0057672 CH0011

CANBERRA

CH-011
Batch Data Report
For
233-S ISOCS NDA Assays

Measurement and Analysis by: _____ **Date:** 4-5-02
Martin Winterrose

Data Review by: _____ **Date:** 5APR02
Michael G. Cantaloub

RECEIVED
JUN 13 2002
EDMC

Canberra Industries, Inc.
1050 Gillmore, Suite A
Richland, Washington 99352
Tel. 509-943-3442 Fax 509-943-0363

COGEMA GROUP

1. Introduction

This report documents results for twenty-five (25) individual items assayed by Canberra Hanford using the In Situ Object Counting System (ISOCS). All measurements were performed in accordance with the "Sampling and Analysis Plan for the 233-S Plutonium Concentration Facility" (DOE/RL-97-87 Rev. 1) and the Canberra Hanford Quality Control Plan and procedure. The individual items were assayed at the 233-S facility during the time period from January 1 to March 21, 2002.

2. Technical Information

The items were assayed within the assay trailer at the 233-S facility grounds. Assays were conducted in one of two manners: For smaller items, a single sample average spectrum was obtained by measuring the item, manually rotating it 180 degrees then continuing data acquisition. For larger items, two separate spectra were obtained and the assay results averaged or summed as appropriate. Total count times were fixed at 1800 seconds live time.

Items were placed on a cart within a reduced background area of the trailer. The detector was positioned a minimum of 24 inches from the item with the detector face visually centered on the largest surface area of the package. The detector sides were shielded with a lead collimator to minimize scatter and background.

Individual ISOCS efficiency calibrations were created for each item. Box, pipe, cylinder and flat plate geometry models were used. An item's composition was determined as best as possible through a combination of the item's packaging description, visual inspection, and package handling. Some items proved very easy to model (e.g. flat plate) while others more difficult. Model matrices were varied or the expected activity distribution adjusted to obtain reasonable correlation between the low and high energy Pu-239 and Am-241 emissions. This was not always a viable option, however; as some assays identified only a single Pu-239 and/or Am-241 emission peak.

The batch contained five (5) irregular shaped pipes having varies pipe 'bends'. Four (4) of these items could be treated as having multiple "legs", with each leg being assayed separate (with unique efficiency calibrations) and the final assay results being summed. This is a conservative method and is expected to overestimate the total activity concentration of the item.

Final package results were calculated using the Analysis V3.0b spreadsheet. Data analysis was conservative. Method selections (e.g. measured Am-241 versus Am-241 calculated from the measured Pu-239) normally favored higher final results when justified.

Several analysis spreadsheets show a "Density > 1" error. This is due almost exclusively to propagating the TMU associated with a flat plate or plates using "Box" assumptions. For metal sheets or straps, the activity is assumed to be limited to the metal's surface (as

a thin dirt layer) not distributed within the plate metal and as such, the 'flag' does not show the results to be in error.

3. Quality Control Results

Daily background and quality control (QC) check source measurements were performed on the system prior to each day's measurements. Charts for these measurements are on pages 5 - 11. The control charts cover the period of January 1, 2002 to March 26, 2002. During the time period, the system was determined to be operating properly. The peak area and centroid control charts indicate a very stable system.

The batch contains items assayed over nearly a three-month period. Suspect background or QC events for much of this time period were investigated and reported in previous batch submittals. There were no irregularities for the time period beyond that previously reported in CH004 to CH010.

Package 4414 was randomly selected for replicate measurement and was assayed on March 7, 2002. The table below shows the comparison results for the 413.69 keV emission of Pu-239. The replicate satisfies the quality assurance requirement.

Replicate Analysis	Item 4414
| Pu-239(orig) – Pu-239(rep) |	14
$1.96 * \sqrt{[unc(orig)]^2 + [unc(rep)]^2}$	152.45

4. Summary of Results

Full data packages for each item are included as an attachment beginning on page 12. The following table (page 4) summarizes the total TRU activity results and plutonium gram values for each item. The 'Pu Mass + 3-sigma' values in the table are based solely on counting statistics. The 'Pu Mass + 3-sigma TMU' values are not included here, but are reported on the final result spreadsheets.

Summary of package assay results for Data Batch Report CH011

Package Item ID	Assay Weight (kg)	TRU Act (nCi/g)	TRU TMU (nCi/g)	Pu Mass (g)	Pu Mass(g) + 3 sigma	Description, calculation notes
1393	22	1.37E+02 ±	1.28E+01	2.89E-02	2.89E-02	Hold Down; Pu-239 MDA
1696	16.6	2.66E+02 ±	3.69E+01	4.23E-02	4.23E-02	4 1" Pipes; Pu-239 MDA
1698	17.2	1.08E+02 ±	1.49E+01	1.78E-02	1.78E-02	4 1" Pipes No Pu/Am; Pu-239 MDA
1743	40.9	3.23E+01 ±	6.35E+00	9.89E-03	2.02E-02	Flow Meter
1750	31.8	4.35E+01 ±	1.30E+01	1.14E-02	2.09E-02	Flow Meter
1745	32	3.19E+01 ±	9.80E+00	8.05E-03	1.46E-02	Flow Meter
1756	32.7	3.18E+01 ±	6.43E+00	7.86E-03	1.63E-02	Flow Meter
1760	31.8	3.40E+01 ±	1.05E+01	8.33E-03	1.51E-02	Flow Meter
1761	29.5	5.27E+01 ±	1.82E+01	1.45E-02	1.45E-02	Switches; Pu-239 MDA
2015	40.9	7.73E+02 ±	5.70E+02	1.28E-01	1.87E-01	3" irregular shaped pipe
2016	31.8	1.84E+02 ±	3.12E+01	3.91E-02	3.91E-02	2" irregular shaped pipe; Pu-239 MDA
2017	27.27	2.37E+02 ±	6.54E+01	3.63E-02	3.63E-02	3" Pipe; Pu-239 MDA
2018	25	3.09E+02 ±	1.46E+02	4.35E-02	8.89E-02	3" irregular shaped pipe
2019	21.8	7.00E+02 ±	1.93E+02	8.59E-02	8.59E-02	2" irregular shaped pipe; Pu-239 MDA
2022	17.3	4.53E+02 ±	1.52E+02	4.40E-02	6.71E-02	2" irregular shaped pipe
2028	3.9	3.09E+02 ±	1.40E+02	7.55E-03	7.55E-03	Pipe; Am-241
2030	24.5	2.98E+01 ±	2.14E+01	6.13E-03	1.09E-02	Breaker Panel
3022	5.9	2.09E+00 ±	3.18E+00	8.17E-03	8.17E-03	Polyethylene blocks; Am-241
4105	3.2	1.06E+02 ±	4.83E+01	7.58E-03	7.58E-03	1" Pipes; Am-241
4251	3.2	2.28E+02 ±	8.61E+01	4.08E-03	7.81E-03	1/2" Pipes
4367	2.3	3.62E+02 ±	5.61E+01	6.94E-03	1.10E-02	Rags
4414	3	1.33E+03 ±	3.08E+02	2.21E-02	3.11E-02	1" Pipes
4414R	3	1.38E+03 ±	3.15E+02	2.29E-02	3.20E-02	1" Pipes
4690	12.5	3.57E+01 ±	5.43E+01	1.71E-02	1.71E-02	Concrete Plug; Am-241
4930	46.8	3.70E+01 ±	9.49E+00	1.46E-02	3.41E-02	Channel
4932	45	4.97E+01 ±	5.97E+00	1.87E-02	2.83E-02	Channel

14 TRU packages
11 LLW packages

Control Charts

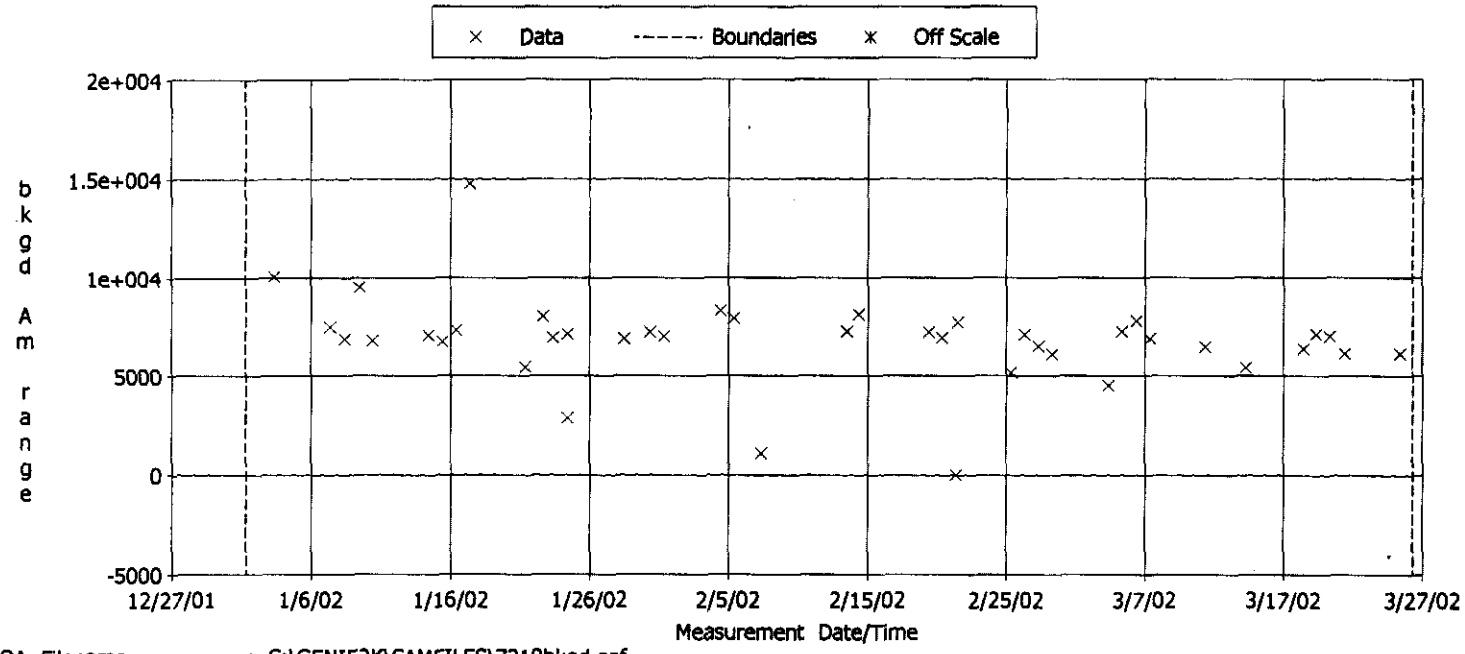

QA Filename : C:\GENIE2K\CAMFILES\7219bkgd.qaf
Parameter Description : bkgd Am range (counts)
Selection Dates : 1/01/02 6:00:00 AM - 3/26/02 6:00:00 AM
Lower/Upper Boundaries : 0.000 - 15000.000

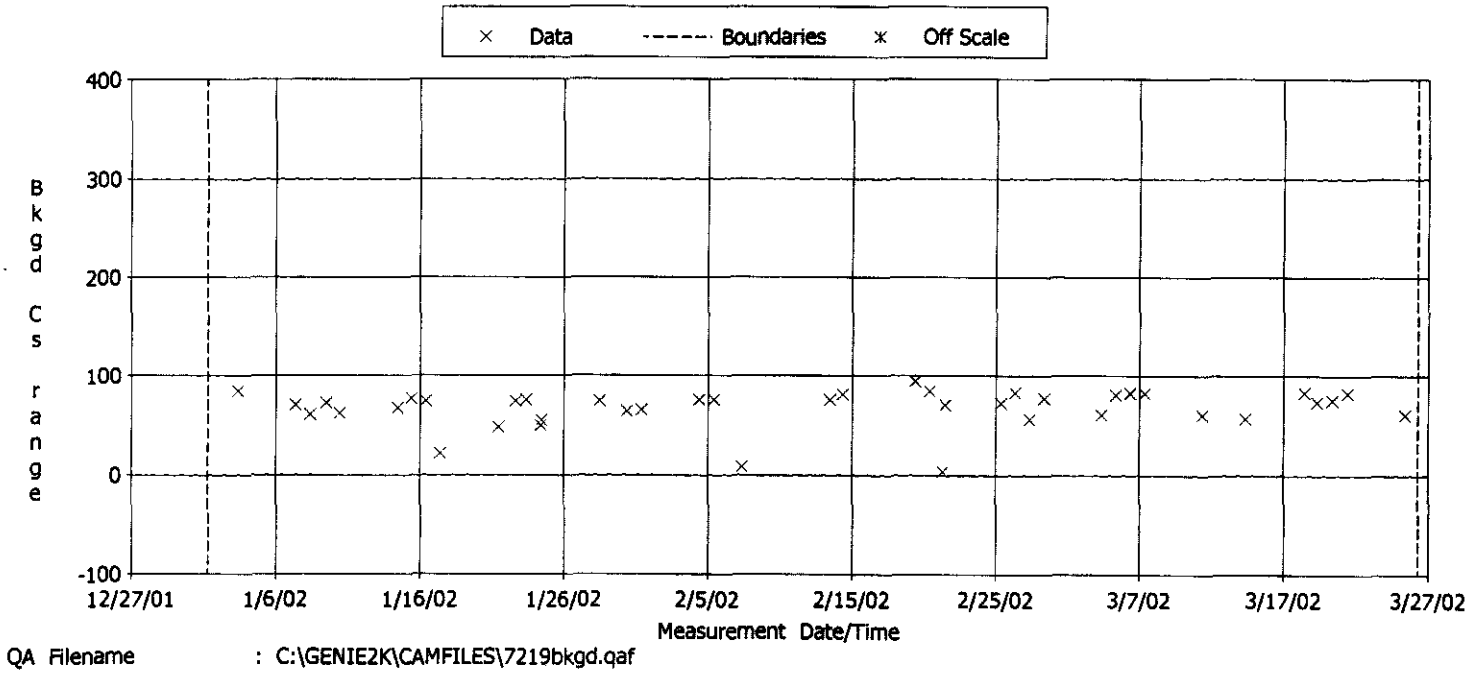

QA Filename : C:\GENIE2K\CAMFILES\7219bkgd.qaf
Parameter Description : Bkgd Cs range (counts)
Selection Dates : 1/01/02 6:00:00 AM - 3/26/02 6:00:00 AM
Lower/Upper Boundaries : 0.000 - 300.000

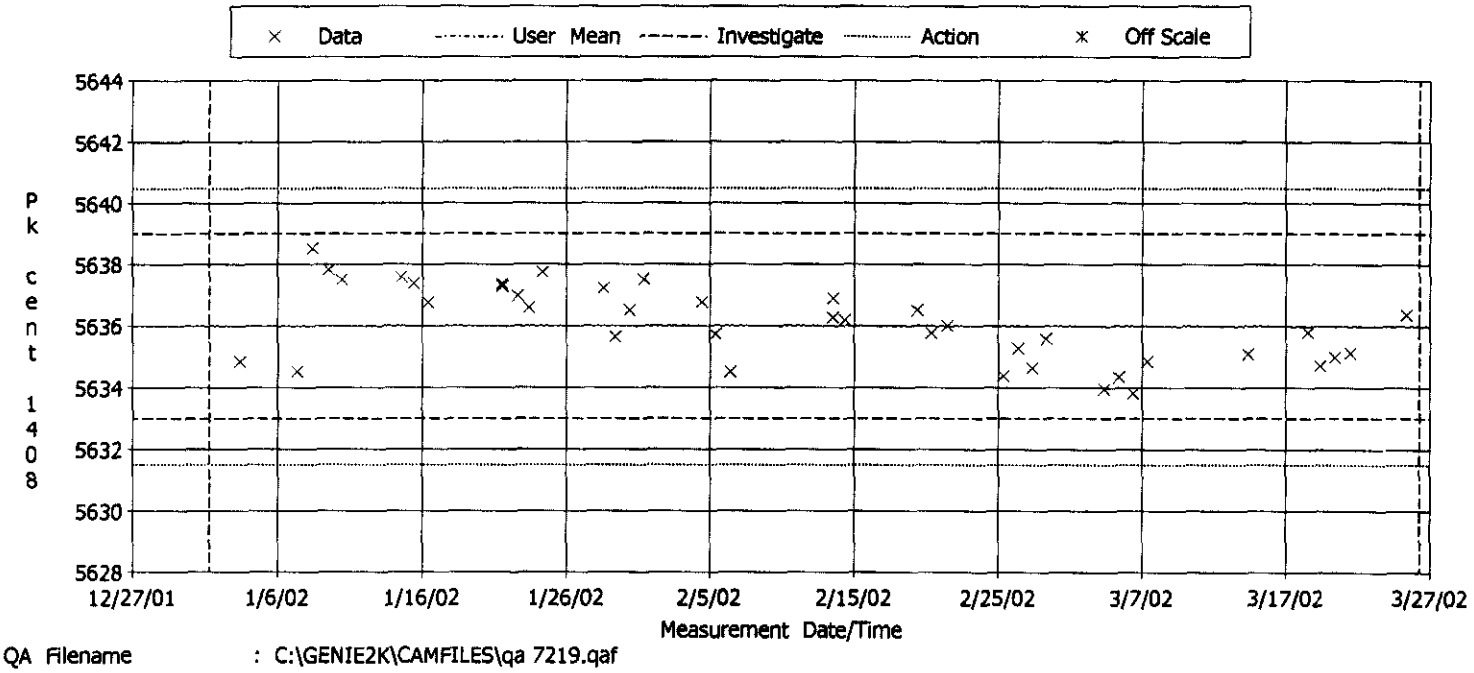

QA Filename : C:\GENIE2K\CAMFILES\qa 7219.qaf
Parameter Description : Pk cent 1408 (ch)
Selection Dates : 1/01/02 6:00:00 AM - 3/26/02 6:00:00 AM
User Mean +/- Std Dev : 5636.000 +/- 1.500

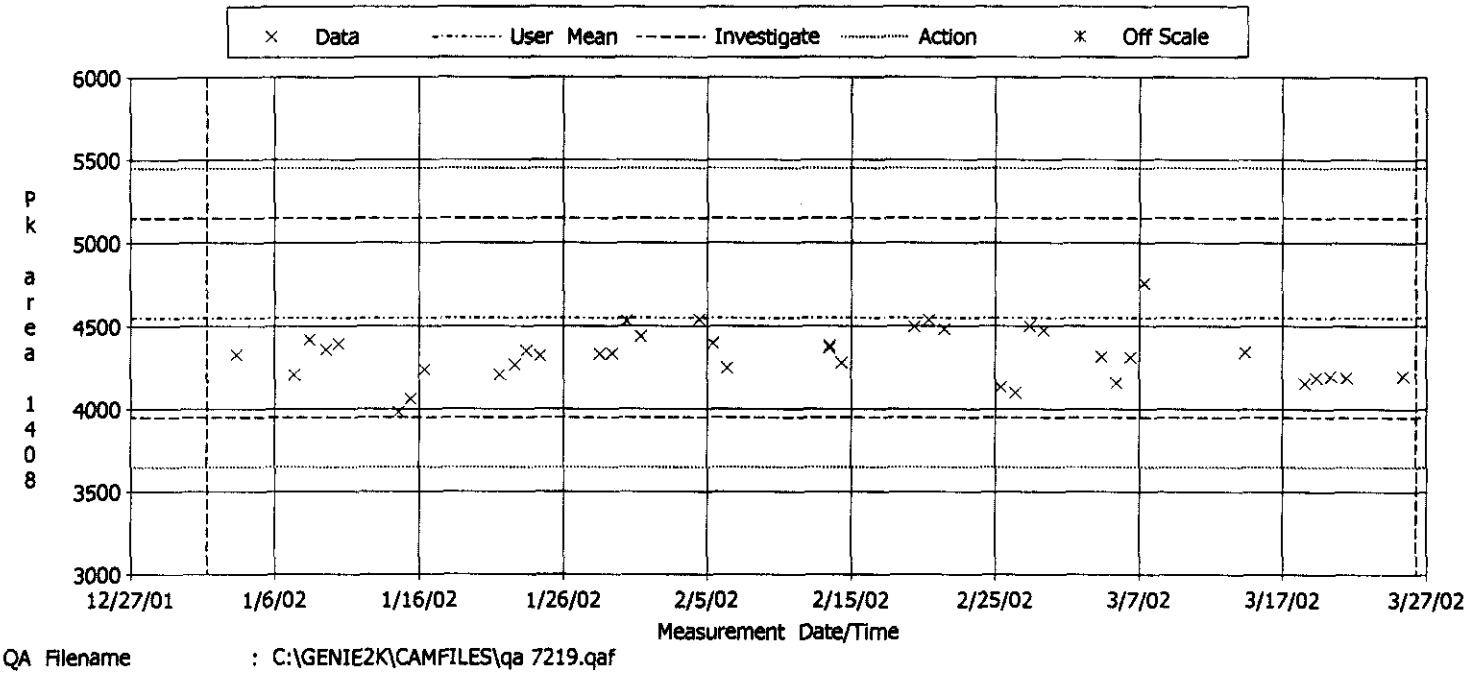

QA Filename : C:\GENIE2K\CAMFILES\qa 7219.qaf
Parameter Description : Pk area 1408 (counts)
Selection Dates : 1/01/02 6:00:00 AM - 3/26/02 6:00:00 AM
User Mean +/- Std Dev : 4550.000 +/- 3.00e+002

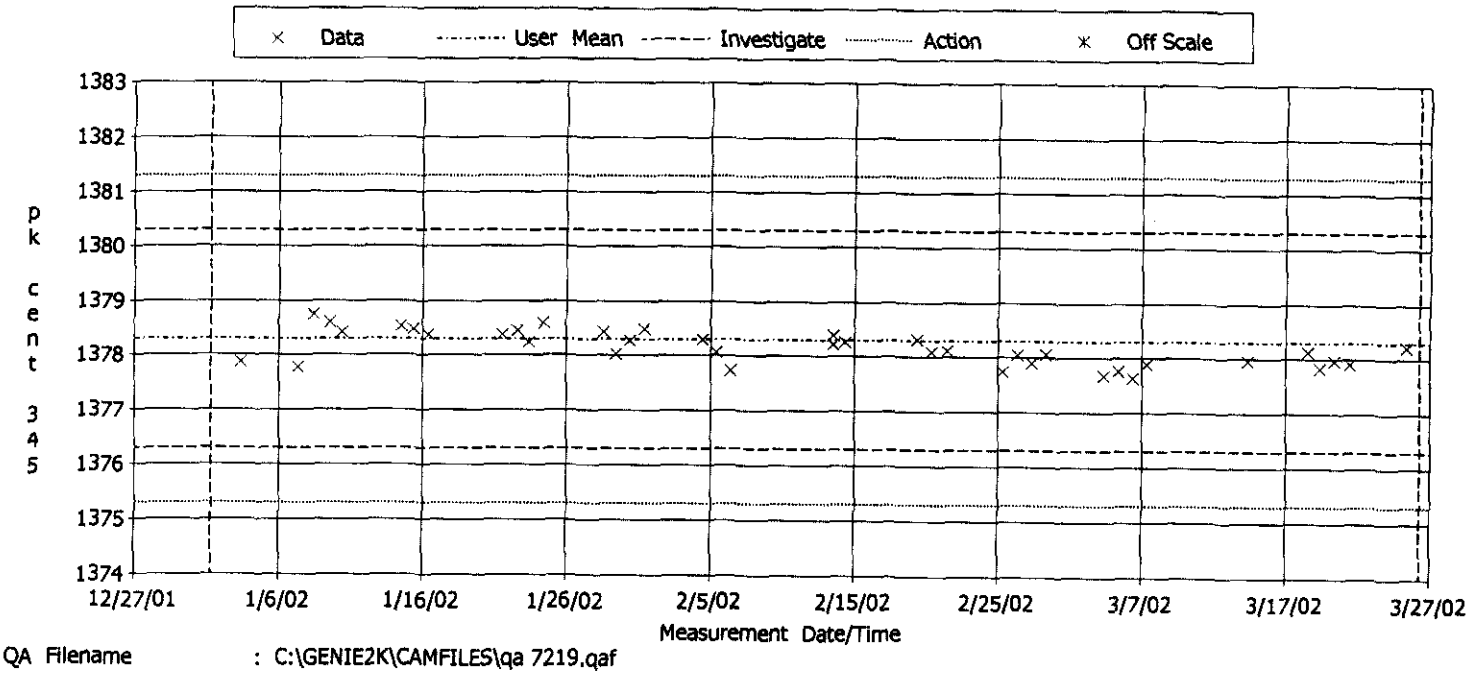

QA Filename : C:\GENIE2K\CAMFILES\qa 7219.qaf
Parameter Description : pk cent 345 (ch)
Selection Dates : 1/01/02 6:00:00 AM - 3/26/02 6:00:00 AM
User Mean +/- Std Dev : 1378.300 +/- 1.000

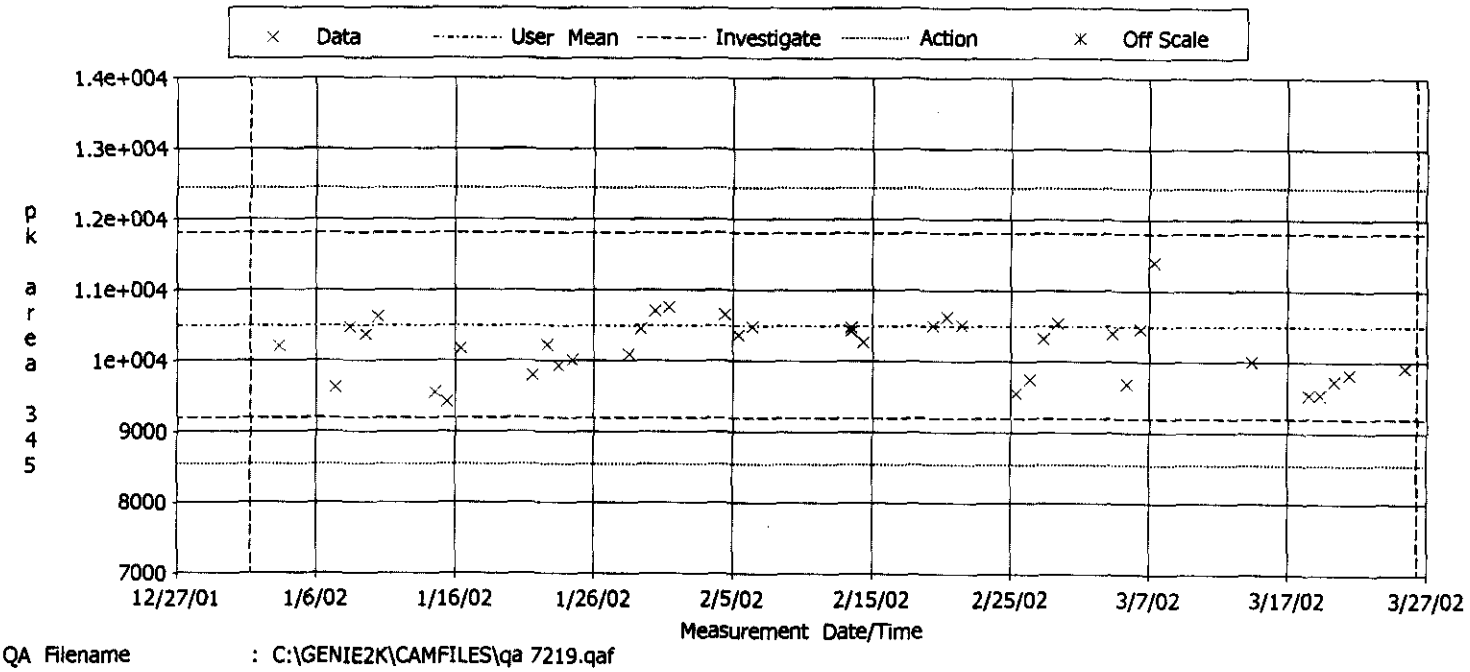

QA Filename : C:\GENIE2K\CAMFILES\qa 7219.qaf
Parameter Description : pk area 345 (counts)
Selection Dates : 1/01/02 6:00:00 AM - 3/26/02 6:00:00 AM
User Mean +/- Std Dev : 10500.000 +/- 6.50e+002

Data Packages

Bldg 233-S
NDA Item Description Sheet
~~Pipe~~ Geometry

RECTANGULAR PLANAR

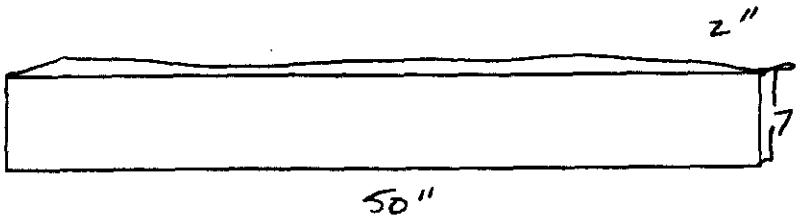

Put Dimensions on Pipe

Item ID: 1393

Weight (kg): 48.5

Material Description: HOLD DOWN

Packaging: 3 + PADDING

Detector Distance (in): 50"

Detector Filters: NONE

Dose Rate: 2.5

Comments: ~~A 900M~~ 1800 /1350
~~B 1800~~ /1351

233-S Item Analysis

Spreadsheet Version 3.0b

1/14/02

Sample Info:

Item ID:	1393	**Assay Date:**	7-Mar-02
File Name:	1350	**File Name:**	

Data Input:

Isotope	Activity (uCi/kg)	Meas Uncert	Activity (uCi/kg)	Meas Uncert
Pu-239 (129)	7.03E+01			
Pu-239 (414)				
Am-241	1.30E+00	1.08E-01		
Np-237				
U-238				
U-235				
Cs-137	1.81E-03	3.42E-04		
Co-60				

Item Parameters:

Contamination: Surface only

Item Type: Box

Calcs: Use 1st

Dimensions:

Length (in):	50	Width (in):	7	Depth (in):	2
Weight (lbs):	48.5	Depth for TMU (in):	4	% Volume:	100

Am-241 Calcs:

Measured	1.30E+00	+/-	3.42E-01	Use Meas
Calculated	9.73E+01	+/-	4.67E+01	

Nuclide Activities:

Isotope	Activity (nCi/g)		Total Unc 1 sigma
Pu-238	2.85E+01	+/-	4.31E+00
Pu-239	7.03E+01	+/-	1.06E+01
Pu-240	3.66E+01	+/-	5.54E+00
Pu-241	1.37E+02	+/-	2.07E+01
Pu-242	3.70E-02	+/-	5.60E-03
Am-241	1.30E+00	+/-	3.42E-01
Np-237	0.00E+00	+/-	0.00E+00
U-238	0.00E+00	+/-	0.00E+00
U-235	0.00E+00	+/-	0.00E+00
Cs-137	1.81E-03	+/-	3.87E-04
Co-60	0.00E+00	+/-	0.00E+00

Results:

Total TRU Activity(nCi/g):	1.37E+02	+/-	1.28E+01	Calc from Pu-239 MDA
Pu (g):	2.89E-02	**Pu (g) + 3 sigma TMU:**	4.20E-02	
		Pu(g) + 3 sigma:	2.89E-02	

Comments:

MDA used due to waste weight

Errors:Density > 1,

Analyst: Martin Winterrose

Date: 3/7/02

233-S Item Analysis

Spreadsheet Version 3.0b

1/14/02

Sample Info:

Item ID: 1393

File Name: 1351

Assay Date: 7-Mar-02

File Name:

Data Input:

Isotope	Activity (uCi/kg)	Meas Uncert
Pu-239 (129)	7.03E+01	
Pu-239 (414)		
Am-241	1.30E+00	1.08E-01
Np-237		
U-238		
U-235		
Cs-137	1.81E-03	3.42E-04
Co-60		

Activity (uCi/kg)	Meas Uncert

Item Parameters:

Contamination: Surface only

Item Type: Box

Calcs: Use 1st

Dimensions:

Length (in): 50

Weight (lbs): 48.5

Width (in): 7

Depth for TMU (in): 4

Depth (in): 2

% Volume: 100

Am-241 Calcs:

Measured	1.30E+00	+/-	3.42E-01	Use Meas
Calculated	9.73E+01	+/-	4.67E+01	

Nuclide Activities:

Isotope	Activity (nCi/g)		Total Unc 1 sigma
Pu-238	2.85E+01	+/-	4.31E+00
Pu-239	7.03E+01	+/-	1.06E+01
Pu-240	3.66E+01	+/-	5.54E+00
Pu-241	1.37E+02	+/-	2.07E+01
Pu-242	3.70E-02	+/-	5.60E-03
Am-241	1.30E+00	+/-	3.42E-01
Np-237	0.00E+00	+/-	0.00E+00
U-238	0.00E+00	+/-	0.00E+00
U-235	0.00E+00	+/-	0.00E+00
Cs-137	1.81E-03	+/-	3.87E-04
Co-60	0.00E+00	+/-	0.00E+00

Results:

Total TRU Activity(nCi/g):		1.37E+02	+/-	1.28E+01	Calc from Pu-239 MDA
Pu (g):	2.89E-02	**Pu (g) + 3 sigma TMU:**		4.20E-02	
		Pu(g) + 3 sigma:		2.89E-02	

Comments:

MDA used due to waste weight

Errors:Density > 1,

Analyst: Martin Winterrose

Date: 3/7/02

```
#Date & Time: Thu Mar 07 09:42:57 2002
~g=RECTANGULAR_PLANE
~description=1393_HOLD_DOWN
~comment=ANGLE_IRON
~Ccollimator=50MM-180D
~crpn=4
~Detector=7219
~Convergence in %=1            ~MDRPN=4
~Lunit=IN  ~Tunit=C  ~Dunit=G/CU.C    ~Punit=MM.HG
~at=20        ~ap=760       ~rh=50
~Energies kev=   50.000,  100.000,  128.000,  130.000,  150.000,  200.000,#
                300.000,  500.000,  700.000, 1000.000, 1400.000, 2000.000,#
               4000.000,
~Error in %=     10.000,   10.000,   10.000,   10.000,   10.000,    8.000,#
                  8.000,    6.000,    6.000,    4.000,    4.000,    4.000,#
                  4.000,
~d1.1=0.024     ~d1.2=50        ~d1.3=7         ~1mater=POLYPROP ~1den=0.91
~d2.1=0.024     ~2mater=POLYPROP ~2den=0.91
~d3.1=0.0312    ~3mater=DRYDIRT  ~3den=1.6       ~3con=1
~d4.1=1.5       ~4mater=304SS    ~4den=7.81
~d5.1=0.0312    ~5mater=DRYDIRT  ~5den=1.6       ~5con=1
~d6.1=0.024     ~6mater=POLYPROP ~6den=0.91
~sd1=50
```

C A N B E R R A I S O C S A N A L Y S I S

Report Generated On : 3/07/02 10:17:11 AM

Sample Title : 1393 Side A
Spectrum Description :
Sample Identification : 1350
Sample Size : 22.0 kg

Sample Taken On : 3/07/02 9:44:00 AM
Acquisition Started : 3/07/02 10:02:05 AM

Live Time: 1800.0 seconds Real Time: 1803.1 seconds

ISOCS Calabration : 1393 HOLD_DOW
Energy Calibration Used Done On : 2/27/01
Efficiency Calibration Used Done On : 3/07/02

P E A K A N A L Y S I S R E P O R T

Peak No.	Peak centroid	Energy (keV)	Net Peak Area	Net Area Uncert.	Continuum Counts
1	239.23	59.89	2.51E+004	614.22	2.21E+003
2	340.24	85.14	8.70E+002	59.17	2.37E+003
3	350.53	87.71	2.13E+002	53.05	2.38E+003
4	2044.48	511.06	1.36E+002	14.98	7.03E+001
5	2437.09	609.18	1.36E+002	14.05	5.51E+001
6	2646.69	661.56	5.54E+001	10.28	4.66E+001
7	3644.97	911.05	5.59E+001	9.86	3.15E+001
8	7064.17	1765.57	4.54E+001	7.87	2.54E+000

NUCLIDE IDENTIFICATION REPORT

Nuclide Name	Id Confidence	Energy (keV)	Yield (%)	Activity (uCi)	Activity Uncertainty
CS-137	1.000	661.65*	85.12	1.81355E-003	3.41646E-004
AM-241	0.995	59.54*	35.70	1.30009E+000	1.08109E-001
		125.28	0.00		
		335.40	0.00		
		662.42* @	0.00	4.28803E+002	8.07720E+001
		722.70	0.00		

INTERFERENCE CORRECTED REPORT

Nuclide Name	Nuclide Id Confidence	Wt mean Activity (uCi/kg)	Wt mean Activity Uncertainty
CS-137	1.000	1.808049E-003	3.416114E-004
AM-241 @	0.995	1.300093E+000	1.081088E-001

? = nuclide is part of an undetermined solution
X = nuclide rejected by the interference analysis
@ = nuclide contains energy lines not used in Weighted Mean Activity

Errors quoted at 1.000 sigma

****
***** N U C L I D E M D A R E P O R T *****
****

	Nuclide Name	Energy (keV)	Yield (%)	Line MDA (uCi/kg)	Nuclide MDA (uCi/kg)	Activity (uCi/kg)
	CO-60	1173.22	100.00	1.8061E-003	1.52E-003	7.9177E-004
		1332.49	100.00	1.5192E-003		-2.0918E-003
	CS-134	475.35	1.46	1.1255E-001	2.04E-003	1.9061E-002
		563.23	8.38	2.1093E-002		1.0297E-002
		569.32	15.43	1.1203E-002		-3.4378E-004
		604.70	97.60	2.4135E-003		-8.5440E-004
		795.84	85.40	2.0359E-003		-7.6126E-004
		801.93	8.73	1.9709E-002		-1.2393E-002
		1038.57	1.00	1.6755E-001		9.9788E-002
		1167.94	1.80	9.5369E-002		-9.6481E-002
		1365.15	3.04	5.5495E-002		3.0865E-002
+	CS-137	661.65*	85.12	1.1296E-003	1.13E-003	1.8135E-003
	NP-237	300.17	6.20	3.1396E-002	5.02E-003	2.0775E-002
		312.00	36.00	5.0231E-003		7.5573E-004
		340.60	4.20	4.4905E-002		1.3605E-002
		375.00	0.68	2.5112E-001		-2.8543E-002
		415.60	1.75	9.9917E-002		3.7711E-002
	Pu-239	129.28	0.01	7.0272E+001	7.03E+001	1.1460E+001
		375.00	0.00	1.0792E+002		-1.2266E+001
		413.70	0.00	1.1570E+002		1.4971E+001
		451.50	0.00	9.3326E+002		1.5393E+002
+	AM-241	59.54*	35.70	1.1487E-002	1.15E-002	1.3001E+000
		125.28	0.00	1.1188E+002		-8.9782E+001
		335.40	0.00	3.8036E+002		-5.3848E+001
		662.42*	0.00	2.6710E+002		4.2880E+002
		722.70	0.00	1.3595E+003		1.4945E+002
	PU-241	114.00	0.02	2.0922E+001	2.09E+001	1.7630E+001
		332.60	0.00	6.1117E+001		-8.4310E+001
	CM-243	209.70	3.27	6.1825E-002	1.32E-002	-3.2377E-002
		228.18	10.56	1.8457E-002		-3.1586E-003
		277.60	14.00	1.3213E-002		-3.2538E-003

+ = Nuclide identified during the nuclide identification
* = Energy line found in the spectrum
> = MDA value not calculated
@ = Half-life too short to be able to perform the decay correction

N U C L I D E T O T A L S

Nuclide	Mass (g)

Bldg 233-S
NDA Item Description Sheet
Pipe Geometry

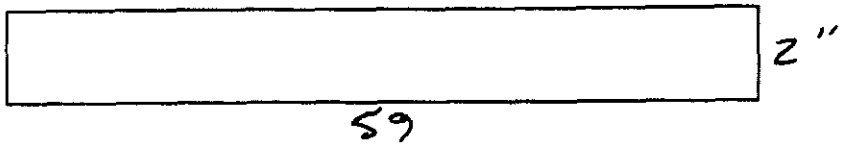

Put Dimensions on Pipe

Item ID: 1696

Weight (kg): 36.5

Material Description: 4 ~~3/4~~ 1" CS Pipes

Packaging: 3 layers

Detector Distance (in): 50"

Detector Filters: None

Dose Rate: 2.5

Comments: A ~~1800~~ 900 1352
B 1800 1353

233-S Item Analysis

Spreadsheet Version 3.0b

1/14/02

Sample Info:

Item ID: 1696

File Name: 1353

Assay Date: 7-Mar-02

File Name:

Data Input:

Isotope	Activity (uCi/kg)	Meas Uncert
Pu-239 (129)	1.37E+02	
Pu-239 (414)		
Am-241	2.47E+00	2.87E-01
Np-237	2.47E-03	8.27E-04
U-238		
U-235		
Cs-137	3.44E-03	4.67E-04
Co-60		

Activity (uCi/kg)	Meas Uncert

Item Parameters:

Contamination: Internal

Item Type: Pipe or Duct

Calcs: Use 1st

Dimensions:

Length (in): 59

Weight (lbs): 36.5

Width (in): 2

Depth for TMU (in): 4

Depth (in): 2

% Volume: 100

Am-241 Calcs:

Measured	2.47E+00	+/-	1.14E+00	Use Meas
Calculated	1.90E+02	+/-	1.20E+02	

Nuclide Activities:

Isotope	Activity (nCi/g)		Total Unc 1 sigma
Pu-238	5.55E+01	+/-	1.25E+01
Pu-239	1.37E+02	+/-	3.08E+01
Pu-240	7.14E+01	+/-	1.60E+01
Pu-241	2.67E+02	+/-	5.99E+01
Pu-242	7.21E-02	+/-	1.62E-02
Am-241	2.47E+00	+/-	1.14E+00
Np-237	2.47E-03	+/-	8.72E-04
U-238	0.00E+00	+/-	0.00E+00
U-235	0.00E+00	+/-	0.00E+00
Cs-137	3.44E-03	+/-	6.05E-04
Co-60	0.00E+00	+/-	0.00E+00

Results:

Total TRU Activity(nCi/g):	2.66E+02	+/-	3.69E+01	Calc from Pu-239 MDA	
Pu (g):	4.23E-02	**Pu (g) + 3 sigma TMU:**	7.08E-02		
		Pu(g) + 3 sigma:	4.23E-02		

Comments:

MDA used due to waste weight

Errors:

Analyst: Martin Winterrose

Date: 4/4/02

```
#Date & Time: Thu Mar 07 10:37:37 2002
~g=PIPE
~description=1696_PIPE
~comment=PIPE_AND_METAL
~Ccollimator=50MM-180D
~crpn=4
~Detector=7219
~Convergence in %=1            ~MDRPN=4
~Lunit=IN  ~Tunit=C  ~Dunit=G/CU.C    ~Punit=MM.HG
~at=20        ~ap=760       ~rh=50
~Energies kev=   50.000,  100.000,  128.000,  130.000,  150.000,  200.000,#
                300.000,  500.000,  700.000, 1000.000, 1400.000, 2000.000,#
               4000.000,
~Error in %=     10.000,   10.000,   10.000,   10.000,   10.000,    8.000,#
                  8.000,    6.000,    6.000,    4.000,    4.000,    4.000,#
                  4.000,
~d1.1=0.154     ~d1.2=2         ~d1.3=29.5      ~d1.4=29.5      ~1mater=CSTEEL   ~1den=7.86
~d2.1=0.133     ~d2.2=29.5      ~d2.3=29.5      ~2mater=DRYDIRT  ~2den=1.6       ~2con=1
~sd1=50
```

C A N B E R R A I S O C S A N A L Y S I S

Report Generated On : 3/07/02 12:11:11 PM

Sample Title : 1696 Side B
Spectrum Description :
Sample Identification : 1353
Sample Size : 16.6 kg

Sample Taken On : 3/07/02 11:00:00 AM
Acquisition Started : 3/07/02 11:00:36 AM

Live Time: 1800.0 seconds Real Time: 1802.3 seconds

ISOCS Calabration : 1696 PIPE
Energy Calibration Used Done On : 2/27/01
Efficiency Calibration Used Done On : 3/07/02

P E A K A N A L Y S I S R E P O R T

Peak No.	Peak centroid	Energy (keV)	Net Peak Area	Net Area Uncert.	Continuum Counts
1	239.06	59.85	5.17E+002	44.02	1.94E+003
2	340.15	85.11	7.61E+002	57.76	2.32E+003
3	350.51	87.70	2.35E+002	54.42	2.34E+003
4	1247.37	311.85	3.86E+001	12.79	1.44E+002
5	1407.49	351.86	9.33E+001	14.17	1.22E+002
6	2043.39	510.79	1.36E+002	14.69	7.24E+001
7	2437.23	609.21	1.27E+002	13.76	5.14E+001
8	2646.84	661.60	8.83E+001	11.66	3.82E+001
9	3646.07	911.33	4.88E+001	9.38	2.68E+001
10	5846.45	1461.24	5.03E+002	23.01	8.67E+000
11	7064.66	1765.69	4.02E+001	7.65	1.57E+000

N U C L I D E I D E N T I F I C A T I O N R E P O R T

Nuclide Name	Id Confidence	Energy (keV)	Yield (%)	Activity (uCi)	Activity Uncertainty
CS-137	1.000	661.65*	85.12	3.43910E-003	4.66715E-004
NP-237	0.605	300.17	6.20		
		312.00*	36.00	2.46684E-003	8.26955E-004
		340.60	4.20		
		375.00	0.68		
		415.60	1.75		
AM-241	0.995	59.54*	35.70	2.46729E+000	2.87321E-001
		125.28	0.00		
		335.40	0.00		
		662.42* @	0.00	8.13155E+002	1.10330E+002
		722.70	0.00		

I N T E R F E R E N C E C O R R E C T E D R E P O R T

Nuclide Name	Nuclide Id Confidence	Wt mean Activity (uCi/kg)	Wt mean Activity Uncertainty
CS-137	1.000	3.428662E-003	4.666241E-004
NP-237	0.605	2.466838E-003	8.269554E-004
AM-241 @	0.995	2.467293E+000	2.873214E-001

? = nuclide is part of an undetermined solution
X = nuclide rejected by the interference analysis
@ = nuclide contains energy lines not used in Weighted Mean Activity

Errors quoted at 1.000 sigma

****
***** N U C L I D E M D A R E P O R T *****
****

	Nuclide Name	Energy (keV)	Yield (%)	Line MDA (uCi/kg)	Nuclide MDA (uCi/kg)	Activity (uCi/kg)
	CO-60	1173.22	100.00	1.8428E-003	1.75E-003	-8.4196E-005
		1332.49	100.00	1.7487E-003		-6.2334E-004
	CS-134	475.35	1.46	1.5787E-001	2.32E-003	1.2290E-001
		563.23	8.38	2.4687E-002		-3.9493E-005
		569.32	15.43	1.3969E-002		7.8049E-003
		604.70	97.60	2.8363E-003		1.6834E-003
		795.84	85.40	2.3241E-003		1.1958E-003
		801.93	8.73	2.3378E-002		-2.3243E-002
		1038.57	1.00	1.9091E-001		-7.5746E-002
		1167.94	1.80	1.1238E-001		-3.6153E-002
		1365.15	3.04	5.5142E-002		5.5205E-002
+	CS-137	661.65*	85.12	1.2253E-003	1.23E-003	3.4391E-003
+	NP-237	300.17	6.20	3.9355E-002	3.75E-003	1.7559E-002
		312.00*	36.00	3.7483E-003		2.4668E-003
		340.60	4.20	5.4874E-002		2.3632E-002
		375.00	0.68	3.1942E-001		-4.5636E-002
		415.60	1.75	1.3129E-001		-3.9806E-002
	Pu-239	129.28	0.01	1.3988E+002	1.37E+002	2.9942E+001
		375.00	0.00	1.3727E+002		-1.9612E+001
		413.70	0.00	1.5510E+002		-1.6020E+001
		451.50	0.00	1.1810E+003		-2.4519E+002
+	AM-241	59.54*	35.70	9.9123E-001	9.91E-001	2.4673E+000
		125.28	0.00	2.3670E+002		1.4769E+002
		335.40	0.00	5.0337E+002		4.0504E+002
		662.42*	0.00	2.8972E+002		8.1316E+002
		722.70	0.00	1.6019E+003		1.0734E+003
	PU-241	114.00	0.02	5.3487E+001	5.35E+001	9.4099E+000
		332.60	0.00	8.6106E+001		-2.3556E+001
	CM-243	209.70	3.27	8.7168E-002	1.76E-002	-6.9377E-002
		228.18	10.56	2.5132E-002		9.0638E-003
		277.60	14.00	1.7629E-002		4.8400E-003

+ = Nuclide identified during the nuclide identification
* = Energy line found in the spectrum
> = MDA value not calculated
@ = Half-life too short to be able to perform the decay correction

N U C L I D E T O T A L S

Nuclide	Mass (g)

Bldg 233-S
NDA Item Description Sheet
Pipe Geometry

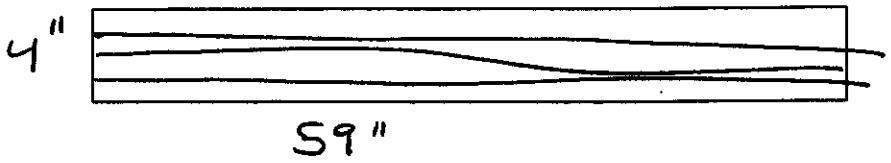

Put Dimensions on Pipe

Item ID: ~~38~~ 1698

Weight (kg): 38 lb (17.2 kg)

Material Description: 4 pipes

Packaging: 3 layers

Detector Distance (in): ~~20~~ 24"

Detector Filters: NONE

Dose Rate: <0.5 mR/hr

Comments: A 1800 1154
B 1800 1150

233-S Item Analysis

Spreadsheet Version 3.0b

1/14/02

Sample Info:

Item ID: 1698
File Name: 1154

Assay Date: 24-Jan-02
File Name: 1156

Data Input:

Isotope	Activity (uCi/kg)	Meas Uncert	Activity (uCi/kg)	Meas Uncert
Pu-239 (129)	5.40E+01		5.66E+01	
Pu-239 (414)				
Am-241	1.69E+00		1.71E+00	
Np-237				
U-238				
U-235	1.19E-03	3.59E-04	1.19E-03	3.59E-04
Cs-137	1.22E-03	1.79E-04	6.54E-04	1.53E-04
Co-60				

Item Parameters:

Contamination: Internal

Item Type: Pipe or Duct

Calcs: Average

Dimensions:

Length (in): 59
Weight (lbs): 38

Width (in): 4
Depth for TMU (in): 4

Depth (in): 4
% Volume: 100

Am-241 Calcs:

Measured	1.70E+00	+/-	7.60E-01	Use Meas
Calculated	7.65E+01	+/-	4.83E+01	

Nuclide Activities:

Isotope	Activity (nCi/g)		Total Unc 1 sigma
Pu-238	2.24E+01	+/-	5.03E+00
Pu-239	5.53E+01	+/-	1.24E+01
Pu-240	2.88E+01	+/-	6.47E+00
Pu-241	1.08E+02	+/-	2.42E+01
Pu-242	2.91E-02	+/-	6.53E-03
Am-241	1.70E+00	+/-	7.60E-01
Np-237	0.00E+00	+/-	0.00E+00
U-238	0.00E+00	+/-	0.00E+00
U-235	1.19E-03	+/-	2.86E-04
Cs-137	9.35E-04	+/-	1.57E-04
Co-60	0.00E+00	+/-	0.00E+00

Results:

Total TRU Activity(nCi/g):		1.08E+02	+/-	1.49E+01	Calc from Pu-239 MDA
Pu (g):	1.78E-02	**Pu (g) + 3 sigma TMU:**		2.98E-02	
		Pu(g) + 3 sigma:		1.78E-02	

Comments: Total TRU activity calc from PU MDA . U-235 value same in both counts so value will average correctly.

Errors:

Analyst: Martin Winterrose

Date: 4/4/02

```
#Date & Time: Thu Jan 24 11:54:03 2002
~g=PIPE
~description=1698_PIPE
~comment=FOUR_1"_PIPES_-_5_FT_LENGTH
~Ccollimator=50MM-180D
~crpn=4
~Detector=7219
~Convergence in %=1            ~MDRPN=4
~Lunit=IN  ~Tunit=C  ~Dunit=G/CU.C    ~Punit=MM.HG
~at=20        ~ap=760       ~rh=50
~Energies kev=   59.540,   88.030,  122.060,  165.850,  391.690,  661.650,#
                898.020, 1173.220, 1332.490, 1836.010,
~Error in %=     10.000,   10.000,   10.000,    8.000,    8.000,    6.000,#
                  6.000,    4.000,    4.000,    4.000,
~d1.1=0.216     ~d1.2=3         ~d1.3=30        ~d1.4=30        ~1mater=304SS    ~1den=7.81
~d2.1=0.133     ~d2.2=30        ~d2.3=30        ~2mater=DRYDIRT  ~2den=1.6       ~2con=1
~sd1=24
```

C A N B E R R A I S O C S A N A L Y S I S

Report Generated On : 1/24/02 12:28:27 PM

Sample Title : 1698 Side A-2
Spectrum Description :
Sample Identification : 1154
Sample Size : 17.2 kg

Sample Taken On : 1/24/02 12:11:00 AM
Acquisition Started : 1/24/02 12:13:21 PM

Live Time: 1800.0 seconds Real Time: 1802.0 seconds

ISOCS Calabration : 1698 PIPE
Energy Calibration Used Done On : 2/27/01
Efficiency Calibration Used Done On : 1/24/02

P E A K A N A L Y S I S R E P O R T

Peak No.	Peak centroid	Energy (keV)	Net Peak Area	Net Area Uncert.	Continuum Counts
1	340.19	85.12	9.76E+002	57.54	1.89E+003
2	351.47	87.94	2.26E+002	49.92	1.91E+003
3	371.54	92.96	2.14E+002	42.86	1.92E+003
4	744.32	186.12	7.02E+001	20.42	4.93E+002
5	2044.14	510.97	1.24E+002	14.51	7.07E+001
6	2438.38	609.50	9.35E+001	12.44	4.78E+001
7	2647.17	661.68	8.22E+001	11.54	4.15E+001
8	3647.08	911.58	6.07E+001	9.79	2.88E+001
9	3878.72	969.47	3.92E+001	8.34	1.83E+001
10	7065.87	1766.00	3.34E+001	6.84	2.12E+000

NUCLIDE IDENTIFICATION REPORT

Nuclide Name	Id Confidence	Energy (keV)	Yield (%)	Activity (uCi)	Activity Uncertainty
CS-137	1.000	661.65*	85.12	1.21628E-003	1.79354E-004
U-235	0.657	143.76	10.50		
		185.71*	54.00	1.19479E-003	3.58502E-004
		205.31	4.70		

INTERFERENCE CORRECTED REPORT

Nuclide Name	Nuclide Id Confidence	Wt mean Activity (uCi/kg)	Wt mean Activity Uncertainty
CS-137	1.000	1.216276E-003	1.793536E-004
U-235	0.657	1.194786E-003	3.585021E-004

? = nuclide is part of an undetermined solution
X = nuclide rejected by the interference analysis
@ = nuclide contains energy lines not used in Weighted Mean Activity

Errors quoted at 1.000 sigma

****
***** N U C L I D E M D A R E P O R T *****
****

	Nuclide Name	Energy (keV)	Yield (%)	Line MDA (uCi/kg)	Nuclide MDA (uCi/kg)	Activity (uCi/kg)
	CO-60	1173.22	100.00	8.3012E-004	6.38E-004	4.2348E-004
		1332.49	100.00	6.3836E-004		2.8141E-004
	CS-134	475.35	1.46	5.9520E-002	8.83E-004	5.3980E-002
		563.23	8.38	1.0074E-002		6.2605E-003
		569.32	15.43	5.3977E-003		7.1088E-004
		604.70	97.60	9.9161E-004		2.3824E-004
		795.84	85.40	8.8308E-004		6.8545E-004
		801.93	8.73	8.3767E-003		-1.3299E-003
		1038.57	1.00	7.5583E-002		5.6521E-002
		1167.94	1.80	4.5042E-002		1.5527E-004
		1365.15	3.04	2.2502E-002		1.4008E-002
+	CS-137	661.65*	85.12	4.8401E-004	4.84E-004	1.2163E-003
	NP-237	300.17	6.20	1.6746E-002	2.79E-003	1.3305E-002
		312.00	36.00	2.7902E-003		-1.1024E-003
		340.60	4.20	2.3767E-002		6.5020E-003
		375.00	0.68	1.2563E-001		-1.1837E-001
		415.60	1.75	5.0941E-002		1.1350E-002
	Pu-239	129.28	0.01	6.5079E+001	5.40E+001	-7.0278E+000
		375.00	0.00	5.3989E+001		-5.0870E+001
		413.70	0.00	5.9704E+001		1.0792E+001
		451.50	0.00	4.3867E+002		1.1383E+002
	AM-241	59.54	35.70	1.6861E+000	1.69E+000	-2.5077E+000
		125.28	0.00	1.1004E+002		-1.0273E+002
		335.40	0.00	1.9607E+002		-4.1213E+001
		662.42	0.00	2.5757E+002		3.0055E+002
		722.70	0.00	6.4828E+002		3.3413E+002
	PU-241	114.00	0.02	2.6031E+001	2.60E+001	1.9886E+001
		332.60	0.00	3.3823E+001		-2.7558E+001
	CM-243	209.70	3.27	3.8907E-002	7.56E-003	2.0226E-002
		228.18	10.56	1.1302E-002		1.4438E-003
		277.60	14.00	7.5645E-003		3.6574E-003

+ = Nuclide identified during the nuclide identification
* = Energy line found in the spectrum
> = MDA value not calculated
@ = Half-life too short to be able to perform the decay correction

N U C L I D E T O T A L S

Nuclide	Mass (g)
U-235	9.33E-003 +/- 2.80E-003

C A N B E R R A I S O C S A N A L Y S I S

Report Generated On : 1/24/02 1:50:25 PM

Sample Title : 1698 Side B-1
Spectrum Description :
Sample Identification : 1156
Sample Size : 17.2 kg

Sample Taken On : 1/24/02 1:34:00 PM
Acquisition Started : 1/24/02 1:35:19 PM

Live Time: 1800.0 seconds Real Time: 1802.0 seconds

ISOCS Calabration : 1698 PIPE
Energy Calibration Used Done On : 2/27/01
Efficiency Calibration Used Done On : 1/24/02

P E A K A N A L Y S I S R E P O R T

Peak No.	Peak centroid	Energy (keV)	Net Peak Area	Net Area Uncert.	Continuum Counts
1	340.41	85.18	9.58E+002	62.43	1.90E+003
2	350.60	87.73	1.76E+002	51.04	1.92E+003
3	955.22	238.83	8.69E+001	17.57	2.12E+002
4	2045.20	511.24	1.59E+002	15.19	6.79E+001
5	2333.56	583.31	8.58E+001	12.25	5.17E+001
6	2438.38	609.50	9.84E+001	12.78	5.17E+001
7	2648.39	661.99	4.42E+001	10.13	4.76E+001
8	5848.76	1461.82	5.09E+002	23.22	5.47E+000
9	7067.49	1766.40	2.48E+001	6.32	1.23E+000

NUCLIDE IDENTIFICATION REPORT

Nuclide Name	Id Confidence	Energy (keV)	Yield (%)	Activity (uCi)	Activity Uncertainty
CS-137	0.995	661.65*	85.12	6.54493E-004	1.52779E-004

INTERFERENCE CORRECTED REPORT

Nuclide Name	Nuclide Id Confidence	Wt mean Activity (uCi/kg)	Wt mean Activity Uncertainty
CS-137	0.995	6.544925E-004	1.527785E-004

? = nuclide is part of an undetermined solution
X = nuclide rejected by the interference analysis
@ = nuclide contains energy lines not used in Weighted Mean Activity

Errors quoted at 1.000 sigma

****
***** N U C L I D E M D A R E P O R T *****
****

	Nuclide Name	Energy (keV)	Yield (%)	Line MDA (uCi/kg)	Nuclide MDA (uCi/kg)	Activity (uCi/kg)
	CO-60	1173.22	100.00	7.7916E-004	6.59E-004	3.1649E-004
		1332.49	100.00	6.5938E-004		-5.1222E-004
	CS-134	475.35	1.46	5.6711E-002	8.86E-004	1.3964E-002
		563.23	8.38	9.2720E-003		-3.8539E-003
		569.32	15.43	5.2653E-003		2.6807E-003
		604.70	97.60	1.0298E-003		-3.0633E-004
		795.84	85.40	8.8583E-004		2.6885E-004
		801.93	8.73	8.6255E-003		-8.1590E-003
		1038.57	1.00	7.5207E-002		-9.8908E-003
		1167.94	1.80	4.1489E-002		1.0738E-002
		1365.15	3.04	2.2151E-002		-5.7169E-004
+	CS-137	661.65*	85.12	5.1477E-004	5.15E-004	6.5449E-004
	NP-237	300.17	6.20	1.6902E-002	2.92E-003	3.2165E-003
		312.00	36.00	2.9177E-003		1.3648E-004
		340.60	4.20	2.2875E-002		1.6490E-004
		375.00	0.68	1.3179E-001		-2.5025E-002
		415.60	1.75	5.1386E-002		6.3101E-003
	Pu-239	129.28	0.01	6.5613E+001	5.66E+001	-7.8508E+000
		375.00	0.00	5.6636E+001		-1.0754E+001
		413.70	0.00	5.9501E+001		2.9451E+001
		451.50	0.00	4.3866E+002		-4.9663E+002
	AM-241	59.54	35.70	1.7062E+000	1.71E+000	-1.4174E+000
		125.28	0.00	1.1202E+002		1.9108E+001
		335.40	0.00	2.0493E+002		9.1764E+001
		662.42	0.00	2.5216E+002		2.2445E+002
		722.70	0.00	5.8075E+002		5.1189E+002
	PU-241	114.00	0.02	2.5673E+001	2.57E+001	-1.0625E+000
		332.60	0.00	3.4827E+001		-1.8996E+001
	CM-243	209.70	3.27	3.9437E-002	7.33E-003	-1.7985E-002
		228.18	10.56	1.1073E-002		-1.8164E-003
		277.60	14.00	7.3310E-003		-6.9916E-004

+ = Nuclide identified during the nuclide identification
* = Energy line found in the spectrum
> = MDA value not calculated
@ = Half-life too short to be able to perform the decay correction

N U C L I D E T O T A L S

Nuclide	Mass (g)

Bldg 233-S
NDA Item Description Sheet
Pipe Geometry

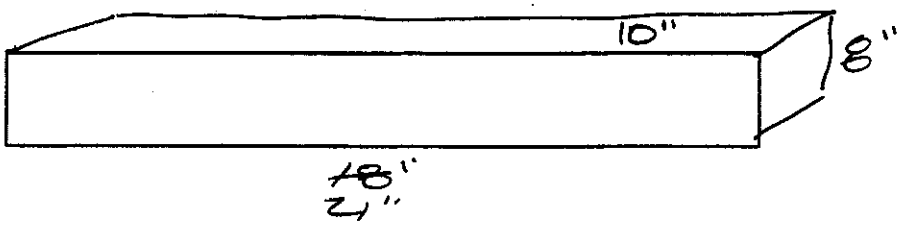

Put Dimensions on Pipe

Item ID: 1743

1.485

Weight (kg): 90LBS 40.9KG

Material Description: FLOW METER

Packaging: 3 + PALLETS

Detector Distance (in): 24

Detector Filters: NONE

Dose Rate: <.5

Comments: A 1800 SEC 1325
B 1800 1326

233-S Item Analysis

Spreadsheet Version 3.0b

1/14/02

Sample Info:

Item ID:	1743	**Assay Date:**	4-Mar-02
File Name:	1326	**File Name:**	

Data Input:

Isotope	Activity (uCi/kg)	Meas Uncert	Activity (uCi/kg)	Meas Uncert
Pu-239 (129)				
Pu-239 (414)	1.30E+01	4.50E+00		
Am-241	7.26E+00	6.11E-01		
Np-237				
U-238				
U-235				
Cs-137	4.71E-04	1.58E-04		
Co-60				

Item Parameters:

Contamination: Internal

Item Type: Box

Calcs: Use 1st

Dimensions:

Length (in):	21	Width (in):	10	Depth (in):	8
Weight (lbs):	90	Depth for TMU (in):	4	% Volume:	100

Am-241 Calcs:

Measured	7.26E+00	+/-	2.97E+00	Use Meas
Calculated	1.80E+01	+/-	1.69E+01	

Nuclide Activities:

Isotope	Activity (nCi/g)		Total Unc 1 sigma
Pu-238	5.26E+00	+/-	1.90E+00
Pu-239	1.30E+01	+/-	4.69E+00
Pu-240	6.76E+00	+/-	2.44E+00
Pu-241	2.53E+01	+/-	9.13E+00
Pu-242	6.83E-03	+/-	2.47E-03
Am-241	7.26E+00	+/-	2.97E+00
Np-237	0.00E+00	+/-	0.00E+00
U-238	0.00E+00	+/-	0.00E+00
U-235	0.00E+00	+/-	0.00E+00
Cs-137	4.71E-04	+/-	1.65E-04
Co-60	0.00E+00	+/-	0.00E+00

Results:

Total TRU Activity(nCi/g):	3.23E+01	+/-	6.35E+00	Calc from Pu-239 Act
Pu (g):	9.89E-03	**Pu (g) + 3 sigma TMU:**	2.06E-02	
		Pu(g) + 3 sigma:	2.02E-02	

Comments:

Error due to geometry.

Errors:Density > 1,

Analyst: Martin Winterrose

Date: 3/4/02

```
#Date & Time: Mon Mar 04 12:32:36 2002
~g=SIMPLE_BOX
~description=1743_VALVE
~comment=FLOW_METER
~Ccollimator=50MM-180D
~crpn=4
~Detector=7219
~Convergence in %=1            ~MDRPN=4
~Lunit=IN  ~Tunit=C  ~Dunit=G/CU.C    ~Punit=MM.HG
~at=20        ~ap=760       ~rh=50
~Energies kev=   50.000,  100.000,  128.000,  130.000,  150.000,  200.000,#
                300.000,  500.000,  700.000, 1000.000, 1400.000, 2000.000,#
               4000.000,
~Error in %=     10.000,   10.000,   10.000,   10.000,   10.000,    8.000,#
                  8.000,    6.000,    6.000,    4.000,    4.000,    4.000,#
                  4.000,
~d1.1=0.0132    ~d1.2=21        ~d1.3=8         ~d1.4=10        ~1mater=LPOLYETH ~1den=0.92
~d3.1=7.95      ~3mater=SAMPLEHS ~3den=1.485     ~3con=1
~sd1=24
```

C A N B E R R A I S O C S A N A L Y S I S

Report Generated On : 3/04/02 1:07:23 PM

Sample Title : 1743 Side B
Spectrum Description :
Sample Identification : 1326
Sample Size : 40.9 kg

Sample Taken On : 3/04/02 12:51:00 PM
Acquisition Started : 3/04/02 12:52:16 PM

Live Time: 1800.0 seconds Real Time: 1804.7 seconds

ISOCS Calabration : 1743 VALVE
Energy Calibration Used Done On : 2/27/01
Efficiency Calibration Used Done On : 3/04/02

P E A K A N A L Y S I S R E P O R T

Peak No.	Peak centroid	Energy (keV)	Net Peak Area	Net Area Uncert.	Continuum Counts
1	203.87	51.06	3.80E+002	89.25	3.16E+003
2	239.21	59.89	8.00E+004	2217.15	2.33E+003
3	340.00	85.08	8.08E+002	59.09	2.26E+003
4	349.21	87.38	1.93E+002	57.98	2.27E+003
5	395.27	98.89	2.36E+002	48.05	2.27E+003
6	414.92	103.80	1.57E+002	45.57	2.24E+003
7	518.76	129.75	1.73E+002	42.46	2.00E+003
8	1408.45	352.10	1.32E+002	15.86	1.24E+002
9	1654.48	413.59	3.25E+001	10.96	9.45E+001
10	2043.90	510.91	1.33E+002	14.91	6.64E+001
11	2333.66	583.33	8.56E+001	12.01	5.88E+001
12	2437.72	609.34	1.42E+002	14.32	4.95E+001
13	2645.73	661.32	5.62E+001	18.79	4.39E+001
14	2648.74	662.07	3.77E+001	19.52	4.43E+001
15	7062.55	1765.17	4.70E+001	7.95	2.51E+000

N U C L I D E I D E N T I F I C A T I O N R E P O R T

Nuclide Name	Id Confidence	Energy (keV)	Yield (%)	Activity (uCi)	Activity Uncertainty
CS-137	0.996	661.65*	85.12	4.71421E-004	1.58448E-004
Pu-239	0.689	129.28*	0.01	1.73338E+001	5.16320E+000
		375.00	0.00		
		413.70*	0.00	1.29842E+001	4.49768E+000
		451.50 @	0.00		
AM-241	0.995	59.54*	35.70	7.26118E+000	6.11034E-001
		125.28	0.00		
		335.40	0.00		
		662.42* @	0.00	7.49318E+001	3.88212E+001
		722.70	0.00		

I N T E R F E R E N C E C O R R E C T E D R E P O R T

Nuclide Name	Nuclide Id Confidence	Wt mean Activity (uCi/kg)	Wt mean Activity Uncertainty
CS-137	0.996	4.714208E-004	1.584475E-004
Pu-239 @	0.689	1.486077E+001	3.391387E+000
AM-241 @	0.995	7.261180E+000	6.110343E-001

? = nuclide is part of an undetermined solution
X = nuclide rejected by the interference analysis
@ = nuclide contains energy lines not used in Weighted Mean Activity

Errors quoted at 1.000 sigma

****
***** N U C L I D E M D A R E P O R T *****
****

	Nuclide Name	Energy (keV)	Yield (%)	Line MDA (uCi/kg)	Nuclide MDA (uCi/kg)	Activity (uCi/kg)
	CO-60	1173.22	100.00	4.2668E-004	3.17E-004	1.1348E-004
		1332.49	100.00	3.1731E-004		-5.5068E-005
	CS-134	475.35	1.46	3.1221E-002	4.52E-004	-4.1169E-003
		563.23	8.38	5.4593E-003		3.9328E-003
		569.32	15.43	2.8725E-003		1.6061E-003
		604.70	97.60	6.1105E-004		-2.5434E-006
		795.84	85.40	4.5222E-004		-2.5561E-004
		801.93	8.73	4.5337E-003		-2.0196E-003
		1038.57	1.00	3.9859E-002		-8.3623E-003
		1167.94	1.80	2.3781E-002		3.7870E-004
		1365.15	3.04	1.0938E-002		-5.9985E-004
+	CS-137	661.65*	85.12	2.8142E-004	2.81E-004	4.7142E-004
	NP-237	300.17	6.20	9.5853E-003	1.51E-003	3.8968E-003
		312.00	36.00	1.5055E-003		-1.2597E-003
		340.60	4.20	1.2556E-002		1.0322E-002
		375.00	0.68	7.3827E-002		3.6495E-002
		415.60	1.75	2.9377E-002		8.1768E-003
+	Pu-239	129.28*	0.01	2.1186E+001	1.92E+001	1.7334E+001
		375.00	0.00	3.1727E+001		1.5683E+001
		413.70*	0.00	1.9169E+001		1.2984E+001
		451.50	0.00	2.5272E+002		2.4089E+002
+	AM-241	59.54*	35.70	2.0603E-002	2.06E-002	7.2612E+000
		125.28	0.00	5.8514E+001		-7.1458E+000
		335.40	0.00	1.1085E+002		9.8862E+001
		662.42*	0.00	6.6830E+001		7.4932E+001
		722.70	0.00	3.3212E+002		3.4492E+002
	PU-241	114.00	0.02	1.2001E+001	1.20E+001	1.4404E+001
		332.60	0.00	1.8384E+001		-2.0225E+000
	CM-243	209.70	3.27	2.3442E-002	4.22E-003	-9.3001E-003
		228.18	10.56	6.4508E-003		-3.4555E-004
		277.60	14.00	4.2231E-003		-1.6189E-003

+ = Nuclide identified during the nuclide identification
* = Energy line found in the spectrum
> = MDA value not calculated
@ = Half-life too short to be able to perform the decay correction

N U C L I D E T O T A L S

Nuclide	Mass (g)
Pu-239	9.80E-003 +/- 2.24E-003

Bldg 233s
NDA Item Description Sheet
Box Geometry

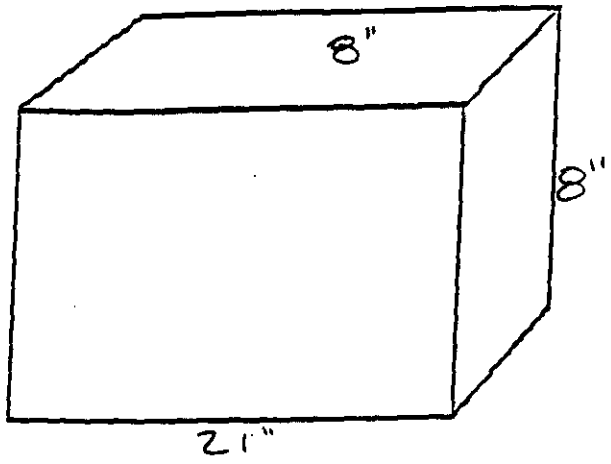

Put Dimensions on Box

Item ID: 1750

Weight (kg): 70 LBS 31.8 kg

Material Description: FLOW METER

Packaging: 3 + LAYERS

Detector Distance (in): 24"

Detector Filters: NONE

Dose Rate: <.5

Comments: A 900 1313
B 1800 1314

233-S Item Analysis

Spreadsheet Version 3.0b

1/14/02

Sample Info:

Item ID: 1750

File Name: 1314

Assay Date: 28-Feb-02

File Name:

Data Input:

Isotope	Activity (uCi/kg)	Meas Uncert
Pu-239 (129)	1.92E+01	5.36E+00
Pu-239 (414)		
Am-241	6.53E+00	5.50E-01
Np-237	6.01E-04	1.98E-04
U-238		
U-235		
Cs-137	4.37E-04	8.92E-05
Co-60		

Activity (uCi/kg)	Meas Uncert

Item Parameters:

Contamination: Internal and External

Item Type: Box

Calcs: Use 1st

Dimensions:

Length (in): 21

Width (in): 8

Depth (in): 8

Weight (lbs): 70

Depth for TMU (in): 4

% Volume: 100

Am-241 Calcs:

Measured	6.53E+00	+/-	6.55E+00	Use Meas
Calculated	2.66E+01	+/-	3.31E+01	

Nuclide Activities:

Isotope	Activity (nCi/g)		Total Unc 1 sigma
Pu-238	7.78E+00	+/-	3.80E+00
Pu-239	1.92E+01	+/-	9.37E+00
Pu-240	1.00E+01	+/-	4.88E+00
Pu-241	3.74E+01	+/-	1.82E+01
Pu-242	1.01E-02	+/-	4.93E-03
Am-241	6.53E+00	+/-	6.55E+00
Np-237	6.01E-04	+/-	2.32E-04
U-238	0.00E+00	+/-	0.00E+00
U-235	0.00E+00	+/-	0.00E+00
Cs-137	4.37E-04	+/-	1.25E-04
Co-60	0.00E+00	+/-	0.00E+00

Results:

Total TRU Activity(nCi/g):	4.35E+01	+/-	1.30E+01	Calc from Pu-239 Act
Pu (g):	1.14E-02	**Pu (g) + 3 sigma TMU:**	2.80E-02	
		Pu(g) + 3 sigma:	2.09E-02	

Comments:

Errors due to geometry.

Errors:Density > 1,

Analyst: Martin Winterrose

Date: 2/28/02

```
#Date & Time: Thu Feb 28 08:44:03 2002
~g=SIMPLE_BOX
~description=1750_VALVE
~comment=FLOW_METER
~Ccollimator=50MM-180D
~crpn=4
~Detector=7219
~Convergence in %=1            ~MDRPN=4
~Lunit=IN  ~Tunit=C  ~Dunit=G/CU.C    ~Punit=MM.HG
~at=20        ~ap=760       ~rh=50
~Energies kev=   50.000,  100.000,  128.000,  130.000,  150.000,  200.000,#
                300.000,  500.000,  700.000, 1000.000, 1400.000, 2000.000,#
               4000.000,
~Error in %=     10.000,   10.000,   10.000,   10.000,   10.000,    8.000,#
                  8.000,    6.000,    6.000,    4.000,    4.000,    4.000,#
                  4.000,
~d1.1=0.0132    ~d1.2=21        ~d1.3=8         ~d1.4=8         ~1mater=LPOLYETH ~1den=0.92
~d3.1=7.95      ~3mater=SAMPLEHS ~3den=1.444     ~3con=1
~sd1=24
```

C A N B E R R A I S O C S A N A L Y S I S

Report Generated On : 2/28/02 9:21:50 AM

Sample Title : 1750 Side B
Spectrum Description :
Sample Identification : 1314
Sample Size : 31.8 kg

Sample Taken On : 2/28/02 9:06:00 AM
Acquisition Started : 2/28/02 9:06:42 AM

Live Time: 1800.0 seconds Real Time: 1804.5 seconds

ISOCS Calabration : 1750 VALVE
Energy Calibration Used Done On : 2/27/01
Efficiency Calibration Used Done On : 2/28/02

P E A K A N A L Y S I S R E P O R T

Peak No.	Peak centroid	Energy (keV)	Net Peak Area	Net Area Uncert.	Continuum Counts
1	239.27	59.90	7.21E+004	1996.38	2.25E+003
2	340.13	85.11	7.19E+002	54.22	2.29E+003
3	351.23	87.88	1.72E+002	51.81	2.31E+003
4	396.28	99.14	2.48E+002	53.06	2.30E+003
5	518.72	129.74	1.91E+002	42.35	2.02E+003
6	954.87	238.75	1.33E+002	18.53	2.25E+002
7	1249.43	312.36	3.83E+001	12.53	1.24E+002
8	1407.81	351.94	8.96E+001	14.11	1.14E+002
9	1502.56	375.62	3.68E+001	11.13	9.50E+001
10	2044.79	511.14	1.42E+002	14.76	6.76E+001
11	2437.51	609.28	1.03E+002	12.48	4.79E+001
12	2647.56	661.78	5.00E+001	10.08	4.09E+001
13	3645.57	911.20	5.09E+001	9.00	1.79E+001
14	7066.44	1766.14	3.76E+001	7.33	1.17E+000

NUCLIDE IDENTIFICATION REPORT

Nuclide Name	Id Confidence	Energy (keV)	Yield (%)	Activity (uCi)	Activity Uncertainty
CS-137	0.999	661.65*	85.12	4.37099E-004	8.92091E-005
NP-237	0.600	300.17	6.20		
		312.00*	36.00	6.00764E-004	1.98467E-004
		340.60	4.20		
		375.00*	0.68	3.24971E-002	9.92849E-003
		415.60	1.75		
Pu-239	0.705	129.28*	0.01	1.92471E+001	5.35699E+000
		375.00*	0.00	1.39655E+001	4.35728E+000
		413.70	0.00		
		451.50 @	0.00		
AM-241	0.994	59.54*	35.70	6.53055E+000	5.49501E-001
		125.28	0.00		
		335.40	0.00		
		662.42* @	0.00	1.03350E+002	2.10912E+001
		722.70	0.00		

INTERFERENCE CORRECTED REPORT

Nuclide Name	Nuclide Id Confidence	Wt mean Activity (uCi/kg)	Wt mean Activity Uncertainty
CS-137	0.999	4.094795E-004	8.923157E-005
NP-237	0.600	5.982480E-004	1.984478E-004
Pu-239 @	0.705	1.641420E+001	3.051752E+000
AM-241 @	0.994	6.530546E+000	5.495006E-001

? = nuclide is part of an undetermined solution
X = nuclide rejected by the interference analysis
@ = nuclide contains energy lines not used in Weighted Mean Activity

Errors quoted at 1.000 sigma

Bldg 233s
NDA Item Description Sheet
Box Geometry

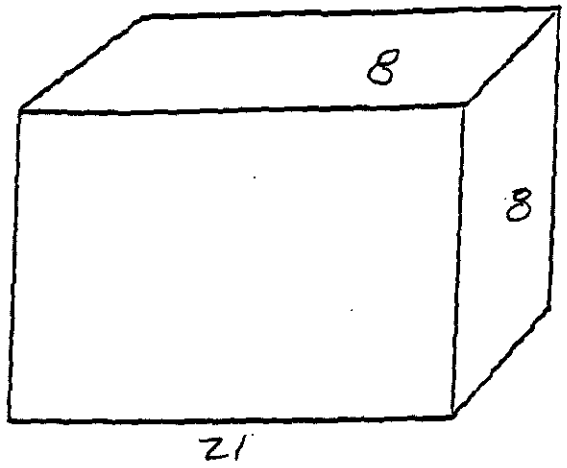

Put Dimensions on Box

Item ID: 1245

Weight (kg): 70.5

Material Description: FLOW METER

Packaging: 3 + LAYERS

Detector Distance (in): 24

Detector Filters: NONE

Dose Rate: <.5

Comments: A1800 1317
B3600 1318

233-S Item Analysis

Spreadsheet Version 3.0b

1/14/02

Sample Info:

Item ID: 1745

File Name: 1318

Assay Date: 28-Feb-02

File Name:

Data Input:

Isotope	Activity (uCi/kg)	Meas Uncert
Pu-239 (129)	1.35E+01	3.68E+00
Pu-239 (414)		
Am-241	5.87E+00	4.94E-01
Np-237		
U-238		
U-235	5.50E-04	1.42E-04
Cs-137	5.27E-04	6.67E-05
Co-60		

Activity (uCi/kg)	Meas Uncert

Item Parameters:

Contamination: Internal and External

Item Type: Box

Calcs: Use 1st

Dimensions:

Length (in): 21

Width (in): 8

Depth (in): 8

Weight (lbs): 70.5

Depth for TMU (in): 4

% Volume: 100

Am-241 Calcs:

Measured	5.87E+00	+/-	5.89E+00	Use Meas
Calculated	1.87E+01	+/-	2.31E+01	

Nuclide Activities:

Isotope	Activity (nCi/g)		Total Unc 1 sigma
Pu-238	5.47E+00	+/-	2.65E+00
Pu-239	1.35E+01	+/-	6.54E+00
Pu-240	7.03E+00	+/-	3.41E+00
Pu-241	2.63E+01	+/-	1.27E+01
Pu-242	7.10E-03	+/-	3.44E-03
Am-241	5.87E+00	+/-	5.89E+00
Np-237	0.00E+00	+/-	0.00E+00
U-238	0.00E+00	+/-	0.00E+00
U-235	5.50E-04	+/-	1.80E-04
Cs-137	5.27E-04	+/-	1.25E-04
Co-60	0.00E+00	+/-	0.00E+00

Results:

Total TRU Activity(nCi/g):	3.19E+01	+/-	9.80E+00	Calc from Pu-239 Act
Pu (g):	8.05E-03	**Pu (g) + 3 sigma TMU:**	1.98E-02	
		Pu(g) + 3 sigma:	1.46E-02	

Comments:

Errors due to geometry.

Errors:Density > 1,

Analyst: Martin Winterrose

Date: 2/28/02

```
#Date & Time: Thu Feb 28 11:06:54 2002
~g=SIMPLE_BOX
~description=1745_VALVE
~comment=FLOW_METER
~Ccollimator=50MM-180D
~crpn=4
~Detector=7219
~Convergence in %=1            ~MDRPN=4
~Lunit=IN  ~Tunit=C  ~Dunit=G/CU.C    ~Punit=MM.HG
~at=20        ~ap=760       ~rh=50
~Energies kev=   50.000,  100.000,  128.000,  130.000,  150.000,  200.000,#
                300.000,  500.000,  700.000, 1000.000, 1400.000, 2000.000,#
               4000.000,
~Error in %=     10.000,   10.000,   10.000,   10.000,   10.000,    8.000,#
                  8.000,    6.000,    6.000,    4.000,    4.000,    4.000,#
                  4.000,
~d1.1=0.0132    ~d1.2=21        ~d1.3=8         ~d1.4=8         ~1mater=LPOLYET
~d3.1=7.95      ~3mater=SAMPLEHS ~3den=1.444     ~3con=1
~sd1=24
```

C A N B E R R A I S O C S A N A L Y S I S

Report Generated On : 2/28/02 12:23:01 PM

Sample Title : 1745 Side B
Spectrum Description :
Sample Identification : 1318
Sample Size : 32.0 kg

Sample Taken On : 2/28/02 11:52:00 AM
Acquisition Started : 2/28/02 11:52:47 AM

Live Time: 3600.0 seconds Real Time: 3608.4 seconds

ISOCS Calabration : 1745 VALCE
Energy Calibration Used Done On : 2/27/01
Efficiency Calibration Used Done On : 2/28/02

P E A K A N A L Y S I S R E P O R T

Peak No.	Peak centroid	Energy (keV)	Net Peak Area	Net Area Uncert.	Continuum Counts
1	239.24	59.90	1.30E+005	3615.33	4.20E+003
2	340.35	85.16	1.43E+003	94.55	4.21E+003
3	351.42	87.93	3.87E+002	88.04	4.25E+003
4	395.78	99.02	2.80E+002	67.06	4.28E+003
5	411.84	103.03	2.07E+002	65.63	4.25E+003
6	518.90	129.79	2.69E+002	57.93	3.78E+003
7	743.23	185.85	1.12E+002	28.58	9.79E+002
8	955.78	238.97	1.99E+002	24.96	4.82E+002
9	1501.73	375.41	5.18E+001	15.23	2.19E+002
10	2043.72	510.87	2.31E+002	24.00	1.36E+002
11	2333.47	583.28	1.34E+002	15.69	1.20E+002
12	2437.49	609.28	1.79E+002	16.95	1.04E+002
13	2647.04	661.65	1.21E+002	14.86	8.87E+001
14	3646.59	911.46	1.03E+002	13.26	5.96E+001
15	7064.64	1765.69	6.81E+001	9.40	4.35E+000

NUCLIDE IDENTIFICATION REPORT

Nuclide Name	Id Confidence	Energy (keV)	Yield (%)	Activity (uCi)	Activity Uncertainty
CS-137	1.000	661.65*	85.12	5.26613E-004	6.66843E-005
U-235	0.656	143.76	10.50		
		185.71*	54.00	5.49839E-004	1.42337E-004
		205.31	4.70		
Pu-239	0.706	129.28*	0.01	1.34948E+001	3.68342E+000
		375.00*	0.00	9.76918E+000	2.96677E+000
		413.70	0.00		
		451.50 @	0.00		
AM-241	0.994	59.54*	35.70	5.86954E+000	4.93990E-001
		125.28	0.00		
		335.40	0.00		
		662.42* @	0.00	1.24515E+002	1.57635E+001
		722.70	0.00		

INTERFERENCE CORRECTED REPORT

Nuclide Name	Nuclide Id Confidence	Wt mean Activity (uCi/kg)	Wt mean Activity Uncertainty
CS-137	1.000	5.017889E-004	6.670181E-005
U-235	0.656	5.498388E-004	1.423374E-004
Pu-239 @	0.706	1.123512E+001	2.310518E+000
AM-241 @	0.994	5.869537E+000	4.939904E-001

? = nuclide is part of an undetermined solution
X = nuclide rejected by the interference analysis
@ = nuclide contains energy lines not used in Weighted Mean Activity

Errors quoted at 1.000 sigma

****
***** N U C L I D E M D A R E P O R T *****
****

	Nuclide Name	Energy (keV)	Yield (%)	Line MDA (uCi/kg)	Nuclide MDA (uCi/kg)	Activity (uCi/kg)
	CO-60	1173.22	100.00	3.0589E-004	2.61E-004	-1.8881E-004
		1332.49	100.00	2.6132E-004		3.7472E-004
	CS-134	475.35	1.46	2.2728E-002	3.57E-004	2.1368E-002
		563.23	8.38	3.7517E-003		-1.5468E-003
		569.32	15.43	2.0350E-003		-1.0906E-003
		604.70	97.60	3.9676E-004		-2.2876E-007
		795.84	85.40	3.5712E-004		2.6551E-004
		801.93	8.73	3.4839E-003		-3.3371E-004
		1038.57	1.00	2.8547E-002		3.2623E-003
		1167.94	1.80	1.7980E-002		1.2663E-002
		1365.15	3.04	7.4990E-003		-2.1491E-003
+	CS-137	661.65*	85.12	2.0232E-004	2.02E-004	5.2661E-004
	NP-237	300.17	6.20	6.4975E-003	1.07E-003	6.6325E-003
		312.00	36.00	1.0687E-003		3.9857E-004
		340.60	4.20	8.8429E-003		-5.3296E-003
		375.00	0.68	5.1307E-002		2.0002E-002
		415.60	1.75	1.9815E-002		7.9225E-003
+	Pu-239	129.28*	0.01	1.4484E+001	1.35E+001	1.3495E+001
		375.00*	0.00	1.3499E+001		9.7692E+000
		413.70	0.00	2.2738E+001		9.8965E-001
		451.50	0.00	1.7450E+002		2.6356E+001
+	AM-241	59.54*	35.70	1.3707E-002	1.37E-002	5.8695E+000
		125.28	0.00	4.0087E+001		7.6197E-001
		335.40	0.00	7.8244E+001		4.9786E+001
		662.42*	0.00	4.7837E+001		1.2451E+002
		722.70	0.00	2.4380E+002		1.1744E+002
	PU-241	114.00	0.02	8.1437E+000	8.14E+000	5.2649E+000
		332.60	0.00	1.3227E+001		2.5988E-001
	CM-243	209.70	3.27	1.6034E-002	2.90E-003	-2.3653E-003
		228.18	10.56	4.4981E-003		-1.0694E-003
		277.60	14.00	2.8967E-003		-2.5406E-003

+ = Nuclide identified during the nuclide identification
* = Energy line found in the spectrum
> = MDA value not calculated
@ = Half-life too short to be able to perform the decay correction

N U C L I D E T O T A L S

Nuclide	Mass (g)
U-235	7.99E-003 +/- 2.07E-003
Pu-239	5.80E-003 +/- 1.19E-003

Bldg 233s
NDA Item Description Sheet
Box Geometry

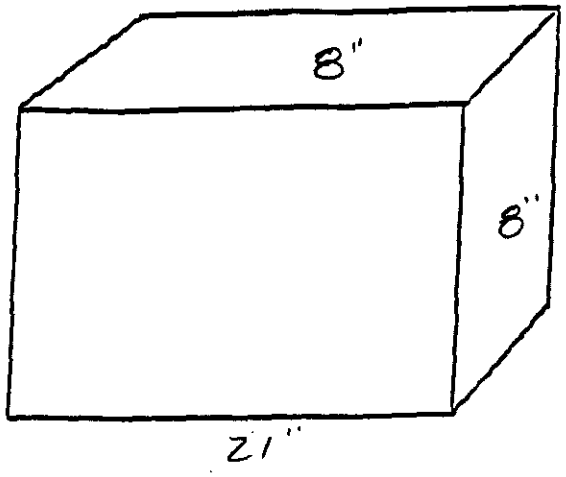

Put Dimensions on Box

1.485°

Item ID: 1756

Weight (kg): 72 LBS

Material Description: FLOW METER

Packaging: 3 + LAYERS

Detector Distance (in): 24"

Detector Filters: NONE

Dose Rate: <1.5

Comments: A 900 SEL 1336
B 1800 1337

233-S Item Analysis

Spreadsheet Version 3.0b

1/14/02

Sample Info:

Item ID:	1756	**Assay Date:**	6-Mar-02
File Name:	1337	**File Name:**	

Data Input:

Isotope	Activity (uCi/kg)	Meas Uncert	Activity (uCi/kg)	Meas Uncert
Pu-239 (129)				
Pu-239 (414)	1.29E+01	4.63E+00		
Am-241	6.96E+00	5.92E-01		
Np-237				
U-238				
U-235				
Cs-137	4.05E-04	8.63E-05		
Co-60				

Item Parameters:

Contamination: Internal

Item Type: Box

Calcs: Use 1st

Dimensions:

Length (in):	21	Width (in):	8	Depth (in):	8
Weight (lbs):	72	Depth for TMU (in):	4	% Volume:	100

Am-241 Calcs:

Measured	6.96E+00	+/-	2.84E+00	Use Meas
Calculated	1.79E+01	+/-	1.73E+01	

Nuclide Activities:

Isotope	Activity (nCi/g)		Total Unc 1 sigma
Pu-238	5.23E+00	+/-	1.95E+00
Pu-239	1.29E+01	+/-	4.81E+00
Pu-240	6.72E+00	+/-	2.51E+00
Pu-241	2.51E+01	+/-	9.37E+00
Pu-242	6.79E-03	+/-	2.53E-03
Am-241	6.96E+00	+/-	2.84E+00
Np-237	0.00E+00	+/-	0.00E+00
U-238	0.00E+00	+/-	0.00E+00
U-235	0.00E+00	+/-	0.00E+00
Cs-137	4.05E-04	+/-	9.53E-05
Co-60	0.00E+00	+/-	0.00E+00

Results:

Total TRU Activity(nCi/g):	3.18E+01	+/-	6.43E+00	Calc from Pu-239 Act
Pu (g):	7.86E-03	**Pu (g) + 3 sigma TMU:**	1.67E-02	
		Pu(g) + 3 sigma:	1.63E-02	

Comments:

Density error is due to waste matrix.

Errors:Density > 1,

Analyst: Martin Winterrose

Date: 3/6/02

```
#Date & Time: Wed Mar 06 09:13:07 2002
~g=SIMPLE_BOX
~description=1756_VALVE
~comment=FLOW_METER
~Ccollimator=50MM-180D
~crpn=4
~Detector=7219
~Convergence in %=1            ~MDRPN=4
~Lunit=IN  ~Tunit=C  ~Dunit=G/CU.C    ~Punit=MM.HG
~at=20        ~ap=760       ~rh=50
~Energies kev=   50.000,  100.000,  128.000,  130.000,  150.000,  200.000,#
                300.000,  500.000,  700.000, 1000.000, 1400.000, 2000.000,#
               4000.000,
~Error in %=     10.000,   10.000,   10.000,   10.000,   10.000,    8.000,#
                  8.000,    6.000,    6.000,    4.000,    4.000,    4.000,#
                  4.000,
~d1.1=0.0132    ~d1.2=21        ~d1.3=8         ~d1.4=8         ~1mater=LPOLYETH ~1den=0.92
~d3.1=7.95      ~3mater=SAMPLEHS ~3den=1.485     ~3con=1
~sd1=24
```

C A N B E R R A I S O C S A N A L Y S I S

Report Generated On : 3/06/02 9:54:13 AM

Sample Title : 1756 Side B
Spectrum Description :
Sample Identification : 1337
Sample Size : 32.7 kg

Sample Taken On : 3/06/02 9:37:00 AM
Acquisition Started : 3/06/02 9:39:06 AM

Live Time: 1800.0 seconds Real Time: 1804.5 seconds

ISOCS Calabration : 1756 VALVE
Energy Calibration Used Done On : 2/27/01
Efficiency Calibration Used Done On : 3/06/02

P E A K A N A L Y S I S R E P O R T

Peak No.	Peak centroid	Energy (keV)	Net Peak Area	Net Area Uncert.	Continuum Counts
1	239.16	59.88	7.67E+004	2336.81	2.15E+003
2	340.15	85.12	7.63E+002	55.57	2.12E+003
3	350.29	87.65	1.90E+002	50.58	2.14E+003
4	395.40	98.92	2.66E+002	46.92	2.15E+003
5	517.47	129.43	2.04E+002	41.57	1.92E+003
6	1407.80	351.94	1.09E+002	14.95	1.17E+002
7	1654.76	413.66	3.17E+001	11.07	7.19E+001
8	2042.89	510.66	1.06E+002	15.89	6.77E+001
9	2437.01	609.16	1.61E+002	14.82	5.02E+001
10	2646.44	661.50	4.67E+001	9.85	3.96E+001
11	4481.75	1120.18	7.30E+001	10.07	2.13E+001
12	7060.36	1764.62	4.89E+001	8.11	2.06E+000

NUCLIDE IDENTIFICATION REPORT

Nuclide Name	Id Confidence	Energy (keV)	Yield (%)	Activity (uCi)	Activity Uncertainty
CS-137	0.999	661.65*	85.12	4.04747E-004	8.62864E-005
Pu-239	0.696	129.28*	0.01	2.05786E+001	5.43153E+000
		375.00	0.00		
		413.70*	0.00	1.29445E+001	4.62897E+000
		451.50 @	0.00		
AM-241	0.995	59.54*	35.70	6.95575E+000	5.91937E-001
		125.28	0.00		
		335.40	0.00		
		662.42* @	0.00	9.57001E+001	2.04003E+001
		722.70	0.00		

INTERFERENCE CORRECTED REPORT

Nuclide Name	Nuclide Id Confidence	Wt mean Activity (uCi/kg)	Wt mean Activity Uncertainty
CS-137	0.999	3.753285E-004	8.631581E-005
Pu-239 @	0.696	1.615639E+001	3.523094E+000
AM-241 @	0.995	6.955745E+000	5.919372E-001

? = nuclide is part of an undetermined solution
X = nuclide rejected by the interference analysis
@ = nuclide contains energy lines not used in Weighted Mean Activity

Errors quoted at 1.000 sigma

****
***** N U C L I D E M D A R E P O R T *****
****

	Nuclide Name	Energy (keV)	Yield (%)	Line MDA (uCi/kg)	Nuclide MDA (uCi/kg)	Activity (uCi/kg)
	CO-60	1173.22	100.00	4.3269E-004	3.44E-004	-1.4590E-004
		1332.49	100.00	3.4433E-004		2.5129E-004
	CS-134	475.35	1.46	3.2569E-002	4.75E-004	-2.9753E-003
		563.23	8.38	5.4282E-003		1.5048E-003
		569.32	15.43	3.0743E-003		1.1683E-004
		604.70	97.60	6.5046E-004		1.7459E-005
		795.84	85.40	4.7540E-004		-2.8096E-004
		801.93	8.73	4.9012E-003		1.5224E-003
		1038.57	1.00	3.9966E-002		-1.5061E-002
		1167.94	1.80	2.2453E-002		-9.9354E-003
		1365.15	3.04	1.1752E-002		9.6494E-003
+	CS-137	661.65*	85.12	2.7698E-004	2.77E-004	4.0475E-004
	NP-237	300.17	6.20	9.8401E-003	1.52E-003	3.2935E-003
		312.00	36.00	1.5216E-003		-9.2041E-004
		340.60	4.20	1.2722E-002		1.3725E-002
		375.00	0.68	7.7284E-002		1.8634E-002
		415.60	1.75	3.0106E-002		1.5906E-002
+	Pu-239	129.28*	0.01	2.0811E+001	1.72E+001	2.0579E+001
		375.00	0.00	3.3212E+001		8.0077E+000
		413.70*	0.00	1.7199E+001		1.2944E+001
		451.50	0.00	2.5977E+002		1.2335E+002
+	AM-241	59.54*	35.70	1.9786E-002	1.98E-002	6.9557E+000
		125.28	0.00	5.7259E+001		-2.7995E+000
		335.40	0.00	1.1057E+002		3.2411E+000
		662.42*	0.00	6.5491E+001		9.5700E+001
		722.70	0.00	3.4358E+002		4.3742E+002
	PU-241	114.00	0.02	1.1485E+001	1.15E+001	-4.9674E+000
		332.60	0.00	1.9686E+001		1.2226E+001
	CM-243	209.70	3.27	2.3226E-002	3.95E-003	4.6210E-003
		228.18	10.56	6.4474E-003		-2.0462E-003
		277.60	14.00	3.9516E-003		-1.3699E-003

+ = Nuclide identified during the nuclide identification
* = Energy line found in the spectrum
> = MDA value not calculated
@ = Half-life too short to be able to perform the decay correction

N U C L I D E T O T A L S

Nuclide	Mass (g)
Pu-239	8.53E-003 +/- 1.86E-003

Bldg 233s
NDA Item Description Sheet
Box Geometry

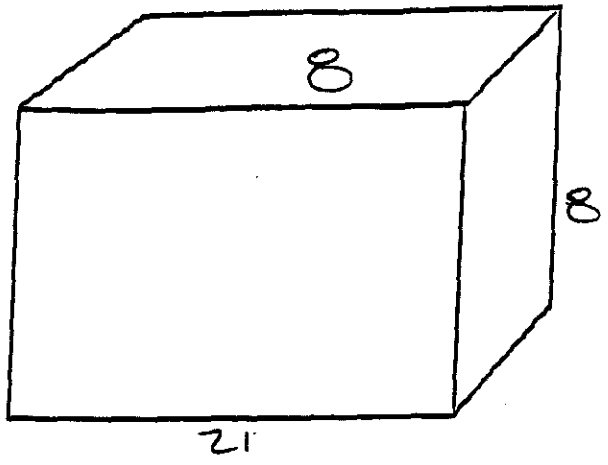

Put Dimensions on Box

Item ID: 1760

Weight (kg): 60 LBS

Material Description: FLOW METER

Packaging: 3 LAYERS

Detector Distance (in): 24

Detector Filters: NONE

Dose Rate: <.5

Comments: A ~~900~~ 1800 1315
B 3600 1314

233-S Item Analysis

Spreadsheet Version 3.0b

1/14/02

Sample Info:

Item ID: 1760

File Name: 1316

Assay Date: 28-Feb-02

File Name:

Data Input:

Isotope	Activity (uCi/kg)	Meas Uncert	Activity (uCi/kg)	Meas Uncert
Pu-239 (129)	1.43E+01	3.88E+00		
Pu-239 (414)				
Am-241	6.48E+00	5.46E-01		
Np-237				
U-238				
U-235				
Cs-137	4.36E-04	6.27E-05		
Co-60				

Item Parameters:

Contamination: Internal and External

Item Type: Box

Calcs: Use 1st

Dimensions:

Length (in): 21

Width (in): 8

Depth (in): 8

Weight (lbs): 69

Depth for TMU (in): 4

% Volume: 100

Am-241 Calcs:

Measured	6.48E+00	+/-	6.50E+00	Use Meas
Calculated	1.97E+01	+/-	2.44E+01	

Nuclide Activities:

Isotope	Activity (nCi/g)		Total Unc 1 sigma
Pu-238	5.78E+00	+/-	2.80E+00
Pu-239	1.43E+01	+/-	6.90E+00
Pu-240	7.43E+00	+/-	3.60E+00
Pu-241	2.78E+01	+/-	1.34E+01
Pu-242	7.51E-03	+/-	3.63E-03
Am-241	6.48E+00	+/-	6.50E+00
Np-237	0.00E+00	+/-	0.00E+00
U-238	0.00E+00	+/-	0.00E+00
U-235	0.00E+00	+/-	0.00E+00
Cs-137	4.36E-04	+/-	1.07E-04
Co-60	0.00E+00	+/-	0.00E+00

Results:

Total TRU Activity(nCi/g):	3.40E+01	+/-	1.05E+01	Calc from Pu-239 Act	
Pu (g):	8.33E-03	**Pu (g) + 3 sigma TMU:**	2.04E-02		
		Pu(g) + 3 sigma:	1.51E-02		

Comments:

Errors due to geometry.

Errors:Density > 1,

Analyst: Martin Winterrose

Date: 2/28/02

```
·Date & Time: Thu Feb 28 09:47:44 2002
·g=SIMPLE_BOX
·description=1760_VALVE
·comment=FLOW_METER
·Ccollimator=50MM-180D
·crpn=4
·Detector=7219
·Convergence in %=1            ~MDRPN=4
·Lunit=IN  ~Tunit=C  ~Dunit=G/CU.C    ~Punit=MM.HG
·at=20        ~ap=760       ~rh=50
·Energies kev=   50.000,  100.000,  128.000,  130.000,  150.000,  200.000,#
                300.000,  500.000,  700.000, 1000.000, 1400.000, 2000.000,#
               4000.000,
·Error in %=     10.000,   10.000,   10.000,   10.000,   10.000,    8.000,#
                  8.000,    6.000,    6.000,    4.000,    4.000,    4.000,#
                  4.000,
·d1.1=0.0132    ~d1.2=21        ~d1.3=8         ~d1.4=8         ~1mater=LPOLYETH ~1den=0.92
·d3.1=7.95      ~3mater=SAMPLEHS ~3den=1.444     ~3con=1
·sd1=24
```

C A N B E R R A I S O C S A N A L Y S I S

:eport Generated On : 2/28/02 10:52:22 AM

:ample Title : 1760 Side B
:pectrum Description :
:ample Identification : 1316
:ample Size : 31.8 kg

:ample Taken On : 2/28/02 10:21:00 AM
\cquisition Started : 2/28/02 10:22:12 AM

:ive Time: 3600.0 seconds Real Time: 3608.8 seconds

ISOCS Calabration : 1760 VALVE
Energy Calibration Used Done On : 2/27/01
Efficiency Calibration Used Done On : 2/28/02

P E A K A N A L Y S I S R E P O R T

Peak No.	Peak centroid	Energy (keV)	Net Peak Area	Net Area Uncert.	Continuum Counts
1	239.22	59.89	1.43E+005	4022.30	4.35E+003
2	340.04	85.09	1.26E+003	96.36	4.31E+003
3	395.90	99.05	5.65E+002	67.17	4.37E+003
4	518.89	129.79	2.83E+002	58.14	3.87E+003
5	955.50	238.90	1.86E+002	24.62	5.03E+002
6	1409.08	352.26	1.68E+002	19.06	2.32E+002
7	2044.85	511.15	2.59E+002	25.31	1.40E+002
8	2334.12	583.44	9.11E+001	14.26	1.21E+002
9	2437.66	609.32	2.09E+002	17.97	1.09E+002
10	2647.66	661.81	9.98E+001	14.00	9.40E+001
11	3645.18	911.10	1.13E+002	13.46	5.79E+001
12	3877.58	969.18	6.68E+001	11.66	5.23E+001
13	4483.19	1120.54	7.30E+001	11.79	5.27E+001
14	7064.05	1765.54	7.90E+001	9.97	6.28E+000

N U C L I D E I D E N T I F I C A T I O N R E P O R T

Nuclide Name	Id Confidence	Energy (keV)	Yield (%)	Activity (uCi)	Activity Uncertainty
CS-137	0.999	661.65*	85.12	4.36361E-004	6.27370E-005
Pu-239	0.435	129.28*	0.01	1.42686E+001	3.78667E+000
		375.00	0.00		
		413.70	0.00		
		451.50 @	0.00		
AM-241	0.995	59.54*	35.70	6.48035E+000	5.46235E-001
		125.28	0.00		
		335.40	0.00		
		662.42* @	0.00	1.03175E+002	1.48312E+001
		722.70	0.00		

I N T E R F E R E N C E C O R R E C T E D R E P O R T

Nuclide Name	Nuclide Id Confidence	Wt mean Activity (uCi/kg)	Wt mean Activity Uncertainty
CS-137	0.999	4.089532E-004	6.276843E-005
Pu-239 @	0.435	1.426863E+001	3.786667E+000
AM-241 @	0.995	6.480350E+000	5.462345E-001

? = nuclide is part of an undetermined solution
X = nuclide rejected by the interference analysis
@ = nuclide contains energy lines not used in Weighted Mean Activity

Errors quoted at 1.000 sigma

****
***** N U C L I D E M D A R E P O R T *****
****

	Nuclide Name	Energy (keV)	Yield (%)	Line MDA (uCi/kg)	Nuclide MDA (uCi/kg)	Activity (uCi/kg)
	CO-60	1173.22	100.00	3.1477E-004	2.53E-004	1.7790E-004
		1332.49	100.00	2.5334E-004		1.6848E-004
	CS-134	475.35	1.46	2.2495E-002	3.43E-004	5.5196E-003
		563.23	8.38	3.6909E-003		8.3135E-004
		569.32	15.43	2.0044E-003		-3.5074E-004
		604.70	97.60	4.0586E-004		-6.2085E-006
		795.84	85.40	3.4312E-004		3.2647E-004
		801.93	8.73	3.2954E-003		-3.2371E-003
		1038.57	1.00	3.0803E-002		-3.3361E-003
		1167.94	1.80	1.7151E-002		6.2734E-003
		1365.15	3.04	7.7820E-003		2.0902E-003
+	CS-137	661.65*	85.12	2.0912E-004	2.09E-004	4.3636E-004
	NP-237	300.17	6.20	6.4918E-003	1.08E-003	2.0508E-003
		312.00	36.00	1.0845E-003		5.9962E-004
		340.60	4.20	9.0308E-003		5.8847E-003
		375.00	0.68	5.1613E-002		2.5001E-003
		415.60	1.75	1.9880E-002		-1.9155E-003
+	Pu-239	129.28*	0.01	1.4740E+001	1.47E+001	1.4269E+001
		375.00	0.00	2.2181E+001		1.0744E+000
		413.70	0.00	2.3340E+001		-4.1212E+000
		451.50	0.00	1.7645E+002		-9.2889E+001
+	AM-241	59.54*	35.70	1.4028E-002	1.40E-002	6.4804E+000
		125.28	0.00	4.0567E+001		2.5994E+000
		335.40	0.00	7.6636E+001		1.6647E+001
		662.42*	0.00	4.9445E+001		1.0318E+002
		722.70	0.00	2.4725E+002		3.2948E+002
	PU-241	114.00	0.02	8.2232E+000	8.22E+000	6.0457E+000
		332.60	0.00	1.2727E+001		-1.3005E+001
	CM-243	209.70	3.27	1.6041E-002	2.95E-003	-1.2678E-002
		228.18	10.56	4.4897E-003		-1.9530E-003
		277.60	14.00	2.9470E-003		7.5592E-004

+ = Nuclide identified during the nuclide identification
* = Energy line found in the spectrum
> = MDA value not calculated
@ = Half-life too short to be able to perform the decay correction

N U C L I D E T O T A L S

Nuclide	Mass (g)
Pu-239	7.32E-003 +/- 1.94E-003

Bldg 233-S
NDA Item Description Sheet
~~Pipe~~ Geometry
Box

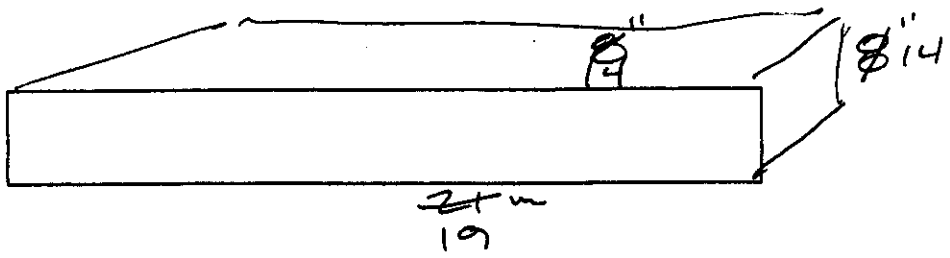

Put Dimensions on Pipe

Item ID: 17 61

Weight (kg): Cs 29.54 .4842

Material Description: SWITCHES

Packaging: 3 LAYERS

Detector Distance (in): 24"

Detector Filters: NONE

Dose Rate: <.5

Comments: A 900 1319
B 1800 1320

233-S Item Analysis

Spreadsheet Version 3.0b

1/14/02

Sample Info:

Item ID: 1761

File Name: 1320

Assay Date: 28-Feb-02

File Name:

Data Input:

Isotope	Activity (uCi/kg)	Meas Uncert	Activity (uCi/kg)	Meas Uncert
Pu-239 (129)	2.64E+01			
Pu-239 (414)				
Am-241	1.83E+00	1.53E-01		
Np-237				
U-238				
U-235				
Cs-137	5.21E-04	8.86E-05		
Co-60				

Item Parameters:

Contamination: Internal and External

Item Type: Box

Calcs: Use 1st

Dimensions:

Length (in): 19

Width (in): 14

Depth (in): 14

Weight (lbs): 65

Depth for TMU (in): 4

% Volume: 100

Am-241 Calcs:

Measured	1.83E+00	+/-	3.30E+00	Use Meas
Calculated	3.65E+01	+/-	5.23E+01	

Nuclide Activities:

Isotope	Activity (nCi/g)		Total Unc 1 sigma
Pu-238	1.07E+01	+/-	6.06E+00
Pu-239	2.64E+01	+/-	1.49E+01
Pu-240	1.38E+01	+/-	7.79E+00
Pu-241	5.14E+01	+/-	2.91E+01
Pu-242	1.39E-02	+/-	7.86E-03
Am-241	1.83E+00	+/-	3.30E+00
Np-237	0.00E+00	+/-	0.00E+00
U-238	0.00E+00	+/-	0.00E+00
U-235	0.00E+00	+/-	0.00E+00
Cs-137	5.21E-04	+/-	1.72E-04
Co-60	0.00E+00	+/-	0.00E+00

Results:

Total TRU Activity(nCi/g):		5.27E+01	+/-	1.82E+01	Calc from Pu-239 MDA
Pu (g):	1.45E-02	**Pu (g) + 3 sigma TMU:**		3.92E-02	
		Pu(g) + 3 sigma:		1.45E-02	

Comments:

Errors:

Analyst: Martin Winterrose

Date: 2/28/02

```
#Date & Time: Thu Feb 28 12:39:21 2002
~g=SIMPLE_BOX
~description=1761_SWITCHES
~comment=SWITCHES
~Ccollimator=50MM-180D
~crpn=4
~Detector=7219
~Convergence in %=1            ~MDRPN=4
~Lunit=IN  ~Tunit=C  ~Dunit=G/CU.C    ~Punit=MM.HG
~at=20        ~ap=760       ~rh=50
~Energies kev=   50.000,  100.000,  128.000,  130.000,  150.000,  200.000,#
                300.000,  500.000,  700.000, 1000.000, 1400.000, 2000.000,#
               4000.000,
~Error in %=     10.000,   10.000,   10.000,   10.000,   10.000,    8.000,#
                  8.000,    6.000,    6.000,    4.000,    4.000,    4.000,#
                  4.000,
~d1.1=0.0132    ~d1.2=19        ~d1.3=14        ~d1.4=14        ~1mater=LPOLYETH ~1den=0.92
~d3.1=13.95     ~3mater=SAMPLEHS ~3den=0.4842    ~3con=1
~sd1=24
```

C A N B E R R A I S O C S A N A L Y S I S

Report Generated On : 2/28/02 1:12:31 PM

Sample Title : 1761 Side B
Spectrum Description :
Sample Identification : 1320
Sample Size : 29.5 kg

Sample Taken On : 2/28/02 12:57:00 PM
Acquisition Started : 2/28/02 12:57:24 PM

Live Time: 1800.0 seconds Real Time: 1803.1 seconds

ISOCS Calabration : 1761 SWITCHES
Energy Calibration Used Done On : 2/27/01
Efficiency Calibration Used Done On : 2/28/02

P E A K A N A L Y S I S R E P O R T

Peak No.	Peak centroid	Energy (keV)	Net Peak Area	Net Area Uncert.	Continuum Counts
1	197.94	49.57	1.80E+002	67.45	2.13E+003
2	239.23	59.89	3.00E+004	811.68	1.89E+003
3	340.39	85.17	6.79E+002	52.90	2.14E+003
4	350.47	87.69	1.54E+002	52.36	2.15E+003
5	372.34	93.16	1.37E+002	47.78	2.18E+003
6	381.30	95.40	1.76E+002	49.16	2.18E+003
7	1408.23	352.05	8.20E+001	13.81	1.06E+002
8	2043.42	510.79	1.28E+002	15.27	5.60E+001
9	2438.02	609.41	1.02E+002	12.62	4.37E+001
10	2647.40	661.74	6.55E+001	10.94	3.62E+001
11	3646.59	911.46	5.74E+001	9.92	2.90E+001
12	7063.35	1765.37	3.18E+001	6.82	1.88E+000

N U C L I D E I D E N T I F I C A T I O N R E P O R T

Nuclide Name	Id Confidence	Energy (keV)	Yield (%)	Activity (uCi)	Activity Uncertainty
CS-137	1.000	661.65*	85.12	5.21200E-004	8.85940E-005
AM-241	0.995	59.54*	35.70	1.82095E+000	1.52845E-001
		125.28	0.00		
		335.40	0.00		
		662.42* @	0.00	1.23235E+002	2.09449E+001
		722.70	0.00		

I N T E R F E R E N C E C O R R E C T E D R E P O R T

Nuclide Name	Nuclide Id Confidence	Wt mean Activity (uCi/kg)	Wt mean Activity Uncertainty
CS-137	1.000	5.134987E-004	8.858517E-005
AM-241 @	0.995	1.820947E+000	1.528446E-001

? = nuclide is part of an undetermined solution
X = nuclide rejected by the interference analysis
@ = nuclide contains energy lines not used in Weighted Mean Activity

Errors quoted at 1.000 sigma

****
***** N U C L I D E M D A R E P O R T *****
****

	Nuclide Name	Energy (keV)	Yield (%)	Line MDA (uCi/kg)	Nuclide MDA (uCi/kg)	Activity (uCi/kg)
	CO-60	1173.22	100.00	4.2346E-004	3.37E-004	-1.0670E-004
		1332.49	100.00	3.3667E-004		1.0898E-004
	CS-134	475.35	1.46	2.7686E-002	4.54E-004	-6.9085E-004
		563.23	8.38	5.3936E-003		2.6151E-003
		569.32	15.43	2.7333E-003		2.2023E-004
		604.70	97.60	5.0757E-004		-2.1958E-004
		795.84	85.40	4.5424E-004		2.1872E-004
		801.93	8.73	4.7124E-003		-2.1765E-003
		1038.57	1.00	4.0076E-002		5.6452E-003
		1167.94	1.80	2.4300E-002		1.0221E-002
		1365.15	3.04	1.0560E-002		6.5911E-003
+	CS-137	661.65*	85.12	2.4429E-004	2.44E-004	5.2120E-004
	NP-237	300.17	6.20	7.5755E-003	1.26E-003	-8.1804E-004
		312.00	36.00	1.2572E-003		-5.7683E-005
		340.60	4.20	1.0957E-002		1.1746E-003
		375.00	0.68	6.1942E-002		-3.9160E-002
		415.60	1.75	2.4202E-002		-2.2243E-003
	Pu-239	129.28	0.01	2.6426E+001	2.64E+001	-7.3237E+000
		375.00	0.00	2.6619E+001		-1.6829E+001
		413.70	0.00	2.8062E+001		5.2049E-001
		451.50	0.00	2.2380E+002		-1.4038E+001
+	AM-241	59.54*	35.70	1.2425E-002	1.24E-002	1.8209E+000
		125.28	0.00	4.2866E+001		2.7976E+001
		335.40	0.00	9.2242E+001		3.4265E+001
		662.42*	0.00	5.7760E+001		1.2323E+002
		722.70	0.00	2.9758E+002		-3.2550E+001
	PU-241	114.00	0.02	8.5523E+000	8.55E+000	-5.8152E-001
		332.60	0.00	1.5446E+001		-7.8638E+000
	CM-243	209.70	3.27	1.8335E-002	3.43E-003	1.3633E-002
		228.18	10.56	5.1761E-003		6.8405E-004
		277.60	14.00	3.4311E-003		-2.5681E-004

+ = Nuclide identified during the nuclide identification
* = Energy line found in the spectrum
> = MDA value not calculated
@ = Half-life too short to be able to perform the decay correction

N U C L I D E T O T A L S

Nuclide	Mass (g)

Bldg 233-S
NDA Item Description Sheet
Pipe Geometry

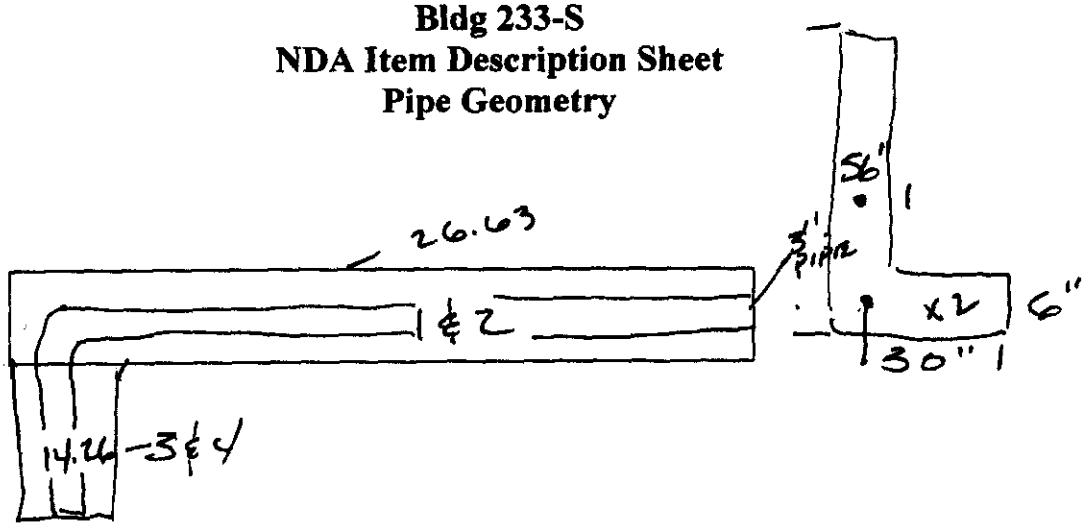

Put Dimensions on Pipe

40.90
÷ 86 = .475588
= 56 x =
26.63 kg
30 14.2674

Item ID: 2015

Weight (kg): 90 LBS 40.90

Material Description: 2" PIPE OR 3" PIPE W/ISKABRESTOS -

Packaging: 3 LAYERS FPADDING

Detector Distance (in): 48"

Detector Filters: NONE

Dose Rate: 1.5

Comments: 56" SEGMENT S.DRA 900 GRC 1028
★ S.DRB 1800 GRC 1029
30" SEGMENT S.DRA 900 GRC 1030
★ S.DRB 1800 GRC 1031
56" SEG WT = 26.63 KG
30" SEG WT = 14.26 KG
EFFICY NEED TO BE MODIFIED.

CORRECT MODEL
REANALYZED 2/12/02
MW

233-S Item Analysis

Spreadsheet Version 3.0b

1/14/02

Sample Info:

Item ID: 2015

File Name: 1029

Assay Date: 17-Dec-01

File Name: 1031

Data Input:

Isotope	Activity (uCi/kg)	Meas Uncert	Activity (uCi/kg)	Meas Uncert
Pu-239 (129)	1.03E+02		6.46E+01	2.59E+01
Pu-239 (414)				
Am-241	6.24E+02	5.23E+01	5.60E+02	2.59E+01
Np-237	2.11E-03	6.26E-04	3.41E-03	1.05E-03
U-238				
U-235				
Cs-137	3.43E-03	3.76E-04	3.77E-03	5.35E-04
Co-60				

Item Parameters:

Contamination: Internal

Item Type: Pipe or Duct

Calcs: Sum

Dimensions:

Length (in): 86

Weight (lbs): 90

Width (in): 3

Depth for TMU (in): 4

Depth (in): 3

% Volume: 100

Am-241 Calcs:

Measured	1.18E+03	+/-	5.33E+02	Calc from Pu-239
Calculated	2.32E+02	+/-	1.71E+02	

Nuclide Activities:

Isotope	Activity (nCi/g)		Total Unc 1 sigma
Pu-238	6.79E+01	+/-	1.85E+01
Pu-239	1.68E+02	+/-	4.57E+01
Pu-240	8.73E+01	+/-	2.38E+01
Pu-241	3.26E+02	+/-	8.89E+01
Pu-242	8.82E-02	+/-	2.40E-02
Am-241	2.32E+02	+/-	1.71E+02
Np-237	5.52E-03	+/-	1.37E-03
U-238	0.00E+00	+/-	0.00E+00
U-235	0.00E+00	+/-	0.00E+00
Cs-137	7.20E-03	+/-	1.04E-03
Co-60	0.00E+00	+/-	0.00E+00

Results:

Total TRU Activity(nCi/g):	7.73E+02	+/-	5.70E+02	Calc from Pu-239 Act
Pu (g):	1.28E-01	**Pu (g) + 3 sigma TMU:**	2.32E-01	
		Pu(g) + 3 sigma:	1.87E-01	

Comments:

Errors:

Analyst: Martin Winterrose

Date: 4/5/02

```
#Date & Time: Fri Mar 08 08:46:08 2002
~g=PIPE
~description=2015_PIPE
~comment=2"PIPE_WITH_1.5"_ASBESTOUS 3"
~Ccollimator=50MM-180D
~crpn=4
~Detector=7219
~Convergence in %=1            ~MDRPN=4
~Lunit=IN  ~Tunit=C  ~Dunit=G/CU.C    ~Punit=MM.HG
~at=20        ~ap=760       ~rh=50
~Energies kev=   50.000,  100.000,  128.000,  130.000,  150.000,  200.000,#
                300.000,  500.000,  700.000, 1000.000, 1400.000, 2000.000,#
               4000.000,
~Error in %=     10.000,   10.000,   10.000,   10.000,   10.000,    8.000,#
                  8.000,    6.000,    6.000,    4.000,    4.000,    4.000,#
                  4.000,
~d1.1=0.216     ~d1.2=3         ~d1.3=28        ~d1.4=28        ~1mater=304SS
~d2.1=0.133     ~d2.2=28        ~d2.3=28        ~2mater=DRYDIRT  ~2den=1.6
~sd1=48
```

C A N B E R R A I S O C S A N A L Y S I S

Report Generated On : 3/08/02 8:55:09 AM

Sample Title : 2015 Side A LP
Spectrum Description :
Sample Identification : 1029
Sample Size : 26.6 kg

Sample Taken On : 12/17/01 11:15:00 AM
Acquisition Started : 12/17/01 11:34:03 AM

Live Time: 1800.0 seconds Real Time: 1803.9 seconds

ISOCS Calabration : 2015 PIPE
Energy Calibration Used Done On : 11/29/01
Efficiency Calibration Used Done On : 3/08/02

P E A K A N A L Y S I S R E P O R T

Peak No.	Peak centroid	Energy (keV)	Net Peak Area	Net Area Uncert.	Continuum Counts
1	203.27	50.85	2.50E+002	116.98	3.21E+003
2	239.12	59.81	4.33E+004	1157.78	2.60E+003
3	340.25	85.10	8.26E+002	63.80	2.85E+003
4	395.21	98.84	1.72E+002	52.25	2.84E+003
5	1247.87	312.04	4.59E+001	13.43	1.53E+002
6	2044.16	511.15	1.42E+002	15.36	6.98E+001
7	2436.20	609.18	8.33E+001	12.16	4.59E+001
8	2646.50	661.76	1.29E+002	13.58	4.09E+001
9	7062.44	1765.94	2.85E+001	6.58	1.12E+000

NUCLIDE IDENTIFICATION REPORT

Nuclide Name	Id Confidence	Energy (keV)	Yield (%)	Activity (uCi)	Activity Uncertainty
CS-137	0.999	661.65*	85.12	3.43213E-003	3.76111E-004
NP-237	0.606	300.17	6.20		
		312.00*	36.00	2.11072E-003	6.25830E-004
		340.60	4.20		
		375.00	0.68		
		415.60	1.75		
AM-241	0.994	59.54*	35.70	6.24189E+002	5.23399E+001
		125.28	0.00		
		335.40	0.00		
		662.42* @	0.00	8.11507E+002	8.89023E+001
		722.70	0.00		

INTERFERENCE CORRECTED REPORT

Nuclide Name	Nuclide Id Confidence	Wt mean Activity (uCi/kg)	Wt mean Activity Uncertainty
CS-137	0.999	7.922260E-004	4.363196E-004
NP-237	0.606	2.110717E-003	6.258299E-004
AM-241 @	0.994	6.241894E+002	5.233985E+001

? = nuclide is part of an undetermined solution
X = nuclide rejected by the interference analysis
@ = nuclide contains energy lines not used in Weighted Mean Activity

Errors quoted at 1.000 sigma

****
***** N U C L I D E M D A R E P O R T *****
****

	Nuclide Name	Energy (keV)	Yield (%)	Line MDA (uCi/kg)	Nuclide MDA (uCi/kg)	Activity (uCi/kg)
	CO-60	1173.22	100.00	1.3640E-003	1.12E-003	7.3625E-004
		1332.49	100.00	1.1181E-003		-7.2144E-004
	CS-134	475.35	1.46	1.0272E-001	1.54E-003	1.6294E-002
		563.23	8.38	1.6698E-002		-5.6064E-003
		569.32	15.43	9.4998E-003		-1.7153E-003
		604.70	97.60	1.7657E-003		2.6693E-004
		795.84	85.40	1.5390E-003		-9.5521E-004
		801.93	8.73	1.4627E-002		-3.1669E-002
		1038.57	1.00	1.2172E-001		1.2665E-001
		1167.94	1.80	7.3945E-002		-8.3340E-002
		1365.15	3.04	3.4314E-002		1.7165E-002
+	CS-137	661.65*	85.12	8.6140E-004	8.61E-004	3.4321E-003
+	NP-237	300.17	6.20	2.8832E-002	2.77E-003	1.6483E-002
		312.00*	36.00	2.7698E-003		2.1107E-003
		340.60	4.20	4.1221E-002		8.3951E-003
		375.00	0.68	2.3998E-001		1.4683E-001
		415.60	1.75	8.8588E-002		6.4576E-003
	Pu-239	129.28	0.01	1.2659E+002	1.03E+002	-1.9904E+002
		375.00	0.00	1.0313E+002		6.3101E+001
		413.70	0.00	1.0357E+002		1.4342E+001
		451.50	0.00	7.5246E+002		-3.4836E+002
+	AM-241	59.54*	35.70	3.4563E+000	3.46E+000	6.2419E+002
		125.28	0.00	2.1814E+002		3.9766E+001
		335.40	0.00	3.2580E+002		-1.8282E+002
		662.42*	0.00	2.0367E+002		8.1151E+002
		722.70	0.00	1.0822E+003		2.8025E+002
	PU-241	114.00	0.02	5.3200E+001	5.32E+001	-1.9556E+001
		332.60	0.00	5.5735E+001		-1.5495E-001
	CM-243	209.70	3.27	6.3523E-002	1.26E-002	-2.3905E-002
		228.18	10.56	1.8922E-002		2.0708E-003
		277.60	14.00	1.2600E-002		-4.4609E-003

+ = Nuclide identified during the nuclide identification
* = Energy line found in the spectrum
> = MDA value not calculated
@ = Half-life too short to be able to perform the decay correction

N U C L I D E T O T A L S

Nuclide	Mass (g)

```
#Date & Time: Fri Mar 08 08:51:45 2002
~g=PIPE
~description=2015_SHORT
~comment=2"PIPE_WITH_1.5"_ASBESTOUS 3"
~Ccollimator=50MM-180D
~crpn=4
~Detector=7219
~Convergence in %=1            ~MDRPN=4
~Lunit=IN  ~Tunit=C  ~Dunit=G/CU.C    ~Punit=MM.HG
~at=20        ~ap=760       ~rh=50
~Energies kev=   50.000,  100.000,  128.000,  130.000,  150.000,  200.000,#
                300.000,  500.000,  700.000, 1000.000, 1400.000, 2000.000,#
               4000.000,
~Error in %=     10.000,   10.000,   10.000,   10.000,   10.000,    8.000,#
                  8.000,    6.000,    6.000,    4.000,    4.000,    4.000,#
                  4.000,
~d1.1=0.216     ~d1.2=3         ~d1.3=15        ~d1.4=15        ~1mater=304SS
~d2.1=0.133     ~d2.2=15        ~d2.3=15        ~2mater=DRYDIRT  ~2den=1.6
~sd1=48
```

C A N B E R R A I S O C S A N A L Y S I S

Report Generated On : 3/08/02 8:53:01 AM

Sample Title : 2015 Side B SP
Spectrum Description :
Sample Identification : 1031
Sample Size : 14.3 kg

Sample Taken On : 12/17/01 12:14:00 AM
Acquisition Started : 12/17/01 12:14:53 PM

Live Time: 1800.0 seconds Real Time: 1803.1 seconds

ISOCS Calabration : 2015 SHORT
Energy Calibration Used Done On : 11/29/01
Efficiency Calibration Used Done On : 3/08/02

P E A K A N A L Y S I S R E P O R T

Peak No.	Peak centroid	Energy (keV)	Net Peak Area	Net Area Uncert.	Continuum Counts
1	239.14	59.82	2.60E+004	669.47	2.12E+003
2	340.05	85.05	8.38E+002	66.34	2.39E+003
3	349.30	87.36	2.08E+002	50.11	2.39E+003
4	370.02	92.54	1.25E+002	45.36	2.39E+003
5	516.46	129.16	1.12E+002	40.75	1.90E+003
6	1248.47	312.20	4.32E+001	13.10	1.39E+002
7	1409.09	352.36	9.40E+001	14.14	1.11E+002
8	2044.02	511.12	1.19E+002	14.12	6.36E+001
9	2437.17	609.42	1.03E+002	12.86	4.95E+001
10	2646.94	661.87	8.28E+001	11.44	3.89E+001
11	3644.79	911.38	5.88E+001	9.94	2.86E+001
12	7063.56	1766.22	2.93E+001	6.62	8.93E-001

N U C L I D E I D E N T I F I C A T I O N R E P O R T

Nuclide Name	Id Confidence	Energy (keV)	Yield (%)	Activity (uCi)	Activity Uncertainty
CS-137	0.998	661.65*	85.12	3.77355E-003	5.34746E-004
NP-237	0.604	300.17	6.20		
		312.00*	36.00	3.40785E-003	1.04672E-003
		340.60	4.20		
		375.00	0.68		
		415.60	1.75		
Pu-239	0.426	129.28*	0.01	6.46492E+001	2.58910E+001
		375.00	0.00		
		413.70	0.00		
		451.50 @	0.00		
AM-241	0.994	59.54*	35.70	5.59660E+002	4.67527E+001
		125.28	0.00		
		335.40	0.00		
		662.42* @	0.00	8.92209E+002	1.26411E+002
		722.70	0.00		

I N T E R F E R E N C E C O R R E C T E D R E P O R T

Nuclide Name	Nuclide Id Confidence	Wt mean Activity (uCi/kg)	Wt mean Activity Uncertainty
CS-137	0.998	1.406501E-003	5.700436E-004
NP-237	0.604	3.407855E-003	1.046725E-003
Pu-239 @	0.426	6.464919E+001	2.589104E+001
AM-241 @	0.994	5.596599E+002	4.675267E+001

? = nuclide is part of an undetermined solution
X = nuclide rejected by the interference analysis
@ = nuclide contains energy lines not used in Weighted Mean Activity

Errors quoted at 1.000 sigma

****
***** N U C L I D E M D A R E P O R T *****
****

	Nuclide Name	Energy (keV)	Yield (%)	Line MDA (uCi/kg)	Nuclide MDA (uCi/kg)	Activity (uCi/kg)
	CO-60	1173.22	100.00	2.2084E-003	1.94E-003	5.1017E-004
		1332.49	100.00	1.9387E-003		-3.9988E-004
	CS-134	475.35	1.46	1.7822E-001	2.73E-003	1.2523E-001
		563.23	8.38	2.9384E-002		8.2439E-003
		569.32	15.43	1.5899E-002		-1.5877E-002
		604.70	97.60	3.0822E-003		-1.0393E-003
		795.84	85.40	2.7252E-003		9.9194E-004
		801.93	8.73	2.6437E-002		6.0331E-003
		1038.57	1.00	2.2090E-001		-2.1572E-002
		1167.94	1.80	1.2500E-001		-4.5729E-002
		1365.15	3.04	6.0585E-002		-5.7033E-004
+	CS-137	661.65*	85.12	1.4456E-003	1.45E-003	3.7736E-003
+	NP-237	300.17	6.20	4.6795E-002	4.54E-003	6.3020E-003
		312.00*	36.00	4.5399E-003		3.4079E-003
		340.60	4.20	7.0952E-002		5.5248E-002
		375.00	0.68	3.8939E-001		-5.1613E-001
		415.60	1.75	1.5023E-001		-3.0637E-002
+	Pu-239	129.28*	0.01	1.1839E+002	1.18E+002	6.4649E+001
		375.00	0.00	1.6734E+002		-2.2180E+002
		413.70	0.00	1.7325E+002		-1.2373E+001
		451.50	0.00	1.3280E+003		-7.5631E+002
+	AM-241	59.54*	35.70	4.6700E+000	4.67E+000	5.5966E+002
		125.28	0.00	3.3699E+002		-1.2148E+002
		335.40	0.00	5.9991E+002		1.5034E+002
		662.42*	0.00	3.4178E+002		8.9221E+002
		722.70	0.00	1.7911E+003		4.5608E+002
	PU-241	114.00	0.02	8.1344E+001	8.13E+001	1.8381E+001
		332.60	0.00	1.0081E+002		-3.6417E+001
	CM-243	209.70	3.27	1.0583E-001	2.06E-002	-5.4219E-003
		228.18	10.56	3.1872E-002		1.6231E-002
		277.60	14.00	2.0621E-002		-1.7698E-003

+ = Nuclide identified during the nuclide identification
* = Energy line found in the spectrum
> = MDA value not calculated
@ = Half-life too short to be able to perform the decay correction

N U C L I D E T O T A L S

Nuclide	Mass (g)
Pu-239	1.49E-002 +/- 5.96E-003

233-S Item Analysis

Spreadsheet Version 3.0b

1/14/02

Sample Info:

Item ID: 2015

File Name: 1029

Assay Date: 17-Dec-01

File Name: 1031

Data Input:

Isotope	Activity (uCi/kg)	Meas Uncert	Activity (uCi/kg)	Meas Uncert
Pu-239 (129)	1.03E+02		6.46E+01	2.59E+01
Pu-239 (414)				
Am-241	6.24E+02	5.23E+01	5.60E+02	2.59E+01
Np-237	2.11E-03	6.26E-04	3.41E-03	1.05E-03
U-238				
U-235				
Cs-137	3.43E-03	3.76E-04	3.77E-03	5.35E-04
Co-60				

Item Parameters:

Contamination: Internal

Item Type: Pipe or Duct

Calcs: Average

Dimensions:

Length (in): 86

Weight (lbs): 90

Width (in): 3

Depth for TMU (in): 4

Depth (in): 3

% Volume: 100

Am-241 Calcs:

Measured	5.92E+02	+/-	2.66E+02	Calc from Pu-239
Calculated	1.16E+02	+/-	8.56E+01	

Nuclide Activities:

Isotope	Activity (nCi/g)		Total Unc 1 sigma
Pu-238	3.40E+01	+/-	9.25E+00
Pu-239	8.38E+01	+/-	2.28E+01
Pu-240	4.37E+01	+/-	1.19E+01
Pu-241	1.63E+02	+/-	4.45E+01
Pu-242	4.41E-02	+/-	1.20E-02
Am-241	1.16E+02	+/-	8.56E+01
Np-237	2.76E-03	+/-	6.83E-04
U-238	0.00E+00	+/-	0.00E+00
U-235	0.00E+00	+/-	0.00E+00
Cs-137	3.60E-03	+/-	5.18E-04
Co-60	0.00E+00	+/-	0.00E+00

Results:

Total TRU Activity(nCi/g):		3.87E+02	+/-	2.85E+02	Calc from Pu-239 Act
Pu (g):	6.38E-02	**Pu (g) + 3 sigma TMU:**		1.16E-01	
		Pu(g) + 3 sigma:		9.34E-02	

Comments:

Errors:

Analyst: Martin Winterrose

Date: 4/5/02

Bldg 233-S
NDA Item Description Sheet
Pipe Geometry

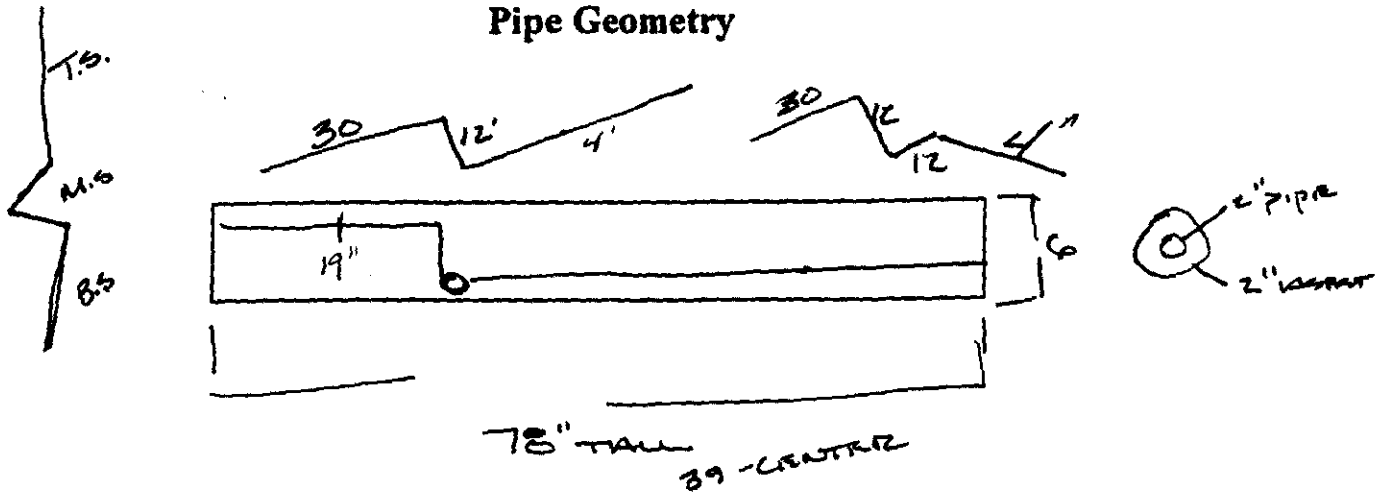

Put Dimensions on Pipe

Item ID: ~~2022~~ MW 2016

Weight (kg): ~~[illegible]~~ MW 70LBS · 31.81 Kg

Material Description: 2" pipe with asbestos

Packaging: 3 layer poly

Detector Distance (in): 25"

Detector Filters: None

Dose Rate: >.5

Comments: 1. 900@-20 0988
2. 1800@-20 0989
3. 1800@ GT 0990

233-S Item Analysis

Spreadsheet Version 3.0b

1/14/02

Sample Info:

Item ID:	2016	**Assay Date:**	5-Dec-01
File Name:	989	**File Name:**	990

Data Input:

Isotope	Activity (uCi/kg)	Meas Uncert	Activity (uCi/kg)	Meas Uncert
Pu-239 (129)	6.64E+01		6.57E+01	
Pu-239 (414)				
Am-241	7.04E+01	5.83E+00	4.33E+01	3.57E+00
Np-237	4.69E-03	5.75E-04	2.55E-03	4.58E-04
U-238				
U-235				
Cs-137	3.04E-03	2.85E-04	1.60E-03	2.22E-04
Co-60				

Item Parameters:

Contamination:	Internal	Item Type:	Pipe or Duct	Calcs:	Average

Dimensions:

Length (in):	78	Width (in):	6	Depth (in):	6
Weight (lbs):	70	Depth for TMU (in):	4	% Volume:	100

Am-241 Calcs:

Measured	5.69E+01	+/-	2.57E+01	Use Meas
Calculated	9.14E+01	+/-	5.77E+01	

Nuclide Activities:

Isotope	Activity (nCi/g)		Total Unc 1 sigma
Pu-238	2.68E+01	+/-	6.01E+00
Pu-239	6.61E+01	+/-	1.48E+01
Pu-240	3.44E+01	+/-	7.73E+00
Pu-241	1.29E+02	+/-	2.89E+01
Pu-242	3.48E-02	+/-	7.80E-03
Am-241	5.69E+01	+/-	2.57E+01
Np-237	3.62E-03	+/-	5.47E-04
U-238	0.00E+00	+/-	0.00E+00
U-235	0.00E+00	+/-	0.00E+00
Cs-137	2.32E-03	+/-	3.16E-04
Co-60	0.00E+00	+/-	0.00E+00

Results:

Total TRU Activity(nCi/g):		1.84E+02	+/-	3.12E+01	Calc from Pu-239 MDA
Pu (g):	3.91E-02	**Pu (g) + 3 sigma TMU:**		6.55E-02	
		Pu(g) + 3 sigma:		3.91E-02	

Comments:

Value averaged.

Errors:

Analyst: Martin Winterrose

Date: 2/12/02

```
#Date & Time: Thu Dec 06 09:01:12 2001
~g=PIPE
~description=2016_PIPE
~comment=2"_PIPE_WITH_2"_ASBESTOS.
~Ccollimator=50MM-180D
~crpn=4
~Detector=7219
~Convergence in %=1            ~MDRPN=4
~Lunit=IN  ~Tunit=C  ~Dunit=G/CU.C    ~Punit=MM.HG
~at=20        ~ap=760       ~rh=50
~Energies kev=   50.000,  100.000,  128.000,  130.000,  150.000,  200.000,#
                300.000,  500.000,  700.000, 1000.000, 1400.000, 2000.000,#
               4000.000,
~Error in %=     10.000,   10.000,   10.000,   10.000,   10.000,    8.000,#
                  8.000,    6.000,    6.000,    4.000,    4.000,    4.000,#
                  4.000,
~d1.1=0.154     ~d1.2=2         ~d1.3=39        ~d1.4=39        ~1mater=304SS    ~1den=7.81
~d2.1=0.133     ~d2.2=39        ~d2.3=39        ~2mater=DRYDIRT  ~2den=1.6       ~2con=1
~1Absor=1.5       ~1Amater=CELLULOS ~1Aden=0.45
~sd1=25          ~sd2=-20         ~sd4=-20
```

C A N B E R R A I S O C S A N A L Y S I S

Report Generated On : 12/06/01 9:14:40 AM

Sample Title : 2016 1 & 2nd counts combined
Spectrum Description :
Sample Identification : 0989
Sample Size : 31.8 kg

Sample Taken On : 12/05/01 12:08:00 PM
Acquisition Started : 12/05/01 12:12:28 PM

Live Time: 1800.0 seconds Real Time: 1803.4 seconds

ISOCS Calabration : 2016 PIPE
Energy Calibration Used Done On : 11/29/01
Efficiency Calibration Used Done On : 12/06/01

P E A K A N A L Y S I S R E P O R T

Peak No.	Peak centroid	Energy (keV)	Net Peak Area	Net Area Uncert.	Continuum Counts
1	202.99	50.78	2.14E+002	59.87	2.75E+003
2	239.14	59.82	2.34E+004	546.59	2.47E+003
3	339.74	84.97	8.00E+002	59.60	3.05E+003
4	1248.01	312.08	1.60E+002	18.08	1.80E+002
5	1408.09	352.11	1.02E+002	15.15	1.24E+002
6	2043.84	511.07	1.19E+002	14.75	7.40E+001
7	2332.90	583.35	7.68E+001	11.69	5.94E+001
8	2436.95	609.37	8.80E+001	12.31	5.78E+001
9	2645.85	661.60	2.07E+002	16.34	4.62E+001
10	3645.17	911.47	6.99E+001	10.23	2.67E+001
11	7062.68	1766.00	3.75E+001	7.18	5.29E-001

NUCLIDE IDENTIFICATION REPORT

Nuclide Name	Id Confidence	Energy (keV)	Yield (%)	Activity (uCi)	Activity Uncertainty
CS-137	1.000	661.65*	85.12	3.34653E-003	2.84582E-004
NP-237	0.583	300.17	6.20		
		312.00*	36.00	4.69506E-003	5.75405E-004
		340.60	4.20		
		375.45	0.68		
		415.76	1.75		
AM-241	0.995	59.54*	35.70	7.04151E+001	5.83346E+000
		125.28	0.00		
		335.40	0.00		
		662.42* @	0.00	7.91269E+002	6.72538E+001
		722.70	0.00		

INTERFERENCE CORRECTED REPORT

Nuclide Name	Nuclide Id Confidence	Wt mean Activity (uCi/kg)	Wt mean Activity Uncertainty
CS-137	1.000	3.048724E-003	2.855061E-004
NP-237	0.583	4.695058E-003	5.754047E-004
AM-241 @	0.995	7.041509E+001	5.833459E+000

? = nuclide is part of an undetermined solution
X = nuclide rejected by the interference analysis
@ = nuclide contains energy lines not used in Weighted Mean Activity

Errors quoted at 1.000 sigma

****
***** N U C L I D E M D A R E P O R T *****
****

	Nuclide Name	Energy (keV)	Yield (%)	Line MDA (uCi/kg)	Nuclide MDA (uCi/kg)	Activity (uCi/kg)
	CO-60	1173.22	100.00	7.8828E-004	6.83E-004	1.4760E-004
		1332.49	100.00	6.8324E-004		-2.7900E-004
	CS-134	475.35	1.46	6.5267E-002	8.83E-004	3.3108E-002
		563.23	8.38	1.0658E-002		5.4008E-003
		569.32	15.43	5.9195E-003		-5.9282E-005
		604.70	97.60	1.0992E-003		-4.0838E-004
		795.84	85.40	8.8337E-004		-6.7751E-004
		801.93	8.73	8.5140E-003		-9.9715E-003
		1038.57	1.00	7.8200E-002		-4.1246E-002
		1167.94	1.80	4.5109E-002		-1.1561E-002
		1365.15	3.04	1.6400E-002		9.4132E-004
+	CS-137	661.65*	85.12	5.5557E-004	5.56E-004	3.3465E-003
+	NP-237	300.17	6.20	1.9257E-002	1.91E-003	2.4731E-003
		312.00*	36.00	1.9064E-003		4.6951E-003
		340.60	4.20	2.7761E-002		6.4256E-003
		375.45	0.68	1.5443E-001		6.7529E-003
		415.76	1.75	5.8274E-002		4.0899E-002
	Pu-239	129.28	0.01	8.0499E+001	6.64E+001	8.6504E+001
		375.00	0.00	6.6709E+001		-1.1043E+001
		413.70	0.00	6.6383E+001		-8.3519E+001
		451.50	0.00	5.2432E+002		3.9994E+002
+	AM-241	59.54*	35.70	7.0400E-001	7.04E-001	7.0415E+001
		125.28	0.00	1.3419E+002		-1.1585E+002
		335.40	0.00	2.2741E+002		-5.1761E-001
		662.42*	0.00	1.3136E+002		7.9127E+002
		722.70	0.00	6.4297E+002		3.8105E+002
	PU-241	114.00	0.02	3.0615E+001	3.06E+001	4.5629E+000
		332.60	0.00	3.8443E+001		-5.3942E+001
	CM-243	209.70	3.27	4.5056E-002	8.55E-003	1.3723E-002
		228.18	10.56	1.3056E-002		4.2906E-003
		277.60	14.00	8.5525E-003		-2.8050E-003

+ = Nuclide identified during the nuclide identification
* = Energy line found in the spectrum
> = MDA value not calculated
@ = Half-life too short to be able to perform the decay correction

N U C L I D E T O T A L S

Nuclide	Mass (g)

```
#Date & Time: Thu Dec 06 09:20:24 2001
~g=PIPE
~description=2016_PIPE
~comment=2"_PIPE_WITH_2"_ASBESTOS.
~Ccollimator=50MM-180D
~crpn=4
~Detector=7219
~Convergence in %=1            ~MDRPN=4
~Lunit=IN  ~Tunit=C  ~Dunit=G/CU.C    ~Punit=MM.HG
~at=20        ~ap=760       ~rh=50
~Energies kev=   50.000,  100.000,  128.000,  130.000,  150.000,  200.000,#
                300.000,  500.000,  700.000, 1000.000, 1400.000, 2000.000,#
               4000.000,
~Error in %=     10.000,   10.000,   10.000,   10.000,   10.000,    8.000,#
                  8.000,    6.000,    6.000,    4.000,    4.000,    4.000,#
                  4.000,
~d1.1=0.154     ~d1.2=2         ~d1.3=39        ~d1.4=39        ~1mater=304SS    ~1den=7.81
~d2.1=0.133     ~d2.2=39        ~d2.3=39        ~2mater=DRYDIRT  ~2den=1.6       ~2con=1
~1Absor=1.5       ~1Amater=CELLULOS ~1Aden=0.45
~sd1=39
```

C A N B E R R A I S O C S A N A L Y S I S

Report Generated On : 12/06/01 9:22:23 AM

Sample Title : 2016 Whole pipe
Spectrum Description :
Sample Identification : 0990
Sample Size : 31.8 kg

Sample Taken On : 12/05/01 12:38:00 PM
Acquisition Started : 12/05/01 12:36:58 PM

Live Time: 1800.0 seconds Real Time: 1802.9 seconds

ISOCS Calabration : 2016 PIPE
Energy Calibration Used Done On : 11/29/01
Efficiency Calibration Used Done On : 12/06/01

P E A K A N A L Y S I S R E P O R T

Peak No.	Peak centroid	Energy (keV)	Net Peak Area	Net Area Uncert.	Continuum Counts
1	197.46	49.40	3.42E+002	61.83	2.50E+003
2	239.14	59.82	1.56E+004	343.82	2.40E+003
3	340.07	85.06	9.26E+002	66.86	2.86E+003
4	351.12	87.82	3.01E+002	58.40	2.87E+003
5	417.82	104.50	1.36E+002	52.06	2.81E+003
6	1248.92	312.31	8.43E+001	14.59	1.46E+002
7	2043.22	510.92	1.33E+002	14.38	7.24E+001
8	2436.64	609.29	9.61E+001	12.76	4.32E+001
9	2645.50	661.51	1.03E+002	12.38	3.91E+001
10	3644.10	911.20	6.97E+001	10.51	2.82E+001
11	7061.06	1765.59	2.62E+001	6.21	7.57E-001

NUCLIDE IDENTIFICATION REPORT

Nuclide Name	Id Confidence	Energy (keV)	Yield (%)	Activity (uCi)	Activity Uncertainty
CS-137	0.999	661.65*	85.12	1.78682E-003	2.21906E-004
NP-237	0.581	300.17	6.20		
		312.00*	36.00	2.55429E-003	4.58615E-004
		340.60	4.20		
		375.45	0.68		
		415.76	1.75		
AM-241	0.995	59.54*	35.70	4.33018E+001	3.57066E+000
		125.28	0.00		
		335.40	0.00		
		662.42* @	0.00	4.22483E+002	5.24561E+001
		722.70	0.00		

INTERFERENCE CORRECTED REPORT

Nuclide Name	Nuclide Id Confidence	Wt mean Activity (uCi/kg)	Wt mean Activity Uncertainty
CS-137	0.999	1.603678E-003	2.223673E-004
NP-237	0.581	2.554288E-003	4.586148E-004
AM-241 @	0.995	4.330181E+001	3.570655E+000

? = nuclide is part of an undetermined solution
X = nuclide rejected by the interference analysis
@ = nuclide contains energy lines not used in Weighted Mean Activity

Errors quoted at 1.000 sigma

****
***** N U C L I D E M D A R E P O R T *****
****

	Nuclide Name	Energy (keV)	Yield (%)	Line MDA (uCi/kg)	Nuclide MDA (uCi/kg)	Activity (uCi/kg)
	CO-60	1173.22	100.00	8.5374E-004	7.47E-004	-9.0278E-005
		1332.49	100.00	7.4672E-004		4.7569E-004
	CS-134	475.35	1.46	6.6224E-002	1.04E-003	1.9492E-002
		563.23	8.38	1.0495E-002		-4.7325E-003
		569.32	15.43	5.9905E-003		5.5208E-003
		604.70	97.60	1.1875E-003		1.1620E-004
		795.84	85.40	1.0430E-003		-1.0714E-004
		801.93	8.73	9.2891E-003		-1.0841E-002
		1038.57	1.00	7.4689E-002		-3.5737E-002
		1167.94	1.80	4.5931E-002		-3.2257E-002
		1365.15	3.04	2.1495E-002		5.3701E-003
+	CS-137	661.65*	85.12	5.5162E-004	5.52E-004	1.7868E-003
+	NP-237	300.17	6.20	1.8019E-002	1.78E-003	-8.9730E-003
		312.00*	36.00	1.7825E-003		2.5543E-003
		340.60	4.20	2.5418E-002		-8.2549E-003
		375.45	0.68	1.5304E-001		-6.3620E-002
		415.76	1.75	5.6285E-002		2.9430E-002
	Pu-239	129.28	0.01	7.7866E+001	6.57E+001	-5.1387E-001
		375.00	0.00	6.5727E+001		1.1149E+001
		413.70	0.00	6.5846E+001		-1.3297E+001
		451.50	0.00	5.2046E+002		4.0516E+002
+	AM-241	59.54*	35.70	6.3840E-001	6.38E-001	4.3302E+001
		125.28	0.00	1.3048E+002		-4.5390E+001
		335.40	0.00	2.1355E+002		2.9645E+001
		662.42*	0.00	1.3043E+002		4.2248E+002
		722.70	0.00	7.2209E+002		6.9567E+002
	PU-241	114.00	0.02	2.9636E+001	2.96E+001	2.5764E+001
		332.60	0.00	3.5838E+001		-7.2821E+000
	CM-243	209.70	3.27	4.3090E-002	8.25E-003	2.8843E-003
		228.18	10.56	1.2585E-002		-3.0357E-004
		277.60	14.00	8.2515E-003		-2.3215E-003

+ = Nuclide identified during the nuclide identification
* = Energy line found in the spectrum
> = MDA value not calculated
@ = Half-life too short to be able to perform the decay correction

N U C L I D E T O T A L S

Nuclide	Mass (g)

Bldg 233-S
NDA Item Description Sheet
Pipe Geometry

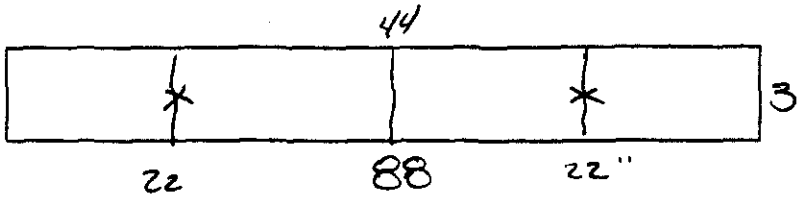

Put Dimensions on Pipe

Item ID: 2017

Weight (kg): 60 LBS 27.27

Material Description: 3" Pipe

Packaging: 3 layer

Detector Distance (in): 24

Detector Filters: None

Dose Rate: <.5

Comments: 2 @ -22"

① A 900 1344
B 1800 1345

② B 900 1346
B 1800 1347

233-S Item Analysis

Spreadsheet Version 3.0b

1/14/02

Sample Info:

Item ID: 2017

File Name: 1345

Assay Date: 6-Mar-02

File Name: 1347

Data Input:

Isotope	Activity (uCi/kg)	Meas Uncert	Activity (uCi/kg)	Meas Uncert
Pu-239 (129)	7.29E+01		7.01E+01	
Pu-239 (414)				
Am-241	8.61E+02	7.24E+01	6.90E+02	5.79E+01
Np-237				
U-238				
U-235	1.36E-03	4.08E-04	1.36E-03	4.08E-04
Cs-137				
Co-60				

Item Parameters:

Contamination: Internal

Item Type: Pipe or Duct

Calcs: Average

Dimensions:

Length (in): 88

Weight (lbs): 60

Width (in): 3

Depth for TMU (in): 4

Depth (in): 3

% Volume: 100

Am-241 Calcs:

Measured	7.76E+02	+/-	3.50E+02	Calc from Pu-239
Calculated	9.90E+01	+/-	6.25E+01	

Nuclide Activities:

Isotope	Activity (nCi/g)		Total Unc 1 sigma
Pu-238	2.90E+01	+/-	6.51E+00
Pu-239	7.15E+01	+/-	1.61E+01
Pu-240	3.73E+01	+/-	8.36E+00
Pu-241	1.39E+02	+/-	3.13E+01
Pu-242	3.76E-02	+/-	8.45E-03
Am-241	9.90E+01	+/-	6.25E+01
Np-237	0.00E+00	+/-	0.00E+00
U-238	0.00E+00	+/-	0.00E+00
U-235	1.36E-03	+/-	3.26E-04
Cs-137	0.00E+00	+/-	0.00E+00
Co-60	0.00E+00	+/-	0.00E+00

Results:

Total TRU Activity(nCi/g):		2.37E+02	+/-	6.54E+01	Calc from Pu-239 MDA
Pu (g):	3.63E-02	**Pu (g) + 3 sigma TMU:**		6.08E-02	
		Pu(g) + 3 sigma:		3.63E-02	

Comments:

U-235 same value in both sides to average.

Errors:

Analyst: Martin Winterrose

Date: 4/5/02

```
#Date & Time: Wed Mar 06 14:08:36 2002
~g=PIPE
~description=2017_PIPE
~comment=PIPE_AND_METAL
~Ccollimator=50MM-180D
~crpn=4
~Detector=7219
~Convergence in %=1            ~MDRPN=4
~Lunit=IN  ~Tunit=C  ~Dunit=G/CU.C    ~Punit=MM.HG
~at=20        ~ap=760       ~rh=50
~Energies kev=   50.000,  100.000,  128.000,  130.000,  150.000,  200.000,#
                300.000,  500.000,  700.000, 1000.000, 1400.000, 2000.000,#
               4000.000,
~Error in %=     10.000,   10.000,   10.000,   10.000,   10.000,    8.000,#
                  8.000,    6.000,    6.000,    4.000,    4.000,    4.000,#
                  4.000,
~d1.1=0.216     ~d1.2=3         ~d1.3=44        ~d1.4=44        ~1mater=304SS    ~1den=7.81
~d2.1=0.133     ~d2.2=44        ~d2.3=44        ~2mater=DRYDIRT  ~2den=1.6       ~2con=1
~sd1=24          ~sd5=-22
```

C A N B E R R A I S O C S A N A L Y S I S

Report Generated On : 3/06/02 2:42:57 PM

Sample Title : 2017 Side A-2
Spectrum Description :
Sample Identification : 1345
Sample Size : 27.3 kg

Sample Taken On : 3/06/02 2:27:00 PM
Acquisition Started : 3/06/02 2:27:50 PM

Live Time: 1800.0 seconds Real Time: 1804.0 seconds

ISOCS Calabration : 2017 PIPE
Energy Calibration Used Done On : 2/27/01
Efficiency Calibration Used Done On : 3/06/02

P E A K A N A L Y S I S R E P O R T

Peak No.	Peak centroid	Energy (keV)	Net Peak Area	Net Area Uncert.	Continuum Counts
1	239.17	59.88	6.15E+004	1688.42	2.12E+003
2	339.98	85.07	1.03E+003	57.44	2.02E+003
3	351.14	87.86	1.81E+002	50.82	2.03E+003
4	369.74	92.51	1.33E+002	46.12	2.03E+003
5	396.53	99.21	2.24E+002	45.96	2.00E+003
6	410.85	102.78	1.27E+002	44.75	1.98E+003
7	1407.81	351.94	1.04E+002	14.46	1.22E+002
8	2043.61	510.84	1.42E+002	14.90	6.95E+001
9	2333.04	583.17	6.91E+001	10.90	4.51E+001
10	2437.41	609.26	1.44E+002	14.25	4.62E+001
11	2645.96	661.38	8.29E+001	11.91	4.07E+001
12	3876.38	968.88	4.53E+001	9.44	2.41E+001
13	5845.41	1460.98	5.24E+002	23.61	6.92E+000
14	7062.58	1765.18	3.68E+001	7.31	2.68E+000

NUCLIDE IDENTIFICATION REPORT

Nuclide Name	Id Confidence	Energy (keV)	Yield (%)	Activity (uCi)	Activity Uncertainty
AM-241	0.992	59.54*	35.70	8.61407E+002	7.24166E+001
		125.28	0.00		
		335.40	0.00		
		662.42* @	0.00	3.57166E+002	5.25385E+001
		722.70	0.00		

INTERFERENCE CORRECTED REPORT

	Nuclide Name	Nuclide Id Confidence	Wt mean Activity (uCi/kg)	Wt mean Activity Uncertainty
X	CS-137	0.997		
	AM-241 @	0.992	8.614067E+002	7.241664E+001

? = nuclide is part of an undetermined solution
X = nuclide rejected by the interference analysis
@ = nuclide contains energy lines not used in Weighted Mean Activity

Errors quoted at 1.000 sigma

****
***** N U C L I D E M D A R E P O R T *****
****

	Nuclide Name	Energy (keV)	Yield (%)	Line MDA (uCi/kg)	Nuclide MDA (uCi/kg)	Activity (uCi/kg)
	CO-60	1173.22	100.00	8.8060E-004	6.87E-004	-7.0713E-004
		1332.49	100.00	6.8726E-004		-1.3039E-004
	CS-134	475.35	1.46	7.1635E-002	9.91E-004	-1.0429E-002
		563.23	8.38	1.1518E-002		8.5361E-004
		569.32	15.43	6.0839E-003		-4.4183E-003
		604.70	97.60	1.3631E-003		5.1951E-004
		795.84	85.40	9.9078E-004		-5.7776E-005
		801.93	8.73	9.5028E-003		-1.3029E-002
		1038.57	1.00	7.9573E-002		-9.6334E-002
		1167.94	1.80	4.6526E-002		3.4616E-003
		1365.15	3.04	2.3260E-002		-9.0848E-003
	CS-137	661.65*	85.12	5.9044E-004	5.90E-004	1.5106E-003
	NP-237	300.17	6.20	1.9740E-002	3.25E-003	-5.6758E-003
		312.00	36.00	3.2484E-003		1.2187E-003
		340.60	4.20	2.8281E-002		1.1268E-002
		375.00	0.68	1.6971E-001		1.0748E-001
		415.60	1.75	6.4292E-002		1.5144E-002
	Pu-239	129.28	0.01	8.2871E+001	7.29E+001	3.5624E+001
		375.00	0.00	7.2931E+001		4.6189E+001
		413.70	0.00	7.3685E+001		1.8017E+001
		451.50	0.00	5.7267E+002		-1.1979E+002
+	AM-241	59.54*	35.70	3.0386E+000	3.04E+000	8.6141E+002
		125.28	0.00	1.4294E+002		2.8970E+001
		335.40	0.00	2.3724E+002		9.3067E+000
		662.42*	0.00	1.3961E+002		3.5717E+002
		722.70	0.00	7.5259E+002		1.1628E+002
	PU-241	114.00	0.02	3.5090E+001	3.51E+001	1.4207E+001
		332.60	0.00	4.0099E+001		-2.5735E+000
	CM-243	209.70	3.27	4.4007E-002	8.63E-003	5.9996E-003
		228.18	10.56	1.2819E-002		-1.8991E-003
		277.60	14.00	8.6332E-003		6.8544E-003

+ = Nuclide identified during the nuclide identification
* = Energy line found in the spectrum
> = MDA value not calculated
@ = Half-life too short to be able to perform the decay correction

N U C L I D E T O T A L S

Nuclide	Mass (g)

C A N B E R R A I S O C S A N A L Y S I S

Report Generated On : 3/06/02 3:17:49 PM

Sample Title : 2017 Side B-2
Spectrum Description :
Sample Identification : 1347
Sample Size : 27.3 kg

Sample Taken On : 3/06/02 3:02:00 PM
Acquisition Started : 3/06/02 3:02:42 PM

Live Time: 1800.0 seconds Real Time: 1803.6 seconds

ISOCS Calabration : 2017 PIPE
Energy Calibration Used Done On : 2/27/01
Efficiency Calibration Used Done On : 3/06/02

P E A K A N A L Y S I S R E P O R T

Peak No.	Peak centroid	Energy (keV)	Net Peak Area	Net Area Uncert.	Continuum Counts
1	200.23	50.15	3.88E+002	69.06	2.59E+003
2	239.17	59.88	4.93E+004	1315.33	2.08E+003
3	339.78	85.02	8.72E+002	58.72	1.95E+003
4	350.13	87.61	1.68E+002	50.30	1.96E+003
5	742.91	185.77	7.09E+001	21.06	4.63E+002
6	1408.53	352.12	7.99E+001	13.78	1.10E+002
7	2043.94	510.92	1.43E+002	15.23	6.74E+001
8	2436.91	609.13	1.38E+002	14.24	5.50E+001
9	2647.01	661.64	7.75E+001	11.31	4.29E+001
10	3644.53	910.94	5.18E+001	9.78	3.34E+001
11	5845.19	1460.93	5.03E+002	23.09	8.07E+000
12	7062.78	1765.23	4.51E+001	7.85	1.26E+000

N U C L I D E I D E N T I F I C A T I O N R E P O R T

Nuclide Name	Id Confidence	Energy (keV)	Yield (%)	Activity (uCi)	Activity Uncertainty
U-235	0.667	143.76	10.50		
		185.71*	54.00	1.35716E-003	4.07900E-004
		205.31	4.70		
AM-241	0.992	59.54*	35.70	6.90127E+002	5.78514E+001
		125.28	0.00		
		335.40	0.00		
		662.42* @	0.00	3.34158E+002	4.98411E+001
		722.70	0.00		

I N T E R F E R E N C E C O R R E C T E D R E P O R T

	Nuclide Name	Nuclide Id Confidence	Wt mean Activity (uCi/kg)	Wt mean Activity Uncertainty
X	CS-137	1.000		
	U-235	0.667	1.357162E-003	4.079005E-004
	AM-241 @	0.992	6.901269E+002	5.785140E+001

? = nuclide is part of an undetermined solution
X = nuclide rejected by the interference analysis
@ = nuclide contains energy lines not used in Weighted Mean Activity

Errors quoted at 1.000 sigma

****
***** N U C L I D E M D A R E P O R T *****
****

	Nuclide Name	Energy (keV)	Yield (%)	Line MDA (uCi/kg)	Nuclide MDA (uCi/kg)	Activity (uCi/kg)
	CO-60	1173.22	100.00	8.1694E-004	6.99E-004	6.8479E-004
		1332.49	100.00	6.9895E-004		5.4133E-005
	CS-134	475.35	1.46	7.2518E-002	1.01E-003	8.7344E-003
		563.23	8.38	1.2869E-002		1.7628E-002
		569.32	15.43	6.6363E-003		-4.7621E-003
		604.70	97.60	1.3591E-003		3.7630E-004
		795.84	85.40	1.0070E-003		-6.7820E-004
		801.93	8.73	9.5842E-003		-5.5915E-003
		1038.57	1.00	8.3672E-002		-7.7005E-002
		1167.94	1.80	4.3565E-002		1.4802E-002
		1365.15	3.04	2.3260E-002		6.3480E-003
	CS-137	661.65*	85.12	6.0496E-004	6.05E-004	1.4133E-003
	NP-237	300.17	6.20	1.9603E-002	3.22E-003	7.6194E-003
		312.00	36.00	3.2152E-003		-1.4052E-003
		340.60	4.20	2.7249E-002		1.0462E-003
		375.00	0.68	1.6319E-001		1.9232E-001
		415.60	1.75	6.5727E-002		2.1251E-002
	Pu-239	129.28	0.01	8.2584E+001	7.01E+001	4.8730E+001
		375.00	0.00	7.0132E+001		8.2650E+001
		413.70	0.00	7.5937E+001		-3.9645E-001
		451.50	0.00	5.6733E+002		-3.2363E+002
+	AM-241	59.54*	35.70	3.0095E+000	3.01E+000	6.9013E+002
		125.28	0.00	1.4213E+002		-1.8631E+001
		335.40	0.00	2.3408E+002		1.9841E+002
		662.42*	0.00	1.4304E+002		3.3416E+002
		722.70	0.00	7.0670E+002		-1.3368E+002
	PU-241	114.00	0.02	3.5066E+001	3.51E+001	-2.7826E+000
		332.60	0.00	3.9306E+001		-4.4615E+001
	CM-243	209.70	3.27	4.5405E-002	8.98E-003	-2.2003E-002
		228.18	10.56	1.2660E-002		1.1272E-002
		277.60	14.00	8.9763E-003		6.2674E-003

+ = Nuclide identified during the nuclide identification
* = Energy line found in the spectrum
> = MDA value not calculated
@ = Half-life too short to be able to perform the decay correction

N U C L I D E T O T A L S

Nuclide	Mass (g)
U-235	1.68E-002 +/- 5.05E-003

Bldg 233-S
NDA Item Description Sheet
Pipe Geometry

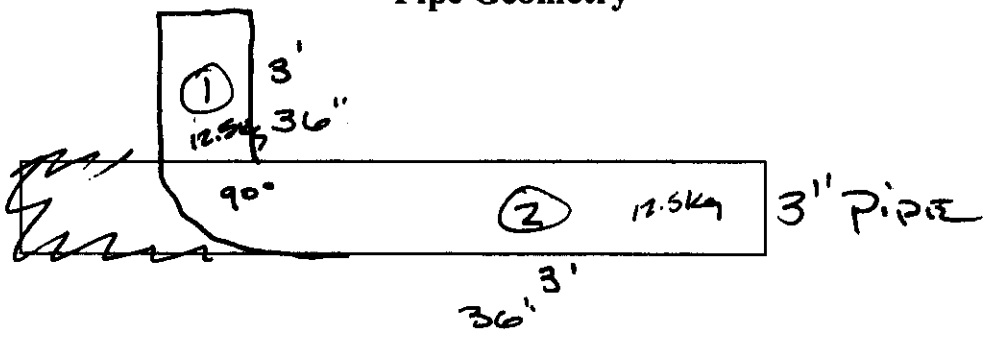

Put Dimensions on Pipe

Item ID: 2018 EACH SIDE 12.5kg

Weight (kg): 55 25 Kg

Material Description: 3" Pipe

Packaging: 3 Layer

Detector Distance (in): 24"

Detector Filters: None

Dose Rate: 2.5

Comments: 1. UP 18" 900SRL 0091
2. OVER 18" 900SRL 0092
MODELED ASK 2 36" PIPES
THEN SUMMED W/ AVERAGED

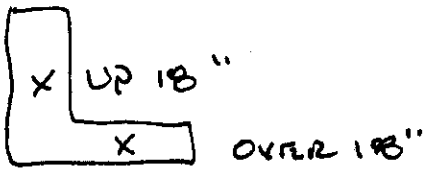

233-S Item Analysis

Spreadsheet Version 3.0b

1/14/02

Sample Info:

Item ID:	2018	**Assay Date:**	5-Dec-01
File Name:	991	**File Name:**	992

Data Input:

Isotope	Activity (uCi/kg)	Meas Uncert	Activity (uCi/kg)	Meas Uncert
Pu-239 (129)	5.33E+01	2.93E+01	4.01E+01	1.41E+01
Pu-239 (414)				
Am-241	1.86E+03	1.48E+02	6.96E+02	5.72E+01
Np-237				
U-238				
U-235				
Cs-137				
Co-60				

Item Parameters:

Contamination:	Internal	Item Type:	Pipe or Duct	Calcs:	Sum

Dimensions:

Length (in):	72	Width (in):	3	Depth (in):	3
Weight (lbs):	55	Depth for TMU (in):	4	% Volume:	100

Am-241 Calcs:

Measured	2.56E+03	+/-	1.15E+03	Calc from Pu-239
Calculated	1.29E+02	+/-	1.38E+02	

Nuclide Activities:

Isotope	Activity (nCi/g)		Total Unc 1 sigma
Pu-238	3.79E+01	+/-	1.57E+01
Pu-239	9.34E+01	+/-	3.87E+01
Pu-240	4.87E+01	+/-	2.02E+01
Pu-241	1.82E+02	+/-	7.53E+01
Pu-242	4.92E-02	+/-	2.04E-02
Am-241	1.29E+02	+/-	1.38E+02
Np-237	0.00E+00	+/-	0.00E+00
U-238	0.00E+00	+/-	0.00E+00
U-235	0.00E+00	+/-	0.00E+00
Cs-137	0.00E+00	+/-	0.00E+00
Co-60	0.00E+00	+/-	0.00E+00

Results:

Total TRU Activity(nCi/g):	3.09E+02	+/-	1.46E+02	Calc from Pu-239 Act
Pu (g):	4.35E-02	**Pu (g) + 3 sigma TMU:**	9.75E-02	
		Pu(g) + 3 sigma:	8.89E-02	

Comments:

Errors:

Analyst: Martin Winterrose

Date: 4/5/02

```
#Date & Time: Fri Mar 08 07:10:34 2002
~g=PIPE
~description=PIPE
~comment=1/2_OF_THE_GEOMETRY
~Ccollimator=50MM-180D
~crpn=4
~Detector=7219
~Convergence in %=1            ~MDRPN=4
~Lunit=IN  ~Tunit=C  ~Dunit=G/CU.C    ~Punit=MM.HG
~at=20        ~ap=760        ~rh=50
~Energies kev=   50.000,  100.000,  128.000,  130.000,  150.000,  200.000,#
                300.000,  500.000,  700.000, 1000.000, 1400.000, 2000.000,#
               4000.000,
~Error in %=     10.000,   10.000,   10.000,   10.000,   10.000,    8.000,#
                  8.000,    6.000,    6.000,    4.000,    4.000,    4.000,#
                  4.000,
~d1.1=0.216     ~d1.2=3         ~d1.3=18        ~d1.4=18        ~1mater=304SS
~d2.1=0.1       ~d2.2=18        ~d2.3=18        ~2mater=DRYDIRT  ~2den=1.6
~sd1=24
```

C A N B E R R A I S O C S A N A L Y S I S

Report Generated On : 3/08/02 7:52:50 AM

Sample Title : 2018 Count 1
Spectrum Description :
Sample Identification : 0991
Sample Size : 12.5 kg

Sample Taken On : 12/05/01 2:17:00 PM
Acquisition Started : 12/05/01 2:17:37 PM

Live Time: 900.0 seconds Real Time: 904.0 seconds

ISOCS Calabration : PIPE
Energy Calibration Used Done On : 11/29/01
Efficiency Calibration Used Done On : 3/08/02

P E A K A N A L Y S I S R E P O R T

	Peak No.	Peak centroid	Energy (keV)	Net Peak Area	Net Area Uncert.	Continuum Counts
	1	238.03	59.54	9.61E+004	402.36	1.37E+004
	2	301.00	75.29	1.78E+003	117.45	2.74E+003
	3	340.00	85.04	3.53E+002	73.29	1.82E+003
M	4	380.02	95.04	8.86E+001	45.04	1.44E+003
m	5	396.29	99.11	2.78E+002	95.60	2.43E+003
m	6	413.93	103.52	2.12E+002	74.93	2.27E+003
	7	516.94	129.28	1.29E+002	67.47	1.47E+003
	8	2043.00	510.86	6.02E+001	16.22	5.38E+001
	9	2646.05	661.65	8.11E+001	13.20	2.39E+001
	10	5846.00	1461.78	2.01E+002	14.85	3.92E+000

N U C L I D E I D E N T I F I C A T I O N R E P O R T

Nuclide Name	Id Confidence	Energy (keV)	Yield (%)	Activity (uCi)	Activity Uncertainty
Pu-239	0.426	129.28*	0.01	5.33288E+001	2.92899E+001
		375.00	0.00		
		413.70	0.00		
		451.50 @	0.00		
AM-241	0.997	59.54*	35.70	1.86170E+003	1.48287E+002
		125.28	0.00		
		335.40	0.00		
		662.42* @	0.00	6.25632E+002	1.03752E+002
		722.70	0.00		

I N T E R F E R E N C E C O R R E C T E D R E P O R T

	Nuclide Name		Nuclide Id Confidence	Wt mean Activity (uCi/kg)	Wt mean Activity Uncertainty
X	CS-137		1.000		
	Pu-239	@	0.426	5.332882E+001	2.928995E+001
	AM-241	@	0.997	1.861700E+003	1.482872E+002

? = nuclide is part of an undetermined solution
X = nuclide rejected by the interference analysis
@ = nuclide contains energy lines not used in Weighted Mean Activity

Errors quoted at 1.000 sigma

N U C L I D E T O T A L S

Nuclide	Mass (g)
Pu-239	1.08E-002 +/- 5.91E-003

****
***** N U C L I D E M D A R E P O R T *****
****

	Nuclide Name	Energy (keV)	Yield (%)	Line MDA (uCi/kg)	Nuclide MDA (uCi/kg)	Activity (uCi/kg)
	CO-60	1173.22	100.00	1.0599E-003	8.89E-004	3.3906E-004
		1332.49	100.00	8.8875E-004		-4.5753E-004
	CS-134	475.35	1.46	9.3181E-002	1.13E-003	-5.8641E-003
		563.23	8.38	1.3741E-002		-7.1971E-003
		569.32	15.43	7.4872E-003		5.0853E-003
		604.70	97.60	1.4936E-003		2.1097E-004
		795.84	85.40	1.1251E-003		-8.7839E-005
		801.93	8.73	1.1026E-002		3.0340E-003
		1038.57	1.00	1.1420E-001		9.7539E-002
		1167.94	1.80	6.2134E-002		-7.7823E-003
		1365.15	3.04	2.8452E-002		1.5704E-002
	CS-137	661.65*	85.12	1.1251E-003	1.13E-003	2.6460E-003
	NP-237	300.17	6.20	2.3073E-002	3.86E-003	-6.3394E-003
		312.00	36.00	3.8568E-003		-2.0127E-003
		340.60	4.20	3.5273E-002		-1.0380E-002
+	Pu-239	129.28*	0.01	9.1557E+001	8.97E+001	5.3329E+001
		375.00	0.00	8.9702E+001		-5.5071E+001
		413.70	0.00	1.0063E+002		1.3764E+002
		451.50	0.00	6.8543E+002		1.3830E+002
+	AM-241	59.54*	35.70	1.6410E+001	1.64E+001	1.8617E+003
		125.28	0.00	1.8871E+002		9.1279E+001
		335.40	0.00	3.0702E+002		1.0029E+002
		662.42*	0.00	2.6602E+002		6.2563E+002
		722.70	0.00	8.9391E+002		-3.4385E+002
	PU-241	114.00	0.02	4.4840E+001	4.48E+001	5.5018E+001
		332.60	0.00	5.1181E+001		5.4029E+001
	CM-243	209.70	3.27	5.7103E-002	9.78E-003	-2.9084E-002
		228.18	10.56	1.6167E-002		8.9464E-003
		277.60	14.00	9.7771E-003		-1.9287E-003

+ = Nuclide identified during the nuclide identification
* = Energy line found in the spectrum
> = MDA value not calculated
@ = Half-life too short to be able to perform the decay correction

C A N B E R R A I S O C S A N A L Y S I S

Report Generated On : 3/08/02 7:26:05 AM

Sample Title : 2018 Count 2
Spectrum Description :
Sample Identification : 0992
Sample Size : 12.5 kg

Sample Taken On : 12/05/01 2:43:00 PM
Acquisition Started : 12/05/01 2:43:24 PM

Live Time: 900.0 seconds Real Time: 902.2 seconds

ISOCS Calabration : PIPE
Energy Calibration Used Done On : 11/29/01
Efficiency Calibration Used Done On : 3/08/02

P E A K A N A L Y S I S R E P O R T

Peak No.	Peak centroid	Energy (keV)	Net Peak Area	Net Area Uncert.	Continuum Counts
1	239.13	59.82	3.84E+004	813.04	1.24E+003
2	339.78	84.98	4.43E+002	38.29	1.15E+003
3	485.76	121.48	1.11E+002	31.03	1.05E+003
4	517.36	129.39	9.73E+001	30.03	9.65E+002
5	2646.09	661.66	5.29E+001	8.73	1.65E+001

N U C L I D E I D E N T I F I C A T I O N R E P O R T

Nuclide Name	Id Confidence	Energy (keV)	Yield (%)	Activity (uCi)	Activity Uncertainty
Pu-239	0.426	129.28*	0.01	4.01450E+001	1.41029E+001
		375.00	0.00		
		413.70	0.00		
		451.50 @	0.00		
AM-241	0.994	59.54*	35.70	6.95666E+002	5.72170E+001
		125.28	0.00		
		335.40	0.00		
		662.42* @	0.00	4.08142E+002	6.85700E+001
		722.70	0.00		

I N T E R F E R E N C E C O R R E C T E D R E P O R T

	Nuclide Name	Nuclide Id Confidence	Wt mean Activity (uCi/kg)	Wt mean Activity Uncertainty
X	CS-137	1.000		
	Pu-239 @	0.426	4.014496E+001	1.410285E+001
	AM-241 @	0.994	6.956661E+002	5.721704E+001

? = nuclide is part of an undetermined solution
X = nuclide rejected by the interference analysis
@ = nuclide contains energy lines not used in Weighted Mean Activity

Errors quoted at 1.000 sigma

****
***** N U C L I D E M D A R E P O R T *****
****

	Nuclide Name	Energy (keV)	Yield (%)	Line MDA (uCi/kg)	Nuclide MDA (uCi/kg)	Activity (uCi/kg)
	CO-60	1173.22	100.00	1.0474E-003	8.71E-004	5.3569E-005
		1332.49	100.00	8.7132E-004		-9.2033E-005
	CS-134	475.35	1.46	9.0666E-002	1.35E-003	-6.8833E-002
		563.23	8.38	1.4153E-002		1.8621E-003
		569.32	15.43	7.8862E-003		4.4176E-003
		604.70	97.60	1.4640E-003		9.6789E-004
		795.84	85.40	1.3470E-003		1.6332E-004
		801.93	8.73	1.2592E-002		-7.3674E-003
		1038.57	1.00	1.0212E-001		1.2990E-002
		1167.94	1.80	5.5225E-002		-7.2431E-002
		1365.15	3.04	2.9046E-002		-1.0253E-002
	CS-137	661.65*	85.12	7.0463E-004	7.05E-004	1.7262E-003
	NP-237	300.17	6.20	2.1679E-002	3.79E-003	-1.8973E-003
		312.00	36.00	3.7914E-003		1.9271E-003
		340.60	4.20	3.3257E-002		2.6950E-002
		375.00	0.68	1.9355E-001		1.2907E-001
		415.60	1.75	7.9957E-002		-1.3637E-002
+	Pu-239	129.28*	0.01	6.0732E+001	6.07E+001	4.0145E+001
		375.00	0.00	8.3176E+001		5.5468E+001
		413.70	0.00	9.5083E+001		-1.4279E+001
		451.50	0.00	6.9907E+002		1.3516E+002
+	AM-241	59.54*	35.70	3.0192E+000	3.02E+000	6.9567E+002
		125.28	0.00	1.7504E+002		2.2086E+001
		335.40	0.00	2.8067E+002		2.2927E+001
		662.42*	0.00	1.6661E+002		4.0814E+002
		722.70	0.00	9.0012E+002		2.1786E+002
	PU-241	114.00	0.02	4.1436E+001	4.14E+001	2.1594E+000
		332.60	0.00	4.7458E+001		-9.0424E+000
	CM-243	209.70	3.27	5.2838E-002	1.00E-002	-1.3637E-002
		228.18	10.56	1.5196E-002		6.1620E-003
		277.60	14.00	1.0030E-002		9.4724E-004

+ = Nuclide identified during the nuclide identification
* = Energy line found in the spectrum
> = MDA value not calculated
@ = Half-life too short to be able to perform the decay correction

N U C L I D E T O T A L S

Nuclide	Mass (g)
Pu-239	8.09E-003 +/- 2.84E-003

Bldg 233-S
NDA Item Description Sheet
Pipe Geometry

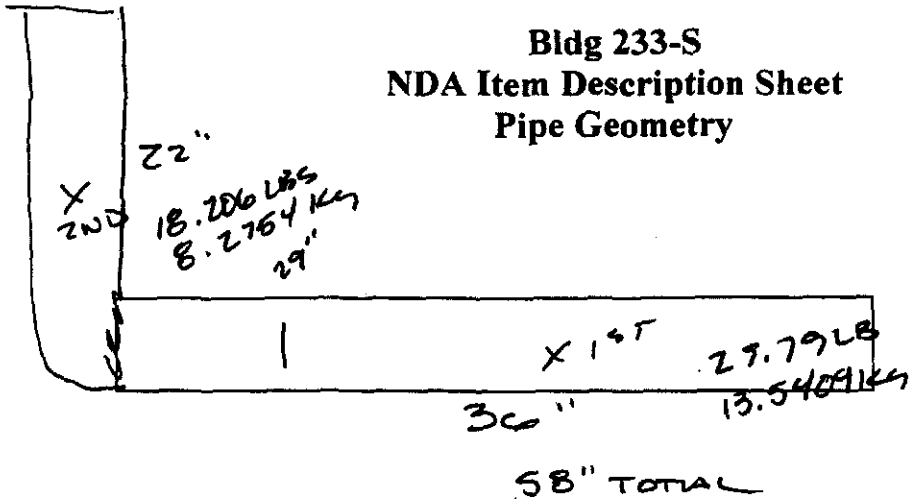

Put Dimensions on Pipe

IF MODELLED AS 2 PIPE SHOULD WE BE PLOTTED

Item ID: 2019

Weight (kg): 48 LBS 21.81 KG

Material Description: 3" PIPE L SHAPED

Packaging: 3 LAYER POLY

Detector Distance (in): 24"

Detector Filters: NONE

Dose Rate: <.5

Comments: 1ST SHOT MODELED AS 36" LONG. SRL 900 0995
2ND SHOT MODELED AS 22" LONG 900 0996
1ST GEOMETRY (
2ND " "
~~THREE COUNTS WERE SUMMED~~ N/A)

233-S Item Analysis

Spreadsheet Version 3.0b

1/14/02

Sample Info:

Item ID:	2019	**Assay Date:**	6-Dec-01
File Name:	995	**File Name:**	996

Data Input:

Isotope	Activity (uCi/kg)	Meas Uncert	Activity (uCi/kg)	Meas Uncert
Pu-239 (129)	8.94E+01		1.22E+02	
Pu-239 (414)				
Am-241	4.68E+02	3.86E+01	4.84E+02	4.01E+01
Np-237	2.13E-03	5.73E-04		
U-238				
U-235				
Cs-137	2.04E-02	1.03E-03	2.06E-02	1.19E-03
Co-60				

Item Parameters:

Contamination: Internal

Item Type: Pipe or Duct

Calcs: Sum

Dimensions:

Length (in):	58	Width (in):	3	Depth (in):	3
Weight (lbs):	48	Depth for TMU (in):	4	% Volume:	100

Am-241 Calcs:

Measured	9.52E+02	+/-	4.30E+02	Calc from Pu-239
Calculated	2.93E+02	+/-	1.85E+02	

Nuclide Activities:

Isotope	Activity (nCi/g)		Total Unc 1 sigma
Pu-238	8.57E+01	+/-	1.92E+01
Pu-239	2.11E+02	+/-	4.75E+01
Pu-240	1.10E+02	+/-	2.47E+01
Pu-241	4.12E+02	+/-	9.24E+01
Pu-242	1.11E-01	+/-	2.50E-02
Am-241	2.93E+02	+/-	1.85E+02
Np-237	2.13E-03	+/-	6.21E-04
U-238	0.00E+00	+/-	0.00E+00
U-235	0.00E+00	+/-	0.00E+00
Cs-137	4.10E-02	+/-	4.84E-03
Co-60	0.00E+00	+/-	0.00E+00

Results:

Total TRU Activity(nCi/g):		7.00E+02	+/-	1.93E+02	Calc from Pu-239 MDA
Pu (g):	8.59E-02	**Pu (g) + 3 sigma TMU:**		1.44E-01	
		Pu(g) + 3 sigma:		8.59E-02	

Comments:

Item modeled as 2 separate geometries then summed. Pu-239 MDA used.

Errors:

Analyst: Martin Winterrose

Date: 4/5/02

```
#Date & Time: Thu Dec 06 10:40:24 2001
~g=PIPE
~description=2019_COUNT_2
~comment=3"_PIPE
~Ccollimator=50MM-180D
~crpn=4
~Detector=7219
~Convergence in %=1            ~MDRPN=4
~Lunit=IN  ~Tunit=C  ~Dunit=G/CU.C    ~Punit=MM.HG
~at=20        ~ap=760       ~rh=50
~Energies kev=   50.000,  100.000,  128.000,  130.000,  150.000,  200.000,#
                300.000,  500.000,  700.000, 1000.000, 1400.000, 2000.000,#
               4000.000,
~Error in %=     10.000,   10.000,   10.000,   10.000,   10.000,    8.000,#
                  8.000,    6.000,    6.000,    4.000,    4.000,    4.000,#
                  4.000,
~d1.1=0.216     ~d1.2=3          ~d1.3=11        ~d1.4=11        ~1mater=304SS
~d2.1=0.133     ~d2.2=11         ~d2.3=11        ~2mater=DRYDIRT  ~2den=1.6
~sd1=24
```

C A N B E R R A I S O C S A N A L Y S I S

Report Generated On : 3/08/02 8:17:17 AM

Sample Title : 2019 count 2
Spectrum Description :
Sample Identification : 0996
Sample Size : 8.3 kg

Sample Taken On : 12/06/01 10:41:00 AM
Acquisition Started : 12/06/01 10:41:25 AM

Live Time: 900.0 seconds Real Time: 901.9 seconds

ISOCS Calabration : 2019 COUNT_2
Energy Calibration Used Done On : 11/29/01
Efficiency Calibration Used Done On : 12/06/01

P E A K A N A L Y S I S R E P O R T

Peak No.	Peak centroid	Energy (keV)	Net Peak Area	Net Area Uncert.	Continuum Counts
1	239.13	59.82	2.24E+004	518.80	1.12E+003
2	340.06	85.05	3.62E+002	37.96	1.21E+003
3	2044.60	511.26	5.94E+001	10.02	3.56E+001
4	2437.99	609.63	4.85E+001	9.02	1.97E+001
5	2646.12	661.67	4.65E+002	22.40	1.84E+001

N U C L I D E I D E N T I F I C A T I O N R E P O R T

Nuclide Name	Id Confidence	Energy (keV)	Yield (%)	Activity (uCi)	Activity Uncertainty
CS-137	1.000	661.65*	85.12	2.06434E-002	1.18733E-003
AM-241	0.994	59.54*	35.70	4.84463E+002	4.01009E+001
		125.28	0.00		
		335.40	0.00		
		662.42* @	0.00	4.88102E+003	2.80427E+002
		722.70	0.00		

I N T E R F E R E N C E C O R R E C T E D R E P O R T

Nuclide Name	Nuclide Id Confidence	Wt mean Activity (uCi/kg)	Wt mean Activity Uncertainty
CS-137	1.000	1.859444E-002	1.198080E-003
AM-241 @	0.994	4.844633E+002	4.010091E+001

? = nuclide is part of an undetermined solution
X = nuclide rejected by the interference analysis
@ = nuclide contains energy lines not used in Weighted Mean Activity

Errors quoted at 1.000 sigma

****
***** N U C L I D E M D A R E P O R T *****
****

	Nuclide Name	Energy (keV)	Yield (%)	Line MDA (uCi/kg)	Nuclide MDA (uCi/kg)	Activity (uCi/kg)
	CO-60	1173.22	100.00	1.5360E-003	1.38E-003	1.0612E-003
		1332.49	100.00	1.3763E-003		6.8432E-004
	CS-134	475.35	1.46	1.3124E-001	1.81E-003	3.8189E-002
		563.23	8.38	2.0504E-002		-1.0246E-002
		569.32	15.43	1.0947E-002		-3.2060E-003
		604.70	97.60	2.1535E-003		-4.5146E-004
		795.84	85.40	1.8065E-003		-7.9535E-004
		801.93	8.73	1.7861E-002		7.8366E-004
		1038.57	1.00	1.4431E-001		2.0435E-002
		1167.94	1.80	8.8636E-002		1.0094E-002
		1365.15	3.04	3.3740E-002		-4.6124E-002
+	CS-137	661.65*	85.12	1.0059E-003	1.01E-003	2.0643E-002
	NP-237	300.17	6.20	3.5239E-002	5.53E-003	8.3839E-003
		312.00	36.00	5.5337E-003		3.2796E-003
		340.60	4.20	4.8149E-002		-4.5680E-002
		375.00	0.68	2.8277E-001		-1.6956E-001
		415.60	1.75	1.2497E-001		1.5068E-002
	Pu-239	129.28	0.01	1.4389E+002	1.22E+002	5.6458E+000
		375.00	0.00	1.2152E+002		-7.2869E+001
		413.70	0.00	1.4170E+002		-5.6398E+001
		451.50	0.00	1.0367E+003		-1.6074E+002
+	AM-241	59.54*	35.70	3.4214E+000	3.42E+000	4.8446E+002
		125.28	0.00	2.4423E+002		8.7623E+001
		335.40	0.00	3.9010E+002		-3.2607E+001
		662.42*	0.00	2.3785E+002		4.8810E+003
		722.70	0.00	1.2164E+003		8.5732E+002
	PU-241	114.00	0.02	5.7946E+001	5.79E+001	2.8835E+001
		332.60	0.00	6.5298E+001		-3.7900E+001
	CM-243	209.70	3.27	7.6307E-002	1.50E-002	-3.0591E-003
		228.18	10.56	2.2048E-002		3.1049E-003
		277.60	14.00	1.4983E-002		4.6649E-003

+ = Nuclide identified during the nuclide identification
* = Energy line found in the spectrum
> = MDA value not calculated
@ = Half-life too short to be able to perform the decay correction

N U C L I D E T O T A L S

Nuclide	Mass (g)

```
#Date & Time: Thu Dec 06 10:10:02 2001
~g=PIPE
~description=2019_1ST_SHOT
~comment=3"_PIPE
~Ccollimator=50MM-180D
~crpn=4
~Detector=7219
~Convergence in %=1            ~MDRPN=4
~Lunit=IN  ~Tunit=C  ~Dunit=G/CU.C    ~Punit=MM.HG
~at=20        ~ap=760       ~rh=50
~Energies kev=   50.000,  100.000,  128.000,  130.000,  150.000,  200.000,#
                300.000,  500.000,  700.000, 1000.000, 1400.000, 2000.000,#
               4000.000,
~Error in %=     10.000,   10.000,   10.000,   10.000,   10.000,    8.000,#
                  8.000,    6.000,    6.000,    4.000,    4.000,    4.000,#
                  4.000,
~d1.1=0.216     ~d1.2=3         ~d1.3=18        ~d1.4=18        ~1mater=304SS
~d2.1=0.133     ~d2.2=18        ~d2.3=18        ~2mater=DRYDIRT  ~2den=1.6
~sd1=24
```

C A N B E R R A I S O C S A N A L Y S I S

Report Generated On : 3/08/02 8:12:32 AM

Sample Title : 2019 count 1
Spectrum Description :
Sample Identification : 0995
Sample Size : 13.5 kg

Sample Taken On : 12/06/01 10:12:00 AM
Acquisition Started : 12/06/01 10:12:51 AM

Live Time: 900.0 seconds Real Time: 901.9 seconds

ISOCS Calabration : 2019 1ST_SHOT
Energy Calibration Used Done On : 11/29/01
Efficiency Calibration Used Done On : 12/06/01

P E A K A N A L Y S I S R E P O R T

Peak No.	Peak centroid	Energy (keV)	Net Peak Area	Net Area Uncert.	Continuum Counts
1	239.11	59.81	2.75E+004	595.45	1.13E+003
2	339.59	84.94	4.02E+002	38.23	1.18E+003
3	1248.45	312.19	4.12E+001	10.92	7.92E+001
4	2044.66	511.28	6.16E+001	10.59	3.68E+001
5	2646.07	661.66	6.79E+002	26.74	1.83E+001
6	7059.49	1765.20	1.75E+001	5.16	7.71E-002

NUCLIDE IDENTIFICATION REPORT

Nuclide Name	Id Confidence	Energy (keV)	Yield (%)	Activity (uCi)	Activity Uncertainty
CS-137	1.000	661.65*	85.12	2.03684E-002	1.02717E-003
NP-237	0.583	300.17	6.20		
		312.00*	36.00	2.12980E-003	5.73247E-004
		340.60	4.20		
		375.00	0.68		
		415.60	1.75		
AM-241	0.994	59.54*	35.70	4.68185E+002	3.85648E+001
		125.28	0.00		
		335.40	0.00		
		662.42* @	0.00	4.81600E+003	2.42519E+002
		722.70	0.00		

INTERFERENCE CORRECTED REPORT

Nuclide Name	Nuclide Id Confidence	Wt mean Activity (uCi/kg)	Wt mean Activity Uncertainty
CS-137	1.000	1.838833E-002	1.038580E-003
NP-237	0.583	2.129796E-003	5.732474E-004
AM-241 @	0.994	4.681850E+002	3.856475E+001

? = nuclide is part of an undetermined solution
X = nuclide rejected by the interference analysis
@ = nuclide contains energy lines not used in Weighted Mean Activity

Errors quoted at 1.000 sigma

****
***** N U C L I D E M D A R E P O R T *****
****

	Nuclide Name	Energy (keV)	Yield (%)	Line MDA (uCi/kg)	Nuclide MDA (uCi/kg)	Activity (uCi/kg)
	CO-60	1173.22	100.00	8.7908E-004	8.79E-004	-5.7064E-004
		1332.49	100.00	9.6194E-004		7.7989E-005
	CS-134	475.35	1.46	9.2235E-002	1.10E-003	7.8264E-003
		563.23	8.38	1.4426E-002		-9.2423E-003
		569.32	15.43	7.9709E-003		3.4998E-003
		604.70	97.60	1.3188E-003		-9.3199E-004
		795.84	85.40	1.1009E-003		-1.0033E-003
		801.93	8.73	1.2146E-002		4.7940E-003
		1038.57	1.00	8.6084E-002		-1.0263E-001
		1167.94	1.80	5.2155E-002		-1.4146E-002
		1365.15	3.04	2.4466E-002		-2.8885E-002
+	CS-137	661.65*	85.12	6.7852E-004	6.79E-004	2.0368E-002
+	NP-237	300.17	6.20	2.3144E-002	2.28E-003	-6.8270E-003
		312.00*	36.00	2.2801E-003		2.1298E-003
		340.60	4.20	3.4345E-002		1.8599E-002
		375.00	0.68	2.1011E-001		7.7505E-002
		415.60	1.75	7.6910E-002		-2.2255E-002
	Pu-239	129.28	0.01	9.8250E+001	8.94E+001	-3.2524E+001
		375.00	0.00	9.0293E+001		3.3308E+001
		413.70	0.00	8.9432E+001		7.8445E+001
		451.50	0.00	7.0835E+002		-3.4652E+002
+	AM-241	59.54*	35.70	2.7070E+000	2.71E+000	4.6819E+002
		125.28	0.00	1.6845E+002		1.4840E+001
		335.40	0.00	2.8187E+002		-6.0720E+001
		662.42*	0.00	1.6043E+002		4.8160E+003
		722.70	0.00	8.2777E+002		-5.2740E+002
	PU-241	114.00	0.02	4.0279E+001	4.03E+001	2.2335E+001
		332.60	0.00	4.9853E+001		2.3997E+001
	CM-243	209.70	3.27	5.2287E-002	1.00E-002	1.5175E-002
		228.18	10.56	1.5432E-002		6.1585E-003
		277.60	14.00	1.0022E-002		-9.5722E-003

+ = Nuclide identified during the nuclide identification
* = Energy line found in the spectrum
> = MDA value not calculated
@ = Half-life too short to be able to perform the decay correction

N U C L I D E T O T A L S

Nuclide	Mass (g)

Bldg 233-S
NDA Item Description Sheet
Pipe Geometry

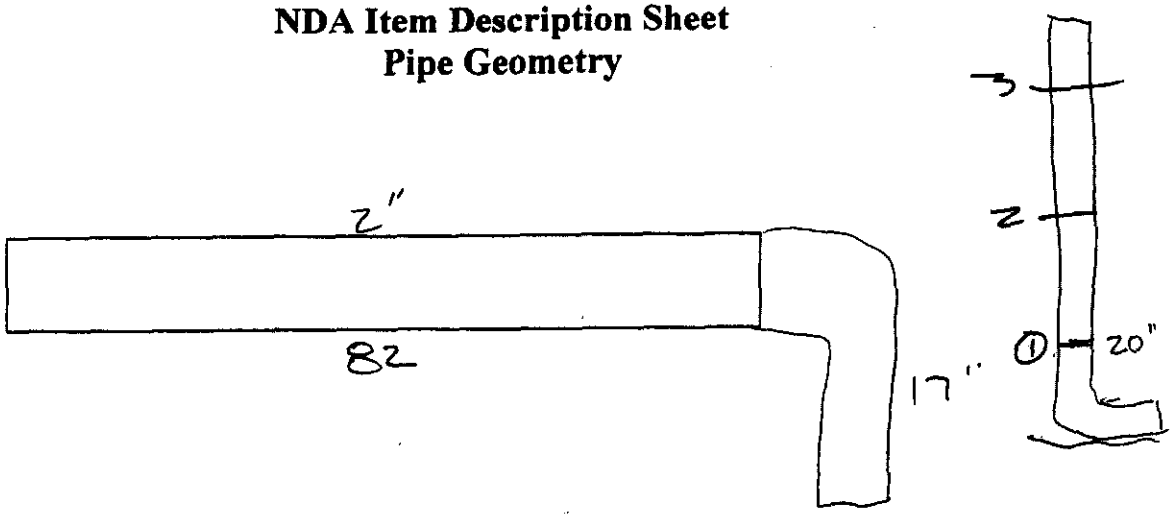

Put Dimensions on Pipe

Item ID: 7022

Weight (kg): 38 17.27

Material Description: LONG 2" PIPE

Packaging: 3 LAYERS

Detector Distance (in): ~~2.1" N/A~~ 52"

Detector Filters: N/A

Dose Rate: <.5

Comments:
1 SIDE A -20" 950 1032
2 SIDE A CT 900 1033
* 3 SIDE A TP 1350 1034 *
LS 1 - 1800 SEC @ 52" 1038 4 SIDE B TZO -20 450 1035 -
LS 2 - 1800 SEC @ 52" 1039 5 SIDE B CT 900 1036 -
6 SIDE B TP 1350 1037 *

ITEM ASSAYED IN SEVERAL CONFIGURATIONS -
- LONGER COUNTS RESULTED MORE CONSITANT RESULTS
MW

233-S Item Analysis Spreadsheet Version 3.0b 1/14/02

Sample Info:

Item ID:	2022	**Assay Date:**	17-Dec-01
File Name:	1038	**File Name:**	1039

Data Input:

Isotope	Activity (uCi/kg)	Meas Uncert	Activity (uCi/kg)	Meas Uncert
Pu-239 (129)	1.58E+02	3.63E+01	1.16E+02	3.11E+01
Pu-239 (414)				
Am-241	2.66E+02	2.19E+01	4.34E+02	3.57E+01
Np-237	2.03E-02	2.34E-03	2.14E-02	2.46E-03
U-238				
U-235				
Cs-137	7.83E-01	2.66E-02	1.09E+00	3.63E-02
Co-60				

Item Parameters:

Contamination: Internal Item Type: Pipe or Duct Calcs: Average

Dimensions:

Length (in):	82	Width (in):	2	Depth (in):	2
Weight (lbs):	38	Depth for TMU (in):	4	% Volume:	100

Am-241 Calcs:

Measured	3.50E+02	+/-	1.58E+02	Calc from Pu-239
Calculated	1.89E+02	+/-	1.45E+02	

Nuclide Activities:

Isotope	Activity (nCi/g)		Total Unc 1 sigma
Pu-238	5.55E+01	+/-	1.58E+01
Pu-239	1.37E+02	+/-	3.89E+01
Pu-240	7.13E+01	+/-	2.03E+01
Pu-241	2.66E+02	+/-	7.58E+01
Pu-242	7.20E-02	+/-	2.05E-02
Am-241	1.89E+02	+/-	1.45E+02
Np-237	2.08E-02	+/-	2.88E-03
U-238	0.00E+00	+/-	0.00E+00
U-235	0.00E+00	+/-	0.00E+00
Cs-137	9.34E-01	+/-	1.07E-01
Co-60	0.00E+00	+/-	0.00E+00

Results:

Total TRU Activity(nCi/g):	4.53E+02	+/-	1.52E+02	Calc from Pu-239 Act	
Pu (g):	4.40E-02	**Pu (g) + 3 sigma TMU:**	8.16E-02		
		Pu(g) + 3 sigma:	6.71E-02		

Comments: Value Averaged for most conservitive result

Errors:

Analyst: Martin Winterrose **Date:** 2/12/02

```
#Date & Time: Mon Dec 17 14:03:25 2001
~g=PIPE
~description=2022_LONG_SHOT
~comment=2"_PIPE
~Ccollimator=50MM-180D
~crpn=4
~Detector=7219
~Convergence in %=1            ~MDRPN=4
~Lunit=IN  ~Tunit=C  ~Dunit=G/CU.C    ~Punit=MM.HG
~at=20        ~ap=760       ~rh=50
~Energies kev=   50.000,  100.000,  128.000,  130.000,  150.000,  200.000,#
                300.000,  500.000,  700.000, 1000.000, 1400.000, 2000.000,#
               4000.000,
~Error in %=     10.000,   10.000,   10.000,   10.000,   10.000,    8.000,#
                  8.000,    6.000,    6.000,    4.000,    4.000,    4.000,#
                  4.000,
~d1.1=0.154     ~d1.2=2         ~d1.3=41        ~d1.4=41        ~1mater=304SS    ~1den=7.81
~d2.1=0.0312    ~d2.2=41        ~d2.3=41        ~2mater=DRYDIRT  ~2den=1.6       ~2con=1
~sd1=52
```

C A N B E R R A I S O C S A N A L Y S I S

Report Generated On : 12/26/01 2:32:00 PM

Sample Title : 2022 Side long Shot
Spectrum Description :
Sample Identification : 1038
Sample Size : 17.3 kg

Sample Taken On : 12/17/01 2:06:00 PM
Acquisition Started : 12/17/01 2:06:38 PM

Live Time: 1800.0 seconds Real Time: 1806.0 seconds

ISOCS Calabration : 2022 LONG_SHO
Energy Calibration Used Done On : 11/29/01
Efficiency Calibration Used Done On : 12/17/01

P E A K A N A L Y S I S R E P O R T

Peak No.	Peak centroid	Energy (keV)	Net Peak Area	Net Area Uncert.	Continuum Counts
1	239.14	59.82	5.26E+004	1138.94	3.42E+003
2	292.05	73.05	1.97E+003	90.88	3.38E+003
3	301.08	75.31	3.27E+003	106.37	3.41E+003
4	340.40	85.14	1.52E+003	95.37	3.79E+003
5	350.61	87.69	3.33E+002	74.63	3.81E+003
6	396.49	99.16	3.81E+002	59.70	3.82E+003
7	415.45	103.90	1.63E+002	56.78	3.79E+003
8	447.56	111.93	1.97E+002	56.50	3.70E+003
9	502.46	125.66	1.80E+002	56.31	3.42E+003
10	519.16	129.84	3.70E+002	58.14	3.32E+003
11	1248.28	312.15	2.95E+002	30.98	8.74E+002
12	2437.82	609.58	1.01E+002	16.71	1.83E+002
13	2646.43	661.74	1.86E+004	238.66	6.41E+001
14	7063.32	1766.16	4.70E+001	7.83	1.28E+000

NUCLIDE IDENTIFICATION REPORT

Nuclide Name	Id Confidence	Energy (keV)	Yield (%)	Activity (uCi)	Activity Uncertainty
CS-137	1.000	661.65*	85.12	7.83310E-001	2.66313E-002
NP-237	0.584	300.17	6.20		
		312.00*	36.00	2.02977E-002	2.33966E-003
		340.60	4.20		
		375.45	0.68		
		415.76	1.75		
Pu-239	0.449	129.28*	0.01	1.57793E+002	3.63024E+001
		375.00	0.00		
		413.70	0.00		
		451.50 @	0.00		
AM-241	0.997	59.54*	35.70	2.66461E+002	2.19492E+001
		125.28*	0.00	1.25848E+002	3.98390E+001
		335.40	0.00		
		662.42* @	0.00	1.85209E+005	6.27690E+003
		722.70	0.00		

INTERFERENCE CORRECTED REPORT

Nuclide Name	Nuclide Id Confidence	Wt mean Activity (uCi/kg)	Wt mean Activity Uncertainty
CS-137	1.000	7.823216E-001	2.654719E-002
NP-237	0.584	2.029775E-002	2.339665E-003
Pu-239 @	0.449	1.577933E+002	3.630242E+001
AM-241 @	0.997	2.337179E+002	1.922451E+001

? = nuclide is part of an undetermined solution
X = nuclide rejected by the interference analysis
@ = nuclide contains energy lines not used in Weighted Mean Activity

Errors quoted at 1.000 sigma

****
***** N U C L I D E M D A R E P O R T *****
****

	Nuclide Name	Energy (keV)	Yield (%)	Line MDA (uCi/kg)	Nuclide MDA (uCi/kg)	Activity (uCi/kg)
	CO-60	1173.22	100.00	2.2856E-003	1.77E-003	-2.0427E-003
		1332.49	100.00	1.7734E-003		-3.8785E-004
	CS-134	475.35	1.46	4.3242E-001	2.28E-003	3.0648E-001
		563.23	8.38	4.9544E-002		5.0611E-003
		569.32	15.43	2.6330E-002		-2.3093E-002
		604.70	97.60	4.3933E-003		1.2405E-003
		795.84	85.40	2.2761E-003		1.3553E-004
		801.93	8.73	2.3777E-002		-1.5279E-002
		1038.57	1.00	1.9116E-001		-4.4786E-002
		1167.94	1.80	1.2721E-001		2.5290E-002
		1365.15	3.04	5.5381E-002		-4.8895E-002
+	CS-137	661.65*	85.12	1.6864E-003	1.69E-003	7.8331E-001
+	NP-237	300.17	6.20	8.8724E-002	9.64E-003	1.5795E-003
		312.00*	36.00	9.6409E-003		2.0298E-002
		340.60	4.20	1.3862E-001		8.0900E-002
		375.45	0.68	8.4951E-001		-5.6873E-001
		415.76	1.75	3.4997E-001		1.4906E-001
+	Pu-239	129.28*	0.01	1.1557E+002	1.16E+002	1.5779E+002
		375.00	0.00	3.6597E+002		3.7206E+001
		413.70	0.00	4.0511E+002		1.6951E+002
		451.50	0.00	3.2687E+003		-9.9493E+000
+	AM-241	59.54*	35.70	1.3924E+000	1.39E+000	2.6646E+002
		125.28*	0.00	1.9204E+002		1.2585E+002
		335.40	0.00	1.1179E+003		1.3145E+002
		662.42*	0.00	3.9873E+002		1.8521E+005
		722.70	0.00	1.7911E+003		1.4651E+003
	PU-241	114.00	0.02	7.1445E+001	7.14E+001	3.0880E+001
		332.60	0.00	1.8978E+002		-1.2138E+001
	CM-243	209.70	3.27	1.7783E-001	3.84E-002	-3.2084E-002
		228.18	10.56	5.3599E-002		3.7687E-002
		277.60	14.00	3.8417E-002		-5.8085E-004

+ = Nuclide identified during the nuclide identification
* = Energy line found in the spectrum
> = MDA value not calculated
@ = Half-life too short to be able to perform the decay correction

N U C L I D E T O T A L S

Nuclide	Mass (g)
Pu-239	4.40E-002 +/- 1.01E-002

C A N B E R R A I S O C S A N A L Y S I S

Report Generated On : 12/26/01 2:33:35 PM

Sample Title : 2022 Side long Shot 2
Spectrum Description :
Sample Identification : 1039
Sample Size : 17.3 kg

Sample Taken On : 12/17/01 2:44:00 PM
Acquisition Started : 12/17/01 2:45:17 PM

Live Time: 1800.0 seconds Real Time: 1807.4 seconds

ISOCS Calabration : 2022 LONG_SHO
Energy Calibration Used Done On : 11/29/01
Efficiency Calibration Used Done On : 12/17/01

P E A K A N A L Y S I S R E P O R T

Peak No.	Peak centroid	Energy (keV)	Net Peak Area	Net Area Uncert.	Continuum Counts
1	239.15	59.82	8.56E+004	1867.93	3.98E+003
2	292.79	73.23	1.79E+003	80.86	3.51E+003
3	300.88	75.26	3.23E+003	92.77	3.55E+003
4	339.98	85.03	1.48E+003	77.83	3.97E+003
5	351.15	87.83	3.01E+002	66.93	4.01E+003
6	396.47	99.16	4.53E+002	69.40	4.05E+003
7	413.64	103.45	1.85E+002	64.75	4.04E+003
8	517.88	129.52	2.71E+002	56.45	3.54E+003
9	1248.33	312.16	3.11E+002	32.57	9.57E+002
10	1498.70	374.76	9.80E+001	26.18	7.98E+002
11	1655.96	414.08	7.30E+001	25.88	8.02E+002
12	2646.46	661.75	2.57E+004	288.74	7.34E+001
13	3646.76	911.87	5.70E+001	9.83	2.65E+001
14	5845.58	1461.67	5.24E+002	23.62	6.07E+000
15	7063.16	1766.12	3.51E+001	7.00	1.13E+000

N U C L I D E I D E N T I F I C A T I O N R E P O R T

Nuclide Name	Id Confidence	Energy (keV)	Yield (%)	Activity (uCi)	Activity Uncertainty
CS-137	1.000	661.65*	85.12	1.08596E+000	3.62864E-002
NP-237	0.654	300.17	6.20		
		312.00*	36.00	2.13955E-002	2.46047E-003
		340.60	4.20		
		375.45*	0.68	3.96175E-001	1.07239E-001
		415.76*	1.75	1.21298E-001	4.32893E-002
Pu-239	0.967	129.28*	0.01	1.16308E+002	3.10938E+001
		375.00*	0.00	1.70255E+002	4.73280E+001
		413.70*	0.00	1.40176E+002	5.08803E+001
		451.50 @	0.00		
AM-241	0.995	59.54*	35.70	4.33541E+002	3.57303E+001
		125.28	0.00		
		335.40	0.00		
		662.42* @	0.00	2.56768E+005	8.55161E+003
		722.70	0.00		

I N T E R F E R E N C E C O R R E C T E D R E P O R T

Nuclide Name	Nuclide Id Confidence	Wt mean Activity (uCi/kg)	Wt mean Activity Uncertainty
CS-137	1.000	1.084122E+000	3.616785E-002
NP-237	0.654	2.141446E-002	2.457171E-003
Pu-239 @	0.967	1.246053E+002	2.002401E+001
AM-241 @	0.995	4.335408E+002	3.573032E+001

? = nuclide is part of an undetermined solution
X = nuclide rejected by the interference analysis
@ = nuclide contains energy lines not used in Weighted Mean Activity

Errors quoted at 1.000 sigma

****
***** N U C L I D E M D A R E P O R T *****
****

	Nuclide Name	Energy (keV)	Yield (%)	Line MDA (uCi/kg)	Nuclide MDA (uCi/kg)	Activity (uCi/kg)
	CO-60	1173.22	100.00	2.1252E-003	1.94E-003	-8.0145E-004
		1332.49	100.00	1.9358E-003		-2.7157E-004
	CS-134	475.35	1.46	4.7354E-001	2.54E-003	8.5664E-001
		563.23	8.38	4.8489E-002		-1.7539E-002
		569.32	15.43	2.7223E-002		8.6119E-003
		604.70	97.60	4.2871E-003		3.7866E-003
		795.84	85.40	2.5372E-003		1.3472E-003
		801.93	8.73	2.4518E-002		-1.2940E-002
		1038.57	1.00	2.1011E-001		5.0687E-002
		1167.94	1.80	1.2199E-001		1.1182E-002
		1365.15	3.04	5.9639E-002		8.5309E-004
+	CS-137	661.65*	85.12	1.7982E-003	1.80E-003	1.0860E+000
+	NP-237	300.17	6.20	9.1536E-002	1.01E-002	1.1442E-002
		312.00*	36.00	1.0074E-002		2.1395E-002
		340.60	4.20	1.4150E-001		1.5543E-001
		375.45*	0.68	5.4226E-001		3.9617E-001
		415.76*	1.75	2.2345E-001		1.2130E-001
+	Pu-239	129.28*	0.01	1.1982E+002	1.20E+002	1.1631E+002
		375.00*	0.00	2.3304E+002		1.7025E+002
		413.70*	0.00	2.5823E+002		1.4018E+002
		451.50	0.00	3.6188E+003		-1.7418E+003
+	AM-241	59.54*	35.70	1.5003E+000	1.50E+000	4.3354E+002
		125.28	0.00	3.3470E+002		2.3152E+002
		335.40	0.00	1.1450E+003		3.2696E+002
		662.42*	0.00	4.2518E+002		2.5677E+005
		722.70	0.00	1.8767E+003		2.1589E+003
	PU-241	114.00	0.02	7.2970E+001	7.30E+001	7.9593E+001
		332.60	0.00	1.9454E+002		-1.0482E+001
	CM-243	209.70	3.27	1.9078E-001	4.04E-002	-1.7501E-001
		228.18	10.56	5.7488E-002		4.5205E-002
		277.60	14.00	4.0398E-002		3.4570E-002

+ = Nuclide identified during the nuclide identification
* = Energy line found in the spectrum
> = MDA value not calculated
@ = Half-life too short to be able to perform the decay correction

N U C L I D E T O T A L S

Nuclide	Mass (g)
Pu-239	3.47E-002 +/- 5.58E-003

Bldg 233-S
NDA Item Description Sheet
Pipe Geometry

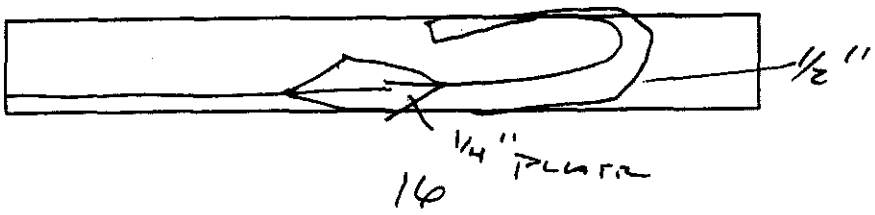

Put Dimensions on Pipe

Item ID: 2028

Weight (kg): 8.5 LBS 3.86 KG

Material Description: PIPE & METAL

Packaging: 3 LAYER

Detector Distance (in): 24"

Detector Filters: NONE

Dose Rate: <.5

Comments: MODELED AS 1" PIPE TO ACCOUNT FOR EXTRA METAL A900 1340 B1800 1341

```
#Date & Time: Wed Mar 06 11:06:01 2002
~g=PIPE
~description=2028_PIPE
~comment=PIPE_AND_METAL
~Ccollimator=50MM-180D
~crpn=4
~Detector=7219
~Convergence in %=1            ~MDRPN=4
~Lunit=IN  ~Tunit=C  ~Dunit=G/CU.C    ~Punit=MM.HG
~at=20        ~ap=760       ~rh=50
~Energies kev=   50.000,  100.000,  128.000,  130.000,  150.000,  200.000,#
                300.000,  500.000,  700.000, 1000.000, 1400.000, 2000.000,#
               4000.000,
~Error in %=     10.000,   10.000,   10.000,   10.000,   10.000,    8.000,#
                  8.000,    6.000,    6.000,    4.000,    4.000,    4.000,#
                  4.000,
~d1.1=0.133     ~d1.2=1         ~d1.3=8         ~d1.4=8         ~1mater=304SS    ~1den=7.81
~d2.1=0.133     ~d2.2=8         ~d2.3=8         ~2mater=DRYDIRT  ~2den=1.6       ~2con=1
~sd1=24
```

C A N B E R R A I S O C S A N A L Y S I S

Report Generated On : 3/06/02 11:39:06 AM

Sample Title : 2028 Side B
Spectrum Description :
Sample Identification : 1341
Sample Size : 3.9 kg

Sample Taken On : 3/06/02 11:23:00 AM
Acquisition Started : 3/06/02 11:23:59 AM

Live Time: 1800.0 seconds Real Time: 1803.8 seconds

ISOCS Calabration : 2028 PIPE
Energy Calibration Used Done On : 2/27/01
Efficiency Calibration Used Done On : 3/06/02

P E A K A N A L Y S I S R E P O R T

Peak No.	Peak centroid	Energy (keV)	Net Peak Area	Net Area Uncert.	Continuum Counts
1	201.93	50.57	2.86E+002	85.95	2.56E+003
2	239.18	59.88	5.18E+004	1361.61	2.01E+003
3	340.19	85.13	8.42E+002	56.93	2.14E+003
4	351.30	87.90	2.26E+002	56.47	2.15E+003
5	395.08	98.84	1.48E+002	45.41	2.17E+003
6	1408.44	352.10	1.16E+002	14.97	1.19E+002
7	2045.10	511.21	1.02E+002	15.47	6.49E+001
8	2436.99	609.15	1.67E+002	15.48	5.11E+001
9	2646.44	661.50	7.10E+001	11.09	4.48E+001
10	3644.17	910.85	5.53E+001	9.63	3.15E+001
11	7062.66	1765.20	6.06E+001	8.87	2.20E+000

N U C L I D E I D E N T I F I C A T I O N R E P O R T

Nuclide Name	Id Confidence	Energy (keV)	Yield (%)	Activity (uCi)	Activity Uncertainty
CS-137	0.999	661.65*	85.12	2.41182E-003	3.84229E-004
AM-241	0.994	59.54*	35.70	9.26281E+001	7.75341E+000
		125.28	0.00		
		335.40	0.00		
		662.42* @	0.00	5.70261E+002	9.08357E+001
		722.70	0.00		

I N T E R F E R E N C E C O R R E C T E D R E P O R T

Nuclide Name	Nuclide Id Confidence	Wt mean Activity (uCi/kg)	Wt mean Activity Uncertainty
CS-137	0.999	2.020066E-003	3.855706E-004
AM-241 @	0.994	9.262806E+001	7.753415E+000

? = nuclide is part of an undetermined solution
X = nuclide rejected by the interference analysis
@ = nuclide contains energy lines not used in Weighted Mean Activity

Errors quoted at 1.000 sigma

****
***** N U C L I D E M D A R E P O R T *****
****

	Nuclide Name	Energy (keV)	Yield (%)	Line MDA (uCi/kg)	Nuclide MDA (uCi/kg)	Activity (uCi/kg)
	CO-60	1173.22	100.00	1.7516E-003	1.74E-003	-4.5238E-004
		1332.49	100.00	1.7403E-003		5.5724E-004
	CS-134	475.35	1.46	1.2192E-001	2.08E-003	1.1905E-001
		563.23	8.38	2.0934E-002		1.1263E-002
		569.32	15.43	1.1336E-002		-5.9347E-003
		604.70	97.60	2.6188E-003		1.1827E-003
		795.84	85.40	2.0830E-003		1.2316E-003
		801.93	8.73	1.9859E-002		-2.1071E-003
		1038.57	1.00	1.6428E-001		-7.2572E-002
		1167.94	1.80	9.8107E-002		8.5166E-003
		1365.15	3.04	5.0612E-002		6.6083E-002
+	CS-137	661.65*	85.12	1.1497E-003	1.15E-003	2.4118E-003
	NP-237	300.17	6.20	3.3512E-002	5.32E-003	2.0368E-003
		312.00	36.00	5.3194E-003		-1.9682E-003
		340.60	4.20	4.6864E-002		1.0984E-003
		375.00	0.68	2.7321E-001		1.5881E-001
		415.60	1.75	1.1099E-001		-1.7296E-002
	Pu-239	129.28	0.01	1.0523E+002	1.05E+002	1.0334E+002
		375.00	0.00	1.1741E+002		6.8250E+001
		413.70	0.00	1.2385E+002		-1.5413E+002
		451.50	0.00	1.0108E+003		3.0284E+002
+	AM-241	59.54*	35.70	3.7829E-001	3.78E-001	9.2628E+001
		125.28	0.00	1.7278E+002		-4.5349E+001
		335.40	0.00	4.0195E+002		2.9062E+002
		662.42*	0.00	2.7185E+002		5.7026E+002
		722.70	0.00	1.3751E+003		-5.3414E+002
	PU-241	114.00	0.02	3.7163E+001	3.72E+001	2.2799E+001
		332.60	0.00	6.8231E+001		-1.2231E+002
	CM-243	209.70	3.27	7.1242E-002	1.47E-002	7.3742E-003
		228.18	10.56	2.1102E-002		6.1330E-003
		277.60	14.00	1.4732E-002		6.4992E-003

+ = Nuclide identified during the nuclide identification
* = Energy line found in the spectrum
> = MDA value not calculated
@ = Half-life too short to be able to perform the decay correction

N U C L I D E T O T A L S

Nuclide	Mass (g)

Bldg 233s
NDA Item Description Sheet
Box Geometry

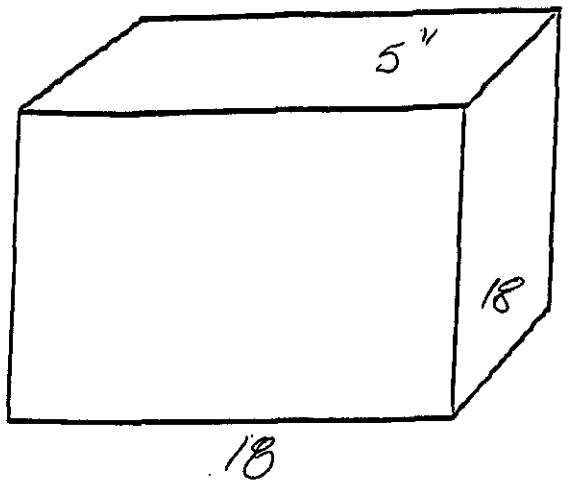

.9246

Put Dimensions on Box

Item ID: 2030

Weight (kg): 54 24.54 kg

Material Description: Beryllium Powder

Packaging: 3 + Padding

Detector Distance (in): 24

Detector Filters: None

Dose Rate: <.5

Comments: A 900 1338
B 1800 1339

233-S Item Analysis

Spreadsheet Version 3.0b

1/14/02

Sample Info:

Item ID: 2030

File Name: 1339

Assay Date: 6-Mar-02

File Name:

Data Input:

Isotope	Activity (uCi/kg)	Meas Uncert
Pu-239 (129)		
Pu-239 (414)	1.34E+01	3.48E+00
Am-241	3.98E+00	3.35E-01
Np-237		
U-238		
U-235	4.25E-04	1.25E-04
Cs-137	5.13E-04	7.83E-05
Co-60		

Activity (uCi/kg)	Meas Uncert

Item Parameters:

Contamination: Internal

Item Type: Box

Calcs: Use 1st

Dimensions:

Length (in): 18

Weight (lbs): 54

Width (in): 18

Depth for TMU (in): 4

Depth (in): 5

% Volume: 100

Am-241 Calcs:

Measured	3.98E+00	+/-	1.99E+01	Use Meas
Calculated	1.86E+01	+/-	2.31E+01	

Nuclide Activities:

Isotope	Activity (nCi/g)		Total Unc 1 sigma
Pu-238	5.44E+00	+/-	2.65E+00
Pu-239	1.34E+01	+/-	6.54E+00
Pu-240	6.99E+00	+/-	3.41E+00
Pu-241	2.61E+01	+/-	1.27E+01
Pu-242	7.06E-03	+/-	3.44E-03
Am-241	3.98E+00	+/-	1.99E+01
Np-237	0.00E+00	+/-	0.00E+00
U-238	0.00E+00	+/-	0.00E+00
U-235	4.25E-04	+/-	2.15E-04
Cs-137	5.13E-04	+/-	2.26E-04
Co-60	0.00E+00	+/-	0.00E+00

Results:

Total TRU Activity(nCi/g):	2.98E+01	+/-	2.14E+01	Calc from Pu-239 Act
Pu (g):	6.13E-03	**Pu (g) + 3 sigma TMU:**	1.51E-02	
		Pu(g) + 3 sigma:	1.09E-02	

Comments:

Errors:

Analyst: Martin Winterrose

Date: 3/6/02

```
!Date & Time: Wed Mar 06 10:15:24 2002
-g=SIMPLE_BOX
-description=2030_PANNEL
-comment=BREAKER_BOX
-Ccollimator=50MM-180D
-crpn=4
-Detector=7219
-Convergence in %=1            ~MDRPN=4
-Lunit=IN  ~Tunit=C  ~Dunit=G/CU.C    ~Punit=MM.HG
-at=20        ~ap=760       ~rh=50
-Energies kev=   50.000,  100.000,  128.000,  130.000,  150.000,  200.000,#
                300.000,  500.000,  700.000, 1000.000, 1400.000, 2000.000,#
               4000.000,
-Error in %=     10.000,   10.000,   10.000,   10.000,   10.000,    8.000,#
                 8.000,    6.000,    6.000,    4.000,    4.000,    4.000,#
                 4.000,
-d1.1=0.0132    -d1.2=18        -d1.3=18        -d1.4=5         -1mater=LPOLYETH -1den=0.92
-d3.1=17.95     -3mater=SAMPLES  -3den=0.9246    -3con=1
-sd1=24
```

C A N B E R R A I S O C S A N A L Y S I S

Report Generated On : 3/06/02 10:50:14 AM

Sample Title : 2030 Side B
Spectrum Description :
Sample Identification : 1339
Sample Size : 24.5 kg

Sample Taken On : 3/06/02 10:33:00 AM
Acquisition Started : 3/06/02 10:35:05 AM

Live Time: 1800.0 seconds Real Time: 1805.1 seconds

ISOCS Calabration : 2030 PANNEL
Energy Calibration Used Done On : 2/27/01
Efficiency Calibration Used Done On : 3/06/02

P E A K A N A L Y S I S R E P O R T

Peak No.	Peak centroid	Energy (keV)	Net Peak Area	Net Area Uncert.	Continuum Counts
1	207.40	51.94	3.06E+002	88.37	3.07E+003
2	239.17	59.88	1.04E+005	2896.07	2.06E+003
3	340.02	85.08	6.09E+002	60.50	1.92E+003
4	350.56	87.72	1.58E+002	55.24	1.93E+003
5	396.09	99.10	3.72E+002	49.36	1.95E+003
6	413.43	103.43	1.52E+002	42.87	1.94E+003
7	444.54	111.20	1.36E+002	47.11	2.02E+003
8	518.86	129.78	2.13E+002	40.15	1.73E+003
9	744.28	186.11	6.98E+001	20.30	4.35E+002
10	1408.75	352.18	1.08E+002	14.31	1.11E+002
11	1500.11	375.01	5.51E+001	12.32	9.43E+001
12	1654.82	413.68	4.49E+001	11.10	7.21E+001
13	2043.70	510.86	1.42E+002	14.85	5.87E+001
14	2437.56	609.30	1.58E+002	14.75	4.26E+001
15	2646.35	661.48	7.58E+001	11.32	3.87E+001
16	7062.76	1765.22	5.70E+001	8.61	1.84E+000

NUCLIDE IDENTIFICATION REPORT

Nuclide Name	Id Confidence	Energy (keV)	Yield (%)	Activity (uCi)	Activity Uncertainty
CS-137	0.999	661.65*	85.12	5.13186E-004	7.83361E-005
U-235	0.646	143.76	10.50		
		185.71*	54.00	4.25228E-004	1.25307E-004
		205.31	4.70		
Pu-239	0.965	129.28*	0.01	1.19303E+001	3.01005E+000
		375.00*	0.00	1.49694E+001	3.54171E+000
		413.70*	0.00	1.34289E+001	3.48236E+000
		451.50 @	0.00		
AM-241	0.995	59.54*	35.70	3.97539E+000	3.34905E-001
		125.28	0.00		
		335.40	0.00		
		662.42* @	0.00	1.21340E+002	1.85192E+001
		722.70	0.00		

INTERFERENCE CORRECTED REPORT

Nuclide Name	Nuclide Id Confidence	Wt mean Activity (uCi/kg)	Wt mean Activity Uncertainty
CS-137	0.999	4.963730E-004	7.833667E-005
U-235	0.646	4.252277E-004	1.253071E-004
Pu-239 @	0.965	1.327266E+001	1.915465E+000
AM-241 @	0.995	3.975388E+000	3.349048E-001

? = nuclide is part of an undetermined solution
X = nuclide rejected by the interference analysis
@ = nuclide contains energy lines not used in Weighted Mean Activity

Errors quoted at 1.000 sigma

****
***** N U C L I D E M D A R E P O R T *****
****

	Nuclide Name	Energy (keV)	Yield (%)	Line MDA (uCi/kg)	Nuclide MDA (uCi/kg)	Activity (uCi/kg)
	CO-60	1173.22	100.00	3.4523E-004	3.04E-004	1.3459E-004
		1332.49	100.00	3.0352E-004		1.2079E-004
	CS-134	475.35	1.46	2.4475E-002	3.82E-004	1.1450E-002
		563.23	8.38	4.1783E-003		2.0154E-003
		569.32	15.43	2.1915E-003		-1.1699E-003
		604.70	97.60	4.8110E-004		1.0670E-004
		795.84	85.40	3.8217E-004		-1.2985E-004
		801.93	8.73	3.5541E-003		1.9968E-004
		1038.57	1.00	3.0241E-002		1.0895E-002
		1167.94	1.80	1.7868E-002		3.0502E-003
		1365.15	3.04	9.3840E-003		7.2626E-003
+	CS-137	661.65*	85.12	2.1439E-004	2.14E-004	5.1319E-004
	NP-237	300.17	6.20	6.2686E-003	1.05E-003	6.2981E-004
		312.00	36.00	1.0464E-003		1.0536E-003
		340.60	4.20	8.9559E-003		-1.3206E-003
		375.00	0.68	5.6671E-002		-9.6168E-003
		415.60	1.75	2.1329E-002		-7.4652E-003
+	Pu-239	129.28*	0.01	1.0990E+001	1.10E+001	1.1930E+001
		375.00*	0.00	1.3015E+001		1.4969E+001
		413.70*	0.00	1.2626E+001		1.3429E+001
		451.50	0.00	1.8967E+002		1.2433E+001
+	AM-241	59.54*	35.70	8.2231E-003	8.22E-003	3.9754E+000
		125.28	0.00	3.0334E+001		7.5727E+000
		335.40	0.00	7.6888E+001		6.3681E+000
		662.42*	0.00	5.0691E+001		1.2134E+002
		722.70	0.00	2.6532E+002		4.2652E+001
	PU-241	114.00	0.02	5.9408E+000	5.94E+000	-1.0965E+000
		332.60	0.00	1.3139E+001		3.0618E+000
	CM-243	209.70	3.27	1.4362E-002	2.71E-003	1.5096E-002
		228.18	10.56	4.0862E-003		4.2813E-003
		277.60	14.00	2.7066E-003		2.4683E-003

+ = Nuclide identified during the nuclide identification
* = Energy line found in the spectrum
> = MDA value not calculated
@ = Half-life too short to be able to perform the decay correction

N U C L I D E T O T A L S

Nuclide	Mass (g)
U-235	4.74E-003 +/- 1.40E-003
Pu-239	5.25E-003 +/- 7.58E-004

Bldg 233s
NDA Item Description Sheet
Box Geometry

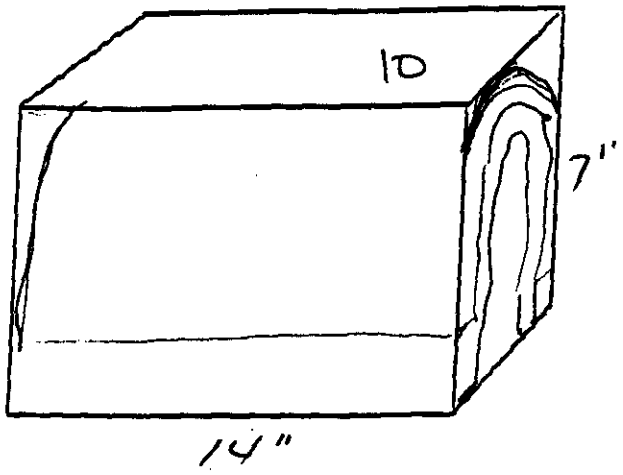

.3679

Put Dimensions on Box

Item ID: 3022

Weight (kg): 13 LBS

Material Description: Poly Bags

Packaging: 3 layer

Detector Distance (in): 24

Detector Filters: None

Dose Rate: Ø

Comments: A 900 1283
B 1800 1284

233-S Item Analysis

Spreadsheet Version 3.0b

1/14/02

Sample Info:

Item ID: 3022

File Name: 1284

Assay Date: 26-Feb-02

File Name:

Data Input:

Isotope	Activity (uCi/kg)	Meas Uncert
Pu-239 (129)	7.43E+01	
Pu-239 (414)		
Am-241	6.26E-01	5.23E-02
Np-237		
U-238		
U-235		
Cs-137	1.90E-03	3.32E-04
Co-60		

Activity (uCi/kg)	Meas Uncert

Item Parameters:

Contamination: Surface only

Item Type: Bag

Calcs: Use 1st

Dimensions:

Length (in): 14

Width (in): 7

Depth (in): 10

Weight (lbs): 13

Depth for TMU (in): 4

% Volume: 100

Am-241 Calcs:

Measured	6.26E-01	+/-	9.53E-01	Use Meas
Calculated	1.03E+02	+/-	1.13E+02	

Nuclide Activities:

Isotope	Activity (nCi/g)		Total Unc 1 sigma
Pu-238	3.01E+01	+/-	1.29E+01
Pu-239	7.43E+01	+/-	3.18E+01
Pu-240	3.87E+01	+/-	1.66E+01
Pu-241	1.45E+02	+/-	6.19E+01
Pu-242	3.91E-02	+/-	1.67E-02
Am-241	6.26E-01	+/-	9.53E-01
Np-237	0.00E+00	+/-	0.00E+00
U-238	0.00E+00	+/-	0.00E+00
U-235	0.00E+00	+/-	0.00E+00
Cs-137	1.90E-03	+/-	5.39E-04
Co-60	0.00E+00	+/-	0.00E+00

Results:

Total TRU Activity(nCi/g):	2.09E+00	+/-	3.18E+00	Calc from Am-241 Act
Pu (g):	8.17E-03	**Pu (g) + 3 sigma TMU:**	1.87E-02	
		Pu(g) + 3 sigma:	8.17E-03	

Comments:

Am value is valid due to no measured Pu value and surface contamination. Waste weight is just above limit.

Errors:TRU calculated from Am-241 on Container > 10 lbs,

Analyst: Martin Winterrose

Date: 4/5/02

```
#Date & Time: Tue Feb 26 08:16:27 2002
~g=SIMPLE_BOX
~description=3022_POLY
~comment=POLY_BLOCK
~Ccollimator=50MM-180D
~crpn=4
~Detector=7219
~Convergence in %=1            ~MDRPN=4
~Lunit=IN  ~Tunit=C  ~Dunit=G/CU.C    ~Punit=MM.HG
~at=20        ~ap=760       ~rh=50
~Energies kev=   50.000,  100.000,  128.000,  130.000,  150.000,  200.000,#
                300.000,  500.000,  700.000, 1000.000, 1400.000, 2000.000,#
               4000.000,
~Error in %=     10.000,   10.000,   10.000,   10.000,   10.000,    8.000,#
                  8.000,    6.000,    6.000,    4.000,    4.000,    4.000,#
                  4.000,
~d1.1=0.0132    ~d1.2=14        ~d1.3=7         ~d1.4=10        ~1mater=LPOLYETH ~1den=0.92
~d3.1=6.95      ~3mater=HPOLYETH ~3den=0.3679    ~3con=1
~sd1=24
```

C A N B E R R A I S O C S A N A L Y S I S

eport Generated On : 3/28/02 3:26:31 PM

ample Title : 3022 Side B
pectrum Description :
ample Identification : 1284
ample Size : 5.9 kg

ample Taken On : 2/26/02 8:37:00 AM
cquisition Started : 2/26/02 8:37:47 AM

ive Time: 1800.0 seconds Real Time: 1802.7 seconds

ISOCS Calabration : 3022 POLY
Energy Calibration Used Done On : 2/27/01
Efficiency Calibration Used Done On : 2/26/02

P E A K A N A L Y S I S R E P O R T

Peak No.	Peak centroid	Energy (keV)	Net Peak Area	Net Area Uncert.	Continuum Counts
1	197.36	49.43	2.89E+002	50.24	1.92E+003
2	239.23	59.89	1.11E+004	288.88	1.96E+003
3	340.19	85.13	7.98E+002	62.08	2.28E+003
4	351.54	87.96	1.68E+002	53.84	2.30E+003
5	1408.45	352.10	1.04E+002	14.92	1.26E+002
6	2043.99	510.94	1.32E+002	14.37	6.22E+001
7	2437.75	609.35	1.01E+002	12.71	5.03E+001
8	2647.73	661.82	6.40E+001	10.98	4.20E+001
9	3646.10	911.33	5.01E+001	9.51	2.52E+001
10	7064.79	1765.73	4.33E+001	7.73	1.27E+000

N U C L I D E I D E N T I F I C A T I O N R E P O R T

Nuclide Name	Id Confidence	Energy (keV)	Yield (%)	Activity (uCi)	Activity Uncertainty
CS-137	0.999	661.65*	85.12	1.90254E-003	3.32142E-004
AM-241	0.995	59.54*	35.70	6.25813E-001	5.23140E-002
		125.28	0.00		
		335.40	0.00		
		662.42* @	0.00	4.49846E+002	7.85238E+001
		722.70	0.00		

I N T E R F E R E N C E C O R R E C T E D R E P O R T

Nuclide Name	Nuclide Id Confidence	Wt mean Activity (uCi/kg)	Wt mean Activity Uncertainty
CS-137	0.999	1.899895E-003	3.321027E-004
AM-241 @	0.995	6.258129E-001	5.231399E-002

? = nuclide is part of an undetermined solution
X = nuclide rejected by the interference analysis
@ = nuclide contains energy lines not used in Weighted Mean Activity

Errors quoted at 1.000 sigma

****
***** N U C L I D E M D A R E P O R T *****
****

	Nuclide Name	Energy (keV)	Yield (%)	Line MDA (uCi/kg)	Nuclide MDA (uCi/kg)	Activity (uCi/kg)
	CO-60	1173.22	100.00	1.5772E-003	1.45E-003	4.8665E-004
		1332.49	100.00	1.4507E-003		-5.3493E-004
	CS-134	475.35	1.46	1.1158E-001	1.79E-003	5.1870E-002
		563.23	8.38	1.8123E-002		-1.1714E-002
		569.32	15.43	1.0132E-002		6.4931E-003
		604.70	97.60	2.0171E-003		8.3293E-004
		795.84	85.40	1.7860E-003		-7.6656E-004
		801.93	8.73	1.7135E-002		1.4422E-002
		1038.57	1.00	1.4077E-001		-6.6456E-002
		1167.94	1.80	8.7885E-002		1.4330E-002
		1365.15	3.04	4.0719E-002		-2.7350E-002
+	CS-137	661.65*	85.12	9.7749E-004	9.77E-004	1.9025E-003
	NP-237	300.17	6.20	2.9257E-002	4.62E-003	6.7193E-003
		312.00	36.00	4.6162E-003		4.8858E-004
		340.60	4.20	3.9859E-002		1.5527E-002
		375.00	0.68	2.2966E-001		-8.5114E-002
		415.60	1.75	8.7979E-002		-1.8938E-002
	Pu-239	129.28	0.01	7.4332E+001	7.43E+001	-6.3755E+001
		375.00	0.00	9.8697E+001		-3.6578E+001
		413.70	0.00	1.0346E+002		3.0800E+001
		451.50	0.00	8.1413E+002		1.1657E+002
+	AM-241	59.54*	35.70	1.1725E-002	1.17E-002	6.2581E-001
		125.28	0.00	1.1823E+002		-1.6329E+000
		335.40	0.00	3.5108E+002		2.6207E+002
		662.42*	0.00	2.3112E+002		4.4985E+002
		722.70	0.00	1.2499E+003		1.1991E+003
	PU-241	114.00	0.02	2.1536E+001	2.15E+001	-1.3242E+001
		332.60	0.00	5.8453E+001		-5.6363E+001
	CM-243	209.70	3.27	6.1429E-002	1.27E-002	-6.0827E-002
		228.18	10.56	1.7697E-002		-1.8488E-004
		277.60	14.00	1.2683E-002		5.1148E-003

+ = Nuclide identified during the nuclide identification
* = Energy line found in the spectrum
> = MDA value not calculated
@ = Half-life too short to be able to perform the decay correction

N U C L I D E T O T A L S

Nuclide	Mass (g)

Bldg 233-S
NDA Item Description Sheet
Pipe Geometry

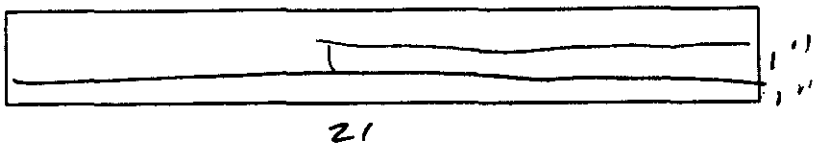

Put Dimensions on Pipe

Item ID: 4/105

Weight (kg): 7LBS 3.18kg

Material Description: 2 1" PIPES

Packaging: 3 LAYERS

Detector Distance (in): 24

Detector Filters: NONE

Dose Rate: <.5

Comments: A 900 SRL 1342
B 1800S 1343

233-S Item Analysis

Spreadsheet Version 3.0b

1/14/02

Sample Info:

Item ID: 4105

File Name: 1343

Assay Date: 6-Mar-02

File Name:

Data Input:

Isotope	Activity (uCi/kg)	Meas Uncert
Pu-239 (129)	1.28E+02	
Pu-239 (414)		
Am-241	3.19E+01	2.68E+00
Np-237		
U-238		
U-235		
Cs-137	3.11E-03	4.84E-04
Co-60		

Activity (uCi/kg)	Meas Uncert

Item Parameters:

Contamination: Internal

Item Type: Pipe or Duct

Calcs: Use 1st

Dimensions:

Length (in): 21

Weight (lbs): 7

Width (in): 1

Depth for TMU (in): 4

Depth (in): 1

% Volume: 100

Am-241 Calcs:

Measured	3.19E+01	+/-	1.45E+01	Use Meas
Calculated	1.77E+02	+/-	1.12E+02	

Nuclide Activities:

Isotope	Activity (nCi/g)		Total Unc 1 sigma
Pu-238	5.19E+01	+/-	1.16E+01
Pu-239	1.28E+02	+/-	2.87E+01
Pu-240	6.67E+01	+/-	1.50E+01
Pu-241	2.49E+02	+/-	5.60E+01
Pu-242	6.74E-02	+/-	1.51E-02
Am-241	3.19E+01	+/-	1.45E+01
Np-237	0.00E+00	+/-	0.00E+00
U-238	0.00E+00	+/-	0.00E+00
U-235	0.00E+00	+/-	0.00E+00
Cs-137	3.11E-03	+/-	5.96E-04
Co-60	0.00E+00	+/-	0.00E+00

Results:

Total TRU Activity(nCi/g):	1.06E+02	+/-	4.83E+01	Calc from Am-241 Act
Pu (g):	7.58E-03	**Pu (g) + 3 sigma TMU:**	1.27E-02	
		Pu(g) + 3 sigma:	7.58E-03	

Comments:

Errors:

Analyst: Martin Winterrose

Date: 3/6/02

```
!Date & Time: Wed Mar 06 12:38:19 2002
~g=PIPE
~description=4105_PIPE
~comment=PIPE_AND_METAL
~Ccollimator=50MM-180D
~crpn=4
~Detector=7219
~Convergence in %=1            ~MDRPN=4
~Lunit=IN  ~Tunit=C  ~Dunit=G/CU.C    ~Punit=MM.HG
~at=20        ~ap=760       ~rh=50
~Energies kev=   50.000,  100.000,  128.000,  130.000,  150.000,  200.000,#
                300.000,  500.000,  700.000, 1000.000, 1400.000, 2000.000,#
               4000.000,
~Error in %=     10.000,   10.000,   10.000,   10.000,   10.000,    8.000,#
                  8.000,    6.000,    6.000,    4.000,    4.000,    4.000,#
                  4.000,
~d1.1=0.133     ~d1.2=1         ~d1.3=10.5      ~d1.4=10.5      ~1mater=304SS    ~1den=7.81
~d2.1=0.133     ~d2.2=10.5      ~d2.3=10.5      ~2mater=DRYDIRT  ~2den=1.6       ~2con=1
~sd1=24
```

C A N B E R R A I S O C S A N A L Y S I S

Report Generated On : 3/06/02 1:40:07 PM

Sample Title : 4105 Side B
Spectrum Description :
Sample Identification : 1343
Sample Size : 3.2 kg

Sample Taken On : 3/06/02 12:40:00 PM
Acquisition Started : 3/06/02 1:40:03 PM

Live Time: 1800.0 seconds Real Time: 1802.6 seconds

ISOCS Calabration : 4105 PIPE
Energy Calibration Used Done On : 2/27/01
Efficiency Calibration Used Done On : 3/06/02

P E A K A N A L Y S I S R E P O R T

Peak No.	Peak centroid	Energy (keV)	Net Peak Area	Net Area Uncert.	Continuum Counts
1	239.20	59.88	1.38E+004	375.32	1.87E+003
2	340.15	85.11	8.43E+002	55.66	2.11E+003
3	350.22	87.63	2.37E+002	48.14	2.13E+003
4	1407.30	351.82	1.22E+002	15.00	1.12E+002
5	2043.59	510.84	1.24E+002	14.23	6.78E+001
6	2436.98	609.15	1.51E+002	14.88	5.31E+001
7	2646.48	661.51	7.35E+001	11.21	4.84E+001
8	3644.71	910.98	5.88E+001	10.06	2.97E+001
9	7061.88	1765.00	5.29E+001	8.24	1.97E+000

N U C L I D E I D E N T I F I C A T I O N R E P O R T

Nuclide Name	Id Confidence	Energy (keV)	Yield (%)	Activity (uCi)	Activity Uncertainty
CS-137	0.999	661.65*	85.12	3.10820E-003	4.83950E-004
AM-241	0.994	59.54*	35.70	3.18524E+001	2.67567E+000
		125.28	0.00		
		335.40	0.00		
		662.42* @	0.00	7.34914E+002	1.14410E+002
		722.70	0.00		

I N T E R F E R E N C E C O R R E C T E D R E P O R T

Nuclide Name	Nuclide Id Confidence	Wt mean Activity (uCi/kg)	Wt mean Activity Uncertainty
CS-137	0.999	2.973482E-003	4.840095E-004
AM-241 @	0.994	3.185238E+001	2.675667E+000

? = nuclide is part of an undetermined solution
X = nuclide rejected by the interference analysis
@ = nuclide contains energy lines not used in Weighted Mean Activity

Errors quoted at 1.000 sigma

****
**** N U C L I D E M D A R E P O R T *****
****

	Nuclide Name	Energy (keV)	Yield (%)	Line MDA (uCi/kg)	Nuclide MDA (uCi/kg)	Activity (uCi/kg)
	CO-60	1173.22	100.00	2.2354E-003	1.95E-003	-3.1715E-004
		1332.49	100.00	1.9454E-003		-9.3270E-004
	CS-134	475.35	1.46	1.5660E-001	2.56E-003	9.5180E-003
		563.23	8.38	2.7804E-002		2.2014E-003
		569.32	15.43	1.4995E-002		-1.0259E-003
		604.70	97.60	3.1253E-003		-5.7737E-004
		795.84	85.40	2.5645E-003		-2.6815E-003
		801.93	8.73	2.5442E-002		6.2066E-003
		1038.57	1.00	1.9764E-001		1.1901E-001
		1167.94	1.80	1.3058E-001		2.9020E-002
		1365.15	3.04	6.5995E-002		2.5776E-002
+	CS-137	661.65*	85.12	1.4823E-003	1.48E-003	3.1082E-003
	NP-237	300.17	6.20	4.0813E-002	6.72E-003	3.8406E-004
		312.00	36.00	6.7156E-003		-3.6858E-003
		340.60	4.20	5.8463E-002		3.1898E-002
		375.00	0.68	3.4348E-001		-1.1394E-001
		415.60	1.75	1.3632E-001		-5.4682E-002
	Pu-239	129.28	0.01	1.2827E+002	1.28E+002	-3.7284E+001
		375.00	0.00	1.4761E+002		-4.8967E+001
		413.70	0.00	1.5486E+002		-6.8508E+001
		451.50	0.00	1.2083E+003		3.7786E+002
+	AM-241	59.54*	35.70	4.7087E-001	4.71E-001	3.1852E+001
		125.28	0.00	2.1276E+002		-1.4754E+002
		335.40	0.00	4.8676E+002		1.4373E+002
		662.42*	0.00	3.5048E+002		7.3491E+002
		722.70	0.00	1.7761E+003		2.1847E+002
	PU-241	114.00	0.02	4.6827E+001	4.68E+001	7.8984E+001
		332.60	0.00	8.1878E+001		-5.1177E+001
	CM-243	209.70	3.27	8.8393E-002	1.80E-002	6.2979E-002
		228.18	10.56	2.5044E-002		-1.9018E-002
		277.60	14.00	1.7962E-002		2.9732E-003

+ = Nuclide identified during the nuclide identification
* = Energy line found in the spectrum
> = MDA value not calculated
@ = Half-life too short to be able to perform the decay correction

N U C L I D E T O T A L S

Nuclide	Mass (g)

Bldg 233-S
NDA Item Description Sheet
Pipe Geometry

4 1/2" PIPE

Put Dimensions on Pipe

Item ID: 4251

Weight (kg): 7 LBS 3.18 kg

Material Description: 4-1/2" PIPES

Packaging: 3 LAYERS

Detector Distance (in): 24

Detector Filters: NONE

Dose Rate: <.5

Comments: MODELED AS 2" A 900 1360
B 1800 1361
WALL 0.109 1/2"
0.133 1"

233-S Item Analysis

Spreadsheet Version 3.0b

1/14/02

Sample Info:

Item ID: 4251

File Name: 1361

Assay Date: 11-Mar-02

File Name:

Data Input:

Isotope	Activity (uCi/kg)	Meas Uncert	Activity (uCi/kg)	Meas Uncert
Pu-239 (129)				
Pu-239 (414)	6.88E+01	2.10E+01		
Am-241	2.91E+02	1.77E+01		
Np-237				
U-238				
U-235				
Cs-137	2.38E-03	4.44E-04		
Co-60				

Item Parameters:

Contamination: Internal

Item Type: Pipe or Duct

Calcs: Use 1st

Dimensions:

Length (in): 21

Width (in): 1

Depth (in): 1

Weight (lbs): 7

Depth for TMU (in): 4

% Volume: 100

Am-241 Calcs:

Measured	2.91E+02	+/-	1.31E+02	Calc from Pu-239
Calculated	9.52E+01	+/-	8.19E+01	

Nuclide Activities:

Isotope	Activity (nCi/g)		Total Unc 1 sigma
Pu-238	2.79E+01	+/-	9.08E+00
Pu-239	6.88E+01	+/-	2.24E+01
Pu-240	3.59E+01	+/-	1.17E+01
Pu-241	1.34E+02	+/-	4.36E+01
Pu-242	3.62E-02	+/-	1.18E-02
Am-241	9.52E+01	+/-	8.19E+01
Np-237	0.00E+00	+/-	0.00E+00
U-238	0.00E+00	+/-	0.00E+00
U-235	0.00E+00	+/-	0.00E+00
Cs-137	2.38E-03	+/-	5.18E-04
Co-60	0.00E+00	+/-	0.00E+00

Results:

Total TRU Activity(nCi/g):	2.28E+02	+/-	8.61E+01	Calc from Pu-239 Act
Pu (g):	4.08E-03	**Pu (g) + 3 sigma TMU:**	8.06E-03	
		Pu(g) + 3 sigma:	7.81E-03	

Comments:

Errors:

Analyst: Martin Winterrose

Date: 3/11/02

```
#Date & Time: Mon Mar 11 08:58:42 2002
~g=PIPE
~description=4251_PIPE
~comment=PIPE_AND_METAL
~Ccollimator=50MM-180D
~crpn=4
~Detector=7219
~Convergence in %=1            ~MDRPN=4
~Lunit=IN  ~Tunit=C  ~Dunit=G/CU.C    ~Punit=MM.HG
~at=20        ~ap=760       ~rh=50
~Energies kev=   50.000,  100.000,  128.000,  130.000,  150.000,  200.000,#
                300.000,  500.000,  700.000, 1000.000, 1400.000, 2000.000,#
               4000.000,
~Error in %=     10.000,   10.000,   10.000,   10.000,   10.000,    8.000,#
                  8.000,    6.000,    6.000,    4.000,    4.000,    4.000,#
                  4.000,
~d1.1=0.133     ~d1.2=1         ~d1.3=10.5      ~d1.4=10.5      ~1mater=304SS    ~1den=7.81
~d2.1=0.109     ~d2.2=10.5      ~d2.3=10.5      ~2mater=DRYDIRT  ~2den=1.6        ~2con=1
~sd1=24
```

C A N B E R R A I S O C S A N A L Y S I S

Report Generated On : 3/11/02 9:32:48 AM

Sample Title : 4251 Side B
Spectrum Description :
Sample Identification : 1361
Sample Size : 3.2 kg

Sample Taken On : 3/11/02 9:17:00 AM
Acquisition Started : 3/11/02 9:17:40 AM

Live Time: 1800.0 seconds Real Time: 1804.8 seconds

ISOCS Calabration : 4251 PIPE
Energy Calibration Used Done On : 2/27/01
Efficiency Calibration Used Done On : 3/11/02

P E A K A N A L Y S I S R E P O R T

Peak No.	Peak centroid	Energy (keV)	Net Peak Area	Net Area Uncert.	Continuum Counts
1	239.24	59.89	9.13E+004	2659.32	2.04E+003
2	340.33	85.16	8.35E+002	55.40	1.87E+003
3	350.45	87.69	2.50E+002	48.15	1.88E+003
4	395.52	98.95	2.24E+002	44.29	1.90E+003
5	445.68	111.49	1.10E+002	43.53	1.95E+003
6	518.69	129.74	1.95E+002	39.74	1.67E+003
7	1408.74	352.18	8.40E+001	13.44	9.16E+001
8	1655.82	413.93	3.66E+001	10.81	7.98E+001
9	2044.75	511.13	1.41E+002	14.49	5.61E+001
10	2437.92	609.39	6.33E+001	10.99	4.90E+001
11	2647.42	661.74	5.66E+001	10.42	4.02E+001

N U C L I D E I D E N T I F I C A T I O N R E P O R T

Nuclide Name	Id Confidence	Energy (keV)	Yield (%)	Activity (uCi)	Activity Uncertainty
CS-137	1.000	661.65*	85.12	2.38139E-003	4.44455E-004
Pu-239	0.710	129.28*	0.01	7.21227E+001	1.90678E+001
		375.00	0.00		
		413.70*	0.00	6.88096E+001	2.10000E+001
		451.50 @	0.00		
AM-241	0.994	59.54*	35.70	2.09706E+002	1.77474E+001
		125.28	0.00		
		335.40	0.00		
		662.42* @	0.00	5.63067E+002	1.05078E+002
		722.70	0.00		

I N T E R F E R E N C E C O R R E C T E D R E P O R T

Nuclide Name	Nuclide Id Confidence	Wt mean Activity (uCi/kg)	Wt mean Activity Uncertainty
CS-137	1.000	1.494477E-003	4.507030E-004
Pu-239 @	0.710	7.062554E+001	1.411677E+001
AM-241 @	0.994	2.097059E+002	1.774740E+001

? = nuclide is part of an undetermined solution
X = nuclide rejected by the interference analysis
@ = nuclide contains energy lines not used in Weighted Mean Activity

Errors quoted at 1.000 sigma

****
***** N U C L I D E M D A R E P O R T *****
****

	Nuclide Name	Energy (keV)	Yield (%)	Line MDA (uCi/kg)	Nuclide MDA (uCi/kg)	Activity (uCi/kg)
	CO-60	1173.22	100.00	2.0008E-003	1.84E-003	-5.1569E-004
		1332.49	100.00	1.8449E-003		1.9794E-004
	CS-134	475.35	1.46	1.4344E-001	2.41E-003	-4.1628E-002
		563.23	8.38	2.5146E-002		-1.3846E-002
		569.32	15.43	1.3572E-002		3.2494E-004
		604.70	97.60	2.5860E-003		1.8273E-004
		795.84	85.40	2.4112E-003		2.6932E-003
		801.93	8.73	2.3372E-002		2.1496E-003
		1038.57	1.00	1.9686E-001		-3.4129E-001
		1167.94	1.80	1.0510E-001		-3.1187E-002
		1365.15	3.04	5.8851E-002		4.3011E-002
+	CS-137	661.65*	85.12	1.3547E-003	1.35E-003	2.3814E-003
	NP-237	300.17	6.20	3.7384E-002	6.44E-003	-6.9592E-004
		312.00	36.00	6.4428E-003		2.2140E-003
		340.60	4.20	5.4991E-002		1.0774E-002
		375.00	0.68	3.3917E-001		3.2956E-001
		415.60	1.75	1.3368E-001		9.8363E-002
+	Pu-239	129.28*	0.01	7.1527E+001	7.15E+001	7.2123E+001
		375.00	0.00	1.4576E+002		1.4163E+002
		413.70*	0.00	8.3159E+001		6.8810E+001
		451.50	0.00	1.2075E+003		-7.2308E+001
+	AM-241	59.54*	35.70	4.8888E-001	4.89E-001	2.0971E+002
		125.28	0.00	2.0262E+002		2.3481E+001
		335.40	0.00	5.1387E+002		4.8870E+002
		662.42*	0.00	3.2030E+002		5.6307E+002
		722.70	0.00	1.6424E+003		-2.3191E+002
	PU-241	114.00	0.02	4.3605E+001	4.36E+001	5.3733E-001
		332.60	0.00	8.6635E+001		-4.1799E+000
	CM-243	209.70	3.27	8.1427E-002	1.65E-002	-5.2917E-002
		228.18	10.56	2.3447E-002		-1.0748E-002
		277.60	14.00	1.6525E-002		-1.7721E-002

+ = Nuclide identified during the nuclide identification
* = Energy line found in the spectrum
> = MDA value not calculated
@ = Half-life too short to be able to perform the decay correction

N U C L I D E T O T A L S

Nuclide	Mass (g)
Pu-239	3.62E-003 +/- 7.24E-004

Bldg 233s
NDA Item Description Sheet
Box Geometry

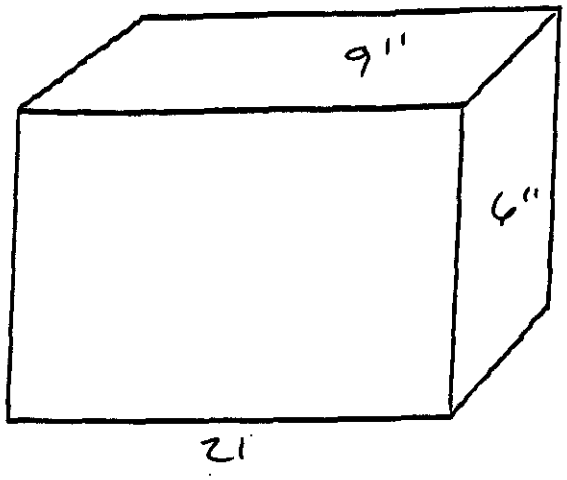

Put Dimensions on Box

Item ID: 4367

Weight (kg): 5 LBS ~~136 kg~~ 2.27 kg

Material Description: MISC WASTE/RAGS

Packaging: 3 LAYERS

Detector Distance (in): 24

Detector Filters: NONE

Dose Rate: <.5

Comments: A900 1362

233-S Item Analysis

Spreadsheet Version 3.0b

1/14/02

Sample Info:

Item ID: 4367

File Name: 1363

Assay Date: 11-Mar-02

File Name:

Data Input:

Isotope	Activity (uCi/kg)	Meas Uncert
Pu-239 (129)		
Pu-239 (414)	1.64E+02	3.20E+01
Am-241	4.63E+01	4.02E+00
Np-237	2.00E-02	1.82E-03
U-238		
U-235		
Cs-137	4.81E-03	6.53E-04
Co-60		

Activity (uCi/kg)	Meas Uncert

Item Parameters:

Contamination: Internal

Item Type: Bag

Calcs: Use 1st

Dimensions:

Length (in): 21

Width (in): 9

Depth (in): 6

Weight (lbs): 5

Depth for TMU (in): 4

% Volume: 100

Am-241 Calcs:

Measured	4.63E+01	+/-	2.99E+01	Use Meas
Calculated	2.27E+02	+/-	1.52E+02	

Nuclide Activities:

Isotope	Activity (nCi/g)		Total Unc 1 sigma
Pu-238	6.64E+01	+/-	1.61E+01
Pu-239	1.64E+02	+/-	3.96E+01
Pu-240	8.54E+01	+/-	2.06E+01
Pu-241	3.19E+02	+/-	7.71E+01
Pu-242	8.63E-02	+/-	2.08E-02
Am-241	4.63E+01	+/-	2.99E+01
Np-237	2.00E-02	+/-	3.36E-03
U-238	0.00E+00	+/-	0.00E+00
U-235	0.00E+00	+/-	0.00E+00
Cs-137	4.81E-03	+/-	9.43E-04
Co-60	0.00E+00	+/-	0.00E+00

Results:

Total TRU Activity(nCi/g):	3.62E+02	+/-	5.61E+01	Calc from Pu-239 Act
Pu (g):	6.94E-03	**Pu (g) + 3 sigma TMU:**	1.20E-02	
		Pu(g) + 3 sigma:	1.10E-02	

Comments:

Errors:

Analyst: Martin Winterrose

Date: 3/11/02

```
#Date & Time: Mon Mar 11 11:12:37 2002
~g=SIMPLE_BOX
~description=4367_WASTE
~comment=WASTE
~Ccollimator=50MM-180D
~crpn=4
~Detector=7219
~Convergence in %=1            ~MDRPN=4
~Lunit=IN  ~Tunit=C  ~Dunit=G/CU.C    ~Punit=MM.HG
~at=20        ~ap=760       ~rh=50
~Energies kev=   50.000,  100.000,  128.000,  130.000,  150.000,  200.000,#
                300.000,  500.000,  700.000, 1000.000, 1400.000, 2000.000,#
               4000.000,
~Error in %=     10.000,   10.000,   10.000,   10.000,   10.000,    8.000,#
                  8.000,    6.000,    6.000,    4.000,    4.000,    4.000,#
                  4.000,
~d1.1=0.0132    ~d1.2=21        ~d1.3=9         ~d1.4=6         ~1mater=LPOLYETH ~1den=0.92
~d3.1=8.95      ~3mater=TYPMIX   ~3den=0.1227    ~3con=1
~sd1=24
```

C A N B E R R A I S O C S A N A L Y S I S

Report Generated On : 3/11/02 11:15:00 AM

Sample Title : 4367 Side B
Spectrum Description :
Sample Identification : 1363
Sample Size : 2.3 kg

Sample Taken On : 3/11/02 10:49:00 AM
Acquisition Started : 3/11/02 11:14:55 AM

Live Time: 1800.0 seconds Real Time: 1818.8 seconds

ISOCS Calabration : 4367 WASTE
Energy Calibration Used Done On : 2/27/01
Efficiency Calibration Used Done On : 3/11/02

P E A K A N A L Y S I S R E P O R T

Peak No.	Peak centroid	Energy (keV)	Net Peak Area	Net Area Uncert.	Continuum Counts
1	239.18	59.88	4.89E+005	17233.4	5.85E+003
2	340.53	85.21	9.43E+002	56.30	2.45E+003
3	350.61	87.73	2.83E+002	51.92	2.44E+003
4	379.74	95.01	3.82E+002	52.36	2.38E+003
5	395.90	99.05	1.12E+003	59.50	2.34E+003
6	413.47	103.44	5.79E+002	52.43	2.29E+003
7	459.63	114.97	1.22E+002	44.22	2.26E+003
8	502.50	125.69	1.59E+002	42.79	2.03E+003
9	518.38	129.66	5.32E+002	45.81	1.92E+003
10	833.94	208.52	1.23E+002	20.46	3.21E+002
11	1201.84	300.47	4.51E+001	13.42	1.56E+002
12	1248.73	312.18	2.56E+002	19.87	1.40E+002
13	1501.16	375.27	9.75E+001	14.42	1.04E+002
14	1655.26	413.79	7.35E+001	13.13	8.44E+001
15	2044.35	511.03	1.27E+002	13.93	5.96E+001
16	2437.62	609.31	1.04E+002	12.55	4.43E+001
17	2647.60	661.79	8.94E+001	11.81	3.52E+001
18	3645.88	911.28	5.43E+001	9.49	2.73E+001
19	7064.77	1765.72	4.52E+001	7.72	1.55E+000

NUCLIDE IDENTIFICATION REPORT

Nuclide Name	Id Confidence	Energy (keV)	Yield (%)	Activity (uCi)	Activity Uncertainty
CS-137	0.999	661.65*	85.12	4.81028E-003	6.53229E-004
NP-237	0.859	300.17*	6.20	1.99326E-002	6.01464E-003
		312.00*	36.00	1.99837E-002	1.82105E-003
		340.60	4.20		
		375.00*	0.68	4.53590E-001	7.00274E-002
		415.60*	1.75	1.41862E-001	2.60100E-002
Pu-239	0.970	129.28*	0.01	1.66398E+002	3.14031E+001
		375.00*	0.00	1.94929E+002	3.25235E+001
		413.70*	0.00	1.63940E+002	3.19585E+001
		451.50 @	0.00		
AM-241	0.995	59.54*	35.70	4.62892E+001	4.02316E+000
		125.28*	0.00	7.70053E+001	2.10734E+001
		335.40	0.00		
		662.42* @	0.00	1.13736E+003	1.54422E+002
		722.70	0.00		
PU-241	0.819	114.00*	0.02	1.02875E+001	3.76856E+000
		332.60	0.00		

INTERFERENCE CORRECTED REPORT

Nuclide Name	Nuclide Id Confidence	Wt mean Activity (uCi/kg)	Wt mean Activity Uncertainty
CS-137	0.999	4.609940E-003	6.533134E-004
NP-237	0.859	1.991473E-002	1.739833E-003
Pu-239 @	0.970	1.653703E+002	1.294966E+001
AM-241 @	0.995	4.736932E+001	3.951785E+000
PU-241	0.819	1.028755E+001	3.768565E+000

? = nuclide is part of an undetermined solution
X = nuclide rejected by the interference analysis
@ = nuclide contains energy lines not used in Weighted Mean Activity

Errors quoted at 1.000 sigma

Bldg 233-S
NDA Item Description Sheet
Pipe Geometry

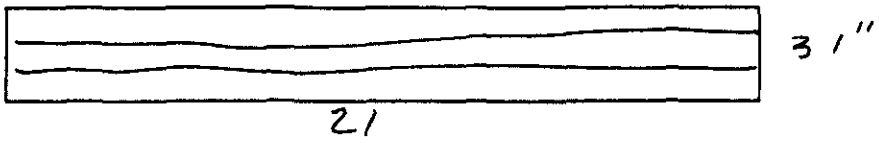

Put Dimensions on Pipe

Item ID: 4414

Weight (kg): 6.5

Material Description: 3 1" Pipes

Packaging: 3 layers

Detector Distance (in): 24"

Detector Filters: None

Dose Rate: <.5

Comments: A 900 1354
B 1800 1355

233-S Item Analysis

Spreadsheet Version 3.0b

1/14/02

Sample Info:

Item ID: 4414

File Name: 1355

Assay Date: 7-Mar-02

File Name:

Data Input:

Isotope	Activity (uCi/kg)	Meas Uncert
Pu-239 (129)		
Pu-239 (414)	4.02E+02	5.48E+01
Am-241	1.12E+04	9.55E+02
Np-237	2.09E-02	2.24E-03
U-238		
U-235		
Cs-137		
Co-60		

Activity (uCi/kg)	Meas Uncert

Item Parameters:

Contamination: Internal

Item Type: Pipe or Duct

Calcs: Use 1st

Dimensions:

Length (in): 21

Weight (lbs): 6.5

Width (in): 3

Depth for TMU (in): 4

Depth (in): 3

% Volume: 100

Am-241 Calcs:

Measured	1.12E+04	+/-	5.11E+03	Calc from Pu-239
Calculated	5.56E+02	+/-	2.96E+02	

Nuclide Activities:

Isotope	Activity (nCi/g)		Total Unc 1 sigma
Pu-238	1.63E+02	+/-	2.89E+01
Pu-239	4.02E+02	+/-	7.13E+01
Pu-240	2.09E+02	+/-	3.71E+01
Pu-241	7.82E+02	+/-	1.39E+02
Pu-242	2.11E-01	+/-	3.75E-02
Am-241	5.56E+02	+/-	2.96E+02
Np-237	2.09E-02	+/-	3.24E-03
U-238	0.00E+00	+/-	0.00E+00
U-235	0.00E+00	+/-	0.00E+00
Cs-137	0.00E+00	+/-	0.00E+00
Co-60	0.00E+00	+/-	0.00E+00

Results:

Total TRU Activity(nCi/g):	1.33E+03	+/-	3.08E+02	Calc from Pu-239 Act	
Pu (g):	2.21E-02	**Pu (g) + 3 sigma TMU:**	3.39E-02		
		Pu(g) + 3 sigma:	3.11E-02		

Comments:

Errors:

Analyst: Martin Winterrose

Date: 3/7/02

```
#Date & Time: Thu Mar 07 12:08:01 2002
~g=PIPE
~description=4414_PIPE
~comment=PIPE_AND_METAL
~Ccollimator=50MM-180D
~crpn=4
~Detector=7219
~Convergence in %=1            ~MDRPN=4
~Lunit=IN  ~Tunit=C  ~Dunit=G/CU.C    ~Punit=MM.HG
~at=20        ~ap=760       ~rh=50
~Energies kev=   50.000,  100.000,  128.000,  130.000,  150.000,  200.000,#
                300.000,  500.000,  700.000, 1000.000, 1400.000, 2000.000,#
               4000.000,
~Error in %=     10.000,   10.000,   10.000,   10.000,   10.000,    8.000,#
                  8.000,    6.000,    6.000,    4.000,    4.000,    4.000,#
                  4.000,
~d1.1=0.216     ~d1.2=3         ~d1.3=10.5      ~d1.4=10.5      ~1mater=CSTEEL   ~1den=7.86
~d2.1=0.133     ~d2.2=10.5      ~d2.3=10.5      ~2mater=DRYDIRT  ~2den=1.6       ~2con=1
~sd1=24
```

C A N B E R R A I S O C S A N A L Y S I S

Report Generated On : 3/07/02 12:45:32 PM

Sample Title : 4414 Side B
Spectrum Description :
Sample Identification : 1355
Sample Size : 3.0 kg

Sample Taken On : 3/07/02 12:30:00 PM
Acquisition Started : 3/07/02 12:30:18 PM

Live Time: 1800.0 seconds Real Time: 1813.3 seconds

ISOCS Calabration : 4414 PIPE
Energy Calibration Used Done On : 2/27/01
Efficiency Calibration Used Done On : 3/07/02

P E A K A N A L Y S I S R E P O R T

Peak No.	Peak centroid	Energy (keV)	Net Peak Area	Net Area Uncert.	Continuum Counts
1	239.19	59.88	3.47E+005	10542.2	4.15E+003
2	340.48	85.20	9.04E+002	65.66	2.30E+003
3	348.81	87.28	2.16E+002	57.04	2.30E+003
4	378.71	94.75	2.82E+002	49.46	2.30E+003
5	395.80	99.02	1.21E+003	60.75	2.27E+003
6	413.38	103.42	4.29E+002	55.77	2.24E+003
7	445.44	111.43	2.06E+002	45.41	2.29E+003
8	518.66	129.73	6.61E+002	47.57	1.94E+003
9	1202.61	300.66	4.19E+001	13.62	1.56E+002
10	1248.42	312.11	1.95E+002	18.71	1.51E+002
11	1380.08	345.01	5.01E+001	13.10	1.23E+002
12	1408.56	352.13	8.11E+001	13.96	1.13E+002
13	1500.99	375.23	1.51E+002	16.28	1.08E+002
14	1655.33	413.80	1.36E+002	15.23	8.79E+001
15	2043.46	510.80	1.22E+002	14.79	7.19E+001
16	2436.83	609.12	1.16E+002	13.10	5.25E+001
17	2646.47	661.51	8.26E+001	11.74	3.69E+001
18	3645.54	911.19	5.31E+001	9.14	2.42E+001
19	7063.36	1765.37	3.98E+001	7.45	7.48E-001

N U C L I D E I D E N T I F I C A T I O N R E P O R T

Nuclide Name	Id Confidence	Energy (keV)	Yield (%)	Activity (uCi)	Activity Uncertainty
NP-237	0.859	300.17*	6.20	2.55547E-002	8.40659E-003
		312.00*	36.00	2.09121E-002	2.24186E-003
		340.60	4.20		
		375.00*	0.68	9.42920E-001	1.10037E-001
		415.60*	1.75	3.47611E-001	4.14309E-002
Pu-239	0.962	129.28*	0.01	5.11731E+002	9.34734E+001
		375.00*	0.00	4.05217E+002	5.37917E+001
		413.70*	0.00	4.01709E+002	5.47727E+001
		451.50 @	0.00		
AM-241	0.992	59.54*	35.70	1.12220E+004	9.54844E+002
		125.28	0.00		
		335.40	0.00		
		662.42* @	0.00	1.21354E+003	1.76626E+002
		722.70	0.00		

I N T E R F E R E N C E C O R R E C T E D R E P O R T

	Nuclide Name	Nuclide Id Confidence	Wt mean Activity (uCi/kg)	Wt mean Activity Uncertainty
X	CS-137	0.999		
	NP-237	0.859	2.105515E-002	2.164534E-003
	Pu-239 @	0.962	4.331169E+002	2.671888E+001
	AM-241 @	0.992	1.122197E+004	9.548439E+002

? = nuclide is part of an undetermined solution
X = nuclide rejected by the interference analysis
@ = nuclide contains energy lines not used in Weighted Mean Activity

Errors quoted at 1.000 sigma

Bldg 233-S
NDA Item Description Sheet
Pipe Geometry

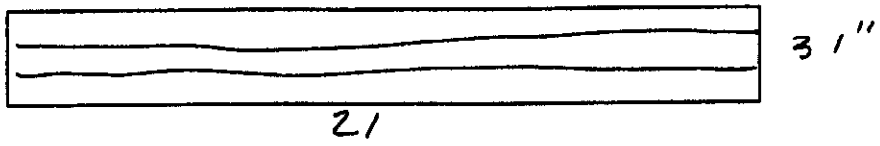

Put Dimensions on Pipe

Item ID: 4414 REPLICATE

Weight (kg): 6.5

Material Description: 3 1" PIPES

Packaging: 3 LAYERS

Detector Distance (in): 24"

Detector Filters: NONE

Dose Rate: <.5

Comments: A 900 ~~1354~~ 1356
B 1800 ~~1355~~ 1357

233-S Item Analysis

Spreadsheet Version 3.0b

1/14/02

Sample Info:

Item ID:	4414 Replicate	**Assay Date:**	7-Mar-02
File Name:	1357	**File Name:**	

Data Input:

Isotope	Activity (uCi/kg)	Meas Uncert	Activity (uCi/kg)	Meas Uncert
Pu-239 (129)				
Pu-239 (414)	4.16E+02	5.52E+01		
Am-241	1.12E+04	9.53E+02		
Np-237	2.37E-02	2.33E-03		
U-238				
U-235				
Cs-137				
Co-60				

Item Parameters:

Contamination: Internal

Item Type: Pipe or Duct

Calcs: Use 1st

Dimensions:

Length (in):	21	Width (in):	3	Depth (in):	3
Weight (lbs):	6.5	Depth for TMU (in):	4	% Volume:	100

Am-241 Calcs:

Measured	1.12E+04	+/-	5.10E+03	Calc from Pu-239
Calculated	5.76E+02	+/-	3.03E+02	

Nuclide Activities:

Isotope	Activity (nCi/g)		Total Unc 1 sigma
Pu-238	1.69E+02	+/-	2.94E+01
Pu-239	4.16E+02	+/-	7.27E+01
Pu-240	2.17E+02	+/-	3.79E+01
Pu-241	8.10E+02	+/-	1.41E+02
Pu-242	2.19E-01	+/-	3.82E-02
Am-241	5.76E+02	+/-	3.03E+02
Np-237	2.37E-02	+/-	3.52E-03
U-238	0.00E+00	+/-	0.00E+00
U-235	0.00E+00	+/-	0.00E+00
Cs-137	0.00E+00	+/-	0.00E+00
Co-60	0.00E+00	+/-	0.00E+00

Results:

Total TRU Activity(nCi/g):	1.38E+03	+/-	3.15E+02	Calc from Pu-239 Act
Pu (g):	2.29E-02	**Pu (g) + 3 sigma TMU:**	3.49E-02	
		Pu(g) + 3 sigma:	3.20E-02	

Comments:

Errors:

Analyst: Martin Winterrose

Date: 3/7/02

```
#Date & Time: Thu Mar 07 12:08:01 2002
~g=PIPE
~description=4414_PIPE
~comment=PIPE_AND_METAL
~Ccollimator=50MM-180D
~crpn=4
~Detector=7219
~Convergence in %=1            ~MDRPN=4
~Lunit=IN  ~Tunit=C  ~Dunit=G/CU.C    ~Punit=MM.HG
~at=20        ~ap=760       ~rh=50
~Energies kev=   50.000,  100.000,  128.000,  130.000,  150.000,  200.000,#
                300.000,  500.000,  700.000, 1000.000, 1400.000, 2000.000,#
               4000.000,
~Error in %=     10.000,   10.000,   10.000,   10.000,   10.000,    8.000,#
                  8.000,    6.000,    6.000,    4.000,    4.000,    4.000,#
                  4.000,
~d1.1=0.216     ~d1.2=3         ~d1.3=10.5      ~d1.4=10.5      ~1mater=CSTEEL
~d2.1=0.133     ~d2.2=10.5      ~d2.3=10.5      ~2mater=DRYDIRT  ~2den=1.6
~sd1=24
```

C A N B E R R A I S O C S A N A L Y S I S

Report Generated On : 3/07/02 2:07:27 PM

Sample Title : 4414 Side B Replicate
Spectrum Description :
Sample Identification : 1357
Sample Size : 3.0 kg

Sample Taken On : 3/07/02 1:44:00 PM
Acquisition Started : 3/07/02 1:52:15 PM

Live Time: 1800.0 seconds Real Time: 1813.2 seconds

ISOCS Calabration : 4414 PIPE
Energy Calibration Used Done On : 2/27/01
Efficiency Calibration Used Done On : 3/07/02

P E A K A N A L Y S I S R E P O R T

Peak No.	Peak centroid	Energy (keV)	Net Peak Area	Net Area Uncert.	Continuum Counts
1	239.18	59.88	3.46E+005	10470.8	4.44E+003
2	340.20	85.13	8.06E+002	56.89	2.29E+003
3	350.46	87.69	1.93E+002	51.70	2.29E+003
4	396.00	99.07	1.12E+003	67.32	2.27E+003
5	413.74	103.51	4.97E+002	50.77	2.23E+003
6	442.68	110.74	1.69E+002	44.95	2.31E+003
7	461.91	115.54	1.84E+002	45.17	2.24E+003
8	518.32	129.64	7.09E+002	51.65	1.97E+003
9	833.94	208.52	1.45E+002	21.09	3.59E+002
10	1201.65	300.42	4.87E+001	14.11	1.71E+002
11	1248.28	312.07	2.21E+002	18.96	1.56E+002
12	1332.17	333.04	6.24E+001	14.12	1.47E+002
13	1501.23	375.29	1.64E+002	16.73	1.08E+002
14	1655.66	413.89	1.41E+002	15.13	8.39E+001
15	2043.53	510.82	1.24E+002	14.00	6.26E+001
16	2436.90	609.13	8.69E+001	12.09	5.25E+001
17	2646.64	661.55	6.68E+001	10.52	3.95E+001
18	3645.91	911.28	6.06E+001	9.80	2.98E+001
19	7063.25	1765.34	4.32E+001	7.72	2.28E+000

NUCLIDE IDENTIFICATION REPORT

Nuclide Name	Id Confidence	Energy (keV)	Yield (%)	Activity (uCi)	Activity Uncertainty
NP-237	0.860	300.17*	6.20	2.97201E-002	8.73473E-003
		312.00*	36.00	2.36712E-002	2.32693E-003
		340.60	4.20		
		375.00*	0.68	1.02351E+000	1.14008E-001
		415.60*	1.75	3.60297E-001	4.13864E-002
Pu-239	0.964	129.28*	0.01	5.49047E+002	1.00503E+002
		375.00*	0.00	4.39849E+002	5.63473E+001
		413.70*	0.00	4.16370E+002	5.52062E+001
		451.50 @	0.00		
AM-241	0.992	59.54*	35.70	1.12087E+004	9.53142E+002
		125.28	0.00		
		335.40	0.00		
		662.42* @	0.00	9.81401E+002	1.57616E+002
		722.70	0.00		
PU-241	0.918	114.00*	0.02	5.15880E+001	1.29801E+001
		332.60*	0.00	8.61959E+001	1.99120E+001

INTERFERENCE CORRECTED REPORT

	Nuclide Name	Nuclide Id Confidence	Wt mean Activity (uCi/kg)	Wt mean Activity Uncertainty
X	CS-137	1.000		
	NP-237	0.860	2.387428E-002	2.246806E-003
	Pu-239 @	0.964	4.566190E+002	2.779702E+001
	AM-241 @	0.992	1.120869E+004	9.531423E+002
	PU-241	0.918	6.190860E+001	1.087374E+001

? = nuclide is part of an undetermined solution
X = nuclide rejected by the interference analysis
@ = nuclide contains energy lines not used in Weighted Mean Activity

Errors quoted at 1.000 sigma

****
***** N U C L I D E M D A R E P O R T *****
****

	Nuclide Name	Energy (keV)	Yield (%)	Line MDA (uCi/kg)	Nuclide MDA (uCi/kg)	Activity (uCi/kg)
	CO-60	1173.22	100.00	2.9460E-003	2.27E-003	1.9208E-003
		1332.49	100.00	2.2672E-003		-2.2695E-003
	CS-134	475.35	1.46	2.3282E-001	3.43E-003	5.0747E-002
		563.23	8.38	3.8697E-002		-7.2071E-003
		569.32	15.43	2.1595E-002		1.0681E-002
		604.70	97.60	4.0000E-003		-1.2220E-003
		795.84	85.40	3.4329E-003		1.5150E-003
		801.93	8.73	3.0720E-002		-3.1077E-002
		1038.57	1.00	2.8461E-001		-3.7668E-002
		1167.94	1.80	1.6348E-001		4.8786E-002
		1365.15	3.04	7.5570E-002		9.6559E-003
	CS-137	661.65*	85.12	1.9859E-003	1.99E-003	4.1507E-003
+	NP-237	300.17*	6.20	3.8752E-002	6.52E-003	2.9720E-002
		312.00*	36.00	6.5242E-003		2.3671E-002
		340.60	4.20	9.7914E-002		-6.6521E-003
		375.00*	0.68	3.1915E-001		1.0235E+000
		415.60*	1.75	1.1567E-001		3.6030E-001
+	Pu-239	129.28*	0.01	1.6208E+002	1.34E+002	5.4905E+002
		375.00*	0.00	1.3716E+002		4.3985E+002
		413.70*	0.00	1.3367E+002		4.1637E+002
		451.50	0.00	1.9258E+003		7.3841E+002
+	AM-241	59.54*	35.70	1.0140E+001	1.01E+001	1.1209E+004
		125.28	0.00	4.7304E+002		-2.1140E+002
		335.40	0.00	8.5971E+002		3.0749E+001
		662.42*	0.00	4.6955E+002		9.8140E+002
		722.70	0.00	2.4813E+003		-1.5165E+003
+	PU-241	114.00*	0.02	6.2546E+001	6.25E+001	5.1588E+001
		332.60*	0.00	8.1649E+001		8.6196E+001
	CM-243	209.70	3.27	1.6041E-001	2.96E-002	8.1056E-002
		228.18	10.56	4.1841E-002		3.5298E-002
		277.60	14.00	2.9635E-002		9.0467E-003

+ = Nuclide identified during the nuclide identification
* = Energy line found in the spectrum
> = MDA value not calculated
@ = Half-life too short to be able to perform the decay correction

N U C L I D E T O T A L S

Nuclide	Mass (g)
Pu-239	2.17E-002 +/- 1.32E-003

Bldg 233s
NDA Item Description Sheet
~~Box Geometry~~

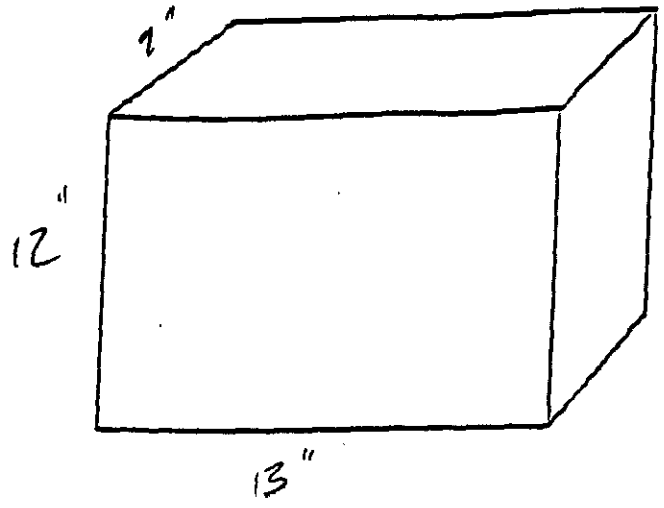

Put Dimensions on Box

Item ID: 469Φ

Weight (kg): 27.5 lbs (12.5 kg)

Material Description: Concrete plug

Packaging: 3 layers

Detector Distance (in): 24"

Detector Filters: NONE

Dose Rate:

Comments: A 900 1099
B 1800 1100

233-S Item Analysis

Spreadsheet Version 3.0b

1/14/02

Sample Info:

Item ID: 4690

File Name: 1100

Assay Date: 15-Jan-02

File Name:

Data Input:

Isotope	Activity (uCi/kg)	Meas Uncert
Pu-239 (129)	7.33E+01	
Pu-239 (414)		
Am-241	1.07E+01	9.07E-01
Np-237		
U-238		
U-235	1.28E-03	4.30E-04
Cs-137	9.60E-04	2.04E-04
Co-60		

Activity (uCi/kg)	Meas Uncert

Item Parameters:

Contamination: Surface only

Item Type: Bag

Calcs: Use 1st

Dimensions:

Length (in): 13

Weight (lbs): 27.5

Width (in): 12

Depth for TMU (in): 4

Depth (in): 9

% Volume: 100

Am-241 Calcs:

Measured	1.07E+01	+/-	1.63E+01	Use Meas
Calculated	1.01E+02	+/-	1.12E+02	

Nuclide Activities:

Isotope	Activity (nCi/g)		Total Unc 1 sigma
Pu-238	2.97E+01	+/-	1.27E+01
Pu-239	7.33E+01	+/-	3.13E+01
Pu-240	3.82E+01	+/-	1.63E+01
Pu-241	1.43E+02	+/-	6.10E+01
Pu-242	3.86E-02	+/-	1.65E-02
Am-241	1.07E+01	+/-	1.63E+01
Np-237	0.00E+00	+/-	0.00E+00
U-238	0.00E+00	+/-	0.00E+00
U-235	1.28E-03	+/-	5.17E-04
Cs-137	9.60E-04	+/-	2.96E-04
Co-60	0.00E+00	+/-	0.00E+00

Results:

Total TRU Activity(nCi/g):	3.57E+01	+/-	5.43E+01	Calc from Am-241 Act
Pu (g):	1.71E-02	**Pu (g) + 3 sigma TMU:**	3.89E-02	
		Pu(g) + 3 sigma:	1.71E-02	

Comments:

Errors are a result of geometry and weight. values are ok and based on surface contamination.

Errors:TRU calculated from Am-241 on Container > 10 lbs,

Analyst: Martin Winterrose

Date: 2/12/02

```
Date & Time: Wed Feb 27 12:55:28 2002
g=PIPE
description=4690_CORE
comment=CONCRETE
Ccollimator=50MM-180D
crpn=4
Detector=7219
Convergence in %=1            ~MDRPN=4
Lunit=IN  ~Tunit=C  ~Dunit=G/CU.C    ~Punit=MM.HG
at=20        ~ap=760       ~rh=50
Energies kev=   50.000,  100.000,  128.000,  130.000,  150.000,  200.000,#
               300.000,  500.000,  700.000, 1000.000, 1400.000, 2000.000,#
              4000.000,
Error in %=     10.000,   10.000,   10.000,   10.000,   10.000,    8.000,#
                 8.000,    6.000,    6.000,    4.000,    4.000,    4.000,#
                 4.000,
~d1.1=0.109     ~d1.2=10        ~d1.3=6         ~d1.4=6         ~1mater=304SS    ~1den=7.81
~d2.1=0.154     ~d2.2=6         ~d2.3=6         ~2mater=DRYDIRT  ~2den=1.6       ~2con=1
~d3.1=9         ~d3.2=6         ~d3.3=6         ~3mater=CONCRETE ~3den=2.3
~sd1=24
```

C A N B E R R A I S O C S A N A L Y S I S

Report Generated On : 2/27/02 12:58:17 PM

Sample Title : 4690 Side B
Spectrum Description :
Sample Identification : 1100
Sample Size : 12.5 kg

Sample Taken On : 1/15/02 10:12:00 AM
Acquisition Started : 1/15/02 10:12:59 AM

Live Time: 1800.0 seconds Real Time: 1802.8 seconds

ISOCS Calabration : 4690 CORE
Energy Calibration Used Done On : 2/27/01
Efficiency Calibration Used Done On : 2/27/02

P E A K A N A L Y S I S R E P O R T

Peak No.	Peak centroid	Energy (keV)	Net Peak Area	Net Area Uncert.	Continuum Counts
1	239.31	59.91	1.34E+004	408.64	1.99E+003
2	340.20	85.13	8.15E+002	58.14	2.37E+003
3	350.31	87.66	2.18E+002	50.70	2.39E+003
4	744.13	186.08	6.43E+001	21.37	5.52E+002
5	1409.68	352.41	1.02E+002	14.37	1.11E+002
6	2045.62	511.34	9.81E+001	13.44	6.87E+001
7	2438.77	609.60	1.17E+002	13.31	5.16E+001
8	2648.60	662.04	4.51E+001	9.48	3.78E+001
9	3647.45	911.67	5.47E+001	9.46	2.74E+001
10	5848.56	1461.77	5.20E+002	23.35	3.88E+000
11	7064.84	1765.74	3.67E+001	7.14	1.23E+000

N U C L I D E I D E N T I F I C A T I O N R E P O R T

Nuclide Name	Id Confidence	Energy (keV)	Yield (%)	Activity (uCi)	Activity Uncertainty
CS-137	0.994	661.65*	85.12	9.60407E-004	2.04211E-004
U-235	0.653	143.76	10.50		
		185.71*	54.00	1.27968E-003	4.29833E-004
		205.31	4.70		
AM-241	0.994	59.54*	35.70	1.06619E+001	9.07149E-001
		125.28	0.00		
		335.40	0.00		
		662.42* @	0.00	2.27083E+002	4.82806E+001
		722.70	0.00		

I N T E R F E R E N C E C O R R E C T E D R E P O R T

Nuclide Name	Nuclide Id Confidence	Wt mean Activity (uCi/kg)	Wt mean Activity Uncertainty
CS-137	0.994	9.153141E-004	2.042302E-004
U-235	0.653	1.279685E-003	4.298329E-004
AM-241 @	0.994	1.066194E+001	9.071494E-001

? = nuclide is part of an undetermined solution
X = nuclide rejected by the interference analysis
@ = nuclide contains energy lines not used in Weighted Mean Activity

Errors quoted at 1.000 sigma

****
**** N U C L I D E M D A R E P O R T *****
****

	Nuclide Name	Energy (keV)	Yield (%)	Line MDA (uCi/kg)	Nuclide MDA (uCi/kg)	Activity (uCi/kg)
	CO-60	1173.22	100.00	1.1540E-003	8.65E-004	9.0558E-004
		1332.49	100.00	8.6501E-004		-4.7329E-004
	CS-134	475.35	1.46	7.6540E-002	1.31E-003	-1.4108E-002
		563.23	8.38	1.2641E-002		5.7715E-003
		569.32	15.43	6.8976E-003		-3.7289E-003
		604.70	97.60	1.4323E-003		9.8424E-005
		795.84	85.40	1.3062E-003		7.8348E-005
		801.93	8.73	1.2453E-002		-4.9934E-003
		1038.57	1.00	1.0818E-001		1.3046E-001
		1167.94	1.80	6.3099E-002		-1.6934E-002
		1365.15	3.04	2.8000E-002		3.4732E-003
+	CS-137	661.65*	85.12	6.6756E-004	6.68E-004	9.6041E-004
	NP-237	300.17	6.20	2.1543E-002	3.48E-003	1.7031E-002
		312.00	36.00	3.4818E-003		-1.0130E-004
		340.60	4.20	2.8805E-002		9.3903E-003
		375.00	0.68	1.7061E-001		-1.5302E-001
		415.60	1.75	6.6124E-002		-5.0121E-002
	Pu-239	129.28	0.01	7.7093E+001	7.33E+001	5.9350E+001
		375.00	0.00	7.3321E+001		-6.5760E+001
		413.70	0.00	7.9246E+001		-1.7282E+001
		451.50	0.00	6.1201E+002		-8.5466E+002
+	AM-241	59.54*	35.70	1.6691E-001	1.67E-001	1.0662E+001
		125.28	0.00	1.2834E+002		-5.9809E+000
		335.40	0.00	2.5248E+002		-1.3362E+000
		662.42*	0.00	1.5784E+002		2.2708E+002
		722.70	0.00	8.2594E+002		-1.6078E+002
	PU-241	114.00	0.02	2.6926E+001	2.69E+001	1.5746E+001
		332.60	0.00	4.3667E+001		2.2318E-001
	CM-243	209.70	3.27	4.8088E-002	9.76E-003	-2.9173E-002
		228.18	10.56	1.3760E-002		5.9280E-003
		277.60	14.00	9.7629E-003		5.1664E-003

+ = Nuclide identified during the nuclide identification
* = Energy line found in the spectrum
> = MDA value not calculated
@ = Half-life too short to be able to perform the decay correction

N U C L I D E T O T A L S

Nuclide	Mass (g)
U-235	7.26E-003 +/- 2.44E-003

Bldg 233-S
NDA Item Description Sheet
~~Pipe~~ Geometry
RECTANGULAR

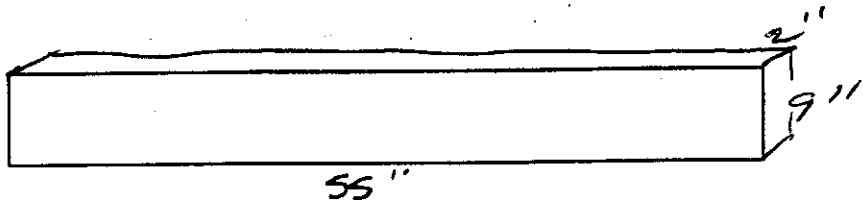

Put Dimensions on Pipe

Item ID: 4930

Weight (kg): 103 46.81

Material Description: CHANNEL

Packaging: 3 LAYERED + PADDING

Detector Distance (in): ~~24"~~ 50"

Detector Filters: NONE

Dose Rate: 2.5

Comments: A ~~1800~~ 1332
B ~~1800~~ 1333
9003

233-S Item Analysis

Spreadsheet Version 3.0b

1/14/02

Sample Info:

Item ID: 4930

File Name: 1332

Assay Date: 5-Mar-02

File Name:

Data Input:

Isotope	Activity (uCi/kg)	Meas Uncert
Pu-239 (129)	1.68E+01	7.44E+00
Pu-239 (414)		
Am-241	4.60E+00	3.67E-01
Np-237		
U-238		
U-235		
Cs-137	3.33E-04	1.24E-04
Co-60		

Activity (uCi/kg)	Meas Uncert

Item Parameters:

Contamination: Surface only

Item Type: Box

Calcs: Use 1st

Dimensions:

Length (in): 55

Weight (lbs): 103

Width (in): 9

Depth for TMU (in): 4

Depth (in): 2

% Volume: 100

Am-241 Calcs:

Measured	4.60E+00	+/-	1.21E+00	Use Meas
Calculated	2.33E+01	+/-	2.78E+01	

Nuclide Activities:

Isotope	Activity (nCi/g)		Total Unc 1 sigma
Pu-238	6.81E+00	+/-	3.18E+00
Pu-239	1.68E+01	+/-	7.86E+00
Pu-240	8.75E+00	+/-	4.09E+00
Pu-241	3.27E+01	+/-	1.53E+01
Pu-242	8.84E-03	+/-	4.14E-03
Am-241	4.60E+00	+/-	1.21E+00
Np-237	0.00E+00	+/-	0.00E+00
U-238	0.00E+00	+/-	0.00E+00
U-235	0.00E+00	+/-	0.00E+00
Cs-137	3.33E-04	+/-	1.29E-04
Co-60	0.00E+00	+/-	0.00E+00

Results:

Total TRU Activity(nCi/g):		3.70E+01	+/-	9.49E+00	Calc from Pu-239 Act
Pu (g):	1.46E-02	**Pu (g) + 3 sigma TMU:**		3.52E-02	
		Pu(g) + 3 sigma:		3.41E-02	

Comments:

Density error is due to waste matrix.

Errors:Density > 1,

Analyst: Martin Winterrose

Date: 3/6/02

```
#Date & Time: Tue Mar 05 09:06:13 2002
~g=RECTANGULAR_PLANE
~description=4930_CHANNEL
~comment=TWO_1/4"_PLATES
~Ccollimator=50MM-180D
~crpn=4
~Detector=EXAMPLE
~Convergence in %=1            ~MDRPN=4
~Lunit=IN  ~Tunit=C  ~Dunit=G/CU.C    ~Punit=MM.HG
~at=20        ~ap=760       ~rh=50
~Energies kev=   50.000,  100.000,  128.000,  130.000,  150.000,  200.000,#
                300.000,  500.000,  700.000, 1000.000, 1400.000, 2000.000,#
               4000.000,
~Error in %=     10.000,   10.000,   10.000,   10.000,   10.000,    8.000,#
                  8.000,    6.000,    6.000,    4.000,    4.000,    4.000,#
                  4.000,
~d1.1=0.025     ~d1.2=55        ~d1.3=9         ~1mater=POLYPROP ~1den=0.91
~d2.1=0.5       ~2mater=CELLULOS ~2den=0.45
~d3.1=0.025     ~3mater=DRYDIRT  ~3den=1.6       ~3con=0.5
~d4.1=0.25      ~4mater=304SS    ~4den=7.81
~d5.1=0.025     ~5mater=DRYDIRT  ~5den=1.6       ~5con=0.5
~d6.1=0.5       ~6mater=CELLULOS ~6den=0.45
~sd1=50
```

C A N B E R R A I S O C S A N A L Y S I S

Report Generated On : 3/06/02 8:34:21 AM

Sample Title : 4930 Side A
Spectrum Description :
Sample Identification : 1332
Sample Size : 46.8 kg

Sample Taken On : 3/05/02 2:29:00 PM
Acquisition Started : 3/05/02 2:29:33 PM

Live Time: 1800.0 seconds Real Time: 1806.1 seconds

ISOCS Calabration : 4930 CHANNEL
Energy Calibration Used Done On : 2/27/01
Efficiency Calibration Used Done On : 3/05/02

P E A K A N A L Y S I S R E P O R T

	Peak No.	Peak centroid	Energy (keV)	Net Peak Area	Net Area Uncert.	Continuum Counts
	1	237.82	59.54	1.26E+005	470.75	2.07E+004
	2	301.00	75.33	3.44E+003	174.61	5.69E+003
	3	340.00	85.08	1.22E+003	153.41	5.39E+003
M	4	396.15	99.11	5.71E+002	226.70	4.10E+003
m	5	415.39	103.92	3.95E+002	142.69	6.04E+003
	6	516.87	129.28	2.32E+002	95.05	2.81E+003
	7	1500.07	375.00	5.28E+001	19.87	1.16E+002
	8	2043.00	510.69	2.10E+002	28.07	1.12E+002
	9	2438.00	609.41	3.60E+001	15.88	8.20E+001
	10	2647.04	661.65	3.67E+001	13.68	5.23E+001
	11	3647.00	911.56	8.55E+001	13.74	2.75E+001
	12	5847.00	1461.38	5.24E+002	24.40	1.32E+001
	13	7063.00	1765.28	4.28E+001	7.07	2.18E+000

NUCLIDE IDENTIFICATION REPORT

Nuclide Name	Id Confidence	Energy (keV)	Yield (%)	Activity (uCi)	Activity Uncertainty
CS-137	1.000	661.65*	85.12	3.33128E-004	1.24485E-004
Pu-239	0.740	129.28*	0.01	1.68019E+001	7.43563E+000
		375.00*	0.00	1.88096E+001	7.23166E+000
		413.70	0.00		
		451.50 @	0.00		
AM-241	1.000	59.54*	35.70	4.60387E+000	3.66600E-001
		125.28	0.00		
		335.40	0.00		
		662.42* @	0.00	7.87662E+001	2.94331E+001
		722.70	0.00		

INTERFERENCE CORRECTED REPORT

Nuclide Name	Nuclide Id Confidence	Wt mean Activity (uCi/kg)	Wt mean Activity Uncertainty
CS-137	1.000	3.136563E-004	1.244916E-004
Pu-239	@ 0.740	1.783368E+001	5.184169E+000
AM-241	@ 1.000	4.603869E+000	3.665996E-001

? = nuclide is part of an undetermined solution
X = nuclide rejected by the interference analysis
@ = nuclide contains energy lines not used in Weighted Mean Activity

Errors quoted at 1.000 sigma

NUCLIDE TOTALS

Nuclide	Mass (g)
Pu-239	1.35E-002 +/- 3.91E-003

****
***** N U C L I D E M D A R E P O R T *****
****

	Nuclide Name	Energy (keV)	Yield (%)	Line MDA (uCi/kg)	Nuclide MDA (uCi/kg)	Activity (uCi/kg)
	CO-60	1173.22	100.00	5.2930E-004	4.47E-004	4.5962E-004
		1332.49	100.00	4.4709E-004		-1.0486E-004
	CS-134	475.35	1.46	3.0639E-002	5.49E-004	-5.5601E-004
		563.23	8.38	5.5783E-003		4.0980E-004
		569.32	15.43	3.0401E-003		-1.5138E-003
		604.70	97.60	5.6992E-004		-5.0394E-004
		795.84	85.40	5.4910E-004		-2.5084E-005
		801.93	8.73	5.5958E-003		-6.2295E-003
		1038.57	1.00	4.8621E-002		2.2733E-002
		1167.94	1.80	2.7336E-002		9.4731E-004
		1365.15	3.04	1.3964E-002		1.1243E-002
+	CS-137	661.65*	85.12	3.9039E-004	3.90E-004	3.3313E-004
	NP-237	300.17	6.20	8.7290E-003	1.48E-003	7.9971E-003
		312.00	36.00	1.4781E-003		4.3068E-004
		340.60	4.20	1.2227E-002		-2.5855E-003
+	Pu-239	129.28*	0.01	2.2536E+001	2.25E+001	1.6802E+001
		375.00*	0.00	2.2660E+001		1.8810E+001
		413.70	0.00	3.1839E+001		-1.4748E+001
		451.50	0.00	2.5230E+002		-9.4736E+001
+	AM-241	59.54*	35.70	3.7123E-002	3.71E-002	4.6039E+000
		125.28	0.00	4.2414E+001		1.5992E+001
		335.40	0.00	1.0431E+002		3.3010E+001
		662.42*	0.00	9.2306E+001		7.8766E+001
		722.70	0.00	4.0648E+002		3.3043E+002
	PU-241	114.00	0.02	8.1838E+000	8.18E+000	9.9610E+000
		332.60	0.00	1.7653E+001		-4.7336E+000
	CM-243	209.70	3.27	1.9782E-002	3.88E-003	3.6091E-003
		228.18	10.56	5.5822E-003		-3.7599E-003
		277.60	14.00	3.8822E-003		-7.3088E-004

+ = Nuclide identified during the nuclide identification
* = Energy line found in the spectrum
> = MDA value not calculated
@ = Half-life too short to be able to perform the decay correction

Bldg 233-S
NDA Item Description Sheet
~~Pipe~~ Geometry

RECTANGULAR PLATE

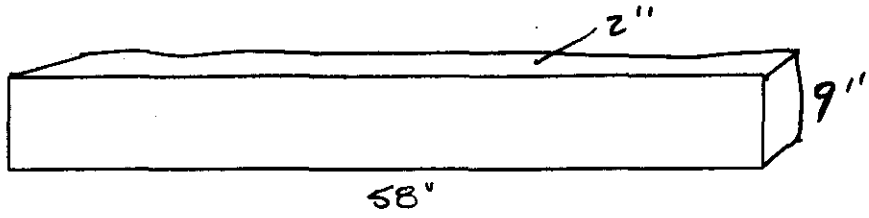

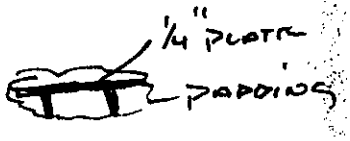

Put Dimensions on Pipe

Item ID: 4932

Weight (kg): 99 LBS 45 kg

Material Description: CHANNEL

Packaging: 3 + PADDING

Detector Distance (in): 50"

Detector Filters: NONE

Dose Rate: <.5

Comments: A 1800 1327
B 1800 1328

233-S Item Analysis

Spreadsheet Version 3.0b

1/14/02

Sample Info:

Item ID: 4932

File Name: 1327

Assay Date: 4-Mar-02

File Name: 1328

Data Input:

Isotope	Activity (uCi/kg)	Meas Uncert	Activity (uCi/kg)	Meas Uncert
Pu-239 (129)				
Pu-239 (414)	2.43E+01	5.60E+00	2.04E+01	5.19E+00
Am-241	1.00E+01	8.54E-01	3.35E+00	2.81E-01
Np-237	1.57E-03	2.50E-04	1.20E-03	2.30E-04
U-238				
U-235				
Cs-137	4.90E-04	9.74E-05	6.43E-04	1.08E-04
Co-60				

Item Parameters:

Contamination: Internal

Item Type: Box

Calcs: Average

Dimensions:

Length (in): 58

Width (in): 9

Depth (in): 2

Weight (lbs): 99

Depth for TMU (in): 4

% Volume: 100

Am-241 Calcs:

Measured	6.67E+00	+/-	2.71E+00	Use Meas
Calculated	3.09E+01	+/-	1.78E+01	

Nuclide Activities:

Isotope	Activity (nCi/g)		Total Unc 1 sigma
Pu-238	9.06E+00	+/-	1.80E+00
Pu-239	2.24E+01	+/-	4.45E+00
Pu-240	1.16E+01	+/-	2.32E+00
Pu-241	4.35E+01	+/-	8.66E+00
Pu-242	1.18E-02	+/-	2.34E-03
Am-241	6.67E+00	+/-	2.71E+00
Np-237	1.39E-03	+/-	2.19E-04
U-238	0.00E+00	+/-	0.00E+00
U-235	0.00E+00	+/-	0.00E+00
Cs-137	5.66E-04	+/-	9.22E-05
Co-60	0.00E+00	+/-	0.00E+00

Results:

Total TRU Activity(nCi/g):		4.97E+01	+/-	5.97E+00	Calc from Pu-239 Act
Pu (g):	1.87E-02	**Pu (g) + 3 sigma TMU:**		2.99E-02	
		Pu(g) + 3 sigma:		2.83E-02	

Comments:

Error due to geometry.

Errors:Density > 1,

Analyst: Martin Winterrose

Date: 3/4/02

```
#Date & Time: Mon Mar 04 13:45:25 2002
~g=RECTANGULAR_PLANE
~description=4932_CHANNEL
~comment=TWO_1/4"_PLATES
~Ccollimator=50MM-180D
~crpn=4
~Detector=EXAMPLE
~Convergence in %=1            ~MDRPN=4
~Lunit=IN  ~Tunit=C  ~Dunit=G/CU.C    ~Punit=MM.HG
~at=20        ~ap=760       ~rh=50
~Energies kev=   50.000,  100.000,  128.000,  130.000,  150.000,  200.000,#
                300.000,  500.000,  700.000, 1000.000, 1400.000, 2000.000,#
               4000.000,
~Error in %=     10.000,   10.000,   10.000,   10.000,   10.000,    8.000,#
                  8.000,    6.000,    6.000,    4.000,    4.000,    4.000,#
                  4.000,
~d1.1=0.025     ~d1.2=58        ~d1.3=9         ~1mater=POLYPROP ~1den=0.91
~d2.1=0.5       ~2mater=CELLULOS ~2den=0.45
~d3.1=0.025     ~3mater=DRYDIRT  ~3den=1.6       ~3con=0.5
~d4.1=0.25      ~4mater=304SS    ~4den=7.81
~d5.1=0.025     ~5mater=DRYDIRT  ~5den=1.6       ~5con=0.5
~d6.1=0.5       ~6mater=CELLULOS ~6den=0.45
~sd1=50
```

C A N B E R R A I S O C S A N A L Y S I S

Report Generated On : 3/04/02 2:17:39 PM

Sample Title : 4932 Side A
Spectrum Description :
Sample Identification : 1327
Sample Size : 45.0 kg

Sample Taken On : 3/04/02 1:46:00 PM
Acquisition Started : 3/04/02 1:47:20 PM

Live Time: 1800.0 seconds Real Time: 1810.6 seconds

ISOCS Calabration : 4932 CHANNEL
Energy Calibration Used Done On : 2/27/01
Efficiency Calibration Used Done On : 3/04/02

P E A K A N A L Y S I S R E P O R T

Peak No.	Peak centroid	Energy (keV)	Net Peak Area	Net Area Uncert.	Continuum Counts
1	207.62	51.99	1.06E+003	146.53	6.83E+003
2	239.20	59.89	2.66E+005	7799.54	4.06E+003
3	339.87	85.05	7.26E+002	69.28	2.60E+003
4	351.06	87.84	2.19E+002	55.97	2.61E+003
5	395.65	98.99	6.07E+002	61.08	2.57E+003
6	412.90	103.30	3.91E+002	52.04	2.54E+003
7	445.08	111.34	1.83E+002	47.32	2.61E+003
8	518.48	129.68	3.49E+002	45.86	2.21E+003
9	1248.67	312.17	1.05E+002	15.86	1.55E+002
10	1332.68	333.17	3.75E+001	12.32	1.25E+002
11	1408.28	352.06	9.75E+001	14.68	1.17E+002
12	1501.68	375.40	7.53E+001	13.22	9.44E+001
13	1654.84	413.68	5.88E+001	12.72	9.67E+001
14	2043.35	510.78	1.44E+002	14.76	6.76E+001
15	2333.24	583.23	6.84E+001	11.45	5.55E+001
16	2437.90	609.38	1.35E+002	13.85	4.75E+001
17	2646.60	661.54	5.14E+001	10.08	4.31E+001
18	3644.84	911.02	6.65E+001	10.35	2.77E+001
19	4482.81	1120.44	5.94E+001	9.63	2.56E+001
20	5846.27	1461.20	5.11E+002	23.23	7.32E+000
21	7062.77	1765.22	3.93E+001	7.25	1.21E+000

N U C L I D E I D E N T I F I C A T I O N R E P O R T

Nuclide Name	Id Confidence	Energy (keV)	Yield (%)	Activity (uCi)	Activity Uncertainty
CS-137	1.000	661.65*	85.12	4.90244E-004	9.74054E-005
NP-237	0.653	300.17	6.20		
		312.00*	36.00	1.57340E-003	2.50072E-004
		340.60	4.20		
		375.00*	0.68	6.58452E-002	1.19176E-002
		415.60*	1.75	2.10564E-002	4.64237E-003
Pu-239	0.966	129.28*	0.01	2.66045E+001	5.67074E+000
		375.00*	0.00	2.82968E+001	5.42548E+000
		413.70*	0.00	2.43334E+001	5.60165E+000
		451.50 @	0.00		
AM-241	0.995	59.54*	35.70	1.00804E+001	8.53866E-001
		125.28	0.00		
		335.40	0.00		
		662.42* @	0.00	1.15916E+002	2.30288E+001
		722.70	0.00		

I N T E R F E R E N C E C O R R E C T E D R E P O R T

Nuclide Name	Nuclide Id Confidence	Wt mean Activity (uCi/kg)	Wt mean Activity Uncertainty
CS-137	1.000	4.476113E-004	9.746331E-005
NP-237	0.653	1.566693E-003	2.498263E-004
Pu-239	@ 0.966	2.589750E+001	2.622244E+000
AM-241	@ 0.995	1.008038E+001	8.538656E-001

? = nuclide is part of an undetermined solution
X = nuclide rejected by the interference analysis
@ = nuclide contains energy lines not used in Weighted Mean Activity

Errors quoted at 1.000 sigma

****
**** N U C L I D E M D A R E P O R T *****
****

	Nuclide Name	Energy (keV)	Yield (%)	Line MDA (uCi/kg)	Nuclide MDA (uCi/kg)	Activity (uCi/kg)
	CO-60	1173.22	100.00	5.8431E-004	5.08E-004	5.4735E-005
		1332.49	100.00	5.0827E-004		6.0970E-004
	CS-134	475.35	1.46	3.7108E-002	5.93E-004	2.7035E-002
		563.23	8.38	6.0503E-003		-1.2370E-003
		569.32	15.43	3.3219E-003		5.9776E-004
		604.70	97.60	6.5256E-004		2.4675E-004
		795.84	85.40	5.9281E-004		1.6777E-004
		801.93	8.73	5.5221E-003		-3.6161E-003
		1038.57	1.00	4.8334E-002		-1.8988E-002
		1167.94	1.80	3.1404E-002		2.5778E-002
		1365.15	3.04	1.3301E-002		1.2962E-003
+	CS-137	661.65*	85.12	3.1738E-004	3.17E-004	4.9024E-004
+	NP-237	300.17	6.20	9.0281E-003	9.11E-004	-5.0601E-003
		312.00*	36.00	9.1121E-004		1.5734E-003
		340.60	4.20	1.3449E-002		-1.0838E-002
		375.00*	0.68	4.1906E-002		6.5845E-002
		415.60*	1.75	1.7365E-002		2.1056E-002
+	Pu-239	129.28*	0.01	1.6879E+001	1.69E+001	2.6605E+001
		375.00*	0.00	1.8009E+001		2.8297E+001
		413.70*	0.00	2.0068E+001		2.4333E+001
		451.50	0.00	2.7423E+002		-8.1305E+001
+	AM-241	59.54*	35.70	1.1343E-002	1.13E-002	1.0080E+001
		125.28	0.00	4.5478E+001		-3.1054E+000
		335.40	0.00	1.1436E+002		1.0395E+002
		662.42*	0.00	7.5044E+001		1.1592E+002
		722.70	0.00	4.0909E+002		4.2280E+002
	PU-241	114.00	0.02	8.8780E+000	8.88E+000	3.4645E+000
		332.60	0.00	1.8778E+001		-1.0342E+001
	CM-243	209.70	3.27	2.2511E-002	4.15E-003	2.0786E-003
		228.18	10.56	6.3518E-003		3.8414E-003
		277.60	14.00	4.1454E-003		4.4362E-004

+ = Nuclide identified during the nuclide identification
* = Energy line found in the spectrum
> = MDA value not calculated
@ = Half-life too short to be able to perform the decay correction

N U C L I D E T O T A L S

Nuclide	Mass (g)
Pu-239	1.88E-002 +/- 1.90E-003

C A N B E R R A I S O C S A N A L Y S I S

Report Generated On : 3/04/02 2:49:29 PM

Sample Title : 4932 Side B
Spectrum Description :
Sample Identification : 1328
Sample Size : 45.0 kg

Sample Taken On : 3/04/02 2:18:00 PM
Acquisition Started : 3/04/02 2:19:16 PM

Live Time: 1800.0 seconds Real Time: 1805.2 seconds

ISOCS Calabration : 4932 CHANNEL
Energy Calibration Used Done On : 2/27/01
Efficiency Calibration Used Done On : 3/04/02

P E A K A N A L Y S I S R E P O R T

Peak No.	Peak centroid	Energy (keV)	Net Peak Area	Net Area Uncert.	Continuum Counts
1	239.19	59.88	8.82E+004	2399.59	2.55E+003
2	340.33	85.16	8.89E+002	63.18	2.40E+003
3	350.41	87.68	2.30E+002	55.81	2.41E+003
4	394.97	98.82	2.21E+002	51.76	2.39E+003
5	518.19	129.61	2.14E+002	43.37	2.07E+003
6	835.69	208.96	6.73E+001	17.99	3.33E+002
7	1247.56	311.89	7.99E+001	14.79	1.57E+002
8	1501.71	375.41	4.45E+001	12.24	1.05E+002
9	1655.39	413.82	4.93E+001	11.91	8.51E+001
10	2043.85	510.90	1.48E+002	15.95	6.36E+001
11	2437.88	609.38	1.26E+002	13.51	5.16E+001
12	2646.80	661.59	6.73E+001	11.17	4.61E+001
13	3643.73	910.74	6.27E+001	9.93	2.95E+001
14	7063.28	1765.35	3.89E+001	7.33	2.60E+000

N U C L I D E I D E N T I F I C A T I O N R E P O R T

Nuclide Name	Id Confidence	Energy (keV)	Yield (%)	Activity (uCi)	Activity Uncertainty
CS-137	1.000	661.65*	85.12	6.42661E-004	1.08494E-004
NP-237	0.654	300.17	6.20		
		312.00*	36.00	1.20167E-003	2.29612E-004
		340.60	4.20		
		375.00*	0.68	3.89619E-002	1.08469E-002
		415.60*	1.75	1.76822E-002	4.33303E-003
Pu-239	0.968	129.28*	0.01	1.62968E+001	4.29021E+000
		375.00*	0.00	1.67437E+001	4.78029E+000
		413.70*	0.00	2.04341E+001	5.18700E+000
		451.50 @	0.00		
AM-241	0.995	59.54*	35.70	3.34569E+000	2.81000E-001
		125.28	0.00		
		335.40	0.00		
		662.42* @	0.00	1.51954E+002	2.56494E+001
		722.70	0.00		

I N T E R F E R E N C E C O R R E C T E D R E P O R T

Nuclide Name	Nuclide Id Confidence	Wt mean Activity (uCi/kg)	Wt mean Activity Uncertainty
CS-137	1.000	6.285114E-004	1.084862E-004
NP-237	0.654	1.206127E-003	2.293906E-004
Pu-239 @	0.968	1.691069E+001	2.406611E+000
AM-241 @	0.995	3.345686E+000	2.809999E-001

? = nuclide is part of an undetermined solution
X = nuclide rejected by the interference analysis
@ = nuclide contains energy lines not used in Weighted Mean Activity

Errors quoted at 1.000 sigma

****
**** N U C L I D E M D A R E P O R T *****
****

	Nuclide Name	Energy (keV)	Yield (%)	Line MDA (uCi/kg)	Nuclide MDA (uCi/kg)	Activity (uCi/kg)
	CO-60	1173.22	100.00	5.0146E-004	5.01E-004	-9.7590E-005
		1332.49	100.00	5.1821E-004		1.3570E-004
	CS-134	475.35	1.46	3.4774E-002	5.67E-004	2.4518E-003
		563.23	8.38	5.7813E-003		-1.9922E-003
		569.32	15.43	3.2333E-003		-2.1608E-003
		604.70	97.60	6.4933E-004		2.4120E-005
		795.84	85.40	5.6655E-004		3.9026E-004
		801.93	8.73	5.4325E-003		-5.9495E-003
		1038.57	1.00	4.8854E-002		2.1515E-002
		1167.94	1.80	2.8424E-002		-5.1680E-003
		1365.15	3.04	1.3006E-002		-8.4699E-003
+	CS-137	661.65*	85.12	3.2726E-004	3.27E-004	6.4266E-004
+	NP-237	300.17	6.20	9.4436E-003	9.17E-004	2.2447E-003
		312.00*	36.00	9.1669E-004		1.2017E-003
		340.60	4.20	1.2945E-002		-1.6724E-003
		375.00*	0.68	4.4148E-002		3.8962E-002
		415.60*	1.75	1.6351E-002		1.7682E-002
+	Pu-239	129.28*	0.01	1.6339E+001	1.63E+001	1.6297E+001
		375.00*	0.00	1.8972E+001		1.6744E+001
		413.70*	0.00	1.8896E+001		2.0434E+001
		451.50	0.00	2.7423E+002		1.3441E+002
+	AM-241	59.54*	35.70	9.0210E-003	9.02E-003	3.3457E+000
		125.28	0.00	4.3935E+001		-1.5975E+001
		335.40	0.00	1.1449E+002		5.3107E+001
		662.42*	0.00	7.7378E+001		1.5195E+002
		722.70	0.00	3.9202E+002		-5.3449E+001
	PU-241	114.00	0.02	8.6345E+000	8.63E+000	9.7407E+000
		332.60	0.00	1.9236E+001		1.7923E+000
	CM-243	209.70	3.27	2.1252E-002	4.28E-003	1.2272E-002
		228.18	10.56	6.0123E-003		1.7708E-003
		277.60	14.00	4.2800E-003		1.9909E-003

+ = Nuclide identified during the nuclide identification
* = Energy line found in the spectrum
> = MDA value not calculated
@ = Half-life too short to be able to perform the decay correction

N U C L I D E T O T A L S

Nuclide	Mass (g)
Pu-239	1.23E-002 +/- 1.75E-003