AR TARGET SHEET

The following document was too large to scan as one unit, therefore, it has been broken down into sections.

EDMC#: 0069626
SECTION: 3 OF 3

DOCUMENT #:

TITLE: Letter from Schepens to Hedges, "Final Dangerous & Mixed Waste RD&D Permit for DBVF Required Submittal for Dried Waste Handling System, 06-ED-023, dated March 22, 2006

APPENDIX A

TFC-ESHQ-Q_C-C-03, REV. C-2
CONTROL OF SUSPECT COUNTERFEIT ITEMS

This page intentionally left blank.

TABLE OF CONTENTS

1.0 PURPOSE AND SCOPE 2
2.0 IMPLEMENTATION 2
3.0 RESPONSIBILITES 2
3.1 Procurement Personnel 2
3.2 Inspection Personnel 2
3.3 Quality Assurance Engineer 2
3.4 S/CI Coordinator 2
3.5 Assigned Engineering Personnel 3
3.6 Responsible Managers and Supervisors 3
4.0 PROCEDURE 3
4.1 Introduction 3
4.2 Procurement 3
4.3 Inspection for Potential S/CI 4
4.4 Control of Material Identified as S/CI 4
4.5 Reporting of S/CI 5
4.6 Acceptance, Removal, and Disposition of S/CI 5
4.7 Surplus/Excess Material 7
4.8 Assessments 7
4.9 Training 7
5.0 DEFINITIONS 8
6.0 RECORDS 9
7.0 SOURCES 9
7.1 Requirements 9
7.2 References 9

TABLE OF FIGURES

Figure 1. Management of Suspect/Counterfeit Items. 11

TABLE OF ATTACHMENTS

ATTACHMENT A - SUSPECT COMPONENTS LIST 12
ATTACHMENT B - CLASSIFICATION OF POTENTIALLY SUSPECT/COUNTERFEIT ITEMS 30
ATTACHMENT C - SUSPECT/COUNTERFEIT ITEMS INFORMATION SOURCE LIST 32
ATTACHMENT D - CHARACTERISTICS THAT MAY MAKE PRODUCTS VULNERABLE TO MISREPRESENTATION, FRAUDULENT PRACTICES, AND COUNTERFEITING 34
ATTACHMENT E - WHERE TO LOOK FOR SUSPECT/COUNTERFEIT ITEMS 35
ATTACHMENT F - SUSPECT/COUNTERFEIT PARTS DETECTION 36
ATTACHMENT G - FASTENERS 41
ATTACHMENT H - DOE HEADMARK LIST 45
ATTACHMENT I - REFURBISHED MOLDED CASE CIRCUIT BREAKERS 47
ATTACHMENT J - ASSESSMENT/SURVEILLANCE LINES OF INQUIRY 51

1.0 PURPOSE AND SCOPE
(7.1.1, 7.1.2, 7.1.3, 7.1.4)

This procedure describes the process for the identification, prevention, evaluation, notification, and disposition of suspect/counterfeit items (S/CIs) at CH2M HILL. This procedure applies to items that are:

- In the procurement cycle
- In source or receiving inspection
- In inventory at warehouses and staging areas
- Installed
- In operation.

This procedure applies to:

- Company ordered material
- Material supplied by subcontractors
- Material and test equipment supplied by test sponsors
- Construction
- Fabrication shops
- Laboratory work and experiments
- Surplus/excess property
- Government property
- Material obtained from U.S. Department of Energy (DOE) sources.

2.0 IMPLEMENTATION

This procedure is effective on the date shown in the header.

3.0 RESPONSIBILITES

3.1 Procurement Personnel

Maintain awareness of S/CI and support S/CI program implementation.

3.2 Inspection Personnel

Perform inspections for conformance or acceptance of material including verifications that the item(s) being inspected do not exhibit indications attributed to potential suspect/counterfeit items.

3.3 Quality Assurance Engineer

1. Ensures appropriate procurement controls are implemented to preclude entry of S/CI to the site through review of procurement documents.

2. Notifies the S/CI coordinator of nonconformance reports (NCRs) associated with S/CI.

3.4 S/CI Coordinator

Apprises company, DOE, and DOE local Office of the Inspector General personnel of S/CI status and final disposition.

3.5 Assigned Engineering Personnel

1. Evaluate S/CI information for applicability to design and procurement specifications, system configuration, and operating conditions.

2. Provide technical specifications, critical characteristics, and acceptance methods in support of procurement and inspection activities to prevent introduction of S/CI.

3.6 Responsible Managers and Supervisors

1. Maintain awareness of S/CI.

2. Control potential S/CI.

3. Evaluate training needs based on job classification and ensure individuals receive training in S/CI awareness, prevention, detection, and reporting, as appropriate, to respective assignments.

4.0 PROCEDURE

4.1 Introduction

The two most common S/CIs found at DOE facilities have been threaded fasteners frandulently marked as high-strength bolts, and refurbished electrical circuit breakers sold and distributed under false certifications. Purchasers have also been misled into accepting S/CIs that do not conform to specified requirements by falsified documentation.

NOTE: Questions about a specific item should be referred to the S/CI coordinator. Attachment A provides a historical listing of suspect components. Equipment/material types or classes have been established to identify those specific items which are classified as potentially misrepresented or S/CI. Attachment B provides a listing of those classifications and items subject to S/CI control at tank farm facilities.

4.2 Procurement

CH2M HILL Personnel

1. Ensure material requirements are specified in subcontracts to preclude the purchase or introduction of S/CI. Use the information in Attachments A, B, C, D, E, F, G, H, and I to identify specific components, characteristics, precautions, and other considerations that are to be addressed during the procurement process to prevent introduction of S/CI.

2. Ensure material requests for quality level 1, 2, and 3 items and services include appropriate technical specifications, procurement quality clauses, documentation, and inspection requirements to prevent introduction of S/CI.

3. In maintenance and construction/fabrication subcontracts, specify appropriate requirements to preclude the purchase or introduction of S/CI.

Quality Assurance Engineer	4.	Review procurement documents to ensure they contain the appropriate procurement controls to preclude entry of S/CI to the site.
Procurement Personnel	5.	Ensure vendor selection complies with qualification requirements for the quality level of the items and services and is based on the vendor's ability to demonstrate the capability of delivering acceptable items.

4.3 Inspection for Potential S/CI

Bill of Material Preparers	1.	For quality level 0 and P-Card items listed in Attachment B, designate an S/CI inspection in the special instruction of the Bill of Material (BOM) in accordance with the requirements of TFC-BSM-FPM_MC-C-01.
	2.	Ensure quality level 0 and P-Card items are inspected prior to material issuance.
First Line Manager	3.	Obtain on-site S/CI inspection for quality level 0 and P-Card items prior to material issue and use.
Engineering Personnel	4.	Provide technical specifications, critical characteristics, and acceptance methods to facilitate inspection planning for S/CI prevention and detection.
Quality Assurance Engineer	5.	Ensure S/CI detection criteria is incorporated into QA inspection planning activities.
Assigned Inspection Personnel	6.	Use Attachments G, H, and I as resources for detecting S/CIs during walkdowns and inspections. Specific items are subject to inspection.
	7.	Verify and document that the items being inspected do not exhibit indications attributed to potential S/CIs as described in Attachments G through J.
	8.	If an S/CI is detected during inspection activities, document and control the S/CI in accordance with TFC-ESHQ-Q_ADM-C-02.

4.4 Control of Material Identified as S/CI

Responsible Manager or Delegate	1.	Ensure items identified as potential S/CI are documented as nonconforming and controlled in accordance with TFC-ESHQ-Q_ADM-C-02. Non conformances identified as S/CI shall be reviewed and processed within four working days to determine whether or not the items are S/CI.
	2.	Transfer tagged S/CIs to 2101-HV for storage.
Cognizant Quality Engineer	3.	Notify the S/CI coordinator of all NCRs associated with the S/CI.

34005-RC-0502

4.5 Reporting of S/CI

Assigned Company Personnel

1. Report all items identified as potential S/CI in accordance with TFC-OPS-OPER-C-24. (7.1.1)

   NOTE: Reporting of S/CIs is required regardless of safety class, where the S/CIs are located (receiving inspection, inventory/storage areas, fabrication and maintenance areas, installed, etc.), or their operating status.

S/CI Coordinator

2. Notify the DOE S/CI coordinator of all occurrence reports associated with S/CIs. As appropriate, transmit copies of NCRs and applicable documentation.

3. Notify the DOE local Office of Inspector General of all S/CIs. Notification should be e-mailed to the DOE local Office of Inspector General points of contact providing information in the following format:

   - NCR number
   - Date NCR was written
   - Purchase order/job control number (if known)
   - End use of product
   - Name of manufacturer, distributor, supplier
   - Safety class (if known)
   - Occurrence report number
   - Value of item(s)
   - Point(s) of contact
   - Description of item(s)
   - Quantity
   - Description of nonconformance
   - Any other pertinent information that would help the DOE local Office of Inspector General.

4.6 Acceptance, Removal, and Disposition of S/CI

S/CI Coordinator

1. Notify responsible company personnel that S/CI may not be destroyed or disposed of without written release from the DOE local Office of Inspector General.

2. Prior to destroying or disposing of S/CIs, consult the Inspector General to determine if there is a need to retain the items as evidence for potential litigation. Based on the Office of Inspector General's decision, either:

   a. Retain S/CI material as evidence for potential litigation, or

   b. Release S/CI material for final disposition and/or disposal as directed by the S/CI coordinator.

34005-RC-0502

Engineering Personnel

3. Evaluate S/CI to determine if its use could create a safety hazard in its current/proposed application.

Assigned Company Personnel

4. If the engineering evaluation of the S/CI has determined that its use could not create a safety hazard in its current/proposed application:

   a. Disposition the S/CI to remain in place.

      NOTE: Criteria for dispositioning S/CI is by acceptance, removal, or replacement after an engineering evaluation. This should be based on the deficient characteristic of the particular item.

   b. Identify the accepted S/CI by marking with orange paint or other appropriate methods and note its location.

   c. In areas where operating temperatures are 500°F and above or are subject to cyclic loading where fatigue failure is likely to occur, replace all grades 8 and 8.2 S/CI fasteners prior to further use of the equipment.

   d. Engineering must also identify a way to prevent its reuse in an application it may not be suitable for.

   e. If removed, prepare the S/CI for disposal.

5. If the engineering evaluation of the S/CI has determined that its use could create a safety hazard in its current/ proposed application:

   a. Contact Waste Feed Operations (WFO) Shift Operations to secure the equipment.

   b. Remove the S/CI as soon as practical.

   c. Tag, segregate, or otherwise control the S/CI to prevent inadvertent use.

   d. Prepare the S/CI for disposal.

S/CI Coordinator

6. Ensure that all S/CI material dispositioned for disposal is properly controlled and arranged for the material to be permanently and irrevocably altered so that it cannot be used. Examples of alterations include:

   - Melting
   - Shredding
   - Destroying the threads on fasteners.

7. If the DOE/Office of Inspector General has approved disposal, arrange for pick-up and disposal of the altered S/CI material on a yearly basis. Burying S/CIs may be acceptable if they do not contain hazardous material or material prohibited by federal, state, or local regulations.

4.7 Surplus/Excess Material

Responsible Personnel

1. Remove S/CI from surplus/excess material before they are released for sale or transfer of accountability.

2. Ensure surplus items received from DOE or other facilities are inspected for S/CI prior to installation.

4.8 Assessments

Quality Assurance

1. Conduct assessments of the effectiveness of the S/CI program.

   NOTE: The assessment should be performance based and designed to determine if company activities are conducted in accordance with this procedure, DOE 414.1A, DOE O 440.1A, DOE G 440.1-6, and 10 CFR 830, Subpart A.

2. Lines of inquiry will be used as appropriate during assessments in areas that interface with the S/CI process. See Attachment J.

4.9 Training

Managers and Supervisors

1. Evaluate individual training needs of assigned personnel to ensure they are proficient in S/CI identification and control procedures within their areas of responsibility.

2. All personnel involved in the following specific areas will receive S/CI process and hands-on training, whether it be formal, continuing training, or required reading. The formal training course that is available is Module #1, Course 170720, "Suspect/Counterfeit Items."

   - Quality Assurance/technicians
   - Engineers (design, systems, etc.) who procure materials/equipment
   - Maintenance personnel (electricians, pipefitters, millwrights, instrument technicians)
   - Warehouse personnel who handle and process materials/equipment
   - Tool Crib attendants.

34005-RC-0502

5.0 DEFINITIONS

Counterfeit part. A part made or altered so as to imitate or resemble an "approved part" without authority or right, and with the intent to mislead or defraud by passing the imitation as original or genuine. (Source: U. S. Department of Transportation Federal Aviation Administration Advisory Circular 21-29B, Detecting and Reporting Suspected Unapproved Parts).

Fastener (regardless of the safety classification). (Source: Fastener Quality Act, Public Law 101-592 as amended by Public Law 104-113).

- A screw, nut, bolt, or stud with internal or external threads or a load-indicating washer with a nominal diameter of 5 millimeters or greater in the case of such items described in metric terms; or 1/4 inch or greater in the case of such items in terms of the English system of measurement which contains any quantity of metal and held out as meeting a standard or specification which requires through-hardening; or

- A screw, nut, bolt, or stud having internal or external threads which bears a grade identification marking required by a standard or specification; or

- A washer to the extent that it is subject to a standard or specification applicable to a screw, nut, bolt, or studs described above, except that such term does not include any screw, nut, bolt, or stud that is produced and marked as American Society for Testing and Materials (ASTM) A 307 Grade A or produced in accordance with ASTM F432.

Grade identification. Any symbol appearing on a fastener purporting to indicate that the fastener's base material, strength properties, or performance capabilities conform to a specific standard of a consensus standards organization or government agency.

Graded classifications. System used to determine minimum requirements for structures, systems and components (e.g., design, operation, procurement, and maintenance requirements). The graded classifications in order of precedence are safety class, safety significant, and enhanced quality general services.

High strength graded fastener. Fasteners having a minimum tensile strength of 75 ksi, including those produced and procured in accordance with the Society of Automotive Engineers Standard J429, Grades 5, 5.2, 8, and 8.2; ASTM Standard A325, Types 1, 2, and 3; ASTM A490, ASTM A354, ASTM A449 (I&II), and some ASTM F468.

Item. An all-inclusive term used in place of any of the following: appurtenance, assembly, component, equipment, material, module, part, structure, subassembly, subsystem, system, or unit. (Source: ASME-NQA-1-1989, Quality Assurance Requirements for Nuclear Facilities).

An all-inclusive term used in place of any of the following: appurtenance, facility, sample, assembly, component, equipment, material, module, part, structure, subassembly, subsystem, system, unit, documented concept, or data. (Source: DOE G 440.1-6, Implementation Guide for use with Suspect/Counterfeit Items Requirements of DOE O 440.1, Worker Protection Management; 10 CFR 830.120; and DOE 5700.6C, Quality Assurance).

Substantial safety hazard. A loss of safety function to the extent that there is a major reduction in the degree of protection to the public or employee health and safety. (Source: U.S. Department of Energy (DOE) M 232.1-1A, "Occurrence Reporting and Processing of Operations Information").

Suspect/counterfeit items. A suspect item is one in which there is an indication by visual inspection, testing, or other information that it may not conform to established Government or industry-accepted specifications or national consensus standards. A counterfeit item is a suspect item that is a copy or substitute without legal right or authority to do so or one whose material, performance, or characteristics are knowingly misrepresented by the vendor, supplier, distributor, or manufacturer. An item that does not conform to established requirements is not normally considered S/CI if the nonconformity results from one or more of the following conditions, which should be controlled by site procedures as nonconforming items:

- Defects resulting from inadequate design or production quality control
- Damage during shipping, handling, or storage
- Improper installation
- Deterioration during service
- Degradation during removal
- Failure resulting from aging or misapplication, or
- Other controllable causes.

(Source: DOE G 440.1-6, Implementation Guide for use with Suspect/Counterfeit Items Requirements of DOE O 440.1, "Worker Protection Management;" 10 CFR 830.120; and DOE 700.6C, "Quality Assurance").

6.0 RECORDS

No records are generated during the performance of this procedure.

7.0 SOURCES

7.1 Requirements

1. DOE-O-232.1A Part 4.f. (1), "Occurrence Reporting and Processing of Operations Information." (S/RID)

2. DOE O 414.1A, "Quality Assurance."

3. 10 CFR 830, Subpart A, "Quality Assurance Requirements."

4. DOE O 440.1A, "Worker Protection Management for DOE Federal and Contractor Employees."

7.2 References

1. HNF-SD-MP-SRID-001, "Standards/Requirements Identification Document for the Tank Farm Contractor."

2. DOE G 440.1-6, "Implementation Guide for use with Suspect/Counterfeit Items Requirements of DOE O 440.1, Worker Protection Management; 10CFR830.120; and DOE5700.6C, Quality Assurance."

3. NRC Information Notice 89-70: "Possible Indications of Misrepresented Vendor Products."

4. NRC Information Notice 89-70, Supplement 1: "Possible Indications of Misrepresented Vendor Products."

5. TFC-BSM-CP_CPR-C-01, "Purchasing Card (P-Card)."

6. TFC-BSM-CP_CPR-C-03, "Buyer's Technical Representative Process."

7. TFC-BSM-CP_CPR-C-06, "Procurement of Items (Materials)."

8. TFC-BSM-CP_CPR-C-09, "Supply Chain Process."

9. TFC-BSM-CP_CPR-C-11, "Acquisition Planning."

10. TFC-BSM-FPM_MC-C-01, "Material Receipt, Storage, Issuance, Return, and Excess Control."

11. TFC-ESHQ-Q_ADM-C-02, "Nonconforming Item Reporting and Control."

12. TFC-OPS-OPER-C-24, "Occurrence Reporting and Processing of Operations Information."

13. TFC-PLN-03, "Engineering Program Management Plan."

Figure 1. Management of Suspect/Counterfeit Items.

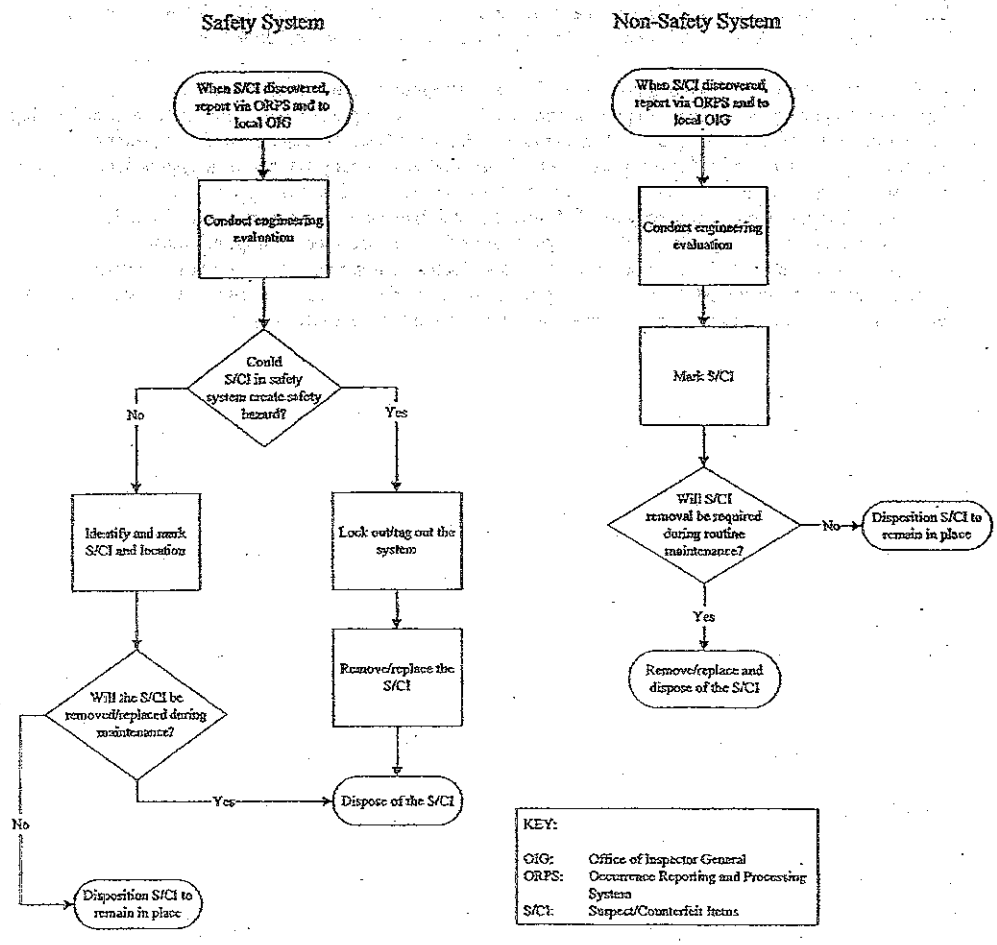

34005-RC-0502

ATTACHMENT A - SUSPECT COMPONENTS LIST

This list was extracted from the U.S. Department of Energy Quarterly Reports on the "Analysis and Trending of Suspect/Counterfeit Items at Department of Energy Facilities," July 1997.

NOTE: It is not necessarily a negative reflection on a supplier or manufacturer if S/CIs are reported regarding its particular product. Reputable manufacturers and suppliers have a vital interest in preventing the manufacture or distribution of S/CI associated with themselves. It may be that the supplier or manufacturer was victimized and is pursuing S/CI associated with its products in an aggressive, prudent, and professional manner in order to get such items off the market. Therefore, each particular case regarding the manufacture or supply of S/CI must be examined on its own merit without making premature conclusions regarding fault or culpability of the manufacturer or supplier whose name is associated with the S/CI. In short, what follows is a "suspect components list" and not a "suspect manufacturer or supplier list." The manufacturer or supplier identified in the following table should not be considered to have engaged in any wrongdoing without additional information.

ATTACHMENT A - SUSPECT COMPONENTS LIST (cont.)

Component	Manufacturer/Type	Description	Supplier	References
Circuit Breakers	General Electric (Component Examples) • AKP-2-25 • EC Trip Types, E-C-1, E-C-2A. • AK All Types	Metal clad, low voltage, DC	Satin America & Circuit Breaker Systems Inc.	NRC I.N. 89-45, Supplements and Attachments SENS Report ID #6 5/23/89
Circuit Breakers	General Electric (Component Examples) • AK-3A-25 • KHL-36 125 • THEF 136050 • AK-2-75-3 • AK-2 • AK-1-50 • AK-1-75 • B • TDQ • TCVVFS • TFJ • TEB122015-WL • TEB132090-WL • TE111015 • TED134060-WL • TEB124050-WL • THED136100 WL • TED126050 • THED136060 WL • THGB2120 • TEF134015 • THEF136M1100 • TED 134030-WL • AK2A25 • THED-136100-WL • THED-136050-WL • THED-136045-WL • THFK-236070-WL • TE-122070 • THED-136150-WL • THED-13600-WL • TED-113020 • TEC-360S0 • THED-124015-WL	1, 2, & 3 pole, various amperages	Bud Ferguson's Industrial Control & Supply, Inc., General Circuit Breaker & Electrical Supply HLC Electric Supply NSSS, Inc. California Breakers, Inc. Rosen Electric Equipment PENCON International (DBA) General Magnetics/ Electric Wholesale Lakeland Engineering Equipment Co. ANTI THEFT Systems, Inc. (DBA) ATS Circuit Breakers and AC Circuit Breaker Electrical Supply California Breakers Voyter Electric Co.	NRC I.N. 88-46 Supplements and Attachments NRC I.N. 90-46 Office of Nuclear Safety 93-5 (#11)

34005-RC-0502

ATTACHMENT A - SUSPECT COMPONENTS LIST (cont.)

Component	Manufacturer/Type	Description	Supplier	References
Circuit Breakers	Westinghouse (Component Examples) • TF136090 • TF361050WL • TED1130020			
	• Not Provided	Commercial Grade	Westinghouse Electric Supply Co. (WESCO)	NRC I.N. 91-48
	• DB-25 & DS-416	Low Voltage	Satin America & Circuit Breaker Systems, Inc.	NRC I.N. 89-45 & Supplement #2
	• FSN-5925-628-0641 • DB-25 • DB-50 • HKB3150T • FB3020 • FB3070 • FB3050 • EHB3025 • LBB3125 • HKA31250 • JA3200 • EHB2100 • 225N	Trip units; Navy Trip units; 1, 2, & 3 pole various amp. ratings	General Circuit Breaker & Electrical Supply HLC Electrical Supply California Breakers, Inc. PENCON International (DBA) General Magnetics/Electric Wholesale	NRC I.N. 88-46, Supplements and Attachments Office Of Nuclear Safety 93-9
	• EB 1020 • HDEA 2030 • MCP331100R • MCP431550CR • BAB3060H • 656D14 8G03 • FA-2100 • EH-2050 • HFB-3050 • HFD(B)-3020 • MA3600 • F2020 • EH2100 • EB3050 • HMC3800F • EA2090 • FA3125 • HMCP 150		ANTI THEFT Systems, Inc. (DBA) ATS Circuit Breakers and AC Circuit Breaker - Electrical Supply Molded Case Circuit Breakers NSSS, Inc. Spectrum, Tech. Rosen Electric Luckow Circuit Breaker	

34005-RC-0502

ATTACHMENT A - SUSPECT COMPONENTS LIST (cont.)

Component	Manufacturer/Type	Description	Supplier	References
Circuit Breakers	Westinghouse (cont.) (Component Examples) • HFD • EH2070 • FA2050 • JA2225 • JL3B125 • JL3B070 • JL3B150 • JL3B200 • JL3B090 • JL3B100 • HLM3800T • F3100N • MA3500 • EH2015 • FA3035 • FA2100 • HLA2125OTM • EH2070 • JB3100 • EB2030 • 8MC300 • CAH3200 • EHB3040 • JL3-B150 • JL3-B200 • JL3-B090 • JL3-B1000 • HFA, HFB, FA • JL3-(B)8070 • JL3-B125 • EH-2020 • FA-3035 • EH-2050 • FA-2100 • FA-2050 • HFB-3050 • JA-2225 • HLM3800T • F3100N • MA3500 • EH2015 • LA3200WL • HLA3200T • 2602D58U9	Shunt Trips Aux. Contacts 2 & 3 pole circuit breakers of various amperages	General Circuit Breaker & Electrical Supply HLC Electrical Supply PENCON International (DBA) General Magnetics/ Electric Wholesale ANTI THEFT Systems, Inc. (DBA) ATS Circuit Breakers and AC Circuit Breaker - Electrical Supply Molded Case Circuit Breakers Co. (MCCB)	NRC I.N. 88-46 Supplements and Attachments

34005-RC-0502

ATTACHMENT A - SUSPECT COMPONENTS LIST (cont.)

Component	Manufacturer/Type	Description	Supplier	References
Circuit Breakers	Westinghouse (cont.) (Component Examples)			
	• HLB3200T • 262156G19 • 1A & 1B • HL300T • HLA2400TM • HMA3600T • HMA3700T • HKA3225T • HNB2700T	225 amp, 3 pole 3 pole, 20 amp 3 pole, 30 amp 1 pole, 20 & 30 amp 2 pole, 20 & 30 amp 3 pole, 60 amp	Not Provided	NRC LN. 88-46 Supp. & Attach.
	• MDL#KAF • QNB3020 • QNB3030 • BA			SENS ID #10 3-17-89 SENS ID #11 3-3-89
	• BA • BA • E3060 • F3020	3 pole, 20 amp	Not Provided	SENS Report ID #12 10-19-88 NRC LN. 88-46
Circuit Breakers	ITE (Component Examples)			
	• Model - E43B015	3-phase 480 volt	Cal. Breakers/Elect. Wholesale Supply Co.	SENS Report ID #8, 5-5-89
	• EQ-B • EE-3B030	1 pole, 20 amp 3 pole, 30 amp	Not Provided	SENS ID #10 3-17-89 SENS ID #11 3-3-89
	• EF3B070 • EF3H050 • EF3B125 • EF3B040 • E42B020 • QJ2B200 • JL3B400	2 & 3 pole various amperages	General Circuit Breaker & Electrical Supply HLC Electrical Supply	NRC LN. 88-46, Supplements and Attachments

ATTACHMENT A - SUSPECT COMPONENTS LIST (cont.)

Component	Manufacturer/Type	Description	Supplier	References
Circuit Breakers	ITE (cont.) (Component Examples) • HE9B040 • EE3B050 • BQ2B030 • EE3B070 • EE2B100 • EE2B050 • EE2B030 • FI3B225 • ET • KA • EH-313015 • JL-3B070 • JL-3B150 • E43B015 • EF2-B030 • EH3B100 • QP1B020 • QJ3B200 • EF3B100 • 1193		California Breakers, Inc. PENCON International (DBA) General Magnetics/ Electric Wholesale ATS Circuit Breakers, Inc. Panel Board Specialties Rosen Electric Equipment	
Circuit Breakers	ITE, Gould & ITE Imperial Brown Boveri Elect. (BBE) ASEA Brown Boveri (Component Examples) • Type HK • 5 HK • 7.5 HK • 15 HK • 38 HK • ITE 62-6	Not Provided ID-4KV Not Provided Not Provided Not Provided	Brown Boveri ASEA Brown Boveri	NRC I.N. 89-86 NRC I.N. 87-41 Office of Nuclear Safety, 92-25
Circuit Breakers	Square "D" Co. Component Examples • KHL 36125 (Any Type)	Molded Case	General Circuit Breaker & Electrical Supply HLC Electric Supply California Breakers, Inc. PENCON International (DBA) General Magnetics/Electric Wholesale	NRC I.N. 88-46 Supp. & Attach. NRCB 88-10 NRC I.N. 90-46

34005-RC-0502

ATTACHMENT A - SUSPECT COMPONENTS LIST (cont.)

Component	Manufacturer/Type	Description	Supplier	References
Circuit Breakers	Square "D" Co. Component Examples (cont.)		ANTI THEFT Systems Inc. (DBA) ATS Circuit Breakers and AC Circuit Breaker - Electrical Supply	
	• QOB220	1 pole, 15 amp	Not Provided	SENS ID #10 3-17-89
	• QO220 • LO-3	2 & 3 pole 20 & 50 amp breakers	General Circuit Breaker & Electrical Supply	NRC I.N. 89-45 & Supplement #2
	• SBW-12 • 989316 • FAL3650-16M or • FAL36050-16M • KA36200	3 pole - 200 amp breaker 30A/600V	HLC Electric Supply California Breakers, Inc.	
	• 999330	Not Provided	PENCON International (DBA) General Magnetics/Electric Wholesale	
	Manufacturer not Provided • EHB3025	Not Provided	Stokely Enterprises Molded Case Circuit Breakers	DOE Letter 8-26-91 Reprinted NuVEP: Bulletin 7-26-91
Circuit Breakers	Fed. Pacific (Component Examples)		General Circuit Breaker & Electrical Supply	
	• NEF431020R • NE111020 • NE	3 pole, 20 amp 1 pole, 20 amp 1 pole, 15 amp	HLC Electric Supply California Breakers, Inc.	
			PENCON International (DBA) General Magnetics/Electric Wholesale	SENS ID. #10 3-17-89

34005-RC-0502

ATTACHMENT A - SUSPECT COMPONENTS LIST (cont.)

Component	Manufacturer/Type	Description	Supplier	References
Circuit Breakers	Fed. Pacific (Component Examples) (cont.) • NF63-1100 • NE22-4060 • NE22-4100 • NEP-433030 • 2P125	1, & 3 pole - 30, 60 & 100 amp breakers	ANTI THEFT Systems, Inc. (DBA) ATS Circuit Breakers and AC Circuit Breaker - Electrical Supply General Circuit Breaker & Electrical Supply HLC Electric Supply California Breakers, Inc.	SENS ID. #11 3-3-89 NRC LN. 88-46, Supp. & Attach.
	Jefferson (Component-Examples)	Not Provided	PENCON International (DBA) General Magnetics/electric Wholesale ANTI THEFT Systems, Inc. (DBA) ATS Circuit Breakers and AC Circuit Breaker - Electrical Supply Mid West Co.	NRC LN. 88-46, Supp. & Attach.
Circuit Breakers	Superior (Component Examples) • 246U-3	Not Provided	General Circuit Breaker & Electrical Supply Rosen Electric HLC Electric Supply California Breakers, Inc. PENCON International (DBA) General Magnetics/Electric Wholesale ANTI THEFT Systems, Inc. (DBA) ATS Circuit Breakers and AC Circuit Breaker - Electrical Supply	NRC LN. 88-46 Supp.& Attach.

34005-RC-0502

ATTACHMENT A - SUSPECT COMPONENTS LIST (cont.)

Component	Manufacturer/Type	Description	Supplier	References
Circuit Breakers	Manufacturer Not Provided (Component Examples) 50DHP250	 2 pole - 50 amp	General Circuit Breaker & Electrical Supply HLC Electric Supply California Breakers, Inc. PENCON International (DBA) ATS Circuit Breakers and AC Circuit Breaker - Electrical Supply	NRC I.N. 88-46, Supp. & Attach.
Circuit Breakers Heaters	Cutler Hammer (Component Examples) • 10177H13 • 10177H21 • 10177H32 • 10177H036 • 10177H1049	 Not Provided	AAKER General Circuit Breaker & Electrical Supply HLC Electrical Supply California Breakers, Inc. PENCON International (DBA) General Magnetics/Electric Wholesale ANTI THEFT Systems, Inc. (DBA) ATS Circuit Breakers and AC Circuit Breaker - Electrical Supply	NRC I.N. 88-46, Supp. & Attach.

34005-RC-0502

ATTACHMENT A - SUSPECT COMPONENTS LIST (cont.)

Component	Manufacturer/Type	Description	Supplier	References
Switches	(Component Examples) Crouse Hinds #EDSC2129 Sq. D Type G. Class 9012, 9025, 9016	Tumbler, ft. op	Platt Electric Supply Co. Gen. Motors, Electro-Motive Design	SBNS ID #16 1-27-92 Office of Nuclear Safety 93-24 & 93-27
Transmitters	Rosemount	(Component Examples) • Model 1151 GP • Model 1151 DP	Venetech	E.L. Wilmot letter dated 8-1-91 H. Richardson letter HR-81-91 dated 8-15-91
Motors	Siemen & Allis (Component Examples) INP 143 T 215 T	10 H.P.	General Circuit Breaker & Electrical Supply HLC Electric Supply California Breakers, Inc. PENCON International (DBA) General Magnetics/Electric Wholesale ANTI THEFT Systems, Inc. (DBA) ATS Circuit Breakers and AC Circuit Breaker - Electrical Supply Rosen Electric Equipment	NRC LN. 88-46, Supplements and Attachments

34005-RC-0502

ATTACHMENT A - SUSPECT COMPONENTS LIST (cont.)

Component	Manufacturer/Type	Description	Supplier	References
Relays	Potter & Brumfield (Component Examples) MDR-138, 173-1 134-1, 142-1	Not-latching rotary	Stokely Enterprises Spectronics, Inc. Nutherm International The Martin Co.	NRC I.N. 90-57 & Attach.
	Teledyne	All qualified to MIL-R-28776 and MIL-R-39016	Not Provided	DOE-ID Wilmot letter, 7-16-91
	G.E. & Exide (Component Examples) • 12HGA-11852 • NX 400	Overload & Aux.	General Circuit Breaker & Electrical Supply HLC Electric Supply California Breakers, Inc. PENCON International (DBA) General Magnetics/Electric Wholesale ANTI THEFT Systems, Inc. (DBA) ATS Circuit Breakers and AC Circuit Breaker - Electrical Supply	NRC I.N. 88-46, Supp. & Attach.
	Manufacturer not provided • FSC-5945	Not Provided	Stokely Enterprises	DOE Letter 8-26-91 Reprinted NuVEP: Bulletin 7-26-91
	Amerace (or Agastat) (Component Examples) Models: E7024 E7022	Electro Pneumatic Timing Relays	Amerace Control Components Supply	SENS ID #1 11-1-91 NRC I.N. 92-24
	A through L Series Model 7032	PRB		

34005-RC-0502

ATTACHMENT A - SUSPECT COMPONENTS LIST (cont.)

Component	Manufacturer/Type	Description	Supplier	References
Fuses	Bussman Co. (Component Examples) REN 15 & NOS-30	15A-250V & 30A-600V	General Circuit Breaker & Electrical Supply HLC Electric Supply California Breakers, Inc. PENCON International (DBA) General Magnetics/Electric Wholesale ANTI THEFT Systems, Inc. (DBA) ATS Circuit Breakers and AC Circuit Breaker - Electrical Supply	NRC I.N. 88-46, Supp. & Attach.
	Class 1E	All Supplied by PMS	Preventive Maintenance Systems (PMS)	NRC I.N. 88-19
Controllers	Manufacturer Not Listed (Component Examples)	Motor Controllers	Stokely Distributors & Stokely Enterprises, Inc.	DOE letter 8-26-91 & NUVEP Bulletin 7-26-91
Starters	Westinghouse (Component Examples) 626B187G17 626B187G13	Not Provided	General Circuit Breaker & Electrical Supply HLC Electric Supply California Breakers, Inc. PENCON International (DBA) General Magnetics/Electric Wholesale ANTI THEFT Systems, Inc. (DBA) ATS Circuit Breakers and AC Circuit Breaker - Electrical Supply	NRC I.N. 88-45 Supp. & Attach.
Resistors	Unknown	All	Impala Electronics	NRC I.N. 91-01

34005-RC-0502

ATTACHMENT A - SUSPECT COMPONENTS LIST (cont.)

Component	Manufacturer/Type	Description	Supplier	References
Semiconductors	Solid State Devices Inc. (SSDI) SFF 9140	P-Channel MOSFET	SSDI	DOE Albuquerque Letter, 06-25-96 to DOD Inspector General
	SPD 1511-1-11	Pin Diode (SA3059)		
	2A14/18 or 2A14/52	Ion Implanted Diode		
	SSR4045CTTXV	SCHOTTKY Diodes		
	SFF9140TWX	Power Transistors		
	SPMF106ANH	Special Pack MOSFET Switch		
	SPD 5818 or IN5858JTXV	Axial Leaded SCHOTTKY Diode		
	2N797	Transistor		
	Unknown	Diode (SA 3436)		
Starter Controls	Westinghouse (Component Examples)	Not Provided	General Circuit Breaker & Electrical Supply	NRC I.N. 88-48
	• A200MICAC		HLC Electric Supply	
	• A201KICA		California Breakers, Inc.	
	• A201L2CA			
	• AN13A		PENCON International (DBA) General Magnetics/Electric Wholesale	
			ANTI THEFT Systems, Inc. (DBA) ATS Circuit Breakers and AC Circuit Breaker - Electrical Supply	

34005-RC-0502

ATTACHMENT A - SUSPECT COMPONENTS LIST (cont.)

Component	Manufacturer/Type	Description	Supplier	References
Gauge Glasses	Siemen & Allis (Component Examples) #00-737-637-118 215 T	Not Provided	Rosen Electric Co.	NRC I.N. 88-46 Supp. & Attach.
Mercury Lamps	Spectro Inc. (Component Examples) V00014	Not Provided	General Circuit Breaker & Electrical Supply HLC Electric Supply California Breakers, Inc. PENCON International (DBA) General Magnetics/Electric Wholesale ANTI THEFT Systems, Inc. (DBA) ATS Circuit Breakers and AC Circuit Breaker - Electrical Supply	NRC I.N. 88-46
Electrical Frames	Westinghouse (Component Examples) LA2600F LA3600F MA2800F	Not Provided	General Circuit Breaker & Electrical Supply HLC Electric Supply California Breakers, Inc. PENCON International (DBA) General Magnetics/Electric Wholesale ANTI THEFT Systems, Inc. (DBA) ATS Circuit Breakers and AC Circuit Breaker - Electrical Supply	NRC I.N. 88-46
Push button station	Crouse Hinds (Component Examples) #00-737-637-118	Single gang, pushbutton	Platt Electric Supply Co.	SENS Report ID #16 1-27-92

34005-RC-0502

ATTACHMENT A - SUSPECT COMPONENTS LIST (cont.)

Component	Manufacturer/Type	Description	Supplier	References
Overload Relay Thermal Unit	Square D (Component Examples) B19.5, B22	Not Provided	Not Provided	NRC I.N. 88-46
Piping, Fittings Flanges, and Components	Tube-line Corp. Ray Miller, Inc.	Subassemblies, fittings, flanges, & other components (Carbon and Stainless Steel components)	Tube-line Ray Miller, Inc.	NRC IEB 83-06 NRC I.N. 89-18 NRC IEB 83-07 NRC I.N. 83-01
Piping, Fittings, Flanges, and Components	Piping Supplies, Inc. & West Jersey Mfg. & Chews Landing Metal Mfg.	Carbon and Stainless Steel Fittings and Flanges	Piping Supplies, Inc. & West Jersey Mfg. & Chews Landing Metal Mfg.	NRC Bulletin 88-05 & Supplements
Valves	VOGT	Full port design 2-inch Model SW-13111 & 1023	CMA International IMA Valve Refurbisher	NRC I.N. 88-48 & Supplements
	Crane	4"-1500psi, pressure sealed	Southern Cal. Valve Maintenance co., Amesse Welding Service & CMA Int.	NRC I.N. 91-09
	ITT Grinnell Valve Co., Inc	Diaphragm valves	ITT Grinnell Valve Co. Inc. Div. of Diaflo & ITT Engineered Valves	NRC Comp. Bulletin 87-02
	Crane, Pacific, Powell, Walworth & Lunkenheimer	Gate Valves	Coffeyville Valve Inc.	NRC I.N. 92-56
	Pacific	8" & 3" Globe Valve	CMA & IMA Valve Refurbisher	NRC I.N. 88-48, Supp. & Attach.
	Crane Chapman	24" Check Valve	CMA & IMA Valve Refurbisher	NRC I.N. 88-48, Supp. & Attach.
	Pacific	Check Valve	CMA & IMA Valve Refurbisher	NRC I.N. 88-48, Supp. & Attach.

ATTACHMENT A - SUSPECT COMPONENTS LIST (cont.)

Component	Manufacturer/Type	Description	Supplier	References
Valves	Kerotest	8" Valve	CMA & IMA Valve Refurbisher	NRC I.N. 88-48 Supp. & Attach.
	Pacific	4" Gate Valve	CMA & IMA Valve Refurbisher	NRC I.N. 88-48 Supp. & Attach.
	Lukenheimer	6" Model 1542 20" Model 3013	CMA & IMA Valve Refurbisher	NRC I.N. 88-48 Supp. & Attach.
	Crane	All	CMA & IMA Valve Refurbisher	NRC I.N. 88-48 Supp. & Attach.
Flanges	China Ding Zinang Nan Xi Li Flange Co. Shou Gang Mach. Eng. Co.	Flanges, ASTM A105, ASME SA105	Billiongold Co. LTD. Tain Gong Co. Samxi Province Overseas Trading Corp	NRC I.N. 92-68 and Attachments Office of Nuclear Safety 92-25, 93-23, and 92-35 National Board of Boiler and Pressure Vessel Inspectors (NBBI) Bulletin: Special Report, 1992, Volume 48, Number 2, The Chinese Flange Investigation
Valve Replacement Parts	Masoneilian-Dresser Industries	Plug stem, stem to plug anti-rotation pin, seat ring, valve plugs, bushings, cages & packing box components	Cor-Val, Control Valve Specialists, H.H. Barnum & M.D. Norwood, Sample Webtrol Controls, Inc.	NRC I.N. 88-97 Supp. & Attach.
Pumps & Replacement Parts	Hayward Tyler Pump Co.	HTPC ASME Nuclear Code	Hayward Tyler Pump Co.	IEB 83-05 & Attachments
Channel Members	Unistrut Corporation	Continuously slotted channels, structural framing members, fasteners, nuts, fittings, pipe clamps	Unistrut Corporation	NRC I.N. 91-25
Fire Barriers	Thermal Science Inc.	Thermo-Log 330	None Listed	ES&Q Update #8 NRC I.N. 92-55
Valve Actuator	Limitorque	Eyebolts on housing cover	None Listed	Office of Nuclear Safety 93-25 NRC I.N. 93-37

ATTACHMENT A - SUSPECT COMPONENTS LIST (cont.)

Component	Manufacturer/Type	Description	Supplier	References
Steel	Alloy & Carbon Steel Co. Inc., Atlantic Steel Co., Levingston Steel Co., & Copperweld Steel co.	Plate Angle Flat Bar Bar	Meredith Corporation Pressure Vessel Nuclear Alloy & Carbon Steel Co., Inc.	NRC LN. 89-56, Attachments and Supplements
Fasteners (Bolts, Screws, Nuts, and Washers)	(parentheses designated headmark) Asahi (A) Daiichi (D) Daiei (E) Fastener Co. of Japan (FM) Hinomoto Metal (H) Jin Her (J) Kyowa (K) Kosaka Kogyo (KS) Kyoei Minamida Seiybo (M) Mnato Kogyo (MS) Nippon (NF) Takai (RT) Tsukimori (S) Unytte (UNY) Yamadai (Y) Ivaco, Infasco (hollow triangled)	• Those with suppliers or manufacturers • Those that are improperly marked • Those of foreign manufacture that do not meet Public Law 101-592. Fastener Quality Act	Note: Listed suppliers may also be manufacturers Lawrence Engineering & Supply Co. Metal Building Bolts Nichimin Corporation UNICO Ace Corporation E. K. Fasteners, Inc. H. Y. Port Fasteners Co. Kobayashi Metals, LTD. Takai Screw Mfg. Co. LTD. Yamaguchi Sesakusho Co. LTD. Highland Bolt & Nut Porteous Fastener Co. Northwest Fasteners Ziegler Bolts & Parts Co. Edgewater Fasteners, Inc. Reynolds Fasteners A & G Engineering	Commercial Carrier Journal Articles for: 6/88, 1/90, 2/90, 3/90, 4/90, 6/90, 7/90, 12/90 INEL Suspect Headmark List SENS Report #5 2/6/91 SENS Report #13 2/6/91 HR 3000, U.S. House of Representatives, July 1988 J. A. Jones, Ltr, 9/23/92 Memo from L. Kubicek, 3/23/91 Memo from D. Sanow, 3/8/91 "Fastener Technology International," Feb., April, and June 1993 Rep. J. Dingell Ltr to Comm. Dept. & NRC June 18, 1993 Office of Nuclear Safety 93-26, 93-22, 93-11 DOE Quality Alert, Bulletin, Issue No. 92-4, August 1992 FDH Hanford Suspect Headmark List

34005-RC-0502

ATTACHMENT A - SUSPECT COMPONENTS LIST (cont.)

Component	Manufacturer/Type	Description	Supplier	References
Fasteners (Bolts, Screws, Nuts, and Washers)	NUCOR	1-1/4" x 2" Zinc Chromate plated surface Hexhead cap screws	Cordova Bolt, Inc.	SENS ID #13 11-6/91
	Any	Any	Aircom Barnett Bolt Works Bolts & Nuts, Inc. Glasser & Assoc. Knoxville Bolt & Screw Metal Fastener Supply Phoell Mfg. Co. Service Supply Co. Southeastern Bolt & Screw Sure Loc Victory Bolt	NRC Compliance Bulletin 87-02 NRC I.N. 89-59

34005-RC-0502

ATTACHMENT B - CLASSIFICATION OF POTENTIALLY SUSPECT/COUNTERFEIT ITEMS

A. ELECTRICAL ITEMS

- Molded Case Circuit Breakers
- Motor Control Centers
  - Complete Units
  - Components
  - Starters
  - Starting coils
  - Contactors
  - Overload relays
  - Starter control relays
  - Overload heaters
- Protective/control relays
- DC power supplies/chargers
- AC inverters
- Current/potential transformers
- Exciters/regulators
- Bus transfers/auto bus transfers
- Motor generator sets
- Generators
- Rewindable motors
- Printed circuit boards
- Bulk commodity items
  - Fuses
  - Splices
  - Electrical connectors
- Indicators/controllers
- Panel lights/switches
- Transmitters/instrument switches
- Isolation devices.

The following items are excluded unless required by the applicable program/project: 600V or less: motors; outlets, switches, and plugs; boxes, conduit (i.e., bodies and covers, nipples, fittings, EMT, flex, liquid tight, rigid); wire; miscellaneous wire connections #10 and below; fixtures; lights.

B. MECHANICAL ITEMS

- Welding materials
  - Rod
  - Wire
  - Flux
- Structural members (pipe supports)
- Channel members

ATTACHMENT B - CLASSIFICATION OF POTENTIALLY SUSPECT/COUNTERFEIT ITEMS (cont.)

- Sheet
- Plate
- Bars
- Round stock
- Other raw material which requires an ASTM or national standard
- All lifting/rigging gear (wire rope shall be made in the United States by a member of the Wire Rope Technical Board (WRTB) or the Associated Wire Rope Fabricators (AWRF) (except stainless steel, and unless recommended otherwise by a crane or hoist manufacturer); stainless steel wire rope shall be made in the United States and shall be 302 or 304 grade stainless steel unless otherwise recommended by a crane or hoist manufacturer)
- Ratchet tie-downs/strapping devices and come-a-longs, with fasteners.

The following materials are excluded unless required by the applicable program/project: ASTM-A36, brass, copper, sheet metal 7 GA or less, and aluminum.

C. PIPING - which requires an ASTM or ASME standard
- Fittings
- Flanges
- Valves
- Pipe
- Components.

The following materials are excluded unless required by the applicable program/project: ASTM-A-53, Swagelock; cast iron, galvanized, copper, bronze, and brass; PVC; and gaskets.

D. FASTENERS - All fasteners 1/4" and above in diameter
- Bolts
- Studs
- Cap screws
- High-strength washers
- Nuts
- Anchors.

NOTE: Attachment I identifies headmarkings for stainless steel and carbon steel high strength fasteners that are considered counterfeit. Fasteners exhibiting these headmarks are counterfeit and no further testing is required.

The following items are excluded, unless required by the applicable program/project: sheetmetal screws, wood screws, stove bolts, pan heads, machine screws, lag bolts, threaded rod, rivets, and carriage bolts.

ATTACHMENT C - SUSPECT/COUNTERFEIT ITEMS INFORMATION SOURCE LIST

A wide variety of industry and Government sources publish information relative to suspect/counterfeit products. The following sources provide information which is available on a continuing basis:

Industrial Fasteners Institute (IFI)

The following information is available from IFI via subscription:

- "Fastener Application Advisory" (Published Monthly)
- "North American Manufacturers Identification Markings for Fasteners"
- Fastener-related video cassettes.

The National Board of Pressure Vessel Inspectors (NBBI)

The NBBI publishes "National Board Bulletins" to alert manufacturers and users of misrepresented products as they are discovered.

National Highway Traffic Safety Administration (NHTSA)

The NHTSA's Office of Defects Investigation issued a "Suspect Bolt List" in late 1990 identifying numerous fasteners, which they determined to be misrepresented.

Trade Journals and Magazines

There are numerous trade-oriented magazines which have carried articles identifying incidents of failure of substandard parts in industry applications which have caused personal injury and death, as well as serious property damage.

Newspaper and Television Reports

Another good source of information are news reports, which provide current accounts of problems encountered as a result of misrepresented products.

U.S. Nuclear Regulatory Commission (NRC)

The NRC issues bulletins, notices, and regulatory guidance on a continuing basis to alert nuclear power utilities of potential intrusion of misrepresented products into the operations environment of operating nuclear power plants.

U.S. Department of Defense (DOD) and U.S. Department of Commerce publications are also monitored by the DOE to assure that the deficiencies identified do not contaminate DOE facilities.

ATTACHMENT C - SUSPECT/COUNTERFEIT ITEMS INFORMATION SOURCE LIST (cont.)

Government Industry Data Exchange Program (GIDEP)

The mission of this program, established by the Office of Management and Budget, is to support government systems readiness, logistics effectiveness, productivity, and cost reduction through timely retrieval, storage, and distribution of data among government and industry organizations.

U.S. Department of Energy

The following documents are issued by the DOE to provide information and guidance relative to the suspect/counterfeit parts issue:

- DOE Orders
- Letters of Direction
- Bulletins and Quality Alerts

(In addition, the DOE periodically sponsors seminars/workshops relative to the detection and control of suspect/counterfeit parts).

U.S. Customs Service

The U.S. Customs Service has published the Suspect Headmark List (Figure 1) identifying graded fasteners determined to be of indeterminate quality, which has been adopted by DOE and, ultimately, Project Hanford, as a formal guide for use when evaluating currently installed and newly procured graded fasteners to assure their fitness for use on the Hanford Site.

ATTACHMENT D - CHARACTERISTICS THAT MAY MAKE PRODUCTS VULNERABLE TO MISREPRESENTATION, FRAUDULENT PRACTICES, AND COUNTERFEITING

The following information has been extracted from the NRC Information Notice 89-70, Supplement 1, Attachment 3:

- High-turnover usage rate.
- No easy or practical way to uniquely mark the component itself.
- Critical characteristics, including environmental qualification not easily discernable in external visual inspection, or characteristics that are difficult to verify through receipt testing.
- May be widely used in non-critical and critical applications.
- Use may not result in used appearance.
- Often marketed through a supplier and dropped shipped from locations other than that of the original supplier.
- Special processes for ASME materials may be subcontracted (heat treating, testing, and inspections).
- Easily copied by secondary market suppliers.
- Viable salvage market.
- Reduced number of original equipment manufacturers.
- Obsolete or hard-to-get components.
- Components manufactured by a company that is no longer in business.
- Items with documentation from a plant where construction has been suspended, canceled, or deferred.
- Moderate or low cost.
- High potential for profit (rejected heats of material are purchased and decertified).

ATTACHMENT E - WHERE TO LOOK FOR SUSPECT/COUNTERFEIT ITEMS

The following areas should receive increased scrutiny to assure that suspect/counterfeit items are not evident:

Items in Supply

- Company supply stock
- Wagon stock
- Other sources of supply contamination.

Items in Use

- Plant facilities, components, and systems
- Equipment
- Operations and maintenance.

Items Being Procured

- "Known" critical items
- Critical equipment and assemblies
- Non-critical "known" purchases.

Operations Decisions

- Major disaster risks
- Personnel safety risks
- Program/mission risks (cost and schedule).

Cost of Implementation

- Potential consequential costs
- Management risk assessment
- Cost of focusing established controls
- Impact on schedule and program mission.

Cost of Focus on Known Suspect/Counterfeit Parts

- Uses existing procurement program
- Focuses on "known parts first"
- Reduction in major disaster potential
- Program costs low/benefits high.

ATTACHMENT F - SUSPECT/COUNTERFEIT PARTS DETECTION

It is very important to remember that just because an item is identified as being "suspect/counterfeit" it may not be appropriate to simply reject it. A review should be performed prior to formal disposition of the item to assure that it is indeed unfit for the intended application.

DETECTION METHODS

Visual Inspection

Items may be substandard or fraudulent when:

- Nameplates, labels, or tags have been altered, photocopied, painted over, are not secured well, show incomplete data, or are missing (e.g., preprinted labels normally show typed entries).
- Obvious attempts at beautification have been made, e.g., excess painting or wire brushing, evidence of hand painting (touch-up), or stainless steel is painted.
- Handmade parts are evident, gaskets are rough cut, shims and thin metal part edges show evidence of cutting or dressing by hand tools (filing, hacksaw marking, use of tin snips or nippers).
- Hand tool marks on fasteners or other assembly parts (upset metal exists on screw or bolt heads) or dissimilar parts are evident (e.g., seven or eight bolts are of the same material and one is a different material).
- Poor fit between assembled items.
- Configuration is not consistent with other items from the same supplier or varies from that indicated in supplier literature or drawings.
- Unusual box or packing of component or item.
- The supplier is not a factory-authorized distributor.
- Dimensions of the item are inconsistent with the specifications requested on the purchase order and/or those provided by the supplier at the time of shipment.
- The item or component matches the description of one that is on a suspect items list (e.g., U.S. Customs Service "Suspect Headmark List," National Board of Boiler and Pressure Vessel Inspectors (NBBI) "Special Bulletin," etc.).

ATTACHMENT F - SUSPECT/COUNTERFEIT PARTS DETECTION (cont.)

Documentation

Documents may be suspect/counterfeit when:

- The use of correction fluid or correction tape is evident. Type or pitch change is evident.
- The document is not signed or initialed when required, is excessively faded or unclear (indicating multiple, sequential copying), or data are missing.
- The name or title of the document approved cannot be determined.
- Technical data is inconsistent (e.g., chemical analysis indicates one material and physical tests indicate another).
- Certification or test results are identical between items when normal variations should be expected.
- Document traceability is not clear. The document should be traceable to the item(s).
- Technical data are not consistent with code or standard requirements (e.g., no impact test results provided when impact testing is required or CMTRS physical test data indicate no heat treatment and heat treatment is required).
- Documentation is not delivered as required on the purchase order or is in an unusual format.
- Lines on forms are bent, broken, or interrupted indicating data has been deleted or exchanged (cut and paste).
- Handwritten entries of data are on the same document where typed or preprinted data exists.
- Data on a single line located at different heights indicate the possibility of retyping.

ATTACHMENT F - SUSPECT/COUNTERFEIT PARTS DETECTION (cont.)

Fasteners

- Headmarkings are marred, missing, or appear to have been altered.
- Threads show evidence of dressing or wear (threads should be of uniform color and finish).
- Headmarkings are inconsistent with a heat lot.
- Headmarkings matching one of those identified on the U.S. Customs Service, "Suspect Headmark List" (Figure QP 3.2-1).
  - Headmarkings which depict both raised and hand-stamped markings, such as those described in WHC Quality Assurance Bulletin # 94-01, "Discrepant Dual Head Stamped Stainless Steel Bolts." This bulletin documents the results of internal inspections and independent testing of stainless steel bolts purchased to ASTM A193, Grade B8, which were found to be substandard.
  - Only manufacturers listed on the "Suspect Fastener Headmark List" (Figure QP 3.2-1) are known to produce substandard graded fasteners. If graded fasteners are discovered which exhibit headmarks matching those on the Suspect/Fastener Headmark List, they shall be considered to be defective without further testing, unless traceable manufacturer's certifications are received which provide documented evidence that the fasteners were not produced by the manufacturer listed on the Suspect Fastener Headmark List.
  - Interpretation of headmark/manufacturers listed on the "Suspect Fastener Headmark List," including newly discovered variations thereto, shall only be provided by the designated S/CI coordinator based on guidance received from the DOE.

Electrical Devices

- Connections show evidence of previous attachment (metal upset or marring).
- Connections show arcing or discoloration.
- Fasteners are loose, missing, or show metal upset.
- Molded case circuit breakers are not consistent with manufacturer-provided checklists for detecting substandard/fraudulent breakers.
- Missing or photocopied Underwriters Laboratories (UL) labels on products requiring such.

ATTACHMENT F - SUSPECT/COUNTERFEIT PARTS DETECTION (cont.)

Rotating Machinery and Valve Internal Parts

- Shows marring, tool impressions, wear marks, traces of Prussian blue or lapping compound, or other evidence of previous attempts at fit up or assembly.
- Heat discoloration is evident.
- Evidence of erosion, corrosion, wire-drawing or "dimples" (inverted cone-shaped impressions) on valve discs, seats, or pump impellers.

Valves

- Paint
  - Valve appears to be freshly painted and valve stem has paint on it
  - Wear marks on any painted surface
  - Valve stem is protected, but protection has paint on it
  - Paint does not match standard Original Equipment Manufacturer (OEM) color.
- Valve Tags
  - Tags attached with screws instead of rivets
  - Tags attached in a different location than normal
  - Tags appear to be worn or old
  - Tags with paint on them
  - Tags that look newer than the valve
  - Tags with no part numbers
  - Tags with irregular stamping.
- Hand Wheels
  - Old looking hand wheels on new looking valves
  - Hand wheels that look sand blasted or newer than the valve
  - Different types of hand wheels on valves of the same manufacturer.
- Bolts and Nuts
  - Bolts and nuts have a used appearance (excessive wrench marks on flats)
  - Improper bolt/nut material (e.g., a bronze nut on a stainless stem).

ATTACHMENT F - SUSPECT/COUNTERFEIT PARTS DETECTION (cont.)

- Valve Body
  - Ground off casting marks with other markings stamped in the area (OEM markings are nearly always raised, not stamped)
  - Signs of weld repairs
  - Incorrect dimensions
  - Freshly sand-blasted appearance, including eye bolts, grease fittings, stem, etc.
  - Evidence of previous bolt head scoring on backsides of flanges, or evidence that this area has been ground to remove such marks
  - On a stainless valve, a finish that is unusually shiny indicates bead-blasting. A finish that is unusually dull indicates sand-blasting. The finish on a new valve is in-between.

Manufacturer's Logo

- Missing.
- Logo plate looks newer than the valve.
- Logo plate shows signs of discoloration from previous use.

Other

- Foreign material inside the valve (e.g., metal shavings).
- Valve stem packing that shows all the adjustments have been run out.
- In gate valves, a gate that is off-center when checked through the open end of the valve.
- Obvious differences between valves in the same shipment.

Price

- Price is significantly less than that of the competition.

ATTACHMENT G - FASTENERS

1.0 Counterfeit/Substandard High-Strength Bolts

1.1 General Background

Counterfeit bolts have been found in military and commercial aircraft, surface ships, submarines, nuclear weapon production facilities, bridges, buildings, and the space shuttle. These bolts often do not possess the capabilities of the genuine bolts they counterfeit and can threaten the reliability of industrial and consumer products, National Security, or lives. At Congressional hearings in 1987, the Army testified that they had purchased bolts that bore the headmarks of Grade 8 high-strength bolts, but that were actually inferior Grade 8.2 bolts.

The International Fasteners Institute (IFI) reported finding substandard, mis-marked, and/or counterfeit high-strength Grade 8 bolts in the United States commercial marketplace. In 1988, IFI reported that counterfeit medium- strength Grade 5 bolts had also been found.

Foreign bolts dominate the American marketplace due to their price advantage, and the majority of suspect/counterfeit bolts are imported. Identifying, testing, and replacing these bolts has proven expensive and difficult, both mechanically and technically. Not finding and replacing these bolts, however, has proven fatal in some instances.

1.2 Headmarks

Attachment I may be removed and photocopied, as needed, for use as a poster and reference to known suspect fastener headmarks. Bolts with the headmarkings shown have a significant likelihood of being found to be inferior to standards. Generally, the cost of replacement of these bolts is less than the cost of chemical, hardness, and tensile strength testing. Note also that counterfeit bolts can be delivered with counterfeit certificates. Documentation alone is insufficient to demonstrate compliance with standards.

1.3 Consensus Standards

There are several consensus organizations that have published standards for the properties of fasteners. One of these is the Society of Automotive Engineers (SAE). The SAE grade (or alleged grade on a suspect item) of a bolt is indicated by raised or indented radial lines on the bolt's head, as shown in Attachment I. These markings are called headmarks. DOE is currently concerned with two different grades of fasteners: one has three equally spaced radial lines on the head of a bolt which indicate that it should meet the specifications for a Grade 5 bolt; the other has six equally spaced radial lines which indicate a Grade 8 bolt. Letters or symbols on the head of a bolt indicate the manufacturer.

ATTACHMENT G - FASTENERS (cont.)

Attachment I is a Suspect/Counterfeit Headmark List that was prepared by the United States Customs Service after extensive testing of many samples of bolts from around the nation. Any bolts anywhere in the DOE community that are currently in stock, in bins, or installed that are on the Customs Headmark List should be considered suspect/ counterfeit. The headmarks on this list are those of manufacturers that have often been found to have sold bolts that did not meet the indicated consensus standards. Sufficient testing has been done on the bolts on this list to presume them defective without further testing.

1.4 Precautions: Selective Testing

Some facilities (manufacturers, distributors, etc.) perform selective testing of sample bolts rather than have an independent testing laboratory run all the tests required by consensus standards. In many cases, a new counterfeit bolt has roughly the same physical strength as the graded bolt it mimics, but does not have either the chemical composition or the heat treatment specified by the consensus standards. As a result, it will stretch, exhibit metal fatigue, or corrode under less harsh service than the genuine bolt. Simple tensile strength tests cannot be used to identify substandard high-strength fasteners and should not be solely relied upon in performing acceptance test.

1.5 Using Suspect/Counterfeit Grade 5 Bolts in Grade 2 Applications

Some sites use suspect/counterfeit Grade 5 bolts in applications that only call for Grade 2 bolts. Eventually, the suspect/counterfeit Grade 5 bolts may find its way into an application that requires a genuine Grade 5 bolt and that application may fail. In some cases, cheap imported graded bolts have been purchased in place of upgraded bolts because the small price differential made the extra quality seem to be a bargain. Given the expense of removing suspect bolts from DOE facilities, the practice of using suspect bolts for any application should be discontinued.

1.6 Keep Bolts in Original Packages

All bolts purchased should be kept in the original packages, not emptied into bins. The packages should have labels or other markings that would permit them to be associated with a particular procurement action and a specific vendor. Approved supplier lists should be checked to assure that fastener suppliers on that list have been recently qualified/audited for adequacy of their quality programs.

ATTACHMENT G - FASTENERS (cont.)

2.0 Stainless Steel fasteners

2.1 Purpose

To provide follow-up information to the previous notification sent to the DOE field and contractor organizations in late 1996.

2.2 Background

In November 1993, the Industrial Fastener Institute (IFI) issued a Fastener Advisory regarding 18-8 stainless steel bolts. The advisory warned about a "bait and switch" tactic in which a distributor takes an 18-8 bolt (indicated by two radial lines 90 degrees apart), but no manufacturer's marking, and sells them as ASTM A320 Grade B8 bolts after hand-stamping B8 on to the heads.

As a result of this IFI Advisory, DOE sites conducted a search of facility stores for stainless steel fasteners with hand-stamped B8 grade marks. Hundreds of stainless steel bolts with hand-stamped B8 grade markings, along with a variety of other raised and depressed head and manufacturer's markings were identified in facility stores throughout the DOE complex.

For example, an inspection of shop stock at a Hanford Site facility revealed bolts with three different raised grade markings, 18-8, 304, and F593C, along with raised manufacturer's identifications of CK, H, HP, C, SO, CS, PMC, TH, THE, and a STAR. The majority of the remaining samples found at Hanford exhibited raised grade markings of 18-8 and 304, with a B8 grade marking and manufacturer's identification hand-stamped into the head of the bolt.

Finally, a few samples did not display any manufacturer's markings. Most of the bolts discovered were purchased with the specification to meet a national consensus standard, American Society for Testing and Materials (ASTM) A193, B8 Class 1 rather than the ASTM A320 standard discussed in the IFI warning.

The Savannah River Site also conducted a site-wide search of facility stores with similar results. A total of 159 stainless steel fasteners with hand-stamped B8 grade marks and raised or hand-stamped manufacturer's symbols were found. Fifteen stainless steel fasteners that had no manufacturer's symbol were also found.

ATTACHMENT G - FASTENERS (cont.)

2.3 Issue

The requirements of the ASTM A193 standard regarding fastener marking and certification are very similar those required by the ASTM A320 standard discussed in the IFI advisory. The ASTM A193 standard requires that grade and manufacturer's identification symbols be applied to the heads of bolts that are larger than 1/4" in diameter. The standard, however, does not specifically differentiate between raised and depressed headmarkings, but states only that "for the purposes of identification marking, the manufacturer is considered the organization that certifies the fastener was manufactured, sampled, tested, inspected in accordance with this specification." In other words, the standard allows for some of the required markings to be formed into the head of the bolt (either raised or lowered) during manufacturing, and the rest to be applied later on via hand-stamping.

Since ASTM A193 does not differentiate between raised and depressed markings, these fasteners can be counterfeited in the same way as the ASTM A320 fasteners discussed in the November 1993 IFI warning. For example, distributors can procure 18-8 stainless steel bolts that were manufactured by an anonymous party, and without conducting the necessary upgrading process or certification testing, a second party could hand-stamp B8 and a manufacturer's marking into the heads to indicate that the fasteners exhibit the mechanical and chemical properties required of ASTM A193Grade B8 Class 1.

Unless the certification documentation is specifically requested, and in most cases it is not, there is no way to determine by visual inspection whether these fasteners were properly certified and tested to meet the requirements of the ASTM standard.

ATTACHMENT H - DOE HEADMARK LIST

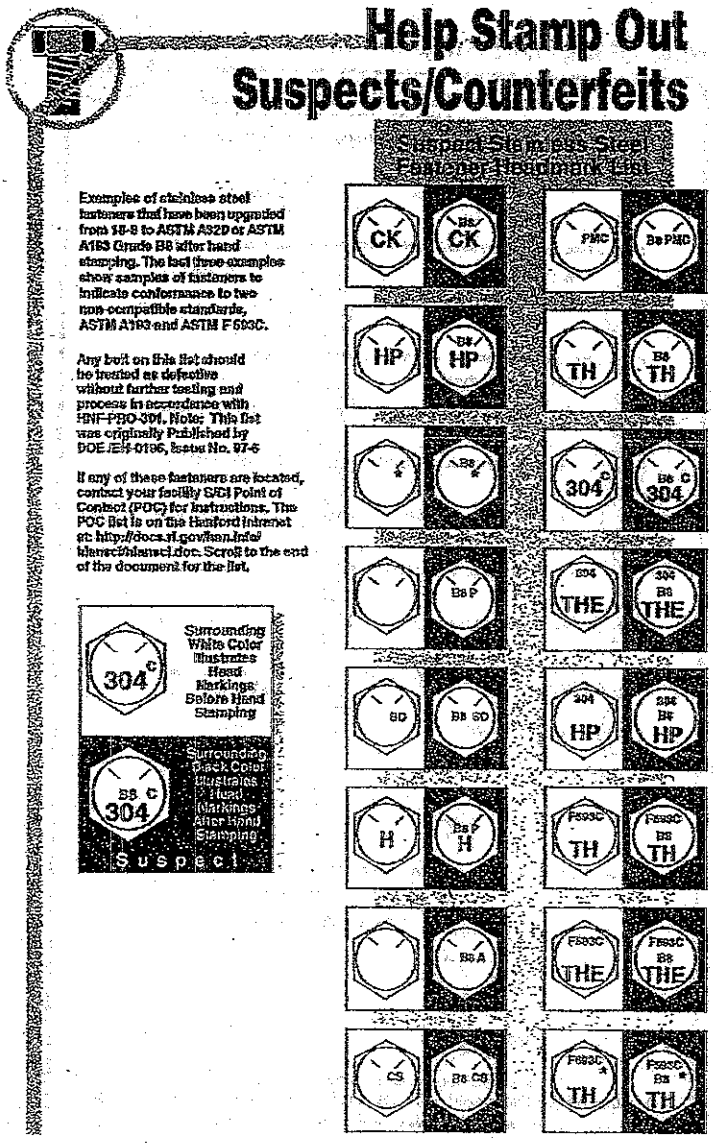

34005-RC-0502

ATTACHMENT H - DOE HEADMARK LIST (cont.)

Help Stamp Out Suspects/Counterfeits

Suspect Fastener Headmark List

All Grade 5 and Grade 8 fasteners of foreign origin which do not bear any manufacturers' headmarks:

Grade 5 Grade 8

Grade 5 fasteners with the following Manufacturers' headmarks:

Mark	Manufacturer	Mark	Manufacturer
J	Jinn Her (TW)	KS	Kosaka Kogyo (JP)

Grade 8 fasteners with the following Manufacturers' headmarks:

Mark	Manufacturer	Mark	Manufacturer
A	Asahi Mgf (JP)	KS	Kosaka Kogyo (JP)
NF	Nippon Fasteners (JP)	HT	Takai Ltd (JP)
H	Hinomoto Metal (JP)	FM	Fastener Co. of Japan (JP)
M	Minamida Sleybo (JP)	KY	Kyoei Mfg (JP)
MS	Mikato Kogyo (JP)	J	Jinn Her (TW)
Hollow Triangle	Infasco (CA, TW, JP, YU) (Greater than 1/2-inch diameter Grade 8 Hollow Triangle only)		
E	Dalei (JP)	UNY	Unylite (JP)

Grade 8.2 fasteners with the following headmarks:

Mark	Manufacturer
KS	Kosaka Kogyo (JP)

Grade A325 fasteners (Bennett Denver target only) with the following headmarks:

	Mark	Manufacturer
Type 1	A325 KS	Kosaka Kogyo (JP)
Type 2		
Type 3		

Key: CA-Canada, JP-Japan, TW-Taiwan, YU-Yugoslavia

Any bolt on this list should be treated as defective without further testing.

34005-RC-0502

ATTACHMENT I - REFURBISHED MOLDED CASE CIRCUIT BREAKERS

Investigations thus far of electrical components at DOE facilities uncovered over 700 suspect/ counterfeit molded-case circuit breakers that were previously used, refurbished and sold to DOE contractors.

I. Recognition Factors

The following factors should be recognized regarding suspect or refurbished circuit breakers:

A. The quality and safety of refurbished molded-case circuit breakers is questionable since they are not designed to be taken apart and serviced or refurbished. There are no electrical standards established by Underwriters Laboratory (UL) for the refurbishing of molded-case electrical circuit breakers, nor are there any "authorized" refurbishes of molded case circuit breakers. Therefore, "refurbished" molded-case circuit breakers should not be accepted for use in any DOE facility.

B. One source of refurbished molded-case circuit breakers is from the demolition of old buildings. Some refurbishes are junk dealers who may change the amperage labels on the circuit breakers to conform to the amperage ordered and then merely clean and shine the breakers.

This situation was brought to DOE's attention by the Nuclear Regulatory Commission (NRC), which, in turn, had been informed of the practice by the company that manufactures circuit breakers. In early 1988, a sales representative identified "refurbished" circuit breakers at Diablo Canyon Nuclear Power Plant. A subsequent investigation confirmed that circuit breakers sold to the power plant as new equipment were actually refurbished. The managers of the two firms that refurbished and sold these breakers have been convicted of fraud and have paid a substantial fine.

C. NRC published information Notice No. 88-46 dated July 8, 1988, on the investigation findings and circulated it to all applicable government agencies, including DOE. On July 20, 1988, DOE notified all field offices that refurbished circuit breakers may have been installed in critical systems. Shortly thereafter, DOE established the Suspect Equipment Notification System (SENS), a sub-module of ES&H Events and News on the Safety Performance Measurement System (SPMS). SENS has since been replaced by the Supplier Evaluation and Suspect Equipment (SESE) sub-module which includes Suspect Equipment Reports.

D. Some of DOE's older sites have circuit breakers in use that are no longer manufactured. According to the Nuclear Management and Resources Council (NUMARC), examples of such breakers are Westinghouse breakers with frames E, EA, F, and FA. If a DOE contractor has an electrical box that requires a breaker with one of these frame sizes, that contractor would not have been able to purchase it from Westinghouse for several years. If the contractor were to order a replacement breaker from an authorized Westinghouse dealer, the dealer could not get a new replacement breaker from the manufacturer. To fill the order, the dealer had to turn to the secondary or refurbished market.

ATTACHMENT I - REFURBISHED MOLDED CASE CIRCUIT BREAKERS (cont.)

Dealing with an authorized distributor does not preclude ending up with refurbished circuit breakers. Westinghouse has announced that it is considering satisfying this market by manufacturing circuit breakers that will fit in these applications.

The solution, as recommended by NUMARC, is not to focus on the credentials of the distributor but on the traceability of the circuit breaker itself. A purchaser can be assured of having a new circuit breaker only if the breaker can be traced back to the original manufacturer.

2. Indicators of Refurbished Breakers

Typically, refurbished circuit breakers sold as new equipment have one or more of the following characteristics:

- The style of breaker is no longer manufactured.
- The breakers may have come in cheap, generic-type packaging instead of in the manufacturer's original boxes.
- Refurbished circuit breakers are often bulk-packaged in plastic bags, brown paper bags, or cardboard boxes with handwritten labels. New circuit breakers are packed individually in boxes that are labeled with the manufacturer's name, which is usually in two or more colors, and are often date stamped.
- The original manufacturer's labels and/or the Underwriter's Laboratory (UL) or Factory Mutual (FM) labels may have been counterfeited or removed from the breaker. Refurbishing operations have been known to use copying machines to produce poor quality copies of the original manufacturer's and the certifying body's labels.
- Breakers may be labeled with the refurbisher's name rather than the label of a known manufacturer.
- The manufacturer's seal (often multicolored) across the two halves of the case of the breaker is broken or missing.
- Wire lugs (connectors) show evidence of tampering.
- The surface of the circuit breaker may be nicked or scratched yet have a high gloss. Refurbishers often coat breakers with clear plastic to produce a high gloss that gives the casual observer the impression that the breaker is new. The plastic case of new circuit breakers often have a dull appearance.
- Some rivets may have been removed and the case may be held together by wood screws, metal screws, or nuts and bolts.

ATTACHMENT I - REFURBISHED MOLDED CASE CIRCUIT BREAKERS (cont.)

- Contradictory amperage ratings may appear on different parts of the same refurbished breaker. On a new breaker, the amperage rating is stamped into, raised from, or machine-painted on the handle of the circuit breaker. In order to supply a breaker with a hard-to-find rating, refurbishers have been known to file down the surface of the handle to remove the original rating and hand-paint the desired amperage rating.

3. Testing

In a news release dated February 6, 1989, the National Electrical Manufacturers Association (NEMA) announced the cancellation of its Publication AB-2-1984 entitled, "Procedures for Field Inspection and Performance Verification of Molded-Case Circuit Breakers used in Commercial and Industrial Applications," and stated the following:

"These procedures were intended for use with breakers that had been originally tested and calibrated in accordance with NEMA Standards Publication AB 1 or Underwriters Laboratories Standard UL 489, and not subsequently opened, cleaned or modified...Therefore, the Standards Publication contained none of the destructive test procedures...necessary to verify the product's ability to withstand such conditions as full voltage overload or short circuit. Without such tests, even if a rebuilt breaker had passed the tests specified in AB-2, there would be no assurance that it would not fail under overload or short circuit conditions. It is NEMA's position that regardless of the results of electrical testing, refurbished electrical circuit breakers are not reliable and should not be used."

4. Precautions

Follow these precautions regarding suspect or refurbished circuit breakers.

A. Require that molded-case breakers be new and unaltered. Proof that they are new and unaltered requires the vendor to show traceability back to the original manufacturer.

B. Do not rely completely on dealing with authorized dealers for protection from purchasing refurbished molded-case circuit breakers.

C. Approve formal procedures for inspecting circuit breakers that are received and installed according to the indicators of refurbished breakers listed above.

D. Contact the original manufacturer if any indication of misrepresentation is encountered. There are many original manufacturers of molded-case circuit breakers whose products are being refurbished and sold as new. These manufacturers have the most specific information about how to ensure that their products have not been refurbished.

ATTACHMENT I - REFURBISHED MOLDED CASE CIRCUIT BREAKERS (cont.)

5. Disposition

A. Segregate and retain all circuit breakers found with indications that they may be refurbished. These will be retained as potential evidence until specifically released by the Office of Inspector General and the Office of Nuclear Safety for Price Anderson Enforcement. Circuit breakers that may be refurbished may only be disposed of when the above organizations no longer need them as evidence.

B. Report suspect electrical components to Occurrence Reporting and Processing System (ORPS). The ORPS categorization group should be identified as "Cross-Category items, Potential Concerns or issues." The description of cause section in the ORPS report should included the text "suspect counterfeit parts."

C. Witness and document the destruction of all suspect/counterfeit circuit breakers when approval is given for disposal.

34005-RC-0502

ATTACHMENT J - ASSESSMENT/SURVEILLANCE LINES OF INQUIRY

1. S/CI processes and other S/CI related processes are effective in addressing the safety-related aspects of S/CI.

2. Formal supplier qualification and re-qualification processes are established and implemented, including routine collection of evaluations of feedback on vendor performance.

3. Controls are established on a graded basis that considers the risks involved and historical experience with S/CIs.

4. Controls are implemented for segregation and separate storage of material identified as suspect/counterfeit

5. Subcontractors have established and implemented sufficient controls to preclude an introduction or use of S/CIs. These controls address construction materials, maintenance or modification equipment and components, and the use subcontractor owned or rented equipment (cranes, hoists, etc.) on site.

6. S/CI processes, requirements, and controls are fully integrated into Integrated Safety Management (ISM) and quality assurance programs and procedures, e.g, training, procurement, maintenance, and assessment) to ensure adequate linkage to S/CI elements.

7. Expectations are established for timeliness in determining whether nonconforming items are S/CI.

8. Protocols are established for clearly identifying S/CIs that are determined to be acceptable for use

9. Inspections for S/CI materials are incorporated into routine maintenance activities, and clear guidance is provided for the disposition of installed S/CI materials identified during routine inspections and maintenance activities.

10. Expectations for S/CI controls are integrated within existing processes, such as routine and special inspections for S/CIs in site procedures, and guidance is provided for performing such inspections.

11. Roles and responsibilities and interfaces for management of S/CIs are clearly assigned, including provisions for the handling of sensitive information and interfacing with the local Office of the Inspector General (IG), to ensure effective, consistent, and timely communication of S/CI information.

12. S/CI reporting requirements are effectively integrated into the site contractors' processes for disposition of non-conforming items, such as NCR processes, as required by appropriate DOE directives.

13. Lessons learned processes are evaluated to determine whether all available and relevant information resources, such as the Government Industry Data Exchange Program (GIDEP), are being utilized for screening S/CI and other relevant information for potential applicability to site activities.

ATTACHMENT J – ASSESSMENT/SURVEILLENCE LINES OF INQUIRY (cont.)

14. Lessons learned processes are evaluated to ensure that significant requirements and performance expectations have been established for the documentation of applicability reviews, needed actions, and actions taken for lessons learned that require line management attention and action.

15. Lessons learned requiring line management actions are integrated with the site's corrective action management processes to ensure formal tracking, feedback, and closure of actions taken.

16. Corrective actions and management procedures include formal linkage to S/CI reporting requirements for the site office, Occurrence Reporting System (ORPS), contractor General Counsel, and the IG.

17. Site mechanisms, such as a controlled product list, are established and used to maintain current and accurate information on S/CIs. Provisions are available for making this list readily available to site personnel who have S/CI responsibilities for procurement, inspection, and other areas associated with the implementation of S/CI controls.

18. S/CI training programs include the identification of positions and associated personnel required to receive training, the processes for designating those personnel who must receive initial and refresher training, and the required frequencies for refresher training.

19. All personnel involved in design, system engineering, procurement, inspection, maintenance, and other functions involving potential S/CI materials receive S/CI process and hands-on training.

20. Training programs place special emphasis on ensuring that system engineers involved in the design, procurement, and inspection of materials and components with the potential for S/CI receive such training.

21. Subcontractors involved in the procurement or handling of potential S/CI materials and components receive initial and refresher training and are knowledgeable of site S/CI processes, procedures, requirements, and controls.

22. S/CI training addresses site-specific processes and procedures for identifying, dispositioning, and reporting S/CIs, including reporting to the IG.

23. S/CI processes are subject to regular self-assessment, consistent with site self-assessment protocol.

24. Assessments are performed for S/CI processes to evaluate significant changes to the S/CI processes and to establish a baseline for implementation where appropriate. Based on that baseline review, further assessments are tailored to the maturity of the S/CI processes.

25. S/CI lines of inquiry are considered and evaluated, as appropriate, during assessments of areas that interface with S/CI processes (procurement process, NCR process, etc.).

APPENDIX B

CONCEPTUAL APPROACH TO

CONTROL PHILOSOPHY & OPERATING APPROACH FOR AWTE

(SELLER WILL DEVELOP AND PROVIDE ACTUAL)

This page intentionally left blank.

1.0 Control Philosophy

Raising and lowering the (5) ICV™ Box feed chutes will be from within the AWTE and performed manually by two (2) operators, one (1) HPT, and one (1) IHT. The AWTE will be designed to tight construction tolerances and ventilated to the off-gas or by-pass exhaust system, which will provide a negative pressure within the AWTE at all times during operation. The control room will activate off-gas exhaust system in the AWTE before operators enter, during the entire chute connection process and throughout the melt. The control room and/or the AWTE shall have instruments to monitor AWTE pressure and temperature. The AWTE and ICV™ Box off-gas system will be balanced to ensure that the negative pressure from within the box is greater than the negative pressure of the room. Airflow around the floor penetrations will flow from the room, into the box and out through the ICV box off-gas exhaust system. The AWTE shall utilize a closed-loop cooling system to keep the feed chutes below 250 °C during the ICV Box melt and the room temperatures under 80 °F, 8 hours after the electrodes are deenergized and manned access to the room is required. The control room will start the cooling system after chute connections are made and room is readied for the melt. The control room shall monitor the cooling system status throughout the melt.

2.0 Operating Approach: Connecting Material Delivery Chutes to ICV™ Box

Approach notes:

- The special tool removes and installs both floor and port covers. It is inserted into the top of the cover and rotated 45° clockwise into position. The covers rotate 20° clockwise to lock and 20° counter-clockwise to unlock.
- Feed Port environmental barrier will be used to provide a connection between the AWTE floor to the ICV™ box feed port. All environmental barriers will stay in place until the melt is completed and the disconnection operation is underway.
- Glove bags will be used to minimize contaminant migration while chute connections are being completed.
- Off-gas ventilation system for AWTE is designed to maintain a negative pressure in the room while one floor penetration is uncovered and open to the outside environment. An environmental barrier must be installed immediately after removing the AWTE floor cover to close penetration.

Empty ICV™ Box is positioned at the melt station to allow the AWTE material delivery chutes to make an aligned connection to the feed chutes of the ICV™ box.

The AWTE contains all the necessary tools, equipment, and parts necessary to complete the connection process of the material delivery chutes.

Prior to entering AWTE, the control room shall activate the AWTE off-gas ventilation system. Feedback from systems shall indicate that unit is operating. Pressure gauge in control room shall indicate that system is functioning by a decrease in pressure. Local indication will also be provided.

Ensure ICV™ melt power supply is locked out.

Confirm off-gas ventilation system is functioning

Enter the AWTE.

Ensure that room has all equipment necessary for the connection operation.

Proceed to feed chute No. 1, remove the floor cover/gasket using the special tool and place in storage location inside the AWTE. Using the same tool, remove the feed port cover/gasket and place in storage location.

Inspect the environmental barrier gasket to ensure that it's acceptable, use the integral handles to position the environmental barrier into the floor opening and rotate 20° clockwise to lock. Barrier will stop in locked position.

Adjust environmental barrier to provide positive contact to feed port by pressing the inner-sleeve of the environmental barrier down onto the feed port and tightening (4) wingscrews to lock sleeve.

Take hold of integral handles on feed chute assembly of ICV™ box, raise until chute stops and engage chute supports.

Raise inner chute to be 12" below feed chute and place friction clamp at its base to prevent it from descending back into the feed port.

Setup glove box frame and install glove bag around material delivery chute and inner chute of feed port. The glove bags may not be required around the at clean soil delivery chutes.

Remove the end cap, employing one operator to release the quick-connect clamp on the delivery chute, and the other operator to support and remove the end cap with gasket. Remove end cap in such a way as to minimize the residual waste that falls off of it, or out of the delivery chute.

Place the gasket on the feed chute for reuse in the delivery/feed chute connection. Then put the end cap in the transfer port of the glove bag and seal the port.

The operator who has just removed the cap will ensure that the feed chute gasket is acceptable for reuse. If gasket requires replacement, the contaminated gasket shall be put into the transfer port and a new gasket onto the feed chute.

Raise and align the feed chute to make a proper connection with the delivery chute. Connection may be tightened with a torque wrench after glove bag is removed. Be sure to keep upward pressure on chute while tightening to ensure chute seats properly.

Remove the glove bag and frame.

Remove chute-clamp from the feed chute

Tighten quick-connect clamp to manufacturers specifications using torque wrench and special socket.

Proceed to next material delivery chute and repeat steps above. This process shall be repeated for the remainder of the (4) delivery chute connections and the two (2) ICV Box ventilation connections.

Before leaving the AWTE, operators must make certain:

- AWTE Cooling system is functioning
- AWTE Off-gas systems are functioning and with input from the control room pressure differentials between outside, AWTE, and ICV™ box are correct.
- Glove bags have been removed.

3.0 Operating Approach: Disconnecting Material Deliver Chutes from ICV™ Box

Properly cooled ICV™ box is positioned at the melt station.

The AWTE contains all the necessary tools, equipment, and parts necessary to complete the disconnection process of the material delivery chutes.

Prior to entering AWTE, the control room shall confirm that AWTE off-gas ventilation system is functioning correctly. Feedback from systems shall indicate that unit is operating. Pressure gauge in control room shall indicate that system is functioning by a decrease in pressure.

Ensure ICV™ melt power supply is locked out.

Enter the AWTE.

Confirm off-gas ventilation system is functioning using pressure gauge mounted within the room.

Ensure that room has all equipment necessary for the disconnection operation.

Measure temperatures of chutes to ensure there is no possibility of injury to the operator and the selected glove bags can withstand the temperature

Place chute-clamp on feed chute 12" above the chute base. This will provide clearance when chute are disconnected and being capped off..

Setup glove box frame and install glove bag around material delivery chute are inner chute of feed port.

Place the following into transfer port(s) of glove bag:

- End cap without gasket
- End cap with gasket
- Quick-connect clamp

Remove quick-connect holding chutes together and lower inner tube of feed port until it is resting on the chute-clamp.

Install end cap (without gasket) on the feed chute using the gasket employed in the melt. Install quick-clamp used in melt to secure the feed chute end cap.

Install the end cap (with gasket) on the inner using the new quick-connect clamp. This new gasket will be used when connecting the inner chute and will be used again when connecting the chutes together at the next melt. Using the new quick-connect clamp to connect the feed chute will ease cleaning in the AWTE.

Remove glove bag, chute-clamp and press the inner chute down into the feed port. The inner chute must be all the way down into the port to allow for proper clearance from port cover. Press the feed chute down flush with the top of the ICV Box and into the top soil.

Additional operations before feed port is covered are yet to be determined.

Inspect feed port cover gasket. If acceptable, position cover onto feed port and rotate 20° clockwise to lock. Cover will stop in locked position.

Remove environmental barrier using integral handles and place in storage location. Retrieve floor cover from storage location and install using special tool. Cover will stop in locked position. Note: To ensure proper ventilation balance between the AWTE and the ICV Box, only one environmental barrier to be

removed at a time. Floor cover must be in place before proceeding to the next chute connection.

Proceed to next material delivery chute and repeat steps above. This process shall be repeated for the remainder of the (4) delivery chute disconnections, and then the two ICV Box ventilation connections

This page intentionally left blank.

APPENDIX C

INSTRUMENTATION NAMING &TAGGING CONVENTION

This page intentionally left blank.

C1 EQUIPMENT IDENTIFICATION NUMBER

The equipment Identification Number (EIN) is comprised of three fields, SYSTEM-COMPONENT-SEQUENCE. Where SYSTEM is the plant Area 00,31-37, COMPONENT is the ISA-loop function code, and SEQUENCE is the device number within the Area.

Example: AWTE Area 34 Instrument Junction Box 34-IJB-001.

Note: The Hanford FARM and LOCATION fields do not apply to the Demonstration Bulk Vitrification System and have been dropped from this convention.

C2 CABLE TAGGING

Cables shall be tagged using From Source & To Destination information. The format will be "FROM-TO" or "FROM-TO-##" if more than one cable run.

Example:

Two Cables:	FROM	34-CAB-123 to 34-IJB-123
Cable Tag:		"34CAB123-34IJB123-C1"
Cable Tag:		"34CAB123-34IJB123-C2"

C3 WIRE TAGGING

Wires will be tagged using the equipment tag and polarity.

Example 1: Wires connected from instrument 34-FIT-123 (24V dc)

Positive Tag "34FIT123(+)"

Negative Tag "34FIT123(-)"

Example 2: Wires connected from instrument 34-LSH-123 (110V ac)

Positive Tag "34LSH123(H)"

Negative Tag "34LSH123(N)"

C4 NOTES

1. Cables shall be identified with cable tag number "source-destination-type."

   M = Motor Feeder Cable; L = Local Control Station Cable; MH = Motor Stator Heater; RTD = Motor Winding Temperature Detector; MA = Motor Armature Cable; MF = Motor Field Cable; C = Control Cable; F = General Feeder Cable; A = Ammeter Cable; T = Tachometer Cable; COM = Communications Cable; RS484, Ethernet, Fibre.

   Analog cables from junction box to field instrument will only be tagged with the instrument tag number.

2. Cables will be tagged on both ends with the same cable tag number.

3. Equipment, motor, and instrument tag numbers shown are for illustration purposes only. Use project specific equipment, motor, and instrument tags.

TECHNICAL DATA SHEET
AMEC Americas Limited

amec

The document revision number is indicated below. Please replace all revised pages of this document and destroy the superseded copies.

PROJECT:	Final DBVS Design	145579-D-DS-017.2	REV. 2
PROJECT NO.:	145579	AWTE Data Sheet Equipment No.: 34-N22-023	
CLIENT:	AMEC E&E - Richland, Washington		

REV. NO.	ISSUED FOR	ORIGIN	DATE	INITIAL
A	For Internal Review	GJ	27-Sep-04	GJ
B	For Internal Approval	GJ	29-Oct-04	GJ
C	For CH2M Hill Review	GJ	3-Nov-04	GJ
0	Bid Request	GJ	7-Jan-05	GJ
1	Bid Request	GJ	24-Jan-05	GJ
2	Construction	SB	17-Jan-06	SB

DOCUMENT APPROVAL

CLIENT APPROVAL (AMEC RICHLAND)	AMEC AMERICAS LIMITED
Original Approvals on File	*Original Approvals on File*
Project Manager: LAB 1/27/06	Project Manager:
Date: LAB 1/27/06 1-27-06	Date:
Q.A. Rep.: AMC 01-27-06	Discipline Lead:
Date: 01-27-06	Date:
CLIENT APPROVAL (CH2M HILL)	Originator:
Project Manager:	Date:
Date: 2/1/06	

This page intentionally left blank.

amec

TECHNICAL DATA SHEET

PROJECT:	Final DBVS Design	145579-D-DS-017.2	REV. 2
PROJECT NO.:	145579	AWTE Data Sheet Equipment No.: 34-N22-023	
CLIENT:	AMEC E&E - Richland, Washington		

REFERENCE SPECIFICATION

Document No.	Specification
145579-D-SP-017	Ancillary Waste Transfer Enclosure (AWTE) Specification

CONTENTS

Data Sheet ..... 2 Pages

Bidders Drawing & Data Commitments Sheet ..... 1 Page

This page intentionally left blank.

amec

TECHNICAL DATA SHEETS

PROJECT:	Final DBVS Design	145579-D-DS-017.2	REV. 2
PROJECT NO.:	145579	AWTE Data Sheet	
CLIENT:	AMEC E&E - Richland Washington	Equipment No.: 34-N22-023	

No. Required	1	Area	34
P&ID#	F-145579-34-A-0101 & 0102	Stream No.	5 & 11
Reference Specification:	145579-D-SP-017	Quality Assurance Level	EQ

Operating Conditions			Rev	Operating Conditions			Rev
Location	(indoors/outdoors)	Indoors		Operation	- Days per year	365	
AWTE operation	(continuous/intermittent)	Intermittent	B		- Hours per day	24	
AWTE Bottom Outer skin temp. -max.	(°F)	N/A		Availability	(%)	95	
Internal Temp. of AWTE - max.	(°C/°F) !	250/80	3	Environment	- Radioactive	Yes	
Ambient temp. - min.	(°F)	-25			- Toxic	Yes	
Ambient temp. - max. (outside)	(°F)	115	0		- Corrosive	No	
Ventilation Airflow (AWTE)	(acfm)	125	0		- Flammable	No	
Air changes	(per hr) *			Overall dimensions			
O/skin Temp. of ICV Box Lid	(°F) !	1222	B		-length	(ft-in) *	
Temp. of off-gas from ICV box	(°F)	880			-width	(ft-in) *	
Internal press.of AWTE (max)	(in wg)	-2.5	0		-height	(ft-in) *	
Internal press.of ICV Box (max)	(in wg)	-3.5	0				
Max. Press. Diff. (AWTE - ICV)	(in wg)	-1	0	Ventilation Airflow (ICV Box inlet)	(acfm)	116	0
				Ventilation Airflow (ICV Box disch.)	(acfm)	409	0

Waste Feed material composition							
Hanford Soil (same as top-off)	(wt %)	47.07		Si4+	(wt %)	0.01	
C (Carbon)	(wt %)	0.03		SO4-2+	(wt %)	0.03	
B2O3 (Boron Oxide	(wt %)	3.52		Moisture	(wt %)	1	0
ZrO2	(wt %)	4.92		137Cs	(Ci/hr)	1.54 E+00	
Al3+	(wt %)	0.1		99Tc	(Ci/hr)	1.23 E-02	
Cl-	(wt %)	0.02		TRU	(Ci/hr)	5.0 E-04	
CO3-2-	(wt %)	0.87		129I	(Ci/hr)	2.05 E-05	
Cr2+	(wt %)	0.06					
F-	(wt %)	0.01		Weight			
Fe3+	(wt %)	0.02		AWTE Assembly Complete	(lb) *		
K+	(wt %)	0.01		Chute Assembly	(lb) *		
Na+	(wt %)	9.28					
NO2	(wt %)	0.24					
NO3	(wt %)	23.25					
PO4-3-	(wt %)	0.45					

Top-Off Soil material composition				Material Specifications				
SiO_2	(wt %)	86.36			ASTM design	Grade	Description	
Na_2O	(wt %)	3.64		AWTE Skin		*		
Moisture (Max.)	(wt %)	5	0	AWTE Frame		*		
Soil SG.		1.5		Chutes	A312	Gr. TP 316L	SS	1
Soil Particle Distribution				Brackets etc.	A36		CS	
Screen No. 4 (4.75mm)	(%)	100		Bolts	A307	B	CS	
Screen No. 10 (2 mm.)	(%)	99		Nuts	A563	C	CS	

Surface Preparation and Finish			
Surface Preparation	*		
System	*		
Finish type	*		
Finish Dry Film Thickness	(in) *		

Date	28-Sep-04	26-Oct-04	3-Nov-04	7-Jan-05	24-Jan-05	24-Jan-06
By	GJ	GJ	GJ	GJ	GJ	
Chked						
Rev.	A	B	C	0	1	2

amec

TECHNICAL DATA SHEETS

Data sheet 2 of 2

Chute				Rev	ICV Box Off Gas Exhaust Duct			Rev
Temp Rating		(°F) *	1222		Off-Gas Temp.	(°F)	880	2
Dimensions		*			Duct Dia.	(in)	6	2
	outside dia.	(in) *			Materials	*		
	inside dia.	(in) *						
	thickness	(in) *		3	ICV Box Ventilation Inlet Duct			
					Inlet Air Temp.	(°F)	ambient air	2
					Duct Dia.	(in)	4	2
					Materials	*		

Comments:

1. Items marked with an * shall be filled in by VENDOR
2. Use "Tadpole" type seal with 1" bulb diameter & 1 1/2" flange width with Mesh core/V-5 cover or equal by "Pyrotek"
3. Items marked with an ! will be revisited upon completion of D-CA-007.

Date	28-Sep-04	26-Oct-04	3-Nov-04	7-Jan-05	24-Jan-05	24-Jan-06	
By	GJ	GJ	GJ	GJ	GJ		
Chked							
Rev.	A	B	C	0	1	2	

amec

TECHNICAL DATA SHEETS

PROJECT:	Final DBVS Design	145579-D-DS-017.2	REV. 2
PROJECT NO.:	145579	AWTE Data Sheet Equipment No.: 34-N22-023	
CLIENT:	AMEC E&E - Richland, Washington		

BIDDERS DRAWING AND DATA COMMITMENTS

Vendor shall supply all drawings, manuals and documentation in the quantities indicated. Approval drawings are due within the listed number of calendar days after issue of the Purchase Order or Letter of Intent. The dates set out for drawing and data submissions are governed by the engineering design schedule of the project. The Vendor shall supply one AutoCAD disk file and requested number of copies within the listed number of calendar days. Final drawings must be certified as correct and bear the Vendors name, equipment number and Purchase Order Number. Drawing Transmittals listing the document numbers, revisions numbers, quantities, status and document types must be included with all submissions (including electronic submittals).

SEND ALL DOCUMENTS TO:	AMEC Americas Limited
Submit all documents via courier service	1135 Jadwin Avenue
Faxed documents must be followed by the originals.	Richland, WA
Electronic E-mail or FTP transmissions of drawings & data must be copied to	99352
Document Control	Attn: Document Control
Always include a transmittal	Phone: (509) 942-1114
	Fax: (509) 942-1112

BIDDERS MUST PROVIDE ESTIMATED LEAD TIMES FOR APPROVAL DRAWINGS

Proposal	Bidder shall include this data for each item			REVIEW ITEMS DUE WITHIN (DAYS)	VENDOR COMMITMENT (SEE NOTE 4) (DAYS)
	Review	Required before ordering or start of fabrication			
		Final	Required within 7 days prior to shipment and before final payment		
PROPOSAL	REVIEW	FINAL	DESCRIPTION		
1			Q A program that satisfies the requirements of ASME NQA-1-1994	Bid	
1			Experience list and maintainability information	Bid	
E+3	E+3		Design, fabrication & delivery schedule	Bid	
E+3	E+3	E+6	Outline drawings and layout drawings indicating weights and dimensions	PO+14	
E+3	E+3	E+6	100% Design and Fabrication Package Including: Drawings, Calculations, Completed equipment data sheets, Vendor cut sheets/Technical Brochures, Bill of materials.	PO+21	
E+3	E+3	E+6	Electrical schematics, wiring, diagrams, pneumatic circuit diagrams and nameplate lists	PO+21	
	E+3	E+1	FAT Plan/Test Procedures	PO+21	
	E+3	E+1	FAT test report	PO+55	
	E+1	E+6	Spare parts list	Del-14	
	E+1	E+6	Set of installation and maintenance manuals c/w technical literature for all equipment and devices	Del-14	
		6	NEC inspection certificate & electromagnetic interference test results	Del-7	
		1	Hardware Delivery (Special tools, etc.)	PO+70	
		6	Site commissioning record & test results	COM+14	
	E+1	E+1	NDE Personnel certification	PO+7	
	E+1	E+1	Visual weld/NDE procedure	PO+7	
	E+3	E+1	Welding procedures, weld map, procedure qualification records and welder qualification records	PO+7	
	E+3	E+1	AWS CWI certificate	PO+7	
	E+3	E+1	Material Control procedure	PO+14	
	E+3	E+1	Shipping and Packaging Plan	PO+7	
	E+3	E+1	NCR's	When identified +3	
	E+3	E+3	Fabrication red-line changes	When identified +3	
	E+3	E+1	CoC's/CMTR's	Del-10	
		6	Certificate of Calibration	Del-7	
	E+3	E+3	Manufacturer's standard surface preparation and painting procedure	PO+7	

THE TIMELY RECEIPT OF THE VENDOR DOCUMENTS IS CRITICAL TO THIS PROJECT

I agree to provide the listed documentation and data and the dates shown above.

Vendor Signature _____ Date _____

This page intentionally left blank.

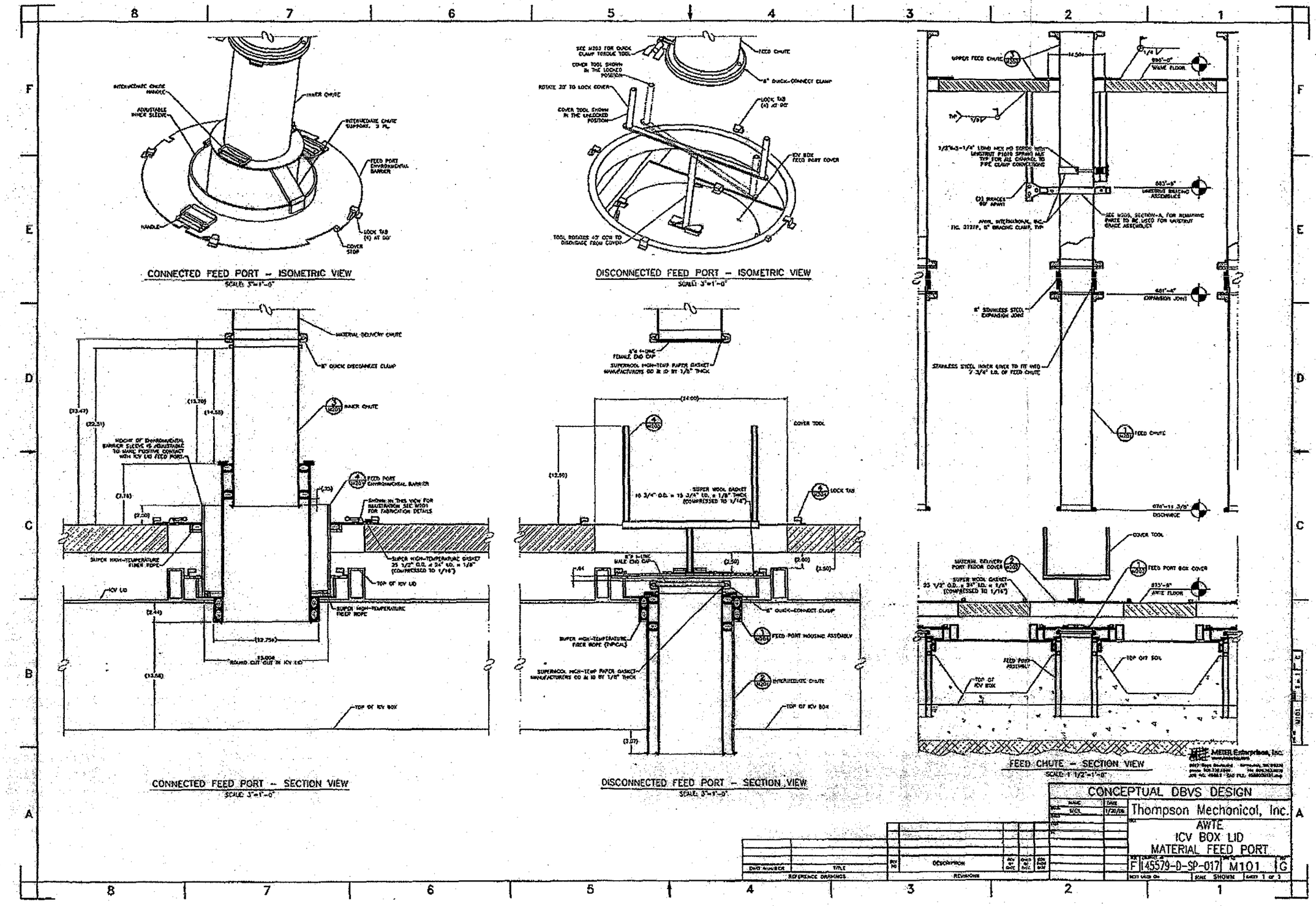
CONNECTED FEED PORT – ISOMETRIC VIEW
SCALE: 3"=1'-0"
DISCONNECTED FEED PORT – ISOMETRIC VIEW
SCALE: 3"=1'-0"
CONNECTED FEED PORT – SECTION VIEW
SCALE: 3"=1'-0"
DISCONNECTED FEED PORT – SECTION VIEW
SCALE: 3"=1'-0"
FEED CHUTE – SECTION VIEW
SCALE: 1 1/2"=1'-0"
CONCEPTUAL DBVS DESIGN
Thompson Mechanical, Inc.
AWTE
ICV BOX LID
MATERIAL FEED PORT
F 145579-D-SP-017 M101 G
SCALE SHOWN
SHEET 1 OF 1
REFERENCE DRAWINGS
REVISIONS
DESCRIPTION

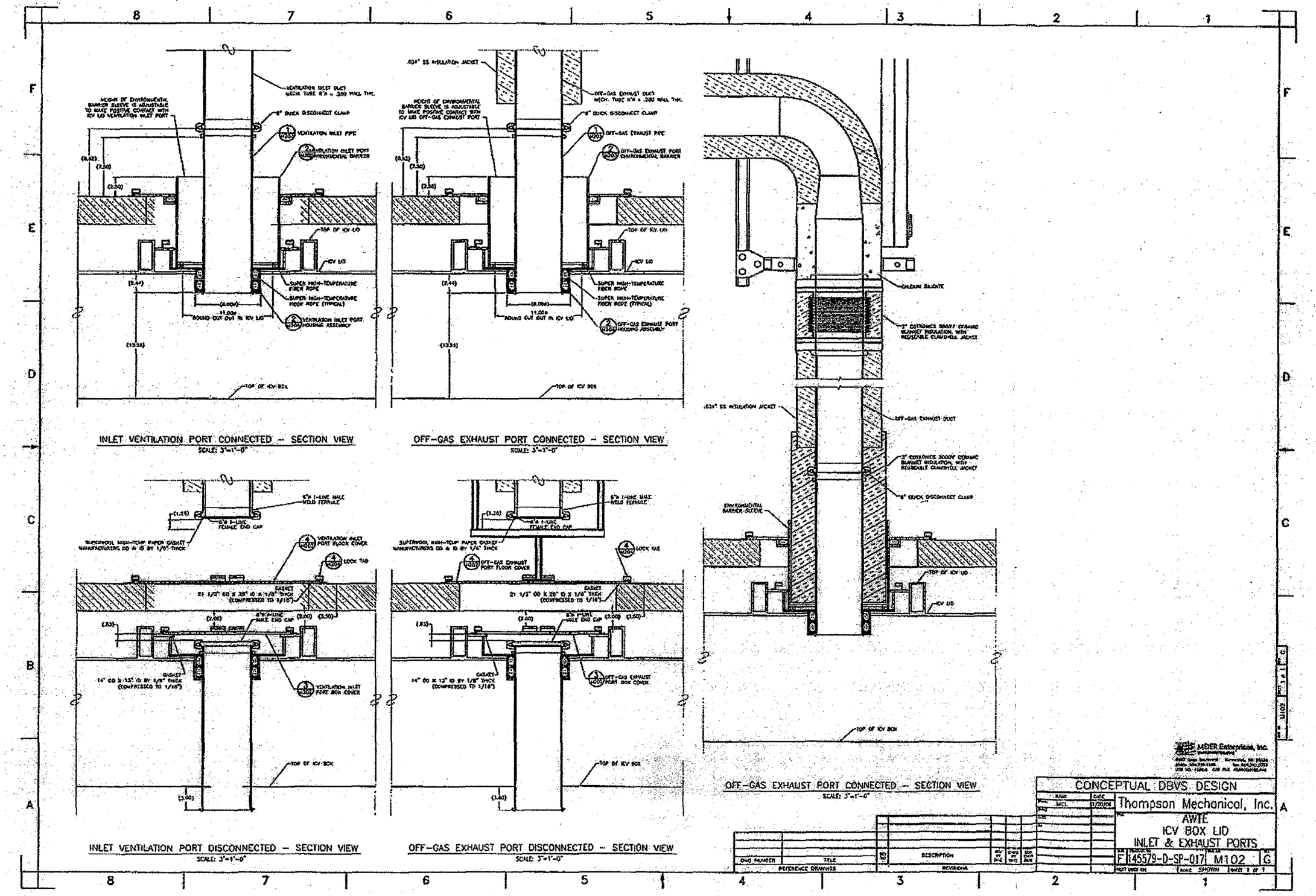
INLET VENTILATION PORT CONNECTED – SECTION VIEW
SCALE: 3"=1'-0"
OFF-GAS EXHAUST PORT CONNECTED – SECTION VIEW
SCALE: 3"=1'-0"
INLET VENTILATION PORT DISCONNECTED – SECTION VIEW
SCALE: 3"=1'-0"
OFF-GAS EXHAUST PORT DISCONNECTED – SECTION VIEW
SCALE: 3"=1'-0"
OFF-GAS EXHAUST PORT CONNECTED – SECTION VIEW
SCALE: 3"=1'-0"
CONCEPTUAL DBVS DESIGN
Thompson Mechanical, Inc.
AWTE
ICV BOX LID
INLET & EXHAUST PORTS
F 145579-D-SP-017 M102 G
SHOWN

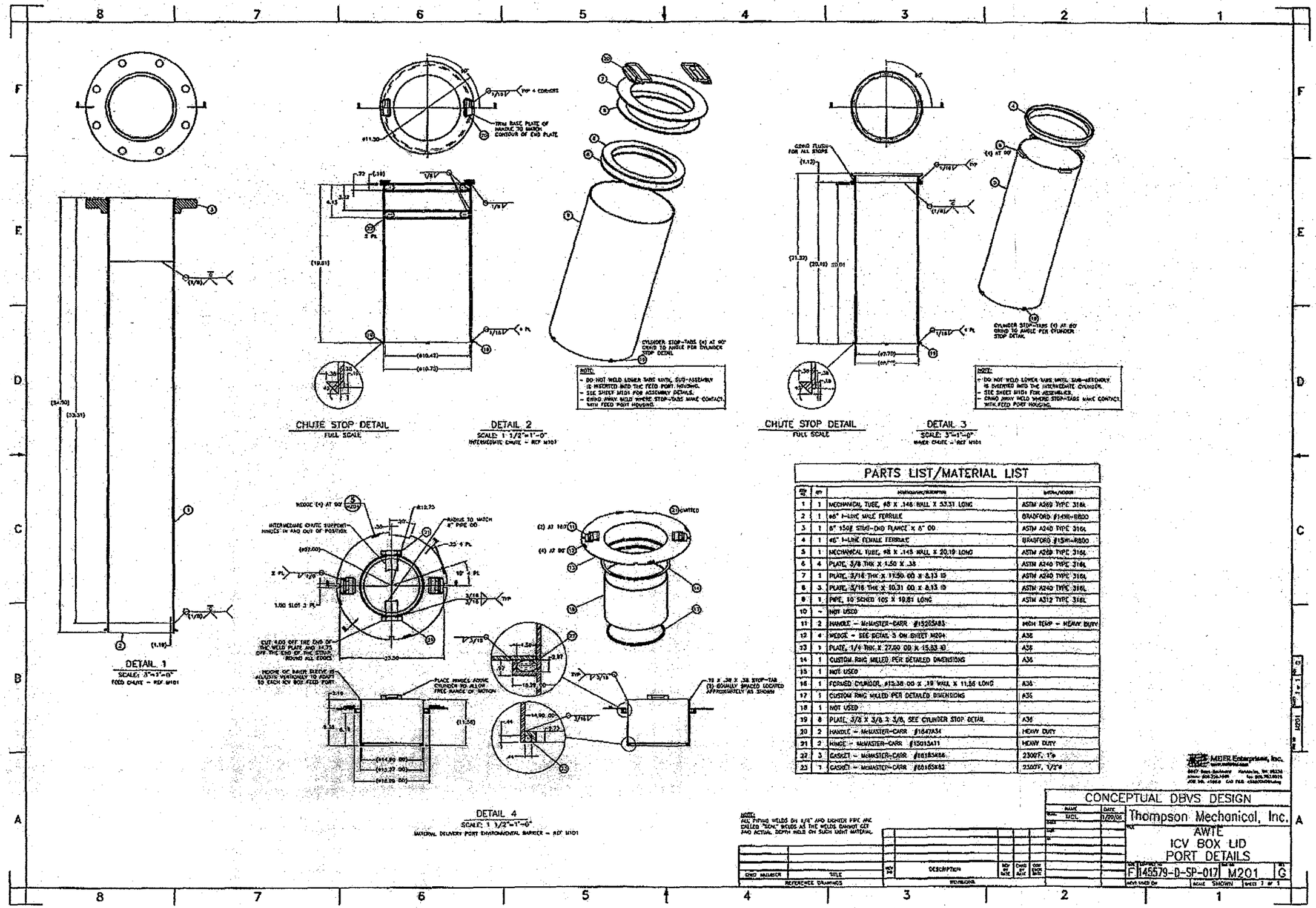

ITEM NO.	QTY	DESCRIPTION	MATERIAL/MODEL
1	1	MECHANICAL TUBE, #8 X .148 WALL X 53.31 LONG	ASTM A269 TYPE 316L
2	1	#8" 1-LINE MALE FERRULE	BRADFORD #14W1-R800
3	1	8" 150# STUD-END FLANGE X 8" OD	ASTM A240 TYPE 316L
4	1	#8" 1-LINE FEMALE FERRULE	BRADFORD #15W1-R800
5	1	MECHANICAL TUBE, #8 X .148 WALL X 20.19 LONG	ASTM A269 TYPE 316L
6	4	PLATE, 3/8 THK X 1.50 X .38	ASTM A240 TYPE 316L
7	1	PLATE, 3/16 THK X 11.50 OD X 8.13 ID	ASTM A240 TYPE 316L
8	3	PLATE, 3/16 THK X 10.31 OD X 8.13 ID	ASTM A240 TYPE 316L
9	1	PIPE, 10 SCHED 10S X 10.81 LONG	ASTM A312 TYPE 316L
10	-	NOT USED	
11	2	HANDLE - McMASTER-CARR #15285A83	HIGH TEMP - HEAVY DUTY
12	4	WEDGE - SEE DETAIL 3 ON SHEET M204	A36
13	1	PLATE, 1/4 THK X 27.00 OD X 15.63 ID	A36
14	1	CUSTOM RING MILLED PER DETAILED DIMENSIONS	A36
15	1	NOT USED	
16	1	FORMED CYLINDER, #13.38 OD X .19 WALL X 11.56 LONG	A36
17	1	CUSTOM RING MILLED PER DETAILED DIMENSIONS	A36
18	1	NOT USED	
19	8	PLATE, 3/8 X 3/8 X 3/8, SEE CYLINDER STOP DETAIL	A36
20	2	HANDLE - McMASTER-CARR #1647A34	HEAVY DUTY
21	2	HINGE - McMASTER-CARR #1501SA11	HEAVY DUTY
22	3	GASKET - McMASTER-CARR #6818SK66	2300F, 1"ø
23	1	GASKET - McMASTER-CARR #6818SK62	2300F, 1/2"ø

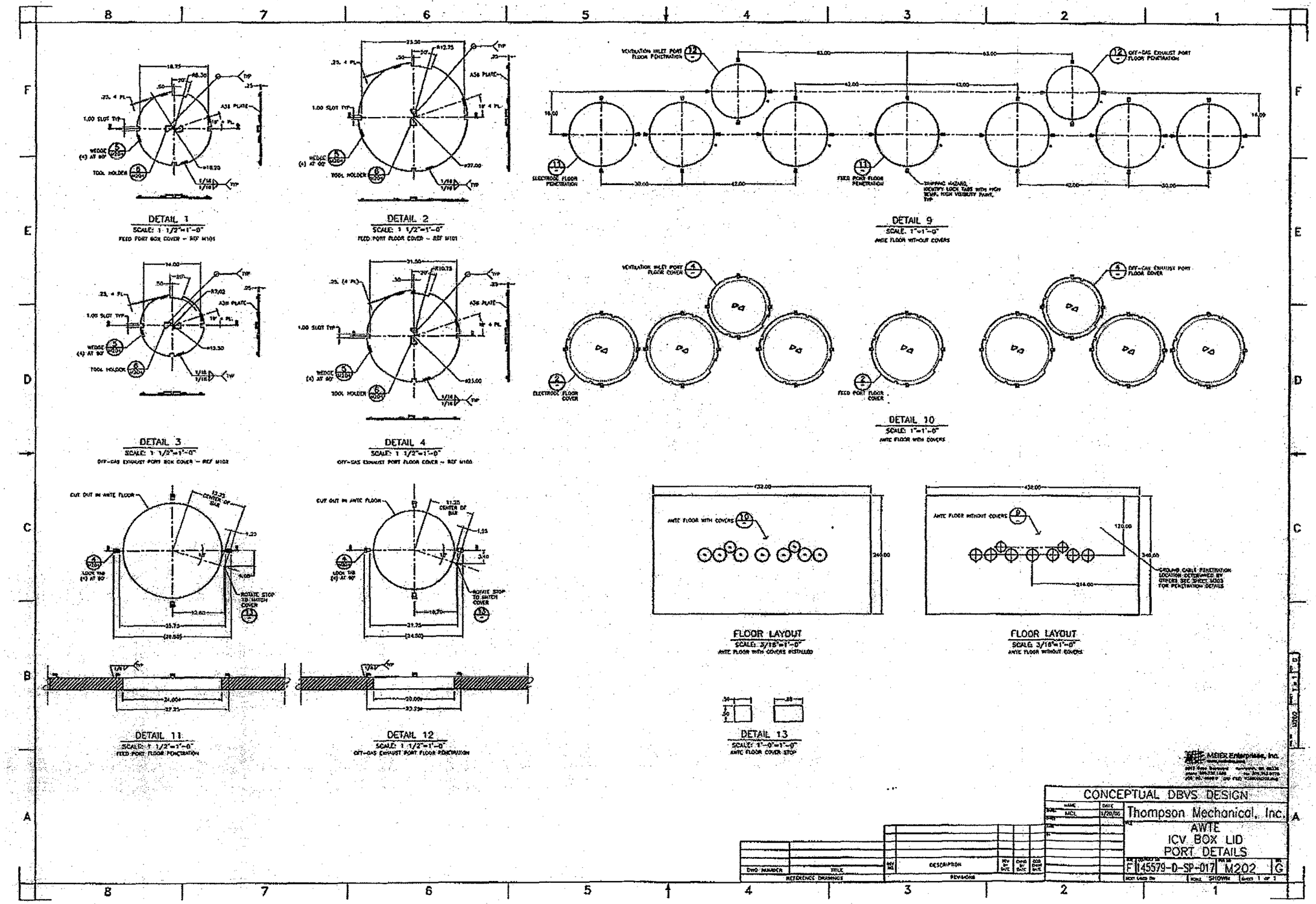
DETAIL 1
SCALE: 1 1/2"=1'-0"
FEED PORT BOX COVER – REF M101
DETAIL 2
SCALE: 1 1/2"=1'-0"
FEED PORT FLOOR COVER – REF M101
DETAIL 9
SCALE: 1"=1'-0"
AWTE FLOOR WITHOUT COVERS
DETAIL 3
SCALE: 1 1/2"=1'-0"
OFF-GAS EXHAUST PORT BOX COVER – REF M102
DETAIL 4
SCALE: 1 1/2"=1'-0"
OFF-GAS EXHAUST PORT FLOOR COVER – REF M102
DETAIL 10
SCALE: 1"=1'-0"
AWTE FLOOR WITH COVERS
DETAIL 11
SCALE: 1 1/2"=1'-0"
FEED PORT FLOOR PENETRATION
DETAIL 12
SCALE: 1 1/2"=1'-0"
OFF-GAS EXHAUST PORT FLOOR PENETRATION
FLOOR LAYOUT
SCALE: 3/16"=1'-0"
AWTE FLOOR WITH COVERS INSTALLED
FLOOR LAYOUT
SCALE: 3/16"=1'-0"
AWTE FLOOR WITHOUT COVERS
DETAIL 13
SCALE: 1'-0"=1'-0"
AWTE FLOOR COVER STOP
CONCEPTUAL DBVS DESIGN
Thompson Mechanical, Inc.
AWTE
ICV BOX LID
PORT DETAILS
F 45579-D-SP-017
M202
G
SCALE SHOWN
SHEET 1 OF 1
REFERENCE DRAWINGS
REVISIONS

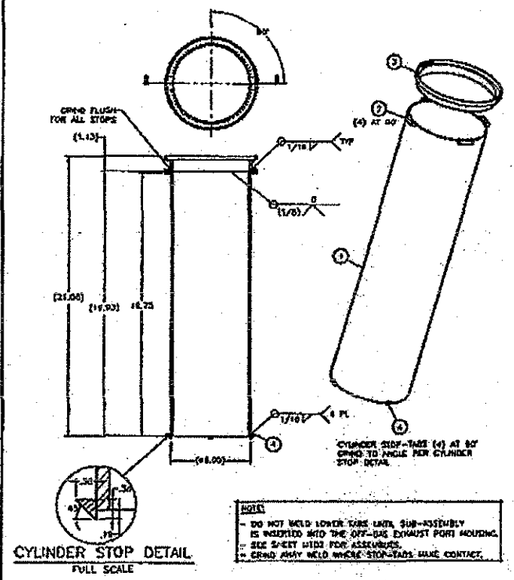

DETAIL 1
SCALE: 3"=1'-0"
OFF-GAS EXHAUST PIPE – REF M102

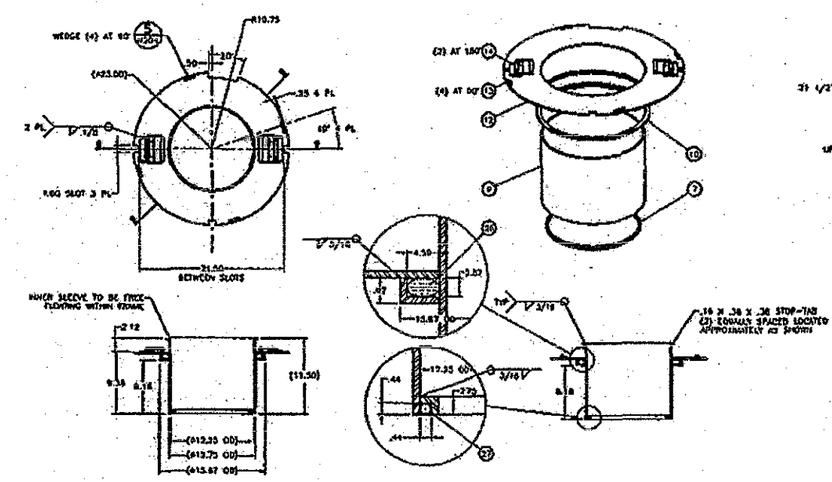

DETAIL 2
SCALE: 1 1/2"=1'-0"
OFF-GAS EXHAUST & VENTILATION-INLET PORT ENVIRONMENTAL BARRIER – REF M102

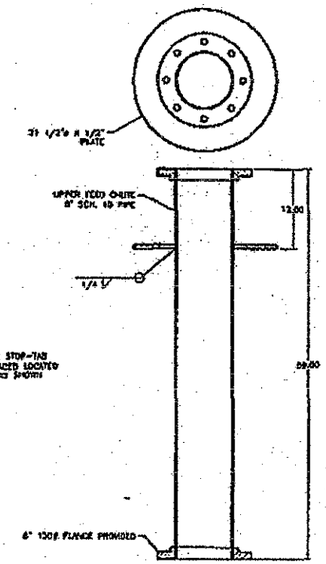

DETAIL 3
SCALE: 1 1/2"=1'-0"
UPPER FEED CHUTE – REF M102

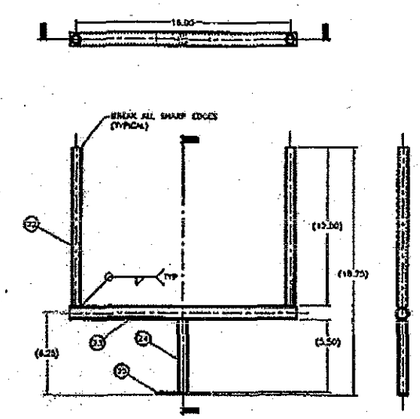

DETAIL 4
SCALE: 3"=1'-0"
COVER TOOL ASSEMBLY – REF M101

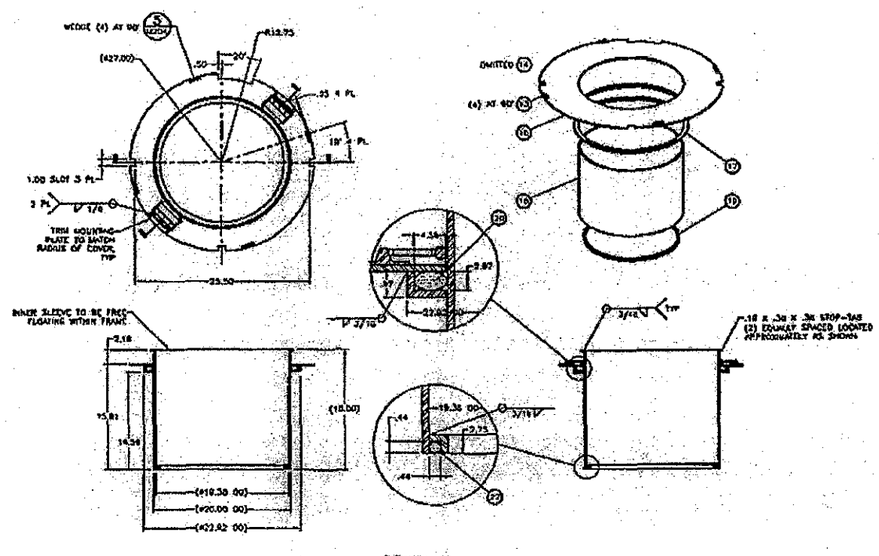

DETAIL 5
SCALE: 1 1/2"=1'-0"
ELECTRODE PORT ENVIRONMENTAL BARRIER

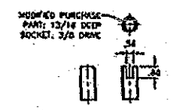

QUICK CLAMP TORQUE TOOL
SCALE: 3"=1'-0"

PARTS LIST/MATERIAL LIST

ITEM NO.	QTY	NOMENCLATURE/DESCRIPTION	MATERIAL/COMM
1	1	MECHANICAL TUBE, #8 X .134 WALL X 19.93 LONG	ASTM A269 TYPE 316L
2	8	PLATE, 1 X 3/8 X 3/8	ASTM A240 TYPE 316L
3	1	#8" I-LINE FEMALE FERRULE	BRADFORD #15M-R600
4	4	PLATE, 3/8 X 3/8 X 3/8, SEE CYLINDER STOP DETAIL	ASTM A240 TYPE 316L
5	–	NOT USED	
6	–	NOT USED	
7	1	CUSTOM RING MILLED PER DETAILED DIMENSIONS	A36
8	–	NOT USED	
9	1	PIPE, 12 SCHED 10 X 11.50 LONG	A36
10	1	CUSTOM RING MILLED PER DETAILED DIMENSIONS	A36
11	–	NOT USED	
12	1	PLATE, 1/4 THK X 23.00 OD X 12.88 ID	A36
13	8	WEDGE, SEE DETAIL 5 ON SHEET M204	A36
14	4	HANDLE, McMASTER-CARR #15265A63	HIGH-TEMP, HEAVY-DUTY
15	–	NOT USED	

PARTS LIST/MATERIAL LIST

ITEM NO.	QTY	NOMENCLATURE/DESCRIPTION	MATERIAL/COMM
16	1	PLATE, 1/4 THK X 27.00 OD X 13.63 ID	A36
17	1	CUSTOM RING MILLED PER DETAILED DIMENSIONS	
18	1	FORMED CYLINDER, #13.30 OD X .19 WALL X 18.00 LONG	
19	1	CUSTOM RING MILLED PER DETAILED DIMENSIONS	
20	–	NOT USED	
21	–	NOT USED	
22	2	1/2" SCHEDULE 40 PIPE X 12.00 LONG	ASTM A53 TYPE F
23	1	3/4" SCHEDULE 40 PIPE X 12.00 LONG	ASTM A53 TYPE F
24	1	1/2" SCHEDULE 40 PIPE X 5.50 LONG	ASTM A53 TYPE F
25	1	PLATE, 1/4 THK X 4.0 X .75	A36
26	2	GASKET – McMASTER-CARR #88185K86	2300F, 1"ø
27	2	GASKET – McMASTER-CARR #88185K82	2300F, 1/2"ø

NOTE:
ALL PIPING WELDS ON 1/8" AND LIGHTER PIPE ARE CALLED "SEAL" WELDS AS THE WELDS CANNOT GET AND ACTUAL DEPTH WELD ON SUCH LIGHT MATERIAL.

DWG NUMBER	TITLE	REV NO	DESCRIPTION	REV BY DATE	CHKD BY DATE	CDR CHECK DATE
REFERENCE DRAWINGS		REVISIONS				

MEIER Enterprises, Inc.

CONCEPTUAL DBVS DESIGN

	NAME	DATE
DRAWN	KCL	1/30/08

Thompson Mechanical, Inc.

AWTE
ICV BOX LID
PORT DETAILS

F 145579-D-SP-017 M203 G

NEXT USED ON | SCALE SHOWN | SHEET 1 of 1

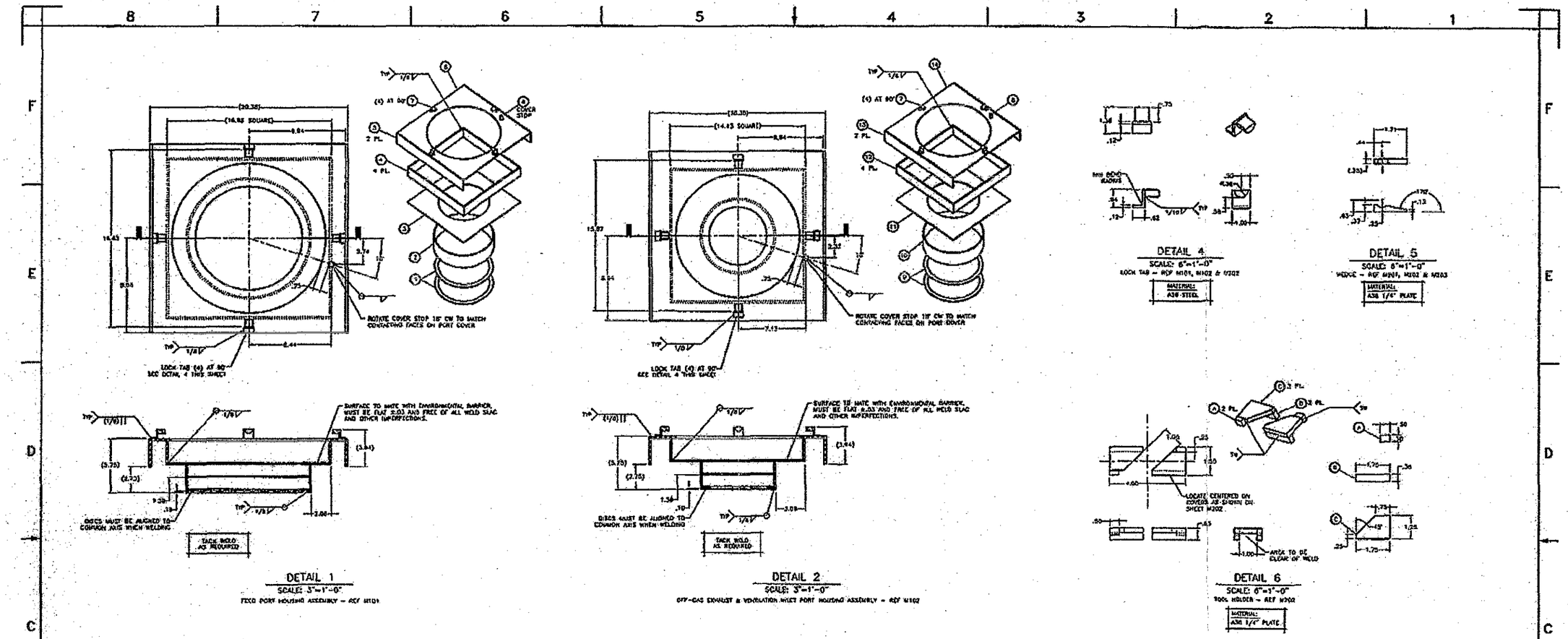

PARTS LIST/MATERIAL LIST

ITEM NO	QTY	NOMENCLATURE/DESCRIPTION	MATERIAL/REFERENCE
1	2	PLATE, 3/16 THK X 12.25 OD X 10.88 ID	ASTM A240 TYPE 316L
2	1	PIPE, 12 SCHED 10 X 3.00 LONG	ASTM A312 TYPE 316L
3	1	PLATE, 3/16 THK X 16.88 SQ X 10.88 ID	A36
4	4	PLATE, 3/16 THK X 18.88 X 2.31	A36
5	2	PLATE, 1/4 THK X 19.88 X 3.00	A36
6	1	PLATE, 1/4 THK X 19.88 SQ WITH ø15.75 ID	A36
7	12	SEE DETAIL 4, THIS SHEET	A36
8	3	BAR, 1/2 X 1/2 X .88	A36
9	2	PLATE, 3/16 THK X 7.50 OD X 6.13 ID	ASTM A240 TYPE 316L
10	1	MECHANICAL TUBE ø8" X .188 WALL X 3.00 LONG	ASTM A269 TYPE 316L
11	1	PLATE, 3/16 THK X 14.13 SQ X 6.13 ID	A36
12	4	PLATE, 3/16 THK X 13.94 X 2.31	A36
13	2	PLATE, 1/4 THK X 17.88 X 3.00	A36
14	1	PLATE, 1/4 THK X 17.88 SQ X 13.00 ID	A36

NOTE:
ALL PIPING WELDS ON 1/4" AND LIGHTER PIPE ARE CALLED "SEAL" WELDS AS THE WELDS CANNOT GET AND ACTUAL DEPTH WELD ON SUCH LIGHT MATERIAL.

METER Enterprises, Inc.

CONCEPTUAL DBVS DESIGN

Thompson Mechanical, Inc.

AWTE
ICV BOX LID
PORT DETAILS

F 145579-D-SP-017 M204 G

SCALE SHOWN SHEET 1 OF 1

DWG NUMBER	TITLE	REV NO	DESCRIPTION	REV BY DATE	CHKD BY DATE	ECN ENGR DATE
REFERENCE DRAWINGS			REVISIONS			

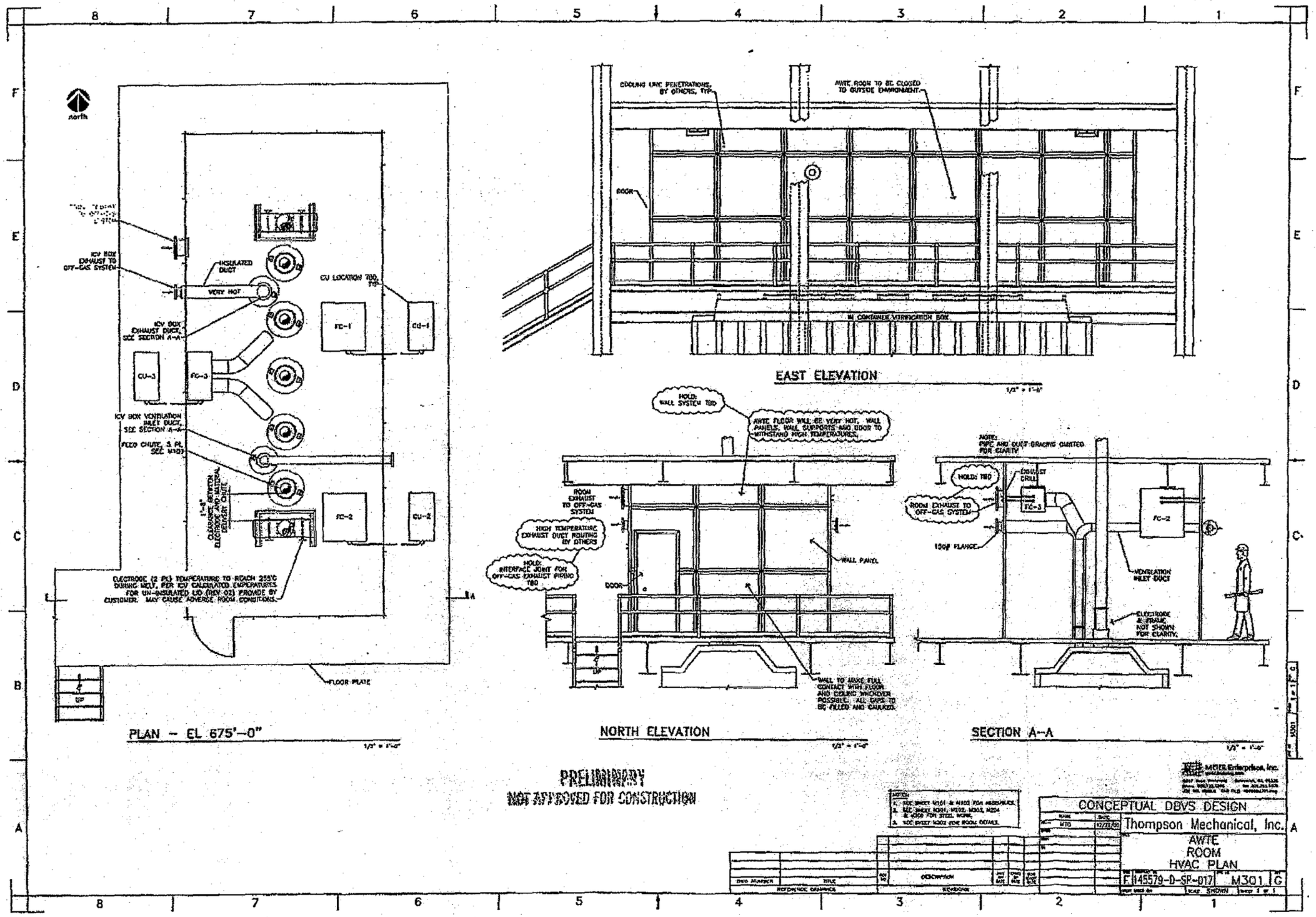

PLAN – EL 675'-0"
1/2" = 1'-0"
ICV BOX EXHAUST TO OFF-GAS SYSTEM
INSULATED DUCT
VERY HOT
CU LOCATION TBD, TYP
ICV BOX EXHAUST DUCT, SEE SECTION A-A
ICV BOX VENTILATION INLET DUCT, SEE SECTION A-A
FEED CHUTE, 5 PL SEE M101
CLEARANCE BETWEEN ELECTRODE AND MATERIAL DELIVERY CHUTE
ELECTRODE (2 PL) TEMPERATURE TO REACH 255°C DURING MELT, PER ICV CALCULATED EMPERATURES FOR UN-INSULATED LID (REV 02) PROVIDE BY CUSTOMER. MAY CAUSE ADVERSE ROOM CONDITIONS.
FLOOR PLATE
FC-1
CU-1
CU-3
FC-3
FC-2
CU-2
EAST ELEVATION
1/2" = 1'-0"
COOLING LINE PENETRATIONS, BY OTHERS, TYP
AWTE ROOM TO BE CLOSED TO OUTSIDE ENVIRONMENT
DOOR
IN CONTAINER VITRIFICATION BOX
NORTH ELEVATION
1/2" = 1'-0"
HOLD: WALL SYSTEM TBD
AWTE FLOOR WILL BE VERY HOT. WALL PANELS, WALL SUPPORTS AND DOOR TO WITHSTAND HIGH TEMPERATURES.
ROOM EXHAUST TO OFF-GAS SYSTEM
HIGH TEMPERATURE EXHAUST DUCT ROUTING BY OTHERS
HOLD: INTERFACE JOINT FOR OFF-GAS EXHAUST PIPING TBD
WALL PANEL
WALL TO MAKE FULL CONTACT WITH FLOOR AND CEILING WHENEVER POSSIBLE. ALL GAPS TO BE FILLED AND CAULKED.
SECTION A-A
1/2" = 1'-0"
NOTE: PIPE AND DUCT BRACING OMITTED FOR CLARITY
HOLD: TBD
EXHAUST GRILL
ROOM EXHAUST TO OFF-GAS SYSTEM
150# FLANGE
VENTILATION INLET DUCT
ELECTRODE & FRAME NOT SHOWN FOR CLARITY.
PRELIMINARY
NOT APPROVED FOR CONSTRUCTION
CONCEPTUAL DBVS DESIGN
Thompson Mechanical, Inc.
AWTE
ROOM
HVAC PLAN
F 145579-D-SP-017 M301 G

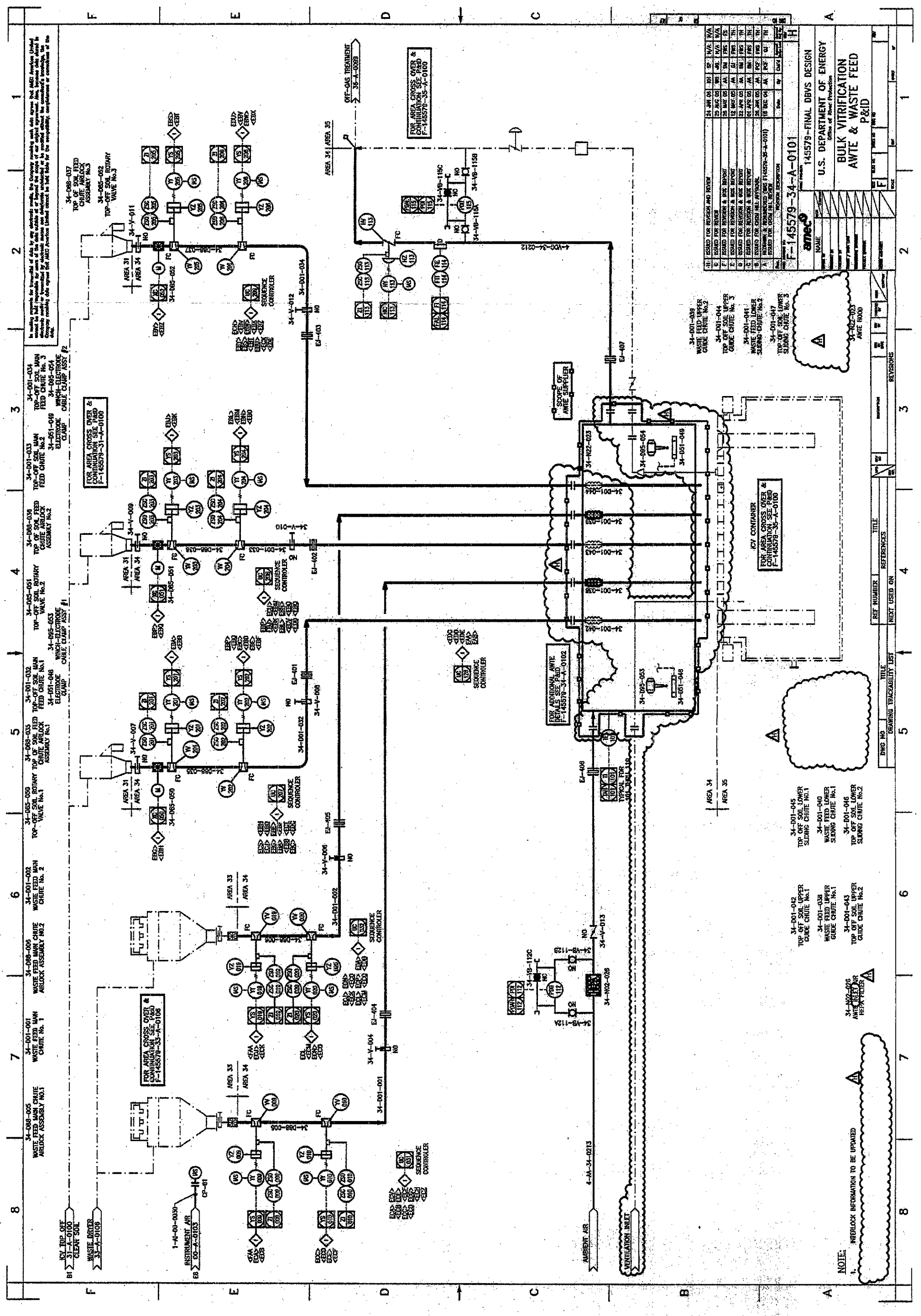
F-145579-34-A-0101
145579-FINAL DBVS DESIGN
U.S. DEPARTMENT OF ENERGY
BULK VITRIFICATION
AWTE & WASTE FEED
P&ID
ICV CONTAINER
FOR AREA CROSS OVER & CONTINUATION SEE P&ID F-145579-35-A-0100
FOR AREA CROSS OVER & CONTINUATION SEE P&ID F-145579-31-A-0100
FOR AREA CROSS OVER & CONTINUATION SEE P&ID F-145579-33-A-0106
FOR ADDITIONAL AWTE DETAILS SEE P&ID F-145579-34-A-0102
SCOPE OF AWTE SUPPLIER
SEQUENCE CONTROLLER
OFF-GAS TREATMENT 36-A-0099
AMBIENT AIR
VENTILATION INLET
INSTRUMENT AIR
NOTE:
1. INTERLOCK INFORMATION TO BE UPDATED

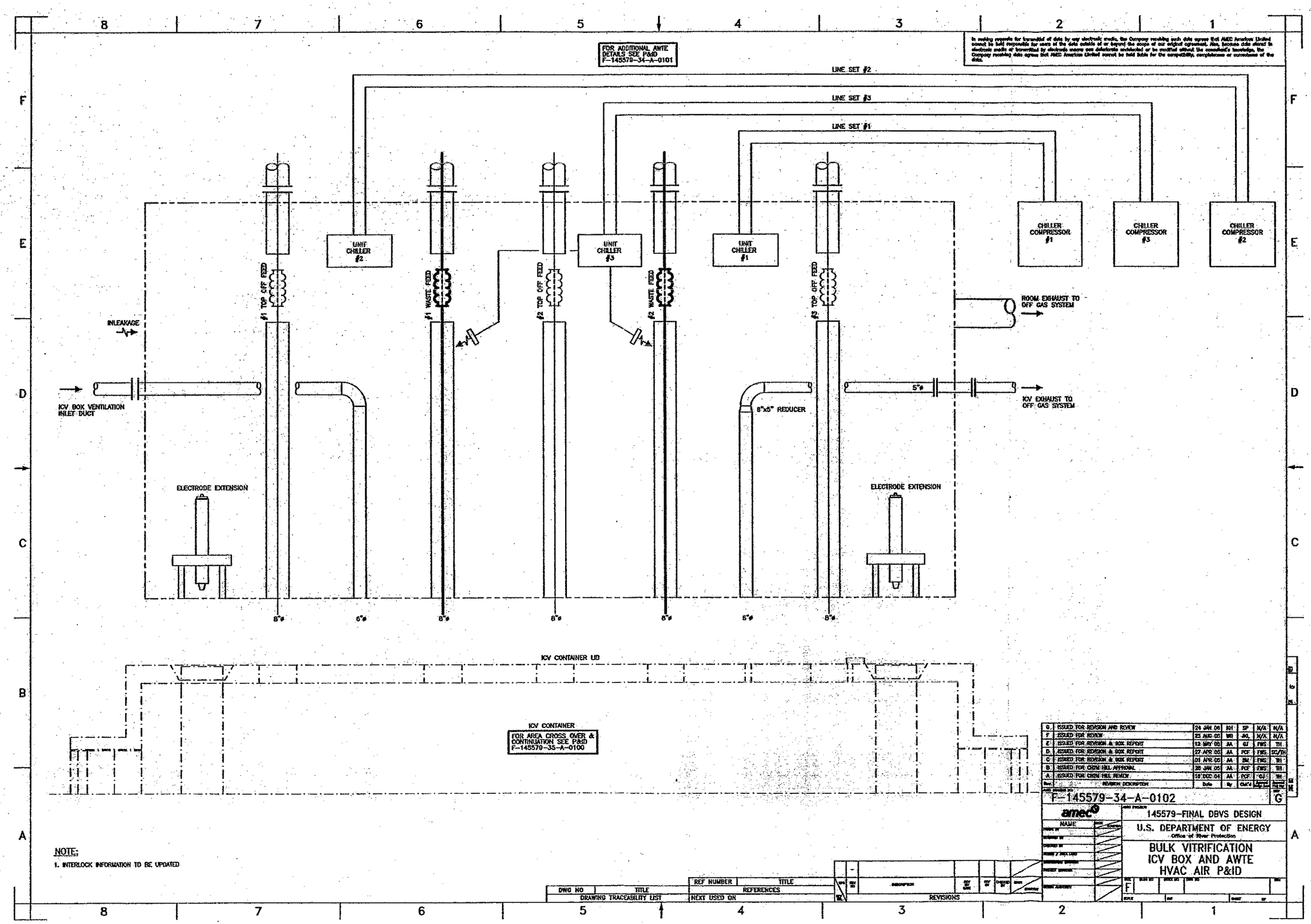
FOR ADDITIONAL AWTE DETAILS SEE P&ID F-145579-34-A-0101
LINE SET #2
LINE SET #3
LINE SET #1
UNIT CHILLER #2
UNIT CHILLER #3
UNIT CHILLER #1
CHILLER COMPRESSOR #1
CHILLER COMPRESSOR #3
CHILLER COMPRESSOR #2
#1 TOP OFF FEED
#1 WASTE FEED
#2 TOP OFF FEED
#2 WASTE FEED
#3 TOP OFF FEED
INLEAKAGE
ICV BOX VENTILATION INLET DUCT
ROOM EXHAUST TO OFF GAS SYSTEM
ICV EXHAUST TO OFF GAS SYSTEM
8"x5" REDUCER
5"ø
ELECTRODE EXTENSION
ELECTRODE EXTENSION
8"ø
6"ø
8"ø
8"ø
8"ø
6"ø
8"ø
ICV CONTAINER LID
ICV CONTAINER
FOR AREA CROSS OVER & CONTINUATION SEE P&ID F-145579-35-A-0100
NOTE:
1. INTERLOCK INFORMATION TO BE UPDATED
G ISSUED FOR REVISION AND REVIEW 24 JAN 06 KH SP N/A N/A
F ISSUED FOR REVIEW 25 AUG 05 WB JKL N/A N/A
E ISSUED FOR REVISION & 90% REPORT 12 MAY 05 AA GJ FWS TH
D ISSUED FOR REVISION & 90% REPORT 27 APR 05 AA PCF FWS SC/TH
C ISSUED FOR REVISION & 90% REPORT 01 APR 05 AA BM FWS TH
B ISSUED FOR CH2M HILL APPROVAL 20 JAN 05 AA PCF FWS TH
A ISSUED FOR CH2M HILL REVIEW 10 DEC 04 AA PCF GJ TH
Rev REVISION DESCRIPTION Date By Chk'd
F-145579-34-A-0102
G
amec
145579-FINAL DBVS DESIGN
U.S. DEPARTMENT OF ENERGY
Office of River Protection
BULK VITRIFICATION
ICV BOX AND AWTE
HVAC AIR P&ID
F
DWG NO TITLE
DRAWING TRACEABILITY LIST
REF NUMBER TITLE
REFERENCES
NEXT USED ON
REVISIONS

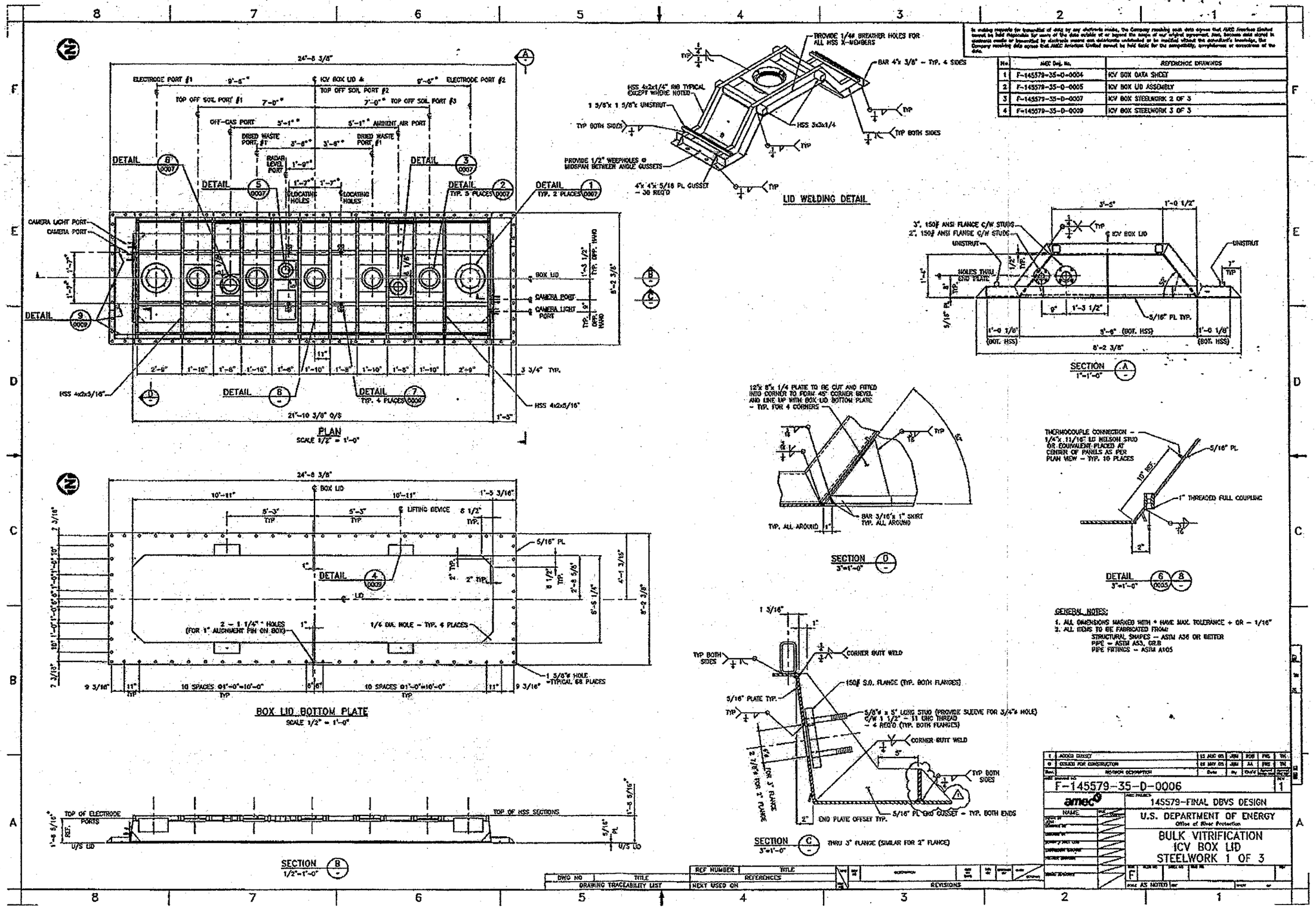
PLAN
SCALE 1/2" = 1'-0"
BOX LID BOTTOM PLATE
SCALE 1/2" = 1'-0"
SECTION B
1/2"=1'-0"
LID WELDING DETAIL
SECTION A
1"=1'-0"
SECTION 0
3"=1'-0"
DETAIL
3"=1'-0"
SECTION C
3"=1'-0"
THRU 3" FLANGE (SIMILAR FOR 2" FLANGE)
GENERAL NOTES:
1. ALL DIMENSIONS MARKED WITH + HAVE MAX. TOLERANCE + OR - 1/16"
2. ALL ITEMS TO BE FABRICATED FROM:
STRUCTURAL SHAPES - ASTM A36 OR BETTER
PIPE - ASTM A53, GR.B
PIPE FITINGS - ASTM A105
F-145579-35-D-0006
145579-FINAL DBVS DESIGN
U.S. DEPARTMENT OF ENERGY
BULK VITRIFICATION
ICV BOX LID
STEELWORK 1 OF 3

G4-152

TECHNICAL SPECIFICATION
AMEC Americas Limited

amec

The document revision number is indicated below. Please replace all revised pages of this document and destroy the superseded copies.

PROJECT:	Final DBVS Design	145579-D-SP-018	REV. 1
PROJECT NO:	145579	DRIED WASTE & TOP-OFF SOIL AIRLOCK ASSEMBLIES	
CLIENT:	AMEC E&E - Richland, Washington		

REV NO	ISSUED FOR	ORIGIN	DATE	INITIAL
A	For Internal Review	FS	24-Sep-04	FS
B	For Internal Approval	GJ	08-Oct-04	FWS for GJ
C	For CH2M Hill Review	FS	27-Oct-04	FS
D	For CH2M Hill Review	FS	21-Dec-04	FS
0	Bid Request	GJ	14-Jan-05	GJ
1	Bid Request	GJ	16-Feb-05	GJ

DOCUMENT APPROVAL

CLIENT APPROVAL (AMEC RICHLAND)

Original Approvals on File

Project Manager: _____
Date: 17 Feb 05

Q.A. Rep.: _____
Date: 2/17/05

CLIENT APPROVAL (CH2M HILL)

Project Manager: _____
Date: 2/22/05

AMEC AMERICAS LIMITED (TRAIL)

Original Approvals on File

Project Manager: _____ (for TH)
Date: Feb 16/05

Discipline Lead: _____
Date: Feb 16/05

Originator: _____
Date: Feb 16/05

This page intentionally left blank.

TECHNICAL SPECIFICATION
AMEC Americas Limited

PROJECT:	Final DBVS Design	145579-D-SP-018	REV. 1
PROJECT NO.:	145579	DRIED WASTE & TOP-OFF SOIL AIRLOCK ASSEMBLIES	
CLIENT:	AMEC E&E – Richland, WA		

TABLE OF CONTENTS

Page

1.0 SCOPE 7
1.1 PURPOSE 7
1.2 SCOPE OF SUPPLY 8

2.0 APPLICABLE DOCUMENTS 10
2.1 GOVERNMENT DOCUMENTS 10
2.2 NON-GOVERNMENT DOCUMENTS 10

3.0 TECHNICAL REQUIREMENTS 12
3.1 ITEM DEFINITION 12
3.1.1 Item Diagram 12
3.1.2 Interface Definition 14
3.2 CHARACTERISTICS 14
3.2.1 Functional Characteristics 14
3.2.2 Physical Characteristics 15
3.2.3 Reliability 15
3.2.4 Maintainability 15
3.2.5 Environment 16
3.2.6 Transportability and Storage 16
3.2.7 Safety 16
3.3 DESIGN AND CONSTRUCTION 16
3.3.1 Parts/Materials/Processes 17
3.3.2 Industry and Government Standards 24
3.3.3 Radiation 25
3.3.4 Cleanliness 25
3.3.5 Corrosion of Parts 26
3.3.6 Protective Coatings 26
3.3.7 Interchangeability 26
3.3.8 Identification and Marking 27
3.3.9 Nameplates 27
3.3.10 Human Engineering 27
3.3.11 Qualification 27
3.3.12 Document Submittal 27
3.3.13 Personnel and Training 29

4.0 QUALITY ASSURANCE REQUIREMENTS 30
4.1 GENERAL 30
4.1.1 Quality Assurance Program 30
4.1.2 Design 30
4.1.3 Procurement Document Control 30
4.1.4 Identification and Control of Items 33
4.1.5 Control of Processes 34

4.1.6 Inspection 35
4.1.7 Test Control 36
4.1.8 Control of Measuring and Test Equipment 37
4.1.9 Handling, Storage, and Shipping 38
4.1.10 Control of Nonconforming Items 38
4.1.11 Quality System for Material Specifying Additional Testing – ASME III/VIII 39
4.2 QUALIFICATION VERIFICATION 39
4.3 INSPECTIONS AND TESTS 40
4.4 TRAINING OF INSPECTION AND TEST PERSONNEL 40

5.0 PREPARATION FOR DELIVERY 41
5.1 GENERAL 41
5.2 PRESERVATION AND PACKAGING 41
5.3 PACKING 41
5.4 MARKING 41
5.5 HANDLING 41
5.6 SHIPPING 41

6.0 NOTES 41

7.0 APPENDICES 42

8.0 ATTACHMENTS 42

APPENDICES

A TFC-ESHQ-QC-C-03 – Control of Suspect/Counterfeit Items

ATTACHMENTS

145579-D-DS-018.1	Dried Waste Airlock Assembly Data Sheet
145579-D-DS-018.2	Top-Off Soil Airlock Assembly Data Sheet
34-YV-009	Waste Feed Main Chute Airlock Assembly No. 1 Valve No. 1
34-YV-010	Waste Feed Main Chute Airlock Assembly No. 1 Valve No. 2
34-YV-019	Waste Feed Main Chute Airlock Assembly No. 2 Valve No. 1
34-YV-020	Waste Feed Main Chute Airlock Assembly No. 2 Valve No. 2
34-YV-201	Top-off Soil Feed Chute Airlock Assembly No. 1 Valve No. 1
34-YV-202	Top-off Soil Feed Chute Airlock Assembly No. 1 Valve No. 2
34-YV-203	Top-off Soil Feed Chute Airlock Assembly No. 2 Valve No. 1
34-YV-204	Top-off Soil Feed Chute Airlock Assembly No. 2 Valve No. 2
34-YV-205	Top-off Soil Feed Chute Airlock Assembly No. 3 Valve No. 1
34-YV-206	Top-off Soil Feed Chute Airlock Assembly No. 3 Valve No. 2
F-145579-34-A-0101	AWTE Hood and Waste Feed P&ID
F-145579-34-A-0102	ICV Box and AWTE Hood Instrument Air P&ID
F-145579-34-D-0003	Chute Layout – Top-Off Soil Impingement Tank to ICV Box Drawing
F-145579-34-D-0006	Chute Layout – Waste Silo to ICV Box Drawing

FIGURES

Figure 3-1: Airlock Assembly 13

TABLES

Table 2-1: Government Documents 10
Table 2-2: Non-Government Documents 10

Acronym List

AISC	American Institute for Steel Construction
AMEC	AMEC Americas Inc
ANSI	American National Standards Institute
ASCE	American Society of Civil Engineers
ASD	Allowable Stress Design
ASME	American Society of Mechanical Engineers
ASNT	American Society of Nondestructive Testing
ASTM	American Society of Testing and Materials
AWG	American Wire Gauge
AWS	American Welding Society
CFR	Code of Federal Regulations
CH2M HILL	CH2M HILL Hanford Group, Inc
CMTR	Certified Material Test Report
CWI	Certified Welding Inspector
DBVS	Demonstration Bulk Vitrification System
DC	Direct Current
DWAA	Dried Waste Airlock Assembly
EMC	Electromagnetic Compatibility
EMI	Electromagnetic Interference
ICV™	In-Container Vitrification™ [1]
lb	Pound
mA	Milliamp
MCS	Monitoring and Control System
NCR	Nonconformance Report
NDE	Nondestructive Examination
NEC	National Electrical Code
NFPA	National Fire Protection Association

[1] In-Container Vitrification™ (ICV™) is a trademark of AMEC Inc.

NOx	Oxides of Nitrogen
NQA	National Quality Assurance
PST	Pipe Sealant with Teflon
QA	Quality Assurance
R	Rad
SAE	Society of Automotive Engineers
TSAA	Top-off Soil Airlock Assembly
UBC	Uniform Building Code
V	Volt

This page intentionally left blank.

1.0 SCOPE

1.1 PURPOSE

AMEC is part of a team that has been selected by the CH2M HILL Hanford Group, Inc. (CH2M HILL) to design, fabricate, test, and deploy a Demonstration Bulk Vitrification System (DBVS) using a process referred to as In-Container Vitrification™ (ICV™) to receive, dry, and immobilize waste from an underground storage tank located in the 200 West Area of the Hanford Nuclear reservation. A main subsystem of the DBVS is the ICV™ Box Feed system.

One of the primary functions of the Box Feed System is to deliver dried waste and top-off soil to the ICV™ container under a controlled, sealed and contained environment at the completion of the melt operation. Major components of the Box Feed system are the Dried Waste and Top–off Soil Airlock Assemblies (DWAA & TSAA), that will facilitate and control delivery of the materials into the ICV™ box.

Due to the pressure difference between the ICV box and the waste transportation system blower, the main purpose of the DWAA is to prevent hot gases and NOx from moving back up the waste feed chute, and potentially into the atmosphere during an upset condition. The DWAA will also facilitate the delivery of radioactive dried waste to the ICV™ box at a controlled rate to facilitate the melt process. There are two DWAA's included in the system design.

The main purpose of the TSAA is to provide a seal for the top-off soil feed system and to prevent radioactive material/dust & hot gases in the ICV™ from exiting up through the top-off soil feed chute, into the clean top-off soil delivery system and potentially into the atmosphere. The TSAA will also facilitate the delivery of the top–off soil, which will be used as a shielding medium, into the ICV™ box on top of the vitrified waste at the completion of the melt process. There are three TSAA's included in the system design.

Throughout this specification, Contract Responder shall act as the Seller and AMEC shall act as the Buyer.

Any discrepancies noted in this specification or between this specification and other documentation shall be noted and referred to the Buyer for resolution before proceeding with design or fabrication of the item in question.

The material being handled by this equipment is considered hazardous and radioactive waste that is regulated under the requirements of 40 CFR 264 Subpart J; WAC 173-303-640 and 10 CFR 830.

1.2 SCOPE OF SUPPLY

The Seller's Scope of Supply shall include, but not be limited to, the design, analysis, fabrication, inspection, testing, documentation, packaging, and shipping of the following components associated with the DWAA and TSAA.

Spherical Disc/Dome Valves – To meter the controlled flow of dried waste and top-off soil transfer into the ICV™ box. There will be two valves included in both the DWAA and TSAA, one inlet valve discharging into the airlock chamber and one discharge valve feeding from the airlock chamber into the upper chutes.

Air Lock Chamber – Will be a specific size, as specified in data sheets 145579-D-DS-018.1 and 145579-D-DS-018.2, to deliver a constant volume of dried waste or top-off soil, into the ICV™ box, per cycle of the valves. In cases where the inlet port diameter and discharge port diameters of the valve differs due to the valve design, the airlock chamber should incorporate a tapered design to provide a smooth transition from the larger outlet diameter on the discharge side of the valve to the smaller inlet diameter of the second valve.

Transition Pieces – Dependent upon the valve design, to facilitate the installation of the airlock assemblies into the pipelines, it may be necessary to have transition pieces to convert from the larger flange diameters of the airlock assembly, down to the actual pipe flange diameters used on the connecting piping, i.e. an 8" valve for use in an 8" pipeline may be supplied with larger than standard 8" pipe flanges. Where possible, for these instances, the Supplier should include the transition pieces for inlet to and discharge from the airlock assemblies in the scope of supply.

Actuator – Each valve will require a pneumatic actuator to operate the valves, assembly to include all pneumatic circuitry required to cycle the valves alternately

or simultaneously. Actuators should be equipped with position switches to indicate when valves are open or closed.

Instrumentation – The Seller shall provide all necessary pneumatic components, including solenoid valves and integral limit switches to allow control and operation of the dome valves from the Buyer's MCS.

Start-up Assistance and Field Support – Seller to provide per diem rates for technical field support during construction and system start-up. The Seller shall provide sufficient documentation and information for operation and repair of the Airlock Assembly.

Work not included in the Seller Scope of Supply is as follows:

(a) Site installation of system;

(b) Design and manufacture of connecting systems to and from the Airlock Assembly to the rest of the plant such as any electrical supply, and MCS valve connections;

2.0 APPLICABLE DOCUMENTS

The following documents, of the exact issue shown, form a part of the basis of design to the extent specified in the application sections of this document. In the event of a conflict between documents referenced herein and the requirements of this specification, the requirements of this specification shall take precedence. All conflicts shall be brought to the attention of the Buyer for resolution.

2.1 GOVERNMENT DOCUMENTS

Documents applicable to the work scope are shown in Table 2-1 and Table 2-2. The latest issue and addenda to the documents in effect at the time of procurement (unless otherwise specified) shall apply and form a part of the basis of design for this specification to the extent specified in the applicable sections of this document.

Table 2-1: Government Documents

Document Number	Title
10 CFR 830	"Nuclear Safety Management", Code of Federal Safety Regulations, as amended.
29 CFR 1910 (2003)	Occupational Safety and Health Standards
40 CFR 264	"Standards for Owners and Operators of Hazardous Waste Treatment, Disposal and Storage Facilities", Subpart J, Code of Federal Regulations, as amended.
WAC 173-303-640	"Tank Systems, Washington Administrative Code, as amended.

2.2 NON-GOVERNMENT DOCUMENTS

Table 2-2: Non-Government Documents

Document Number	Title
AISC ASD	American Institute of Steel Construction – Allowable Stress Design
ASCE 7-98	Minimum Design Loads for Building and Other Structures
ASME B16.5	Pipe Flanges and Flared Fittings

Table 2-2: Non-Government Documents

Document Number	Title
ASME B18.2.1-1999	Square and Hex Bolts and Screws Inch Series Including Hex Cap Screws and Lag Screws
ASME B30.20	Below-The-Hook Lifting Devices
ASME B31.3-2002	Process Piping
ASME NQA-1-1994* (see note at end of table)	Quality Assurance Requirements for Nuclear Facility Applications
ASME PCC-1-2000	Guidelines for Pressure Boundary Bolted Flange Joint Assembly
ASME Section IX	Boiler & Pressure Vessel Code – Welding and Brazing Qualifications
ASNT-TC-1A	Recommended Practice- Non-Destructive Testing
ASTM A193-01	Standard specification for Alloy-Steel and Stainless Steel Bolting Materials for High-Temperature Service.
ASTM A194-01	Standard specification for Carbon and Alloy Nuts for Bolts for High-Pressure and High-Temperature Service.
ASTM A307-02	Standard specification for Carbon Steel Bolts and Studs, 60,000 psi Tensile Strength
ASTM A354-01	Standard specification for Quenched and Tempered Alloy Steel Bolts, Studs and other Externally Threaded Fasteners
ASTM A563-00	Standard specification for Carbon and Alloy Steel Nuts
ASTM F436-02	Standard Specification for Hardened Steel Washers
AWS D1.1-02	Structural Welding Code – Steel
HNF-2962, Rev. 0	List of EMI/EMC Requirements, Numetec Hanford Corporation for Fluor Daniel Corporation Hanford, Inc., Richland, WA
NFPA 70 (2002)	National Electrical Code
RPP-8530	Tank Farm Labeling Standard
SAE J429	Mechanical And Material Requirements for Externally Threaded Fasteners, Standard
TFC-ESHQ-QC-C-03, Rev. B	Control of Suspect/Counterfeit Items
UBC (1997)	Uniform Building Code (1997)

*The relevant requirements of NQA-1 are included in Section 4.0

3.0 TECHNICAL REQUIREMENTS

The following is a description of the required procedures taken on by the DWAA and TSAA. The Seller shall provide similar documentation stating the ability of their equipment to comply with the necessary requirements.

3.1 ITEM DEFINITION

The DWAA is required to prevent hot gases and NOx from moving back up the waste feed chute, and potentially into the atmosphere. It is also required to transfer the dried waste from the vacuum receiver unit to the ICV™ container. The DWAA shall include inlet and discharge spherical disc/dome valves, a pre-determined size of airlock chamber, pneumatic actuators for operation of the valves, position switches, cycling of the valves will be controlled from the MCS, suitable pneumatic control valves to be included, and all necessary accessories and instrumentation in order to install and operate the DWAA.

The TSAA is required to prevent radioactive material/dust & hot gases from moving up the top-off soil chutes, into the top-off soil feed system and potentially into the atmosphere. The TSAA is also required to transfer top-off soil from the top-off soil impingement tanks into the ICV™ container to provide a shielding layer (soil) over the top of the melted dried waste. The TSAA shall include inlet and discharge spherical disc/dome valves, a pre-determined size of airlock chamber, pneumatic actuators for operation of the valves, position switches, cycling of the valves will be controlled from the MCS, suitable pneumatic control valves to be included, and all necessary accessories and instrumentation in order to install and operate the TSAA.

The DWAA and TSAA shall satisfy the requirements shown in Figure 3-1 in Section 3.1.1, and the Technical Data Sheets 145579-D-DS-018.1 and 145579-D-DS-018.2.

All components of the assemblies shall be detailed according to drawings and specifications supplied by the Seller.

3.1.1 Item Diagram

See Figure 3-1, and drawings F-145579-34-D-0003 and F-145579-34-D-0006, for DWAA and TSAA system assemblies.

Airlock Assembly to include: spool pieces, reducers, spherical valves, airlock chamber, valve actuators and instrumentation.

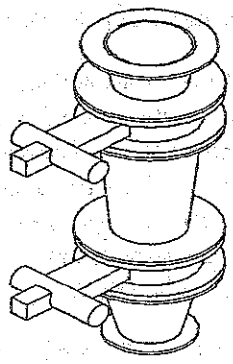

ISOMETRIC

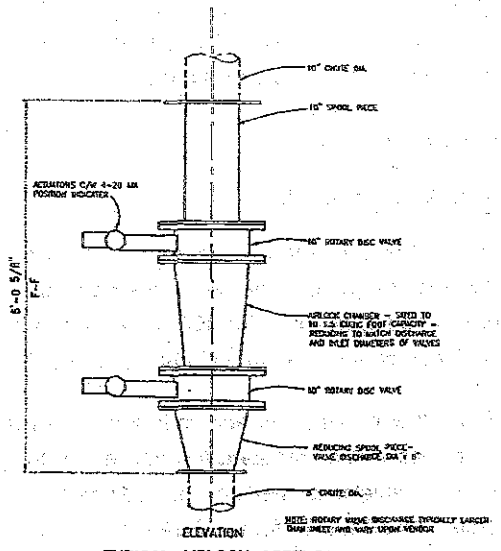

TYPICAL AIRLOCK ASSEMBLY

Figure 3-1: Airlock Assembly

3.1.2 Interface Definition

The Seller shall provide all pneumatic equipment, air and instrumentation with standard pipe-threaded connections wherever possible. The Seller shall provide the programming to interface with the Buyer's MCS.

The upper flange of the DWAA will interface with the waste feed chute, as it exits the Rotary feeder/valve located below the vacuum/filter receiver unit. The connection point is a standard 10" pipe diameter flanged joint. The lower flange of the DWAA will interface with the upper guide chute of the waste feed chute. The connection point is a standard 8" pipe diameter flanged joint located just above the floor at elevation. The overall length of the DWAA will be as specified on drawing F-145579-34-D-0006 and fig. 3.1a of this specification.

The upper flange of the TSAA will interface with the top-off soil chute as it exits from the rotary feeder/valve located below the top-off soil impingement tank. The connection point is a standard 10" pipe diameter flanged joint. The lower flange of the TSAA will interface with the upper guide chute of the top off soil chute. The connection point is an 8" pipe diameter standard flanged joint located just above the floor at elevation The overall length of the TSAA is as shown on F-145579-34-D-0003 and fig. 3.1b of this specification.

3.2 CHARACTERISTICS

3.2.1 Functional Characteristics

The DWAA shall prevent hot gases and NOx from moving back up through the waste feed chute and into the waste feed system. The DWAA shall facilitate the delivery of dried waste into the ICV Box. Further Functional Characteristics for the DWAA can be found in data sheet 145579-D-DS-018.1

The TSAA shall prevent hot and radioactive gases from entering the top-off soil feed system as well as facilitate the delivery of top-off soil to the ICV™ container to provide a shielding medium on completion of the melt process. Further Functional Characteristics for the TSAA can be found in data sheet 145579-D-DS-018.2.

3.2.2 Physical Characteristics

The Airlock Assemblies may be required to cycle up to three times per minute. Further Physical Characteristics can be found in Figure 3-1, and data sheets 145579-D-DS-018.1 and 145579-D-DS-018.2.

3.2.3 Reliability

The Bulk Vitrification plant is expected to operate 24 hours per day, 7 days per week. Service work will be done during scheduled downtimes. High reliability is required for any moving parts in the DWAA and TSAA. The service life is 24 months and the design life is five years. The failure of any DBVS component shall not compromise safe maintenance or post corrective action, operation of the DBVS.

3.2.4 Maintainability

Maintainability characteristics of the design (lubrication, parts replacement and repair, spares, modular construction, test points, etc.), should include, but not be limited to, the following:

(i) Maintenance and Repair Cycles. Expected inspection of the DWAA and TSAA will be once per month by the Buyer. The Seller shall provide typical maintenance schedule.

(ii) Spares and Spare Parts. The Seller shall identify recommended spares and spare parts.

(iii) Service and Access. The DWAA and TSAA shall be designed for ease of service (access openings/spacing, self-test capability, test fixtures, sealed bearings, etc.). The Seller shall identify requirements for service (remove and replace only, bench repair, special tools, remote handling/maintenance, etc.) and for capability of the unit to be repaired with or without a load.

(iv) Components shall be designed to be maintained and repaired on site.

3.2.5 Environment

This equipment will only be operated inside a weatherproof enclosure. The equipment shall be designed to operate under the environmental conditions listed below.

(i) Ambient air temperature range is -25°F to 115°F with a maximum 24-hour differential of 50°F;

(ii) Relative humidity ranges from near 0 to 100%.

3.2.6 Transportability and Storage

The DWAA and TSAA shall be suitably packaged and identifiable for transportation to, and storage at, the job site, as specified in Section 5.0.

3.2.7 Safety

The DWAA and TSAA shall be designed to maintain the safety of operators, general public, and equipment. The Seller shall provide all necessary guards, lockouts, and other safety equipment for safe operation. The equipment supplied by the Seller shall incorporate any design features to comply with the applicable subparts of 29 CFR 1910, *Occupational Safety and Health Standards.*

3.3 DESIGN AND CONSTRUCTION

The Seller shall provide all design calculations necessary for the DWAA and TSAA, which include, but is not limited to, airlock chamber sizing calculations, valve sizing calculations (based on chute diameter), and structural calculations. Calculations shall be submitted to the Buyer in accordance with the Technical Data Sheets, 145579-D-DS-018.1 and 145579-D-DS-018.2. The Seller shall provide all design drawings necessary for the DWAA and TSAA which includes, but is not limited to, drawing outlines, pneumatic circuitry, interface drawings, elementary control diagrams, dimensional drawings (including material and component listing), and as-built drawings. Drawings shall be submitted to the Buyer in accordance with the Bidders Drawing and Data Commitments found in the Technical Data Sheets, 145579-D-DS-018.1 and 145579-D-DS-018.2.

Alternative equipment designs and/or materials of construction are permissible if the Vendor demonstrates that they are able to meet or exceed the durability and reliability of the materials, which are specified in Section 3.3.1. Any alternative design must be thoroughly explained with text supplemented by drawings or sketches and proposed with the original bid. Buyer approval is required before proceeding with an alternative equipment design.

3.3.1 Parts/Materials/Processes

Components in the DWAA TSAA shall be fabricated from materials as specified on the Technical Data Sheets, 145579-D-DS-018.1 and 145579-D-DS-018.2.

3.3.1.1 General

The Seller shall evaluate all components on the basis of compliance with the Specification. The Buyer must approve the final selection.

All products and materials shall be supplied new and meet all requirements of the inspection authorities having jurisdiction. All components shall be standardized whenever possible to minimize the necessary spare parts inventory.

3.3.1.2 Airlock Assembly

The Dried Waste Airlock Assembly and the Top-Off Soil Airlock Assembly shall be designed to meet the transfer rates and controls specified in the Technical Data Sheets, 145579-D-DS-018.1 and 145579-D-DS-018.2. Actuators shall pneumatically control the inlet and discharge spherical disc/dome valves. The DWAA and TSAA valves will be controlled from the MCS and shall be capable of operating at various cycle times simultaneously, with a maximum cycle frequency of up to 3 times per minute. The DWAA and TSAA shall be designed so that no material build up will occur in the inlet and discharge valves, as well as inside the airlock chamber.

3.3.1.3 Electric Motor

There are no electric motors required with this equipment.

3.3.1.4 Electric Wiring

The only wiring required with this equipment is the control wiring for the limit switches and solenoid valves associated with the pneumatic actuator.

3.3.1.5 Piping

3.3.1.5.1 General

Piping components for the DWAA and TSAA shall be designed, fabricated, inspected, examined, and tested in accordance with ASME B31.3 "*Process Piping*", normal service. If there is a conflict between this portion of this specification and ASME B31.3, then ASME B31.3 shall be deemed to be correct. Anytime the requirements in this specification are more stringent, or are in addition to code requirements, the requirements in this specification shall be followed.

3.3.1.5.2 Flange Joints

All flanges shall be standard ANSI 150 lb raised face flanges per ASME B16.5 "*Pipe Flanges and Flared Fittings*", except where otherwise specified in this document, and shall be made from the same type of steel as the pipe they are welded or threaded to, unless otherwise noted.

3.3.1.5.3 Threaded Joints

Threaded joints in lines shall be joined using Loctite®[2] PST.

3.3.1.5.4 Valves and Installation

All valves shall be installed per Manufacturer's instructions.

Seller shall review Manufacturer's supplied information for unique installation requirements and request written clarification if installation requirements do not match the design.

[2] Loctite is a registered trademark of Henkel Corporation

3.3.1.6 Electrical

Design and installation of electrical equipment shall be in accordance with the NFPA 70 "*National Electric Code*" (NEC).

3.3.1.6.1 Wire and Cable

(a) Conductors shall be stranded copper for all sizes of wire and cable.

(b) Wire insulation shall be Type THHN (heat resistant thermoplastic) / THWN (moisture and heat resistant thermoplastic) for all 300V conductors.

(c) Conductors for control circuits shall be No. 14 AWG minimum, except that remote control circuits, signaling circuits, instrumentation, and power limited circuits may be sized smaller in accordance with the National Electric Code (NEC).

(d) Control and power multi-conductor cable shall be 300V, flame resistant, radiation resistant, jacketed cable suitable for wet or dry locations. Conductors shall be stranded copper with cross-linked polyethylene ethylene propylene insulation with a temperature rating of 194°F.

3.3.1.6.2 Wire / Cable Markers

Conductors shall be identified with white heat shrink tubing with indelible black typed on letters. Hand lettered labels shall not be used.

3.3.1.7 Instrumentation and Installation

In general, all instrument transmitters shall provide an isolated 4-20mA signal to the MCS, all pneumatic control valves shall accept a 4-20mA control signal from the MCS and provide position indication to the MCS. Solenoids and limit switches shall be 24 VDC. Instruments, tubing, piping, and wiring shall be installed in accordance with the instrument manufacturers recommendations and the best practice for the industry. Purchasing and installation of the MCS input/output modules are not included in this contract. The Buyer shall provide guidance with positioning based on best available knowledge of the configuration.

3.3.1.8 Mechanical Assembly Requirements

All equipment shall be assembled observing the equipment Manufacturer's recommended assembly instructions. During fabrication, the Seller shall submit all fabrication red-line changes to the Buyer for review and approval before implementation of the change with the exception of any minor red-line changes that do not affect form, fit, or function of the equipment. The Seller shall submit as-built drawings as well as final red-lined fabrication drawings to the Buyer with delivery. The Seller shall denote mounting configuration and details on the red-lined fabrication drawings.

Piping attached to equipment shall be installed with fasteners made finger-tight until alignment is achieved, at which time all fasteners shall be tightened. Tightening torque shall be that which is recommended by ASME B31.3 or gasket Manufacturer recommended torque values for the gasket system used. Flange assembly and bolting shall be performed in accordance with ASME PCC-1-2000 "*Guidelines for Pressure Boundary Bolted Flange Joint Assembly*". Inspection documentation shall be provided in accordance with the Bidders Drawing and Data Commitments Sheet located in the Technical Data Sheets, 145579-D-DS-018.1 and 145579-D-DS-018.2 as evidence of proper bolt torquing.

3.3.1.9 Electrical Assembly Requirements

There are no electrical assembly requirements for the DWAA and TSAA.

3.3.1.10 Materials

The Seller shall select materials as per Technical Data Sheets 145579-D-DS-018.1 and 145579-D-DS-018.2. All parts and materials shall be new. All parts shall be made of corrosion-resistant materials that are suitable for this environment. Material selection shall be identified in the Seller documents to the Buyer.

Material type and grade shall be clearly identified on the bill of materials. Certified Material Test Reports (CMTRs) are required for all materials coming in contact with the air stream. The Seller shall identify any materials that do not have CMTRs for review, approval, and final records.

3.3.1.11 Fasteners

No fasteners shall be capable of vibrating loose under operating conditions. All such joints should be tack welded or have some equivalent means of assurance of remaining intact. Double-nutting is not an acceptable method of securing fasteners. Loctite® thread lock may be used where applicable.

Stainless-steel bolts, cap screws, and washers shall be per ASTM A193 Grade B8 "*Standard Specification for Alloy-Steel and Stainless Steel Bolting Materials for High-Temperature Service*", and nuts shall be heavy hex nuts per ASTM A194 Grade 8 "*Standard Specification for Carbon and Alloy Nuts for Bolts for High-Pressure and High-Temperature Service*". Bolts and cap screws shall be grade marked. Carbon-steel bolts shall be per ASTM A307 "*Standard Specification for Carbon Steel Bolts and Studs, 60,000 psi Tensile Strength*" or better, nuts per ASTM A563 "*Standard Specification for Carbon and Alloy Steel Nuts*" Grade C Heavy Hex, and washers per ASTM F436 "*Standard Specification for Hardened Steel Washers*". Bolts and cap screws shall be grade marked.

All graded fasteners shall conform to ASME B18.2.1 "*Square and Hex Bolts and Screws Inch Series Including Hex Cap Screws and Lag Screws*", Society of Automotive Engineers (SAE) J429 "*Mechanical and Material Requirements for Externally Threaded Fasteners, Standard*", and ASTM A354 "*Standard Specification for Quenched and Tempered Alloy Steel Bolts, Studs and Other Externally Threaded Fasteners*".

The Seller shall select fasteners where they are not specifically called out in this specification using the following guidance:

(a) Anti-galling compound (e.g., Loctite® 8013 or 8009) shall be applied where stainless-steel bolts are used.

(b) Stainless-steel bolts, nuts, and washers shall be used when the mating parts are stainless steel.

(c) Carbon-steel bolts, nuts, and washers shall be used where mating parts are not stainless steel.

(d) The Seller shall ensure that suspect/counterfeit fasteners and components are not used for the construction of the DWAA and TSAA and its components as per TFC-ESHQ-QC-C-03, Rev. B "*Control of*

Suspect/Counterfeit Items". Suspect fasteners can be identified by the following inspection methods:

(i) Head markings are marred, missing, or appear to have been altered,

(ii) Threads show evidence of dressing or wear (threads should be of uniform color and finish),

(iii) Head markings are inconsistent with a heat lot, and

(iv) Head markings matching one of those identified on the United States Customs Service, "Suspect Headmark List", in Appendix A.

3.3.1.12 Gaskets

Pipe flange connections shall be appropriate for the temperature and sealing application of the system to which they will be sealing. No part of the gasket shall protrude into the internal bore of the pipeline. The Seller shall provide manufacture cut-sheets and application data for gaskets during the design for Buyer approval.

3.3.1.13 Welding

Welding of all pressure piping shall be performed in accordance with ASME B31.3, normal service at a minimum. Certified welders shall perform welding of all structural steel in accordance with American Welding Society (AWS) D1.1 "*Structural Welding Code – Steel*". Welding Procedures, Procedure Qualification Records, and Welder Procedure Qualification Records shall be submitted for review and approval to the Buyer before welding is performed.

3.3.1.13.1 Allowable Welding Methods

Welding of all carbon steel, including but not limited to structural shapes, rectangular tubing, plate, and sheet shall be performed in accordance with AWS D1.1 non-tubular, statically- loaded conditions. Welding of carbon steel portions of piping systems shall be as required in ASME B31.3.

3.3.1.13.2 Welding Procedure Requirements

All welding shall be performed in accordance with the Seller's approved Welding Procedure specification. Each Welding Procedure specification shall be qualified with a Procedure Qualification Record as required in ASME Section IX "*Boiler and Pressure Vessel Code – Welding and Brazing Qualifications*", and AWS D1.1, as applicable.

3.3.1.13.3 Welder Qualification

Welder Performance Qualification Records shall be submitted for all personnel performing welding, including tacking. Welders shall be qualified in accordance with ASME Section IX, and AWS D1.1, as applicable.

3.3.1.13.4 Weld Joints and Preparation

Weld joints are as permitted by the referenced standards.

3.3.1.13.5 Weld Repair

Weld defects shall be removed and repaired as allowed by the referenced standards. The original Welding Procedure specification shall be used for weld repair. Welds that fail inspection shall not be ground out and repaired more than twice before the section is abandoned and replaced.

3.3.1.13.6 Inspection

Inspection shall be done in accordance with the Seller's standard practice. A certified dimensional drawing and weld map shall be produced from this inspection.

Prior to fabrication, a weld map shall be produced and delivered to the Buyer for review and approval. Welds shall be inspected per ASME B31.3, normal service at a minimum for pressure piping and per AWS D1.1 for structural steel. An AWS Certified Weld Inspector (CWI) shall perform visual inspections and inspectors certified to ASNT-TC-1A "*Recommended Practice – Non-Destructive Testing*" shall perform NDEs. Visual and NDE weld inspection procedures shall be submitted along with the personnel certifications to the Buyer for review and approval, before performance of the inspections and examinations. Welded

connections on the lifting components shall be 100% visual and 100% Dye-Penetrant Test or Magnetic Particle Test inspected.

3.3.2 Industry and Government Standards

The DWAA and TSAA shall comply with all applicable industry and government standards called out herein.

3.3.2.1 Design Loads

The DWAA and TSAA equipment shall conform to allowable loading factors as defined by the American Institute for Steel Construction (AISC) Allowable Stress Design (ASD) for the loads identified below. The Seller shall submit details of structural mounting brackets and attachments to the equipment for loading analysis by the Buyer.

3.3.2.2 Dead Loads

Dead loads include the weight of all permanent materials and equipment, including the DWAA and TSAA equipment. See attached drawings F-145579-34-D-0003 and F-145579-34-D-0006 for interconnecting components.

The unit weights of material and construction assemblies shall be those given in ASCE 7-98 "*Minimum Design Loads for Building and Other Structures*". Where unit weights are neither established in that standard nor determined by test or analysis, the weights shall be determined from data in manufacturer drawings or catalogs.

3.3.2.3 Live Loads

Live loads are those loads produced by the use and occupancy of the DWAA and TSAA and do not include construction and environmental loads such as wind load, snow load, rain load, flood load, or dead load. Live loads are produced by operations and maintenance workers and equipment.

- Live loads shall be not less than the minimum uniform load or concentrated load stipulated in ASCE 7-98.
- The weight of service equipment that may be removed with change of occupancy of a given area shall be considered as live load.

3.3.2.4 Snow Loads

Snow loading for the DWAA and TSAA is not applicable.

3.3.2.5 Wind Loads

Wind loading for the DWAA and TSAA is not applicable.

3.3.2.6 Hoisting and Rigging Loads

The lifting apparatus (eyebolts, hoist rings, and lifting bails) shall be designed in accordance with the ASME B30.20 *Below-The-Hook Lifting Devices*. Equipment lift points designed and fabricated by Seller shall have a factor of safety of 3 based on yield strength. Equipment purchased by Seller shall have a factor of safety of 3 based on yield strength. Documents shall be provided to the Buyer demonstrating incorporation of these safety factors. The Seller shall identify the total weight, the center of gravity, and the lift points and rigging methods necessary for lifting each AWTE component. Lift points shall be identified with yellow paint. Any special tooling, spreader bars or other recommended fabricated devices for lifting shall be provided by the Seller.

3.3.2.7 Seismic Loads

Earthquake induced design loads, as a minimum, shall comply with the 1997-UBC "*Uniform Building Code*" Seismic Zone 2B for essential facilities.

3.3.3 Radiation

(a) Electromagnetic. The DWAA and TSAA shall comply with the requirements in HNF-2962 "*A list of EMI/EMC Requirements*" on electromagnetic radiation.

(b) Nuclear. Both the DWAA and TSAA will be exposed to nuclear radiation from the process. This exposure must not affect the operation of the equipment. Anticipated dose for the life of the installation is 10,000 R.

3.3.4 Cleanliness

Before assembly, and before preparing for shipment, all components shall be cleaned by flushing clean water and/or blown clean and dry with compressed air

to the extent that extraneous materials, such as those listed below, are not present:

(a) Metallic or other dusts (shop dust), chips, turnings, and weld splatter;
(b) Abrasive particles;
(c) Rust and other loose corrosion particles;
(d) Magnetic/liquid penetrate residues, dye check, etc.;
(e) Foreign material, such as paper, tape, plastic, sand, and wood;
(f) Cutting oils;
(g) Excess lubrication, grease, and oil; and
(h) Marking dyes.

The fabrication procedure shall describe the cleaning and packaging steps taken.

The DWAA and TSAA equipment ports and pipe openings shall be temporarily capped following cleaning and drying for shipment. Ports should remain capped at all times unless the port is directly being used. Packaging requirements following cleaning are documented in Section 5.3 of this document.

3.3.5 Corrosion of Parts

DWAA and TSAA design shall include requirements for corrosion protection, especially restrictions on dissimilar metal couples.

3.3.6 Protective Coatings

Carbon Steel components will require protective coating. Seller to submit their standard painting specifications for approval prior to award of P.O.

3.3.7 Interchangeability

All DWAA and TSAA components should be accessible and easily removed for replacement of damaged parts. All fittings, fasteners, hose, piping and valves shall be standard and common to ensure availability or replacement of these parts. The DWAA and TSAA design shall ensure interchangeability of components, to minimize consumable part storage.

3.3.8 Identification and Marking

The DWAA and TSAA shall have a Manufacturer's nameplate using the Seller's standard practice. The nameplate shall include: the equipment number (provided by the Buyer) assembly weight (dry and wet); purchase order number; lifting bail working load limits; Manufacturer data for swivel hoist rings (as applicable); and this specification number, 145579-D-SP-018, latest revision. Clearly mark and identify any components required for removal before equipment installation (e.g., shipping blocks).

3.3.9 Nameplates

Seller shall provide a nameplate, which conforms to the relevant sections of the Hanford Specification RPP-8530 "*Tank Farm Labeling Standard*".

3.3.10 Human Engineering

There are no special human engineering requirements for this equipment.

3.3.11 Qualification

Equipment supplied by the Seller shall be subject to Factory Acceptance Testing (FAT). The Seller will be expected to provide a shop simulation of the inlet conditions of their equipment under normal and transient operating conditions to demonstrate the operational efficiency of the equipment. The Seller shall provide a FAT plan for operational testing and leak testing of their equipment in their proposal in accordance with the verification, inspection and test requirements specified in sections 4.2 and 4.3.

3.3.12 Document Submittal

Each document submittal shall be identified with this specification number, item number, purchase order number, and Seller's identification number. Submittals shall be transmitted to the Buyer in accordance with the directions found in the Drawing and Data Commitment sheet in the Technical Data Sheets 145579-D-DS-018.1 and 145579-D-DS-018.2.

Data shall be sufficiently clear to allow legible copies to be made on standard reproduction equipment after microfilming.

Along with the bid submittal, the items shown in the Drawing and Data Commitment sheets shall be included. The schedule shall show equipment fabrication, testing, and delivery as noted on the inquiry. The drawings shall show full compliance with this specification (and the associated drawings/documents) or note any exceptions. The Seller shall allow 10 working days for the Buyer to review and state the disposition of each submittal.

Approval by the Buyer does not relieve the Seller from the responsibility for accuracy or adequacy of design under this specification.

Submittals are divided into two types: (1) Those requiring "approval before proceeding" (i.e., weld procedures or pre-purchase evaluation data); and (2) Those requiring "approval before shipment" (i.e., vendor information data).

Submittals requiring approval before shipment will be reviewed to verify completeness and adequacy for their intended purposes.

Unacceptable items that require approval before proceeding will be handled as specified below.

A submittal requiring approval that is not approved by the Buyer, will be dispositional as:

1. "Not Approved, Revise and Resubmit." The submittal is considered technically deficient, or incomplete, and is therefore unacceptable. Re-submittal is required; hence fabrication, procurement, or performance of procedures shall not proceed.

2. "Approved with Exception." Fabrication, procurement, and performance of procedures may proceed, and re-submittal is required to verify incorporation of the exception. Final acceptance of the item is contingent upon the Buyer's receipt and approval of the corrected submittal.

Submittals requiring approval before shipment that are determined to be incomplete or inadequate will be marked "Resubmit" and will be returned. An explanation of the deficiencies will be included for corrective action by the Seller.

The Seller shall provide fabrication traveler(s) for the fabrication and testing of the above-described DWAA and TSAA equipment. The fabrication traveler(s) shall include detailed procurement, fabrication, assembly, testing, shipping, and handling steps required to properly fabricate, assemble, and test the equipment in accordance with the drawings and specifications.

A proposed schedule of fabrication, inspection, and testing of all DWAA and TSAA equipment shall be submitted for review with the bid and approval with the submittal of the fabrication traveler(s).

The Buyer will insert witness/hold points in the fabrication traveler during their review and approval of the fabrication traveler. Witness points can be waived by the Buyer but must be documented in writing. Hold points require the Buyer personnel to be present during the fabrication, inspection, or test step.

3.3.13 Personnel and Training

The Seller's equipment and systems shall be designed so that it is operable and maintainable by the Buyer's operations and maintenance personnel. If specialized technical education or training is required by the Buyer's personnel the Seller shall advise in their proposal.

4.0 QUALITY ASSURANCE REQUIREMENTS

4.1 GENERAL

4.1.1 Quality Assurance Program

The Subcontractor/Supplier shall have a documented, implemented and maintained Quality Assurance Program that is based on a national standard and identifies the activities and items to which it applies. Instructions and procedures must include or reference appropriate quantitative or qualitative acceptance criteria for determining that prescribed activities have been satisfactorily accomplished. The Quality Assurance Program must address each of the areas discussed within this QA Requirements Flow-down. The Subcontractor/Supplier must submit the Quality Assurance Program to the Buyer for review prior to award of contract.

The Subcontractor/Supplier shall assess its Quality Assurance Program regularly to assure its effective implementation.

The Quality Assurance Program shall provide for indoctrination and training, as necessary, of personnel performing activities affecting quality to assure that suitable proficiency is achieved and maintained. Personnel who conduct inspection and test activities shall be qualified to conduct those activities and certification of the qualification must be submitted to the Buyer upon request.

4.1.2 Design

The Subcontractor/Supplier must define, control, and verify designs developed for this contract. Design inputs must be specified on a timely basis and correctly translated into design documents. Design interfaces must be identified and controlled. Persons who did not design the item must be used to verify design adequacy. Design changes, including field changes, must be reviewed and approved by the same personnel who reviewed and approved the initial designs.

4.1.3 Procurement Document Control

Procurement documents must include or reference sufficient quality and technical requirements in order to describe the items and services requested. Procurement documents must be reviewed and approved by the authorized personnel within

the Subcontractor's/Supplier's organization, and changes must be reviewed and approved by the same individuals who reviewed and approved the original procurement documents.

The Subcontractor/Supplier must have a process for accepting procured items. This process must include one or a combination of the following: Certificate of Conformance, source verification, receiving inspection, and post-installation testing.

The Subcontractor/Supplier shall provide a legible and reproducible Certificate of Conformance. The Certificate of Conformance shall be signed by the Subcontractor's/Supplier's authorized representative responsible for quality assurance.

The Certificate of Conformance shall contain, as a minimum, the following information:

- Identification of the Buyer's contract or purchase order number under which the materials, equipment, component, or service is being purchased;
- Provide traceability by means of positive identification from the material, equipment, component, or service to the Certificate of Conformance;
- Identify the specific procurement requirements met by the material, equipment, component, or service supplied (i.e., codes, standards, or other applicable specification). The procurement requirements shall include any approved changes, waivers, or deviations applicable to the subject materials, equipment, component, or service;
- Identify any procurement requirements that have not been met, together with an explanation and the means for resolving the nonconformance.

The Subcontractor's/Supplier's certification system, including the procedures to be followed in filling out a certificate and the administrative procedures for review and approval of the certificates, shall be described in the Subcontractor's/Supplier's QA Program.

The certification system shall provide a means to verify the validity of Subcontractor/Supplier certificates and the effectiveness of the certification system, such as during the performance of audits of the Subcontractor/Supplier or independent inspection or test of the items. The Buyer shall conduct this verification at intervals commensurate with the Subcontractor's/Supplier's past quality performance.

The Subcontractor/Supplier is required to flow-down all quality assurance requirements from this contract to any sub-tier suppliers/Subcontractor/Suppliers. Any access to the sub-tier suppliers'/Subcontractor/Suppliers' facilities for verification activities will be requested through the Subcontractor/Supplier prior to access, and verification activities may be performed jointly.

The Subcontractor/Supplier shall warrant that all items furnished under the contract are genuine (i.e., new, not refurbished, not counterfeit) and match the quality, test reports, markings, and/or fitness for intended use as required by the contract. Any materials furnished as part of the contract that the government or other duly recognized agency had been previously found to be suspect/counterfeit shall not be used.

All items are subject to inspection at the Subcontractor's/Supplier's facility or lower-tier subcontractor's facility. The Subcontractor/Supplier shall notify the Buyer at least 7 working days in advance of the time when such items or activities will reach the Buyer's identified inspection hold points. As a minimum, final inspection prior to packaging for shipment shall be considered such a hold point, unless specifically waived by the Buyer.

The Subcontractor/Supplier shall obtain all materials to be delivered under the contract directly from the original manufacturer or an authorized manufacturer's representative. The Subcontractor/Supplier shall provide legible and reproducible documentation, with the materials, that provides objective evidence that the items were provided by the original manufacturer. Such documentation may include a copy of the purchase order to the manufacturer, shipping documentation or manufacturer invoice; each of which would identify that the materials were obtained from the original manufacturer.

The Subcontractor/Supplier shall submit, with or prior to item shipment, a recommended spare parts list. The list shall provide the name and address of the original supplier of the replacement part, and the part's drawings, specification, or catalog identity including applicable change or revision information.

All items and/or services procured under this specification shall be subject to inspection by the Buyer or Buyer's representative throughout the contract. Additionally, procured items and/or services shall be subject to inspection for acceptance.

The Subcontractor/Supplier shall grant access to the Subcontractor's/Supplier's plant facilities and records for inspection or audit by the Buyer, his designated representative, and/or other parties authorized by the Buyer.

4.1.4 Identification and Control of Items

The Subcontractor/Supplier shall establish controls to assure that only correct and accepted items are used or installed.

All items shall be identified with the applicable part number, model number, or other identifier prescribed in the specification. Identification shall be on the item or the package containing the item. When the identification is on the item, such marking shall not impair the service of the item or violate dimensional, chemical, or physical requirements.

The Subcontractor/Supplier shall submit a legible and reproducible copy of the product data sheet (e.g., drawing, catalog cut sheet, brochure, etc.) that provides adequate information to enable the Buyer to verify the form and function of the articles procured. One copy of such documentation, unless otherwise specified, shall accompany the item.

The Subcontractor/Supplier shall identify each item, assembly, package, container, or material, having limited shelf life, with the cure date or date of manufacture and the expiration date. The Subcontractor/Supplier shall specify any storage temperatures, humidity and environmental conditions that should be maintained. Material shall not be furnished having less than 75 percent of total shelf life available at time of shipment.

Certified Material Test Reports (CMTRs) containing actual chemical analysis and mechanical properties of the material being supplied shall be submitted prior to or with each shipment of material. Each CMTR shall contain the following information as a minimum:

- Product Description – specification(s), codes, type of material, etc.;
- Actual results of chemical analysis/mechanical testing in accordance with the provisions of the code, standard, and/or specification;
- The specification and material grade;
- Traceability to the item tested (e.g., heat number, lot number, etc.);
- Name and address of manufacturer (may be identified by letterhead, logo, etc.);
- Manufacturer's ASME certificate number and expiration date;
- Buyer's contract number and item number to which the report applies;
- The report shall be signed by an authorized representative of the manufacturer.

In addition to the ASTM/ASME marking, the Subcontractor/Supplier shall physically identify each item/part furnished to the Buyer with the heat number (or identification number that is traceable to the heat number) and the contract number. Methods and materials used to accomplish required markings shall be compatible with the material being marked. Small items shall be bagged/wrapped and tagged.

4.1.5 Control of Processes

The Subcontractor/Supplier shall have processes to control processes, including special processes that control or verify quality (e.g., welding, heat treating, and nondestructive examination). Special processes must be performed by qualified personnel using qualified procedures in accordance with specified requirements.

Subcontractor/Supplier personnel performing weld inspections shall be certified as a CWI in accordance with the requirements of the American Welding Society (AWS), QC-1. The following documentation shall be submitted for Buyer approval prior to the start of fabrication:

- Current AWS CWI certification;
- Current/valid visual acuity examination (must be given every 3 years); and
- Visual weld inspection procedure(s).

Welding procedures and personnel shall be qualified in accordance with applicable AWS or ASME requirements specified in the contract. The Subcontractor/Supplier shall submit copies of all welding procedures, procedure qualification records, and welder qualification records to be employed. Buyer review and approval of these documents is required prior to start of fabrication.

Nondestructive Examination (NDE) personnel shall be qualified and certified in accordance with the recommended guidelines of the American Society of Nondestructive Testing (ASNT) SNT-TC-1A. The Supplier is not authorized to begin fabrication until the following documentation has been approved by the Buyer:

- NDE personnel qualification and certification procedure;
- Level I, II, and/or III personnel qualification and certification records, including objective evidence of NDE training, formal education, examination, experience, date of hire and current visual acuity exam;
- NDE method procedure(s) compliant with the applicable requirements of the Buyer's contract.

NDE reports and radiographs shall be traceable to the item examined, shall include all essential examination parameters, and shall be signed and dated by a qualified/certified NDE examiner. All NDE reports and radiographs shall accompany or preceded shipment of the item or component. Radiographs and radiographic technique and examination reports shall be subject to approval by the Buyer prior to shipment.

These requirements shall be passed to lower-tier subcontractors.

4.1.6 Inspection

The Subcontractor/Supplier shall have a process to plan and execute inspections to verify conformance of an item or activity to specified requirements. The

process shall document the characteristics to be inspected and inspection methods to be employed. The Subcontractor/Supplier shall document the results of inspections. Inspections for acceptance shall be performed by persons other than those who performed or directly supervised the work being inspected.

The Subcontractor/Supplier shall submit, as required by the contract, legible, reproducible copies of inspection and/or test reports. The reports shall include, as a minimum, the following information:

- Identification of applicable inspection and/or test procedure;
- Resulting data for all characteristics evaluated, as required by inspection or test procedures, including reference to information on action taken in connection with nonconformances;
- Traceability to the item inspected/tested (e.g., serial number, part number, lot number, etc.), date of inspection, name of inspector, type of observation; and
- Signature of the Subcontractor/Supplier's authorized representative or agency performing the inspection or test.

4.1.7 Test Control

The Subcontractor/Supplier shall have a process to plan and execute tests to verify conformance of an item or activity to specified requirements. The process shall document the characteristics to be tested and test methods to be employed.

The Subcontractor/Supplier shall prepare a detailed test plan. Prior to starting work, the plan shall be submitted to the Buyer for approval and insertion of Buyer's designated source inspection/witness notification points. The test plan shall provide the following at a minimum:

- Traceability to Buyer's purchase/contract order document number;
- Name or description of the item to be tested (e.g., components, assemblies, subassemblies); and
- Method/procedure to be used during test.

Subsequent revisions/modifications to the test plan require review and approval by the Buyer prior to implementation of the changes.

The Subcontractor/Supplier shall provide test reports that include, as a minimum:

- Item tested,
- Date of test,
- Tester or data recorder,
- Type of observation,
- Results and acceptability,
- Action taken in connection with any deviations noted, and
- Person evaluating test results.

Test plans and test reports must be submitted to the Buyer for the project records.

4.1.8 Control of Measuring and Test Equipment

The Subcontractor/Supplier shall control tools, gages, instruments, and other measuring and test equipment used for activities affecting quality, and shall calibrate at specified periods and adjust to maintain accuracy within necessary limits.

The Subcontractor/Supplier shall maintain legible, reproducible copies of the Certificates of Calibration, traceable to the National Institute of Standards and Technology (NIST), for each article contracted. Each Certificate of Calibration shall be signed by the Supplier's representative responsible for calibration, attesting to its authenticity, and shall be identified with the following information:

- Buyer's contract number;
- Identification of the article to which the Certificate of Calibration applies; and
- Standards used for calibration.

In addition, the Subcontractor/Supplier shall submit a report of actual calibration results. The report shall be identifiable to the acceptance criteria of the items submitted and shall meet the contract requirements. The report shall contain the signature of the authorized representative of the agency verifying compliance. One copy of the documentation, unless otherwise specified, shall accompany the applicable item(s) shipped.

The Certification of Calibration will be held on file by AMEC as objective evidence to support the actual test results and attest to the fact that the calibrated item(s) met requirements.

4.1.9 Handling, Storage, and Shipping

The Subcontractor/Supplier shall prepare and submit for Buyer review and approval, prior to use, procedure(s) or plan(s) for the packaging and shipping of materials, equipment, or components to be furnished under the contract. The procedure(s) or plan(s) shall include, as appropriate, cleanliness inspection prior to packaging, use of preservatives and coatings, descriptions of specially designed shipping containers, handling and rigging data, final inspections and the type of transfer and shipping vehicles.

4.1.10 Control of Nonconforming Items

The Subcontractor/Supplier must have a process to control items that do not conform to specified requirements to prevent inadvertent installation or use. These controls must provide for identification, documentation, evaluation, segregation (when practical), and disposition of nonconforming items, and for notification to affected organizations.

All nonconforming conditions identified at the Subcontractor/Supplier's facility, with a proposed disposition of "Accept-as-Is" or "Repair," as defined below, shall be approved by the Buyer before Supplier implementation of the Nonconformance Report (NCR) disposition:

- **Accept-as-Is:** Nonconforming materials will perform its intended function.
- **Repair:** Nonconforming item can be corrected so that its characteristics meet requirements of the contract.

Nonconforming items identified as "Repair" or "Rework" shall be re-examined in accordance with applicable procedures and with the original acceptance criteria, unless the nonconforming item disposition has established alternate acceptance criteria.

Nonconformances shall be documented by the Subcontractor/Supplier on their own nonconformance form or one provided by the Buyer. After documenting the

nonconformance and providing a proposed disposition and technical justification, the report shall be submitted to the Buyer.

After the proposed disposition has been evaluated, and approved or rejected by the Buyer, the form shall be returned to the Subcontractor/Supplier. Corrective action may only take place after Buyer approval. Copies of completed, Buyer approved, NCRs shall be shipped to the Buyer with the affected item.

4.1.11 Quality System for Material Specifying Additional Testing – ASME III/VIII

Materials shall be manufactured and controlled under a quality program in accordance with the appropriate issue of ASME Section III or VIII. The manufacturer shall have an appropriate Quality System Certificate (e.g., Material Manufacturer, Material Supplier) and utilize it to control their activities associated with execution of the Buyer's contract.

The Supplier's ASME-approved QA Program shall be used during the performance of the contract and shall be subject to audit and approval by the Buyer or its representatives as warranted. The Subcontractor's/Supplier's QA Program and manufacturer's ASME certificate shall be submitted to the Buyer with the proposal.

Where such documentation has been submitted to the Buyer within the previous 12 months and such documentation has not been revised, re-submittals are not necessary. In this instance, the Subcontractor/Supplier shall reference the QA Program title and expiration date.

4.2 QUALIFICATION VERIFICATION

Items to be verified:

(i) Airlock chamber capacity
(ii) Spherical disc valve cycling rates (maximum and minimum).
(iii) Leak (Hydrostatic) and pressure tests

4.3 INSPECTIONS AND TESTS

Seller shall provide all necessary reviews, inspections, tests, analyses, demonstrations, and documentation required to verify that all qualifications have been satisfied, including:

(a) All verifications stated in section 4.2, Qualification Verification.

(b) Testing to ensure satisfaction of the specified functional characteristics, as specified in section 3.2.1, including leak and pressure testing.

(c) Measurement of the specified physical characteristics and comparison with previous tests on similar equipment.

(d) Examination for workmanship.

4.4 TRAINING OF INSPECTION AND TEST PERSONNEL

The Seller shall qualify Inspection and Test Personnel performing acceptance inspections and testing. In addition, the Seller shall document all qualifications. Review of the qualifications may be subject to a surveillance or source inspection by the Buyer.

5.0 PREPARATION FOR DELIVERY

5.1 GENERAL

The equipment shall be shipped via truck. All parts shall be match marked and shown on the general assembly drawings.

5.2 PRESERVATION AND PACKAGING

Seller shall provide all necessary packaging, supports, cushioning, and wrapping to protect the DWAA and TSAA and all internal components from damage during shipping.

5.3 PACKING

The DWAA and TSAA shall be packed appropriately to protect the exterior surfaces during shipping and handling.

5.4 MARKING

All shipping containers shall be marked and labeled for safety, protection, and identification. If the unit must be disassembled for shipping, containers shall be identified as to their contents.

5.5 HANDLING

The seller shall identify any special handling requirements for the DWAA and TSAA, such as loading and unloading limitations, and restrictions regarding hooks, bails, forklifts, etc.

5.6 SHIPPING

Seller shall specify limitations or special instructions on shipping.

6.0 NOTES

There are no notes for this specification.

7.0 APPENDICES

Appendix	Description
A	TFC-ESHQ-QC-C-03 – Control of Suspect/Counterfeit Items

8.0 ATTACHMENTS

Document No.	Description	Rev.
145579-D-DS-018.1	Dried Waste Airlock Assembly Data Sheet	1
145579-D-DS-018.2	Top-Off Soil Airlock Assembly Data Sheet	1
34-YV-009	Waste Feed Main Chute Airlock Assembly No. 1 Valve No. 1	B
34-YV-010	Waste Feed Main Chute Airlock Assembly No. 1 Valve No. 2	C
34-YV-019	Waste Feed Main Chute Airlock Assembly No. 2 Valve No. 1	B
34-YV-020	Waste Feed Main Chute Airlock Assembly No. 2 Valve No. 2	C
34-YV-201	Top-off Soil Feed Chute Airlock Assembly No. 1 Valve No. 1	C
34-YV-202	Top-off Soil Feed Chute Airlock Assembly No. 1 Valve No. 2	C
34-YV-203	Top-off Soil Feed Chute Airlock Assembly No. 2 Valve No. 1	C
34-YV-204	Top-off Soil Feed Chute Airlock Assembly No. 2 Valve No. 2	C
34-YV-205	Top-off Soil Feed Chute Airlock Assembly No. 3 Valve No. 1	C
34-YV-206	Top-off Soil Feed Chute Airlock Assembly No. 3 Valve No. 2	C
F-145579-34-A-0101	AWTE Hood and Waste Feed P&ID	B
F-145579-34-A-0102	ICV Box and AWTE Hood Instrument Air P&ID	B
F-145579-34-D-0003	Chute Layout – Top-Off Soil Impingement Tank to ICV Box Drawing	E
F-145579-34-D-0006	Chute Layout – Waste Silo to ICV Box Drawing	E

TECHNICAL SPECIFICATION

PROJECT:	Final DBVS Design	145579-D-SP-018
PROJECT NO.:	145579	APPENDIX A TFC-ESHQ-Q_C-C-03, (REV. B)
CLIENT:	AMEC E&E – Richland, WA	

APPENDIX A

TFC-ESHQ-Q_C-C-03, REV. B
CONTROL OF SUSPECT COUNTERFEIT ITEMS

This page intentionally left blank.

USQ #03-1456-S

CH2M HILL Hanford Group, Inc.	Manual	ESHQ
	Document	TFC-ESHQ-Q_C-C-03, REV B
CONTROL OF SUSPECT/ COUNTERFEIT ITEMS	Page	1 of 52
	Issue Date	December 31, 2003
	Effective Date	December 31, 2003

APPROVAL AUTHORITY: R. L. Higgins

DOCUMENT OWNER: J. L. Logston

TABLE OF CONTENTS

1.0 PURPOSE AND SCOPE 2
2.0 IMPLEMENTATION 2
3.0 RESPONSIBILITES 2
- 3.1 Procurement Personnel 2
- 3.2 Inspection Personnel 2
- 3.3 Quality Assurance Engineer 2
- 3.4 S/CI Coordinator 2
- 3.5 Assigned Engineering Personnel 3
- 3.6 Responsible Managers and Supervisors 3

4.0 PROCEDURE 3
- 4.1 Introduction 3
- 4.2 Procurement 3
- 4.3 Inspection for Potential S/CI 4
- 4.4 Control of Material Identified as S/CI 4
- 4.5 Reporting of S/CI 5
- 4.6 Acceptance, Removal, and Disposition of S/CI 5
- 4.7 Surplus/Excess Material 7
- 4.8 Assessments 7
- 4.9 Training 7

5.0 DEFINITIONS 8
6.0 RECORDS 9
7.0 SOURCES 9
- 7.1 Requirements 9
- 7.2 References 9

TABLE OF FIGURES

Figure 1. Management of Suspect/Counterfeit Items. 11

TABLE OF ATTACHMENTS

ATTACHMENT A - SUSPECT COMPONENTS LIST 12
ATTACHMENT B - CLASSIFICATION OF POTENTIALLY SUSPECT/COUNTERFEIT ITEMS 30
ATTACHMENT C - SUSPECT/COUNTERFEIT ITEMS INFORMATION SOURCE LIST 32
ATTACHMENT D - CHARACTERISTICS THAT MAY MAKE PRODUCTS VULNERABLE TO MISREPRESENTATION, FRAUDULENT PRACTICES, AND COUNTERFEITING 34
ATTACHMENT E - WHERE TO LOOK FOR SUSPECT/COUNTERFEIT ITEMS 35
ATTACHMENT F - SUSPECT/COUNTERFEIT PARTS DETECTION 36
ATTACHMENT G - FASTENERS 41
ATTACHMENT H - DOE HEADMARK LIST 45
ATTACHMENT I - REFURBISHED MOLDED CASE CIRCUIT BREAKERS 47
ATTACHMENT J - ASSESSMENT/SURVEILLANCE LINES OF INQUIRY 51

This page intentionally left blank.

1.0 PURPOSE AND SCOPE
(7.1.1, 7.1.2, 7.1.3, 7.1.4)

This procedure describes the process for the identification, prevention, evaluation, notification, and disposition of suspect/counterfeit items (S/CIs) at CH2M HILL. This procedure applies to items that are:

- In the procurement cycle
- In source or receiving inspection
- In inventory at warehouses and staging areas
- Installed
- In operation.

This procedure applies to:

- Company ordered material
- Material supplied by subcontractors
- Material and test equipment supplied by test sponsors
- Construction
- Fabrication shops
- Laboratory work and experiments
- Surplus/excess property
- Government property
- Material obtained from U.S. Department of Energy (DOE) sources.

2.0 IMPLEMENTATION

This procedure is effective on the date shown in the header.

3.0 RESPONSIBILITES

3.1 Procurement Personnel

Maintain awareness of S/CI and support S/CI program implementation.

3.2 Inspection Personnel

Perform inspections for conformance or acceptance of material including verifications that the item(s) being inspected do not exhibit indications attributed to potential suspect/counterfeit items.

3.3 Quality Assurance Engineer

1. Ensures appropriate procurement controls are implemented to preclude entry of S/CI to the site through review of procurement documents.

2. Notifies the S/CI coordinator of nonconformance reports (NCRs) associated with S/CI.

3.4 S/CI Coordinator

Apprises company, DOE, and DOE local Office of the Inspector General personnel of S/CI status and final disposition.

3.5 Assigned Engineering Personnel

1. Evaluate S/CI information for applicability to design and procurement specifications, system configuration, and operating conditions.

2. Provide technical specifications, critical characteristics, and acceptance methods in support of procurement and inspection activities to prevent introduction of S/CI.

3.6 Responsible Managers and Supervisors

1. Maintain awareness of S/CI.

2. Control potential S/CI.

3. Evaluate training needs based on job classification and ensure individuals receive training in S/CI awareness, prevention, detection, and reporting, as appropriate, to respective assignments.

4.0 PROCEDURE

4.1 Introduction

The two most common S/CIs found at DOE facilities have been threaded fasteners fraudulently marked as high-strength bolts, and refurbished electrical circuit breakers sold and distributed under false certifications. Purchasers have also been misled into accepting S/CIs that do not conform to specified requirements by falsified documentation.

NOTE: Questions about a specific item should be referred to the S/CI coordinator. Attachment A provides a historical listing of suspect components. Equipment/material types or classes have been established to identify those specific items which are classified as potentially misrepresented or S/CI. Attachment B provides a listing of those classifications and items subject to S/CI control at tank farm facilities.

4.2 Procurement

CH2M HILL Personnel

1. Ensure material requirements are specified in subcontracts to preclude the purchase or introduction of S/CI. Use the information in Attachments A, B, C, D, E, F, G, H, and I to identify specific components, characteristics, precautions, and other considerations that are to be addressed during the procurement process to prevent introduction of S/CI.

2. Ensure material requests for quality level 1, 2, and 3 items and services include appropriate technical specifications, procurement quality clauses, documentation, and inspection requirements to prevent introduction of S/CI.

3. In maintenance and construction/fabrication subcontracts, specify appropriate requirements to preclude the purchase or introduction of S/CI.

Quality Assurance Engineer	4.	Review procurement documents to ensure they contain the appropriate procurement controls to preclude entry of S/CI to the site.
Procurement Personnel	5.	Ensure vendor selection complies with qualification requirements for the quality level of the items and services and is based on the vendor's ability to demonstrate the capability of delivering acceptable items.

4.3 Inspection for Potential S/CI

Bill of Material Preparers	1.	For quality level 0 and P-Card items listed in Attachment B, designate an S/CI inspection in the special instruction of the Bill of Material (BOM) in accordance with the requirements of TFC-BSM-FPM_MC-C-01.
	2.	Ensure quality level 0 and P-Card items are inspected prior to material issuance.
First Line Manager	3.	Obtain on-site S/CI inspection for quality level 0 and P-Card items prior to material issue and use.
Engineering Personnel	4.	Provide technical specifications, critical characteristics, and acceptance methods to facilitate inspection planning for S/CI prevention and detection.
Quality Assurance Engineer	5.	Ensure S/CI detection criteria is incorporated into QA inspection planning activities.
Assigned Inspection Personnel	6.	Use Attachments G, H, and I as resources for detecting S/CIs during walkdowns and inspections. Specific items are subject to inspection.
	7.	Verify and document that the items being inspected do not exhibit indications attributed to potential S/CIs as described in Attachments G through J.
	8.	If an S/CI is detected during inspection activities, document and control the S/CI in accordance with TFC-ESHQ-Q_ADM-C-02.

4.4 Control of Material Identified as S/CI

Responsible Manager or Delegate	1.	Ensure items identified as potential S/CI are documented as nonconforming and controlled in accordance with TFC-ESHQ-Q_ADM-C-02. Non conformances identified as S/CI shall be reviewed and processed within four working days to determine whether or not the items are S/CI.
	2.	Transfer tagged S/CIs to 2101-HV for storage.
Cognizant Quality Engineer	3.	Notify the S/CI coordinator of all NCRs associated with the S/CI.

4.5 Reporting of S/CI

Assigned Company Personnel

1. Report all items identified as potential S/CI in accordance with TFC-OPS-OPER-C-24. (7.1.1)

   NOTE: Reporting of S/CIs is required regardless of safety class, where the S/CIs are located (receiving inspection, inventory/storage areas, fabrication and maintenance areas, installed, etc.), or their operating status.

S/CI Coordinator

2. Notify the DOE S/CI coordinator of all occurrence reports associated with S/CIs. As appropriate, transmit copies of NCRs and applicable documentation.

3. Notify the DOE local Office of Inspector General of all S/CIs. Notification should be e-mailed to the DOE local Office of Inspector General points of contact providing information in the following format:

   - NCR number
   - Date NCR was written
   - Purchase order/job control number (if known)
   - End use of product
   - Name of manufacturer, distributor, supplier
   - Safety class (if known)
   - Occurrence report number
   - Value of item(s)
   - Point(s) of contact
   - Description of item(s)
   - Quantity
   - Description of nonconformance
   - Any other pertinent information that would help the DOE local Office of Inspector General.

4.6 Acceptance, Removal, and Disposition of S/CI

S/CI Coordinator

1. Notify responsible company personnel that S/CI may not be destroyed or disposed of without written release from the DOE local Office of Inspector General.

2. Prior to destroying or disposing of S/CIs, consult the Inspector General to determine if there is a need to retain the items as evidence for potential litigation. Based on the Office of Inspector General's decision, either:

   a. Retain S/CI material as evidence for potential litigation, or

   b. Release S/CI material for final disposition and/or disposal as directed by the S/CI coordinator.

Engineering Personnel

3. Evaluate S/CI to determine if its use could create a safety hazard in its current/proposed application.

Assigned Company Personnel

4. If the engineering evaluation of the S/CI has determined that its use could not create a safety hazard in its current/proposed application:

   a. Disposition the S/CI to remain in place.

      NOTE: Criteria for dispositioning S/CI is by acceptance, removal, or replacement after an engineering evaluation. This should be based on the deficient characteristic of the particular item.

   b. Identify the accepted S/CI by marking with orange paint or other appropriate methods and note its location.

   c. In areas where operating temperatures are 500°F and above or are subject to cyclic loading where fatigue failure is likely to occur, replace all grades 8 and 8.2 S/CI fasteners prior to further use of the equipment.

   d. Engineering must also identify a way to prevent its reuse in an application it may not be suitable for.

   e. If removed, prepare the S/CI for disposal.

5. If the engineering evaluation of the S/CI has determined that its use could create a safety hazard in its current/ proposed application:

   a. Contact Waste Feed Operations (WFO) Shift Operations to secure the equipment.

   b. Remove the S/CI as soon as practical.

   c. Tag, segregate, or otherwise control the S/CI to prevent inadvertent use.

   d. Prepare the S/CI for disposal.

S/CI Coordinator

6. Ensure that all S/CI material dispositioned for disposal is properly controlled and arranged for the material to be permanently and irrevocably altered so that it cannot be used. Examples of alterations include:

   - Melting
   - Shredding
   - Destroying the threads on fasteners.

7. If the DOE/Office of Inspector General has approved disposal, arrange for pick-up and disposal of the altered S/CI material on a yearly basis. Burying S/CIs may be acceptable if they do not contain hazardous material or material prohibited by federal, state, or local regulations.

4.7 Surplus/Excess Material

Responsible Personnel

1. Remove S/CI from surplus/excess material before they are released for sale or transfer of accountability.

2. Ensure surplus items received from DOE or other facilities are inspected for S/CI prior to installation.

4.8 Assessments

Quality Assurance

1. Conduct assessments of the effectiveness of the S/CI program.

   NOTE: The assessment should be performance based and designed to determine if company activities are conducted in accordance with this procedure, DOE 414.1A, DOE O 440.1A, DOE G 440.1-6, and 10 CFR 830, Subpart A.

2. Lines of inquiry will be used as appropriate during assessments in areas that interface with the S/CI process. See Attachment J.

4.9 Training

Managers and Supervisors

1. Evaluate individual training needs of assigned personnel to ensure they are proficient in S/CI identification and control procedures within their areas of responsibility.

2. All personnel involved in the following specific areas will receive S/CI process and hands-on training, whether it be formal, continuing training, or required reading. The formal training course that is available is Module #1, Course 170720, "Suspect/Counterfeit Items."

   - Quality Assurance/technicians
   - Engineers (design, systems, etc.) who procure materials/equipment
   - Maintenance personnel (electricians, pipefitters, millwrights, instrument technicians)
   - Warehouse personnel who handle and process materials/equipment
   - Tool Crib attendants.

5.0 DEFINITIONS

Counterfeit part. A part made or altered so as to imitate or resemble an "approved part" without authority or right, and with the intent to mislead or defraud by passing the imitation as original or genuine. (Source: U. S. Department of Transportation Federal Aviation Administration Advisory Circular 21-29B, Detecting and Reporting Suspected Unapproved Parts).

Fastener (regardless of the safety classification). (Source: Fastener Quality Act, Public Law 101-592 as amended by Public Law 104-113).

- A screw, nut, bolt, or stud with internal or external threads or a load-indicating washer with a nominal diameter of 5 millimeters or greater in the case of such items described in metric terms; or 1/4 inch or greater in the case of such items in terms of the English system of measurement which contains any quantity of metal and held out as meeting a standard or specification which requires through-hardening; or

- A screw, nut, bolt, or stud having internal or external threads which bears a grade identification marking required by a standard or specification; or

- A washer to the extent that it is subject to a standard or specification applicable to a screw, nut, bolt, or studs described above, except that such term does not include any screw, nut, bolt, or stud that is produced and marked as American Society for Testing and Materials (ASTM) A 307 Grade A or produced in accordance with ASTM F432.

Grade identification. Any symbol appearing on a fastener purporting to indicate that the fastener's base material, strength properties, or performance capabilities conform to a specific standard of a consensus standards organization or government agency.

Graded classifications. System used to determine minimum requirements for structures, systems and components (e.g., design, operation, procurement, and maintenance requirements). The graded classifications in order of precedence are safety class, safety significant, and enhanced quality general services.

High strength graded fastener. Fasteners having a minimum tensile strength of 75 ksi, including those produced and procured in accordance with the Society of Automotive Engineers Standard J429, Grades 5, 5.2, 8, and 8.2; ASTM Standard A325, Types 1, 2, and 3; ASTM A490, ASTM A354, ASTM A449 (I&II), and some ASTM F468.

Item. An all-inclusive term used in place of any of the following: appurtenance, assembly, component, equipment, material, module, part, structure, subassembly, subsystem, system, or unit. (Source: ASME-NQA-1-1989, Quality Assurance Requirements for Nuclear Facilities).

An all-inclusive term used in place of any of the following: appurtenance, facility, sample, assembly, component, equipment, material, module, part, structure, subassembly, subsystem, system, unit, documented concept, or data. (Source: DOE G 440.1-6, Implementation Guide for use with Suspect/Counterfeit Items Requirements of DOE O 440.1, Worker Protection Management; 10 CFR 830.120; and DOE 5700.6C, Quality Assurance).

Substantial safety hazard. A loss of safety function to the extent that there is a major reduction in the degree of protection to the public or employee health and safety. (Source: U.S. Department of Energy (DOE) M 232.1-1A, "Occurrence Reporting and Processing of Operations Information").

Suspect/counterfeit items. A suspect item is one in which there is an indication by visual inspection, testing, or other information that it may not conform to established Government or industry-accepted specifications or national consensus standards. A counterfeit item is a suspect item that is a copy or substitute without legal right or authority to do so or one whose material, performance, or characteristics are knowingly misrepresented by the vendor, supplier, distributor, or manufacturer. An item that does not conform to established requirements is not normally considered S/CI if the nonconformity results from one or more of the following conditions, which should be controlled by site procedures as nonconforming items:

- Defects resulting from inadequate design or production quality control
- Damage during shipping, handling, or storage
- Improper installation
- Deterioration during service
- Degradation during removal
- Failure resulting from aging or misapplication, or
- Other controllable causes.

(Source: DOE G 440.1-6, Implementation Guide for use with Suspect/Counterfeit Items Requirements of DOE O 440.1, "Worker Protection Management;" 10 CFR 830.120; and DOE 700.6C, "Quality Assurance").

6.0 RECORDS

No records are generated during the performance of this procedure.

7.0 SOURCES

7.1 Requirements

1. DOE-O-232.1A Part 4.f. (1), "Occurrence Reporting and Processing of Operations Information." (S/RID)

2. DOE O 414.1A, "Quality Assurance."

3. 10 CFR 830, Subpart A, "Quality Assurance Requirements."

4. DOE O 440.1A, "Worker Protection Management for DOE Federal and Contractor Employees."

7.2 References

1. HNF-SD-MP-SRID-001, "Standards/Requirements Identification Document for the Tank Farm Contractor."

2. DOE G 440.1-6, "Implementation Guide for use with Suspect/Counterfeit Items Requirements of DOE O 440.1, Worker Protection Management; 10CFR830.120; and DOE5700.6C, Quality Assurance."

3. NRC Information Notice 89-70: "Possible Indications of Misrepresented Vendor Products."

4. NRC Information Notice 89-70, Supplement 1: "Possible Indications of Misrepresented Vendor Products."

5. TFC-BSM-CP_CPR-C-01, "Purchasing Card (P-Card)."

6. TFC-BSM-CP_CPR-C-03, "Buyer's Technical Representative Process."

7. TFC-BSM-CP_CPR-C-06, "Procurement of Items (Materials)."

8. TFC-BSM-CP_CPR-C-09, "Supply Chain Process."

9. TFC-BSM-CP_CPR-C-11, "Acquisition Planning."

10. TFC-BSM-FPM_MC-C-01, "Material Receipt, Storage, Issuance, Return, and Excess Control."

11. TFC-ESHQ-Q_ADM-C-02, "Nonconforming Item Reporting and Control."

12. TFC-OPS-OPER-C-24, "Occurrence Reporting and Processing of Operations Information."

13. TFC-PLN-03, "Engineering Program Management Plan."

Figure 1. Management of Suspect/Counterfeit Items.

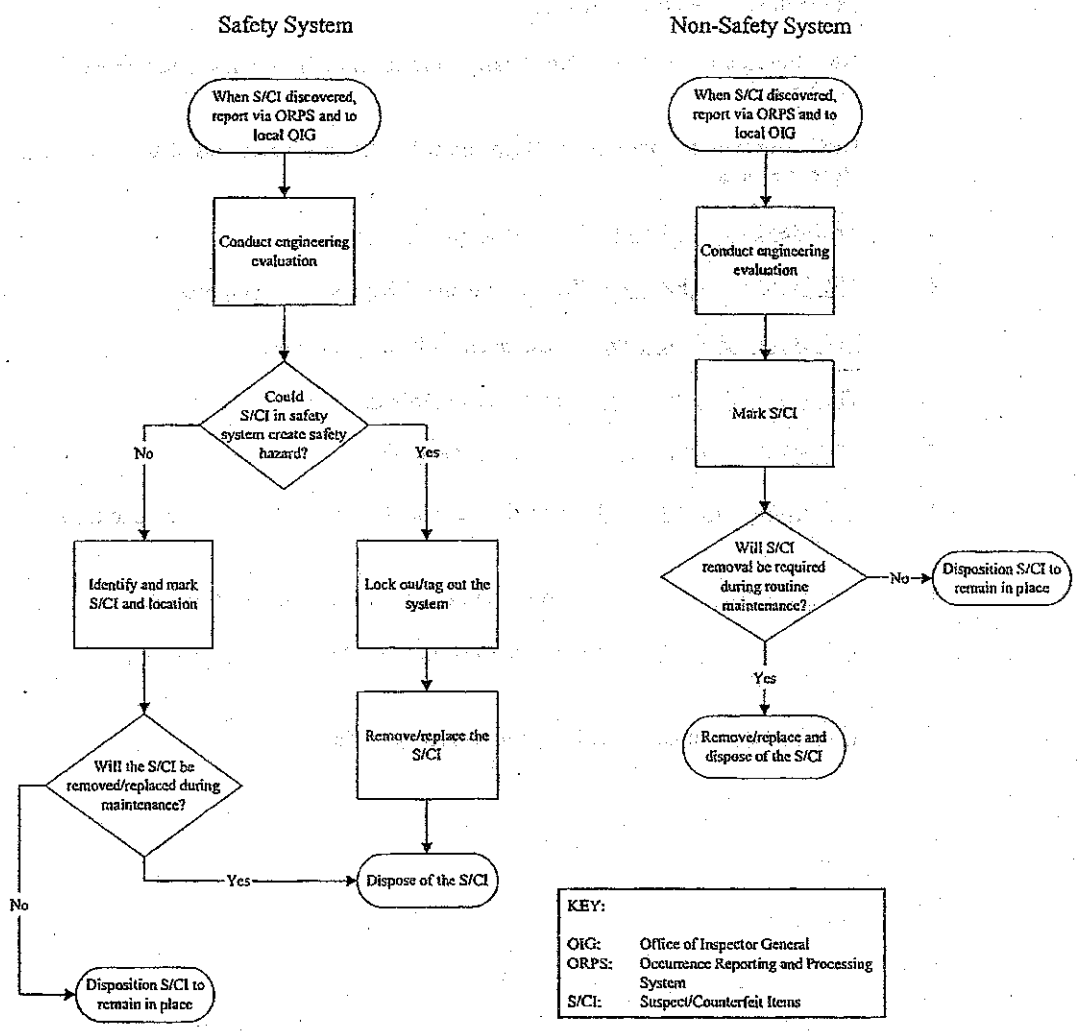

ATTACHMENT A - SUSPECT COMPONENTS LIST

This list was extracted from the U.S. Department of Energy Quarterly Reports on the "Analysis and Trending of Suspect/Counterfeit Items at Department of Energy Facilities," July 1997.

NOTE: It is not necessarily a negative reflection on a supplier or manufacturer if S/CIs are reported regarding its particular product. Reputable manufacturers and suppliers have a vital interest in preventing the manufacture or distribution of S/CI associated with themselves. It may be that the supplier or manufacturer was victimized and is pursuing S/CI associated with its products in an aggressive, prudent, and professional manner in order to get such items off the market. Therefore, each particular case regarding the manufacture or supply of S/CI must be examined on its own merit without making premature conclusions regarding fault or culpability of the manufacturer or supplier whose name is associated with the S/CI. In short, what follows is a "suspect components list" and not a "suspect manufacturer or supplier list." The manufacturer or supplier identified in the following table should not be considered to have engaged in any wrongdoing without additional information.

ATTACHMENT A - SUSPECT COMPONENTS LIST (cont.)

Component	Manufacturer/Type	Description	Supplier	References
Circuit Breakers	General Electric (Component Examples) • AKF-2-25 • EC Trip Types, E-C-1, E-C-2A • AK All Types	Metal clad, low voltage, DC	Satin America & Circuit Breaker Systems Inc.	NRC I.N. 89-45, Supplements and Attachments SENS Report ID #6 5/23/89
Circuit Breakers	General Electric (Component Examples) • AK-3A-25 • KHL-36 125 • THEF 136050 • AK-2-75-3 • AK-2 • AK-1-50 • AK-1-75 • B • TDQ • TCVVFS • TFJ • TEB122015-WL • TEB132090-WL • TE111015 • TED134060-WL • TEB124050-WL • THED136100 WL • TED126050 • THED136060 WL • THGB2120 • TEF134015 • THEF136M1100 • TED 134030-WL • AK2A25 • THED-136100-WL • THED-136050-WL • THED-136045-WL • THFK-236070-WL • TE-122070 • THED-136150-WL • THED-13600-WL • TED-113020 • TEC-360S0 • THED-124015-WL	1, 2, & 3 pole, various amperages	Bud Ferguson's Industrial Control & Supply, Inc., General Circuit Breaker & Electrical Supply HLC Electric Supply NSSS, Inc. California Breakers, Inc. Rosen Electric Equipment PENCON International (DBA) General Magnetics/ Electric Wholesale Lakeland Engineering Equipment Co. ANTI THEFT Systems, Inc. (DBA) ATS Circuit Breakers and AC Circuit Breaker Electrical Supply California Breakers Voyter Electric Co.	NRC I.N. 88-46 Supplements and Attachments NRC I.N. 90-46 Office of Nuclear Safety 93-5 (#11)

ATTACHMENT A - SUSPECT COMPONENTS LIST (cont.)

Component	Manufacturer/Type	Description	Supplier	References
Circuit Breakers	Westinghouse (Component Examples) • TF136090 • TF361050WL • TED1130020			
	• Not Provided	Commercial Grade	Westinghouse Electric Supply Co. (WESCO)	NRC I.N. 91-48
	• DB-25 & DS-416	Low Voltage	Satin America & Circuit Breaker Systems, Inc.	NRC I.N. 89-45 & Supplement #2
	• FSN-5925-628-0641 • DB-25 • DB-50 • HKB3150T • FB3020 • FB3070 • FB3050 • EHB3025 • LBB3125 • HKA31250 • JA3200 • EHB2100 • 225N	Trip units; Navy Trip units; 1, 2, & 3 pole various amp. ratings	General Circuit Breaker & Electrical Supply HLC Electrical Supply California Breakers, Inc. PENCON International (DBA) General Magnetics/Electric Wholesale	NRC I.N. 88-46, Supplements and Attachments Office Of Nuclear Safety 93-9
	• EB 1020 • HDEA 2030 • MCP331100R • MCP431550CR • BAB3060H • 656D14 8G03 • FA-2100 • EH-2050 • HFB-3050 • HFD(B)-3020 • MA3600 • F2020 • EH2100 • EB3050 • HMC3800F • EA2090 • FA3125 • HMCP 150		ANTI THEFT Systems, Inc. (DBA) ATS Circuit Breakers and AC Circuit Breaker - Electrical Supply Molded Case Circuit Breakers NSSS, Inc. Spectrum, Tech. Rosen Electric Luckow Circuit Breaker	

ATTACHMENT A - SUSPECT COMPONENTS LIST (cont.)

Component	Manufacturer/Type	Description	Supplier	References
Circuit Breakers	Westinghouse (cont.) (Component Examples) • HFD • EH2070 • FA2050 • JA2225 • JL3B125 • JL3B070 • JL3B150 • JL3B200 • JL3B090 • JL3B100 • HLM3800T • F3100N • MA3500 • EH2015 • FA3035 • FA2100 • HLA2125OTM • EH2070 • JB3100 • EB2030 • 8MC800 • CAH3200 • EHB3040 • JL3-B150 • JL3-B200 • JL3-B090 • JL3-B1000 • HFA, HFB, FA • JL3-(B)8070 • JL3-B125 • EH-2020 • FA-3035 • EH-2050 • FA-2100 • FA-2050 • HFB-3050 • JA-2225 • HLM3800T • F3100N • MA3500 • EH2015 • LA3200WL • HLA3200T • 2602D58U9	Shunt Trips Aux. Contacts 2 & 3 pole circuit breakers of various amperages	General Circuit Breaker & Electrical Supply HLC Electrical Supply PENCON International (DBA) General Magnetics/ Electric Wholesale ANTI THEFT Systems, Inc. (DBA) ATS Circuit Breakers and AC Circuit Breaker - Electrical Supply Molded Case Circuit Breakers Co. (MCCB)	NRC LN. 88-46 Supplements and Attachments

ATTACHMENT A - SUSPECT COMPONENTS LIST (cont.)

Component	Manufacturer/Type	Description	Supplier	References
Circuit Breakers	Westinghouse (cont.) (Component Examples)			
	• HLB3200T • 262156G19 • 1A & 1B			NRC I.N. 88-46 Supp. & Attach.
	• HL300T • HLA2400TM • HMA3600T • HMA3700T • HKA3225T • HNB2700T	225 amp, 3 pole 3 pole, 20 amp 3 pole, 30 amp 1 pole, 20 & 30 amp 2 pole, 20 & 30 amp 3 pole, 60 amp	Not Provided	
	• MDL#KAF • QNB3020 • QNB3030 • BA			SENS ID #10 3-17-89 SENS ID #11 3-3-89
	• BA	3 pole, 20 amp	Not Provided	
	• BA			
	• E3060			
	• F3020			SENS Report ID #12 10-19-88 NRC I.N. 88-46
Circuit Breakers	ITE (Component Examples)			
	• Model - E43B015	3-phase 480 volt	Cal. Breakers/Elect. Wholesale Supply Co.	SENS Report ID #8, 5-5-89
	• EQ-B	1 pole, 20 amp 3 pole, 30 amp	Not Provided	SENS ID #10 3-17-89
	• EE-3B030			SENS ID #11 3-3-89
	• EF3B070 • EF3H050 • EF3B125 • EF3B040 • E42B020 • QJ2B200 • JL3B400	2 & 3 pole various amperages	General Circuit Breaker & Electrical Supply HLC Electrical Supply	NRC I.N. 88-46, Supplements and Attachments

ATTACHMENT A - SUSPECT COMPONENTS LIST (cont.)

Component	Manufacturer/Type	Description	Supplier	References
Circuit Breakers	ITE (cont.) (Component Examples) • HE9B040 • EE3B050 • BQ2B030 • EE3B070 • EE2B100 • EE2B050 • EE2B030 • FJ3B225 • ET • KA • EH-313015 • JL-3B070 • JL-3B150 • E43B015 • EF2-B030 • EH3B100 • QP1B020 • QJ3B200 • EF3B100 • I193		California Breakers, Inc. PENCON International (DBA) General Magnetics/ Electric Wholesale ATS Circuit Breakers, Inc. Panel Board Specialties Rosen Electric Equipment	
Circuit Breakers	ITE, Gould & ITE Imperial Brown Boveri Elect. (BBE) ASEA Brown Boveri (Component Examples) • Type HK • 5 HK • 7.5 HK • 15 HK • 38 HK • ITE 62-6	Not Provided ID-4KV Not Provided Not Provided Not Provided	Brown Boveri ASEA Brown Boveri	NRC I.N. 89-86 NRC I.N. 87-41 Office of Nuclear Safety, 92-25
Circuit Breakers	Square "D" Co. Component Examples • KHL 36125 (Any Type)	Molded Case	General Circuit Breaker & Electrical Supply HLC Electric Supply California Breakers, Inc. PENCON International (DBA) General Magnetics/Electric Wholesale	NRC I.N. 88-46 Supp. & Attach. NRCB 88-10 NRC I.N. 90-46

ATTACHMENT A - SUSPECT COMPONENTS LIST (cont.)

Component	Manufacturer/Type	Description	Supplier	References
Circuit Breakers	Square "D" Co. Component Examples (cont.)		ANTI THEFT Systems Inc. (DBA) ATS Circuit Breakers and AC Circuit Breaker - Electrical Supply	
	• QOB220	1 pole, 15 amp	Not Provided	SENS ID #10 3-17-89
	• QO220 • LO-3	2 & 3 pole 20 & 50 amp breakers	General Circuit Breaker & Electrical Supply	NRC LN. 89-45 & Supplement #2
	• SBW-12 • 989316 • FAL3650-16M or • FAL36050-16M • KA36200	3 pole - 200 amp breaker 30A/600V	HLC Electric Supply California Breakers, Inc.	
	• 999330	Not Provided	PENCON International (DBA) General Magnetics/Electric Wholesale	
	Manufacturer not Provided • EHB3025	Not Provided	Stokely Enterprises Molded Case Circuit Breakers	DOE Letter 8-26-91 Reprinted NuVEP: Bulletin 7-26-91
Circuit Breakers	Fed. Pacific (Component Examples)		General Circuit Breaker & Electrical Supply	
	• NEF431020R • NE111020 • NE	3 pole, 20 amp 1 pole, 20 amp 1 pole, 15 amp	HLC Electric Supply California Breakers, Inc.	
			PENCON International (DBA) General Magnetics/Electric Wholesale	SENS ID. #10 3-17-89

ATTACHMENT A - SUSPECT COMPONENTS LIST (cont.)

Component	Manufacturer/Type	Description	Supplier	References
Circuit Breakers	Fed. Pacific (Component Examples) (cont.) • NF63-1100 • NE22-4060 • NE22-4100 • NEF-433030 • 2P125	1, & 3 pole - 30, 60 & 100 amp breakers	ANTI THEFT Systems, Inc. (DBA) ATS Circuit Breakers and AC Circuit Breaker - Electrical Supply General Circuit Breaker & Electrical Supply HLC Electric Supply California Breakers, Inc.	SENS ID. #11 3-3-89 NRC I.N. 88-46, Supp. & Attach.
	Jefferson (Component Examples)	Not Provided	PENCON International (DBA) General Magnetics/electric Wholesale ANTI THEFT Systems, Inc. (DBA) ATS Circuit Breakers and AC Circuit Breaker - Electrical Supply Mid West Co.	NRC I.N. 88-46, Supp. & Attach.
Circuit Breakers	Superior (Component Examples) • 246U-3	Not Provided	General Circuit Breaker & Electrical Supply Rosen Electric HLC Electric Supply California Breakers, Inc. PENCON International (DBA) General Magnetics/Electric Wholesale ANTI THEFT Systems, Inc. (DBA) ATS Circuit Breakers and AC Circuit Breaker - Electrical Supply	NRC I.N. 88-46 Supp.& Attach.

ATTACHMENT A - SUSPECT COMPONENTS LIST (cont.)

Component	Manufacturer/Type	Description	Supplier	References
Circuit Breakers	Manufacturer Not Provided (Component Examples) 50DHP250	 2 pole - 50 amp	General Circuit Breaker & Electrical Supply HLC Electric Supply California Breakers, Inc. PENCON International (DBA) ATS Circuit Breakers and AC Circuit Breaker - Electrical Supply	NRC I.N. 88-46, Supp. & Attach.
Circuit Breakers Heaters	Cutler Hammer (Component Examples) • 10177H13 • 10177H21 • 10177H32 • 10177H036 • 10177H1049	 Not Provided	AAKER General Circuit Breaker & Electrical Supply HLC Electrical Supply California Breakers, Inc. PENCON International (DBA) General Magnetics/Electric Wholesale ANTI THEFT Systems, Inc. (DBA) ATS Circuit Breakers and AC Circuit Breaker - Electrical Supply	NRC I.N. 88-46, Supp. & Attach.

ATTACHMENT A - SUSPECT COMPONENTS LIST (cont.)

Component	Manufacturer/Type	Description	Supplier	References
Switches	(Component Examples) Crouse Hinds #EDSC2129 Sq. D Type G. Class 9012, 9025, 9016	Tumbler, ft. op	Platt Electric Supply Co. Gen. Motors, Electro-Motive Design	SENS ID #16 1-27-92 Office of Nuclear Safety 93-24 & 93-27
Transmitters	Rosemount	(Component Examples) • Model 1151 GP • Model 1151 DP	Venetech	E.L. Wilmot letter dated 8-1-91 H. Richardson letter HR-81-91 dated 8-15-91
Motors	Siemen & Allis (Component Examples) INP 143 T 215 T	10 H.P.	General Circuit Breaker & Electrical Supply HLC Electric Supply California Breakers, Inc. PENCON International (DBA) General Magnetics/Electric Wholesale ANTI THEFT Systems, Inc. (DBA) ATS Circuit Breakers and AC Circuit Breaker - Electrical Supply Rosen Electric Equipment	NRC I.N. 88-46, Supplements and Attachments

ATTACHMENT A - SUSPECT COMPONENTS LIST (cont.)

Component	Manufacturer/Type	Description	Supplier	References
Relays	Potter & Brumfield (Component Examples) MDR-138, 173-1 134-1, 142-1	Not-latching rotary	Stokely Enterprises Spectronics, Inc. Nutherm International The Martin Co.	NRC I.N. 90-57 & Attach.
	Teledyne	All qualified to MIL-R-28776 and MIL-R-39016	Not Provided	DOE-ID Wilmot letter, 7-16-91
	G.E. & Exide (Component Examples) • 12HGA-11S52 • NX 400	Overload & Aux.	General Circuit Breaker & Electrical Supply HLC Electric Supply California Breakers, Inc. PENCON International (DBA) General Magnetics/Electric Wholesale ANTI THEFT Systems, Inc. (DBA) ATS Circuit Breakers and AC Circuit Breaker - Electrical Supply	NRC I.N. 88-46, Supp. & Attach.
	Manufacturer not provided • FSC-5945	Not Provided	Stokely Enterprises	DOE Letter 8-26-91 Reprinted NuVEP: Bulletin 7-26-91
	Amerace (or Agastat) (Component Examples) Models: E7024 E7022 A through L Series Model 7032	Electro Pneumatic Timing Relays PRB	Amerace Control Components Supply	SENS ID #1 11-1-91 NRC I.N. 92-24

ATTACHMENT A - SUSPECT COMPONENTS LIST (cont.)

Component	Manufacturer/Type	Description	Supplier	References
Fuses	Bussman Co. (Component Examples) REN 15 & NOS-30	15A-250V & 30A-600V	General Circuit Breaker & Electrical Supply HLC Electric Supply California Breakers, Inc. PENCON International (DBA) General Magnetics/Electric Wholesale ANTI THEFT Systems, Inc. (DBA) ATS Circuit Breakers and AC Circuit Breaker - Electrical Supply	NRC I.N. 88-46, Supp. & Attach.
	Class 1E	All Supplied by PMS	Preventive Maintenance Systems (PMS)	NRC I.N. 88-19
Controllers	Manufacturer Not Listed (Component Examples)	Motor Controllers	Stokely Distributors & Stokely Enterprises, Inc.	DOE letter 8-26-91 & NUVEP Bulletin 7-26-91
Starters	Westinghouse (Component Examples) 626B187G17 626B187G13	Not Provided	General Circuit Breaker & Electrical Supply HLC Electric Supply California Breakers, Inc. PENCON International (DBA) General Magnetics/Electric Wholesale ANTI THEFT Systems, Inc. (DBA) ATS Circuit Breakers and AC Circuit Breaker - Electrical Supply	NRC I.N. 88-45 Supp. & Attach.
Resistors	Unknown	All	Impala Electronics	NRC I.N. 91-01

ATTACHMENT A - SUSPECT COMPONENTS LIST (cont.)

Component	Manufacturer/Type	Description	Supplier	References
Semiconductors	Solid State Devices Inc. (SSDI) SFF 9140	P-Channel MOSFET	SSDI	DOE Albuquerque Letter, 06-25-96 to DOD Inspector General
	SPD 1511-1-11	Pin Diode (SA3059)		
	2A14/18 or 2A14/52	Ion Implanted Diode		
	SSR4045CTTXV	SCHOTTKY Diodes		
	SFF9140TWX	Power Transistors		
	SPMF106ANH	Special Pack MOSFET Switch		
	SPD 5818 or IN5858JTXV	Axial Leaded SCHOTTKY Diode		
	2N797	Transistor		
	Unknown	Diode (SA 3436)		
Starter Controls	Westinghouse (Component Examples)	Not Provided	General Circuit Breaker & Electrical Supply	NRC I.N. 88-48
	• A200MICAC		HLC Electric Supply	
	• A201KICA		California Breakers, Inc.	
	• A201L2CA			
	• AN13A		PENCON International (DBA) General Magnetics/Electric Wholesale	
			ANTI THEFT Systems, Inc. (DBA) ATS Circuit Breakers and AC Circuit Breaker - Electrical Supply	

ATTACHMENT A - SUSPECT COMPONENTS LIST (cont.)

Component	Manufacturer/Type	Description	Supplier	References
Gauge Glasses	Siemen & Allis (Component Examples) #00-737-637-118 215 T	Not Provided	Rosen Electric Co.	NRC I.N. 88-46 Supp. & Attach.
Mercury Lamps	Spectro Inc. (Component Examples) V00014	Not Provided	General Circuit Breaker & Electrical Supply HLC Electric Supply California Breakers, Inc. PENCON International (DBA) General Magnetics/Electric Wholesale ANTI THEFT Systems, Inc. (DBA) ATS Circuit Breakers and AC Circuit Breaker - Electrical Supply	NRC I.N. 88-46
Electrical Frames	Westinghouse (Component Examples) LA2600F LA3600F MA2800F	Not Provided	General Circuit Breaker & Electrical Supply HLC Electric Supply California Breakers, Inc. PENCON International (DBA) General Magnetics/Electric Wholesale ANTI THEFT Systems, Inc. (DBA) ATS Circuit Breakers and AC Circuit Breaker - Electrical Supply	NRC I.N. 88-46
Push button station	Crouse Hinds (Component Examples) #00-737-637-118	Single gang, pushbutton	Platt Electric Supply Co.	SENS Report ID #16 1-27-92

ATTACHMENT A - SUSPECT COMPONENTS LIST (cont.)

Component	Manufacturer/Type	Description	Supplier	References
Overload Relay Thermal Unit	Square D (Component Examples) B19.5, B22	Not Provided	Not Provided	NRC I.N. 88-46
Piping, Fittings Flanges, and Components	Tube-line Corp. Ray Miller, Inc.	Subassemblies, fittings, flanges, & other components (Carbon and Stainless Steel components)	Tube-line Ray Miller, Inc.	NRC IEB 83-06 NRC I.N. 89-18 NRC IEB 83-07 NRC I.N. 83-01
Piping, Fittings, Flanges, and Components	Piping Supplies, Inc. & West Jersey Mfg. & Chews Landing Metal Mfg.	Carbon and Stainless Steel Fittings and Flanges	Piping Supplies, Inc. & West Jersey Mfg. & Chews Landing Metal Mfg.	NRC Bulletin 88-05 & Supplements
Valves	VOGT	Full port design 2-inch Model SW-13111 & 1023	CMA International IMA Valve Refurbisher	NRC I.N. 88-48 & Supplements
	Crane	4"-1500psi, pressure sealed	Southern Cal. Valve Maintenance co., Amesse Welding Service & CMA Int.	NRC I.N. 91-09
	ITT Grinnell Valve Co., Inc	Diaphragm valves	ITT Grinnell Valve Co. Inc. Div. of Diaflo & ITT Engineered Valves	NRC Comp. Bulletin 87-02
	Crane, Pacific, Powell, Walworth & Lunkenheimer	Gate Valves	Coffeyville Valve Inc.	NRC I.N. 92-56
	Pacific	8" & 3" Globe Valve	CMA & IMA Valve Refurbisher	NRC I.N. 88-48, Supp. & Attach.
	Crane Chapman	24" Check Valve	CMA & IMA Valve Refurbisher	NRC I.N. 88-48, Supp. & Attach.
	Pacific	Check Valve	CMA & IMA Valve Refurbisher	NRC I.N. 88-48, Supp. & Attach.

ATTACHMENT A - SUSPECT COMPONENTS LIST (cont.)

Component	Manufacturer/Type	Description	Supplier	References
Valves	Kerotest	8" Valve	CMA & IMA Valve Refurbisher	NRC I.N. 88-48 Supp. & Attach.
	Pacific	4" Gate Valve	CMA & IMA Valve Refurbisher	NRC I.N. 88-48 Supp. & Attach.
	Lukenheimer	6" Model 1542 20" Model 3013	CMA & IMA Valve Refurbisher	NRC I.N. 88-48 Supp. & Attach.
	Crane	All	CMA & IMA Valve Refurbisher	NRC I.N. 88-48 Supp. & Attach.
Flanges	China Ding Zinang Nan Xi Li Flange Co. Shou Gang Mach. Eng. Co.	Flanges, ASTM A105, ASME SA105	Billiongold Co. LTD. Tain Gong Co. Sanxi Province Overseas Trading Corp	NRC I.N. 92-68 and Attachments Office of Nuclear Safety 92-25, 93-23, and 92-35 National Board of Boiler and Pressure Vessel Inspectors (NBBI) Bulletin: Special Report, 1992, Volume 48, Number 2, The Chinese Flange Investigation
Valve Replacement Parts	Masoneilian-Dresser Industries	Plug stem, stem to plug anti-rotation pin, seat ring, valve plugs, bushings, cages & packing box components	Cor-Val, Control Valve Specialists, H.H. Barnum & M.D. Norwood, Sample Webtrol Controls, Inc.	NRC I.N. 88-97 Supp. & Attach.
Pumps & Replacement Parts	Hayward Tyler Pump Co.	HTPC ASME Nuclear Code	Hayward Tyler Pump Co.	IEB 83-05 & Attachments
Channel Members	Unistrut Corporation	Continuously slotted channels, structural framing members, fasteners, nuts, fittings, pipe clamps	Unistrut Corporation	NRC I.N. 91-25
Fire Barriers	Thermal Science Inc.	Thermo-Log 330	None Listed	ES&Q Update #8 NRC I.N. 92-55
Valve Actuator	Limitorque	Eyebolts on housing cover	None Listed	Office of Nuclear Safety 93-25 NRC I.N. 93-37

ATTACHMENT A - SUSPECT COMPONENTS LIST (cont.)

Component	Manufacturer/Type	Description	Supplier	References
Steel	Alloy & Carbon Steel Co. Inc., Atlantic Steel Co., Levingston Steel Co., & Copperweld Steel co.	Plate Angle Flat Bar Bar	Meredith Corporation Pressure Vessel Nuclear Alloy & Carbon Steel Co., Inc.	NRC LN. 89-56, Attachments and Supplements
Fasteners (Bolts, Screws, Nuts, and Washers)	(parentheses designated headmark) Asahi (A) Daiichi (D) Daiei (E) Fastener Co. of Japan (FM) Hinomoto Metal (H) Jin Her (J) Kyowa (K) Kosaka Kogyo (KS) Kyoei Minamida Seiybo (M) Mnato Kogyo (MS) Nippon (NF) Takai (RT) Tsukimori (S) Unytte (UNY) Yamadai (Y) Ivaco, Infasco (hollow triangled)	• Those with suppliers or manufacturers • Those that are improperly marked • Those of foreign manufacture that do not meet Public Law 101-592. Fastener Quality Act	Note: Listed suppliers may also be manufacturers Lawrence Engineering & Supply Co. Metal Building Bolts Nichimin Corporation UNICO Ace Corporation E. K. Fasteners, Inc. H. Y. Port Fasteners Co. Kobayashi Metals, LTD. Takai Screw Mfg. Co. LTD. Yamaguchi Sesakusho Co. LTD. Highland Bolt & Nut Porteous Fastener Co. Northwest Fasteners Ziegler Bolts & Parts Co. Edgewater Fasteners, Inc. Reynolds Fasteners A & G Engineering	Commercial Carrier Journal Articles for: 6/88, 1/90, 2/90, 3/90, 4/90, 6/90, 7/90, 12/90 INEL Suspect Headmark List SENS Report #5 2/6/91 SENS Report #13 2/6/91 HR 3000, U.S. House of Representatives, July 1988 J. A. Jones, Ltr, 9/23/92 Memo from L. Kubicek, 3/28/91 Memo from D. Sanow, 3/8/91 "Fastener Technology International," Feb., April, and June 1993 Rep. J. Dingell Ltr to Comm. Dept. & NRC June 18, 1993 Office of Nuclear Safety 93-26, 93-22, 93-11 DOE Quality Alert, Bulletin, Issue No. 92-4, August 1992 FDH Hanford Suspect Headmark List

ATTACHMENT A - SUSPECT COMPONENTS LIST (cont.)

Component	Manufacturer/Type	Description	Supplier	References
Fasteners (Bolts, Screws, Nuts, and Washers)	NUCOR	1-1/4" x 2" Zinc Chromate plated surface Hexhead cap screws	Cordova Bolt, Inc.	SENS ID #13 11-6/91
	Any	Any	Aircom Barnett Bolt Works Bolts & Nuts, Inc. Glasser & Assoc. Knoxville Bolt & Screw Metal Fastener Supply Phoell Mfg. Co. Service Supply Co. Southeastern Bolt & Screw Sure Loc Victory Bolt	NRC Compliance Bulletin 87-02 NRC I.N. 89-59

ATTACHMENT B - CLASSIFICATION OF POTENTIALLY SUSPECT/COUNTERFEIT ITEMS

A. ELECTRICAL ITEMS

- Molded Case Circuit Breakers
- Motor Control Centers
  - Complete Units
  - Components
  - Starters
  - Starting coils
  - Contactors
  - Overload relays
  - Starter control relays
  - Overload heaters
- Protective/control relays
- DC power supplies/chargers
- AC inverters
- Current/potential transformers
- Exciters/regulators
- Bus transfers/auto bus transfers
- Motor generator sets
- Generators
- Rewindable motors
- Printed circuit boards
- Bulk commodity items
  - Fuses
  - Splices
  - Electrical connectors
- Indicators/controllers
- Panel lights/switches
- Transmitters/instrument switches
- Isolation devices.

The following items are excluded unless required by the applicable program/project: 600V or less: motors; outlets, switches, and plugs; boxes, conduit (i.e., bodies and covers, nipples, fittings, EMT, flex, liquid tight, rigid); wire; miscellaneous wire connections #10 and below; fixtures; lights.

B. MECHANICAL ITEMS

- Welding materials
  - Rod
  - Wire
  - Flux
- Structural members (pipe supports)
- Channel members

ATTACHMENT B - CLASSIFICATION OF POTENTIALLY SUSPECT/COUNTERFEIT ITEMS (cont.)

- Sheet
- Plate
- Bars
- Round stock
- Other raw material which requires an ASTM or national standard
- All lifting/rigging gear (wire rope shall be made in the United States by a member of the Wire Rope Technical Board (WRTB) or the Associated Wire Rope Fabricators (AWRF) (except stainless steel, and unless recommended otherwise by a crane or hoist manufacturer); stainless steel wire rope shall be made in the United States and shall be 302 or 304 grade stainless steel unless otherwise recommended by a crane or hoist manufacturer)
- Ratchet tie-downs/strapping devices and come-a-longs, with fasteners.

The following materials are excluded unless required by the applicable program/project: ASTM-A36, brass, copper, sheet metal 7 GA or less, and aluminum.

C. PIPING - which requires an ASTM or ASME standard
- Fittings
- Flanges
- Valves
- Pipe
- Components.

The following materials are excluded unless required by the applicable program/project: ASTM-A-53, Swagelock; cast iron, galvanized, copper, bronze, and brass; PVC; and gaskets.

D. FASTENERS - All fasteners 1/4" and above in diameter
- Bolts
- Studs
- Cap screws
- High-strength washers
- Nuts
- Anchors.

NOTE: Attachment I identifies headmarkings for stainless steel and carbon steel high strength fasteners that are considered counterfeit. Fasteners exhibiting these headmarks are counterfeit and no further testing is required.

The following items are excluded, unless required by the applicable program/project: sheetmetal screws, wood screws, stove bolts, pan heads, machine screws, lag bolts, threaded rod, rivets, and carriage bolts.

ATTACHMENT C - SUSPECT/COUNTERFEIT ITEMS INFORMATION SOURCE LIST

A wide variety of industry and Government sources publish information relative to suspect/counterfeit products. The following sources provide information which is available on a continuing basis:

Industrial Fasteners Institute (IFI)

The following information is available from IFI via subscription:

- "Fastener Application Advisory" (Published Monthly)
- "North American Manufacturers Identification Markings for Fasteners"
- Fastener-related video cassettes.

The National Board of Pressure Vessel Inspectors (NBBI)

The NBBI publishes "National Board Bulletins" to alert manufacturers and users of misrepresented products as they are discovered.

National Highway Traffic Safety Administration (NHTSA)

The NHTSA's Office of Defects Investigation issued a "Suspect Bolt List" in late 1990 identifying numerous fasteners, which they determined to be misrepresented.

Trade Journals and Magazines

There are numerous trade-oriented magazines which have carried articles identifying incidents of failure of substandard parts in industry applications which have caused personal injury and death, as well as serious property damage.

Newspaper and Television Reports

Another good source of information are news reports, which provide current accounts of problems encountered as a result of misrepresented products.

U.S. Nuclear Regulatory Commission (NRC)

The NRC issues bulletins, notices, and regulatory guidance on a continuing basis to alert nuclear power utilities of potential intrusion of misrepresented products into the operations environment of operating nuclear power plants.

U.S. Department of Defense (DOD) and U.S. Department of Commerce publications are also monitored by the DOE to assure that the deficiencies identified do not contaminate DOE facilities.

ATTACHMENT C - SUSPECT/COUNTERFEIT ITEMS INFORMATION SOURCE LIST (cont.)

Government Industry Data Exchange Program (GIDEP)

The mission of this program, established by the Office of Management and Budget, is to support government systems readiness, logistics effectiveness, productivity, and cost reduction through timely retrieval, storage, and distribution of data among government and industry organizations.

U.S. Department of Energy

The following documents are issued by the DOE to provide information and guidance relative to the suspect/counterfeit parts issue:

- DOE Orders
- Letters of Direction
- Bulletins and Quality Alerts

(In addition, the DOE periodically sponsors seminars/workshops relative to the detection and control of suspect/counterfeit parts).

U.S. Customs Service

The U.S. Customs Service has published the Suspect Headmark List (Figure 1) identifying graded fasteners determined to be of indeterminate quality, which has been adopted by DOE and, ultimately, Project Hanford, as a formal guide for use when evaluating currently installed and newly procured graded fasteners to assure their fitness for use on the Hanford Site.

ATTACHMENT D - CHARACTERISTICS THAT MAY MAKE PRODUCTS VULNERABLE TO MISREPRESENTATION, FRAUDULENT PRACTICES, AND COUNTERFEITING

The following information has been extracted from the NRC Information Notice 89-70, Supplement 1, Attachment 3:

- High-turnover usage rate.
- No easy or practical way to uniquely mark the component itself.
- Critical characteristics, including environmental qualification not easily discernable in external visual inspection, or characteristics that are difficult to verify through receipt testing.
- May be widely used in non-critical and critical applications.
- Use may not result in used appearance.
- Often marketed through a supplier and dropped shipped from locations other than that of the original supplier.
- Special processes for ASME materials may be subcontracted (heat treating, testing, and inspections).
- Easily copied by secondary market suppliers.
- Viable salvage market.
- Reduced number of original equipment manufacturers.
- Obsolete or hard-to-get components.
- Components manufactured by a company that is no longer in business.
- Items with documentation from a plant where construction has been suspended, canceled, or deferred.
- Moderate or low cost.
- High potential for profit (rejected heats of material are purchased and decertified).

ATTACHMENT E - WHERE TO LOOK FOR SUSPECT/COUNTERFEIT ITEMS

The following areas should receive increased scrutiny to assure that suspect/counterfeit items are not evident:

Items in Supply

- Company supply stock
- Wagon stock
- Other sources of supply contamination.

Items in Use

- Plant facilities, components, and systems
- Equipment
- Operations and maintenance.

Items Being Procured

- "Known" critical items
- Critical equipment and assemblies
- Non-critical "known" purchases.

Operations Decisions

- Major disaster risks
- Personnel safety risks
- Program/mission risks (cost and schedule).

Cost of Implementation

- Potential consequential costs
- Management risk assessment
- Cost of focusing established controls
- Impact on schedule and program mission.

Cost of Focus on Known Suspect/Counterfeit Parts

- Uses existing procurement program
- Focuses on "known parts first"
- Reduction in major disaster potential
- Program costs low/benefits high.

ATTACHMENT F - SUSPECT/COUNTERFEIT PARTS DETECTION

It is very important to remember that just because an item is identified as being "suspect/counterfeit" it may not be appropriate to simply reject it. A review should be performed prior to formal disposition of the item to assure that it is indeed unfit for the intended application.

DETECTION METHODS

Visual Inspection

Items may be substandard or fraudulent when:

- Nameplates, labels, or tags have been altered, photocopied, painted over, are not secured well, show incomplete data, or are missing (e.g., preprinted labels normally show typed entries).
- Obvious attempts at beautification have been made, e.g., excess painting or wire brushing, evidence of hand painting (touch-up), or stainless steel is painted.
- Handmade parts are evident, gaskets are rough cut, shims and thin metal part edges show evidence of cutting or dressing by hand tools (filing, hacksaw marking, use of tin snips or nippers).
- Hand tool marks on fasteners or other assembly parts (upset metal exists on screw or bolt heads) or dissimilar parts are evident (e.g., seven or eight bolts are of the same material and one is a different material).
- Poor fit between assembled items.
- Configuration is not consistent with other items from the same supplier or varies from that indicated in supplier literature or drawings.
- Unusual box or packing of component or item.
- The supplier is not a factory-authorized distributor.
- Dimensions of the item are inconsistent with the specifications requested on the purchase order and/or those provided by the supplier at the time of shipment.
- The item or component matches the description of one that is on a suspect items list (e.g., U.S. Customs Service "Suspect Headmark List," National Board of Boiler and Pressure Vessel Inspectors (NBBI) "Special Bulletin," etc.).

ATTACHMENT F - SUSPECT/COUNTERFEIT PARTS DETECTION (cont.)

Documentation

Documents may be suspect/counterfeit when:

- The use of correction fluid or correction tape is evident. Type or pitch change is evident.
- The document is not signed or initialed when required, is excessively faded or unclear (indicating multiple, sequential copying), or data are missing.
- The name or title of the document approved cannot be determined.
- Technical data is inconsistent (e.g., chemical analysis indicates one material and physical tests indicate another).
- Certification or test results are identical between items when normal variations should be expected.
- Document traceability is not clear. The document should be traceable to the item(s).
- Technical data are not consistent with code or standard requirements (e.g., no impact test results provided when impact testing is required or CMTRS physical test data indicate no heat treatment and heat treatment is required).
- Documentation is not delivered as required on the purchase order or is in an unusual format.
- Lines on forms are bent, broken, or interrupted indicating data has been deleted or exchanged (cut and paste).
- Handwritten entries of data are on the same document where typed or preprinted data exists.
- Data on a single line located at different heights indicate the possibility of retyping.

ATTACHMENT F - SUSPECT/COUNTERFEIT PARTS DETECTION (cont.)

Fasteners

- Headmarkings are marred, missing, or appear to have been altered.
- Threads show evidence of dressing or wear (threads should be of uniform color and finish).
- Headmarkings are inconsistent with a heat lot.
- Headmarkings matching one of those identified on the U.S. Customs Service, "Suspect Headmark List" (Figure QP 3.2-1).
  - Headmarkings which depict both raised and hand-stamped markings, such as those described in WHC Quality Assurance Bulletin # 94-01, "Discrepant Dual Head Stamped Stainless Steel Bolts." This bulletin documents the results of internal inspections and independent testing of stainless steel bolts purchased to ASTM A193, Grade B8, which were found to be substandard.
  - Only manufacturers listed on the "Suspect Fastener Headmark List" (Figure QP 3.2-1) are known to produce substandard graded fasteners. If graded fasteners are discovered which exhibit headmarks matching those on the Suspect/Fastener Headmark List, they shall be considered to be defective without further testing, unless traceable manufacturer's certifications are received which provide documented evidence that the fasteners were not produced by the manufacturer listed on the Suspect Fastener Headmark List.
  - Interpretation of headmark/manufacturers listed on the "Suspect Fastener Headmark List," including newly discovered variations thereto, shall only be provided by the designated S/CI coordinator based on guidance received from the DOE.

Electrical Devices

- Connections show evidence of previous attachment (metal upset or marring).
- Connections show arcing or discoloration.
- Fasteners are loose, missing, or show metal upset.
- Molded case circuit breakers are not consistent with manufacturer-provided checklists for detecting substandard/fraudulent breakers.
- Missing or photocopied Underwriters Laboratories (UL) labels on products requiring such.

ATTACHMENT F - SUSPECT/COUNTERFEIT PARTS DETECTION (cont.)

Rotating Machinery and Valve Internal Parts

- Shows marring, tool impressions, wear marks, traces of Prussian blue or lapping compound, or other evidence of previous attempts at fit up or assembly.
- Heat discoloration is evident.
- Evidence of erosion, corrosion, wire-drawing or "dimples" (inverted cone-shaped impressions) on valve discs, seats, or pump impellers.

Valves

- Paint
  - Valve appears to be freshly painted and valve stem has paint on it
  - Wear marks on any painted surface
  - Valve stem is protected, but protection has paint on it
  - Paint does not match standard Original Equipment Manufacturer (OEM) color.
- Valve Tags
  - Tags attached with screws instead of rivets
  - Tags attached in a different location than normal
  - Tags appear to be worn or old
  - Tags with paint on them
  - Tags that look newer than the valve
  - Tags with no part numbers
  - Tags with irregular stamping.
- Hand Wheels
  - Old looking hand wheels on new looking valves
  - Hand wheels that look sand blasted or newer than the valve
  - Different types of hand wheels on valves of the same manufacturer.
- Bolts and Nuts
  - Bolts and nuts have a used appearance (excessive wrench marks on flats)
  - Improper bolt/nut material (e.g., a bronze nut on a stainless stem).

ATTACHMENT F - SUSPECT/COUNTERFEIT PARTS DETECTION (cont.)

- Valve Body
  - Ground off casting marks with other markings stamped in the area (OEM markings are nearly always raised, not stamped)
  - Signs of weld repairs
  - Incorrect dimensions
  - Freshly sand-blasted appearance, including eye bolts, grease fittings, stem, etc.
  - Evidence of previous bolt head scoring on backsides of flanges, or evidence that this area has been ground to remove such marks
  - On a stainless valve, a finish that is unusually shiny indicates bead-blasting. A finish that is unusually dull indicates sand-blasting. The finish on a new valve is in-between.

Manufacturer's Logo

- Missing.
- Logo plate looks newer than the valve.
- Logo plate shows signs of discoloration from previous use.

Other

- Foreign material inside the valve (e.g., metal shavings).
- Valve stem packing that shows all the adjustments have been run out.
- In gate valves, a gate that is off-center when checked through the open end of the valve.
- Obvious differences between valves in the same shipment.

Price

- Price is significantly less than that of the competition.

ATTACHMENT G - FASTENERS

1.0 Counterfeit/Substandard High-Strength Bolts

1.1 General Background

Counterfeit bolts have been found in military and commercial aircraft, surface ships, submarines, nuclear weapon production facilities, bridges, buildings, and the space shuttle. These bolts often do not possess the capabilities of the genuine bolts they counterfeit and can threaten the reliability of industrial and consumer products, National Security, or lives. At Congressional hearings in 1987, the Army testified that they had purchased bolts that bore the headmarks of Grade 8 high-strength bolts, but that were actually inferior Grade 8.2 bolts.

The International Fasteners Institute (IFI) reported finding substandard, mis-marked, and/or counterfeit high-strength Grade 8 bolts in the United States commercial marketplace. In 1988, IFI reported that counterfeit medium- strength Grade 5 bolts had also been found.

Foreign bolts dominate the American marketplace due to their price advantage, and the majority of suspect/counterfeit bolts are imported. Identifying, testing, and replacing these bolts has proven expensive and difficult, both mechanically and technically. Not finding and replacing these bolts, however, has proven fatal in some instances.

1.2 Headmarks

Attachment I may be removed and photocopied, as needed, for use as a poster and reference to known suspect fastener headmarks. Bolts with the headmarkings shown have a significant likelihood of being found to be inferior to standards. Generally, the cost of replacement of these bolts is less than the cost of chemical, hardness, and tensile strength testing. Note also that counterfeit bolts can be delivered with counterfeit certificates. Documentation alone is insufficient to demonstrate compliance with standards.

1.3 Consensus Standards

There are several consensus organizations that have published standards for the properties of fasteners. One of these is the Society of Automotive Engineers (SAE). The SAE grade (or alleged grade on a suspect item) of a bolt is indicated by raised or indented radial lines on the bolt's head, as shown in Attachment I. These markings are called headmarks. DOE is currently concerned with two different grades of fasteners: one has three equally spaced radial lines on the head of a bolt which indicate that it should meet the specifications for a Grade 5 bolt; the other has six equally spaced radial lines which indicate a Grade 8 bolt. Letters or symbols on the head of a bolt indicate the manufacturer.

Attachment I is a Suspect/Counterfeit Headmark List that was prepared by the United States Customs Service after extensive testing of many samples of bolts from around the nation. Any bolts anywhere in the DOE community that are currently in stock, in bins, or installed that are on the Customs Headmark List should be considered suspect/ counterfeit. The headmarks on this list are those of manufacturers that have often been found to have sold bolts that did not meet the indicated consensus standards. Sufficient testing has been done on the bolts on this list to presume them defective without further testing.

1.4 Precautions: Selective Testing

Some facilities (manufacturers, distributors, etc.) perform selective testing of sample bolts rather than have an independent testing laboratory run all the tests required by consensus standards. In many cases, a new counterfeit bolt has roughly the same physical strength as the graded bolt it mimics, but does not have either the chemical composition or the heat treatment specified by the consensus standards. As a result, it will stretch, exhibit metal fatigue, or corrode under less harsh service than the genuine bolt. Simple tensile strength tests cannot be used to identify substandard high-strength fasteners and should not be solely relied upon in performing acceptance test.

1.5 Using Suspect/Counterfeit Grade 5 Bolts in Grade 2 Applications

Some sites use suspect/counterfeit Grade 5 bolts in applications that only call for Grade 2 bolts. Eventually, the suspect/counterfeit Grade 5 bolts may find its way into an application that requires a genuine Grade 5 bolt and that application may fail. In some cases, cheap imported graded bolts have been purchased in place of upgraded bolts because the small price differential made the extra quality seem to be a bargain. Given the expense of removing suspect bolts from DOE facilities, the practice of using suspect bolts for any application should be discontinued.

1.6 Keep Bolts in Original Packages

All bolts purchased should be kept in the original packages, not emptied into bins. The packages should have labels or other markings that would permit them to be associated with a particular procurement action and a specific vendor. Approved supplier lists should be checked to assure that fastener suppliers on that list have been recently qualified/audited for adequacy of their quality programs.

ATTACHMENT G - FASTENERS (cont.)

2.0 Stainless Steel fasteners

2.1 Purpose

To provide follow-up information to the previous notification sent to the DOE field and contractor organizations in late 1996.

2.2 Background

In November 1993, the Industrial Fastener Institute (IFI) issued a Fastener Advisory regarding 18-8 stainless steel bolts. The advisory warned about a "bait and switch" tactic in which a distributor takes an 18-8 bolt (indicated by two radial lines 90 degrees apart), but no manufacturer's marking, and sells them as ASTM A320 Grade B8 bolts after hand-stamping B8 on to the heads.

As a result of this IFI Advisory, DOE sites conducted a search of facility stores for stainless steel fasteners with hand-stamped B8 grade marks. Hundreds of stainless steel bolts with hand-stamped B8 grade markings, along with a variety of other raised and depressed head and manufacturer's markings were identified in facility stores throughout the DOE complex.

For example, an inspection of shop stock at a Hanford Site facility revealed bolts with three different raised grade markings, 18-8, 304, and F593C, along with raised manufacturer's identifications of CK, H, HP, C, SO, CS, PMC, TH, THE, and a STAR. The majority of the remaining samples found at Hanford exhibited raised grade markings of 18-8 and 304, with a B8 grade marking and manufacturer's identification hand-stamped into the head of the bolt.

Finally, a few samples did not display any manufacturer's markings. Most of the bolts discovered were purchased with the specification to meet a national consensus standard, American Society for Testing and Materials (ASTM) A193, B8 Class 1 rather than the ASTM A320 standard discussed in the IFI warning.

The Savannah River Site also conducted a site-wide search of facility stores with similar results. A total of 159 stainless steel fasteners with hand-stamped B8 grade marks and raised or hand-stamped manufacturer's symbols were found. Fifteen stainless steel fasteners that had no manufacturer's symbol were also found.

ATTACHMENT G - FASTENERS (cont.)

2.3 Issue

The requirements of the ASTM A193 standard regarding fastener marking and certification are very similar those required by the ASTM A320 standard discussed in the IFI advisory. The ASTM A193 standard requires that grade and manufacturer's identification symbols be applied to the heads of bolts that are larger than 1/4" in diameter. The standard, however, does not specifically differentiate between raised and depressed headmarkings, but states only that "for the purposes of identification marking, the manufacturer is considered the organization that certifies the fastener was manufactured, sampled, tested, inspected in accordance with this specification." In other words, the standard allows for some of the required markings to be formed into the head of the bolt (either raised or lowered) during manufacturing, and the rest to be applied later on via hand-stamping.

Since ASTM A193 does not differentiate between raised and depressed markings, these fasteners can be counterfeited in the same way as the ASTM A320 fasteners discussed in the November 1993 IFI warning. For example, distributors can procure 18-8 stainless steel bolts that were manufactured by an anonymous party, and without conducting the necessary upgrading process or certification testing, a second party could hand-stamp B8 and a manufacturer's marking into the heads to indicate that the fasteners exhibit the mechanical and chemical properties required of ASTM A193Grade B8 Class 1.

Unless the certification documentation is specifically requested, and in most cases it is not, there is no way to determine by visual inspection whether these fasteners were properly certified and tested to meet the requirements of the ASTM standard.

ATTACHMENT H - DOE HEADMARK LIST

Help Stamp Out Suspects/Counterfeits

Suspect Stainless Steel Fastener Headmark List

Examples of stainless steel fasteners that have been upgraded from 18-8 to ASTM A320 or ASTM A193 Grade B8 after hand stamping. The last three examples show samples of fasteners to indicate conformance to two non-compatible standards, ASTM A193 and ASTM F 593C.

Any bolt on this list should be treated as defective without further testing and process in accordance with HNF-PRO-301. Note: This list was originally Published by DOE /EH-0196, Issue No. 97-6

If any of these fasteners are located, contact your facility S/CI Point of Contact (POC) for instructions. The POC list is on the Hanford Intranet at: http://docs.rl.gov/han.info/hfanecl/hfanscl.doc. Scroll to the end of the document for the list.

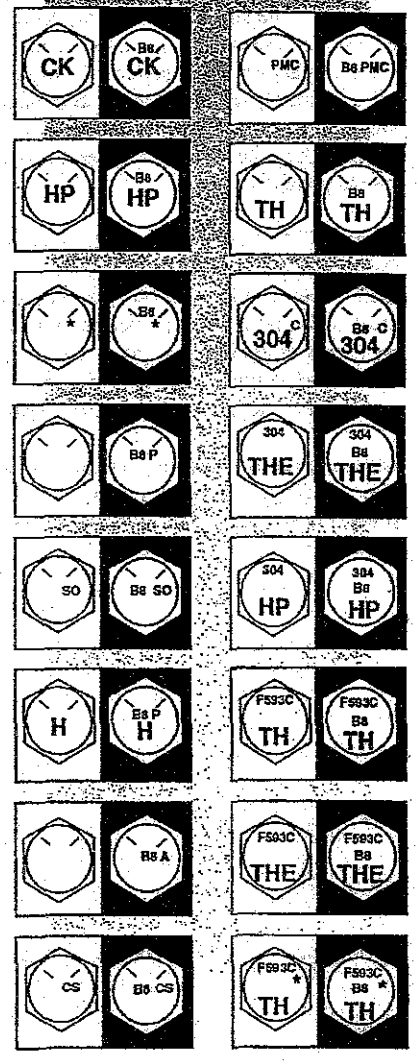

ATTACHMENT H - DOE HEADMARK LIST (cont.)

Help Stamp Out Suspects/Counterfeits

Suspect Fastener Headmark List

All Grade 5 and Grade 8 fasteners of foreign origin which do not bear any manufacturers' headmarks:

Grade 5 Grade 8

Grade 5 fasteners with the following Manufacturers' headmarks:

Mark	Manufacturer	Mark	Manufacturer
J	Jinn Her (TW)	KS	Kosaka Kogyo (JP)

Grade 8 fasteners with the following Manufacturers' headmarks:

Mark	Manufacturer	Mark	Manufacturer
A	Asahi Mgf (JP)	KS	Kosaka Kogyo (JP)
NF	Nippon Fasteners (JP)	RT	Takai Ltd (JP)
H	Hinomoto Metal (JP)	FM	Fastener Co. of Japan (JP)
M	Minamida Sleybo (JP)	KY	Kyoei Mfg (JP)
MS	Minato Kogyo (JP)	J	Jinn Her (TW)
Hollow Triangle	Infasco (CA, TW, JP, YU) (Greater than 1/2-inch diameter Grade 8 Hollow Triangle only)		
E	Datei (JP)	UNY	Unytite (JP)

Grade 8.2 fasteners with the following headmarks:

Mark	Manufacturer
KS	Kosaka Kogyo (JP)

Grade A325 fasteners (Bennett Denver target only) with the following headmarks:

	Mark	Manufacturer
Type 1	A325 KS	Kosaka Kogyo (JP)
Type 2		
Type 3		

Key: CA-Canada, JP-Japan, TW-Taiwan, YU-Yugoslavia

Any bolt on this list should be treated as defective without further testing.

ATTACHMENT I - REFURBISHED MOLDED CASE CIRCUIT BREAKERS

Investigations thus far of electrical components at DOE facilities uncovered over 700 suspect/ counterfeit molded-case circuit breakers that were previously used, refurbished and sold to DOE contractors.

1. Recognition Factors

The following factors should be recognized regarding suspect or refurbished circuit breakers:

A. The quality and safety of refurbished molded-case circuit breakers is questionable since they are not designed to be taken apart and serviced or refurbished. There are no electrical standards established by Underwriters Laboratory (UL) for the refurbishing of molded-case electrical circuit breakers, nor are there any "authorized" refurbishes of molded case circuit breakers. Therefore, "refurbished" molded-case circuit breakers should not be accepted for use in any DOE facility.

B. One source of refurbished molded-case circuit breakers is from the demolition of old buildings. Some refurbishes are junk dealers who may change the amperage labels on the circuit breakers to conform to the amperage ordered and then merely clean and shine the breakers.

This situation was brought to DOE's attention by the Nuclear Regulatory Commission (NRC), which, in turn, had been informed of the practice by the company that manufactures circuit breakers. In early 1988, a sales representative identified "refurbished" circuit breakers at Diablo Canyon Nuclear Power Plant. A subsequent investigation confirmed that circuit breakers sold to the power plant as new equipment were actually refurbished. The managers of the two firms that refurbished and sold these breakers have been convicted of fraud and have paid a substantial fine.

C. NRC published information Notice No. 88-46 dated July 8, 1988, on the investigation findings and circulated it to all applicable government agencies, including DOE. On July 20, 1988, DOE notified all field offices that refurbished circuit breakers may have been installed in critical systems. Shortly thereafter, DOE established the Suspect Equipment Notification System (SENS), a sub-module of ES&H Events and News on the Safety Performance Measurement System (SPMS). SENS has since been replaced by the Supplier Evaluation and Suspect Equipment (SESE) sub-module which includes Suspect Equipment Reports.

D. Some of DOE's older sites have circuit breakers in use that are no longer manufactured. According to the Nuclear Management and Resources Council (NUMARC), examples of such breakers are Westinghouse breakers with frames E, EA, F, and FA. If a DOE contractor has an electrical box that requires a breaker with one of these frame sizes, that contractor would not have been able to purchase it from Westinghouse for several years. If the contractor were to order a replacement breaker from an authorized Westinghouse dealer, the dealer could not get a new replacement breaker from the manufacturer. To fill the order, the dealer had to turn to the secondary or refurbished market.

ATTACHMENT I - REFURBISHED MOLDED CASE CIRCUIT BREAKERS (cont.)

Dealing with an authorized distributor does not preclude ending up with refurbished circuit breakers. Westinghouse has announced that it is considering satisfying this market by manufacturing circuit breakers that will fit in these applications.

The solution, as recommended by NUMARC, is not to focus on the credentials of the distributor but on the traceability of the circuit breaker itself. A purchaser can be assured of having a new circuit breaker only if the breaker can be traced back to the original manufacturer.

2. Indicators of Refurbished Breakers

Typically, refurbished circuit breakers sold as new equipment have one or more of the following characteristics:

- The style of breaker is no longer manufactured.
- The breakers may have come in cheap, generic-type packaging instead of in the manufacturer's original boxes.
- Refurbished circuit breakers are often bulk-packaged in plastic bags, brown paper bags, or cardboard boxes with handwritten labels. New circuit breakers are packed individually in boxes that are labeled with the manufacturer's name, which is usually in two or more colors, and are often date stamped.
- The original manufacturer's labels and/or the Underwriter's Laboratory (UL) or Factory Mutual (FM) labels may have been counterfeited or removed from the breaker. Refurbishing operations have been known to use copying machines to produce poor quality copies of the original manufacturer's and the certifying body's labels.
- Breakers may be labeled with the refurbisher's name rather than the label of a known manufacturer.
- The manufacturer's seal (often multicolored) across the two halves of the case of the breaker is broken or missing.
- Wire lugs (connectors) show evidence of tampering.
- The surface of the circuit breaker may be nicked or scratched yet have a high gloss. Refurbishers often coat breakers with clear plastic to produce a high gloss that gives the casual observer the impression that the breaker is new. The plastic case of new circuit breakers often have a dull appearance.
- Some rivets may have been removed and the case may be held together by wood screws, metal screws, or nuts and bolts.

ATTACHMENT I - REFURBISHED MOLDED CASE CIRCUIT BREAKERS (cont.)

- Contradictory amperage ratings may appear on different parts of the same refurbished breaker. On a new breaker, the amperage rating is stamped into, raised from, or machine-painted on the handle of the circuit breaker. In order to supply a breaker with a hard-to-find rating, refurbishers have been known to file down the surface of the handle to remove the original rating and hand-paint the desired amperage rating.

3. Testing

In a news release dated February 6, 1989, the National Electrical Manufacturers Association (NEMA) announced the cancellation of its Publication AB-2-1984 entitled, "Procedures for Field Inspection and Performance Verification of Molded-Case Circuit Breakers used in Commercial and Industrial Applications," and stated the following:

"These procedures were intended for use with breakers that had been originally tested and calibrated in accordance with NEMA Standards Publication AB 1 or Underwriters Laboratories Standard UL 489, and not subsequently opened, cleaned or modified...Therefore, the Standards Publication contained none of the destructive test procedures...necessary to verify the product's ability to withstand such conditions as full voltage overload or short circuit. Without such tests, even if a rebuilt breaker had passed the tests specified in AB-2, there would be no assurance that it would not fail under overload or short circuit conditions. It is NEMA's position that regardless of the results of electrical testing, refurbished electrical circuit breakers are not reliable and should not be used."

4. Precautions

Follow these precautions regarding suspect or refurbished circuit breakers.

A. Require that molded-case breakers be new and unaltered. Proof that they are new and unaltered requires the vendor to show traceability back to the original manufacturer.

B. Do not rely completely on dealing with authorized dealers for protection from purchasing refurbished molded-case circuit breakers.

C. Approve formal procedures for inspecting circuit breakers that are received and installed according to the indicators of refurbished breakers listed above.

D. Contact the original manufacturer if any indication of misrepresentation is encountered. There are many original manufacturers of molded-case circuit breakers whose products are being refurbished and sold as new. These manufacturers have the most specific information about how to ensure that their products have not been refurbished.

ATTACHMENT I - REFURBISHED MOLDED CASE CIRCUIT BREAKERS (cont.)

5. Disposition

A. Segregate and retain all circuit breakers found with indications that they may be refurbished. These will be retained as potential evidence until specifically released by the Office of Inspector General and the Office of Nuclear Safety for Price Anderson Enforcement. Circuit breakers that may be refurbished may only be disposed of when the above organizations no longer need them as evidence.

B. Report suspect electrical components to Occurrence Reporting and Processing System (ORPS). The ORPS categorization group should be identified as "Cross-Category items, Potential Concerns or issues." The description of cause section in the ORPS report should included the text "suspect counterfeit parts."

C. Witness and document the destruction of all suspect/counterfeit circuit breakers when approval is given for disposal.

ATTACHMENT J - ASSESSMENT/SURVEILLANCE LINES OF INQUIRY

1. S/CI processes and other S/CI related processes are effective in addressing the safety-related aspects of S/CI.

2. Formal supplier qualification and re-qualification processes are established and implemented, including routine collection of evaluations of feedback on vendor performance.

3. Controls are established on a graded basis that considers the risks involved and historical experience with S/CIs.

4. Controls are implemented for segregation and separate storage of material identified as suspect/counterfeit

5. Subcontractors have established and implemented sufficient controls to preclude an introduction or use of S/CIs. These controls address construction materials, maintenance or modification equipment and components, and the use subcontractor owned or rented equipment (cranes, hoists, etc.) on site.

6. S/CI processes, requirements, and controls are fully integrated into Integrated Safety Management (ISM) and quality assurance programs and procedures, e.g, training, procurement, maintenance, and assessment) to ensure adequate linkage to S/CI elements.

7. Expectations are established for timeliness in determining whether nonconforming items are S/CI.

8. Protocols are established for clearly identifying S/CIs that are determined to be acceptable for use

9. Inspections for S/CI materials are incorporated into routine maintenance activities, and clear guidance is provided for the disposition of installed S/CI materials identified during routine inspections and maintenance activities.

10. Expectations for S/CI controls are integrated within existing processes, such as routine and special inspections for S/CIs in site procedures, and guidance is provided for performing such inspections.

11. Roles and responsibilities and interfaces for management of S/CIs are clearly assigned, including provisions for the handling of sensitive information and interfacing with the local Office of the Inspector General (IG), to ensure effective, consistent, and timely communication of S/CI information.

12. S/CI reporting requirements are effectively integrated into the site contractors' processes for disposition of non-conforming items, such as NCR processes, as required by appropriate DOE directives.

13. Lessons learned processes are evaluated to determine whether all available and relevant information resources, such as the Government Industry Data Exchange Program (GIDEP), are being utilized for screening S/CI and other relevant information for potential applicability to site activities.

ATTACHMENT J – ASSESSMENT/SURVEILLENCE LINES OF INQUIRY (cont.)

14. Lessons learned processes are evaluated to ensure that significant requirements and performance expectations have been established for the documentation of applicability reviews, needed actions, and actions taken for lessons learned that require line management attention and action.

15. Lessons learned requiring line management actions are integrated with the site's corrective action management processes to ensure formal tracking, feedback, and closure of actions taken.

16. Corrective actions and management procedures include formal linkage to S/CI reporting requirements for the site office, Occurrence Reporting System (ORPS), contractor General Counsel, and the IG.

17. Site mechanisms, such as a controlled product list, are established and used to maintain current and accurate information on S/CIs. Provisions are available for making this list readily available to site personnel who have S/CI responsibilities for procurement, inspection, and other areas associated with the implementation of S/CI controls.

18. S/CI training programs-include the identification of positions and associated personnel required to receive training, the processes for designating those personnel who must receive initial and refresher training, and the required frequencies for refresher training.

19. All personnel involved in design, system engineering, procurement, inspection, maintenance, and other functions involving potential S/CI materials receive S/CI process and hands-on training.

20. Training programs place special emphasis on ensuring that system engineers involved in the design, procurement, and inspection of materials and components with the potential for S/CI receive such training.

21. Subcontractors involved in the procurement or handling of potential S/CI materials and components receive initial and refresher training and are knowledgeable of site S/CI processes, procedures, requirements, and controls.

22. S/CI training addresses site-specific processes and procedures for identifying, dispositioning, and reporting S/CIs, including reporting to the IG.

23. S/CI processes are subject to regular self-assessment, consistent with site self-assessment protocol.

24. Assessments are performed for S/CI processes to evaluate significant changes to the S/CI processes and to establish a baseline for implementation where appropriate. Based on that baseline review, further assessments are tailored to the maturity of the S/CI processes.

25. S/CI lines of inquiry are considered and evaluated, as appropriate, during assessments of areas that interface with S/CI processes (procurement process, NCR process, etc.).

This page intentionally left blank.

TECHNICAL DATA SHEET
AMEC Americas Limited

amec

The document revision number is indicated below. Please replace all revised pages of this document and destroy the superseded copies.

PROJECT:	Final DBVS Design	145579-D-DS-018.1	REV. 1
PROJECT NO.:	145579	Dried Waste Airlock Assembly	
CLIENT:	AMEC E&E - Richland, Washington	EQUIPMENT NO.	34-D84-005 / 006

REV. NO.	ISSUED FOR	ORIGIN	DATE	INITIAL
A	For Internal Review	FS	24-Sep-04	FS
B	For Internal Approval	FS	08-Oct-04	FS
C	For CH2M Hill Review	FS	21-Dec-04	FS
0	Bid Request	GJ	14-Jan-05	GJ
1	Bid Request	GJ	15-Feb-05	GJ

DOCUMENT APPROVAL

CLIENT APPROVAL (AMEC RICHLAND)
Original Sigs October 13, 2004

Project Manager:
Date: 17 Feb 05
Q.A. Rep.:
Date: 2/17/05

CLIENT APPROVAL (CH2M HILL)

Project Manager:
Date: 2/22/05

AMEC AMERICAS LIMITED (TRAIL)
Original Signatures on File

Project Manager: (for TH)
Date: Feb 16/05
Discipline Lead:
Date: Feb. 16/05
Originator:
Date: Feb. 16/05

This page intentionally left blank.

amec

TECHNICAL DATA SHEET

PROJECT:	Final DBVS Design	145579-D-DS-018.1	REV. 1
PROJECT NO.:	145579	Dried Waste Airlock Assembly	
CLIENT:	AMEC E&E - Richland, Washington	EQUIPMENT NO.	34-D84-005 / 006

REFERENCE SPECIFICATION

Document No.	Specification
145579-D-SP-018	Dried Waste Airlock Assembly (DWAA) Specification

CONTENTS

Data Sheet ..... 2 Pages

Bidders Drawing & Data Commitments Sheet ..... 1 Page

This page intentionally left blank.

amec

TECHNICAL DATA SHEETS

PROJECT:	Final DBVS Design	145579-D-DS-018.1	REV. 1
PROJECT NO.:	145579	Dried Waste Airlock Assembly	
CLIENT:	AMEC E&E - Richland Washington	EQ. NO.: 34-D84-005 / 006	

No. Required	2	Area	Box Feed 34
P&ID#	F-145579-34-A-0101 & 0102	Stream No.	5
Reference Specification:	145579-D-SP-018	Quality Assurance Level	EQ

Operating Conditions			Rev				Rev
Location (Indoors/Outdoors)	For CH2M Hill F	Indoors		Environmental Conditions			
Operation (Continuous / Intermittent)		Intermittent		Ambient Temperature Range	(°F)	-25 to 115	
Days per year		365		Relative Humidity	(%)	0-100	C
Hours per day		24		Availability	(%)	95	
Noise Level Allowable per 8 hr shift (dB - Lex)		85		Environment - Radioactive		Yes	
Shift Length	(hrs)	8		- Toxic		Yes	C
Noise Level Allowable	(dB)	85		- Corrosive		Yes	C
Site Elevation	(ft)	663		- Flammable		No	
Airlock Information							
				Chamber Capacity	(ft^3)	1.5	C
Manufacturer	*			Chamber Inside Dia.	(in) *		
Serial Number	*			Height	(in) *		
Flowrate (Max)	(lb/hr)	15420	0	Flange			
Material through Airlock				- no. of holes	*		
- description		dried waste	C	- Bolt Hole Dia.	(in) *		
- Bulk Density	(lb/ft^3)	93		- Outside Diam.	(in) *		
- Moisture Content	%	1	C				
- Max. Cycle Rate	(cycles per min)	3	C	Internal Finish	*		
					*		
Operating Temperature Range	(°F)	-25 to 140	1		*		0
Head of Material above valve	(ft)	1		Discharge Reducer Size	*		C
Operating Press. through valve	(psi) *						
Flow Area (inlet)	(ft^2)	0.55		**Actuator**			
Port Dia. (inlet)	(in)	10		- type	*		
Air Operator Type	*			- Solenoid Control Signal	(VDC)	24	
Required Air Flow	(ACFM) *		C	- Position Indication		Yes	
Chamber Purger (Yes/No)		Yes		Min. Pilot Pressure	(psi) *		
Clean Out Ports (Yes/No)		Yes		Supply Air Pressure	(psi)	90	C

Materials of Construction

	Type		Item	ASTM design	Grade	Description	
Valve Body	SS	0	Brackets etc.	A36		CS	
Internal Parts			Bolts	A307	B	CS	
-wetted	SS		Nuts	A563	A	CS	
-non wetted	SS	0	Flanges	A105	B	CS	C
Solenoid Operator *			Pipe	A53	B	CS	C
Subplates and Manifolds *							
Fasteners *							
Seals *							

Weight

Total Shipping Weight	(lbs) *	Operating Weight	(lbs) *

Date	24-Sep-04	08-Oct-04	21-Dec-04	14-Jan-05	15-Feb-05			
By	FS	FS	FS	GJ	GJ			
Chked	GJ	GJ	GJ	FWS	GJ			
Rev.	A	B	C	0	1			

amec

TECHNICAL DATA SHEETS

Data sheet 2 of 2

Inlet Composition

Process Fluid		Dried Waste	C
Particulate Type		Radioactive	C
Phase		Solid	C
Handford Soil	(wt %)	47.07	
C (Carbon)	(wt %)	0.03	
B2O3 (Boron Oxide	(wt %)	3.52	
ZrO2	(wt %)	4.92	
Al3+	(wt %)	0.1	
Cl-	(wt %)	0.02	
CO3-2-	(wt %)	0.87	
Cr2+	(wt %)	0.06	
F-	(wt %)	0.01	
Fe3+	(wt %)	0.02	
K+	(wt %)	0.01	
Na+	(wt %)	9.28	
NO2	(wt %)	0.24	
NO3	(wt %)	23.25	
PO4-3-	(wt %)	0.45	
Si4+	(wt %)	0.01	
SO4-2+	(wt %)	0.03	
Moisture	(wt %)	8	
137Cs	(Ci/hr)	1.54 E+00	
99Tc	(Ci/hr)	1.23 E-02	
TRU	(Ci/hr)	9.0 E-04	
129I	(Ci/hr)	2.05 E-05	
Total			

Handford Soil Composition:			
SiO_2	(wt %)	95	C
Na_2O	(wt %)	4	C
Moisture	(wt %)	1	C
Soil SG.		1.5	
Soil Particle Distribution			
Screen No. 4 (4.75mm)	(%)	100	
Screen No. 10 (2 mm.)	(%)	99	

Comments:

1. Items marked with an * shall be filled in by VENDOR
2. Valve actuators to include position/limit switches.

Date	24-Sep-04	08-Oct-04	21-Dec-04	14-Jan-05	15-Feb-05		
By	FS	FS	FS	GJ	GJ		
Chked	GJ	GJ	GJ	FWS			
Rev.	A	B	C	0	1		

amec

TECHNICAL DATA SHEETS

PROJECT:	Final DBVS Design	145579-D-DS-018.1	REV. 1
PROJECT NO.:	145579	Dried Waste Airlock Assembly	
CLIENT:	AMEC E&E - Richland, Washington	EQ. NO.:	34-D84-005 / 006

BIDDERS DRAWING AND DATA COMMITMENTS

Vendor shall supply all drawings, manuals and documentation in the quantities indicated. Approval drawings are due within the listed number of calendar days after issue of the Purchase Order or Letter of Intent. The dates set out for drawing and data submissions are governed by the engineering design schedule of the project. The Vendor shall supply one AutoCAD disk file and requested number of copies within the listed number of calendar days. Final drawings must be certified as correct and bear the Vendors name, equipment number and Purchase Order Number. Drawing Transmittals listing the document numbers, revisions numbers, quantities, status and document types must be included with all submissions (including electronic submittals).

SEND ALL DOCUMENTS TO:

Submit all documents via courier service
Faxed documents must be followed by the originals.
Electronic E-mail or FTP transmissions of drawings & data must be copied to Document Control
Always include a transmittal

AMEC Americas Limited
1385 Cedar Avenue
Trail, BC, Canada
V1R 4C3
Attn: Document Control
Phone: (250) 368-2400
Fax: (250) 368-2401

BIDDERS MUST PROVIDE ESTIMATED LEAD TIMES FOR APPROVAL DRAWINGS

Proposal	Bidder shall include this data for each item			REVIEW ITEMS DUE WITHIN	VENDOR COMMITMENT (SEE NOTE 4)
	Review	Required before ordering or start of fabrication			
		Final	Required within 7 days prior to shipment and before final payn		
PROPOSAL	REVIEW	FINAL	DESCRIPTION	(DAYS)	(DAYS)
1			Q A program that satisfies the requirements of ASME NQA-1-1994	Bid	
1			Experience list and maintainability information	Bid	
E+3	E+3		Design, fabrication & delivery schedule	Bid	
E+3	E+3	E+6	Outline drawings and layout drawings indicating weights and dimensions	PO+10	
E+3	E+3	E+6	Technical brochures on purchased components	PO+17	
	E+3	E+6	Final Drawings + Calculations	PO+17	
	E+1	E+6	Spare parts list	Del-14	
	E+1	E+6	Set of installation and maintenance manuals c/w technical literature for all equipment and devices	Del-14	
		6	Electromagnetic interference test results	N/A	
		1	Hardware Delivery	PO+50	
		6	Site commissioning record & test results	COM+14	

THE TIMELY RECEIPT OF THE VENDOR DOCUMENTS IS CRITICAL TO THIS PROJECT
BUYER COMMITS TO A 10 WORKING DAY TURNAROUND ON REVIEW ITEMS

I agree to provide the listed documentation and data and the dates shown above.

Vendor Signature _____ Date _____

This page intentionally left blank.

TECHNICAL DATA SHEET
AMEC Americas Limited

amec

The document revision number is indicated below. Please replace all revised pages of this document and destroy the superseded copies.

PROJECT:	Final DBVS Design	145579-D-DS-018.2	REV. 1
PROJECT NO.:	145579	Top Off Soil Feed Chute Airlock Assembly	
CLIENT:	AMEC E&E - Richland, Washington	EQUIPMENT NO. 34-D88-035 / 036 / 037	

REV. NO.	ISSUED FOR	ORIGIN	DATE	INITIAL
A	For Internal Review	FS	24-Sep-04	FS
B	For CH2M Hill Review	FS	28-Oct-04	FS
C	For CH2M Hill Review	FS	21-Dec-04	FS
0	Bid Request	GJ	14-Jan-05	GJ
1	Bid Request	GJ	15-Feb-05	GJ

DOCUMENT APPROVAL

CLIENT APPROVAL (AMEC RICHLAND)
Original Approvals on File

Project Manager:
Date: 17 Feb 05
Q.A. Rep.:
Date: 2/17/05

CLIENT APPROVAL (CH2M HILL)

Project Manager:
Date: 2/22/05

AMEC AMERICAS LIMITED (TRAIL)
Original Approvals on File

Project Manager: (for TH)
Date: Feb 16/05
Discipline Lead:
Date: FEB. 16/05
Originator:
Date: FEB. 16/05

This page intentionally left blank.

amec

TECHNICAL DATA SHEET

PROJECT:	Final DBVS Design	145579-D-DS-018.2	REV. 1
PROJECT NO.:	145579	Top Off Soil Feed Chute Airlock Assembly	
CLIENT:	AMEC E&E - Richland, Washington	EQUIPMENT NO.	34-D88-035 / 036 / 037

REFERENCE SPECIFICATION

Document No.	Specification
145579-D-SP-018	Top-Off Soil Airlock Assembly (TSAA) Specification

CONTENTS

Data Sheet _____ 2 Pages

Bidders Drawing & Data Commitments Sheet _____ 1 Page

This page intentionally left blank.

amec

TECHNICAL DATA SHEETS

PROJECT:	Final DBVS Design	145579-D-DS-018.2	REV. 1
PROJECT NO.:	145579	Top Off Soil Feed Chute Airlock Assembly	
CLIENT:	AMEC E&E - Richland Washington	EQ. NO.: 34-D88-035 / 036 / 037	

No. Required	3	Area	Box Feed 34
P&ID #	F-145579-34-A-0101 & 0102	Stream No.	11
Reference Specification:	145579-D-SP-018	Quality Assurance Level	EQ

Operating Conditions			Rev	Environmental Conditions			Rev
Location (Indoors/Outdoors)		Indoors					
Operation (Continuous / Intermitte		For CH2M Hill R Intermittent		Ambient Temperature	(°F)	-25 to 115	
Days per year		365		Availability	(%)	95	
Hours per day		24		Environment - Radioactive		No	
Noise Level Allowable per 8 hr shift (dB - Lex)		85		- Toxic		No	
Shift Length	(hrs)	8		- Corrosive		No	
Noise Level Allowable	(dB)	85		- Flammable		No	
Site Elevation	(ft)	663		Relative Humidity	(%)	0-100	C
Airlock Information							
				Chamber Capacity	(ft^3)	1.5	B
Manufacturer	*			Chamber Inside Dia.	(in) *		
Serial Number	*			Height	(in) *		
Flowrate (Max)	(lb/hr)	1837	C	Flange			
Material through Airlock				- no. of holes	*		
- description		clean soil	C	- Bolt Hole Dia.	(in) *		
- Bulk Density	(lb/ft^3)	93		- Outside Diam.	(in) *		
- Max. Moisture Content	%	5	C				
- Max. Cycle Rate	(cycles per min)	3	C	Internal Finish	*		
Operating Temperature (Range)	(°F)	-25 to 140	1		*		
Head of Material above valve	(ft)	1	0				0
Operating Press. through valve	(psi)			Discharge Reducer Size	*		B
Flow Area (inlet)	(ft^2)	0.55	C				
Port Dia. (inlet)	(in)	10	C	**Actuator**			
Air Operator Type	*			- type	*		
Required airflow	(acfm)			- Solenoid Control Signal	(VDC)	24	
Chamber Purger (Yes/No)		Yes		- Position Indication		Yes	
Clean Out Ports (Yes/No)		Yes		Min. Pilot Pressure	(psi) *		
				Supply Air Pressure	(psi)	90	B

Materials of Construction

		Type		Item	ASTM design	Grade	Description	
Valve Body		SS	0	Brackets etc.	A36		CS	
Internal Parts				Bolts	A307	B	CS	
-wetted		SS		Nuts	A563	A	CS	
-non wetted		SS	0	Flanges	A105	B	CS	B
Solenoid Operator	*			Pipe	A53	B	CS	B
Subplates and Manifolds	*							
Fasteners	*							
Seals	*							

Weight

Total Shipping Weight	(lbs) *		Operating Weight	(lbs) *	

Date	24-Sep-04	28-Oct-04	21-Dec-04	13-Jan-05	15-Feb-05		
By	FS	FS	FS	FS	GJ		
Chked	GJ	GJ	GJ	GJ	GJ		
Rev.	A	B	C	0	1		

amec

TECHNICAL DATA SHEETS

Data sheet 2 of 2

Inlet Composition			
Process Fluid		Soil	
Particulate Type		Non-Radioactive	
Phase		Solid	
SiO_2	(wt %)	91.16	C
Na_2O	(wt %)	3.84	C
Moisture	(wt %)	5	C
Soil SG.		1.5	
Soil Particle Distribution			
Screen No. 4 (4.75mm)	(%)	100	
Screen No. 10 (2 mm.)	(%)	99	

Comments:

1. Items marked with an * shall be filled in by VENDOR
2. Valve actuators to include position/limit switches.

Date	24-Sep-04	28-Oct-04	21-Dec-04	13-Jan-05	15-Feb-05		
By	FS	FS	FS	FS	GJ		
Chked	GJ	GJ	GJ	GJ			
Rev.	A	B	C	0	1		

amec

TECHNICAL DATA SHEETS

PROJECT:	Final DBVS Design	145579-D-DS-018.2	REV. 1
PROJECT NO.:	145579	Top Off Soil Feed Chute Airlock Assembly	
CLIENT:	AMEC E&E - Richland, Washington	EQ. NO.:	34-D88-035 / 036 / 037

BIDDERS DRAWING AND DATA COMMITMENTS

Vendor shall supply all drawings, manuals and documentation in the quantities indicated. Approval drawings are due within the listed number of calendar days after issue of the Purchase Order or Letter of Intent. The dates set out for drawing and data submissions are governed by the engineering design schedule of the project. The Vendor shall supply one AutoCAD disk file and requested number of copies within the listed number of calendar days. Final drawings must be certified as correct and bear the Vendors name, equipment number and Purchase Order Number. Drawing Transmittals listing the document numbers, revisions numbers, quantities, status and document types must be included with all submissions (including electronic submittals).

SEND ALL DOCUMENTS TO:

Submit all documents via courier service
Faxed documents must be followed by the originals.
Electronic E-mail or FTP transmissions of drawings & data must be copied to Document Control
Always include a transmittal

AMEC Americas Limited
1385 Cedar Avenue
Trail, BC, Canada
V1R 4C3
Attn: Document Control
Phone: (250) 368-2400
Fax: (250) 368-2401

BIDDERS MUST PROVIDE ESTIMATED LEAD TIMES FOR APPROVAL DRAWINGS

Proposal	Bidder shall include this data for each item			REVIEW ITEMS DUE WITHIN	VENDOR COMMITMENT (SEE NOTE 4)
	Review	Required before ordering or start of fabrication			
		Final	Required within 7 days prior to shipment and before final payr		
PROPOSAL	REVIEW	FINAL	DESCRIPTION	(DAYS)	(DAYS)
1			Q A program that satisfies the requirements of ASME NQA-1-1994	Bid	
1			Experience list and maintainability information	Bid	
E+3	E+3		Design, fabrication & delivery schedule	Bid	
E+3	E+3	E+6	Outline drawings and layout drawings indicating weights and dimensions	PO+10	
E+3	E+3	E+6	Technical brochures on purchased components	PO+17	
	E+3	E+6	Final Drawings + Calculations	PO+17	
	E+1	E+6	Spare parts list	Del-14	
	E+1	E+6	Set of installation and maintenance manuals c/w technical literature for all equipment and devices	Del-14	
		6	Electromagnetic interference test results	N/A	
		1	Hardware Delivery	PO+50	
		6	Site commissioning record & test results	COM+14	

THE TIMELY RECEIPT OF THE VENDOR DOCUMENTS IS CRITICAL TO THIS PROJECT
BUYER COMMITS TO A 10 WORKING DAY TURNAROUND ON REVIEW ITEMS

I agree to provide the listed documentation and data and the dates shown above.

Vendor Signature _____ Date _____

This page intentionally left blank.

amec AMEC E&C Services Limited
Trail, BC Canada

Instrumentation Data Sheet

TAG NUMBER: 34-YV-009

SUBJECT:	VALVE - ON/OFF		
SERVICE:	ICV BOX WASTE FEED CHUTE No.1 AIRLOCK ASSEMBLY VALVE No.1		
SUPPLIER:		P.I.C. No.:	206
MAKE:	Gemco Valve or Equal	P.O. No.:	
MODEL:	T Valve*	P&ID No.:	F-145579-34-A-0101

BODY		POSITION SWITCH	
Size:	10"	Tag:	34-ZSC-009/ 34-ZSO-009
Rating:	150# ANSI	Make:	*
Connection:	FLANGE	Model:	*
Material:	*	Form:	DPDT
Packing:	*	Rating:	NEMA 4X
F-F Dim.	*	Mounting:	On Valve
		Action:	Note 1.

TRIM		SOLENOID	
Type:	DISC	Tag:	34-YY-009
Port Size:	10"	Make:	*
Char. Curve:	*	Model:	*
Seat Mat'l:	*	Action:	Energise to open
Disc Mat'l:	*	Mounting:	On Valve
Leak Class:	*	Voltage:	24 V DC
Valve Cv:	*		

ACTUATOR:			
Type:	Pneumatic / Spring Return	Input:	*
Make:	*	Action:	Air to Open
Model:	*	Fail Position:	Closed
Size:	*	Air Supply:	80 psig

316SS tag permanently affixed to instrument

SERVICE CONDITIONS:			Minimum	Normal	Maximum
Line No./Equip. No.	34-D84-005	Flow	0		7128
Fluid	DRY WASTE (Note 3)	PI	0		-1
Spec. Grav.	1.5 (Solids Only)	DP			
% Solids	99 % (wt %), 1% Moisture	Cv			
Min. Temp.	-25°F	Noise			< 85dBa
Oper. Temp.	82°F				
Max. Temp.	115°F	Units Flow	Kg/hr		
Max. Shutoff dP		Pres	In H2O		

NOTES:
1. Close limit switch closes when valve is closed; Open limit switch closes when valve is open.
2. All items with an * shall be filled in by the VENDOR
3. See Mechanical Data sheet 145579-D-DS-018.1 for soil composition

By: Bgw	Chk:	Appd	Date: 12-Jan-05	Project: 145579	Rev: B

amec — AMEC E&C Services Limited, Trail, BC Canada

Instrumentation Data Sheet

TAG NUMBER: **34-YV-010**

SUBJECT:	VALVE - ON/OFF		
SERVICE:	ICV BOX WASTE FEED CHUTE No.1 AIRLOCK ASSEMBLY VALVE No.2		
SUPPLIER:		P.I.C. No.:	206
MAKE:	Gemco Valve or Equal	P.O. No.:	
MODEL:	T Valve*	P&ID No.:	F-145579-34-A-0101

BODY		POSITION SWITCH	
Size:	10"	Tag:	34-ZSC-010/ 34-ZSO-010
Rating:	150# ANSI	Make:	*
Connection:	FLANGE	Model:	*
Material:	*	Form:	DPDT
Packing:	*	Rating:	NEMA 4X
F-F Dim.	*	Mounting:	On Valve
		Action:	Note 1.

TRIM		SOLENOID	
Type:	DISC	Tag:	34-YY-010
Port Size:	10"	Make:	*
Char. Curve:	*	Model:	*
Seat Mat'l:	*	Action:	Energise to open
Disc Mat'l:	*	Mounting:	On Valve
Leak Class:	*	Voltage:	24 V DC
Valve Cv:	*		

ACTUATOR:			
Type:	Pneumatic / Spring Return	Input:	*
Make:	*	Action:	Air to Open.
Model:	*	Fail Position:	Closed
Size:	*	Air Supply:	80 psig

316SS tag permanently affixed to instrument

SERVICE CONDITIONS:			Minimum	Normal	Maximum
Line No.	34-D84-005	Flow	0		7128
Fluid	DRY WASTE (Note 3)	PI	0		-1
Spec. Grav.	1.5 (Solids Only)	DP			
% Solids	99 % (wt %), 1% Moisture	Cv			
Min. Temp.	-25°F	Noise			< 85dBa
Oper. Temp.	82°F				
Max. Temp.	115°F	Units Flow	Kg./HR.		
Max. Shutoff dP		Pres	In H2O		

NOTES:
1. Close limit switch closes when valve is closed; Open limit switch closes when valve is open.
2. All items with an * shall be filled in by the VENDOR
3. See Mechanical Data sheet 145579-D-DS-018.1 for soil composition.

By: Bgw.	Chk:	Appd	Date: 12-Jan-05	Project: 145579	Rev: C

amec	AMEC E&C Services Limited Trail, BC Canada	Instrumentation Data Sheet

TAG NUMBER: 34-YV-019

SUBJECT:	VALVE - ON/OFF		
SERVICE:	ICV BOX WASTE FEED CHUTE No.2 AIRLOCK ASSEMBLY VALVE No.1		
SUPPLIER:		P.I.C. No.:	206
MAKE:	Gemco Valve or Equal	P.O. No.:	
MODEL:	T Valve*	P&ID No.:	F-145579-34-A-0101

BODY		POSITION SWITCH	
Size:	10"	Tag:	34-ZSC-019/ 34-ZSO-019
Rating:	150# ANSI	Make:	*
Connection:	FLANGE	Model:	*
Material:	*	Form:	DPDT
Packing:	*	Rating:	NEMA 4
F-F Dim.	*	Mounting:	On Valve
		Action:	Note 1.

TRIM		SOLENOID	
Type:	DISC	Tag:	34-YY-019
Port Size:	10"	Make:	*
Char. Curve:	*	Model:	*
Seat Mat'l:	*	Action:	Energise to open
Disc Mat'l:	*	Mounting:	On Valve
Leak Class:	*	Voltage:	24 V DC
Valve Cv:	*		

ACTUATOR:			
Type:	Pneumatic / Spring Return	Input:	*
Make:	*	Action:	Air to Open
Model:	*	Fail Position:	Closed
Size:	*	Air Supply:	80 psig

316SS tag permanently affixed to instrument

SERVICE CONDITIONS:			Minimum	Normal	Maximum
Line No./Equip.	34-D84-006	Flow	0		7128
Fluid	DRY WASTE (Note 3)	Pl	0		-1
Spec. Grav.	1.5 (Solids Only)	DP			
% Solids	99 % (wt %), 1% Moisture	Cv			
Min. Temp.	-25°F	Noise			<85dBa
Oper. Temp.	82°F				
Max. Temp.	115°F	Units Flow	Kg/HR		
Max. Shutoff dP		Pres	In H2O		

NOTES:
1. Close limit switch closes when valve is closed; Open limit switch closes when valve is open.
2. All items with an * shall be filled in by the VENDOR
3. See Mechanical Data sheet 145579-D-DS-018.1 for soil composition

By: Bgw	Chk:	Appd	Date: 12-Jan-05	Project: 145579	Rev: B

amec — AMEC E&C Services Limited, Trail, BC Canada

Instrumentation Data Sheet

TAG NUMBER: 34-YV-020

SUBJECT:	VALVE - ON/OFF		
SERVICE:	ICV BOX WASTE FEED CHUTE No.2 AIRLOCK ASSEMBLY VALVE No.2		
SUPPLIER:		P.I.C. No.:	206
MAKE:	Gemco Valve or Equal	P.O. No.:	
MODEL:	T Valve*	P&ID No.:	F-145579-34-A-0101

BODY		POSITION SWITCH	
Size:	10"	Tag:	34-ZSC-020/ 34-ZSO-020
Rating:	150# ANSI	Make:	*
Connection:	FLANGE	Model:	*
Material:	*	Form:	DPDT
Packing:	*	Rating:	NEMA 4
F-F Dim.	*	Mounting:	On Valve
		Action:	Note 1.

TRIM		SOLENOID	
Type:	DISC	Tag:	34-YY-020
Port Size:	10"	Make:	*
Char. Curve:	*	Model:	*
Seat Mat'l:	*	Action:	Energise to open
Disc Mat'l:	*	Mounting:	On Valve
Leak Class:	*	Voltage:	24 V DC
Valve Cv:	*		

ACTUATOR:

Type:	Pneumatic / Spring Return	Input:	*
Make:	*	Action:	Air to Open
Model:	*	Fail Position:	Closed
Size:	*	Air Supply:	80 psig

316SS tag permanently affixed to instrument

SERVICE CONDITIONS:

			Minimum	Normal	Maximum
Line No./Equip. No.	34-D84-005	Flow	0		7128
Fluid	DRY WASTE (Note 3)	PI	0		-1
Spec. Grav.	1.5 (Solids Only)	DP			
% Solids	90 % (wt %)	Cv			
Min. Temp.	-25°F	Noise			< 85dBa
Oper. Temp.	82°F				
Max. Temp.	250°F	Units Flow	Kg./hr		
Max. Shutoff dP		Pres	In H2O		

NOTES:
1. Close limit switch closes when valve is closed; Open limit switch closes when valve is open.
2. All items with an * shall be filled in by the VENDOR
3. See Mechanical Data sheet 145579-D-DS-018.1 for soil composition

By: Bgw	Chk:	Appd	Date: 16-Dec-04	Project: 145579	Rev: B

amec AMEC E&C Services Limited
Trail, BC Canada

Instrumentation Data Sheet

TAG NUMBER: 34-YV-201

SUBJECT:	VALVE - ON/OFF		
SERVICE:	TOP OFF SOIL FEED CHUTE AIRLOCK ASSEMBLY No.1 VALVE No.1		
SUPPLIER:		P.I.C. No.:	206
MAKE:	Gemco Valve or Equivalent	P.O. No.:	
MODEL:	T Valve*	P&ID No.:	F-145579-34-A-0101

BODY		POSITION SWITCH	
Size:	10"	Tag:	34-ZSC-201 / 34-ZSO-201
Rating:	150# ANSI	Make:	*
Connection:	FLANGE	Model:	*
Material:	*	Form:	DPDT
Packing:	*	Rating:	NEMA 4X
F-F Dim.	*	Mounting:	On Valve
		Action:	Note 1.

TRIM		SOLENOID	
Type:	DISC	Tag:	34-YY-201
Port Size:	10"	Make:	*
Char. Curve:	*	Model:	*
Seat Mat'l:	*	Action:	Energise to open
Disc Mat'l:	*	Mounting:	On Valve
Leak Class:	*	Voltage:	24 V DC
Valve Cv:	*		

ACTUATOR:			
Type:	Pneumatic / Spring Return	Input:	*
Make:	*	Action:	Air to Open
Model:	*	Fail Position:	Closed
Size:	*	Air Supply:	80 psig

316SS tag permanently affixed to instrument

SERVICE CONDITIONS:			Minimum	Normal	Maximum
Line No./Equip. No.	34-D88-035	Flow	0		1847
Fluid	TOP OFF SOIL (Note 3)	PI	0		-1
Spec. Grav.	1.5 (Solids Only)	DP			
% Solids	95 % (wt %), 5% Moisture	Cv			
Min. Temp.	-25°F	Noise			< 85dBa
Oper. Temp.	82°F				
Max. Temp.	115°F	Units Flow	lb/hr		
Max. Shutoff dP		Pres	In H2O		

NOTES:
1. Close limit switch closes when valve is closed; Open limit switch closes when valve is open.
2. All items with an * shall be filled in by the VENDOR
3. See Mechanical Data sheet 145579-D-DS-018.2 for soil composition

By: Bgw	Chk:	Appd	Date: 12-Jan-05	Project: 145579	Rev: C

amec — AMEC E&C Services Limited, Trail, BC Canada

Instrumentation Data Sheet

TAG NUMBER: 34-YV-202

SUBJECT:	VALVE - ON/OFF		
SERVICE:	TOP OFF SOIL FEED CHUTE AIRLOCK ASSEMBLY No.1 VALVE No.2		
SUPPLIER:		P.I.C. No.:	206
MAKE:	Gemco Valve or Equivalent	P.O. No.:	
MODEL:	T Valve*	P&ID No.:	F-145579-34-A-0101

BODY		POSITION SWITCH	
Size:	10"	Tag:	34-ZSC-202 / 34-ZSO-202
Rating:	150# ANSI	Make:	*
Connection:	FLANGE	Model:	*
Material:	*	Form:	DPDT
Packing:	*	Rating:	NEMA 4X
F-F Dim.	*	Mounting:	On Valve
		Action:	Note 1.

TRIM		SOLENOID	
Type:	DISC	Tag:	34-YY-202
Port Size:	10"	Make:	*
Char. Curve:	*	Model:	*
Seat Mat'l:	*	Action:	Energise to open
Disc Mat'l:	*	Mounting:	On Valve
Leak Class:	*	Voltage:	24 V DC
Valve Cv:	*		

ACTUATOR:			
Type:	Pneumatic / Spring Return	Input:	*
Make:	*	Action:	Air to Open
Model:	*	Fail Position:	Closed
Size:	*	Air Supply:	80 psig

316SS tag permanently affixed to instrument

SERVICE CONDITIONS:			Minimum	Normal	Maximum
Line No./Equip. No.	34-D88-035	Flow	0		1847
Fluid	TOP OFF SOIL (Note 3)	Pl	0		-1
Spec. Grav.	1.5 (Solids Only)	DP			
% Solids	95 % (wt %), 5% Moisture	Cv			
Min. Temp.	-25°F	Noise			<85dBa
Oper. Temp.	82°F				
Max. Temp.	115°F	Units Flow	lb/hr		
Max. Shutoff dP		Pres	In H2O		

NOTES:
1. Close limit switch closes when valve is closed; Open limit switch closes when valve is open.
2. All items with an * shall be filled in by the VENDOR
3. See Mechanical Data sheet 145579-D-DS-018.2 for soil composition

By: Bgw	Chk:	Appd:	Date: 12-Jan-05	Project: 145579	Rev: C

P:\Design\INST\Data Sheets\007.1 (Area 34 Inst. DS)\Area 34\34-YV-202_IDS.doc
01/14/2005

amec — AMEC E&C Services Limited, Trail, BC Canada

Instrumentation Data Sheet

TAG NUMBER: 34-YV-201

SUBJECT:	VALVE - ON/OFF		
SERVICE:	TOP OFF SOIL FEED CHUTE AIRLOCK ASSEMBLY No.1 VALVE No.1		
SUPPLIER:		P.I.C. No.:	206
MAKE:	Gemco Valve or Equivalent	P.O. No.:	
MODEL:	T Valve*	P&ID No.:	F-145579-34-A-0101

BODY		POSITION SWITCH	
Size:	10"	Tag:	34-ZSC-201 / 34-ZSO-201
Rating:	150# ANSI	Make:	*
Connection:	FLANGE	Model:	*
Material:	*	Form:	DPDT
Packing:	*	Rating:	NEMA 4X
F-F Dim.	*	Mounting:	On Valve
		Action:	Note 1.

TRIM		SOLENOID	
Type:	DISC	Tag:	34-YY-201
Port Size:	10"	Make:	*
Char. Curve:	*	Model:	*
Seat Mat'l:	*	Action:	Energise to open
Disc Mat'l:	*	Mounting:	On Valve
Leak Class:	*	Voltage:	24 V DC
Valve Cv:	*		

ACTUATOR:			
Type:	Pneumatic / Spring Return	Input:	*
Make:	*	Action:	Air to Open
Model:	*	Fail Position:	Closed
Size:	*	Air Supply:	80 psig

316SS tag permanently affixed to instrument

SERVICE CONDITIONS:			Minimum	Normal	Maximum
Line No./Equip. No.	34-D88-035	Flow	0		1847
Fluid	TOP OFF SOIL (Note 3)	Pl	0		-1
Spec. Grav.	1.5 (Solids Only)	DP			
% Solids	95 % (wt %), 5% Moisture	Cv			
Min. Temp.	-25°F	Noise			< 85dBa
Oper. Temp.	82°F				
Max. Temp.	115°F	Units Flow	lb/hr		
Max. Shutoff dP		Pres	In H2O		

NOTES:
1. Close limit switch closes when valve is closed; Open limit switch closes when valve is open.
2. All items with an * shall be filled in by the VENDOR
3. See Mechanical Data sheet 145579-D-DS-018.2 for soil composition.

By: Bgw	Chk:	Apprd:	Date: 12-Jan-05	Project: 145579	Rev: C

amec AMEC E&C Services Limited Trail, BC Canada

Instrumentation Data Sheet

TAG NUMBER: 34-YV-202

SUBJECT:	VALVE - ON/OFF		
SERVICE:	TOP OFF SOIL FEED CHUTE AIRLOCK ASSEMBLY No.1 VALVE No.2		
SUPPLIER:		P.I.C. No.:	206
MAKE:	Gemco Valve or Equivalent	P.O. No.:	
MODEL:	T Valve*	P&ID No.:	F-145579-34-A-0101

BODY		POSITION SWITCH	
Size:	10"	Tag:	34-ZSC-202 / 34-ZSO-202
Rating:	150# ANSI	Make:	*
Connection:	FLANGE	Model:	*
Material:	*	Form:	DPDT
Packing:	*	Rating:	NEMA 4X
F-F Dim.	*	Mounting:	On Valve
		Action:	Note 1.

TRIM		SOLENOID	
Type:	DISC	Tag:	34-YY-202
Port Size:	10"	Make:	*
Char. Curve:	*	Model:	*
Seat Mat'l:	*	Action:	Energise to open
Disc Mat'l:	*	Mounting:	On Valve
Leak Class:	*	Voltage:	24 V DC
Valve Cv:	*		

ACTUATOR:

Type:	Pneumatic / Spring Return	Input:	*
Make:	*	Action:	Air to Open
Model:	*	Fail Position:	Closed
Size:	*	Air Supply:	80 psig

316SS tag permanently affixed to instrument

SERVICE CONDITIONS:

			Minimum	Normal	Maximum
Line No./Equip. No.	34-D88-035	Flow	0		1847
Fluid	TOP OFF SOIL (Note 3)	PI	0		-1
Spec. Grav.	1.5 (Solids Only)	DP			
% Solids	95 % (wt %), 5% Moisture	Cv			
Min. Temp.	-25°F	Noise			< 85dBa
Oper. Temp.	82°F				
Max. Temp.	115°F	Units Flow	lb/hr		
Max. Shutoff dP		Pres	In H2O		

NOTES:
1. Close limit switch closes when valve is closed; Open limit switch closes when valve is open.
2. All items with an * shall be filled in by the VENDOR
3. See Mechanical Data sheet 145579-D-DS-018.2 for soil composition

By: Bgw	Chk:	Appd:	Date: 12-Jan-05	Project: 145579	Rev: C

amec AMEC E&C Services Limited
Trail, BC Canada

Instrumentation Data Sheet

TAG NUMBER: 34-YV-203

SUBJECT:	VALVE - ON/OFF		
SERVICE:	TOP OFF SOIL FEED CHUTE AIRLOCK ASSEMBLY No.2 VALVE No.1		
SUPPLIER:		P.I.C. No.:	206
MAKE:	Gemco Valve or Equivalent	P.O. No.:	
MODEL:	*	P&ID No.:	F-145579-34-A-0101

BODY		POSITION SWITCH	
Size:	10"	Tag:	34-ZSC-203/ 34-ZSO-203
Rating:	150# ANSI	Make:	*
Connection:	FLANGE	Model:	*
Material:	*	Form:	DPDT
Packing:	*	Rating:	NEMA 4X
F-F Dim.	*	Mounting:	On Valve
		Action:	Note 1.

TRIM		SOLENOID	
Type:	DISC	Tag:	34-YY-203
Port Size:	10"	Make:	*
Char. Curve:	*	Model:	*
Seat Mat'l:	*	Action:	Energise to open
Disc Mat'l:	*	Mounting:	On Valve
Leak Class:	*	Voltage:	24 V DC
Valve Cv:	*		

ACTUATOR:			
Type:	Pneumatic / Spring Return	Input:	*
Make:	*	Action:	Air to Open
Model:	*	Fail Position:	Closed
Size:	*	Air Supply:	80 psig

316SS tag permanently affixed to instrument

SERVICE CONDITIONS:			Minimum	Normal	Maximum
Line No./Equip. No.	34-D88-036	Flow	0		1847
Fluid	TOP OFF SOIL (Note 3)	PI	0		-1
Spec. Grav.	1.5 (Solids Only)	DP			
% Solids	95 % (wt %), 5% Moisture	Cv			
Min. Temp.	-25°F	Noise			< 85dBa
Oper. Temp.	82°F				
Max. Temp.	115°F	Units Flow	lb/hr		
Max. Shutoff dP		Pres	In H2O		

NOTES:
1. Close limit switch closes when valve is closed; Open limit switch closes when valve is open.
2. All items with an * shall be filled in by the VENDOR
3. See Mechanical Data sheet 145579-D-DS-018.2 for soil composition

By: Bgw	Chk:	Appd:	Date: 12-Jan-05	Project: 145579	Rev: C

F:\Design\INST\Data Sheets\007.1 (Area 34 Inst. DS)\Area 34\34-YV-203_IDS.doc
01/14/2005

Page 1 of 1

amec AMEC E&C Services Limited Trail, BC Canada

Instrumentation Data Sheet

TAG NUMBER: 34-YV-204

SUBJECT:	VALVE - ON/OFF		
SERVICE:	TOP OFF SOIL FEED CHUTE AIRLOCK ASSEMBLY No.2 VALVE No.2		
SUPPLIER:		P.I.C. No.:	206
MAKE:	Gemco Valve or Equivalent	P.O. No.:	
MODEL:	T Valve	P&ID No.:	F-145579-34-A-0101

BODY		POSITION SWITCH	
Size:	10"	Tag:	34-ZSC-204/ 34-ZSO-204
Rating:	150# ANSI	Make:	*
Connection:	FLANGE	Model:	*
Material:	*	Form:	DPDT
Packing:	*	Rating:	NEMA 4X
F-F Dim.	*	Mounting:	On Valve
		Action:	Note 1.

TRIM		SOLENOID	
Type:	DISC	Tag:	34-YY-204
Port Size:	10"	Make:	*
Char. Curve:	*	Model:	*
Seat Mat'l:	*	Action:	Energise to open
Disc Mat'l:	*	Mounting:	On Valve
Leak Class:	*	Voltage:	24 V DC
Valve Cv:	*		

ACTUATOR:			
Type:	Pneumatic / Spring Return	Input:	*
Make:	*	Action:	Air to Open
Model:	*	Fail Position:	Closed
Size:	*	Air Supply:	80 psig

316SS tag permanently affixed to instrument

SERVICE CONDITIONS:			Minimum	Normal	Maximum
Line No./Equip. No.	34-D88-036	Flow	0		1847
Fluid	TOP OFF SOIL (Note 3)	PI	0		-1
Spec. Grav.	1.5 (Solids Only)	DP			
% Solids	95 % (wt %), 5% Moisture	Cv			
Min. Temp.	-25°F	Noise			< 85dBa
Oper. Temp.	82°F				
Max. Temp.	115°F	Units Flow	lb/hr		
Max. Shutoff dP		Pres	In H2O		

NOTES:
1. Close limit switch closes when valve is closed; Open limit switch closes when valve is open.
2. All items with an * shall be filled in by the VENDOR
3. See Mechanical Data sheet 145579-D-DS-018.2 for soil composition

By: Bgw	Chk:	Appd:	Date: 12-Jan-05	Project: 145579	Rev: C

amec — AMEC B&C Services Limited, Trail, BC Canada

Instrumentation Data Sheet

TAG NUMBER: 34-YV-205

SUBJECT:	VALVE - ON/OFF		
SERVICE:	TOP OFF SOIL FEED CHUTE AIRLOCK ASSEMBLY No.3 VALVE No.1		
SUPPLIER:		P.I.C. No.:	206
MAKE:	Gemco Valve or Equivalent	P.O. No.:	
MODEL:	T Valve	P&ID No.:	F-145579-34-A-0101

BODY		POSITION SWITCH	
Size:	10"	Tag:	34-ZSC-205/ 34-ZSO-205
Rating:	150# ANSI	Make:	*
Connection:	FLANGE	Model:	*
Material:	*	Form:	DPDT
Packing:	*	Rating:	NEMA 4X
F-F Dim.	*	Mounting:	On Valve
		Action:	Note 1.

TRIM		SOLENOID	
Type:	DISC	Tag:	34-YY-205
Port Size:	10"	Make:	*
Char. Curve:	*	Model:	*
Seat Mat'l:	*	Action:	Energise to open
Disc Mat'l:	*	Mounting:	On Valve
Leak Class:	*	Voltage:	24 V DC
Valve Cv:	*		

ACTUATOR:			
Type:	Pneumatic / Spring Return	Input:	*
Make:	*	Action:	Air to Open
Model:	*	Fail Position:	Closed
Size:	*	Air Supply:	80 psig

316SS tag permanently affixed to instrument

SERVICE CONDITIONS:			Minimum	Normal	Maximum
Line No.	34-D88-037	Flow	0		1847
Fluid	TOP OFF SOIL (Note 3)	Pl	0		-1
Spec. Grav.	1.5 (Solids Only)	DP			
% Solids	95 % (wt %), 5% Moisture	Cv			
Min. Temp.	-25°F	Noise			< 85dBa
Oper. Temp.	82°F				
Max. Temp.	115°F	Units Flow	ACFM		
Max. Shutoff dP		Pres	In H2O		

NOTES:
1. Close limit switch closes when valve is closed; Open limit switch closes when valve is open.
2. All items with an * shall be filled in by the VENDOR
3. See Mechanical Data sheet 145579-D-DS-018.2 for soil composition

By: Bgw	Chk:	Appd:	Date: 12-Jan-05	Project: 145579	Rev: C

amec AMEC E&C Services Limited Trail, BC Canada

Instrumentation Data Sheet

TAG NUMBER: 34-YV-206

SUBJECT:	VALVE - ON/OFF		
SERVICE:	TOP OFF SOIL FEED CHUTE AIRLOCK ASSEMBLY No.3 VALVE No.2		
SUPPLIER:		P.I.C. No.:	206
MAKE:	Gemco Valve or Equivalent	P.O. No.:	
MODEL:	T Valve*	P&ID No.:	F-145579-34-A-0101

BODY		POSITION SWITCH	
Size:	10"	Tag:	34-ZSC-206/ 34-ZSO-206
Rating:	150# ANSI	Make:	*
Connection:	FLANGE	Model:	*
Material:	*	Form:	DPDT
Packing:	*	Rating:	NEMA 4X
F-F Dim.	*	Mounting:	On Valve
		Action:	Note 1.

TRIM		SOLENOID	
Type:	DISC	Tag:	34-YY-206
Port Size:	10"	Make:	*
Char. Curve:	*	Model:	*
Seat Mat'l:	*	Action:	Energise to open
Disc Mat'l:	*	Mounting:	On Valve
Leak Class:	*	Voltage:	24 V DC
Valve Cv:	*		

ACTUATOR:			
Type:	Pneumatic / Spring Return	Input:	*
Make:	*	Action:	Air to Open
Model:	*	Fail Position:	Closed
Size:	*	Air Supply:	80 psig

316SS tag permanently affixed to instrument

SERVICE CONDITIONS:			Minimum	Normal	Maximum
Line No./Equip. No.	34-D88-037	Flow	0		1847
Fluid	TOP OFF SOIL (Note 3)	PI	0		-1
Spec. Grav.	1.5 (Solids Only)	DP			
% Solids	95 % (wt %), 5% Moisture	Cv			
Min. Temp.	-25°F	Noise			< 85dBa
Oper. Temp.	82°F				
Max. Temp.	115°F	Units Flow	lb/hr		
Max. Shutoff dP		Pres	In H2O		

NOTES:
1. Close limit switch closes when valve is closed; Open limit switch closes when valve is open.
2. All items with an * shall be filled in by the VENDOR
3. See Mechanical Data sheet 145579-D-DS-018.2 for soil composition

By: Bgw	Chk:	Appd	Date: 12-Jan-05	Project: 145579	Rev: C

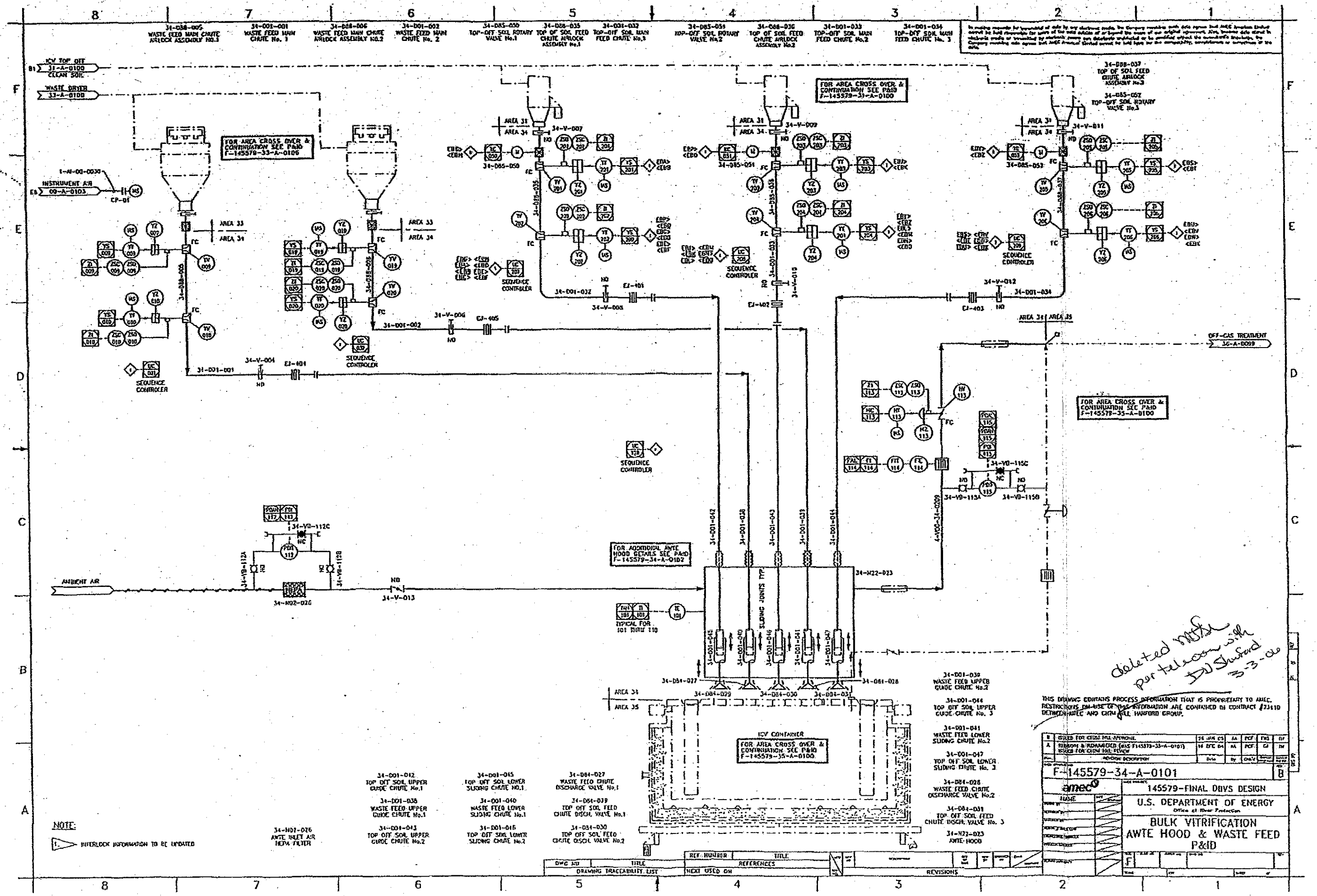

deleted MFR per telecon with DJ Shuford 3-3-06

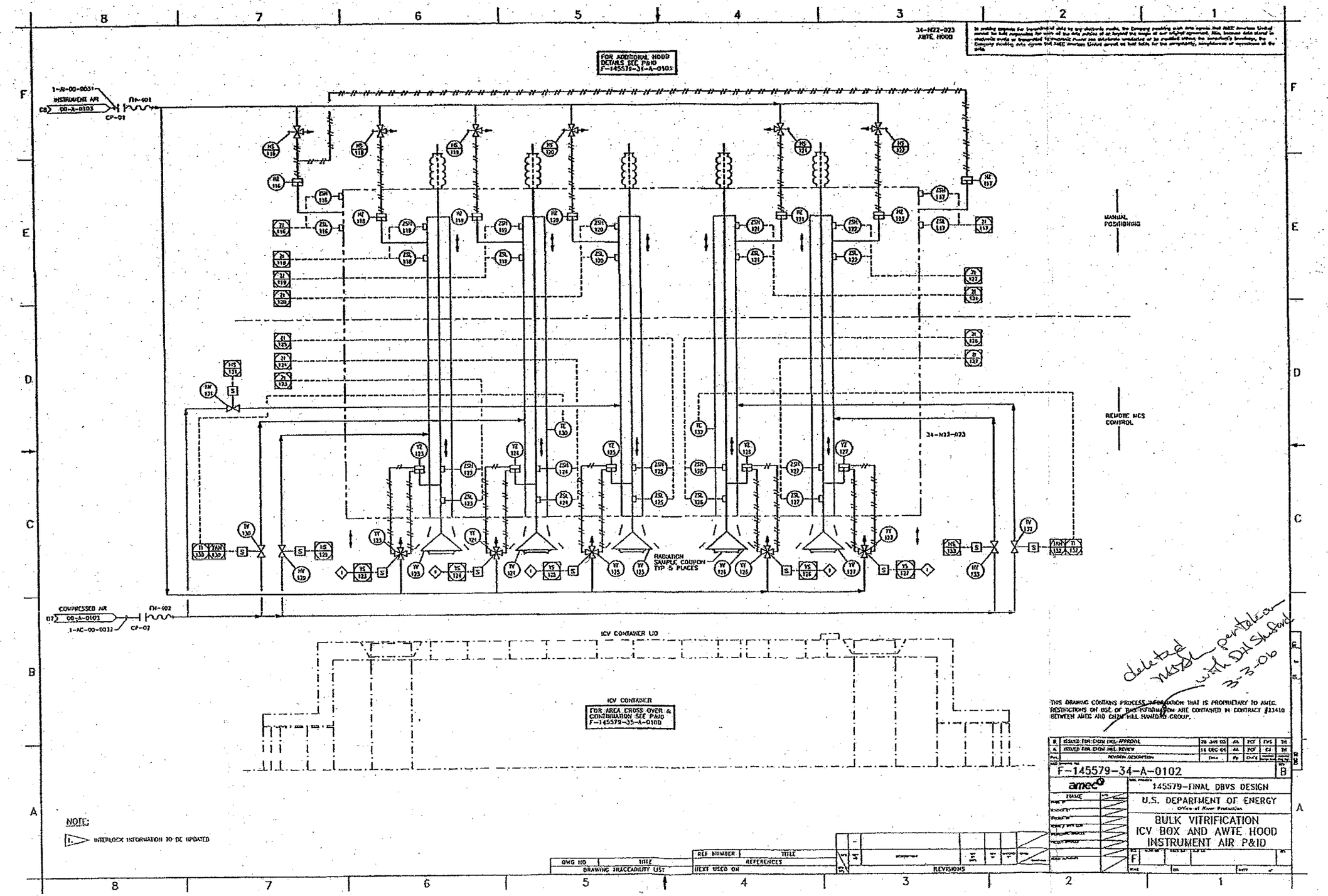
FOR ADDITIONAL HOOD DETAILS SEE P&ID F-145579-34-A-0103
34-M22-023
AWTE HOOD
INSTRUMENT AIR
COMPRESSED AIR
MANUAL POSITIONING
REMOTE MCS CONTROL
RADIATION SAMPLE COUPON TYP 5 PLACES
ICV CONTAINER UD
ICV CONTAINER
FOR AREA CROSS OVER & CONTINUATION SEE P&ID F-145579-35-A-0100
NOTE:
1. INTERLOCK INFORMATION TO BE UPDATED
F-145579-34-A-0102
B
145579-FINAL DBVS DESIGN
U.S. DEPARTMENT OF ENERGY
BULK VITRIFICATION
ICV BOX AND AWTE HOOD
INSTRUMENT AIR P&ID
DRAWING TRACEABILITY LIST
REFERENCES
REVISIONS

No.	AMEC Dwg. No.	REFERENCE DRAWINGS
3	F-145579-34-D-0007	DISCHARGE NOZZLE ASSEMBLY
2	F-145579-34-D-0001	AWTE PLAN AND ELEVATIONS
1	F-145579-34-D-0002	AWTE DETAILS & SECTION

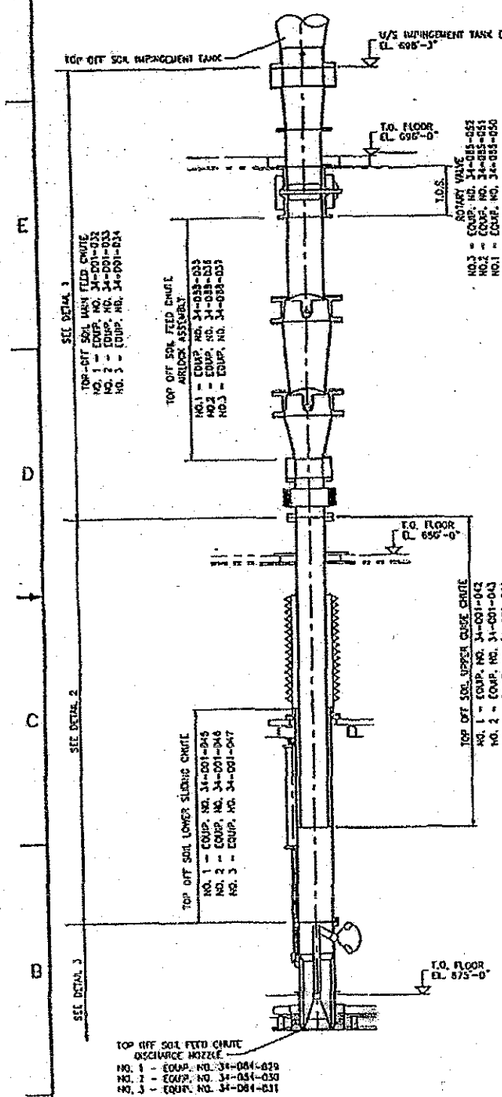

SECTION THRU TOP OFF SOIL IMPINGEMENT TANK, AIRLOCK AND DISCHARGE CHUTE - TYP. 3 PLACES
SCALE: 3/4"=1'-0"

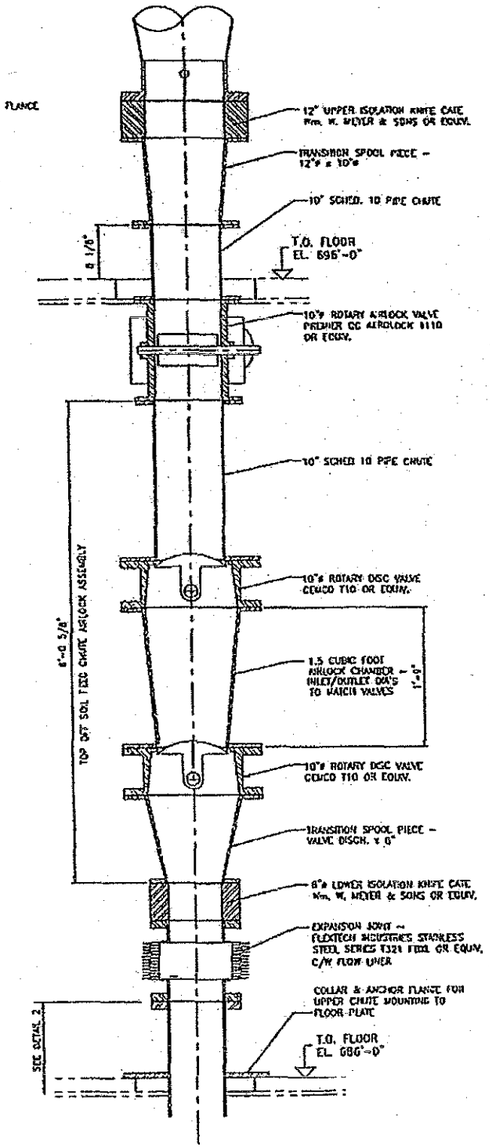

DETAIL 1 AIRLOCK ARRANGEMENT ASSEMBLY
SCALE: 1 1/2"= 1'-0"

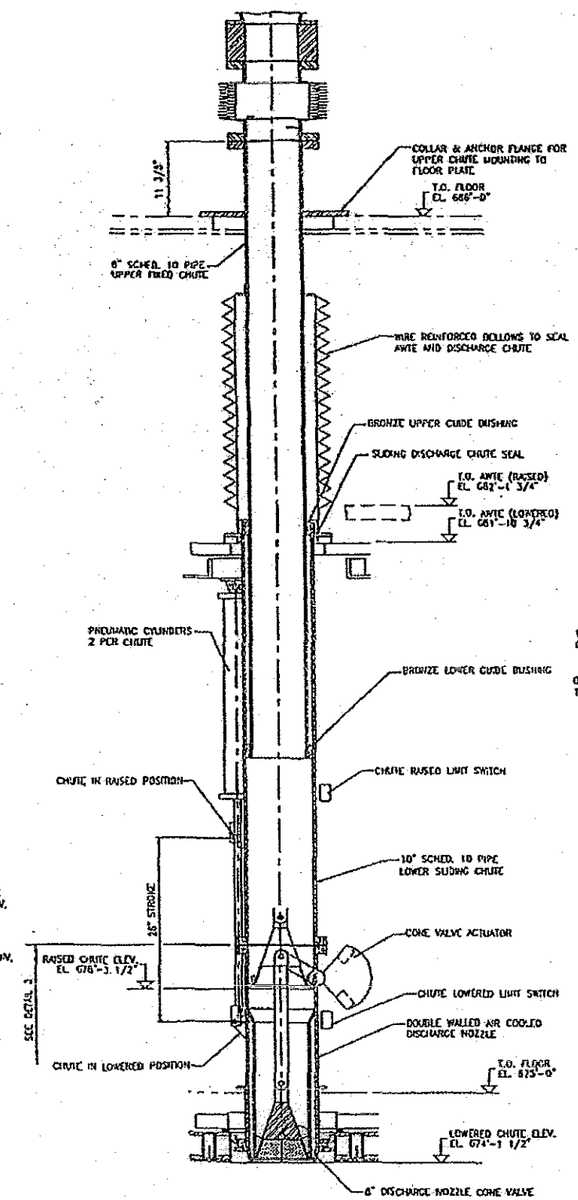

DETAIL 2 DISCHARGE CHUTE ASSEMBLY
SCALE: 1 1/2"= 1'-0"

NOTE:

GASKET CLEARANCE BETWEEN ALL FLANGE FACES = 1/8"

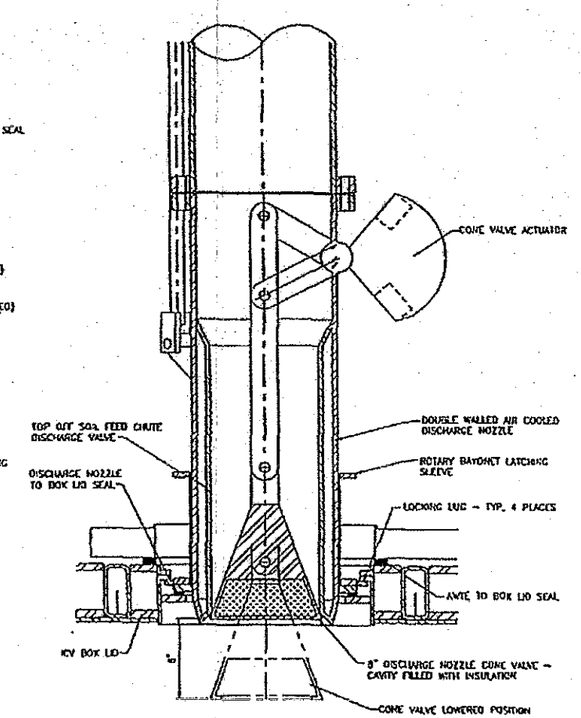

DETAIL 3 DISCHARGE NOZZLE TO ICV BOX
SCALE: 3"= 1'-0"

NOT APPROVED FOR CONSTRUCTION

Rev.	REVISION DESCRIPTION	DATE	By	Chk'd	Approved	Date
E	ISSUED FOR INFORMATION	16 FEB 05	RES		GF	SC
D	ISSUED FOR INFORMATION	20 DEC 04	RES		J-ITW	DH
C	ISSUED FOR CPE REVIEW/APPROVAL	9 NOV 04	RKB		GF	DH
B	ISSUED FOR INTERNAL APPROVAL	13 OCT 04	RES		J-ITW	JCS
A	ISSUED FOR REVIEW	04 OCT 04	RPB		J-ITW	JCS

F-145579-34-D-0003 — E

amec

145579-FINAL DBVS DESIGN

U.S. DEPARTMENT OF ENERGY
Office of River Protection

BULK VITRIFICATION
CHUTE LAYOUT ~ TOP OFF SOIL IMPINGMENT TANK TO ICV BOX

F — SCALE: AS NOTED

DWG NO	TITLE	REF NUMBER	TITLE
DRAWING TRACEABILITY LIST		NEXT USED ON	REFERENCES

REVISIONS

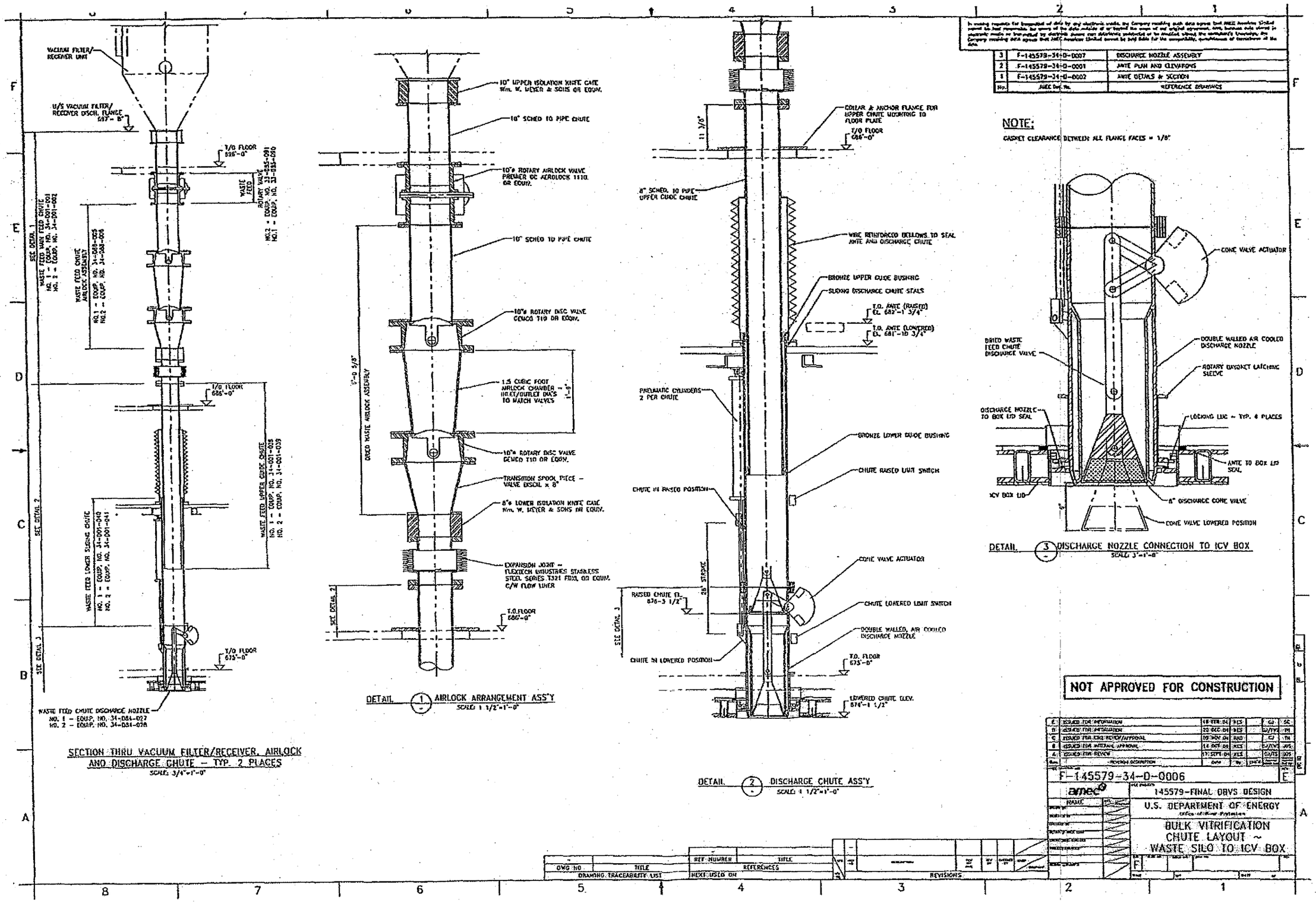

No.	AMEC Dwg. No.	REFERENCE DRAWINGS
3	F-145579-34-D-0007	DISCHARGE NOZZLE ASSEMBLY
2	F-145579-34-D-0001	ANTE PLAN AND ELEVATIONS
1	F-145579-34-D-0002	ANTE DETAILS & SECTION

DWG NO	TITLE	REF NUMBER	TITLE
DRAWING TRACEABILITY LIST		REFERENCES	
		HEXT USED ON	

REV	DESCRIPTION	DATE	BY	CHK'D	APPD
E	ISSUED FOR INFORMATION	18 FEB 04	RCS	GJ	SK
D	ISSUED FOR INTEGRATION	23 DEC 04	RCS	GJ/TYC	TM
C	ISSUED FOR CDR REVIEW/APPROVAL	09 NOV 04	RAD	GJ	TM
B	ISSUED FOR INTERNAL APPROVAL	14 OCT 04	RCS	GJ/TYC	JVS
A	ISSUED FOR REVIEW	17 SEPT 04	RCS	GJ/TS	JVS

REVISIONS

amec

TECHNICAL ENGINEERING CHANGE NOTICE (TECN)

145579 FINAL DBVS DESIGN TECN No.: **D-SP-018.R01.1**

DOCUMENT(S) AFFECTED BY CHANGE

Document No. of affected Docs.	Rev	Title:
145579-D-SP-018	1	Dried Waste and Top off Soil Airlock Assemblies
145579-D-DS-018.1	1	Dried Waste Airlock Assembly Data Sheet
145579-D-DS-018.2	1	Top-Off Soil Airlock Assembly Data Sheet

Originator: Victor Lourenco Date: April 27, 2005

BASIS OF CHANGE:

Revised Instrumentation Data Sheets. Revised Bidder's Drawing & Data Commitment sheet to match specification.

CN was signed twice

DESCRIPTION OF CHANGE:

145579-D-SP-018

Moved all Instrumentation Data Sheets from Section 8.0 "Attachments" to Section 7.0 "Appendices" under newly created "Appendix B". All Instrumentation Data Sheets amended to Rev. 1. (See attached pages.)

145579-D-DS-018.1 & 145579-D-DS-018.2

Both data sheets amended to match specification. (See attached pages.)

Total Pages Attached: 15.

AREA/DISC. LEAD:		DATE: 27 Apr 05
TRL ENG. MNGR. (JCS/TH):		DATE: Apr 27/05
AMEC E&E (M. Lucas):		DATE: 4/28/05
CLIENT APPROVAL: DAS		DATE: 5/4/05

Pic 206 ww

7.0 APPENDICES

Appendix	Description
A	TFC-ESHQ-QC-C-03 – Control of Suspect/Counterfeit Items
B	Instrumentation Data Sheets:
	34-YV-009 Waste Feed Main Chute Airlock Assembly No. 1 Valve No. 1 (Rev. 1)
	34-YV-010 Waste Feed Main Chute Airlock Assembly No. 1 Valve No. 2 (Rev. 1)
	34-YV-019 Waste Feed Main Chute Airlock Assembly No. 2 Valve No. 1 (Rev. 1)
	34-YV-020 Waste Feed Main Chute Airlock Assembly No. 2 Valve No. 2 (Rev. 1)
	34-YV-201 Top-off Soil Feed Chute Airlock Assembly No. 1 Valve No. 1 (Rev. 1)
	34-YV-202 Top-off Soil Feed Chute Airlock Assembly No. 1 Valve No. 2 (Rev. 1)
	34-YV-203 Top-off Soil Feed Chute Airlock Assembly No. 2 Valve No. 1 (Rev. 1)
	34-YV-204 Top-off Soil Feed Chute Airlock Assembly No. 2 Valve No. 2 (Rev. 1)
	34-YV-205 Top-off Soil Feed Chute Airlock Assembly No. 3 Valve No. 1 (Rev. 1)
	34-YV-206 Top-off Soil Feed Chute Airlock Assembly No. 3 Valve No. 2 (Rev. 1)

8.0 ATTACHMENTS

Document No.	Description	Rev.
145579-D-DS-018.1	Dried Waste Airlock Assembly Data Sheet	1
145579-D-DS-018.2	Top-Off Soil Airlock Assembly Data Sheet	1
~~34-YV-009~~	~~Waste Feed Main Chute Airlock Assembly No. 1 Valve No. 1~~	~~B~~
~~34-YV-010~~	~~Waste Feed Main Chute Airlock Assembly No. 1 Valve No. 2~~	~~C~~
~~34-YV-019~~	~~Waste Feed Main Chute Airlock Assembly No. 2 Valve No. 1~~	~~B~~
~~34-YV-020~~	~~Waste Feed Main Chute Airlock Assembly No. 2 Valve No. 2~~	~~C~~
~~34-YV-201~~	~~Top-off Soil Feed Chute Airlock Assembly No. 1 Valve No. 1~~	~~C~~
~~34-YV-202~~	~~Top-off Soil Feed Chute Airlock Assembly No. 1 Valve No. 2~~	~~C~~
~~34-YV-203~~	~~Top-off Soil Feed Chute Airlock Assembly No. 2 Valve No. 1~~	~~C~~

TECHNICAL SPECIFICATION
AMEC Americas Limited

amec

PROJECT:	**Final DBVS Design**	**TECN: D-SP-018.R01.1**
PROJECT NO.:	**145579**	**DRIED WASTE & TOP-OFF SOIL AIRLOCK ASSEMBLIES**
CLIENT:	**AMEC E&E – Richland, WA**	

Document No.	Description	Rev.
~~34-YV-204~~	~~Top-off Soil Feed Chute Airlock Assembly No. 2 Valve No. 2~~	~~C~~
~~34-YV-205~~	~~Top-off Soil Feed Chute Airlock Assembly No. 3 Valve No. 1~~	~~C~~
~~34-YV-206~~	~~Top-off Soil Feed Chute Airlock Assembly No. 3 Valve No. 2~~	~~C~~
F-145579-34-A-0101	AWTE Hood and Waste Feed P&ID	B
F-145579-34-A-0102	ICV Box and AWTE Hood Instrument Air P&ID	B
F-145579-34-D-0003	Chute Layout – Top-Off Soil Impingement Tank to ICV Box Drawing	E
F-145579-34-D-0006	Chute Layout – Waste Silo to ICV Box Drawing	E

This page intentionally left blank.

amec

TECHNICAL SPECIFICATION

PROJECT:	Final DBVS Design	TECN: D-SP-018.R01.1
PROJECT NO.:	145579	APPENDIX B INSTRUMENTATION DATA SHEETS
CLIENT:	AMEC E&E – Richland, WA	

APPENDIX B
INSTRUMENTATION DATA SHEETS

DOCUMENT NO.	TITLE	REV NO.	NO. OF PAGES
34-YV-009	Waste Feed Main Chute Airlock Assembly No. 1 Valve No. 1	1	1
34-YV-010	Waste Feed Main Chute Airlock Assembly No. 1 Valve No. 2	1	1
34-YV-019	Waste Feed Main Chute Airlock Assembly No. 2 Valve No. 1	1	1
34-YV-020	Waste Feed Main Chute Airlock Assembly No. 2 Valve No. 2	1	1
34-YV-201	Top-off Soil Feed Chute Airlock Assembly No. 1 Valve No. 1	1	1
34-YV-202	Top-off Soil Feed Chute Airlock Assembly No. 1 Valve No. 2	1	1
34-YV-203	Top-off Soil Feed Chute Airlock Assembly No. 2 Valve No. 1	1	1
34-YV-204	Top-off Soil Feed Chute Airlock Assembly No. 2 Valve No. 2	1	1
34-YV-205	Top-off Soil Feed Chute Airlock Assembly No. 3 Valve No. 1	1	1
34-YV-206	Top-off Soil Feed Chute Airlock Assembly No. 3 Valve No. 2	1	1

This page intentionally left blank.

amec AMEC E&C Services Limited
Trail, BC Canada

Instrumentation Data Sheet

TAG NUMBER: 34-YV-009

SUBJECT:	VALVE - ON/OFF		
SERVICE:	ICV BOX WASTE FEED CHUTE No.1 AIRLOCK ASSEMBLY VALVE No.1		
SUPPLIER:		P.I.C. No.:	206
MAKE:	Gemco Valve or Equal	P.O. No.:	
MODEL:	T Valve*	P&ID No.:	F-145579-34-A-0101

POSITION SWITCH

Tag:	34-ZSC-009/ 34-ZSO-009
Make:	*
Model:	*
Form:	DPDT
Rating:	NEMA 4X – UL Listed
Mounting:	On Valve
Action:	Note 1.

SOLENOID

Tag:	34-YY-009
Make:	*
Model:	*
Action:	Energise to open
Mounting:	On Valve
Voltage:	24 V DC
Rating:	NEMA 4X – UL Listed

ACTUATOR:

Type:	Pneumatic / Spring Return	Input:	*
Make:	*	Action:	Air to Open
Model:	*	Fail Position:	Closed
Size:	*	Air Supply:	80 psig

316SS tag permanently affixed to instrument

SERVICE CONDITIONS:

Line No./Equip. No.	34-D84-005			
Fluid	DRY WASTE (Note 3)			
Bulk Dens.	93 lb/ft^3			
% Solids	99 % by volume			
Min. Temp.	-25°F			
Oper. Temp.	82°F			
Max. Temp.	115°F	Units Flow	Kg/hr	
Max. Shutoff dP		Pres	In H2O	

NOTES:
1. Close limit switch closes when valve is closed; Open limit switch closes when valve is open.
2. All items with an * shall be filled in by the VENDOR
3. See Mechanical Data sheet 145579-D-DS-018.1 for soil composition

By: DRJ	Chk:	Appd	Date: 26-Apr-05	Project: 145579	Rev: 1

amec AMEC E&C Services Limited Trail, BC Canada	Instrumentation Data Sheet

TAG NUMBER: 34-YV-010

SUBJECT:	VALVE - ON/OFF		
SERVICE:	ICV BOX WASTE FEED CHUTE No.1 AIRLOCK ASSEMBLY VALVE No.2		
SUPPLIER:		P.I.C. No.:	206
MAKE:	Gemco Valve or Equal	P.O. No.:	
MODEL:	T Valve*	P&ID No.:	F-145579-34-A-0101

POSITION SWITCH

Tag:	34-ZSC-010/ 34-ZSO-010
Make:	*
Model:	*
Form:	DPDT
Rating:	NEMA 4X – UL Listed
Mounting:	On Valve
Action:	Note 1.

SOLENOID

Tag:	34-YY-010
Make:	*
Model:	*
Action:	Energise to open
Mounting:	On Valve
Voltage:	24 V DC
Rating:	NEMA 4X – UL Listed

ACTUATOR:

Type:	Pneumatic / Spring Return	Input:	*
Make:	*	Action:	Air to Open
Model:	*	Fail Position:	Closed
Size:	*	Air Supply:	80 psig

316SS tag permanently affixed to instrument

SERVICE CONDITIONS:

Line No.	34-D84-005			
Fluid	DRY WASTE (Note 3)			
Bulk Dens.	93 lb/ft^3			
% Solids	99 % by volume			
Min. Temp.	-25°F			
Oper. Temp.	82°F			
Max. Temp.	140°F	Units Flow	Kg./HR	
Max. Shutoff dP		Pres	In H2O	

NOTES:

1. Close limit switch closes when valve is closed; Open limit switch closes when valve is open.
2. All items with an * shall be filled in by the VENDOR
3. See Mechanical Data sheet 145579-D-DS-018.1 for soil composition

By: DRJ	Chk:	Appd	Date: 26-Apr-05	Project: 145579	Rev: 1

amec AMEC B&C Services Limited Trail, BC Canada

Instrumentation Data Sheet

TAG NUMBER: 34-YV-019

SUBJECT:	VALVE - ON/OFF		
SERVICE:	ICV BOX WASTE FEED CHUTE No.2 AIRLOCK ASSEMBLY VALVE No.1		
SUPPLIER:		P.I.C. No.:	206
MAKE:	Gemco Valve or Equal	P.O. No.:	
MODEL:	T Valve*	P&ID No.:	F-145579-34-A-0101

POSITION SWITCH

Tag:	34-ZSC-019/ 34-ZSO-019
Make:	*
Model:	*
Form:	DPDT
Rating:	NEMA 4X – UL Listed
Mounting:	On Valve
Action:	Note 1.

SOLENOID

Tag:	34-YY-019
Make:	*
Model:	*
Action:	Energise to open
Mounting:	On Valve
Voltage:	24 V DC
Rating:	NEMA 4X – UL Listed

ACTUATOR:

Type:	Pneumatic / Spring Return	Input:	*
Make:	*	Action:	Air to Open
Model:	*	Fail Position:	Closed
Size:	*	Air Supply:	80 psig

316SS tag permanently affixed to instrument

SERVICE CONDITIONS:

Line No./Equip.	34-D84-006				
Fluid	DRY WASTE (Note 3)				
Bulk Dens.	93 lb/ft^3				
% Solids	99 % by volume				
Min. Temp.	-25°F				
Oper. Temp.	82°F				
Max. Temp.	115°F	Units	Flow	Kg/HR	
Max. Shutoff dP			Pres	In H2O	

NOTES:
1. Close limit switch closes when valve is closed; Open limit switch closes when valve is open.
2. All items with an * shall be filled in by the VENDOR
3. See Mechanical Data sheet 145579-D-DS-018.1 for soil composition

By: DRJ	Chk:	Appd	Date: 26-Apr-05	Project: 145579	Rev: 1

amec AMEC E&C Services Limited Trail, BC Canada

Instrumentation Data Sheet

TAG NUMBER: 34-YV-020

SUBJECT:	VALVE - ON/OFF		
SERVICE:	ICV BOX WASTE FEED CHUTE No.2 AIRLOCK ASSEMBLY VALVE No.2		
SUPPLIER:		P.I.C. No.:	206
MAKE:	Gemco Valve or Equal	P.O. No.:	
MODEL:	T Valve*	P&ID No.:	F-145579-34-A-0101

POSITION SWITCH	
Tag:	34-ZSC-020/ 34-ZSO-020
Make:	*
Model:	*
Form:	DPDT
Rating:	NEMA 4X – UL Listed
Mounting:	On Valve
Action:	Note 1.

SOLENOID	
Tag:	34-YY-020
Make:	*
Model:	*
Action:	Energise to open
Mounting:	On Valve
Voltage:	24 V DC
Rating:	NEMA 4X – UL Listed

ACTUATOR:

Type:	Pneumatic / Spring Return	Input:	*
Make:	*	Action:	Air to Open
Model:	*	Fail Position:	Closed
Size:	*	Air Supply:	80 psig

316SS tag permanently affixed to instrument

SERVICE CONDITIONS:

Line No./Equip. No.	34-D84-005			
Fluid	DRY WASTE (Note 3)			
Bulk Dens.	93 lb/ft^3			
% Solids	99 % by volume			
Min. Temp.	-25°F			
Oper. Temp.	82°F			
Max. Temp.	140°F	Units	Flow	Kg./hr
Max. Shutoff dP			Pres	In H2O

NOTES:
1. Close limit switch closes when valve is closed; Open limit switch closes when valve is open.
2. All items with an * shall be filled in by the VENDOR
3. See Mechanical Data sheet 145579-D-DS-018.1 for soil composition

By: DRJ	Chk:	Appd	Date: 26-Apr-05	Project: 145579	Rev: 1

amec AMEC E&C Services Limited
Trail, BC Canada

Instrumentation Data Sheet

TAG NUMBER: 34-YV-201

SUBJECT:	VALVE - ON/OFF		
SERVICE:	TOP OFF SOIL FEED CHUTE AIRLOCK ASSEMBLY No.1 VALVE No.1		
SUPPLIER:		P.I.C. No.:	206
MAKE:	Gemco Valve or Equivalent	P.O. No.:	
MODEL:	T Valve*	P&ID No.:	F-145579-34-A-0101

POSITION SWITCH

Tag:	34-ZSC-201 / 34-ZSO-201
Make:	*
Model:	*
Form:	DPDT
Rating:	NEMA 4X – UL Listed
Mounting:	On Valve
Action:	Note 1.

SOLENOID

Tag:	34-YY-201
Make:	*
Model:	*
Action:	Energise to open
Mounting:	On Valve
Voltage:	24 V DC
Rating:	NEMA 4X – UL Listed

ACTUATOR:

Type:	Pneumatic / Spring Return	Input:	*
Make:	*	Action:	Air to Open
Model:	*	Fail Position:	Closed
Size:	*	Air Supply:	80 psig

316SS tag permanently affixed to instrument

SERVICE CONDITIONS:

Line No./Equip. No.	34-D88-035			
Fluid	TOP OFF SOIL (Note 3)			
Bulk Dens..	89.3 lb/ft^3			
% Solids	95 % by volume			
Min. Temp.	-25°F			
Oper. Temp.	82°F			
Max. Temp.	115°F	Units Flow	lb/hr	
Max. Shutoff dP		Pres	In H2O	

NOTES:
1. Close limit switch closes when valve is closed; Open limit switch closes when valve is open.
2. All items with an * shall be filled in by the VENDOR
3. See Mechanical Data sheet 145579-D-DS-018.2 for soil composition

By: DRJ	Chk:	Appd	Date: 26-Apr-05	Project: 145579	Rev: 1

amec AMEC E&C Services Limited Trail, BC Canada

Instrumentation Data Sheet

TAG NUMBER: 34-YV-202

SUBJECT:	VALVE - ON/OFF		
SERVICE:	TOP OFF SOIL FEED CHUTE AIRLOCK ASSEMBLY No.1 VALVE No.2		
SUPPLIER:		P.I.C. No.:	206
MAKE:	Gemco Valve or Equivalent	P.O. No.:	
MODEL:	T Valve*	P&ID No.:	F-145579-34-A-0101

POSITION SWITCH

Tag:	34-ZSC-202 / 34-ZSO-202
Make:	*
Model:	*
Form:	DPDT
Rating:	NEMA 4X – UL Listed
Mounting:	On Valve
Action:	Note 1.

SOLENOID

Tag:	34-YY-202
Make:	*
Model:	*
Action:	Energise to open
Mounting:	On Valve
Voltage:	24 V DC
Rating:	NEMA 4X – UL Listed

ACTUATOR:

Type:	Pneumatic / Spring Return	Input:	*
Make:	*	Action:	Air to Open
Model:	*	Fail Position:	Closed
Size:	*	Air Supply:	80 psig

316SS tag permanently affixed to instrument

SERVICE CONDITIONS:

Line No./Equip. No.	34-D88-035			
Fluid	TOP OFF SOIL (Note 3)			
Bulk Dens..	89.3 lb/ft^3			
% Solids	95 % by volume			
Min. Temp.	-25°F			
Oper. Temp.	82°F			
Max. Temp.	115°F	Units	Flow	lb/hr
Max. Shutoff dP			Pres	In H2O

NOTES:
1. Close limit switch closes when valve is closed; Open limit switch closes when valve is open.
2. All items with an * shall be filled in by the VENDOR
3. See Mechanical Data sheet 145579-D-DS-018.2 for soil composition

By: DRJ	Chk:	Appd	Date: 26-Apr-05	Project: 145579	Rev: 1

amec AMEC E&C Services Limited
Trail, BC Canada

Instrumentation Data Sheet

TAG NUMBER: 34-YV-203

SUBJECT:	VALVE – ON/OFF		
SERVICE:	TOP OFF SOIL FEED CHUTE AIRLOCK ASSEMBLY No.2 VALVE No.1		
SUPPLIER:		P.I.C. No.:	206
MAKE:	Genco Valve or Equivalent	P.O. No.:	
MODEL:	*	P&ID No.:	F-145579-34-A-0101

POSITION SWITCH

Tag:	34-ZSC-203/ 34-ZSO-203
Make:	*
Model:	*
Form:	DPDT
Rating:	NEMA 4X – UL Listed
Mounting:	On Valve
Action:	Note 1.

SOLENOID

Tag:	34-YY-203
Make:	*
Model:	*
Action:	Energise to open
Mounting:	On Valve
Voltage:	24 V DC
Rating:	NEMA 4X – UL Listed

ACTUATOR:

Type:	Pneumatic / Spring Return	Input:	*
Make:	*	Action:	Air to Open
Model:	*	Fail Position:	Closed
Size:	*	Air Supply:	80 psig

316SS tag permanently affixed to instrument

SERVICE CONDITIONS:

Line No./Equip. No.	34-D88-036			
Fluid	TOP OFF SOIL (Note 3)			
Bulk Dens..	89.3 lb/ft^3			
% Solids	95 % by volume			
Min. Temp.	-25°F			
Oper. Temp.	82°F			
Max. Temp.	115°F	Units	Flow	lb/hr
Max. Shutoff dP			Pres	In H2O

NOTES:
1. Close limit switch closes when valve is closed; Open limit switch closes when valve is open.
2. All items with an * shall be filled in by the VENDOR
3. See Mechanical Data sheet 145579-D-DS-018.2 for soil composition

By: DRJ	Chk:	Appd	Date: 26-Apr-05	Project: 145579	Rev: 1

amec	AMEC E&C Services Limited Trail, BC Canada	Instrumentation Data Sheet

TAG NUMBER: 34-YV-204

SUBJECT:	VALVE - ON/OFF		
SERVICE:	TOP OFF SOIL FEED CHUTE AIRLOCK ASSEMBLY No.2 VALVE No.2		
SUPPLIER:		P.I.C. No.:	206
MAKE:	Gemco Valve or Equivalent	P.O. No.:	
MODEL:	T Valve	P&ID No.:	F-145579-34-A-0101

POSITION SWITCH

Tag:	34-ZSC-204/ 34-ZSO-204
Make:	*
Model:	*
Form:	DPDT
Rating:	NEMA 4X – UL Listed
Mounting:	On Valve
Action:	Note 1.

SOLENOID

Tag:	34-YY-204
Make:	*
Model:	*
Action:	Energise to open
Mounting:	On Valve
Voltage:	24 V DC
Rating:	NEMA 4X – UL Listed

ACTUATOR:

Type:	Pneumatic / Spring Return	Input:	*
Make:	*	Action:	Air to Open
Model:	*	Fail Position:	Closed
Size:	*	Air Supply:	80 psig

316SS tag permanently affixed to instrument

SERVICE CONDITIONS:

Line No./Equip. No.	34-D88-036			
Fluid	TOP OFF SOIL (Note 3)			
Bulk Dens..	89.3 lb/ft^3			
% Solids	95 % by volume			
Min. Temp.	-25°F			
Oper. Temp.	82°F			
Max. Temp.	115°F	Units	Flow	lb/hr
Max. Shutoff dP			Pres	in H2O

NOTES:
1. Close limit switch closes when valve is closed; Open limit switch closes when valve is open.
2. All items with an * shall be filled in by the VENDOR
3. See Mechanical Data sheet 145579-D-DS-018.2 for soil composition

By: DRJ	Chk:	Appd	Date: 26-Apr-05	Project: 145579	Rev: 1

amec AMEC E&C Services Limited Trail, BC Canada

Instrumentation Data Sheet

TAG NUMBER: 34-YV-205

SUBJECT:	VALVE - ON/OFF		
SERVICE:	TOP OFF SOIL FEED CHUTE AIRLOCK ASSEMBLY No.3 VALVE No.1		
SUPPLIER:		P.I.C. No.:	206
MAKE:	Gemco Valve or Equivalent	P.O. No.:	
MODEL:	T Valve	P&ID No.:	F-145579-34-A-0101

POSITION SWITCH

Tag:	34-ZSC-205/ 34-ZSO-205
Make:	*
Model:	*
Form:	DPDT
Rating:	NEMA 4X – UL Listed
Mounting:	On Valve
Action:	Note 1.

SOLENOID

Tag:	34-YY-205
Make:	*
Model:	*
Action:	Energise to open
Mounting:	On Valve
Voltage:	24 V DC
Rating:	NEMA 4X – UL Listed

ACTUATOR:

Type:	Pneumatic / Spring Return	Input:	*
Make:	*	Action:	Air to Open
Model:	*	Fail Position:	Closed
Size:	*	Air Supply:	80 psig

316SS tag permanently affixed to instrument

SERVICE CONDITIONS:

Line No.	34-D88-037			
Fluid	TOP OFF SOIL (Note 3)			
Bulk Dens..	89.3 lb/ft^3			
% Solids	95 % by volume			
Min. Temp.	-25°F			
Oper. Temp.	82°F			
Max. Temp.	115°F	Units	Flow	ACFM
Max. Shutoff dP			Pres	In H2O

NOTES:
1. Close limit switch closes when valve is closed; Open limit switch closes when valve is open.
2. All items with an * shall be filled in by the VENDOR
3. See Mechanical Data sheet 145579-D-DS-018.2 for soil composition

By: DRI	Chk:	Appd	Date: 26-Apr-05	Project: 145579	Rev: 1

amec AMEC E&C Services Limited Trail, BC Canada

Instrumentation Data Sheet

TAG NUMBER: 34-YV-206

SUBJECT:	VALVE - ON/OFF		
SERVICE:	TOP OFF SOIL FEED CHUTE AIRLOCK ASSEMBLY No.3 VALVE No.2		
SUPPLIER:		P.I.C. No.:	206
MAKE:	Gemco Valve or Equivalent	P.O. No.:	
MODEL:	T Valve*	P&ID No.:	F-145579-34-A-0101

POSITION SWITCH

Tag:	34-ZSC-206/ 34-ZSO-206
Make:	*
Model:	*
Form:	DPDT
Rating:	NEMA 4X – UL Listed
Mounting:	On Valve
Action:	Note 1.

SOLENOID

Tag:	34-YY-206
Make:	*
Model:	*
Action:	Energise to open
Mounting:	On Valve
Voltage:	24 V DC
Rating:	NEMA 4X – UL Listed

ACTUATOR:

Type:	Pneumatic / Spring Return	Input:	*
Make:	*	Action:	Air to Open
Model:	*	Fail Position:	Closed
Size:	*	Air Supply:	80 psig

316SS tag permanently affixed to instrument

SERVICE CONDITIONS:

Line No./Equip. No.	34-D88-037			
Fluid	TOP OFF SOIL (Note 3)			
Bulk Dens..	89.3 lb/ft^3			
% Solids	95 % by volume			
Min. Temp.	-25°F			
Oper. Temp.	82°F			
Max. Temp.	115°F	Units Flow	lb/hr	
Max. Shutoff dP		Pres	In H2O	

NOTES:
1. Close limit switch closes when valve is closed; Open limit switch closes when valve is open.
2. All items with an * shall be filled in by the VENDOR
3. See Mechanical Data sheet 145579-D-DS-018.2 for soil composition

By: DRJ	Chk:	Appd	Date: 26-Apr-05	Project: 145579	Rev: 1

amec

TECHNICAL DATA SHEETS

PROJECT:	Final DBVS Design	TECN: D-SP-018.R01.1 (DS-018.1)	
PROJECT NO.:	145579	Dried Waste Airlock Assembly	
CLIENT:	AMEC E&E - Richland, Washington	EQ. NO.:	34-D84-005 / 006

BIDDERS DRAWING AND DATA COMMITMENTS

Vendor shall supply all drawings, manuals and documentation in the quantities indicated. Approval drawings are due within the listed number of calendar days after issue of the Purchase Order or Letter of Intent. The dates set out for drawing and data submissions are governed by the engineering design schedule of the project. The Vendor shall supply one AutoCAD disk file and requested number of copies within the listed number of calendar days. Final drawings must be certified as correct and bear the Vendors name, equipment number and Purchase Order Number. Drawing Transmittals listing the document numbers, revisions numbers, quantities, status and document types must be included with all submissions (including electronic submittals).

SEND ALL DOCUMENTS TO:

Submit all documents via courier service
Faxed documents must be followed by the originals.
Electronic E-mail or FTP transmissions of drawings & data must be copied to Document Control
Always include a transmittal

AMEC Americas Limited
1385 Cedar Avenue
Trail, BC, Canada
V1R 4C3
Attn: Document Control
Phone: (250) 368-2400
Fax: (250) 368-2401

BIDDERS MUST PROVIDE ESTIMATED LEAD TIMES FOR APPROVAL DRAWINGS

Proposal	Bidder shall include this data for each item			REVIEW ITEMS DUE WITHIN	VENDOR COMMITMENT (SEE NOTE 4)
	Review	Required before ordering or start of fabrication			
		Final	Required within 7 days prior to shipment and before final paym		
PROPOSAL	REVIEW	FINAL	DESCRIPTION	(DAYS)	(DAYS)
1			Q A program that satisfies the requirements of ASME NQA-1-1994 and ASME Section III or VIII	Bid	
1			Experience list and maintainability information	Bid	
E+3	E+3		Design, fabrication & delivery schedule	Bid	
E+3	E+3	E+6	Outline drawings and layout drawings indicating weights and dimensions	PO+10	
E+3	E+3	E+6	Technical brochures on purchased components	PO+17	
	E+3	E+6	Final Drawings + Calculations	PO+17	
	E+1	E+6	Spare parts list	Del-14	
	E+1	E+6	Set of installation and maintenance manuals c/w technical literature for all equipment and devices	Del-14	
		6	Electromagnetic interference test results	N/A	
		1	Hardware Delivery	PO+50	
		6	Site commissioning record & test results	COM+14	
	E+1	E+1	NDE personnel certifications	PO+7	
	E+1	E+1	Visual weld / NDE procedures	PO+7	
	E+3	E+1	Welding procedures, weld map, procedure qualification records and welder qualification records		
	E+3	E+1	AWS CWI certificate	PO+7	
	E+3	E+1	Shipping and packaging plan	PO+7	
E+3	E+3	E+1	Electrical schematics, wiring diagrams, control diagrams and nameplates lists	PO+25	
	E+3	E+1	Factory acceptance test (FAT) plan	PO+14	
	E+3	E+1	Manufacturer's standard surface preparation and painting specification	PO+7	
	E+3	E+1	NCR's	When identified +3	
	E+3	E+1	CoC's / CMTR's	Del-10	
		6	Certificate of calibration	Del-7	

Legend
E = Electronic Copy, PO + = Due within +/- calendar days of P.O. issuance, Del +/- = Due within +/- calendar days of define COM +/- = Due within +/- calendar days of commissioning

THE TIMELY RECEIPT OF THE VENDOR DOCUMENTS IS CRITICAL TO THIS PROJECT
BUYER COMMITS TO A 10 WORKING DAY TURNAROUND ON REVIEW ITEMS

I agree to provide the listed documentation and data and the dates shown above.

Vendor Signature _____ Date _____

amec

TECHNICAL DATA SHEETS

PROJECT:	Final DBVS Design	TECN: D-SP-018.R01.1 (DS-018.2)
PROJECT NO.:	145579	Top Off Soil Feed Chute Airlock Assembly
CLIENT:	AMEC E&E - Richland, Washington	EQ. NO.: 34-D88-035 / 036 / 037

BIDDERS DRAWING AND DATA COMMITMENTS

Vendor shall supply all drawings, manuals and documentation in the quantities indicated. Approval drawings are due within the listed number of calendar days after issue of the Purchase Order or Letter of Intent. The dates set out for drawing and data submissions are governed by the engineering design schedule of the project. The Vendor shall supply one AutoCAD disk file and requested number of copies within the listed number of calendar days. Final drawings must be certified as correct and bear the Vendors name, equipment number and Purchase Order Number. Drawing Transmittals listing the document numbers, revisions numbers, quantities, status and document types must be included with all submissions (including electronic submittals).

SEND ALL DOCUMENTS TO:

Submit all documents via courier service
Faxed documents must be followed by the originals.
Electronic E-mail or FTP transmissions of drawings & data must be copied to Document Control
Always include a transmittal

AMEC Americas Limited
1385 Cedar Avenue
Trail, BC, Canada
V1R 4C3
Attn: Document Control
Phone: (250) 368-2400
Fax: (250) 368-2401

BIDDERS MUST PROVIDE ESTIMATED LEAD TIMES FOR APPROVAL DRAWINGS

Proposal	Bidder shall include this data for each item			REVIEW ITEMS DUE WITHIN	VENDOR COMMITMENT (SEE NOTE 4)
	Review	Required before ordering or start of fabrication			
		Final	Required within 7 days prior to shipment and before final paym		
PROPOSAL	REVIEW	FINAL	DESCRIPTION	(DAYS)	(DAYS)
1			Q A program that satisfies the requirements of ASME NQA-1-1994 and ASME Section III or VIII	Bid	
1			Experience list and maintainability information	Bid	
E+3	E+3		Design, fabrication & delivery schedule	Bid	
E+3	E+3	E+6	Outline drawings and layout drawings indicating weights and dimensions	PO+10	
E+3	E+3	E+6	Technical brochures on purchased components	PO+17	
	E+3	E+6	Final Drawings + Calculations	PO+17	
	E+1	E+6	Spare parts list	Del-14	
	E+1	E+6	Set of installation and maintenance manuals c/w technical literature for all equipment and devices	Del-14	
		6	Electromagnetic interference test results	N/A	
		1	Hardware Delivery	PO+50	
		6	Site commissioning record & test results	COM+14	
	E+1	E+1	NDE personnel certifications	PO+7	
	E+1	E+1	Visual weld / NDE procedures	PO+7	
	E+3	E+1	records and welder qualification records		
	E+3	E+1	AWS CWI certificate	PO+7	
	E+3	E+1	Shipping and packaging plan	PO+7	
E+3	E+3	E+1	nameplates lists	PO+25	
	E+3	E+1	Factory acceptance test (FAT) plan	PO+14	
	E+3	E+1	Manufacturer's standard surface preparation and painting	PO+7	
	E+3	E+1	NCR's	When identified +3	
	E+3	E+1	CoC's / CMTR's	Del-10	
		6	Certificate of calibration	Del-7	

Legend:
E = Electronic Copy PO +/- = Due within +/- calendar days of P.O. issuance Del +/- = Due within +/- calendar days of delivery COM +/- = Due within +/- calendar days of commissioning

THE TIMELY RECEIPT OF THE VENDOR DOCUMENTS IS CRITICAL TO THIS PROJECT
BUYER COMMITS TO A 10 WORKING DAY TURNAROUND ON REVIEW ITEMS

I agree to provide the listed documentation and data and the dates shown above.

Vendor Signature _____ Date _____

Permit Attachment LL DBVS

Appendix 5 Dried Waste Handling System

Section 6 Miscellaneous Information

Technical Specifications: Dried Waste Transfer System (145579-D-SP-032, Rev 0) – A Corrosion Review

Technical Specifications: Ancillary Waste Transfer Enclosure (AWTE) (145579-D-SP-017, Rev 2), AWTE Data Sheet (145579-D-DS-017.1, Rev C), Dried Waste & Top-off Soil Airlock Assemblies (145579-D-SP-018, Rev 1), and Top-off Soil Discharge Nozzle Assembly (145579-D-DS-020.2, Rev C) – A Corrosion Review.

DBVS-LDS-014, Response to Corrosion Review for the Dried Waste Transfer System

CHEMMET, LTD, PC
POB 4068
West Richland, WA 99353
509-967-2309 fax 967-2459
Your single source for Chemical, Materials, and Environmental Technology

February 5, 2005

Charles E. Grenard
DMJM Technologies
3250 Port of Benton Blvd
Richland, WA 99354-1670

Dear Mr Grenard

Technical Specifications: ***Dried Waste Transfer System*** **(145579-D-SP-032, Rev 0) – A Corrosion Review**

No specific concerns were noted. There are two general comments of which only one has a direct bearing on corrosion/erosion.

- A close look at the erosion situation should be taken after the velocities of the solids, feed and mixed waste, are determined,
- Although it is not really a corrosion concern so much as much as a quantity of condensate produced, the moisture content of Hanford soil should be evaluated. It was listed as only about 1.5%. This seems low unless it is only surface soil taken during the summer. During the winter and down 10-15 feet, higher values are likely.

Sincerely,

James R. Divine, PhD, PE
NACE Corrosion Specialist, #867
Chief Engineer

JAMES R. DIVINE
STATE OF WASHINGTON
12231
REGISTERED
PROFESSIONAL ENGINEER

EXPIRES: 3-11-06

This page intentionally left blank.

CHEMMET, LTD, PC
POB 4068
West Richland, WA 99353
509-967-2309 fax 967-2459
Your single source for Chemical, Materials, and Environmental Technology

March 14, 2005

Charles E. Grenard
DMJM Technologies
3250 Port of Benton Blvd
Richland, WA 99354-1670

Dear Mr Grenard

Technical Specifications: ***Ancillary Waste Transfer Enclosure (AWTE)*** **(145579-D-SP-017, Rev 2),** ***AWTE Data Sheet*** **(145579-D-DS-017.1, Rev C),** ***Dried Waste & Top-off Soil Airlock Assemblies*** **(145579-D-SP-018, Rev 1), and** ***Top-off Soil Discharge Nozzle Assembly)*** **(145579-D-DS-020.2, Rev C) – A Corrosion Review**

This document presents a limited number of general remarks about corrosion in the specifications and recommendations.

Ancillary Waste Transfer Enclosure (AWTE) **(145579-D-SP-017, Rev 2) and** ***AWTE Data Sheet*** **(145579-D-DS-017.1, Rev C)**

1. Abbreviations and Acronyms, p 5ff – As a chemical engineer, I would like to see proper use of nomenclature and symbols for the chemical species. For example, Al3+ should be Al^{3+} and is aluminum ion, not aluminum. This is for future reference because it need not be changed; but is confusing.
2. Section 3.1.11 – 880 °F is approaching the scaling temperature of carbon steel in air. The possible presence of other species, NOx and SOx, may increase the potential for scaling as will periodic temperature cycles.
3. Section 3.1.13 – if the elastomeric components at the 180 °F glove ports are subject to a combination of temperature and radiation there could a synergistic interaction to reduce the lifetime of the elastomer.

There were no comments on the data sheet.

Dried Waste & Top-off Soil Airlock Assemblies **(145579-D-SP-018, Rev 1)**
No specific comments are made though there is some question about the life of bearing surfaces in a corrosive/erosive environment.

Top-off Soil Discharge Nozzle Assembly) **(145579-D-DS-020.2, Rev C)**
No specific comments are made though there is some question about the life of bearing surfaces in a corrosive/erosive environment.

General Recommendations
After the design is far enough along to be able to determine velocities and mass loadings, the effects of erosion of the soil and dried waste should be reviewed.

In addition, the scaling temperature of carbon steel in air is about 900 °F. Scaling increases rapidly above this temperature, and is strongly affected by impurities in the gasses. Rather than use an ordinary carbon steel, one with chromium and molybdenum will raise the scaling temperature. One possible material is A387 (UNS 41545) with about 5% Cr and 0.5% Mo – the scaling temperature would increase to about 1150 °F. Other, more expensive alloys are available. Ideally, your melter vendor will have a complete list of suitable alloys on hand – they may even be able to demonstrate that the existing material is satisfactory.

Sincerely,

James R. Divine, PhD, PE
NACE Corrosion Specialist, #867
Chief Engineer

JAMES R. DIVINE
STATE OF WASHINGTON
12231
REGISTERED
PROFESSIONAL ENGINEER
9-14-05
EXPIRES: 3-11-06

DMJM technology

3250 Port of Benton Blvd
MSIN H0-50
Richland, WA 99354-1670
T 509.375.7774
F 509.375.5331

April 15, 2005

DBVS-LDS-014

Mr. James R. Divine
ChemMet, Ltd. PC
P.O. Box 4068
West Richland, Washington 99353

References: 1) Technical Specifications: *Dried Waste Transfer System* (145579-D-SP-032, Rev 0)–A Corrosion Review, dated February 5, 2005.

2) Technical Specifications: *Ancillary Waste Transfer Enclosure (AWTE)* (145579-D-SP-017, Rev 2), *AWTE Data Sheet* (145579-D-DS-017.1, Rev C), *Dried Waste & Top-off Soil Airlock Assemblies* (145579-D-SP-018, Rev 1), and *Top-off Soil Discharge Nozzle Assembly*) (145579-D-DS-020.2, Rev C)–A Corrosion Review, dated March 14, 2005.

SUBJECT: RESPONSE TO CORROSION REVIEW FOR THE DRIED WASTE TRANSFER SYSTEM

Dear Mr. Divine,

DMJMH+N, Inc. (dba DMJM Technology) recently contracted with ChemMet, Ltd. to conduct a corrosion review on various systems and components for the Demonstration Bulk Vitrification System (DBVS) Project.

Table 1 denotes our planned actions to address your comments, issues, and concerns stated in your review of the DBVS equipment specifications.

Thank you for your corrosion review on the DBVS Dried Waste Handling System.

Respectfully,

Kurt J. McCracken
Chief Engineer

Ja-Kael Luey for
James R. Fredrickson
DBVS Project Manager

cc: DMJM Technology

James Frederickson
Kurt McCracken
Ja-Kael Luey
DMJM File/LB

CH2M HILL Hanford Group, Inc.

Mike Leonard
Dave Shuford

AMEC Earth and Environmental

Leo Thompson
Mark Lucas

An AECOM Company

Table 1. Dried Waste Transfer System. (2 sheets)

Item	Section	Comment or Recommendation	Disposition or Planned Action
Technical Specification 145579-D-SP-032, Rev. 0, *Dried Waste Transfer System*			
1.	General	A close look at the erosion situation should be taken after the velocities of the solids, feed and mixed waste, are determined	Per the specification, the Seller is responsible for determining if an allowance is required for wear. The Seller submittals will be reviewed to determine if components and critical areas (such as elbows) are designed to account for wear and/or can be readily replaced.
2.	General	Although it is not really a corrosion concern as much as a quantity of condensate produced, the moisture content of Hanford soil should be evaluated. It was listed as only about 1.5%. This seems low unless it is only surface soil taken during the summer. During the winter and down 10-15 feet, higher values are likely.	The Dried Waste Transfer System will handle material discharged from the waste dryer and thus have low moisture content as the result of processing.
Technical Specification 145579-D-SP-017, Rev. 2, *Ancillary Waste Transfer Enclosure (AWTE)* and 145579-D-DS-017-1, Rev. C, *AWTE Data Sheet*			
3.	Abbreviations and Acronyms, p 5ff	As a chemical engineer, I would like to see proper use of nomenclature and symbols for the chemical species. For example, Al3+ should be Al^{3+} and is aluminum ion, not aluminum. This is for future reference because it need not be changed; but is confusing.	Acknowledged. No change made.
4.	Section 3.1.11	880 °F is approaching the scaling temperature of carbon steel in air. The possible presence of other species, NOx and SOx, may increase the potential for scaling as will periodic temperature cycles.	Material specification for chutes and ducting inside AWTE are being revised to 316L stainless steel in response to earlier comments from CH2M Hill regarding corrosion concerns due to acids etc.
5.	Section 3.1.13	If the electrometric components at the 180 °F glove ports are subject to a combination of temperature and radiation there could be a synergistic interaction to reduce the lifetime of the elastomer.	Glove material is to be selected by the Vendor based on operating conditions provided, i.e. temperature and radiation levels. Glove material selected will be reviewed and approved by AMEC/DMJM H+N.
		There were no comments on the data sheet.	

Table 1. Dried Waste Transfer System. (2 sheets)

Item	Section	Comment or Recommendation	Disposition or Planned Action
Technical Specification 145579-D-SE-018, Rev. 1, *Dried Waste & Top-off Soil Airlock Assemblies*			
6.	N/A	No specific comments are made though there is some question about the life of bearing surfaces in a corrosive/erosive environment.	See Item #8.
Data Sheet 145579-D-DS-020-2, Rev. C, *Top-off Soil Discharge Nozzle Assembly*			
7.	N/A	No specific comments are made though there is some question about the life of bearing surfaces in a corrosive/erosive environment.	See Item #8.
General Recommendations			
8.	N/A	After the design is far enough along to be able to determine velocities and mass loadings, the effects of erosion of the soil and dried waste should be reviewed. In addition, the scaling temperature of carbon steel in air is about 900 °F. Scaling increases rapidly above this temperature, and is strongly affected by impurities in the gasses. Rather than use an ordinary carbon steel, one with chromium and molybdenum will raise the scaling temperature. Once possible material is A387 (UNS 41545) with about 5% Cr and 0.5% Mo – the scaling temperature would increase to about 1150 °F. Other, more expensive alloys are available. Ideally, your melter vendor will have a complete list of suitable alloys on hand – they may even be able to demonstrate that the existing material is satisfactory.	Erosion of chutes from soil is not a major concern. Velocities will be low in comparison to the vacuum transfer system, there are no elbows, only vertical sections which will not run full of material since they are oversized. Only concern is the cone valve, which will be directly in the path of the soil/waste. For other reasons, such as waste material sticking and melting onto cone valve, coating of the base material is being considered. Testing of various coatings is being undertaken and will likely be some form of ceramic material, erosion will be considered in the coating selection. Material specification for the nozzle is currently 316L stainless steel. A coating to prevent the waste sticking is also under review as noted above.

This page intentionally left blank.