This document was too large to scan as a single document. It has been divided into smaller sections.

Section 1 of 13

Document Information			
Document #	RPP-24544	Revision	1D
Title	DEMONSTRATION BULK VITRIFICATION SYS INDEPENDENT QUALIFIED REGISTERED PROFESSIONAL ENGINEER (IQRPE & RCRA DESIGN REVIEW PACKAGE		
Date	05/11/2006		
Originator	SHUFORD DH	ORG CO	CH2M
Recipient		Recipient Co.	
References	ECN-723118-R5, RPP-24544-R0, RPP-24544-R1, RPP-24544-R1A, RPP-24544-R1B, RPP-24544-R1C, EDT-821657, ECN-723118-R0, ECN-723118-R1, ECN-723118-R3, ECN-723118-R4		
Keywords	SUPPL TREATMENT		
Projects			

S

CH2M HILL ENGINEERING CHANGE NOTICE

☒ DM ☐ FM ☐ TM

1a. ECN 723118 R 5

1b. Proj. ECN - - R

2. Simple Modification	3. Design Inputs – For full ECNs, record information on the ECN-1 Form (not required for Simple Modifications)	4. Date
☒ Yes ☐ No		5/10/2006

5. Originator's Name, Organization, MSIN, & Phone No.	6. USQ Number	7. Related ECNs
M. A. Fish Closure Projects Engineering Support, S7-67	No. - - - R- ☒ N/A	ECN-723118, Revisions 0, 1, 2, 3 & 4

8. Title	9. Bldg. / Facility No.	10. Equipment / Component ID	11. Approval Designator
Incorporate the Off-Gas Treatment System (OGTS) Design Information	DBVS/241-G	N/A	ER

12. Engineering Documents/Drawings to be Changed (Incl. Sheet & Rev. Nos.)	13. Safety Designation	14. Expedited/Off-Shift ECN?
RPP-24544, Revision 1c	☐ SC ☐ SS ☐ GS ☒ N/A	☐ Yes ☒ No

15a. Work Package Number	15b. Modification Work Completed	15c. Restored to Original Status (TM)	16. Fabrication Support ECN?
N/A	N/A Responsible Engineer / Date	N/A Responsible Engineer / Date	☐ Yes ☒ No

17. Description of the Change (Use ECN Continuation pages as needed)

This ECN revises RPP-24544, Revision 1c, "Demonstration Bulk Vitrification System IQRPE/RCRA Design Review Package" to include the Off-Gas Treatment System (OGTS) Information in Section 2.5

Problem: The OGTS portion of the IQRPE/RCRA design package has been completed and requires release/configuration control.

Solution: Update RPP-24544 with RCRA design information on the OGTS so EPA and WDOE can review and approve.

Analysis: The original release and subsequent additions to RPP-24544 are listed below:

RPP-24544, Revision 0, Released on EDT-821657 incorporated Section 2.1 Waste Receipt System
RPP-24544, Revision 1, Released on ECN-723118, Revision 0, incorporated Section 2.3 Secondary Waste System
RPP-24544, Revision 1a, Released on ECN-723118, Revision 1, incorporated Section 2.2 Waste Dryer System.
RPP-24544, Revision 1b, Released on ECN-723118, Revision 3, incorporated Section 2.4, Dried Waste Handling System
RPP-24544, Revision 1c, Released on ECN-723118, Revision 4, incorporated Section 2.6, In-Container Vitrification System (ICV).

EPA and WDOE comments on released portions of the document were resolved and incorporated where available.

18. Justification of the Change (Use ECN Continuation pages as needed)

This update to RPP-24544 is to incorporate DBVS Off-Gas Treatment System RCRA design information and was performed in accordance with the DBVS project schedule.

No USQ screening is necessary. This document is being transmitted to the Department of Energy, Office of River Protection. A Documented Safety Analysis (DSA) will be prepared for DBVS upon completion of final design. Design changes made after publication of the DSA will require a USQ screening.

19. ECN Category

☒ Direct Revision
☐ Supplemental
☐ Void/Cancel

ECN Type

☐ Supersedure
☐ Revision

20. Distribution

Name	MSIN	Name	MSIN
DH Shuford	S7-67	MJ Sutey	S7-70
FR Miera	H6-03	JE Van Beek	S7-67
TH May	S7-67	CA Rieck	S7-67
MW Leonard	S7-67	RR True	R3-26
SE Carlson	S7-67	RL Brown	S7-75
WE Bryan	S7-67	JC Hoffman	S7-67
MA Fish	S7-67	^CH2M EQRG	R1-14

Release Stamp

MAY 11 2006
DATE:
STA: 15
HANFORD RELEASE
ID: 65

CH2M HILL ENGINEERING CHANGE NOTICE	1a. ECN 723118 R 5
Page 2 of 2 ☒ DM ☐ FM ☐ TM	1b. Proj. ECN - - R

21. Revisions Planned (Include a brief description of the contents of each revision)

~~ECN-723118, R5 is planned to incorporate the information for the Main Off-Gas Treatment System, Section 2.5 and be released as RPP-24544, Revision 1d.~~ MA Fish 5/11/06.

Note: All revisions shall have the approvals of the affected organizations as identified in block 11 "Approval Designator," on page 1 of this ECN.

22. **Commercial Grade Item Dedication Numbers** (associated with this design change)	23. **Engineering Data Transmittal Numbers** (associated with this design change, e.g., new drawings, new documents)
N/A	N/A

24. Other Non Engineering (not in HDCS) documents that need to be modified due to this change

Type of Document	Document Number	Update Completed On	Responsible Engineer (print/sign and date)
Alarm Response Procedure			
Operations Procedure			
Maintenance Procedure			
Type of Document	**Document Number**	**Type of Document**	**Document Number**
N/A			

25. Field Change Notice(s) Used?
☐ Yes ☒ No
If Yes, Record Information on the ECN-2 Form, attach form(s), include a description of the interim resolution on ECN Page 1, block 17, and identify permanent changes.

NOTE: ECNs are required to record and approve all FCNs issued. If the FCNs have not changed the original design media then they are just incorporated into the design media via an ECN. If the FCN did change the original design media then the ECN will include the necessary engineering changes to the original design media.

26. Design Verification Required?
☐ Yes ☒ No
If Yes, as a minimum attach the one page checklist from TFC-ENG-DESIGN-P-17.

27. Approvals

Facility/Project Signatures		Date	A/E Signatures	Date
Resp. Engineer	DH Shuford DH Shuford	5/10/06	Originator/Design Agent	
Resp. Manager	MJ Sutey MJ Sutey	5/10/06	Professional Engineer	
Quality Assurance			Project Engineer	
IS&H Engineer			Quality Assurance	
NS&L Engineer			Safety	
Environ. Engineer	FR Miera F. R. Miera	5/10/06	Designer	
Engineering Checker	M A Fish M. A. Fish	5/10/06	Environ. Engineer	
Other	RL Brown (Rad Con) R Brown	5/10/06	Other	
Other	JE Van Beek (PM) DH Shuford DH Shuford for by telecon	5/10/06	Other	
Other			DEPARTMENT OF ENERGY / OFFICE OF RIVER PROTECTION	
Other			Signature or a Control Number that tracks the Approval Signature	
Other				
Other			ADDITIONAL SIGNATURES	
Other				
Other				

Demonstration Bulk Vitrification System IQRPE/RCRA Design Review Package

D.H. Shuford
CH2M HILL Hanford Group, Inc.
Richland, WA 99352
U.S. Department of Energy Contract DE-AC27-99RL14047

EDT/ECN: 723118, R5 UC:
Cost Center: Charge Code: 501907
B&R Code: Total Pages: 6,727

Key Words: Design Review, Independent Qualified Registered Professional Engineer, Supplemental Treatment, Bulk Vitrification, IQRPE

Abstract: The Supplemental Treatment Test and Demonstration Project is a research, development and demonstration (RD&D) project with the goal of providing the suitability of Bulk Vitrification as an acceptable process for the treatment of tank farm Low Activity Waste. This document provides design information for the regulator's approval in accordance with the requirements of the RD&D permit issued for the project.

TRADEMARK DISCLAIMER. Reference herein to any specific commercial product, process, or service by trade name, trademark, manufacturer, or otherwise, does not necessarily constitute or imply its endorsement, recommendation, or favoring by the United States Government or any agency thereof or its contractors or subcontractors.

Printed in the United States of America. To obtain copies of this document, contact: Document Control Services, P.O. Box 950, Mailstop H6-08, Richland WA 99352, Phone (509) 372-2420; Fax (509) 376-4989.

MAY 11 2006
DATE:
STA: 15
HANFORD RELEASE
ID: 65

Nancy A. Fouad 5-11-06
Release Approval Date Release Stamp

Approved For Public Release

Tank Farm Contractor (TFC) RECORD OF REVISION	(1) Document Number RPP-24544	Page 1

(2) Title
Demonstration Bulk Vitrification System IQRPE/RCRA Design Review Package

Change Control Record

(3) Revision	(4) Description of Change - Replace, Add, and Delete Pages	Authorized for Release	
		(5) Resp. Engr. (print/sign/date)	(6) Resp. Mgr. (print/sign/date)
0	Initial release	See EDT 821657	See EDT 821657
0A	Direct revision - see ECN 722947, R0	See ECN 722947, R0	See ECN 722947, R0
1	Direct revision - see ECN 723811, R0	see ECN 723811, R0	see ECN 723811, R0
1a	Direct revision - see ECN 723811, R1	See ECN 723811, R1	See ECN 723811, R1
1b	Direct revision - see ECN 723118, R3	See ECN 723118, R3	see ECN 723118, R3
1c	Direct revision - see ECN 723118, R4	See ECN 723118, R4	See ECN 723118, R4
1d RS	Direct revision - see ECN 723118, R5	D.H. Shuford D H Shuford 5/10/06	M.J. Sutey BY TELECON M A Fish 5/10/06

Executive Summary

EXECUTIVE SUMMARY

This document provides design information for the Demonstration Bulk Vitrification System Main Off-Gas Treatment System as well as an overview of the system. This information is provided in accordance with the requirements of Permit No. WA 7890008967, "PERMIT FOR DANGEROUS AND OR MIXED WASTE RESEARCH, DEVELOPMENT, AND DEMONSTRATION."

Specific design information is provided in this report for the Main Off-Gas Treatment System, with details for installation and the Demonstration Bulk Vitrification System site to follow in a separate installation package. Specific design information discussed in the report is presented in the following areas:

- System description,
- System location,
- Structural calculation,
- System sketches,
- Design codes and standards,
- Waste assessment,
- Controls,
- Secondary containment and leak detection,
- Corrosion assessment,
- Inspection schedule, and
- Installation assessment.

Where information regarding treatment, management, and disposal of the radioactive source, byproduct material and/or special nuclear components of mixed waste (as defined by the *Atomic Energy Act of 1954*, as amended) has been incorporated into this document, it is not incorporated for the purpose of regulating the radiation hazards of such components under the authority of Chapter 70.105 of the *Revised Code of Washington* and its implementing regulations but is provided for information purposes only.

Contents

CONTENTS

1.0 INTRODUCTION 1-1

2.0 SYSTEM ASSESSMENTS 2-1

2.1 WASTE RECEIPT SYSTEM 2-3

2.2 WASTE DRYER SYSTEM 2-13

2.3 SECONDARY WASTE SYSTEM 2-29

2.4 DRIED WASTE HANDLING SYSTEM 2-41

2.5 MAIN OFF-GAS TREATMENT SYSTEM 2-51

2.5.1 System Description – Normal Off-Gas Treatment System Operation 2-51

2.5.2 System Description – Off-Gas Treatment System Bypass Operation 2-57

2.5.3 Location 2-58

2.5.4 Calculations 2-59

2.5.5 Tank System Sketches 2-59

2.5.6 Design Codes and Standards 2-60

2.5.7 Waste Assessment 2-61

2.5.8 Controls 2-62

2.5.9 Secondary Containment and Leak Detection Description 2-69

2.5.10 Corrosion Assessment 2-70

2.5.11 Inspection Schedule 2-70

2.5.12 Installation Assessment 2-71

2.6 IN-CONTAINER VITRIFICATION SYSTEM 2-73

3.0 REFERENCES 3-1

APPENDICES

A **Demonstration Bulk Vitrification System Calculations** ..... **A-i**

- A1 Waste Receipt System A1-1
- A2 Waste Dryer System A2-1
- A3 Secondary Waste System A3-1
- A4 Dried Waste Handling System A4-1
- **A5 Main Off-Gas Treatment System** **A5-1**
- A6 In-Container Vitrification System A6-1

B Demonstration Bulk Vitrification System Site Maps ..... B-i

C **Demonstration Bulk Vitrification System Drawings and Sketches** ..... **C-i**

- C1 Waste Receipt System C1-1
- C2 Waste Dryer System C2-1
- C3 Secondary Waste System C3-1
- C4 Dried Waste Handling System C4-1
- **C5 Main Off-Gas Treatment System** **C5-1**
- C6 In-Container Vitrification System C6-1

D **Demonstration Bulk Vitrification System Piping and Instrumentation Diagrams** ..... **D-i**

- D1 Waste Receipt System D1-1
- D2 Waste Dryer System D2-1
- D3 Secondary Waste System D3-1
- D4 Dried Waste Handling System D4-1
- **D5 Main Off-Gas Treatment System** **D5-1**
- D6 In-Container Vitrification System D6-1

E Demonstration Bulk Vitrification System Process Flow Diagrams ..... E-i

F Demonstration Bulk Vitrification System S-109 Waste Simulant Characteristics ..... F-i

G **Demonstration Bulk Vitrification System Technical Specifications** ..... **G-i**

- G1 Waste Receipt System G1-1
- G2 Waste Dryer System G2-1
- G3 Secondary Waste System G3-1
- G4 Dried Waste Handling System G4-1
- **G5 Main Off-Gas Treatment System** **G5-1**
- G6 In-Container Vitrification System G6-1

H Demonstration Bulk Vitrification System Miscellaneous Supporting Data ..... H-i

H1 Waste Receipt System H1-1
H2 Waste Dryer System H2-1
H3 Secondary Waste System H3-1
H4 Dried Waste Handling System H4-1
H5 Main Off-Gas Treatment System H5-1
H6 In-Container Vitrification System H6-1

LIST OF FIGURES

1-1. Bulk Vitrification Unit Operation Interfaces for the Main Process Systems 1-2

2-1. Main Off-Gas Treatment System Overview 2-63

LIST OF TABLES

1-1. Summary of Currently Planned Full-Scale Tests in the Demonstration Bulk Vitrification System 1-6

2-1. Design Codes and Standards for the Waste Receipt System 2-6

2-2. Design Codes and Standards for the Waste Dryer System 2-16

2-3. Selected Waste Dryer System Interlocks 2-22

2-4. Design Codes and Standards for the Secondary Waste System 2-33

2-5. Selected Secondary Waste System Interlocks 2-35

2-6. Design Codes and Standards for the Dried Waste Handling System 2-44

2-7. Selected Dried Waste Handling System Interlocks 2-46

2-8. Design Codes and Standards for the Main Off-Gas Treatment System 2-60

2-9. Air Stream Properties Entering OGTS Components 2-61

2-10. Selected Main Off-Gas Treatment System Interlocks 2-69

2-11. Design Codes and Standards for the In-Container Vitrification System 2-75

2-12. In-Container Vitrification System Interlocks 2-76

List of Terms

LIST OF TERMS

Editor's Note: The List of Terms and Trademarks include callouts from previous packages.

AMEC	AMEC Earth and Environmental, Inc.
ASME	American Society of Mechanical Engineers
AWTE	ancillary waste transfer enclosure
DBVS	Demonstration Bulk Vitrification System
DCRS	Dryer and Condensate Recovery System
Ecology	Washington State Department of Ecology
EPDM	ethylene propylene diene monomer
ETF	Effluent Treatment Facility
HEGA	high-efficiency gas adsorber
HEPA	high-efficiency particulate air
HIHTL	hose-in-hose transfer line
ICV™	In-Container Vitrification™
IDF	Integrated Disposal Facility
ILAW	immobilized low-activity waste
IQRPE	Independent Qualified Registered Professional Engineer
ISO	International Organization for Standardization
LAW	low-activity waste
MCS	Monitoring and Control System
OGTS	Main Off-Gas Treatment System
P&ID	piping and instrumentation diagram
PFD	process flow diagram
RD&D	Research, Development, and Demonstration
S-109 WRS	Single-shell Tank 241-S-109 Waste Retrieval System
SCR	selective catalytic reduction
SST	Single-shell Tank

TRADEMARKS

Allen-Bradley	Registered trademark of Allen-Bradley Company, LLC Corporation.
AutoCAD	Registered trademark of AutoDesk, Inc.
Bray	Registered trademark of BRAY INTERNATIONAL, Inc.
Buna N	Registered trademark of Buna Werke Huls G.m.b.h.
Electromark	Registered trademark of Permar Systems, Incorporated dba Electromark Company.
Excel	Registered trademark of the Microsoft Corporation.
Flanders BF Series	Trademark of Flanders Corporation.
Flanders/CSC	Trademark of Flanders Corporation.
Flanders GG-F Fluid Seal	Trademark of Flanders Corporation.
GeoMelt	Registered trademark of GeoSafe Corporation.
ICV	Trademark of AMEC, Inc.
In-Container Vitrification	Trademark of AMEC, Inc.
Keystone	Trademark of Tyco Industries.
LineBacker	Registered trademark of Professional Services Industries, Inc.
Loctite	Registered trademark of Henkel Loctite.
MathCAD	Registered trademark of Mathsoft Engineering & Education, Inc.
Microsoft	Registered trademark of the Microsoft Corporation.
Mini Power-Zone	Registered trademark of Square D Company Corporation.
National Electric Code	Registered trademark of the National Fire Protection Association.
NEC	Registered trademark of the National Fire Protection Association.
Neo-Lube	Registered trademark of Watson Bowman ACME Corporation.
Overkote	Registered trademark of the Rust-Oleum Corporation.
PanelView	Trademark of Allen-Bradley Company, Inc.
PureForm	Trademark of Corning Incorporated.
Rust-Oleum	Registered trademark of the Rust-Oleum Corporation.
Square D	Registered trademark of Square D Company Corporation.
Swagelok	Registered trademark of Swagelok Company.
Teflon	Registered trademark of E.I. Du Pont De Nemours and Company.
Tri-Mer	Registered trademark of Tri-Mer Corporation.
Viton	Registered trademark of DuPont DOW Elastomers.
Weidmüller	Registered trademark of C. A. Weidmüller K.G. Company.

2.5 Main Off-Gas Treatment System

2.5 MAIN OFF-GAS TREATMENT SYSTEM

The OGTS tempers, scrubs, condenses, consolidates, filters, chemically and catalytically treats, and monitors the process off-gases before discharge to the atmosphere. The OGTS collects gases, particulates, and vapors from the waste dryer condenser, the ICV box, the AWTE, the waste receipt tanks, and the secondary waste tanks. In addition, the OGTS maintains flow through, and a negative pressure relative to atmospheric within, the ICV box during processing. The overall layout of the OGTS is shown on Drawing F 145579-36-V-0001 in Appendix C5. Section 2.5.1 describes the components used for normal operations while Section 2.5.2 describes the components for the emergency Bypass System which is used for upset conditions.

The emergency bypass is designed for emergency use and will only be used when the OGTS has an unexpected shutdown, due to power loss or major equipment failure. Should this happen automatic interlocks will stop the glassforming process by ceasing the melt feed and removing power from the ICV box electrodes. The same interlocks cause the Main OGTS to be bypassed and direct remaining off-gas generated after the process shutdown through the emergency bypass to discharge through the 155-ft stack. This shutdown process is designed to meet the permit requirements stated in Part II, Section II.A.5.

To minimize emergency bypass usage the OGTS has been designed to be a very reliable system with redundant equipment at key potential failure points (HEPAs, HEGAs, Exhaust Fans, etc.). For example, the SMFs, although normally operated in sequence, are capable of being bypassed so that each can run while bypassing the other. The number of control valves has also been minimized to improve reliability. The design of the system meets UBC seismic and code requirements, resulting in enhanced quality specifications. Note: As used within this text, any reference to the OGTS bypass implies OGTS emergency bypass.

2.5.1 System Description – Normal Off-Gas Treatment System Operation

The OGTS is operated continuously, which results in a constant air sweep through the liquid waste staging tanks and secondary waste storage tanks. During normal operations there are two operating conditions for the OGTS: (1) ICV box is being processed and is connected to the OGTS and (2) ICV box is not connected to the OGTS. Control during these operating conditions is discussed in Section 2.5.8.

Before the addition of dried waste and processing, the electrodes are connected to the power supply and the box vent port and the AWTE vent is connected to the OGTS. The off-gas from the melting and cooling process is passed through sintered metal filters before being sent to the OGTS wet scrubber skid. Particulates collected by the sintered metal filters are sent back to the dryer.

The filtered off-gas stream from the sintered metal filters is fed to the wet scrubbing system. The gas is quenched with a dilute caustic (sodium hydroxide) solution to cool it before entering the scrubber, which dynamically removes acidic gases and particulates. After leaving the scrubber, entrained moisture in the off-gas stream is removed in a mist eliminator. The scrubbed off-gas stream is then cooled in a condenser to remove additional moisture. Additional air is introduced to the wet scrubber stream from the vents of the secondary waste storage tanks and from the dryer condenser off-gas. The combined air streams enter a second mist eliminator and any remaining entrained moisture in the off-gas stream is removed.

The off-gas stream is then heated to reduce the relative humidity, and filtered through two HEPA filter banks in series. After the HEPA filters, the off-gas stream is drawn through a HEGA carbon filter, which is used to adsorb any organic compounds and residual radioactive iodine. From the HEGA filter, the off-gas stream is drawn through a polishing filter and then through the SCR skid. The purpose of the polishing filter is to capture any "break-up" of the carbon filter media and prevent the media from entering the SCR skid. The HEPA filter and HEGA filter skids have redundancy, with the off-gas stream passing through one set of filters and adsorbers, while the second set of filters and adsorbers are on stand-by.

Within the SCR skid, the stream is preheated by an air-to-air heat exchanger and then an electric heater, in order to bring the off-gas to the required operating temperature before entering the SCR. Anhydrous ammonia that is stored in a liquid ammonia tank is drawn through an atomizer that mixes the vaporized ammonia with ambient air before the stream enters the catalyst bed. As the off-gas passes through the catalyst bed, the NO_x within the stream is reacted with ammonia in a special catalyst bed to produce water vapor and nitrogen gas. The catalyst bed will also provide high efficiency conversion of CO to CO_2 in the off-gas stream. The hot off-gas stream from the SCR continues through the exhaust side of the air-to-air heat exchanger to preheat the incoming off-gas.

The treated off-gas from the SCR skid is discharged through the exhaust stack by one of two parallel off-gas exhaust fans: one operating and the other on stand-by. Before being discharged to the atmosphere, the off-gas stack monitoring system will sample the off-gas stream to measure and totalize the discharge flow, temperature, and non-radioactive contaminants present such as NO_x, SO_x, CO, HCl, Cl_2, and total hydrocarbons being exhausted to the atmosphere. Analysis of the off-gas stream for radioactive contaminants is performed at two locations: (1) record sample for iodine and particulate is collected from the stack and (2) beta and gamma radiation are measured just upstream of the SCR. Temperature limitation for the probe used for radiation monitoring required relocation of the sample point from the stack (the SCR discharge temperature exceeded capability of commercial units).

The DBVS RD&D permit application included a potential ammonia scrubbing system, indicated in Figure B-3 of the application. This system was designated with a "Hold" because it was not clear at the time of the application whether or not the ammonia scrubber system would be required. Subsequent design and vendor information has determined that an ammonia scrubbing system is not required. The ammonia concentration in the treated off-gas from the SCR will be

monitored and the ammonia feed rates to the SCR will be adjusted as needed to ensure that ammonia releases remain within limits. The OGTS consists of the following components:

- Sintered metal filter #1 (36-N02-019) and sintered metal filter #2 (36-N02-020),
- Wet scrubber skid (36-D58-002) which consists of the following:
  - Quencher (36-N83-034),
  - Scrubber Feed Tank (36-D74-052),
  - Heat Exchanger (36-D30-046),
  - Venturi Scrubber (36-N73-035),
  - Mist Eliminator #1 (36-N24-036),
  - Scrubber Condenser (36-D10-040),
  - Mist Eliminator #2 (36-N24-041), and
  - HEPA Filter Heater (36-N84-042).
- HEPA filter skid (36-D58-114) which consists of the following:
  - HEPA Filter #1 (36-N02-114A) was 36-N02-043,
  - HEPA Filter #2 (36-N02-114B) was 36-N02-045,
  - HEPA Filter #3 (36-N02-114C) was 36-N02-044, and
  - HEPA Filter #4 (36-N02-114D) a new filter.
- HEGA filter skid (36-D58-109) which consists of the following:
  - Carbon Filter #1 (36-N02-064),
  - Polishing Filter #1 (36-N02-079),
  - Carbon Filter #2 (36-N02-106), and
  - Polishing Filter #2 (36-N02-107).
- SCR skid (36-D58-105) which consists of the following:
  - SCR Heat Exchanger (36-D30-077),
  - SCR Heater (36-N84-078A and B), and
  - SCR Catalyst Bed (36-D59-003).
- Exhaust fan #1 (36-N31-025) and exhaust fan #2 (36-N31-026),
- Exhaust stack (36-N26-024),
- Stack monitoring system,

- OGTS bypass which consists of the following skids:
  - OGTS Bypass Bleed Skid (36-D58-140),
  - OGTS Bypass Filter/Fan Skid #1 (36-D58-138), and
  - OGTS Bypass Filter/Fan Skid #2 (36-D58-139).

2.5.1.1 Sintered Metal Filters (Specification 143643-V-SP-002). Two sintered metal filters connected in series filter the particulate emissions from the ICV box and AWTE. The particulates trapped by the sintered metal filters are returned to the waste dryer using the vacuum in the dryer as the motive force. The two sintered metal filters in the series arrangement are rated for 99.97 percent efficiency for removing particles above 0.3 microns. Each filter will be capable of rejecting material when back-pulsed. The sintered metal filters are normally operated in series to achieve the required particulate removal.

The sintered metal filters are supported by the melt area structure. (Structure described in Section 2.4.)

2.5.1.2 Wet Scrubber Skid Assembly (Specification 145579-D-SP-037). The wet scrubber skid consists of the process airflow treatment equipment. The process airflow treatment equipment (wet scrubber system), consists of a quencher (36-N83-034), a venturi scrubber (36-N73-035), a mist eliminator (36-N24-036), a liquid cooled condenser (26-D10-040), another mist eliminator (36 N24-041), and finally a HEPA filter heater (36-N84-042). The condenser is a finned tube heat exchanger with a chilled water/glycol solution circulated to an air-cooled chiller for the condenser cooling source. The HEPA filter heater is an electric resistance heater used to heat the off-gas to reduce the relative humidity before the HEPA filter trains.

The wet scrubber system also contains a scrubber tank (36-D74-052); an off-gas caustic storage tank (36-D74-010); and a heat exchanger (36-D30-046). The quench solution and scrubber solution is pumped from the scrubber tank to the quencher and the scrubber. The quench and scrubber solution are piped to the heat exchanger where heat is removed from the solution before returning to the scrubber tank. The condenser is a shell and tube heat exchanger with a chilled water/glycol solution circulated to an air-cooled chiller for the condenser cooling source. The pH level in the scrubber tank is monitored and adjusted by making up caustic from the caustic storage tank and bleeding excess solution to the scrubber bleed tanks.

The off-gas caustic storage tank (36-D74-010) is supplied caustic solution from the 15 percent NaOH solution tank (36-D74-113; see Technical Data Sheet 145579-D-DS-058.5 in Appendix G5.) The off-gas caustic storage tank is manually filled to achieve a 5 percent NaOH solution in the tank.

The wet scrubber system will be installed in an insulated enclosure. The wet scrubber system enclosure will be heated by an electric resistance heater for freeze protection at a minimum of 40 °F, and cooled for equipment protection by a split system ductless air conditioning system at a maximum of 85 °F.

The secondary containment requirement for the wet scrubber assembly shall be capable of containing at least the total capacity of the caustic recirculation system inventory. The wet scrubber skid assembly will have leak detection capability and a pump-out port for removal of any liquid contained in the skid assembly. The sump will be designed such that 1.5 gal of liquid will provide a pool depth of at least 1 in. The secondary containment shall have a minimum 1/8-in./ft slope toward the side with the sumps. Leak detection shall provide dry contacts to the MCS termination panel or be part of a packaged system alarm status signal.

The wet scrubber skid will be located on the off-gas treatment equipment concrete Foundation #13 as shown on Drawing H-14-106796 in Appendix C5.

The 15 percent NaOH storage tank is located north of the wet scrubber skid on concrete Foundation #22 as shown on Drawing H-14-106800 in Appendix C5.

A chilled water/glycol solution is provided to the wet scrubber skid condenser from an air-cooled scroll chiller and chiller pump skid. The off-gas chiller pump skid consists of a chilled water pump, surge tank, and overflow tank. For information on the off-gas chiller pump skid, see Specification 145579-V-SP-011 and Technical Data Sheets 145579-V-DS-011.1 and -011.2 in Appendix G5. The air-cooled scroll chiller is a commercial chiller specified in Technical Data Sheet 145579-V-DS-012.1 (Appendix G5). The off-gas chiller pump skid and air-cooled chiller are located on the Off-Gas Treatment equipment Foundation #13 as shown on Drawing F-145579-36-V-0001 in Appendix C5.

2.5.1.3 HEPA Filter Skid (Specification 145579-D-SP-036). The HEPA filter skid consists of two parallel filter trains: one train normally operating and one on standby. The HEPA filter skid includes two pneumatically operated butterfly valves (36-HV-309 and 36-HV-313), two round duct to rectangular transitions, two inlet test sections, two HEPA filter banks in series (36-N02-114A and 36-N02-114B), two combination test sections, two HEPA filter banks in series (36-N02-114C and 36-N02-114D), two outlet test sections, and two rectangular to round transitions. Each filter train will be configured in a two-high by two-wide filter arrangement to accommodate the process flow and be completely assembled on a structural steel frame.

The HEPA filter skid also contains a condensate collection system consisting of a condensate tank, valved condensate drain lines from each of the HEPA filter train sections, a condensate removal pump, and secondary containment. The condensate tank and secondary containment will include provisions for level instrumentation.

The HEPA filter skid assembly will be located on the off-gas treatment equipment concrete Foundation #13 as shown on Drawing F-145579-36-V-0001 in Appendix C5.

2.5.1.4 HEGA Filter Skid (Specification 145579-V-SP-010). The HEGA filter skid consists of two parallel filter trains: one normally operating and one on standby. The HEGA filter skid includes two round to rectangular transitions, two inlet test sections, two HEGA filters (36-N02-064 and 36-N02-106), two combination test sections, two 80-percent polishing filters (36-N02-079 and 36-N02-107), two outlet test sections, two rectangular to round transitions, two

butterfly valves, and two pneumatically operated butterfly valves. Each HEGA filter train will be configured in a two-high by two-wide filter arrangement to accommodate the process flow and be completely assembled on a structural steel frame. The purpose of the HEGA filter is to adsorb organic compounds and radioactive iodine. The polishing filter will capture carbon particles from the HEGA filters, due to filter degradation, to prevent carryover into the SCR skid.

The HEGA filter skid will be located on the off-gas treatment equipment concrete Foundation #13 as shown on Drawing F-145579-36-V-0001 in Appendix C5..

2.5.1.5 Selective Catalytic Reduction Skid (Specification 145579-V-SP-001). The SCR skid (36-D58-105) will be used to remove the NO_x and CO from the off-gas stream. The SCR consists of an air-to-air heat exchanger (36-D30-077), used to preheat the off-gas inlet air stream; an electric in-line heater (36-N84-078), which is used to heat the off-gas air stream to the required catalyst reaction temperature; an SCR unit containing the catalyst bed (36-D59-003), used to aid the reaction of the NO_x and CO with the ammonia; an ammonia atomizer, used to atomize the ammonia in the high-velocity air stream; and an ammonia supply tank (36-D38-008), used to store ammonia and supply the ammonia atomizer.

The SCR skid will be located on the off-gas treatment equipment concrete Foundation #13 as shown on Drawing F-145579-36-V-0001 in Appendix C5. The ammonia tank and ammonia vaporizer will be located south of the SCR skid on the liquid ammonia storage tank Foundation #12 as shown on Drawing H-14-106796.

2.5.1.6 Exhaust Fans (Specification 145579-V-SP-004). The OGTS includes two exhaust fans (36-N31-025 and 36-N31-026): one fan operates continuously and the other is on standby. The exhaust fans provide the motive force to move the exhaust gases and vapors through the OGTS. The exhaust fans are direct drive configuration, centrifugal type. Variable frequency drives will be used with the exhaust fans during start-up.

The OGTS exhaust fans are located north of the SCR, adjacent to the exhaust stack, on concrete Foundation #10 as shown on Drawing H-14-106796 in Appendix C5.

2.5.1.7 Exhaust Stack (Specification 145579-V-SP-005). The OGTS exhaust stack (36-N26-024), is designed to disperse the quenched, filtered, and scrubbed off-gas to the atmosphere without disturbance to local air conditions. The exhaust stack will also provide the location for the stack monitoring system sample probes and air velocity probes. The exhaust stack includes lightning protection, ladders, platforms, gas sampling ports, velocity ports, drainage ports, support rings, access doors, and supports. The OGTS exhaust stack has a 48-in. outside diameter at the base, and a 24-in. outside diameter at its exit, and discharges 155 ft above grade. The exhaust stack is shown on Drawings F-145579-36-V-0007 and 36-V-0033 in Appendix C5.

The OGTS exhaust stack is located north of the SCR on concrete Foundation #10 as shown on Drawing H-14-106796 in Appendix C5.

2.5.1.8 Off-Gas Stack Monitoring System (Technical Data Sheets 145579-F-DS-002.1 and 145579-F-DS-002.2). The OGTS stack monitoring system will analyze the off-gas stream, collect data and samples for regulatory reporting, provide feedback for the performance of the OGTS, and provide warnings to personnel in the event of elevated exhaust stack emissions. The stack monitoring system consists of the following components:

- Continuous radiation monitor,
- Record sampler(s),
- Continuous gas emissions monitor,
- Record sampling for stack particulate: P-10 (sub 10-micron particle),
- Off-gas stack flow measurement,
- Off-gas stack temperature measurement,
- Shrouded sample probes,
- Heat-traced sample transport lines, and
- Cabinets/enclosures required to house and protect equipment.

The stack monitoring system shrouded sample probes, stack off-gas temperature measurement, and off-gas stack flow measurement devices will be located in the OGTS exhaust stack. The radiation record sampler, continuous gas emissions monitor, continuous stack particulate collection device, hardware, and software will be located in cabinets at the base of the OGTS exhaust stack.

The OGTS continuous radiation monitor will monitor the off-gas for beta and gamma sources. The continuous Radiation Monitoring System shrouded probes, and flow measurement devices will be located in the OGTS duct between the HEGA filter skid and the SCR. The OGTS continuous gas emissions monitor will monitor the off-gas for NO_x, SO_2, HCl, CO, total hydrocarbons, Cl_2, and NH_3, among others.

2.5.2 System Description – Off-Gas Treatment System Bypass Operation

The OGTS Bypass System is designed to provide continuous flow through the ICV box to the exhaust stack. This system is engaged if flow into the ICV box falls below a target level. Once engaged, gases from the process are drawn from the ICV box through HEPA filters and then discharged through the Exhaust Stack. Figure 2-1 illustrates this bypass around the Main OGTS components. The Bypass System provides a means to protect co-located workers by confining toxic gases and discharging the gases through the 155-ft Exhaust Stack.

To ensure that the Bypass System provides immediate gas flow from the ICV box, one of the two fans is always running. Air is drawn through a HEPA filter, located on a skid near the Melt Area. When valves switch the flow path from the Main OGTS to the Bypass System, there is still some flow through the HEPA filter, but the majority of the flow is now from the ICV box.

This operational approach minimizes the lag time for establishing flow from the ICV box through the Bypass System.

The Bypass System is comprised of the following Components:

- OGTS Bypass Bleed Skid (36-D58-140), which consists of the following:
  - OGTS Bypass Bleed Heater (36-N84-140),
  - OGTS Bypass Bleed Pre-Filter (36-N02-135), and
  - OGTS Bypass Bleed HEPA Filter (36-N02-134).
- OGTS Bypass Filter/Fan Skid #1 (36-D58-138), which consists of the following:
  - OGTS Bypass Pre-Filter #1 (36-N02-136),
  - OGTS Bypass HEPA Filter #1 (36-N02-131), and
  - OGTS Bypass Fan #1 (36-N31-130).
- OGTS Bypass Filter/Fan Skid #2 (36-D58-139), which consists of the following:
  - OGTS Bypass Pre-Filter #2 (36-N02-137),
  - OGTS Bypass HEPA Filter #2 (36-N02-133), and
  - OGTS Bypass Fan #2 (36-N31-131).

The functional and design requirements for the Bypass System are contained in Specification 145579-V-SP-017 (See Appendix G5). To ensure that power is always available to the Bypass System fans, the Bypass System also includes an Uninterruptible Power Supply, Diesel Generator, and Automatic Transfer Switch (see Data Sheets 145579-E-DS-013.01, 145579-D-DS-067.01, and 145579-E-DS-013.02, respectively, in Appendix G5). The condition that triggers flow through the Bypass System is discussed in Section 2.5.8.6. This condition also triggers other actions that stops the processing of waste (melt power is switched off, waste feed from the dryer stops, and the drying of waste stops). These additional actions are discussed in Sections 2.4 and 2.6.

2.5.3 Location

The OGTS is located throughout the DBVS site. The OGTS extends from the inlets for the AWTE and ICV box, to the sintered metal filters and then north and west to the wet scrubber skid, which is oriented east to west. The OGTS proceeds west through the HEPA filter skid, HEGA filter skid, and the SCR skid, before running north to the exhaust fans and exhaust stack. Vents from the Liquid Waste Staging and Secondary Waste Storage Tanks are tied into the OGTS at locations prior to, and into, the Wet Scrubber Skid. The OGTS site layout is shown on Drawings F-145579-36-V-0001, -0002, -0003, -0004, -0005, -0006, -0007, and -0008 in Appendix C5.

2.5.4 Calculations

The OGTS equipment will be analyzed and designed in accordance with ASME AG-1. The calculations will demonstrate that equipment will withstand applied loads without loss of integrity or release of radioactive/hazardous material. The structural analysis requirements for the different OGTS components are identified in the specifications (Appendix G5). Foundation calculations for all of the off-gas components, with the exception of the off-gas stack foundation, have been reviewed and approved as part of the foundation submittal for site improvements.

Mechanical calculations performed for the OGTS will be prepared in accordance with requirements in ASME AG-1, B31.3, or ASME STS-1a-2003 as contained in the specifications. Calculations will include the following areas as applicable:

- Pipe/housing wall thickness calculations for pressure;
- Stress calculations for sustained loads because of pressure, dead load, and any other sustained loads;
- Stress calculations for displacement stresses, such as thermal loads; and
- Stress calculations for occasional load such as pressure, dead weight, other sustained loads, and earthquake loads.

Stress calculations for the interconnecting ductwork from the AWTE to the inlet of the exhaust stack are contained in 145579-V-CA-005 (see Appendix A5). Stress calculations for the interconnecting ductwork associated with the Bypass System are contained 145579-B-CA-023 (see Appendix A5). Calculation 145579-V-CA-005 evaluates the ductwork against the requirements from ASME AG-1.

Mechanical calculations will also account for compatibility of the selected material components with the waste material to be handled, and assess if an allowance is required for corrosion, or other wear (such as erosion), in the design of the system. Additional calculations that may be performed, if applicable for the assembled system, include: pump sizing, valve actuator sizing, and wear allowances.

A material balance calculation (Calculation 145579-A-CA-004) for the overall DBVS process was discussed in Section 2.2.3.2. This calculation covers the OGTS for normal operations. Pressures in the OGTS components and ductwork are contained in Calculations 145579-D-CA-061 and 145579-D-CA-056 (for Bypass System) (see Appendix A5). The estimated loading for the carbon filters on the HEGA Filter Skid is contained in Calculation 34005-CA-0001 (See Appendix A5).

2.5.5 Tank System Sketches

2.5.5.1 Wet Scrubber System Skid Tanks. The wet scrubber system includes one circulation tank (36-D74-052) and an off-gas caustic storage tank (36-D74-010). The circulation tank

contains the solution for the scrubbing and quenching of the process air stream. The wet scrubber caustic solution tank contains a 5 percent NaOH solution to maintain the circulation tank pH. Details for the tanks will be developed by the fabricator based on specification requirements and process equipment needs.

The off-gas caustic storage tank (36-D74-010) is fed from the 15 percent NaOH solution tank (36-D74-113) which is a double-walled chemical storage tank.

2.5.5.2 HEPA Filter Skid Condensate Tank. The HEPA filter assembly skid includes a condensate tank with secondary containment. Details for the tank and containment will be developed by the fabricator based on specification requirements and process equipment needs.

2.5.6 Design Codes and Standards

The design codes and standards that apply to the OGTS are identified in Table 2-8 below. Applicable and relevant portions of the design codes and standards are flowed down into the specifications, drawings, and calculations. See Section 3.0 for complete reference information.

Table 2-8. Design Codes and Standards for the Main Off-Gas Treatment System. (2 sheets)

Design Code or Standard	Design Code or Standard	Design Code or Standard
10 CFR 830	ASNT SNT-TC-1A	DOE/RL-92-36
10 CFR 835	ASTM A 480/A 480M	DOE-HDBK-1169
29 CFR 1910	ASTM A 516/A 516M	ERDA 76-21
40 CFR 264	ASTM D 2854	HNF-2962
40 CFR 60	ASTM D 2862	HNF-SD-GN-ER-501
40 CFR 61	ASTM D 3803	IEC 61000-4-2
47 CFR 15	ASTM D 1056	IEEE C62.41
AATCC Test Method 27	ASTM F 436	IEEE C62.41.1
AISC (Allowable Stress Design)	ASTM A 105/A 105M	IEEE C62.41.2
AISC (Load and Resistance	ASTM A 106	IEEE Std 141
Factor Design)	ASTM A 108	IEEE Std 142
ANSI C63.16	ASTM A 176	IEEE Std 242
ANSI FCI 70-2	ASTM A 182/A 182M	IEEE Std 519
ANSI Y14.1	ASTM A 193/A 193M	IEEE Std C37.90.2
ANSI Y14.5M	ASTM A 194/A 194M	IESNA HB-9
ANSI/ASHRAE 87.1	ASTM A 234/A 234M	IP-2
ANSI/HI 3.1-3.5	ASTM A 240/A 240M	ISO 668
ANSI/HI 3.6	ASTM A 269	ISO 1161
ANSI/HPS N13.1	ASTM A 276	ISO 1496-2
ANSI/HPS N41.18	ASTM A 307	MSS SP-67
ANSI/HPS N317	ASTM A 312/A 312M	MSS SP-72
ANSI/HPS	ASTM A 325	MSS SP-82
N323ANSI/IESNA RP-7	ASTM A 354	NEMA MG-1
ASCE 4-98	ASTM A 36/A 36M	NEMA MG-13
ASCE 7-98	ASTM A 403/A 403M	NFPA 90A
ASHRAE Fundamentals Handbook	ASTM A 500	NFPA 91
ASME AG-1	ASTM A 53/A 53M	NFPA 70

Table 2-8. Design Codes and Standards for the Main Off-Gas Treatment System. (2 sheets)

Design Code or Standard	Design Code or Standard	Design Code or Standard
ASME B31.1	ASTM A 563a	RPP-8530
ASME B31.3	ASTM A 569	RPP-17403
ASME N509	ASTM C 518	SAE J429
ASME N510	ASTM D 380	SAE J534
ASME STS-1a-2003	ASTM D 991	TFC-ENG-STD-06
ASME B&PV Code	ASTM D 1621	TFC-ENG-STD-21
Section IX	ASTM D 1622	UBC, 1997
Section VIII	ASTM E 285	UL 508A
ASME B16.5	ASTM E 84	UL 900
ASME B16.9	ASTM E 96	UL-listed
ASME B16.11	ANSI/AWS D1.3-98	WAC 173-303-640
ASME B18.2.1	AWS D9.1/D9.1M:2000	WAC 173-460
ASME B18.2.2	AWS D9.1	WAC 246-247
ASME B30.20	AWS D1.1/D1.1M	
ASME B31.3	AWS D1.6	
ASME NQA-1, 1994	AWS QC-1	
ASME PCC-1		

2.5.7 Waste Assessment

The off-gas air stream properties expected to be encountered by the OGTS are summarized in Table 2-9.

Table 2-9. Air Stream Properties Entering OGTS Components.

Properties	Sintered Metal Filter	Wet Scrubber Skid	HEPA and HEGA Skid	SCR Skid
Design Air Flow Rate, acfm	536	3,115	4,560	7,692
Estimated Temperature °F	572 (300 °C)	134 (57°C)	167 (75 °C) maximum	128 (53 °C)
Estimated Pressure in. w.g.	-2.6	-13.6	-85.1	-96.2
Air Stream Chemical/Radioactive Components				
SO_2 (ppmV)	721	72	2	1.1
NO_x (ppmV)	69,951	6,930	6,125	3,425
HCl (ppmV)	70	7	0.15	0.08

HEGA = high-efficiency gas adsorber.
HEPA = high-efficiency particulate air.
ppbM = parts per billion by mass.
ppmV = parts per million by volume.
TRU = transuranic.
w.g. = water gauge.

The OGTS is capable of handling the gases, vapors, and particulates expected to be entrained in the off-gas. The OGTS is also capable of handling the pressures and temperatures expected to be encountered during operation, standby, and off-normal conditions.

2.5.8 Controls

Controls for the Main OGTS stream, Bypass System, pressure control, and an overview of the interlock philosophy for the OGTS are described in the following sections. Reference to specific instrumentation and loop diagrams are provided to assist the reader; however, it should be noted that these "currently assigned identification numbers" may change as detailed fabrication information is received from the suppliers of equipment.

Figure 2-1 provides an overview of the OGTS and the interface of the OGTS with various DBVS systems. Details for the systems that interface with the OGTS are discussed in Sections 2.1, 2.2, 2.3, 2.4, and 2.6. The OGTS is a constant-volume system. The primary exhaust fan will operate continuously at a fixed revolution per minute, except during start-up when a variable frequency drive is used to ramp the fan to its normal operating condition. The stand-by fan will operate at the same conditions as the primary fan if the primary fan fails to provide operational flow and pressure. System flow is balanced using HEPA-filtered ambient air inlets at various locations before the final HEPA filter skid, and 80-percent efficient (medium efficiency) filtered ambient air inlets downstream of the HEPA filter skid as shown on Figure 2-1 and the P&IDs. The OGTS is designed for pressures as stated in specifications and data sheets (see Appendix G5).

Figure 2-1. Main Off-Gas Treatment System Overview.

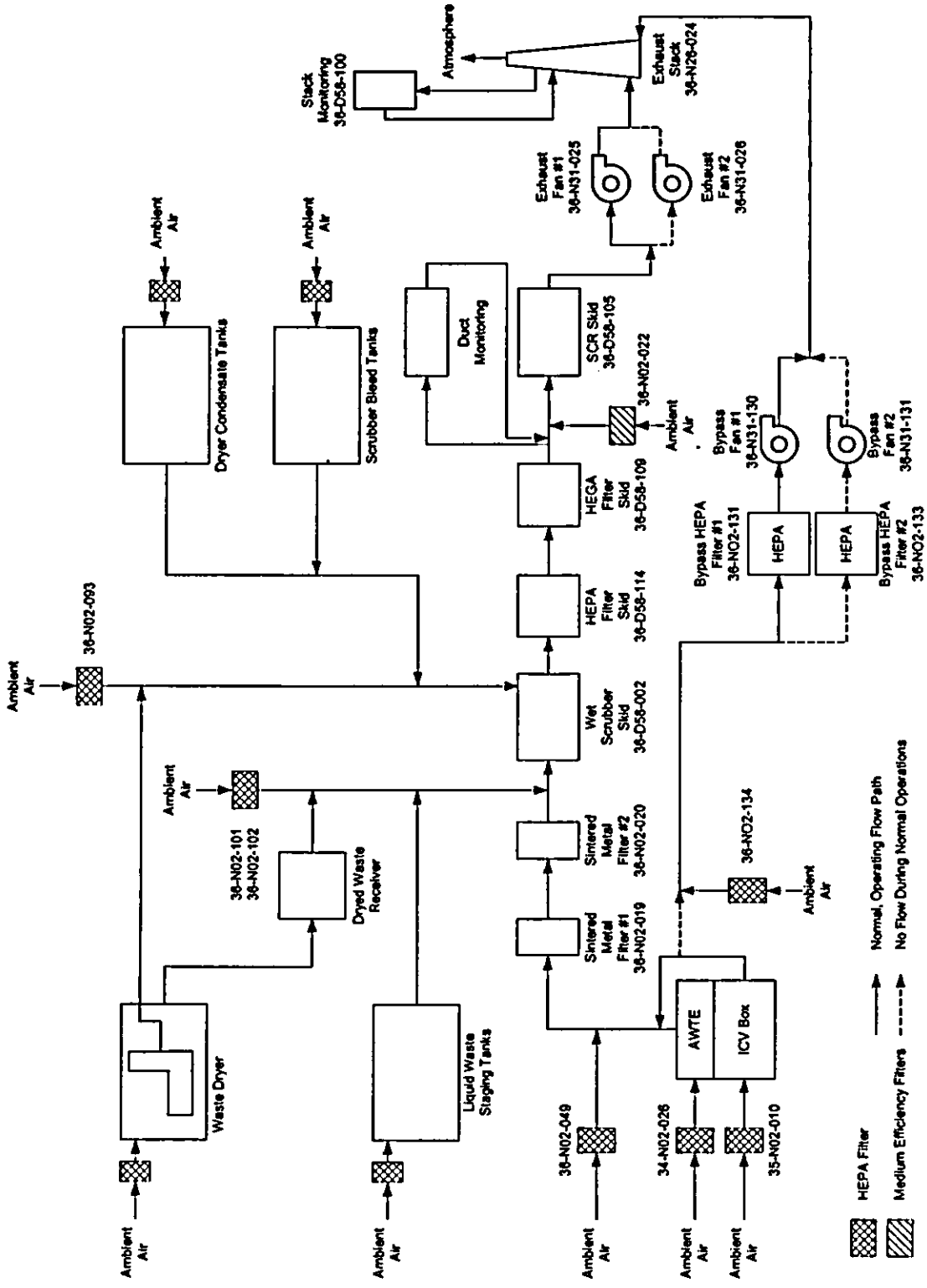

During ICV melt operations, the following OGTS components will be in operation:

1. Sintered metal filters number 1 and number 2 (36-N02-019 and 36-N02-020);
2. Wet scrubbing system consisting of the quencher (36-N83-034), dynamic scrubber (36-N73-035), mist eliminator #1 (36-N24-036); scrubber condenser (36-D10-040);
3. The mist eliminator (36-N24-041);
4. The HEPA filter heater (36-N84-042);
5. One bank of HEPA filters (two HEPA filters in series);
6. One bank of HEGA and polishing filters;
7. The SCR unit;
8. One exhaust fan;
9. The stack monitoring system; and
10. One bypass filter/fan system.

During normal operating conditions (both during melting and when an ICV box is not located under the AWTE) the damper for air inlet 36-NO2-022 is adjusted to maintain a volumetric flow rate through the SCR and to reduce the concentration of NOx to the SCR design limits (36-HV-504). Dampers for air inlet filters 36-NO2-101 and 36-NO2-102 are adjusted to provide a constant gas stream flow entering the wet scrubber skid (see 36-FV-016 on Drawing F-145579-36-A-0099 in Appendix D5). The damper 36-TV-014 for inlet filter 36-NO2-049 is normally closed. If the temperature entering the Sintered Metal Filter exceeds 572 °F, the inlet filter damper will modulate open to maintain a maximum of 572 °F to the SCR Sintered Metal Filter (See 36-TV-014 on Drawing F-145579-36-A-0099 in Appendix D5).

When an ICV box is not located under the AWTE, these dampers (along with the damper for 36-NO2-093 [36-FV-331 on Drawing F-145579-36-A-0102 in Appendix D5]) are adjusted to maintain the volumetric flow rate through the OGTS. The other ambient air inlet filters shown on Figure 2-1 do not have dampers; the inlet flow is dictated by the static pressure in the system (i.e., a slight negative pressure in the Liquid Waste Staging Tanks draws air into the tanks and then through to the OGTS). The ICV Box is moved after processing is complete and gas emissions cease. Before the ICV Box is disconnected from the AWTE, the low ICV Inlet Air Flow interlock is disabled (using a key switch) because it is not required when there are no emissions from the process (see Section 2.5.8.6). Disabling the interlock prevents the gas flow from transferring from the Main OGTS to the Bypass System.

The Main OGTS is designed to utilize redundancy to ensure treatment is available for the generated off-gas stream from the DBVS process. Active monitoring at various locations allow for data trending, providing operators feedback on the performance of various OGTS components. This data also allows for actions to be taken prior to alarms at the OGTS exhaust

stack. Actions that may be taken include slowing the ICV process (reduction of source term), switch to redundant or back-up systems, and adjustment of operating parameters. Appropriate reporting and on-site responses will be performed in the event of stack alarms.

2.5.8.1 Sintered Metal Filter Controls. Particulates collected by the OGTS from the melt are impinged on the sintered metal filters, causing the pressure drop across the filters to increase. Compressed air, controlled by a timer, is used to back-pulse all of the sintered metal filter elements. The time period between back-pulses may be adjusted based on the trend of the pressure drop across the sintered metal filters. The particulates are collected at the bottom of the sintered metal filter housing. These particulates are then returned to the dryer, using vacuum from the dryer as the motive force and bleed air, for incorporation into the next batch of material for the melt. For instrumentation see P&ID F-145579-36-A-0099 in Appendix D5. The control philosophy for return of collected particulate to the dryer is discussed in Section 2.2.7.3.

The temperature entering the sintered metal filters will be controlled by bleeding ambient air through valve 36-TV-014, controlled by 36-TE-014.

2.5.8.2 Wet Scrubber Skid Controls. The off-gas from the sintered metal filters is routed through a quencher, scrubber, and mist eliminator. The quencher and scrubber remove acid gases by circulating a dilute caustic (sodium hydroxide) solution through the quencher and scrubber. The caustic solution is circulated from a scrubber tank that has controls to maintain pH level and scrubber tank bleed off. The caustic make-up solution valve (36-LV-119) is used to control flow into the tank and is closed automatically upon high tank level alarm, to prevent the tank from overfilling. For instrumentation see P&ID F-145579-36-A-0100 and -0102 in Appendix D5.

The dilute caustic solution is supplied from a "day-use" tank located inside the wet scrubber skid (36-D74-010 as shown on Drawing F-145579-36-A-0102 in Appendix D5). As dictated by processing conditions, caustic solution is added to the scrubber tank to maintain the scrubber tank solution in a basic pH range (to be developed during full-scale testing with nonregulated material). Control of pH is achieved by the amount of caustic allowed into the tank from valve 36-LV-119. The day-use tank provides two functions: (1) allows the wet scrubber system to be self-contained and (2) allows for the flexibility to further dilute the caustic solution if required. If dilution is required, filtered water is added to the tank until a target density (measured by 36-DE-225) is achieved. A mixer (36-D57-095) is provided in the tank to ensure a homogeneous solution.

The day-use tank receives a 15 percent sodium hydroxide solution from tank 36-D74-113. Tank 36-D74-113 is sized to contain sufficient 15 percent sodium hydroxide solution for a single box campaign. The off-gas from the wet scrubber is then cooled by the condenser; the off-gas temperature leaving the condenser is controlled by modulating the chilled water/glycol flow through the condenser. The off-gas passes through the mist eliminator and then to the heater.

The heater is controlled by the entering (36-TE-307A) and leaving air temperature (36-TE-307B), to maintain a minimum 40 °F rise in off-gas stream temperature, or a maximum

leaving air temperature of 200 °F. A temperature controller (36-E02-042C) modulates the capacity of the heater through a silicon-controlled rectifier that varies the current through the heating elements. The wet scrubber skid leaving air temperature is indicated by 36-TE-308. The 40 °F rise in off-gas stream temperature is to protect the downstream HEPA and HEGA filter skids from condensation. Insulation will be placed on the ductwork connecting to these skids. Insulation will also be placed on the housings themselves (see Specifications 145579-D-SP-036 and 145579-V-SP-010 in Appendix G5). The upper temperature is based on the limit for the HEPA filters.

Within the wet scrubber skid, the temperature of the scrub solution is controlled via 36-TV-113 Chilled Water supply valve to heat exchanger HX-001. Feedback is based on the temperature as read by 36-TE-113. The water/glycol solution provided to the wet scrubber skid condenser and heat exchanger is pumped to the components by the off-gas chiller pump skid and cooled by an air-cooled scroll chiller. The temperature in the water/glycol loop is maintained by controls integral to the chiller. The chiller modulates capacity to maintain leaving water/glycol temperature based on the return water/glycol solution temperature. Large swings in the return water/glycol solution temperature are reduced using the surge tank to moderate the return water temperature. The surge tank includes Low level measured at 36-LSL-816. The chilled water system expansion tank includes a high level alarm measured at 36-LSH-819 and low level alarm measured at 36-LSL-820. For instrumentation see P&ID F-145579-36-A-0106 in Appendix D5.

2.5.8.3 HEPA Filter and HEGA Filter Skid Controls. The off-gas from the wet scrubber skid is routed through one of two HEPA filter and HEGA filter trains; the second train is on standby. The differential pressure entering the HEPA filter skid is monitored by 36-PDIT-312. In addition, each HEPA filter, carbon adsorber, and polishing filter is monitored for differential pressure (36-PDIS-311, 36-PDIS-315, 36-PDIS-317, 36-PDIS-335, 36-PDIT-327, 36-PDIT-332, 36-PDIT-333, and 36-PDIT-334). Upon a high differential pressure alarm (indicating a plugged filter) or on a low differential pressure alarm (indicating a potentially breached filter), the standby HEPA filter/HEGA filter skid train will be lined up by opening valves 36-HV-313 and 36-HV-314, then the operating filter train will be valved out using 36-HV-309 and 36-HV-314. The temperatures entering each HEPA filter train (36-TE-340 and 36-TE-344) and exiting (36-TE-343 and 36-TE-347) are also monitored.

The HEPA filter skid controls monitor leak detection in the condensate collection tank secondary containment, and at each HEPA filter housing at 36-LSH-318, 36-LSH-319, 36-LSH-320, and 36-LSH-321. If liquid is detected in a HEPA filter housing, a switch is made to the standby train. When appropriate, the drain valves on the affected housing train are opened and the tank vent opened to drain liquid into the condensate collection tank. This liquid is pumped from the collection tank to a container using the local station at the skid.

Between the final HEPA filter and before the HEGA filter, each filter train will include a heat detector to provide fire detection in the ductwork (see Drawing F-145579-00-E-0082 in Appendix C5). Each heat detector will be an approved rate of rise detector connected to the fire alarm control panel.

The discharge from the HEGA filter skid includes temperature monitoring at 36-TE-316, pressure monitoring at 36-PIT-325, and monitoring for total hydrocarbons at 36-AE-328.

For instrumentation on the HEPA filter skid and HEGA filter skid see P&ID F-145579-36-A-0107 in Appendix D5.

Between ICV container melts, the HEGA filter in the operating train will be valved-out and the remaining capacity of the carbon filter will be analyzed. The analysis will be used to trend the carbon filter loading to assure that the filter is changed by the time the filter reaches 50 percent of total adsorbance capacity for organics.

2.5.8.4 Selective Catalytic Reduction Unit Controls. The off-gas from the HEPA filter/HEGA filter skid proceeds to the SCR unit. Before entering the SCR unit, ambient air is mixed with the off-gas stream to reduce the concentration of NO_x to meet the requirements of the SCR. The entering temperature is monitored by 36-TE-505 and the entering NO_x concentration is monitored by 36-AE-503. The MCS adjusts air inlet valve 36-HV-504 to control the NOx concentration entering the SCR. Level of control is limited by the required flow rate of upstream components. Valve 36-HV-504 is interlocked with the ICV Low Air Inlet Flow trip to isolate the OGTS ducting.

The off-gas is pre-heated with an air-to-air heat exchanger. The off-gas that has been heated and treated is routed through the air-to-air heat exchanger to recover the energy from the treated air before the additional heating required for the off-gas stream for NO_x removal in the SCR unit. The temperature downstream of the air-to-air heat exchanger is monitored by 36-TE-506. The mixed air is reheated by an electric heater to the SCR bed's operating temperature. The heater is modulated by temperature controller 36-E02-108 to maintain the off-gas downstream temperature through a silicon control rectifier that varies the current through the heating elements.

The off-gas passes through the SCR bed which consists of a multi-pass catalyst bed where ammonia is injected into the air stream. Anhydrous ammonia is fed from a storage tank and mixed with heated ambient air and injected into a venturi within the SCR bed (flow is regulated based on NOx concentration at the SCR outlet). The SCR bed will consist of a multi-pass catalyst bed to provide high-efficiency removal of NO_x and CO. The off-gas on the discharge of the catalyst bed is monitored for temperature by 36-TE-510, ammonia slip by 36-AE-509, and NOx concentration by 36-AE-508. The treated off-gas stream is routed through the air-to-air heat exchanger where the off-gas leaving air temperature is monitored by 36-TE-511 and then routed to the exhaust fans and out the exhaust stack.

Control of ammonia is automatically controlled based on NOx levels as read by AE-508 and ammonia concentration as read by AE-532. The balance is to add just enough ammonia to decrease the NOx levels but not add any more than is effective at lowering this level. In addition, should ammonia concentration reach an unacceptable level, the ammonia feed valve 36-HV-407 is interlocked closed. Additionally, 36-HV-407 is also interlocked with high area

ammonia concentration as detected by AE-414. For instrumentation, see P&ID F-145579-36-A-0103 in Appendix D5.

2.5.8.5 Exhaust Fan Controls. The exhaust fans are controlled by the MCS via operator initiated start and stop commands. The redundant exhaust fan is started up and placed into service should the primary exhaust fan experience High- fan motor vibration level, High- fan bearing temperature, or motor low speed.

The temperature and pressure of the off-gas stream is measured downstream of the exhaust fans prior to entering the stack at 36-TE-522 and 36-PIT-521. For exhaust fan instrumentation see P&ID F-145579-36-A-0103 in Appendix D5.

2.5.8.6 Interlock Philosophy. A single type of interlock is shown on the P&ID drawings associated with the OGTS. Safety Hardwired Interlocks consist of those interlocks that are necessary to prevent or mitigate a hazard that, if not addressed, could lead to a safety event. This event could be a release of radiological or hazardous gases. For the OGTS system, interlocks are shown in Table 2-10 and discussed in greater detail below.

- I-6 switches flow from the Main OGTS to the Bypass System by closing valves (35-HV-114 and 35-HV-115) and opening a valve (36-HV-901) as shown on P&ID F-145579-35-A-0100.
- I-6 will close the ammonia isolation feed valve (36-HV-407) shown on P&ID F-145579-36-A-0103. This prevents the potential for higher concentration of ammonia and air due to a low air flow condition, which in turn precludes a flammable gas mixture.
- I-8 closes air bleed dampers on P&ID Drawings F-145579-36-A-0099, F-145579-36-A-0102, and F-145579-36-A-0103. This interlock ensures that the Main OGTS is isolated when the OGTS bypass is initiated. Isolation protects the workers from the potential of escaping NO_x gases in occupied areas.
- I-10 shuts the ammonia isolation feed valve (HV-407) shown on P&ID F-145579-36-A-0103 based on concentration of ammonia exceeding the set point in the process piping or exceeding the life safety limit in the general airspace (i.e., leak from the system). Ammonia has a lower flammability level at approximately 16 percent in air, levels will be limited to 1/4 LFL (4 percent) or to the lowest value suitable for the proper operation of the SCR. Air detection of ammonia will detect levels less than 25 ppm for personnel safety. Either detection about set point will immediately isolate the ammonia source from the storage tank. In any situation, any residual ammonia in the system will be swept by either the main off-gas ventilation fans or the bypass fans from the SCR.
- I-11 shuts down the exhaust fan on high vibration (see 36-VS-025 and 36-VS-026 on P&ID F-145579-36-A-0103 in Appendix D5). The setting on the switch will be higher than the alarm settings for 35-VE-515 and 36-VE-518; the purpose of

the switch is to protect the ductwork and fan housing from damage due to excessive vibration.

Table 2-10. Selected Main Off-Gas Treatment System Interlocks.

Condition	Interlock Code	Action
Low ICV™ Inlet Air Flow (35-FE-112) from Drawing F-145579-35-A-0100. Note that two out of three flow elements must alarm low to trigger event.	I-6	Directs flow through Bypass System by: • Closing valves leading to the Main OGTS (35-HV-114 and 35-HV-115 on Drawing F-144579-35-A-100). • Opening valve leading to Bypass System (36-HV-901 on Drawing F-145579-35-A-0100). Stops Ammonia feed by: • Closing valve 36-HV-407 (see Drawing F-145579-36-0103).
Low ICV™ Inlet Air Flow (35-FE-112) from Drawing F-145579-35-A-0100. Note that two out of three flow elements must alarm low to trigger event.	I-8	Isolates the Main OGTS Inlet Air points by: • Closing inlet air valves 36-TV-014 and 36-FV-016 (see Drawing F-145579-36-A-0099). • Closing inlet air valve 36-FV-331 (see Drawing F-145579-36-A-0102). • Closing inlet air valve 36-HV-504 (see Drawing F-145579-36-0103).
High Ammonia concentration in process (36-AE-414) or worker area (36-AE-532) (see Drawing F-145579-36-A-0103).	I-10	Stops Ammonia feed by: • Closing valve 36-HV-407 (see Drawing F-145579-36-0103).
High fan vibration (36-VS-025 and 36-VS-026) (see Drawing F-145579-36-A-0103)	I-11	Shuts down fan associated with vibration • 36-VS-025 shuts down 36-N31-025 • 36-VS-026 shuts down 36-N31-026

Note that normal MCS control sequences (and those for normal protection of equipment) are not shown so as to reduce drawing clutter and focus on significant interlocks. Normal control functions are presented to the MCS operator on the operating system computer screens.

2.5.9 Secondary Containment and Leak Detection Description

2.5.9.1 Sintered Metal Filters. The sintered metal filters are maintained under a negative pressure to assure that if the housing leaks, that material will remain within the housing and the OGTS. The sintered metal filters have no secondary containment or dried waste leak detection. In lieu of leak detection, the filters are pressure tested before installation, tested as part of an overall system check, and will be periodically inspected.

2.5.9.2 Wet Scrubber System Skid Tanks. The secondary containment will be designed into the wet scrubber system enclosure. The secondary containment will be designed to hold the capacity of the recirculation system inventory and will include a sump designed such that 1.5 gal of liquid will create a pool depth of at least 1 in. The enclosure will be designed to slope toward the sumps. The systems leak detection will include dry contacts to connect to the MCS termination panel.

2.5.9.3 HEPA Filter Skid Condensate Tanks. Liquid level measurement in the secondary containment will provide an alarm and indication that the primary condensate tank has failed. Secondary containment is provided due to a lack of specific information as to which, if any, hazardous constituents will condense from the air stream at this point in the process.

2.5.10 Corrosion Assessment

The design of the tanks for the wet scrubber system, HEPA filter assembly, and the SCR unit ammonia tank has not been completed at this time. The technical specifications require the design engineer to select materials and components to be compatible with the expected chemical composition, temperature, and state of the waste streams in contact with the tanks. When these tanks are designed, the design submittals will be provided for an independent corrosion assessment.

An independent corrosion expert has reviewed the specifications and has identified concerns associated with the selection of some materials of construction and identified potential corrosion under insulation issues. The planned actions to address this, and other items noted in the corrosion review, are described in a response letter to the corrosion expert (see Appendix H5). Changes have made to the OGTS since the initial corrosion reviews performed in 2005. These changes have been reviewed by the independent corrosion expert (recent corrosion review is provided in Appendix H).

2.5.11 Inspection Schedule

Inspection and certification of the sintered metal filters, wet scrubber skid, HEPA filter skid, HEGA filter skid, SCR skid, exhaust fans, and exhaust stack will be performed at the supplier's facility to ensure they comply with the design requirements. Additional inspection and certification will be performed to verify they have been properly installed before placing them into service by an IQRPE or a representative of the IQRPE. An inspection/certification report will be submitted to the Ecology documenting the inspection results.

Additionally, before placing the tank systems into service, the wet scrubber skid and the HEPA filter skid- tanks will be inspected by a qualified, independent installation inspector or an IQRPE for structural damage and for proper installation. This individual is responsible for certifying to Ecology that the OGTS tanks were properly installed. The inspection will include the following:

- Evaluation of welds to verify no cracking or lack of fusion;

- Confirmation that no punctures, scrapes of protective coatings, cracks, corrosion, or other structure damage are present;
- Performance of tank tightness test to verify no leaks are present and that pressure or vacuum did not change beyond specifications over the test period;
- Verification of the protection of ancillary equipment against physical damage and stress; and
- Installation inspection that conform to consensus-recognized standards including the documentation of findings and corrective actions documented in a post-inspection report.

The need for an integrity inspection will be determined by the Owner/Operator in accordance with Permit condition IV.A.8.d.i Installation Assessment

2.5.12 Installation Assessment

At the time of the writing of this document, site grading has been completed and a number of the concrete foundations place. The structural calculation for the slabs (listed in Appendix A5) have been reviewed and approved. All of the OGTS components are located on concrete foundations. General Arrangement Drawing F-145579-36-V-0001 illustrates the projected completed assembly of the installed OGTS equipment on the DBVS site and the interface with other systems (see Appendix C5). Finer views of areas of the DBVS site with OGTS components are shown on drawings F-145579-36-V-0002, 36-V-0003, 36-V-0004, 36-V-0005, 36-V-0006, 36-V-000736-V-0008, 36-V-0016, 36-V-0019, and 36-V-0021. Refinement of the drawings and development of installation details will be performed as detailed drawings and installation instructions from equipment suppliers are received. The modular nature of the OGTS will facilitate installation of the system through the minimization of the number of pieces of equipment that require placement and number of field connections.

An assessment of the installation of the OGTS will be performed during the actual installation on site and will include an independent inspection of the following activities by an IQRPE or a Qualified Installation Inspector:

- Visual inspection and pressure testing;
- Placement of anchor bolts;
- Placement of the shop-fabricated/installed tanks ;
- Installation of the Sintered metal filters, wet scrubber system skid, the HEPA filter skid, HEGA filter Skid, SCR skid, -exhaust fans, exhaust stack, and other ancillary equipment; and
- Tightness testing before placing the system into service.

Upon completion of the final installation, an inspection report documenting the results of the tank system installation will be prepared by the IQRPE or a Qualified Installation Inspector. The inspection results will be documented in the report and included in the Operating Record. This record will be accessible at the DBVS and will contain:

1. An as-built site plan;
2. An as-built drawing set of the installed OGTS;
3. Inspection notes, photographs, and any other material used to document inspection activities;
4. Documentation of any defects discovered;
5. Documentation of tightness testing results;
6. A signed and dated statement certifying the corrosion protection system (if installed); and
7. A statement signed by the IQRPE certifying the proper installation of the OGTS tank systems.

The assembled system will undergo testing as a subsystem and as part of the integrated complete DBVS facility. Subsystem testing that may be performed include chilled water supply operation and flow to the wet scrubber, balancing of flow using the air inlet control valves, verification of flow from connected peripheral systems (liquid waste staging tanks, secondary waste storage tanks), and pressure monitoring at multiple locations under OGTS flow conditions. Specific instrumentation and systems that will also be checked include, remote actuation of valves, local activation of HEPA Skid valves, and ability to shutdown equipment remotely (such as the chilled water pump skid and wet scrubber skid). Complete DBVS facility integrated performance testing are projected to involve the use non-contaminated, non-regulated test materials for functional testing of the assembled system.

3.0 References

3.0 REFERENCES

Editor's Note: The References include citations from previous packages.

10 CFR 830, "Nuclear Safety Management," *Code of Federal Regulations*, as amended.

10 CFR 835, "Occupational Radiation Protection," *Code of Federal Regulations*, as amended.

29 CFR 1910, "Occupational Safety and Health Standards," *Code of Federal Regulations*, as amended.

40 CFR 60, "Standards of Performance for New Stationary Sources," *Code of Federal Regulations*, as amended.

40 CFR 61, "National Emission Standards for Hazardous Air Pollutants: Radionuclides," *Code of Federal Regulations*, as amended.

40 CFR 264, "Standards for Owners and Operators of Hazardous Waste Treatment, Storage, and Disposal Facilities," Subpart J, *Code of Federal Regulations*, as amended.

47 CFR 15, "Radio Frequency Devices," *Code of Federal Regulations*, as amended.

AATCC Test Method 27, *Water Resistance: Hydrostatic Pressure Test*, American Association of Textile Chemists and Colorists, Research Triangle Park, North Carolina.

ACI 318-02, *Building Code Requirements for Structural Concrete (ACI 318-02) and Commentary (ACI 318R-02)*, American Concrete Institution, Farmington Hills, Michigan.

AISC, *Manual of Steel Construction—Allowable Stress Design*, Ninth Edition, American Institute of Steel Construction, Chicago, Illinois.

AISC, *Manual of Steel Construction—Load and Resistance Factor Design*, Third Edition, American Institute of Steel Construction, Chicago, Illinois.

ASME AG-1, *Code on Nuclear Air and Gas Treatment*, American Society of Mechanical Engineers, New York, New York.

ASME STS-1a-2003, *Steel Stacks*, Addenda to ASME STS-1-2000 Edition, American Society of Mechanical Engineers, New York, New York.

ANSI C63.16, *American National Standard Guide for Electrostatic Discharge Test Methodologies and Criteria for Electronic Equipment*, American National Standards Institute, Washington, D.C.

ANSI FCI 70-2, *Control Valve Seat Leakage*, Fluid Controls Institute, Inc., Cleveland, Ohio.

ANSI/ISA-82.02.01-1999 (IEC 61010-1 Mod), *American National Standard for Safety Standard for Electrical and Electronic Test, Measuring, Controlling, and Related Equipment-General Requirements*, The Instrumentation, Systems, and Automation Society, Research Triangle Park, North Carolina.

ANSI/ISA-82.02.02-1996 (IEC 61010-2-031), *American National Standard for Safety Requirements for Electrical Equipment for Measurement, Control, and Laboratory Use*, The Instrumentation, Systems, and Automation Society, Research Triangle Park, North Carolina.

ANSI Y14.1, *Drawing Sheet Size and Format*, American National Standards Institute, Inc., New York, New York.

ANSI Y14.5M, *Dimensioning and Tolerancing*, American National Standards Institute, New York, New York.

ANSI/ASHRAE 87.1-1992, *Method of Testing Fan Vibration-Blade Vibrations and Critical Speeds*, American National Standards Institute, Inc., Washington, D.C.

ANSI/ASME B1.20.1, *Pipe Threads, General Purpose (Inch)*, American Society of Mechanical Engineers, New York, New York. AATCC Test Method 27, *Water Resistance: Hydrostatic Pressure Test*, American Association of Textile Chemists and Colorists, Research Triangle Park, North Carolina.

ANSI/AWWA D100, *AWWA Standard for Welded Steel Tanks for Water Storage*, American Water Works Association, Denver, Colorado.

ANSI/HI 3.1-3.5, *American National Standard for Rotary Pumps for Nomenclature, Definitions, Applications and Operation*, Hydraulic Institute, Parsippany, New Jersey.

ANSI/HI 3.6, *American National Standard for Rotary Pump Tests*, Hydraulic Institute, Parsippany, New Jersey.

ANSI N13.1-1999, *Health Physics Society Sampling and Monitoring Releases*, American National Standards Institute, Inc., New York, New York.

ANSI/IESNA RP-7, *Lighting Industrial Facilities*, Illuminating Engineering Society of North America, New York, New York.

API Standard 620, *Design and Construction of Large, Welded, Low-Pressure Storage Tank*, American Petroleum Institute, Washington, D.C.

ASCE 4-98, *Seismic Analysis of Safety-Related Nuclear Structures*, American Society of Civil Engineers, Reston, Virginia.

ASCE 7-98, *Minimum Design Loads for Buildings and Other Structures*, American Society of Civil Engineers, Reston, Virginia.

ASHRAE Fundamentals Handbook, *2001 ASHRAE Handbook -- Fundamentals*, American Society of Heating, Refrigerating, and Air Conditioning Engineers, Atlanta, Georgia.

ASME B&PV Code, *ASME Boiler and Pressure Vessel Code*, American Society of Mechanical Engineers, New York, New York.

Section I, "Power Boilers"

Section VIII, "Rules for Construction of Pressure Vessels"

Section IX, "Welding and Brazing Qualifications"

ASME B16.5, *Pipe Flanges and Flanged Fittings*, American Society of Mechanical Engineers, New York, New York.

ASME B16.9, *Factory-Made Wrought Steel Buttwelding Fittings*, American Society of Mechanical Engineers, New York, New York.

ASME B16.11, *Forged Fittings, Socket Welding and Threaded*, American Society of Mechanical Engineers, New York, New York.

ASME B18.2.1, *Square and Hex Bolts and Screws Inch Series*, American Society of Mechanical Engineers, New York, New York.

ASME B18.2.2, *Square and Hex Nuts*, American Society of Mechanical Engineers, New York, New York.

ASME B30.9-2003, *Slings*, American Society of Mechanical Engineers, New York, New York.

ASME B30.20, *Below-the-Hook Lifting Devices*, American Society of Mechanical Engineers, New York, New York.

ASME B31.1, *Power Piping*, American Society of Mechanical Engineers, New York, New York.

ASME B31.3, *Process Piping*, American Society of Mechanical Engineers, New York, New York.

ASME B31.5, *Refrigeration Piping Procedures*, American Society of Mechanical Engineers, New York, New York.

ASME NQA-1, 1994, *Quality Assurance Program Requirements for Nuclear Facilities*, American Society of Mechanical Engineers, New York, New York.

ANSI N509-2002, *Nuclear Power Plant Air-Cleaning Units and Components*, American National Standards Institute, Inc., New York, New York.

ASME N510, *Testing of Nuclear Air Treatment Systems*, American Society of Mechanical Engineers, New York, New York.

ASME PCC-1, *Guidelines for Pressure Boundary Bolted Flange Joint Assembly*, American Society of Mechanical Engineers, New York, New York.

ASNT SNT-TC-1A, *Recommended Practice*, American Society of Nondestructive Testing, Columbus, Ohio.

ASTM A 36/A 36M, *Standard Specification for Carbon Structural Steel*, American Society of Testing and Materials, New York, New York.

ASTM A 53/A 53M, *Standard Specification for Pipe, Steel, Black and Hot-Dipped, Zinc-Coated, Welded and Seamless*, American Society of Testing and Materials, New York, New York.

ASTM A 105/A 105M, *Standard Specification for Carbon Steel Forgings for Piping Applications*, American Society for Testing and Materials, West Conshohocken, Pennsylvania.

ASTM A 106, *Standard Specification for Carbon Steel Forgings for Piping Applications*, American Society for Testing and Materials, West Conshohocken, Pennsylvania.

ASTM A 108, *Standard Specification for Steel Bars, Carbon, Cold-Finished, Standard Quality*, American Society for Testing and Materials, West Conshohocken, Pennsylvania.

ASTM A 176, *Standard Specification for Stainless and Heat-Resisting Chromium Steel Plate, Sheet, and Strip*, American Society for Testing and Materials, West Conshohocken, Pennsylvania.

ASTM A 182/A 182M, *Standard Specification for Forged or Rolled Alloy-Steel Pipe Flanges, Forged Fittings, and Valves and Parts for High-Temperature Service*, American Society for Testing and Materials, West Conshohocken, Pennsylvania.

ASTM A 193/A 193M, *Standard Specification for Alloy-Steel and Stainless Steel Bolting Materials for High-Temperature Service*, American Society for Testing and Materials, West Conshohocken, Pennsylvania.

ASTM A 194/A 194M, *Standard Specification for Carbon and Alloy Steel Nuts for Bolts for High Pressure and High Temperature Service, or Both*, American Society for Testing and Materials, West Conshohocken, Pennsylvania.

ASTM A 234/A 234M, *Standard Specification for Piping Fittings of Wrought Carbon Steel and Alloy Steel for Moderate and High Temperature Service*, American Society for Testing and Materials, West Conshohocken, Pennsylvania.

ASTM A 240/A 240M, *Standard Specification for Chromium and Chromium-Nickel Stainless Steel Plate, Sheet, and Strip for Pressure Vessels and for General Applications*, American Society for Testing and Materials, West Conshohocken, Pennsylvania.

ASTM A 269, *Standard Specification for Seamless and Welded Austenitic Stainless Steel Tubing for General Service*, American Society of Testing and Materials, New York, New York.

ASTM A 276, *Standard Specification for Stainless Steel Bars and Shapes*, American Society of Testing and Materials, New York, New York.

ASTM A 307, *Standard Specification for Carbon Steel Bolts and Studs, 60 000 PSI Tensile Strength*, American Society for Testing and Materials, West Conshohocken, Pennsylvania.

ASTM A 312/A 312M, *Standard Specification for Seamless and Welded Austenitic Stainless Steel Pipes*, American Society for Testing and Materials, West Conshohocken, Pennsylvania.

ASTM A 325, *Standard Specification for Structural Bolts, Steel, Heat Treated, 120/105 ksi Minimum Tensile Strength*, American Society for Testing and Materials, West Conshohocken, Pennsylvania.

ASTM A 351/A 351M-03, *Standard Specification for Castings, Austenitic, Austenitic-Ferritic (Duplex), for Pressure-Containing Parts*, American Society for Testing and Materials, West Conshohocken, Pennsylvania.

ASTM A 354, *Standard Specification for Quenched and Tempered Alloy Steel Bolts, Studs, and other Externally Threaded Fasteners*, American Society for Testing and Materials, West Conshohocken, Pennsylvania.

ASTM A 403/A 403M, *Standard Specification for Wrought Austenitic Stainless Steel Piping Fittings*, American Society for Testing and Materials, West Conshohocken, Pennsylvania.

ASTM A 480/A 480M, *Standard Specification for* General Requirements for Flat-Rolled Stainless and Heat-Resisting Steel Plate, Sheet, and Strip, American Society for Testing and Materials, West Conshohocken, Pennsylvania.

ASTM A 500, *Standard Specification for Cold-Formed Welded and Seamless Carbon Steel Structural Tubing in Rounds and Shapes*, American Society for Testing and Materials, West Conshohocken, Pennsylvania.

ASTM A 516/A 516M, *Standard Specification for Pressure Vessel Plates, Carbon Steel, for Moderate- and Lower-Temperature Service*, American Society for Testing and Materials, West Conshohocken, Pennsylvania.

ASTM A 563a, *Standard Specification for Carbon and Alloy Steel Nuts*, American Society for Testing and Materials, West Conshohocken, Pennsylvania.

ASTM A 569, *Standard Specification for Steel, Carbon (0.15 Maximum, Percent), Hot-Rolled Sheet and Strip Commercial*, American Society for Testing and Materials, West Conshohocken, Pennsylvania.

ASTM B 187/B 187M-03, *Standard Specification for Copper, Bus Bar, Rod, and Shapes and General Purpose Rod, Bar, and Shapes*, American Society for Testing and Materials, West Conshohocken, Pennsylvania.

ASTM C 518, *Standard Test Method for Steady-State Thermal Transmission Properties by Means of the Heat Flow Meter Apparatus*, American Society for Testing and Materials, West Conshohocken, Pennsylvania.

ASTM D 380, *Standard Test Method for Rubber Hose*, American Society for Testing and Materials, West Conshohocken, Pennsylvania.

ASTM D 991, *Standard Test Method for Rubber Property-Volume Resistivity Of Electrically Conductive and Antistatic Products*, American Society for Testing and Materials, West Conshohocken, Pennsylvania.

ASTM D 1056, *Standard Specification for Flexible Cellular Materials-Sponge or Expanded Rubber*, American Society for Testing and Materials, West Conshohocken, Pennsylvania.

ASTM D 1621, *Standard Test Method for Compressive Properties of Rigid Cellular Plastics*, American Society for Testing and Materials, West Conshohocken, Pennsylvania.

ASTM D 1622, *Standard Test Method for Apparent Density of Rigid Cellular Plastics*, American Society for Testing and Materials, West Conshohocken, Pennsylvania.

ASTM D 2854-96(2000), *Standard Test Method for Apparent Density of Activated Carbon*, American Society for Testing and Materials, West Conshohocken, Pennsylvania.

ASTM D 2862-97(2004), *Standard Test Method for Particle Size Distribution of Granular Activated Carbon*, American Society for Testing and Materials, West Conshohocken, Pennsylvania.

ASTM D 3803-91(2004), *Standard Test Method for Nuclear-Grade Activated Carbon, American Society for Testing and Materials*, West Conshohocken, Pennsylvania.

ASTM D 5162, *Standard Practice for Discountability (Holiday) Testing of Nonconductive Protective Coating on Metallic Substrates*, American Society for Testing and Materials, West Conshohocken, Pennsylvania.

ASTM E 84, *Standard Test Method for Surface Burning Characteristics of Building Materials*, American Society for Testing and Materials, West Conshohocken, Pennsylvania.

ASTM E 96, *Standard Test Methods for Water Vapor Transmission of Materials*, American Society for Testing and Materials, West Conshohocken, Pennsylvania.

ASTM E 285, *Standard Test Method for Oxyacetylene Ablation Testing of Thermal Insulation Materials*, American Society for Testing and Materials, West Conshohocken, Pennsylvania.

ASTM F 436, *Standard Specification for Hardened Steel Washers*, American Society for Testing and Materials, West Conshohocken, Pennsylvania.

Atomic Energy Act of 1954, 42 U.S.C. 2011 – 2259, et seq.

AWS D1.1/D1.1M, *Structural Welding Code—Steel*, American Welding Society, Miami, Florida.

ANSI/AWS D1.3-98, *Structural Welding Code—Sheet Steel*, American Welding Society, Miami, Florida.

AWS D1.6, *Structural Welding Code—Stainless Steel*, American Welding Society, Miami, Florida.

AWS QC-1, *Standard for AWS Certification of Welding Inspectors*, American Welding Society, Miami, Florida.

Bagaasen, L.M., J.H. Westsik, Jr., and T.M. Brouns, 2005, *Waste-Form Qualification Compliance Strategy for Bulk Vitrification*, PNNL-15048, Pacific Northwest National Laboratory, Richland, Washington.

CH2M HILL, 2004, *Initial DBVS Design Site Improvement Package*, RPP-22537, Revision 0, Prepared by AMEC Earth & Environmental, Richland, Washington, and AMEC Americas Limited, Trail, British Columbia under document number 143643-G-RP-001, for CH2M HILL Hanford Group, Inc., Richland, Washington.

DOE-HDBK-1169-2003, *DOE Handbook – Nuclear Air Cleaning Handbook*, U.S. Department of Energy, Washington, D.C.

DOE/RL-92-36, *Hanford Site Hoisting and Rigging Manual*, U.S. Department of Energy, Richland, Washington.

Fuller, P., 2004, *Hydraulic Fluid Compatibility with TraceTek Leak Detection System and Mini-Probe*, RPP-19524, Revision 1, CH2M HILL Hanford Group, Inc., Richland, Washington.

HNF-2962, *A List of EMI/EMC Requirements*, Revision 0, Numatec Hanford Corporation for Fluor Daniel Hanford, Inc., Richland, Washington.

HNF-SD-GN-ER-501, *Natural Phenomena Hazards, Hanford Site, Washington*, Revision 1B, Westinghouse Hanford Company, Richland, Washington.

IEC 61000-4-2, *Electromagnetic Compatibility (EMC) – Part 4-2: Testing and Measurement Techniques – Electrostatic Discharge Immunity Test*, International Engineering Consortium, Chicago, Illinois.

IEEE Std C2, *National Electrical Safety Code*, Institute of Electrical and Electronics Engineers, New York, New York.

IEEE C62.41, *IEEE Recommended Practice on Surge Voltages in Low-Voltages AC Power Circuits*, Institute of Electrical and Electronics Engineers, New York, New York.

IEEE C62.41.1, *IEEE Guide on the Surge Environment in Low-Voltage (1000 V and Less) AC Power Circuits*, Institute of Electrical and Electronics Engineers, New York, New York.

IEEE C62.41.2, *IEEE Recommended Practice on Characterization of Surges in Low Voltage (1000 V and Less) AC Power Circuits*, Institute of Electrical and Electronics Engineers, New York, New York.

IEEE Std C37.90.2, *IEEE Standard for Withstand Capability of Relay Systems to Radiated Electromagnetic Interference from Transceivers*, Institute of Electrical and Electronics Engineers, New York, New York.

IEEE Std 141, *IEEE Recommended Practice for Electric Power Distribution for Industrial Plants*, Institute of Electrical and Electronics Engineers, New York, New York.

IEEE Std 142, *IEEE Recommended Practice for Grounding of Industrial and Commercial Power Systems*, Institute of Electrical and Electronics Engineers, New York, New York.

IEEE Std 242, *IEEE Recommended Practice for Protection and Coordination of Industrial and Commercial Power Systems*, Institute of Electrical and Electronics Engineers, New York, New York.

IEEE Std 519, *Recommended Practices and Requirements for Harmonic Control in Electrical Power Systems*, Institute of Electrical and Electronics Engineers, New York, New York.

IESNA HB-9, *IESNA Lighting Handbook*, 9th Edition, Illuminating Engineering Society of North America, New York, New York.

IP-2, *The 2003 Hose Handbook*, 7th Edition, Rubber Manufacturers of America, Washington, D.C.

ISA-82.03-1988, *Standard for Safety Standard for Electrical and Electronic Test, Measuring, Controlling, and Related Equipment*, The Instrumentation, Systems, and Automation Society, Research Triangle Park, North Carolina.

ISO 668, *Series 1 Freight Containers Classification, Dimensions and Ratings*, International Organization for Standardization, Geneva, Switzerland.

ISO 1161, *Series 1 Freight Containers -- Corner Fittings -- Specification*, International Organization for Standardization, Geneva, Switzerland.

ISO 1496-2, *Series 1 Freight Containers –Specification and Testing – Part 2: Thermal Containers*, International Organization for Standardization, Geneva, Switzerland.

Leonard, M.W., 2004, *Interface Control Document Between the Demonstration Bulk Vitrification System (DBVS) [CH2M HILL Hanford Group, Inc.] and the Effluent Treatment Facility (ETF) [Fluor Hanford]*, Revision 0, CH2M HILL Hanford Group, Inc., Richland, Washington.

MSS SP-67, *Butterfly Valves*, Manufacturing Standardization Society of the Valve and Fittings Industry, Inc., Vienna, Virginia.

MSS SP-72, *Ball Valves with Flanged or Butt-Welding Ends for General Service*, Manufacturing Standardization Society of the Valve and Fittings Industry, Inc., Vienna, Virginia.

MSS SP-82, *Valve Pressure Testing Methods*, Manufacturing Standardization Society of the Valve and Fittings Industry, Inc., Vienna, Virginia.

NEMA MG-1, *Motors and Generators*, National Electrical Manufacturers Association, Rosslyn, Virginia.

NEMA MG-13, *Frame Assignments for Alternating-Current Integral-Horsepower Induction Motors*, National Electrical Manufacturers Association, Rosslyn, Virginia.

NFPA 70, *National Electrical Code®*, 2002 Edition, National Fire Protection Association, Quincy, Massachusetts.

NFPA 90A, *Standard for the Installation of Air-Conditioning and Ventilating Systems*, 1999 Edition, National Fire Protection Association, Quincy, Massachusetts.

NFPA 91, *Standard for Exhaust Systems for Air Conveying of Vapors, Gases, Mists, and Noncombustible Particulate Solids*, 1999 Edition, National Fire Protection Association, Quincy, Massachusetts.

RPP-8530, *Tank Farm Labeling Standard*, Revision 0, CH2M HILL Hanford Group, Inc., Richland, Washington. (Cancelled: See TFC-ENG-STD-12.)

RPP-17403, *Demonstration Bulk Vitrification System Specification*, Revision 2, CH2M HILL Hanford Group, Inc., Richland, Washington.

RCW Chapter 70.105, "Hazardous Waste Management," *Revised Code of Washington*.

SAE J429, *Mechanical and Material Requirements for Externally Threaded Fasteners*, Society of Automotive Engineers, Warrendale, Pennsylvania.

SAE J534, *Lubrication Fittings*, Society of Automotive Engineers, Warrendale, Pennsylvania.

TFC-ENG-STD-06, *Design Loads for Tank Farm Facilities*, Revision A, CH2M HILL Hanford Group, Inc., Richland, Washington.

TFC-ENG-STD-12, *Tank Farm Equipment Identification Numbering and Labeling Standard*, Revision A, CH2M HILL Hanford Group, Inc., Richland, Washington. (Replaces Canceled RPP-8530.)

TFC-ENG-STD-21, *Hose-in-Hose Transfer Lines*, Revision A, CH2M HILL Hanford Group, Richland, Washington.

TFC-ESHQ-Q_C-C-03, *Control of Suspect Counterfeit Items*, Revision B, CH2M HILL Hanford Group, Richland, Washington.

TFC-PLN-09, *Human Factors Program*, Revision A-1, CH2M HILL Hanford Group, Richland, Washington.

UBC, 1997, *1997 Uniform Building Code*, International Conference of Building Officials, Whittier, California.

UL 142, *Standard for Safety-Steel Aboveground Tanks for Flammable and Combustible Liquids*, Underwriters Laboratories, Inc., Northbrook, Illinois.

UL 508A, *Standard for Industrial Control Panels*, Underwriters Laboratories, Inc., Northbrook, Illinois.

UL 840, *Insulation Coordination Including Clearances and Creepage Distances for Electrical Equipment*, Underwriters Laboratories, Inc., Northbrook, Illinois.

UL 900, *Air Filter Units*, Underwriters Laboratories, Inc., Northbrook, Illinois.

UL-listed, *Electrical Appliance and Utilization Equipment Directory*, Underwriters Laboratories, Inc., Northbrook, Illinois.

WAC 173-303-640, "Tank Systems," *Washington Administrative Code*, as amended.

WAC 173-400, "General Regulations for Air Pollution Sources," *Washington Administrative Code*, as amended.

WAC 246-247, "Radiation Protection – Air Emissions," *Washington Administrative Code*, as amended.

This page intentionally left blank.

Appendix A5

APPENDIX A5

MAIN OFF-GAS TREATMENT SYSTEM

Calculation Number	Revision	Title	Page
34005-CA-0001	C	*HEGA Skid – Organic Load Capacity*	A5-3
	N/A	Subcontractor Calculation Review Checklist	A5-111
145579-B-CA-023	1	*DBVS OGTS Bypass Structural Analysis*	A5-113
	N/A	Subcontractor Calculation Review Checklist	A5-271
145579-C-CA-001[a]	1	*Tri-Mer Scrubber Foundation (#11)*	N/A
145579-C-CA-010[b]	1	*PC-2 Basic Foundations (FDN #3, 7, 10, 12, and 13)*	N/A
145579-C-CA-015	2	*OGTS Steel Stack Foundation (Foundation #10)*	A5-272
	N/A	Subcontractor Calculation Review Checklist	A5-386
145579-C-CA-016	0	*Reagent Tank Foundations (Fdns #21, 22)*	A5-388
	N/A	Subcontractor Calculation Review Checklist	A5-448
145579-D-CA-043	A	*DBVS Detectable Leak Volume for the OGTS Wet Scrubber System*	A5-450
	N/A	Subcontractor Calculation Review Checklist	A5-461
145579-D-CA-056	1	*DBVS OGTS Bypass System Thermal Hydraulics Analysis*	A5-463
	N/A	CH2M HILL Spreadsheet Verification and Release Form for 145579-D-CA-056	A5-601
	N/A	Subcontractor Calculation Review Checklist	A5-634
145579-V-CA-004	1	*Off-Gas Chiller*	A5-636
	N/A	Subcontractor Calculation Review Checklist	A5-678
145579-V-CA-005	1	*Off-Gas Treatment System Pipe Stress Analysis*	A5-680
	N/A	Subcontractor Calculation Review Checklist	A5-1283

Calculation Number	Revision	Title	Page
145579-D-CA-061	0	*DBVS OGTS Thermal Hydraulics Analysis*	A5-1285
	N/A	CH2M HILL Spreadsheet Verification and Release Form for 145579-D-CA-061	A5-1524
	N/A	Subcontractor Calculation Review Checklist	A5-1554

[a]Calculation 145579-C-CA-001 has been reviewed by IQRPE (see Design Assessment Report No. DR-001). Calculation not provided in this Design Review Package.

[b]Calculation 145579-C-CA-010 has been reviewed by IQRPE (see Design Assessment Report No. DR-006). Calculation not provided in this Design Review Package.

34005-CA-0001

amec

CALCULATION COVER SHEET

CALC. NO.: 34005-CA-0001 REV: C DATE: March 17, 2006

CALC. TITLE: HEGA Skid – Organic Load Capacity

PROJECT NO.: 145579 PROJECT TITLE: Final DBVS Design

Design Verification Required: ☐ Yes X No

Calculation Type: ☐ Scoping X Preliminary ☐ Final

Superseded by Calculation No.: ☐ Voided

ORIGINAL AND REVISED CALCULATIONS/ANALYSIS APPROVAL

REV.	ORIGINATOR:	DATE:	CHECKED:	DATE:	APPROVED	DATE
A	Travis Beck	4/14/05	Matt Kizerian	4/25/05	Mark Lucas	4/25/05
B						
C	Joy Wilson		Travis Beck		J. Jeffers	
	[illegible]	3-27-06	Travis H Beck	3/27/06	J Jeffers	3/27/06

AFFECTED DOCUMENTS

DOCUMENT NUMBER:	TITLE:	REV. NO.:	DISC. LEAD INITIALS

RECORD OF REVISION

REV. NO.	REASON FOR REVISION:
A	Initial Revision
B	Issued for Internal Review
C	Updated assumptions for calculations

ATTACHMENTS

Document Number/ID:	TITLE:	TOTAL PAGES
Attachment 1	HEGA Skid – Organic Load Capacity Calculation	7
Attachment 2	Email from Cheryl Arm to Ja-Kael Luey outlining the review of treatment efficiencies for off gas components	2
Attachment 3	Vendor Information regarding HEGA Skid	27
Attachment 4	Technical Data Sheet, 145579-D-DS-010.1, Rev. 1	5
Attachment 5	HNF-14755, Rev. 1, Appendix 2B, 242-A Evaporator Process Flow Data	50
Attachment 6	Tank S-109 BBI By Waste Phase, Excel Spreadsheet	4

amec

CALCULATION SHEET

CALC. NO.:	34005-CA-0001	REV:	C	DATE:	March 17, 2006
CALC. TITLE:	HEGA Skid – Organic Load Capacity				
PROJECT NO.:	145579	PROJECT TITLE:	Final DBVS Design		

1. INTRODUCTION

1.1 Purpose

The purpose of this calculation is to determine the time to reach the capacity of organics in the carbon bed of the HEGA Skid.

1.2 Scope

The scope of this calculation includes determining the 50% loading capacity of organics to meet the requirements stated in the RD&D permit. It is assumed the species of organics used in the calculation. The model of the carbon filter is assumed and will be updated as vendor information is provided. This calculation will provide the baseline time period for change out of the carbon bed to meet permit requirements.

2 BASIS

2.1 Design Inputs

1. The S-109 BBI (Best Basis Inventory) provided the mass of organics currently residing in the saltcake (see Attachment 6). This information was used to determine the approximate mass of organics per ICV box.

2. Permit # WA 7890008967, *Permit For Dangerous And Or Mixed Waste Research, Development, and Demonstration,* Section V.I.6.e, states that 100% of volatile organic carbon (VOC) and 50% of semi-volatile organic carbon (SVOC) leave the Waste Dryer as vapor.

2.2 Criteria

Permit # WA 7890008967, *Permit For Dangerous And Or Mixed Waste Research, Development, and Demonstration,* Section V.C.1.h, requires that the operation of the DBVS shall not exceed 50 percent of the organic design capacity for the carbon filter and shall change out the carbon filter before commencement of the next DBVS campaign if it is projected that the capacity would be exceeded during a DBVS

amec

CALCULATION SHEET

CALC. NO.:	34005-CA-0001	REV:	C	DATE:	March 17, 2006
CALC. TITLE:	HEGA Skid – Organic Load Capacity				
PROJECT NO.:	145579	PROJECT TITLE:	Final DBVS Design		

campaign. Additionally Section V.C.1.i states that a carbon filter shall be changed out following detection of organic break-through.

Organic capacity for the carbon bed is defined as the mass of organics that can be retained per mass of carbon. At this point the carbon filter cannot hold any additional organics, otherwise a removal of 0%.

50% capacity is half of the mass of organics that can be retained per mass of carbon.

20% capacity is the point where organic breakthrough may start to occur. At this point the removal efficiency begins to decrease and organics will pass through the bed.

2.3 Assumptions

1. S-109 BBI does not provide speciation of total organic carbon (TOC). It is necessary, for the calculation, to use compounds that may be found in the tank waste for modeling. Document HNF-14755, Revision 1, *242-A Evaporator Documented Safety Analysis, Appendix 2B, 242-A Evaporator Process Flow Data* (see Attachment 5), was analyzed to determine the species of organics most likely found in tank waste. Although 242-A Evaporator was not used on S-109 it is assumed that organics found in this tank would be likely to be found in S-109. The four species used in this calculation are Ethylbenzaldehyde, 4-Methylbenzaldehyde, MAIDA [n-(methylamine)iminodiacetic acid, and C3-Alkylbenzene [n-propylbenzene]. The highest concentration component in the feed stream is ethanedioic acid, aka oxalate, and is already signified within the S-109 analysis as oxalate (see attachment 1).

2. For this calculation it is necessary to have species classified as VOC and SVOC. Using boiling points for the 4 species it was assumed that the 2 species with the lowest boiling can be VOC and the 2 highest will be SVOC.

3. The Dryer Condenser will condense vapors leaving the Waste Dryer before connecting to the Main Off-Gas System. Vapors condensed out will be sent to ETF for treatment. It is assumed that 50% of organic vapors (both VOC and SVOC) will be condensed.

ORIGINATOR:	DATE:	CHECKER:	DATE:
[illegible]	3-27-06	Travis H Beck	3/27/06

amec

CALCULATION SHEET

CALC. NO.:	34005-CA-0001	REV:	C	DATE:	March 17, 2006
CALC. TITLE:	HEGA Skid – Organic Load Capacity				
PROJECT NO.:	145579	PROJECT TITLE:	Final DBVS Design		

4. Organics not vaporizing in the Waste Dryer will be sent to the ICV box. Based on data from testing on the Waste Treatment Plant (WTP), destruction of organics in the melter ranged from 32.7 to 57 percent. For conservatism, it is assumed that 32.7% of organics will vaporize and pyrolize in the ICV box and the remaining 67.3% will vaporize and continue downstream to the Main Off-Gas System.

5. Email from Cheryl Arm to Ja-Kael Luey on review of the RD&D permit and the NOC permits pertaining to the DBVS site (see attachment 2) outlining the removal efficiencies of equipment. A removal of 10% in the quencher and 25% in the venturi scrubber is stated. An assumed removal efficiency of 30% in the wet scrubber will be used, which is conservative.

6. Discussions with CSC/Flanders gave a 99.9% removal efficiency of organics by the carbon filter (see attachment 3).

7. Also discussed with CSC/Flanders was the loading capacity of organics (see attachment 3). Since each species has differing loading capacities, the average was taken. It is assumed based on this information that 100 pounds of carbon will retain 38.7 pounds of organics.

8. Based on the flow rate and residence time given in Technical Data Sheet, 145579-V-DS-010.1, Revision 1, *Carbon Filter 1 & 2* (attachment 4) and from vendor manual (see attachment 3) to determine the mass of carbon used in the carbon filter. Approximately 384 lbs of carbon will be used, based on Model # AG-GG18-62-NS.

9. Vendor discussions (CSC/Flanders) stated that the adsorption of water into the bed will be minimal as long as the relative humidity stays below 70%. Based on process requirements that the relative humidity is below 70% to prevent plugging the HEPA filters upstream, it is assumed that water adsorption will have minimal impact and is therefore left out of the calculation.

10. Vendor discussions (CSC/Flanders) stated that off-gas constituents such as NOx would not be retained in the carbon due to the low molecular weight. Based on this information it is assumed that these constituents will have negligible impact and will be left out of this calculation.

ORIGINATOR:	DATE:	CHECKER:	DATE:
[illegible]	3-27-06	Travis Beck	3/27/06

amec

CALCULATION SHEET

CALC. NO.:	34005-CA-0001	REV:	C	DATE:	March 17, 2006
CALC. TITLE:	HEGA Skid – Organic Load Capacity				
PROJECT NO.:	145579	PROJECT TITLE:	Final DBVS Design		

11. Radioactive iodine, I-129, will be adsorbed into the carbon bed. Preliminary calculations showed that the mass of iodine adsorbed has little to no impact and will be left out of this calculation.

3 REFERENCES

1. *Permit for Dangers And Or Mixed Waste Research, Development and Demonstration*, 2004. Washington Department of Ecology, Richland, Washington.

2. HNF-14755, Rev 1, *242-A Evaporator Documented Safety Analysis, Appendix 2B, 242-A Evaporator Process Flow Data*

3. 24590-WTP-RPT-ENV-03-005, Rev. 0, *4-9's Destruction and Removal Efficiency Assessment*

4 METHODS

Calculations to determine the organic load capacity will be done by hand calculating material balances around individual pieces of equipment.

5 RESULTS AND CONCLUSIONS

50% capacity will not be reached in during the DBVS campaign. Approximately 71.6 melts are necessary to reach the 50% capacity. The time to reach 20% capacity (when breakthrough will occur) is 28.7 melts.

ORIGINATOR:	DATE:	CHECKER:	DATE:
[signature]	3-27-06	Travis H Beck	3/27/06

34005-CA-0001

Attachment 1

HEGA Skid – Organic Load Capacity Calculation (Hand Calculation)

amec

CALCULATION SHEET

CALC. NO.:	34005-CA-0001	REV:	C	DATE:	March 17, 2006
CALC. TITLE:	HEGA Skid – Organic Load Capacity				
PROJECT NO.:	145579	PROJECT TITLE:	Final DBVS Design		

1. Determination of TOC as carbon from the S-109 BBI Inventory. Using 520,000 gallons of saltcake in tank S-109 and that current saltcake is 17 M Na. To have a 5 M Na solution for DBVS operation it takes 3.4 gal 5 M Na to have the equivalent moles of Na for a 17 M Na solution.

   Mass of oxalate in saltcake – 7910 kg
   Mass of oxalate in liquid – 6 kg
   Total mass of oxalate – 7916 kg
   Mass of TOC (as carbon) in saltcake – 2160 kg
   Mass of TOC (as carbon) in liquid – 70 kg
   Mass of TOC (as carbon) total – 2230 kg

   Mass of Carbon as Oxalate

   (Total mass of oxalate) / (Total volume of waste) / (Dilution factor - 17 M to 5 M) * (Amount of waste per ICV box) * (Mass fraction carbon in oxalate) = Mass carbon as oxalate

   7916 / 520000 / 3.4 * 13170 * 0.27 = 15.92 kg carbon as oxalate

   Mass of Carbon as Organic

   (Total mass of carbon as TOC) / (Total volume of waste) / (Dilution factor – 17 M to 5 M) * (Amount of waste per ICV box) = Mass carbon as organic

   2230 / 520000 / 3.4 * 13170 = 16.61 kg carbon as organic

   Mass of Carbon as Organic (Not being oxalate)

   16.61 – 15.92 = 0.69 kg Carbon

ORIGINATOR:	DATE:	CHECKER:	DATE:
[signature]	3-27-06	Travis H Beck	3/27/06

amec

CALCULATION SHEET

CALC. NO.:	34005-CA-0001	REV:	C	DATE:	May 2, 2005
CALC. TITLE:	HEGA Skid – Organic Load Capacity				
PROJECT NO.:	145579	PROJECT TITLE:	Final DBVS Design		

2. Using sample data from 242-A evaporator feed stream to identify potential organic species in tank waste (see attachment 5). The four constituents and concentrations were found to be Ethylbenzaldehyde (520 mg/L), 4-Methylbenzaldehyde (500 mg/L), MAIDA (410 mg/L), and C3-Alkylbenzene (390 mg/L).

   Assuming 1 L of solution gives the following mass.

Ethylbenzaldehyde	-	520 mg
4-Methylbenzaldehyde	-	500 mg
MAIDA	-	410 mg
C3-Alkylbenzene	-	390 mg

   Calculate the mass of carbon for each species by multiplying the species mass by the carbon mass fraction per species.

Constituent	Molecular Weight	Mass Carbon	Carbon Mass Fraction
Ethylbenzaldehyde	134.177	108.099	0.8056
4-Methylbenzaldehyde	120.151	96.088	0.7997
MAIDA	162.145	60.055	0.3704
C3-Alkylbenzene	120.194	108.099	0.8994

Ethylbenzaldehyde	-	419 mg carbon
4-Methylbenzaldehyde	-	400 mg carbon
MAIDA	-	152 mg carbon
C3-Alkylbenzene	-	351 mg carbon
Total Carbon		1322 mg carbon

   The following table is the mass fraction pertaining to the 242-A feed stream (species mass carbon / total mass carbon).

Constituent	Mass Fraction Carbon (242-A)
Ethylbenzaldehyde ($C_9H_{10}O_1$)	0.317
4-Methylbenzaldehyde ($C_8H_8O_1$)	0.302
MAIDA ($C_5H_{10}N_2O_4$)	0.115
C3-Alkylbenzene (C_9H_{12})	0.266

ORIGINATOR:	DATE:	CHECKER:	DATE:
[signature]	3-27-06	Travis H Beck	3/27/06

amec

CALCULATION SHEET

CALC. NO.: 34005-CA-0001 REV: C DATE: May 2, 2005

CALC. TITLE: HEGA Skid – Organic Load Capacity

PROJECT NO.: 145579 PROJECT TITLE: Final DBVS Design

3. Convert the mass fraction from #1 from kg to lb.

0.69 kg C * (2.201 lb C / 1 kg C) = 1.521 lb C per ICV box

4. Using mass from #3 multiplied by the carbon mass fraction in #2 to determine the mass of carbon for each constituent.

Constituent	Carbon Mass Fraction (242-A)	Constituent Mass Carbon (lb)
Ethylbenzaldehyde	0.317	0.4822
4-Methylbenzaldehyde	0.302	0.4593
MAIDA	0.115	0.1749
C3-Alkylbenzene	0.266	0.4046

5. Dividing the weight fractions of carbon per species into constituent mass of carbon (#4) to calculate the overall mass of organic constituents feed into dryer.

Constituent	Mass of Carbon (lb)	Constituent Mass Fraction Carbon	Overall Mass of Constituent (lb)
Ethylbenzaldehyde	0.4822	0.8056	0.598
4-Methylbenzaldyde	0.4593	0.7997	0.574
MAIDA	0.1749	0.3704	0.472
C3-Alkylbenzene	0.4046	0.8994	0.450

6. See assumption #2.

Constituent	Boiling Point (°C)	Assumption
Ethylbenzaldehyde	83	VOC
4-Methylbenzaldehyde	205	SVOC
MAIDA	376	SVOC
C3-Alkylbenzene	159	VOC

ORIGINATOR:	DATE:	CHECKER:	DATE:
[signature]	7-27-06	Travis H Beck	3/27/06

amec

CALCULATION SHEET

CALC. NO.: 34005-CA-0001 REV: C DATE: May 2, 2005

CALC. TITLE: HEGA Skid – Organic Load Capacity

PROJECT NO.: 145579 PROJECT TITLE: Final DBVS Design

7. Using design input #2 and calculation #5 perform mass balance around the waste dryer.

   Mass in to Dryer = see calculation #5
   Mass in to Dryer Condenser (SVOC) = Mass in to Dryer * 0.50
   Mass in to Dryer Condenser (VOC) = Mass in to Dryer
   Mass in to Melt = Mass in to Dryer – Mass in to Dryer Condenser (SVOC and VOC)

Constituent	Mass in to Dryer (lb)	Mass into Dryer Condenser (lb)	Mass into Melt (lb)
Ethylbenzaldehyde	0.598	0.598	0
4-Methylbenzaldehyde	0.574	0.287	0.287
MAIDA	0.472	0.236	0.236
C3-Alkylbenzene	0.450	0.450	0

8. Using assumption #3 and results from calculation #7 to determine mass balance around Dryer Condenser.

   Mass in to Dryer Condenser = see calculation #7
   Mass to ETF = Mass in to Dryer Condenser * 0.50
   Mass to HEGA Skid = Mass in to Dryer Condenser – Mass to ETF

Constituent	Mass in to Dryer Condenser (lb)	Mass to ETF (lb)	Mass to HEGA Skid (lb)
Ethylbenzaldehyde	0.598	0.299	0.299
4-Methylbenzaldehyde	0.287	0.144	0.143
MAIDA	0.236	0.118	0.118
C3-Alkylbenzene	0.450	0.450	0.225

ORIGINATOR:	DATE:	CHECKER:	DATE:
[illegible]	2-27-06	Travis A Beck	3/27/06

amec

CALCULATION SHEET

CALC. NO.: 34005-CA-0001 REV: C DATE: May 2, 2005

CALC. TITLE: HEGA Skid – Organic Load Capacity

PROJECT NO.: 145579 PROJECT TITLE: Final DBVS Design

9. Using assumption #4 and results from calculation #7 to determine mass balance around Melt.

Mass in to Melt = see calculation #7
Mass Destroyed in Melt = Mass in to Melt * 0.327
Mass in to Wet Scrubber = Mass in to Melt – Mass Destroyed in Melt

Constituents	Mass in to Melt (lb)	Mass Destroyed in Melt (lb)	Mass in to Wet Scrubber (lb)
Ethylbenzaldehyde	0	0	0
4-Methylbenzaldehyde	0.287	0.094	0.193
MAIDA	0.236	0.069	0.167
C3-Alkylbenzene	0	0	0

10. Using assumption #5 and results from calculation #9 to determine mass balance around Wet Scrubber Skid.

Mass in to Wet Scrubber = see calculation #9
Mass in to ETF = Mass in to Wet Scrubber * 0.30
Mass in to HEGA Skid = Mass in to Wet Scrubber – Mass in to ETF

Constituent	Mass in to Wet Scrubber (lb)	Mass in to ETF (lb)	Mass into HEGA Skid (lb)
Ethylbenzaldehyde	0	0	0
4-Methylbenzaldehyde	0.193	0.058	0.135
MAIDA	0.167	0.05	0.117
C3-Alkylbenzene	0	0	0

ORIGINATOR:	DATE:	CHECKER:	DATE:
[signature]	3-27-06	Travis H Beck	3/27/06

amec

CALCULATION SHEET

CALC. NO.: 34005-CA-0001 REV: C DATE: May 2, 2005

CALC. TITLE: HEGA Skid – Organic Load Capacity

PROJECT NO.: 145579 PROJECT TITLE: Final DBVS Design

11. Using assumption #6 and results from calculations #8 and #10 to calculate mass balance around HEGA skid.

Mass in to HEGA Skid = see calculation #8 + calculation #10
Mass retained in HEGA Skid = Mass in to HEGA Skid * 0.999
Mass emitted = Mass into HEGA Skid – Mass retained in HEGA Skid

Constituent	Mass In to HEGA Skid (lb)	Mass retained in HEGA Skid (lb)	Mass Emitted (lb)
Ethylbenzaldehyde	0.299	0.299	0
4-Methylbenzaldehyde	0.278	0.278	0
MAIDA	0.235	0.235	0
C3-Alkylbenzene	0.225	0.225	0

12. Determine the overall mass balance of the system.

Mass in – Mass to ETF (Dryer Condenser) – Mass Destroyed – Mass to ETF (Wet Scrubber) – Mass retained in HEGA – Mass emitted = 0

Constituent	Mass In	Mass to ETF (DC)	Mass Destroyed	Mass to ETF (WS)	Mass retained	Mass emitted	Accumulation
Ethylbenzaldehyde	0.598	0.299	0	0	0.299	0	0
4-Methylbenzaldehyde	0.574	0.144	0.094	0.058	0.278	0	0
MAIDA	0.472	0.118	0.069	0.05	0.235	0	0
C3-Alkylbenzene	0.450	0.225	0	0	0.225	0	0

ORIGINATOR:	DATE:	CHECKER:	DATE:
[signature]	3-26-07	Travis A Beck	3/27/06

amec

CALCULATION SHEET

CALC. NO.: 34005-CA-0001 REV: C DATE: May 2, 2005

CALC. TITLE: HEGA Skid – Organic Load Capacity

PROJECT NO.: 145579 PROJECT TITLE: Final DBVS Design

13. Using results from calculation #11 to determine the amount of organics retained in carbon bed.

Constituent	Mass Retained in Carbon (lb)
Ethylbenzaldehyde	0.299
4-Methylbenzaldehyde	0.278
MAIDA	0.235
C3-Alkylbenzene	0.225

Total Organics retained is 1.037 lb per ICV box

14. Using assumption #7 for 38.7 lb organic per 100 lb carbon and assuming 384 lb of carbon to have an overall capacity of 148.6 lb of organics.

15. Calculation of time to reach capacities.

To reach 100% capacity = 148.6/1.037 = 143.3 melts
To reach 50% capacity = 143.3 * 0.50 = 71.6 melts
To reach 20% capacity = 143.3 * 0.20 = 28.7 melts

ORIGINATOR:	DATE:	CHECKER:	DATE:
[signature]	3-29-06	Travis H Beck	3/27/06

34005-CA-0001

Attachment 2

Review of Equipment Removal Efficiencies – Email for Cheryl Arm to Ja-Kael Luey

Luey, Ja-Kael

From: Ann, Cheryl
Sent: Monday, December 20, 2004 2:03 PM
To: Luey, Ja-Kael
Cc: Wiemers, Karyn; Pajunen, Al; Swanson, Lynn; McCracken, Kurt J.
Subject: RE: Permit Requirements for Wet Scrubbing System
Attachments: Ja-Kael Requws.pdf

Ja-Kael,

Review of the RD&D and the three NOCs resulted in the table presented below. My explanation of the document evaluations follow.

Table 4-2. Offgas Treatment Component Efficiencies

Component	Nominal Control Efficiency					
	Water/ Water Vapor	Organic Compounds	HCl	NO_x	SO_x	Particulate[1]
Baghouse	—	—	—	—	—	99%
Condenser	95 – 98%	50%	<10%	<10%	<10%	—
Mist Eliminator	10 – 25%	—	—	—	—	—
Sintered Metal Filter	—	—	—	—	—	99.5%
HEPA Filter	—	—	—	—	—	99.95%
Quench System	10 – 25%	10%	10%	10%	10%	10%
Packed Tower Scrubber (optional)[2]	—	90%	93%	93%	93%	<50%
Venturi Scrubber	—	25%	25%	25%	25%	95%
Selective Catalytic Reduction Unit(s)	—	—	—	99%[3]	—	—
Carbon Filter	—	95 – 99%	25%	25%	25%	—

[1] Particulate removal efficiencies are for ten-micron (10 μ) particle diameters and up. Removal efficiencies are based on AP-42 (EPA 1995), Appendix B.1, reference texts and process knowledge

[2] Efficiency range varies with pollutant adsorbed

[3] The selective catalytic reduction design goal is 99% efficiency

The RC&D Permit sections relevant to the Off-Gas Treatment System: (These sections are incl[illegible] in the attached PDF file.)

- II A 4 – nothing specific to topic at hand;
- II A 5 – nothing specific to topic at hand;
- II.M – nothing specific to topic at hand (This section calls out WAC 173-303-690 & 691. These refer to 40 CFR 264 Subpart AA and are document, record and maintenance requirements. These are to be included into the Design Requirements Matrix from our last effort.)
- V.A.1.x – nothing specific to topic at hand;
- V.A.1.z – Refers Attachment LL with Section 4.0 including process description (table above);
- V.C 1 g – nothing specific to topic at hand;
- V.L4.p,r – nothing specific to topic at hand; and
- V.L6 e – nothing specific to topic at hand (tables not filled out)

The WDOH NOC only contains a general description. This is included in the attached PDF file.
The NESHAPS NOC does not contain anything specific to the topic at hand. It like the other NOC's refer to the 60% design.
The Ecology NOC makes reference to the WAC 173-400-110(5)(o). This is included in the attached PDF file but only has emissions in tons per year.

If you have any questions or need explanation, let me know!

Thanks, Cheryl ☺

From: Luey, Ja-Kael
Sent: Sunday, December 19, 2004 1:40 PM
To: Arm, Cheryl
Cc: Fredericksen, Jim; McCracken, Kurt J.; Luey, Ja-Kael
Subject: Permit Requirements for Wet Scrubbing System

Cheryl,

Please look through the three permits for DBVS and let me know what specific removal efficiencies are called out for the Off-Gas Treatment System trailer. We are going to replace this trailer with a new system and I need to know what is committed to in the permit so that I can close out comments on the specification. Please provide specific references and copies of the relevant pages from the permit so that I can clearly show justify any changes, or lack of changes, made to the specification.

It is my hope that you will be able to provide this information during the day on Monday.

Ja-Kael

34005-CA-0001

Attachment 3

Vendor Information on Carbon Filter

(1) Email from CSC/Flanders representative on efficiencies and loading

(2) CSC/Flanders On-Line Manual

Travis Beck

From: DMS (Douglas Stevenson) [DStevenson@CSC.FlandersCorp.com]
Sent: Thursday, May 19, 2005 5:18 AM
To: Travis Beck
Subject: RE: Organics
Attachments: travis beck.xls

Travis,
I calculated the capacities of each chemical for you Attached is a spread sheet with calculated capacities for the chemicals you needed filter.

Doug

-----Original Message-----
From: Travis Beck [mailto:travis.beck@amec.com]
Sent: Tuesday, May 17, 2005 4:35 PM
To: 'DMS (Douglas Stevenson)'
Subject: RE: Organics

Douglas,

As more information is becoming available regarding the tank waste I am updating my model. I have four new constituents that I was hoping you may be able to get me the same loading information that you had sent previously. The four are ethylbenzaldehye (C9H10O), 4-methylbenzaldehyde (C8H8O), N-(methylamine)iminodiacetic acid aka gly ser (N2C5H10O4), and C3-Alkylbenzene aka n-propylbenzene (C9H12). Thanks again for your help, any questions please give me a call at 509.942.1114 ext 139

Travis H. Beck, EIT
Process Engineer
AMEC Earth & Environmental
1135 Jadwin Avenue
Richland, WA 99352
Phone: (509) 942-1114 ext. 139
Fax: (509) 942-1122
travis.beck@amec.com

From: DMS (Douglas Stevenson) [mailto:DStevenson@CSC.FlandersCorp.com]
Sent: Thursday, March 31, 2005 8:07 AM
To: Travis Beck
Subject: RE: Organics

Travis,
Sorry I did not get back with you earlier, I got your message and I went through my old e-mails and found yours, I calculated the capacities of each chemical for you. Attached is a spread sheet with calculated capacities for the chemicals you needed filter The industry standard for break through of an contaminate is usually 20-25% of the carbons capacity for that chemical. Flanders/CSC adsorber will adsorb 99 9 % of these contaminates until 20-25% of the adsorber's capacity is expended, after the 20-25% break through will start occurring If you have any other questions please call.

-----Original Message-----
From: Travis Beck [mailto:travis.beck@amec.com]
Sent: Friday, March 18, 2005 11:13 AM
To: Douglas Stevenson
Subject: Organics

Douglas,

Here are the 4 constituents that I am using for re-cacalculating:

Hepladecanoic Acid, C17H34O2
Tetradecane, C14H30
1,3,5-trimethylbenzene, C9H12
Dodecane, C12H26

As before I am looking for the capacity of organic per pound of carbon. Currently I have the removal efficiency at 99%, if you feel that this may be different for any of the compounds let me know. Once again, I appreciate your help in this manner.

Thanks,

Travis H. Beck, EIT
Process Engineer
AMEC Earth & Environmental
1135 Jadwin Avenue
Richland, WA 99352
Phone: (509) 942-1114 ext. 139
Fax: (509) 942-1122
travis.beck@amec.com

The information contained in this e-mail is intended only for the individual or entity to whom it is addressed.
Its contents (including any attachments) may contain confidential and/or privileged information.
If you are not an intended recipient you must not use, disclose, disseminate, copy or print its contents.
If you receive this e-mail in error, please notify the sender by reply e-mail and delete and destroy the message.

Flanders®
FOREMOST IN AIR FILTRATION

Flanders / CSC®

Bath, NC 27808
Tel: 252-923-2911
Fax: 252-923-6931
Email: csc@csc.flanderscorp.com

1 Ethylbenzaldehye
Carbon Adsorption Capacity: 48 4 g/100g of carbon

2 4-methylbenzaldehyde
Carbon Adsorption Capacity: 43 6 g/100g of carbon

3 4-(methylamine) iminodiacetic acid
Carbon Adsorption Capacity: 30 2 g/100g of carbon

4 C3-Alkybenzene
Carbon Adsorption Capacity 32 4 g/100g of carbon

Here are the adsorption capacities for the chemicals you are looking to filter out of your air stream The numbers above represent how many grams of contaminates can be adsorbed by 100 grams of carbon. If you need me to extrapolate out the wt of carbon in an Flanders/CSC absorbed and the capacity for contaminate each absorber, let me know.

Doug

Flanders / CSC®

HEGA Filters
PB-2003-1103

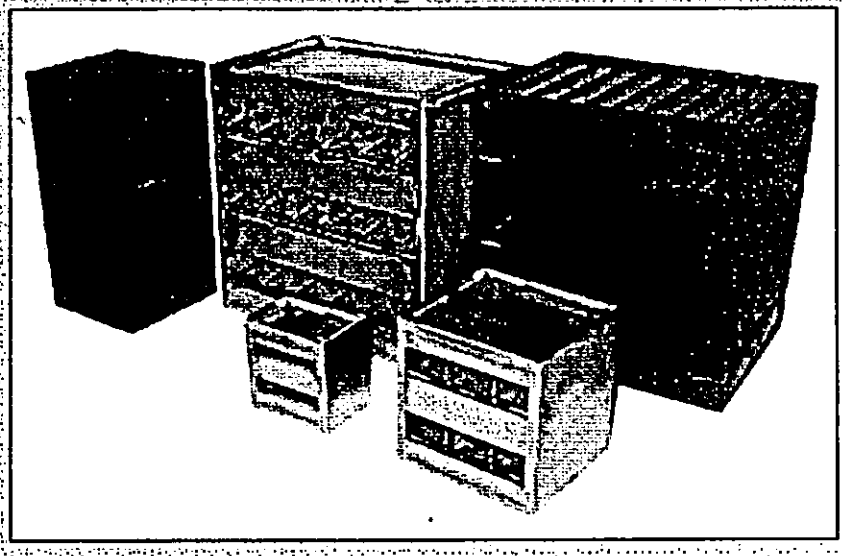

HEGA Filters

Disposable, Replaceable or Refillable Adsorbers for the Control of Dangerous Gaseous Contaminants

A Wholly Owned Subsidiary of Flanders Corporation

HEGA Filters: *Table of Contents*

Quality Assurance 2
Important Message 3
Introduction 4
What is a HEGA?
Where are HEGA's Used?
How Does a HEGA Work?
HEGA Selection
Design 5
Design Considerations
Diagram: V-Bed Adsorber Applications
V-Bed Adsorbers 6
Carbon Adsorbers
Residence Time
Applications
Adsorber Deisgn and Performance
Stainless Steel Frame Adsorbers 7
DMMP -Qualified Adsorbers
Adsorber Housings
Type IV (V-Bed) Stainless Steel Frame Adsorbers
Suggested Specifications Type IV Stainless Steel Adsorbers 8
Ordering Information
Diagram: Model Number Breakdown
Ordering Information 9
Type IV (V-Bed) Stainless Steel Adsorbers
Chart: Full-Size Gel Seal Adsorbers
Chart: Full-Size Gasket Seal Adsorbers
Type IV (V-Bed) Stainless Steel Adsorbers - Small Size
Chart: Small Size Stainless Steel Gel Seal Adsorbers - Activated Carbon
Chart: Small Size Stainless Steel Gasket Seal Adsorbers - Activated Carbon
Chart: Small Size Stainless Steel Gel Seal Adsorbers - Nuclear Grade Carbon
Chart: Small Size Stainless Steel Gasket Seal Adsorbers - Nuclear Grade Carbon
Chart: Small Size Stainless Steel Gel Seal Adsorbers - Whetlerized Carbon
Chart: Small Size Stainless Steel Gasket Seal Adsorbers - Whetlerized Carbon
Cinersorb 13
Suggested Specifications and Ordering Info for Cinersorb 14
Diagram: Model Number Breakdown
Chart: Gel Seal Housings
Chart: Gasket Seal Housings
Type II Tray Carbon Adsorbers 17
Type II Tray Carbon Adsorbers
Application
Suggested Specifications
Diagram: Model Number Breakdown
Ordering Information for Type II Tray Carbon Adsorbers 18
Diagram: Type II Carbon Tray Adsorber
Chart: Flanders/CSC Type II Tray Adsorber
Carbon Sampling Systems 19
Carbon Sampling Canisters
Radioactive Iodine Performance Test
Types of Adsorption
Efficiency vs. Penetration
Residence Time
Capacity
Decontamination Factor
Design Principles for Filtering Dangerous Chemical Contaminants

Important Message

NOTICE . . . Compliance with installation and operation standards must be met to ensure quality performance.

HEGA filters are factory tested to meet the requirements of IES RP-CC-008-84, "Recommended Practice for Gas Phase Adsorber Cells."

HEPA filters are factory tested to meet the requirements of IES RP-CC001.3 for Type A, B, C, D or E filters:

- Industrial Grade
- Nuclear Grade
- Laminar Flow Grade
- Bio/Hazard Grade HEPA
- VLSI
- ULPA

Test results appear on both the filter label and upon the filter carton label. An additional quality assurance test report is kept on file and is available on request.

Flanders/CSC recommends that all HEGA and HEPA filters be tested in place by qualified personnel to ensure that the filters have been correctly installed in the containment housing.

Flanders/CSC service personnel are available for installations, supervision of installation, testing and certification of compliance to industry and government standards and instruction of the owner's personnel in testing and maintenance procedures.

Flanders/CSC does not guarantee that its equipment will operate at the performance levels given on the identification labels or in the catalog specifications under all conditions of installation and use, nor does Flanders/CSC guarantee the suitability of its product for the particular end use which may be contemplated by the buyer.

For best results, it is recommended that the buyer supply complete information about the operating conditions of the ventilation system to Flanders/CSC for evaluation.

When the system components are supplied to the buyer or his agent for final installation and assembly in the field, it should be under the supervision of factory trained personnel.

Failure to adhere to this recommendation or failure of the buyer to have filters timely retested and serviced will nullify or limit any warranties which might otherwise apply and may result in a compromised installation.

Flanders / CSC®

Quality Assurance

Any industry that has dangerous process or exhaust gases and/or particulates has a vital concern for the health and safety of personnel. In addition to corporate concern, the United States Government has dictated that safety equipment meet minimum safety standards. Any equipment sold to meet these minimum standards has to be manufactured using accepted Quality Control procedures.

Flanders/CSC Corporation has developed a Quality Assurance program to assure that the product or service provided meets these standards. This program addresses the entire range of Flanders/CSC involvement, including the purchase of raw materials, the shortage of these raw materials, incorporation of these materials into a product or service, testing this product or service, and then shipping it to its destination.

The program of Flanders/CSC has been audited many times, and each time the program has been acceptable. An uncontrolled copy of the program manual is available with each request for Quality Assurance information. Like any dynamic document, the program is continually being revised to include recent issues of standards and specifications in order that Flanders/CSC may use the latest state-of-the-art methods in providing its products and services.

The Quality Assurance Program at Flanders/CSC Corporation has been audited and approved several times by the Nuclear Utilities Procurement and Inspection Committee, NUPIC. This committee was established by nuclear electric utilities to ensure that suppliers of goods and services can meet all applicable regulatory and quality requirements.

Notes:

1. As part of our continuing program to improve the design and quality of all our products, we reserve the right to make such changes without notice or obligation.
2. Flanders/CSC, through its limited warranty, guarantees that the products described herein will meet all specifications agreed to by the buyer and the seller.
3. ASME N509 *Nuclear Power Plant Air-Cleaning Units and Components.*
4. ASME N510 *Testing of Nuclear Air Treatment Systems.*

© Copyright 2003 Flanders/CSC Corporation
7013 Hwy 92E - PO Box 3
Bath, NC 27808

HEGA Filters: *Introduction*

What Is a HEGA?

To be called a High Efficiency Gas Adsorber (HEGA), the adsorber must exhibit a minimum mechanical efficiency of 99.9% when tested in accordance with the Institute of Environmental Sciences designation: IES-RP-CC-008-84, "Recommended Practice for Gas Phase Adsorber Cell." In addition, the adsorber must be designed, built, filled and packaged in accordance with the intent of this standard. Since HEGA filters are manufactured in several different sizes and of several different materials, this standard is not always followed to the letter. It is the intent of the standard and the resulting performance of these adsorbers that is important. This type of adsorber is not intended to be used in odor control systems. However, if the user needs a very efficient odor control system and can justify the higher initial and operating costs, then this type of adsorber will do an excellent job. The following comparison between an odor control type adsorber vs. a HEGA may help:

> An odor control type adsorber compared to a HEGA is like comparing an ASHRAE type particulate filter to a HEPA. The odor control type adsorber (like the ASHRAE type particulate filter) has a low efficiency, low pressure drop and low cost. On the other hand, the HEGA (like the HEPA) has a higher efficiency, higher pressure drop and higher cost. Both adsorbers have their place in industry, but because of these major differences they are not usually interchangeable.

Where are HEGA's Used?

HEGA's are most often used in "containment" air filtration systems. Containment air filtration systems are very high efficiency systems, used to filter and contain dangerous particulate and/or gaseous contaminants. Containment systems are most often designed to treat exhaust air from contaminated spaces, but occasionally are used in supply and recirculated air systems. Examples of facilities using these systems are:

- **Nuclear Power Plants**
- **Cancer Research Laboratories**
- **Toxicology Laboratories**
- **Animal Disease Research Facilities**
- **Chemical Agent Research Facilities**
- **Bomb Shelters (CBR)**
- **Radiopharmaceutical Plants**
- **HVAC Systems**
- **Laboratories Using Chemical Carcinogens**
- **Chemical Agent Munitions Disposal Facilities**
- **Hospital Isolation Suites**
- **Pharmacological Facilities**
- **Chemical Process Facilities**
- **Military Facilities**
- **Biological Research Facilities**
- **Department of Energy Facilities**

How Does a HEGA Work?

A High Efficiency Gas Adsorber (HEGA) filters gaseous contaminants from an airstream by adsorbing the contaminants (See Page 19, "Types of Adsorption"). With a properly designed system that includes proper adsorber selection, adsorbent and resident time, any adsorbable contaminant can be filtered and contained. (See Page 6 for "Adsorber Design and Performance." Page 20, "Residence Time").

HEGA Selection

When designing a system requiring HEGAs, consider:

1. Type: "Cinersorb" (p. 13), Type IV (V-Bed) (p. 7), or Type II Tray? (p. 17)
2. Type of carbon needed? (p. 6 & 7)
3. Residence Time: (See pp. 6 & 20)
4. Need for sample canisters? (See p. 19)

Design Considerations

The following should be considered when designing a filtration system:

1. Any system that filters dangerous contaminants should incorporate bag-in/bag-out housings to contain the contaminated filters and protect maintenance personnel during filter change-out.
2. Particulate filtration must be provided upstream of HEGA filters to prevent the adsorber from trapping particulates and thereby increasing the adsorber's pressure drop.
3. Some applications require high efficiency or HEPA filters located downstream of the adsorber to collect any fines (dust which might be contaminated) released from the adsorbent material and to act as a backup in case the first particulate filter should fail.
4. Filter trains can be easily constructed with any combination of roughing filters, high efficiency filters, HEPA filters and adsorbers (See illustration below).
5. An in-place test of both adsorbers and HEPA filters is recommended for nuclear containment systems and is becoming a more frequent requirement for many critical applications. The purpose of this in-place testing is to "validate" the installed system. The in-place test, if required, should be discussed with a Flanders/CSC factory representative prior to the selection of equipment so the system will be correctly designed to facilitate the test. In-place test equipment and service personnel are available from Flanders/CSC to assist in the original installation and testing.
6. The filtration system should be manufactured under a good quality assurance program such as one that addresses all of the basic requirements of ASME NQA-1, "Quality Assurance Program Requirements for Nuclear Facilities."

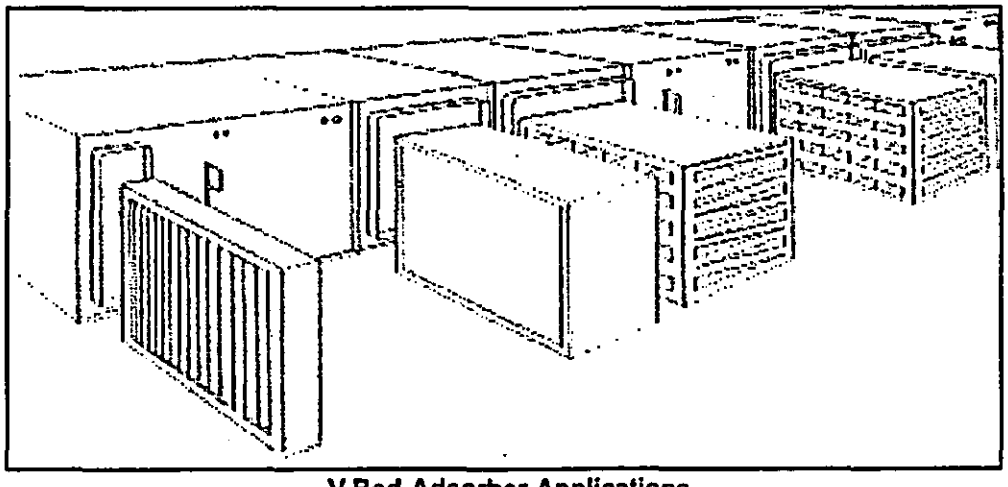

V-Bed Adsorber Applications

From left to right: prefilter, upstream in-place test section, HEPA filter, V-bed adsorber, in-place combination test section, V-bed adsorber, HEPA filter, downstream in-place test section.

HEGA Filters: *V-Bed Adsorbers*

Carbon Adsorbers

Carbon adsorbers use activated or impregnated /activated carbon as a filtering medium to remove gaseous emissions from nuclear, biological and/or chemical process exhaust air. Due to the potentially hazardous nature of their end use, the customer should consult with Flanders/CSC technical representatives as early as possible during the design phase of a project to assure proper specifications for the adsorbers and the filtration system. Flanders/CSC personnel have many years experience with gas-phase and HEPA filtration systems and can provide assistance in adsorbent selection, residence time calculations, and system configuration.

All units are manufactured in accordance with Flanders/CSC's quality assurance program, which meets the requirements of ASME-NQA-1, "Quality Assurance Program Requirements for Nuclear Facilities." Flanders/CSC tests each adsorber to insure a minimum mechanical efficiency (the percentage of air that actually contacts the activated carbon in a system without penetrating voids or cracks) of 99.9% per IES-RP-CC-008-84, "Recommended Practice for Gas-Phase Adsorber Cells." This test of the adsorber's efficiency on test agents is used to determine if the adsorber is properly manufactured and filled, but not whether it is suitable for a given application.

Residence Time

Under actual operating conditions, the removal efficiency (the percentage of containment actually removed by the activated carbon during operation) of an adsorber is determined by the type and amount of contaminant in the gas stream, the type and amount of adsorbent, and the residence time (the time that the gas stream is in contact with the carbon). In most applications, a residence time of 0.125 second is sufficient. In other cases, residence time is a critical factor that must be calculated for the specific contaminant. (See p. 20.)

Applications

Type IV (V-Bed) adsorbers are designed for use in Flanders/CSC BF-Series and BG-Series bag-in/bag-out housings for KF-Series and KG-Series high efficiency side-service housings. Occasionally they are used in large "front and rear loading" built-up banks inside walk-in plenums, but the Type II Tray adsorber is usually best suited for that system design.

Adsorber Design and Performance

All units are made with beds of carbon mounted in a "V" configuration at various depths and residence times at rated airflow depending upon customer requirements. Various grades of carbon are available to meet specific removal requirements:

Designation A = Activated 8 x 16 mesh carbon is used to adsorb heavy solvents, elemental iodine and most odors. This carbon is specified as follows:

The activated carbon shall be coconut shell base, 8 x 16 mesh and shall have a minimum carbon tetrachloride activity of 60% when tested in accordance with ASTM D3467. The carbon shall meet the "base" carbon requirements for nuclear grade carbon.

Designation N = Nuclear grade 8 x 16 mesh carbon is specially impregnated activated carbon used to adsorb organic radioiodides. This carbon is specified as follows:

The nuclear grade carbon shall be coconut shell base, 8 x 16 mesh that meets the requirements of "ASME N509-1996 "Reaffirmed," Section 5.2.

Designation W = Whetlerized 12 x 30 mesh carbon is specially impregnated activated carbon used to adsorb toxic warfare gases. This carbon is specified as follows:

The activated carbon shall be specially impregnated coal base that meets the requirements of Military Standard MIL-C-0013724D.

Designation T = ASZM-TEDA (Cooperite) 12 x 30 mesh carbon used to adsorb toxic warfare gases. Performs similar to Whetlerite. Impregnants do not include chromium.

The activated carbon shall be specially impregnated coal base that meets the requirements of EA-DTL-1704A.

Other media available to meet design requirements.

Note: Carbon adsorbers can be "poisoned" by paint fumes and other gases commonly found in many facilities and must be carefully protected when stored. The customer should consult the factory representative regarding storage precautions.

DMMP - Qualified Adsorbers

Flanders/CSC model numbers

- AF-GG16-62-WSD
- AF-GG16-62-TSD
- AG-GG16-62-WSD
- AG-GG16-62-TSD

have been tested and certified for DMMP Qualification at the U.S. Army Armament Munitions and Chemical Command, Aberdeen Proving Grounds.

Adsorber Housings

V-Bed carbon adsorbers are manufactured in standard sizes for use in bag-in/bag-out and side-load housings, and are available in both gel seal and gasket seal designs. Flanders/CSC manufactures a complete line of housings for adsorbers and HEPA filters. Contact the factory or your Flanders/CSC representative for complete information on adsorbers and HEPA filter housings.

Type IV (V-Bed) Stainless Steel Frame Adsorbers

Description

The Flanders/CSC Type IV (V-Bed) adsorber is designed with either 1-inch, 1 3/8-inch or 2-inch thick beds arranged in a V-Bank configuration. This design allows a high airflow at a relatively low pressure drop. Adsorber frames are constructed of T-304 stainless steel with T-304 stainless steel perforated screens.

These adsorbers are designed for use in Flanders/CSC G-Series, BF-Series and BG-Series bag-in/bag-out housings, KF-Series and KG-Series efficiency side-serving housings.

These adsorbers are manufactured under stringent quality control procedures. Each adsorber is filled, tested and packaged in accordance with IES Designation: RP-8 (IES-RP-CC-008, "Recommended Practice for Gas Phase Adsorber Cells"). Before shipping, each adsorber is tested in accordance with this standard to assure a minimum mechanical efficiency of 99.9%.

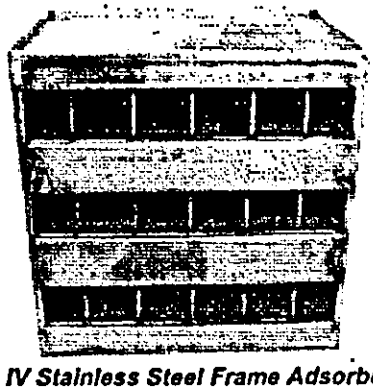

Type IV Stainless Steel Frame Adsorber

Features

- Minimum mechanical efficiency of 99.9% when tested in accordance with IES Designation: RP-8 (IES-RP-CC-008, "Recommended Practices for Gas-Phase Adsorber Cells"). Higher efficiencies available when required.

HEGA Filters: *Suggested Specifications Type IV Stainless Steel Adsorbers*

- Designed, manufactured and tested under a Quality Assurance Program that meets the basic requirements of ASME NQA-1, "Quality Assurance Program Requirements for Nuclear Facilities."
- Available in several standard sizes allowing use in standard filter housings.
- Corrosion resistant.
- Can be filled with appropriate adsorbent to capture any adsorbable contaminant.
- Many applications: Treat exhaust air from safety cabinets, glove boxes and fume hoods, supply air to inhalation labs, etc.

Suggested Specifications Type IV Stainless Steel Adsorbers

From the tables on Pages 9 - 11, fill in the blanks for adsorber requirements.

Adsorber shall be Flanders/CSC model number____. Adsorber frame shall be constructed of 14-gauge T-304 stainless steel and have_____beds that are_____deep, arranged in a V-bank configuration. The filter frame shall be size:_____" high x_____" wide x _____" deep, and have a _____(gel/gasket) seal on one side. The rated flow shall be _____CFM at approximately _____" w.g. pressure drop and _____second residence time. Adsorber screens shall be perforated 26 gauge T-304 stainless steel supported by external spacers to prevent distortion during filling with carbon. Adsorber shall exhibit a minimum mechanical efficiency of 99.9% when tested in accordance with IES-RP-CC-008-84, "Recommended Practice for Gas-Phase Adsorber Cells." Units shall be designed, manufactured, and tested under a Quality Assurance Program that meets the requirements of ASME NQA-1, "Quality Assurance Program Requirements for Nuclear Facilities."

Ordering Information: *Type IV (V-Bed) Stainless Steel Adsorber*

Model Number Breakdown *(Example)*

AG - GG16 - 62 - WSD

Adsorber

G= Gasket Seal
F= Gel Seal

Adsorber Size (Nominal)

	High Wide Deep
CC6	= 12"x 12"x 5 ⅞"
CC12	= 12"x 12"x 11 ½"
CG12	= 12"x 24"x 11 ½"
CG16	= 12"x 24"x 16"
GC16	= 24"x 12"x 16"
GC12	= 24"x 12"x 11 ½"
GG12	= 24"x 24"x 11 ½"
GG16	= 24"x 24"x 16"
GG18	= 24"x 24"x 18"

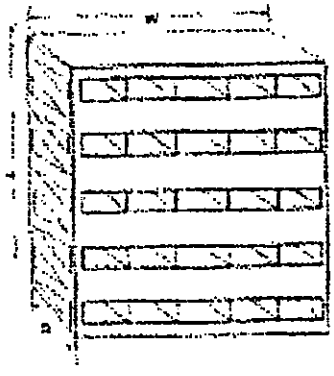

DMMP Qualified
(Leave blank if not required)

Frame Material
S=Stainless Steel

Adsorbent Material
A = Activated Carbon (8 x 16 Mesh)
N = Nuclear Grade Carbon (8 x 16 Mesh)
W = Whetlerized Carbon (12 x 30 Mesh)
T = ASZM-TEDA Carbon (12 x 30 Mesh)

Bed Thickness
1 = 1" Bed Thickness
1 ⅞ = 1 ⅞" Bed Thickness
2 = 2" Bed Thickness

Number of Beds Per Cell
3 = 3 Beds per Cell
4 = 4 Beds per Cell
8 = 8 Beds per Cell
10 = 10 Beds per Cell

Notes:

1. In the charts on the following pages, pressure drop and weight will vary slightly due to variations in carbon particle size distribution and packing density.
2. Not all model number combinations above are available.

Ordering Information: *Type IV (V-Bed) Stainless Steel Adsorber*

Note: ΔP may vary by +/- 20% due to physical characteristics of the carton. These variations must be considered when sizing fans.

Full Size Gel Seal Adsorbers

Model Number	Size H x W x D w/ Gel Seal Channel (inches)	Rated Flow (CFM)	Approx. ΔP (In. W.G.)	Res. Time (sec.)	No. of Beds	Bed Depth (inches)	Max. Temp.	Approx. Carbon Net Wt. (lbs.)	Approx. Ship Wt. (lbs.)
AF-GC12-101-AS	24x12x12¼	500	0.90	0.083	10	1	200°F	29	92
AF-GC12-101-NS	24x12x12¼	500	0.90	0.083	10	1	200°F	32	95
AF-GC12-101-WS	24x12x12¼	500	2.00	0.083	10	1	200°F	35	98
AF-GC12-101-TS	24x12x12¼	500	2.00	0.083	10	1	200°F	35	98
AF-GG12-101-AS	24x24x12¼	1000	0.90	0.083	10	1	200°F	58	153
AF-GG12-101-NS	24x24x12¼	1000	0.90	0.083	10	1	200°F	64	159
AF-GG12-101-WS	24x24x12¼	1000	2.00	0.083	10	1	200°F	70	165
AF-GG12-101-TS	24x24x12¼	1000	2.00	0.083	10	1	200°F	70	165
AF-GG16-81⅜-AS	24x24x16¾	1000	0.85	0.125	8	1⅜	200°F	75	210
AF-GG16-81⅜-NS	24x24x16¾	1000	0.85	0.125	8	1⅜	200°F	80	215
AF-GG16-81⅜-WS	24x24x16¾	1000	2.10	0.125	8	1⅜	200°F	90	225
AF-GG16-81⅜-TS	24x24x16¾	1000	2.10	0.125	8	1⅜	200°F	90	225
AF-GG12-62-AS	24x24x12¼	700	1.75	0.125	6	2	200°F	59	162
AF-GG12-62-NS	24x24x12¼	700	1.75	0.125	6	2	200°F	62	165
AF-GG12-62-WS	24x24x12¼	700	3.90	0.125	6	2	200°F	70	173
AF-GG12-62-TS	24x24x12¼	700	3.90	0.125	6	2	200°F	70	173
AF-GG16-62-AS	24x24x16¾	1000	1.75	0.125	6	2	200°F	79	205
AF-GG16-62-NS	24x24x16¾	1000	1.75	0.125	6	2	200°F	86	212
AF-GG16-62-WS	24x24x16¾	1000	3.90	0.125	6	2	200°F	98	224
AF-GG16-62-WSD	24x24x16¾	1000	3.90	0.125	6	2	200°F	100	226
AF-GG16-62-TS	24x24x16¾	1000	3.90	0.125	6	2	200°F	98	224
AF-GG16-62-TSD	24x24x16¾	1000	3.90	0.125	6	2	200°F	100	226
AF-GG18-62-AS	24x24x18¾	1250	1.75	0.125	6	2	200°F	90	225
AF-GG18-62-NS	24x24x18¾	1250	1.75	0.125	6	2	200°F	96	231
AF-GG18-62-WS	24x24x18¾	1250	4.10	0.125	6	2	200°F	105	240
AF-GG18-62-TS	24x24x18¾	1250	4.10	0.125	6	2	200°F	105	240

HEGA Filters: *Ordering Information*

Ordering Information: *Type IV (V-Bed) Stainless Steel Adsorber*

Note: ΔP may vary by +/- 20% due to physical characteristics of the carton. These variations must be considered when sizing fans.

Full Size Gasket Seal Adsorbers

Model Number	Size H x W x D (inches)	Rated Flow (CFM)	Approx. ΔP (In. W.G.)	Res. Time (sec.)	No. of Beds	Bed Depth (inches)	Max. Temp.	Approx. Carbon Net Wt. (lbs.)	Approx. Ship Wt. (lbs.)
AG-GC12-101-AS	24x12x11½	500	0.90	0.083	10	1	200°F	29	89
AG-GC12-101-NS	24x12x11½	500	0.90	0.083	10	1	200°F	32	92
AG-GC12-101-WS	24x12x11½	500	2.00	0.083	10	1	200°F	35	95
AG-GC12-101-TS	24x12x11½	500	2.00	0.083	10	1	200°F	35	95
AG-GG12-101-AS	24x24x11½	1000	0.90	0.083	10	1	200°F	58	148
AG-GG12-101-NS	24x24x11½	1000	0.90	0.083	10	1	200°F	64	154
AG-GG12-101-WS	24x24x11½	1000	2.00	0.083	10	1	200°F	70	160
AG-GG12-101-TS	24x24x11½	1000	2.00	0.083	10	1	200°F	70	160
AG-GG16-81⅜-AS	24x24x16	1000	0.85	0.125	8	1⅜	200°F	75	205
AG-GG16-81⅜-NS	24x24x16	1000	0.85	0.125	8	1⅜	200°F	80	210
AG-GG16-81⅜-WS	24x24x16	1000	2.10	0.125	8	1⅜	200°F	90	220
AG-GG16-81⅜-TS	24x24x16	1000	2.10	0.125	8	1⅜	200°F	90	220
AG-GG12-62-AS	24x24x11½	700	1.75	0.125	6	2	200°F	59	157
AG-GG12-62-NS	24x24x11½	700	1.75	0.125	6	2	200°F	62	160
AG-GG12-62-WS	24x24x11½	700	3.90	0.125	6	2	200°F	70	168
AG-GG12-62-TS	24x24x11½	700	3.90	0.125	6	2	200°F	70	168
AG-GG16-62-AS	24x24x16	1000	1.75	0.125	6	2	200°F	79	200
AG-GG16-62-NS	24x24x16	1000	1.75	0.125	6	2	200°F	86	207
AG-GG16-62-WS	24x24x16	1000	3.90	0.125	6	2	200°F	98	219
AG-GG16-62-WSD	24x24x16	1000	3.90	0.125	6	2	200°F	100	221
AG-GG16-62-TS	24x24x16	1000	3.90	0.125	6	2	200°F	98	219
AG-GG16-62-TSD	24x24x16	1000	3.90	0.125	6	2	200°F	100	221
AG-GG18-62-AS	24x24x18	1250	1.75	0.125	6	2	200°F	90	220
AG-GG18-62-NS	24x24x18	1250	1.75	0.125	6	2	200°F	96	226
AG-GG18-62-WS	24x24x18	1250	4.10	0.125	6	2	200°F	105	235
AG-GG18-62-TS	24x24x18	1250	4.10	0.125	6	2	200°F	105	235

Ordering Information: *Type IV (V-Bed) Stainless Steel Adsorber*

Small Size Adsorbers

Note: ΔP may vary by +/- 20% due to physical characteristics of the carton. These variations must be considered when sizing fans.

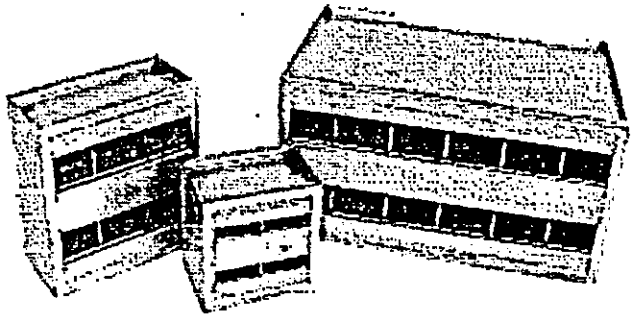

Ordering information below is for small size gel and gasket seal adsorbers, grouped by adsorbent materials (Activated Carbon, Nuclear Grade Carbon, Whetlerized Carbon and ASZM-TEDA Carbon).

Small Size Stainless Steel *Gel Seal* Adsorbers - Activated Carbon

Model Number	Size H x W x D with Gel Seal Channel (Inches)	Rated Flow (CFM)	Approx. ΔP (In. W.G.)	Res. Time (sec.)	No. of Beds	Bed Depth (Inches)	Max. Temp.	Approx. Carbon Net Wt. (lbs.)	Approx. Ship Wt. (lbs.)
AF-BB6-41-AS	8x 8x 6⅝	40	0.45	0.083	4	1	200°F	3	16
AF-CC6-41⅜-AS	12x12x 6⅝	55	0.90	0.125	4	1⅜	200°F	8	33
AF-CC12-41⅜-AS	12x12x12¼	140	1.10	0.125	4	1⅜	200°F	14	53
AF-CC16-41⅜-AS	12x12x16¾	465	0.85	0.125	4	1⅜	200°F	45	124

Small Size Stainless Steel *Gasket Seal* Adsorbers - Activated Carbon

Model Number	Size H x W x D (Inches)	Rated Flow (CFM)	Approx. ΔP (In. W.G.)	Res. Time (sec.)	No. of Beds	Bed Depth (inches)	Max. Temp.	Approx. Carbon Net Wt. (lbs.)	Approx. Ship Wt. (lbs.)
AG-BB6-41-AS	8x8x5⅞	40	0.45	0.083	4	1	200°F	3	15
AG-CC6-41⅜-AS	12x12x5⅞	55	0.90	0.125	4	1⅜	200°F	8	31
AG-CC12-41⅜-AS	12x12x11½	140	1.10	0.125	4	1⅜	200°F	14	51
AG-CG16-41⅜-AS	12x24x16	465	0.85	0.125	4	1⅜	200°F	45	121

HEGA Filters: *Ordering Information*

Small Size Stainless Steel *Gel Seal* Adsorbers - Nuclear Grade Carbon

Model Number	Size H x W x D w/ Gel Seal Channel (inches)	Rated Flow (CFM)	Approx. ΔP (In. W.G.)	Res. Time (sec.)	No. of Beds	Bed Depth (inches)	Max. Temp.	Approx. Carbon Net Wt. (lbs.)	Approx. Ship Wt. (lbs.)
AF-BB6-41-NS	8x 8x 6⅝	40	0.45	0.083	4	1	200°F	3	16
AF-CC6-41⅜-NS	12x12x 6⅝	55	0.90	0.125	4	1⅜	200°F	8	33
AF-CC12-41⅜-NS	12x12x12¼	140	1.10	0.125	4	1⅜	200°F	15	54
AF-CC16-41⅜-NS	12x12x16¾	465	0.85	0.125	4	1⅜	200°F	48	127

Small Size Stainless Steel *Gasket Seal* Adsorbers - Nuclear Grade Carbon

Model Number	Size H x W x D (inches)	Rated Flow (CFM)	Approx. ΔP (In. W.G.)	Res. Time (sec.)	No. of Beds	Bed Depth (inches)	Max. Temp.	Approx. Carbon Net Wt. (lbs.)	Approx. Ship Wt. (lbs.)
AG-BB6-41-NS	8x 8x 5⅞	40	0.45	0.083	4	1	200°F	3	15
AG-CC6-41⅜-NS	12x12x 5⅞	55	0.90	0.125	4	1⅜	200°F	8	31
AG-CC12-41⅜-NS	12x12x11½	140	1.10	0.125	4	1⅜	200°F	15	52
AG-CG16-41⅜-NS	12x24x16	465	0.85	0.125	4	1⅜	200°F	48	124

Small Size Stainless Steel *Gel Seal* Adsorbers - Whetlerized Carbon

Model Number	Size H x W x D w/ Gel Seal Channel (inches)	Rated Flow (CFM)	Approx. ΔP (In. W.G.)	Res. Time (sec.)	No. of Beds	Bed Depth (inches)	Max. Temp.	Approx. Carbon Net Wt. (lbs.)	Approx. Ship Wt. (lbs.)
AF-BB6-41-WS	8x 8x 6⅝	40	1.00	0.083	4	1	200°F	4	17
AF-CC6-41⅜-WS	12x12x 6⅝	55	2.10	0.125	4	1⅜	200°F	9	34
AF-CC12-41⅜-WS	12x12x12¼	140	2.10	0.125	4	1⅜	200°F	16	55
AF-CC16-41⅜-WS	12x12x16¾	465	2.10	0.125	4	1⅜	200°F	50	129

Small Size Stainless Steel *Gasket Seal* Adsorbers - Whetlerized Carbon

Model Number	Size H x W x D (inches)	Rated Flow (CFM)	Approx. ΔP (In. W.G.)	Res. Time (sec.)	No. of Beds	Bed Depth (inches)	Max. Temp.	Approx. Carbon Net Wt. (lbs.)	Approx. Ship Wt. (lbs.)
AG-BB6-41-WS	8x 8x 5⅞	40	1.00	0.083	4	1	200°F	3	15
AG-CC6-41⅜-WS	12x12x 5⅞	55	2.10	0.125	4	1⅜	200°F	8	31
AG-CC12-41⅜-WS	12x12x11½	140	2.10	0.125	4	1⅜	200°F	15	52
AG-CG16-41⅜-WS	12x24x16	465	2.10	0.125	4	1⅜	200°F	48	124

Cinersorb: *Incineratable High Efficiency Gas Adsorber*

The Cinersorb is the solution to problems associated with the disposal of carbon adsorbers contaminated with toxic, carcinogenic, microbiological, radioactive or other dangerous contaminants.

Many facilities have a waste disposal problem regarding high-efficiency adsorbers that are loaded with dangerous contaminants. In the past, high-efficiency adsorbers (i.e.. adsorbers that exhibit a mechanical efficiency of 99.9%) have been manufactured with metal frames. Since these metal frame adsorbers cannot always be safely refilled with fresh carbon, their disposal becomes a problem.

The Flanders/CSC Cinersorb, which has a combustible frame constructed of high impact polystyrene plastic, solves this problem.

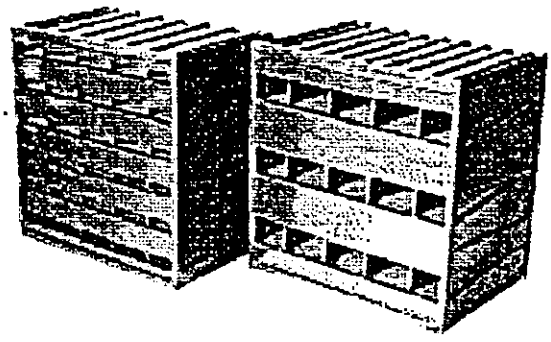

Incineration guidelines vary from contaminant to contaminant. The customer should determine that incineration meets the requirements governed by type of contaminant in question and local regulations.

Features

- Polystyrene frame allows disposal by incineration (volume reduction exceeds 95%)
- Mechanical efficiency of 99.9% when tested in accordance with IES-RP-CC-008-84, "Recommended Practice for Gas-Phase Adsorber Cells"
- Available in many sizes (See pp. 15-16), allowing use in most standard filter housings
- Easier to handle, weighs 40 to 50% less than metal frame adsorbers
- Less expensive than metal frame adsorbers
- Corrosion resistant
- Can be filled with any adsorbent to capture almost any contaminant
- Many applications, including safety cabinet, glove box and fume hood exhaust, laboratory supply air and odor control
- Designed, manufactured and tested under a Quality Assurance Program that meets the requirements of ASME-NQA-1, "Quality Assurance Program for Nuclear Facilities"

Suggested Specifications Cinersorb Disposable Carbon Adsorbers

From the tables on Pages 15-16, fill in the blanks for adsorber requirements.

Adsorber shall be Flanders/CSC model number____. Adsorber frame shall be constructed of high impact polystyrene to allow disposal of spent adsorber by incineration. Adsorbers shall have_____beds that are _____deep, arranged in a V-bank configuration. The filter frame shall be size:_____" high x_____" wide x _____" deep, and have a _____ (gel/gasket) seal on one side. The rated flow shall be _____CFM at _____" w.g. pressure drop and _____second residence time. Adsorber screens shall be perforated plastic supported by external spacers to prevent distortion during filling with carbon. Adsorber shall exhibit a minimum mechanical efficiency of 99.9% when tested in accordance with IES-RP-CC-008-84, "Recommended Practice for Gas-Phase Adsorber Cells."

Model Number Breakdown *(Example)*

AG - GG16 - 62 - WP

Adsorber

G= Gasket Seal
F= Gel Seal

Adsorber Size (Nominal)

	High	Wide	Deep
CC12	= 12"	x 12"	x 11 ½"
CG16	= 12"	x 24"	x 16
GC16	= 24"	x 12"	x 16"
GC12	= 24"	x 12"	x 11 ½"
GG12	= 24"	x 24"	x 11 ½"
GG16	= 24"	x 24"	x 16"
GG18	= 24"	x 24"	x 18"

Frame Material
P=Plastic

Adsorbent Material
A = Activated Carbon (8 x 16 Mesh)
N = Nuclear Grade Carbon (8 x 16 Mesh)
W = Whetlerized Carbon (12 x 30 Mesh)
T = ASZM-TEDA Carbon (12 x 30 Mesh)

Bed Thickness
1 = 1" Bed Thickness
1 ¾ = 1 ¾" Bed Thickness
2 = 2" Bed Thickness

Number of Beds Per Cell
3 = 3 Beds per Cell
4 = 4 Beds per Cell
8 = 8 Beds per Cell
10 = 10 Beds per Cell
12 = 12 Beds per Cell

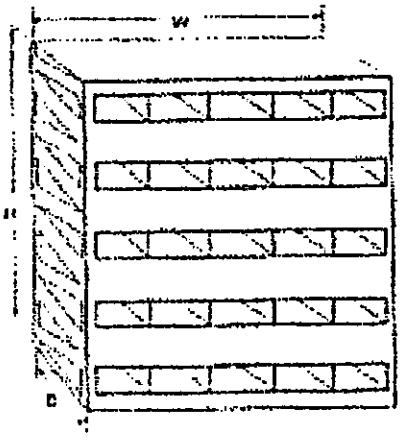

Notes:

1. In the charts on the following pages, pressure drop and weight will vary slightly due to variations in carbon particle size distribution and packing density.
2. Not all model number combinations above are available.

HEGA Filters: *Ordering Information for Cinersorb Disposable Carbon Adsorber*

Ordering Information: *Cinersorb Disposable Carbon Adsorber*

These adsorbers are designed as *disposable* units. DO NOT refill with fresh carbon for reuse. NOT recommended for use in systems above 120° F or if contaminants will attack the polystyrene plastic frame material.

Note: ΔP may vary by +/- 20% due to physical characteristics of the carton. These variations must be considered when sizing fans.

Gel Seal Housings

Model Number	Size H x W x D with Gel Seal Channel (inches)	Rated Flow (CFM)	Approx. ΔP (In. W.G.)	Res. Time (sec.)	No. of Beds	Bed Depth (inches)	Max. Temp.	Approx. Carbon Net Wt. (lbs.)	Approx. Ship Wt. (lbs.)
AF-GC12-101-AP	24x12x12¼	500	0.90	0.083	10	1	120°F	23	92
AF-GC12-101-NP	24x12x12¼	500	0.90	0.083	10	1	120°F	25	95
AF-GC12-101-WP	24x12x12¼	500	2.00	0.083	10	1	120°F	26	98
AF-GC12-101-TP	24x12x12¼	500	2.00	0.083	10	1	120°F	26	98
AF-GG12-101-AP	24x24x12¼	1000	0.90	0.083	10	1	120°F	43	153
AF-GG12-101-NP	24x24x12¼	1000	0.90	0.083	10	1	120°F	49	159
AF-GG12-101-WP	24x24x12¼	1000	2.00	0.083	10	1	120°F	52	165
AF-GG12-101-TP	24x24x12¼	1000	2.00	0.083	10	1	120°F	52	165
AF-GG12-62-AP	24x24x12¼	700	1.75	0.125	6	2	200°F	59	162
AF-GG12-62-NP	24x24x12¼	700	1.75	0.125	6	2	200°F	59	162
AF-GG16-81⅜-AP	24x24x16¾	1000	0.85	0.125	8	1⅜	120°F	74	113
AF-GG16-81⅜-NP	24x24x16¾	1000	0.85	0.125	8	1⅜	120°F	79	118
AF-GG16-81⅜-WP	24x24x16¾	1000	2.10	0.125	8	1⅜	120°F	88	127
AF-GG16-81⅜-TP	24x24x16¾	1000	2.10	0.125	8	1⅜	120°F	88	127
AF-GG16-121-AP	24x24x16¾	1000	.5	0.125	12	1	120°F	120	78
AF-GG16-121-NP	24x24x16¾	1000	.5	0.125	12	1	120°F	120	78
AF-GG16-62-AP	24x24x16¾	1000	1.75	0.125	6	2	120°F	80	115
AF-GG16-62-NP	24x24x16¾	1000	1.75	0.125	6	2	120°F	84	119
AF-GG16-62-WP	24x24x16¾	1000	3.90	0.125	6	2	120°F	96	131
AF-GG16-62-TP	24x24x16¾	1000	3.90	0.125	6	2	120°F	96	131
AF-GG18-62-AP	24x24x18¾	1250	1.75	0.125	6	2	120°F	79	127
AF-GG18-62-NP	24x24x18¾	1250	1.75	0.125	6	2	120°F	86	131
AF-GG18-62-WP	24x24x18¾	1250	4.10	0.125	6	2	120°F	98	140
AF-GG18-62-TP	24x24x18¾	1250	4.10	0.125	6	2	120°F	100	140

HEGA Filters: *Ordering Information for Cinersorb*

Ordering Information: *Cinersorb Disposable Carbon Adsorbers*

Note: ΔP may vary by +/- 20% due to physical characteristics of the carton. These variations must be considered when sizing fans.

Gasket Seal Housings

Model Number	Size H x W x D (inches)	Rated Flow (CFM)	Approx. ΔP (In. W.G.)	Res. Time (sec.)	No. of Beds	Bed Depth (inches)	Max. Temp.	Approx. Carbon Net Wt. (lbs.)	Approx. Ship Wt. (lbs.)
AG-GC12-101-AP	24x12x11½	500	0.90	0.083	10	1	120°F	23	42
AG-GC12-101-NP	24x12x11½	500	0.90	0.083	10	1	120°F	25	44
AG-GC12-101-WP	24x12x11½	500	2.00	0.083	10	1	120°F	26	45
AG-GC12-101-TP	24x12x11½	500	2.00	0.083	10	1	120°F	26	45
AG-GG12-101-AP	24x24x11½	1000	0.90	0.083	10	1	120°F	43	77
AG-GG12-101-NP	24x24x11½	1000	0.90	0.083	10	1	120°F	49	83
AG-GG12-101-WP	24x24x11½	1000	2.00	0.083	10	1	120°F	52	86
AG-GG12-101-TP	24x24x11½	1000	2.00	0.083	10	1	120°F	52	86
AG-GG12-62-WP	24x24x11½	700	1.75	0.125	6	2	200°F	59	162
AG-GG12-62-TP	24x24x11½	700	1.75	0.125	6	2	200°F	59	162
AG-GG16-81⅜-AP	24x24x16	1000	0.85	0.125	8	1⅜	120°F	74	113
AG-GG16-81⅜-NP	24x24x16	1000	0.85	0.125	8	1⅜	120°F	79	118
AG-GG16-81⅜-WP	24x24x16	1000	2.10	0.125	8	1⅜	120°F	88	127
AG-GG16-81⅜-TP	24x24x16	1000	2.10	0.125	8	1⅜	120°F	88	127
AG-GG16-121-AP	24x24x16	1000	0.5	0.125	12	1	120°F	120	78
AG-GG16121-NP	24x24x16	1000	0.5	0.125	12	1	120°F	120	78
AG-GG16-62-AP	24x24x16	1000	1.75	0.125	6	2	120°F	80	115
AG-GG16-62-NP	24x24x16	1000	1.75	0.125	6	2	120°F	84	119
AG-GG16-62-WP	24x24x16	1000	3.90	0.125	6	2	120°F	96	131
AG-GG16-62-TP	24x24x16	1000	3.90	0.125	6	2	120°F	96	131
AG-GG18-62-AP	24x24x18	1250	1.75	0.125	6	2	120°F	92	127
AG-GG18-62-NP	24x24x18	1250	1.75	0.125	6	2	120°F	96	131
AG-GG18-62-WP	24x24x18	1250	4.10	0.125	6	2	120°F	105	140
AG-GG18-62-TP	24x24x18	1250	4.10	0.125	6	2	120°F	105	140

Type II Tray Carbon Adsorbers

The Flanders/CSC Type II adsorber meets the design and performance criteria of IES-RP-CC-008-84, "Recommended Practice for Gas-Phase Adsorber Cell." It is primarily used by the nuclear industry. The Flanders/CSC Type II cell exhibits a minimum mechanical efficiency of 99.9% when tested in accordance with that standard.

The Flanders/CSC Type II cell incorporates two 2-inch beds. Three cells are designed to be modular with a 1000 CFM HEPA filter in both flow rate and size. By using multiple Type II cells, any required flow rate can be obtained.

The Flanders/CSC Type II cell is made of 300-Series stainless steel. Dimensions are maintained to assure conformance with the requirements of IES-RP-CC-008-84, "Recommended Practice for Gas-Phase Adsorber Cells." It is designed, manufactured and tested under a quality assurance program that meets the basic requirements of ASME NQA-1, "Quality Assurance Program Requirements for Nuclear Facilities."

Application

Type II Tray adsorbers are designed so that three cells in parallel are modular with a 1000 CFM HEPA filter. These adsorbers are primarily used by the nuclear industry. They are usually installed in large "built-up" banks inside walk-in plenums.

Suggested Specifications

Adsorber shall be Flanders/CSC V-2 Type II adsorber tray. The adsorber frame shall be constructed of Type 304 stainless steel and have two (2), 2-inch deep beds. Adsorber screens shall be perforated 26 gage Type 304 stainless steel (0.045" dia. holes, 37% open area) with external reinforcement to prevent distortion during filling with carbon. The adsorber shall be filled with 8 x 16 mesh, granular, activated, impregnated carbon that meets the requirements of Article FF-5000 of ASME/ANSI

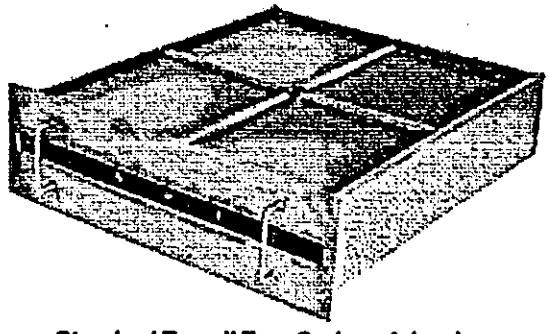

Standard Type II Tray Carbon Adsorber

AG-1-1997, "Code on Nuclear Air and Gas Treatment." At a rated flow of 333 CFM each shall provide a 0.25 second residence time with an approximate pressure drop of 1.10" water gage. Approximate filled weight of the adsorber is 96 lbs. with a maximum operating temperature of 200° F. The adsorber shall exhibit a mechanical efficiency of 99.9% when tested in accordance with IES-RP-CC-08-84, "Recommended Practice for Gas-Phase Adsorber Cells." The adsorber shall be designed, manufactured and tested under a Quality Assurance Program that meets the basic requirements of ASME NQA-1, "Quality Assurance Program Requirements for Nuclear Facilities."

Model Number Breakdown *(Example)*

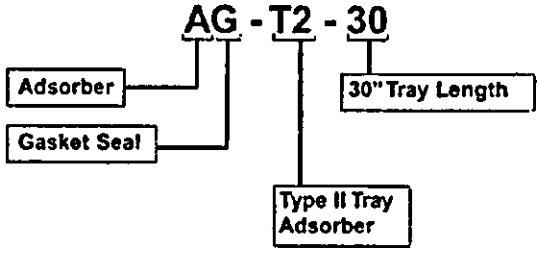

HEGA Filters: *Ordering Information for Type II Tray Carbon Adsorber*

Ordering Information: *Type II Tray Carbon Adsorber*

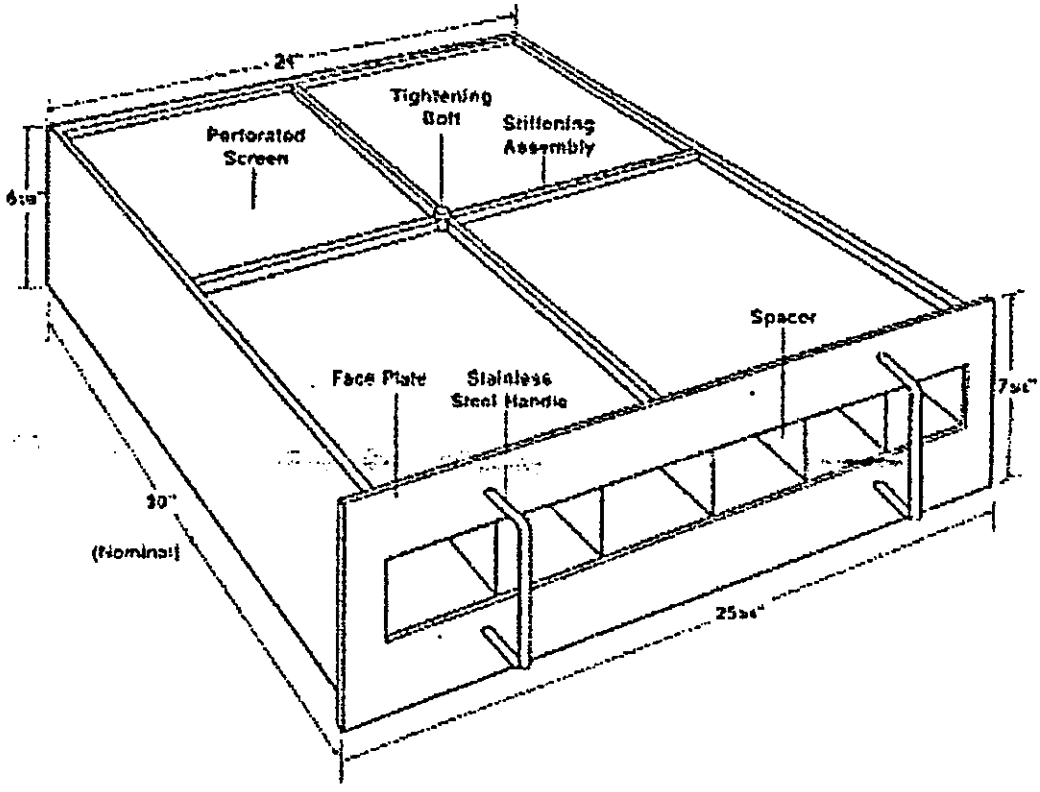

Flanders/CSC Type II Tray Adsorber

Rated Flow (CFM)	Velocity through Carbon Bed	Mechanical Efficiency	Bed Depth	Δ P (Inches W.G.)	Approx. Filled Wt. (lbs.)	Approx. Ship Wt. (lbs.)
333	40 ft/minute	99.9%	2 inches	0.25 sec.	0.90 (±0.30)	105

Standard Options:

1. Different length cells
2. Special frame materials
3. Special adsorbents
4. Special faceplate
5. Sample canisters
6. Custom sizes

Note: Flanders/CSC's Service Division can refill and recertify most types of High Efficiency Gas Adsorbers.

Carbon Sampling Canisters

In nuclear applications, *US Reg. Guide 1.52 details the frequency of having carbon tested for ability to remove methyl iodide. The sampler devices shown simplify the sample taking procedure. The sampler is removed, the sampler space is blanked off, and the sample is sent to the lab for analysis. No in-place test is required. (Note: If a filter is removed to provide a sample, an in-place test *must* be performed after the filter is replaced.)

Existing systems can use the compatible Flanders/CSC sampling system for easy conversion.

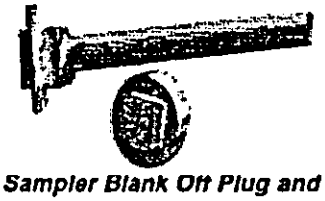

Carbon Sampler Blank Off Plug and Canister/Plug Removal Tool (furnished)

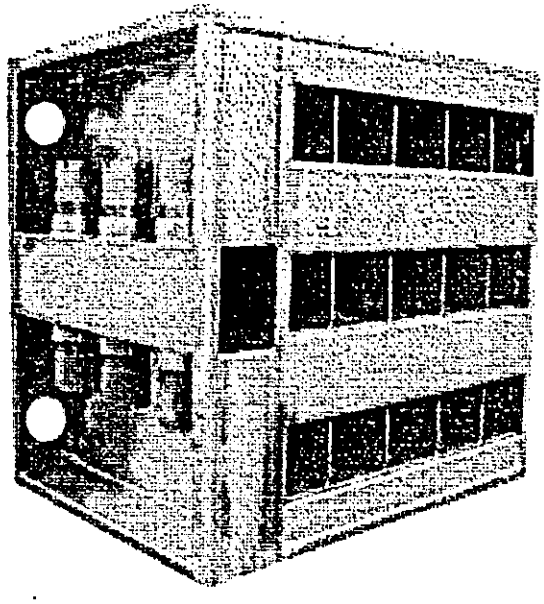

Radioactive Iodine Performance Test

Flanders/CSC can provide radioiodine testing services on samples of carbon to determine if the samples meet customer specifications. Tests can be expedited to prevent extended downtime of the customer's air filtration system. Tests are performed to latest versions of ASTM-D3803, ASME N509 and ASME AG-1; but, any standard radioiodine testing can be performed. Customer can also specify custom test parameters, if required.

*US Nuclear Regulatory Commission Regulatory Guide 1.52, "Design, Testing and Maintenance Criteria for Post Accident Engineered-Safety-Feature Atmosphere Cleanup System Air Filtration and Adsorption Units of Light-Water-Cooled Nuclear Power Plants."

Types of Adsorption

There are three types of adsorption that concern us: 1. Kinetic, 2. Isotopic Exchange, and 3. Complexing or Chemisorption.

Kinetic: Kinetic adsorption of a gas molecule or chemical vapor is the physical attraction of the molecule to the carbon granule by electrostatic forces. These forces, as they apply to small particles, are governed by van der Waals theories, and these attraction forces are termed van der Waals forces. Since these forces are physical in nature, the forces can be undone by physical effort. Thus, high temperature, high humidity, or other natural causes may cause an adsorbed contaminant to desorb.

Generally, the higher the boiling point, the larger the molecule size, and the lower the melting temperature, the easier the molecule is to kinetically adsorb and the stronger it is held once it is adsorbed.

Isotopic Exchange: A second "adsorption" mechanism is isotopic exchange. Radioactive materials usually have a family of isotopes. If a stable isotope is adsorbed on the carbon initially, an unstable isotopic compound will, when it comes into contact with the stable form of the element, exchange the isotopes. The

stable form is now on the airborne molecule and the radioactive form is on the molecular structure of the impregnant. An example of this is carbon impregnated with KI_3. The radioactive form of iodine in the organic form CH_3I^{131} will isotopically exchange with the iodine on the carbon. This exchange is nondirectional, meaning the adsorbed (exchanged) radioactive species of iodine may very well exchange again. The result will be a different airborne radioactive methyl iodide molecule. This new radioactive molecule may again isotopically exchange with stable iodides on the carbon in the KI_3 impregnant, and so on, until the radioactive iodine is delayed long enough to decay into stable xenon.

Complexing or Chemisorption: A third capture mechanism is chemisorption. This is the actual complexing, attaching chemically, of a radioactive iodine species to a stable impregnant that has the ability to share electrons. Once the iodine is complexed, it does NOT desorb similarly to isotopic exchange. However, it may desorb similarly to the kinetic adsorption discussed. But if it does, the entire impregnant desorbs from the carbon, not just the iodine. An example of this is to impregnate the carbon with triethylenediamine (TEDA) or some other tertiary amine.

To take advantage of both impregnants and capture mechanisms, carbon can be co-impregnated. This allows the carbon to be used as a kinetic adsorber, an isotopic exchange medium and a complexing agent. As long as the operating conditions are kept within normal bounds, the carbon will perform as required. It will perform under high humidity conditions and under high temperature conditions better than a carbon with a single impregnant.

Efficiency vs. Penetration

There is often confusion between "efficiency" and "penetration" of contaminants through a carbon bed.

Efficiency is the ability for the carbon to remove a desired contaminant. Methyl iodide efficiency, for example, is determined by challenging the carbon with an actual radioactive methyl iodide vapor. The amount of the contaminant upstream of the carbon is known, and the amount that is collected on backup beds is measured. The efficiency of that carbon sample to remove methyl iodide is easily calculated by comparing the counts of the carbon sample to the counts on the backup beds. Test parameters such as temperature and relative humidity greatly affect the efficiency.

Penetration, on the other hand, is a term used to indicate the degree of leak tightness for installed carbon systems. The installed system is subjected to a test gas that is easily adsorbed, such as R-11 (trichlorofluoromethane). The penetration, or by-pass of the R-II, is measured downstream of the filter and that amount is compared to the amount measured upstream of the filter. A penetration value in percent is easily calculated from the collected data. This is also termed mechanical efficiency.

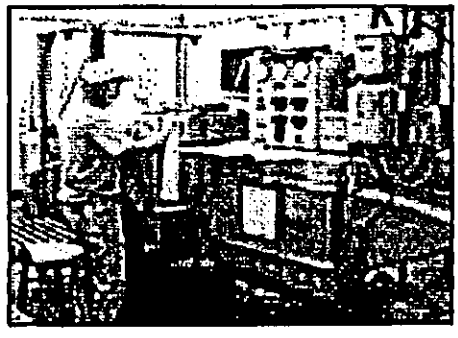

Residence Time

Residence time is the term given to the time that a gas stream contacts a carbon bed. For example, if a carbon bed were a foot thick and the air stream moved at one foot per minute, the residence time would be one minute. It would take one minute for the air to move through the bed.

Typically, the carbon bed is 1-inch thick and the air velocity is 40-feet per minute. What would

the residence time be in that situation? (0.125 seconds) The residence time can be calculated easily from the following relationships:

$$RT = 5 \times \frac{D}{V}$$

Where:

RT = Residence time (seconds)

D = Depth of carbon bed (inches)

V = Velocity of gas through bed (feet/min)

Most of the time, the velocity will not be given and must be calculated from the relationship:

$$V = \frac{Q}{A}$$

Where:

V = Velocity of gas through bed (feet/min)

A = Unbaffled area of carbon bed (sq.ft)

Q =Quantity of gas flowing through bed (CFM)

Let's take an example from real life: Assume that Q=1,000 CFM and that a single 6 panel, 16-inch deep (in direction of air flow), 2-inch bed depth filter is to be used. To calculate the residence time, first determine the area of the carbon bed. The total area is 12.5 sq. ft. The 12.5 ft^2 is determined by actual measurements of the unbaffled bed area on one side of the carbon filter. Therefore:

$$V = \frac{Q}{A}$$

$$V = \frac{1000\ CFM}{12.5\ ft}$$

$$V = 80\ ft/min$$

And:

$$RT = \frac{5 \times D}{V}$$

$$RT = \frac{5 \times 2}{80}$$

$$RT = \frac{10}{80}$$

$$RT = 0.125\ second$$

The concept of residence time is very important from the designer's point of view. That is why Flanders/CSC is taking a lot of time to explain it fully. Flanders/CSC cannot design a system unless we know either the actual residence time required, or all of the parameters that determine the optimum residence time, (flow rate, contaminants, concentrations, temperature, humidity, required efficiency, etc.)

The residence time is critical to the chemisorption or complexing phenomena. As the gas enters the bed, it must have time to interact with the impregnants on the carbon. Too little time will mean that the contaminants will not interact completely with the carbon or impregnants. Too much time means that the system is not designed efficiently.

In summary, you need to be aware of the important of residence time because the first question we ask about an inquiry for any carbon system is, "What is the residence time requirement?" If you do not know, we will have to determine it before the best system can be designed by our engineering staff.

Capacity

The capacity of activated carbon is the percentage of its own weight that an activated carbon can adsorb of a given vapor under certain conditions. Some of these conditions are vapor concentration, temperature, humidity, air velocity, and defined breakthrough.

Example: If 100 pounds of activated carbon adsorbs 15 pounds of benzene before it reaches

a customer defined breakthrough point of 5 ppm, then the capacity of that activated carbon for benzene is 15%.

Decontamination Factor

The Decontamination Factor is the ratio of the concentration of a contaminant in the untreated air to the concentration of the contaminant in the treated air.

If anyone asks what the Decontamination Factor (DF) of a filter is, the answer can be obtained by calculating the RECIPROCAL of the penetration expressed as a fraction, or

$$DF = \frac{1}{Pen.}$$

Examples:

Penetration	Calculation	Result
40%	$DF = \frac{1}{0.40}$	DF = 2.5
0.1%	$DF = \frac{1}{0.001}$	DF = 1,000
5%	$DF = \frac{1}{0.50}$	DF = 20

Design Principles for Filtering Dangerous Chemical Contaminants

It is generally acknowledged that a properly designed filtration system to remove dangerous chemical contaminants should be as follows:

1. HEPA filters should be used to trap dangerous particulates and protect the carbon filters from collecting particulates and thereby increasing the adsorber's pressure drop.
2. Carbon filters must:
   - a Exhibit a minimum mechanical efficiency of 99.9% (i.e., HEGA).
   - b Use high quality coconut shell activated carbon.
   - c Be sized for approximately 0.125 second residence time.
3. All filters should be installed in "Bag-in/Bag-out" housings to protect maintenance personnel and the environment.
4. Filtration system designs should have provisions for pulling samples of air or carbon for laboratory analysis (to assist in determining when carbon adsorbers need changing).
5. The disposal of hazaradous waste (i.e., spent HEPA and HEGA filters) should also be considered. Any HEPA or HEGA filter containing regulated chemicals should be disposed of in accordance with Federal, State and local restrictions.
6. The filtration system must be manufactured under a good quality control program such as one that addressed the requirements of ASME NQA-1, "Quality Assurance Program Requirements for Nuclear Facilities."

HEGA Filters: *General Information on Carbon and Adsorption Materials*

The following are some random thoughts and information that will help you form a general idea about carbon filter technology. These comments are to be considered as general axioms, and the reader should be able to "fill in" some of the unknown factors when unusual situations arise. However, there is no substitute for expert advice and opinion, and the reader is urged to contact Flanders/CSC for answers to any technical problem, specific questions or additional information.

1 Elemental iodine is adsorbed by attraction of the iodine to the carbon. This is called Kinetic adsorption.

2 Methyl iodide, which comes from elemental iodine (I_2) combining with methane must be adsorbed by chemisorption, usually in the form of isotopic exchange when KI carbon is used or complexing when TEDA carbon is used.

3 The recommended residence time for methyl iodide is 0.25 seconds residence time per 2-inch bed. Tests have shown that the carbon will perform as required at twice that velocity or half that r esidence time for a limited time period.

4 As the humidity increases, the ability of the carbon to perform is adversely affected. However, the carbon must perform at 95% relative humidity in order to meet ASME AG-1 requirements.

5 The heavier the molecular weight of a material, the easier it is to adsorb.

6 The higher the boiling temperature of a material, the easier it is to adsorb.

7 The converse of 5 and 6 is true.

8 One gram of 60% active carbon (as measured by carbon tetrachloride) has a surface area of about 1,000 square meters.

9 The adsorption coefficient of carbon is the amount of a given material that the carbon will adsorb, by weight.

10 Some hard to adsorb materials can be displaced by easier to adsorb materials. For example, acetic anhydride may displace acetone. Acetone may displace acetaldehyde, and acetaldehyde may displace acetylene.

11 The lower the concentration of a material, the harder to achieve a high removal percentage.

12 One gram of carbon will adsorb one milligram of iodine. The potential inventory of radioiodine in a nuclear power system is very small.

13 Since carbon will adsorb anything adsorbable, it can be *poisoned* by harmless materials and be unable to adsorb the material that it was designed to control. That is why the carbon should always be protected from vapors that will harm it.

14 Shelf life of carbon in properly packaged drums or in filters having a vapor barrier of some kind can be as long as five (5) years. Flanders/CSC recommends that carbon over three (3) years old be retested to assure that it meets the efficiency requirements of the original specifications.

15 Methyl iodide adsorbs-desorbs-adsorbs through the bed, exchanging iodine at each juncture. That is to say, methyl iodide can be radioactive-stable-radioactive-stable until it decays into harmless xenon.

16 Elemental iodine, once adsorbed, usually stays adsorbed.

Important Notice

For best results in the application of Flanders/CSC® products, it is recommended that the buyer supply complete information about the operating conditions of the ventilation system to Flanders/CSC® for prior evaluation. Flanders/CSC® does not guarantee that its equipment will operate at the performance levels given on the identification labels or in the catalog specifications under all conditions of installation and use, nor does Flanders/CSC® guarantee the suitability of its product for the particular end use which may be contemplated by the buyer. When the system components are supplied to the buyer or his agent for final installation and assembly in the field, it should be under the supervision of factory trained personnel who are equipped to test the installation and certify its performance and conformance to industry accepted specifications. Failure to follow these procedures may result in a compromised installation.

Flanders/CSC®

FLANDERS/CSC CORPORATION
7013 Hwy 92E - PO Box 3
Bath, NC 27808

Representatives of Flanders/CSC® products are located throughout the world.

Your closest representative's office may be found by contacting our manufacturing and sales department.

Represented by:

Tel: 252-923-2911 Fax: 252-923-6931
Email: csc@csc.flanderscorp.com
Web site: www.flanders-csc.com

FLANDERS/CSC® Printed In USA 11/2003

34005-CA-0001

Attachment 4

Technical Data Sheet, 145579-V-DS-010.1, Rev.1
Carbon Filter 1 & 2

TECHNICAL DATA SHEET
AMEC Americas Limited

amec

The document revision number is indicated below. Please replace all revised pages of this document and destroy the superseded copies.

PROJECT:	Final DBVS Design	145579-V-DS-010.1	REV. 1
PROJECT NO.:	145579	CARBON FILTER 1 & 2	
CLIENT:	AMEC E&E - Richland, Washington	EQUIPMENT NO. 36-N02-064 & -106	

REV. NO.	ISSUED FOR	ORIGIN	DATE	INITIAL
A	Internal Review	DW	18-Oct-04	DW
B	Internal Approval	DW	02-Nov-04	DW
C	CH2M Hill Review	DW	10-Nov-04	DW
0	Bid Request	DW	14-Jan-05	DW
1	Bid Request	DW	28-Feb-05	DCO

DOCUMENT APPROVAL

CLIENT APPROVAL (AMEC RICHLAND)
Original Approvals on File

Project Manager: Keith Witwer for Humphrey
Date: 3/1/05
Q.A. Rep.:
Date: 3/1/05

CLIENT APPROVAL (CH2M HILL)
Project Manager:
Date: 3/1/05

AMEC AMERICAS LIMITED (TRAIL)
Original Approvals on File

Project Manager:
Date: Feb 28/05
Discipline Lead: G. Jones
Date: Feb. 28/05
Originator:
Date: Feb 28, 05

amec

TECHNICAL DATA SHEET

PROJECT:	Final DBVS Design	145579-V-DS-010.1	REV. 1
PROJECT NO.:	145579	CARBON FILTER 1 & 2	
CLIENT:	AMEC E&E - Richland, Washington	EQUIPMENT NO.	36-N02-064 & -106

REFERENCE SPECIFICATION

Document No.	Specification
145579-V-SP-010	HEGA Filter Skid

CONTENTS

Data Sheets _____ 2 Pages
Bidders Drawing & Data Commitments Sheet _____ 1 Page

amec

TECHNICAL DATA SHEETS

PROJECT:	Final DBVS Design	145579-V-DS-010.1	REV. 1
PROJECT NO.:	145579	CARBON FILTER 1 & 2	
CLIENT:	AMEC E&E - Richland Washington	EQ. NO.:	36 N02-064 & -106

Data Sheet 1 of 1

No. Required	2	Area	36
PFD #	F-145579-00-A-0022 (Rev 0E)	Stream No.	32
Reference Specifications	145579-V-SP-010	Quality Assurance Level	EQ

Operating Conditions			Rev				Rev
Location (Indoor/Outdoor)		Outdoor		Operation	- Days per year	365	
Environmental conditions					- Hours per day	24	
Max Operating temperature	(°F)	167		Availability	%	100	
Min Operating/Outdoor temperature	(°F)	-25		Elevation (ft)		663	
Operation	(cont/semi/intermittent)	Continuous		Environment	- Radioactive	Yes	
Max Operating Pressure	(in WG)	-95.8	1		- Toxic	Yes	
Operating Pressure drop	(in WG)	1.75			- Corrosive	Yes	
Design Flow Rate (at 167°F 91.4inWG)	(ACFM)	4819	1		- Flammable	No	

HEGA Filter data				Inlet Composition			
Manufacturer		Flanders	1	Process Fluid		Air	
Model Number		AG-GG18 02 N3	1	Phase		Gas	
Removal Efficiency (129I & organics)		99%	B	Design mass flow rate	(lb/h)	13,924	1
Adsorbent material		Activated Carbon		Volumetric flow rate	(ACFM)	4,819	1
Mesh Size	*			SO2 gas	ppmV	?	
Face Velocity	(fps) *			NOx gas	ppmV	5,468	1
Rated Airflow	(SCFM) *			HCl gas	ppmV	0.2	
Internal Resistance	(in WG) *			137Cs	Ci/hr	4.6E-10	
Operating Temperature	(°F) *			99Tc	Ci/hr	1.8E-11	
Actual Size				TRU	Ci/hr	2.7E-15	B
- Height	(in) *			129I	Ci/hr	5.5E-11	
- Width	(in) *			**Outlet Composition**			
- Length	(in) *			Process Fluid		Air	
Filter Area	(ft^2) *			Phase		Gas	
Casing Material	*			Design mass flow rate	(lb/h)	13,924	1
Residence Time	(sec) *	0.25		SO2 gas	ppmV	2	
Depth of Carbon Bed	(in)			NOx gas	ppmV	5,468	1
Estimated Organics removal requirement	(wt.%)	0.176363	0	HCl gas	ppmV	0.2	
				137Cs	Ci/hr	4.6E-10	
				99Tc	Ci/hr	1.8E-11	
				TRU	Ci/hr	2.7E-15	
				129I	Ci/hr	5.5E-11	

Housing Data				
Manufacturer		Flanders		
Model Number		BFI-2HLW-4G6JP-316L-D1	1	
Material		SS 316	B	**Bubble-Tight Isolation Dampers**
Overall Height	(in) *			Manufacturer: Pentair
Overall Depth	(in) *			Model Number: UBTP-FB-304-16 (B)
Overall Width	(in) *			Type: Damper (B)
Wall Thickness	(in) *			Duct Type: Round
Number of Filter Access Doors	*			Diameter (in.): 16
Bag-In/Bag-out feature		req'd		Material: SS 304 (B)
Pressure Rating (pos/ neg)	(in WG)	-130	0	Actuation: Manual (0)
Interface Duct Diameter	(in)	16	B	
Duct Interface		Flanged	0	
Differential Pressure Indicator/Transmitter				
See Appendix B				

Date	15-Oct-04	02-Nov-04	10-Nov-04	14-Jan-05	28-Feb-05		
By	DW	DW	DW	DW			
Chked	AP	AP	AP	AP			
Rev.	A	B	C	0	1		

amec

TECHNICAL DATA SHEETS

PROJECT:	Final DBVS Design	145579-V-DS-010.1	REV. 1
PROJECT NO.:	145579	CARBON FILTER 1 & 2	
CLIENT:	AMEC E&E - Richland Washington	EQ. NO.:	30-H92-061 & -106

Data Sheet 2 of 2

No. Required	2	Area	0	36
PFD #	F-145579-00-A-0022 (Rev 0E)	Stream No.	0	32
Reference Specification:	145579-V-SP-010	Quality Assurance Level	0	EQ

Comments:

All items with an * shall be filled in by the VENDOR

Date	18-Oct-04	02-Nov-04	10-Nov-04	14-Jan-05	28-Feb-05		
By	DW	DW	DW	DW			
Chked	AP	AP	AP	AP			
Rev	A	B	C	0	1		

amec

TECHNICAL DATA SHEETS

PROJECT:	Final DBVS Design	145579-V-DS-010.1	REV. 1
PROJECT NO.:	145579	CARBON FILTER 1 & 2	
CLIENT:	AMEC E&E - Richland, Washington	EQ. NO.: 36-N02-064 & -106	

Final DBVS Design

BIDDERS DRAWING AND DATA COMMITMENTS

Vendor shall supply all drawings, manuals and documentation in the quantities indicated. Approval drawings are due within the listed number of calendar days after issue of the Purchase Order or Letter of Intent. The days set out for drawing and data submittals are governed by the Review and requested number of copies within the listed number of calendar days. Final drawings must be certified as correct and bear the Vendor name, equipment number and Purchase Order Number. Drawing Transmittals listing the document numbers, revision numbers, quantities, status and document types must be included with all submittals (including electronic submittals)

SEND ALL DOCUMENTS TO:

Submit all documents via courier service
Faxed documents must be followed by the originals.
Electronic E-mail or FTP transmissions of drawings & data must be copied to
Document Control
Always include a transmittal

AMEC Americas Limited
1385 Cedar Avenue
Trail, BC, Canada
V1R 4C3
Attn: Document Control
Phone: (250) 368-2400
Fax: (250) 368-2401

BIDDERS MUST PROVIDE ESTIMATED LEAD TIMES FOR APPROVAL DRAWINGS

Proposal	Bidder shall include the data for each area			REVIEW ITEMS DUE WITHIN	VENDOR COMMITMENT (SEE NOTE 4)
	Review	Required before ordering or start of fabrication			
		Final	Required within 7 days prior to shipment and before final payment		
PROPOSAL	REVIEW	FINAL	DESCRIPTION	(DAYS)	(DAYS)
I			QA Program that satisfies the requirements of NQA-1-1994	Bid	
I			Experience list and maintainability information	Bid	
E+3	E+3		Design, fabrication & delivery schedule	PO+7	
	E+3	E+6	90% Design and Fabrication & delivery package including: -Drawings -Calculations -Completed Equipment Data Sheets -Vendor Cut Sheets/Technical Brochures -Bill of Materials	PO+21	
E+3	E+3	E+6	Outline drawings and layout drawings indicating weights and dimensions	PO+14	
E+3	E+3	E+6	Technical brochures on purchased components	PO+21	
	E+3	E+6	Calculations	PO+21	
	E+1	E+6	Spare parts list	Del-14	
	E+1	E+6	Set of installation and maintenance manuals c/w technical literature for all equipment and devices	Del-14	
		6	Site commissioning report & test results	COM+14	

THE TIMELY RECEIPT OF THE VENDOR DOCUMENTS IS CRITICAL TO THIS PROJECT

I agree to provide the listed documentation and data and the dates shown above.

Vendor Signature _____ Date _____

34005-CA-0001

Attachment 5

HNF-14755, Revision 1, Appendix 2B
242-A Evaporator Process Flow Data

APPENDIX 2B

242-A EVAPORATOR PROCESS FLOW DATA

This page intentionally left blank.

CONTENTS

2B.0 PROCESS FLOW DATA 2B-1
2B.1 DESCRIPTION OF FLOW SHEETS 2B-1
2B.2 REFERENCES 2B-9

LIST OF TABLES

Table 2B-1. Process Flow Sheet for 242-A Evaporator. T2B-1
Table 2B-2. 242-A Evaporator Feed to C-A-1. ..... T2B-25
Table 2B-3. Partition Coefficients and Activity Coefficients. T2B-29
Table 2B-4. Table of Constants. T2B-35

This page intentionally left blank.

2B.0 PROCESS FLOW DATA

The process flow sheet allows people to model the 242-A Evaporator plant by entering different values in place of the values used in this flow sheet. A majority of the assumed flow conditions, which are variable or subject to change, are located in one area of the flow sheet. Changing any of these flows or values results in an immediate adjustment in the flow sheet and a recalculation of new values. The partition coefficients and the activity coefficients, located in two columns of the spreadsheet, can be changed easily when data support new values for these constants. Also, the equations in the spreadsheet can be changed, if desired, to accommodate changes in the 242-A Evaporator plant or new assumption about the stream flow relationships.

The ability to change the flow sheet increases the opportunity for many groups to use the flow sheet for their own purposes. For example, process engineering can use the flow sheet to estimate concentration of radionuclides in the effluent streams. Advanced engineering can use the flow sheet to predict the effect of changing the partition and activity coefficients. Using feed, product, and effluent data, the activity and partition coefficients can be adjusted to match operating conditions. Health Physics personnel can use the flow sheet to estimate effluent concentrations when plant conditions change. The decontamination coefficients provide a measure of the efficiency of the process in containing radioactivity and preventing releases to the environs.

2B.1 DESCRIPTION OF FLOW SHEETS

The following are specifics on the flow sheets presented in Tables 2B-1 through 2B-4 of this appendix. The assumptions evolved during development of the flow sheet. References are made to the design calculation sheets, which provide examples of the equations and formulas used in calculating the values on the flow sheet.

Each column is identified separately, giving a brief description of the flow and the methodology and assumptions used in calculating the values. Reference to an example calculation is noted to clarify how the values were derived.

The first two columns describe the radionuclide, inorganic or organic chemicals and the units. Two values are used for each chemical to simplify construction of the Symphony spreadsheet. The space allowed for the equation for each cell is limited in size, which limits the number of mathematical operations that can be performed for each cell. Also, two cells allow for a quick scan of the values to determine if the input and output from a vessel is balanced. The other cell has values in units that can be compared to environmental release limits.

Table 2B-1, Sheet 1

<u>Column 3, Stream 1, Feed</u>: The feed stream enters the C-A-1 vessel recirculating loop from feed tank TK-241-AW-102. A flow rate of 340 L/min (90 gal/min) was selected as an average flow rate. The temperature value comes from the previous flow sheet FDM-T-600-00001 (H-2-69320). Feed density (Sp. Gr.) is calculated using the primary inorganic chemical

composition values and the PREDICT computer equations (note slurry sp. gr calculation example on page 8 of the design calculation sheets). Pump pressure for the feed was assumed to be 340 kpa- (50 lbf/in^2-) gauge.

The individual values for the chemicals (mg/L and FCi/mL) are an average of samples from three double-shell tanks, 241-AW-101, 241-AW-103, and 241-AW-106 (not the appropriate columns in Table 2B-2. These three tanks contain a near double-shell slurry feed (DSSF) product. The values for each tank were averaged (labeled TI-355 Values). A standard deviation for the sample values is also shown. The next column is entitled "Adjusted Feed to C-A-1." The "Average TI-355 Values" values were multiplied by 70% and entered in the "Adjusted Feed to C-A-1" column as the "best guess" of the feed concentration. The values were then adjusted upward so that the slurry values of the Stream 2 column matched the average of the sample date. The "Adjusted Feed to C-A-1" values are identical to the "Stream 1" values and the column labeled "Typical Feed to C-A-1" in Table 2B-3. The feed values required adjustment based on the partition coefficient values and the activity coefficient values. For example, the "^{3}H" (tritium) concentration value from the tanks sampled was 1.0 E-02 FCi/mL. The value for the feed input is higher (1.8 E-02 FCi/mL) to account for the low ^{3}H partition coefficient (6.6 E+03). The low partition coefficient means that a larger fraction of the tritium is evaporated overhead with the condensate stream, the expected path for tritium because tritium is part of the water molecule.

The column next to "Average TI-355 Values" in Table 2B-2 is labeled "Std. Dev. +/-." The "values" in this column is the calculated standard deviation for the values used to calculate the average values. The standard deviation is a little misleading because each tank result is an average of four samples for the tank. Therefore, the standard deviation values, in most cases, are nearly equal to the average value. This suggests that the variation in values is wider than if the values were selected from the same statistical population of values. The wide variation in values is expected for double-shell tank sample analysis because each tank contains a mixture of waste from a variety of sources. The sample analysis values from these tanks, when compared to other typical feed for the 242-A Evaporator, are higher. This comparison shows that the waste in the three tanks is concentrated waste.

<u>Stream 2, Slurry</u>: Slurry flow for this flow sheet is based on a 30% waste volume reduction factor. The inorganic and radionuclide concentrations are calculated using the partition factor. The partition factor is a measure of the equilibrium concentrations of a substance in the gas and liquid phase when steady state can be assumed. For example, the partition coefficient for "^{3}H" is 6.6×10^3 (Table 2B-3, Column entitled "C-A-1 Vapor Space Part. Coeff.") The partition coefficient means FCi/mL ^{3}H in the liquid phase divided by FCi/mL ^{3}H in the aqueous phase, assuming equilibrium conditions. An example of the calculation equations is shown on pages 2 through 4 of the design calculation sheets.

Organic concentrations are calculated using the pure vapor pressure of the compound and the activity coefficient for that compound. These values are used instead of partition coefficients because the vapor concentrations of organics are temperature dependent. As the temperature increases, the organic concentrations in the vapor phase also increase. For an ideal organic vapor, the activity coefficient would be 1.0, meaning that the vapor phase mole fraction equals the liquid phase mole fraction. The activity coefficient, therefore, is a measure of how close the organic vapor concentrations correspond to an ideal gas. Activity coefficients near 1.0 mean that

the gas and liquid phase concentrations behave like and ideal gas (Raoult's Law). Activity coefficients further from 1.0 are a measure of the non-ideal behavior of the gas. Example calculations using acetone are shown on pages 6 and 7.

All water entering the C-A-1 evaporator vessel [(-B-1 and P-B-2 pumps seal leakage (Streams 30 and 31), humidity in the air purges (an input value on the Table of Constants, Table 2B-4), deentrainer pad flushes (Stream 2)] and 30% of the feed stream water is evaporated overhead. The remaining water flows through the slurry pump as part of Stream 2. The density calculation is similar to the density calculation of Stream 1. Vessel C-A-1 temperature is calculated using the equation of the PREDICT program. An example of the calculation is presented on page 8 of the design calculation sheets.

The radionuclide, inorganic, and organic concentrations in the P-B-2 pump seal water leakage flow (Stream 31) are assumed to flow with the slurry flow. This assumption is opposite for the P-B-2 pump seal leakage-water flow (Stream 31), which is assumed to flow with the overhead vapors. This means that the pump P-B-2 seal water leakage rate does not dilute the slurry flow but merely adds a minor amount of chemicals to the slurry flow.

The calculated specific gravity for the slurry (Table 2-15) of 1.4 is an indication that this flow sheet is near the maximum expected concentrations for future 242-A Evaporator campaigns. In the past and evaporator product has been considered a DSSF product if the density is in the 1.4 to 1.5 range.

Stream 3, Filtered Raw Water: Filtered raw water flows into C-A-1 vessel as a spray on the deentrainment pads to wash the overhead vapors. All water entering through Stream 3 is assumed to be evaporated overhead with the vapor flow. Any organic, inorganic, and radionuclide compounds are assumed to be in equilibrium with the other C-A-1 vessel compounds and either exit with the slurry flow or the overhead vapor flow. The density of the water flow is calculated by suing a regression equation developed for pure water (page 8 of the design calculations). The raw water temperature in an input value. The temperature comes from the raw water samples taken for the Part B Permit.

Stream 4, Vessel C-A-1 Overhead Vapor Flow: Column 8 contains all other compounds that enter C-A-1 vessel and do not flow with the slurry flow. The vacuum for this flow is a value selected for the flow sheet (i.e., 50 torr as shown in Table 2B-4). The gas temperature is also a value selected for the flow sheet (Table 2B-4). The vacuum and temperature values are used to determine the volume flow rate of gases for this stream. The vapor flow rate, the slurry flow rate, the partition coefficient values, and the activity coefficients are used in the equations to calculate the slurry and overhead flow rates of the stream components.

Stream 5, E-C-1 Condensate Flow: Vapors condensed in the primary condenser are assumed to be in equilibrium with the vapor flow exiting from the condenser. Different partition coefficients are used for these calculations because data collected for partition coefficients show the pure water partition coefficient (steam condensate is considered to be pure water) to be lower than that for liquids containing dissolved salts (Bendixsen 1989). An assumed water leakage rate [note constant in Table 2B-4 of 0.01 g/m (2.2×10^{-5} lb/m)]. for the condenser also adds organic, inorganic and radionuclide concentrations to both the condensate and vapor flows from E-C-1.

Stream 6, E-C-1 Vapor Flow: The E-C-1 vapor flow vacuum is calculate using an input value for the E-C-1 pressure differential (20 torr), not value in the Table of Constants, Table 2B-4. The vapor flow also includes ambient air and water vapor flows (Stream 27). Both the vapor temperature and humidity are calculated using equations that assume saturated steam for the E-C-1 vapor flow. Heat transferred to the raw water flowing through the condenser assumes a 10% heat loss to the room. and the remaining heat raises the cooling water temperature. Examples of heat transfer calculations are shown on pages 9 and 10 of the design calculation pages.

Stream 7, E-C-2 Condensate Flow: Vapors condensed in the E-C-2 intercondenser also include the steam condensate flow (Stream 25) from the steam eductor J-LC1-1. The steam flow contains minor concentrations on inorganic and radionuclides that contribute to the condensate concentrations. The calculation methods for the components of the condensate flow are identical with the equations used for the E-C-1 condensate flow.

Stream 8, E-C-2 Vapor Flow: Vapors exiting E-C-2 contain the airflow rate from E-C-1 (Stream 6). The pressure in the E-C-2 condenser is an input value on the constant table, Table 2B-4. As with the E-C-1 condenser, both the temperature and humidity values are calculated using the saturated steam equations. The radionuclide, inorganic and organic concentrations are calculated using the same equations, partition coefficients , and activity coefficients used for the E-C-1 vapor flow.

Stream 9, E-C-3 Condensate Flow: This stream contains the steam condensate flow and radionuclides and inorganic concentrations from Stream 26. As with E-C-1 and E-C-2, the radionuclide, inorganic, and organic concentrations are assumed to be in equilibrium with the E-C-3 vapor flow (Stream 16) concentrations. The vapor partition coefficients for inorganics and radionuclides are used to calculate the fraction of components entering from Streams 8 and 26 that are used in Stream 9. The pure component vapor pressure and activity coefficients for the organic components at the temperature of the offgases determine the concentrations of organic components in the condensate flow. The equations for these calculations are identical to the equations for E-C-1 and E-C-2. The E-C-3 vacuum in an input value shown in Table 2B-4.

Stream 10, Condensate Flow from Tank C-100: The water flow rate for this stream is the sum of condensate flows from Streams 5, 7, and 9 minus a small vapor loss to Stream 32, the air exhaust flow from C-100. The condensate concentrations for radionuclides, inorganics, and organics are assumed to be in equilibrium with the concentrations in the exhaust airflow, Stream 32. The equations for calculating these concentrations are identical to the equations used for E-C-2, E-C-2, and E-C-3. Similarly, the pure water partition coefficients are used for radionuclide and inorganic components. As before, the organic concentrations in the condensate flow use the pure component vapor pressure and activity coefficients to calculate the concentrations. A heat transfer calculation for tank TK-C-100 is not done because the tank temperature is assumed to be near room temperature. There are no cooling or steam coils for tank TK-C-100.

Table 2B-1, Sheet 7

Stream 11, Condensate Flow to Liquid Effluent Retention Facility (LERF): All flow values for this stream are identical with the flow values of Stream 10 except for the total dissolved solid,

^{90}Sr, ^{134}Cs, ^{135}Cs, and ^{137}Cs values. The filter efficiency of the F-C-1 filter, a constant from page C-1 (95%), removes part of the total dissolved solids from Stream 10.

Stream 12, Organic Flow to Tank TK-241-AW-102: No flow values are placed in this column because the organic overflow back to TK-241-AW-102 is unknown and variable. Periodic overflow from tank TK-C-100 to tank TK-241-AW-102 is requested by engineering when an organic layer is suspected or detected in tank TK-C-100.

Streams 13 and 14, Regeneration Eluant Flows for IX-D-1: Ion exchange column IX-D-1 is not used and its removal from the 242-A Evaporator is planned.

Stream 15, Inlet Airflow for the Vessel Ventilation System: A damper controls airflow into the vessel ventilation system to control vacuum downstream of the E-C-3 condenser. This airflow contains ambient water vapor. The average air temperature and humidity values from the Hanford Meteorological measurement for the 46-year period prior to development of the flow sheet were used as the values for this flow: 10 EC (50 EF) and 50% relative humidity. The flow rate is an input value (500 std/ft^3/min) on the constant table, Table 2B-4.

Stream 16, Vapor Flow Upstream from the H-C-1 Heater: This gas flow is the sum of gas flows from the E-C-3 condenser and Streams 15 and 32.

Stream 17, AirFlow to F-C-5 High-Efficiency Particulate Air (HEPA) Filters: Stream 16 is heated by the Electric Heater, H-C-1, to 66 EC (150 EF). This value was copied from the previous flow sheet, H-2-39620. The pressure differential for the heater is an input value, 3 in. H_2O, shown on the Table of Constants. The concentration of radionuclide, inorganic or organic components for Stream 17 are identical to the values for Stream 16.

Stream 18, Stack Airflow: The values of this flow are identical to Stream 17 flow rates. The concentrations of most of the radionuclides and organics are lower than Stream 17 because the F-C-5 filter efficiency and differential pressure values are constants input on the Table of Constants. The assumed F-C-5 filter efficiency of 99% removes 99% of the radioactive and inorganic particulates flowing in the combined vapor flows. Only the volatile and semivolatile inorganic and radionuclide components and the organic components are assumed to flow through the filter without being captured. The volatile and semivolatile inorganic and radionuclide components passing through the F-C-5 filter have been identified as ^{3}H, ^{113}Sn, ^{124}Sb, ^{125}Sb, ^{126}Sn, ^{129}I, and NH_4^+.

Stream 19, Steam Flow to the E-A-1 Reboiler: The steam flow rate is an input value from the previous flow sheet H-2-69320 [12,300 Kg/h (27,000 lb steam/hr)]. The steam pressure is also from the previous flow sheet [21 kPa (3 lbf/in^2)] (gauge). The concentrations of radionuclide and inorganic components are input values from an average of samples of the steam condensate (Loll 1990c).

Stream 20, Steam Condensate from the E-A-1 Reboiler: The steam condensate flow rates match the Stream 19 values. This assumes no leaks from the system to either the process streams or the atmosphere.

Table 2B-1, Sheet 13

Stream 21, Raw Water to E-C-1: This flow rate is an input value from the previous flow sheet, H-2-69320 [13,000 L/min (3,500 gal/min)]. The water temperature and components concentration values are input values from an average of samples of the used raw-water flow (Loll 1990a). Heat transfer calculations for the condensate flow (Stream 5) and the vapor flow (Stream 6) are used to estimate the temperature of the used cooling water flowing into Stream 24.

Stream 22, Raw Water to E-C-2: This flow rate is also an input value from the previous flow sheet, H-2-69320 [303 L/min (80 gal/min)]. The temperature and components concentration values are also input values from an average of samples of the used raw-water flow as explained for Stream 21. Heat transfer calculations also estimate the temperature rise of the water exiting E-C-2 to be 11 EC (52 EF) (value below the Joules/min heat transfer rate).

Stream 23, Raw Water to E-C-3: This flow rate is identical to E-C-2 because water flows directly from the E-C-2 raw-water outlet pipe to the E-C-3 inlet raw-water pipe. Heat transferred to the raw water flowing through E-C-3 raises the water temperature above the inlet water temperature approximately 12 EC (54 EF) (value below the Joules/min heat transfer rate).

Stream 24, Used Raw Water to Treated Effluent Disposal Facility (TEDF): This flow is a summation of Streams 21 and 23 subtracting the water leakage rate into E-C-1. The water temperature is calculated using the combined flow rates and temperatures of Streams 21 and 23. The heat transfer value is also the sum of Streams 21 and 23. The component concentrations for this flow are calculated using the concentrations and flow rates of Streams 21 and 23.

Stream 25, J-EC1-1 Steam Jet Stream Flow: The stream flow rate is identical to the steam flow rate on the previous flow sheet, H-2-69320, [309.09 kg/h (680 lb/h)]. Steam pressure is 7.2×20^5 kPa [1×10^5 lbf/in^2 (gauge)]. The radionuclide, inorganic, and organic concentrations are identical to Stream 19.

Stream 26, J-EC2-1 Steam Jet Steam Flow: The steam flow rate is identical to the steam flow rate on the previous flow sheet, H-2-69320, 341 Kg/h (750 lb/h). Stream flow properties are similar to Stream 25.

Stream 27, Air Leakage into E-C-1: Air added to control C-A-1 vessel vacuum flows into E-C-1 and is estimated be 708 L/min (25 std. ft^3/min). The temperature and humidity of the vacuum are the same as Stream 16.

Streams 28 and 29, Steam Flow through H-C-1: These streams no longer have values because the prior vessel ventilation steam heater has been replaced with an electric heater.

Stream 30, Pump P-B-1 Seal Water Leakage Flow: Filtered raw water leaks through the P-B-1 shaft seals at an estimated rate of 0.57 L/min (0.15 gal/min). This value is an input value on the Table of Constants, Table 2B-4. The radionuclide, inorganic and organic concentrations are data from the used raw water samples (Loll 1990a).

Table 2B-1, Sheet 19

Stream 31, Tank P-B-2 Seal Water Leakage Flow: Filtered raw water leaks through the P-B-2 pump shaft seals at an estimated flow rate of 0.38 L/min (0.1 gal/min). This value is also in the Table of Constants and the component concentrations are identical to Stream 30.

Stream 32, Tank TK-C-100 Exhaust Air Flow: The exhaust vapor flow rate from tank TK-C-100 has been estimated to be 708 L/min (25 std. ft^3/min) and the value is in the Table of Constants. The radionuclide, inorganic, and organic components for this stream are in equilibrium with Stream 10. As with E-C-1, E-C-2, and E-C-3, the pure water partition coefficients and activity coefficients are used to calculate the equilibrium concentrations in the gas and liquid flows. The vapor temperature is assumed to be the same as the water temperature in tank TK-C-100.

Table 2B-2, Columns 1 and 2: These two columns contain the component and unit information for the flow sheet. These columns contain similar information found in columns 1 and 2 in Table 2B-1.

Columns 3, 4, 5, 6, and 7: These columns contain the most recent information on component concentrations for the 242-A Evaporator. The column headed "WHC-SD-WM-PSE-008" is from the hazard classification source term document identifying the maximum concentrations to be used for the 242-A Evaporator accident analysis calculations. The column headed "65959-87-720 Starr" was an earlier attempt by J. C. Starr to estimate the source term for the accident analysis calculations. The next three columns are sample averages of three double-shell tanks that contain soluble-shell slurry (DSS) and DSSF product from the 242-A Evaporator (Hendrickson 1990).

Column 8: This column is a repeat of column 9 in Table 2B-3 showing the raw water component concentrations.

Column 9: Blank.

Column 10: This column is an arithmetic average of columns 5, 6, and 7, which have values. A blank space in columns 5, 6, or 7 is not averaged with the other values. If only one value is shown in columns 5, 6, or 7, the value is transferred to column 10.

Column 11: This column is the standard deviation calculated for columns 5, 6, and 7. This value represents a measure of dispersion of the sample data from tanks TK-AN-103, TK-AN-106, and TK-AW-103. Column 11 is blank if columns 5, 6, or 7 have no values or only one value appears in columns 5, 6, or 7.

Column 12: The data in column 11 was multiplied by 70% providing feed stream concentrations for the flow sheet assuming a 242-A Evaporator campaign with a waste volume reduction (WVR) of 30%. The flow sheet, therefore, represents current operation of the 242-A Evaporator producing a DSSF product. For some components, the 70% value was adjusted upward slightly to compensate for part of the components being discharged from the 242-A Evaporator with the stack gas and process condensate flows. The adjustment was necessary so that the slurry flow concentrations match the values in column 10. The values in this column were transferred to column 3 in Table 2B-3 providing the feed input data for the flow sheets.

Table 2B-3: The first two columns of these pages contain Nuclide/Chemical and Units columns identical to those in Table 2B-1. The third column is the feed stream data used by column 3 in Table 2B-1. The flow sheet was designed so that this column could be replaced with another feed stream composition, and the spreadsheet would recalculate all o the streams using the information in this column.

Column 4: The "Mole Weight" column contains the molecular weight values of the components. The Mole Weight column is used to calculate molarity of the inorganics in the feed and slurry streams. Stream molarity values are also used to calculate the boiling point of the slurry flow and the density of the feed and slurry streams.

Column 5: The "Ion Charge" column contains the plus or minus ionic charge of the inorganic species in solution. This column was originally placed in the flow sheet to determine total ionic strength of the ions in solution. The information in this column is no longer being used by the flow sheet.

Columns 6 and 7: "C-A-1 Vapor Space Partition Coefficient" and "Condensate Partition Coefficient" are the values used in the equilibrium equations to calculate the vapor space and liquid concentrations of the radionuclides and inorganic components. These values were derived from sample analyses of the 702-A Ventilation System Flowsheet (Bendixsen 1990). More recent data have been used to further refine the numbers (DOE-RL 1990).

Table 2B-3, Sheet 3, Columns 5, 6, and 7: Titles for these columns for organic compounds are "Gamma," "A," and "B." Gamma is the activity coefficient calculated using the equations for organic components in a water system (Pierotti et al. 1959). The activity coefficient is used to calculate the mole fraction of the organic in equilibrium with the mole fraction of organic in the liquid phase. "A" and "B" are the factors used in the regression equation for calculating the pure component vapor pressure. The equation is an exponential equation of the form: Vapor Pressure (mm Hg) = $Exp^{(A/C+B)}$ where C is the temperature in EC. For some low boiling point organics, C is EC + 273.12 (EK). The pure component vapor pressure equation is derived by selecting vapor pressure data in the 30 to 50 EC range (Perry 1973) and calculating the regression equation.

Table 2B-3, Sheet 1, Column 8: The "242-A Stack and Process Condensate Decontamination Factors" column calculates the decontamination factor by dividing the feed concentration by the effluent concentration. The evaporation stack decontamination values are generally very high because the gas flow exiting from the C-A-1 vessel passes through three condensers, a demister, and double HEPA filters before discharging from the stack. A majority of the components are removed from the stack gas flow by the vessel ventilation process.

On the flow sheet, the lower number for each pair of values is the decontamination factor for the process condensate product flow. The decontamination factor for the process condensate is influenced by the scrubbing efficiency of the C-A-1 vessel demister pads.

Columns 9 and 10: These columns contain the concentrations of radionuclides, inorganic, and organic components in the raw water and stream flows entering the 242-A Evaporator. This data is an average of sample analysis when the 242-A Evaporator facility was operating in 1985 through 1987 and 1989 through 1990 respectively (Loll 1990a and Loll 1990c).

Table 2B-4: This page contains the Table of Constants used by the flow sheet. These values can be changed by the user when new information concerning the process becomes available. Changing one of these values changes the value of every place the value is used in the flow sheet.

2B.2 REFERENCES

Bendixsen, 1989

DOE-RL 1990

Hendrickson 1990

Loll 1990a

Loll 1990c

Perry 1973

Pierotti et al. 1959

1

This page intentionally left blank.

2

1

Table 2B-1. Process Flow Sheet for 242-A Evaporator. (24 sheets)

Description	Units	Feed	Slurry	FRW	C-A-1 Vapor	E-C-1 Cond.	E-C-1 Vapor	E-C-2 Cond.	E-C-2 Vapor	E-C-3 Cond	Process Cond
Stream Number		1	2	3	4	5	6	7	8	9	10
Form		Liquid	Liquid	Liquid	Gas	Liquid	Gas	Liquid	Gas	Liquid	Liquid
L/min	Total	3.4E+02	2.4E+02	7.6E+00	2.4E+06	1.1E+02	2.1E+04	5.2E+00	1.6E+04	5.6E+00	1.2E+02
Batch	L/Batch										
Temperature	C	4.3E+01	5.2E+01	2.2E+01	3.8E+01	2.5E+01	2.9E+01	3.9E+01	3.5E+01	6.6E+01	2.8E+01
Sp. Gr.	unitless	1.3E+00	1.4E+00	1.0E+00	5.8E-02	1.0E+00	3.6E-02	9.9E-01	4.8E-02	9.8E-01	1.0E+00
Abs. Pressure	Torr	2.6E+03	2.6E+03	7.6E+02	5.0E+01	7.6E+02	3.0E+01	7.6E+02	4.1E+01	7.6E+02	7.6E+02
Abs. Pressure	Pa	3.4E+05	3.4E+05	1.0E+05	6.7E+03	1.0E+05	4.0E+03	1.0E+05	5.5E+03	1.0E+05	1.0E+05
pH		1.3E+01	1.3E+01	7.0E+00		1.0E+01		1.0E+01		1.0E+01	1.0E+01
TOC	mg/L	3.3E+03	4.6E+03	1.7E+00	1.3E-02	2.9E+02	2.9E-03	1.3E+01	1.3E-04	1.5E+00	2.6E+02
TOC	mg/min	1.1E+06	1.1E+06	1.3E+01	3.2E+04	3.2E+04	6.2E+01	6.6E+01	2.1E+00	8.3E+00	3.2E+04
TDS	mg/L	0.0E+00	0.0E+00	0.0E+00	0.0E+00	0.0E+00	0.0E+00	7.3E+01	7.3E-04	7.9E+01	6.7E+00
TDS	mg/min	0.0E+00	0.0E+00	0.0E+00	0.0E+00	0.0E+00	0.0E+00	3.8E+02	1.2E+01	4.4E+02	8.2E+02
H2O	L/min	3.5E+02	2.4E+02	7.6E+00	2.4E+06	1.1E+02	8.5E+02	5.2E+00	9.1E+03	5.6E+00	1.2E+02
H2O	kg/min	3.4E+02	2.4E+02	7.6E+00	1.1E+02	1.1E+02	2.4E-02	5.1E+00	3.5E-02	5.5E+00	1.2E+02
Air	L/min	0.0E+00	0.0E+00	0.0E+00	4.9E+02	0.0E+00	2.1E+04	0.0E+00	1.5E+04	0.0E+00	0.0E+00
Air	kg/min	0.0E+00	0.0E+00	0.0E+00	3.7E-02	0.0E+00	9.5E-01	0.0E+00	9.5E-01	0.0E+00	0.0E+00
Heat	Joules/min		1.0E+07		2.7E+06	2.7E+08	1.7E+04	1.6E+07	3.0E+04	1.6E+07	
Alpha	uCi/ml	0.0E+00	2.9E-11	8.1E-10	2.0E-18	6.0E-14	6.0E-19	6.2E-10	6.2E-15	6.7E-10	5.7E-11
Alpha	uCi/min	0.0E+00	6.9E-06	6.2E-06	6.6E-09	6.7E-09	1.3E-11	3.2E-06	1.0E-07	3.8E-06	7.0E-06
Beta	uCi/ml	0.0E+00	3.6E-10	1.0E-08	3.5E-17	7.5E-13	7.5E-18	3.0E-14	3.0E-19	8.6E-16	6.8E-13
Beta	uCi/min	0.0E+00	8.6E-05	7.7E-05	8.3E-08	8.3E-08	1.6E-10	1.6E-10	4.9E-12	4.8E-12	8.3E-08
3H	uCi/ml	1.8E-02	1.0E-02	0.0E+00	1.5E-06	3.2E-02	2.9E-06	9.5E-03	8.6E-07	2.4E-03	3.0E-02
3H	uCi/min	6.0E+03	2.4E+03	0.0E+00	3.6E+03	3.6E+03	6.3E+01	4.9E+01	1.4E+01	1.3E+01	3.6E+03
14C	uCi/ml	9.7E-04	1.4E-03	0.0E+00	1.4E-10	3.8E-06	3.0E-11	1.2E-07	1.2E-12	7.6E-09	2.7E-06
14C	uCi/min	3.3E+02	3.3E+02	0.0E+00	3.3E-01	3.3E-01	6.4E-04	6.4E-04	2.0E-05	4.3E-05	3.3E-01
60Co	uCi/ml	2.3E-02	3.3E-02	0.0E+00	3.3E-09	7.1E-05	7.1E-10	2.8E-06	2.8E-11	8.2E-08	6.4E-05
60Co	uCi/min	7.8E+03	7.8E+03	0.0E+00	7.9E+00	7.8E+00	1.5E-02	1.5E-02	4.6E-04	4.6E-04	7.9E+00
63Ni	uCi/ml	0.0E+00	0.0E+00	0.0E+00	0.0E+00	0.0E+00	0.0E+00	0.0E+00	0.0E+00	0.0E+00	0.0E+00
63Ni	uCi/min	0.0E+00	0.0E+00	0.0E+00	0.0E+00	0.0E+00	0.0E+00	0.0E+00	0.0E+00	0.0E+00	0.0E+00
79Se	uCi/ml	1.0E-02	1.5E-02	0.0E+00	1.5E-09	3.2E-05	3.2E-10	1.3E-06	1.3E-11	3.7E-08	2.9E-05
79Se	uCi/min	3.5E+03	3.5E+03	0.0E+00	3.5E+00	3.5E+00	6.8E-03	6.6E-03	2.1E-04	2.0E-04	3.5E+03
90Sr	uCi/ml	7.6E+00	1.1E+01	0.0E+00	4.7E-09	1.0E-04	5.6E-11	2.3E-07	1.3E-13	8.8E-10	9.2E-05
90Sr	uCi/min	2.6E+06	2.6E+06	0.0E+00	1.1E+01	1.1E+01	1.2E-03	1.2E-03	2.1E-06	4.9E-06	1.1E+01
93Zr	uCi/ml	0.0E+00	0.0E+00	0.0E+00	0.0E+00	0.0E+00	0.0E+00	0.0E+00	0.0E+00	0.0E+00	0.0E+00
93Zr	uCi/min	0.0E+00	0.0E+00	0.0E+00	0.0E+00	0.0E+00	0.0E+00	0.0E+00	0.0E+00	0.0E+00	0.0E+00
94Nb	uCi/ml	1.7E-02	2.5E-02	0.0E+00	2.5E-09	5.3E-05	5.3E-10	2.1E-06	2.1E-11	6.1E-08	4.8E-05
94Nb	uCi/min	5.9E+03	5.8E+03	0.0E+00	5.9E+00	5.9E+00	1.1E-02	1.1E-02	3.4E-04	3.4E-04	5.9E+00
99Tc	uCi/ml	8.5E-02	1.2E-01	0.0E+00	1.2E-08	2.6E-04	2.6E-09	1.1E-05	1.1E-10	3.0E-07	2.4E-04
99Tc	uCi/min	2.9E+04	2.9E+04	0.0E+00	2.9E+01	2.9E+01	5.6E-02	5.4E-02	1.7E-03	1.7E-03	2.9E+01
106Ru	uCi/ml	7.0E+00	1.0E+01	0.0E+00	1.3E-09	2.5E-05	1.7E-11	7.2E-08	4.5E-14	1.3E-10	2.5E-05
106Ru	uCi/min	2.4E+06	2.4E+06	0.0E+00	3.1E+00	3.1E+00	3.7E-04	3.7E-04	2.2E-07	7.2E-07	3.1E-00
113Sn	uCi/ml	0.0E+00	0.0E+00	0.0E+00	0.0E+00	0.0E+00	0.0E+00	0.0E+00	0.0E+00	0.0E+00	0.0E+00
113Sn	uCi/min	0.0E+00	0.0E+00	0.0E+00	0.0E+00	0.0E+00	0.0E+00	0.0E+00	0.0E+00	0.0E+00	0.0E+00
124Sb	uCi/ml	0.0E+00	0.0E+00	0.0E+00	0.0E+00	0.0E+00	0.0E+00	0.0E+00	0.0E+00	0.0E+00	0.0E+00
124Sb	uCi/min	0.0E+00	0.0E+00	0.0E+00	0.0E+00	0.0E+00	0.0E+00	0.0E+00	0.0E+00	0.0E+00	0.0E+00
125Sb	uCi/ml	0.0E+00	0.0E+00	0.0E+00	0.0E+00	0.0E+00	0.0E+00	0.0E+00	0.0E+00	0.0E+00	0.0E+00
125Sb	uCi/min	0.0E+00	0.0E+00	0.0E+00	0.0E+00	0.0E+00	0.0E+00	0.0E+00	0.0E+00	0.0E+00	0.0E+00
126Sn	uCi/ml	0.0E+00	0.0E+00	0.0E+00	0.0E+00	0.0E+00	0.0E+00	0.0E+00	0.0E+00	0.0E+00	0.0E+00
126Sn	uCi/min	0.0E+00	0.0E+00	0.0E+00	0.0E+00	0.0E+00	0.0E+00	0.0E+00	0.0E+00	0.0E+00	0.0E+00
129I	uCi/ml	2.7E-04	2.8E-04	0.0E+00	1.0E-08	2.2E-04	1.6E-09	6.3E-06	4.5E-11	1.3E-07	2.0E-04
129I	uCi/min	9.2E+01	6.8E+01	0.0E+00	2.4E+01	2.4E+01	3.3E-02	3.3E-02	7.3E-04	7.3E-04	2.4E+01
134Cs	uCi/ml	2.0E+00	2.9E+00	0.0E+00	6.2E-08	1.8E-03	4.1E-10	1.7E-06	3.9E-13	1.1E-09	1.6E-03
134Cs	uCi/min	6.8E+05	6.8E+05	0.0E+00	2.0E+02	2.0E+02	8.8E-03	8.8E-03	6.4E-06	6.4E-06	2.0E+02
135Cs	uCi/ml	0.0E+00	0.0E+00	0.0E+00	0.0E+00	0.0E+00	0.0E+00	0.0E+00	0.0E+00	0.0E+00	0.0E+00
135Cs	uCi/min	0.0E+00	0.0E+00	0.0E+00	0.0E+00	0.0E+00	0.0E+00	0.0E+00	0.0E+00	0.0E+00	0.0E+00
137Cs	uCi/ml	3.5E+02	5.1E+02	0.0E+00	5.5E-10	1.2E-05	3.3E-12	1.4E-08	3.8E-15	1.1E-11	1.1E-05
137Cs	uCi/min	1.2E+08	1.2E+08	0.0E+00	1.3E+00	1.3E+00	7.0E-05	7.0E-05	6.1E-08	6.1E-08	1.3E+00
144Ce	uCi/ml	0.0E+00	0.0E+00	0.0E+00	0.0E+00	0.0E+00	0.0E+00	0.0E+00	0.0E+00	0.0E+00	0.0E+00
144Ce	uCi/min	0.0E+00	0.0E+00	0.0E+00	0.0E+00	0.0E+00	0.0E+00	0.0E+00	0.0E+00	0.0E+00	0.0E+00
147Pm	uCi/ml	0.0E+00	0.0E+00	0.0E+00	0.0E+00	0.0E+00	0.0E+00	0.0E+00	0.0E+00	0.0E+00	0.0E+00
147Pm	uCi/min	0.0E+00	0.0E+00	0.0E+00	0.0E+00	0.0E+00	0.0E+00	0.0E+00	0.0E+00	0.0E+00	0.0E+00
151Sm	uCi/ml	0.0E+00	0.0E+00	0.0E+00	0.0E+00	0.0E+00	0.0E+00	0.0E+00	0.0E+00	0.0E+00	0.0E+00
151Sm	uCi/min	0.0E+00	0.0E+00	0.0E+00	0.0E+00	0.0E+00	0.0E+00	0.0E+00	0.0E+00	0.0E+00	0.0E+00
155Eu	uCi/ml	0.0E+00	0.0E+00	0.0E+00	0.0E+00	0.0E+00	0.0E+00	0.0E+00	0.0E+00	0.0E+00	0.0E+00
155Eu	uCi/min	0.0E+00	0.0E+00	0.0E+00	0.0E+00	0.0E+00	0.0E+00	0.0E+00	0.0E+00	0.0E+00	0.0E+00
226Ra	uCi/ml	0.0E+00	0.0E+00	0.0E+00	0.0E+00	0.0E+00	0.0E+00	0.0E+00	0.0E+00	0.0E+00	0.0E+00

2

Table 2B-1. Process Flow Sheet for 242-A Evaporator. (24 sheets)

Description	Units	Feed	Slurry	FRx	C-A-1 Vapor	E-C-1 Cond.	E-C-1 Vapor	E-C-2 Cond.	E-C-2 Vapor	E-C-3 Cond.	Process Cond.
Stream Number		1	2	3	4	5	6	7	8	9	10
226Ra	uCi/min	0.0E+00	0.0E+00	0.0E+00	0.0E+00	0.0E+00	0.0E+00	0.0E+00	0.0E+00	0.0E+00	0.0E+00
230Th	uCi/ml	0.0E+00	0.0E+00	0.0E+00	0.0E+00	0.0E+00	0.0E+00	0.0E+00	0.0E+00	0.0E+00	0.0E+00
230Th	uCi/min	0.0E+00	0.0E+00	0.0E+00	0.0E+00	0.0E+00	0.0E+00	0.0E+00	0.0E+00	0.0E+00	0.0E+00
233U	uCi/ml	0.0E+00	0.0E+00	0.0E+00	0.0E+00	0.0E+00	0.0E+00	0.0E+00	0.0E+00	0.0E+00	0.0E+00
233U	uCi/min	0.0E+00	0.0E+00	0.0E+00	0.0E+00	0.0E+00	0.0E+00	0.0E+00	0.0E+00	0.0E+00	0.0E+00
234U	uCi/ml	2.6E-05	3.6E-05	0.0E+00	3.7E-12	7.8E-08	7.8E-13	3.3E-09	3.3E-14	2.9E-10	7.2E-08
234U	uCi/min	8.7E+00	8.7E+00	0.0E+00	8.7E-03	8.7E-03	1.7E-05	1.7E-05	5.4E-07	1.6E-06	8.7E-03
235U	uCi/ml	1.3E-06	1.8E-06	0.0E+00	1.8E-13	3.9E-09	3.9E-14	1.6E-10	1.6E-15	4.5E-12	3.5E-09
235U	uCi/min	4.3E-01	4.3E-01	0.0E+00	4.3E-04	4.3E-04	8.3E-07	8.1E-07	2.5E-08	2.5E-08	4.3E-04
238U	uCi/ml	9.3E-06	1.3E-05	0.0E+00	1.3E-12	2.9E-08	2.9E-13	1.3E-09	1.3E-14	2.1E-10	2.6E-08
238U	uCi/min	3.2E+00	3.2E+00	0.0E+00	3.2E-03	3.2E-03	6.1E-06	6.8E-06	2.1E-07	1.2E-06	3.2E-03
237Np	uCi/ml	4.4E-05	6.3E-05	0.0E+00	6.3E-12	1.4E-07	1.4E-12	5.5E-09	5.5E-14	1.6E-10	1.2E-07
237Np	uCi/min	1.5E+01	1.5E+01	0.0E+00	1.5E-02	1.5E-02	2.9E-05	2.8E-05	8.8E-07	8.8E-07	1.5E-02
238Pu	uCi/ml	5.1E-04	7.3E-04	0.0E+00	2.0E-14	4.3E-10	8.9E-16	3.6E-12	7.6E-18	2.2E-14	3.9E-10
238Pu	uCi/min	1.7E+02	1.7E+02	0.0E+00	4.7E-05	4.7E-05	1.9E-08	1.9E-08	1.2E-10	1.2E-10	4.7E-05
239Pu	uCi/ml	1.1E-03	1.5E-03	0.0E+00	4.1E-14	8.8E-10	1.8E-15	7.6E-12	1.6E-17	4.6E-14	8.0E-10
239Pu	uCi/min	3.6E+02	3.6E+02	0.0E+00	9.8E-05	9.8E-05	3.9E-08	3.9E-08	2.5E-10	2.5E-10	9.8E-05
240Pu	uCi/ml	0.0E+00	0.0E+00	0.0E+00	0.0E+00	0.0E+00	0.0E+00	0.0E+00	0.0E+00	0.0E+00	0.0E+00
240Pu	uCi/min	0.0E+00	0.0E+00	0.0E+00	0.0E+00	0.0E+00	0.0E+00	0.0E+00	0.0E+00	0.0E+00	0.0E+00
241Pu	uCi/ml	0.0E+00	0.0E+00	0.0E+00	0.0E+00	0.0E+00	0.0E+00	0.0E+00	0.0E+00	0.0E+00	0.0E+00
241Pu	uCi/min	0.0E+00	0.0E+00	0.0E+00	0.0E+00	0.0E+00	0.0E+00	0.0E+00	0.0E+00	0.0E+00	0.0E+00
241Am	uCi/ml	1.5E-03	2.2E-03	0.0E+00	1.6E-13	3.3E-09	6.8E-15	2.8E-11	5.7E-17	1.7E-13	3.0E-09
241Am	uCi/min	5.2E+02	5.2E+02	0.0E+00	3.7E-04	3.7E-04	1.5E-07	1.5E-07	9.3E-10	9.2E-10	3.7E-04
243Am	uCi/ml	0.0E+00	0.0E+00	0.0E+00	0.0E+00	0.0E+00	0.0E+00	0.0E+00	0.0E+00	0.0E+00	0.0E+00
243Am	uCi/min	0.0E+00	0.0E+00	0.0E+00	0.0E+00	0.0E+00	0.0E+00	0.0E+00	0.0E+00	0.0E+00	0.0E+00
244Cm	uCi/ml	1.7E-04	2.4E-04	0.0E+00	2.4E-11	5.2E-07	5.2E-12	2.1E-08	2.1E-13	6.0E-10	4.8E-07
244Cm	uCi/min	5.8E+01	5.8E+01	0.0E+00	5.8E-02	5.8E-02	1.1E-04	1.1E-04	3.4E-06	3.4E-06	5.8E-02
AlO2-	mg/L	2.2E+04	3.2E+04	0.0E+00	2.3E-03	4.5E+01	4.5E-04	1.8E+00	1.8E-05	5.3E-02	4.1E+01
AlO2-	mg/min	7.6E+06	7.5E+06	0.0E+00	5.1E+03	5.0E+03	9.8E+00	9.5E+00	3.0E-01	2.9E-01	5.1E+03
NH4+	mg/L	9.3E+02	1.3E+02	0.0E+00	1.2E-01	2.3E+03	1.1E+00	1.9E+03	9.1E-01	2.1E+03	2.3E+03
NH4+	mg/min	3.2E+05	3.2E+04	0.0E+00	2.8E+05	2.6E+05	2.4E+04	9.7E+03	1.5E+04	1.2E+04	2.8E+05
Sb	mg/L	0.0E+00	0.0E+00	0.0E+00	0.0E+00	0.0E+00	0.0E+00	0.0E+00	0.0E+00	0.0E+00	0.0E+00
Sb	mg/min	0.0E+00	0.0E+00	0.0E+00	0.0E+00	0.0E+00	0.0E+00	0.0E+00	0.0E+00	0.0E+00	0.0E+00
As	mg/L	0.0E+00	0.0E+00	0.0E+00	0.0E+00	0.0E+00	0.0E+00	0.0E+00	0.0E+00	0.0E+00	0.0E+00
As	mg/min	0.0E+00	0.0E+00	0.0E+00	0.0E+00	0.0E+00	0.0E+00	0.0E+00	0.0E+00	0.0E+00	0.0E+00
Ba	mg/L	9.8E+00	1.4E+01	3.0E-02	1.4E-06	3.0E-02	3.0E-07	3.1E-02	3.1E-07	3.2E-02	3.0E-02
Ba	mg/min	3.3E+03	3.3E+03	2.3E-01	3.3E+00	3.3E+00	6.5E-03	1.6E-01	5.1E-03	1.8E-01	3.7E+00
Be	mg/L	0.0E+00	0.0E+00	0.0E+00	0.0E+00	0.0E+00	0.0E+00	0.0E+00	0.0E+00	0.0E+00	0.0E+00
Be	mg/min	0.0E+00	0.0E+00	0.0E+00	0.0E+00	0.0E+00	0.0E+00	0.0E+00	0.0E+00	0.0E+00	0.0E+00
Bi	mg/L	0.0E+00	0.0E+00	0.0E+00	0.0E+00	0.0E+00	0.0E+00	0.0E+00	0.0E+00	0.0E+00	0.0E+00
Bi	mg/min	0.0E+00	0.0E+00	0.0E+00	0.0E+00	0.0E+00	0.0E+00	0.0E+00	0.0E+00	0.0E+00	0.0E+00
B	mg/L	1.2E+01	1.7E+01	0.0E+00	1.7E-06	3.7E-02	3.7E-07	1.9E-02	1.9E-07	1.9E-02	3.5E-02
B	mg/min	4.1E+03	4.0E+03	0.0E+00	4.1E+00	4.1E+00	7.9E-03	2.0E-01	3.1E-03	1.1E-01	4.3E+00
Ca	mg/L	5.1E+01	7.3E+01	1.9E+01	7.3E-06	1.6E-01	1.6E-06	1.9E+01	1.9E-04	2.0E+01	1.9E+00
Ca	mg/min	1.7E+04	1.7E+04	1.5E+02	1.8E+01	1.8E+01	3.5E-02	9.6E+01	3.0E+00	1.1E+02	2.3E+02
Cd	mg/L	1.1E+01	1.6E+01	2.0E-03	1.6E-06	3.4E-02	3.4E-07	1.4E-03	1.4E-08	4.0E-05	3.1E-02
Cd	mg/min	3.8E+03	3.8E+03	1.5E-02	3.8E+00	3.8E+00	7.4E-03	7.2E-03	2.2E-04	2.2E-04	3.8E+00
CO3=	mg/L	8.7E+03	1.2E+04	0.0E+00	1.2E-03	2.7E+01	2.7E-04	1.1E+00	1.1E-05	3.1E-02	2.4E+01
CO3=	mg/min	2.9E+06	2.9E+06	0.0E+00	3.0E+03	3.0E+03	5.7E+00	5.5E+00	1.7E-01	1.7E-01	3.0E+03
Cl-	mg/L	4.5E+03	6.4E+03	7.8E-01	1.2E-03	2.7E+01	2.2E-05	1.2E+00	9.9E-07	1.1E+00	2.4E+01
Cl-	mg/min	1.5E+06	1.5E+06	6.0E+00	3.0E+03	3.0E+03	4.8E-01	6.1E+00	1.6E-02	6.3E+00	3.0E+03
Cr	mg/L	4.2E+02	6.0E+02	1.0E-02	1.7E-06	3.7E-02	4.5E-08	1.9E-04	2.3E-10	6.6E-07	3.4E-02
Cr	mg/min	1.4E+05	1.4E+05	7.9E-02	4.1E+00	4.1E+00	9.7E-04	9.7E-04	3.7E-06	3.7E-06	4.1E+00
Cu	mg/L	4.8E+00	6.9E+00	7.4E-02	6.9E-07	1.5E-02	1.5E-07	1.1E-02	1.1E-07	1.1E-02	1.5E-02
Cu	mg/min	1.6E+03	1.6E+03	5.6E-01	1.7E+00	1.7E+00	3.2E-03	5.8E-02	1.8E-03	6.4E-02	1.8E+00
CN-	mg/L	3.4E+01	4.8E+01	0.0E+00	4.8E-06	1.0E-01	1.0E-06	4.2E-03	4.2E-08	1.2E-04	9.5E-02
CN-	mg/min	1.2E+04	1.2E+04	0.0E+00	1.2E+01	1.2E+01	2.2E-02	2.2E-02	6.8E-04	6.7E-04	1.2E+01
F-	mg/L	2.7E+02	3.9E+02	0.0E+00	1.6E-06	3.5E-02	5.7E-08	1.3E-01	2.1E-07	1.3E-01	4.3E-02
F-	mg/min	9.2E+04	9.2E+04	0.0E+00	3.9E+00	3.9E+00	1.2E-03	6.6E-01	3.4E-03	7.4E-01	5.3E+00
Fe	mg/L	2.8E+01	3.9E+01	1.0E-01	3.9E-06	8.5E-02	8.5E-07	8.4E-02	8.4E-07	8.7E-02	8.5E-02
Fe	mg/min	9.4E+03	9.4E+03	7.9E-01	9.4E+00	9.4E+00	1.8E-02	4.4E-01	1.4E-02	4.9E-01	1.0E+01
H2	mg/L	1.6E-11	1.7E-11	0.0E+00	9.1E-06	1.9E-09	1.0E-07	2.5E-09	1.3E-07	2.1E-08	2.0E-11
H2	mg/min	5.3E-09	4.0E-09	0.0E+00	2.2E-03	2.1E-07	2.2E-03	1.3E-08	2.2E-03	1.2E-07	2.4E-09
OH-	mg/L	4.9E+04	7.0E+04	0.0E+00	7.0E-03	1.5E+02	1.5E-03	6.0E+00	6.0E-05	1.7E-01	1.4E+02
OH-	mg/min	1.7E+07	1.7E+07	0.0E+00	1.7E+04	1.7E+04	3.2E+01	3.1E+01	9.7E-01	9.7E-01	1.7E+04
Pb	mg/L	5.1E+01	7.0E+01	1.3E-02	2.4E-04	5.1E+00	1.2E-06	1.0E-02	2.4E-09	5.6E-03	4.6E+00

1
2

Table 2B-1. Process Flow Sheet for 242-A Evaporator. (24 sheets)

Description	Units	Feed	Slurry	FAr	E-A-1 Vapor	E-C-1 Cond.	E-C-1 Vapor	E-C-2 Cond.	E-C-2 Vapor	E-C-3 Cond.	Process Cond.
Stream Number		1	2	3	4	5	6	7	8	9	10
Pb	mg/min	1.7E+04	1.7E+04	9.6E-02	5.6E+02	5.6E+02	2.5E-02	5.4E-02	3.9E-05	3.1E-02	5.6E+02
Mg	mg/L	2.0E+01	2.9E+01	4.3E+00	2.9E-06	6.4E-02	6.4E-07	4.4E+00	4.4E-05	4.7E+00	4.6E-01
Mg	mg/min	6.9E+03	6.9E+03	3.3E+01	7.0E+00	7.1E+00	1.4E-02	2.3E+01	7.1E-01	2.6E+01	5.6E+01
Mn	mg/L	2.0E+01	2.9E+01	1.1E-02	2.9E-06	6.2E-02	6.2E-07	1.6E-02	1.6E-07	1.5E-02	5.8E-02
Mn	mg/min	6.9E+03	6.9E+03	8.1E-02	6.9E+00	6.9E+00	1.3E-02	8.4E-02	2.6E-03	8.3E-02	7.1E+00
Hg	mg/L	5.6E+00	8.0E+00	0.0E+00	8.0E-07	1.7E-02	1.7E-07	7.9E-04	7.9E-09	1.3E-04	1.6E-02
Hg	mg/min	1.9E+03	1.9E+03	0.0E+00	1.9E+00	1.9E+00	3.7E-03	4.1E-03	1.3E-04	7.2E-04	1.9E+00
Mo	mg/L	4.2E+01	6.0E+01	0.0E+00	6.0E-06	1.3E-01	1.3E-06	5.2E-03	5.2E-08	1.5E-04	1.2E-01
Mo	mg/min	1.4E+04	1.4E+04	0.0E+00	1.4E+01	1.4E+01	2.8E-02	2.7E-02	8.4E-04	8.3E-04	1.4E-01
Ni	mg/L	2.8E+01	4.0E+01	1.1E-02	4.0E-06	8.6E-02	8.6E-07	3.5E-03	3.5E-08	1.0E-04	7.9E-02
Ni	mg/min	9.5E+03	9.5E+03	8.5E-02	9.6E+00	9.5E+00	1.8E-02	1.8E-02	5.6E-04	5.6E-04	9.6E+00
NO3-	mg/L	1.2E+05	1.8E+05	1.2E+00	3.1E-02	6.7E+02	4.2E-04	2.3E+00	1.4E-06	5.6E-01	6.1E+02
NO3-	mg/min	4.2E+07	4.2E+07	9.0E+00	7.4E+04	7.4E+04	8.9E+00	1.2E+01	2.3E-02	3.1E+00	7.4E+04
NO2-	mg/L	6.0E+04	8.6E+04	0.0E+00	3.6E-03	7.7E+01	4.8E-05	2.0E-01	1.2E-07	3.6E-04	7.0E+01
NO2-	mg/min	2.1E+07	2.0E+07	0.0E+00	8.6E+03	8.6E+03	1.0E+00	1.0E+00	2.0E-03	2.0E-03	8.6E+03
PO4	mg/L	3.7E+03	5.3E+03	0.0E+00	5.3E-04	1.1E+01	1.1E-04	4.6E-01	4.6E-06	1.3E-02	1.0E+01
PO4	mg/min	1.3E+06	1.3E+06	0.0E+00	1.3E+03	1.3E+03	2.4E+00	2.4E+00	7.4E-02	7.3E-02	1.3E+03
P	mg/L	3.4E+03	4.9E+03	0.0E+00	4.9E-04	1.1E+01	1.1E-04	4.2E-01	4.2E-06	1.2E-02	9.6E+00
P	mg/min	1.2E+06	1.2E+06	0.0E+00	1.2E+03	1.2E+03	2.3E+00	2.2E+00	6.8E-02	6.8E-02	1.2E+03
K	mg/L	1.3E+04	1.8E+04	8.0E-01	5.1E-04	1.1E+01	1.1E-04	1.2E+00	1.2E-05	7.9E-01	1.0E+01
K	mg/min	4.3E+06	4.3E+06	6.1E+00	1.2E+03	1.2E+03	2.4E+00	6.1E+00	1.9E-01	4.4E+00	1.2E+03
Se	mg/L	0.0E+00	0.0E+00	0.0E+00	0.0E+00	0.0E+00	0.0E+00	0.0E+00	0.0E+00	0.0E+00	0.0E+00
Se	mg/min	0.0E+00	0.0E+00	0.0E+00	0.0E+00	0.0E+00	0.0E+00	0.0E+00	0.0E+00	0.0E+00	0.0E+00
Si	mg/L	1.3E+02	1.9E+02	0.0E+00	1.9E-05	4.1E-01	4.1E-06	2.4E+00	2.4E-05	2.6E+00	5.9E-01
Si	mg/min	4.5E+04	4.5E+04	0.0E+00	4.5E+01	4.5E+01	8.8E-02	1.3E+01	3.9E-01	1.5E+01	7.2E+01
Ag	mg/L	0.0E+00	0.0E+00	0.0E+00	0.0E+00	0.0E+00	0.0E+00	0.0E+00	0.0E+00	0.0E+00	0.0E+00
Ag	mg/min	0.0E+00	0.0E+00	0.0E+00	0.0E+00	0.0E+00	0.0E+00	0.0E+00	0.0E+00	0.0E+00	0.0E+00
Na	mg/L	1.7E+05	2.4E+05	2.4E+00	8.0E-04	1.7E+01	1.7E-04	2.6E+00	2.8E-05	2.3E+00	1.6E+01
Na	mg/min	5.7E+07	5.7E+07	1.8E+01	1.9E+03	1.9E+03	3.7E+00	1.5E+01	4.5E-01	1.3E+01	1.9E+03
SO4=	mg/L	2.0E+03	2.9E+03	1.0E+01	2.1E-04	4.5E+00	4.1E-06	1.0E+01	9.5E-06	1.1E+01	5.0E+00
SO4=	mg/min	6.9E+05	6.9E+05	7.8E+01	5.0E+02	5.0E+02	8.7E-02	5.4E+01	1.5E-01	6.0E+01	6.1E+02
S-	mg/L	0.0E+00	0.0E+00	0.0E+00	0.0E+00	0.0E+00	0.0E+00	0.0E+00	0.0E+00	0.0E+00	0.0E+00
S-	mg/min	0.0E+00	0.0E+00	0.0E+00	0.0E+00	0.0E+00	0.0E+00	0.0E+00	0.0E+00	0.0E+00	0.0E+00
Ti	mg/L	0.0E+00	0.0E+00	0.0E+00	0.0E+00	0.0E+00	0.0E+00	0.0E+00	0.0E+00	0.0E+00	0.0E+00
Ti	mg/min	0.0E+00	0.0E+00	0.0E+00	0.0E+00	0.0E+00	0.0E+00	0.0E+00	0.0E+00	0.0E+00	0.0E+00
W	mg/L	1.5E+02	2.1E+02	0.0E+00	2.1E-05	4.5E-01	4.5E-06	1.8E-02	1.8E-07	5.2E-04	4.1E-01
W	mg/min	5.0E+04	5.0E+04	0.0E+00	5.0E+01	5.0E+01	9.7E-02	9.4E-02	2.9E-03	2.9E-03	5.0E+01
U	mg/L	5.3E+01	7.5E+01	6.4E+04	7.5E-06	1.6E-01	1.6E-06	7.0E-03	7.0E-08	7.3E-04	1.5E-01
U	mg/min	1.8E+04	1.8E+04	4.9E-03	1.8E+01	1.8E+01	3.5E-02	3.6E-02	1.1E-03	4.1E-03	1.8E+01
V	mg/L	0.0E+00	0.0E+00	0.0E+00	0.0E+00	0.0E+00	0.0E+00	0.0E+00	0.0E+00	0.0E+00	0.0E+00
V	mg/min	0.0E+00	0.0E+00	0.0E+00	0.0E+00	0.0E+00	0.0E+00	0.0E+00	0.0E+00	0.0E+00	0.0E+00
Zn	mg/L	3.8E+01	4.8E+01	4.8E-02	4.8E-06	1.0E-01	1.0E-06	2.2E-02	2.2E-07	2.0E-02	9.6E-02
Zn	mg/min	1.1E+04	1.1E+04	3.6E-01	1.1E+01	1.1E+01	2.2E-02	1.1E-01	3.6E-03	1.1E-01	1.2E+01
Zr	mg/L	0.0E+00	0.0E+00	0.0E+00	0.0E+00	0.0E+00	0.0E+00	0.0E+00	0.0E+00	0.0E+00	0.0E+00
Zr	mg/min	0.0E+00	0.0E+00	0.0E+00	0.0E+00	0.0E+00	0.0E+00	0.0E+00	0.0E+00	0.0E+00	0.0E+00
Acetone	mg/L	4.5E-01	1.2E-02	0.0E+00	6.5E-05	1.0E+00	1.7E-03	6.7E-01	2.0E-03	7.1E-01	1.0E+00
Acetone	mg/min	1.5E+02	2.8E+00	0.0E+00	1.5E+02	1.1E+02	3.7E+01	3.5E+00	3.3E+01	5.1E+00	1.2E+02
Alkyl, hydroxy-	mg/L	1.3E+00	1.8E+00	0.0E+00	5.8E-06	1.3E-01	9.8E-08	4.1E-04	6.7E-10	1.9E-06	1.1E-01
methyl benzene	mg/min	4.4E+02	4.3E+02	0.0E+00	1.4E+01	1.4E+01	2.1E-03	2.1E-03	1.1E-05	1.1E-05	1.4E+01
Benzyl alcohol	mg/L	0.0E+00	0.0E+00	0.0E+00	0.0E+00	0.0E+00	0.0E+00	0.0E+00	0.0E+00	0.0E+00	0.0E+00
Benzyl alcohol	mg/min	0.0E+00	0.0E+00	0.0E+00	0.0E+00	0.0E+00	0.0E+00	0.0E+00	0.0E+00	0.0E+00	0.0E+00
Benzaldehyde	mg/L	0.0E+00	0.0E+00	0.0E+00	0.0E+00	0.0E+00	0.0E+00	0.0E+00	0.0E+00	0.0E+00	0.0E+00
Benzaldehyde	mg/min	0.0E+00	0.0E+00	0.0E+00	0.0E+00	0.0E+00	0.0E+00	0.0E+00	0.0E+00	0.0E+00	0.0E+00
Benzene	mg/L	0.0E+00	0.0E+00	0.0E+00	0.0E+00	0.0E+00	0.0E+00	0.0E+00	0.0E+00	0.0E+00	0.0E+00
Benzene	mg/min	0.0E+00	0.0E+00	0.0E+00	0.0E+00	0.0E+00	0.0E+00	0.0E+00	0.0E+00	0.0E+00	0.0E+00
Bromodichloro-	mg/L	0.0E+00	0.0E+00	0.0E+00	0.0E+00	0.0E+00	0.0E+00	0.0E+00	0.0E+00	0.0E+00	0.0E+00
methane	mg/min	0.0E+00	0.0E+00	0.0E+00	0.0E+00	0.0E+00	0.0E+00	0.0E+00	0.0E+00	0.0E+00	0.0E+00
Bromoform	mg/L	0.0E+00	0.0E+00	0.0E+00	0.0E+00	0.0E+00	0.0E+00	0.0E+00	0.0E+00	0.0E+00	0.0E+00
Bromoform	mg/min	0.0E+00	0.0E+00	0.0E+00	0.0E+00	0.0E+00	0.0E+00	0.0E+00	0.0E+00	0.0E+00	0.0E+00
Butanedioic	mg/L	3.0E+02	4.2E+02	0.0E+00	1.8E-03	3.9E+01	6.8E-05	2.8E-01	7.9E-07	2.3E-03	3.6E+01
Acid	mg/min	1.0E+05	9.9E+04	0.0E+00	4.3E+03	4.3E+03	1.5E+00	1.5E+00	1.3E-02	1.3E-02	4.3E+03
1-Butanol	mg/L	0.0E+00	2.1E-04	1.1E-02	1.9E-08	4.1E-04	8.0E-09	2.9E-05	1.3E-09	3.4E-06	3.7E-04
1-Butanol	mg/min	0.0E+00	4.9E-02	8.4E-02	4.5E-02	4.5E-02	1.7E-04	1.5E-04	2.2E-05	1.9E-05	4.5E-02
2-Butanone	mg/L	0.0E+00	0.0E+00	0.0E+00	0.0E+00	0.0E+00	0.0E+00	0.0E+00	0.0E+00	0.0E+00	0.0E+00
2-Butanone	mg/min	0.0E+00	0.0E+00	0.0E+00	0.0E+00	0.0E+00	0.0E+00	0.0E+00	0.0E+00	0.0E+00	0.0E+00

3

1
2

Table 2B-1. Process Flow Sheet for 242-A Evaporator. (24 sheets)

Description	Units	Feed	Slurry	FRW	C-A-1 Vapor	E-C-1 Cond.	E-C-1 Vapor	E-C-2 Cond.	E-C-2 Vapor	E-C-3 Cond.	Process Cond.
Stream Number		1	2	3	4	5	6	7	8	9	10
Butoxy-	mg/L	0.0E+00	0.0E+00	0.0E+00	0.0E+00	0.0E+00	0.0E+00	0.0E+00	0.0E+00	0.0E+00	0.0E+00
diglycol	mg/min	0.0E+00	0.0E+00	0.0E+00	0.0E+00	0.0E+00	0.0E+00	0.0E+00	0.0E+00	0.0E+00	0.0E+00
2-Butoxy-	mg/L	0.0E+00	0.0E+00	0.0E+00	0.0E+00	0.0E+00	0.0E+00	0.0E+00	0.0E+00	0.0E+00	0.0E+00
ethanol	mg/min	0.0E+00	0.0E+00	0.0E+00	0.0E+00	0.0E+00	0.0E+00	0.0E+00	0.0E+00	0.0E+00	0.0E+00
Butoxy-	mg/L	0.0E+00	0.0E+00	0.0E+00	0.0E+00	0.0E+00	0.0E+00	0.0E+00	0.0E+00	0.0E+00	0.0E+00
glycol	mg/min	0.0E+00	0.0E+00	0.0E+00	0.0E+00	0.0E+00	0.0E+00	0.0E+00	0.0E+00	0.0E+00	0.0E+00
Butoxytri-	mg/L	0.0E+00	0.0E+00	0.0E+00	0.0E+00	0.0E+00	0.0E+00	0.0E+00	0.0E+00	0.0E+00	0.0E+00
ethyleneglycol	mg/min	0.0E+00	0.0E+00	0.0E+00	0.0E+00	0.0E+00	0.0E+00	0.0E+00	0.0E+00	0.0E+00	0.0E+00
Butraldehyde	mg/L	0.0E+00	0.0E+00	0.0E+00	0.0E+00	0.0E+00	0.0E+00	0.0E+00	0.0E+00	0.0E+00	0.0E+00
Butraldehyde	mg/min	0.0E+00	0.0E+00	0.0E+00	0.0E+00	0.0E+00	0.0E+00	0.0E+00	0.0E+00	0.0E+00	0.0E+00
C3-Alkylbenzene	mg/L	3.9E+02	3.2E+02	0.0E+00	2.3E-02	4.9E+02	6.5E-03	3.2E+01	1.2E-03	3.1E+00	4.5E+02
C3-Alkylbenzene	mg/min	1.3E+05	7.7E+04	0.0E+00	5.5E+04	5.5E+04	1.8E+02	1.6E+02	1.9E+01	1.7E+01	5.5E+04
Caproic acid	mg/L	0.0E+00	0.0E+00	0.0E+00	0.0E+00	0.0E+00	0.0E+00	0.0E+00	0.0E+00	0.0E+00	0.0E+00
Caproic acid	mg/min	0.0E+00	0.0E+00	0.0E+00	0.0E+00	0.0E+00	0.0E+00	0.0E+00	0.0E+00	0.0E+00	0.0E+00
Carbon	mg/L	0.0E+00	0.0E+00	0.0E+00	0.0E+00	0.0E+00	0.0E+00	0.0E+00	0.0E+00	0.0E+00	0.0E+00
Tetrachloride	mg/min	0.0E+00	0.0E+00	0.0E+00	0.0E+00	0.0E+00	0.0E+00	0.0E+00	0.0E+00	0.0E+00	0.0E+00
Chlorodibromo-	mg/L	0.0E+00	0.0E+00	0.0E+00	0.0E+00	0.0E+00	0.0E+00	0.0E+00	0.0E+00	0.0E+00	0.0E+00
ethane	mg/min	0.0E+00	0.0E+00	0.0E+00	0.0E+00	0.0E+00	0.0E+00	0.0E+00	0.0E+00	0.0E+00	0.0E+00
Chloroethyl, 2-	mg/L	1.3E+01	1.3E+01	0.0E+00	5.4E-04	1.2E+01	1.1E-04	4.2E-01	8.6E-06	2.4E-02	1.1E+01
hydroxymethyl, 8A	mg/L	4.4E+03	3.1E+03	0.0E+00	1.3E+03	1.3E+03	2.3E+00	2.2E+00	1.4E-01	1.3E-01	1.3E+03
Chloroform	mg/L	0.0E+00	0.0E+00	0.0E+00	0.0E+00	0.0E+00	0.0E+00	0.0E+00	0.0E+00	0.0E+00	0.0E+00
Chloroform	mg/min	0.0E+00	0.0E+00	0.0E+00	0.0E+00	0.0E+00	0.0E+00	0.0E+00	0.0E+00	0.0E+00	0.0E+00
2-Chloromethyl-	mg/L	1.4E+01	1.2E+01	0.0E+00	8.2E-04	1.8E+01	2.6E-04	9.8E-01	3.2E-05	8.6E-02	1.6E+01
hydroxymethylbenzene	mg/min	4.8E+03	2.9E+03	0.0E+00	2.0E+03	1.9E+03	5.6E+00	5.1E+00	5.2E-01	4.8E-01	2.0E+03
2-Chloromethyl-	mg/L	1.5E+01	6.6E+00	0.0E+00	1.5E-03	3.1E+01	1.6E-03	4.9E+00	5.4E-04	1.2E+00	2.9E+01
-o-xylene	mg/min	5.1E+03	1.6E+03	0.0E+00	3.5E+03	3.5E+03	3.4E+01	2.5E+01	8.7E+00	6.8E+00	3.5E+03
Citric Acid	mg/L	2.8E+01	3.4E+01	0.0E+00	6.4E-04	1.4E+01	5.0E-05	2.0E-01	1.8E-06	5.0E-03	1.3E+01
Citric Acid	mg/min	9.6E+03	8.1E+03	0.0E+00	1.5E+03	1.5E+03	1.1E+00	1.1E+00	2.9E-02	2.8E-02	1.5E+03
1,2 Dichloro-	mg/L	0.0E+00	0.0E+00	0.0E+00	0.0E+00	0.0E+00	0.0E+00	0.0E+00	0.0E+00	0.0E+00	0.0E+00
ethane	mg/min	0.0E+00	0.0E+00	0.0E+00	0.0E+00	0.0E+00	0.0E+00	0.0E+00	0.0E+00	0.0E+00	0.0E+00
1,1 Dichloro-	mg/L	0.0E+00	0.0E+00	0.0E+00	0.0E+00	0.0E+00	0.0E+00	0.0E+00	0.0E+00	0.0E+00	0.0E+00
ethylene	mg/min	0.0E+00	0.0E+00	0.0E+00	0.0E+00	0.0E+00	0.0E+00	0.0E+00	0.0E+00	0.0E+00	0.0E+00
Diethyl-	mg/L	4.6E+00	6.6E+00	0.0E+00	2.3E-06	4.8E-02	4.5E-09	1.9E-05	3.4E-12	9.9E-09	4.4E-02
phthalates	mg/min	1.6E+03	1.6E+03	0.0E+00	5.4E+00	5.4E+00	9.6E-05	9.6E-05	5.5E-08	5.5E-08	5.4E+00
Difluoroci-	mg/L	0.0E+00	0.0E+00	0.0E+00	0.0E+00	0.0E+00	0.0E+00	0.0E+00	0.0E+00	0.0E+00	0.0E+00
chloromethane	mg/min	0.0E+00	0.0E+00	0.0E+00	0.0E+00	0.0E+00	0.0E+00	0.0E+00	0.0E+00	0.0E+00	0.0E+00
3,5-Dimethyl-	mg/L	0.0E+00	0.0E+00	0.0E+00	0.0E+00	0.0E+00	0.0E+00	0.0E+00	0.0E+00	0.0E+00	0.0E+00
pyridine	mg/min	0.0E+00	0.0E+00	0.0E+00	0.0E+00	0.0E+00	0.0E+00	0.0E+00	0.0E+00	0.0E+00	0.0E+00
Dimethylnitro-	mg/L	0.0E+00	0.0E+00	0.0E+00	0.0E+00	0.0E+00	0.0E+00	0.0E+00	0.0E+00	0.0E+00	0.0E+00
samine	mg/min	0.0E+00	0.0E+00	0.0E+00	0.0E+00	0.0E+00	0.0E+00	0.0E+00	0.0E+00	0.0E+00	0.0E+00
Dimethyltoluidine	mg/L	1.0E+01	1.2E+01	0.0E+00	2.4E-04	5.1E+00	2.0E-05	8.2E-02	7.6E-07	2.2E-03	4.7E+00
Dimethyltoluidine	mg/min	3.4E+03	2.8E+03	0.0E+00	5.7E+02	5.7E+02	4.4E-01	4.2E-01	1.2E-02	1.2E-02	5.7E+02
Dioctylphthalate	mg/L	9.0E+00	1.3E+01	0.0E+00	3.9E-06	8.4E-02	6.6E-09	2.7E-05	4.4E-12	1.3E-08	7.7E-02
Dioctylphthalate	mg/min	3.1E+03	3.1E+03	0.0E+00	9.4E+00	9.4E+00	1.4E-04	1.4E-04	7.1E-08	7.1E-08	9.4E+00
Dodecane	mg/L	2.2E+00	2.9E+00	0.0E+00	2.8E-05	6.1E-01	1.3E-06	5.5E-03	2.7E-08	7.6E-05	5.5E-01
Dodecane	mg/min	7.5E+02	6.8E+02	0.0E+00	6.7E+01	6.7E+01	2.9E-02	2.8E-02	4.3E-04	4.2E-04	6.7E+01
Dodecanoic	mg/L	6.6E-01	9.5E-01	0.0E+00	1.3E-07	2.9E-03	9.9E-11	4.1E-07	3.0E-14	8.6E-11	2.6E-03
Acid	mg/min	2.3E+02	2.3E+02	0.0E+00	3.2E-01	3.2E-01	2.1E-06	2.1E-06	4.8E-10	4.8E-10	3.2E-01
Ethanedioic Acid	mg/L	2.9E+03	4.2E+03	0.0E+00	1.8E-03	3.8E+01	3.4E-06	1.4E-02	2.8E-09	8.2E-06	3.5E+01
Ethanedioic Acid	mg/min	1.0E+06	1.0E+06	0.0E+00	4.3E+03	4.3E+03	7.3E-02	7.3E-02	4.6E-05	4.6E-05	4.3E+03
Ethoxytri-	mg/L	0.0E+00	0.0E+00	0.0E+00	0.0E+00	0.0E+00	0.0E+00	0.0E+00	0.0E+00	0.0E+00	0.0E+00
ethylene glycol	mg/min	0.0E+00	0.0E+00	0.0E+00	0.0E+00	0.0E+00	0.0E+00	0.0E+00	0.0E+00	0.0E+00	0.0E+00
Ethyl,2-methyl-	mg/L	3.3E+01	4.6E+01	0.0E+00	6.8E-05	1.5E+00	5.1E-07	2.1E-03	1.6E-09	4.5E-06	1.3E+00
hydroxymethylbenzenes	mg/min	1.1E+04	1.1E+04	0.0E+00	1.6E+02	1.6E+02	1.1E-02	1.1E-02	2.5E-05	2.5E-05	1.6E+02
Ethyl alcohol	mg/L	0.0E+00	0.0E+00	0.0E+00	0.0E+00	0.0E+00	0.0E+00	0.0E+00	0.0E+00	0.0E+00	0.0E+00
Ethyl alcohol	mg/min	0.0E+00	0.0E+00	0.0E+00	0.0E+00	0.0E+00	0.0E+00	0.0E+00	0.0E+00	0.0E+00	0.0E+00
Ethyl Benzene	mg/L	0.0E+00	0.0E+00	0.0E+00	0.0E+00	0.0E+00	0.0E+00	0.0E+00	0.0E+00	0.0E+00	0.0E+00
Ethyl Benzene	mg/min	0.0E+00	0.0E+00	0.0E+00	0.0E+00	0.0E+00	0.0E+00	0.0E+00	0.0E+00	0.0E+00	0.0E+00
Ethylbenz-	mg/L	5.2E+02	6.9E+02	0.0E+00	4.9E-03	1.1E+02	1.7E-04	6.9E-01	2.4E-05	6.9E-03	9.6E+01
aldehyde	mg/min	1.8E+05	1.6E+05	0.0E+00	1.2E+04	1.2E+04	3.6E+00	3.6E+00	3.9E-02	3.9E-02	1.2E+04
EDTA	mg/L	8.0E+00	1.1E+01	0.0E+00	6.9E-08	1.5E-03	2.4E-12	9.8E-09	3.2E-17	9.2E-14	1.4E-03
EDTA	mg/min	2.7E+03	2.7E+03	0.0E+00	1.7E-01	1.7E-01	5.1E-08	5.1E-08	5.1E-13	5.1E-13	1.7E-01
EGTA	mg/L	2.4E+01	3.4E+01	0.0E+00	2.0E-07	4.4E-03	7.0E-12	2.9E-08	9.3E-17	2.7E-13	4.0E-03
EGTA	mg/min	8.0E+03	8.0E+03	0.0E+00	4.9E-01	4.9E-01	1.5E-07	1.5E-07	1.5E-12	1.5E-12	4.9E-01
Ethylxylene	mg/L	2.7E-01	3.2E-01	0.0E+00	7.0E-06	1.5E-01	6.7E-07	2.7E-03	2.8E-08	7.9E-06	1.4E-01
Ethylxylene	mg/min	9.2E+01	7.5E+01	0.0E+00	1.7E+01	1.7E+01	1.4E-02	1.4E-02	4.6E-04	4.4E-04	1.7E+01

3

1
2

Table 2B-1. Process Flow Sheet for 242-A Evaporator. (24 sheets)

Description	Units	Feed	Slurry	FRW	C-A-1 Vapor	E-C-1 Cond.	E-C-1 Vapor	E-C-2 Cond.	E-C-2 Vapor	E-C-3 Cond.	Process Cond.
Stream Number		1	2	3	4	5	6	7	8	9	10
Heptadecane	mg/L	0.0E+00	0.0E+00	0.0E+00	0.0E+00	0.0E+00	0.0E+00	0.0E+00	0.0E+00	0.0E+00	0.0E+00
Heptadecane	mg/min	0.0E+00	0.0E+00	0.0E+00	0.0E+00	0.0E+00	0.0E+00	0.0E+00	0.0E+00	0.0E+00	0.0E+00
Heptadecanoic	mg/L	1.7E+00	2.4E+00	0.0E+00	9.0E-07	1.9E-02	1.8E-09	7.5E-06	1.5E-12	4.3E-09	1.8E-02
Acid	mg/min	5.7E+02	5.7E+02	0.0E+00	2.2E+00	2.2E+00	3.9E-05	3.9E-05	2.4E-08	2.4E-08	2.2E+00
Heptanedioic	mg/L	1.9E+01	2.7E+01	0.0E+00	1.4E-05	3.0E-01	2.8E-08	1.1E-04	2.4E-11	7.0E-08	2.8E-01
Acid	mg/min	6.4E+03	6.4E+03	0.0E+00	3.4E+01	3.4E+01	5.6E-04	5.6E-04	3.9E-07	3.9E-07	3.4E+01
Hexadecane	mg/L	0.0E+00	0.0E+00	0.0E+00	0.0E+00	0.0E+00	0.0E+00	0.0E+00	0.0E+00	0.0E+00	0.0E+00
Hexadecane	mg/min	0.0E+00	0.0E+00	0.0E+00	0.0E+00	0.0E+00	0.0E+00	0.0E+00	0.0E+00	0.0E+00	0.0E+00
Hexadecanoic	mg/L	5.9E-01	8.3E-01	0.0E+00	4.8E-07	1.0E-02	1.5E-09	6.0E-06	1.8E-12	5.2E-09	9.4E-03
Acid	mg/min	2.0E+02	2.0E+02	0.0E+00	1.1E+00	1.1E+00	3.1E-05	3.1E-05	2.9E-08	2.9E-08	1.1E+00
Hexanedioic	mg/L	2.5E+01	3.6E+01	0.0E+00	3.8E-07	8.2E-03	2.3E-11	9.6E-08	5.5E-16	1.6E-12	7.5E-03
Acid	mg/min	8.5E+03	8.5E+03	0.0E+00	9.1E-01	9.1E-01	5.0E-07	5.0E-07	8.9E-12	8.9E-12	9.1E-01
Hexanoic	mg/L	3.0E+01	4.3E+01	0.0E+00	2.0E-05	4.3E-01	1.9E-08	7.9E-05	1.2E-11	3.5E-08	3.9E-01
Acid	mg/min	1.0E+04	1.0E+04	0.0E+00	4.7E+01	4.7E+01	4.1E-04	4.1E-04	2.0E-07	2.0E-07	4.7E+01
Hydroxyacetic	mg/L	6.8E+01	4.6E+01	0.0E+00	5.1E-03	1.1E+02	3.0E-03	1.1E+01	6.0E-04	1.5E+00	1.0E+02
Acid	mg/min	2.3E+04	1.1E+04	0.0E+00	1.2E+04	1.2E+04	6.4E+01	5.4E+01	9.7E+00	8.6E+00	1.2E+04
2-Hydroxymethyl-	mg/L	2.0E+01	2.7E+01	0.0E+00	1.2E-04	2.6E+00	2.4E-06	9.8E-03	2.1E-09	5.5E-05	2.4E-02
benzoic Acid	mg/min	6.8E+03	6.5E+03	0.0E+00	2.9E+02	2.9E+02	5.1E-02	5.1E-02	3.3E-04	3.3E-04	2.9E-02
Methoxydi-	mg/L	0.0E+00	0.0E+00	0.0E+00	0.0E+00	0.0E+00	0.0E+00	0.0E+00	0.0E+00	0.0E+00	0.0E+00
glycol	mg/min	0.0E+00	0.0E+00	0.0E+00	0.0E+00	0.0E+00	0.0E+00	0.0E+00	0.0E+00	0.0E+00	0.0E+00
Methoxytri-	mg/L	0.0E+00	0.0E+00	0.0E+00	0.0E+00	0.0E+00	0.0E+00	0.0E+00	0.0E+00	0.0E+00	[illegible]
glycol	mg/min	0.0E+00	0.0E+00	0.0E+00	0.0E+00	0.0E+00	0.0E+00	0.0E+00	0.0E+00	0.0E+00	[illegible]
Methylbenz-	mg/L	5.0E+02	6.9E+02	0.0E+00	3.2E-03	6.9E+01	6.6E-05	2.7E-01	6.0E-07	1.7E-03	[illegible]
aldehyde	mg/min	1.7E+05	1.6E+05	0.0E+00	7.7E+03	7.7E+03	1.4E+00	1.4E+00	9.7E-03	9.6E-03	[illegible]
2-Methylbenzoic	mg/L	1.4E+01	1.8E+01	0.0E+00	1.6E-04	3.3E+00	5.2E-06	2.1E-02	8.0E-08	2.3E-04	[illegible]
Acid	mg/min	4.8E+03	4.4E+03	0.0E+00	3.6E+02	3.6E+02	1.1E-01	1.1E-01	1.3E-03	1.3E-03	[illegible]
Methylene	mg/L	0.0E+00	0.0E+00	0.0E+00	0.0E+00	0.0E+00	0.0E+00	0.0E+00	0.0E+00	0.0E+00	[illegible]
chloride	mg/min	0.0E+00	0.0E+00	0.0E+00	0.0E+00	0.0E+00	0.0E+00	0.0E+00	0.0E+00	0.0E+00	[illegible]
2-Methyl.hydroxy-	mg/L	2.6E+02	3.5E+02	0.0E+00	2.9E-03	6.2E+01	9.7E-05	4.0E-01	1.5E-06	4.3E-03	[illegible]
Methyl benzene	mg/min	9.0E+04	8.3E+04	0.0E+00	6.8E+03	6.8E+03	2.1E+00	2.1E+00	2.4E-02	2.4E-02	[illegible]
Methyl n-propyl	mg/L	0.0E+00	0.0E+00	0.0E+00	0.0E+00	0.0E+00	0.0E+00	0.0E+00	0.0E+00	0.0E+00	[illegible]
ketone	mg/min	0.0E+00	0.0E+00	0.0E+00	0.0E+00	0.0E+00	0.0E+00	0.0E+00	0.0E+00	0.0E+00	[illegible]
Methyl n-butyl	mg/L	0.0E+00	0.0E+00	0.0E+00	0.0E+00	0.0E+00	0.0E+00	0.0E+00	0.0E+00	0.0E+00	[illegible]
ketone	mg/min	0.0E+00	0.0E+00	0.0E+00	0.0E+00	0.0E+00	0.0E+00	0.0E+00	0.0E+00	0.0E+00	[illegible]
MIBK	mg/L	0.0E+00	0.0E+00	0.0E+00	0.0E+00	0.0E+00	0.0E+00	0.0E+00	0.0E+00	0.0E+00	[illegible]
(Hexone)	mg/min	0.0E+00	0.0E+00	0.0E+00	0.0E+00	0.0E+00	0.0E+00	0.0E+00	0.0E+00	0.0E+00	[illegible]
2-Methyl-	mg/L	0.0E+00	0.0E+00	0.0E+00	0.0E+00	0.0E+00	0.0E+00	0.0E+00	0.0E+00	0.0E+00	[illegible]
nonane	mg/min	0.0E+00	0.0E+00	0.0E+00	0.0E+00	0.0E+00	0.0E+00	0.0E+00	0.0E+00	0.0E+00	[illegible]
Methyl-	mg/L	2.5E+00	3.5E+00	0.0E+00	9.2E-06	2.0E-01	1.2E-07	5.1E-04	6.9E-10	2.0E-[illegible]	[illegible]
toluidine	mg/min	8.5E+02	8.3E+02	0.0E+00	2.2E+01	2.2E+01	2.7E-03	2.7E-03	1.1E-05	1.1E-[illegible]	[illegible]
n-C22H46 ·	mg/L	1.3E+01	1.8E+01	0.0E+00	1.8E-06	4.0E-02	1.3E-09	5.3E-06	3.1E-13	9.1E-[illegible]	[illegible]
C40H82	mg/min	4.3E+03	4.3E+03	0.0E+00	4.4E+00	4.4E+00	2.7E-05	2.7E-05	5.1E-09	5.1E-[illegible]	[illegible]
HEDTA	mg/L	1.5E+01	2.1E+01	0.0E+00	8.5E-05	1.8E+00	1.7E-06	7.0E-03	1.4E-08	4.1E-05	[illegible]
HEDTA	mg/min	5.1E+03	4.9E+03	0.0E+00	2.0E+02	2.0E+02	3.6E-02	3.6E-02	2.3E-04	2.3E-04	[illegible]
NAIDA	mg/L	4.1E+02	5.8E+02	0.0E+00	5.3E-04	1.1E+01	2.1E-06	8.5E-03	3.6E-09	1.0E-05	[illegible]
NAIDA	mg/min	1.4E+05	1.4E+05	0.0E+00	1.3E+03	1.3E+03	4.4E-02	4.4E-02	5.8E-05	5.8E-05	[illegible]
NTEEDA	mg/L	2.1E+01	3.0E+01	0.0E+00	2.7E-05	5.9E-01	1.1E-07	4.4E-04	1.8E-10	5.3E-07	[illegible]
NTEEDA	mg/min	7.2E+03	7.1E+03	0.0E+00	6.5E+01	6.5E+01	2.3E-03	2.3E-03	3.0E-06	3.0E-06	[illegible]
Nitrilotri-	mg/L	4.2E+00	6.0E+00	0.0E+00	5.5E-06	1.2E-01	2.1E-08	8.8E-05	3.7E-11	1.1E-07	[illegible]
acetic Acid	mg/min	1.4E+03	1.4E+03	0.0E+00	1.3E+01	1.3E+01	4.6E-04	4.5E-04	6.0E-07	6.0E-07	[illegible]
Octodecanoic	mg/L	2.9E-01	4.1E-01	0.0E+00	1.6E-07	3.5E-03	3.4E-10	1.4E-06	2.9E-13	8.3E-10	[illegible]
Acid	mg/min	9.8E+01	9.7E+01	0.0E+00	3.8E-01	3.8E-01	7.3E-06	7.3E-06	4.7E-09	4.7E-09	[illegible]
o-Xylene	mg/L	0.0E+00	0.0E+00	0.0E+00	0.0E+00	0.0E+00	0.0E+00	0.0E+00	0.0E+00	0.0E+00	[illegible]
o-Xylene	mg/min	0.0E+00	0.0E+00	0.0E+00	0.0E+00	0.0E+00	0.0E+00	0.0E+00	0.0E+00	0.0E+00	[illegible]
p-Chlorotoluene	mg/L	0.0E+00	0.0E+00	0.0E+00	0.0E+00	0.0E+00	0.0E+00	0.0E+00	0.0E+00	0.0E+00	[illegible]
p-Chlorotoluene	mg/min	0.0E+00	0.0E+00	0.0E+00	0.0E+00	0.0E+00	0.0E+00	0.0E+00	0.0E+00	0.0E+00	[illegible]
p-Dichloro-	mg/L	0.0E+00	0.0E+00	0.0E+00	0.0E+00	0.0E+00	0.0E+00	0.0E+00	0.0E+00	0.0E+00	[illegible]
benzene	mg/min	0.0E+00	0.0E+00	0.0E+00	0.0E+00	0.0E+00	0.0E+00	0.0E+00	0.0E+00	0.0E+00	[illegible]
Pentadecane	mg/L	1.6E+00	2.2E+00	0.0E+00	2.4E-06	5.2E-02	1.4E-08	5.7E-05	3.2E-11	9.1E-08	4.8E-02
Pentadecane	mg/min	5.4E+02	5.3E+02	0.0E+00	5.8E+00	5.8E+00	2.9E-04	2.9E-04	5.1E-07	5.1E-07	[illegible]
Pentadecanoic	mg/L	2.5E+01	3.5E+01	0.0E+00	3.1E-05	6.6E-01	1.4E-07	5.8E-04	2.6E-10	7.6E-07	6.0E-01
Acid	mg/min	8.3E+03	8.3E+03	0.0E+00	7.3E+01	7.3E+01	3.0E-03	3.0E-03	4.2E-06	4.2E-06	7.3E+01
Pentanedioic	mg/L	4.9E+01	7.0E+01	0.0E+00	4.0E-07	8.5E-03	1.1E-11	4.6E-08	1.3E-16	3.7E-13	7.8E-03
Acid	mg/min	1.7E+04	1.7E+04	0.0E+00	9.5E-01	9.5E-01	2.4E-07	2.4E-07	2.1E-12	2.1E-12	9.5E-01
Phenol	mg/L	0.0E+00	0.0E+00	0.0E+00	0.0E+00	0.0E+00	0.0E+00	0.0E+00	0.0E+00	0.0E+00	0.0E+00
Phenol	mg/min	0.0E+00	0.0E+00	0.0E+00	0.0E+00	0.0E+00	0.0E+00	0.0E+00	0.0E+00	0.0E+00	0.0E+00

3

Table 2B-1. Process Flow Sheet for 242-A Evaporator. (24 sheets)

Description	Units	Feed	Slurry	FRW	C-A-1 Vapor	E-C-1 Cond.	E-C-1 Vapor	E-C-2 Cond.	E-C-2 Vapor	E-C-3 Cond.	Process Cond.
Stream Number		1	2	3	4	5	6	7	8	9	10
2-Propanol	mg/L	0.0E+00	0.0E+00	0.0E+00	0.0E+00	0.0E+00	0.0E+00	0.0E+00	0.0E+00	0.0E+00	0.0E+00
2-Propanol	mg/min	0.0E+00	0.0E+00	0.0E+00	0.0E+00	0.0E+00	0.0E+00	0.0E+00	0.0E+00	0.0E+00	0.0E+00
Propylbenzene	mg/L	2.4E+00	1.8E+00	0.0E+00	1.7E-04	3.5E+00	8.0E-05	2.9E-01	1.4E-05	3.6E-02	3.2E+00
Propylbenzene	mg/min	8.2E+02	4.2E+02	0.0E+00	3.9E+02	3.9E+02	1.7E+00	1.5E+00	2.2E-01	2.0E-01	3.9E+02
Pyridine	mg/L	0.0E+00	0.0E+00	0.0E+00	0.0E+00	0.0E+00	0.0E+00	0.0E+00	0.0E+00	0.0E+00	0.0E+00
Pyridine	mg/min	0.0E+00	0.0E+00	0.0E+00	0.0E+00	0.0E+00	0.0E+00	0.0E+00	0.0E+00	0.0E+00	0.0E+00
Tetrachloro-	mg/L	0.0E+00	0.0E+00	0.0E+00	0.0E+00	0.0E+00	0.0E+00	0.0E+00	0.0E+00	0.0E+00	0.0E+00
ethylene	mg/min	0.0E+00	0.0E+00	0.0E+00	0.0E+00	0.0E+00	0.0E+00	0.0E+00	0.0E+00	0.0E+00	0.0E+00
Tetradecane	mg/L	5.9E+00	8.2E+00	0.0E+00	2.0E-05	4.2E-01	2.4E-07	1.0E-03	1.2E-09	3.5E-06	3.8E-01
Tetradecane	mg/min	2.0E+03	2.0E+03	0.0E+00	4.7E+01	4.7E+01	5.2E-03	5.2E-03	2.0E-05	2.0E-05	4.7E+01
Tetrahydro-	mg/L	0.0E+00	0.0E+00	0.0E+00	0.0E+00	0.0E+00	0.0E+00	0.0E+00	0.0E+00	0.0E+00	0.0E+00
furan	mg/min	0.0E+00	0.0E+00	0.0E+00	0.0E+00	0.0E+00	0.0E+00	0.0E+00	0.0E+00	0.0E+00	0.0E+00
Tributyl	mg/L	1.6E+01	2.2E+01	0.0E+00	5.7E-05	1.2E+00	6.9E-07	2.9E-03	3.6E-09	1.0E-05	1.1E+00
phosphate	mg/min	5.4E+03	5.2E+03	0.0E+00	1.4E+02	1.4E+02	1.5E-02	1.5E-02	5.9E-05	5.9E-05	1.4E+02
Tri-n-butyl-	mg/L	7.7E+00	1.1E+01	0.0E+00	2.8E-05	6.0E-01	3.4E-07	1.4E-03	1.8E-09	5.1E-06	5.4E-01
(di-ol)-phosphate		2.6E+03	2.6E+03	0.0E+00	6.6E+01	6.6E+01	7.3E-03	7.3E-03	2.9E-05	2.9E-05	6.6E+01
1,1,1-Tri-	mg/L	0.0E+00	0.0E+00	0.0E+00	0.0E+00	0.0E+00	0.0E+00	0.0E+00	0.0E+00	0.0E+00	0.0E+00
chlorethane	mg/min	0.0E+00	0.0E+00	0.0E+00	0.0E+00	0.0E+00	0.0E+00	0.0E+00	0.0E+00	0.0E+00	0.0E+00
Trichloro-	mg/L	0.0E+00	0.0E+00	0.0E+00	0.0E+00	0.0E+00	0.0E+00	0.0E+00	0.0E+00	0.0E+00	0.0E+00
ethylene	mg/min	0.0E+00	0.0E+00	0.0E+00	0.0E+00	0.0E+00	0.0E+00	0.0E+00	0.0E+00	0.0E+00	0.0E+00
Trichloromethane	mg/L	0.0E+00	0.0E+00	0.0E+00	0.0E+00	0.0E+00	0.0E+00	0.0E+00	0.0E+00	0.0E+00	0.0E+00
Trichloromethane	mg/min	0.0E+00	0.0E+00	0.0E+00	0.0E+00	0.0E+00	0.0E+00	0.0E+00	0.0E+00	0.0E+00	0.0E+00
Tridecane	mg/L	1.1E+01	1.5E+01	0.0E+00	9.1E-05	2.0E+00	4.1E-06	1.7E-02	6.3E-08	1.8E-04	1.8E+00
Tridecane	mg/min	3.7E+03	3.5E+03	0.0E+00	2.2E+02	2.2E+02	8.9E-02	8.8E-02	1.0E-03	1.0E-03	2.2E+02
Triglyme	mg/L	0.0E+00	0.0E+00	0.0E+00	0.0E+00	0.0E+00	0.0E+00	0.0E+00	0.0E+00	0.0E+00	0.0E+00
Triglyme	mg/min	0.0E+00	0.0E+00	0.0E+00	0.0E+00	0.0E+00	0.0E+00	0.0E+00	0.0E+00	0.0E+00	0.0E+00
1,3,5 Trimethyl	mg/L	1.2E+02	7.8E+01	0.0E+00	9.9E-03	2.1E+02	6.8E-03	2.3E+01	1.6E-03	3.9E+00	1.9E+02
benzene	mg/min	4.2E+04	1.9E+04	0.0E+00	2.4E+04	2.4E+04	1.5E-02	1.2E+02	2.5E+01	2.2E+01	2.4E+04
Toluene	mg/L	0.0E+00	0.0E+00	0.0E+00	0.0E+00	0.0E+00	0.0E+00	0.0E+00	0.0E+00	0.0E+00	0.0E+00
Toluene	mg/min	0.0E+00	0.0E+00	0.0E+00	0.0E+00	0.0E+00	0.0E+00	0.0E+00	0.0E+00	0.0E+00	0.0E+00
Vinyl Chloride	mg/L	0.0E+00	0.0E+00	0.0E+00	0.0E+00	0.0E+00	0.0E+00	0.0E+00	0.0E+00	0.0E+00	0.0E+00
Vinyl Chloride	mg/min	0.0E+00	0.0E+00	0.0E+00	0.0E+00	0.0E+00	0.0E+00	0.0E+00	0.0E+00	0.0E+00	0.0E+00
Undecane	mg/L	1.6E+00	1.9E+00	0.0E+00	4.2E-05	9.1E-01	4.3E-06	1.7E-02	1.9E-07	5.3E-04	8.3E-01
Undecane	mg/min	5.5E+02	4.4E+02	0.0E+00	1.0E+02	1.0E+02	9.3E-02	9.0E-02	3.0E-03	3.0E-03	1.0E+02
Unknown	mg/L	9.2E+00	1.3E+01	0.0E+00	4.5E-06	9.7E-02	8.9E-09	3.7E-05	6.8E-12	2.0E-08	8.8E-02
phthalates	mg/min	3.1E+03	3.1E+03	0.0E+00	1.1E+01	1.1E+01	1.9E-04	1.9E-04	1.1E-07	1.1E-07	1.1E+01

Table 2B-1. Process Flow Sheet for 242-A Evaporator. (24 sheets)

Description	Units	PC to LERF	C100 to 102AW	E-101 to IX	Eluted IX to 102-AW	Inlet Air	Air to H-C-1	Air to F-C-5	Stack Air	E-A-1 Steam	E-A-1 Cond.
Stream Number		11	12	13	14	15	16	17	18	19	20
Form		Liquid	Liquid	Liquid	Liquid	Gas	Gas	Gas	Gas	Steam	Liquid
L/min	Total	1.2E+02				1.5E+04	1.8E+04	1.8E+04	1.8E+04	2.9E+05	2.1E-02
Batch	L/Batch			1.3E+04	1.3E+04						
Temperature	C	2.8E+01	2.8E+01	7.0E+01	7.0E+01	1.0E+01	3.8E+01	6.6E+01	6.6E+01	1.1E+02	3.8E+01
Sp. Gr.	unitless	1.0E+00	9.0E-01	1.0E+00	1.0E+00	9.6E-01	8.6E-01	7.9E-01	8.0E-01	8.7E-01	9.9E-01
Abs. Pressure	Torr	7.6E+02	7.6E+02			7.6E+02	7.4E+02	7.5E+02	7.5E+02	9.2E+02	7.6E+02
Abs. Pressure	Pa	1.0E+05	1.0E+05			1.0E+05	9.9E+04	1.0E+05	1.0E+05	1.2E+05	1.0E+05
pH		1.0E+01	7.0E+00								8.0E+00
TOC	mg/L	2.6E+02				0.0E+00	5.0E-05	5.0E-05	5.0E-05	7.7E-04	1.1E+00
TOC	mg/min	3.2E+04				0.0E+00	9.0E-01	9.0E-01	9.0E-01	2.3E+02	2.3E-02
TDS	mg/L	3.4E-01				0.0E+00	1.3E-04	1.3E-04	1.3E-06	5.4E-02	7.6E+01
TDS	mg/min	4.1E+01				0.0E+00	2.4E+00	2.4E+00	2.4E-02	1.6E+04	1.6E+04
H2O	L/min	1.2E+02				9.0E+01	4.4E+02	4.4E+02	4.4E+02	2.9E+05	2.1E-02
H2O	kg/min	1.2E+02				7.0E-02	3.0E-01	3.0E-01	3.0E-01	2.0E+02	2.0E+02
Air	L/min	0.0E+00				1.5E+04	1.8E+04	1.6E+04	1.8E+04	0.0E+00	0.0E+00
Air	kg/min	0.0E+00				1.8E+01	2.0E+01	2.0E+01	2.0E+01	0.0E+00	0.0E+00
Heat	Joules/min			2.4E+09			4.7E+05	5.6E+05		5.2E+08	
Alpha	uCi/ml	5.7E-11					1.1E-15	1.1E-15	1.1E-17	4.6E-13	6.5E-10
Alpha	uCi/min	7.0E-06					2.1E-08	2.1E-08	2.1E-10	1.3E-04	1.3E-04
Beta	uCi/ml	6.8E-13					1.2E-19	1.2E-19	1.2E-21	0.0E+00	0.0E+00
Beta	uCi/min	8.3E-08					2.2E-12	2.2E-12	2.2E-14	0.0E+00	0.0E+00
3H	uCi/ml	3.0E-02					8.5E-08	8.5E-08	8.5E-08	0.0E+00	0.0E+00
3H	uCi/min	3.6E+03					1.5E+00	1.5E+00	1.5E+00	0.0E+00	0.0E+00
14C	uCi/ml	2.7E-06					5.0E-13	5.0E-13	5.0E-15	2.8E-12	4.0E-09
14C	uCi/min	3.3E-01					9.0E-06	9.0E-06	9.0E-08	[illegible]3E-04	8.3E-04
60Co	uCi/ml	6.4E-05					1.2E-11	1.2E-11	1.2E-[illegible]	[illegible]0E+00	0.0E+00
60Co	uCi/min	7.9E+00					2.1E-04	2.1E-04	2.1E-06	0.0E+00	0.0E+00
63Ni	uCi/ml	0.0E+00					0.0E+00	0.0E+00	0.0E+00	0.0E+00	0.0E+00
63Ni	uCi/min	0.0E+00					0.0E+00	0.0E+00	0.0E+00	0.0E+00	0.0E+00
79Se	uCi/ml	2.9E-05					5.2E-12	5.2E-12	5.2E-12	0.0E+00	0.0E+00
79Se	uCi/min	3.5E+00					9.4E-05	9.4E-05	9.4E-05	0.0E+00	0.0E+00
90Sr	uCi/ml	4.6E-06					9.1E-13	9.1E-13	9.1E-15	3.5E-13	5.0E-10
90Sr	uCi/min	5.6E-01					1.7E-05	1.7E-05	1.7E-07	1.0E-04	1.0E-04
93Zr	uCi/ml	0.0E+00					0.0E+00	0.0E+00	0.0E+00	0.0E+00	0.0E+00
93Zr	uCi/min	0.0E+00					0.0E+00	0.0E+00	0.0E+00	0.0E+00	0.0E+00
94Nb	uCi/ml	4.8E-05					8.7E-12	8.7E-12	8.7E-14	0.0E+00	0.0E+00
94Nb	uCi/min	5.9E+00					1.6E-04	1.6E-04	1.6E-06	0.0E+00	0.0E+00
99Tc	uCi/ml	2.4E-04					4.3E-11	4.3E-11	4.3E-13	0.0E+00	0.0E+00
99Tc	uCi/min	2.9E-01					7.8E-04	7.8E-04	7.8E-06	0.0E+00	0.0E+00
106Ru	uCi/ml	2.5E-05					2.8E-13	2.8E-13	2.8E-13	0.0E+00	0.0E+00
106Ru	uCi/min	3.1E-06					5.1E-06	5.1E-06	5.1E-06	0.0E+00	0.0E+00
113Sn	uCi/ml	0.0E+00					0.0E+00	0.0E+00	0.0E+00	0.0E+00	0.0E+00
113Sn	uCi/min	0.0E+00					0.0E+00	0.0E+00	0.0E+00	0.0E+00	0.0E+00
124Sb	uCi/ml	0.0E+00					0.0E+00	0.0E+00	0.0E+00	0.0E+00	0.0E+00
124Sb	uCi/min	0.0E+00					0.0E+00	0.0E+00	0.0E+00	0.0E+00	0.0E+00
125Sb	uCi/ml	0.0E+00					0.0E+00	0.0E+00	0.0E+00	0.0E+00	0.0E+00
125Sb	uCi/min	0.0E+00					0.0E+00	0.0E+00	0.0E+00	0.0E+00	0.0E+00
126Sn	uCi/ml	0.0E+00					0.0E+00	0.0E+00	0.0E+00	0.0E+00	0.0E+00
126Sn	uCi/min	0.0E+00					0.0E+00	0.0E+00	0.0E+00	0.0E+00	0.0E+00
129I	uCi/ml	2.0E-04					2.6E-11	2.6E-11	2.6E-11	0.0E+00	0.0E+00
129I	uCi/min	2.4E+01					4.6E-04	4.6E-04	4.6E-04	0.0E+00	0.0E+00
134Cs	uCi/ml	8.0E-05					6.6E-12	6.6E-12	6.6E-14	0.0E+00	0.0E+00
134Cs	uCi/min	9.8E+00					1.2E-04	1.2E-04	1.2E-06	0.0E+00	0.0E+00
135Cs	uCi/ml	0.0E+00					0.0E+00	0.0E+00	0.0E+00	0.0E+00	0.0E+00
135Cs	uCi/min	0.0E+00					0.0E+00	0.0E+00	0.0E+00	0.0E+00	0.0E+00
137Cs	uCi/ml	5.4E-07					5.3E-14	5.3E-14	5.3E-16	0.0E+00	0.0E+00
137Cs	uCi/min	6.6E-02					9.7E-07	9.7E-07	9.7E-09	0.0E+00	0.0E+00
144Ce	uCi/ml	0.0E+00					0.0E+00	0.0E+00	0.0E+00	0.0E+00	0.0E+00
144Ce	uCi/min	0.0E+00					0.0E+00	0.0E+00	0.0E+00	0.0E+00	0.0E+00
147Pm	uCi/ml	0.0E+00					0.0E+00	0.0E+00	0.0E+00	0.0E+00	0.0E+00
147Pm	uCi/min	0.0E+00					0.0E+00	0.0E+00	0.0E+00	0.0E+00	0.0E+00
151Sm	uCi/ml	0.0E+00					0.0E+00	0.0E+00	0.0E+00	0.0E+00	0.0E+00
151Sm	uCi/min	0.0E+00					0.0E+00	0.0E+00	0.0E+00	0.0E+00	0.0E+00
155Eu	uCi/ml	0.0E+00					0.0E+00	0.0E+00	0.0E+00	0.0E+00	0.0E+00
155Eu	uCi/min	0.0E+00					0.0E+00	0.0E+00	0.0E+00	0.0E+00	0.0E+00

Table 2B-1. Process Flow Sheet for 242-A Evaporator. (24 sheets)

Description	Units	PC to LERF	C100 to 102AW	E-101 to IX	Eluted IX to 102-AW	Inlet Air	Air to H-C-1	Air to F-C-5	Stack Air	E-A-1 Steam	E-A-1 Cond.
Stream Number		11	12	13	14	15	16	17	18	19	20
226Ra	uCi/ml	0.0E+00					0.0E+00	0.0E+00	0.0E+00	0.0E+00	0.0E+00
226Ra	uCi/min	0.0E+00					0.0E+00	0.0E+00	0.0E+00	0.0E+00	0.0E+00
230Th	uCi/ml	0.0E+00					0.0E+00	0.0E+00	0.0E+00	0.0E+00	0.0E+00
230Th	uCi/min	0.0E+00					0.0E+00	0.0E+00	0.0E+00	0.0E+00	0.0E+00
233U	uCi/ml	0.0E+00					0.0E+00	0.0E+00	0.0E+00	0.0E+00	0.0E+00
233U	uCi/min	0.0E+00					0.0E+00	0.0E+00	0.0E+00	0.0E+00	0.0E+00
234U	uCi/ml	7.2E-08					1.3E-14	1.3E-14	1.3E-16	1.4E-13	1.9E-10
234U	uCi/min	8.7E-03					2.4E-07	2.4E-07	2.4E-09	4.0E-05	4.0E-05
235U	uCi/ml	3.5E-09					6.4E-16	6.4E-16	6.4E-18	0.0E+00	0.0E+00
235U	uCi/min	4.3E-04					1.2E-08	1.2E-08	1.2E-10	0.0E+00	0.0E+00
238U	uCi/ml	2.6E-08					5.0E-15	5.0E-15	5.0E-17	1.2E-13	1.7E-10
238U	uCi/min	3.2E-03					9.1E-08	9.1E-08	9.1E-10	3.5E-05	3.5E-05
237Np	uCi/ml	1.2E-07					2.2E-14	2.2E-14	2.2E-16	0.0E+00	0.0E+00
237Np	uCi/min	1.5E-02					4.1E-07	4.1E-07	4.1E-09	0.0E+00	0.0E+00
238Pu	uCi/ml	3.9E-10					1.4E-17	1.4E-17	1.4E-19	0.0E+00	0.0E+00
238Pu	uCi/min	4.7E-05					2.6E-10	2.6E-10	2.6E-12	0.0E+00	0.0E+00
239Pu	uCi/ml	8.0E-10					3.0E-17	3.0E-17	3.0E-19	0.0E+00	0.0E+00
239Pu	uCi/min	9.8E-05					5.4E-10	5.4E-10	5.4E-12	0.0E+00	0.0E+00
240Pu	uCi/ml	0.0E+00					0.0E+00	0.0E+00	0.0E+00	0.0E+00	0.0E+00
240Pu	uCi/min	0.0E+00					0.0E+00	0.0E+00	0.0E+00	0.0E+00	0.0E+00
241Pu	uCi/ml	0.0E+00					0.0E+00	0.0E+00	0.0E+00	0.0E+00	0.0E+00
241Pu	uCi/min	0.0E+00					0.0E+00	0.0E+00	0.0E+00	0.0E+00	0.0E+00
241Am	uCi/ml	3.0E-09					1.1E-16	1.1E-16	1.1E-18	0.0E+00	0.0E+00
241Am	uCi/min	3.7E-04					2.0E-09	2.0E-09	2.0E-11	0.0E+00	0.0E+00
243Am	uCi/ml	0.0E+00					0.0E+00	0.0E+00	0.0E+00	0.0E+00	0.0E+00
243Am	uCi/min	0.0E+00					0.0E+00	0.0E+00	0.0E+00	0.0E+00	0.0E+00
244Cm	uCi/ml	4.8E-07					8.6E-14	8.6E-14	8.6E-16	0.0E+00	0.0E+00
244Cm	uCi/min	5.8E-02					1.6E-06	1.6E-06	1.6E-08	0.0E+00	0.0E+00
AlO2-	mg/L	4.1E+01					7.5E-06	7.5E-06	7.5E-08	0.0E+00	0.0E+00
AlO2-	mg/min	5.1E+03					1.4E+01	1.4E+01	1.4E+03	0.0E+00	0.0E+00
NH4+	mg/L	2.3E+03					1.9E-01	1.9E-01	1.9E-01	4.4E-05	6.3E-02
NH4+	mg/min	2.8E+05					3.4E+03	3.4E+03	3.4E+03	1.3E+01	1.3E+01
Sb	mg/L	0.0E+00					0.0E+00	0.0E+00	0.0E+00	0.0E+00	0.0E+00
Sb	mg/min	0.0E+00					0.0E+00	0.0E+00	0.0E+00	0.0E+00	0.0E+00
As	mg/L	0.0E+00					0.0E+00	0.0E+00	0.0E+00	0.0E+00	0.0E+00
As	mg/min	0.0E+00					0.0E+00	0.0E+00	0.0E+00	0.0E+00	0.0E+00
Ba	mg/L	3.0E-02					6.0E-08	6.0E-08	6.0E-10	2.2E-05	3.1E-02
Ba	mg/min	3.7E+00					1.1E-03	1.1E-03	1.1E-05	6.4E+00	6.4E+00
Be	mg/L	0.0E+00					0.0E+00	0.0E+00	0.0E+00	0.0E+00	0.0E+00
Be	mg/min	0.0E+00					0.0E+00	0.0E+00	0.0E+00	0.0E+00	0.0E+00
Bi	mg/L	0.0E+00					0.0E+00	0.0E+00	0.0E+00	0.0E+00	0.0E+00
Bi	mg/min	0.0E+00					0.0E+00	0.0E+00	0.0E+00	0.0E+00	0.0E+00
B	mg/L	3.5E-02					3.9E-08	3.9E-08	3.9E-10	1.3E-05	1.8E-02
B	mg/min	4.3E+00					7.0E-04	7.0E-04	7.0E-06	3.8E+00	3.8E+00
Ca	mg/L	1.9E+00					3.4E-05	3.4E-05	3.4E-07	1.4E-02	1.9E+01
Ca	mg/min	2.3E+02					6.2E-01	6.2E-01	6.2E-03	4.0E+03	4.0E+03
Cd	mg/L	3.1E-02					5.7E-09	5.7E-09	5.7E-11	0.0E+00	0.0E+00
Cd	mg/min	3.8E+00					1.0E-04	1.0E-04	1.0E-06	0.0E+00	0.0E+00
CO3-	mg/L	2.4E+01					4.4E-06	4.4E-06	4.4E-08	0.0E+00	0.0E+00
CO3-	mg/min	3.0E+03					8.0E-02	8.0E-02	8.0E-04	0.0E+00	0.0E+00
Cl-	mg/L	2.4E+01					5.2E-07	5.2E-07	5.2E-09	7.7E-04	1.1E+00
Cl-	mg/min	3.0E+03					9.4E-03	9.4E-03	9.4E-05	2.3E+02	2.3E+02
Cr	mg/L	3.4E-02					7.4E-10	7.4E-10	7.4E-12	0.0E+00	0.0E+00
Cr	mg/min	4.1E+00					1.3E-05	1.3E-05	1.3E-07	0.0E+00	0.0E+00
Cu	mg/L	1.5E-02					2.2E-08	2.2E-08	2.2E-10	7.7E-06	1.1E-02
Cu	mg/min	1.8E+00					4.0E-04	4.0E-04	4.0E-06	2.3E+00	2.3E+00
CN-	mg/L	9.5E-02					1.7E-08	1.7E-08	1.7E-10	0.0E+00	0.0E+00
CN-	mg/min	1.2E+01					3.1E-04	3.1E-04	3.1E-06	0.0E+00	0.0E+00
F-	mg/L	4.3E-02					3.8E-08	3.8E-08	3.8E-10	9.1E-05	1.3E-01
F-	mg/min	5.3E+00					6.8E-04	6.8E-04	6.8E-06	2.7E+01	2.7E+01
Fe	mg/L	8.5E-02					1.6E-07	1.6E-07	1.6E-09	5.9E-05	8.4E-02
Fe	mg/min	1.0E+01					3.0E-03	3.0E-03	3.0E-05	1.7E+01	1.7E+01
H2	mg/L	2.0E-11					1.2E-07	1.2E-07	1.2E-07	0.0E+00	0.0E+00
H2	mg/min	2.4E-09					2.2E-03	2.2E-03	2.2E-03	0.0E+00	0.0E+00
OH-	mg/L	1.4E+02					2.5E-05	2.5E-05	2.5E-07	0.0E+00	0.0E+00

Table 2B-1. Process Flow Sheet for 242-A Evaporator. (24 sheets)

Description	Units	PC to LERF	C100 to 102AW	E-101 to IX	IX to 102-AW	Inlet Air	Air to H-C-1	Air to F-C-5	Stack Air	E-A-1 Steam	E-A-1 Cond.
Stream Number		11	12	13	14	15	16	17	18	19	20
OH-	mg/min	1.7E+04					4.5E-01	4.5E-01	4.5E-03	0.0E+00	0.0E+00
Pb	mg/L	4.6E+00					1.9E-08	1.9E-08	1.9E-10	3.9E-06	5.5E-03
Pb	mg/min	5.6E+02					3.5E-04	3.5E-04	3.5E-06	1.1E+00	1.1E+00
Mg	mg/L	4.6E-01					8.6E-06	8.0E-06	8.0E-08	3.2E-03	4.5E+00
Mg	mg/min	5.6E+01					1.5E-01	1.5E-01	1.5E-03	9.4E+02	9.4E+02
Mn	mg/L	5.8E-02					3.5E-08	3.5E-08	3.5E-10	1.0E-05	1.4E-02
Mn	mg/min	7.1E+00					6.4E-04	6.4E-04	6.4E-06	2.9E+00	2.9E+00
Hg	mg/L	1.6E-02					3.0E-09	3.0E-09	3.0E-11	7.4E-08	1.1E-04
Hg	mg/min	1.9E+00					5.5E-05	5.5E-05	5.5E-07	2.2E-02	2.2E-02
Mo	mg/L	1.2E-01					2.1E-08	2.1E-08	2.1E-10	0.0E+00	0.0E+00
Mo	mg/min	1.4E+01					3.9E-04	3.9E-04	3.9E-06	0.0E+00	0.0E+00
Ni	mg/L	7.9E-02					1.4E-08	1.4E-08	1.4E-10	0.0E+00	0.0E+00
Ni	mg/min	9.6E+00					2.6E-04	2.6E-04	2.6E-06	0.0E+00	0.0E+00
NO3-	mg/L	6.1E+02					6.8E-06	6.8E-06	6.8E-08	3.9E-04	5.5E-01
NO3-	mg/min	7.4E+04					1.2E-01	1.2E-01	1.2E-03	1.1E+02	1.1E+02
NO2-	mg/L	7.0E+01					7.8E-07	7.8E-07	7.8E-09	0.0E+00	0.0E+00
NO2-	mg/min	8.6E+03					1.4E-02	1.4E-02	1.4E-04	0.0E+00	0.0E+00
PO4	mg/L	1.0E+01					1.9E-06	1.9E-06	1.9E-08	0.0E+00	0.0E+00
PO4	mg/min	1.3E+03					3.4E-02	3.4E-02	3.4E-04	0.0E+00	0.0E+00
P	mg/L	9.6E+00					1.7E-06	1.7E-06	1.7E-08	0.0E+00	0.0E+00
P	mg/min	1.2E+03					3.2E-02	3.2E-02	3.2E-04	0.0E+00	0.0E+00
K	mg/L	1.0E+01					3.2E-06	3.2E-06	3.2E-08	5.3E-04	7.5E-01
K	mg/min	1.2E+03					5.7E-02	5.7E-02	5.7E-04	1.5E+02	1.5E+02
Se	mg/L	0.0E+00					0.0E+00	0.0E+00	0.0E+00	0.0E+00	0.0E+00
Se	mg/min	0.0E+00					0.0E+00	0.0E+00	0.0E+00	0.0E+00	0.0E+00
Si	mg/L	5.9E-01					4.5E-06	4.5E-06	4.5E-08	1.8E-03	2.5E+00
Si	mg/min	7.2E+01					8.2E-02	8.2E-02	8.2E-04	5.2E+02	5.2E+02
Ag	mg/L	0.0E+00					0.0E+00	0.0E+00	0.0E+00	0.0E+00	0.0E+00
Ag	mg/min	0.0E+00					0.0E+00	0.0E+00	0.0E+00	0.0E+00	0.0E+00
Na	mg/L	1.6E+01					6.7E-06	6.7E-06	6.7E-08	1.5E-03	2.2E+00
Na	mg/min	1.9E+03					1.2E-01	1.2E-01	1.2E-03	4.5E+02	4.5E+02
SO4=	mg/L	5.0E+00					1.7E-06	1.7E-06	1.7E-08	7.4E-03	1.0E+01
SO4=	mg/min	6.1E+02					3.1E-02	3.1E-02	3.1E-04	2.2E+03	2.2E+03
S-	mg/L	0.0E+00					0.0E+00	0.0E+00	0.0E+00	0.0E+00	0.0E+00
S-	mg/min	0.0E+00					0.0E+00	0.0E+00	0.0E+00	0.0E+00	0.0E+00
Ti	mg/L	0.0E+00					0.0E+00	0.0E+00	0.0E+00	0.0E+00	0.0E+00
Ti	mg/min	0.0E+00					0.0E+00	0.0E+00	0.0E+00	0.0E+00	0.0E+00
U	mg/L	4.1E-01					7.4E-08	7.4E-08	7.4E-10	0.0E+00	0.0E+00
U	mg/min	5.0E+01					1.4E-03	1.4E-03	1.4E-05	0.0E+00	0.0E+00
U	mg/L	1.5E-01					2.8E-08	2.8E-08	2.8E-10	3.7E-07	5.2E-04
U	mg/min	1.8E+01					5.0E-04	5.0E-04	5.0E-06	1.1E-01	1.1E-01
V	mg/L	0.0E+00					0.0E+00	0.0E+00	0.0E+00	0.0E+00	0.0E+00
V	mg/min	0.0E+00					0.0E+00	0.0E+00	0.0E+00	0.0E+00	0.0E+00
Zn	mg/L	9.6E-02					5.0E-08	5.0E-08	5.0E-10	1.3E-05	1.9E-02
Zn	mg/min	1.2E+01					9.1E-04	9.1E-04	9.1E-06	3.9E+00	3.9E+00
Zr	mg/L	0.0E+00					0.0E+00	0.0E+00	0.0E+00	0.0E+00	0.0E+00
Zr	mg/min	0.0E+00					0.0E+00	0.0E+00	0.0E+00	0.0E+00	0.0E+00
Acetone	mg/L	1.0E-00					1.6E-03	1.6E-03	1.6E-03		
Acetone	mg/min	1.2E+02					2.9E+01	2.9E+01	2.9E+01		
Alkyl, hydroxy-methyl benzene	mg/L	1.1E-01					1.8E-09	1.8E-09	1.8E-09		
	mg/min	1.4E+01					3.3E-05	3.3E-05	3.3E-05		
Benzyl alcohol	mg/L	0.0E+00					0.0E+00	0.0E+00	0.0E+00		
Benzyl alcohol	mg/min	0.0E+00					0.0E+00	0.0E+00	0.0E+00		
Benzaldehyde	mg/L	0.0E+00					0.0E+00	0.0E+00	0.0E+00		
Benzaldehyde	mg/min	0.0E+00					0.0E+00	0.0E+00	0.0E+00		
Benzene	mg/L	0.0E+00					0.0E+00	0.0E+00	0.0E+00		
Benzene	mg/min	0.0E+00					0.0E+00	0.0E+00	0.0E+00		
Bromodichloro-methane	mg/L	0.0E+00					0.0E+00	0.0E+00	0.0E+00		
	mg/min	0.0E+00					0.0E+00	0.0E+00	0.0E+00		
Bromoform	mg/L	0.0E+00					0.0E+00	0.0E+00	0.0E+00		
Bromoform	mg/min	0.0E+00					0.0E+00	0.0E+00	0.0E+00		
Butanedioic Acid	mg/L	3.6E+01					1.2E-06	1.2E-06	1.2E-06		
	mg/min	4.3E+03					2.2E-02	2.2E-02	2.2E-02		
1-Butanol	mg/L	3.7E-04					2.9E-10	2.9E-10	2.9E-10		
1-Butanol	mg/min	4.5E-02					5.3E-06	5.3E-06	5.3E-06		

Table 2B-1. Process Flow Sheet for 242-A Evaporator. (24 sheets)

Description	Units	PC to LERF	C100 to 102AW	E-101 to IX	Eluted IX to 102-AW	Inlet Air	Air to H-C-1	Air to F-C-5	Stack Air	E-A-1 Steam	E-A-1 Cond.
Stream Number		11	12	13	14	15	16	17	18	19	20
2-Butanone	mg/L	0.0E+00					0.0E+00	0.0E+00	0.0E+00		
2-Butanone	mg/min	0.0E+00					0.0E+00	0.0E+00	0.0E+00		
Butoxy-	mg/L	0.0E+00					0.0E+00	0.0E+00	0.0E+00		
diglycol	mg/min	0.0E+00					0.0E+00	0.0E+00	0.0E+00		
2-Butoxy-	mg/L	0.0E+00					0.0E+00	0.0E+00	0.0E+00		
ethanol	mg/min	0.0E+00					0.0E+00	0.0E+00	0.0E+00		
Butoxy-	mg/L	0.0E+00					0.0E+00	0.0E+00	0.0E+00		
glycol	mg/min	0.0E+00					0.0E+00	0.0E+00	0.0E+00		
Butoxytri-	mg/L	0.0E+00					0.0E+00	0.0E+00	0.0E+00		
ethyleneglycol	mg/min	0.0E+00					0.0E+00	0.0E+00	0.0E+00		
Butraldehyde	mg/L	0.0E+00					0.0E+00	0.0E+00	0.0E+00		
Butraldehyde	mg/min	0.0E+00					0.0E+00	0.0E+00	0.0E+00		
C3-Alkylbenzene	mg/L	4.5E+02					2.4E-04	2.4E-04	2.4E-04		
C3-Alkylbenzene	mg/min	5.5E+04					4.4E+00	4.4E+00	4.4E+00		
Caproic acid	mg/L	0.0E+00					0.0E+00	0.0E+00	0.0E+00		
Caproic acid	mg/min	0.0E+00					0.0E+00	0.0E+00	0.0E+00		
Carbon	mg/L	0.0E+00					0.0E+00	0.0E+00	0.0E+00		
Tetrachloride	mg/min	0.0E+00					0.0E+00	0.0E+00	0.0E+00		
Chlorodibromo-	mg/L	0.0E+00					0.0E+00	0.0E+00	0.0E+00		
ethane	mg/min	0.0E+00					0.0E+00	0.0E+00	0.0E+00		
Chloroethyl, 2-	mg/L	1.1E+01					2.4E-06	2.4E-06	2.4E-06		
hydroxymethyl, 8A		1.3E+03					4.4E-02	4.4E-02	4.4E-02		
Chloroform	mg/L	0.0E+00					0.0E+00	0.0E+00	0.0E+00		
Chloroform	mg/min	0.0E+00					0.0E+00	0.0E+00	0.0E+00		
2-Chloromethyl-	mg/L	1.6E+01					7.2E-06	7.2E-06	7.2E-06		
hydroxymethylbenzene		2.0E+03					1.3E-01	1.3E-01	1.3E-01		
2-Chloromethyl-	mg/L	2.9E+01					1.3E-04	1.3E-04	1.3E-04		
-o-xylene	mg/min	3.5E+03					2.4E+00	2.4E+00	2.4E+00		
Citric Acid	mg/L	1.3E+01					1.0E-06	1.0E-06	1.0E-06		
Citric Acid	mg/min	1.5E+03					1.8E-02	1.8E-02	1.8E-02		
1,2 Dichloro-	mg/L	0.0E+00					0.0E+00	0.0E+00	0.0E+00		
ethane	mg/min	0.0E+00					0.0E+00	0.0E+00	0.0E+00		
1,1 Dichloro-	mg/L	0.0E+00					0.0E+00	0.0E+00	0.0E+00		
ethylene	mg/min	0.0E+00					0.0E+00	0.0E+00	0.0E+00		
Diethyl-	mg/L	4.4E-02					8.3E-11	8.3E-11	8.3E-11		
phthalates	mg/min	5.4E+00					1.5E-06	1.5E-06	1.5E-06		
Difluorodi-	mg/L	0.0E+00					0.0E+00	0.0E+00	0.0E+00		
chloromethane	mg/min	0.0E+00					0.0E+00	0.0E+00	0.0E+00		
3,5-Dimethyl-	mg/L	0.0E+00					0.0E+00	0.0E+00	0.0E+00		
pyridine	mg/min	0.0E+00					0.0E+00	0.0E+00	0.0E+00		
Dimethylnitro-	mg/L	0.0E+00					0.0E+00	0.0E+00	0.0E+00		
samine	mg/min	0.0E+00					0.0E+00	0.0E+00	0.0E+00		
Dimethyltoluidine	mg/L	4.7E+00					4.0E-07	4.0E-07	4.0E-07		
Dimethyltoluidine	mg/min	5.7E+02					7.3E-03	7.3E-03	7.3E-03		
Dioctylphthalate	mg/L	7.7E-02					1.2E-10	1.2E-10	1.2E-10		
Dioctylphthalate	mg/min	9.4E+00					2.2E-06	2.2E-06	2.2E-06		
Dodecane	mg/L	5.5E-01					2.5E-08	2.5E-08	2.5E-08		
Dodecane	mg/min	6.7E+01					4.6E-04	4.6E-04	4.6E-04		
Dodecanoic	mg/L	2.6E-03					1.8E-12	1.8E-12	1.8E-12		
Acid	mg/min	3.2E-01					3.3E-08	3.3E-08	3.3E-08		
Ethanedioic Acid	mg/L	3.5E+01					6.4E-08	6.4E-08	6.4E-08		
Ethanedioic Acid	mg/min	4.3E+03					1.2E-03	1.2E-03	1.2E-03		
Ethoxytri-	mg/L	0.0E+00					0.0E+00	0.0E+00	0.0E+00		
ethylene glycol	mg/min	0.0E+00					0.0E+00	0.0E+00	0.0E+00		
Ethyl,2-methyl-	mg/L	1.3E+00					9.5E-09	9.5E-09	9.5E-09		
hydroxymethylbenzenes		1.6E+02					1.7E-04	1.7E-04	1.7E-04		
Ethyl alcohol	mg/L	0.0E+00					0.0E+00	0.0E+00	0.0E+00		
Ethyl alcohol	mg/min	0.0E+00					0.0E+00	0.0E+00	0.0E+00		
Ethyl Benzene	mg/L	0.0E+00					0.0E+00	0.0E+00	0.0E+00		
Ethyl Benzene	mg/min	0.0E+00					0.0E+00	0.0E+00	0.0E+00		
Ethylbenz-	mg/L	9.6E+01					3.2E-06	3.2E-06	3.2E-06		
aldehyde	mg/min	1.2E-04					5.8E-02	5.8E-02	5.8E-02		
EDTA	mg/L	1.4E-03					4.4E-14	4.4E-14	4.4E-14		
EDTA	mg/min	1.7E-01					8.0E-10	8.0E-10	8.0E-10		
EDTA	mg/L	4.0E-03					1.3E-13	1.3E-13	1.3E-13		
EDTA	mg/min	4.9E-01					2.3E-09	2.3E-09	2.3E-09		

Table 2B-1. Process Flow Sheet for 242-A Evaporator. (24 sheets)

Description	Units	PC to LERF	C100 to 102AW	E-101 to IX	Eluted IX to 102-AW	Inlet Air	Air to H-C-1	Air to F-C-5	Stack Air	E-A-1 Steam	E-A-1 Cond.
Stream Number		11	12	13	14	15	16	17	18	19	20
Ethylxylene	mg/L	1.4E+01					1.3E-08	1.3E-08	1.3E-08		
Ethylxylene	mg/min	1.7E+01					2.4E-04	2.4E-04	2.4E-04		
Heptadecane	mg/L	0.0E+00					0.0E+00	0.0E+00	0.0E+00		
Heptadecane	mg/min	0.0E+00					0.0E+00	0.0E+00	0.0E+00		
Heptadecanoic	mg/L	1.8E-02					3.4E-11	3.4E-11	3.4E-11		
Acid	mg/min	2.2E+00					6.1E-07	6.1E-07	6.1E-07		
Heptanedioic	mg/L	2.8E-01					5.1E-10	5.1E-10	5.1E-10		
Acid	mg/min	3.4E+01					9.2E-06	9.2E-06	9.2E-06		
Hexadecane	mg/L	0.0E+00					0.0E+00	0.0E+00	0.0E+00		
Hexadecane	mg/min	0.0E+00					0.0E+00	0.0E+00	0.0E+00		
Hexadecanoic	mg/L	9.4E-03					2.7E-11	2.7E-11	2.7E-11		
Acid	mg/min	1.1E+00					4.9E-07	4.9E-07	4.9E-07		
Hexanedioic	mg/L	7.5E-03					4.3E-13	4.3E-13	4.3E-13		
Acid	mg/min	9.1E-01					7.8E-09	7.8E-09	7.8E-09		
Hexanoic	mg/L	3.9E-01					3.9E-10	3.9E-10	3.9E-10		
Acid	mg/min	4.7E+01					7.0E-06	7.0E-06	7.0E-06		
Hydroxyacetic	mg/L	1.0E+02					1.2E-04	1.2E-04	1.2E-04		
Acid	mg/min	1.2E+04					2.1E+00	2.1E+00	2.1E+00		
2-Hydroxymethyl-	mg/L	2.4E+00					4.5E-08	4.5E-08	4.5E-08		
benzoic Acid	mg/min	2.9E+02					8.2E-04	8.2E-04	8.2E-04		
Methoxydi-	mg/L	0.0E+00					0.0E+00	0.0E+00	0.0E+00		
glycol	mg/min	0.0E+00					0.0E+00	0.0E+00	0.0E+00		
Methoxytri-	mg/L	0.0E+00					0.0E+00	0.0E+00	0.0E+00		
glycol	mg/min	0.0E+00					0.0E+00	0.0E+00	0.0E+00		
Methylbenz-	mg/L	6.3E+01					1.3E-06	1.3E-06	1.3E-06		
aldehyde	mg/min	7.7E+03					2.3E-02	2.3E-02	2.3E-02		
2-Methylbenzoic	mg/L	3.0E+00					9.9E-08	9.9E-08	9.9E-08		
Acid	mg/min	3.6E+02					1.8E-03	1.8E-03	1.8E-03		
Methylene	mg/L	0.0E+00					0.0E+00	0.0E+00	0.0E+00		
chloride	mg/min	0.0E+00					0.0E+00	0.0E+00	0.0E+00		
2-Methyl.hydroxy-	mg/L	5.6E+01					1.9E-06	1.9E-06	1.9E-06		
methyl benzene	mg/min	6.8E+03					3.4E-02	3.4E-02	3.4E-02		
Methyl n-propyl	mg/L	0.0E+00					0.0E+00	0.0E+00	0.0E+00		
ketone	mg/min	0.0E+00					0.0E+00	0.0E+00	0.0E+00		
Methyl n-butyl	mg/L	0.0E+00					0.0E+00	0.0E+00	0.0E+00		
ketone	mg/min	0.0E+00					0.0E+00	0.0E+00	0.0E+00		
MIBK	mg/L	0.0E+00					0.0E+00	0.0E+00	0.0E+00		
(Hexone)	mg/min	0.0E+00					0.0E+00	0.0E+00	0.0E+00		
2-Methyl-	mg/L	0.0E+00					0.0E+00	0.0E+00	0.0E+00		
nonane	mg/min	0.0E+00					0.0E+00	0.0E+00	0.0E+00		
Methyl-	mg/L	1.8E-01					2.3E-09	2.3E-09	2.3E-09		
toluidine	mg/min	2.2E+01					4.2E-05	4.2E-05	4.2E-05		
n-C22H46 -	mg/L	3.6E-02					2.3E-11	2.3E-11	2.3E-11		
C4GH82	mg/min	4.4E+00					4.2E-07	4.2E-07	4.2E-07		
NEDTA	mg/L	1.7E+00					3.2E-08	3.2E-08	3.2E-08		
NEDTA	mg/min	2.0E+02					5.8E-04	5.8E-04	5.8E-04		
NAIDA	mg/L	1.0E+01					3.9E-08	3.9E-08	3.9E-08		
NAIDA	mg/min	1.3E+03					7.1E-04	7.1E-04	7.1E-04		
NICEDA	mg/L	5.4E-01					2.0E-09	2.0E-09	2.0E-09		
NICEDA	mg/min	6.5E+01					3.6E-05	3.6E-05	3.6E-05		
Nitrilotri-	mg/L	1.1E-01					4.0E-10	4.0E-10	4.0E-10		
acetic Acid	mg/min	1.3E+01					7.3E-06	7.3E-06	7.3E-06		
Octodecanoic	mg/L	3.2E+03					6.3E-12	6.3E-12	6.3E-12		
Acid	mg/min	3.8E-01					1.1E-07	1.1E-07	1.1E-07		
o-Xylene	mg/L	0.0E+00					0.0E+00	0.0E+00	0.0E+00		
o-Xylene	mg/min	0.0E+00					0.0E+00	0.0E+00	0.0E+00		
p-Chlorotoluene	mg/L	0.0E+00					0.0E+00	0.0E+00	0.0E+00		
p-Chlorotoluene	mg/min	0.0E+00					0.0E+00	0.0E+00	0.0E+00		
p-Dichloro-	mg/L	0.0E+00					0.0E+00	0.0E+00	0.0E+00		
benzene	mg/min	0.0E+00					0.0E+00	0.0E+00	0.0E+00		
Pentadecane	mg/L	4.8E-02					2.6E-10	2.6E-10	2.6E-10		
Pentadecane	mg/min	5.8E+00					4.6E-06	4.6E-06	4.6E-06		
Pentadecanoic	mg/L	6.0E-01					2.6E-09	2.6E-09	2.6E-09		
Acid	mg/min	7.3E+01					4.8E-05	4.8E-05	4.8E-05		
Pentanedioic	mg/L	7.8E-03					2.1E-13	2.1E-13	2.1E-13		
Acid	mg/min	9.5E-01					3.7E-09	3.7E-09	3.7E-09		

Table 2B-1. Process Flow Sheet for 242-A Evaporator. (24 sheets)

Description	Units	PC to LERF	C100 to 102AW	E-101 to IX	Eluted IX to 102-AW	Inlet Air	Air to H-C-1	Air to F-C-5	Stack Air	E-A-1 Steam	E-A-1 Cond.
Stream Number		11	12	13	14	15	16	17	18	19	20
Phenol	mg/L	0.0E+00					0.0E+00	0.0E+00	0.0E+00		
Phenol	mg/min	0.0E+00					0.0E+00	0.0E+00	0.0E+00		
2-Propanol	mg/L	0.0E+00					0.0E+00	0.0E+00	0.0E+00		
2-Propanol	mg/min	0.0E+00					0.0E+00	0.0E+00	0.0E+00		
Propylbenzene	mg/L	3.2E+00					2.7E-06	2.7E-06	2.7E-06		
Propylbenzene	mg/min	3.9E+02					4.9E-02	4.9E-02	4.9E-02		
Pyridine	mg/L	0.0E+00					0.0E+00	0.0E+00	0.0E+00		
Pyridine	mg/min	0.0E+00					0.0E+00	0.0E+00	0.0E+00		
Tetrachloro-	mg/L	0.0E+00					0.0E+00	0.0E+00	0.0E+00		
ethylene	mg/min	0.0E+00					0.0E+00	0.0E+00	0.0E+00		
Tetradecane	mg/L	3.8E-01					4.5E-09	4.5E-09	4.5E-09		
Tetradecane	mg/min	4.7E+01					8.2E-05	8.2E-05	8.2E-05		
Tetrahydro-	mg/L	0.0E+00					0.0E+00	0.0E+00	0.0E+00		
furan	mg/min	0.0E+00					0.0E+00	0.0E+00	0.0E+00		
Tributyl	mg/L	1.1E+00					1.3E-08	1.3E-08	1.3E-08		
phosphate	mg/min	1.4E+02					2.4E-04	2.4E-04	2.4E-04		
Tri-n-butyl-	mg/L	5.4E-01					6.4E-09	6.4E-09	6.4E-09		
(di-ol)-phosphate		6.6E+01					1.2E-04	1.2E-04	1.2E-04		
1,1,1-Tri-	mg/L	0.0E+00					0.0E+00	0.0E+00	0.0E+00		
chlorethane	mg/min	0.0E+00					0.0E+00	0.0E+00	0.0E+00		
Trichloro-	mg/L	0.0E+00					0.0E+00	0.0E+00	0.0E+00		
ethylene	mg/min	0.0E+00					0.0E+00	0.0E+00	0.0E+00		
Trichloromethane	mg/L	0.0E+00					0.0E+00	0.0E+00	0.0E+00		
Trichloromethane	mg/min	0.0E+00					0.0E+00	0.0E+00	0.0E+00		
Tridecane	mg/L	1.8E+00					7.5E-08	7.5E-08	7.5E-08		
Tridecane	mg/min	2.2E+02					1.4E-03	1.4E-03	1.4E-03		
Triglyme	mg/L	0.0E+00					0.0E+00	0.0E+00	0.0E+00		
Triglyme	mg/min	0.0E+00					0.0E+00	0.0E+00	0.0E+00		
1,3,5 Trimethyl	mg/L	1.9E+02					3.1E-04	3.1E-04	3.1E-04		
benzene	mg/min	2.4E+04					5.5E+00	5.5E+00	5.5E+00		
Toluene	mg/L	0.0E+00					0.0E+00	0.0E+00	0.0E+00		
Toluene	mg/min	0.0E+00					0.0E+00	0.0E+00	0.0E+00		
Vinyl Chloride	mg/L	0.0E+00					0.0E+00	0.0E+00	0.0E+00		
Vinyl Chloride	mg/min	0.0E+00					0.0E+00	0.0E+00	0.0E+00		
Undecane	mg/L	8.3E-01					8.7E-08	8.7E-08	8.7E-08		
Undecane	mg/min	1.0E+02					1.6E-03	1.6E-03	1.6E-03		
Unknown	mg/L	8.8E-02					1.7E-10	1.7E-10	1.7E-10		
phthalates	mg/min	1.1E+01					3.0E-06	3.0E-06	3.0E-06		

Table 2B-1. Process Flow Sheet for 242-A Evaporator. (24 sheets)

Description	Units	RW To E-C-1	RW To E-C-2	RW To E-C-3	RW To B Pond	J-EC1-1 Steam	J-EC1-2 Steam	Air In-leaks	H-C-1 Steam	H-C-1 Cond.	P-B-1 Seal Water
Stream Number		21	22	23	24	25	26	27	28	29	30
Form		Liquid	Liquid	Liquid	Liquid	Steam	Steam	Gas	Steam	Liquid	Liquid
L/min	Total	1.3E+04	3.0E+02	3.0E+02	1.4E+04	2.8E+04	3.1E+04	7.4E+02	0.0E+00	0.0E+00	5.7E-01
Batch	L/Batch										
Temperature	C	2.2E+01	2.2E+01	3.4E+01	2.7E+01	1.7E+02	1.7E+02	1.0E+01	1.2E+02	3.8E+01	2.2E+01
Sp. Gr.	unitless	1.0E+00	1.0E+00	9.9E-01	1.0E+00	4.4E+00	4.4E+00	9.6E-01	1.2E+00	9.9E-01	1.0E+00
Abs. Pressure	Torr	5.2E+03	5.2E+03	4.7E+03	4.7E+03	5.4E+03	5.4E+03	7.6E+02	1.3E+03	7.6E+02	7.6E+02
Abs. Pressure	Pa	6.9E+05	6.9E+05	6.2E+05	6.2E+05	7.2E+05	7.2E+05	1.0E+05	1.7E+05	1.0E+05	1.0E+05
pH		6.2E+00	6.2E+00	6.2E+00	6.2E+00					8.0E+00	6.2E+00
TOC	mg/L	1.7E+00	1.7E+00	1.7E+00	1.7E+00	2.0E-04	2.0E-04	0.0E+00	ERR	1.1E+00	1.7E+00
TOC	mg/min	2.2E+04	5.1E+02	5.1E+02	2.3E+04	5.7E+00	6.2E+00	0.0E+00	0.0E+00	0.0E+00	9.7E-01
TDS	mg/L	0.0E+00	0.0E+00	0.0E+00	0.0E+00	1.4E-02	1.4E-02	0.0E+00	ERR	7.6E+01	0.0E+00
TDS	mg/min	0.0E+00	0.0E+00	0.0E+00	0.0E+00	3.9E+02	4.3E+02	0.0E+00	0.0E+00	0.0E+00	0.0E+00
H2O	L/min	1.3E+04	3.0E+02	3.0E+02	1.4E+04	2.8E+04	3.1E+04	4.5E+00	0.0E+00	0.0E+00	5.7E-01
H2O	kg/min	1.3E+04	3.0E+02	3.0E+02	1.4E+04	5.2E+00	5.7E+00	3.5E-03	0.0E+00	0.0E+00	5.7E-01
Air	L/min	0.0E+00	0.0E+00	0.0E+00	0.0E+00	0.0E+00	0.0E+00	7.3E+02	0.0E+00	0.0E+00	0.0E+00
Air	kg/min	0.0E+00	0.0E+00	0.0E+00	0.0E+00	0.0E+00	0.0E+00	9.2E-01	0.0E+00	0.0E+00	0.0E+00
Heat	Joules/min	2.5E+08	1.6E+07	1.5E+07	2.8E+08	1.3E+07	1.4E+07		0.0E+00		
		4.5E+09	1.1E+01	1.1E+01							
Alpha	uCi/ml	8.1E-10	8.1E-10	8.1E-10	8.1E-10	1.2E-10	1.2E-10				8.1E-10
Alpha	uCi/min	1.1E-02	2.5E-04	2.5E-04	1.1E-02	3.3E-06	3.7E-06				4.6E-07
Beta	uCi/ml	1.0E-09	1.0E-08	1.0E-08	1.0E-08	0.0E+00	0.0E+00				1.0E-08
Beta	uCi/min	1.3E-01	3.1E-03	3.1E-03	1.4E-01	0.0E+00	0.0E+00				5.7E-06
3H	uCi/ml	0.0E+00	0.0E+00	0.0E+00	0.0E+00	0.0E+00	0.0E+00				0.0E+00
3H	uCi/min	0.0E+00	0.0E+00	0.0E+00	0.0E+00	0.0E+00	0.0E+00				0.0E+00
14C	uCi/ml	0.0E+00	0.0E+00	0.0E+00	0.0E+00	7.3E-10	7.3E-10				0.0E+00
14C	uCi/min	0.0E+00	0.0E+00	0.0E+00	0.0E+00	2.1E-05	2.3E-05				0.0E+00
60Co	uCi/ml	0.0E+00	0.0E+00	0.0E+00	0.0E+00	0.0E+00	0.0E+00				0.0E+00
60Co	uCi/min	0.0E+00	0.0E+00	0.0E+00	0.0E+00	0.0E+00	0.0E+00				0.0E+00
63Ni	uCi/ml	0.0E+00	0.0E+00	0.0E+00	0.0E+00	0.0E+00	0.0E+00				0.0E+00
63Ni	uCi/min	0.0E+00	0.0E+00	0.0E+00	0.0E+00	0.0E+00	0.0E+00				0.0E+00
79Se	uCi/ml	0.0E+00	0.0E+00	0.0E+00	0.0E+00	0.0E+00	0.0E+00				0.0E+00
79Se	uCi/min	0.0E+00	0.0E+00	0.0E+00	0.0E+00	0.0E+00	0.0E+00				0.0E+00
90Sr	uCi/ml	0.0E+00	0.0E+00	0.0E+00	0.0E+00	9.0E-11	9.0E-11				0.0E+00
90Sr	uCi/min	0.0E+00	0.0E+00	0.0E+00	0.0E+00	2.6E-06	2.8E-06				0.0E+00
93Zr	uCi/ml	0.0E+00	0.0E+00	0.0E+00	0.0E+00	0.0E+00	0.0E+00				0.0E+00
93Zr	uCi/min	0.0E+00	0.0E+00	0.0E+00	0.0E+00	0.0E+00	0.0E+00				0.0E+00
94Nb	uCi/ml	0.0E+00	0.0E+00	0.0E+00	0.0E+00	0.0E+00	0.0E+00				0.0E+00
94Nb	uCi/min	0.0E+00	0.0E+00	0.0E+00	0.0E+00	0.0E+00	0.0E+00				0.0E+00
99Tc	uCi/ml	0.0E+00	0.0E+00	0.0E+00	0.0E+00	0.0E+00	0.0E+00				0.0E+00
99Tc	uCi/min	0.0E+00	0.0E+00	0.0E+00	0.0E+00	0.0E+00	0.0E+00				0.0E+00
106Ru	uCi/ml	0.0E+00	0.0E+00	0.0E+00	0.0E+00	0.0E+00	0.0E+00				0.0E+00
106Ru	uCi/min	0.0E+00	0.0E+00	0.0E+00	0.0E+00	0.0E+00	0.0E+00				0.0E+00
113Sn	uCi/ml	0.0E+00	0.0E+00	0.0E+00	0.0E+00	0.0E+00	0.0E+00				0.0E+00
113Sn	uCi/min	0.0E+00	0.0E+00	0.0E+00	0.0E+00	0.0E+00	0.0E+00				0.0E+00
124Sb	uCi/ml	0.0E+00	0.0E+00	0.0E+00	0.0E+00	0.0E+00	0.0E+00				0.0E+00
124Sb	uCi/min	0.0E+00	0.0E+00	0.0E+00	0.0E+00	0.0E+00	0.0E+00				0.0E+00
125Sb	uCi/ml	0.0E+00	0.0E+00	0.0E+00	0.0E+00	0.0E+00	0.0E+00				0.0E+00
125Sb	uCi/min	0.0E+00	0.0E+00	0.0E+00	0.0E+00	0.0E+00	0.0E+00				0.0E+00
126Sn	uCi/ml	0.0E+00	0.0E+00	0.0E+00	0.0E+00	0.0E+00	0.0E+00				0.0E+00
126Sn	uCi/min	0.0E+00	0.0E+00	0.0E+00	0.0E+00	0.0E+00	0.0E+00				0.0E+00
129I	uCi/ml	0.0E+00	0.0E+00	0.0E+00	0.0E+00	0.0E+00	0.0E+00				0.0E+00
129I	uCi/min	0.0E+00	0.0E+00	0.0E+00	0.0E+00	0.0E+00	0.0E+00				0.0E+00
134Cs	uCi/ml	0.0E+00	0.0E+00	0.0E+00	0.0E+00	0.0E+00	0.0E+00				0.0E+00
134Cs	uCi/min	0.0E+00	0.0E+00	0.0E+00	0.0E+00	0.0E+00	0.0E+00				0.0E+00
135Cs	uCi/ml	0.0E+00	0.0E+00	0.0E+00	0.0E+00	0.0E+00	0.0E+00				0.0E+00
135Cs	uCi/min	0.0E+00	0.0E+00	0.0E+00	0.0E+00	0.0E+00	0.0E+00				0.0E+00
137Cs	uCi/ml	0.0E+00	0.0E+00	0.0E+00	0.0E+00	0.0E+00	0.0E+00				0.0E+00
137Cs	uCi/min	0.0E+00	0.0E+00	0.0E+00	0.0E+00	0.0E+00	0.0E+00				0.0E+00
144Ce	uCi/ml	0.0E+00	0.0E+00	0.0E+00	0.0E+00	0.0E+00	0.0E+00				0.0E+00
144Ce	uCi/min	0.0E+00	0.0E+00	0.0E+00	0.0E+00	0.0E+00	0.0E+00				0.0E+00
147Pm	uCi/ml	0.0E+00	0.0E+00	0.0E+00	0.0E+00	0.0E+00	0.0E+00				0.0E+00
147Pm	uCi/min	0.0E+00	0.0E+00	0.0E+00	0.0E+00	0.0E+00	0.0E+00				0.0E+00
151Sm	uCi/ml	0.0E+00	0.0E+00	0.0E+00	0.0E+00	0.0E+00	0.0E+00				0.0E+00
151Sm	uCi/min	0.0E+00	0.0E+00	0.0E+00	0.0E+00	0.0E+00	0.0E+00				0.0E+00
155Eu	uCi/ml	0.0E+00	0.0E+00	0.0E+00	0.0E+00	0.0E+00	0.0E+00				0.0E+00

Table 2B-1. Process Flow Sheet for 242-A Evaporator. (24 sheets)

Description	Units	RW To E-C-1	RW To E-C-2	RW To E-C-3	RW To B Pond	J-EC1-1 Steam	J-EC1-2 Steam	Air In-leaks	H-C-1 Steam	H-C-1 Cond.	P-B-1 Seal Water
Stream Number		21	22	23	24	25	26	27	28	29	30
155Eu	uCi/min	0.0E+00	0.0E+00	0.0E+00	0.0E+00	0.0E+00	0.0E+00				0.0E+00
226Ra	uCi/ml	0.0E+00	0.0E+00	0.0E+00	0.0E+00	0.0E+00	0.0E+00				0.0E+00
226Ra	uCi/min	0.0E+00	0.0E+00	0.0E+00	0.0E+00	0.0E+00	0.0E+00				0.0E+00
230Th	uCi/ml	0.0E+00	0.0E+00	0.0E+00	0.0E+00	0.0E+00	0.0E+00				0.0E+00
230Th	uCi/min	0.0E+00	0.0E+00	0.0E+00	0.0E+00	0.0E+00	0.0E+00				0.0E+00
233U	uCi/ml	0.0E+00	0.0E+00	0.0E+00	0.0E+00	0.0E+00	0.0E+00				0.0E+00
233U	uCi/min	0.0E+00	0.0E+00	0.0E+00	0.0E+00	0.0E+00	0.0E+00				0.0E+00
234U	uCi/ml	0.0E+00	0.0E+00	0.0E+00	0.0E+00	3.5E-11	3.5E-11				0.0E+00
234U	uCi/min	0.0E+00	0.0E+00	0.0E+00	0.0E+00	9.9E-07	1.1E-06				0.0E+00
235U	uCi/ml	0.0E+00	0.0E+00	0.0E+00	0.0E+00	0.0E+00	0.0E+00				0.0E+00
235U	uCi/min	0.0E+00	0.0E+00	0.0E+00	0.0E+00	0.0E+00	0.0E+00				0.0E+00
238U	uCi/ml	0.0E+00	0.0E+00	0.0E+00	0.0E+00	3.1E-11	3.1E-11				0.0E+00
238U	uCi/min	0.0E+00	0.0E+00	0.0E+00	0.0E+00	8.7E-07	9.6E-07				0.0E+00
237Np	uCi/ml	0.0E+00	0.0E+00	0.0E+00	0.0E+00	0.0E+00	0.0E+00				0.0E+00
237Np	uCi/min	0.0E+00	0.0E+00	0.0E+00	0.0E+00	0.0E+00	0.0E+00				0.0E+00
238Pu	uCi/ml	0.0E+00	0.0E+00	0.0E+00	0.0E+00	0.0E+00	0.0E+00				0.0E+00
238Pu	uCi/min	0.0E+00	0.0E+00	0.0E+00	0.0E+00	0.0E+00	0.0E+00				0.0E+00
239Pu	uCi/ml	0.0E+00	0.0E+00	0.0E+00	0.0E+00	0.0E+00	0.0E+00				0.0E+00
239Pu	uCi/min	0.0E+00	0.0E+00	0.0E+00	0.0E+00	0.0E+00	0.0E+00				0.0E+00
240Pu	uCi/ml	0.0E+00	0.0E+00	0.0E+00	0.0E+00	0.0E+00	0.0E+00				0.0E+00
240Pu	uCi/min	0.0E+00	0.0E+00	0.0E+00	0.0E+00	0.0E+00	0.0E+00				0.0E+00
241Pu	uCi/ml	0.0E+00	0.0E+00	0.0E+00	0.0E+00	0.0E+00	0.0E+00				0.0E+00
241Pu	uCi/min	0.0E+00	0.0E+00	0.0E+00	0.0E+00	0.0E+00	0.0E+00				0.0E+00
241Am	uCi/ml	0.0E+00	0.0E+00	0.0E+00	0.0E+00	0.0E+00	0.0E+00				0.0E+00
241Am	uCi/min	0.0E+00	0.0E+00	0.0E+00	0.0E+00	0.0E+00	0.0E+00				0.0E+00
243Am	uCi/ml	0.0E+00	0.0E+00	0.0E+00	0.0E+00	0.0E+00	0.0E+00				0.0E+00
243Am	uCi/min	0.0E+00	0.0E+00	0.0E+00	0.0E+00	0.0E+00	0.0E+00				0.0E+00
244Cm	uCi/ml	0.0E+00	0.0E+00	0.0E+00	0.0E+00	0.0E+00	0.0E+00				0.0E+00
244Cm	uCi/min	0.0E+00	0.0E+00	0.0E+00	0.0E+00	0.0E+00	0.0E+00				0.0E+00
AlO2-	mg/L	0.0E+00	0.0E+00	0.0E+00	0.0E+00	0.0E+00	0.0E+00				0.0E+00
AlO2-	mg/min	0.0E+00	0.0E+00	0.0E+00	0.0E+00	0.0E+00	0.0E+00				0.0E+00
NH4+	mg/L	0.0E+00	0.0E+00	0.0E+00	0.0E+00	1.1E-05	1.1E-05				0.0E+00
NH4+	mg/min	0.0E+00	0.0E+00	0.0E+00	0.0E+00	3.2E-01	3.6E-01				0.0E+00
Sb	mg/L	0.0E+00	0.0E+00	0.0E+00	0.0E+00	0.0E+00	0.0E+00				0.0E+00
Sb	mg/min	0.0E+00	0.0E+00	0.0E+00	0.0E+00	0.0E+00	0.0E+00				0.0E+00
As	mg/L	0.0E+00	0.0E+00	0.0E+00	0.0E+00	0.0E+00	0.0E+00				0.0E+00
As	mg/min	0.0E+00	0.0E+00	0.0E+00	0.0E+00	0.0E+00	0.0E+00				0.0E+00
Ba	mg/L	3.0E-02	3.0E-02	3.0E-02	3.0E-02	5.7E-06	5.7E-06				3.0E-02
Ba	mg/min	4.0E+02	9.2E+00	9.2E+00	4.1E+02	1.6E-01	1.8E-01				1.7E-02
Be	mg/L	0.0E+00	0.0E+00	0.0E+00	0.0E+00	0.0E+00	0.0E+00				0.0E+00
Be	mg/min	0.0E+00	0.0E+00	0.0E+00	0.0E+00	0.0E+00	0.0E+00				0.0E+00
Bi	mg/L	0.0E+00	0.0E+00	0.0E+00	0.0E+00	0.0E+00	0.0E+00				0.0E+00
Bi	mg/min	0.0E+00	0.0E+00	0.0E+00	0.0E+00	0.0E+00	0.0E+00				0.0E+00
B	mg/L	0.0E+00	0.0E+00	0.0E+00	0.0E+00	3.4E-06	3.4E-06				0.0E+00
B	mg/min	0.0E+00	0.0E+00	0.0E+00	0.0E+00	9.5E-02	1.1E-01				0.0E+00
Ca	mg/L	1.9E+01	1.9E+01	1.9E+01	1.9E+01	3.5E-03	3.5E-03				1.9E+01
Ca	mg/min	2.6E+05	5.8E+03	5.8E+03	2.6E+05	9.9E+01	1.1E+02				1.1E+01
Cd	mg/L	2.0E-03	2.0E-03	2.0E-03	2.0E-03	0.0E+00	0.0E+00				2.0E-03
Cd	mg/min	2.6E+01	6.0E-01	6.0E-01	2.7E+01	0.0E+00	0.0E+00				1.1E-03
CO3=	mg/L	0.0E+00	0.0E+00	0.0E+00	0.0E+00	0.0E+00	0.0E+00				0.0E+00
CO3=	mg/min	0.0E+00	0.0E+00	0.0E+00	0.0E+00	0.0E+00	0.0E+00				0.0E+00
Cl-	mg/L	7.8E-01	7.8E-01	7.8E-01	7.8E-01	2.0E-04	2.0E-04				7.8E-01
Cl-	mg/min	1.0E+04	2.4E+02	2.4E+02	1.1E+04	5.7E+00	6.2E+00				4.5E-01
Cr	mg/L	1.0E-02	1.0E-02	1.0E-02	1.0E-02	0.0E+00	0.0E+00				1.0E-02
Cr	mg/min	1.4E+02	3.1E+00	3.1E+00	1.4E+02	0.0E+00	0.0E+00				5.9E-03
Cu	mg/L	7.4E-02	7.4E-02	7.4E-02	7.3E-02	2.0E-06	2.0E-06				7.4E-02
Cu	mg/min	9.7E+02	2.2E+01	2.2E+01	1.0E+03	5.7E-02	5.2E-02				4.2E-02
CN-	mg/L	0.0E+00	0.0E+00	0.0E+00	0.0E+00	0.0E+00	0.0E+00				0.0E+00
CN-	mg/min	0.0E+00	0.0E+00	0.0E+00	0.0E+00	0.0E+00	0.0E+00				0.0E+00
F-	mg/L	0.0E+00	0.0E+00	0.0E+00	0.0E+00	2.3E-05	2.3E-05				0.0E+00
F-	mg/min	0.0E+00	0.0E+00	0.0E+00	0.0E+00	6.6E-01	7.3E-01				0.0E+00
Fe	mg/L	1.0E-01	1.0E-01	1.0E-01	1.0E-01	1.5E-05	1.5E-05				1.0E-01
Fe	mg/min	1.4E+03	3.1E+01	3.1E+01	1.4E+03	4.3E-01	4.8E-01				5.9E-02
N2	mg/L	0.0E+00	0.0E+00	0.0E+00	0.0E+00	0.0E+00	0.0E+00				0.0E+00

1
2

Table 2B-1. Process Flow Sheet for 242-A Evaporator. (24 sheets)

Description	Units	RW To E-C-1	RW To E-C-2	RW To E-C-3	RW To B Pond	J-EC1-1 Steam	J-EC1-2 Steam	Air In-leaks	H-C-1 Steam	H-C-1 Cond.	P-B-1 Seal Water
Stream Number		21	22	23	24	25	26	27	28	29	30
H2	mg/min	0.0E+00	0.0E+00	0.0E+00	0.0E+00	0.0E+00	0.0E+00				0.0E+00
OH+	mg/L	0.0E+00	0.0E+00	0.0E+00	0.0E+00	0.0E+00	0.0E+00				0.0E+00
OH-	mg/min	0.0E+00	0.0E+00	0.0E+00	0.0E+00	0.0E+00	0.0E+00				0.0E+00
Pb	mg/L	1.3E-02	1.3E-02	1.3E-02	1.3E-02	1.0E-06	1.0E-06				1.3E-02
Pb	mg/min	1.7E+02	3.8E+00	3.8E+00	1.7E+02	2.8E-02	3.1E-02				7.2E-03
Mg	mg/L	4.3E+00	4.3E+00	4.3E+00	4.3E+00	8.2E-04	8.2E-04				4.3E+00
Mg	mg/min	5.7E+04	1.3E+03	1.3E+03	5.9E+04	2.3E+01	2.6E+01				2.5E+00
Mn	mg/L	1.1E-02	1.1E-02	1.1E-02	1.1E-02	2.6E-06	2.6E-06				1.1E-02
Mn	mg/min	1.4E+02	3.2E+00	3.2E+00	1.4E+02	7.3E-02	8.1E-02				4.1E-03
Hg	mg/L	0.0E+00	0.0E+00	0.0E+00	0.0E+00	1.9E-06	1.9E-06				0.0E+00
Hg	mg/min	0.0E+00	0.0E+00	0.0E+00	0.0E+00	5.4E-04	6.0E-04				0.0E+00
Mo	mg/L	0.0E+00	0.0E+00	0.0E+00	0.0E+00	0.0E+00	0.0E+00				0.0E+00
Mo	mg/min	0.0E+00	0.0E+00	0.0E+00	0.0E+00	0.0E+00	0.0E+00				0.0E+00
Ni	mg/L	1.1E-02	1.1E-02	1.1E-02	1.1E-02	0.0E+00	0.0E+00				1.1E-02
Ni	mg/min	1.5E+02	3.4E+00	3.4E+00	1.5E+02	0.0E+00	0.0E+00				6.4E-03
NO3-	mg/L	1.2E+00	1.2E+00	1.2E+00	1.2E+00	1.0E-04	1.0E-04				1.2E+00
NO3-	mg/min	1.6E+04	3.6E+02	3.6E+02	1.6E+04	2.8E+00	3.1E+00				6.8E-01
NO2-	mg/L	0.0E+00	0.0E+00	0.0E+00	0.0E+00	0.0E+00	0.0E+00				0.0E+00
NO2-	mg/min	0.0E+00	0.0E+00	0.0E+00	0.0E+00	0.0E+00	0.0E+00				0.0E+00
PO4	mg/L	0.0E+00	0.0E+00	0.0E+00	0.0E+00	0.0E+00	0.0E+00				0.0E+00
PO4	mg/min	0.0E+00	0.0E+00	0.0E+00	0.0E+00	0.0E+00	0.0E+00				0.0E+00
P	mg/L	0.0E+00	0.0E+00	0.0E+00	0.0E+00	0.0E+00	0.0E+00				0.0E+00
P	mg/min	0.0E+00	0.0E+00	0.0E+00	0.0E+00	0.0E+00	0.0E+00				0.0E+00
K	mg/L	8.0E-01	8.0E-01	8.0E-01	8.0E-01	1.4E-04	1.4E-04				8.0E-01
K	mg/min	1.1E+04	2.4E+02	2.4E+02	1.1E+04	3.9E+00	4.3E+00				4.5E-01
Se	mg/L	0.0E+00	0.0E+00	0.0E+00	0.0E+00	0.0E+00	0.0E+00				0.0E+00
Se	mg/min	0.0E+00	0.0E+00	0.0E+00	0.0E+00	0.0E+00	0.0E+00				0.0E+00
Si	mg/L	0.0E+00	0.0E+00	0.0E+00	0.0E+00	4.5E-04	4.5E-04				0.0E+00
Si	mg/min	0.0E+00	0.0E+00	0.0E+00	0.0E+00	1.3E+01	1.4E+01				0.0E+00
Ag	mg/L	0.0E+00	0.0E+00	0.0E+00	0.0E+00	0.0E+00	0.0E+00				0.0E+00
Ag	mg/min	0.0E+00	0.0E+00	0.0E+00	0.0E+00	0.0E+00	0.0E+00				0.0E+00
Na	mg/L	2.4E+00	2.4E+00	2.4E+00	2.3E+00	4.0E-04	4.0E-04				2.4E+00
Na	mg/min	3.1E+04	7.1E+02	7.1E+02	3.2E+04	1.1E+01	1.3E+01				1.3E+00
SO4-	mg/L	1.0E-01	1.0E+01	1.0E-01	1.0E+01	1.9E-03	1.9E-03				1.0E+01
SO4-	mg/min	1.4E+05	3.1E+03	3.1E+03	1.4E+05	5.4E+01	6.0E+01				5.8E-00
S-	mg/L	0.0E+00	0.0E+00	0.0E+00	0.0E+00	0.0E+00	0.0E+00				0.0E+06
S-	mg/min	0.0E+00	0.0E+00	0.0E+00	0.0E+00	0.0E+00	0.0E+00				0.0E+00
Ti	mg/L	0.0E+00	0.0E+00	0.0E+00	0.0E+00	0.0E+00	0.0E+00				0.0E+00
Ti	mg/min	0.0E+00	0.0E+00	0.0E+00	0.0E+00	0.0E+00	0.0E+00				0.0E+06
W	mg/L	0.0E+00	0.0E+00	0.0E+00	0.0E+00	0.0E+00	0.0E+00				0.0E+00
W	mg/min	0.0E+00	0.0E+00	0.0E+00	0.0E+00	0.0E+00	0.0E+00				0.0E+00
U	mg/L	6.4E-04	6.4E-04	6.4E-04	6.4E-04	9.4E-08	9.4E-08				6.4E-04
U	mg/min	8.5E+00	1.9E-01	1.9E-01	8.7E+00	2.7E-03	3.0E-03				3.7E-04
V	mg/L	0.0E+00	0.0E+00	0.0E+00	0.0E+00	0.0E+00	0.0E+00				0.0E+00
V	mg/min	0.0E+00	0.0E+00	0.0E+00	0.0E+00	0.0E+00	0.0E+00				0.0E+00
Zn	mg/L	4.8E-02	4.8E-02	4.8E-02	4.8E-02	3.4E-06	3.4E-06				4.8E-02
Zn	mg/min	6.3E+02	1.4E+01	1.4E+01	6.5E+02	9.6E-02	1.1E-01				2.7E-02
Zr	mg/L	0.0E+00	0.0E+00	0.0E+00	0.0E+00	0.0E+00	0.0E+00				0.0E+00
Zr	mg/min	0.0E+00	0.0E+00	0.0E+00	0.0E+00	0.0E+00	0.0E+00				0.0E+00
Acetone	mg/L	0.0E+00	0.0E+00	0.0E+00	0.0E+00						0.0E+00
Acetone	mg/min	0.0E+00	0.0E+00	0.0E+00	0.0E+00						0.0E+00
Alkyl, hydroxy-methyl benzene	mg/L	0.0E+00	0.0E+00	0.0E+00	0.0E+00						0.0E+00
	mg/min	0.0E+00	0.0E+00	0.0E+00	0.0E+00						0.0E+00
Benzyl alcohol	mg/L	0.0E+00	0.0E+00	0.0E+00	0.0E+00						0.0E+00
Benzyl alcohol	mg/min	0.0E+00	0.0E+00	0.0E+00	0.0E+00						0.0E+00
Benzaldehyde	mg/L	0.0E+00	0.0E+00	0.0E+00	0.0E+00						0.0E+00
Benzaldehyde	mg/min	0.0E+00	0.0E+00	0.0E+00	0.0E+00						0.0E+00
Benzene	mg/L	0.0E+00	0.0E+00	0.0E+00	0.0E+00						0.0E+00
Benzene	mg/min	0.0E+00	0.0E+00	0.0E+00	0.0E+00						0.0E+00
Bromodichloro-methane	mg/L	0.0E+00	0.0E+00	0.0E+00	0.0E+00						0.0E+00
	mg/min	0.0E+00	0.0E+00	0.0E+00	0.0E+00						0.0E+00
Bromoform	mg/L	0.0E+00	0.0E+00	0.0E+00	0.0E+00						0.0E+00
Bromoform	mg/min	0.0E+00	0.0E+00	0.0E+00	0.0E+00						0.0E+00
Butanedioic	mg/L	0.0E+00	0.0E+00	0.0E+00	0.0E+00						0.0E+00

3

Table 2B-1. Process Flow Sheet for 242-A Evaporator. (24 sheets)

Description	Units	RW To E-C-1	RW To E-C-2	RW To E-C-3	RW To B Pond	J-EC1-1 Steam	J-EC1-2 Steam	Air In-leaks	H-C-1 Steam	H-C-1 Cond.	P-B-1 Seal Water
Stream number		21	22	23	24	25	26	27	28	29	30
Acid	mg/min	0.0E+00	0.0E+00	0.0E+00	0.0E+00						0.0E+00
1-Butanol	mg/L	1.1E-02	1.1E-02	1.1E-02	1.1E-02						1.1E-02
1-Butanol	mg/min	1.5E+02	3.3E+00	3.3E+00	1.5E+02						6.2E-03
2-Butanone	mg/L	0.0E+00	0.0E+00	0.0E+00	0.0E+00						0.0E+00
2-Butanone	mg/min	0.0E+00	0.0E+00	0.0E+00	0.0E+00						0.0E+00
Butoxy-	mg/L	0.0E+00	0.0E+00	0.0E+00	0.0E+00						0.0E+00
diglycol	mg/min	0.0E+00	0.0E+00	0.0E+00	0.0E+00						0.0E+00
2-Butoxy-	mg/L	0.0E+00	0.0E+00	0.0E+00	0.0E+00						0.0E+00
ethanol	mg/min	0.0E+00	0.0E+00	0.0E+00	0.0E+00						0.0E+00
Butoxy-	mg/L	0.0E+00	0.0E+00	0.0E+00	0.0E+00						0.0E+00
glycol	mg/min	0.0E+00	0.0E+00	0.0E+00	0.0E+00						0.0E+00
Butoxytri-	mg/L	0.0E+00	0.0E+00	0.0E+00	0.0E+00						0.0E+00
ethyleneglycol	mg/min	0.0E+00	0.0E+00	0.0E+00	0.0E+00						0.0E+00
Butraldehyde	mg/L	0.0E+00	0.0E+00	0.0E+00	0.0E+00						0.0E+00
Butraldehyde	mg/min	0.0E+00	0.0E+00	0.0E+00	0.0E+00						0.0E+00
C3-Alkylbenzene	mg/L	0.0E+00	0.0E+00	0.0E+00	0.0E+00						0.0E+00
C3-Alkylbenzene	mg/min	0.0E+00	0.0E+00	0.0E+00	0.0E+00						0.0E+00
Caproic acid	mg/L	0.0E+00	0.0E+00	0.0E+00	0.0E+00						0.0E+00
Caproic acid	mg/min	0.0E+00	0.0E+00	0.0E+00	0.0E+00						0.0E+00
Carbon	mg/L	0.0E+00	0.0E+00	0.0E+00	0.0E+00						0.0E+00
Tetrachloride	mg/min	0.0E+00	0.0E+00	0.0E+00	0.0E+00						0.0E+00
Chlorodibromo-	mg/L	0.0E+00	0.0E+00	0.0E+00	0.0E+00						0.0E+00
ethane	mg/min	0.0E+00	0.0E+00	0.0E+00	0.0E+00						0.0E+00
Chloroethyl, 2-	mg/L	0.0E+00	0.0E+00	0.0E+00	0.0E+00						0.0E+00
hydroxymethyl, BA		0.0E+00	0.0E+00	0.0E+00	0.0E+00						0.0E+00
Chloroform	mg/L	0.0E+00	0.0E+00	0.0E+00	0.0E+00						0.0E+00
Chloroform	mg/min	0.0E+00	0.0E+00	0.0E+00	0.0E+00						0.0E+00
2-Chloromethyl-	mg/L	0.0E+00	0.0E+00	0.0E+00	0.0E+00						0.0E+00
hydroxymethylbenzene		0.0E+00	0.0E+00	0.0E+00	0.0E+00						0.0E+00
2-Chloromethyl-	mg/L	0.0E+00	0.0E+00	0.0E+00	0.0E+00						0.0E+00
-o-xylene	mg/min	0.0E+00	0.0E+00	0.0E+00	0.0E+00						0.0E+00
Citric Acid	mg/L	0.0E+00	0.0E+00	0.0E+00	0.0E+00						0.0E+00
Citric Acid	mg/min	0.0E+00	0.0E+00	0.0E+00	0.0E+00						0.0E+00
1,2 Dichloro-	mg/L	0.0E+00	0.0E+00	0.0E+00	0.0E+00						0.0E+00
ethane	mg/min	0.0E+00	0.0E+00	0.0E+00	0.0E+00						0.0E+00
1,1 Dichloro-	mg/L	0.0E+00	0.0E+00	0.0E+00	0.0E+00						0.0E+00
ethylene	mg/min	0.0E+00	0.0E+00	0.0E+00	0.0E+00						0.0E+00
Diethyl-	mg/L	0.0E+00	0.0E+00	0.0E+00	0.0E+00						0.0E+00
phthalates	mg/min	0.0E+00	0.0E+00	0.0E+00	0.0E+00						0.0E+00
Difluorodi-	mg/L	0.0E+00	0.0E+00	0.0E+00	0.0E+00						0.0E+00
chloromethane	mg/min	0.0E+00	0.0E+00	0.0E+00	0.0E+00						0.0E+00
3,5-Dimethyl-	mg/L	0.0E+00	0.0E+00	0.0E+00	0.0E+00						0.0E+00
pyridine	mg/min	0.0E+00	0.0E+00	0.0E+00	0.0E+00						0.0E+00
Dimethylnitro-	mg/L	0.0E+00	0.0E+00	0.0E+00	0.0E+00						0.0E+00
samine	mg/min	0.0E+00	0.0E+00	0.0E+00	0.0E+00						0.0E+00
Dimethyltoluidine	mg/L	0.0E+00	0.0E+00	0.0E+00	0.0E+00						0.0E+00
Dimethyltoluidine	mg/min	0.0E+00	0.0E+00	0.0E+00	0.0E+00						0.0E+00
Dioctylphthalate	mg/L	0.0E+00	0.0E+00	0.0E+00	0.0E+00						0.0E+00
Dioctylphthalate	mg/min	0.0E+00	0.0E+00	0.0E+00	0.0E+00						0.0E+00
Dodecane	mg/L	0.0E+00	0.0E+00	0.0E+00	0.0E+00						0.0E+00
Dodecane	mg/min	0.0E+00	0.0E+00	0.0E+00	0.0E+00						0.0E+00
Dodecanoic	mg/L	0.0E+00	0.0E+00	0.0E+00	0.0E+00						0.0E+00
Acid	mg/min	0.0E+00	0.0E+00	0.0E+00	0.0E+00						0.0E+00
Ethanedioic Acid	mg/L	0.0E+00	0.0E+00	0.0E+00	0.0E+00						0.0E+00
Ethanedioic Acid	mg/min	0.0E+00	0.0E+00	0.0E+00	0.0E+00						0.0E+00
Ethoxytri-	mg/L	0.0E+00	0.0E+00	0.0E+00	0.0E+00						0.0E+00
ethylene glycol	mg/min	0.0E+00	0.0E+00	0.0E+00	0.0E+00						0.0E+00
Ethyl,2-methyl-	mg/L	0.0E+00	0.0E+00	0.0E+00	0.0E+00						0.0E+00
hydroxymethylbenzenes		0.0E+00	0.0E+00	0.0E+00	0.0E+00						0.0E+00
Ethyl alcohol	mg/L	0.0E+00	0.0E+00	0.0E+00	0.0E+00						0.0E+00
Ethyl alcohol	mg/min	0.0E+00	0.0E+00	0.0E+00	0.0E+00						0.0E+00
Ethyl Benzene	mg/L	0.0E+00	0.0E+00	0.0E+00	0.0E+00						0.0E+00
Ethyl Benzene	mg/min	0.0E+00	0.0E+00	0.0E+00	0.0E+00						0.0E+00
Ethylbenz-	mg/L	0.0E+00	0.0E+00	0.0E+00	0.0E+00						0.0E+00
aldehyde	mg/min	0.0E+00	0.0E+00	0.0E+00	0.0E+00						0.0E+00

Table 2B-1. Process Flow Sheet for 242-A Evaporator. (24 sheets)

Description	Units	Rw To E-C-1	Rw To E-C-2	Rw To E-C-3	Rw To B Pond	J-EC1-1 Steam	J-EC1-2 Steam	Air In-leats	H-C-1 Steam	H-C-1 Cond.	P-B-1 Seal Water
Stream Number		21	22	23	24	25	26	27	28	29	30
EDTA	mg/L	0.0E+00	0.0E+00	0.0E+00	0.0E+00						0.0E+00
EDTA	mg/min	0.0E+00	0.0E+00	0.0E+00	0.0E+00						0.0E+00
EDTA	mg/L	0.0E+00	0.0E+00	0.0E+00	0.0E+00						0.0E+00
EDTA	mg/min	0.0E+00	0.0E+00	0.0E+00	0.0E+00						0.0E+00
Ethylxylene	mg/L	0.0E+00	0.0E+00	0.0E+00	0.0E+00						0.0E+00
Ethylxylene	mg/min	0.0E+00	0.0E+00	0.0E+00	0.0E+00						0.0E+00
Heptadecane	mg/L	0.0E+00	0.0E+00	0.0E+00	0.0E+00						0.0E+00
Heptadecane	mg/min	0.0E+00	0.0E+00	0.0E+00	0.0E+00						0.0E+00
Heptadecanoic	mg/L	0.0E+00	0.0E+00	0.0E+00	0.0E+00						0.0E+00
Acid	mg/min	0.0E+00	0.0E+00	0.0E+00	0.0E+00						0.0E+00
Heptanedioic	mg/L	0.0E+00	0.0E+00	0.0E+00	0.0E+00						0.0E+00
Acid	mg/min	0.0E+00	0.0E+00	0.0E+00	0.0E+00						0.0E+00
Hexadecane	mg/L	0.0E+00	0.0E+00	0.0E+00	0.0E+00						0.0E+00
Hexadecane	mg/min	0.0E+00	0.0E+00	0.0E+00	0.0E+00						0.0E+00
Hexadecanoic	mg/L	0.0E+00	0.0E+00	0.0E+00	0.0E+00						0.0E+00
Acid	mg/min	0.0E+00	0.0E+00	0.0E+00	0.0E+00						0.0E+00
Hexanedioic	mg/L	0.0E+00	0.0E+00	0.0E+00	0.0E+00						0.0E+00
Acid	mg/min	0.0E+00	0.0E+00	0.0E+00	0.0E+00						0.0E+00
Hexanoic	mg/L	0.0E+00	0.0E+00	0.0E+00	0.0E+00						0.0E+00
Acid	mg/min	0.0E+00	0.0E+00	0.0E+00	0.0E+00						0.0E+00
Hydroxyacetic	mg/L	0.0E+00	0.0E+00	0.0E+00	0.0E+00						0.0E+00
Acid	mg/min	0.0E+00	0.0E+00	0.0E+00	0.0E+00						0.0E+00
2-Hydroxymethyl-	mg/L	0.0E+00	0.0E+00	0.0E+00	0.0E+00						0.0E+00
benzoic Acid	mg/min	0.0E+00	0.0E+00	0.0E+00	0.0E+00						0.0E+00
Methoxydi-	mg/L	0.0E+00	0.0E+00	0.0E+00	0.0E+00						0.0E+00
glycol	mg/min	0.0E+00	0.0E+00	0.0E+00	0.0E+00						0.0E+00
Methoxytri-	mg/L	0.0E+00	0.0E+00	0.0E+00	0.0E+00						0.0E+00
glycol	mg/min	0.0E+00	0.0E+00	0.0E+00	0.0E+00						0.0E+00
Methylbenz-	mg/L	0.0E+00	0.0E+00	0.0E+00	0.0E+00						0.0E+00
aldehyde	mg/min	0.0E+00	0.0E+00	0.0E+00	0.0E+00						0.0E+00
2-Methylbenzoic	mg/L	0.0E+00	0.0E+00	0.0E+00	0.0E+00						0.0E+00
Acid	mg/min	0.0E+00	0.0E+00	0.0E+00	0.0E+00						0.0E+00
Methylene	mg/L	0.0E+00	0.0E+00	0.0E+00	0.0E+00						0.0E+00
chloride	mg/min	0.0E+00	0.0E+00	0.0E+00	0.0E+00						0.0E+00
2-Methyl,hydroxy-	mg/L	0.0E+00	0.0E+00	0.0E+00	0.0E+00						0.0E+00
methyl benzene	mg/min	0.0E+00	0.0E+00	0.0E+00	0.0E+00						0.0E+00
Methyl n-propyl	mg/L	0.0E+00	0.0E+00	0.0E+00	0.0E+00						0.0E+00
ketone	mg/min	0.0E+00	0.0E+00	0.0E+00	0.0E+00						0.0E+00
Methyl n-butyl	mg/L	0.0E+00	0.0E+00	0.0E+00	0.0E+00						0.0E+00
ketone	mg/min	0.0E+00	0.0E+00	0.0E+00	0.0E+00						0.0E+00
MIBK	mg/L	0.0E+00	0.0E+00	0.0E+00	0.0E+00						0.0E+00
(Hexone)	mg/min	0.0E+00	0.0E+00	0.0E+00	0.0E+00						0.0E+00
2-Methyl-	mg/L	0.0E+00	0.0E+00	0.0E+00	0.0E+00						0.0E+00
nonane	mg/min	0.0E+00	0.0E+00	0.0E+00	0.0E+00						0.0E+00
Methyl-	mg/L	0.0E+00	0.0E+00	0.0E+00	0.0E+00						0.0E+00
toluidine	mg/min	0.0E+00	0.0E+00	0.0E+00	0.0E+00						0.0E+00
n-C27H46 -	mg/L	0.0E+00	0.0E+00	0.0E+00	0.0E+00						0.0E+00
C4CH82	mg/min	0.0E+00	0.0E+00	0.0E+00	0.0E+00						0.0E+00
NEDTA	mg/L	0.0E+00	0.0E+00	0.0E+00	0.0E+00						0.0E+00
NEDTA	mg/min	0.0E+00	0.0E+00	0.0E+00	0.0E+00						0.0E+00
MAIDA	mg/L	0.0E+00	0.0E+00	0.0E+00	0.0E+00						0.0E+00
MAIDA	mg/min	0.0E+00	0.0E+00	0.0E+00	0.0E+00						0.0E+00
MICEDA	mg/L	0.0E+00	0.0E+00	0.0E+00	0.0E+00						0.0E+00
MICEDA	mg/min	0.0E+00	0.0E+00	0.0E+00	0.0E+00						0.0E+00
Nitrilotri-	mg/L	0.0E+00	0.0E+00	0.0E+00	0.0E+00						0.0E+00
acetic Acid	mg/min	0.0E+00	0.0E+00	0.0E+00	0.0E+00						0.0E+00
Octodecanoic	mg/L	0.0E+00	0.0E+00	0.0E+00	0.0E+00						0.0E+00
Acid	mg/min	0.0E+00	0.0E+00	0.0E+00	0.0E+00						0.0E+00
o-Xylene	mg/L	0.0E+00	0.0E+00	0.0E+00	0.0E+00						0.0E+00
o-Xylene	mg/min	0.0E+00	0.0E+00	0.0E+00	0.0E+00						0.0E+00
p-Chlorotoluene	mg/L	0.0E+00	0.0E+00	0.0E+00	0.0E+00						0.0E+00
p-Chlorotoluene	mg/min	0.0E+00	0.0E+00	0.0E+00	0.0E+00						0.0E+00
p-Dichloro-	mg/L	0.0E+00	0.0E+00	0.0E+00	0.0E+00						0.0E+00
benzene	mg/min	0.0E+00	0.0E+00	0.0E+00	0.0E+00						0.0E+00
Pentadecane	mg/L	0.0E+00	0.0E+00	0.0E+00	0.0E+00						0.0E+00

Table 2B-1. Process Flow Sheet for 242-A Evaporator. (24 sheets)

Description	Units	RW To E-C-1	RW To E-C-2	RW To E-C-3	RW To B Pond	J-EC1-1 Steam	J-EC1-2 Steam	Air In-Leaks	H-C-1 Steam	H-C-1 Cond.	P-B-1 Seal Water
Stream Number		21	22	23	24	25	26	27	28	29	30
Pentadecane	mg/min	0.0E+00	0.0E+00	0.0E+00	0.0E+00						0.0E+00
Pentadecanoic	mg/L	0.0E+00	0.0E+00	0.0E+00	0.0E+00						0.0E+00
Acid	mg/min	0.0E+00	0.0E+00	0.0E+00	0.0E+00						0.0E+00
Pentanedioic	mg/L	0.0E+00	0.0E+00	0.0E+00	0.0E+00						0.0E+00
Acid	mg/min	0.0E+00	0.0E+00	0.0E+00	0.0E+00						0.0E+00
Phenol	mg/L	0.0E+00	0.0E+00	0.0E+00	0.0E+00						0.0E+00
Phenol	mg/min	0.0E+00	0.0E+00	0.0E+00	0.0E+00						0.0E+00
2-Propanol	mg/L	0.0E+00	0.0E+00	0.0E+00	0.0E+00						0.0E+00
2-Propanol	mg/min	0.0E+00	0.0E+00	0.0E+00	0.0E+00						0.0E+00
Propylbenzene	mg/L	0.0E+00	0.0E+00	0.0E+00	0.0E+00						0.0E+00
Propylbenzene	mg/min	0.0E+00	0.0E+00	0.0E+00	0.0E+00						0.0E+00
Pyridine	mg/L	0.0E+00	0.0E+00	0.0E+00	0.0E+00						0.0E+00
Pyridine	mg/min	0.0E+00	0.0E+00	0.0E+00	0.0E+00						0.0E+00
Tetrachloro-	mg/L	0.0E+00	0.0E+00	0.0E+00	0.0E+00						0.0E+00
ethylene	mg/min	0.0E+00	0.0E+00	0.0E+00	0.0E+00						0.0E+00
Tetradecane	mg/L	0.0E+00	0.0E+00	0.0E+00	0.0E+00						0.0E+00
Tetradecane	mg/min	0.0E+00	0.0E+00	0.0E+00	0.0E+00						0.0E+00
Tetrahydro-	mg/L	0.0E+00	0.0E+00	0.0E+00	0.0E+00						0.0E+00
furan	mg/min	0.0E+00	0.0E+00	0.0E+00	0.0E+00						0.0E+00
Tributyl	mg/L	0.0E+00	0.0E+00	0.0E+00	0.0E+00						0.0E+00
phosphate	mg/min	0.0E+00	0.0E+00	0.0E+00	0.0E+00						0.0E+00
Tri-n-butyl-	mg/L	0.0E+00	0.0E+00	0.0E+00	0.0E+00						0.0E+00
(di-ol)-phosphate		0.0E+00	0.0E+00	0.0E+00	0.0E+00						0.0E+00
1,1,1-Tri-	mg/L	0.0E+00	0.0E+00	0.0E+00	0.0E+00						0.0E+00
chlorethane	mg/min	0.0E+00	0.0E+00	0.0E+00	0.0E+00						0.0E+00
Trichloro-	mg/L	0.0E+00	0.0E+00	0.0E+00	0.0E+00						0.0E+00
ethylene	mg/min	0.0E+00	0.0E+00	0.0E+00	0.0E+00						0.0E+00
Trichloromethane	mg/L	0.0E+00	0.0E+00	0.0E+00	0.0E+00						0.0E+00
Trichloromethane	mg/min	0.0E+00	0.0E+00	0.0E+00	0.0E+00						0.0E+00
Tridecane	mg/L	0.0E+00	0.0E+00	0.0E+00	0.0E+00						0.0E+00
Tridecane	mg/min	0.0E+00	0.0E+00	0.0E+00	0.0E+00						0.0E+00
Triglyme	mg/L	0.0E+00	0.0E+00	0.0E+00	0.0E+00						0.0E+00
Triglyme	mg/min	0.0E+00	0.0E+00	0.0E+00	0.0E+00						0.0E+00
1,3,5 Trimethyl	mg/L	0.0E+00	0.0E+00	0.0E+00	0.0E+00						0.0E+00
benzene	mg/min	0.0E+00	0.0E+00	0.0E+00	0.0E+00						0.0E+00
Toluene	mg/L	0.0E+00	0.0E+00	0.0E+00	0.0E+00						0.0E+00
Toluene	mg/min	0.0E+00	0.0E+00	0.0E+00	0.0E+00						0.0E+00
Vinyl Chloride	mg/L	0.0E+00	0.0E+00	0.0E+00	0.0E+00						0.0E+00
Vinyl Chloride	mg/min	0.0E+00	0.0E+00	0.0E+00	0.0E+00						0.0E+00
Undecane	mg/L	0.0E+00	0.0E+00	0.0E+00	0.0E+00						0.0E+00
Undecane	mg/min	0.0E+00	0.0E+00	0.0E+00	0.0E+00						0.0E+00
Unknown	mg/L	0.0E+00	0.0E+00	0.0E+00	0.0E+00						0.0E+00
phthalates	mg/min	0.0E+00	0.0E+00	0.0E+00	0.0E+00						0.0E+00

Table 2B-1. Process Flow Sheet for 242-A Evaporator. (24 sheets)

Description	Units	P-8-2 Seal Water	C-100 Air Flow
Stream Number		31	32
Form		Liquid	Gas
L/min	Total	3.8E-01	3.2E+02
Batch	L/Batch		
Temperature	C	2.2E+01	2.8E+01
Sp. Gr.	unitless	1.0E+00	9.1E-01
Abs. Pressure	Torr	7.6E+02	7.6E+02
Abs. Pressure	Pa	1.0E+05	1.0E+05
pH		6.2E+00	
TOC	mg/L	1.7E+00	2.6E-03
TOC	mg/min	6.4E-01	8.6E-01
TDS	mg/L	0.0E+00	6.7E-05
TDS	mg/min	0.0E+00	2.2E-02
H2O	L/min	3.8E-01	1.2E+01
H2O	kg/min	3.8E-01	8.6E-03
Air	L/min	0.0E+00	3.1E+02
Air	kg/min	0.0E+00	3.7E-01
Heat	Joules/min		
Alpha	uCi/ml	8.1E-10	5.7E-16
Alpha	uCi/min	3.1E-07	1.9E-10
Beta	uCi/ml	1.0E-08	6.8E-18
Beta	uCi/min	3.8E-06	2.2E-12
3H	uCi/ml	0.0E+00	2.7E-06
3H	uCi/min	0.0E+00	8.8E-01
14C	uCi/ml	0.0E+00	2.7E-11
14C	uCi/min	0.0E+00	8.8E-06
60Co	uCi/ml	0.0E+00	6.4E-10
60Co	uCi/min	0.0E+00	2.1E-04
63Ni	uCi/ml	0.0E+00	0.0E+00
63Ni	uCi/min	0.0E+00	0.0E+00
79Se	uCi/ml	0.0E+00	2.9E-10
79Se	uCi/min	0.0E+00	9.3E-05
90Sr	uCi/ml	0.0E+00	5.1E-11
90Sr	uCi/min	0.0E+00	1.7E-05
93Zr	uCi/ml	0.0E+00	0.0E+00
93Zr	uCi/min	0.0E+00	0.0E+00
94Nb	uCi/ml	0.0E+00	4.8E-10
94Nb	uCi/min	0.0E+00	1.6E-04
99Tc	uCi/ml	0.0E+00	2.4E-09
99Tc	uCi/min	0.0E+00	7.7E-04
106Ru	uCi/ml	0.0E+00	1.6E-11
106Ru	uCi/min	0.0E+00	5.1E-06
113Sn	uCi/ml	0.0E+00	0.0E+00
113Sn	uCi/min	0.0E+00	0.0E+00
124Sb	uCi/ml	0.0E+00	0.0E+00
124Sb	uCi/min	0.0E+00	0.0E+00
125Sb	uCi/ml	0.0E+00	0.0E+00
125Sb	uCi/min	0.0E+00	0.0E+00
126Sn	uCi/ml	0.0E+00	0.0E+00
126Sn	uCi/min	0.0E+00	0.0E+00
129I	uCi/ml	0.0E+00	1.4E-09
129I	uCi/min	0.0E+00	4.6E-04
134Cs	uCi/ml	0.0E+00	3.7E-10
134Cs	uCi/min	0.0E+00	1.2E-04
135Cs	uCi/ml	0.0E+00	0.0E+00
135Cs	uCi/min	0.0E+00	0.0E+00
137Cs	uCi/ml	0.0E+00	3.0E-12
137Cs	uCi/min	0.0E+00	9.7E-07
144Ce	uCi/ml	0.0E+00	0.0E+00
144Ce	uCi/min	0.0E+00	0.0E+00
147Pm	uCi/ml	0.0E+00	0.0E+00
147Pm	uCi/min	0.0E+00	0.0E+00
151Sm	uCi/ml	0.0E+00	0.0E+00
151Sm	uCi/min	0.0E+00	0.0E+00
155Eu	uCi/ml	0.0E+00	0.0E+00

Table 2B-1. Process Flow Sheet for 242-A Evaporator. (24 sheets)

Description	Units	P-B-2 Seal Water	C-100 Air Flow
Stream Number		31	32
155Eu	uCi/min	0.0E+00	0.0E+00
226Ra	uCi/ml	0.0E+00	0.0E+00
226Ra	uCi/min	0.0E+00	0.0E+00
230Th	uCi/ml	0.0E+00	0.0E+00
230Th	uCi/min	0.0E+00	0.0E+00
233U	uCi/ml	0.0E+00	0.0E+00
233U	uCi/min	0.0E+00	0.0E+00
234U	uCi/ml	0.0E+00	7.2E-13
234U	uCi/min	0.0E+00	2.3E-07
235U	uCi/ml	0.0E+00	3.5E-14
235U	uCi/min	0.0E+00	1.1E-08
238U	uCi/ml	0.0E+00	2.6E-13
238U	uCi/min	0.0E+00	8.4E-08
237Np	uCi/ml	0.0E+00	1.2E-12
237Np	uCi/min	0.0E+00	4.0E-07
238Pu	uCi/ml	0.0E+00	8.1E-16
238Pu	uCi/min	0.0E+00	2.6E-10
239Pu	uCi/ml	0.0E+00	1.7E-15
239Pu	uCi/min	0.0E+00	5.4E-10
240Pu	uCi/ml	0.0E+00	0.0E+00
240Pu	uCi/min	0.0E+00	0.0E+00
241Pu	uCi/ml	0.0E+00	0.0E+00
241Pu	uCi/min	0.0E+00	0.0E+00
241Am	uCi/ml	0.0E+00	6.2E-15
241Am	uCi/min	0.0E+00	2.0E-09
243Am	uCi/ml	0.0E+00	0.0E+00
243Am	uCi/min	0.0E+00	0.0E+00
244Cm	uCi/ml	0.0E+00	4.8E-12
244Cm	uCi/min	0.0E+00	1.5E-06
AlO2-	mg/L	0.0E+00	4.1E-04
AlO2-	mg/min	0.0E+00	1.3E-01
NH4+	mg/L	0.0E+00	1.1E+00
NH4+	mg/min	0.0E+00	3.6E+02
Sb	mg/L	0.0E+00	0.0E+00
Sb	mg/min	0.0E+00	0.0E+00
As	mg/L	0.0E+00	0.0E+00
As	mg/min	0.0E+00	0.0E+00
Ba	mg/L	3.0E-02	3.0E-07
Ba	mg/min	1.2E-02	9.8E-05
Be	mg/L	0.0E+00	0.0E+00
Be	mg/min	0.0E+00	0.0E+00
Bi	mg/L	0.0E+00	0.0E+00
Bi	mg/min	0.0E+00	0.0E+00
B	mg/L	0.0E+00	3.5E-07
B	mg/min	0.0E+00	1.1E-04
Ca	mg/L	1.9E+01	1.9E-05
Ca	mg/min	7.3E+00	6.0E-03
Cd	mg/L	2.0E-03	3.1E-07
Cd	mg/min	7.6E-04	1.0E-04
CO3=	mg/L	0.0E+00	2.4E-04
CO3=	mg/min	0.0E+00	7.9E-02
Cl-	mg/L	7.8E-01	2.0E-05
Cl-	mg/min	3.0E-01	6.6E-03
Cr	mg/L	1.0E-02	4.1E-08
Cr	mg/min	3.9E-03	1.3E-05
Cu	mg/L	7.4E-02	1.5E-07
Cu	mg/min	2.8E-02	4.7E-05
CN-	mg/L	0.0E+00	9.5E-07
CN-	mg/min	0.0E+00	3.1E-04
F-	mg/L	0.0E+00	7.1E-08
F-	mg/min	0.0E+00	2.3E-05
Fe	mg/L	1.0E-01	8.5E-07
Fe	mg/min	3.9E-02	2.8E-04
H2	mg/L	0.0E+00	1.0E-09

Table 2B-1. Process Flow Sheet for 242-A Evaporator. (24 sheets)

Description	Units	P-B-2 Seal Water	C-100 Air Flow
Stream Number		31	32
H2	mg/min	0.0E+00	3.4E-07
OH-	mg/L	0.0E+00	1.4E-03
OH-	mg/min	0.0E+00	4.4E-01
Pb	mg/L	1.3E-02	1.1E-06
Pb	mg/min	4.8E-03	3.5E-04
Mg	mg/L	4.3E+00	4.6E-06
Mg	mg/min	1.6E+00	1.5E-03
Mn	mg/L	1.1E-02	5.8E-07
Mn	mg/min	4.0E-03	1.9E-04
Hg	mg/L	0.0E+00	1.6E-07
Hg	mg/min	0.0E+00	5.1E-05
Mo	mg/L	0.0E+00	1.2E-06
Mo	mg/min	0.0E+00	3.8E-04
Ni	mg/L	1.1E-02	7.9E-07
Ni	mg/min	4.2E-03	2.5E-04
NO3-	mg/L	1.2E+00	3.8E-04
NO3-	mg/min	4.5E-01	1.2E-01
NO2-	mg/L	0.0E+00	4.4E-05
NO2-	mg/min	0.0E+00	1.4E-02
PO4	mg/L	0.0E+00	1.0E-04
PO4	mg/min	0.0E+00	3.4E-02
P	mg/L	0.0E+00	9.6E-05
P	mg/min	0.0E+00	3.1E-02
K	mg/L	8.0E-01	1.0E-04
K	mg/min	3.0E-01	3.3E-02
Se	mg/L	0.0E+00	0.0E+00
Se	mg/min	0.0E+00	0.0E+00
Si	mg/L	0.0E+00	5.9E-06
Si	mg/min	0.0E+00	1.9E-03
Ag	mg/L	0.0E+00	0.0E+00
Ag	mg/min	0.0E+00	0.0E+00
Na	mg/L	2.4E+00	1.6E-04
Na	mg/min	8.9E-01	5.2E-02
SO4-	mg/L	1.0E+01	4.5E-06
SO4-	mg/min	3.9E+00	1.5E-03
S-	mg/L	0.0E+00	0.0E+00
S-	mg/min	0.0E+00	0.0E+00
Ti	mg/L	0.0E+00	0.0E+00
Ti	mg/min	0.0E+00	0.0E+00
W	mg/L	0.0E+00	4.1E-06
W	mg/min	0.0E+00	1.3E-03
U	mg/L	6.4E-04	1.5E-06
U	mg/min	2.4E-04	4.8E-04
V	mg/L	0.0E+00	0.0E+00
V	mg/min	0.0E+00	0.0E+00
Zn	mg/L	4.8E-02	9.6E-07
Zn	mg/min	1.8E-02	3.1E-04
Zr	mg/L	0.0E+00	0.0E+00
Zr	mg/min	0.0E+00	0.0E+00
Acetone	mg/L	0.0E+00	1.9E-03
Acetone	mg/min	0.0E+00	6.0E-01
Alkyl, hydroxy-	mg/L	0.0E+00	1.0E-07
methyl benzene	mg/min	0.0E+00	3.3E-05
Benzyl alcohol	mg/L	0.0E+00	0.0E+00
Benzyl alcohol	mg/min	0.0E+00	0.0E+00
Benzaldehyde	mg/L	0.0E+00	0.0E+00
Benzaldehyde	mg/min	0.0E+00	0.0E+00
Benzene	mg/L	0.0E+00	0.0E+00
Benzene	mg/min	0.0E+00	0.0E+00
Bromodichloro-	mg/L	0.0E+00	0.0E+00
methane	mg/min	0.0E+00	0.0E+00
Bromoform	mg/L	0.0E+00	0.0E+00
Bromoform	mg/min	0.0E+00	0.0E+00
Butanedioic	mg/L	0.0E+00	6.8E-05

Table 2B-1. Process Flow Sheet for 242-A Evaporator. (24 sheets)

Description	Units	P-B-2 Seal Water	C-100 Air Flow
Stream Number		31	32
Acid	mg/min	0.0E+00	2.2E-02
1-Butanol	mg/L	1.1E-02	8.6E-09
1-Butanol	mg/min	4.2E-03	2.8E-06
2-Butanone	mg/L	0.0E+00	0.0E+00
2-Butanone	mg/min	0.0E+00	0.0E+00
Butoxy-diglycol	mg/L	0.0E+00	0.0E+00
	mg/min	0.0E+00	0.0E+00
2-Butoxy-ethanol	mg/L	0.0E+00	0.0E+00
	mg/min	0.0E+00	0.0E+00
Butoxy-glycol	mg/L	0.0E+00	0.0E+00
	mg/min	0.0E+00	0.0E+00
Butoxytri-ethyleneglycol	mg/L	0.0E+00	0.0E+00
	mg/min	0.0E+00	0.0E+00
Butraldehyde	mg/L	0.0E+00	0.0E+00
Butraldehyde	mg/min	0.0E+00	0.0E+00
C3-Alkylbenzene	mg/L	0.0E+00	9.0E-03
C3-Alkylbenzene	mg/min	0.0E+00	2.9E+00
Caproic acid	mg/L	0.0E+00	0.0E+00
Caproic acid	mg/min	0.0E+00	0.0E+00
Carbon Tetrachloride	mg/L	0.0E+00	0.0E+00
	mg/min	0.0E+00	0.0E+00
Chlorodibromo-ethane	mg/L	0.0E+00	0.0E+00
	mg/min	0.0E+00	0.0E+00
Chloroethyl. 2-hydroxyethyl. BA	mg/L	0.0E+00	1.1E-04
	mg/min	0.0E+00	3.7E-02
Chloroform	mg/L	0.0E+00	0.0E+00
Chloroform	mg/min	0.0E+00	0.0E+00
2-Chloromethyl-hydroxymethylbenzene	mg/L	0.0E+00	2.8E-04
	mg/min	0.0E+00	8.9E-02
2-Chloromethyl-o-xylene	mg/L	0.0E+00	1.7E-03
	mg/min	0.0E+00	5.4E-01
Citric Acid	mg/L	0.0E+00	5.4E-05
Citric Acid	mg/min	0.0E+00	1.7E-02
1,2 Dichloro-ethane	mg/L	0.0E+00	0.0E+00
	mg/min	0.0E+00	0.0E+00
1,1 Dichloro-ethylene	mg/L	0.0E+00	0.0E+00
	mg/min	0.0E+00	0.0E+00
Diethyl-phthalates	mg/L	0.0E+00	4.6E-09
	mg/min	0.0E+00	1.5E-06
Difluorodi-chloromethane	mg/L	0.0E+00	0.0E+00
	mg/min	0.0E+00	0.0E+00
3,5-Dimethyl-Pyridine	mg/L	0.0E+00	0.0E+00
	mg/min	0.0E+00	0.0E+00
Dimethylnitro-samine	mg/L	0.0E+00	0.0E+00
	mg/min	0.0E+00	0.0E+00
Dimethyltoluidine	mg/L	0.0E+00	2.2E-05
Dimethyltoluidine	mg/min	0.0E+00	7.0E-03
Dioctylphthalate	mg/L	0.0E+00	6.9E-09
Dioctylphthalate	mg/min	0.0E+00	2.2E-06
Dodecane	mg/L	0.0E+00	1.4E-05
Dodecane	mg/min	0.0E+00	4.6E-04
Dodecanoic Acid	mg/L	0.0E+00	1.0E-10
	mg/min	0.0E+00	3.3E-08
Ethanedioic Acid	mg/L	0.0E+00	3.6E-06
Ethanedioic Acid	mg/min	0.0E+00	1.2E-03
Ethoxytri-ethylene glycol	mg/L	0.0E+00	0.0E+00
	mg/min	0.0E+00	0.0E+00
Ethyl.2-methyl-hydroxymethylbenzenes	mg/L	0.0E+00	5.3E-07
	mg/min	0.0E+00	1.7E-04
Ethyl alcohol	mg/L	0.0E+00	0.0E+00
Ethyl alcohol	mg/min	0.0E+00	0.0E+00
Ethyl Benzene	mg/L	0.0E+00	0.0E+00
Ethyl Benzene	mg/min	0.0E+00	0.0E+00
Ethylbenz-aldehyde	mg/L	0.0E+00	1.8E-04
	mg/min	0.0E+00	5.7E-02

Table 2B-1. Process Flow Sheet for 242-A Evaporator. (24 sheets)

Description	Units	P-B-2 Seal Water	C-100 Air Flow
Stream Number		31	32
EDTA	mg/L	0.0E+00	2.5E-12
EDTA	mg/min	0.0E+00	8.0E-10
EDTA	mg/L	0.0E+00	7.2E-12
EDTA	mg/min	0.0E+00	2.3E-09
Ethylxylene	mg/L	0.0E+00	7.2E-07
Ethylxylene	mg/min	0.0E+00	2.3E-04
Heptadecane	mg/L	0.0E+00	0.0E+00
Heptadecane	mg/min	0.0E+00	0.0E+00
Heptadecanoic	mg/L	0.0E+00	1.9E-09
Acid	mg/min	0.0E+00	6.1E-07
Heptanedioic	mg/L	0.0E+00	2.8E-08
Acid	mg/min	0.0E+00	9.2E-06
Hexadecane	mg/L	0.0E+00	0.0E+00
Hexadecane	mg/min	0.0E+00	0.0E+00
Hexadecanoic	mg/L	0.0E+00	1.5E-09
Acid	mg/min	0.0E+00	4.9E-07
Hexanedioic	mg/L	0.0E+00	2.4E-11
Acid	mg/min	0.0E+00	7.8E-09
Hexanoic	mg/L	0.0E+00	2.2E-08
Acid	mg/min	0.0E+00	7.0E-06
Hydroxyacetic	mg/L	0.0E+00	3.1E-03
Acid	mg/min	0.0E+00	1.0E+00
2-Hydroxymethyl-	mg/L	0.0E+00	2.5E-06
benzoic Acid	mg/min	0.0E+00	8.2E-04
Methoxyai-	mg/L	0.0E+00	0.0E+00
glycol	mg/min	0.0E+00	0.0E+00
Methosytri-	mg/L	0.0E+00	0.0E+00
glycol	mg/min	0.0E+00	0.0E+00
Methylbenz-	mg/L	0.0E+00	7.0E-05
aldahyde	mg/min	0.0E+00	2.3E-02
2-Methylbenzoic	mg/L	0.0E+00	5.5E-06
Acid	mg/min	0.0E+00	1.8E-03
Methylene	mg/L	0.0E+00	0.0E+00
chloride	mg/min	0.0E+00	0.0E+00
2-Methyl.hydroxy-	mg/L	0.0E+00	1.0E-04
methyl benzene	mg/min	0.0E+00	3.4E-02
Methyl n-propyl	mg/L	0.0E+00	0.0E+00
ketone	mg/min	0.0E+00	0.0E+00
Methyl n-butyl	mg/L	0.0E+00	0.0E+00
ketone	mg/min	0.0E+00	0.0E+00
MIBK	mg/L	0.0E+00	0.0E+00
(Hexone)	mg/min	0.0E+00	0.0E+00
2-Methyl-	mg/L	0.0E+00	0.0E+00
nonane	mg/min	0.0E+00	0.0E+00
Methyl-	mg/L	0.0E+00	1.3E-07
toluidine	mg/min	0.0E+00	4.2E-05
n-C22H46 -	mg/L	0.0E+00	1.3E-09
C40H82	mg/min	0.0E+00	4.2E-07
NEDTA	mg/L	0.0E+00	1.8E-06
NEDTA	mg/min	0.0E+00	5.8E-04
NAIDA	mg/L	0.0E+00	2.2E-06
NAIDA	mg/min	0.0E+00	7.1E-04
NICEDA	mg/L	0.0E+00	1.1E-07
NICEDA	mg/min	0.0E+00	3.6E-05
Nitrilotri-	mg/L	0.0E+00	2.3E-08
acetic Acid	mg/min	0.0E+00	7.3E-06
Octodecanoic	mg/L	0.0E+00	3.5E-10
Acid	mg/min	0.0E+00	1.1E-07
o-Xylene	mg/L	0.0E+00	0.0E+00
o-Xylene	mg/min	0.0E+00	0.0E+00
p-Chlorotoluene	mg/L	0.0E+00	0.0E+00
p-Chlorotoluene	mg/min	0.0E+00	0.0E+00
p-Dichloro-	mg/L	0.0E+00	0.0E+00
benzene	mg/min	0.0E+00	0.0E+00
Pentadecane	mg/L	0.0E+00	1.4E-03

Table 2B-1. Process Flow Sheet for 242-A Evaporator. (24 sheets)

Pentadecane	mg/min	0.0E+00	4.6E-06
Pentadecanoic	mg/L	0.0E+00	1.5E-07
Acid	mg/min	0.0E+00	4.8E-05
Pentanedioic	mg/L	0.0E+00	1.2E-11
Acid	mg/min	0.0E+00	3.7E-09
Phenol	mg/L	0.0E+00	0.0E+00
Phenol	mg/min	0.0E+00	0.0E+00
2-Propanol	mg/L	0.0E+00	0.0E+00
2-Propanol	mg/min	0.0E+00	0.0E+00
Propylbenzene	mg/L	0.0E+00	8.4E-05
Propylbenzene	mg/min	0.0E+00	2.7E-02
Pyridine	mg/L	0.0E+00	0.0E+00
Pyridine	mg/min	0.0E+00	0.0E+00
Tetrachloro-	mg/L	0.0E+00	0.0E+00
ethylene	mg/min	0.0E+00	0.0E+00
Tetradecane	mg/L	0.0E+00	2.5E-07
Tetradecane	mg/min	0.0E+00	8.2E-05
Tetrahydro-	mg/L	0.0E+00	0.0E+00
furan	mg/min	0.0E+00	0.0E+00
Tributyl	mg/L	0.0E+00	7.3E-07
phosphate	mg/min	0.0E+00	2.4E-04
Tri-n-butyl-	mg/L	0.0E+00	3.6E-07
(di-ol)-phosphate		0.0E+00	1.2E-04
1,1,1-Tri-	mg/L	0.0E+00	0.0E+00
chlorethane	mg/min	0.0E+00	0.0E+00
Trichloro-	mg/L	0.0E+00	0.0E+00
ethylene	mg/min	0.0E+00	0.0E+00
Trichloromethane	mg/L	0.0E+00	0.0E+00
Trichloromethane	mg/min	0.0E+00	0.0E+00
Tridecane	mg/L	0.0E+00	4.2E-06
Tridecane	mg/min	0.0E+00	1.4E-03
Triglyme	mg/L	0.0E+00	0.0E+00
Triglyme	mg/min	0.0E+00	0.0E+00
1,3,5 Trimethyl	mg/L	0.0E+00	7.1E-03
benzene	mg/min	0.0E+00	2.3E-00
Toluene	mg/L	0.0E+00	0.0E+00
Toluene	mg/min	0.0E+00	0.0E+00
Vinyl Chloride	mg/L	0.0E+00	0.0E+00
Vinyl Chloride	mg/min	0.0E+00	0.0E+00
Undecane	mg/L	0.0E+00	4.6E-06
Undecane	mg/min	0.0E+00	1.5E-03
Unknown	mg/L	0.0E+00	9.3E-09
phthalates	mg/min	0.0E+00	3.0E-06

1 Table 2B-2. 242-A Evaporator Feed to C-A-1. (4 sheets)

2

Nuclide/Chemical	Units	SD-WM -PSE-008 DSSF	65959-87 -72CSTarr DSS	AN-103 SD-WM -TI-355 DSS	AN-106 SD-WM -TI-355 DSSF	AN-101 SD-WM -TI-355 DSSF	Raw Water	Average TI-355 Values	Std. Dev. +/-	Adjusted Feed to C-A-1
Sp. Gr.	unitless			1.6E+00	1.2E+00	1.5E+00	1.7E+01	1.4E+00	1.7E-01	
TOC	mg/L		1.0E+04	7.4E+03	5.3E+03	1.1E+03	6.2E+00 1.7E+00	4.6E+03	2.8E+03	3.3E+03
TOC	mg/min									
TDS	mg/L									
TDS	mg/min									
Alpha	uCi/ml						8.1E-01			
Beta	uCi/ml						1.0E+01			
3H	uCi/ml			4.0E-03	7.0E-03	1.9E-02		1.0E-02	8.5E-03	1.8E-02
14C	uCi/ml	2.6E-01	3.7E-01	2.0E-03	6.5E-04	1.5E-03		1.4E-03	5.6E-04	9.7E-04
60Co	uCi/ml			3.8E-02		2.7E-02		3.3E-02	5.5E-03	2.3E-02
63Ni	uCi/ml	2.6E+00	3.7E+00							
79Se	uCi/ml			4.3E-02	5.2E-04	4.9E-04		1.5E-02	2.0E-02	1.0E-02
90Sr	uCi/ml	1.8E+02	2.6E+02	1.3E+01	4.4E+00	1.5E+01		1.1E+01	4.6E+00	7.6E+00
93Zr	uCi/ml	1.3E-02	1.8E-02							
94Nb	uCi/ml			7.1E-03		4.2E-02		2.5E-02	3.7E-02	1.7E-02
99Tc	uCi/ml	2.0E+00	2.9E+00	1.7E-01	8.5E-02	1.1E-01		1.2E-01	3.6E-02	8.5E-02
106Ru	uCi/ml	5.3E+01	6.6E+01	6.8E-02		2.0E-01		1.0E-01	1.0E-01	7.0E+00
113Sn	uCi/ml									
124Sb	uCi/ml	1.4E+00	2.0E+00							
125Sb	uCi/ml	4.0E+00	5.5E+00							
126Sn	uCi/ml	2.0E-02	2.9E-03							
129I	uCi/ml	2.6E-03	3.7E-03	5.2E-04	2.0E-04	1.3E-04		2.8E-04	1.7E-04	2.7E-04
134Cs	uCi/ml			1.1E-01		5.6E+00		2.9E+00	2.3E+00	2.0E+00
135Cs	uCi/ml	6.6E-03	9.2E-03							
137Cs	uCi/ml	1.3E+03	1.8E+03	7.5E+02	2.7E+02	5.0E+02		5.1E+02	2.0E+02	3.5E+02
144Ce	uCi/ml	8.5E-01	1.2E+00							
147Pm	uCi/ml									
151Sm	uCi/ml	2.6E+01	2.9E+01							
155Eu	uCi/ml									
226Ra	uCi/ml	1.3E-12	1.8E-12							
230Th	uCi/ml	6.6E-11	9.2E-11							
233U	uCi/ml	2.9E-08	4.0E-08							
234U	uCi/ml	2.6E-07	3.7E-07	5.3E-05		2.0E-05		3.6E-05	1.7E-05	2.6E-05
235U	uCi/ml	1.3E-04	1.8E-04	1.1E-06		2.5E-06		1.8E-06	7.0E-07	1.3E-06
238U	uCi/ml	2.6E-03	3.7E-03	1.4E-05	4.0E-06	2.1E-05		1.3E-05	6.6E-06	9.3E-06
237Np	uCi/ml	4.0E-03	5.5E-03	2.0E-05	1.6E-04	9.4E-06		6.3E-05	6.9E-05	4.4E-05
238Pu	uCi/ml	6.6E-04	9.2E-04	9.8E-04	2.1E-04	1.0E-03		7.3E-04	3.7E-04	5.1E-04
239Pu	uCi/ml	1.0E-01	1.4E-01	1.9E-03	4.4E-04	2.2E-03		1.5E-03	7.7E-04	1.1E-03
240Pu	uCi/ml	1.3E-03	1.8E-03							
241Pu	uCi/ml	3.4E-02	4.8E-02							
241Am	uCi/ml	1.5E-03	2.9E-00	2.3E-03	1.5E-03	2.7E-03		2.2E-03	5.0E-04	1.5E-03
243Am	uCi/ml	2.0E-03	2.9E-03							
244Cm	uCi/ml	1.3E-02	1.8E-02	4.2E-04		6.6E-05		2.4E-04	1.8E-04	1.7E-04
AlO2-	mg/L	1.5E+05	2.2E+05	5.8E+04	1.1E+04	2.6E+04		3.2E+04	2.0E+04	2.2E+04
NH4+	mg/L	1.7E+03						3.2E+02		3.2E+02
Sb	mg/L									
As	mg/L									
Ba	mg/L					1.4E+01	3.0E-02	1.4E+01		9.8E+00
Be	mg/L									
Bi	mg/L									
B	mg/L				1.3E+01			1.3E+01		1.2E+01
Ca	mg/L			8.6E+01	6.7E+01	6.5E+01	1.9E+01	7.3E+01	9.5E+00	5.1E+01
Cd	mg/L			1.6E+01			2.0E-03	1.6E+01		1.1E+01
CO3=	mg/L	2.4E+05	6.0E+04	9.0E+03	2.3E+04	5.1E+03		1.2E+04	7.7E+03	8.7E+03
Cl-	mg/L			9.6E+03	2.9E+03	6.8E+03	7.8E-01	6.4E+03	2.7E+03	4.5E+03
Cr	mg/L			8.5E+02	6.1E+02	3.5E+02	1.0E-02	6.0E+02	2.0E+02	4.2E+02
Cu	mg/L			1.2E+01	1.8E+00		7.4E-02	6.9E+00	5.1E+00	4.8E+00
CN-	mg/L			3.4E+01	1.3E+01	9.8E+01		4.8E+01	3.6E+01	3.4E+01
F-	mg/L	5.7E+04		7.4E+02	3.4E+01			3.9E+02	3.5E+02	2.7E+02
Fe	mg/L			7.0E+01	9.4E+00	3.9E+01	1.0E-01	3.9E+01	2.5E+01	2.8E+01
Hg	mg/L									
OH-	mg/L	1.1E+05	1.0E+05	9.8E+04	1.2E+04	9.9E+04		7.0E+04	4.1E+04	4.9E+04
Pb	mg/L			7.2E+01		6.8E+01	1.3E-02	7.0E+01	2.0E+00	5.1E+01

3

Table 2B-2. 242-A Evaporator Feed to C-A-1. (4 sheets)

Nuclide/Chemical	Units	SD-WM -PSE-008 DSSF	65659-87 -7205Starr DSS	AN-103 SD-WM -T1-355 DSS	AN-106 SD-WM -T1-355 DSSF	AN-101 SD-WM -T1-355 DSSF	Raw Water	Average T1-355 Values	Std. Dev +/-	Adjusted Feed to C-A-1
Mg	mg/L			2.9E+01			4.3E-00	2.9E+01		2.0E+01
Mn	mg/L			2.9E+01			1.1E-02	2.9E+01		2.0E+01
							T6-1-10			
Hg	mg/L			1.6E+01		3.5E-02		8.0E+00	8.0E+00	
5.6E-00										
Mo	mg/L			8.8E+01	3.2E+01	6.0E+01		6.0E+01	2.3E+01	4.2E+01
Ni	mg/L				5.3E+01	2.7E+01	1.1E-02	4.0E+01	1.3E+01	2.8E+01
NO3-	mg/L	2.6E+05	5.0E+05	1.6E+05	7.9E+04	2.9E+05	1.2E+00	1.8E+05	8.7E+04	1.2E+05
NO2-	mg/L	2.3E+05	3.2E+05	1.4E+05	3.4E+04	8.4E+04		8.6E+04	4.3E+04	6.0E+04
PO4	mg/L	8.2E+04	3.8E+04	9.3E+02	1.4E+04	8.9E+02		5.3E+03	6.2E+03	3.7E+03
P	mg/L				4.9E+03			4.9E+03	0.0E+00	3.4E+03
K	mg/L			1.5E+04	1.2E+03	3.9E+04	8.0E-01	1.8E+04	1.6E+04	1.3E+04
Se	mg/L									
Si	mg/L			2.7E+02		1.1E+02		1.9E+02	8.0E+01	1.3E+02
Ag	mg/L									
Na	mg/L	6.3E+05	6.7E+05	3.4E+05	1.2E+05	2.6E+05	2.4E+00	2.4E+05	9.1E+04	1.7E+05
SO4=	mg/L		3.8E+04	1.6E+03	2.9E+03	4.2E+03	1.0E+01	2.9E+03	1.1E+03	2.2E+03
S-	mg/L									
Ti	mg/L									
W	mg/L			2.1E+02				2.1E+02		[illegible]
U	mg/L			1.2E+02	1.4E+01	9.2E+01	6.4E-04	7.5E+01	4.5E+01	[illegible]
Y	mg/L									
Zn	mg/L			4.8E+01			4.8E-02	4.8E+01		[illegible]
Zr	mg/L									
Acetone	mg/L									[illegible]
Alkyl, hydroxy-methyl benzene	mg/L			1.8E+00				1.8E+00		[illegible]
Benzyl alcohol	mg/L									
Benzaldehyde	mg/L									
Benzene	mg/L									
Bromodichloro-methane	mg/L									
Bromoform	mg/L									
Butanedioic Acid	mg/L			4.2E+02				4.2E+02		[illegible]
1-Butanol	mg/L						1.1E-02			
2-Butanone	mg/L									
Butoxy-diglycol	mg/L									
2-Butoxy-ethanol	mg/L									
Butoxy-glycol	mg/L									
Butoxytri-ethyleneglycol	mg/L									
Butraldehyde	mg/L									
CJ-Alkylbenzene	mg/L			3.2E+02				3.2E+02		[illegible]
Caproic acid	mg/L									
Carbon Tetrachloride	mg/L									
Chlorobromo-ethane	mg/L									
Chloroethyl, 2-hydroxymethyl, BA	mg/L			1.3E+01				1.3E+01		[illegible]
Chloroform	mg/L									
2-Chloromethyl-hydroxymethylbenzene	mg/L			1.2E+01				1.2E+01		1.4E+01
2-Chloromethyl-o-xylene	mg/L			6.6E+00				6.6E+00		[illegible]
Citric Acid	mg/L			1.8E+01	3.2E+01	5.3E+01		3.4E+01	1.4E+01	2.8E+01
1,2 Dichloro-ethane	mg/L									
1,1 Dichloro-ethylene	mg/L									

Table 2B-2. 242-A Evaporator Feed to C-A-1. (4 sheets)

Nuclide/Chemical	Units	SD-WM -PSE-008 DSSF	65959-87 -7205Starr DSS	AN-103 SD-WM -TI-355 DSS	AN-106 SD-WM -TI-355 DSSF	AN-101 SD-WM -TI-355 DSSF	Raw Water	Average TI-355 Values	Std. Dev. +/-	Adjusted Feed to C-A-1
Diethyl-phthalates	mg/L					6.6E+00		6.6E+00		4.6E+00
Difluoroti-chloromethane	mg/L									
3,5-Dimethyl-pyridine	mg/L									
Dimethylnitro-samine	mg/L									
Dimethyltoluidine	mg/L			1.2E+01				1.2E+01		1.0E+01
Dioctylphthalate	mg/L			2.4E+01		1.8E+00		1.3E+01	1.1E+01	9.0E+00
Dodecane	mg/L			4.0E+00		1.7E+00		2.9E+00	1.1E+00	2.2E+00
Dodecanoic Acid	mg/L					9.5E-01		9.5E-01		6.6E-01
Ethanedioic Acid	mg/L			4.2E+03				4.2E+03		2.9E+03
Ethoxytri-ethylene glycol	mg/L									
Ethyl,2-methyl-hydroxymethylbenzenes	mg/L			4.6E+01				4.6E+01		3.3E+01
Ethyl alcohol	mg/L									
Ethyl Benzene	mg/L									
Ethylbenz-aldehyde	mg/L			6.9E+02				6.9E+02		5.2E+02
EDDA	mg/L			4.8E+00		1.8E+01		1.1E+01	6.6E+00	8.0E+00
EDTA	mg/L			8.5E+01	4.8E+00	1.1E+01		3.4E+01	3.6E+01	2.4E+01
Ethylxylene	mg/L			3.2E-01				3.2E-01		2.7E-01
Heptadecane	mg/L									
Heptadecanoic Acid	mg/L			2.4E+00				2.4E+00		1.7E+00
Heptanedioic Acid	mg/L			2.7E+01				2.7E+01		1.9E+01
Hexadecane	mg/L									
Hexadecanoic Acid	mg/L					8.3E-01		8.3E-01		5.9E-01
Hexanedioic Acid	mg/L			6.4E+01		7.1E+00		3.6E+01	2.8E+01	2.5E+01
Hexanoic Acid	mg/L			4.3E+01				4.3E+01		3.0E+01
Hydroxyacetic Acid	mg/L				4.6E+01			4.6E+01		6.8E+01
2-Hydroxymethyl-benzoic Acid	mg/L			2.7E+01				2.7E+01		2.0E+01
Methoxydi-glycol	mg/L									
Methoxytri-glycol	mg/L									
Methylbenz-aldehyde	mg/L			6.9E+02				6.9E+02		5.0E+02
2-Methylbenzoic Acid	mg/L			1.8E+01				1.8E+01		1.4E+01
Methylene Chloride	mg/L									
2-Methyl,hydroxy-methyl benzene	mg/L			3.5E+02				3.5E+02		2.6E+02
Methyl n-propyl ketone	mg/L									
Methyl n-butyl ketone	mg/L									
MIBK (Hexone)	mg/L									
2-Methyl-nonane	mg/L									
Methyl-toluidine	mg/L			3.5E+00				3.5E+00		2.5E+00
n-C22H46 + C43H82	mg/L			1.5E+01		2.0E+01		1.8E+01	2.5E+00	1.3E+01
NEDTA	mg/L				2.0E+01			2.0E+01		1.5E+01

1
2

Table 2B-2. 242-A Evaporator Feed to C-A-1. (4 sheets)

Nuclide/Chemical	Units	SD-WM -PSE-008 DSSF	65555-87 -720Starr DSS	AW-103 SD-WM -TI-355 DSS	AW-106 SD-WM -TI-355 DSSF	AW-101 SD-WM -TI-355 DSSF	Raw Water	Average TI-355 Values	Std. Dev. +/-	Adjusted Feed to C-A-1
HAIDA	mg/L			5.8E+02				5.8E+02		4.1E+02
HICEDA	mg/L			3.0E+01				3.0E+01		2.1E+01
Nitrilotri-acetic Acid	mg/L			4.6E+00		7.5E+00		6.0E+00	1.5E+00	4.2E+00
Octadecanoic Acid	mg/L					4.1E-01		4.1E-01		2.9E-01
o-Xylene	mg/L									
p-Chlorotoluene	mg/L									
p-Dichloro-benzene	mg/L									
Pentadecane	mg/L			3.7E+00		8.0E-01		2.2E+00	1.5E+00	1.6E+00
Pentadecanoic Acid	mg/L			3.5E+01				3.5E+01		2.5E+01
Pentanedioic Acid	mg/L			7.0E+01				7.0E+01		4.9E+01
Phenol	mg/L									
2-Propanol	mg/L									
Propylbenzene	mg/L			1.8E+00				1.8E+00		2.4E+00
Pyridine	mg/L									
Tetrachloro-ethylene	mg/L									
Tetradecane	mg/L			9.0E+00		7.4E+00		8.2E+00	8.0E-01	5.9E+00
Tetrahydro-furan	mg/L									
Tributyl phosphate	mg/L			1.8E+01		2.7E+01		2.3E+01	4.5E+00	1.6E+01
Tri-n-butyl-(di-oil)-phosphate	mg/L			1.1E+01				1.1E+01		7.7E+00
1,1,1-Tri-chloroethane	mg/L									
Trichloro-ethylene	mg/L									
Trichloromethane	mg/L									
Tridecane	mg/L			1.5E+01		1.4E+01		1.5E+01	5.0E-01	1.1E+01
Triglyme	mg/L									
1,3,5 Trimethyl benzene	mg/L			7.8E+01				7.8E+01		1.2E+02
Toluene	mg/L									
Vinyl Chloride	mg/L									
Undecane	mg/L			5.8E-01		3.3E+00		1.9E+00	1.4E+00	1.6E+00
Unknown phthalates	mg/L			2.1E+01		5.4E+00		1.3E+01	7.8E+00	9.2E+00

3

Table 2B-3. Partition Coefficients and Activity Coefficients. (6 sheets)

Nuclide/Chemical	Units	Typical Feed To C-A-1	Mole Weight	Ion Charge	C-A-1 Vapor Space Part. Coeff.	Cond. Part. Coeff.	242-A Stack & Condens. Decon. Factors
TOC	mg/L	3.3E+03	3.6E+02	2.0E+00	3.4E+05	1.0E+05	9.2E+0
TOC	mg/min						1.7E+01
TDS	mg/L				1.0E+07	1.0E+05	0.0E+00
TDS	mg/min						0.0E+00
Alpha	uCi/ml				1.0E+07	1.0E+05	2.5E+06
							5.1E-01
Beta	uCi/ml				1.0E+07	1.0E+05	2.9E+11
							5.3E+02
3H	uCi/ml	1.8E-02			6.6E+03	1.1E+04	1.2E+05
							3.4E-01
14C	uCi/ml	9.7E-04			1.0E+07	1.0E+05	2.8E+11
							5.1E+02
60Co	uCi/ml	2.3E-02			1.0E+07	1.0E+05	2.8E+11
							5.1E+02
63Ni	uCi/ml				1.0E+07	1.0E+05	0.0E+00
							0.0E+00
79Se	uCi/ml	1.0E-02			1.0E+07	1.0E+05	2.8E+09
							5.1E+02
90Sr	uCi/ml	7.6E+00			2.3E+09	1.8E+06	1.2E+15
							2.3E+06
93Zr	uCi/ml				1.0E+07	1.0E+05	0.0E+00
							0.0E+00
94Nb	uCi/ml	1.7E-02			1.0E+07	1.0E+05	2.8E+11
							5.1E+02
99Tc	uCi/ml	8.5E-02			1.0E+07	1.0E+05	2.8E+11
							5.1E+02
106Ru	uCi/ml	7.0E+00			6.7E-07	1.6E+06	3.1E+11
							3.4E+03
113Sn	uCi/ml				2.9E+05	5.2E+05	0.0E+00
							0.0E+00
124Sb	uCi/ml				1.0E+07	1.0E+05	0.0E+00
							0.0E+00
125Sb	uCi/ml				1.0E+07	1.0E+05	0.0E+00
							0.0E+00
126Sn	uCi/ml				1.0E+07	1.0E+05	0.0E+00
							0.0E+00
129I	uCi/ml	2.7E-04			2.8E+04	1.4E+05	1.1E+07
							1.4E+00
134Cs	uCi/ml	2.0E+00			3.5E+07	4.3E+06	4.3E+13
							3.6E+04
135Cs	uCi/ml				3.5E+07	4.3E+06	0.0E+00
							0.0E+00
137Cs	uCi/ml	3.5E+02			9.3E+11	3.6E+06	9.5E+17
							9.4E+08
144Ce	uCi/ml				1.0E+07	1.0E+05	0.0E+00
							0.0E+00
147Pm	uCi/ml				1.0E+07	1.0E+05	0.0E+00
							0.0E+00
151Sm	uCi/ml				1.0E+07	1.0E+05	0.0E+00
							0.0E+00
155Eu	uCi/ml				1.0E+07	1.0E+05	0.0E+00
							0.0E+00
226Ra	uCi/ml				1.0E+07	1.0E+05	0.0E+00
							0.0E+00
230Th	uCi/ml				1.0E+07	1.0E+05	0.0E+00
							0.0E+00
233U	uCi/ml				1.0E+07	1.0E+05	0.0E+00
							0.0E+00
234U	uCi/ml	2.6E-05			1.0E+07	1.0E+05	2.7E+11
							5.1E+02
235U	uCi/ml	1.3E-06			1.0E+07	1.0E+05	2.8E+11
							5.1E+02
238U	uCi/ml	9.3E-06			1.0E+07	1.0E+05	2.7E+11
							5.1E+02
237Np	uCi/ml	4.4E-05			1.0E+07	1.0E+05	2.8E+11
							5.1E+02

Table 2B-3. Partition Coefficients and Activity Coefficients. (6 sheets)

Nuclide/Chemical	Units	Typical Feed To C-A-1	Mole Weight	Ion Charge	C-A-1 Vapor Space Part. Coeff.	Cond. Part. Coeff.	242-A Stack & Concens. Decon. Factors
238Pu	uCi/ml	5.1E-04			3.7E+10	4.8E+05	5.1E+15 1.9E+06
239Pu	uCi/ml	1.1E-03			3.7E+10	4.8E+05	5.1E+15 1.9E+06
240Pu	uCi/ml				1.0E+07	1.0E+05	0.0E+00 0.0E+00
241Pu	uCi/ml				1.0E+07	1.0E+05	0.0E+00 0.0E+00
241Am	uCi/ml	1.5E-03			1.4E+10	4.9E+05	2.0E+15 7.1E+05
243Am	uCi/ml				1.4E+10	4.9E+05	0.0E+00 0.0E+00
244Cm	uCi/ml	1.7E-04			1.0E+07	1.0E+05	2.8E+11 5.1E+02
AlO2-	mg/L	2.2E+04	5.9E+01	1.0E+00	1.5E+07	1.0E+05	4.2E+11 7.6E+02
NH4+	mg/L	9.3E+02	1.8E+01	1.0E+00	1.1E+03	2.1E+03	7.0E+02 5.7E-02
Sb	mg/L		1.2E+02	3.0E+00	1.0E+07	1.0E+05	0.0E+00 0.0E+00
As	mg/L		7.5E+01	3.0E+00	1.0E+07	1.0E+05	0.0E+00 0.0E+00
Ba	mg/L	9.8E+00	1.4E+02	2.0E+00	1.0E+07	1.0E+05	2.3E+10 4.6E+02
Be	mg/L		9.0E+00	2.0E+00	1.0E+07	1.0E+05	0.0E+00 0.0E+00
Bi	mg/L		2.1E+02	3.0E+00	1.0E+07	1.0E+05	0.0E+00 0.0E+00
B	mg/L	1.2E+01	1.1E+01	3.0E+00	1.0E+07	1.0E+05	4.4E+10 4.9E+02
Ca	mg/L	5.1E+01	4.0E+01	2.0E+00	1.0E+07	1.0E+05	2.1E+08 3.9E+01
Cd	mg/L	1.1E+01	1.1E+02	2.0E+00	1.0E+07	1.0E+05	2.8E+11 5.1E+02
CO3=	mg/L	8.2E+03	6.0E+01	2.0E+00	1.0E+07	1.0E+05	2.8E+11 5.1E+02
Cl-	mg/L	4.5E+03	3.5E+01	1.0E+00	5.2E+06	1.2E+06	1.2E+12 2.6E+02
Cr	mg/L	4.2E+02	5.2E+01	2.0E+00	3.5E+08	8.2E+05	8.2E+13 1.8E+04
Cu	mg/L	4.8E+00	6.4E+01	2.0E+00	1.0E+07	1.0E+05	3.1E+10 4.7E+02
CN-	mg/L	3.4E+01	2.6E+01	1.0E+00	1.0E+07	1.0E+05	2.8E+11 5.1E+02
F-	mg/L	2.7E+02	1.9E+01	1.0E+00	2.4E+08	6.1E+05	1.0E+12 9.0E+03
Fe	mg/L	2.8E+01	5.6E+01	3.0E+00	1.0E+07	1.0E+05	2.4E+10 4.6E+02
H2	mg/L	0.0E+00	2.0E+00	0.0E+00	8.3E-01 A	4.5E+00 B	1.4E-04 8.4E-01
OH-	mg/L	4.9E-04	1.7E+01	1.0E+00	1.0E+07	1.0E+05	2.8E+11 5.1E+02
Pb	mg/L	5.1E+01	2.1E+02	2.0E+00	3.0E+05	4.3E+06	3.6E+11 1.5E+01
Mg	mg/L	2.0E+01	2.4E+01	2.0E+00	1.0E+07	1.0E+05	3.6E+08 6.3E+01
Mn	mg/L	2.0E+01	5.5E+01	2.0E+00	1.0E+07	1.0E+05	8.2E+10 5.0E+02
Hg	mg/L	5.6E+00	2.0E+02	2.0E+00	1.0E+07	1.0E+05	2.6E+11 5.1E+02
Mo	mg/L	4.2E+01	9.6E+01	2.0E+00	1.0E+07	1.0E+05	2.8E+11 5.1E+02
Ni	mg/L	2.8E+01	5.9E+01	2.0E+00	1.0E+07	1.0E+05	2.8E+11 5.1E+02

Table 2B-3. Partition Coefficients and Activity Coefficients. (6 sheets)

Nuclide/Chemical	Units	Typical Feed To C-A-1	Mole Weight	Ion Charge	C-A-1 Vapor Space Part. Coeff.	Cond. Part. Coeff.	242-A Stack & Condens. Decon. Factors
NO3-	mg/L	1.2E+05	6.2E+01	1.0E+00	5.7E+06	1.6E+06	2.6E+12 2.9E+02
NO2-	mg/L	6.0E+04	4.6E+01	1.0E+00	2.4E+07	1.6E+06	1.1E+13 1.2E+03
PO4	mg/L	3.7E+03	9.5E+01	3.0E+00	1.0E+07	1.0E+05	2.8E+11 5.1E+02
P	mg/L	3.4E+03	3.1E+01	3.0E+00	1.0E+07	1.0E+05	2.8E+11 5.1E+02
K	mg/L	1.3E+04	3.9E+01	1.0E+00	3.5E+07	1.0E+05	5.7E+11 1.8E+03
Se	mg/L		7.9E+01	2.0E+00	1.0E+07	1.0E+05	0.0E+00 0.0E+00
Si	mg/L	1.3E+02	2.8E+01	4.0E+00	1.0E+07	1.0E+05	4.2E+09 3.2E+02
Ag	mg/L		1.1E+02	1.0E+00	1.0E+07	1.0E+05	0.0E+00 0.0E+00
Na	mg/L	1.7E+05	2.3E+01	1.0E+00	3.0E+08	1.0E+05	3.6E+12 1.5E+04
SO4=	mg/L	2.0E+03	9.6E+01	2.0E+00	1.4E+07	1.1E+06	1.7E+11 5.8E+02
S-	mg/L		3.2E+01	2.0E+00	1.0E+07	1.0E+05	0.0E+00 0.0E+00
Ti	mg/L		4.8E+01	3.0E+00	1.0E+07	1.0E+05	0.0E+00 0.0E+00
W	mg/L	1.5E+02	1.8E+02	2.0E+00	1.0E+07	1.0E+05	2.8E+11 5.1E+02
U	mg/L	5.3E+01	2.4E+02	3.0E+00	1.0E+07	1.0E+05	2.7E+11 5.1E+02
V	mg/L		5.1E+01	2.0E+00	1.0E+07	1.0E+05	0.0E+00 0.0E+00
Zn	mg/L	3.4E+01	6.5E+01	2.0E+00	1.0E+07	1.0E+05	9.6E+10 5.0E+02
Zr	mg/L		9.1E+01	4.0E+00	1.0E+07	1.0E+05	0.0E+00 0.0E+00
				Gamma	A	B	
Acetone	mg/L	4.5E-01		7.8E+00	4.5E-02	-8.0E+00	7.5E+00 1.2E-02
Alkyl, hydroxy-methyl benzene	mg/L	1.3E+00		6.3E+00	5.4E-02	-3.2E+00	9.8E+08 1.6E+01
Benzyl alcohol	mg/L			3.4E+00	7.1E-02	-4.1E+00	0.0E+00 0.0E+00
Benzaldehyde	mg/L			3.6E+00	6.5E-02	-1.7E+00	0.0E+00 0.0E+00
Benzene	mg/L			9.1E+00	4.5E-02	3.4E+00	0.0E+00 0.0E+00
Bromodichloro-methane	mg/L			2.0E+00	4.3E-02	3.4E+00	0.0E+00 0.0E+00
Bromoform	mg/L			2.0E+00	5.3E-02	4.6E-01	0.0E+00 0.0E+00
Butanedioic Acid	mg/L	3.0E+02		1.6E+00	3.6E-02	-7.9E-01	3.4E+08 1.2E+01
1-Butanol	mg/L			1.6E+00	6.2E-02	9.7E-01	7.1E+05 5.6E-01
2-Butanone	mg/L			1.7E+00	4.3E-02	3.5E+00	0.0E+00 0.0E+00
Butoxy-diglycol	mg/L			2.7E+00	6.1E-02	-1.7E+00	0.0E+00 0.0E+00
2-Butoxy-etnanol	mg/L			2.7E+00	6.1E-02	-1.7E+00	0.0E+00 0.0E+00
Butoxy-glycol	mg/L			2.7E+00	6.1E-02	-1.7E+00	0.0E+00 0.0E+00
Butoxytri-ethyleneglycol	mg/L			2.7E+00	6.1E-02	-1.7E+00	0.0E+00 0.0E+00
Butraldehyde	mg/L			1.6E+00	6.2E-02	9.7E-01	0.0E+00 0.0E+00
C3-Alkylbenzene	mg/L	3.9E+02		5.0E+00	5.4E-02	-7.8E-02	1.3E+06

1
2

Table 2B-3. Partition Coefficients and Activity Coefficients. (6 sheets)

Nuclide/Chemical	Units	Typical Feed To C-A-1	Mole Weight	Ion Charge	C-A-1 Vapor Space Part. Coeff.	Cond Part. Coeff.	242-A Stack & Condens. Decon. Factors
Caproic acid	mg/L			2.8E+00	8.9E-02	-6.3E+00	7.1E-01 0.0E+00 0.0E+00
Carbon Tetrachloride	mg/L			2.0E+00	4.0E-02	3.7E+00	0.0E+00 0.0E+00
Chlorodibromo-ethane	mg/L			2.6E+00	4.7E-02	1.4E+00	0.0E+00 0.0E+00
Chloroethyl, 2-hydroxymethyl, 8A	mg/L	1.3E+01		6.4E+00	5.9E-02	-1.1E+00	5.3E+06 1.2E+00
Chloroform	mg/L			2.0E+00	4.3E-02	4.2E+00	0.0E+00 0.0E+00
2-Chloromethyl-hydroxymethylbenzene	mg/L	1.4E+01		1.0E+01	5.9E-02	-1.1E+00	1.7E+06 7.5E-01
2-Chloromethyl-o-xylene	mg/L	1.5E+01		6.4E+00	5.7E-02	6.6E-01	5.0E+04 2.3E-01
Citric Acid	mg/L	2.8E+01		2.8E+00	6.2E-02	-1.3E+00	3.4E+07 2.7E+00
1,2 Dichloro-ethane	mg/L			2.6E+00	4.0E-02	3.4E+00	0.0E+00 0.0E+00
1,1 Dichloro-ethylene	mg/L			2.6E+00	3.8E-02	6.4E+00	0.0E+00 0.0E+00
Diethyl-phthalates	mg/L	4.6E+00		6.5E+00	5.0E-02	-5.5E+00	0.0E+10 1.5E+02
Difluorodi-chloromethane	mg/L			2.3E+00	4.6E-02	-4.4E+00	0.0E+00 0.0E+00
3,5-Dimethyl-pyridine	mg/L			3.9E+00	6.2E-02	-1.8E+00	0.0E+00 0.0E+00
Dimethylnitro-samine	mg/L			2.1E+00	3.9E-02	4.5E+00	0.0E+00 0.0E+00
Dimethyltoluidine	mg/L	1.0E+01		5.1E+00	6.2E-02	-1.8E+00	2.9E+07 2.6E+00
Dioctylphthalate	mg/L	9.0E+00		9.0E+00	5.2E-02	-6.0E+00	1.1E+11 1.7E+02
Dodecane	mg/L	2.2E+00		8.4E+00	5.7E-02	-2.7E+00	1.1E+08 5.2E+00
Dodecanoic Acid	mg/L	6.6E-01		6.5E+00	5.4E-02	-6.6E+00	5.2E+11 3.6E+02
Ethanedioic Acid	mg/L	2.9E+03		4.9E-01	6.0E-02	-3.2E+00	6.5E+10 1.2E+02
Ethoxytri-ethylene glycol	mg/L			2.2E+00	4.1E-02	2.5E+00	0.0E+00 0.0E+00
Ethyl,2-methyl-hydroxymethylbenzenes	mg/L	3.3E+01		5.3E+00	5.5E-02	-4.0E+00	4.9E+09 3.5E+01
Ethyl alcohol	mg/L			5.3E-01	5.4E-02	2.7E+00	0.0E+00 0.0E+00
Ethyl Benzene	mg/L			5.8E+00	5.1E-02	9.8E-01	0.0E+00 0.0E+00
Ethylbenz-aldehyde	mg/L	5.2E+02		4.9E+00	5.7E-02	-2.5E+00	2.2E+08 7.2E+00
EDTA	mg/L	8.0E+00		9.5E+00	5.2E-02	-1.0E+01	2.6E+14 8.4E+03
EDTA	mg/L	2.4E+01		9.5E+00	5.2E-02	-1.0E+01	2.6E+14 8.4E+03
Ethylxylene	mg/L	2.7E-01		4.8E+00	6.1E-02	-1.6E+00	2.3E+07 2.3E+00
Heptadecane	mg/L			1.2E+01	5.3E-02	-6.1E+00	0.0E+00 0.0E+00
Heptadecanoic Acid	mg/L	1.7E+00		1.2E+01	5.3E-02	-6.1E+00	7.1E+10 1.4E+02
Heptanedioic Acid	mg/L	1.9E+01		3.4E+00	6.9E-02	-5.4E+00	5.3E+10 9.7E+01
Hexadecane	mg/L			1.1E+01	5.4E-02	-5.7E+00	0.0E+00 0.0E+00
Hexadecanoic Acid	mg/L	5.9E-01		1.1E+01	5.4E-02	-5.7E+00	3.1E+10 8.9E-01

3

Table 2B-3. Partition Coefficients and Activity Coefficients. (6 sheets)

Nuclide/Chemical	Units	Typical Feed To C-A-1	Mole Height	Ion Charge	C-A-1 Vapor Space Part. Coeff.	Cond. Part. Coeff.	242-A Stack & Condens. Decon. Factors
Hexanedioic Acid	mg/L	2.5E+01		2.8E+00	5.1E-02	-8.1E+00	8.3E+13 4.8E+03
Hexanoic Acid	mg/L	3.0E+01		2.8E+00	8.9E-02	-6.3E+00	1.1E+11 1.1E+02
Hydroxyacetic Acid	mg/L	6.8E+01		4.9E-01	5.4E-02	2.7E+00	3.9E+05 4.6E-01
2-Hydroxymethyl-benzoic Acid	mg/L	2.0E+01		4.0E+00	6.1E-02	-3.0E+00	6.0E+08 1.1E+01
Methoxydi-glycol	mg/L			2.3E+00	5.7E-02	-5.2E+00	0.0E+00 0.0E+00
Methosytri-glycol	mg/L			2.2E+00	6.2E-02	-2.4E+00	0.0E+00 0.0E+00
Methylbenz-aldehyde	mg/L	5.0E+02		4.2E+00	6.1E-02	-3.0E+00	5.5E+08 1.1E+01
2-Methylbenzoic Acid	mg/L	1.4E+01		3.9E+00	6.3E-02	-2.5E+00	1.9E+08 6.2E+00
Methylene chloride	mg/L			2.0E+00	3.9E-02	5.1E+00	0.0E+00 0.0E+00
2-Methyl,hydroxy-methyl benzene	mg/L	2.6E+02		3.9E+00	6.3E-02	-2.5E+00	1.9E+08 6.2E+00
Methyl n-propyl ketone	mg/L			2.1E+00	5.9E-02	1.3E+00	0.0E+00 0.0E+00
Methyl n-butyl ketone	mg/L			2.6E+00	6.5E-02	-2.6E-01	0.0E+00 0.0E+00
MIBK (Hexone)	mg/L			2.6E+00	6.1E-02	4.9E-01	0.0E+00 0.0E+00
2-Methyl-nonane	mg/L			7.1E+00	5.9E-02	-4.0E+00	0.0E+00 0.0E+00
Methyl-toluidine	mg/L	2.5E+00		4.5E+00	5.6E-02	-3.3E+00	1.5E+09 1.9E+01
n-C22H46 - C40H82	mg/L	1.3E+01		2.1E+01	4.4E-02	-7.5E+00	7.8E+11 5.0E+02
NEDTA	mg/L	1.5E+01		4.5E+00	5.7E-02	-3.0E+00	6.4E+08 1.2E+01
NAIDA	mg/L	4.1E+02		2.7E+00	6.3E-02	-4.2E+00	1.5E+10 5.6E+01
NICEDA	mg/L	2.1E+01		2.7E+00	6.3E-02	-4.2E+00	1.5E+10 5.6E+01
Nitrilotri-acetic Acid	mg/L	4.2E+00		2.7E+00	6.3E-02	-4.2E+00	1.5E+10 5.6E+01
Octodecanoic Acid	mg/L	2.9E-01		1.2E+01	5.3E-02	-6.1E+00	6.5E+10 1.3E+02
o-Xylene	mg/L			5.8E+00	5.1E-02	8.6E-01	0.0E+00 0.0E+00
p-Chlorotoluene	mg/L			5.8E+00	5.1E-02	7.2E-02	0.0E+00 0.0E+00
p-Dichloro-benzene	mg/L			5.1E+00	4.8E-02	-3.4E-01	0.0E+00 0.0E+00
Pentadecane	mg/L	1.6E+00		1.0E+01	5.5E-02	-5.0E+00	8.7E+09 4.7E+01
Pentadecanoic Acid	mg/L	2.5E+01		8.4E+00	5.5E-02	-5.0E+00	1.3E+10 5.8E+01
Pentanedioic Acid	mg/L	4.9E+01		2.2E+00	5.7E-02	-8.8E+00	3.4E+14 9.0E+03
Phenol	mg/L			2.6E+00	7.2E-02	-2.9E+00	0.0E+00 0.0E+00
2-Propanol	mg/L			1.1E+00	5.5E-02	2.4E+00	0.0E+00 0.0E+00
Propylbenzene	mg/L	2.4E+00		6.5E+00	5.4E-02	-7.8E-02	6.5E+05 5.5E-01
Pyridine	mg/L			2.7E+00	5.0E-02	1.8E+00	0.0E+00 0.0E+00
Tetrachloro-ethylene	mg/L			9.5E+00	4.8E-02	1.7E+00	0.0E+00 0.0E+00
Tetradecane	mg/L	5.9E+00		9.7E+00	5.4E-02	-4.2E+00	1.8E+09 2.1E+01

Table 2B-3. Partition Coefficients and Activity Coefficients. (6 sheets)

Nuclide/Chemical	Units	Typical Feed To C-A-1	Mole Weight	Ion Charge	C-A-1 Vapor Space Part. Coeff.	Cond. Part. Coeff.	242-A Stack & Condens. Decon. Factors
Tetrahydro-furan	mg/L			2.0E+00	4.3E-02	3.5E+00	0.0E+00 0.0E+00
Tributyl phosphate	mg/L	1.6E+01		8.4E+00	5.8E-02	-4.1E+00	1.7E+09 2.0E+01
Tri-n-butyl-(di-ol)-phosphate	mg/L	7.7E+00		8.4E+00	5.8E-02	-4.1E+00	1.7E+09 2.0E+01
1.1.1-Tri-chloroethane	mg/L			2.6E+00	4.5E-02	2.1E+00	0.0E+00 0.0E+00
Trichloro-ethylene	mg/L			2.6E+00	4.3E-02	3.2E+00	0.0E+00 0.0E+00
Trichloromethane	mg/L			2.0E+00	3.8E-02	5.7E+00	0.0E+00 0.0E+00
Tridecane	mg/L	1.1E+01		9.0E+00	4.1E-02	-2.5E+00	2.0E+08 8.3E+00
Triglyme	mg/L			3.3E+00	4.6E-02	2.3E+00	0.0E+00 0.0E+00
1.3.5 Trimethyl benzene	mg/L	1.2E+02		1.1E+01	5.3E-02	-2.1E-01	2.5E+05 4.0E-01
Toluene	mg/L			5.2E+00	5.0E-02	2.1E+00	0.0E+00 0.0E+00
Vinyl Chloride	mg/L			2.6E+00	4.5E-02	-5.1E+00	0.0E+00 0.0E+00
Undecane	mg/L	1.6E+00		7.8E+00	6.0E-02	-1.9E+00	2.2E+07 2.3E+00
Unknown phthalates	mg/L	9.2E+00		6.5E+00	5.0E-02	-5.5E+00	8.0E+10 1.5E+02

1

Table 2B-4. Table of Constants.

J-EC1-1 Steam Flow Rate	6.8 E+02 lb/h
J-EC2-1 Steam FLow Rate	7.5 E+02 lb/h
Air to control C-A-1 vacuum	2.5 E+01 scfm
RW to E-C-1	3.5 E+03 gpm
RW to E-C-2	8.0 E+01 gpm
Steam to E-A-1	2.7 E+04 lb/h
Steam to H-C-1	0.0 E+00 lb/h
Air added to exhaust flow	5.0 E+02 scfm
Feed flow to C-A-1	9.0 E+01 gpm
Filtered RW	1.0 E+03 lb/h
Waste Volume Reduction	3.0 E+01 %
C-A-1 Vacuum	5.0 E+01 Torr
P-B-1 Seal water flow rate	1.5 E-01 gpm
E-C-1 Water leakage rate	1.0 E-02 gpm
P-B-2 Seal water flow rate	1.0 E-01 gpm
E-C-1 Pressure drop	2.0 E+01 Torr
Inst. Air into C-A-1	1.0 E+00 CFM
Percent heat losses to room	1.0 E+01 Percent
E-C-2 Pressure	8.0 E-01 psia
E-C-3 Vacuum	1.0 E+01 in. of H_2O
F-C-1 Filter efficiency	9.5 E+01 Percent
F-C-5 Filter efficiency	9.9 E+01 Percent
E-101 Batch Size	3.4 E+03 Gal
E-101 Temperature	7.0 E+01 C
E-101 NaNO3 Molarity	1.0 E+00 Moles/L
H-C-1 Differential Pressure	3.0 E+00 in. H20
F-C-5 Differential Pressure	4.0 E+00 in. H2o
90Sr IX adsorbing eff.	9.5 E+01 Percent
134Cs, 137Cs IX eff.	9.5 E+01 Percent
Gas Flow, C-100 to Stack	2.5 E+01 SCFM
Water Vap. Pressure Coeff.	5.7 E-02 -1.4 E+01
Alpha Hydrogen (G)	1.6 E+00 Molecules/100-eV
Beta Hydrogen (G)	6.0 E-01 Molecules/100-eV
Gamma Hydrogen (G)	4.5 E-01 Molecules/100-eV
C-A-1 Volume	2.5 E+04 Gal

2

This page intentionally left blank.

34005-CA-0001

Attachment 6

Tank S-109 BBI by Waste Phase

Tank Name	Analyte	Waste Phase	Waste Type	Inventory	Inventory Units	Density	Density Units	Volume	Volume Units	Adjusted Concentration	Adjusted Concentration Units
241-S-109	Zr	Salt Cake (Liquids)	S1-SltCk (Liquid)	2.53E-01	kg	1.37	g/mL	63	kL	2.93E+00	ug/g
241-S-109	Zr	Salt Cake (Solids)	S1-SltCk (Solid)	2.17E+01	kg	1.66	g/mL	1905	kL	6.87E+00	ug/g
241-S-109	Zr	Sludge	R1 (Solid)	5.07E+00	kg	1.77	g/mL	49	kL	5.84E+01	ug/g
241-S-109	Zr	Total		2.70E+01	kg						
241-S-109	UTOTAL	Salt Cake (Liquids)	S1-SltCk (Liquid)	9.89E-02	kg	1.49	g/mL	63	kL	1.05E+00	ug/g
241-S-109	UTOTAL	Salt Cake (Solids)	S1-SltCk (Solid)	1.84E+02	kg	1.66	g/mL	1905	kL	5.82E+01	ug/g
241-S-109	UTOTAL	Sludge	R1 (Solid)	4.15E+02	kg	1.77	g/mL	49	kL	4.79E+03	ug/g
241-S-109	UTOTAL	Total		6.00E+02	kg						
241-S-109	TOC	Salt Cake (Liquids)	S1-SltCk (Liquid)	7.02E+01	kg	1.49	g/mL	63	kL	7.48E+02	ug/g
241-S-109	TOC	Salt Cake (Solids)	S1-SltCk (Solid)	2.16E+03	kg	1.66	g/mL	1905	kL	6.82E+02	ug/g
241-S-109	TOC	Sludge	R1 (Solid)	9.11E+01	kg	1.77	g/mL	49	kL	1.05E+03	ug/g
241-S-109	TOC	Total		2.32E+03	kg						
241-S-109	TIC as CO	Salt Cake (Liquids)	S1-SltCk (Liquid)	6.17E+02	kg	1.49	g/mL	63	kL	6.58E+03	ug/g
241-S-109	TIC as CO	Salt Cake (Solids)	S1-SltCk (Solid)	7.06E+04	kg	1.66	g/mL	1905	kL	2.23E+04	ug/g
241-S-109	TIC as CO	Sludge	R1 (Solid)	7.73E+02	kg	1.77	g/mL	49	kL	8.91E+03	ug/g
241-S-109	TIC as CO	Total		7.20E+04	kg						
241-S-109	Sr	Salt Cake (Liquids)	S1-SltCk (Liquid)	2.77E-03	kg	1.45	g/mL	63	kL	3.03E-02	ug/g
241-S-109	Sr	Salt Cake (Solids)	S1-SltCk (Solid)	2.43E+00	kg	1.68	g/mL	1905	kL	7.60E-01	ug/g
241-S-109	Sr	Sludge	R1 (Solid)	2.60E+01	kg	1.77	g/mL	49	kL	3.00E+02	ug/g
241-S-109	Sr	Total		2.85E+01	kg						
241-S-109	SO4	Salt Cake (Liquids)	S1-SltCk (Liquid)	1.08E+02	kg	1.49	g/mL	63	kL	1.15E+03	ug/g
241-S-109	SO4	Salt Cake (Solids)	S1-SltCk (Solid)	2.47E+04	kg	1.66	g/mL	1905	kL	7.81E+03	ug/g
241-S-109	SO4	Sludge	R1 (Solid)	1.04E+02	kg	1.77	g/mL	49	kL	1.20E+03	ug/g
241-S-109	SO4	Total		2.49E+04	kg						
241-S-109	Si	Salt Cake (Liquids)	S1-SltCk (Liquid)	8.58E+00	kg	1.49	g/mL	63	kL	9.14E+01	ug/g
241-S-109	Si	Salt Cake (Solids)	S1-SltCk (Solid)	1.02E+03	kg	1.66	g/mL	1905	kL	3.24E+02	ug/g
241-S-109	Si	Sludge	R1 (Solid)	1.34E+02	kg	1.77	g/mL	49	kL	1.55E+03	ug/g
241-S-109	Si	Total		1.17E+03	kg						
241-S-109	PO4	Salt Cake (Liquids)	S1-SltCk (Liquid)	1.01E+02	kg	1.49	g/mL	63	kL	1.07E+03	ug/g
241-S-109	PO4	Salt Cake (Solids)	S1-SltCk (Solid)	3.64E+04	kg	1.66	g/mL	1905	kL	1.15E+04	ug/g
241-S-109	PO4	Sludge	R1 (Solid)	3.56E+02	kg	1.77	g/mL	49	kL	4.11E+03	ug/g
241-S-109	PO4	Total		3.68E+04	kg						
241-S-109	Pb	Salt Cake (Liquids)	S1-SltCk (Liquid)	2.53E+00	kg	1.37	g/mL	63	kL	2.93E+01	ug/g
241-S-109	Pb	Salt Cake (Solids)	S1-SltCk (Solid)	1.88E+02	kg	1.66	g/mL	1905	kL	5.94E+01	ug/g
241-S-109	Pb	Sludge	R1 (Solid)	5.72E+00	kg	1.77	g/mL	49	kL	6.59E+01	ug/g
241-S-109	Pb	Total		1.96E+02	kg						
241-S-109	Oxalate	Salt Cake (Liquids)	S1-SltCk (Liquid)	5.66E+00	kg		g/mL	63	kL	6.03E+01	ug/g
241-S-109	Oxalate	Salt Cake (Solids)	S1-SltCk (Solid)	7.91E+03	kg	1.66	g/mL	1905	kL	2.50E+03	ug/g
241-S-109	Oxalate	Sludge	R1 (Solid)	2.16E+02	kg		g/mL	49	kL	2.49E+03	ug/g
241-S-109	Oxalate	Total		8.13E+03	kg						
241-S-109	NO3	Salt Cake (Liquids)	S1-SltCk (Liquid)	8.29E+03	kg	1.49	g/mL	63	kL	8.83E+04	ug/g
241-S-109	NO3	Salt Cake (Solids)	S1-SltCk (Solid)	1.90E+06	kg	1.66	g/mL	1905	kL	6.00E+05	ug/g
241-S-109	NO3	Sludge	R1 (Solid)	9.71E+03	kg	1.77	g/mL	49	kL	1.12E+05	ug/g
241-S-109	NO3	Total		1.92E+06	kg						
241-S-109	NO2	Salt Cake (Liquids)	S1-SltCk (Liquid)	5.35E+03	kg	1.49	g/mL	63	kL	5.70E+04	ug/g
241-S-109	NO2	Salt Cake (Solids)	S1-SltCk (Solid)	1.46E+04	kg	1.66	g/mL	1905	kL	4.62E+03	ug/g
241-S-109	NO2	Sludge	R1 (Solid)	2.74E+03	kg	1.77	g/mL	49	kL	3.16E+04	ug/g
241-S-109	NO2	Total		2.27E+04	kg						
241-S-109	Ni	Salt Cake (Liquids)	S1-SltCk (Liquid)	5.05E-01	kg	1.37	g/mL	63	kL	5.85E+00	ug/g
241-S-109	Ni	Salt Cake (Solids)	S1-SltCk (Solid)	4.10E+01	kg	1.66	g/mL	1905	kL	1.30E+01	ug/g
241-S-109	Ni	Sludge	R1 (Solid)	1.41E+01	kg	1.77	g/mL	49	kL	1.63E+02	ug/g
241-S-109	Ni	Total		5.57E+01	kg						
241-S-109	Na	Salt Cake (Liquids)	S1-SltCk (Liquid)	1.38E+04	kg	1.49	g/mL	63	kL	1.48E+05	ug/g
241-S-109	Na	Salt Cake (Solids)	S1-SltCk (Solid)	7.48E+05	kg	1.66	g/mL	1905	kL	2.37E+05	ug/g
241-S-109	Na	Sludge	R1 (Solid)	8.76E+03	kg	1.77	g/mL	49	kL	1.01E+05	ug/g
241-S-109	Na	Total		7.70E+05	kg						
241-S-109	Mn	Salt Cake (Liquids)	S1-SltCk (Liquid)	3.79E-01	kg	1.49	g/mL	63	kL	4.03E+00	ug/g
241-S-109	Mn	Salt Cake (Solids)	S1-SltCk (Solid)	5.22E+01	kg	1.66	g/mL	1905	kL	1.65E+01	ug/g
241-S-109	Mn	Sludge	R1 (Solid)	1.54E+02	kg	1.77	g/mL	49	kL	1.77E+03	ug/g
241-S-109	Mn	Total		2.06E+02	kg						
241-S-109	La	Salt Cake (Liquids)	S1-SltCk (Liquid)	7.99E-05	kg	1.45	g/mL	63	kL	8.75E-04	ug/g
241-S-109	La	Salt Cake (Solids)	S1-SltCk (Solid)	2.00E-03	kg	1.68	g/mL	1905	kL	6.26E-04	ug/g
241-S-109	La	Sludge	R1 (Solid)	2.91E+00	kg	1.77	g/mL	49	kL	3.36E+01	ug/g
241-S-109	La	Total		2.92E+00	kg						
241-S-109	K	Salt Cake (Liquids)	S1-SltCk (Liquid)	1.44E+02	kg	1.49	g/mL	63	kL	1.54E+03	ug/g
241-S-109	K	Salt Cake (Solids)	S1-SltCk (Solid)	9.87E+02	kg	1.66	g/mL	1905	kL	3.12E+02	ug/g
241-S-109	K	Sludge	R1 (Solid)	5.33E+01	kg	1.77	g/mL	49	kL	6.15E+02	ug/g
241-S-109	K	Total		1.18E+03	kg						
241-S-109	Hg	Salt Cake (Liquids)	S1-SltCk (Liquid)	1.63E-02	kg	1.45	g/mL	63	kL	1.79E-01	ug/g
241-S-109	Hg	Salt Cake (Solids)	S1-SltCk (Solid)	3.19E+00	kg	1.68	g/mL	1905	kL	9.97E-01	ug/g
241-S-109	Hg	Sludge	R1 (Solid)	2.25E+00	kg	1.77	g/mL	49	kL	2.60E+01	ug/g
241-S-109	Hg	Total		5.46E+00	kg						
241-S-109	Fe	Salt Cake (Liquids)	S1-SltCk (Liquid)	1.76E+00	kg	1.37	g/mL	63	kL	2.04E+01	ug/g
241-S-109	Fe	Salt Cake (Solids)	S1-SltCk (Solid)	1.77E+03	kg	1.66	g/mL	1905	kL	5.60E+02	ug/g

241-S-109	Fe	Sludge	R1 (Solid)	3.26E+02 kg	1.77 g/mL	49 kL	3.76E+03 ug/g
241-S-109	Fe	Total		2.10E+03 kg			
241-S-109	F	Salt Cake (Liquids)	S1-SltCk (Liquid)	4.65E+00 kg	1.49 g/mL	63 kL	4.96E+01 ug/g
241-S-109	F	Salt Cake (Solids)	S1-SltCk (Solid)	7.08E+02 kg	1.66 g/mL	1905 kL	2.24E+02 ug/g
241-S-109	F	Sludge	R1 (Solid)	1.75E+01 kg	1.77 g/mL	49 kL	2.02E+02 ug/g
241-S-109	F	Total		7.30E+02 kg			
241-S-109	Cr	Salt Cake (Liquids)	S1-SltCk (Liquid)	5.64E+02 kg	1.49 g/mL	63 kL	6.01E+03 ug/g
241-S-109	Cr	Salt Cake (Solids)	S1-SltCk (Solid)	4.53E+03 kg	1.66 g/mL	1905 kL	1.43E+03 ug/g
241-S-109	Cr	Sludge	R1 (Solid)	2.57E+02 kg	1.77 g/mL	49 kL	2.96E+03 ug/g
241-S-109	Cr	Total		5.35E+03 kg			
241-S-109	Cl	Salt Cake (Liquids)	S1-SltCk (Liquid)	5.96E+02 kg	1.49 g/mL	63 kL	6.35E+03 ug/g
241-S-109	Cl	Salt Cake (Solids)	S1-SltCk (Solid)	1.17E+03 kg	1.66 g/mL	1905 kL	3.69E+02 ug/g
241-S-109	Cl	Sludge	R1 (Solid)	1.94E+02 kg	1.77 g/mL	49 kL	2.24E+03 ug/g
241-S-109	Cl	Total		1.96E+03 kg			
241-S-109	Ca	Salt Cake (Liquids)	S1-SltCk (Liquid)	3.06E+00 kg	1.37 g/mL	63 kL	3.54E+01 ug/g
241-S-109	Ca	Salt Cake (Solids)	S1-SltCk (Solid)	3.20E+02 kg	1.66 g/mL	1905 kL	1.01E+02 ug/g
241-S-109	Ca	Sludge	R1 (Solid)	4.68E+01 kg	1.77 g/mL	49 kL	5.40E+02 ug/g
241-S-109	Ca	Total		3.70E+02 kg			
241-S-109	Bi	Salt Cake (Liquids)	S1-SltCk (Liquid)	1.92E+00 kg	1.45 g/mL	63 kL	2.10E+01 ug/g
241-S-109	Bi	Salt Cake (Solids)	S1-SltCk (Solid)	4.83E+01 kg	1.68 g/mL	1905 kL	1.51E+01 ug/g
241-S-109	Bi	Sludge	R1 (Solid)	1.48E+01 kg	1.77 g/mL	49 kL	1.71E+02 ug/g
241-S-109	Bi	Total		6.51E+01 kg			
241-S-109	Al	Salt Cake (Liquids)	S1-SltCk (Liquid)	2.89E+03 kg	1.49 g/mL	63 kL	3.07E+04 ug/g
241-S-109	Al	Salt Cake (Solids)	S1-SltCk (Solid)	5.44E+03 kg	1.66 g/mL	1905 kL	1.72E+03 ug/g
241-S-109	Al	Sludge	R1 (Solid)	1.62E+04 kg	1.77 g/mL	49 kL	1.87E+05 ug/g
241-S-109	Al	Total		2.45E+04 kg			
241-S-109	99Tc	Salt Cake (Liquids)	S1-SltCk (Liquid)	1.58E+01 Ci	1.45 g/mL	63 kL	1.72E-01 uCi/g
241-S-109	99Tc	Salt Cake (Solids)	S1-SltCk (Solid)	3.12E+02 Ci	1.68 g/mL	1905 kL	9.74E-02 uCi/g
241-S-109	99Tc	Sludge	R1 (Solid)	1.20E+00 Ci	1.77 g/mL	49 kL	1.38E-02 uCi/g
241-S-109	99Tc	Total		3.29E+02 Ci			
241-S-109	93Zr	Salt Cake (Liquids)	S1-SltCk (Liquid)	1.90E+00 Ci	1.45 g/mL	63 kL	2.08E-02 uCi/g
241-S-109	93Zr	Salt Cake (Solids)	S1-SltCk (Solid)	5.63E+01 Ci	1.68 g/mL	1905 kL	1.76E-02 uCi/g
241-S-109	93Zr	Sludge	R1 (Solid)	1.89E-01 Ci	1.77 g/mL	49 kL	2.18E-03 uCi/g
241-S-109	93Zr	Total		5.84E+01 Ci			
241-S-109	93mNb	Salt Cake (Liquids)	S1-SltCk (Liquid)	1.58E+00 Ci	1.45 g/mL	63 kL	1.73E-02 uCi/g
241-S-109	93mNb	Salt Cake (Solids)	S1-SltCk (Solid)	4.70E+01 Ci	1.68 g/mL	1905 kL	1.47E-02 uCi/g
241-S-109	93mNb	Sludge	R1 (Solid)	1.65E-01 Ci	1.77 g/mL	49 kL	1.91E-03 uCi/g
241-S-109	93mNb	Total		4.88E+01 Ci			
241-S-109	90Y	Salt Cake (Liquids)	S1-SltCk (Liquid)	1.53E+01 Ci	g/mL	63 kL	1.63E-01 uCi/g
241-S-109	90Y	Salt Cake (Solids)	S1-SltCk (Solid)	1.40E+04 Ci	g/mL	1905 kL	4.44E+00 uCi/g
241-S-109	90Y	Sludge	R1 (Solid)	3.55E+04 Ci	g/mL	49 kL	4.09E+02 uCi/g
241-S-109	90Y	Total		4.96E+04 Ci			
241-S-109	90Sr	Salt Cake (Liquids)	S1-SltCk (Liquid)	1.53E+01 Ci	1.49 g/mL	63 kL	1.63E-01 uCi/g
241-S-109	90Sr	Salt Cake (Solids)	S1-SltCk (Solid)	1.40E+04 Ci	1.68 g/mL	1905 kL	4.44E+00 uCi/g
241-S-109	90Sr	Sludge	R1 (Solid)	3.55E+04 Ci	1.77 g/mL	49 kL	4.09E+02 uCi/g
241-S-109	90Sr	Total		4.96E+04 Ci			
241-S-109	79Se	Salt Cake (Liquids)	S1-SltCk (Liquid)	6.80E-02 Ci	1.45 g/mL	63 kL	7.45E-04 uCi/g
241-S-109	79Se	Salt Cake (Solids)	S1-SltCk (Solid)	9.47E-01 Ci	1.68 g/mL	1905 kL	2.96E-04 uCi/g
241-S-109	79Se	Sludge	R1 (Solid)	3.16E-03 Ci	1.77 g/mL	49 kL	3.64E-05 uCi/g
241-S-109	79Se	Total		1.02E+00 Ci			
241-S-109	63Ni	Salt Cake (Liquids)	S1-SltCk (Liquid)	3.19E+00 Ci	1.45 g/mL	63 kL	3.49E-02 uCi/g
241-S-109	63Ni	Salt Cake (Solids)	S1-SltCk (Solid)	1.16E+03 Ci	1.68 g/mL	1905 kL	3.61E-01 uCi/g
241-S-109	63Ni	Sludge	R1 (Solid)	2.85E+01 Ci	1.77 g/mL	49 kL	3.29E-01 uCi/g
241-S-109	63Ni	Total		1.19E+03 Ci			
241-S-109	60Co	Salt Cake (Liquids)	S1-SltCk (Liquid)	1.61E-01 Ci	1.49 g/mL	63 kL	1.72E-03 uCi/g
241-S-109	60Co	Salt Cake (Solids)	S1-SltCk (Solid)	2.45E+01 Ci	1.66 g/mL	1905 kL	7.74E-03 uCi/g
241-S-109	60Co	Sludge	R1 (Solid)	6.20E-02 Ci	1.77 g/mL	49 kL	7.14E-04 uCi/g
241-S-109	60Co	Total		2.47E+01 Ci			
241-S-109	59Ni	Salt Cake (Liquids)	S1-SltCk (Liquid)	3.42E-02 Ci	1.45 g/mL	63 kL	3.74E-04 uCi/g
241-S-109	59Ni	Salt Cake (Solids)	S1-SltCk (Solid)	1.24E+01 Ci	1.68 g/mL	1905 kL	3.88E-03 uCi/g
241-S-109	59Ni	Sludge	R1 (Solid)	3.23E-01 Ci	1.77 g/mL	49 kL	3.72E-03 uCi/g
241-S-109	59Ni	Total		1.28E+01 Ci			
241-S-109	3H	Salt Cake (Liquids)	S1-SltCk (Liquid)	6.50E-02 Ci	1.45 g/mL	63 kL	7.12E-04 uCi/g
241-S-109	3H	Salt Cake (Solids)	S1-SltCk (Solid)	3.60E+01 Ci	1.68 g/mL	1905 kL	1.12E-02 uCi/g
241-S-109	3H	Sludge	R1 (Solid)	1.05E+00 Ci	1.77 g/mL	49 kL	1.22E-02 uCi/g
241-S-109	3H	Total		3.71E+01 Ci			
241-S-109	244Cm	Salt Cake (Liquids)	S1-SltCk (Liquid)	4.30E-05 Ci	1.49 g/mL	63 kL	4.59E-07 uCi/g
241-S-109	244Cm	Salt Cake (Solids)	S1-SltCk (Solid)	1.06E-02 Ci	1.66 g/mL	1905 kL	3.36E-06 uCi/g
241-S-109	244Cm	Sludge	R1 (Solid)	2.57E-04 Ci	1.77 g/mL	49 kL	2.97E-06 uCi/g
241-S-109	244Cm	Total		1.09E-02 Ci			
241-S-109	243Cm	Salt Cake (Liquids)	S1-SltCk (Liquid)	1.84E-06 Ci	1.49 g/mL	63 kL	1.96E-08 uCi/g
241-S-109	243Cm	Salt Cake (Solids)	S1-SltCk (Solid)	4.56E-04 Ci	1.66 g/mL	1905 kL	1.44E-07 uCi/g
241-S-109	243Cm	Sludge	R1 (Solid)	1.09E-05 Ci	1.77 g/mL	49 kL	1.26E-07 uCi/g
241-S-109	243Cm	Total		4.69E-04 Ci			
241-S-109	243Am	Salt Cake (Liquids)	S1-SltCk (Liquid)	1.02E-05 Ci	1.49 g/mL	63 kL	1.09E-07 uCi/g
241-S-109	243Am	Salt Cake (Solids)	S1-SltCk (Solid)	1.00E-02 Ci	1.66 g/mL	1905 kL	3.16E-06 uCi/g
241-S-109	243Am	Sludge	R1 (Solid)	7.92E-03 Ci	1.77 g/mL	49 kL	9.14E-05 uCi/g
241-S-109	243Am	Total		1.79E-02 Ci			

241-S-109	242Pu	Salt Cake (Liquids)	S1-SltCk (Liquid)	3.70E-08 Ci	1.49 g/mL	63 kL	3.95E-10 uCi/g
241-S-109	242Pu	Salt Cake (Solids)	S1-SltCk (Solid)	6.87E-05 Ci	1.66 g/mL	1905 kL	2.17E-08 uCi/g
241-S-109	242Pu	Sludge	R1 (Solid)	2.53E-04 Ci	1.77 g/mL	49 kL	2.92E-06 uCi/g
241-S-109	242Pu	Total		3.22E-04 Ci			
241-S-109	242Cm	Salt Cake (Liquids)	S1-SltCk (Liquid)	5.54E-05 Ci	1.49 g/mL	63 kL	5.90E-07 uCi/g
241-S-109	242Cm	Salt Cake (Solids)	S1-SltCk (Solid)	1.37E-02 Ci	1.66 g/mL	1905 kL	4.32E-06 uCi/g
241-S-109	242Cm	Sludge	R1 (Solid)	6.44E-04 Ci	1.77 g/mL	49 kL	7.42E-06 uCi/g
241-S-109	242Cm	Total		1.44E-02 Ci			
241-S-109	241Pu	Salt Cake (Liquids)	S1-SltCk (Liquid)	3.88E-03 Ci	1.49 g/mL	63 kL	4.13E-05 uCi/g
241-S-109	241Pu	Salt Cake (Solids)	S1-SltCk (Solid)	7.16E+00 Ci	1.66 g/mL	1905 kL	2.27E-03 uCi/g
241-S-109	241Pu	Sludge	R1 (Solid)	2.51E+01 Ci	1.77 g/mL	49 kL	2.89E-01 uCi/g
241-S-109	241Pu	Total		3.22E+01 Ci			
241-S-109	241Am	Salt Cake (Liquids)	S1-SltCk (Liquid)	1.69E-02 Ci	1.49 g/mL	63 kL	1.80E-04 uCi/g
241-S-109	241Am	Salt Cake (Solids)	S1-SltCk (Solid)	1.66E+01 Ci	1.66 g/mL	1905 kL	5.24E-03 uCi/g
241-S-109	241Am	Sludge	R1 (Solid)	2.17E+01 Ci	1.77 g/mL	49 kL	2.50E-01 uCi/g
241-S-109	241Am	Total		3.83E+01 Ci			
241-S-109	240Pu	Salt Cake (Liquids)	S1-SltCk (Liquid)	6.04E-04 Ci	1.49 g/mL	63 kL	6.44E-06 uCi/g
241-S-109	240Pu	Salt Cake (Solids)	S1-SltCk (Solid)	1.12E+00 Ci	1.66 g/mL	1905 kL	3.54E-04 uCi/g
241-S-109	240Pu	Sludge	R1 (Solid)	8.33E+00 Ci	1.77 g/mL	49 kL	9.61E-02 uCi/g
241-S-109	240Pu	Total		9.45E+00 Ci			
241-S-109	239Pu	Salt Cake (Liquids)	S1-SltCk (Liquid)	2.77E-03 Ci	1.49 g/mL	63 kL	2.95E-05 uCi/g
241-S-109	239Pu	Salt Cake (Solids)	S1-SltCk (Solid)	5.14E+00 Ci	1.66 g/mL	1905 kL	1.62E-03 uCi/g
241-S-109	239Pu	Sludge	R1 (Solid)	4.29E+01 Ci	1.77 g/mL	49 kL	4.95E-01 uCi/g
241-S-109	239Pu	Total		4.81E+01 Ci			
241-S-109	238U	Salt Cake (Liquids)	S1-SltCk (Liquid)	3.30E-05 Ci	1.49 g/mL	63 kL	3.51E-07 uCi/g
241-S-109	238U	Salt Cake (Solids)	S1-SltCk (Solid)	6.15E-02 Ci	1.66 g/mL	1905 kL	1.94E-05 uCi/g
241-S-109	238U	Sludge	R1 (Solid)	1.39E-01 Ci	1.77 g/mL	49 kL	1.60E-03 uCi/g
241-S-109	238U	Total		2.00E-01 Ci			
241-S-109	238Pu	Salt Cake (Liquids)	S1-SltCk (Liquid)	9.77E-05 Ci	1.49 g/mL	63 kL	1.04E-06 uCi/g
241-S-109	238Pu	Salt Cake (Solids)	S1-SltCk (Solid)	1.81E-01 Ci	1.66 g/mL	1905 kL	5.71E-05 uCi/g
241-S-109	238Pu	Sludge	R1 (Solid)	7.96E-01 Ci	1.77 g/mL	49 kL	9.18E-03 uCi/g
241-S-109	238Pu	Total		9.77E-01 Ci			
241-S-109	237Np	Salt Cake (Liquids)	S1-SltCk (Liquid)	2.96E-03 Ci	1.45 g/mL	63 kL	3.24E-05 uCi/g
241-S-109	237Np	Salt Cake (Solids)	S1-SltCk (Solid)	2.55E+00 Ci	1.68 g/mL	1905 kL	7.98E-04 uCi/g
241-S-109	237Np	Sludge	R1 (Solid)	8.76E-03 Ci	1.77 g/mL	49 kL	1.01E-04 uCi/g
241-S-109	237Np	Total		2.57E+00 Ci			
241-S-109	236U	Salt Cake (Liquids)	S1-SltCk (Liquid)	8.73E-07 Ci	1.49 g/mL	63 kL	9.30E-09 uCi/g
241-S-109	236U	Salt Cake (Solids)	S1-SltCk (Solid)	1.62E-03 Ci	1.66 g/mL	1905 kL	5.12E-07 uCi/g
241-S-109	236U	Sludge	R1 (Solid)	2.80E-03 Ci	1.77 g/mL	49 kL	3.23E-05 uCi/g
241-S-109	236U	Total		4.42E-03 Ci			
241-S-109	235U	Salt Cake (Liquids)	S1-SltCk (Liquid)	1.47E-06 Ci	1.49 g/mL	63 kL	1.56E-08 uCi/g
241-S-109	235U	Salt Cake (Solids)	S1-SltCk (Solid)	2.73E-03 Ci	1.66 g/mL	1905 kL	8.64E-07 uCi/g
241-S-109	235U	Sludge	R1 (Solid)	5.83E-03 Ci	1.77 g/mL	49 kL	6.72E-05 uCi/g
241-S-109	235U	Total		8.56E-03 Ci			
241-S-109	234U	Salt Cake (Liquids)	S1-SltCk (Liquid)	3.51E-05 Ci	1.49 g/mL	63 kL	3.74E-07 uCi/g
241-S-109	234U	Salt Cake (Solids)	S1-SltCk (Solid)	6.54E-02 Ci	1.66 g/mL	1905 kL	2.07E-05 uCi/g
241-S-109	234U	Sludge	R1 (Solid)	1.35E-01 Ci	1.77 g/mL	49 kL	1.56E-03 uCi/g
241-S-109	234U	Total		2.01E-01 Ci			
241-S-109	233U	Salt Cake (Liquids)	S1-SltCk (Liquid)	5.55E-05 Ci	1.49 g/mL	63 kL	5.91E-07 uCi/g
241-S-109	233U	Salt Cake (Solids)	S1-SltCk (Solid)	1.03E-01 Ci	1.66 g/mL	1905 kL	3.27E-05 uCi/g
241-S-109	233U	Sludge	R1 (Solid)	2.71E-05 Ci	1.77 g/mL	49 kL	3.13E-07 uCi/g
241-S-109	233U	Total		1.03E-01 Ci			
241-S-109	232U	Salt Cake (Liquids)	S1-SltCk (Liquid)	8.95E-07 Ci	1.49 g/mL	63 kL	9.53E-09 uCi/g
241-S-109	232U	Salt Cake (Solids)	S1-SltCk (Solid)	1.67E-03 Ci	1.66 g/mL	1905 kL	5.27E-07 uCi/g
241-S-109	232U	Sludge	R1 (Solid)	5.35E-06 Ci	1.77 g/mL	49 kL	6.16E-08 uCi/g
241-S-109	232U	Total		1.67E-03 Ci			
241-S-109	232Th	Salt Cake (Liquids)	S1-SltCk (Liquid)	2.64E-06 Ci	1.45 g/mL	63 kL	2.89E-08 uCi/g
241-S-109	232Th	Salt Cake (Solids)	S1-SltCk (Solid)	7.84E-05 Ci	1.68 g/mL	1905 kL	2.45E-08 uCi/g
241-S-109	232Th	Sludge	R1 (Solid)	1.09E-12 Ci	1.77 g/mL	49 kL	1.26E-14 uCi/g
241-S-109	232Th	Total		8.10E-05 Ci			
241-S-109	231Pa	Salt Cake (Liquids)	S1-SltCk (Liquid)	7.82E-04 Ci	1.45 g/mL	63 kL	8.56E-06 uCi/g
241-S-109	231Pa	Salt Cake (Solids)	S1-SltCk (Solid)	2.33E-02 Ci	1.68 g/mL	1905 kL	7.27E-06 uCi/g
241-S-109	231Pa	Sludge	R1 (Solid)	1.15E-06 Ci	1.77 g/mL	49 kL	1.33E-08 uCi/g
241-S-109	231Pa	Total		2.40E-02 Ci			
241-S-109	229Th	Salt Cake (Liquids)	S1-SltCk (Liquid)	7.69E-07 Ci	1.45 g/mL	63 kL	8.42E-09 uCi/g
241-S-109	229Th	Salt Cake (Solids)	S1-SltCk (Solid)	2.29E-05 Ci	1.68 g/mL	1905 kL	7.16E-09 uCi/g
241-S-109	229Th	Sludge	R1 (Solid)	3.82E-09 Ci	1.77 g/mL	49 kL	4.41E-11 uCi/g
241-S-109	229Th	Total		2.37E-05 Ci			
241-S-109	228Ra	Salt Cake (Liquids)	S1-SltCk (Liquid)	2.27E-04 Ci	1.45 g/mL	63 kL	2.48E-06 uCi/g
241-S-109	228Ra	Salt Cake (Solids)	S1-SltCk (Solid)	6.74E-03 Ci	1.68 g/mL	1905 kL	2.11E-06 uCi/g
241-S-109	228Ra	Sludge	R1 (Solid)	1.04E-12 Ci	1.77 g/mL	49 kL	1.20E-14 uCi/g
241-S-109	228Ra	Total		6.96E-03 Ci			
241-S-109	227Ac	Salt Cake (Liquids)	S1-SltCk (Liquid)	8.50E-05 Ci	1.45 g/mL	63 kL	9.31E-07 uCi/g
241-S-109	227Ac	Salt Cake (Solids)	S1-SltCk (Solid)	2.53E-03 Ci	1.68 g/mL	1905 kL	7.90E-07 uCi/g
241-S-109	227Ac	Sludge	R1 (Solid)	8.13E-07 Ci	1.77 g/mL	49 kL	9.37E-09 uCi/g
241-S-109	227Ac	Total		2.62E-03 Ci			
241-S-109	226Ra	Salt Cake (Liquids)	S1-SltCk (Liquid)	2.46E-06 Ci	1.45 g/mL	63 kL	2.72E-08 uCi/g
241-S-109	226Ra	Salt Cake (Solids)	S1-SltCk (Solid)	7.38E-05 Ci	1.68 g/mL	1905 kL	2.31E-08 uCi/g

241-S-109	226Ra	Sludge	R1 (Solid)	1.81E-07 Ci	1.77 g/mL	49 kL	2.09E-09 uCi/g
241-S-109	226Ra	Total		7.65E-05 Ci			
241-S-109	155Eu	Salt Cake (Liquids)	S1-SltCk (Liquid)	6.39E-01 Ci	1.45 g/mL	63 kL	7.00E-03 uCi/g
241-S-109	155Eu	Salt Cake (Solids)	S1-SltCk (Solid)	5.37E+01 Ci	1.68 g/mL	1905 kL	1.68E-02 uCi/g
241-S-109	155Eu	Sludge	R1 (Solid)	2.41E-01 Ci	1.77 g/mL	49 kL	2.78E-03 uCi/g
241-S-109	155Eu	Total		5.46E+01 Ci			
241-S-109	154Eu	Salt Cake (Liquids)	S1-SltCk (Liquid)	2.02E+00 Ci	1.45 g/mL	63 kL	2.21E-02 uCi/g
241-S-109	154Eu	Salt Cake (Solids)	S1-SltCk (Solid)	1.23E+02 Ci	1.68 g/mL	1905 kL	3.88E-02 uCi/g
241-S-109	154Eu	Sludge	R1 (Solid)	7.15E-01 Ci	1.77 g/mL	49 kL	8.24E-03 uCi/g
241-S-109	154Eu	Total		1.25E+02 Ci			
241-S-109	152Eu	Salt Cake (Liquids)	S1-SltCk (Liquid)	2.54E-02 Ci	1.45 g/mL	63 kL	2.78E-04 uCi/g
241-S-109	152Eu	Salt Cake (Solids)	S1-SltCk (Solid)	2.14E+00 Ci	1.68 g/mL	1905 kL	6.69E-04 uCi/g
241-S-109	152Eu	Sludge	R1 (Solid)	1.15E-02 Ci	1.77 g/mL	49 kL	1.33E-04 uCi/g
241-S-109	152Eu	Total		2.18E+00 Ci			
241-S-109	151Sm	Salt Cake (Liquids)	S1-SltCk (Liquid)	1.77E+02 Ci	1.45 g/mL	63 kL	1.94E+00 uCi/g
241-S-109	151Sm	Salt Cake (Solids)	S1-SltCk (Solid)	5.03E+04 Ci	1.68 g/mL	1905 kL	1.57E+01 uCi/g
241-S-109	151Sm	Sludge	R1 (Solid)	1.30E+02 Ci	1.77 g/mL	49 kL	1.50E+00 uCi/g
241-S-109	151Sm	Total		5.07E+04 Ci			
241-S-109	14C	Salt Cake (Liquids)	S1-SltCk (Liquid)	3.55E-02 Ci	1.45 g/mL	63 kL	3.88E-04 uCi/g
241-S-109	14C	Salt Cake (Solids)	S1-SltCk (Solid)	1.00E+01 Ci	1.68 g/mL	1905 kL	3.13E-03 uCi/g
241-S-109	14C	Sludge	R1 (Solid)	6.82E-02 Ci	1.77 g/mL	49 kL	7.87E-04 uCi/g
241-S-109	14C	Total		1.01E+01 Ci			
241-S-109	137mBa	Salt Cake (Liquids)	S1-SltCk (Liquid)	1.69E+04 Ci	g/mL	63 kL	1.80E+02 uCi/g
241-S-109	137mBa	Salt Cake (Solids)	S1-SltCk (Solid)	1.91E+04 Ci	g/mL	1905 kL	6.04E+00 uCi/g
241-S-109	137mBa	Sludge	R1 (Solid)	5.16E+03 Ci	g/mL	49 kL	5.96E+01 uCi/g
241-S-109	137mBa	Total		4.12E+04 Ci			
241-S-109	137Cs	Salt Cake (Liquids)	S1-SltCk (Liquid)	1.79E+04 Ci	1.49 g/mL	63 kL	1.91E+02 uCi/g
241-S-109	137Cs	Salt Cake (Solids)	S1-SltCk (Solid)	2.02E+04 Ci	1.66 g/mL	1905 kL	6.39E+00 uCi/g
241-S-109	137Cs	Sludge	R1 (Solid)	5.47E+03 Ci	1.77 g/mL	49 kL	6.31E+01 uCi/g
241-S-109	137Cs	Total		4.36E+04 Ci			
241-S-109	134Cs	Salt Cake (Liquids)	S1-SltCk (Liquid)	5.14E-03 Ci	1.45 g/mL	63 kL	5.63E-05 uCi/g
241-S-109	134Cs	Salt Cake (Solids)	S1-SltCk (Solid)	1.53E-01 Ci	1.68 g/mL	1905 kL	4.79E-05 uCi/g
241-S-109	134Cs	Sludge	R1 (Solid)	6.56E-05 Ci	1.77 g/mL	49 kL	7.56E-07 uCi/g
241-S-109	134Cs	Total		1.58E-01 Ci			
241-S-109	129I	Salt Cake (Liquids)	S1-SltCk (Liquid)	1.50E-02 Ci	1.45 g/mL	63 kL	1.64E-04 uCi/g
241-S-109	129I	Salt Cake (Solids)	S1-SltCk (Solid)	2.96E-01 Ci	1.68 g/mL	1905 kL	9.24E-05 uCi/g
241-S-109	129I	Sludge	R1 (Solid)	1.92E-03 Ci	1.77 g/mL	49 kL	2.21E-05 uCi/g
241-S-109	129I	Total		3.13E-01 Ci			
241-S-109	126Sn	Salt Cake (Liquids)	S1-SltCk (Liquid)	4.01E-01 Ci	1.45 g/mL	63 kL	4.39E-03 uCi/g
241-S-109	126Sn	Salt Cake (Solids)	S1-SltCk (Solid)	3.90E+00 Ci	1.68 g/mL	1905 kL	1.22E-03 uCi/g
241-S-109	126Sn	Sludge	R1 (Solid)	1.27E-02 Ci	1.77 g/mL	49 kL	1.47E-04 uCi/g
241-S-109	126Sn	Total		4.32E+00 Ci			
241-S-109	125Sb	Salt Cake (Liquids)	S1-SltCk (Liquid)	7.83E-02 Ci	1.45 g/mL	63 kL	8.57E-04 uCi/g
241-S-109	125Sb	Salt Cake (Solids)	S1-SltCk (Solid)	2.18E+01 Ci	1.68 g/mL	1905 kL	6.82E-03 uCi/g
241-S-109	125Sb	Sludge	R1 (Solid)	3.78E-03 Ci	1.77 g/mL	49 kL	4.36E-05 uCi/g
241-S-109	125Sb	Total		2.19E+01 Ci			
241-S-109	113mCd	Salt Cake (Liquids)	S1-SltCk (Liquid)	1.70E+00 Ci	1.45 g/mL	63 kL	1.86E-02 uCi/g
241-S-109	113mCd	Salt Cake (Solids)	S1-SltCk (Solid)	5.05E+01 Ci	1.68 g/mL	1905 kL	1.58E-02 uCi/g
241-S-109	113mCd	Sludge	R1 (Solid)	1.12E-01 Ci	1.77 g/mL	49 kL	1.29E-03 uCi/g
241-S-109	113mCd	Total		5.23E+01 Ci			
241-S-109	106Ru	Salt Cake (Liquids)	S1-SltCk (Liquid)	3.36E-07 Ci	1.45 g/mL	63 kL	3.67E-09 uCi/g
241-S-109	106Ru	Salt Cake (Solids)	S1-SltCk (Solid)	2.62E-05 Ci	1.68 g/mL	1905 kL	8.18E-09 uCi/g
241-S-109	106Ru	Sludge	R1 (Solid)	3.27E-10 Ci	1.77 g/mL	49 kL	3.78E-12 uCi/g
241-S-109	106Ru	Total		2.65E-05 Ci			

Figure 1. Calculation Review Checklist.

Calculation Reviewed: CA-0001, HEGA Skid Organic Loading Calc

Scope of Review: Calculation
(e.g., document section or portion of calculation)

Engineer/Analyst: Jay Wilson Date: _____

Organizational Manager: Jeff Jeffers Date: _____

This document consists of _____ pages and the following attachments (if applicable):

_____

Yes	No	NA*		
[X]	[ ]	[ ]	1.	Analytical and technical approaches and results are reasonable and appropriate.
[X]	[ ]	[ ]	2.	Necessary assumptions are reasonable, explicitly stated, and supported.
[X]	[ ]	[ ]	3.	Ensure calculations that use software include a paper printout, microfiche, CD ROM, or other electronic file of the input data and identification to the computer codes and versions used, or provide alternate documentation to uniquely and clearly identify the exact coding and execution process.
[X]	[ ]	[ ]	4.	Input data were checked for consistency with original source information.
[X]	[ ]	[ ]	5.	For both qualitative and quantitative data, uncertainties are recognized and discussed.
[X]	[ ]	[ ]	6.	Mathematical derivations were checked, including dimensional consistency of results.
[X]	[ ]	[ ]	7.	Calculations are sufficiently detailed such that a technically qualified person can understand the analysis without requiring outside information.
[X]	[ ]	[ ]	8.	Software verification and validation are addressed adequately.
[X]	[ ]	[ ]	9.	Limits/criteria/guidelines applied to the analysis results are appropriate and referenced. Limits/criteria/guidelines were checked against references.
[X]	[ ]	[ ]	10.	Conclusions are consistent with analytical results and applicable limits.
[X]	[ ]	[ ]	11.	Results and conclusions address all points in the purpose.
[X]	[ ]	[ ]	12.	Referenced documents are retrievable or otherwise available.
[X]	[ ]	[ ]	13.	The version or revision of each reference is cited.
[X]	[ ]	[ ]	14.	The document was prepared in accordance with Attachment A, "Calculation Format and Preparation Instructions."
[X]	[ ]	[ ]	15.	Impacts on requirements have been assessed and change documentation initiated to incorporate revisions to affected documents, as appropriate.
[X]	[ ]	[ ]	16.	All checker comments have been dispositioned and the design media matches the calculations.

Travis Beck Travis N Beck 3/27/06
Checker (printed name and signature) Date

* If No or NA is chosen, an explanation must be provided on or attached to this form.

Figure 1. Subcontractor Calculation Review Checklist.

Page 1 of 1

Subject: DBVS HEGA Skid-Organic Load Capacity

The subject document has been reviewed by the undersigned.
The checker reviewed and verified the following items as applicable.

Documents Reviewed: 34005-CA-0001 rev C

Analysis Performed By: AMEC

- Design Input
- Basic Assumptions
- Approach/Design Methodology
- Consistency with item or document supported by the calculation
- Conclusion/Results Interpretation
- Impact on existing requirements
- _____

Checker (printed name, signature, and date)

Thomas H May Thomas H May 4/19/06

Organizational Manager (printed name, signature and date)

Dave Shuford David H Shuford 4/19/06

This page intentionally left blank.

145579-B-CA-023

DMJM H&N | AECOM

CALCULATION COVER SHEET

Date: 3/24/2006

Calculation No: 145579-B-CA-023
Calculation Title: DBVS OGTS Bypass Structural Analysis
Project No. & Title: A77977 / Demonstration Bulk Vitrification System
Design Verification Required: ☒ Yes ☐ No
Calculation Type: ☐ Scoping ☐ Preliminary ☒ Final
☐ Superseded by Calculation No: _____ ☐ Voided

ORIGINAL AND REVISED CALCULATION/ANALYSIS APPROVAL

	Rev. A Printed Name/Signature/Initials/Date	Rev. 0 Printed Name/Signature/Initials/Date	Rev. 1 Printed Name/Signature/Initials/Date
Originator:	James Van Corbach	James Van Corbach 2/24/06	James Van Corbach 3/24/06 JVC
Checked By:	Doug Chenault	Kevin Jones 2/24/06	Kevin Jones 3/25/06 KMJ
Approved By:			3/25/06
Other:			

AFFECTED DOCUMENTS

Document Number	Document Title	Rev. Number	Responsible Discipline Lead Initials

RECORD OF REVISION

Rev.	Reason for Revision
A	Initial Release
0	Incorporate CH2M Hill Comments
1	Revise duct material yield strength for temperature effects

ATTACHMENTS

Attachment #	Title	Total Pages
Attachment 1	Drawings & Sketches	6
Attachment 2	Mechanical Properties of Circular Duct	2
Attachment 3	Expansion Joint Schedule	2
Attachment 4	RISA 3D Analysis Input and Output Data	94
Attachment 5	Excel Spreadsheet – AG-1 Analysis and Unity Checks	14
Attachment 6	RISA 3D Validation & Verification Cover Sheet	2
Attachment 7	UBC 1997 Seismic Force Evaluation	6

TOTAL CALCULATION PAGE COUNT 157

Form EP 3.3-2F, Sept 2002

DMJM H&N | AECOM

CALCULATION SHEET

Calculation No.: 145579-B-CA-023	Originator: J. Van Corbach JVC Date: 3/24/06
Rev. No.: 1	Checker: Kevin Jones KMJ Date: 3/25/06
Calculation Title: DBVS OGTS Bypass Structural Analysis	

1.0 INTRODUCTION

The bypass system is being designed as part of the DBVS Off-Gas Treatment System (OGTS). Its function is to maintain vacuum in the ICV for a loss of flow upset condition in the primary DBVS OGTS.

1.1 Purpose

The purpose of this calculation is to analyze the DBVS OGTS bypass ductwork in accordance with ASME AG-1 Service Level B. This is accomplished by determining the stresses in the DBVS OGTS bypass duct work and comparing them with the allowable stresses per ASME AG-1. The location and type of duct supports and the location and need for expansion joints will also be evaluated. The resultant forces and moments imparted to the duct supports and attached equipment will be included in the results.

1.2 Scope

The scope of the calculation consists of the structural analysis and design of the DBVS OGTS Bypass duct which is located between the ICV™ and exhaust stack. Currently the main OGTS duct from the ICV™ Box is signified as 5-VOG-35-0217, the beginning of the bypass duct is signified as 6-VOG-36-0286 and branches from the main 5" OGTS duct near the ICV™ Box. This calculation covers the duct labeled as 6-VOG-36-0286, 8-VOG-36-0286, 8-VOG-36-0318, 8-VOG-36-0319, 8-VOG-36-0406, 12-AA-36-0409, and 6-AA-36-0408.

2.0 Basis

2.1 Design Inputs

1. ICV Off-gas Exit Temperature 875°F, *F-145579-00-A-0021Full DBVS Feed Preparation & Melt Process Flow Diagram.*
2. Design Temperature -25°F to 115°F, *HNF-SD-GN-ER-501.*
3. Ambient Air Temperature 77°F, Stream 7A, *F-145579-00-A-0021Full DBVS Feed Preparation & Melt Process Flow Diagram.*
4. Duct geometry per drawings, *F-145579-36-V-0003, F-145579-36-V-0007, F-145576-36-V-0006, F-145579-36-V-0030, and F-145579-36-V-0034.*
5. Earthquake Loads design to UBC 1997 with the following criteria: seismic zone is 2B (*TFC-ENG-STD-06*), Performance category is 2 (*TFC-ENG-STD-06*), and Soil profile is Sc, (*RPP-24544, Rev.1, Appendix H, Report of Geotechnical Engineering Services*). The Operational Basis Earthquake (OBE, *ASME AG-1*) horizontal

CALCULATION SHEET

Calculation No.: 145579-B-CA-023	Originator: J. Van Corbach JVC Date: 3/24/06
Rev. No.: 1	Checker: Kevin Jones KMJ Date: 3/25/06
Calculation Title: DBVS OGTS Bypass Structural Analysis	

components will be applied simultaneously, *ASME-AG-1*. UBC-1997 states that in general, the vertical seismic component may be taken as zero for Allowable Stress Design (Section 1630.1.1). See Attachment 7 for further discussion.

6. Wind Loads design to ASCE 7-98 with the following criteria: Performance Category is 2, Exposure Category is C, velocity is 85 mph, and Importance Factor is 1.15, *TFC-ENG-STD-06*.
7. The ducting is schedule 10S (8 inch and larger) and 40S (6 inch and smaller), stainless steel pipe, A312 type 316L with a minimum yield strength of 25 ksi, ASTM A312/A 312M-05.

2.2 Criteria

1. Design to ASME AG-1 Sections SA, Service Level B.

2.3 Assumptions

1. Assume ambient installation temperatures of -25°F.
2. Assume HEPA Filter Inlet maximum temperature of 200°F, per filter manufacturer (Flanders) maximum temperature (250°F) plus buffer.
3. Fluid density is negligible (low pressure air).
4. Inline filters are modelled as rigid elements and self-supporting (no loads on duct).
5. Isolation damper are modelled with section properties of the connecting duct. An additional point load equal to the damper weight is applied at the location of the damper. Damper weight is approximated, based on engineering judgment, as shown in the following table:

Duct Size	Damper Weight
6"	76 lbs
8"	101 lbs

6. All piping connections are welded (i.e. no flanges) except for connections to equipment, dampers and filters.
7. Model connection to fan inlets, fan outlets, and exhaust stack as an anchor and self-supporting (no loads on duct).
8. Effects of fatigue are neglected (approximately 150 startup/shutdown cycles in 5 year design life).
9. Friction between duct and supports/guides is neglected

CALCULATION SHEET

Calculation No.: 145579-B-CA-023	Originator: J. Van Corbach JVC Date: 3/24/06
Rev. No.: 1	Checker: Kevin Jones KMJ Date: 3/25/06
Calculation Title: DBVS OGTS Bypass Structural Analysis	

10. Expansion joints modeled are DME Inc. Series 250 Low Pressure and Series 650 Multi-ply Exhaust expansion joints. The expansion joints and properties used in this model are as follows:

Size	Part #	Axial Spring Rate	Lateral Spring Rate	Length	Weight
6"	65-3-6-7	165 lbs/in	249 lbs/in	11.0 in	11 lbs
8"	65-3-8-12	123 lbs/in	109 lbs/in	16.0 in	19 lbs
8"	25-4-8-30	685 lbs/in	NA	16.0 in	20 lbs

11. The maximum design pressure of the Bypass system is based on the maximum static pressure of the assumed system fan, a New York Blower Company Model 1508A. The model 1508A can create a maximum of 19.0 in. W.G. (0.69 psi) of static pressure. The maximum volumetric flow rate of this fan is 1125 cfm.

12. Expansion joints at the fans and filters will be Proco Series 242 expansion joints. Dead weight of the 8" Model 242-C Proco expansion joint is 44 lbs and is 12" in length.

13. No duct supports or expansion joints are identified on the drawings (refer to Design Inputs) for the By-pass Duct. The duct supports used in this analysis have been placed according to existing support locations and support footings as shown on the before mentioned drawings.

14. The thermal loading on the duct has not yet been determined by analysis. This calculation will base the thermal load on the duct as follows: an 875°F temperature at the ICV box and a 200°F maximum temperature at the HEPA filter input. Additional information on the application of these loads is in Section 4.0.

15. A reduction of 5% pipe wall thickness is used for corrosion or erosion, based on engineering judgment. Refer to Attachment 2.

3.0 References

Drawing References:

1. F-145579-00-A-0021, Rev 0H, "Full DBVS Feed Preparation & Melt Process Flow Diagram".
2. F-145579-35-A-0100, Rev. N, "Bulk Vitrification ICV Box P&ID."
3. F-145579-36-A-0105, Rev. M, "Bulk Vitrification Stack Monitoring P&ID."
4. F-145579-36-A-0108, Rev. E "Bulk Vitrification OGTS Bypass P&ID."

CALCULATION SHEET

Calculation No.: 145579-B-CA-023	Originator: J. Van Corbach JVC Date: 3/24/06
Rev. No.: 1	Checker: Kevin Jones KMJ Date: 3/25/06
Calculation Title: DBVS OGTS Bypass Structural Analysis	

5. F-145579-36-V-0003, Rev. K, "Bulk Vitrification Off-Gas Treatment Melt & Dryer Lower Plan."
6. F-145579-36-V-0006, Rev. H "Bulk Vitrification Off-Gas Treatment Wet Scrubber Skid Plan."
7. F-145579-36-V-0007, Rev. H, "Bulk Vitrification Off-Gas Treatment Scrub & Stack Plan."
8. F-145579-36-V-0023, Rev. E, "Bulk Vitrification Off-Gas Treatment Standard Details-Sht. 1."
9. F-145579-36-V-0024, Rev. F, "Bulk Vitrification Off-Gas Treatment Duct Support Details."
10. F-145579-36-V-0028, Rev. K, "Bulk Vitrification Off-Gas Treatment Melt & Dryer Section 'C'."
11. F-145579-36-V-0030, Rev. J, "Bulk Vitrification Off-Gas Treatment Melt & Dryer Section 'E'."
12. F-145579-36-V-0031, Rev. G, "Bulk Vitrification Off-Gas Treatment Wet Scrubber Skid Sections."
13. F-145579-36-V-0033, Rev. H, "Bulk Vitrification Off-Gas Treatment Scrub & Stack Section."
14. F-145579-36-V-0034, Rev. H, "Bulk Vitrification Off-Gas Treatment Scrub & Stack Sections."
15. F-145579-00-P-0001, 0002, 0003 and 0004, Rev D, "Bulk Vitrification Typical Pipe Support Details."

Design Codes:

16. *Uniform Building Code 1997*, UBC.
17. *Manual of Steel Construction*, AISC, Ninth Edition.
18. *Minimum Design Loads for Buildings and Other Structures*, ASCE 7-98.
19. ASME AG-1-1997 with ASME AG-1a 2000 Addenda, Section SA and AA.
20. *Cold-Formed Steel Design Manual*, American Iron and Steel Institute (AISI), 1996 Edition.
21. Standard Specification for Seamless, Welded, and Heavily Cold Worked Austenitic Stainless Steel Pipes, ASTM A 312/A 312M-05.
22. ASME Boiler & Pressure Vessel Code, Section II, Part D, Subpart 1-2004.

CALCULATION SHEET

Calculation No.: 145579-B-CA-023	Originator: J. Van Corbach JVC Date: 3/24/06
Rev. No.: 1	Checker: Kevin Jones KMJ Date: 3/25/06
Calculation Title: DBVS OGTS Bypass Structural Analysis	

Other:

23. *Natural Phenomena Hazards Design and Evaluation Criteria for DOE Facilities*, DOE-STD-1020-02.

24. *Design Loads for Tank Farm Facilities*, TFC-ENG-STD-06, Rev B-1.

25. *Mechanical Engineering Design*, Joseph E. Shigley and Charles R. Mischke, Fifth Edition, McGraw-Hill, Inc. 1989.

26. *Demonstration Bulk Vitrification System IQRPE/RCRA Design Review Package*, RPP-24544, Rev. 1.

27. *Mark's Standard Handbook for Mechanical Engineers*, Eugene A. Avallone & Theodore Baumeister III, Ninth Edition, McGraw-Hill, Inc., 1987.

28. *Fundamentals of Fluid Mechanics*, Bruce Munson, Donald Young, Theodore Okiishi, 3rd Edition, John Wiley & Sons Inc, New York, 1998.

29. *Roark's Formulas for Stress and Strain*, Warren C. Young and Richard G. Budynas, Seventh Edition, McGraw-Hill, Inc., 2002.

4.0 Methods

Calculations were performed using RISA 3D version 5.0d (Rapid Integrated Structural Analysis) computer software, which was previously verified and validated (DMJM H+N V&V Computer #102561). Portions of the model input and output code checks were calculated using MS Excel and Mathcad. Those portions were verified by handheld calculator.

Dimensional data, support locations and expansion joint locations were taken directly from the latest piping layout drawings and sections. ICV™ Off Gas temperature was obtained from F-145579-00-A-0021 as indicated in the Design Inputs and the system pressure is listed in the assumptions based upon the maximum static design pressure of the system fan.

Yield Strength and the Modulus of Elasticity are reduced for the high temperatures that the duct will experience. Reductions are based on the published data in the ASME B&PV Code Section II. The maximum temperature of the duct will be 875°F. For simplicity, the duct will be analyzed at two temperature ranges, 0°-400°F and 401°F-875°F with the yield strength and modulus of elasticity determined from the highest temperature of the two temperature ranges.

Pipe wall thicknesses were reduced 12.5% per ASTM A 312/A 312M-05 to account for manufacturing under tolerances. The thinner pipe wall thicknesses are used in the RISA

CALCULATION SHEET

Calculation No.: 145579-B-CA-023	Originator: J. Van Corbach JVC Date: 3/24/06
Rev. No.: 1	Checker: Kevin Jones KMJ Date: 3/25/06
Calculation Title: DBVS OGTS Bypass Structural Analysis	

model. Unreduced pipe cross sections are used in the determination of the design allowable stresses, per ASME AG-1, Section AA, Appendix AA-D, Article D-2000.

Duct Supports and Expansion joints were incorporated into the design as needed to reduce the stresses in the duct and deflections at the connection points at the equipment.

Normal loads applied in the RISA model are the actual dead weight of the duct and components.

The loads, as a result of the compression of the DME expansion joints, were determined by an iterative process. By initially solving the RISA model, Load Case 2 (Dead Load + Thermal + Wind (X)) without the axial spring loads of the expansion joints being applied, the deflections of the joints from the "Joint Deflections" output and with the spring rates as listed in the "Assumptions" were used to determine the axial spring load (i.e., deflection of 2" x 575 lb/in = 1150 lb). This load was applied and the model re-analyzed. The new deflections were used to re-calculate the axial spring load of the expansion joints and the model re-analyzed until convergence was found (i.e., axial load of 1150 lb resulting in a new deflection of 1.75" x 575 lb/in = 1006 lb, adjust axial load to new value). For conservatism the final axial spring loads are rounded up.

The loads for the Proco Series 242 expansion joints were determined as follows: an end thrust load on the duct is based on the operating pressure. The thrust factor for Proco Series 242 expansion joints is 63.62 in^2. End thrust load is 0.69 psi x 63.62 in^2 = 43.9 lbs.

The temperature loads and gradients used were determined as follows:

Divide the length of duct into 10 sections.

Use the input temperature of 875°F plus the install ambient temperature of -25°F at the ICV™ box outlet connection and the minimum inlet temperature of the filters of 200°F plus the install ambient temperature of -25°F to determine the overall temperature change. 875°F - (-25°F) = 900°F, 200°F – (-25°F) = 225°F.

The total temperature change is 675°F. Temperature change at the start of the OGTS Bypass duct is 900°F and the temperature decreases to 225°F at the inlet of the filters. (900°F – 225°F = 675°F)

Divide the number of sections minus one into the temperature differential to get a temperature step of 75°F (675°F / 9 = 75°).

For conservatism, apply the same filter inlet temperature to the remaining duct from the fans to the exhaust stack.

The ambient air intake will be considered at ambient temperature over the entire length of duct to the connection to the main bypass duct. Temperature change will be

CALCULATION SHEET

Calculation No.: 145579-B-CA-023	Originator: J. Van Corbach JVC Date: 3/24/06
Rev. No.: 1	Checker: Kevin Jones KMJ Date: 3/25/06
Calculation Title: DBVS OGTS Bypass Structural Analysis	

the ambient temperature, 77°F, plus the assumed ambient install temperature of -25°F (77°F – (-25°F) = 102°F).

5.0 Results and Conclusions

The evaluation of the OGTS Bypass Duct shows that the design satisfies the ASME AG-1 Sections SA, Service Level B criteria, given that the duct supports, duct support types and expansion joints, as indicated in the RISA Analysis, Attachment 4, are incorporated into the design.

The ASME AG-1 allowable loads are determined in Section 6.0 of this calculation. The ASME AG-1 allowable loads (Section 6) and the output from the RISA model data (Attachment 4) are input into an Excel spreadsheet (Attachment 5) and ASME AG-1 unity check analysis is performed. A value less than 1.0 represents that that section of duct satisfies the ASME AG-1 criteria. All sections of the OGTS Bypass Duct are less than 1.0 (Attachment 5, Columns: D-2250 Equation 11, D-2260 Equation 13, and D-2270 Equation 14).

This evaluation also provides the design loads and reactions at the duct support locations for input in the analysis of the duct supports. Table 1 provides a summary of the supports for the duct system used in the RISA model including the RISA node number. Table 1 recommends the type of support required at the given support location and provides design load information for the support. Attachment 4 indicates the locations of the duct supports in the RISA model that must be incorporated into the design of the duct system.

TABLE 1

Node #	Duct Support # (Att. A)	Support Direction(s)	Max X Reaction (lbs)	Max Y Reaction (lbs)	Max Z Reaction (lbs)
N5	29	Vertical (Y), Lateral (Z), Lateral (X)	423	644	1029
N6	1	Vertical (Y), Lateral (Z), Lateral (X)	338	126	603
N11	2	Vertical (Y), Lateral (X)	212	643	-
N12	3	Vertical (Y), Lateral (X), Axial (Z)	29	33	76
N13	4	Vertical (Y), Lateral (X)	1063	138	-
N14	5	Vertical (Y), Lateral (X)	1327	93	-
N19	6	Vertical (Y), Lateral (Z)	-	375	939
N20	7	Vertical (Y), Lateral (Z)	-	508	327
N21	8	Vertical (Y), Lateral (Z), Axial (X)	406	12	3
N23	9	Vertical (Y), Lateral (Z)	-	296	278
N25	10	Vertical (Y), Lateral (Z)	-	155	141

DMJM H&N | AECOM

CALCULATION SHEET

Calculation No.: 145579-B-CA-023	Originator: J. Van Corbach JVC Date: 3/24/06
Rev. No.: 1	Checker: Kevin Jones KMJ Date: 3/25/06
Calculation Title: DBVS OGTS Bypass Structural Analysis	

Node #	Duct Support # (Att. A)	Support Direction(s)	Max X Reaction (lbs)	Max Y Reaction (lbs)	Max Z Reaction (lbs)
N26	11	Vertical (Y), Lateral (Z), Axial (X)	305	76	66
N27	12	Vertical (Y), Lateral (Z)	-	69	67
N28	13	Vertical (Y), Lateral (Z)	-	149	121
N30	14	Vertical (Y), Lateral (Z)	-	268	250
N32	15	Vertical (Y), Lateral (Z), Axial (X)	37	34	29
N33	16	Vertical (Y), Lateral (Z)	-	276	293
N53	17	Vertical (Y), Lateral (Z)	-	519	137
N99	18	Vertical (Y), Lateral (Z), Axial (X)	1713	1550	904
N50	19	Vertical (Y), Lateral (X)	549	2103	-
N72	20	Vertical (Y), Lateral (X), Axial (Z)	496	922	323
N73	21	Vertical (Y)	-	479	-
N98	22	Vertical (Y)	-	217	-
N104	23	Vertical (Y)	-	142	-
N75	24	Vertical (Y), Lateral (X)	287	269	-
N93	25	Vertical (Y)	-	346	-
N65	26	Vertical (Y), Lateral (X), Axial (Z)	1431	1076	573
N71	Exhaust Stack	Vertical (Y), Lateral (X), Axial (Z)	1202	598	156
N110B	27	Vertical (Y)	-	211	-
N116	28	Vertical (Y), Lateral (X)	361	835	-
N124	30	Vertical (Y), Lateral (X)	268	244	-
N15	31	Vertical (Y), Lateral (X)	2395	346	-

The support locations, as indicated in Table 1 and Attachment 4, are the minimum number of supports needed to satisfy the ASME AG-1 criteria, but does not limit the addition of more duct supports. If additional supports are added care must be taken to ensure the thermal growth of the duct into the expansion joints. The addition of duct supports may require the need for additional analysis. Additional analysis or optimization of the duct support system may be required should the duct supports be unable to handle the reaction loads as determined in this evaluation.

Table 2 provides a summary of the expansion joints for the duct system used in the RISA model including the RISA node numbers, identifier number, and maximum deflections. The expansion joints modeled in the RISA Analysis are DME Inc. Series 250 Low

DMJM H&N | AECOM

CALCULATION SHEET

Calculation No.: 145579-B-CA-023	Originator: J. Van Corbach JVC Date: 3/24/06
Rev. No.: 1	Checker: Kevin Jones KMJ Date: 3/25/06
Calculation Title: DBVS OGTS Bypass Structural Analysis	

Pressure and 650 Multi-ply Exhaust Expansion joint and Proco Series 242 expansion joints. Attachment 1 provides a mark-up of the duct drawings indicating the locations of the expansion joints in the RISA model and must be incorporated into the design of the duct system.

TABLE 2

Node #	Expansion Joint # (Att.A)	Expansion Joint Type	Max X Deflection (in)	Max Y Deflection (in)	Max Z Deflection (in)
N88, N89	EJ-636	DME Series 650 #65-3-8-12	0.173	0.047	1.883 Axial
N107, N108	EJ-637	DME Series 250 #25-4-8-30	2.516 Axial	0.196	0.205
N109, N108A	EJ-613	DME Series 250 #25-4-8-30	2.448 Axial	0.012	0.017
N51, N96	EJ-615	Proco Series 242	0.332	0.004	1.338 Axial
N52, N97	EJ-618	Proco Series 242	0.480	0.002	0.205 Axial
N100, N101	EJ-620	Proco Series 242	0.232	0.004	1.313 Axial
N55, N57	EJ-617	Proco Series 242	0.094	0.004	1.095 Axial
N1, N92	EJ-634	DME Series 650 #65-3-6-7	0.648 Axial	0.12	0.014
N111, N110A	EJ-612	DME Series 250 #25-4-8-30	2.503 Axial	0.002	0.002
N110, N111A	EJ-621	DME Series 250 #25-4-8-30	2.409 Axial	0.151	0.080
N105B, N104A	EJ-635	DME Series 650 #65-3-8-12	0.173	0.335	2.342 Axial

6.0 Calculation / Analysis

This analysis considers the AG-1 Service Level B loads on the DBVS OGTS bypass ductwork which is located between the ICV and exhaust stack. The duct was modeled in RISA-3D design analysis program. The RISA-3D output results were imported into an Excel spreadsheet to perform the unity checks according to the ASME AG-1 Non mandatory Appendix AA-D - *Design of Ductwork by Analysis (Suggested Approach)*. The following MathCad calculations are used to determine loads and maximum allowable stresses that are used in the RISA-3D model and the Excel spreadsheet. The RISA-3D model, input and output files can be found in Attachment 4. The Excel spreadsheet can be found in Attachment 5.

6.1 Design Loads

Dead Load

Dead Load is determined, based on the size of the duct as shown in Attachment 2. The Dead Load includes the weight of all internally or externally mounted components such as dampers and insulation.

Live Load

Live Load is not considered in the Service Level B AG-1 analysis.

Seismic Load

The seismic load is determined, based on UBC-1997, Section 1632.

For PC-2 duct, Seismic Zone 2B, Soil Profile Sc:

$I_p := 1.5$ — Importance Factor - Table 16-K

$C_a := 0.24$ — Seismic Factor - Table 16-Q

$a_p := 1.0$ $\quad R_p := 3.0$ — Horizontal Force Factor - Table 16-O

$h_x := 0ft$ — Element elevation at duct attachment point

$h_r := 26.5ft$ — Elevation at highest point (at branch connection near the dryer).

$$F_p := \frac{a_p \cdot C_a \cdot I_p}{R_p} \cdot \left(1 + 3 \cdot \frac{h_x}{h_r}\right) \cdot W_p$$

UBC 1997, 1632.2 Equation 32-2.

$F_p = 0.12 W_p$ — Seismic loading coefficient.

$F_{pmin} := 0.7 \cdot C_a \cdot I_p \cdot W_p$ $\quad F_{pmin} = 0.25 W_p$ — UBC 1997, 1632.2, eq. 32-3, total design lateral seismic force shall not be less than this.

$F_{pmax} := 4 \cdot C_a \cdot I_p \cdot W_p$ $\quad F_{pmax} = 1.44 W_p$

UBC 1997, 1632.2, eq. 32-3, total design lateral seismic force shall not exceed this.

F_p is not between F_{pmin} and F_{pmax}, therefore use F_{pmin} value.

$F_p := 0.25 \cdot W_p$

Seismic force on duct. F_p will also be used to determine the seismic load acting on the duct due to inline components such as dampers, etc.

Although the seismic coefficient for this section of duct is determined and listed above, this analysis will use the determined seismic coefficient for the main OGTS duct found in calculation #145579-V-CA-005. This seismic coefficient will be applied to the entire length, approximately 317 ft, of the bypass duct from the connection at the main OGTS line to the exhaust stack. This is a conservative approach because the bypass duct is attached to the main OGTS Duct through an expansion joint at the branch connection.

$F_p := 0.5 \cdot W_p$

Seismic force on duct. Calculation #145579-V-CA-005.

$W_p :=$

19.42
13.72
24.74

Duct dead load (lbs/ft) Attachment 2. Applied distributed dead load on RISA model.

$F_p := 0.5 \cdot W_p \cdot \frac{lbf}{ft}$ $\quad F_p = \begin{pmatrix} 9.71 \\ 6.86 \\ 12.37 \end{pmatrix} \frac{lbf}{ft}$

Applied distributed seismic load on RISA model.

$L := \begin{pmatrix} 12.0 \\ 11.0 \\ 16.0 \\ 16.0 \end{pmatrix} \cdot in$

Length of Expansion Joints per Assumptions. Reference page 4 this calculation.

$W_p := \begin{pmatrix} 44.0 \\ 11 \\ 19 \\ 20 \end{pmatrix} \cdot lbf$

Expansion joint dead load (lbs) per assumptions. Applied distributed dead load on RISA model. Reference page 4 this calculation.

$\frac{W_p}{L} = \begin{pmatrix} 44.0 \\ 12.0 \\ 14.2 \\ 15.0 \end{pmatrix} \frac{lbf}{ft}$

Expansion joint weight per foot, apply to RISA Model.

$F_p := 0.5 \cdot \frac{W_p}{L}$ $\quad F_p = \begin{pmatrix} 22.0 \\ 6.0 \\ 7.1 \\ 7.5 \end{pmatrix} \frac{lbf}{ft}$ Applied distributed seismic load on RISA model.

Wind Load

Wind load is determined from Chapter 6.0 of ASCE 7-98.

For Wind Loads, Performance Category is 2, Exposure Category is C, velocity is 85 mph and Importance Factor is 1.15 (TFC-ENG-STD-06).

$I := 1.15$ Importance Factor

The highest point is at an elevation of approximately 26.5ft (at branch connection near the dryer). Consider all duct at this elevation (conservative)

$K_z := 0.95$ Interpolated from Table 6-5, ASCE 7-98

$K_{zt} := 1.0$ No hill or slope to consider.

$K_d := 0.85$ Table 6-6 for solid signs.

$V := 85 \ \frac{mi}{hr}$ Design wind velocity.

$q_z := 0.00256 \cdot \frac{lbf}{ft^2} \cdot K_z \cdot K_{zt} \cdot K_d \cdot V^2 \cdot I$ Velocity pressure evaluated at height z above ground (Section 6.5.10).

$q_z = 17.2 \frac{lbf}{ft^2}$

Determine equivalent force per linear foot of from wind loading.

$A_f := 1$ Area of duct normal to the wind direction

$G := 0.85$ Gust effect factor, Section 6.5.8

M/N ratio, duct height is 6.625" and 8.625", length is one foot. M/N ratios are 1'/0.55' = 1.8 and 1'/0.72' = 1.39. Use 1.8.

$C_f := 1.2$ — Force coefficient from Figure 6-11, M/N ratio less than 6, above ground level.

$F := q_z \cdot G \cdot C_f \cdot A_f$ $\quad F = 17.5 \frac{lbf}{ft^2}$ — Wind force per square foot, Eq. 6-20, Section 6.5.13

$D := \begin{pmatrix} 6.625 \\ 8.625 \\ 12.75 \end{pmatrix} \cdot in$ — The wind contacts duct with diameters of 6", 8" and 12".

$F_w := F \cdot D$ $\quad F_w = \begin{pmatrix} 9.7 \\ 12.6 \\ 18.6 \end{pmatrix} \frac{lbf}{ft}$ — Wind force per linear foot of duct of a given diameter of 6", 8" and 12", respectively.

Thermal Load

The overall thermal growth of the duct system is evaluated, based on ASME AG-1-1997, pages 15 and 16. The thermal growth is determined for a defined portion of the duct system and expansion joints placed strategically along that defined length to allow for adequate thermal expansion in the support system. The worst case temperature delta considers a low installation ambient of -25°F.

No reference could be found for the thermal expansion coefficient of 316L Stainless Steel. However the chemical composition of 316L Stainless Steel is 16.0-18.0 Chromium, 10.0-14.0 Nickel, and 2.00-3.00 Molybdenum (ASTM A 312/A 312M-05, page 3). In ASME B&PV, Section II, Part D, Subpart 2, page 671, 316L Stainless Steel belongs to Group 3 alloys. Group 3 also includes 18-8 Stainless Steel, therefore 18-8 SS will exhibit the same thermal properties as 316L SS. Referring to Table TE-1, page 669, the linear thermal expansion coefficient for Group 3 at 850-900°F is between 9.5-10.2 in/100 ft. Interpolating for 875°F results in 9.85 in/100 ft which equates to (9.85 in)/((100 ft)(12 in / ft)(875°F) = 9.3 μin/in-°F. Referencing ASME B31.3-2002, Appendix C, Table C-3, page 233, the linear thermal expansion coefficient of 18-8 SS at 875°F is 10.13 μin/in-°F. Use the more conservative value from ASME B31.3.

$\delta_{t1} := [200 - (-25)]°F$ $\quad \delta_{t1} = 225.0°F$ — refer to Assumptions

$\delta_{t2} := [875 - (-25)]°F$ $\quad \delta_{t2} = 900.0°F$ — refer to Design Inputs

$\delta_{t3} := [77 - (-25)] \cdot °F$ $\quad \delta_{t3} = 102.0°F$ — refer to Design Inputs

$\varepsilon := 0.00001013 \frac{\frac{in}{in}}{°F}$ — Coefficient of Thermal Expansion of 18-8 Stainless Steel, ASME B31.3-2002, Table C-3, page 233.

Fluid Momentum Load (FML)

Calculate the Fluid momentum loads.

Calculation No.
145579-B-CA-023
Rev. No. 1
Calculation Title DBVS OGTS
Bypass Structural Analysis

Originator: J Van Corbach JVC
Date: 3/24/2006
Checker: Kevin Jones KMJ
Date: 3/25/06

$\rho := 0.00238 \frac{slug}{ft^3}$ — Density of air @ standard atmospheric pressure and 59°F (Fundamentals of Fluid Mechanics, Table 1.7)

$theta := \frac{\pi}{2}$ — All HVAC duct bends are 90°.

$i := 0 .. 2$

$d :=$

6.625
8.625
12.750

$d := d \cdot in$ — Pipe diameter, see Attachment 2.

$t :=$

0.280
0.148
0.180

$t := t \cdot in$ — Unreduced pipe wall thickness, see Attachment 2.

$Area := \pi \cdot \left(\frac{d - 2 \cdot t}{2}\right)^2$ $\quad Area = \begin{pmatrix} 28.9 \\ 54.5 \\ 120.6 \end{pmatrix} in^2$ — Cross-sectional area of each duct size.

$Q := 1125cfm$ — Maximum Flow rate for the NYB Model 1508 Fan, see Assumptions.

$V_i := \frac{Q}{Area_i}$ $\quad V = \begin{pmatrix} 93.5 \\ 49.6 \\ 22.4 \end{pmatrix} \frac{ft}{sec}$ — Velocity through each duct size.

From the linear momentum equation (Fundamentals of Fluid Mechanics, p 228, Eq 5.22), the following equations are derived that solve for the fluid momentum loads resulting from a steady moving fluid changing directions:

$F_{x_i} := -\rho \cdot Area_i \cdot (V_i)^2 (1 - \cos(theta))$ — (Fundamentals of Fluid Mechanics, pg. 230, Eq. 5)

$F_{z_i} := \rho \cdot Area_i \cdot (V_i)^2 \cdot (\sin(theta))$ — (Fundamentals of Fluid Mechanics, pg. 230, Eq. 6)

where F_x is the force component in the direction of the flow of fluid before the bend and F_z is the anchoring force component perpendicular to F_x

Solving for these equations provides the following fluid momentum loads for each sized duct bend:

$F_x = \begin{pmatrix} -4 \\ -2 \\ -1 \end{pmatrix} lbf$ $\quad F_z = \begin{pmatrix} 4 \\ 2 \\ 1 \end{pmatrix} lbf$ — FML for 6", 8" and 12" diameter ducts

Fluid momentum loads are small and not considered in this analysis.

External Load (EL)

No external loads have been identified for this ductwork.

Additional Dynamic Load (ADL)

No dynamic loading has been identified for this ductwork.

Normal Operating Pressure Differential Load (NOPD)

From Roark's Formulas for Stress and Strain, 7th edition, Chapter 13 - Shells of Revolution: Pressure Vessels; Pipes. Table 13.1 Formulas for membrane stresses and deformations in thin-walled vessels. Table 13.1 and the associated equations refer to following variables

R	radius of curvature of a circumference
E	modulus of elasticity
t	plate thickness
q	uniform distributed pressure
σ_2	circumferential or hoop stress

From Table 13.1, Case 1 Form of vessel, Cylindrical, Case 1b Loading, Uniform radial pressure, we get the following equation.

$$\sigma_2 = \frac{q \cdot R}{t}$$

$q := 19in\_H2O$ $\quad q = 0.686psi$ — Duct operating pressure per Assumptions.

$t :=$

0.231
0.122
0.148

$t := t \cdot in$ — Reduced pipe wall thickness, see Attachment 2.

$$R_i := \frac{D_i}{2}$$

$$R = \begin{pmatrix} 3.31 \\ 4.31 \\ 6.38 \end{pmatrix} in$$

Pipe radius.

$$\sigma_2 := \frac{q \cdot R}{t} \qquad \sigma_2 = \begin{pmatrix} 9.8 \\ 24.2 \\ 29.4 \end{pmatrix} psi$$

Hoop stress as a result of NOPD.

The NOPD loads are small and not considered in this analysis.

System Operating Pressure Transients Load (SOPT)

No SOPT loads have been identified for this ductwork.

Load Combinations

Load Combinations are not required for Service Level B AG-1 Analysis; refer to Section SA-4212, ASME AG-1 Code. However per Section SA-4100, "Ductwork and ductwork supports shall be designed in accordance with the requirements of Article AA-4000 and this Section." Section AA-4212 lists the load combinations for Service Level B as the following:

Normal Loads (N) + Wind (W) + Thermal (T)
Normal Loads (N) + Operationally Based Earthquake (OBE) + Thermal (T) + Other dynamic loads (ADL)

where:

N - Normal Loads = NOPD+SOPT+DW+EL+FML
DW - Dead Weight including loads caused by attached piping, accessories, or other equipment
T - Thermal Loads
OBE - Seismic Load that are the result of an earthquake
ADL - Additional dynamic loads resulting from system excitation due to structural motion.
W - Wind Load

6.2 Constants Defined

Material properties.

$E_{875} := 23650ksi$ — AMSE B&PV, Section II, Part D, Subpart 2, page 696, interpolated for 875°F.

$E_{400} := 26400 \cdot ksi$ — AMSE B&PV, Section II, Part D, Subpart 2, page 696, for 400°F.

$\sigma_{y\_875} := 13.95ksi$ — Yield Strength of TP316L interpolated for 875°F, ASTM B&PV, Section II, Part D, Subpart 1, page 557.

$\sigma_{y\_400} := 17.5ksi$ — Yield Strength of TP316L at 400°F, ASTM B&PV, Section II, Part D, Subpart 1, page 556.

6.3 NOPD Analysis

Circular Duct

Pressure analysis for circular duct is analyzed using Article D-2280 and is located in Section 6.5 of this calculation.

6.4 Round Ductwork Design Analysis

The following sections & equations can be found in the Non mandatory Appendix AA-D - Design of Ductwork by Analysis (Suggested Approach) of the ASME-AG-1 manual.

D-2200 ALLOWABLE DESIGN STRESSES - SERVICE LEVEL A

The maximum normal allowable stresses to be used in design for Service Level A load combinations given in Table SA-4212 shall not exceed the following stresses. Although this application is Service Level B the following is used in the determination of the Service Level B allowables.

D-2210 AXIALLY LOADED COMPRESSION MEMBERS

$i := 0 .. 2$

$K := 0.8$ Effective length factor, AISC, page 5-135

$L := \begin{pmatrix} 12 \\ 22 \\ 7 \end{pmatrix} ft$ Maximum unbraced length of an 6" member is 12 feet at the fresh air intake, 8" member is 22 feet at the span between the fans and the exhaust stack. All other pipe, the longest span is less than 7 feet.

$d :=$

6.625
8.625
12.750

$t :=$

0.280
0.148
0.180

$D := d \cdot in$ $t := t \cdot in$

$A_i := \frac{\pi \cdot \left[(D_i)^2 - (D_i - 2 \cdot t_i)^2\right]}{4}$ $A = \begin{pmatrix} 5.58 \\ 3.94 \\ 7.11 \end{pmatrix} in^2$ Full unreduced cross sectional area of the duct, in^2

$I_i := \frac{\pi \cdot \left[(D_i)^4 - (D_i - 2 \cdot t_i)^4\right]}{64}$ $I = \begin{pmatrix} 28.14 \\ 35.41 \\ 140.42 \end{pmatrix} in^4$ Moment of inertia

$r := \sqrt{\frac{I}{A}}$ $r = \begin{pmatrix} 2.25 \\ 3.00 \\ 4.44 \end{pmatrix} in$ Radius of gyration of the unreduced cross section.

$\sigma_{e\_875} := \frac{\pi^2 \cdot E_{875}}{\left(\frac{K \cdot L}{r}\right)^2}$ $\sigma_{e\_875} = \begin{pmatrix} 89 \\ 47 \\ 1021 \end{pmatrix} ksi$ Elastic buckling stress at 875°F

$$\sigma_{e\_400} := \frac{\pi^2 \cdot E_{400}}{\left(\frac{K \cdot L}{r}\right)^2} \qquad \sigma_{e\_400} = \begin{pmatrix} 99 \\ 52 \\ 1140 \end{pmatrix} ksi$$

Elastic buckling stress at 400°F

$$\frac{\sigma_{y\_875}}{2} = 7.0\ ksi \qquad \frac{\sigma_{y\_400}}{2} = 8.8\ ksi$$

If $\sigma_e \le \frac{\sigma_y}{2}$, then use equation 1a.

$$\sigma_0 = 0.521 \cdot \frac{\pi^2 \cdot E}{\left(\frac{K \cdot L}{r}\right)^2}$$

Equation 1a, **NOT APPLICABLE**

If $\sigma_e > \frac{\sigma_y}{2}$, then use equation 1b.

$$\alpha_{875} := \frac{0.037}{\frac{D\sigma_{y\_875}}{t \cdot E_{875}}} + 0.667 \qquad \alpha_{875} = \begin{pmatrix} 3.32 \\ 1.74 \\ 1.55 \end{pmatrix}$$

Area reduction factor at 875°F

$$\alpha_{400} := \frac{0.037}{\frac{D\sigma_{y\_400}}{t \cdot E_{400}}} + 0.667 \qquad \alpha_{400} = \begin{pmatrix} 3.03 \\ 1.62 \\ 1.46 \end{pmatrix}$$

Area reduction factor at 400°F

$$\alpha_{875_i} := if\left(\alpha_{875_i} > 1.0, 1.0, \alpha_{875_i}\right)$$

$\alpha \le 1.0$, if area reduction factor is greater than 1.0 use 1.0.

$$\alpha_{875} = \begin{pmatrix} 1.00 \\ 1.00 \\ 1.00 \end{pmatrix}$$

$$\alpha_{400_i} := if\left(\alpha_{400_i} > 1.0, 1.0, \alpha_{400_i}\right)$$

$\alpha \le 1.0$, if area reduction factor is greater than 1.0 use 1.0.

$$\alpha_{400} = \begin{pmatrix} 1.00 \\ 1.00 \\ 1.00 \end{pmatrix}$$

$$R_{875} := \sqrt{\frac{\sigma_{y\_875}}{\sigma_{e\_875}}} \qquad R_{875} = \begin{pmatrix} 0.40 \\ 0.54 \\ 0.12 \end{pmatrix}$$

$$R_{400} := \sqrt{\frac{\sigma_{y\_400}}{\sigma_{e\_400}}} \qquad R_{400} = \begin{pmatrix} 0.42 \\ 0.58 \\ 0.12 \end{pmatrix}$$

$$\sigma_{o\_875} := \frac{\sigma_{y\_875} \cdot \left(1 - \frac{\sigma_{y\_875}}{4 \cdot \sigma_{e\_875}}\right) \cdot \left[1 - \left(1 - R_{875}^{2}\right) \cdot \left(1 - \alpha_{875}\right)\right]}{\frac{5}{3} + \frac{3}{8} \cdot R_{875} - \frac{R_{875}^{3}}{8}}$$ Equation 1b.

$$\boxed{\sigma_{o\_875} = \begin{pmatrix} 7.4 \\ 7.0 \\ 8.1 \end{pmatrix} \text{ksi}}$$

Allowable combined column and local buckling under axial loading for a circular cross section at 875°F.

$$\sigma_{o\_400} := \frac{\sigma_{y\_400} \cdot \left(1 - \frac{\sigma_{y\_400}}{4 \cdot \sigma_{e\_400}}\right) \cdot \left[1 - \left(1 - R_{400}^{2}\right) \cdot \left(1 - \alpha_{400}\right)\right]}{\frac{5}{3} + \frac{3}{8} \cdot R_{400} - \frac{R_{400}^{3}}{8}}$$ Equation 1b.

$$\boxed{\sigma_{o\_400} = \begin{pmatrix} 9.2 \\ 8.6 \\ 10.2 \end{pmatrix} \text{ksi}}$$

Allowable combined column and local buckling under axial loading for a circular cross section at 400°F.

Column Buckling:

$$\frac{D}{t} = \begin{pmatrix} 23.7 \\ 58.3 \\ 70.8 \end{pmatrix} \qquad 0.441 \cdot \frac{E_{875}}{\sigma_{y\_875}} = 747.6$$

Where $\frac{D}{t} > 0.441 \cdot \frac{E}{\sigma_y}$, use equations 2a and 2b.

$$0.441 \cdot \frac{E_{400}}{\sigma_{y\_400}} = 665.3$$

For $\frac{K \cdot L}{r} < C_c$

$$\frac{K \cdot L}{r} = \begin{pmatrix} 51.3 \\ 70.5 \\ 15.1 \end{pmatrix} \qquad C_c = \sqrt{\frac{2 \cdot \pi^2 \cdot E}{\sigma_y}}$$

NOT APPLICABLE

$$\sigma_o = 0.522 \cdot \sigma_y - \frac{\left(\frac{K \cdot L}{r}\right)^2 \cdot \sigma_y^{\,2}}{1494 \cdot ksi}$$

Equation 2a, NOT APPLICABLE

For $\frac{K \cdot L}{r} \geq C_c$

$$\sigma_o = \frac{151900}{\left(\frac{K \cdot L}{r}\right)^2}$$

Equation 2b, NOT APPLICABLE

Local Buckling:

$$\frac{D}{t} = \begin{pmatrix} 23.7 \\ 58.3 \\ 70.8 \end{pmatrix} \qquad \frac{3300ksi}{\sigma_{y\_875}} = 236.6 \qquad \frac{13000 \cdot ksi}{\sigma_{y\_875}} = 931.9$$

$$\frac{3300ksi}{\sigma_{y\_400}} = 188.6 \qquad \frac{13000 \cdot ksi}{\sigma_{y\_400}} = 742.9$$

If $\frac{D}{t} \leq \frac{3300}{\sigma_y}$, then

$\sigma_{875} := 0.60 \cdot \sigma_{y\_875}$ $\boxed{\sigma_{875} = 8.4\,ksi}$ Equation 3, Allowable local buckling stress at 875°F.

$\sigma_{400} := 0.60 \cdot \sigma_{y\_400}$ $\boxed{\sigma_{400} = 10.5\,ksi}$ Equation 3, Allowable local buckling stress at 400°F.

If $\frac{3300}{\sigma_y} < \frac{D}{t} \leq \frac{13000}{\sigma_y}$, then

$$\sigma = \frac{662 \cdot ksi}{\frac{D}{t}} + 0.399 \cdot \sigma_y$$

Equation 4, Allowable local buckling stress, NOT APPLICABLE.

If $\frac{D}{t} > \frac{13000}{\sigma_y}$, then

$$\sigma = \frac{5860 \cdot ksi}{\frac{D}{t}}$$

Equation 5, Allowable local buckling stress, NOT APPLICABLE.

D-2220 CYLINDRICAL TUBULAR MEMBERS IN BENDING

The local buckling behavior in the compression portion of a cylindrical tubular member subjected to a bending load is similar to the local buckling behavior under axial compression. Therefore, equations (3), (4), and (5) of Article D-2210 may be used to determine both local buckling stresses due to axial compression as well as the onset of flexural buckling.

$$\frac{D}{t} = \begin{pmatrix} 23.7 \\ 58.3 \\ 70.8 \end{pmatrix}$$

$$0.070 \cdot \frac{E_{875}}{\sigma_{y\_875}} = 118.7 \qquad 0.319 \cdot \frac{E_{875}}{\sigma_{y\_875}} = 540.8 \qquad 0.441 \cdot \frac{E_{875}}{\sigma_{y\_875}} = 747.6$$

$$0.070 \cdot \frac{E_{400}}{\sigma_{y\_400}} = 105.6 \qquad 0.319 \cdot \frac{E_{400}}{\sigma_{y\_400}} = 481.2 \qquad 0.441 \cdot \frac{E_{400}}{\sigma_{y\_400}} = 665.3$$

If $\frac{D}{t} \le 0.070 \frac{E}{\sigma_y}$, then

$\sigma_{a\_875} := 0.75 \cdot \sigma_{y\_875}$ $\boxed{\sigma_{a\_875} = 10.5\,ksi}$ Equation 6, Allowable bending stress for 6", 8" and 12" duct at 875°F.

$\sigma_{a\_400} := 0.75 \cdot \sigma_{y\_400}$ $\boxed{\sigma_{a\_400} = 13.1\,ksi}$ Equation 6, Allowable bending stress for 6", 8" and 12" duct at 400°F.

If $0.070 \frac{E}{\sigma_y} < \frac{D}{t} \le 0.319 \frac{E}{\sigma_y}$, then

$$\sigma_a = \left(0.581 + 0.012 \cdot \frac{\frac{E}{\sigma_y}}{\frac{D}{t}} \right) \cdot \sigma_y$$

Equation 7, Allowable bending stress, **NOT APPLICABLE.**

If $0.319 \cdot \frac{E}{\sigma_y} < \frac{D}{t} \le 0.441 \frac{E}{\sigma_y}$, then

$$\sigma_a = 0.196 \cdot \frac{E}{\frac{D}{t}}$$

Equation 8, Allowable bending stress, **NOT APPLICABLE.**

If none of the above conditions have been satisfied, use Equation 3 of Article D-2210 per above stipulation.

$\sigma_a = \sigma$ Allowable bending stress, **NOT APPLICABLE.**

D-2230 TORSION

The normal allowable shear stress, v_t, due to local buckling of a circular tubular member subjected to torsion shall not exceed the following:

$v := 0.3$ — Poisson's Ratio, AISC ASD, page 6-37.

$E_{s\_875} := \frac{E_{875}}{2 \cdot (1 + v)}$ $\quad E_{s\_875} = 9096.2\,ksi$ — Secant modulus at 875°F, also called Shear modulus of Elasticity or Modulus of Rigidity, Equation 2-19, Shigley page 34.

$E_{s\_400} := \frac{E_{400}}{2 \cdot (1 + v)}$ $\quad E_{s\_400} = 10153.8\,ksi$ — Secant modulus at 400°F.

$a_{875} := 1.16 \cdot \frac{E_{s\_875}}{E_{875}}$ $\quad a_{875} = 0.45$ — Plasticity reduction factor at 875°F

$a_{400} := 1.16 \cdot \frac{E_{s\_400}}{E_{400}}$ $\quad a_{400} = 0.45$ — Plasticity reduction factor at 400°F

$R := \frac{D}{2}$ $\quad R = \begin{pmatrix} 3.31 \\ 4.31 \\ 6.38 \end{pmatrix} in$ — Outside duct radius

$$v_{t\_875_i} := 0.395 \cdot a_{875} \cdot E_{875} \cdot \left(\frac{t_i}{R_i}\right)^{\frac{5}{4}} \cdot \left(\frac{R_i}{L_i}\right)^{\frac{1}{2}}$$

Equation 9 at 875°F.

$$\boxed{v_{t\_875} = \begin{pmatrix} 28.8 \\ 7.9 \\ 13.3 \end{pmatrix} ksi}$$

Allowable shear stress due to torsion at 875°F.

$$v_{t\_400_i} := 0.395 \cdot a_{400} \cdot E_{400} \cdot \left(\frac{t_i}{R_i}\right)^{\frac{5}{4}} \cdot \left(\frac{R_i}{L_i}\right)^{\frac{1}{2}}$$

Equation 9 at 400°F.

$$\boxed{v_{t\_400} = \begin{pmatrix} 32.2 \\ 8.8 \\ 14.8 \end{pmatrix} ksi}$$

Allowable shear stress due to torsion at 400°F.

D-2240 TRANSVERSE SHEAR

The allowable shear stress, σ_v, due to local buckling of a circular tubular member subjected to transverse shear shall not exceed the following:

$$\sigma_{v\_875_i} := 0.493 \cdot a_{875} \cdot E_{875} \cdot \left(\frac{t_i}{R_i}\right)^{\frac{5}{4}} \cdot \left(\frac{R_i}{L_i}\right)^{\frac{1}{2}}$$

Equation 10, Allowable Transverse shear stress at 875°F.

$$\sigma_{v\_875} = \begin{pmatrix} 36.0 \\ 9.8 \\ 16.6 \end{pmatrix} \text{ksi}$$

Allowable shear stress due to torsion at 875°F.

$$\sigma_{v\_400_i} := 0.493 \cdot a_{400} \cdot E_{400} \cdot \left(\frac{t_i}{R_i}\right)^{\frac{5}{4}} \cdot \left(\frac{R_i}{L_i}\right)^{\frac{1}{2}}$$

Equation 10, Allowable Transverse shear stress at 400°F.

$$\sigma_{v\_400} = \begin{pmatrix} 40.1 \\ 11.0 \\ 18.5 \end{pmatrix} \text{ksi}$$

Allowable shear stress due to torsion at 400°F.

D-2250 COMBINED AXIAL COMPRESSION AND BENDING

When subject to both axial compression and bending loads, members shall be proportioned so that the interaction of these loads does not overstress the ductwork.

$$\sigma_{c\_875_i} := \text{if}\left(\sigma_{o\_875_i} < \sigma_{875}, \sigma_{o\_875_i}, \sigma_{875_i}\right)$$

$$\sigma_{c\_875} = \begin{pmatrix} 7.4 \\ 7.0 \\ 8.1 \end{pmatrix} \text{ksi}$$

σ_c, allowable bending stress, is the lesser of the values of σ_o and σ, from section D-2210 at 875°F.

$$\sigma_{c\_400_i} := \text{if}\left(\sigma_{o\_400_i} < \sigma_{400}, \sigma_{o\_400_i}, \sigma_{400_i}\right)$$

$$\sigma_{c\_400} = \begin{pmatrix} 9.2 \\ 8.6 \\ 10.2 \end{pmatrix} \text{ksi}$$

σ_c, allowable bending stress, is the lesser of the values of σ_o and σ, from section D-2210 at 400°F.

If $\frac{f_a}{\sigma_c} \le 0.15$, use equation 11. Calculation performed on Excel spreadsheet, Attachment 5.

$$\frac{f_a}{\sigma_c} + \frac{f_{bx}}{\sigma_a} + \frac{f_{by}}{\sigma_a} \le 1.0$$

Equation 11, must be less than or equal to 1.0, calculation performed on Excel spreadsheet, Attachment 5.

f_a - applied compressive stress.

f_b - applied bending stress in the x and y direction.

σ_a - allowable bending stress.

D-2260 COMBINED TORSION AND AXIAL COMPRESSION OR BENDING

f_c - applied compressive stress due to axial loading or bending, value used is the maximum of the RISA-3D calculated axial, y top bending, y bot bending, z top bending or z bot bending stress.

$\varepsilon_{c\_875} := \sigma_{a\_875}$ $\quad \varepsilon_{c\_875} = 10.5\,ksi$

ε_c = allowable compressive stress due to axial loading or bending at 875°F, ksi.

$\varepsilon_{c\_400} := \sigma_{a\_400}$ $\quad \varepsilon_{c\_400} = 13.1\,ksi$

ε_c = allowable compressive stress due to axial loading or bending at 400°F, ksi.

σ_v - applied torsional shear stress.

$\varepsilon_{v\_875} := v_{t\_875}$ $\quad \varepsilon_{v\_875} = \begin{pmatrix} 28.8 \\ 7.9 \\ 13.3 \end{pmatrix} ksi$

ε_v= allowable torsional shear stress at 875°F, ksi

$\varepsilon_{v\_400} := v_{t\_400}$ $\quad \varepsilon_{v\_400} = \begin{pmatrix} 32.2 \\ 8.8 \\ 14.8 \end{pmatrix} ksi$

ε_v= allowable torsional shear stress at 400°F, ksi

$$\left(\frac{f_c}{\varepsilon_c}\right)^2 + \left(\frac{\sigma_v}{\varepsilon_v}\right)^2 \le 1.0$$

Equation 13, must be less than or equal to 1.0, calculation performed on Excel spreadsheet, Attachment 5.

D-2270 COMBINED TORSION AND TRANSVERSE SHEAR

f_t - applied torsional shear stress

$v_{t\_875} = \begin{pmatrix} 28.8 \\ 7.9 \\ 13.3 \end{pmatrix} ksi$

v_t - allowable torsional shear stress at 875°F.

$v_{t\_400} = \begin{pmatrix} 32.2 \\ 8.8 \\ 14.8 \end{pmatrix} ksi$

v_t - allowable torsional shear stress at 400°F.

f_v - applied transverse shear stress

$$\sigma_{v\_875} = \begin{pmatrix} 36.0 \\ 9.8 \\ 16.6 \end{pmatrix} \text{ksi}$$

σ_v - allowable transverse shear stress at 875°F.

$$\sigma_{v\_400} = \begin{pmatrix} 40.1 \\ 11.0 \\ 18.5 \end{pmatrix} \text{ksi}$$

σ_v - allowable transverse shear stress at 400°F.

$$\frac{f_t}{v_t} + \frac{f_v}{\sigma_v} < 1.0$$

Equation 14, must be less than 1.0, calculation performed on Excel spreadsheet, Attachment 5.

6.5 Ductwork Pressure Analysis

D-2280 PRESSURE

Positive Internal Pressure. Positive internal pressure causes tensile stresses within the duct and actually reduces the tendency toward buckling. The tensile stresses due to internal pressure are:

$$\sigma_H = \frac{P' \cdot R}{h}$$

Equation 15, Hoop stress as a result of NOPD, **NOT APPLICABLE.**

$$\sigma_L = \frac{P' \cdot R}{2 \cdot h}$$

Equation 16, Longitudinal stress as a result of NOPD, **NOT APPLICABLE.**

Negative Internal Pressure. The critical hoop stress results from an external or negative internal pressure. The critical elastic buckling pressure for ducts subjected to external pressure is given below:

$$L = \begin{pmatrix} 12.0 \\ 22.0 \\ 7.0 \end{pmatrix} \text{ft}$$

$$D = \begin{pmatrix} 6.62 \\ 8.63 \\ 12.75 \end{pmatrix} \text{in} \qquad t = \begin{pmatrix} 0.280 \\ 0.148 \\ 0.180 \end{pmatrix} \text{in}$$

$j := 0 .. 2$

$$\frac{D}{t} = \begin{pmatrix} 23.7 \\ 58.3 \\ 70.8 \end{pmatrix} \qquad \frac{1.818 \cdot L_j}{D_j} \cdot \left(\frac{D_j}{t_j}\right)^{\frac{1}{2}} = \begin{pmatrix} 192.2 \\ 424.8 \\ 100.8 \end{pmatrix} \qquad 4 \cdot \frac{D}{t} = \begin{pmatrix} 94.6 \\ 233.1 \\ 283.3 \end{pmatrix}$$

If $10 < \frac{1.818 \cdot L}{D} \cdot \left(\frac{D}{t}\right)^{\frac{1}{2}} < \frac{D}{t}$ then, $P'_{CR} = \frac{2.6 \cdot E}{\left(\frac{L}{D}\right) \cdot \left(\frac{D}{t}\right)^{2.5}}$ Equation 17.

If $\frac{1.818 \cdot L}{D} \cdot \left(\frac{D}{t}\right)^{\frac{1}{2}} < \frac{4D}{t}$ then, $P'_{CR} = 2.2 \cdot E \cdot \left(\frac{t}{D}\right)^3$ Equation 18.

ASME AG-1 does not give any guidance on the determination of P'_{CR} if $\frac{1.818 \cdot L}{D} \cdot \left(\frac{D}{t}\right)^{\frac{1}{2}}$ is greater than $\frac{4 \cdot D}{t}$, for conservatism use the most conservative value for P'_{CR}.

$$P'_{CR1\_875_i} := 2.2 \cdot E_{875} \cdot \left(\frac{t_i}{D_i}\right)^3 \qquad P'_{CR1\_875} = \begin{pmatrix} 3928.0 \\ 262.9 \\ 146.4 \end{pmatrix} \text{psi}$$ Equation 18

$$P'_{CR1\_400_i} := 2.2 \cdot E_{400} \cdot \left(\frac{t_i}{D_i}\right)^3 \qquad P'_{CR1\_400} = \begin{pmatrix} 4384.7 \\ 293.5 \\ 163.4 \end{pmatrix} \text{psi}$$

$$P'_{CR2\_875_i} := \frac{2.6 \cdot E_{875}}{\left(\frac{L_i}{D_i}\right) \cdot \left(\frac{D_i}{t_i}\right)^{2.5}} \qquad P'_{CR2\_875} = \begin{pmatrix} 1038.9 \\ 77.5 \\ 221.0 \end{pmatrix} \text{psi}$$ Equation 17

$$P'_{CR2\_400_i} := \frac{2.6 \cdot E_{400}}{\left(\frac{L_i}{D_i}\right) \cdot \left(\frac{D_i}{t_i}\right)^{2.5}} \qquad P'_{CR2\_400} = \begin{pmatrix} 1159.7 \\ 86.5 \\ 246.7 \end{pmatrix} \text{psi}$$

Use equation 18 for 12" pipe and equation 17 for 6" and 8".

$$P'_{CR\_875_i} := \text{if}\left(P'_{CR1\_875_i} < P'_{CR2\_875_i}, P'_{CR1\_875_i}, P'_{CR2\_875_i}\right)$$

$$P'_{CR\_875_i} = \begin{pmatrix} 1038.9 \\ 77.5 \\ 146.4 \end{pmatrix} psi$$

$$P'_{CR\_400_i} := if\left(P'_{CR1\_400_i} < P'_{CR2\_400_i}, P'_{CR1\_400_i}, P'_{CR2\_400_i}\right)$$

$$P'_{CR\_400_i} = \begin{pmatrix} 1159.7 \\ 86.5 \\ 163.4 \end{pmatrix} psi$$

$$P'_{allow\_875} := \frac{P'_{CR\_875}}{1.67} \qquad P'_{allow\_875} = \begin{pmatrix} 622.1 \\ 46.4 \\ 87.7 \end{pmatrix} psi$$

Allowable pressure at 875°F.

$$P'_{allow\_400} := \frac{P'_{CR\_400}}{1.67} \qquad P'_{allow\_400} = \begin{pmatrix} 694.4 \\ 51.8 \\ 97.9 \end{pmatrix} psi$$

Allowable pressure at 400°F.

$$P' := \begin{pmatrix} -19.0 \\ -19.0 \\ -19.0 \end{pmatrix} \cdot in\_H2O \qquad P' = \begin{pmatrix} -0.69 \\ -0.69 \\ -0.69 \end{pmatrix} psi$$

Actual duct system pressure for duct (negative internal pressure) is far below the allowable for the given NOPD values. Use maximum design pressure of proposed system fans.

D-2281 COMPRESSION IN COMBINATION WITH INTERNAL PRESSURE

Internal pressure stiffens the duct against buckling from external loads and reduces the net compressive stress in the section. For conservatism, the internal pressure should be ignored and the external load used for calculation.

D-2300 ALLOWABLE DESIGN STRESSES SERVICE LEVELS B, C, OR D

Members and assemblies subject to stresses produced by Service Levels B, C, or D load combinations shown in Table SA-4212 (ASME AG-1-2000), may be proportioned for unit stresses 1.3 (Service Level B) or 1.6 (Service Levels C or D) times greater than those specified in Articles D-2210 through D-2240 for Service Level A load combinations. However, the increased stress allowables shall not exceed the following limits:

$$\sigma_{o\_max\_875} := 0.9 \cdot \sigma_{y\_875} \qquad \sigma_{o\_max\_875} = 12.6\,ksi$$

Equation 21, maximum allowable compression stress for column buckling under axial loading at 875°F.

$$\sigma_{o\_875} := \sigma_{o\_875} \cdot 1.3$$

Service Level B

$\sigma_{o\_875} = \begin{pmatrix} 9.6 \\ 9.1 \\ 10.6 \end{pmatrix} ksi$

$\sigma_o < \sigma_{o\_max}$ therefore OK.

$\sigma_{o\_max\_400} := 0.9 \cdot \sigma_{y\_400}$ $\quad \sigma_{o\_max\_400} = 15.8\,ksi$

Equation 21, maximum allowable compression stress for column buckling under axial loading at 400°F.

$\sigma_{o\_400} := \sigma_{o\_400} \cdot 1.3$

Service Level B

$\sigma_{o\_400} = \begin{pmatrix} 12.0 \\ 11.2 \\ 13.2 \end{pmatrix} ksi$

$\sigma_o < \sigma_{o\_max}$ therefore OK.

$\sigma_{max\_875} := 0.9 \cdot \sigma_{y\_875}$ $\quad \sigma_{max\_875} = 12.6\,ksi$

Equation 22, maximum allowable compression stress for local buckling under axial loading at 875°F.

$\sigma_{875} := \sigma_{875} \cdot 1.3$

Service Level B

$\sigma_{875} = 10.9\,ksi$

$\sigma < \sigma_{max}$ therefore OK.

$\sigma_{max\_400} := 0.9 \cdot \sigma_{y\_400}$ $\quad \sigma_{max\_400} = 15.8\,ksi$

Equation 22, maximum allowable compression stress for local buckling under axial loading at 400°F.

$\sigma_{400} := \sigma_{400} \cdot 1.3$

Service Level B

$\sigma_{400} = 13.7\,ksi$

$\sigma < \sigma_{max}$ therefore OK.

$\sigma_{a\_max\_875} := 0.9 \cdot \sigma_{y\_875}$ $\quad \sigma_{a\_max\_875} = 12.6\,ksi$

Equation 23, maximum allowable bending stress at 875°F.

$\sigma_{a\_875} := \sigma_{a\_875} \cdot 1.3$

Service Level B

$\sigma_{a\_875} = 13.6\,ksi$

$\sigma_a > \sigma_{a\_max}$ therefore use max value.

$\sigma_{a\_875} := \sigma_{a\_max\_875}$ $\quad \sigma_{a\_875} = 12.6\,ksi$

$\sigma_{a\_max\_400} := 0.9 \cdot \sigma_{y\_400}$ $\quad \sigma_{a\_max\_400} = 15.8\,ksi$

Equation 23, maximum allowable bending stress at 400°F.

$\sigma_{a\_400} := \sigma_{a\_400} \cdot 1.3$

Service Level B

$\sigma_{a\_400} = 17.1\,ksi$

$\sigma_a > \sigma_{a\_max}$ therefore use max value.

$\sigma_{a\_400} := \sigma_{a\_max\_400}$ $\quad \sigma_{a\_400} = 15.8\,ksi$

$v_{t\_max\_875} := \frac{0.9 \cdot \sigma_{y\_875}}{\sqrt{3}}$ $\quad v_{t\_max\_875} = 7.2\ ksi$

Equation 23a, maximum allowable shear stress due to torsion at 875°F.

$v_{t\_875} := 1.3 \cdot v_{t\_875}$

Service Level B

$$v_{t\_875} = \begin{pmatrix} 37.5 \\ 10.2 \\ 17.3 \end{pmatrix} ksi$$

if $v_t < v_{t\_max}$ use v_t, otherwise use v_{t_max}

$v_{t\_875_i} := if\left(v_{t\_875_i} < v_{t\_max\_875}, v_{t\_875_i}, v_{t\_max\_875}\right)$

$$v_{t\_875} = \begin{pmatrix} 7.2 \\ 7.2 \\ 7.2 \end{pmatrix} ksi$$

$v_{t\_max\_400} := \frac{0.9 \cdot \sigma_{y\_400}}{\sqrt{3}}$ $\quad v_{t\_max\_400} = 9.1\ ksi$

Equation 23a, maximum allowable shear stress due to torsion at 400°F.

$v_{t\_400} := 1.3 \cdot v_{t\_400}$

Service Level B

$$v_{t\_400} = \begin{pmatrix} 41.8 \\ 11.4 \\ 19.3 \end{pmatrix} ksi$$

if $v_t < v_{t\_max}$ use v_t, otherwise use v_{t_max}

$v_{t\_400_i} := if\left(v_{t\_400_i} < v_{t\_max\_400}, v_{t\_400_i}, v_{t\_max\_400}\right)$

$$v_{t\_400} = \begin{pmatrix} 9.1 \\ 9.1 \\ 9.1 \end{pmatrix} ksi$$

$\sigma_{v\_max\_875} := \frac{0.9 \cdot \sigma_{y\_875}}{\sqrt{3}}$ $\quad \sigma_{v\_max\_875} = 7.2\ ksi$

Equation 24, maximum allowable transverse shear at 875°F.

$\sigma_{v\_875} := \sigma_{v\_875} \cdot 1.3$

Service Level B

$$\sigma_{v\_875} = \begin{pmatrix} 46.7 \\ 12.8 \\ 21.6 \end{pmatrix} ksi$$

if $\sigma_v < \sigma_{v\_max}$ use σ_v, otherwise use σ_{v_max}

$\sigma_{v\_875_i} := if\left(\sigma_{v\_875_i} < \sigma_{v\_max\_875}, \sigma_{v\_875_i}, \sigma_{v\_max\_875}\right)$

$$\sigma_{v\_875} = \begin{pmatrix} 7.2 \\ 7.2 \\ 7.2 \end{pmatrix} ksi$$

$\sigma_{v\_max\_400} := \dfrac{0.9 \cdot \sigma_{y\_400}}{\sqrt{3}}$ $\quad \sigma_{v\_max\_400} = 9.1\ ksi$

Equation 24, maximum allowable transverse shear at 400°F.

$\sigma_{v\_400} := \sigma_{v\_400} \cdot 1.3$

Service Level B

$$\sigma_{v\_400} = \begin{pmatrix} 52.2 \\ 14.3 \\ 24.1 \end{pmatrix} ksi$$

if $\sigma_v < \sigma_{v\_max}$ use σ_v, otherwise use σ_{v_max}

$\sigma_{v\_400_i} := if\left(\sigma_{v\_400_i} < \sigma_{v\_max\_400}, \sigma_{v\_400_i}, \sigma_{v\_max\_400}\right)$

$$\sigma_{v\_400} = \begin{pmatrix} 9.1 \\ 9.1 \\ 9.1 \end{pmatrix} ksi$$

D-2400 STIFFENER DESIGN

Stiffeners are not used in the design of this duct system.

DMJM H&N | AECOM

ATTACHMENT 1

Calculation No.: 145579-B-CA-023	
Rev. No.: 1	
Calculation Title: DBVS OGTS Bypass Structural Analysis	

Drawings & Sketches

In making requests for transmittal of data by any electronic media, the Company receiving such data agrees that AMEC Americas Limited cannot be held responsible for users of the data outside of or beyond the scope of our original agreement. Also, because data stored in electronic media or transmitted by electronic means can deteriorate undetected or be modified without the consultant's knowledge, the Company receiving data agrees that AMEC Americas Limited cannot be held liable for the compatibility, completeness or correctness of the data.

No.	AMEC Dwg. No.	REFERENCE DRAWINGS
1	F-145579-00-D-0041	MELT AREA G.A. ELEVATIONS NORTH AND WEST
2	F-145579-00-D-0051	MELT AREA G.A. PLAN VIEWS
3	F-145579-36-V-0004	OFF-GAS TREATMENT MELT & DRYER MIDDLE PLAN
4	F-145579-36-V-0005	OFF-GAS TREATMENT MELT & DRYER UPPER PLANS
5	F-145579-36-V-0027	OFF-GAS TREATMENT MELT & DRYER SECTIONS A & B
6	F-145579-36-V-0028	OFF-GAS TREATMENT MELT & DRYER SECTION C
7	F-145579-36-V-0029	OFF-GAS TREATMENT MELT & DRYER SECTION D
8	F-145579-36-V-0030	OFF-GAS TREATMENT MELT & DRYER SECTION E

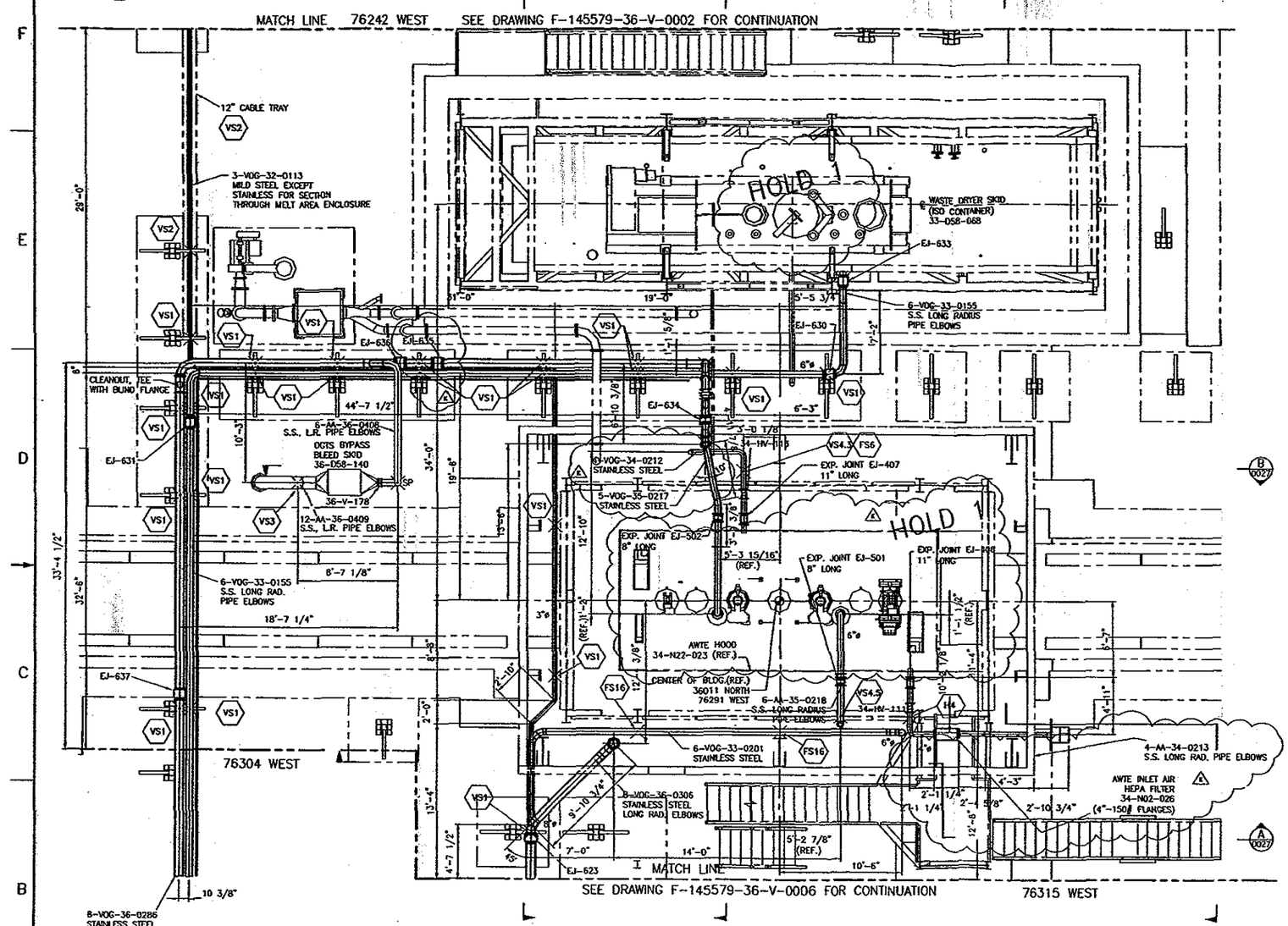

PLAN @ 675'-0"

NOTES:

1. ONLY VENTILATION DUCTWORK PIPING AND SUPPORTING CABLE TRAYS SHOWN. ALL OTHER PIPING AND CABLE TRAYS OMITTED FOR CLARITY.
2. DIMENSIONS AND LOCATIONS OF JOINTS TO BE CONFIRMED BY SELECTED VENDOR.
3. VENTILATION DUCTWORK PIPING TO BE MINIMUM THICKNESS SCHEDULE 40 COMPLETE WITH LONG RADIUS ELBOWS FOR 6" AND SMALLER AND SCHEDULE 10 PIPE AND PIPE FITTINGS FOR PIPE 8" AND LARGER EXCEPT AS NOTED.
4. DUCTWORK MATERIAL AND FABRICATION SHALL CONFORM TO ASME B31.1 POWER PIPING.
5. DUCTWORK FITTINGS AS PER AMEC DWG. NO. F-145579-36-V-0023 STANDARD DETAILS – SHT. 1.
6. I.D. DESIGNATES ISOLATION DAMPERS TO BE FLANGERS ROUND BUBBLE-TIGHT (FLAT BLADE TYPE). FLANGES TO MATCH 150# DRILLING.
7. VENTILATION DUCTWORK SUPPORTS ARE REPRESENTED BY A HEXAGON.
   EXAMPLES – VS- OR RG- CG- CS- A- H- DS-
   FOR 'VS' TYPE SUPPORTS SEE DWG. F-145579-36-0024.
   FOR ALL OTHER SUPPORTS SEE DRAWINGS F-145579-00-P-0001 TO -0004.
8. SEE BRANCH REINFORCEMENT DETAIL ON DWG. F-145579-36-V-0023 FOR FITTINGS SHOWN SHADED.

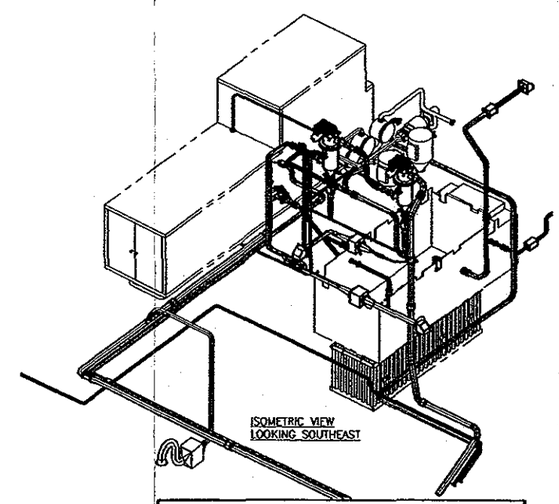

HOLDS:
1. PENDING VENDOR INFORMATION.

NOT APPROVED FOR CONSTRUCTION

Rev.	REVISION DESCRIPTION	Date	By	Ch'd	Appr'd	Appr'd Cust
K	RE-ISSUED FOR OGTS DESIGN REPORT	25 MAR 06	THB	JM	JL	JSG
J	ISSUED FOR OGTS DESIGN REPORT	24 FEB 06	RRB	JM	SRB	JSG
H	ISSUED FOR DESIGN	16/12/05	RRB		FWS	JOS
G	ISSUED FOR INFORMATION – OFF-GAS SYSTEM REVISED	14/11/05	RRB		FWS	JOS
F	REISSUED FOR CH2M HILL REVIEW/90% REPORT(AREA 36 ONLY)	26/04/05	JCH	PCF	FWS	SC
E	ISSUED FOR CH2M HILL REVIEW/90% REPORT (AREA 36 ONLY)	15/03/05	JCH	PCF	FWS	TH
D	ISSUED FOR CH2M HILL REVIEW/90% REPORT (DCV SYSTEM)	02/03/05	JCH	PCF	GJ	TH
C	ISSUED FOR CH2M HILL REVIEW/90% REPORT (AREA 33 ONLY)	31/01/05	RDB	PCF	FWS	TH
B	ISSUED FOR INTERNAL APPROVAL	17/12/04	JCH	AP	FWS	TH
A	ISSUED FOR REVIEW	05/11/04	JCH	AP	FWS	TH

AMEC DWG/PKG NO: F-145579-36-V-0003 REV: K

amec

AMEC PROJECT: 145579–FINAL DBVS DESIGN

U.S. DEPARTMENT OF ENERGY
Office of River Protection

BULK VITRIFICATION
OFF-GAS TREATMENT
MELT & DRYER LOWER PLAN

SIZE F | BLDG NO | MODEL NO | DWG NO | REV

SCALE 1/4"=1'-0" | SHEET | OF

NAME | DATE | COMPANY
DRAWN BY JCH
DESIGNED BY
CHECKED BY
LEAD / PROJ. ENGR.
DISCIPLINE ENGINEER
PROJECT MANAGER
VENDOR AUTHORITY

DWG NO	TITLE
–	

DRAWING TRACEABILITY LIST

REF NUMBER	TITLE
–	

REFERENCES
NEXT USED ON

REV NO	DESCRIPTION	REV BY DATE	REV BY	CHECKED BY	CHECK	COMPANY
–						

REVISIONS

In making requests for transmittal of data by any electronic media, the Company receiving such data agrees that AMEC Americas Limited cannot be held responsible for users of the data outside of or beyond the scope of our original agreement. Also, because data stored in electronic media or transmitted by electronic means can deteriorate undetected or be modified without the consultant's knowledge, the Company receiving data agrees that AMEC Americas Limited cannot be held liable for the compatibility, completeness or correctness of the data.

No.	AMEC Dwg. No.	REFERENCE DRAWINGS
1	F-145579-36-V-0031	OFF-GAS TREATMENT – WET SCRUBBER SKID SECTIONS
2	F-145579-00-D-0009	OFF-GAS & ELECT. TRAILERS G.A. – PLAN
3	F-145579-00-P-0007	OFF-GAS TREATMENT – PIPING LAYOUT
4	F-145579-00-P-0012	OFF-GAS TREATMENT – PIPING SECTIONS

NOTES:

1. ONLY VENTILATION DUCTWORK PIPING AND SUPPORTING CABLE TRAYS SHOWN. ALL OTHER PIPING AND CABLE TRAYS OMITTED FOR CLARITY.
2. DIMENSIONS AND LOCATIONS OF JOINTS TO BE CONFIRMED BY SELECTED VENDOR.
3. VENTILATION DUCTWORK PIPING TO BE MINIMUM THICKNESS SCHEDULE 40 COMPLETE WITH LONG RADIUS ELBOWS FOR 6" AND SMALLER AND SCHEDULE 10 PIPE AND PIPE FITTINGS FOR PIPE 8" AND LARGER EXCEPT AS NOTED.
4. DUCTWORK MATERIAL AND FABRICATION SHALL CONFORM TO ASME B31.1 POWER PIPING.
5. DUCTWORK FITTINGS AS PER AMEC DWG. NO. F-145579-36-V-0023 STANDARD DETAILS – SHT. 1.
6. I.D. DESIGNATES ISOLATION DAMPERS TO BE FLANDERS ROUND BUBBLE-TIGHT (FLAT BLADE TYPE). FLANGES TO MATCH 150# DRILLING.
7. VENTILATION DUCTWORK SUPPORTS ARE REPRESENTED BY A HEXAGON.
   EXAMPLES – VS– DR RG– CG– CS– A– H– DS–
   FOR 'VS' TYPE SUPPORTS SEE DWG. F-145579-36-0024.
   FOR ALL OTHER SUPPORTS SEE DRAWINGS F-145579-00-P-0001 TO -0004.
8. SEE BRANCH REINFORCEMENT DETAIL ON DWG. F-145579-36-V-0023 FOR FITTINGS SHOWN SHADED.
9. HOLD 1 FOR VENDOR INFORMATION.

HOLDS:

1. PENDING VENDOR INFORMATION.

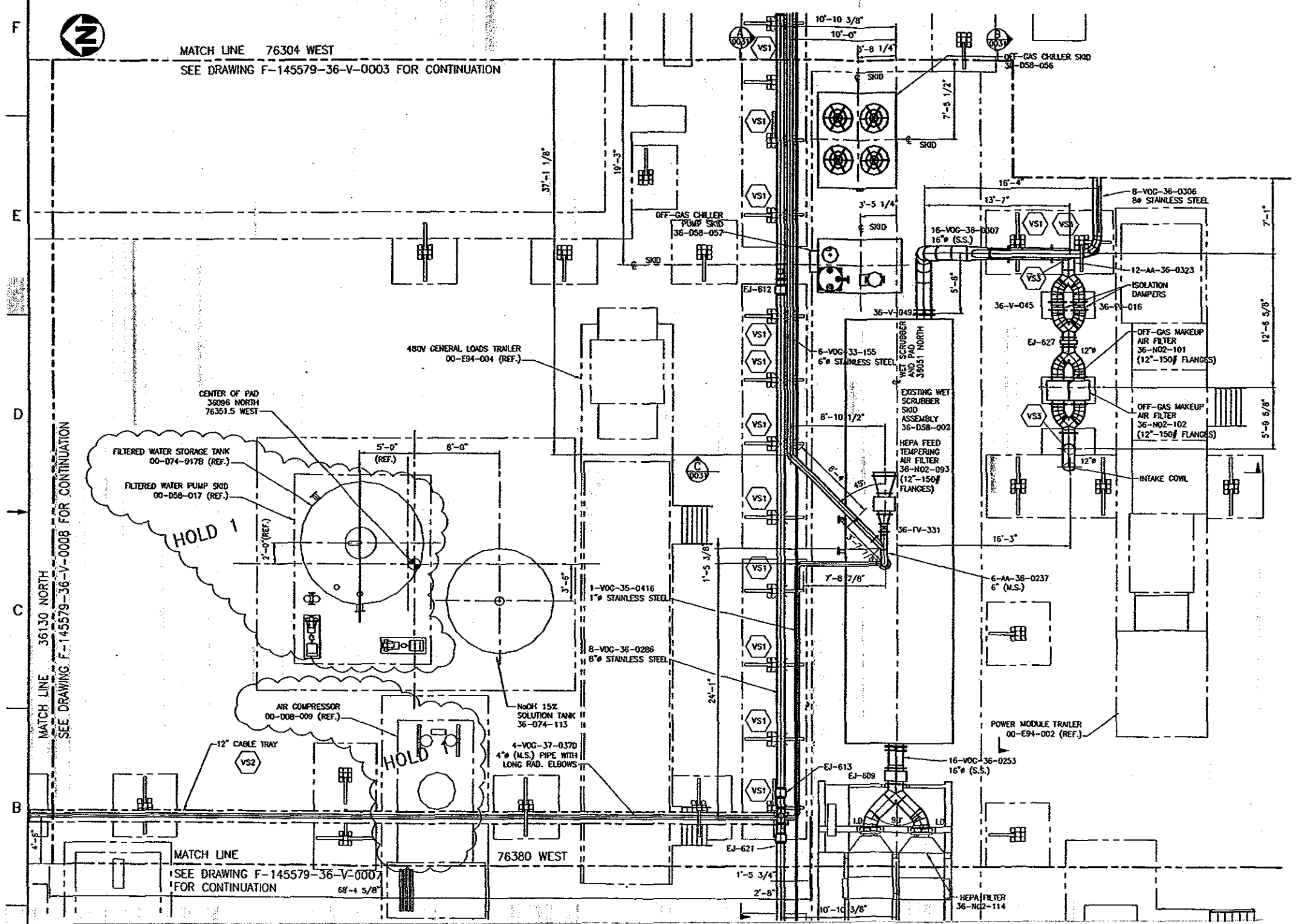

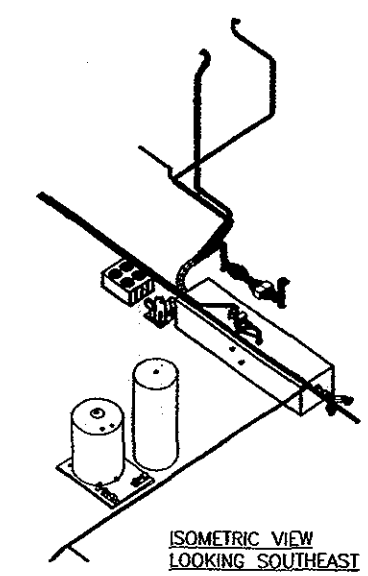

Rev.	REVISION DESCRIPTION	Date	By	Ch'd	Approved Design Eng.	Approved Proj. Eng.	DWG NO
H	ISSUED FOR CH2M REVIEW/ REPORT (AREA 36 ONLY)	24 MAR 06	SW	JM	JL	JSG	
G	ISSUED FOR OGTS DESIGN REPORT	24 FEB 06	RRB	JM	SRB	JSG	
F	ISSUED FOR DESIGN	16/12/05	RRB		FWS	JOS	
E	ISSUED FOR INFORMATION – OFF-GAS SYSTEM REVISED	14/11/05	RRB		FWS	JOS	
D	REISSUED FOR CH2M HILL REVIEW/90% REPORT-(AREA 36 ONLY)	26/04/05	RDB	PCF	FWS	SC	
C	ISSUED FOR CH2M HILL REVIEW/90% REPORT-(AREA 36 ONLY)	15/03/05	JCH	PCF	FWS	TH	
B	ISSUED FOR INTERNAL APPROVAL	21/12/04	JCH	AP	FWS	TH	
A	ISSUED FOR REVIEW	29 OCT 04	RDB	AP	FWS	JOS	

AMEC DWG. NO F-145579-36-V-0006 REV H

amec

AMEC PROJECT: 145579-FINAL DBVS DESIGN

U.S. DEPARTMENT OF ENERGY
Office of River Protection

BULK VITRIFICATION
OFF-GAS TREATMENT
WET SCRUBBER SKID PLAN

SIZE F | SCALE 1/4"=1'-0" | SHEET OF

DWG NO	TITLE
DRAWING TRACEABILITY LIST	

REF NUMBER	TITLE
NEXT USED ON	REFERENCES

REV NO	DESCRIPTION	REV BY DATE	REV BY	CHECKED BY	CHCK	Contract
REVISIONS						

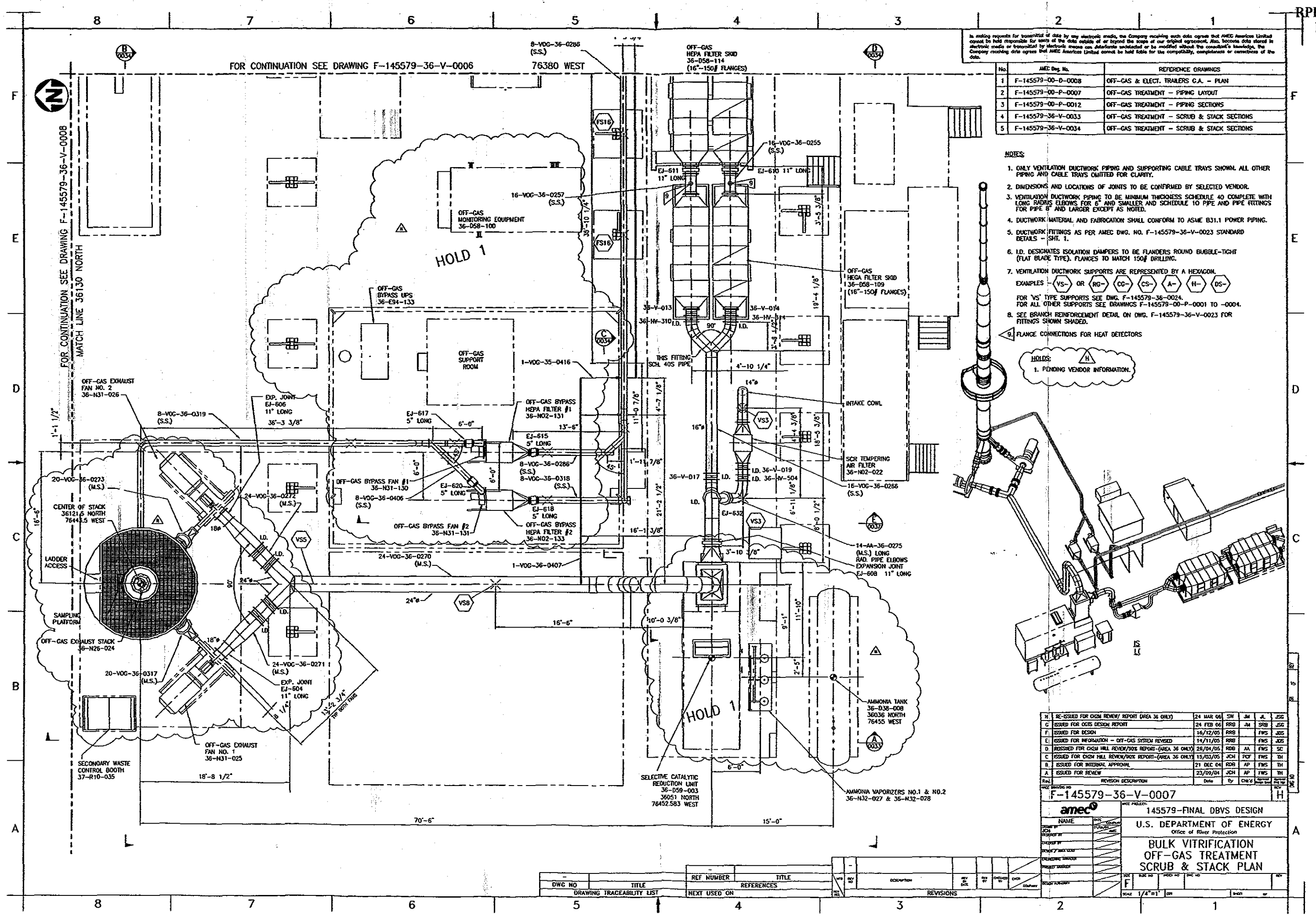

In making requests for transmittal of data by any electronic media, the Company receiving such data agrees that AMEC Americas Limited cannot be held responsible for users of the data outside of or beyond the scope of our original agreement. Also, because data stored in electronic media or transmitted by electronic means can deteriorate undetected or be modified without the consultant's knowledge, the Company receiving data agrees that AMEC Americas Limited cannot be held liable for the compatibility, completeness or correctness of the data.

No.	AMEC Dwg. No.	REFERENCE DRAWINGS
1	F-145579-00-D-0008	OFF-GAS & ELECT. TRAILERS C.A. - PLAN
2	F-145579-00-P-0007	OFF-GAS TREATMENT - PIPING LAYOUT
3	F-145579-00-P-0012	OFF-GAS TREATMENT - PIPING SECTIONS
4	F-145579-36-V-0033	OFF-GAS TREATMENT - SCRUB & STACK SECTIONS
5	F-145579-36-V-0034	OFF-GAS TREATMENT - SCRUB & STACK SECTIONS

Rev.	REVISION DESCRIPTION	Date	By	Chk'd	Appr'd	Appr'd
H	RE-ISSUED FOR CH2M REVIEW/ REPORT (AREA 36 ONLY)	24 MAR 06	SW	JM	JL	JSG
G	ISSUED FOR OGIS DESIGN REPORT	24 FEB 06	RRB	JM	SRB	JSG
F	ISSUED FOR DESIGN	16/12/05	RRB		FWS	JDS
E	ISSUED FOR INFORMATION - OFF-GAS SYSTEM REVISED	14/11/05	RRB		FWS	JDS
D	REISSUED FOR CH2M HILL REVIEW/90% REPORT-(AREA 36 ONLY)	28/04/05	RDB	AA	FWS	SC
C	ISSUED FOR CH2M HILL REVIEW/90% REPORT-(AREA 36 ONLY)	15/03/05	JCH	PCF	FWS	TH
B	ISSUED FOR INTERNAL APPROVAL	21 DEC 04	RDB	AP	FWS	TH
A	ISSUED FOR REVIEW	23/09/04	JCH	AP	FWS	TH

In making requests for transmittal of data by any electronic media, the Company receiving such data agrees that AMEC Americas Limited cannot be held responsible for uses of the data outside of or beyond the scope of our original agreement. Also, because data stored in electronic media or transmitted by electronic means can deteriorate undetected or be modified without the consultant's knowledge, the Company receiving data agrees that AMEC Americas Limited cannot be held liable for the compatibility, completeness or correctness of the data.

No.	AMEC Dwg. No.	REFERENCE DRAWINGS
1	F-145579-00-D-0041	MELT AREA G.A. ELEVATIONS NORTH AND WEST
2	F-145579-00-D-0051	MELT AREA G.A. PLAN VIEWS
3	F-145579-36-V-0003	OFF-GAS TREATMENT MELT & DRYER LOWER PLAN
4	F-145579-36-V-0004	OFF-GAS TREATMENT MELT & DRYER MIDDLE PLAN
5	F-145579-36-V-0005	OFF-GAS TREATMENT MELT & DRYER UPPER PLANS
5	F-145579-36-V-0027	OFF-GAS TREATMENT MELT & DRYER SECTIONS A & B
6	F-145579-36-V-0028	OFF-GAS TREATMENT MELT & DRYER SECTION C
7	F-145579-36-V-0029	OFF-GAS TREATMENT MELT & DRYER SECTION D

NOTES:

1. ONLY VENTILATION DUCTWORK PIPING AND SUPPORTING CABLE TRAYS SHOWN. ALL OTHER PIPING AND CABLE TRAYS OMITTED FOR CLARITY.
2. DIMENSIONS AND LOCATIONS OF JOINTS TO BE CONFIRMED BY SELECTED VENDOR.
3. VENTILATION DUCTWORK PIPING TO BE MINIMUM THICKNESS SCHEDULE 40 COMPLETE WITH LONG RADIUS ELBOWS FOR 6" AND SMALLER AND SCHEDULE 10 PIPE AND PIPE FITTINGS FOR PIPE 8" AND LARGER EXCEPT AS NOTED.
4. DUCTWORK MATERIAL AND FABRICATION SHALL CONFORM TO ASME B31.1 POWER PIPING.
5. DUCTWORK FITTINGS AS PER AMEC DWG. NO. F-145579-36-V-0023 STANDARD DETAILS – SHT. 1.
6. I.D. DESIGNATES ISOLATION DAMPERS TO BE FLANDERS ROUND BUBBLE-TIGHT (FLAT BLADE TYPE). FLANGES TO MATCH 150# DRILLING.
7. VENTILATION DUCTWORK SUPPORTS ARE REPRESENTED BY A HEXAGON.
   EXAMPLES - VS- OR RG- CG- CS- A- H- DS-
   FOR 'VS' TYPE SUPPORTS SEE DWG. F-145579-36-0024.
   FOR ALL OTHER SUPPORTS SEE DRAWINGS F-145579-00-P-0001 TO -0004.
8. SEE BRANCH REINFORCEMENT DETAIL ON DWG. F-145579-36-V-0023 FOR FITTINGS SHOWN SHADED.

HOLDS: 3
1. PENDING VENDOR INFORMATION.

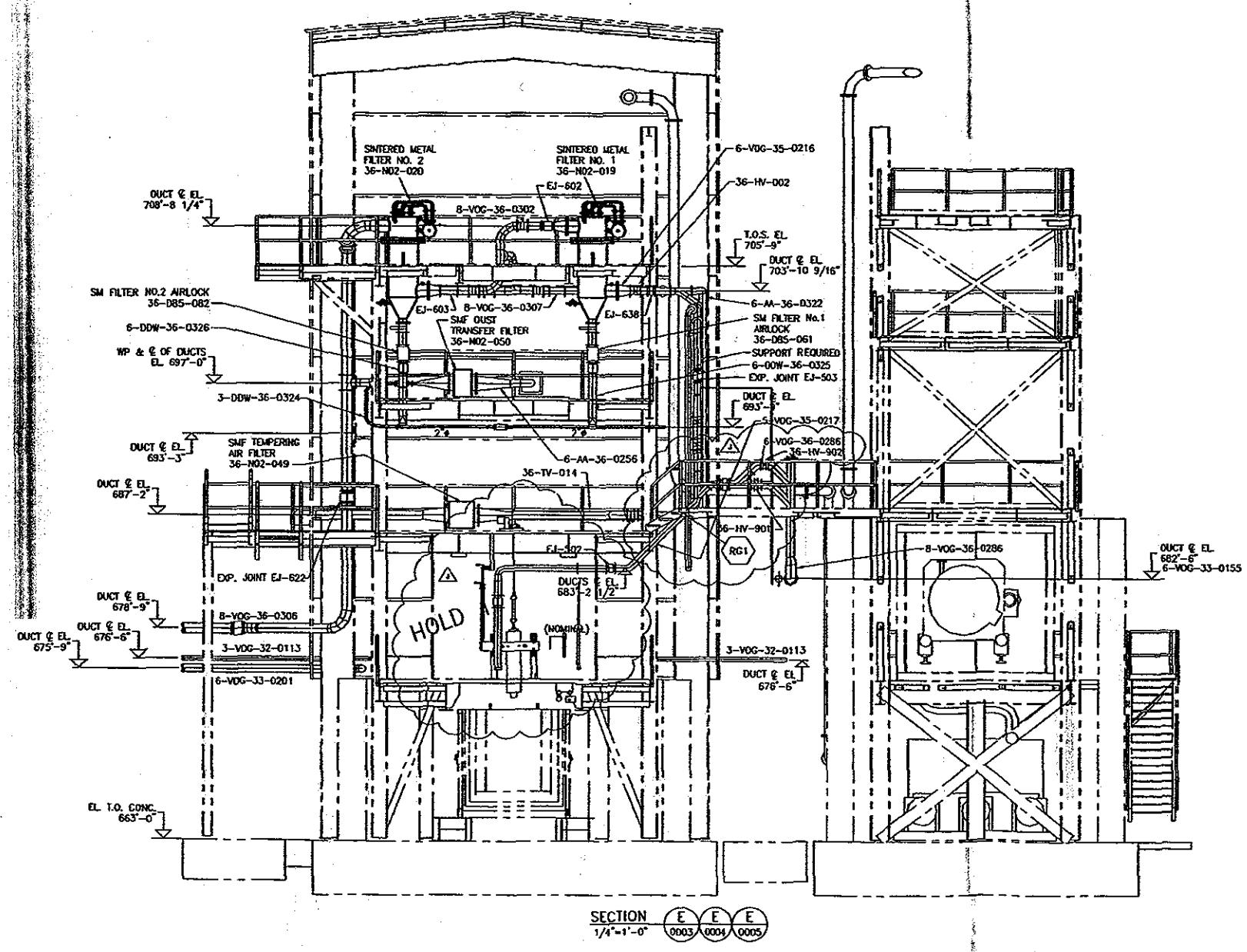

SECTION E E E
1/4"=1'-0" 0003 0004 0005

NOT APPROVED FOR CONSTRUCTION

Rev.	REVISION DESCRIPTION	Date	By	Chk'd	Approved	Approved for Const.	REV
J	RE-ISSUED FOR OGTS DESIGN REPORT	25 MAR 06	THB	JM	JL	JSG	
H	ISSUED FOR OGTS DESIGN REPORT	24 FEB 06	RRB	JM	SRB	JSG	
G	ISSUED FOR DESIGN	18/12/05	RRB		FWS	JDS	
F	ISSUED FOR INFORMATION – OFF-GAS SYSTEM REVISED	14/11/05	RDB		FWS	JDS	
E	REISSUED FOR CH2M HILL REVIEW/90% REPORT (AREA 36 ONLY)	26/04/05	JCH	PCF	FWS	SC	
D	ISSUED FOR CH2M HILL REVIEW/90% REPORT (AREA 36 ONLY)	15/03/05	JCH	PCF	FWS	TH	
C	ISSUED FOR CH2M HILL REVIEW/90% REPORT (DCV SYSTEM)	02/03/05	JCH	PCF	GJ	TH	
B	ISSUED FOR CH2M HILL REVISION/90% REPORT (AREA 33 ONLY)	31/01/05	RDB	PCF	FWS	TH	
A	ISSUED FOR INTERNAL APPROVAL	17/12/04	RDB	AP	FWS	TH	

AMEC DRAWING NO: F-145579-36-V-0030 REV: J

amec

AMEC PROJECT: 145579-FINAL DBVS DESIGN

U.S. DEPARTMENT OF ENERGY
Office of River Protection

BULK VITRIFICATION
OFF-GAS TREATMENT
MELT & DRYER SECTION 'E'

SIZE F SCALE 1/4"=1'-0"

NAME	COMPANY
DRAWN BY RDB	AMEC
DESIGNED BY	
CHECKED BY	
DESIGN / ANALYSIS LEAD	
MECHANICAL VENDOR	
PROJECT MANAGER	
DESIGN AUTHORITY	

DWG NO	TITLE
DRAWING TRACEABILITY LIST	

REF NUMBER	TITLE
REFERENCES	
NEXT USED ON	

REV NO	DESCRIPTION	REV BY	REV DATE	CHECKED BY	CHK'D	COMPANY
REVISIONS						

In making requests for transmittal of data by any electronic media, the Company receiving such data agrees that AMEC Americas Limited cannot be held responsible for uses of the data outside of or beyond the scope of our original agreement. Also, because data stored in electronic media or transmitted by electronic means can deteriorate undetected or be modified without the consultant's knowledge, the Company receiving data agrees that AMEC Americas Limited cannot be held liable for the compatibility, completeness or correctness of the data.

No.	AMEC Dwg. No.	REFERENCE DRAWINGS
1	F-145579-00-D-0008	OFF-GAS & ELECT. TRAILERS G.A. - PLAN
2	F-145579-00-P-0007	OFF-GAS TREATMENT - PIPING LAYOUT
3	F-145579-00-P-0012	OFF-GAS TREATMENT - PIPING SECTIONS
4	F-145579-36-V-0007	OFF-GAS TREATMENT - SCRUB & STACK PLAN
5	F-145579-36-V-0033	OFF-GAS TREATMENT - SCRUB & STACK SECTION
6	F-145579-36-V-0021	OFF-GAS EXHAUST STACK DETAILS

NOTES:

1. ONLY VENTILATION DUCTWORK, PIPING AND SUPPORTING CABLE TRAYS SHOWN. ALL OTHER PIPING AND CABLE TRAYS OMITTED FOR CLARITY.
2. DIMENSIONS AND LOCATIONS OF JOINTS TO BE CONFIRMED BY SELECTED VENDOR.
3. VENTILATION DUCTWORK PIPING TO BE MINIMUM THICKNESS SCHEDULE 40 COMPLETE WITH LONG RADIUS FOR PIPE 6" AND SMALLER AND SCHEDULE 10 FOR PIPE 8" AND LARGER EXCEPT AS NOTED.
4. DUCTWORK MATERIAL AND FABRICATION SHALL CONFORM TO ASME B31.1 POWER PIPING.
5. DUCTWORK FITTINGS AS PER AMEC DWG. NO. F-145579-36-V-0023 STANDARD DETAILS - SHT. 1.
6. I.D. DESIGNATES ISOLATION DAMPERS TO BE FLANDERS ROUND BUBBLE-TIGHT (FLAT BLADE TYPE). FLANGES TO MATCH 150# DRILLING.
7. VENTILATION DUCTWORK SUPPORTS ARE REPRESENTED BY A HEXAGON.
   EXAMPLES - VS- OR RG- CG- CS- A- H- DS-
   FOR "VS" TYPE SUPPORTS SEE DWG. F-145579-36-0024.
   FOR ALL OTHER SUPPORTS SEE DRAWINGS F-145579-00-P-0001 TO -0004.
8. SEE BRANCH REINFORCEMENT DETAIL ON DWG. F-145579-36-V-0023 FOR FITTINGS SHOWN SHADED.

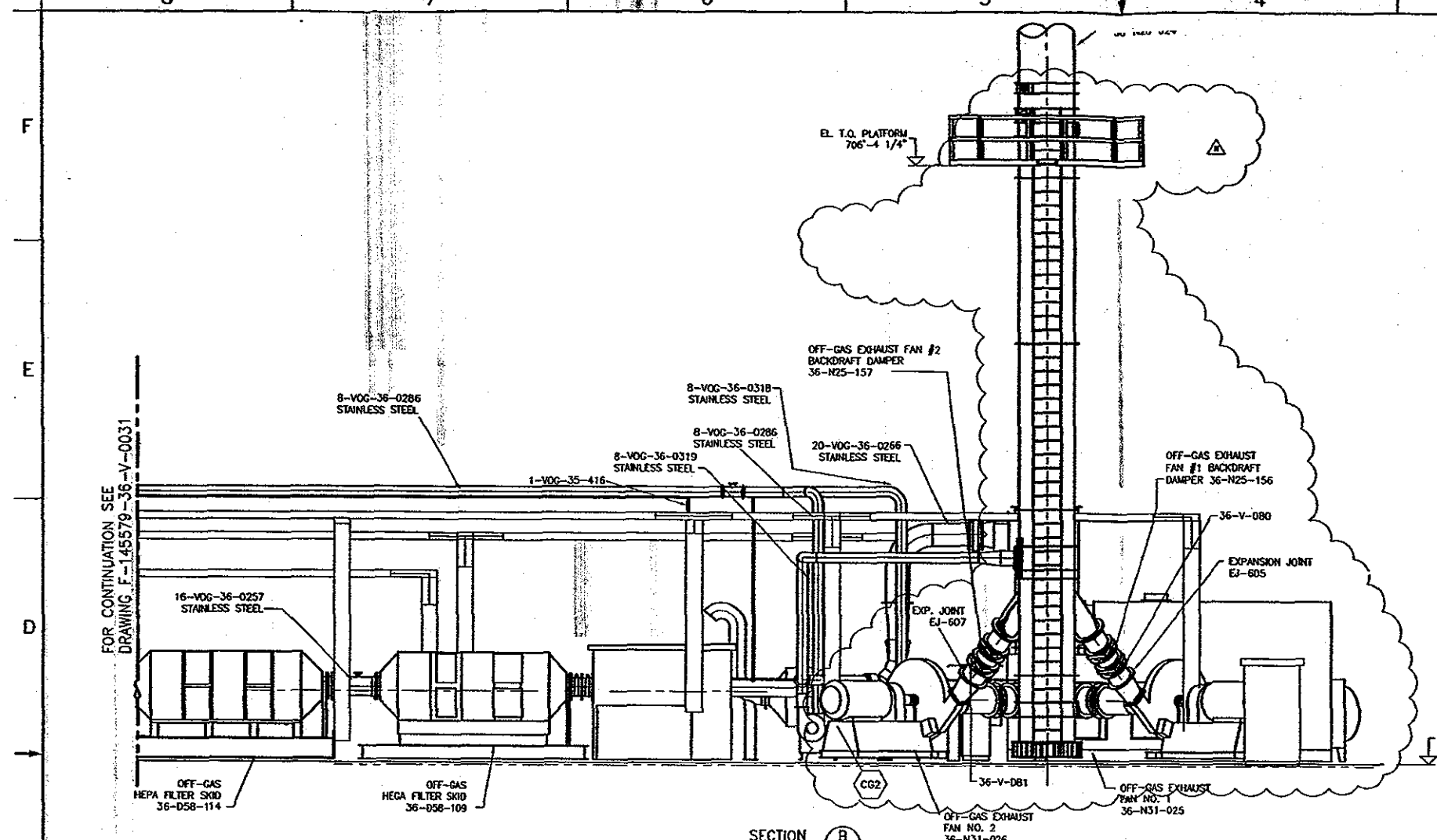

SECTION B 0007
1/4"=1'-0"

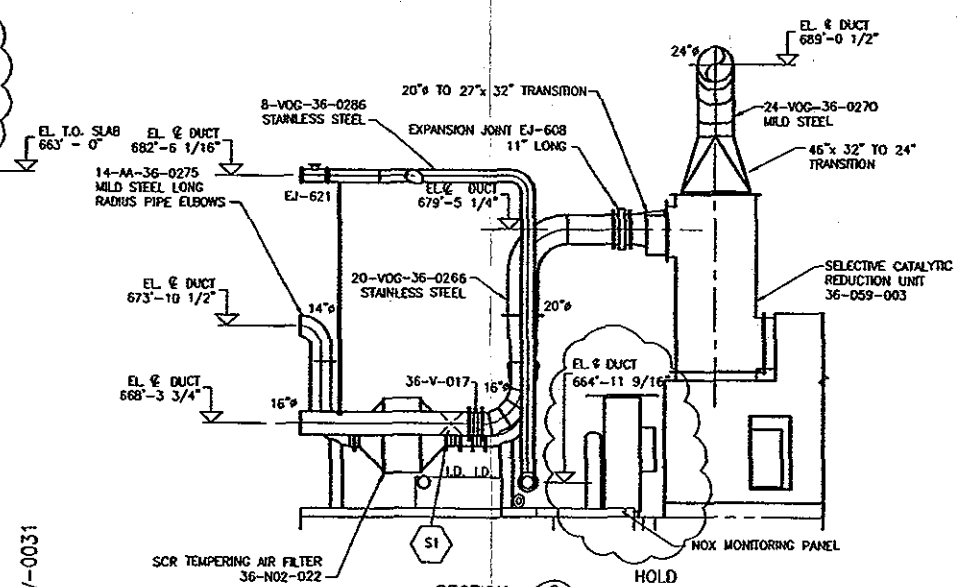

SECTION C 0007
1/4"=1'-0"

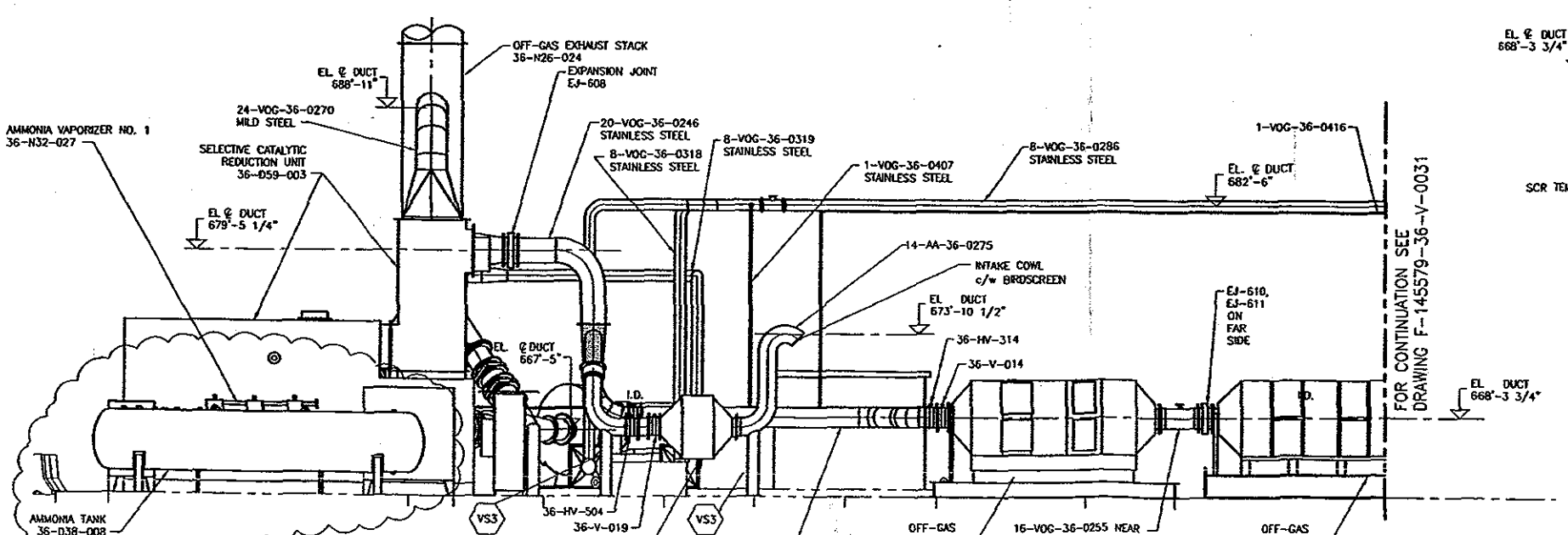

SECTION D 0007
1/4"=1'-0"

REV	REVISION DESCRIPTION	Date	By	Chk'd	Approved	Approved Date	REV
K	ISSUED FOR CH2M REVIEW/ REPORT (AREA 36 ONLY)	25 MAR 06	THB	JM	JL	JSG	
G	ISSUED FOR OGTS DESIGN REPORT	24 FEB 06	RRB	JM	SRB	JSG	
F	ISSUED FOR DESIGN	16 DEC 05	RRB		FWS	JDS	
E	ISSUED FOR INFORMATION - OFF GAS SYSTEM REVISED	14 NOV 05	RRB		FWS	JDS	
D	REISSUED FOR CH2M HILL REVIEW/90% REPORT (AREA 36 ONLY)	26 APR 05	RDB	AA	FWS	SC	
C	ISSUED FOR CH2M HILL REVIEW/90% REPORT (AREA 36 ONLY)	10/03/05	JCH	PCF	FWS	TH	
B	ISSUED FOR INTERNAL APPROVAL	21 DEC 04	RDB	AP	FWS	TH	
A	ISSUED FOR REVIEW	23/09/04	JCH	AP	FWS	TH	

AMEC DRAWING NO: F-145579-36-V-0034 REV: H

amec

AMEC PROJECT: 145579-FINAL DBVS DESIGN

U.S. DEPARTMENT OF ENERGY
Office of River Protection

BULK VITRIFICATION
OFF-GAS TREATMENT
SCRUB & STACK SECTIONS

SIZE F | SCALE 1/4"=1' | SHEET OF

DWG NO	TITLE
DRAWING TRACEABILITY LIST	

REF NUMBER	TITLE
REFERENCES	
NEXT USED ON	

REV	DESCRIPTION	CHKD	COMPANY
REVISIONS			

DMJM H&N | AECOM

ATTACHMENT 2

Calculation No.: 145579-B-CA-023	Originator: J. Van Corbach JVC Date: 3/24/06
Rev. No.: 1	Checker: Kevin Jones KMJ Date: 3/25/06
Calculation Title: DBVS OGTS Bypass Structural Analysis	

Mechanical Properties of Circular Duct

Mechanical Properties For Circular Duct

Nominal Duct Size	Schedule	Duct Diameter(1)	Material	Nominal Thickness	17.5% Permitted Under Wall Thickness(2)	Moment of Inertia(4) $\pi(d^4-d_1^4)/64$	Cross-sectional Area(3)	Cross-sectional Area(4)	Duct Weight per foot(3)	Equivalent Density(5)	Radius of Gyration, k(4)
(in)		(in)		(in)	(in)	(in^4)	(in^2)	(in^2)	(lbf/ft)	(lbf/in^3)	(in)
6	40S	6.625	A312 TP316L	0.280	0.2310	23.74	5.58	4.64	19.42	0.290	2.26
8	10S	8.625	A312 TP316L	0.148	0.1221	29.48	3.94	3.26	13.72	0.290	3.01
12	10S	12.75	A312 TP316L	0.180	0.1485	116.71	7.11	5.88	24.74	0.290	4.46

(1) - Duct diameter is the outer diameter of the associated nominal pipe size per ASTM A312/A 312M-05, page 10.
(2) - Duct wall thickness per ASTM A312/A 312M-05, page 5. ASTM A53 also uses 12.5% reduction per ASTM A 53/A 53M-02, page 17. Include an additional 5% for corrosion/erosion
(3) - Based on Nominal Wall Thickness.
(4) - Based on Manufacturers allowed Under Wall Thickness and corrosion/erosion reduction
(5) - Mark's Standard Handbook for Mechanical Engineers, page 6-44

Attachment 2
Calc #145579-B-CA-023
Revision 1
Sheet 2 of 2

DMJM H&N | AECOM

ATTACHMENT 3

Calculation No.: 145579-B-CA-023	Originator: J. Van Corbach JVC Date: 3/24/06
Rev. No.: 1	Checker: Kevin Jones KMJ Date: 3/25/06
Calculation Title: DBVS OGTS Bypass Structural Analysis	

Expansion Joint Schedule

Calculation 145579-B-CA-023 Expansion Joint Schedule										
Tag Number	Node Numbers	X-Dspl (max)	X-Dspl (min)	Y-Dspl (max)	Y-Dspl (min)	Z-Dspl (max)	Z-Dspl (min)	X - Max Total Dspl	Y - Max Total Dspl	Z - Max Total Dspl
EJ-634	N1	0	0	0	0	0	0	0.648	0.12	0.014
	N92	-0.002	-0.648	0.12	-0.011	0.008	-0.014	Axial	Lateral	Lateral
EJ-636	N88	0.014	-0.016	0.009	0	0	-0.05	0.173	0.047	1.883
	N89	0.157	-0.128	0	-0.038	1.833	0	Lateral	Lateral	Axial
EJ-637	N107	0.041	0	0.002	0.002	0.002	-0.002	2.516	0.196	0.205
	N108	0	-2.475	-0.192	-0.194	0.2	-0.203	Axial	Lateral	Lateral
EJ-613	N109	0	-2.421	0.008	-0.007	0.015	-0.014	2.448	0.012	0.017
	N108A	0.027	0	-0.002	-0.004	0.002	-0.002	Axial	Lateral	Lateral
EJ-621	N110	0	-0.027	0.004	0.003	0.002	-0.002	2.409	0.151	0.08
	N111A	2.382	0	-0.105	-0.147	0.077	-0.078	Axial	Lateral	Lateral
EJ-612	N111	0	-2.467	0.002	0.002	0.002	-0.002	2.503	0.002	0.002
	N110A	0.036	0	0	0	0	0	Axial	Lateral	Lateral
EJ-635	N105B	0.129	-0.157	0.325	-0.017	0	-2.292	0.173	0.335	2.342
	N104A	0.016	-0.013	0	-0.01	0.05	0	Lateral	Lateral	Axial
EJ-615 - Filter Intake	N51	0	0	0	0	0	0	0.332	0.004	1.338
	N96	0.332	-0.026	0	-0.004	0.013	-1.338	Lateral	Lateral	Axial
EJ-618 - Filter Intake	N52	0	0	0	0	0	0	0.48	0.002	0.205
	N97	0.48	-0.025	0	-0.002	0	-0.205	Lateral	Lateral	Axial
EJ-620 - Fan Outlet	N100	0	0	0	0	0	0	0.232	0.004	1.313
	N101	0.002	-0.232	-0.002	-0.004	1.313	0	Lateral	Lateral	Axial
EJ-617 - Fan Outlet	N55	0	0	0	0	0	0	0.094	0.004	1.095
	N57	0.094	-0.088	-0.002	-0.004	1.095	-0.004	Lateral	Lateral	Axial

Attachment 3
Calc #145579-B-CA-023
Revision 1
Sheet 2 of 2

DMJM H&N | AECOM

ATTACHMENT 4

Calculation No.: 145579-B-CA-023	Originator: J. Van Corbach JC Date: 3/24/06
Rev. No.: 1	Checker: Kevin Jones KMJ Date: 3/25/06
Calculation Title: DBVS OGTS Bypass Structural Analysis	

RISA 3D Analysis Input and Output Data

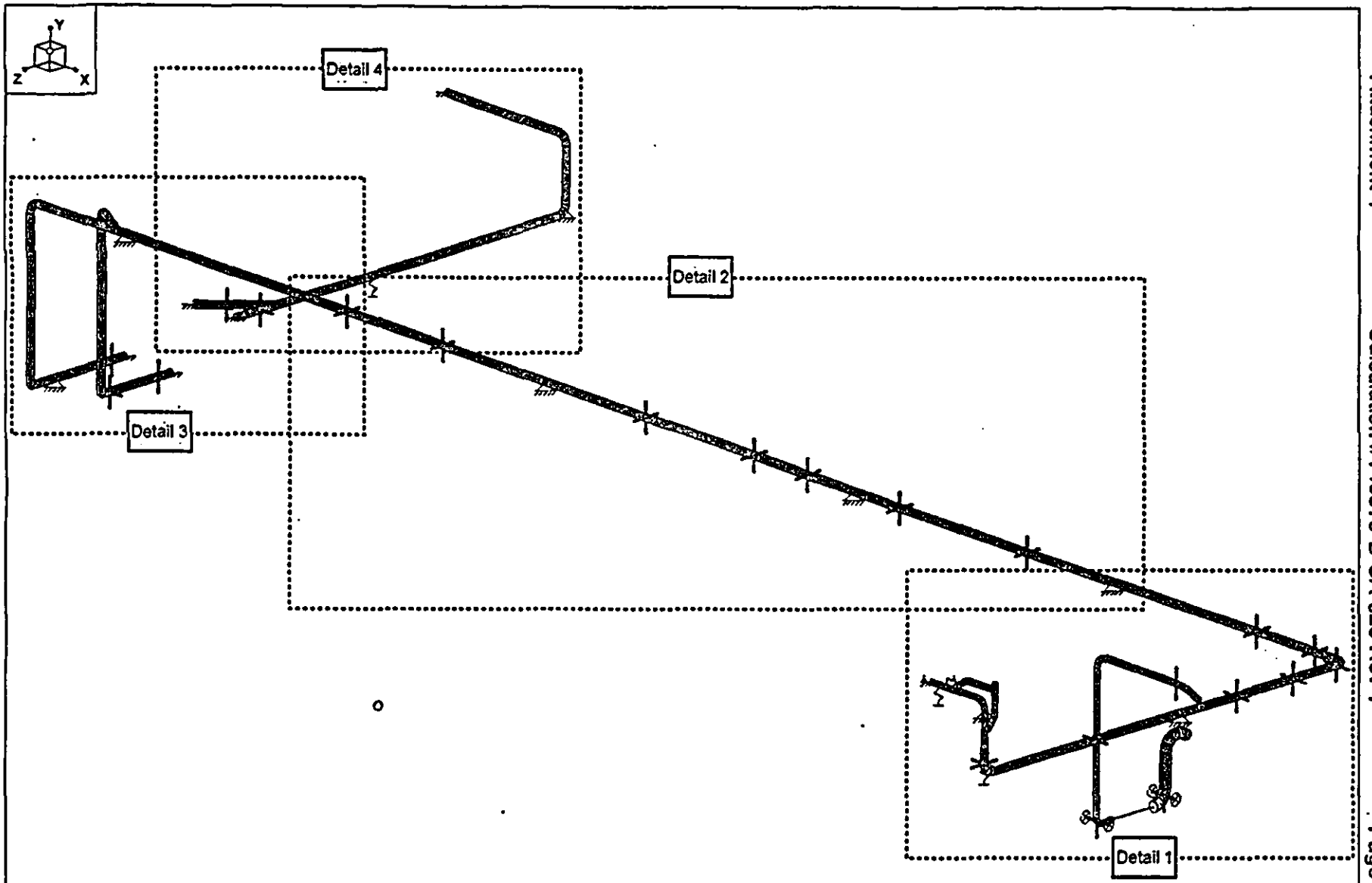

DMJM H&N	DBVS OGTS Bypass	
DMJMH&N		Mar 23, 2006 at 9:03 AM
145579-B-CA-023	Rendered Model with Supports	untitled.r3d

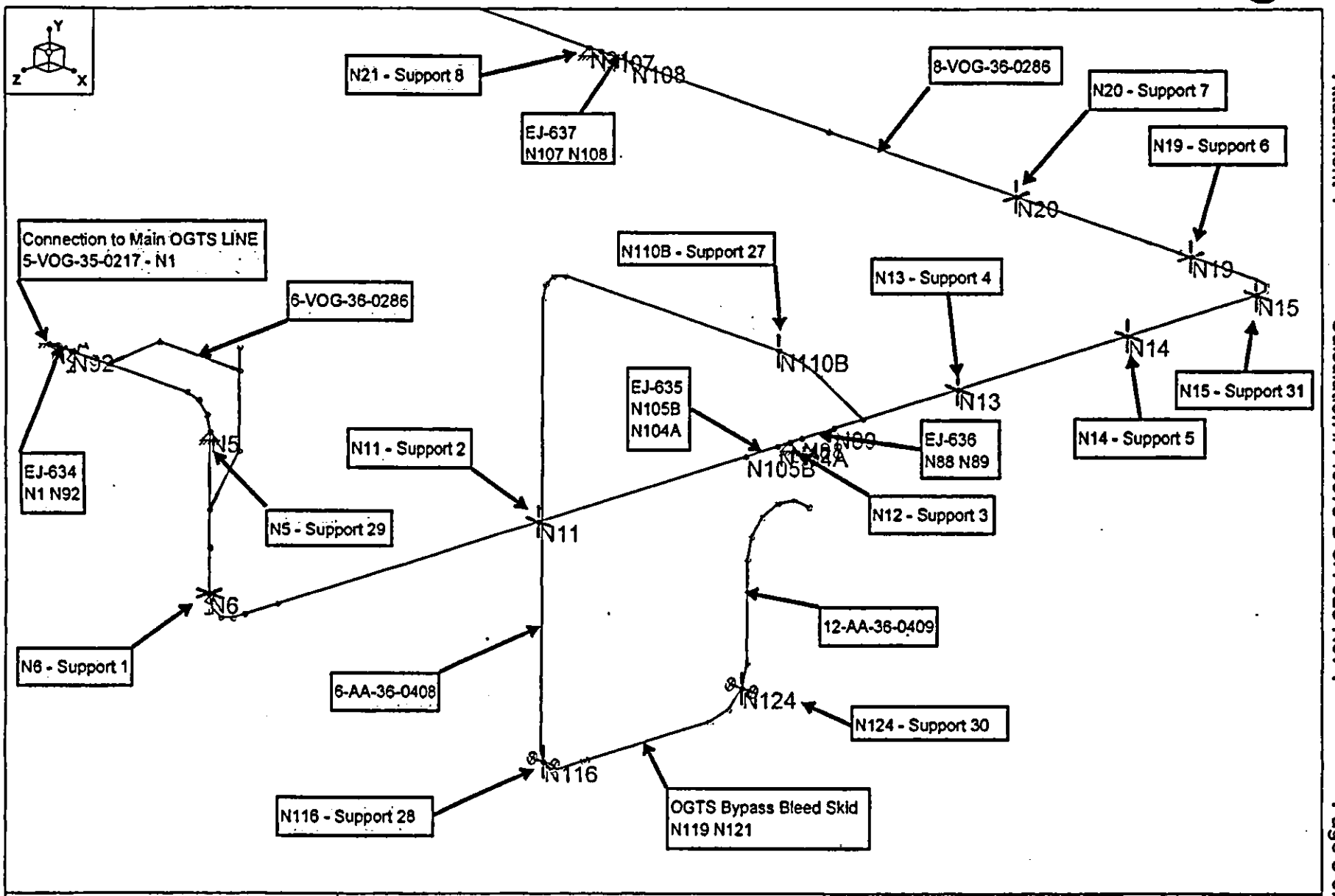

DMJM H&N	DBVS OGTS Bypass	
DMJMH&N	DETAIL 1	Mar 23, 2006 at 9:10 AM
145579-B-CA-023	Support and Expansion Joint Locations	untitled.r3d

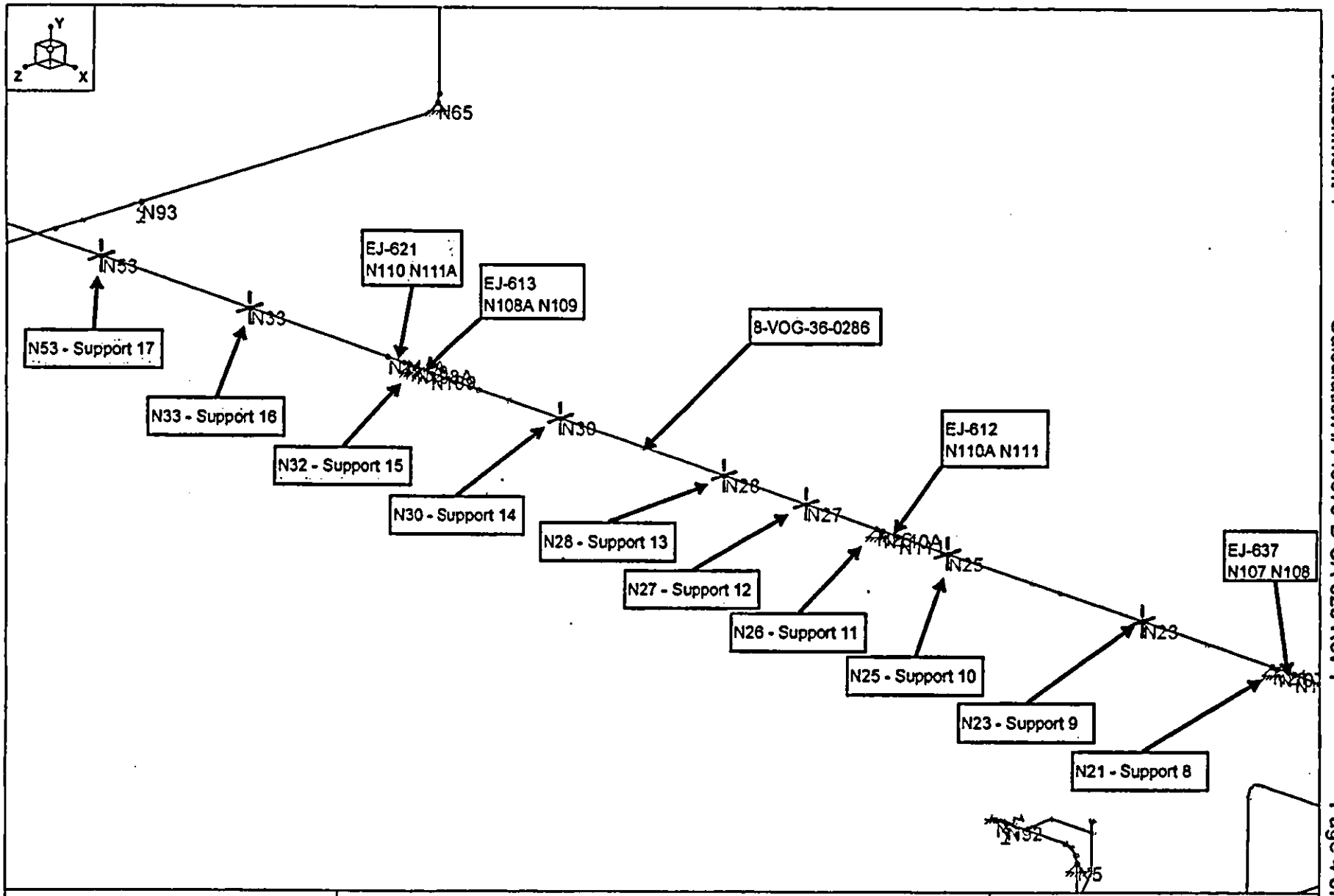

DMJM H&N	DBVS OGTS Bypass	
DMJMH&N	DETAIL 2	Mar 23, 2006 at 11:10 AM
145579-B-CA-023	Support and Expansion Joint Locations	untitled.r3d

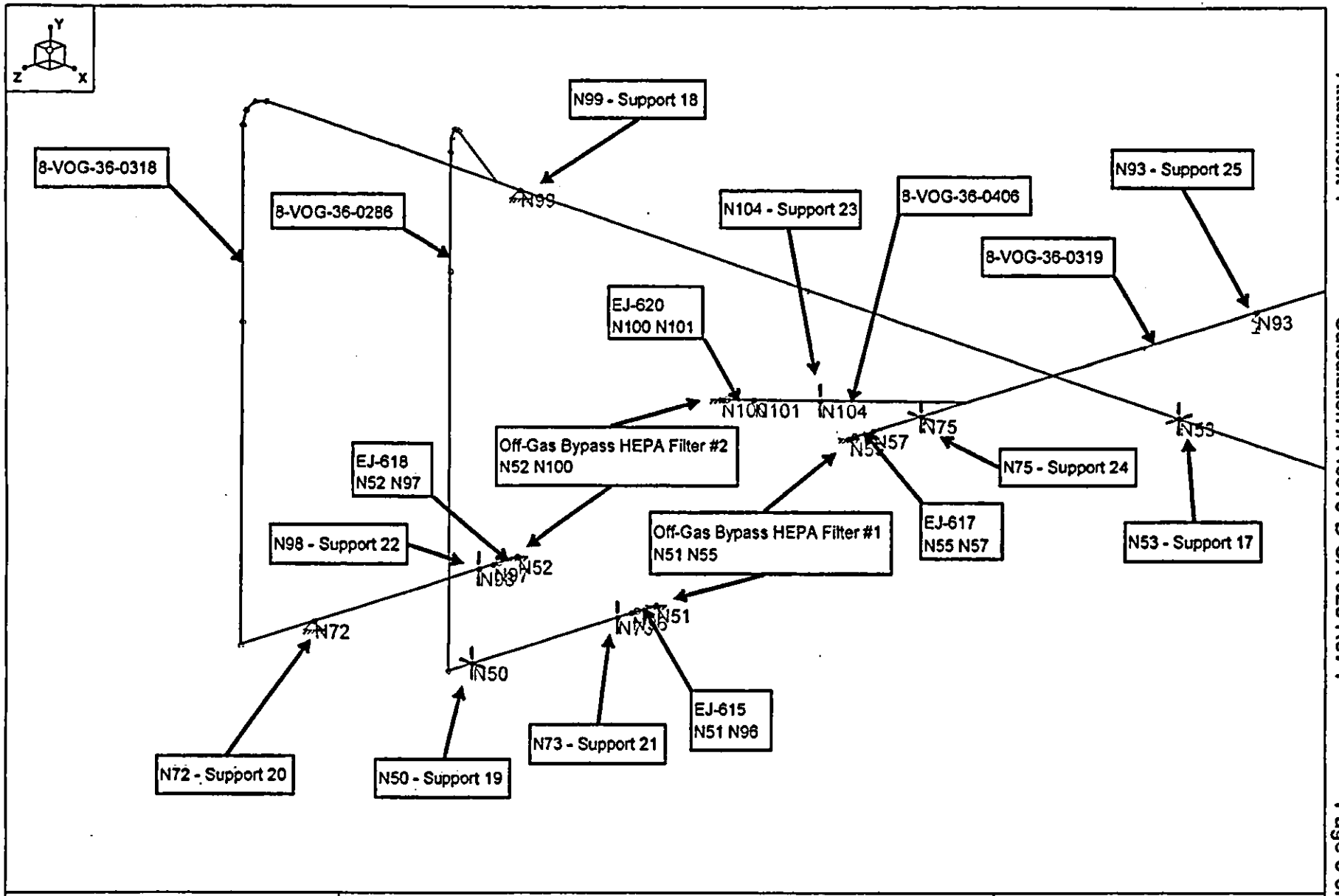

DMJM H&N	DBVS OGTS Bypass	
DMJMH&N	DETAIL 3	Mar 23, 2006 at 9:15 AM
145579-B-CA-023	Support and Expansion Joint Locations	untitled.r3d

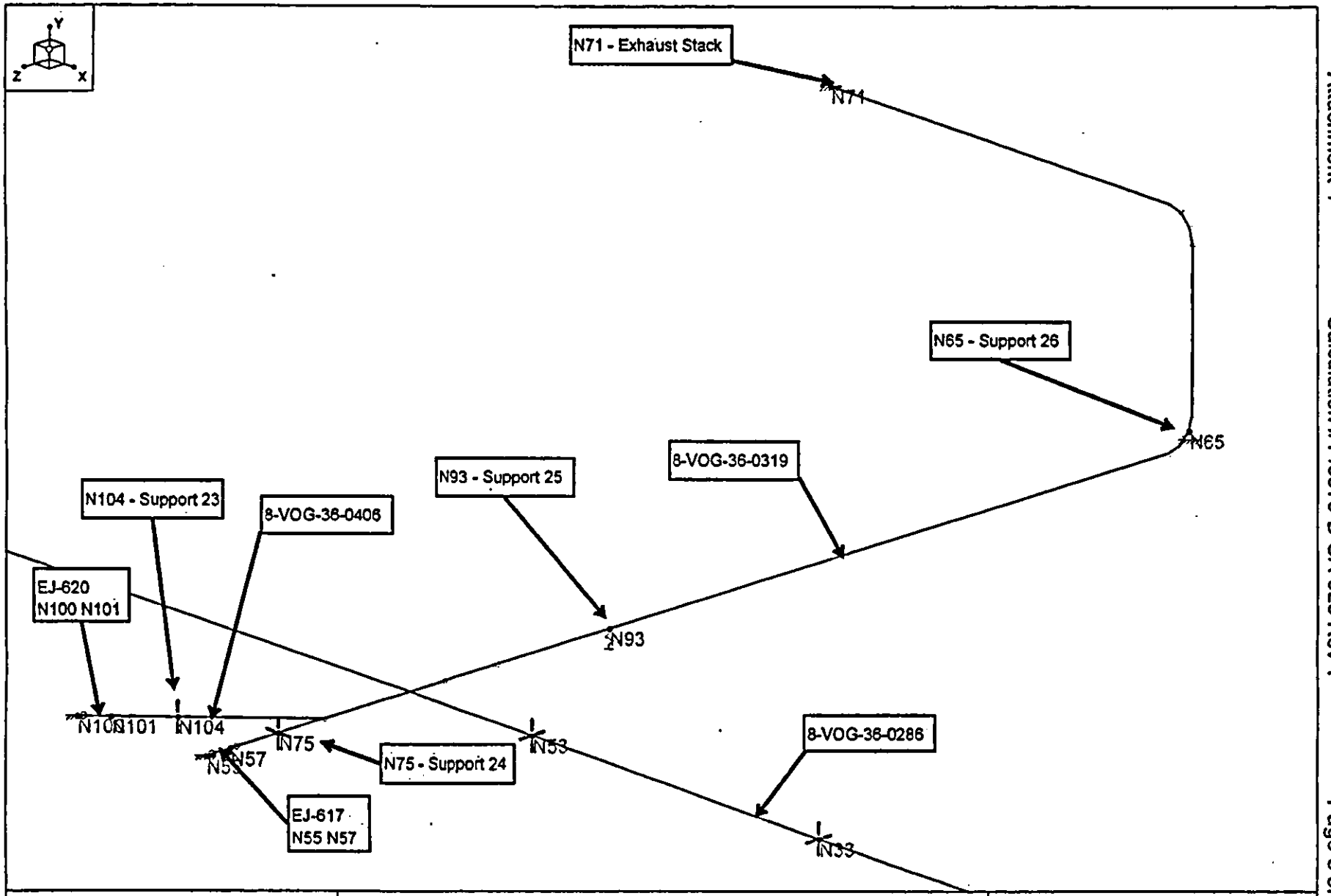

DMJM H&N	DBVS OGTS Bypass	
DMJMH&N	DETAIL 4	Mar 23, 2006 at 9:15 AM
145579-B-CA-023	Support and Expansion Joint Locations	untitled.r3d

Global

Display Sections for Member Calcs	5
Max Internal Sections for Member Calcs	97
Include Shear Deformation	Yes
Include Warping	Yes
Area Load Mesh (in^2)	144
Merge Tolerance (in)	.12
P-Delta Analysis Tolerance	0.50%
Vertical Axis	Y

Hot Rolled Steel Code	AISC: ASD 9th
Cold Formed Steel Code	AISI 99: ASD
NDS Wood Code	NDS 91: ASD
NDS Temperature	< 100F
Concrete Code	ACI 1999

Number of Shear Regions	4
Region Spacing Increment (in)	4
Biaxial Column Method	PCA Load Contour
Parme Beta Factor (PCA)	.65
Concrete Stress Block	Rectangular
Use Cracked Sections	Yes
Bad Framing Warnings	No
Unused Force Warnings	Yes

Joint Coordinates and Temperatures

	Label	X [in]	Y [in]	Z [in]	Temp [F]	Detach From Dia...
1	N1	0	0	0	0	
2	N2	70.4375	0	0	0	
3	N3	76.437567	-1.607445	0	0	
4	N4	80.830055	-5.999567	0	0	
5	N5	82.437	-12	0	0	
6	N6	82.437	-73.75	0	0	
7	N7	82.437	-79.75	-1.607695	0	
8	N8	82.437	-84.142305	-6	0	
9	N9	82.437	-85.75	-12	0	
10	N10	82.437	-85.75	-18	0	
11	N11	82.437	-85.75	-165	0	
12	N12	82.437	-85.75	-291	0	
13	N13	82.437	-85.75	-375	0	
14	N14	82.437	-85.75	-459	0	
15	N15	82.437	-85.75	-523.25	0	
16	N16	80.829305	-85.75	-529.25	0	
17	N17	76.437	-85.75	-533.642305	0	
18	N18	70.437	-85.75	-535.25	0	
19	N19	36.062	-85.75	-535.25	0	
20	N20	-53.938	-85.75	-535.25	0	
21	N21	-275.938	-85.75	-535.25	0	
22	N22	-341.938	-85.75	-535.25	0	
23	N23	-407.938	-85.75	-535.25	0	
24	N24	-520.938	-85.75	-535.25	0	
25	N25	-605.938	-85.75	-535.25	0	
26	N26	-677.938	-85.75	-535.25	0	
27	N27	-749.938	-85.75	-535.25	0	
28	N28	-833.938	-85.75	-535.25	0	
29	N29	-917.938	-85.75	-535.25	0	
30	N30	-1001.938	-85.75	-535.25	0	
31	N31	-1085.938	-85.75	-535.25	0	
32	N32	-1157.938	-85.75	-535.25	0	
33	N33	-1319.938	-85.75	-535.25	0	

Joint Coordinates and Temperatures (Continued)

	Label	X [in]	Y [in]	Z [in]	Temp [F]	Detach From Dia...
34	N34	-1823.416	-85.75	-535.25	0	
35	N35	-1943.063	-85.75	-535.25	0	
36	N36	-1872.671195	-85.75	-563.6875	0	
37	N37	-1877.867347	-87.357695	-566.6875	0	
38	N38	-1881.671195	-91.75	-568.883653	0	
39	N39	-1883.0635	-97.75	-569.6875	0	
40	N40	-1949.063	-87.357695	-535.25	0	
41	N41	-1953.455305	-91.75	-535.25	0	
42	N42	-1955.063	-97.75	-535.25	0	
43	N47	-1955.063	-296.25	-535.25	0	
44	N49	-1883.0635	-296.25	-569.6875	0	
45	N50	-1883.0635	-296.2505	-581.688	0	
46	N51	-1883.063	-296.25	-673.125	0	
47	N52	-1955.063	-296.25	-673.125	0	
48	N53	-1469.938	-85.75	-535.25	0	
49	N55	-1869.563	-249.625	-756.625	0	
50	N57	-1869.563	-249.625	-768.625	0	
51	N61	-1869.563	-249.625	-771.625	0	
52	N62	-1869.563	-249.625	-815.3125	0	
53	N63	-1869.563	-249.625	-1238.875	0	
54	N64	-1869.563	-248.017305	-1244.875	0	
55	N65	-1869.563	-243.625	-1249.2673	0	
56	N66	-1869.563	-237.625	-1250.875	0	
57	N67	-1869.563	-171.625	-1250.875	0	
58	N68	-1871.170695	-165.625	-1250.875	0	
59	N69	-1875.563	-161.232695	-1250.875	0	
60	N70	-1881.563	-159.625	-1250.875	0	
61	N71	-2057.313	-159.625	-1250.875	0	
62	N72	-1955.063	-296.25	-571.25	0	
63	N73	-1883.0635	-296.2505	-654.125	0	
64	N75	-1869.563	-249.625	-792.625	0	
65	N76	82.437	-85.75	-34	0	
66	N77	-150.938	-85.75	-535.25	0	
67	N78	-491.938	-85.75	-535.25	0	
68	N79	-1053.938	-85.75	-535.25	0	
69	N81	-1661.938	-85.75	-535.25	0	
70	N82	-1955.063	-173.75	-535.25	0	
71	N83	-1883.0635	-143.75	-569.6875	0	
72	N84	30.062	-85.75	-535.25	0	
73	N85	14.0625	-85.75	-535.25	0	
74	N88	82.437	-85.75	-297	0	
75	N89	82.437	-85.75	-313	0	
76	N90	-1869.563	-249.625	-876	0	
77	N91	-1869.563	-249.625	-902.5	0	
78	N92	11	0	0	0	
79	N93	-1869.563	-249.625	-959	0	
80	N96	-1883.063	-296.25	-661.125	0	
81	N97	-1955.063	-296.25	-661.125	0	
82	N98	-1955.063	-296.25	-654.125	0	
83	N99	-1811.416	-85.75	-535.25	0	
84	N100	-1932.1255	-249.625	-752.75	0	
85	N101	-1923.640253	-249.625	-761.235247	0	
86	N103	-1918.690472	-249.625	-766.185028	0	
87	N104	-1906.6697	-249.625	-778.2058	0	
88	N101A	97.6245	-15.1875	0	0	
89	N103A	56.34325	15.1875	0	0	
90	N105	82.437	-41.53125	0	0	
91	N106	97.6245	-15.21875	0	0	
92	N106A	97.6245	23.8125	0	0	

Joint Coordinates and Temperatures (Continued)

	Label	X [in]	Y [in]	Z [in]	Temp [F]	Detach From Dia...
93	N105A	29.812	0	0	0	
94	N106B	82.437	-56.25	0	0	
95	N107	-269.938	-85.75	-535.25	0	
96	N108	-253.938	-85.75	-535.25	0	
97	N110A	-671.938	-85.75	-535.25	0	
98	N111	-655.938	-85.75	-535.25	0	
99	N108A	-1151.938	-85.75	-535.25	0	
100	N109	-1135.938	-85.75	-535.25	0	
101	N110	-1163.938	-85.75	-535.25	0	
102	N111A	-1179.938	-85.75	-535.25	0	
103	N112	22	0	0	0	
104	N104A	82.437	-85.75	-285	0	
105	N105B	82.437	-85.75	-269	0	
106	N106C	82.437	-85.75	-327.25	0	
107	N107A	82.437	-64.006466	-305.506466	0	
108	N108B	80.829305	-59.763826	-301.263826	0	
109	N109A	76.437	-56.657997	-298.157997	0	
110	N110B	70.437	-55.5212	-297.0212	0	
111	N111B	-40.563	-55.521185	-297.021185	0	
112	N112A	-46.563007	-57.128882	-297.021185	0	
113	N113	-50.955318	-61.521193	-297.021185	0	
114	N114	-52.563015	-67.5212	-297.021185	0	
115	N115	-52.563015	-240.625	-297.021185	0	
116	N116	-52.563	-245.1249	-298.2269	0	
117	N117	-52.563015	-248.419068	-301.521093	0	
118	N118	-52.563015	-249.624815	-306.021	0	
119	N119	-52.563	-249.6248	-320.021	0	
120	N120	-52.563015	-249.624815	-318.021	0	
121	N121	-52.563015	-249.624815	-381.021	0	
122	N122	-52.563015	-249.624815	-382.146	0	
123	N123	-52.563015	-247.213297	-391.145907	0	
124	N124	-52.563	-240.6249	-397.7343	0	
125	N125	-52.563015	-231.625	-400.145815	0	
126	N126	-52.563015	-191.625	-400.145815	0	
127	N127	-52.563015	-183.453087	-402.107718	0	
128	N128	-52.563015	-177.062544	-407.565757	0	
129	N129	-52.563015	-173.846427	-415.330151	0	
130	N130	-52.563015	-174.505807	-423.708363	0	
131	N131	-52.563015	-178.896947	-430.874053	0	

Joint Boundary Conditions

	Joint Label	X [lb/in]	Y [lb/in]	Z [lb/in]	X Rot.[k-ft/rad]	Y Rot.[k-ft/rad]	Z Rot.[k-ft/rad]
1	N1	Reaction	Reaction	Reaction	Reaction	Reaction	Reaction
2	N6	Reaction	S224	Reaction			
3	N9						
4	N10						
5	N11	Reaction	Reaction				
6	N12	Reaction	Reaction	Reaction			
7	N13	Reaction	Reaction				
8	N14	Reaction	Reaction				
9	N19		Reaction	Reaction			
10	N20		Reaction	Reaction			
11	N21	Reaction	Reaction	Reaction			
12	N22						
13	N23		Reaction	Reaction			
14	N24						
15	N25		Reaction	Reaction			
16	N26	Reaction	Reaction	Reaction			

Joint Boundary Conditions (Continued)

	Joint Label	X [lb/in]	Y [lb/in]	Z [lb/in]	X Rot.[k-ft/rad]	Y Rot.[k-ft/rad]	Z Rot.[k-ft/rad]
17	N27		Reaction	Reaction			
18	N28		Reaction	Reaction			
19	N29						
20	N30		Reaction	Reaction			
21	N31						
22	N32	Reaction	Reaction	Reaction			
23	N33		Reaction	Reaction			
24	N50	Reaction	Reaction				
25	N51	Reaction	Reaction	Reaction	Reaction	Reaction	Reaction
26	N52	Reaction	Reaction	Reaction	Reaction	Reaction	Reaction
27	N53		Reaction	Reaction			
28	N55	Reaction	Reaction	Reaction	Reaction	Reaction	Reaction
29	N57						
30	N61						
31	N62						
32	N63						
33	N64						
34	N65	Reaction	Reaction	Reaction			
35	N66						
36	N67						
37	N68						
38	N69						
39	N70						
40	N71	Reaction	Reaction	Reaction	Reaction	Reaction	Reaction
41	N72	Reaction	Reaction	Reaction			
42	N73		Reaction				
43	N75	Reaction	Reaction				
44	N85						
45	N88						
46	N90						
47	N91						
48	N92	S165	S249	S249			
49	N93		CS1e+6				
50	N98		Reaction				
51	N99	Reaction	Reaction	Reaction			
52	N100	Reaction	Reaction	Reaction	Reaction	Reaction	Reaction
53	N101						
54	N103						
55	N104		Reaction				
56	N105A						
57	N112						
58	N106B						
59	N5	Reaction	Reaction	Reaction			
60	N124	Reaction	Reaction		Reaction		
61	N116	Reaction	Reaction		Reaction		
62	N120						
63	N121						
64	N119						
65	N110B		Reaction				
66	N15	Reaction	Reaction				

Hot Rolled Steel Properties

	Label	E [ksi]	G [ksi]	Nu	Therm (1E5 F)	Density[lb/in^3]	Yield[ksi]
1	A36	29000	11154	.3	.65	.283	36
2	A312TP316L	28277	11154	.3	1.013	.29	25
3	A312TP316	28277	11154	.3	1.013	.29	30

Hot Rolled Steel Section Sets

	Label	Shape	Design List	Type	Material	Design Rules	A [in2]	Iyy [in4]	Izz [in4]	J [in4]
1	5in Dia. Duct	5 in Sch 40S 17.5% ...	Pipe	Beam	A312TP..	Typical	3.5781	12.82	12.82	25.6399
2	6in Dia. Duct	6 in Sch 40S 17.5% ...	Pipe	Beam	A312TP..	Typical	4.6402	23.7441	23.7441	47.4883
3	8in Dia. Duct	8 in dia Sch 10s 17.5...	Pipe	Beam	A312TP..	Typical	3.2616	29.4826	29.4826	58.9653
4	12in Dia. Duct	12 in dia Sch 10s 17...	Pipe	Beam	A312TP..	Typical	5.8789	116.71...	116.71...	233.42...

Member Primary Data

	Label	I Joint	J Joint	K Joint	Rotate(d...	Section/Shape	Design List	Type	Material	Design Rules
1	M1	N2	N3			6in Dia. Duct	Pipe	Beam	A312TP316L	Typical
2	M2	N3	N4			6in Dia. Duct	Pipe	Beam	A312TP316L	Typical
3	M3	N4	N5			6in Dia. Duct	Pipe	Beam	A312TP316L	Typical
4	M4	N5	N106B			6in Dia. Duct	Pipe	Beam	A312TP316L	Typical
5	M5	N6	N7			8in Dia. Duct	Pipe	Beam	A312TP316L	Typical
6	M6	N7	N8			8in Dia. Duct	Pipe	Beam	A312TP316L	Typical
7	M7	N8	N9			8in Dia. Duct	Pipe	Beam	A312TP316L	Typical
8	M8	N9	N10			8in Dia. Duct	Pipe	Beam	A312TP316L	Typical
9	M9	N10	N76			8in Dia. Duct	Pipe	Beam	A312TP316L	Typical
10	M10	N11	N105B			8in Dia. Duct	Pipe	Beam	A312TP316L	Typical
11	M11	N12	N88			8in Dia. Duct	Pipe	Beam	A312TP316L	Typical
12	M12	N13	N14			8in Dia. Duct	Pipe	Beam	A312TP316L	Typical
13	M13	N14	N15			8in Dia. Duct	Pipe	Beam	A312TP316L	Typical
14	M14	N15	N16			8in Dia. Duct	Pipe	Beam	A312TP316L	Typical
15	M15	N16	N17			8in Dia. Duct	Pipe	Beam	A312TP316L	Typical
16	M16	N17	N18			8in Dia. Duct	Pipe	Beam	A312TP316L	Typical
17	M17	N18	N19			8in Dia. Duct	Pipe	Beam	A312TP316L	Typical
18	M18	N19	N84			8in Dia. Duct	Pipe	Beam	A312TP316L	Typical
19	M19	N20	N77			8in Dia. Duct	Pipe	Beam	A312TP316L	Typical
20	M20	N21	N22			8in Dia. Duct	Pipe	Beam	A312TP316L	Typical
21	M21	N22	N23			8in Dia. Duct	Pipe	Beam	A312TP316L	Typical
22	M22	N23	N78			8in Dia. Duct	Pipe	Beam	A312TP316L	Typical
23	M23	N24	N25			8in Dia. Duct	Pipe	Beam	A312TP316L	Typical
24	M24	N25	N111			8in Dia. Duct	Pipe	Beam	A312TP316L	Typical
25	M25	N26	N27			8in Dia. Duct	Pipe	Beam	A312TP316L	Typical
26	M26	N111A	N33			8in Dia. Duct	Pipe	Beam	A312TP316L	Typical
27	M27	N28	N29			8in Dia. Duct	Pipe	Beam	A312TP316L	Typical
28	M28	N29	N30			8in Dia. Duct	Pipe	Beam	A312TP316L	Typical
29	M29	N30	N79			8in Dia. Duct	Pipe	Beam	A312TP316L	Typical
30	M30	N31	N109			8in Dia. Duct	Pipe	Beam	A312TP316L	Typical
31	M31	N32	N110			8in Dia. Duct	Pipe	Beam	A312TP316L	Typical
32	M32	N110A	N26			8in Dia. Duct	Pipe	Beam	A312TP316L	Typical
33	M33	N34	N35			8in Dia. Duct	Pipe	Beam	A312TP316L	Typical
34	M34	N35	N40			8in Dia. Duct	Pipe	Beam	A312TP316L	Typical
35	M35	N40	N41			8in Dia. Duct	Pipe	Beam	A312TP316L	Typical
36	M36	N41	N42			8in Dia. Duct	Pipe	Beam	A312TP316L	Typical
37	M37	N42	N82			8in Dia. Duct	Pipe	Beam	A312TP316L	Typical
38	M41	N47	N97			8in Dia. Duct	Pipe	Beam	A312TP316L	Typical
39	M42	N34	N36			8in Dia. Duct	Pipe	Beam	A312TP316L	Typical
40	M43	N36	N37			8in Dia. Duct	Pipe	Beam	A312TP316L	Typical
41	M44	N37	N38			8in Dia. Duct	Pipe	Beam	A312TP316L	Typical
42	M45	N38	N39			8in Dia. Duct	Pipe	Beam	A312TP316L	Typical
43	M46	N39	N83			8in Dia. Duct	Pipe	Beam	A312TP316L	Typical
44	M49	N49	N50			8in Dia. Duct	Pipe	Beam	A312TP316L	Typical
45	M50	N50	N96			8in Dia. Duct	Pipe	Beam	A312TP316L	Typical
46	M51	N108A	N32			8in Dia. Duct	Pipe	Beam	A312TP316L	Typical
47	M52	N55	N57			8in Dia. Duct	Pipe	Beam	A312TP316L	Typical
48	M54	N57	N61			8in Dia. Duct	Pipe	Beam	A312TP316L	Typical
49	M55	N61	N62			8in Dia. Duct	Pipe	Beam	A312TP316L	Typical
50	M56	N101A	N103A			6in Dia. Duct	Pipe	Beam	A312TP316L	Typical

Member Primary Data (Continued)

	Label	I Joint	J Joint	K Joint	Rotate(d...	Section/Shape	Design List	Type	Material	Design Rules
51	M57	N105A	N103A			6in Dia. Duct	Pipe	Beam	A312TP316L	Typical
52	M58	N101	N103			8in Dia. Duct	Pipe	Beam	A312TP316L	Typical
53	M59	N62	N90			8in Dia. Duct	Pipe	Beam	A312TP316L	Typical
54	M60	N63	N64			8in Dia. Duct	Pipe	Beam	A312TP316L	Typical
55	M61	N64	N65			8in Dia. Duct	Pipe	Beam	A312TP316L	Typical
56	M62	N65	N66			8in Dia. Duct	Pipe	Beam	A312TP316L	Typical
57	M63	N66	N67			8in Dia. Duct	Pipe	Beam	A312TP316L	Typical
58	M64	N67	N68			8in Dia. Duct	Pipe	Beam	A312TP316L	Typical
59	M65	N68	N69			8in Dia. Duct	Pipe	Beam	A312TP316L	Typical
60	M66	N69	N70			8in Dia. Duct	Pipe	Beam	A312TP316L	Typical
61	M67	N70	N71			8in Dia. Duct	Pipe	Beam	A312TP316L	Typical
62	M68	N2	N112			6in Dia. Duct	Pipe	Beam	A312TP316L	Typical
63	M69	N105	N106			6in Dia. Duct	Pipe	Beam	A312TP316L	Typical
64	M70	N103	N62			8in Dia. Duct	Pipe	Beam	A312TP316L	Typical
65	M71	N76	N11			8in Dia. Duct	Pipe	Beam	A312TP316L	Typical
66	M72	N77	N108			8in Dia. Duct	Pipe	Beam	A312TP316L	Typical
67	M73	N78	N24			8in Dia. Duct	Pipe	Beam	A312TP316L	Typical
68	M74	N79	N31			8in Dia. Duct	Pipe	Beam	A312TP316L	Typical
69	M75	N33	N53			8in Dia. Duct	Pipe	Beam	A312TP316L	Typical
70	M76	N81	N34			8in Dia. Duct	Pipe	Beam	A312TP316L	Typical
71	M77	N82	N47			8in Dia. Duct	Pipe	Beam	A312TP316L	Typical
72	M78	N83	N49			8in Dia. Duct	Pipe	Beam	A312TP316L	Typical
73	M79	N84	N85			8in Dia. Duct	Pipe	Beam	A312TP316L	Typical
74	M80	N85	N20			8in Dia. Duct	Pipe	Beam	A312TP316L	Typical
75	M82	N27	N28			8in Dia. Duct	Pipe	Beam	A312TP316L	Typical
76	M83	N88	N89			8in Dia. Duct	Pipe	Beam	A312TP316L	Typical
77	M84	N89	N13			8in Dia. Duct	Pipe	Beam	A312TP316L	Typical
78	M85	N90	N91			8in Dia. Duct	Pipe	Beam	A312TP316L	Typical
79	M86	N91	N93			8in Dia. Duct	Pipe	Beam	A312TP316L	Typical
80	M87	N92	N1			6in Dia. Duct	Pipe	Beam	A312TP316L	Typical
81	M88	N93	N63			8in Dia. Duct	Pipe	Beam	A312TP316L	Typical
82	M90	N53	N81			8in Dia. Duct	Pipe	Beam	A312TP316L	Typical
83	M91	N96	N51			8in Dia. Duct	Pipe	Beam	A312TP316L	Typical
84	M92	N97	N52			8in Dia. Duct	Pipe	Beam	A312TP316L	Typical
85	M93	N100	N101			8in Dia. Duct	Pipe	Beam	A312TP316L	Typical
86	M95	N106A	N106			6in Dia. Duct	Pipe	Beam	A312TP316L	Typical
87	M96	N106B	N6			8in Dia. Duct	Pipe	Beam	A312TP316L	Typical
88	M97	N107	N21			8in Dia. Duct	Pipe	Beam	A312TP316L	Typical
89	M98	N108	N107			8in Dia. Duct	Pipe	Beam	A312TP316L	Typical
90	M99	N109	N108A			8in Dia. Duct	Pipe	Beam	A312TP316L	Typical
91	M100	N110	N111A			8in Dia. Duct	Pipe	Beam	A312TP316L	Typical
92	M101	N111	N110A			8in Dia. Duct	Pipe	Beam	A312TP316L	Typical
93	M93A	N112	N92			6in Dia. Duct	Pipe	Beam	A312TP316L	Typical
94	M94	N104A	N12			8in Dia. Duct	Pipe	Beam	A312TP316L	Typical
95	M95A	N105B	N104A			8in Dia. Duct	Pipe	Beam	A312TP316L	Typical
96	M96A	N106C	N107A			6in Dia. Duct	Pipe	Beam	A312TP316L	Typical
97	M97A	N107A	N108B			6in Dia. Duct	Pipe	Beam	A312TP316L	Typical
98	M98A	N108B	N109A			6in Dia. Duct	Pipe	Beam	A312TP316L	Typical
99	M99A	N109A	N110B			6in Dia. Duct	Pipe	Beam	A312TP316L	Typical
100	M100A	N110B	N111B			6in Dia. Duct	Pipe	Beam	A312TP316L	Typical
101	M101A	N111B	N112A			6in Dia. Duct	Pipe	Beam	A312TP316L	Typical
102	M102	N112A	N113			6in Dia. Duct	Pipe	Beam	A312TP316L	Typical
103	M103	N113	N114			6in Dia. Duct	Pipe	Beam	A312TP316L	Typical
104	M104	N114	N115			6in Dia. Duct	Pipe	Beam	A312TP316L	Typical
105	M105	N115	N116			6in Dia. Duct	Pipe	Beam	A312TP316L	Typical
106	M106	N116	N117			6in Dia. Duct	Pipe	Beam	A312TP316L	Typical
107	M107	N117	N118			6in Dia. Duct	Pipe	Beam	A312TP316L	Typical
108	M108	N118	N119			6in Dia. Duct	Pipe	Beam	A312TP316L	Typical
109	M109	N119	N120			6in Dia. Duct	Pipe	Beam	A312TP316L	Typical

Member Primary Data (Continued)

	Label	I Joint	J Joint	K Joint	Rotate(d...	Section/Shape	Design List	Type	Material	Design Rules
110	M110	N121	N122			12in Dia. Duct	Pipe	Beam	A312TP316L	Typical
111	M111	N122	N123			12in Dia. Duct	Pipe	Beam	A312TP316L	Typical
112	M112	N123	N124			12in Dia. Duct	Pipe	Beam	A312TP316L	Typical
113	M113	N124	N125			12in Dia. Duct	Pipe	Beam	A312TP316L	Typical
114	M114	N125	N126			12in Dia. Duct	Pipe	Beam	A312TP316L	Typical
115	M115	N126	N127			12in Dia. Duct	Pipe	Beam	A312TP316L	Typical
116	M116	N127	N128			12in Dia. Duct	Pipe	Beam	A312TP316L	Typical
117	M117	N128	N129			12in Dia. Duct	Pipe	Beam	A312TP316L	Typical
118	M118	N129	N130			12in Dia. Duct	Pipe	Beam	A312TP316L	Typical
119	M119	N130	N131			12in Dia. Duct	Pipe	Beam	A312TP316L	Typical
120	M120	N119	N121			RIGID	None	None	LINK	Default

Member Advanced Data

	Label	I Release	J Release	I Offset[in]	J Offset[in]	T/C Only	Physical	TOM	Inactive
1	M1						Yes		
2	M2						Yes		
3	M3						Yes		
4	M4						Yes		
5	M5						Yes		
6	M6						Yes		
7	M7						Yes		
8	M8						Yes		
9	M9						Yes		
10	M10						Yes		
11	M11						Yes		
12	M12						Yes		
13	M13						Yes		
14	M14						Yes		
15	M15						Yes		
16	M16						Yes		
17	M17						Yes		
18	M18						Yes		
19	M19						Yes		
20	M20						Yes		
21	M21						Yes		
22	M22						Yes		
23	M23						Yes		
24	M24						Yes		
25	M25						Yes		
26	M26						Yes		
27	M27						Yes		
28	M28						Yes		
29	M29						Yes		
30	M30						Yes		
31	M31						Yes		
32	M32						Yes		
33	M33						Yes		
34	M34						Yes		
35	M35						Yes		
36	M36						Yes		
37	M37						Yes		
38	M41						Yes		
39	M42						Yes		
40	M43						Yes		
41	M44						Yes		
42	M45						Yes		
43	M46						Yes		
44	M49						Yes		

Member Advanced Data (Continued)

	Label	I Release	J Release	I Offset[in]	J Offset[in]	T/C Only	Physical	TOM	Inactive
45	M50						Yes		
46	M51						Yes		
47	M52	XXXOXX					Yes		
48	M54						Yes		
49	M55						Yes		
50	M56			4.3125			Yes		
51	M57			8.625			Yes		
52	M58						Yes		
53	M59						Yes		
54	M60						Yes		
55	M61						Yes		
56	M62						Yes		
57	M63						Yes		
58	M64						Yes		
59	M65						Yes		
60	M66						Yes		
61	M67						Yes		
62	M68						Yes		
63	M69			8.625			Yes		
64	M70						Yes		
65	M71						Yes		
66	M72						Yes		
67	M73						Yes		
68	M74						Yes		
69	M75						Yes		
70	M76						Yes		
71	M77						Yes		
72	M78						Yes		
73	M79						Yes		
74	M80						Yes		
75	M82						Yes		
76	M83	XXXOOO					Yes		
77	M84						Yes		
78	M85						Yes		
79	M86						Yes		
80	M87	XXXOOO					Yes		
81	M88						Yes		
82	M90						Yes		
83	M91	XXXOXX					Yes		
84	M92	XXXOXX					Yes		
85	M93	XXXOXX					Yes		
86	M95						Yes		
87	M96						Yes		
88	M97						Yes		
89	M98	XXXOOO					Yes		
90	M99	XXXOOO					Yes		
91	M100	XXXOOO					Yes		
92	M101	XXXOOO					Yes		
93	M93A						Yes		
94	M94						Yes		
95	M95A	XXXOOO					Yes		
96	M96A			12.2			Yes		
97	M97A						Yes		
98	M98A						Yes		
99	M99A						Yes		
100	M100A						Yes		
101	M101A						Yes		
102	M102						Yes		
103	M103						Yes		

Member Advanced Data (Continued)

	Label	I Release	J Release	I Offset[in]	J Offset[in]	T/C Only	Physical	TOM	Inactive
104	M104						Yes		
105	M105						Yes		
106	M106						Yes		
107	M107						Yes		
108	M108						Yes		
109	M109						Yes		
110	M110						Yes		
111	M111						Yes		
112	M112						Yes		
113	M113						Yes		
114	M114						Yes		
115	M115						Yes		
116	M116						Yes		
117	M117						Yes		
118	M118						Yes		
119	M119						Yes		
120	M120						Yes		

Basic Load Cases

	BLC Description	Category	X Grav...	Y Grav...	Z Grav...	Joint	Point	Distrib...	Area (...	Surfac...
1	SELFWEIGHT	DL					3	118		
2	DAMPER WEIGHT	DL								
3	SEISMIC X	ELX					3	118		
4	SEISMIC Z	ELZ					3	118		
5	THERMAL	None				17		119		
6	LIVE LOAD	LL								
7	FML	None								
8	WIND (X)	WLX						76		
9	WIND (Z)	WLZ						90		
10	SNOW	LL								

Load Combinations

	Description	Sol...	PDelta	SRSS	BLC	Fact...	BLC	Fact...	BLC	Fact...	BLC	Fact...	BLC	Fact...	BLC	Fact...	BLC	Fact...	BLC	Fact...
1	DEAD LOAD	Yes			DL	1														
2	DL+THERMAL+WIND(X)	Yes			DL	1	5	1	W...	1										
3	DL+THERMAL+WIND(-X)	Yes			DL	1	5	1	W...	-1										
4	DL+THERMAL+WIND(+Z)	Yes			DL	1	5	1	WLZ	1										
5	DL+THERMAL+WIND(-Z)	Yes			DL	1	5	1	WLZ	-1										
6	DL+SEISMIC(+X)(+Z)+T...	Yes			DL	1	5	1	ELX	1	ELZ	1								
7	DL+SEISMIC(+X)(-Z)+T...	Yes			DL	1	5	1	ELX	1	ELZ	-1								
8	DL+SEISMIC(-X)(+Z)+T...	Yes			DL	1	5	1	ELX	-1	ELZ	1								
9	DL+SEISMIC(-X)(-Z)+TH...	Yes			DL	1	5	1	ELX	-1	ELZ	-1								

Joint Loads and Enforced Displacements (BLC 5 : THERMAL)

	Joint Label	L,D,M	Direction	Magnitude[lb,lb-ft,in,rad,lb*s^2/in]
1	N88	L	Z	240
2	N89	L	Z	-240
3	N96	L	Z	43.9
4	N97	L	Z	-43.9
5	N57	L	Z	-43.9
6	N101	L	Z	-31
7	N101	L	X	31
8	N105B	L	Z	-300
9	N104A	L	Z	-300
10	N108	L	X	1525

Joint Loads and Enforced Displacements (BLC 5 : THERMAL) (Continued)

	Joint Label	L,D,M	Direction	Magnitude[lb,lb-ft,in,rad,lb*s^2/in]
11	N107	L	X	-1525
12	N110A	L	X	-1700
13	N111	L	X	1700
14	N109	L	X	1670
15	N108A	L	X	-1670
16	N110	L	X	1650
17	N111A	L	X	-1650

Member Point Loads (BLC 1 : SELFWEIGHT)

	Member Label	Direction	Magnitude[lb,lb-ft]	Location[in,%]
1	M68	Y	-76	3
2	M56	Y	-76	30
3	M109	Y	-76	%50

Member Point Loads (BLC 3 : SEISMIC X)

	Member Label	Direction	Magnitude[lb,lb-ft]	Location[in,%]
1	M56	X	38	35.1865
2	M68	X	38	8
3	M109	X	38	%50

Member Point Loads (BLC 4 : SEISMIC Z)

	Member Label	Direction	Magnitude[lb,lb-ft]	Location[in,%]
1	M68	Z	38	8
2	M56	Z	38	35.1865
3	M109	Z	38	%50

Member Distributed Loads (BLC 1 : SELFWEIGHT)

	Member Label	Direction	Start Magnitude[lb/ft,deg]	End Magnitu...	Start Locatio...	End Location...
1	M1	Y	-19.42	-19.42	0	0
2	M2	Y	-19.42	-19.42	0	0
3	M3	Y	-19.42	-19.42	0	0
4	M4	Y	-19.42	-19.42	0	0
5	M5	Y	-13.72	-13.72	0	0
6	M6	Y	-13.72	-13.72	0	0
7	M7	Y	-13.72	-13.72	0	0
8	M8	Y	-13.72	-13.72	0	0
9	M9	Y	-15	-15	0	0
10	M10	Y	-13.72	-13.72	0	0
11	M11	Y	-13.72	-13.72	0	0
12	M12	Y	-13.72	-13.72	0	0
13	M13	Y	-13.72	-13.72	0	0
14	M14	Y	-13.72	-13.72	0	0
15	M15	Y	-13.72	-13.72	0	0
16	M16	Y	-13.72	-13.72	0	0
17	M17	Y	-13.72	-13.72	0	0
18	M18	Y	-13.72	-13.72	0	0
19	M19	Y	-13.72	-13.72	0	0
20	M20	Y	-13.72	-13.72	0	0
21	M21	Y	-13.72	-13.72	0	0
22	M22	Y	-13.72	-13.72	0	0
23	M23	Y	-13.72	-13.72	0	0
24	M24	Y	-13.72	-13.72	0	0
25	M25	Y	-13.72	-13.72	0	0
26	M26	Y	-13.72	-13.72	0	0
27	M27	Y	-13.72	-13.72	0	0

Member Distributed Loads (BLC 1 : SELFWEIGHT) (Continued)

	Member Label	Direction	Start Magnitude[lb/ft,deg]	End Magnitu...	Start Locatio...	End Location...
28	M28	Y	-13.72	-13.72	0	0
29	M29	Y	-13.72	-13.72	0	0
30	M30	Y	-13.72	-13.72	0	0
31	M31	Y	-13.72	-13.72	0	0
32	M32	Y	-13.72	-13.72	0	0
33	M33	Y	-13.72	-13.72	0	0
34	M34	Y	-13.72	-13.72	0	0
35	M35	Y	-13.72	-13.72	0	0
36	M36	Y	-13.72	-13.72	0	0
37	M37	Y	-13.72	-13.72	0	0
38	M41	Y	-13.72	-13.72	0	0
39	M42	Y	-13.72	-13.72	0	0
40	M43	Y	-13.72	-13.72	0	0
41	M44	Y	-13.72	-13.72	0	0
42	M45	Y	-13.72	-13.72	0	0
43	M46	Y	-13.72	-13.72	0	0
44	M49	Y	-13.72	-13.72	0	0
45	M50	Y	-13.72	-13.72	0	0
46	M51	Y	-13.72	-13.72	0	0
47	M52	Y	-44	-44	0	0
48	M54	Y	-13.72	-13.72	0	0
49	M55	Y	-13.72	-13.72	0	0
50	M56	Y	-19.42	-19.42	0	0
51	M57	Y	-19.42	-19.42	0	0
52	M58	Y	-13.72	-13.72	0	0
53	M59	Y	-13.72	-13.72	0	0
54	M60	Y	-13.72	-13.72	0	0
55	M61	Y	-13.72	-13.72	0	0
56	M62	Y	-13.72	-13.72	0	0
57	M63	Y	-13.72	-13.72	0	0
58	M64	Y	-13.72	-13.72	0	0
59	M65	Y	-13.72	-13.72	0	0
60	M66	Y	-13.72	-13.72	0	0
61	M67	Y	-13.72	-13.72	0	0
62	M68	Y	-19.42	-19.42	0	0
63	M69	Y	-19.42	-19.42	0	0
64	M70	Y	-13.72	-13.72	0	0
65	M71	Y	-13.72	-13.72	0	0
66	M72	Y	-13.72	-13.72	0	0
67	M73	Y	-13.72	-13.72	0	0
68	M74	Y	-13.72	-13.72	0	0
69	M75	Y	-13.72	-13.72	0	0
70	M76	Y	-13.72	-13.72	0	0
71	M77	Y	-13.72	-13.72	0	0
72	M78	Y	-13.72	-13.72	0	0
73	M79	Y	-15	-15	0	0
74	M80	Y	-13.72	-13.72	0	0
75	M82	Y	-13.72	-13.72	0	0
76	M83	Y	-15	-15	0	0
77	M84	Y	-13.72	-13.72	0	0
78	M85	Y	-13.72	-13.72	0	0
79	M86	Y	-13.72	-13.72	0	0
80	M87	Y	-12	-12	0	0
81	M88	Y	-13.72	-13.72	0	0
82	M90	Y	-13.72	-13.72	0	0
83	M91	Y	-44	-44	0	0
84	M92	Y	-44	-44	0	0
85	M93	Y	-44	-44	0	0
86	M95	Y	-19.42	-19.42	0	0

Member Distributed Loads (BLC 1 : SELFWEIGHT) (Continued)

	Member Label	Direction	Start Magnitude[lb/ft,deg]	End Magnitu...	Start Locatio...	End Location...
87	M96	Y	-13.72	-13.72	0	0
88	M97	Y	-13.72	-13.72	0	0
89	M98	Y	-15	-15	0	0
90	M99	Y	-15	-15	0	0
91	M100	Y	-15	-15	0	0
92	M101	Y	-15	-15	0	0
93	M93A	Y	-19.42	-19.42	0	0
94	M94	Y	-13.72	-13.72	0	0
95	M95A	Y	-14.2	-14.2	0	0
96	M119	Y	-24.74	-24.74	0	0
97	M118	Y	-24.74	-24.74	0	0
98	M117	Y	-24.74	-24.74	0	0
99	M116	Y	-24.74	-24.74	0	0
100	M115	Y	-24.74	-24.74	0	0
101	M114	Y	-24.74	-24.74	0	0
102	M113	Y	-24.74	-24.74	0	0
103	M112	Y	-24.74	-24.74	0	0
104	M111	Y	-24.74	-24.74	0	0
105	M110	Y	-24.74	-24.74	0	0
106	M108	Y	-19.42	-19.42	0	0
107	M107	Y	-19.42	-19.42	0	0
108	M106	Y	-19.42	-19.42	0	0
109	M105	Y	-19.42	-19.42	0	0
110	M104	Y	-19.42	-19.42	0	0
111	M103	Y	-19.42	-19.42	0	0
112	M102	Y	-19.42	-19.42	0	0
113	M101A	Y	-19.42	-19.42	0	0
114	M100A	Y	-19.42	-19.42	0	0
115	M99A	Y	-19.42	-19.42	0	0
116	M98A	Y	-19.42	-19.42	0	0
117	M97A	Y	-19.42	-19.42	0	0
118	M96A	Y	-19.42	-19.42	0	0

Member Distributed Loads (BLC 3 : SEISMIC X)

	Member Label	Direction	Start Magnitude[lb/ft,deg]	End Magnitu...	Start Locatio...	End Location...
1	M52	X	22	22	0	0
2	M91	X	22	22	0	0
3	M92	X	22	22	0	0
4	M93	X	22	22	0	0
5	M1	X	9.71	9.71	0	0
6	M2	X	9.71	9.71	0	0
7	M3	X	9.71	9.71	0	0
8	M4	X	9.71	9.71	0	0
9	M111	X	12.37	12.37	0	0
10	M112	X	12.37	12.37	0	0
11	M113	X	12.37	12.37	0	0
12	M114	X	12.37	12.37	0	0
13	M110	X	12.37	12.37	0	0
14	M115	X	12.37	12.37	0	0
15	M116	X	12.37	12.37	0	0
16	M117	X	12.37	12.37	0	0
17	M118	X	12.37	12.37	0	0
18	M119	X	12.37	12.37	0	0
19	M56	X	9.71	9.71	0	0
20	M57	X	9.71	9.71	0	0
21	M68	X	9.71	9.71	0	0
22	M69	X	9.71	9.71	0	0
23	M95	X	9.71	9.71	0	0
24	M93A	X	9.71	9.71	0	0

Member Distributed Loads (BLC 3 : SEISMIC X) (Continued)

	Member Label	Direction	Start Magnitude[lb/ft,deg]	End Magnitu...	Start Locatio...	End Location...
25	M96A	X	9.71	9.71	0	0
26	M97A	X	9.71	9.71	0	0
27	M98A	X	9.71	9.71	0	0
28	M99A	X	9.71	9.71	0	0
29	M100A	X	9.71	9.71	0	0
30	M101A	X	9.71	9.71	0	0
31	M102	X	9.71	9.71	0	0
32	M103	X	9.71	9.71	0	0
33	M104	X	9.71	9.71	0	0
34	M106	X	9.71	9.71	0	0
35	M105	X	9.71	9.71	0	0
36	M107	X	9.71	9.71	0	0
37	M108	X	9.71	9.71	0	0
38	M9	X	7.5	7.5	0	0
39	M83	X	7.5	7.5	0	0
40	M98	X	7.5	7.5	0	0
41	M99	X	7.5	7.5	0	0
42	M100	X	7.5	7.5	0	0
43	M101	X	7.5	7.5	0	0
44	M95A	X	7.1	7.1	0	0
45	M5	X	6.86	6.86	0	0
46	M6	X	6.86	6.86	0	0
47	M7	X	6.86	6.86	0	0
48	M8	X	6.86	6.86	0	0
49	M10	X	6.86	6.86	0	0
50	M11	X	6.86	6.86	0	0
51	M12	X	6.86	6.86	0	0
52	M13	X	6.86	6.86	0	0
53	M14	X	6.86	6.86	0	0
54	M15	X	6.86	6.86	0	0
55	M16	X	6.86	6.86	0	0
56	M17	X	6.86	6.86	0	0
57	M18	X	6.86	6.86	0	0
58	M19	X	6.86	6.86	0	0
59	M20	X	6.86	6.86	0	0
60	M21	X	6.86	6.86	0	0
61	M22	X	6.86	6.86	0	0
62	M23	X	6.86	6.86	0	0
63	M24	X	6.86	6.86	0	0
64	M25	X	6.86	6.86	0	0
65	M26	X	6.86	6.86	0	0
66	M27	X	6.86	6.86	0	0
67	M28	X	6.86	6.86	0	0
68	M29	X	6.86	6.86	0	0
69	M30	X	6.86	6.86	0	0
70	M31	X	6.86	6.86	0	0
71	M32	X	6.86	6.86	0	0
72	M33	X	6.86	6.86	0	0
73	M34	X	6.86	6.86	0	0
74	M35	X	6.86	6.86	0	0
75	M36	X	6.86	6.86	0	0
76	M37	X	6.86	6.86	0	0
77	M41	X	6.86	6.86	0	0
78	M42	X	6.86	6.86	0	0
79	M43	X	6.86	6.86	0	0
80	M44	X	6.86	6.86	0	0
81	M45	X	6.86	6.86	0	0
82	M46	X	6.86	6.86	0	0
83	M49	X	6.86	6.86	0	0

Member Distributed Loads (BLC 3 : SEISMIC X) (Continued)

	Member Label	Direction	Start Magnitude[lb/ft,deg]	End Magnitu...	Start Locatio...	End Location...
84	M50	X	6.86	6.86	0	0
85	M51	X	6.86	6.86	0	0
86	M54	X	6.86	6.86	0	0
87	M55	X	6.86	6.86	0	0
88	M58	X	6.86	6.86	0	0
89	M59	X	6.86	6.86	0	0
90	M60	X	6.86	6.86	0	0
91	M61	X	6.86	6.86	0	0
92	M62	X	6.86	6.86	0	0
93	M63	X	6.86	6.86	0	0
94	M64	X	6.86	6.86	0	0
95	M65	X	6.86	6.86	0	0
96	M66	X	6.86	6.86	0	0
97	M67	X	6.86	6.86	0	0
98	M70	X	6.86	6.86	0	0
99	M71	X	6.86	6.86	0	0
100	M72	X	6.86	6.86	0	0
101	M73	X	6.86	6.86	0	0
102	M74	X	6.86	6.86	0	0
103	M75	X	6.86	6.86	0	0
104	M76	X	6.86	6.86	0	0
105	M77	X	6.86	6.86	0	0
106	M78	X	6.86	6.86	0	0
107	M79	X	6.86	6.86	0	0
108	M80	X	6.86	6.86	0	0
109	M82	X	6.86	6.86	0	0
110	M84	X	6.86	6.86	0	0
111	M85	X	6.86	6.86	0	0
112	M86	X	6.86	6.86	0	0
113	M88	X	6.86	6.86	0	0
114	M90	X	6.86	6.86	0	0
115	M96	X	6.86	6.86	0	0
116	M97	X	6.86	6.86	0	0
117	M94	X	6.86	6.86	0	0
118	M87	X	6	6	0	0

Member Distributed Loads (BLC 4 : SEISMIC Z)

	Member Label	Direction	Start Magnitude[lb/ft,deg]	End Magnitu...	Start Locatio...	End Location...
1	M52	Z	22	22	0	0
2	M91	Z	22	22	0	0
3	M92	Z	22	22	0	0
4	M93	Z	22	22	0	0
5	M119	Z	12.37	12.37	0	0
6	M118	Z	12.37	12.37	0	0
7	M117	Z	12.37	12.37	0	0
8	M116	Z	12.37	12.37	0	0
9	M115	Z	12.37	12.37	0	0
10	M114	Z	12.37	12.37	0	0
11	M110	Z	12.37	12.37	0	0
12	M111	Z	12.37	12.37	0	0
13	M112	Z	12.37	12.37	0	0
14	M113	Z	12.37	12.37	0	0
15	M1	Z	9.71	9.71	0	0
16	M2	Z	9.71	9.71	0	0
17	M3	Z	9.71	9.71	0	0
18	M4	Z	9.71	9.71	0	0
19	M56	Z	9.71	9.71	0	0
20	M57	Z	9.71	9.71	0	0
21	M68	Z	9.71	9.71	0	0

Member Distributed Loads (BLC 4 : SEISMIC Z) (Continued)

	Member Label	Direction	Start Magnitude[lb/ft,deg]	End Magnitu...	Start Locatio...	End Location...
22	M69	Z	9.71	9.71	0	0
23	M95	Z	9.71	9.71	0	0
24	M93A	Z	9.71	9.71	0	0
25	M108	Z	9.71	9.71	0	0
26	M107	Z	9.71	9.71	0	0
27	M106	Z	9.71	9.71	0	0
28	M105	Z	9.71	9.71	0	0
29	M104	Z	9.71	9.71	0	0
30	M103	Z	9.71	9.71	0	0
31	M102	Z	9.71	9.71	0	0
32	M101A	Z	9.71	9.71	0	0
33	M100A	Z	9.71	9.71	0	0
34	M99A	Z	9.71	9.71	0	0
35	M98A	Z	9.71	9.71	0	0
36	M97A	Z	9.71	9.71	0	0
37	M96A	Z	9.71	9.71	0	0
38	M9	Z	7.5	7.5	0	0
39	M83	Z	7.5	7.5	0	0
40	M98	Z	7.5	7.5	0	0
41	M99	Z	7.5	7.5	0	0
42	M100	Z	7.5	7.5	0	0
43	M101	Z	7.5	7.5	0	0
44	M95A	Z	7.1	7.1	0	0
45	M5	Z	6.86	6.86	0	0
46	M6	Z	6.86	6.86	0	0
47	M7	Z	6.86	6.86	0	0
48	M8	Z	6.86	6.86	0	0
49	M10	Z	6.86	6.86	0	0
50	M11	Z	6.86	6.86	0	0
51	M12	Z	6.86	6.86	0	0
52	M13	Z	6.86	6.86	0	0
53	M14	Z	6.86	6.86	0	0
54	M15	Z	6.86	6.86	0	0
55	M16	Z	6.86	6.86	0	0
56	M17	Z	6.86	6.86	0	0
57	M18	Z	6.86	6.86	0	0
58	M19	Z	6.86	6.86	0	0
59	M20	Z	6.86	6.86	0	0
60	M21	Z	6.86	6.86	0	0
61	M22	Z	6.86	6.86	0	0
62	M23	Z	6.86	6.86	0	0
63	M24	Z	6.86	6.86	0	0
64	M25	Z	6.86	6.86	0	0
65	M26	Z	6.86	6.86	0	0
66	M27	Z	6.86	6.86	0	0
67	M28	Z	6.86	6.86	0	0
68	M29	Z	6.86	6.86	0	0
69	M30	Z	6.86	6.86	0	0
70	M31	Z	6.86	6.86	0	0
71	M32	Z	6.86	6.86	0	6
72	M33	Z	6.86	6.86	0	0
73	M34	Z	6.86	6.86	0	0
74	M35	Z	6.86	6.86	0	0
75	M36	Z	6.86	6.86	0	0
76	M37	Z	6.86	6.86	0	0
77	M41	Z	6.86	6.86	0	0
78	M42	Z	6.86	6.86	0	0
79	M43	Z	6.86	6.86	0	0
80	M44	Z	6.86	6.86	0	0

Member Distributed Loads (BLC 4 : SEISMIC Z) (Continued)

	Member Label	Direction	Start Magnitude[lb/ft,deg]	End Magnitu...	Start Locatio...	End Location...
81	M45	Z	6.86	6.86	0	0
82	M46	Z	6.86	6.86	0	0
83	M49	Z	6.86	6.86	0	0
84	M50	Z	6.86	6.86	0	0
85	M51	Z	6.86	6.86	0	0
86	M54	Z	6.86	6.86	0	0
87	M55	Z	6.86	6.86	0	0
88	M58	Z	6.86	6.86	0	0
89	M59	Z	6.86	6.86	0	0
90	M60	Z	6.86	6.86	0	0
91	M61	Z	6.86	6.86	0	0
92	M62	Z	6.86	6.86	0	0
93	M63	Z	6.86	6.86	0	0
94	M64	Z	6.86	6.86	0	0
95	M65	Z	6.86	6.86	0	0
96	M66	Z	6.86	6.86	0	0
97	M67	Z	6.86	6.86	0	0
98	M70	Z	6.86	6.86	0	0
99	M71	Z	6.86	6.86	0	0
100	M72	Z	6.86	6.86	0	0
101	M73	Z	6.86	6.86	0	0
102	M74	Z	6.86	6.86	0	0
103	M75	Z	6.86	6.86	0	0
104	M76	Z	6.86	6.86	0	0
105	M77	Z	6.86	6.86	0	0
106	M78	Z	6.86	6.86	0	0
107	M79	Z	6.86	6.86	0	0
108	M80	Z	6.86	6.86	0	0
109	M82	Z	6.86	6.86	0	0
110	M84	Z	6.86	6.86	0	0
111	M85	Z	6.86	6.86	0	0
112	M86	Z	6.86	6.86	0	0
113	M88	Z	6.86	6.86	0	0
114	M90	Z	6.86	6.86	0	0
115	M96	Z	6.86	6.86	0	0
116	M97	Z	6.86	6.86	0	0
117	M94	Z	6.86	6.86	0	0
118	M87	Z	6	6	0	0

Member Distributed Loads (BLC 5 : THERMAL)

	Member Label	Direction	Start Magnitude[lb/ft,deg]	End Magnitu...	Start Locatio...	End Location...
1	M1	T	900	900	0	0
2	M2	T	900	900	0	0
3	M3	T	900	900	0	0
4	M4	T	900	900	0	0
5	M5	T	900	900	0	0
6	M6	T	900	900	0	0
7	M7	T	900	900	0	0
8	M8	T	900	900	0	0
9	M9	T	900	900	0	0
10	M10	T	825	825	0	0
11	M11	T	825	825	0	0
12	M12	T	825	825	0	0
13	M13	T	750	750	0	0
14	M14	T	750	750	0	0
15	M15	T	750	750	0	0
16	M16	T	750	750	0	0
17	M17	T	750	750	0	0
18	M18	T	750	750	0	0

Member Distributed Loads (BLC 5 : THERMAL) (Continued)

	Member Label	Direction	Start Magnitude[lb/ft,deg]	End Magnitu...	Start Locatio...	End Location...
19	M19	T	750	750	0	0
20	M20	T	675	675	0	0
21	M21	T	675	675	0	0
22	M22	T	675	675	0	0
23	M23	T	600	600	0	0
24	M24	T	600	600	0	0
25	M25	T	600	600	0	0
26	M26	T	450	450	0	0
27	M27	T	525	525	0	0
28	M28	T	525	525	0	0
29	M29	T	525	525	0	0
30	M30	T	450	450	0	0
31	M31	T	450	450	0	0
32	M32	T	600	600	0	0
33	M33	T	300	300	0	0
34	M34	T	300	300	0	0
35	M35	T	300	300	0	0
36	M36	T	300	300	0	0
37	M37	T	300	300	0	0
38	M41	T	225	225	0	0
39	M42	T	300	300	0	0
40	M43	T	300	300	0	0
41	M44	T	300	300	0	0
42	M45	T	300	300	0	0
43	M46	T	300	300	0	0
44	M49	T	225	225	0	0
45	M50	T	225	225	0	0
46	M51	T	450	450	0	0
47	M52	T	225	225	0	0
48	M54	T	225	225	0	0
49	M55	T	225	225	0	0
50	M56	T	900	900	0	0
51	M57	T	900	900	0	0
52	M58	T	225	225	0	0
53	M59	T	225	225	0	0
54	M60	T	225	225	0	0
55	M61	T	225	225	0	0
56	M62	T	225	225	0	0
57	M63	T	225	225	0	0
58	M64	T	225	225	0	0
59	M65	T	225	225	0	0
60	M66	T	225	225	0	0
61	M67	T	225	225	0	0
62	M68	T	900	900	0	0
63	M69	T	900	900	0	0
64	M70	T	225	225	0	0
65	M71	T	825	825	0	0
66	M72	T	675	675	0	0
67	M73	T	600	600	0	0
68	M74	T	450	450	0	0
69	M75	T	375	375	0	0
70	M76	T	300	300	0	0
71	M77	T	225	225	0	0
72	M78	T	225	225	0	0
73	M79	T	750	750	0	0
74	M80	T	750	750	0	0
75	M82	T	525	525	0	0
76	M83	T	825	825	0	0
77	M84	T	825	825	0	0

Member Distributed Loads (BLC 5 : THERMAL) (Continued)

	Member Label	Direction	Start Magnitude[lb/ft,deg]	End Magnitu...	Start Locatio...	End Location...
78	M85	T	225	225	0	0
79	M86	T	225	225	0	0
80	M87	T	900	900	0	0
81	M88	T	225	225	0	0
82	M90	T	375	375	0	0
83	M91	T	225	225	0	0
84	M92	T	225	225	0	0
85	M93	T	225	225	0	0
86	M93A	T	900	900	0	0
87	M94	T	825	825	0	0
88	M95	T	900	900	0	0
89	M95A	T	825	825	0	0
90	M96	T	900	900	0	0
91	M96A	T	102	102	0	0
92	M97	T	675	675	0	0
93	M97A	T	102	102	0	0
94	M98	T	675	675	0	0
95	M98A	T	102	102	0	0
96	M99	T	450	450	0	0
97	M99A	T	102	102	0	0
98	M100	T	450	450	0	0
99	M100A	T	102	102	0	0
100	M101	T	600	600	0	0
101	M101A	T	102	102	0	0
102	M102	T	102	102	0	0
103	M103	T	102	102	0	0
104	M104	T	102	102	0	0
105	M105	T	102	102	0	0
106	M106	T	102	102	0	0
107	M107	T	102	102	0	0
108	M108	T	102	102	0	0
109	M109	T	102	102	0	0
110	M110	T	102	102	0	0
111	M111	T	102	102	0	0
112	M112	T	102	102	0	0
113	M113	T	102	102	0	0
114	M114	T	102	102	0	0
115	M115	T	102	102	0	0
116	M116	T	102	102	0	0
117	M117	T	102	102	0	0
118	M118	T	102	102	0	0
119	M119	T	102	102	0	0

Member Distributed Loads (BLC 8 : WIND (X))

	Member Label	Direction	Start Magnitude[lb/ft,deg]	End Magnitu...	Start Locatio...	End Location...
1	M1	X	9.7	9.7	0	0
2	M2	X	9.7	9.7	0	0
3	M3	X	9.7	9.7	0	0
4	M4	X	9.7	9.7	0	0
5	M5	X	12.6	12.6	0	0
6	M6	X	12.6	12.6	0	0
7	M7	X	12.6	12.6	0	0
8	M8	X	12.6	12.6	0	0
9	M9	X	12.6	12.6	0	0
10	M10	X	12.6	12.6	0	0
11	M11	X	12.6	12.6	0	0
12	M12	X	12.6	12.6	0	0
13	M13	X	12.6	12.6	0	0
14	M14	X	12.6	12.6	0	0

Member Distributed Loads (BLC 8 : WIND (X)) (Continued)

	Member Label	Direction	Start Magnitude[lb/ft,deg]	End Magnitu...	Start Locatio...	End Location...
15	M15	X	12.6	12.6	0	0
16	M16	X	12.6	12.6	0	0
17	M34	X	12.6	12.6	0	0
18	M35	X	12.6	12.6	0	0
19	M36	X	12.6	12.6	0	0
20	M37	X	12.6	12.6	0	0
21	M41	X	12.6	12.6	0	0
22	M42	X	12.6	12.6	0	0
23	M43	X	12.6	12.6	0	0
24	M44	X	12.6	12.6	0	0
25	M45	X	12.6	12.6	0	0
26	M46	X	12.6	12.6	0	0
27	M49	X	12.6	12.6	0	0
28	M50	X	12.6	12.6	0	0
29	M59	X	12.6	12.6	0	0
30	M60	X	12.6	12.6	0	0
31	M61	X	12.6	12.6	0	0
32	M62	X	12.6	12.6	0	0
33	M63	X	12.6	12.6	0	0
34	M64	X	12.6	12.6	0	0
35	M65	X	12.6	12.6	0	0
36	M66	X	12.6	12.6	0	0
37	M70	X	12.6	12.6	0	0
38	M71	X	12.6	12.6	0	0
39	M77	X	12.6	12.6	0	0
40	M78	X	12.6	12.6	0	0
41	M83	X	12.6	12.6	0	0
42	M84	X	12.6	12.6	0	0
43	M85	X	12.6	12.6	0	0
44	M86	X	12.6	12.6	0	0
45	M88	X	12.6	12.6	0	0
46	M91	X	12.6	12.6	0	0
47	M92	X	12.6	12.6	0	0
48	M95	X	9.7	9.7	0	0
49	M69	X	9.7	9.7	0	0
50	M57	X	9.7	9.7	0	0
51	M96	X	12.6	12.6	0	0
52	M94	X	12.6	12.6	0	0
53	M95A	X	12.6	12.6	0	0
54	M110	X	18.6	18.6	0	0
55	M111	X	18.6	18.6	0	0
56	M112	X	18.6	18.6	0	0
57	M113	X	18.6	18.6	0	0
58	M114	X	18.6	18.6	0	0
59	M115	X	18.6	18.6	0	0
60	M116	X	18.6	18.6	0	0
61	M117	X	18.6	18.6	0	0
62	M118	X	18.6	18.6	0	0
63	M119	X	18.6	18.6	0	0
64	M96A	X	9.7	9.7	0	0
65	M97A	X	9.7	9.7	0	0
66	M98A	X	9.7	9.7	0	0
67	M99A	X	9.7	9.7	0	0
68	M101A	X	9.7	9.7	0	0
69	M102	X	9.7	9.7	0	0
70	M103	X	9.7	9.7	0	0
71	M104	X	9.7	9.7	0	0
72	M105	X	9.7	9.7	0	0
73	M106	X	9.7	9.7	0	0

Member Distributed Loads (BLC 8 : WIND (X)) (Continued)

	Member Label	Direction	Start Magnitude[lb/ft,deg]	End Magnitu...	Start Locatio...	End Location...
74	M107	X	9.7	9.7	0	0
75	M108	X	9.7	9.7	0	0
76	M109	X	9.7	9.7	0	0

Member Distributed Loads (BLC 9 : WIND (Z))

	Member Label	Direction	Start Magnitude[lb/ft,deg]	End Magnitu...	Start Locatio...	End Location...
1	M1	Z	9.7	9.7	0	0
2	M2	Z	9.7	9.7	0	0
3	M3	Z	9.7	9.7	0	0
4	M4	Z	9.7	9.7	0	0
5	M5	Z	12.6	12.6	0	0
6	M6	Z	12.6	12.6	0	0
7	M15	Z	12.6	12.6	0	0
8	M16	Z	12.6	12.6	0	0
9	M17	Z	12.6	12.6	0	0
10	M18	Z	12.6	12.6	0	0
11	M19	Z	12.6	12.6	0	0
12	M20	Z	12.6	12.6	0	0
13	M21	Z	12.6	12.6	0	0
14	M22	Z	12.6	12.6	0	0
15	M23	Z	12.6	12.6	0	0
16	M24	Z	12.6	12.6	0	0
17	M25	Z	12.6	12.6	0	0
18	M27	Z	12.6	12.6	0	0
19	M28	Z	12.6	12.6	0	0
20	M29	Z	12.6	12.6	0	0
21	M30	Z	12.6	12.6	0	0
22	M31	Z	12.6	12.6	0	0
23	M33	Z	12.6	12.6	0	0
24	M34	Z	12.6	12.6	0	0
25	M35	Z	12.6	12.6	0	0
26	M36	Z	12.6	12.6	0	0
27	M37	Z	12.6	12.6	0	0
28	M42	Z	12.6	12.6	0	0
29	M43	Z	12.6	12.6	0	0
30	M44	Z	12.6	12.6	0	0
31	M45	Z	12.6	12.6	0	0
32	M46	Z	12.6	12.6	0	0
33	M52	Z	12.6	12.6	0	0
34	M60	Z	12.6	12.6	0	0
35	M61	Z	12.6	12.6	0	0
36	M62	Z	12.6	12.6	0	0
37	M63	Z	12.6	12.6	0	0
38	M64	Z	12.6	12.6	0	0
39	M65	Z	12.6	12.6	0	0
40	M66	Z	12.6	12.6	0	0
41	M67	Z	12.6	12.6	0	0
42	M68	Z	9.7	9.7	0	0
43	M70	Z	12.6	12.6	0	0
44	M72	Z	12.6	12.6	0	0
45	M73	Z	12.6	12.6	0	0
46	M74	Z	12.6	12.6	0	0
47	M75	Z	12.6	12.6	0	0
48	M76	Z	12.6	12.6	0	0
49	M77	Z	12.6	12.6	0	0
50	M78	Z	12.6	12.6	0	0
51	M79	Z	12.6	12.6	0	0
52	M80	Z	12.6	12.6	0	0
53	M82	Z	12.6	12.6	0	0

Member Distributed Loads (BLC 9 : WIND (Z)) (Continued)

	Member Label	Direction	Start Magnitude[lb/ft,deg]	End Magnitu...	Start Locatio...	End Location...
54	M87	Z	9.7	9.7	0	0
55	M90	Z	12.6	12.6	0	0
56	M95	Z	9.7	9.7	0	0
57	M93	Z	12.6	12.6	0	0
58	M56	Z	9.7	9.7	0	0
59	M69	Z	9.7	9.7	0	0
60	M57	Z	9.7	9.7	0	0
61	M96	Z	12.6	12.6	0	0
62	M97	Z	12.6	12.6	0	0
63	M98	Z	12.6	12.6	0	0
64	M32	Z	12.6	12.6	0	0
65	M101	Z	12.6	12.6	0	0
66	M51	Z	12.6	12.6	0	0
67	M99	Z	12.6	12.6	0	0
68	M100	Z	12.6	12.6	0	0
69	M26	Z	12.6	12.6	0	0
70	M93A	Z	9.7	9.7	0	0
71	M107	Z	9.7	9.7	0	0
72	M106	Z	9.7	9.7	0	0
73	M105	Z	9.7	9.7	0	0
74	M104	Z	9.7	9.7	0	0
75	M103	Z	9.7	9.7	0	0
76	M102	Z	9.7	9.7	0	0
77	M101A	Z	9.7	9.7	0	0
78	M100A	Z	9.7	9.7	0	0
79	M99A	Z	9.7	9.7	0	0
80	M98A	Z	9.7	9.7	0	0
81	M97A	Z	9.7	9.7	0	0
82	M96A	Z	9.7	9.7	0	0
83	M111	Z	18.6	18.6	0	0
84	M112	Z	18.6	18.6	0	0
85	M113	Z	18.6	18.6	0	0
86	M114	Z	18.6	18.6	0	0
87	M115	Z	18.6	18.6	0	0
88	M116	Z	18.6	18.6	0	0
89	M117	Z	18.6	18.6	0	0
90	M119	Z	18.6	18.6	0	0

Envelope Joint Reactions

	Joint		X [lb]	lc	Y [lb]	lc	Z [lb]	lc	MX [lb-ft]	lc	MY [lb-ft]	lc	MZ [lb-ft]	lc
1	N1	max	5.5	8	11	1	8.892	5	315.326	9	212.242	7	800.242	6
2		min	-5.5	6	-11	1	-8.892	4	-6.112	1	-162.796	8	-225.284	1
3	N6	max	-66.43	1	126.035	7	602.949	9	0	1	0	1	0	1
4		min	-338.395	6	025	1	-19.462	1	0	1	0	1	0	1
5	N11	max	211.623	3	643.479	8	0	1	0	1	0	1	0	1
6		min	-194.403	2	234.034	1	0	1	0	1	0	1	0	1
7	N12	max	29.4	3	32.653	1	76.327	7	0	1	0	1	0	1
8		min	-29.4	2	32.653	2	0	1	0	1	0	1	0	1
9	N13	max	722.582	9	138.008	6	0	1	0	1	0	1	0	1
10		min	-1062.654	6	65.84	9	0	1	0	1	0	1	0	1
11	N14	max	1327.362	6	60.987	1	0	1	0	1	0	1	0	1
12		min	-817.85	9	-93.053	6	0	1	0	1	0	1	0	1
13	N19	max	0	1	-216.958	1	939.19	9	0	1	0	1	0	1
14		min	0	1	-375.224	7	-443.671	6	0	1	0	1	0	1
15	N20	max	0	1	508.447	7	311.148	5	0	1	0	1	0	1
16		min	0	1	496.461	1	-326.669	4	0	1	0	1	0	1
17	N21	max	55.663	8	11.536	7	2.773	5	0	1	0	1	0	1
18		min	-405.663	6	11.056	1	-3.378	4	0	1	0	1	0	1

Envelope Joint Reactions (Continued)

	Joint		X [lb]	lc	Y [lb]	lc	Z [lb]	lc	MX [lb-ft]	lc	MY [lb-ft]	lc	MZ [lb-ft]	lc
19	N23	max	0	1	295.774	1	278.238	5	0	1	0	1	0	1
20		min	0	1	295.196	7	-277.55	4	0	1	0	1	0	1
21	N25	max	0	1	154.597	6	141.089	5	0	1	0	1	0	1
22		min	0	1	154.497	1	-141.172	4	0	1	0	1	0	1
23	N26	max	305.253	8	76.374	6	66.221	5	0	1	0	1	0	1
24		min	-245.253	6	75.228	1	-66.233	4	0	1	0	1	0	1
25	N27	max	0	1	68.86	1	66.766	5	0	1	0	1	0	1
26		min	0	1	63.393	6	-66.886	4	0	1	0	1	0	1
27	N28	max	0	1	149.05	6	121.218	5	0	1	0	1	0	1
28		min	0	1	137.99	1	-120.869	4	0	1	0	1	0	1
29	N30	max	0	1	268.43	1	249.794	5	0	1	0	1	0	1
30		min	0	1	261.69	6	-250.012	4	0	1	0	1	0	1
31	N32	max	36.86	8	33.72	4	29.4	5	0	1	0	1	0	1
32		min	0	1	33.72	3	-29.4	4	0	1	0	1	0	1
33	N33	max	0	1	276.199	1	289.852	5	0	1	0	1	0	1
34		min	0	1	176.054	6	-293.105	4	0	1	0	1	0	1
35	N50	max	548.626	3	2103.238	4	0	1	0	1	0	1	0	1
36		min	-2.525	1	325.115	1	0	1	0	1	0	1	0	1
37	N51	max	22	8	44	1	22	7	-22	1	11	8	-15.143	1
38		min	-22	6	44	1	-22	6	-22	1	-11	6	-1474.961	8
39	N52	max	22	8	44	1	22	7	-22	1	11	8	-4.957	1
40		min	-22	6	44	1	-22	6	-22	1	-11	6	-1093.594	8
41	N53	max	0	1	519.254	6	137.106	5	0	1	0	1	0	1
42		min	0	1	258.585	1	-128.638	4	0	1	0	1	0	1
43	N55	max	0	1	0	1	0	1	0	1	0	1	248.425	4
44		min	0	1	0	1	0	1	0	1	0	1	9.479	1
45	N65	max	-30.212	1	1076.129	2	573.214	7	0	1	0	1	0	1
46		min	-1430.65	2	342.153	1	-397.663	8	0	1	0	1	0	1
47	N71	max	1202.421	9	115.287	1	130.269	5	83.917	5	879.01	4	317.915	1
48		min	28.372	1	-597.782	2	-156.019	4	-279.9	4	-507.736	5	-4127.532	2
49	N72	max	496.109	3	922.465	4	323.174	5	0	1	0	1	0	1
50		min	-3.043	1	437.766	1	-95.59	4	0	1	0	1	0	1
51	N73	max	0	1	17.608	1	0	1	0	1	0	1	0	1
52		min	0	1	-478.966	7	0	1	0	1	0	1	0	1
53	N75	max	236.937	3	269.314	2	0	1	0	1	0	1	0	1
54		min	-287.373	2	117.375	1	0	1	0	1	0	1	0	1
55	N92	max	106.961	9	2.827	1	3.488	7	0	1	0	1	0	1
56		min	.286	1	-29.81	6	-1.983	8	0	1	0	1	0	1
57	N93	max	0	1	345.846	4	0	1	0	1	0	1	0	1
58		min	0	1	278.796	5	0	1	0	1	0	1	0	1
59	N98	max	0	1	108.736	5	0	1	0	1	0	1	0	1
60		min	0	1	-216.512	4	0	1	0	1	0	1	0	1
61	N99	max	1712.629	9	425.07	1	495.852	5	0	1	0	1	0	1
62		min	.518	1	-1550.251	6	-904.25	4	0	1	0	1	0	1
63	N100	max	0	1	0	1	0	1	-20.772	1	0	1	125.62	4
64		min	0	1	0	1	0	1	-125.62	4	0	1	20.772	1
65	N104	max	0	1	141.66	1	0	1	0	1	0	1	0	1
66		min	0	1	4.136	2	0	1	0	1	0	1	0	1
67	N5	max	423.127	8	643.648	1	19.459	1	0	1	0	1	0	1
68		min	-210.384	7	139.057	8	-1029.045	8	0	1	0	1	0	1
69	N124	max	268.326	8	243.734	1	0	1	1378.025	5	0	1	0	1
70		min	-259.265	7	113.333	4	0	1	77.653	1	0	1	0	1
71	N116	max	360.843	9	835.124	9	0	1	3027.792	8	0	1	0	1
72		min	-208.177	6	496.119	1	0	1	-2726.804	7	0	1	0	1
73	N110B	max	0	1	210.839	6	0	1	0	1	0	1	0	1
74		min	0	1	110.499	9	0	1	0	1	0	1	0	1
75	N15	max	-1.415	1	346.147	6	0	1	0	1	0	1	0	1
76		min	-2394.907	6	166.883	1	0	1	0	1	0	1	0	1
77	Totals:	max	3141.672	9	6347.051	6	3700.591	5						

Envelope Joint Reactions (Continued)

	Joint		X [lb]	lc	Y [lb]	lc	Z [lb]	lc	MX [lb-ft]	lc	MY [lb-ft]	lc	MZ [lb-ft]	lc
78		min	-3203.672	6	6347.051	1	-3726.393	4						

Envelope Joint Displacements

	Joint		X [in]	lc	Y [in]	lc	Z [in]	lc	X Rotation ...	lc	Y Rotation ...	lc	Z Rotation ...	lc
1	N1	max	0	6	0	1	0	4	0	1	0	8	0	1
2		min	0	8	0	1	0	5	0	9	0	7	0	6
3	N2	max	-.002	1	.112	6	0	1	9.856e-6	1	2.627e-4	8	1.962e-4	1
4		min	-.107	9	-.002	1	-.007	7	-4.223e-4	9	-1.372e-4	7	-8.33e-5	6
5	N3	max	-.001	1	.097	6	0	1	1.074e-5	1	2.57e-4	8	1.738e-4	1
6		min	-.052	9	0	1	-.006	7	-4.54e-4	9	-1.3e-4	7	-2.057e-4	6
7	N4	max	0	1	.055	6	0	1	1.158e-5	1	2.423e-4	8	1.41e-4	1
8		min	-.013	9	0	1	-.003	7	-4.814e-4	9	-1.167e-4	7	-3.295e-4	6
9	N5	max	0	7	0	8	0	8	1.241e-5	1	2.172e-4	8	1.036e-4	1
10		min	0	8	0	1	0	1	-5.009e-4	9	-1.012e-4	7	-4.025e-4	6
11	N6	max	0	6	0	1	0	1	1.166e-3	9	2.451e-4	9	1.254e-4	6
12		min	0	1	-.563	7	0	9	-2.955e-5	1	-2.394e-4	6	-3.986e-5	1
13	N7	max	.001	6	0	1	0	1	1.499e-3	9	2.636e-4	9	1.038e-4	6
14		min	0	1	-.615	6	-.023	9	-3.747e-5	1	-2.672e-4	6	-3.836e-5	1
15	N8	max	.003	6	0	1	0	1	1.83e-3	9	2.765e-4	9	7.488e-5	8
16		min	-.001	9	-.648	6	-.07	9	-4.373e-5	1	-2.913e-4	6	-3.673e-5	1
17	N9	max	.005	6	0	1	0	1	2.152e-3	9	2.849e-4	9	5.435e-5	8
18		min	-.003	9	-.652	6	-.128	9	-4.735e-5	1	-3.068e-4	6	-3.494e-5	1
19	N10	max	.007	6	0	1	0	1	2.449e-3	9	2.893e-4	9	3.482e-5	8
20		min	-.005	9	-.638	6	-.183	9	-4.818e-5	1	-3.144e-4	6	-4.077e-5	7
21	N11	max	0	2	0	1	0	1	4.365e-3	6	7.458e-4	6	9.848e-6	1
22		min	0	3	0	8	-1.423	9	-7.614e-5	1	-6.166e-4	9	-8.841e-4	7
23	N12	max	0	2	0	2	0	1	1.571e-3	6	2.693e-3	6	4.673e-5	1
24		min	0	3	0	1	0	7	-8.172e-5	1	-2.24e-3	9	-1.607e-3	7
25	N13	max	0	6	0	9	1.314	6	2.397e-4	6	1.212e-3	6	5.161e-5	1
26		min	0	9	0	6	0	1	3.795e-6	1	-9.82e-4	9	-1.403e-3	7
27	N14	max	0	9	0	6	.612	6	8.3e-6	1	1.704e-4	9	4.154e-5	1
28		min	0	6	0	1	0	1	-4.682e-5	6	-1.303e-4	6	-6.776e-4	7
29	N15	max	0	6	0	1	.124	6	1.296e-5	8	1.308e-4	9	3.383e-5	1
30		min	0	1	0	6	0	1	-2.295e-5	1	-4.785e-4	6	-1.23e-4	7
31	N16	max	0	1	0	4	.077	6	1.417e-5	9	2.308e-4	9	3.177e-5	1
32		min	-.013	9	0	1	0	1	-3.039e-5	1	-6.3e-4	6	-7.24e-5	7
33	N17	max	0	1	0	7	.04	6	2.52e-5	9	3.64e-4	9	2.724e-5	1
34		min	-.047	9	0	1	-.014	9	-3.434e-5	1	-7.073e-4	6	-3.184e-5	7
35	N18	max	0	1	0	7	.024	6	4.064e-5	9	4.951e-4	9	1.956e-5	1
36		min	-.094	9	0	1	-.023	9	-3.583e-5	1	-7.329e-4	6	-5.054e-6	7
37	N19	max	0	1	0	7	0	6	1.308e-4	9	5.682e-4	9	-5.373e-5	7
38		min	-.354	9	0	1	0	9	-3.738e-5	1	-5.207e-4	6	-9.041e-5	1
39	N20	max	0	1	0	1	0	4	3.668e-4	9	5.982e-4	4	4.629e-4	1
40		min	-1.037	9	0	7	0	5	-4.145e-5	1	-6.19e-4	5	4.469e-4	7
41	N21	max	0	6	0	1	0	4	9.489e-4	9	3.645e-4	4	3.673e-4	1
42		min	0	8	0	7	0	5	-5.146e-5	1	-3.677e-4	5	3.649e-4	7
43	N22	max	0	1	-.008	7	.008	4	1.122e-3	9	7.341e-5	5	-7.436e-5	7
44		min	-.45	8	-.008	1	-.008	5	-5.444e-5	1	-7.291e-5	4	-7.475e-5	1
45	N23	max	0	1	0	7	0	4	1.295e-3	9	4.617e-5	5	-3.926e-5	7
46		min	-.9	8	0	1	0	5	-5.742e-5	1	-4.519e-5	4	-3.994e-5	1
47	N24	max	0	1	-.007	1	.006	4	1.591e-3	9	2.826e-6	5	-5.603e-6	1
48		min	-1.649	8	-.007	7	-.006	5	-6.252e-5	1	-3.067e-6	4	-5.82e-6	6
49	N25	max	0	1	0	1	0	4	1.814e-3	9	7.581e-5	5	-8.58e-5	8
50		min	-2.164	8	0	6	0	5	-6.635e-5	1	-7.614e-5	4	-8.6e-5	1
51	N26	max	0	6	0	1	0	4	2.003e-3	9	6.542e-6	5	-7.161e-6	8
52		min	0	8	0	6	0	5	-6.96e-5	1	-6.645e-6	4	-7.961e-6	1
53	N27	max	0	1	0	6	0	4	2.192e-3	9	5.648e-7	4	-2.552e-7	1
54		min	-.437	8	0	1	0	5	-7.285e-5	1	-4.76e-7	5	-2.358e-6	6

Envelope Joint Displacements (Continued)

	Joint		X [in]	lc	Y [in]	lc	Z [in]	lc	X Rotation ...	lc	Y Rotation ...	lc	Z Rotation ...	lc
55	N28	max	0	1	0	1	0	4	2.412e-3	9	1.409e-5	4	2.876e-5	6
56		min	-.882	8	0	6	0	5	-7.664e-5	1	-1.438e-5	5	2.011e-5	1
57	N29	max	0	1	-.002	1	0	4	2.632e-3	9	2.839e-5	5	-1.691e-5	6
58		min	-1.327	8	-.003	6	0	5	-8.043e-5	1	-2.869e-5	4	-2.607e-5	1
59	N30	max	0	1	0	6	0	4	2.853e-3	9	1.072e-4	4	9.012e-5	1
60		min	-1.773	8	0	1	0	5	-8.422e-5	1	-1.057e-4	5	4.275e-5	6
61	N31	max	0	1	-.005	6	.015	4	3.073e-3	9	1.103e-4	4	4.556e-5	1
62		min	-2.193	8	-.012	1	-.015	5	-8.801e-5	1	-1.06e-4	5	-8.686e-5	6
63	N32	max	0	1	0	3	0	4	3.262e-3	9	2.757e-4	5	-4.083e-4	1
64		min	0	8	0	4	0	5	-9.126e-5	1	-2.69e-4	4	-6.136e-4	6
65	N33	max	1.746	6	0	6	0	4	3.686e-3	9	3.559e-4	5	-5.551e-4	1
66		min	0	1	0	1	0	5	-9.857e-5	1	-3.439e-4	4	-9.245e-4	6
67	N34	max	0	1	.061	6	.023	4	5.007e-3	9	2.077e-3	4	-8.132e-5	1
68		min	-.036	3	.002	1	-.021	5	-1.213e-4	1	-1.944e-3	5	-5.098e-3	6
69	N35	max	0	1	.537	5	.36	4	2.398e-3	4	2.837e-3	4	1.159e-4	1
70		min	-.4	3	-.011	1	-.253	5	-1.486e-5	1	-2.154e-3	5	-2.313e-3	5
71	N36	max	-.004	1	.447	6	.036	4	6.063e-3	9	1.878e-3	4	3.74e-6	1
72		min	-.243	4	0	1	-.236	5	-1.003e-4	1	-3.024e-3	5	-4.054e-3	8
73	N37	max	-.004	1	.476	6	.029	4	6.058e-3	9	1.846e-3	4	6.981e-6	1
74		min	-.27	4	0	1	-.271	5	-9.465e-5	1	-3.06e-3	5	-3.658e-3	8
75	N38	max	-.005	1	.485	6	.01	1	6.016e-3	9	1.809e-3	4	9.741e-6	1
76		min	-.3	4	-.001	1	-.315	5	-8.948e-5	1	-3.08e-3	5	-3.222e-3	8
77	N39	max	-.005	1	.475	8	.011	1	5.947e-3	9	1.767e-3	4	1.217e-5	1
78		min	-.323	4	-.001	1	-.357	5	-8.485e-5	1	-3.106e-3	5	-2.772e-3	8
79	N40	max	0	1	.545	5	.373	4	2.265e-3	4	2.767e-3	4	1.095e-4	1
80		min	-.421	9	-.012	1	-.266	5	-1.98e-4	5	-2.225e-3	5	-2.023e-3	5
81	N41	max	0	1	.54	5	.375	4	2.143e-3	4	2.677e-3	4	1.037e-4	1
82		min	-.443	5	-.012	1	-.274	5	-4.185e-4	5	-2.321e-3	5	-1.723e-3	5
83	N42	max	.001	1	.524	5	.367	4	2.044e-3	4	2.581e-3	4	9.855e-5	1
84		min	-.457	5	-.012	1	-.275	5	-6.073e-4	5	-2.416e-3	5	-1.424e-3	5
85	N47	max	.01	1	.015	5	.082	4	1.246e-3	4	2.72e-4	1	2.751e-3	8
86		min	-.19	5	-.039	4	0	1	-8.925e-4	5	-5.143e-3	5	1.247e-5	1
87	N49	max	.003	4	0	1	.013	1	1.555e-3	7	3.226e-4	4	2.784e-3	8
88		min	-.05	5	-.017	7	-1.129	5	6.008e-5	1	-4.115e-3	5	2.858e-5	1
89	N50	max	0	1	0	1	.013	1	1.115e-3	7	2.881e-4	4	2.461e-3	8
90		min	0	3	0	4	-1.157	5	4.787e-5	1	-4.139e-3	5	2.526e-5	1
91	N51	max	0	6	0	1	0	6	0	1	0	6	0	8
92		min	0	8	0	1	0	7	0	1	0	8	0	1
93	N52	max	0	6	0	1	0	6	0	1	0	6	0	8
94		min	0	8	0	1	0	7	0	1	0	8	0	1
95	N53	max	1.179	6	0	1	0	4	4.08e-3	9	1.112e-4	4	1.338e-3	6
96		min	0	1	0	6	0	5	-1.053e-4	1	-1.382e-4	5	5.074e-4	1
97	N55	max	0	1	0	1	0	1	0	1	0	1	0	1
98		min	0	1	0	1	0	1	0	1	0	1	0	4
99	N57	max	.094	3	-.002	5	1.095	2	1.623e-4	4	3.937e-3	3	-2.075e-6	1
100		min	-.088	2	-.004	4	-.004	1	7.413e-5	5	-3.663e-3	2	-5.439e-5	4
101	N61	max	.083	3	-.001	5	1.088	2	1.611e-4	4	3.937e-3	3	-2.594e-6	1
102		min	-.077	2	-.003	4	-.004	1	7.294e-5	5	-3.663e-3	2	-6.799e-5	4
103	N62	max	.083	2	.003	4	.988	2	1.396e-4	4	3.864e-3	3	-1.015e-5	1
104		min	-.089	3	0	5	-.004	1	5.691e-5	1	-3.575e-3	2	-2.66e-4	4
105	N63	max	-.002	1	-.006	1	.023	5	9.675e-4	4	2.612e-3	2	-3.384e-5	1
106		min	-.067	3	-.024	4	-.004	1	1.254e-4	5	-2.986e-3	3	-5.998e-3	2
107	N64	max	0	1	-.003	1	.01	5	9.87e-4	4	2.522e-3	2	-3.378e-5	1
108		min	-.039	3	-.014	4	-.003	1	7.269e-5	5	-2.915e-3	3	-6.076e-3	2
109	N65	max	0	2	0	1	0	8	1.003e-3	4	2.414e-3	2	-3.332e-5	1
110		min	0	1	0	2	0	7	9.467e-6	5	-2.822e-3	3	-6.146e-3	2
111	N66	max	.041	3	.015	4	.003	1	1.019e-3	4	2.29e-3	2	-3.263e-5	1
112		min	0	1	0	1	-.004	5	-5.092e-5	5	-2.713e-3	3	-6.193e-3	2
113	N67	max	.391	3	.165	4	.071	4	9.779e-4	4	1.017e-3	2	5.119e-5	1

Envelope Joint Displacements (Continued)

	Joint		X [in]	lc	Y [in]	lc	Z [in]	lc	X Rotation ...	lc	Y Rotation ...	lc	Z Rotation ...	lc
114		min	0	1	0	1	-.019	5	-2.876e-4	5	-1.477e-3	3	-3.535e-3	2
115	N68	max	.407	3	.184	4	.076	4	9.552e-4	4	8.991e-4	2	6.606e-5	1
116		min	0	1	0	1	-.02	5	-2.843e-4	5	-1.361e-3	3	-2.994e-3	2
117	N69	max	.409	6	.206	4	.078	4	9.283e-4	4	7.943e-4	2	7.982e-5	1
118		min	0	1	0	1	-.022	5	-2.778e-4	5	-1.257e-3	3	-2.43e-3	2
119	N70	max	.399	6	.222	4	.077	4	8.975e-4	4	7.04e-4	2	9.064e-5	1
120		min	0	1	0	1	-.022	5	-2.691e-4	5	-1.166e-3	3	-1.873e-3	2
121	N71	max	0	1	0	2	0	4	0	4	0	5	0	2
122		min	0	9	0	1	0	5	0	5	0	4	0	1
123	N72	max	0	1	0	1	0	4	7.296e-4	4	2.743e-4	1	2.033e-3	8
124		min	0	3	0	4	0	5	-1.804e-4	5	-5.338e-3	5	9.215e-6	1
125	N73	max	.303	7	0	7	.013	1	-1.121e-5	1	3.429e-4	8	5.113e-4	8
126		min	-.024	8	0	1	-1.322	5	-5.064e-4	7	-4.194e-3	7	5.25e-6	1
127	N75	max	0	2	0	1	1.04	2	1.363e-4	4	3.937e-3	3	-6.226e-6	1
128		min	0	3	0	2	-.004	1	4.817e-5	5	-3.663e-3	2	-1.632e-4	4
129	N76	max	.012	6	-.002	1	0	1	3.166e-3	9	2.798e-4	9	-1.727e-5	8
130		min	-.009	9	-.594	6	-.328	9	-3.977e-5	1	-3.097e-4	6	-1.326e-4	7
131	N77	max	0	1	-.096	7	.103	4	6.211e-4	9	1.211e-3	4	1.2e-3	1
132		min	-1.772	9	-.097	1	-.105	5	-4.582e-5	1	-1.224e-3	5	1.19e-3	7
133	N78	max	0	1	-.006	1	.005	4	1.515e-3	9	5.958e-5	4	6.444e-5	1
134		min	-1.473	8	-.006	7	-.005	5	-6.121e-5	1	-5.963e-5	5	6.43e-5	6
135	N79	max	0	1	-.005	6	.01	4	2.989e-3	9	2.02e-4	4	1.637e-4	1
136		min	-2.048	8	-.009	1	-.01	5	-8.656e-5	1	-1.988e-4	5	6.368e-5	6
137	N81	max	.452	6	-.077	1	.035	7	4.583e-3	9	4.432e-4	5	2.951e-4	6
138		min	0	1	-.325	6	-.043	8	-1.14e-4	1	-4.61e-4	4	-2.512e-4	1
139	N82	max	.007	1	.293	5	.242	4	1.399e-3	4	1.45e-3	4	2.202e-3	4
140		min	-.449	5	-.012	1	-.161	5	-2.139e-3	5	-3.46e-3	5	4.86e-5	1
141	N83	max	-.004	1	.335	8	.014	1	5.245e-3	9	1.432e-3	4	3.034e-4	4
142		min	-.371	4	-.001	1	-.612	5	-5.127e-5	1	-3.34e-3	5	-5.08e-4	5
143	N84	max	0	1	0	1	.003	9	1.465e-4	9	4.784e-4	9	-8.476e-5	7
144		min	-.4	9	0	7	-.003	6	-3.766e-5	1	-4.402e-4	6	-1.143e-4	1
145	N85	max	0	1	.003	1	.009	5	1.885e-4	9	2.874e-4	5	-1.282e-4	7
146		min	-.521	9	.002	7	-.008	4	-3.838e-5	1	-2.705e-4	4	-1.412e-4	1
147	N88	max	.014	9	.009	6	0	1	1.448e-3	6	2.791e-3	6	4.849e-5	1
148		min	-.016	6	0	1	-.05	7	-7.158e-5	1	-2.323e-3	9	-1.641e-3	7
149	N89	max	.157	6	0	1	1.833	6	1.12e-3	6	3.052e-3	6	5.317e-5	1
150		min	-.128	9	-.038	6	0	1	-4.543e-5	1	-2.542e-3	9	-1.733e-3	7
151	N90	max	.282	2	.009	4	.85	2	6.34e-5	4	3.22e-3	3	-1.354e-5	1
152		min	-.308	3	-.004	5	-.004	1	3.601e-5	5	-2.872e-3	2	-1.083e-3	2
153	N91	max	.352	2	.01	4	.79	2	9.224e-6	5	2.74e-3	3	-1.503e-5	1
154		min	-.388	3	-.004	5	-.004	1	-1.601e-5	4	-2.383e-3	2	-1.442e-3	2
155	N92	max	-.002	1	.12	6	.008	8	1.523e-6	1	3.234e-5	8	4.495e-5	1
156		min	-.648	9	-.011	1	-.014	7	-7.858e-5	9	-4.206e-5	7	-1.567e-4	6
157	N93	max	.452	2	0	5	.661	2	-2.336e-4	5	1.455e-3	3	-1.819e-5	1
158		min	-.508	3	0	4	-.004	1	-4.33e-4	4	-1.111e-3	2	-2.207e-3	2
159	N96	max	.332	7	0	1	.013	1	-1.129e-5	1	3.429e-4	8	3.229e-4	8
160		min	-.026	8	-.004	7	-1.338	5	-5.065e-4	7	-4.194e-3	7	3.315e-6	1
161	N97	max	.48	5	0	5	0	1	1.016e-4	5	2.743e-4	1	2.394e-4	8
162		min	-.025	1	-.002	4	-.205	7	-3.282e-4	4	-5.338e-3	5	1.085e-6	1
163	N98	max	.442	5	0	4	0	1	1.016e-4	5	2.743e-4	1	3.791e-4	8
164		min	-.023	1	0	5	-.189	7	-3.281e-4	4	-5.338e-3	5	1.719e-6	1
165	N99	max	0	1	0	6	0	4	4.975e-3	9	1.735e-3	4	-2.265e-4	1
166		min	0	9	0	1	0	5	-1.207e-4	1	-1.586e-3	5	-4.815e-3	6
167	N100	max	0	1	0	1	0	1	0	4	0	1	0	1
168		min	0	1	0	1	0	1	0	1	0	1	0	4
169	N101	max	.002	1	-.002	1	1.313	3	1.443e-4	4	3.814e-3	3	8.928e-5	4
170		min	-.232	2	-.004	4	0	1	6.104e-5	1	-3.525e-3	2	5.195e-5	1
171	N103	max	.002	1	-.001	1	1.283	3	1.578e-4	4	3.814e-3	3	7.07e-5	4
172		min	-.203	2	-.003	4	0	1	6.116e-5	1	-3.525e-3	2	4.676e-5	1

Envelope Joint Displacements (Continued)

	Joint		X [in]	lc	Y [in]	lc	Z [in]	lc	X Rotation ...	lc	Y Rotation ...	lc	Z Rotation ...	lc
173	N104	max	.001	1	0	2	1.21	3	1.809e-4	4	3.815e-3	3	2.45e-5	1
174		min	-.133	2	0	1	0	1	5.178e-5	1	-3.526e-3	2	1.066e-5	5
175	N101A	max	.045	6	.192	9	.005	6	6.124e-6	1	1.458e-5	8	5.346e-4	9
176		min	-.004	1	0	1	-.006	9	-3.521e-4	7	-1.85e-4	7	1.688e-4	1
177	N103A	max	-.004	1	.198	6	.004	8	4.731e-6	1	1.964e-5	8	1.346e-4	1
178		min	-.295	9	-.007	1	-.012	7	-2.624e-4	7	-1.74e-4	7	-6.549e-4	6
179	N105	max	.001	1	0	1	.013	9	4.701e-6	1	1.227e-4	9	3.865e-4	9
180		min	-.007	6	-.269	7	0	1	-2.076e-4	7	-7.891e-5	6	-4.908e-7	1
181	N106	max	.074	7	0	1	.01	6	6.063e-6	1	5.66e-5	3	1.13e-3	9
182		min	0	1	-.087	6	0	1	-3.326e-4	7	-9.14e-5	2	7.538e-5	1
183	N106A	max	.042	6	.27	9	.004	6	6.124e-6	1	1.458e-5	8	5.348e-4	9
184		min	-.005	1	0	1	-.009	9	-3.523e-4	7	-1.85e-4	7	1.688e-4	1
185	N105A	max	-.002	1	.114	6	.007	8	4.128e-6	1	8.71e-5	8	1.205e-4	1
186		min	-.477	9	-.01	1	-.013	7	-2.13e-4	9	-1.138e-4	7	-4.346e-4	6
187	N106B	max	0	1	0	1	.012	9	3.682e-4	9	1.852e-4	9	2.097e-4	6
188		min	-.003	6	-.403	7	0	1	-9.432e-6	1	-1.609e-4	6	-3.197e-5	1
189	N107	max	.041	6	.002	1	.002	5	9.332e-4	9	4.149e-4	4	4.177e-4	1
190		min	0	1	-.002	7	-.002	4	-5.119e-5	1	-4.185e-4	5	4.15e-4	7
191	N108	max	0	1	-.192	7	.2	4	8.912e-4	9	5.521e-4	4	5.556e-4	1
192		min	-2.475	9	-.194	1	-.203	5	-5.047e-5	1	-5.57e-4	5	5.518e-4	7
193	N110A	max	.036	6	0	8	0	4	1.987e-3	9	1.132e-5	5	-1.275e-5	8
194		min	0	1	0	1	0	5	-6.933e-5	1	-1.144e-5	4	-1.349e-5	1
195	N111	max	0	1	.002	1	.002	5	1.945e-3	9	2.124e-5	5	-2.431e-5	8
196		min	-2.467	8	-.002	8	-.002	4	-6.861e-5	1	-2.141e-5	4	-2.492e-5	1
197	N108A	max	.027	6	-.002	1	.002	4	3.246e-3	9	2.429e-4	5	-3.695e-4	1
198		min	0	1	-.004	6	-.002	5	-9.099e-5	1	-2.364e-4	4	-5.688e-4	6
199	N109	max	0	1	.008	6	.015	4	3.204e-3	9	1.526e-4	5	-2.627e-4	1
200		min	-2.421	8	-.007	1	-.014	5	-9.026e-5	1	-1.467e-4	4	-4.458e-4	6
201	N110	max	0	1	.004	6	.002	5	3.277e-3	9	3.081e-4	5	-4.467e-4	1
202		min	-.027	8	-.003	1	-.002	4	-9.153e-5	1	-3.013e-4	4	-6.581e-4	6
203	N111A	max	2.382	6	-.105	1	.077	4	3.319e-3	9	3.939e-4	5	-5.481e-4	1
204		min	0	1	-.147	6	-.078	5	-9.225e-5	1	-3.865e-4	4	-7.757e-4	6
205	N112	max	-.002	1	.117	6	.007	8	3.046e-6	1	6.475e-5	8	8.995e-5	1
206		min	-.548	9	-.011	1	-.013	7	-1.572e-4	9	-8.433e-5	7	-3.162e-4	6
207	N104A	max	.016	6	0	1	.05	6	1.693e-3	6	2.595e-3	6	4.498e-5	1
208		min	-.013	9	-.01	6	0	1	-9.227e-5	1	-2.158e-3	9	-1.572e-3	7
209	N105B	max	.129	9	.325	6	0	1	2.016e-3	6	2.332e-3	6	4.029e-5	1
210		min	-.157	6	-.017	1	-2.292	9	-1.236e-4	1	-1.935e-3	9	-1.481e-3	7
211	N106C	max	.111	6	0	1	1.713	6	8.235e-4	6	3.281e-3	6	5.734e-5	1
212		min	-.091	9	-.025	6	0	1	-2.706e-5	1	-2.736e-3	9	-1.815e-3	7
213	N107A	max	.23	6	0	1	1.743	6	8.626e-4	7	4.451e-3	6	6.865e-5	1
214		min	-.134	9	-.027	6	0	1	-4.189e-5	1	-3.908e-3	9	-2.08e-3	7
215	N108B	max	.256	6	0	1	1.757	6	9.558e-4	7	4.82e-3	6	7.332e-5	1
216		min	-.147	9	-.023	7	0	1	-4.443e-5	1	-4.289e-3	9	-2.142e-3	7
217	N109A	max	.272	6	0	1	1.783	6	1.096e-3	7	5.158e-3	6	7.942e-5	1
218		min	-.161	9	-.013	7	0	1	-4.566e-5	1	-4.635e-3	9	-2.173e-3	7
219	N110B	max	.274	6	0	9	1.817	6	1.245e-3	7	5.447e-3	6	8.816e-5	1
220		min	-.171	9	0	6	0	1	-5.266e-5	8	-4.933e-3	9	-2.167e-3	7
221	N111B	max	.16	6	.188	7	2.553	6	3.765e-3	7	6.642e-3	6	-9.47e-5	1
222		min	-.285	9	-.001	1	.001	1	-3.064e-3	8	-6.309e-3	9	-1.541e-3	8
223	N112A	max	.152	6	.191	7	2.597	6	3.907e-3	7	6.503e-3	6	-9.275e-5	1
224		min	-.293	9	0	1	.001	1	-3.233e-3	8	-6.183e-3	9	-1.467e-3	8
225	N113	max	.142	6	.188	7	2.64	6	4.034e-3	7	6.325e-3	6	-8.668e-5	1
226		min	-.301	9	0	1	.001	1	-3.387e-3	8	-6.019e-3	9	-1.381e-3	8
227	N114	max	.134	6	.183	6	2.67	6	4.128e-3	7	6.128e-3	6	-7.816e-5	1
228		min	-.307	9	0	1	.002	1	-3.503e-3	8	-5.836e-3	9	-1.287e-3	8
229	N115	max	.005	6	.005	6	3.148	6	2.428e-4	7	6.828e-4	6	3.226e-3	9
230		min	-.015	9	0	1	.004	1	-2.22e-4	8	-7.49e-4	9	-1.001e-3	6
231	N116	max	0	6	0	1	3.147	6	0	7	5.363e-4	6	3.266e-3	9

Envelope Joint Displacements (Continued)

	Joint		X [in]	lc	Y [in]	lc	Z [in]	lc	X Rotation ...	lc	Y Rotation ...	lc	Z Rotation ...	lc
232		min	0	9	0	9	.004	1	0	8	-6.111e-4	9	-1.038e-3	6
233	N117	max	.013	9	0	1	3.144	6	-4.404e-6	1	4.037e-4	6	3.316e-3	9
234		min	-.005	6	-.003	6	.004	1	-2.515e-5	4	-4.855e-4	9	-1.089e-3	6
235	N118	max	.019	9	0	1	3.139	6	-6.344e-6	1	2.917e-4	6	3.366e-3	9
236		min	-.008	6	-.005	4	.004	1	-4.179e-5	4	-3.796e-4	9	-1.14e-3	6
237	N119	max	.022	9	0	1	3.125	6	1.713e-6	1	2.496e-5	6	3.49e-3	9
238		min	-.01	6	-.006	4	.004	1	-5.135e-5	9	-1.277e-4	9	-1.267e-3	6
239	N120	max	.022	9	0	1	3.127	6	4.463e-7	1	4.363e-5	6	3.481e-3	9
240		min	-.01	6	-.006	4	.004	1	-5.209e-5	9	-1.453e-4	9	-1.257e-3	6
241	N121	max	.03	9	0	1	3.125	6	1.713e-6	1	2.495e-5	6	3.49e-3	9
242		min	-.011	6	-.009	4	.004	1	-5.135e-5	9	-1.277e-4	9	-1.267e-3	6
243	N122	max	.03	9	0	1	3.124	6	1.697e-6	1	2.391e-5	6	3.493e-3	9
244		min	-.011	6	-.009	4	.004	1	-4.882e-5	9	-1.267e-4	9	-1.269e-3	6
245	N123	max	.022	9	0	1	3.114	6	1.236e-6	1	1.822e-5	6	3.509e-3	9
246		min	-.008	6	-.007	4	.004	1	-2.625e-5	5	-1.213e-4	9	-1.286e-3	6
247	N124	max	0	7	0	4	3.107	6	0	1	1.6e-5	6	3.523e-3	9
248		min	0	8	0	1	.004	1	0	5	-1.192e-4	9	-1.3e-3	6
249	N125	max	.012	6	.009	4	3.105	6	8.904e-6	4	1.435e-5	6	3.533e-3	9
250		min	-.031	9	0	1	.004	1	-1.631e-5	5	-1.175e-4	9	-1.31e-3	6
251	N126	max	.065	6	.051	4	3.105	6	2.056e-5	4	5.901e-6	6	3.553e-3	9
252		min	-.173	9	0	1	.003	1	-5.463e-5	5	-1.091e-4	9	-1.33e-3	6
253	N127	max	.076	6	.059	4	3.104	6	1.901e-5	4	4.332e-6	6	3.554e-3	9
254		min	-.202	9	0	1	.003	1	-5.828e-5	5	-1.075e-4	9	-1.331e-3	6
255	N128	max	.084	6	.066	4	3.098	6	1.735e-5	4	3.24e-6	6	3.555e-3	9
256		min	-.224	9	0	1	.003	1	-6.056e-5	5	-1.064e-4	9	-1.331e-3	6
257	N129	max	.088	6	.069	4	3.09	6	1.621e-5	4	2.663e-6	6	3.554e-3	9
258		min	-.235	9	0	1	.003	1	-6.165e-5	5	-1.059e-4	9	-1.331e-3	6
259	N130	max	.087	6	.069	4	3.081	6	1.573e-5	4	2.462e-6	6	3.554e-3	9
260		min	-.232	9	0	1	.003	1	-6.197e-5	5	-1.056e-4	9	-1.331e-3	6
261	N131	max	.082	6	.064	4	3.074	6	1.565e-5	4	2.436e-6	6	3.554e-3	9
262		min	-.215	9	0	1	.003	1	-6.2e-5	5	-1.056e-4	9	-1.331e-3	6

Envelope Member Section Deflections

	Member	Sec		x [in]	lc	y [in]	lc	z [in]	lc	x Rotate [r...	lc	(n) L/y Ratio	lc	(n) L/z Ratio	lc
1	M1	1	max	-.001	1	.081	6	0	1	1.04e-5	1	NC	6	NC	1
2			min	-.132	9	-.002	1	-.007	7	-3.947e-4	9	5154.959	1	NC	7
3		2	max	-.001	1	.081	6	0	1	1.063e-5	1	NC	6	NC	1
4			min	-.118	9	-.002	1	-.007	7	-4.033e-4	9	6969.39	1	NC	7
5		3	max	-.001	1	.081	6	0	1	1.085e-5	1	NC	6	NC	1
6			min	-.103	9	-.002	1	-.006	7	-4.118e-4	9	NC	1	NC	7
7		4	max	-.001	1	.08	6	0	1	1.107e-5	1	NC	6	NC	1
8			min	-.089	9	-.002	1	-.006	7	-4.203e-4	9	NC	1	NC	7
9		5	max	-.001	1	.08	6	0	1	1.13e-5	1	NC	6	NC	1
10			min	-.075	9	-.001	1	-.006	7	-4.288e-4	9	NC	1	NC	7
11	M2	1	max	0	1	.032	6	0	1	1.012e-5	1	NC	6	NC	1
12			min	-.105	9	-.002	1	-.006	7	-4.421e-4	8	6129.183	1	NC	7
13		2	max	0	1	.032	6	0	1	1.029e-5	1	NC	6	NC	1
14			min	-.09	9	-.001	1	-.005	7	-4.46e-4	8	8378.357	1	NC	7
15		3	max	0	1	.032	6	0	1	1.047e-5	1	NC	6	NC	1
16			min	-.076	9	-.001	1	-.004	7	-4.5e-4	8	NC	1	NC	7
17		4	max	0	1	.031	6	0	1	1.064e-5	1	NC	6	NC	1
18			min	-.062	9	0	1	-.004	7	-4.539e-4	8	NC	1	NC	7
19		5	max	0	1	.031	6	0	1	1.081e-5	1	NC	6	NC	1
20			min	-.048	9	0	1	-.003	7	-4.578e-4	8	NC	1	NC	7
21	M3	1	max	0	1	.003	6	0	1	6.58e-6	1	NC	6	NC	1
22			min	-.057	8	0	1	-.003	7	-3.389e-4	8	8128.287	1	NC	7
23		2	max	0	1	.002	6	0	1	6.646e-6	1	NC	6	NC	1
24			min	-.042	8	0	1	-.002	7	-3.356e-4	8	NC	1	NC	7

Envelope Member Section Deflections (Continued)

	Member	Sec		x [in]	lc	y [in]	lc	z [in]	lc	x Rotate [r...	lc	(n) L/y Ratio	lc	(n) L/z Ratio	lc
25		3	max	0	1	.001	6	0	1	6.712e-6	1	NC	6	NC	1
26			min	-.028	8	0	1	-.002	7	-3.324e-4	8	NC	1	NC	7
27		4	max	0	1	0	6	0	1	6.778e-6	1	NC	6	NC	1
28			min	-.014	8	0	1	0	7	-3.291e-4	8	NC	1	NC	7
29		5	max	0	1	0	1	0	1	6.844e-6	1	NC	1	NC	1
30			min	0	1	0	1	0	1	-3.258e-4	8	NC	1	NC	1
31	M4	1	max	0	1	0	1	0	1	1.012e-4	7	NC	1	NC	1
32			min	0	1	0	1	0	1	-2.172e-4	8	NC	1	NC	1
33		2	max	.101	7	.005	6	0	1	7.398e-5	7	NC	6	NC	1
34			min	0	1	0	1	-.006	9	-1.629e-4	8	NC	1	NC	9
35		3	max	.202	7	.008	6	0	1	4.684e-5	2	7057.979	6	NC	1
36			min	0	1	-.001	1	-.011	4	-1.087e-4	3	NC	1	9556.563	4
37		4	max	.302	7	.005	6	0	1	9.928e-5	6	NC	6	NC	1
38			min	0	1	0	1	-.014	9	-1.382e-4	9	NC	1	NC	9
39		5	max	.403	7	.003	6	0	1	1.609e-4	6	NC	6	NC	1
40			min	0	1	0	1	-.012	9	-1.852e-4	9	NC	1	NC	9
41	M5	1	max	.543	7	0	1	0	1	1.988e-4	6	NC	1	NC	1
42			min	0	1	-.146	7	0	1	-2.553e-4	9	NC	7	NC	1
43		2	max	.558	7	0	1	0	6	2.069e-4	6	NC	1	NC	6
44			min	0	1	-.144	6	0	1	-2.584e-4	9	NC	6	NC	1
45		3	max	.572	7	0	1	0	6	2.151e-4	6	NC	1	NC	6
46			min	0	1	-.142	6	0	1	-2.614e-4	9	NC	6	NC	1
47		4	max	.586	7	0	1	0	6	2.232e-4	6	NC	1	NC	6
48			min	0	1	-.14	6	0	1	-2.644e-4	9	NC	6	NC	1
49		5	max	.6	7	0	1	.001	6	2.313e-4	6	NC	1	NC	6
50			min	0	1	-.138	6	0	1	-2.674e-4	9	NC	6	NC	1
51	M6	1	max	.451	9	0	1	.001	6	1.156e-4	6	NC	1	NC	6
52			min	0	1	-.42	6	0	1	-2.214e-4	9	NC	6	NC	1
53		2	max	.465	9	0	1	.002	6	1.252e-4	6	NC	1	NC	6
54			min	0	1	-.417	6	0	9	-2.202e-4	9	NC	6	NC	9
55		3	max	.479	9	0	1	.002	6	1.349e-4	6	NC	1	NC	6
56			min	0	1	-.415	6	0	9	-2.191e-4	9	NC	6	NC	9
57		4	max	.493	9	0	1	.002	6	1.446e-4	6	NC	1	NC	6
58			min	0	1	-.412	6	0	9	-2.179e-4	9	NC	6	8019.719	9
59		5	max	.508	9	0	1	.003	6	1.543e-4	6	NC	1	NC	6
60			min	0	1	-.41	6	-.001	9	-2.168e-4	9	NC	6	5915.246	9
61	M7	1	max	.235	9	0	1	.003	6	3.668e-5	1	NC	1	NC	6
62			min	0	1	-.608	6	-.001	9	-1.006e-4	9	NC	6	NC	9
63		2	max	.249	9	0	1	.003	6	3.624e-5	1	NC	1	NC	6
64			min	0	1	-.606	6	-.002	9	-9.638e-5	9	NC	6	NC	9
65		3	max	.264	9	0	1	.004	6	3.581e-5	1	NC	1	6478.309	6
66			min	0	1	-.603	6	-.002	9	-9.217e-5	9	NC	6	7446.137	9
67		4	max	.278	9	0	1	.004	6	3.538e-5	1	NC	1	4308.009	6
68			min	0	1	-.6	6	-.002	9	-8.796e-5	9	NC	6	4932.844	9
69		5	max	.292	9	0	1	.005	6	4.305e-5	6	NC	1	3224.152	6
70			min	0	1	-.597	6	-.003	9	-8.375e-5	9	NC	6	3677.896	9
71	M8	1	max	.128	9	0	1	.005	6	3.494e-5	1	NC	1	NC	6
72			min	0	1	-.652	6	-.003	9	-5.435e-5	8	NC	6	NC	9
73		2	max	.142	9	0	1	.005	6	3.45e-5	1	NC	1	NC	6
74			min	0	1	-.648	6	-.003	9	-4.947e-5	8	NC	6	NC	9
75		3	max	.155	9	0	1	.006	6	3.406e-5	1	NC	1	6340.748	6
76			min	0	1	-.645	6	-.004	9	-4.458e-5	8	NC	6	6854.802	9
77		4	max	.169	9	0	1	.006	6	3.362e-5	1	NC	1	4213.762	6
78			min	0	1	-.642	6	-.004	9	-3.97e-5	8	NC	6	4560.529	9
79		5	max	.183	9	0	1	.007	6	4.077e-5	7	NC	1	3151.417	6
80			min	0	1	-.638	6	-.005	9	-3.482e-5	8	NC	6	3414.514	9
81	M9	1	max	.183	9	0	1	.007	6	4.077e-5	7	NC	1	NC	6
82			min	0	1	-.638	6	-.005	9	-3.482e-5	8	NC	6	NC	9
83		2	max	.219	9	-.001	1	.008	6	6.371e-5	7	NC	1	NC	6

Envelope Member Section Deflections (Continued)

	Member	Sec		x [in]	lc	y [in]	lc	z [in]	lc	x Rotate [r...	lc	(n) L/y Ratio	lc	(n) L/z Ratio	lc
84			min	0	1	-.628	6	-.006	9	-2.179e-5	8	NC	6	NC	9
85		3	max	.256	9	-.001	1	.009	6	8.666e-5	7	NC	1	NC	6
86			min	0	1	-.617	6	-.007	9	-8.773e-6	8	NC	6	NC	9
87		4	max	.292	9	-.002	1	.01	6	1.096e-4	7	NC	1	NC	6
88			min	0	1	-.606	6	-.008	9	4.248e-6	8	NC	6	NC	9
89		5	max	.328	9	-.002	1	.012	6	1.326e-4	7	NC	1	NC	6
90			min	0	1	-.594	6	-.009	9	1.727e-5	8	NC	6	NC	9
91	M10	1	max	1.423	9	0	1	0	1	8.841e-4	7	NC	1	NC	1
92			min	0	1	0	1	0	1	-9.848e-6	1	NC	1	NC	1
93		2	max	1.64	9	.104	6	.02	9	1.033e-3	7	4464.708	6	5295.866	9
94			min	0	1	-.003	1	-.024	6	-1.746e-5	1	NC	1	4358.076	6
95		3	max	1.857	9	.193	6	.047	9	1.182e-3	7	3453.047	6	2201.176	9
96			min	0	1	-.008	1	-.057	6	-2.507e-5	1	NC	1	1810.755	6
97		4	max	2.075	9	.266	6	.084	9	1.332e-3	7	4718.613	6	1243.841	9
98			min	0	1	-.013	1	-.101	6	-3.268e-5	1	7737.267	1	1024.671	6
99		5	max	2.292	9	.325	6	.129	9	1.481e-3	7	NC	6	804.945	9
100			min	0	1	-.017	1	-.157	6	-4.029e-5	1	5980.664	1	664.46	6
101	M11	1	max	0	1	0	1	0	1	1.607e-3	7	NC	1	NC	1
102			min	0	1	0	1	0	1	-4.673e-5	1	NC	1	NC	1
103		2	max	.013	7	.002	6	.003	9	1.616e-3	7	NC	6	1777.359	9
104			min	0	1	0	1	-.004	6	-4.717e-5	1	NC	1	1478.686	6
105		3	max	.025	7	.005	6	.007	9	1.624e-3	7	NC	6	884.626	9
106			min	0	1	0	1	-.008	6	-4.761e-5	1	NC	1	736.013	6
107		4	max	.038	7	.007	6	.01	9	1.633e-3	7	NC	6	587.072	9
108			min	0	1	0	1	-.012	6	-4.805e-5	1	NC	1	488.475	6
109		5	max	.05	7	.009	6	.014	9	1.641e-3	7	NC	6	438.313	9
110			min	0	1	0	1	-.016	6	-4.849e-5	1	NC	1	364.721	6
111	M12	1	max	0	1	0	1	0	1	1.403e-3	7	NC	1	NC	1
112			min	-1.314	6	0	1	0	1	-5.161e-5	1	NC	1	NC	1
113		2	max	0	1	.003	6	.012	9	1.221e-3	7	NC	6	6998.921	9
114			min	-1.139	6	0	1	-.014	6	-4.909e-5	1	NC	1	5798.17	6
115		3	max	0	1	.003	6	.012	9	1.04e-3	7	NC	6	6993.445	9
116			min	-.963	6	0	1	-.014	6	-4.658e-5	1	NC	1	5998.096	6
117		4	max	0	1	.001	6	.006	9	8.589e-4	7	NC	6	NC	9
118			min	-.788	6	0	1	-.007	6	-4.406e-5	1	NC	1	NC	6
119		5	max	0	1	0	1	0	1	6.776e-4	7	NC	1	NC	1
120			min	-.612	6	0	1	0	1	-4.154e-5	1	NC	1	NC	1
121	M13	1	max	0	1	0	1	0	1	6.776e-4	7	NC	1	NC	1
122			min	-.612	6	0	1	0	1	-4.154e-5	1	NC	1	NC	1
123		2	max	0	1	0	1	0	7	5.39e-4	7	NC	1	NC	7
124			min	-.49	6	0	4	-.002	8	-3.961e-5	1	NC	4	NC	8
125		3	max	0	1	0	1	0	7	4.003e-4	7	NC	1	NC	7
126			min	-.368	6	0	8	-.004	8	-3.768e-5	1	NC	8	NC	8
127		4	max	0	1	0	1	.001	7	2.617e-4	7	NC	1	NC	7
128			min	-.246	6	0	8	-.004	8	-3.575e-5	1	NC	8	NC	8
129		5	max	0	1	0	1	0	1	1.23e-4	7	NC	1	NC	1
130			min	-.124	6	0	1	0	1	-3.383e-5	1	NC	1	NC	1
131	M14	1	max	0	1	0	1	0	1	1.19e-4	7	NC	1	NC	1
132			min	-.119	6	0	1	-.032	6	-2.673e-5	1	NC	1	NC	6
133		2	max	0	1	0	4	0	1	1.068e-4	7	NC	4	NC	1
134			min	-.108	6	0	1	-.031	6	-2.576e-5	1	NC	1	NC	6
135		3	max	0	1	0	4	0	1	9.47e-5	7	NC	4	NC	1
136			min	-.096	6	0	1	-.03	6	-2.478e-5	1	NC	1	NC	6
137		4	max	0	1	0	4	0	1	8.257e-5	7	NC	4	NC	1
138			min	-.084	6	0	1	-.029	6	-2.38e-5	1	NC	1	NC	6
139		5	max	0	1	0	4	0	1	7.044e-5	7	NC	4	NC	1
140			min	-.072	6	0	1	-.028	6	-2.282e-5	1	NC	1	NC	6
141	M15	1	max	0	1	0	4	0	1	5.26e-5	7	NC	4	NC	1
142			min	-.049	6	0	1	-.06	6	-9.76e-7	1	NC	1	NC	6

Envelope Member Section Deflections (Continued)

	Member	Sec		x [in]	lc	y [in]	lc	z [in]	lc	x Rotate [r...	lc	(n) L/y Ratio	lc	(n) L/z Ratio	lc
143		2	max	.008	9	0	7	0	1	4.348e-5	7	NC	7	NC	1
144			min	-.037	6	0	1	-.059	6	-2.729e-6	8	NC	1	NC	6
145		3	max	.02	9	0	7	0	1	3.436e-5	7	NC	7	NC	1
146			min	-.025	6	0	1	-.058	6	-8.274e-6	8	NC	1	NC	6
147		4	max	.031	9	0	7	0	1	2.524e-5	7	NC	7	NC	1
148			min	-.013	6	0	1	-.057	6	-1.382e-5	8	NC	1	NC	6
149		5	max	.043	9	0	7	0	1	1.621e-5	6	NC	7	NC	1
150			min	-.001	6	0	1	-.056	6	-1.947e-5	9	NC	1	NC	6
151	M16	1	max	.049	9	0	7	0	9	2.612e-5	1	NC	7	NC	9
152			min	0	1	0	1	-.049	6	-2.494e-5	9	NC	1	NC	6
153		2	max	.061	9	0	7	0	9	2.698e-5	1	NC	7	9874.923	9
154			min	0	1	0	1	-.048	6	-2.945e-5	9	NC	1	NC	6
155		3	max	.073	9	0	7	0	1	2.784e-5	1	NC	7	NC	1
156			min	0	1	0	1	-.047	6	-3.395e-5	9	NC	1	NC	6
157		4	max	.085	9	0	7	0	1	2.869e-5	1	NC	7	NC	1
158			min	0	1	0	1	-.045	6	-3.845e-5	9	NC	1	NC	6
159		5	max	.096	9	0	7	0	1	2.955e-5	1	NC	7	NC	1
160			min	0	1	0	1	-.044	6	-4.296e-5	9	NC	1	NC	6
161	M17	1	max	.094	9	0	7	.023	9	3.583e-5	1	NC	7	NC	9
162			min	0	1	0	1	-.024	6	-4.064e-5	9	NC	1	1453.287	6
163		2	max	.159	9	0	7	.018	9	3.622e-5	1	NC	7	NC	9
164			min	0	1	0	1	-.017	6	-6.317e-5	9	NC	1	1999.122	6
165		3	max	.224	9	0	7	.012	9	3.661e-5	1	NC	7	NC	9
166			min	0	1	0	1	-.011	6	-8.571e-5	9	NC	1	3148.598	6
167		4	max	.289	9	0	7	.006	9	3.7e-5	1	NC	7	NC	9
168			min	0	1	0	1	-.005	6	-1.082e-4	9	NC	1	6748.571	6
169		5	max	.354	9	0	1	0	1	3.738e-5	1	NC	1	NC	1
170			min	0	1	0	1	0	1	-1.308e-4	9	NC	1	NC	1
171	M18	1	max	.354	9	0	1	0	1	3.738e-5	1	NC	1	NC	1
172			min	0	1	0	1	0	1	-1.308e-4	9	NC	1	NC	1
173		2	max	.366	9	0	1	0	6	3.745e-5	1	NC	1	NC	6
174			min	0	1	0	7	0	9	-1.347e-4	9	NC	7	NC	9
175		3	max	.377	9	0	1	.001	6	3.752e-5	1	NC	1	NC	6
176			min	0	1	0	7	-.002	9	-1.386e-4	9	NC	7	NC	9
177		4	max	.388	9	0	1	.002	6	3.759e-5	1	NC	1	NC	6
178			min	0	1	0	7	-.002	9	-1.426e-4	9	NC	7	NC	9
179		5	max	.4	9	0	1	.003	6	3.766e-5	1	8962.017	1	NC	6
180			min	0	1	0	7	-.003	9	-1.465e-4	9	NC	7	NC	9
181	M19	1	max	1.037	9	0	1	0	1	4.145e-5	1	NC	1	NC	1
182			min	0	1	0	1	0	1	-3.668e-4	9	NC	1	NC	1
183		2	max	1.221	9	-.016	7	.019	5	4.254e-5	1	6080.191	7	4980.453	5
184			min	0	1	-.016	1	-.019	4	-4.304e-4	9	5942.141	1	5106.342	4
185		3	max	1.404	9	-.039	7	.045	5	4.363e-5	1	2466.072	7	2140.941	5
186			min	0	1	-.04	1	-.044	4	-4.939e-4	9	2422.639	1	2185.004	4
187		4	max	1.588	9	-.067	7	.075	5	4.473e-5	1	1449.037	7	1301.066	5
188			min	0	1	-.068	1	-.073	4	-5.575e-4	9	1427.633	1	1324.165	4
189		5	max	1.772	9	-.096	7	.105	5	4.582e-5	1	1009.898	7	926.331	5
190			min	0	1	-.097	1	-.103	4	-6.211e-4	9	996.76	1	941.077	4
191	M20	1	max	0	1	0	1	0	1	5.146e-5	1	NC	1	NC	1
192			min	0	1	0	1	0	1	-9.489e-4	9	NC	1	NC	1
193		2	max	.113	8	-.005	7	.005	5	5.221e-5	1	NC	7	NC	5
194			min	0	1	-.005	1	-.005	4	-9.922e-4	9	NC	1	NC	4
195		3	max	.225	8	-.008	7	.008	5	5.295e-5	1	NC	7	NC	5
196			min	0	1	-.008	1	-.008	4	-1.035e-3	9	NC	1	NC	4
197		4	max	.338	8	-.009	7	.009	5	5.37e-5	1	NC	7	NC	5
198			min	0	1	-.009	1	-.009	4	-1.079e-3	9	NC	1	NC	4
199		5	max	.45	8	-.008	7	.008	5	5.444e-5	1	NC	7	NC	5
200			min	0	1	-.008	1	-.008	4	-1.122e-3	9	NC	1	NC	4
201	M21	1	max	.45	8	-.008	7	.008	5	5.444e-5	1	8373.67	7	8309.827	5

Envelope Member Section Deflections (Continued)

	Member	Sec		x [in]	lc	y [in]	lc	z [in]	lc	x Rotate [r...	lc	(n) L/y Ratio	lc	(n) L/z Ratio	lc
202			min	0	1	-.008	1	-.008	4	-1.122e-3	9	8319.928	1	8382.013	4
203		2	max	.563	8	-.006	7	.006	5	5.518e-5	1	NC	7	NC	5
204			min	0	1	-.006	1	-.006	4	-1.165e-3	9	NC	1	NC	4
205		3	max	.675	8	-.004	7	.004	5	5.593e-5	1	NC	7	NC	5
206			min	0	1	-.004	1	-.004	4	-1.208e-3	9	NC	1	NC	4
207		4	max	.788	8	-.001	7	.002	5	5.667e-5	1	NC	7	NC	5
208			min	0	1	-.001	1	-.001	4	-1.252e-3	9	NC	1	NC	4
209		5	max	.9	8	0	1	0	1	5.742e-5	1	NC	1	NC	1
210			min	0	1	0	1	0	1	-1.295e-3	9	NC	1	NC	1
211	M22	1	max	.9	8	0	1	0	1	5.742e-5	1	NC	1	NC	1
212			min	0	1	0	1	0	1	-1.295e-3	9	NC	1	NC	1
213		2	max	1.044	8	0	1	0	5	5.837e-5	1	NC	1	NC	5
214			min	0	1	0	7	0	4	-1.35e-3	9	NC	7	NC	4
215		3	max	1.187	8	-.002	1	.002	5	5.931e-5	1	NC	1	NC	5
216			min	0	1	-.002	7	-.002	4	-1.405e-3	9	NC	7	NC	4
217		4	max	1.33	8	-.004	1	.004	5	6.026e-5	1	NC	1	NC	5
218			min	0	1	-.004	7	-.004	4	-1.46e-3	9	NC	7	NC	4
219		5	max	1.473	8	-.006	1	.005	5	6.121e-5	1	NC	1	NC	5
220			min	0	1	-.006	7	-.005	4	-1.515e-3	9	NC	7	NC	4
221	M23	1	max	1.649	8	-.007	1	.006	5	6.252e-5	1	NC	1	NC	5
222			min	0	1	-.007	7	-.006	4	-1.591e-3	9	NC	7	NC	4
223		2	max	1.778	8	-.006	1	.006	5	6.347e-5	1	NC	1	NC	5
224			min	0	1	-.006	7	-.006	4	-1.647e-3	9	NC	7	NC	4
225		3	max	1.907	8	-.005	8	.004	5	6.443e-5	1	NC	8	NC	5
226			min	0	1	-.005	7	-.004	4	-1.703e-3	9	NC	7	NC	4
227		4	max	2.035	8	-.002	8	.002	5	6.539e-5	1	NC	8	NC	5
228			min	0	1	-.002	1	-.002	4	-1.759e-3	9	NC	1	NC	4
229		5	max	2.164	8	0	1	0	1	6.635e-5	1	NC	1	NC	1
230			min	0	1	0	1	0	1	-1.814e-3	9	NC	1	NC	1
231	M24	1	max	2.164	8	0	1	0	1	6.635e-5	1	NC	1	NC	1
232			min	0	1	0	1	0	1	-1.814e-3	9	NC	1	NC	1
233		2	max	2.24	8	0	1	0	4	6.692e-5	1	NC	1	NC	4
234			min	0	1	0	8	0	5	-1.847e-3	9	NC	8	NC	5
235		3	max	2.316	8	.002	1	.001	4	6.748e-5	1	NC	1	NC	4
236			min	0	1	-.002	8	-.001	5	-1.88e-3	9	NC	8	NC	5
237		4	max	2.391	8	.002	1	.002	4	6.804e-5	1	NC	1	NC	4
238			min	0	1	-.002	8	-.002	5	-1.913e-3	9	NC	8	NC	5
239		5	max	2.467	8	.002	1	.002	4	6.861e-5	1	NC	1	NC	4
240			min	0	1	-.002	8	-.002	5	-1.945e-3	9	NC	8	NC	5
241	M25	1	max	0	1	0	1	0	1	6.96e-5	1	NC	1	NC	1
242			min	0	1	0	1	0	1	-2.003e-3	9	NC	1	NC	1
243		2	max	.109	8	0	1	0	4	7.041e-5	1	NC	1	NC	4
244			min	0	1	0	6	0	5	-2.05e-3	9	NC	6	NC	5
245		3	max	.218	8	0	1	0	5	7.122e-5	1	NC	1	NC	5
246			min	0	1	0	6	0	4	-2.097e-3	9	NC	6	NC	4
247		4	max	.327	8	0	1	0	5	7.204e-5	1	NC	1	NC	5
248			min	0	1	0	6	0	4	-2.145e-3	9	NC	6	NC	4
249		5	max	.437	8	0	1	0	1	7.285e-5	1	NC	1	NC	1
250			min	0	1	0	1	0	1	-2.192e-3	9	NC	1	NC	1
251	M26	1	max	0	1	-.105	1	.078	5	9.225e-5	1	NC	1	NC	5
252			min	-2.382	6	-.147	6	-.077	4	-3.319e-3	9	NC	6	NC	4
253		2	max	0	1	-.082	1	.061	5	9.383e-5	1	NC	1	NC	5
254			min	-2.223	6	-.116	6	-.06	4	-3.411e-3	9	NC	6	NC	4
255		3	max	0	1	-.054	1	.04	5	9.541e-5	1	NC	1	NC	5
256			min	-2.064	6	-.078	6	-.039	4	-3.503e-3	9	NC	6	NC	4
257		4	max	0	1	-.025	1	.017	5	9.699e-5	1	NC	1	NC	5
258			min	-1.905	6	-.037	6	-.017	4	-3.595e-3	9	NC	6	NC	4
259		5	max	0	1	0	1	0	1	9.857e-5	1	NC	1	NC	1
260			min	-1.746	6	0	1	0	1	-3.686e-3	9	NC	1	NC	1

Envelope Member Section Deflections (Continued)

	Member	Sec		x [in]	lc	y [in]	lc	z [in]	lc	x Rotate [r...	lc	(n) L/y Ratio	lc	(n) L/z Ratio	lc
261	M27	1	max	.882	8	0	1	0	1	7.664e-5	1	NC	1	NC	1
262			min	0	1	0	1	0	1	-2.412e-3	9	NC	1	NC	1
263		2	max	.993	8	0	1	0	5	7.759e-5	1	NC	1	NC	5
264			min	0	1	0	6	0	4	-2.467e-3	9	NC	6	NC	4
265		3	max	1.105	8	-.001	1	.001	5	7.853e-5	1	NC	1	NC	5
266			min	0	1	-.002	6	-.001	4	-2.522e-3	9	NC	6	NC	4
267		4	max	1.216	8	-.002	1	.001	5	7.948e-5	1	NC	1	NC	5
268			min	0	1	-.003	6	-.001	4	-2.577e-3	9	NC	6	NC	4
269		5	max	1.327	8	-.002	1	0	5	8.043e-5	1	NC	1	NC	5
270			min	0	1	-.003	6	0	4	-2.632e-3	9	NC	6	NC	4
271	M28	1	max	1.327	8	-.002	1	0	5	8.043e-5	1	NC	1	NC	5
272			min	0	1	-.003	6	0	4	-2.632e-3	9	NC	6	NC	4
273		2	max	1.439	8	0	1	0	3	8.138e-5	1	NC	1	NC	3
274			min	0	1	-.002	6	0	2	-2.687e-3	9	NC	6	NC	2
275		3	max	1.55	8	0	1	0	4	8.232e-5	1	NC	1	NC	4
276			min	0	1	0	6	0	5	-2.742e-3	9	NC	6	NC	5
277		4	max	1.661	8	0	1	.001	4	8.327e-5	1	NC	1	NC	4
278			min	0	1	0	6	-.001	5	-2.798e-3	9	NC	6	NC	5
279		5	max	1.773	8	0	1	0	1	8.422e-5	1	NC	1	NC	1
280			min	0	1	0	1	0	1	-2.853e-3	9	NC	1	NC	1
281	M29	1	max	1.773	8	0	1	0	1	8.422e-5	1	NC	1	NC	1
282			min	0	1	0	1	0	1	-2.853e-3	9	NC	1	NC	1
283		2	max	1.841	8	0	6	.002	5	8.481e-5	1	NC	6	NC	5
284			min	0	1	-.002	1	-.002	4	-2.887e-3	9	NC	1	NC	4
285		3	max	1.91	8	-.002	6	.004	5	8.539e-5	1	NC	6	NC	5
286			min	0	1	-.004	1	-.004	4	-2.921e-3	9	NC	1	NC	4
287		4	max	1.979	8	-.004	6	.007	5	8.598e-5	1	NC	6	7354.615	5
288			min	0	1	-.006	1	-.007	4	-2.955e-3	9	8228.945	1	7267.108	4
289		5	max	2.048	8	-.005	6	.01	5	8.656e-5	1	NC	6	5297.918	5
290			min	0	1	-.009	1	-.01	4	-2.989e-3	9	5999.533	1	5231.489	4
291	M30	1	max	2.193	8	-.005	6	.015	5	8.801e-5	1	NC	6	NC	5
292			min	0	1	-.012	1	-.015	4	-3.073e-3	9	NC	1	NC	4
293		2	max	2.25	8	-.003	6	.016	5	8.857e-5	1	NC	6	NC	5
294			min	0	1	-.013	1	-.016	4	-3.106e-3	9	NC	1	NC	4
295		3	max	2.307	8	0	6	.016	5	8.914e-5	1	NC	6	NC	5
296			min	0	1	-.012	1	-.017	4	-3.138e-3	9	NC	1	NC	4
297		4	max	2.364	8	.003	6	.016	5	8.97e-5	1	6300.92	6	NC	5
298			min	0	1	-.01	1	-.016	4	-3.171e-3	9	NC	1	NC	4
299		5	max	2.421	8	.008	6	.014	5	9.026e-5	1	3880.433	6	NC	5
300			min	0	1	-.007	1	-.015	4	-3.204e-3	9	NC	1	NC	4
301	M31	1	max	0	1	0	1	0	1	9.126e-5	1	NC	1	NC	1
302			min	0	1	0	1	0	1	-3.262e-3	9	NC	1	NC	1
303		2	max	.007	8	0	6	0	4	9.133e-5	1	6462.006	6	NC	4
304			min	0	1	0	1	0	5	-3.266e-3	9	9686.996	1	NC	5
305		3	max	.014	8	.002	6	0	4	9.139e-5	1	3202.291	6	7222.733	4
306			min	0	1	.001	1	0	5	-3.27e-3	9	4787.949	1	7051.585	5
307		4	max	.02	8	.003	6	.001	4	9.146e-5	1	2116.044	6	4746.081	4
308			min	0	1	.002	1	-.001	5	-3.273e-3	9	3155.745	1	4634.798	5
309		5	max	.027	8	.004	6	.002	4	9.153e-5	1	1573.16	6	3509.19	4
310			min	0	1	.003	1	-.002	5	-3.277e-3	9	2340.237	1	3427.756	5
311	M32	1	max	0	1	0	8	0	5	6.933e-5	1	NC	8	NC	5
312			min	-.036	6	0	1	0	4	-1.987e-3	9	NC	1	NC	4
313		2	max	0	1	0	8	0	5	6.94e-5	1	NC	8	NC	5
314			min	-.027	6	0	1	0	4	-1.991e-3	9	NC	1	NC	4
315		3	max	0	1	0	8	0	5	6.946e-5	1	NC	8	NC	5
316			min	-.018	6	0	1	0	4	-1.995e-3	9	NC	1	NC	4
317		4	max	0	1	0	8	0	5	6.953e-5	1	NC	8	NC	5
318			min	-.009	6	0	1	0	4	-1.999e-3	9	NC	1	NC	4
319		5	max	0	1	0	1	0	1	6.96e-5	1	NC	1	NC	1

Envelope Member Section Deflections (Continued)

	Member	Sec		x [in]	lc	y [in]	lc	z [in]	lc	x Rotate [r...	lc	(n) L/y Ratio	lc	(n) L/z Ratio	lc
320			min	0	1	0	1	0	1	-2.003e-3	9	NC	1	NC	1
321	M33	1	max	.036	3	.061	6	.021	5	1.213e-4	1	NC	6	NC	5
322			min	0	1	.002	1	-.023	4	-5.007e-3	9	NC	1	NC	4
323		2	max	.127	3	.207	6	.079	5	9.468e-5	1	3415.158	6	2093.862	5
324			min	0	1	.001	1	-.095	4	-4.306e-3	4	NC	1	1659.215	4
325		3	max	.218	3	.335	6	.135	5	6.807e-5	1	2303.47	6	1055.824	5
326			min	0	1	-.003	1	-.181	4	-3.67e-3	4	NC	1	759.672	4
327		4	max	.309	3	.449	5	.192	5	4.147e-5	1	3726.087	5	701.817	5
328			min	0	1	-.007	1	-.271	4	-3.034e-3	4	NC	1	482.481	4
329		5	max	.4	3	.537	5	.253	5	1.486e-5	1	NC	5	516.663	5
330			min	0	1	-.011	1	-.36	4	-2.398e-3	4	9329.797	1	355.677	4
331	M34	1	max	.259	4	.622	5	.253	5	5.153e-4	5	NC	5	NC	5
332			min	.003	1	-.011	1	-.36	4	-3.051e-3	4	NC	1	NC	4
333		2	max	.263	4	.625	5	.256	5	5.782e-4	5	NC	5	1918.919	5
334			min	.003	1	-.011	1	-.363	4	-3.014e-3	4	NC	1	NC	4
335		3	max	.268	4	.629	5	.259	5	6.412e-4	5	NC	5	959.199	5
336			min	.003	1	-.011	1	-.366	4	-2.977e-3	4	NC	1	NC	4
337		4	max	.273	4	.632	5	.263	5	7.041e-4	5	NC	5	639.251	5
338			min	.003	1	-.011	1	-.37	4	-2.941e-3	4	NC	1	NC	4
339		5	max	.277	4	.635	5	.266	5	7.671e-4	5	NC	5	479.245	5
340			min	.003	1	-.011	1	-.373	4	-2.904e-3	4	NC	1	NC	4
341	M35	1	max	.008	1	.683	5	.266	5	1.713e-3	5	NC	5	NC	5
342			min	-.087	5	-.008	1	-.373	4	-3.559e-3	4	NC	1	NC	4
343		2	max	.008	1	.686	5	.268	5	1.769e-3	5	NC	5	NC	5
344			min	-.083	5	-.009	1	-.373	4	-3.521e-3	4	NC	1	NC	4
345		3	max	.008	1	.689	5	.27	5	1.825e-3	5	NC	5	NC	5
346			min	-.078	5	-.009	1	-.374	4	-3.483e-3	4	NC	1	5405.802	4
347		4	max	.008	1	.692	5	.272	5	1.881e-3	5	NC	5	NC	5
348			min	-.073	5	-.009	1	-.375	4	-3.446e-3	4	NC	1	3576.524	4
349		5	max	.008	1	.695	5	.274	5	1.937e-3	5	NC	5	NC	5
350			min	-.068	5	-.009	1	-.375	4	-3.408e-3	4	NC	1	2663.329	4
351	M36	1	max	.012	1	.568	5	.274	5	2.35e-3	5	NC	5	NC	5
352			min	-.407	5	-.004	1	-.375	4	-3.14e-3	4	NC	1	750.215	4
353		2	max	.012	1	.57	5	.275	5	2.386e-3	5	NC	5	NC	5
354			min	-.402	5	-.004	1	-.373	4	-3.111e-3	4	NC	1	1007.075	4
355		3	max	.012	1	.573	5	.275	5	2.421e-3	5	NC	5	NC	5
356			min	-.397	5	-.004	1	-.371	4	-3.081e-3	4	NC	1	1520.755	4
357		4	max	.012	1	.575	5	.275	5	2.456e-3	5	NC	5	NC	5
358			min	-.393	5	-.004	1	-.369	4	-3.051e-3	4	NC	1	3061.71	4
359		5	max	.012	1	.577	5	.275	5	2.491e-3	5	NC	5	NC	5
360			min	-.388	5	-.004	1	-.367	4	-3.022e-3	4	NC	1	NC	4
361	M37	1	max	.012	1	.457	5	.275	5	2.416e-3	5	NC	5	NC	5
362			min	-.524	5	-.001	1	-.367	4	-2.581e-3	4	NC	1	606.747	4
363		2	max	.012	1	.476	5	.258	5	2.677e-3	5	3678.784	5	6446.072	5
364			min	-.466	5	-.003	1	-.331	4	-2.298e-3	4	NC	1	854.566	4
365		3	max	.012	1	.479	5	.233	5	2.938e-3	5	2904.235	5	5184.706	5
366			min	-.409	5	-.004	1	-.298	4	-2.015e-3	4	NC	1	1342.334	4
367		4	max	.012	1	.47	5	.2	5	3.199e-3	5	4087.335	5	7482.829	5
368			min	-.351	5	-.006	1	-.269	4	-1.733e-3	4	NC	1	2787.336	4
369		5	max	.012	1	.449	5	.161	5	3.46e-3	5	NC	5	NC	5
370			min	-.293	5	-.007	1	-.242	4	-1.45e-3	4	NC	1	NC	4
371	M41	1	max	0	1	.015	5	.01	1	-1.247e-5	1	8826.656	5	NC	1
372			min	-.082	4	-.039	4	-.19	5	-2.751e-3	8	3396.579	4	NC	5
373		2	max	0	1	0	5	.001	1	-9.625e-6	1	NC	5	NC	1
374			min	-.01	4	-.004	4	-.024	5	-2.123e-3	8	NC	4	757.993	5
375		3	max	.061	7	.011	4	.144	5	-6.778e-6	1	9704.219	4	376.749	5
376			min	0	1	-.003	5	-.007	1	-1.495e-3	8	NC	5	7299.87	1
377		4	max	.133	7	.008	4	.312	5	-3.932e-6	1	NC	4	250.697	5
378			min	0	1	-.002	5	-.016	1	-8.673e-4	8	NC	5	4864.444	1

Envelope Member Section Deflections (Continued)

	Member	Sec		x [in]	lc	y [in]	lc	z [in]	lc	x Rotate [r...	lc	(n) L/y Ratio	lc	(n) L/z Ratio	lc
379		5	max	.205	7	0	5	.48	5	-1.085e-6	1	NC	5	187.848	5
380			min	0	1	-.002	4	-.025	1	-2.394e-4	8	NC	4	3647.533	1
381	M42	1	max	.042	5	.061	6	0	5	1.457e-4	1	NC	6	NC	5
382			min	0	1	.002	1	-.038	4	-2.017e-3	9	NC	1	NC	4
383		2	max	.085	5	.16	6	.031	5	1.305e-4	1	NC	6	1849.908	5
384			min	0	1	.002	1	-.068	4	-2.383e-3	9	NC	1	NC	4
385		3	max	.129	5	.261	6	.067	5	1.153e-4	1	8227.128	6	855.96	5
386			min	0	1	.001	1	-.097	4	-2.75e-3	9	NC	1	NC	4
387		4	max	.172	5	.358	6	.106	5	1.002e-4	1	7380.012	6	536.751	5
388			min	0	1	0	1	-.125	4	-3.116e-3	9	NC	1	NC	4
389		5	max	.215	5	.447	6	.148	5	8.498e-5	1	NC	6	383.784	5
390			min	0	1	0	1	-.152	4	-3.483e-3	9	NC	1	NC	4
391	M43	1	max	.095	5	.483	6	.148	5	4.754e-5	1	NC	6	NC	5
392			min	0	1	0	1	-.152	4	-2.918e-3	9	NC	1	NC	4
393		2	max	.1	5	.492	6	.154	5	4.596e-5	1	NC	6	1052.385	5
394			min	0	1	0	1	-.154	4	-2.954e-3	9	NC	1	NC	4
395		3	max	.104	5	.501	6	.16	5	4.439e-5	1	NC	6	524.788	5
396			min	0	1	0	1	-.156	4	-2.989e-3	9	NC	1	NC	4
397		4	max	.109	5	.51	6	.166	5	4.282e-5	1	NC	6	348.954	5
398			min	0	1	0	1	-.158	4	-3.025e-3	9	NC	1	NC	4
399		5	max	.114	5	.518	6	.172	5	4.124e-5	1	NC	6	261.06	5
400			min	0	1	0	1	-.16	4	-3.06e-3	9	NC	1	NC	4
401	M44	1	max	0	1	.502	5	.172	5	-3.893e-5	1	NC	5	NC	5
402			min	-.181	4	-.001	1	-.16	4	-2.797e-3	4	NC	1	NC	4
403		2	max	0	1	.511	5	.18	5	-4.003e-5	1	NC	5	861.176	5
404			min	-.176	4	-.001	1	-.16	4	-2.795e-3	4	NC	1	NC	4
405		3	max	0	1	.52	5	.187	5	-4.114e-5	1	NC	5	429.227	5
406			min	-.172	4	-.001	1	-.159	4	-2.793e-3	4	NC	1	NC	4
407		4	max	0	1	.528	5	.194	5	-4.225e-5	1	NC	5	285.266	5
408			min	-.167	4	-.001	1	-.159	4	-2.791e-3	4	NC	1	NC	4
409		5	max	0	1	.537	5	.201	5	-4.335e-5	1	NC	5	213.303	5
410			min	-.162	4	-.002	1	-.159	4	-2.789e-3	4	NC	1	NC	4
411	M45	1	max	0	1	.396	5	.201	5	2.042e-3	5	NC	5	NC	5
412			min	-.402	4	-.001	1	-.159	4	-2.3e-3	4	NC	1	NC	4
413		2	max	0	1	.404	5	.208	5	2.04e-3	5	NC	5	927.526	5
414			min	-.397	4	-.001	1	-.156	4	-2.292e-3	4	NC	1	NC	4
415		3	max	0	1	.413	5	.215	5	2.039e-3	5	NC	5	462.103	5
416			min	-.393	4	-.002	1	-.154	4	-2.283e-3	4	NC	1	NC	4
417		4	max	0	1	.421	5	.222	5	2.037e-3	5	NC	5	306.99	5
418			min	-.388	4	-.002	1	-.151	4	-2.274e-3	4	NC	1	NC	4
419		5	max	0	1	.429	5	.228	5	2.036e-3	5	NC	5	229.453	5
420			min	-.383	4	-.002	1	-.149	4	-2.266e-3	4	NC	1	NC	4
421	M46	1	max	.001	1	.323	4	.357	5	3.106e-3	5	NC	4	NC	5
422			min	-.475	8	.005	1	-.011	1	-1.767e-3	4	NC	1	NC	1
423		2	max	.001	1	.348	4	.424	5	3.164e-3	5	3562.078	4	NC	5
424			min	-.44	8	.004	1	-.012	1	-1.683e-3	4	NC	1	NC	1
425		3	max	.001	1	.364	4	.488	5	3.223e-3	5	2748.987	4	NC	5
426			min	-.405	8	.004	1	-.013	1	-1.599e-3	4	NC	1	NC	1
427		4	max	.001	1	.371	4	.551	5	3.281e-3	5	3774.717	4	NC	5
428			min	-.37	8	.004	1	-.013	1	-1.516e-3	4	NC	1	NC	1
429		5	max	.001	1	.371	4	.612	5	3.34e-3	5	NC	4	NC	5
430			min	-.335	8	.004	1	-.014	1	-1.432e-3	4	NC	1	NC	1
431	M49	1	max	1.129	5	0	1	.003	4	-2.858e-5	1	NC	1	3584.889	4
432			min	-.013	1	-.017	7	-.05	5	-2.784e-3	8	703.92	7	NC	5
433		2	max	1.136	5	0	1	.002	4	-2.775e-5	1	NC	1	4867.496	4
434			min	-.013	1	-.012	7	-.037	5	-2.703e-3	8	974.68	7	NC	5
435		3	max	1.143	5	0	1	.002	4	-2.692e-5	1	NC	1	7398.14	4
436			min	-.013	1	-.008	7	-.025	5	-2.622e-3	8	1525.918	7	NC	5
437		4	max	1.15	5	0	1	0	4	-2.609e-5	1	NC	1	NC	4

Envelope Member Section Deflections (Continued)

	Member	Sec		x [in]	lc	y [in]	lc	z [in]	lc	x Rotate [r...	lc	(n) L/y Ratio	lc	(n) L/z Ratio	lc
438			min	-.013	1	-.004	7	-.012	5	-2.541e-3	8	3203.189	7	NC	5
439		5	max	1.157	5	0	1	0	1	-2.526e-5	1	NC	1	NC	1
440			min	-.013	1	0	1	0	1	-2.461e-3	8	NC	1	NC	1
441	M50	1	max	1.157	5	0	1	0	1	-2.526e-5	1	NC	1	NC	1
442			min	-.013	1	0	1	0	1	-2.461e-3	8	NC	1	NC	1
443		2	max	1.202	5	.013	7	.083	7	-1.978e-5	1	5549.044	7	962.456	7
444			min	-.013	1	0	1	-.006	8	-1.926e-3	8	NC	1	NC	8
445		3	max	1.247	5	.014	7	.166	7	-1.429e-5	1	5045.997	7	479.807	7
446			min	-.013	1	0	1	-.013	8	-1.392e-3	8	NC	1	6302.58	8
447		4	max	1.293	5	.007	7	.249	7	-8.802e-6	1	8530.327	7	319.272	7
448			min	-.013	1	0	1	-.019	8	-8.574e-4	8	NC	1	4100.523	8
449		5	max	1.338	5	0	1	.332	7	-3.315e-6	1	NC	1	239.191	7
450			min	-.013	1	-.004	7	-.026	8	-3.229e-4	8	NC	7	3032.531	8
451	M51	1	max	0	1	-.002	1	.002	5	9.099e-5	1	NC	1	NC	5
452			min	-.027	6	-.004	6	-.002	4	-3.246e-3	9	NC	6	NC	4
453		2	max	0	1	-.002	1	.001	5	9.105e-5	1	NC	1	NC	5
454			min	-.02	6	-.003	6	-.001	4	-3.25e-3	9	NC	6	NC	4
455		3	max	0	1	-.001	1	0	5	9.112e-5	1	NC	1	NC	5
456			min	-.014	6	-.002	6	0	4	-3.254e-3	9	NC	6	NC	4
457		4	max	0	1	0	1	0	5	9.119e-5	1	NC	1	NC	5
458			min	-.007	6	0	6	0	4	-3.258e-3	9	NC	6	NC	4
459		5	max	0	1	0	1	0	1	9.126e-5	1	NC	1	NC	1
460			min	0	1	0	1	0	1	-3.262e-3	9	NC	1	NC	1
461	M52	1	max	0	1	-.003	5	.142	3	0	1	NC	5	NC	3
462			min	0	1	-.006	4	-.132	2	0	1	6126.126	4	NC	2
463		2	max	0	1	-.002	5	.13	3	1.36e-5	4	NC	5	NC	3
464			min	-.274	2	-.005	4	-.121	2	5.189e-7	1	8173.37	4	NC	2
465		3	max	.002	1	-.002	5	.118	3	2.72e-5	4	NC	5	NC	3
466			min	-.547	2	-.005	4	-.11	2	1.038e-6	1	NC	4	NC	2
467		4	max	.003	1	-.002	5	.106	3	4.079e-5	4	NC	5	NC	3
468			min	-.821	2	-.004	4	-.099	2	1.557e-6	1	NC	4	NC	2
469		5	max	.004	1	-.002	5	.094	3	5.439e-5	4	NC	5	NC	3
470			min	-1.095	2	-.004	4	-.088	2	2.075e-6	1	NC	4	NC	2
471	M54	1	max	.004	1	-.002	5	.094	3	5.439e-5	4	NC	5	253.975	3
472			min	-1.095	2	-.004	4	-.088	2	2.075e-6	1	6093.956	4	NC	2
473		2	max	.004	1	-.002	5	.092	3	5.779e-5	4	NC	5	338.633	3
474			min	-1.093	2	-.004	4	-.085	2	2.205e-6	1	8132.411	4	NC	2
475		3	max	.004	1	-.002	5	.089	3	6.119e-5	4	NC	5	507.95	3
476			min	-1.091	2	-.003	4	-.082	2	2.335e-6	1	NC	4	NC	2
477		4	max	.004	1	-.001	5	.086	3	6.459e-5	4	NC	5	1015.9	3
478			min	-1.089	2	-.003	4	-.08	2	2.465e-6	1	NC	4	NC	2
479		5	max	.004	1	-.001	5	.083	3	6.799e-5	4	NC	5	NC	3
480			min	-1.088	2	-.003	4	-.077	2	2.594e-6	1	NC	4	NC	2
481	M55	1	max	.004	1	-.001	5	.083	3	6.799e-5	4	NC	5	NC	3
482			min	-1.088	2	-.003	4	-.077	2	2.594e-6	1	7260.447	4	NC	2
483		2	max	.004	1	0	5	.04	3	1.175e-4	4	NC	5	NC	3
484			min	-1.063	2	-.001	4	-.037	2	4.483e-6	1	NC	4	NC	2
485		3	max	.004	1	0	4	.003	2	1.67e-4	4	NC	4	NC	2
486			min	-1.038	2	0	5	-.003	3	6.372e-6	1	NC	5	NC	3
487		4	max	.004	1	.001	4	.043	2	2.165e-4	4	NC	4	NC	2
488			min	-1.013	2	0	5	-.046	3	8.261e-6	1	NC	5	NC	3
489		5	max	.004	1	.003	4	.083	2	2.66e-4	4	NC	4	NC	2
490			min	-.988	2	0	5	-.089	3	1.015e-5	1	NC	5	NC	3
491	M56	1	max	.004	1	.189	9	.007	9	3.521e-4	7	NC	9	NC	9
492			min	-.045	6	0	1	-.005	6	-6.124e-6	1	NC	1	NC	6
493		2	max	.042	9	.187	6	.007	9	3.297e-4	7	NC	6	NC	9
494			min	.004	1	-.002	1	-.004	6	-5.776e-6	1	NC	1	NC	6
495		3	max	.127	9	.188	6	.009	7	3.073e-4	7	NC	6	NC	7
496			min	.004	1	-.004	1	-.004	8	-5.428e-6	1	NC	1	NC	8

Envelope Member Section Deflections (Continued)

	Member	Sec		x [in]	lc	y [in]	lc	z [in]	lc	x Rotate [r...	lc	(n) L/y Ratio	lc	(n) L/z Ratio	lc
497		4	max	.211	9	.192	6	.011	7	2.848e-4	7	NC	6	NC	7
498			min	.004	1	-.005	1	-.004	8	-5.079e-6	1	NC	1	NC	8
499		5	max	.295	9	.198	6	.012	7	2.624e-4	7	4224.585	6	NC	7
500			min	.004	1	-.007	1	-.004	8	-4.731e-6	1	NC	1	NC	8
501	M57	1	max	-.006	1	.331	6	.006	8	3.209e-6	1	NC	6	NC	8
502			min	-.36	9	-.007	1	-.013	7	-2.393e-4	7	NC	1	NC	7
503		2	max	-.006	1	.328	6	.005	8	3.482e-6	1	NC	6	NC	8
504			min	-.31	9	-.006	1	-.013	7	-2.58e-4	7	NC	1	NC	7
505		3	max	-.006	1	.325	6	.005	8	3.755e-6	1	NC	6	NC	8
506			min	-.26	9	-.005	1	-.013	7	-2.767e-4	7	NC	1	NC	7
507		4	max	-.006	1	.321	6	.004	8	4.028e-6	1	NC	6	NC	8
508			min	-.21	9	-.005	1	-.012	7	-2.954e-4	7	NC	1	NC	7
509		5	max	-.006	1	.317	6	.004	8	4.301e-6	1	NC	6	NC	8
510			min	-.16	9	-.004	1	-.012	7	-3.142e-4	7	NC	1	NC	7
511	M58	1	max	.001	1	-.002	1	.925	3	3.89e-5	4	NC	1	NC	3
512			min	-.932	3	-.004	4	.002	1	6.432e-6	1	6021.193	4	NC	1
513		2	max	.001	1	-.002	1	.918	3	4.457e-5	4	NC	1	NC	3
514			min	-.928	3	-.004	4	.002	1	7.37e-6	1	8048.525	4	NC	1
515		3	max	.001	1	-.001	1	.911	3	5.024e-5	4	NC	1	NC	3
516			min	-.924	3	-.003	4	.002	1	8.308e-6	1	NC	4	NC	1
517		4	max	.001	1	-.001	1	.905	3	5.591e-5	4	NC	1	NC	3
518			min	-.92	3	-.003	4	.002	1	9.246e-6	1	NC	4	NC	1
519		5	max	.001	1	-.001	1	.898	3	6.159e-5	4	NC	1	NC	3
520			min	-.916	3	-.003	4	.002	1	1.018e-5	1	NC	4	NC	1
521	M59	1	max	.004	1	.003	4	.083	2	2.66e-4	4	NC	4	NC	2
522			min	-.988	2	0	5	-.089	3	1.015e-5	1	NC	5	NC	3
523		2	max	.004	1	.005	4	.136	2	4.697e-4	4	NC	4	NC	2
524			min	-.954	2	.002	5	-.147	3	-1.1e-5	1	NC	5	NC	3
525		3	max	.004	1	.007	4	.188	2	6.734e-4	4	NC	4	NC	2
526			min	-.919	2	.002	5	-.204	3	1.185e-5	1	NC	5	NC	3
527		4	max	.004	1	.008	4	.237	2	8.774e-4	2	NC	4	NC	2
528			min	-.885	2	.003	5	-.257	3	1.27e-5	1	NC	5	NC	3
529		5	max	.004	1	.009	4	.282	2	1.083e-3	2	NC	4	NC	2
530			min	-.85	2	.004	5	-.308	3	1.354e-5	1	NC	5	NC	3
531	M60	1	max	.002	1	-.007	1	-.002	1	6.469e-3	2	1664.088	1	NC	1
532			min	-.026	5	-.019	4	-.067	3	-4.237e-6	1	NC	4	227.037	3
533		2	max	.002	1	-.006	1	-.002	1	6.482e-3	2	2226.032	1	NC	1
534			min	-.023	5	-.017	4	-.06	3	-4.655e-6	1	NC	4	303.108	3
535		3	max	.002	1	-.005	1	-.001	1	6.496e-3	2	3350.733	1	NC	1
536			min	-.019	5	-.016	4	-.053	3	-5.073e-6	1	NC	4	455.277	3
537		4	max	.002	1	-.004	1	-.001	1	6.509e-3	2	6726.505	1	NC	1
538			min	-.016	5	-.014	4	-.046	3	-5.491e-6	1	NC	4	911.84	3
539		5	max	.002	1	-.003	1	0	1	6.522e-3	2	NC	1	NC	1
540			min	-.012	5	-.012	4	-.039	3	-5.908e-6	1	NC	4	NC	3
541	M61	1	max	0	1	0	5	0	1	6.08e-3	2	NC	5	NC	1
542			min	-.014	6	-.006	4	-.039	3	-8.14e-5	1	NC	4	158.506	3
543		2	max	0	1	0	5	0	1	6.073e-3	2	NC	5	NC	1
544			min	-.011	6	-.005	4	-.029	3	-8.272e-5	1	NC	4	211.388	3
545		3	max	0	1	0	5	0	1	6.066e-3	2	NC	5	NC	1
546			min	-.007	6	-.003	4	-.02	3	-8.405e-5	1	NC	4	317.164	3
547		4	max	0	1	0	5	0	1	6.059e-3	2	NC	5	NC	1
548			min	-.004	6	-.002	4	-.01	3	-8.537e-5	1	NC	4	634.519	3
549		5	max	0	1	0	1	0	1	6.053e-3	2	NC	1	NC	1
550			min	0	1	0	1	0	1	-8.669e-5	1	NC	1	NC	1
551	M62	1	max	0	1	0	1	0	1	3.922e-3	2	NC	1	NC	1
552			min	0	1	0	1	0	1	-1.154e-3	3	NC	1	NC	1
553		2	max	.004	5	.002	4	.01	3	3.895e-3	2	4006.612	4	601.396	3
554			min	0	1	0	5	0	1	-1.125e-3	3	NC	5	NC	1
555		3	max	.007	5	.003	4	.021	3	3.869e-3	2	1999.482	4	300.587	3

Envelope Member Section Deflections (Continued)

	Member	Sec		x [in]	lc	y [in]	lc	z [in]	lc	x Rotate [r...	lc	(n) L/y Ratio	lc	(n) L/z Ratio	lc
556			min	0	1	0	5	0	1	-1.097e-3	3	NC	5	NC	1
557		4	max	.011	5	.005	4	.031	3	3.842e-3	2	1330.302	4	200.347	3
558			min	0	1	0	5	0	1	-1.068e-3	3	NC	5	NC	1
559		5	max	.014	5	.006	4	.041	3	3.815e-3	2	995.609	4	150.25	3
560			min	0	1	0	5	0	1	-1.039e-3	3	NC	5	NC	1
561	M63	1	max	.015	4	0	1	.003	1	2.29e-3	2	NC	1	NC	1
562			min	0	1	-.041	3	-.004	5	-2.713e-3	3	NC	3	NC	5
563		2	max	.053	4	0	1	.02	4	1.972e-3	2	NC	1	NC	4
564			min	0	1	-.142	3	-.006	5	-2.404e-3	3	4889.336	3	NC	5
565		3	max	.09	4	-.001	1	.037	4	1.653e-3	2	NC	1	NC	4
566			min	0	1	-.238	3	-.009	5	-2.095e-3	3	3029.591	3	NC	5
567		4	max	.128	4	-.001	1	.054	4	1.335e-3	2	NC	1	NC	4
568			min	0	1	-.323	3	-.014	5	-1.786e-3	3	3437.096	3	6695.828	5
569		5	max	.165	4	0	1	.071	4	1.017e-3	2	NC	1	NC	4
570			min	0	1	-.391	3	-.019	5	-1.477e-3	3	NC	3	4502.531	5
571	M64	1	max	.058	4	.421	3	.019	5	1.055e-3	2	NC	3	NC	5
572			min	0	1	0	1	-.071	4	-1.678e-3	3	NC	1	NC	4
573		2	max	.062	4	.426	3	.019	5	1.026e-3	2	NC	3	NC	5
574			min	0	1	0	1	-.072	4	-1.648e-3	3	NC	1	NC	4
575		3	max	.065	4	.431	3	.019	5	9.97e-4	2	NC	3	NC	5
576			min	0	1	0	1	-.073	4	-1.619e-3	3	NC	1	NC	4
577		4	max	.069	4	.436	3	.02	5	9.681e-4	2	NC	3	NC	5
578			min	0	1	0	1	-.075	4	-1.589e-3	3	NC	1	NC	4
579		5	max	.072	4	.441	3	.02	5	9.393e-4	2	NC	3	NC	5
580			min	0	1	0	1	-.076	4	-1.56e-3	3	NC	1	NC	4
581	M65	1	max	0	1	.418	4	.02	5	8.294e-4	2	NC	4	NC	5
582			min	-.159	5	0	1	-.076	4	-1.631e-3	3	NC	1	NC	4
583		2	max	0	1	.422	4	.021	5	8.079e-4	2	NC	4	NC	5
584			min	-.155	5	0	1	-.077	4	-1.606e-3	3	NC	1	NC	4
585		3	max	0	1	.427	4	.021	5	7.864e-4	2	NC	4	NC	5
586			min	-.152	5	0	1	-.077	4	-1.58e-3	3	NC	1	NC	4
587		4	max	0	1	.431	4	.021	5	7.649e-4	2	NC	4	NC	5
588			min	-.148	5	0	1	-.078	4	-1.555e-3	3	NC	1	NC	4
589		5	max	0	1	.434	4	.022	5	7.433e-4	2	NC	4	NC	5
590			min	-.145	5	0	1	-.078	4	-1.53e-3	3	NC	1	NC	4
591	M66	1	max	0	1	.304	4	.022	5	4.538e-4	2	NC	4	NC	5
592			min	-.342	7	0	1	-.078	4	-1.202e-3	3	NC	1	NC	4
593		2	max	0	1	.308	4	.022	5	4.446e-4	2	NC	4	NC	5
594			min	-.339	7	0	1	-.078	4	-1.187e-3	3	NC	1	NC	4
595		3	max	0	1	.311	4	.022	5	4.355e-4	2	NC	4	NC	5
596			min	-.335	7	0	1	-.077	4	-1.173e-3	3	NC	1	NC	4
597		4	max	0	1	.315	4	.022	5	4.263e-4	2	NC	4	NC	5
598			min	-.331	7	0	1	-.077	4	-1.158e-3	3	NC	1	NC	4
599		5	max	0	1	.317	4	.022	5	4.172e-4	2	NC	4	NC	5
600			min	-.328	7	0	1	-.077	4	-1.144e-3	3	NC	1	NC	4
601	M67	1	max	0	1	.222	4	.022	5	2.691e-4	5	NC	4	NC	5
602			min	-.399	6	0	1	-.077	4	-8.975e-4	4	NC	1	2290.465	4
603		2	max	0	1	.23	4	.02	5	2.018e-4	5	2754.505	4	NC	5
604			min	-.299	6	-.004	1	-.055	4	-6.732e-4	4	NC	1	3209.483	4
605		3	max	0	1	.148	2	.014	5	1.345e-4	5	4656.314	2	NC	5
606			min	-.199	6	-.006	1	-.031	4	-4.488e-4	4	NC	1	5650.148	4
607		4	max	0	1	.049	2	.005	5	6.727e-5	5	NC	2	NC	5
608			min	-.1	6	-.003	1	-.01	4	-2.244e-4	4	NC	1	NC	4
609		5	max	0	1	0	1	0	1	0	1	NC	1	NC	1
610			min	0	1	0	1	0	1	0	1	NC	1	NC	1
611	M68	1	max	.107	9	.112	6	.007	7	4.223e-4	9	NC	6	NC	7
612			min	-.002	1	-.002	1	0	1	-9.856e-6	1	NC	1	NC	1
613		2	max	.217	9	.112	6	.009	7	3.599e-4	9	NC	6	NC	7
614			min	-.002	1	-.005	1	-.002	8	-8.149e-6	1	NC	1	NC	8

Envelope Member Section Deflections (Continued)

	Member	Sec		x [in]	lc	y [in]	lc	z [in]	lc	x Rotate [r...	lc	(n) L/y Ratio	lc	(n) L/z Ratio	lc
615		3	max	.327	9	.111	6	.011	7	2.975e-4	9	NC	6	NC	7
616			min	.002	1	-.007	1	-.004	8	-6.441e-6	1	NC	1	NC	8
617		4	max	.438	9	.113	6	.012	7	2.351e-4	9	NC	6	NC	7
618			min	.002	1	-.009	1	-.006	8	-4.734e-6	1	NC	1	NC	8
619		5	max	.548	9	.117	6	.013	7	1.572e-4	9	9307.336	6	NC	7
620			min	.002	1	-.011	1	-.007	8	-3.046e-6	1	NC	1	NC	8
621	M69	1	max	0	1	0	1	.012	4	3.272e-6	9	NC	1	8380.85	4
622			min	-.236	6	-.126	9	0	1	-1.472e-4	6	NC	9	NC	1
623		2	max	0	1	0	1	.011	4	-3.8e-7	1	NC	1	NC	4
624			min	-.187	6	-.123	9	0	1	-1.584e-4	2	NC	9	NC	1
625		3	max	0	1	0	1	.01	4	8.97e-8	1	NC	1	NC	4
626			min	-.137	6	-.118	7	0	1	-1.832e-4	7	NC	7	NC	1
627		4	max	0	1	0	1	.01	6	5.593e-7	1	NC	1	NC	6
628			min	-.088	6	-.113	7	0	1	-2.106e-4	7	NC	7	NC	1
629		5	max	0	1	0	1	.01	6	1.029e-6	1	NC	1	NC	6
630			min	-.038	6	-.107	7	0	1	-2.379e-4	7	NC	7	NC	1
631	M70	1	max	.001	1	-.001	1	.898	3	6.159e-5	4	NC	1	NC	3
632			min	-.916	3	-.003	4	.002	1	1.018e-5	1	NC	4	NC	1
633		2	max	.001	1	0	4	.832	3	1.179e-4	4	NC	4	NC	3
634			min	-.877	3	0	1	0	1	1.949e-5	1	NC	1	NC	1
635		3	max	.001	1	.002	4	.765	3	1.742e-4	4	NC	4	NC	3
636			min	-.837	3	0	1	-.001	1	2.88e-5	1	NC	1	NC	1
637		4	max	.001	1	.003	4	.699	3	2.305e-4	4	NC	4	NC	3
638			min	-.798	3	.001	1	-.002	1	3.811e-5	1	NC	1	NC	1
639		5	max	.001	1	.003	4	.757	2	2.868e-4	4	NC	4	282.812	2
640			min	-.758	3	0	5	-.004	1	4.742e-5	1	NC	5	NC	1
641	M71	1	max	.328	9	-.002	1	.012	6	1.326e-4	7	NC	1	NC	6
642			min	0	1	-.594	6	-.009	9	1.727e-5	8	NC	6	NC	9
643		2	max	.602	9	-.002	1	.021	6	3.204e-4	7	NC	1	NC	6
644			min	0	1	-.47	6	-.017	9	1.891e-5	1	5179.001	6	NC	9
645		3	max	.876	9	-.001	1	.024	6	5.083e-4	7	NC	1	7355.59	6
646			min	0	1	-.318	6	-.02	9	9.327e-6	1	6107.789	6	8615.979	9
647		4	max	1.149	9	0	1	.018	6	6.962e-4	7	NC	1	8859.248	6
648			min	0	1	-.155	6	-.015	9	-2.604e-7	1	NC	6	NC	9
649		5	max	1.423	9	0	1	0	1	8.841e-4	7	NC	1	NC	1
650			min	0	1	0	1	0	1	-9.848e-6	1	NC	1	NC	1
651	M72	1	max	1.772	9	-.096	7	.105	5	4.582e-5	1	NC	7	NC	5
652			min	0	1	-.097	1	-.103	4	-6.211e-4	9	NC	1	NC	4
653		2	max	1.948	9	-.126	7	.135	5	4.698e-5	1	NC	7	NC	5
654			min	0	1	-.127	1	-.133	4	-6.886e-4	9	NC	1	NC	4
655		3	max	2.123	9	-.153	7	.163	5	4.815e-5	1	NC	7	NC	5
656			min	0	1	-.155	1	-.16	4	-7.562e-4	9	NC	1	NC	4
657		4	max	2.299	9	-.175	7	.185	5	4.931e-5	1	NC	7	NC	5
658			min	0	1	-.177	1	-.183	4	-8.237e-4	9	NC	1	NC	4
659		5	max	2.475	9	-.192	7	.203	5	5.047e-5	1	NC	7	NC	5
660			min	0	1	-.194	1	-.2	4	-8.912e-4	9	NC	1	NC	4
661	M73	1	max	1.473	8	-.006	1	.005	5	6.121e-5	1	NC	1	NC	5
662			min	0	1	-.006	7	-.005	4	-1.515e-3	9	NC	7	NC	4
663		2	max	1.517	8	-.007	1	.006	5	6.153e-5	1	NC	1	NC	5
664			min	0	1	-.007	7	-.006	4	-1.534e-3	9	NC	7	NC	4
665		3	max	1.561	8	-.007	1	.006	5	6.186e-5	1	NC	1	NC	5
666			min	0	1	-.007	7	-.006	4	-1.553e-3	9	NC	7	NC	4
667		4	max	1.605	8	-.007	1	.006	5	6.219e-5	1	NC	1	NC	5
668			min	0	1	-.007	7	-.006	4	-1.572e-3	9	NC	7	NC	4
669		5	max	1.649	8	-.007	1	.006	5	6.252e-5	1	NC	1	NC	5
670			min	0	1	-.007	7	-.006	4	-1.591e-3	9	NC	7	NC	4
671	M74	1	max	2.048	8	-.005	6	.01	5	8.656e-5	1	NC	6	NC	5
672			min	0	1	-.009	1	-.01	4	-2.989e-3	9	NC	1	NC	4
673		2	max	2.085	8	-.005	6	.011	5	8.693e-5	1	NC	6	NC	5

Envelope Member Section Deflections (Continued)

	Member	Sec		x [in]	lc	y [in]	lc	z [in]	lc	x Rotate [r...	lc	(n) L/y Ratio	lc	(n) L/z Ratio	lc
674			min	0	1	-.01	1	-.012	4	-3.01e-3	9	NC	1	NC	4
675		3	max	2.121	8	-.005	6	.013	5	8.729e-5	1	NC	6	NC	5
676			min	0	1	-.011	1	-.013	4	-3.031e-3	9	NC	1	NC	4
677		4	max	2.157	8	-.005	6	.014	5	8.765e-5	1	NC	6	NC	5
678			min	0	1	-.012	1	-.014	4	-3.052e-3	9	NC	1	NC	4
679		5	max	2.193	8	-.005	6	.015	5	8.801e-5	1	NC	6	NC	5
680			min	0	1	-.012	1	-.015	4	-3.073e-3	9	NC	1	NC	4
681	M75	1	max	0	1	0	1	0	1	9.857e-5	1	NC	1	NC	1
682			min	-1.746	6	0	1	0	1	-3.686e-3	9	NC	1	NC	1
683		2	max	0	1	.028	6	.007	4	1.003e-4	1	5365.983	6	NC	4
684			min	-1.604	6	.014	1	-.008	5	-3.785e-3	9	NC	1	NC	5
685		3	max	0	1	.041	6	.007	4	1.02e-4	1	3694.116	6	NC	4
686			min	-1.462	6	.018	1	-.008	5	-3.883e-3	9	8280.839	1	NC	5
687		4	max	0	1	.034	6	.004	4	1.036e-4	1	4460.062	6	NC	4
688			min	-1.32	6	.014	1	-.005	5	-3.981e-3	9	NC	1	NC	5
689		5	max	0	1	0	1	0	1	1.053e-4	1	NC	1	NC	1
690			min	-1.179	6	0	1	0	1	-4.08e-3	9	NC	1	NC	1
691	M76	1	max	0	1	-.077	1	.043	8	1.14e-4	1	2044.73	1	NC	8
692			min	-.452	6	-.325	6	-.035	7	-4.583e-3	9	NC	6	NC	7
693		2	max	0	1	-.061	1	.052	8	1.158e-4	1	2582.513	1	6479.251	8
694			min	-.33	6	-.312	6	-.044	7	-4.689e-3	9	1924.592	6	7247.603	7
695		3	max	0	1	-.036	1	.056	4	1.176e-4	1	4281.559	1	3186.945	4
696			min	-.208	6	-.246	6	-.049	5	-4.795e-3	9	1413.562	6	3446.504	5
697		4	max	0	1	-.011	1	.037	4	1.195e-4	1	NC	1	3523.69	4
698			min	-.086	6	-.122	6	-.033	5	-4.901e-3	9	1863.386	6	3780.215	5
699		5	max	.036	3	.061	6	.021	5	1.213e-4	1	NC	6	NC	5
700			min	0	1	.002	1	-.023	4	-5.007e-3	9	NC	1	NC	4
701	M77	1	max	.012	1	.449	5	.161	5	3.46e-3	5	NC	5	503.66	5
702			min	-.293	5	-.007	1	-.242	4	-1.45e-3	4	NC	1	767.466	4
703		2	max	.012	1	.397	5	.092	5	3.881e-3	5	9226.294	5	705.107	5
704			min	-.224	5	-.008	1	-.2	4	-9.948e-4	4	NC	1	1036.876	4
705		3	max	.012	1	.331	5	.021	5	4.302e-3	5	NC	5	1186.277	5
706			min	-.154	5	-.009	1	-.16	4	-5.394e-4	4	NC	1	1566.677	4
707		4	max	.012	1	.26	5	-.009	1	4.723e-3	5	NC	5	NC	1
708			min	-.085	5	-.009	1	-.121	4	-2.669e-4	1	NC	1	3159.647	4
709		5	max	.039	4	.19	5	0	1	5.143e-3	5	NC	5	NC	1
710			min	-.015	5	-.01	1	-.082	4	-2.72e-4	1	NC	1	NC	4
711	M78	1	max	.001	1	.371	4	.612	5	3.34e-3	5	NC	4	NC	5
712			min	-.335	8	.004	1	-.014	1	-1.432e-3	4	NC	1	NC	1
713		2	max	.001	1	.326	8	.794	5	3.534e-3	5	2933.245	8	2899.992	5
714			min	-.249	8	.002	1	-.015	1	-1.155e-3	4	NC	1	NC	1
715		3	max	0	1	.233	8	.943	5	3.727e-3	5	2961.318	8	2113.327	5
716			min	-.163	8	.001	1	-.016	1	-8.774e-4	4	NC	1	NC	1
717		4	max	0	1	.115	6	1.055	5	3.921e-3	5	7961.607	6	2773.227	5
718			min	-.077	8	0	1	-.015	1	-6.e-4	4	NC	1	NC	1
719		5	max	.017	7	.05	5	1.129	5	4.115e-3	5	NC	5	NC	5
720			min	0	1	-.003	4	-.013	1	-3.226e-4	4	NC	4	NC	1
721	M79	1	max	.4	9	0	1	.003	6	3.766e-5	1	NC	1	NC	6
722			min	0	1	0	7	-.003	9	-1.465e-4	9	NC	7	NC	9
723		2	max	.43	9	.001	1	.005	6	3.784e-5	1	NC	1	NC	6
724			min	0	1	0	7	-.005	9	-1.57e-4	9	NC	7	NC	9
725		3	max	.46	9	.002	1	.006	6	3.802e-5	1	NC	1	NC	6
726			min	0	1	.001	7	-.006	9	-1.675e-4	9	NC	7	NC	9
727		4	max	.491	9	.002	1	.007	6	3.82e-5	1	9599.767	1	NC	6
728			min	0	1	.002	7	-.008	9	-1.78e-4	9	NC	7	NC	9
729		5	max	.521	9	.003	1	.008	4	3.838e-5	1	7057.464	1	NC	4
730			min	0	1	.002	7	-.009	5	-1.885e-4	9	8242.036	7	NC	5
731	M80	1	max	.521	9	.003	1	.008	4	3.838e-5	1	NC	1	NC	4
732			min	0	1	.002	7	-.009	5	-1.885e-4	9	NC	7	NC	5

Envelope Member Section Deflections (Continued)

	Member	Sec		x [in]	lc	y [in]	lc	z [in]	lc	x Rotate [r...	lc	(n) L/y Ratio	lc	(n) L/z Ratio	lc
733		2	max	.65	9	.005	1	.011	4	3.914e-5	1	NC	1	NC	4
734			min	0	1	.005	7	-.012	5	-2.33e-4	9	NC	7	NC	5
735		3	max	.779	9	.007	1	.011	4	3.991e-5	1	NC	1	9297.627	4
736			min	0	1	.006	7	-.012	5	-2.776e-4	9	NC	7	8907.825	5
737		4	max	.908	9	.005	1	.008	4	4.068e-5	1	NC	1	NC	4
738			min	0	1	.005	7	-.008	5	-3.222e-4	9	NC	7	NC	5
739		5	max	1.037	9	0	1	0	1	4.145e-5	1	NC	1	NC	1
740			min	0	1	0	1	0	1	-3.668e-4	9	NC	1	NC	1
741	M82	1	max	.437	8	0	1	0	1	7.285e-5	1	NC	1	NC	1
742			min	0	1	0	1	0	1	-2.192e-3	9	NC	1	NC	1
743		2	max	.548	8	0	6	0	5	7.38e-5	1	NC	6	NC	5
744			min	0	1	0	1	0	4	-2.247e-3	9	NC	1	NC	4
745		3	max	.659	8	0	6	0	5	7.474e-5	1	NC	6	NC	5
746			min	0	1	0	1	0	4	-2.302e-3	9	NC	1	NC	4
747		4	max	.771	8	0	6	0	4	7.569e-5	1	NC	6	NC	4
748			min	0	1	0	1	0	5	-2.357e-3	9	NC	1	NC	5
749		5	max	.882	8	0	1	0	1	7.664e-5	1	NC	1	NC	1
750			min	0	1	0	1	0	1	-2.412e-3	9	NC	1	NC	1
751	M83	1	max	.05	7	.001	1	.203	6	1.641e-3	7	NC	1	NC	6
752			min	0	1	-.059	6	-.167	9	-4.849e-5	1	778.392	6	NC	9
753		2	max	0	1	0	1	.192	6	1.664e-3	7	NC	1	NC	6
754			min	-.421	6	-.053	6	-.158	9	-4.966e-5	1	1072.025	6	NC	9
755		3	max	0	1	0	1	.18	6	1.687e-3	7	NC	1	NC	6
756			min	-.891	6	-.048	6	-.148	9	-5.083e-5	1	1662.857	6	NC	9
757		4	max	0	1	0	1	.169	6	1.71e-3	7	NC	1	NC	6
758			min	-1.362	6	-.043	6	-.138	9	-5.2e-5	1	3443.33	6	NC	9
759		5	max	0	1	0	1	.157	6	1.733e-3	7	NC	1	NC	6
760			min	-1.833	6	-.038	6	-.128	9	-5.317e-5	1	NC	6	NC	9
761	M84	1	max	0	1	0	1	.157	6	1.733e-3	7	NC	1	396.012	6
762			min	-1.833	6	-.038	6	-.128	9	-5.317e-5	1	1614.606	6	482.993	9
763		2	max	0	1	0	1	.107	6	1.804e-3	7	NC	1	577.652	6
764			min	-1.703	6	-.024	6	-.087	9	-5.719e-5	1	2637.609	6	709.843	9
765		3	max	0	1	0	1	.061	6	1.67e-3	7	NC	1	1011.001	6
766			min	-1.573	6	-.013	6	-.049	9	-5.533e-5	1	4877.195	6	1252.586	9
767		4	max	0	1	0	1	.025	6	1.536e-3	7	NC	1	2471.575	6
768			min	-1.444	6	-.005	6	-.02	9	-5.347e-5	1	NC	6	3075.268	9
769		5	max	0	1	0	1	0	1	1.403e-3	7	NC	1	NC	1
770			min	-1.314	6	0	1	0	1	-5.161e-5	1	NC	1	NC	1
771	M85	1	max	.004	1	.009	4	.282	2	1.083e-3	2	NC	4	NC	2
772			min	-.85	2	-.004	5	-.308	3	1.354e-5	1	NC	5	NC	3
773		2	max	.004	1	.01	4	.301	2	1.173e-3	2	NC	4	NC	2
774			min	-.835	2	-.004	5	-.329	3	1.391e-5	1	NC	5	NC	3
775		3	max	.004	1	.01	4	.319	2	1.262e-3	2	NC	4	NC	2
776			min	-.82	2	-.004	5	-.349	3	1.429e-5	1	NC	5	NC	3
777		4	max	.004	1	.01	4	.336	2	1.352e-3	2	NC	4	NC	2
778			min	-.805	2	-.004	5	-.369	3	1.466e-5	1	NC	5	NC	3
779		5	max	.004	1	.01	4	.352	2	1.442e-3	2	NC	4	NC	2
780			min	-.79	2	-.004	5	-.388	3	1.503e-5	1	NC	5	NC	3
781	M86	1	max	.004	1	.01	4	.352	2	1.442e-3	2	NC	4	NC	2
782			min	-.79	2	-.004	5	-.388	3	1.503e-5	1	NC	5	NC	3
783		2	max	.004	1	.009	4	.384	2	1.633e-3	2	NC	4	8495.941	2
784			min	-.757	2	-.004	5	-.424	3	1.582e-5	1	NC	5	8433.941	3
785		3	max	.004	1	.008	4	.411	2	1.824e-3	2	NC	4	6266.958	2
786			min	-.725	2	-.004	5	-.457	3	1.661e-5	1	NC	5	6204.168	3
787		4	max	.004	1	.005	4	.434	2	2.016e-3	2	NC	4	8235.504	2
788			min	-.693	2	-.002	5	-.484	3	1.74e-5	1	NC	5	8131.232	3
789		5	max	.004	1	0	5	.452	2	2.207e-3	2	NC	5	NC	2
790			min	-.661	2	0	4	-.508	3	1.819e-5	1	NC	4	NC	3
791	M87	1	max	.648	9	0	1	0	8	7.858e-5	9	NC	1	NC	8

Envelope Member Section Deflections (Continued)

	Member	Sec		x [in]	lc	y [in]	lc	z [in]	lc	x Rotate [r...	lc	(n) L/y Ratio	lc	(n) L/z Ratio	lc
792			min	.002	1	0	6	0	7	-1.523e-6	1	NC	6	NC	7
793		2	max	.486	9	0	1	0	8	5.894e-5	9	NC	1	NC	8
794			min	.001	1	0	6	0	7	-1.142e-6	1	NC	6	NC	7
795		3	max	.324	9	0	1	0	8	3.929e-5	9	NC	1	NC	8
796			min	0	1	0	6	0	7	-7.616e-7	1	NC	6	NC	7
797		4	max	.162	9	0	1	0	8	1.965e-5	9	NC	1	NC	8
798			min	0	1	0	6	0	7	-3.808e-7	1	NC	6	NC	7
799		5	max	0	1	0	1	0	1	0	1	NC	1	NC	1
800			min	0	1	0	1	0	1	0	1	NC	1	NC	1
801	M88	1	max	.004	1	0	5	.452	2	2.207e-3	2	NC	5	NC	2
802			min	-.661	2	0	4	-.508	3	1.819e-5	1	NC	4	NC	3
803		2	max	.004	1	-.026	5	.469	2	3.155e-3	2	NC	5	2111.982	2
804			min	-.501	2	-.046	4	-.546	3	2.21e-5	1	7012.981	4	1878.952	3
805		3	max	.004	1	-.042	5	.371	2	4.102e-3	2	8119.073	5	1861.001	2
806			min	-.342	2	-.083	4	-.463	3	2.601e-5	1	3946.877	4	1594.998	3
807		4	max	.004	1	-.033	5	.191	2	5.05e-3	2	NC	5	3272.625	2
808			min	-.183	5	-.076	4	-.284	3	2.992e-5	1	4805.521	4	2622.851	3
809		5	max	.004	1	-.006	1	-.002	1	5.998e-3	2	NC	1	NC	1
810			min	-.023	5	-.024	4	-.067	3	3.384e-5	1	NC	4	NC	3
811	M90	1	max	0	1	0	1	0	1	1.053e-4	1	NC	1	NC	1
812			min	-1.179	6	0	1	0	1	-4.08e-3	9	NC	1	NC	1
813		2	max	0	1	-.031	1	.007	3	1.075e-4	1	NC	1	NC	3
814			min	-.997	6	-.087	6	-.005	2	-4.206e-3	9	NC	6	NC	2
815		3	max	0	1	-.062	1	.016	3	1.097e-4	1	8326.477	1	NC	3
816			min	-.815	6	-.192	6	-.011	2	-4.332e-3	9	6427.364	6	NC	2
817		4	max	0	1	-.079	1	.027	8	1.118e-4	1	9032.563	1	7173.717	8
818			min	-.634	6	-.28	6	-.02	7	-4.457e-3	9	5187.285	6	9492.118	7
819		5	max	0	1	-.077	1	.043	8	1.14e-4	1	NC	1	4472.723	8
820			min	-.452	6	-.325	6	-.035	7	-4.583e-3	9	NC	6	5502.494	7
821	M91	1	max	1.338	5	0	1	0	6	-3.315e-6	1	NC	1	NC	6
822			min	-.013	1	0	1	0	8	-3.229e-4	8	NC	1	NC	8
823		2	max	1.003	5	0	1	0	6	-2.487e-6	1	NC	1	NC	6
824			min	-.01	1	0	1	0	8	-2.422e-4	8	NC	1	NC	8
825		3	max	.669	5	0	1	0	6	-1.658e-6	1	NC	1	NC	6
826			min	-.007	1	0	1	0	8	-1.615e-4	8	NC	1	NC	8
827		4	max	.334	5	0	1	0	6	-8.289e-7	1	NC	1	NC	6
828			min	-.003	1	0	1	0	8	-8.073e-5	8	NC	1	NC	8
829		5	max	0	1	0	1	0	1	0	1	NC	1	NC	1
830			min	0	1	0	1	0	1	0	1	NC	1	NC	1
831	M92	1	max	.205	7	0	1	0	6	-1.085e-6	1	NC	1	NC	6
832			min	0	1	0	1	0	8	-2.394e-4	8	NC	1	NC	8
833		2	max	.154	7	0	1	0	6	-8.141e-7	1	NC	1	NC	6
834			min	0	1	0	1	0	8	-1.796e-4	8	NC	1	NC	8
835		3	max	.102	7	0	1	0	6	-5.427e-7	1	NC	1	NC	6
836			min	0	1	0	1	0	8	-1.197e-4	8	NC	1	NC	8
837		4	max	.051	7	0	1	0	6	-2.714e-7	1	NC	1	NC	6
838			min	0	1	0	1	0	8	-5.986e-5	8	NC	1	NC	8
839		5	max	0	1	0	1	0	1	0	1	NC	1	NC	1
840			min	0	1	0	1	0	1	0	1	NC	1	NC	1
841	M93	1	max	0	1	-.003	1	.97	3	0	1	NC	1	NC	3
842			min	0	1	-.006	4	.003	1	0	1	6020.355	4	NC	1
843		2	max	0	1	-.002	1	.959	3	9.724e-6	4	NC	1	NC	3
844			min	-.233	3	-.005	4	.003	1	1.608e-6	1	8032.164	4	NC	1
845		3	max	0	1	-.002	1	.947	3	1.945e-5	4	NC	1	NC	3
846			min	-.466	3	-.005	4	.003	1	3.216e-6	1	NC	4	NC	1
847		4	max	0	1	-.002	1	.936	3	2.917e-5	4	NC	1	NC	3
848			min	-.699	3	-.004	4	.002	1	4.824e-6	1	NC	4	NC	1
849		5	max	.001	1	-.002	1	.925	3	3.89e-5	4	NC	1	NC	3
850			min	-.932	3	-.004	4	-.002	1	6.432e-6	1	NC	4	NC	1

Envelope Member Section Deflections (Continued)

	Member	Sec		x [in]	lc	y [in]	lc	z [in]	lc	x Rotate [r...	lc	(n) L/y Ratio	lc	(n) L/z Ratio	lc
851	M95	1	max	0	1	.005	1	.009	9	1.85e-4	7	7222.42	1	2843.105	9
852			min	-.27	9	-.042	6	-.004	6	-1.458e-5	8	NC	6	NC	6
853		2	max	0	1	.003	1	.006	9	1.812e-4	7	NC	1	3773.286	9
854			min	-.181	9	-.046	6	-.005	6	-1.583e-5	8	8969.766	6	NC	6
855		3	max	0	1	.002	1	.002	9	1.484e-4	7	NC	1	5692.78	9
856			min	-.092	9	-.053	6	-.007	6	-2.655e-5	8	3369.59	6	NC	6
857		4	max	0	1	0	1	0	1	1.156e-4	7	NC	1	NC	1
858			min	-.003	9	-.063	7	-.008	6	-3.726e-5	8	1782.774	7	9670.537	6
859		5	max	.087	6	0	1	0	1	9.14e-5	2	NC	1	NC	1
860			min	0	1	-.074	7	-.01	6	-5.66e-5	3	1187.443	7	7157.155	6
861	M96	1	max	.403	7	.003	6	0	1	1.609e-4	6	6616.9	6	NC	1
862			min	0	1	0	1	-.012	9	-1.852e-4	9	NC	1	NC	9
863		2	max	.443	7	.002	6	0	1	1.805e-4	6	9536.407	6	NC	1
864			min	0	1	0	1	-.011	9	-2.002e-4	9	NC	1	NC	9
865		3	max	.483	7	.001	6	0	1	2.002e-4	6	NC	6	NC	1
866			min	0	1	0	1	-.008	9	-2.151e-4	9	NC	1	NC	9
867		4	max	.523	7	0	6	0	1	2.198e-4	6	NC	6	NC	1
868			min	0	1	0	1	-.004	9	-2.301e-4	9	NC	1	NC	9
869		5	max	.563	7	0	1	0	1	2.394e-4	6	NC	1	NC	1
870			min	0	1	0	1	0	1	-2.451e-4	9	NC	1	NC	1
871	M97	1	max	0	1	.002	1	.002	4	5.119e-5	1	2556.074	1	2573.412	4
872			min	-.041	6	.002	7	-.002	5	-9.332e-4	9	2573.093	7	2551.12	5
873		2	max	0	1	.002	1	.002	4	5.126e-5	1	3464.029	1	3487.835	4
874			min	-.031	6	.002	7	-.002	5	-9.371e-4	9	3487.055	7	3457.661	5
875		3	max	0	1	.001	1	.001	4	5.133e-5	1	5282.448	1	5319.282	4
876			min	-.02	6	.001	7	-.001	5	-9.41e-4	9	5317.498	7	5273.326	5
877		4	max	0	1	0	1	0	4	5.139e-5	1	NC	1	NC	4
878			min	-.01	6	0	7	0	5	-9.45e-4	9	NC	7	NC	5
879		5	max	0	1	0	1	0	1	5.146e-5	1	NC	1	NC	1
880			min	0	1	0	1	0	1	-9.489e-4	9	NC	1	NC	1
881	M98	1	max	2.475	9	.01	1	.01	4	5.047e-5	1	2055.865	1	2069.272	4
882			min	0	1	.01	7	-.01	5	-8.912e-4	9	2069.749	7	2051.157	5
883		2	max	1.846	9	.008	1	.008	4	5.065e-5	1	2842.091	1	2860.753	4
884			min	0	1	.008	7	-.008	5	-9.017e-4	9	2861.242	7	2835.751	5
885		3	max	1.217	9	.006	1	.006	4	5.083e-5	1	4425.571	1	4454.931	4
886			min	0	1	.006	7	-.006	5	-9.122e-4	9	4455.318	7	4416.07	5
887		4	max	.588	9	.004	1	.004	4	5.101e-5	1	9200.056	1	9262.028	4
888			min	0	1	.004	7	-.004	5	-9.227e-4	9	9261.716	7	9181.41	5
889		5	max	0	1	.002	1	.002	4	5.119e-5	1	NC	1	NC	4
890			min	-.041	6	.002	7	-.002	5	-9.332e-4	9	NC	7	NC	5
891	M99	1	max	2.421	8	-.007	1	.005	5	9.026e-5	1	NC	1	NC	5
892			min	0	1	-.012	6	-.005	4	-3.204e-3	9	NC	6	NC	4
893		2	max	1.809	8	-.006	1	.004	5	9.045e-5	1	NC	1	NC	5
894			min	0	1	-.01	6	-.004	4	-3.214e-3	9	NC	6	NC	4
895		3	max	1.197	8	-.005	1	.003	5	9.063e-5	1	NC	1	NC	5
896			min	0	1	-.008	6	-.003	4	-3.225e-3	9	NC	6	NC	4
897		4	max	.585	8	-.004	1	.002	5	9.081e-5	1	NC	1	NC	5
898			min	0	1	-.006	6	-.002	4	-3.235e-3	9	NC	6	NC	4
899		5	max	0	1	-.002	1	.002	5	9.099e-5	1	NC	1	NC	5
900			min	-.027	6	-.004	6	-.002	4	-3.246e-3	9	NC	6	NC	4
901	M100	1	max	.027	8	-.113	1	.084	5	9.153e-5	1	NC	1	NC	5
902			min	0	1	-.159	6	-.082	4	-3.277e-3	9	NC	6	NC	4
903		2	max	0	1	-.112	1	.082	5	9.171e-5	1	NC	1	NC	5
904			min	-.575	6	-.156	6	-.081	4	-3.288e-3	9	NC	6	NC	4
905		3	max	0	1	-.11	1	.081	5	9.189e-5	1	NC	1	NC	5
906			min	-1.177	6	-.153	6	-.079	4	-3.298e-3	9	NC	6	NC	4
907		4	max	0	1	-.108	1	.079	5	9.207e-5	1	NC	1	NC	5
908			min	-1.779	6	-.15	6	-.078	4	-3.309e-3	9	NC	6	NC	4
909		5	max	0	1	-.105	1	.078	5	9.225e-5	1	NC	1	NC	5

Envelope Member Section Deflections (Continued)

	Member	Sec		x [in]	lc	y [in]	lc	z [in]	lc	x Rotate [r...	lc	(n) L/y Ratio	lc	(n) L/z Ratio	lc
910			min	-2.382	6	-.147	6	-.077	4	-3.319e-3	9	NC	6	NC	4
911	M101	1	max	2.467	8	0	8	0	5	6.861e-5	1	NC	8	NC	5
912			min	0	1	0	1	0	4	-1.945e-3	9	NC	1	NC	4
913		2	max	1.841	8	0	8	0	5	6.879e-5	1	NC	8	NC	5
914			min	0	1	0	1	0	4	-1.956e-3	9	NC	1	NC	4
915		3	max	1.215	8	0	8	0	5	6.897e-5	1	NC	8	NC	5
916			min	0	1	0	1	0	4	-1.966e-3	9	NC	1	NC	4
917		4	max	.59	8	0	8	0	5	6.915e-5	1	NC	8	NC	5
918			min	0	1	0	1	0	4	-1.977e-3	9	NC	1	NC	4
919		5	max	0	1	0	8	0	5	6.933e-5	1	NC	8	NC	5
920			min	-.036	6	0	1	0	4	-1.987e-3	9	NC	1	NC	4
921	M93A	1	max	.548	9	.117	6	.013	7	1.572e-4	9	NC	6	NC	7
922			min	.002	1	-.011	1	-.007	8	-3.046e-6	1	NC	1	NC	8
923		2	max	.573	9	.118	6	.014	7	1.375e-4	9	NC	6	NC	7
924			min	.002	1	-.011	1	-.008	8	-2.666e-6	1	NC	1	NC	8
925		3	max	.598	9	.119	6	.014	7	1.179e-4	9	NC	6	NC	7
926			min	.002	1	-.011	1	-.008	8	-2.285e-6	1	NC	1	NC	8
927		4	max	.623	9	.119	6	.014	7	9.823e-5	9	NC	6	NC	7
928			min	.002	1	-.011	1	-.008	8	-1.904e-6	1	NC	1	NC	8
929		5	max	.648	9	.12	6	.014	7	7.858e-5	9	NC	6	NC	7
930			min	.002	1	-.011	1	-.008	8	-1.523e-6	1	NC	1	NC	8
931	M94	1	max	0	1	0	1	.016	6	1.572e-3	7	NC	1	NC	6
932			min	-.05	6	-.01	6	-.013	9	-4.498e-5	1	612.219	6	NC	9
933		2	max	0	1	0	1	.012	6	1.581e-3	7	NC	1	NC	6
934			min	-.038	6	-.007	6	-.01	9	-4.541e-5	1	823.995	6	NC	9
935		3	max	0	1	0	1	.008	6	1.59e-3	7	NC	1	NC	6
936			min	-.025	6	-.005	6	-.007	9	-4.585e-5	1	1247.781	6	NC	9
937		4	max	0	1	0	1	.004	6	1.598e-3	7	NC	1	NC	6
938			min	-.013	6	-.002	6	-.003	9	-4.629e-5	1	2519.627	6	NC	9
939		5	max	0	1	0	1	0	1	1.607e-3	7	NC	1	NC	1
940			min	0	1	0	1	0	1	-4.673e-5	1	NC	1	NC	1
941	M95A	1	max	2.292	9	.002	1	.055	6	1.481e-3	7	9287.705	1	NC	6
942			min	0	1	-.039	6	-.046	9	-4.029e-5	1	539.109	6	NC	9
943		2	max	1.706	9	.002	1	.046	6	1.504e-3	7	NC	1	NC	6
944			min	0	1	-.032	6	-.038	9	-4.146e-5	1	734.778	6	NC	9
945		3	max	1.121	9	.001	1	.036	6	1.527e-3	7	NC	1	NC	6
946			min	0	1	-.024	6	-.03	9	-4.263e-5	1	1127.239	6	NC	9
947		4	max	.535	9	0	1	.026	6	1.55e-3	7	NC	1	NC	6
948			min	0	1	-.017	6	-.022	9	-4.38e-5	1	2307.056	6	NC	9
949		5	max	0	1	0	1	.016	6	1.572e-3	7	NC	1	NC	6
950			min	-.05	6	-.01	6	-.013	9	-4.498e-5	1	NC	6	NC	9
951	M96A	1	max	1.196	8	0	1	.106	9	1.052e-3	6	NC	1	NC	9
952			min	0	1	-1.239	6	-.155	6	-2.637e-3	9	NC	6	NC	6
953		2	max	1.201	8	0	1	.112	9	1.255e-3	6	NC	1	3050.829	9
954			min	0	1	-1.243	6	-.172	6	-2.907e-3	9	NC	6	1077.899	6
955		3	max	1.206	8	0	1	.119	9	1.457e-3	6	NC	1	1443.894	9
956			min	0	1	-1.246	6	-.191	6	-3.177e-3	9	NC	6	523.464	6
957		4	max	1.211	8	0	1	.126	9	1.66e-3	6	NC	1	914.509	9
958			min	0	1	-1.249	6	-.21	6	-3.447e-3	9	NC	6	339.481	6
959		5	max	1.215	8	0	1	.134	9	1.862e-3	6	NC	1	653.745	9
960			min	0	1	-1.252	6	-.23	6	-3.717e-3	9	NC	6	248.044	6
961	M97A	1	max	1.168	9	0	1	0	1	1.66e-3	6	NC	1	NC	1
962			min	0	1	-1.12	9	-.833	6	-3.785e-3	9	NC	9	NC	6
963		2	max	1.17	9	0	1	0	1	1.735e-3	6	NC	1	NC	1
964			min	0	1	-1.12	9	-.84	6	-3.877e-3	9	NC	9	872.473	6
965		3	max	1.171	9	0	1	0	1	1.81e-3	6	NC	1	NC	1
966			min	0	1	-1.121	9	-.847	6	-3.97e-3	9	9116.939	9	433.499	6
967		4	max	1.173	9	0	1	0	1	1.885e-3	6	NC	1	NC	1
968			min	0	1	-1.121	9	-.854	6	-4.062e-3	9	5932.023	9	287.227	6

Envelope Member Section Deflections (Continued)

	Member	Sec		x [in]	lc	y [in]	lc	z [in]	lc	x Rotate [r...	lc	(n) L/y Ratio	lc	(n) L/z Ratio	lc
969		5	max	1.175	9	0	1	0	1	1.96e-3	6	NC	1	NC	1
970			min	0	1	-1.121	9	-.862	6	-4.155e-3	9	4335.722	9	214.129	6
971	M98A	1	max	.936	9	0	1	0	1	1.228e-3	6	NC	1	NC	1
972			min	0	1	-.56	9	-1.582	6	-3.48e-3	9	NC	9	NC	6
973		2	max	.938	9	0	1	0	1	1.303e-3	6	NC	1	NC	1
974			min	0	1	-.559	9	-1.59	6	-3.562e-3	9	NC	9	815.746	6
975		3	max	.939	9	0	1	0	1	1.379e-3	6	NC	1	NC	1
976			min	0	1	-.558	9	-1.598	6	-3.644e-3	9	NC	9	405.568	6
977		4	max	.941	9	0	1	.001	1	1.454e-3	6	NC	1	NC	1
978			min	0	1	-.556	9	-1.606	6	-3.726e-3	9	NC	9	268.892	6
979		5	max	.942	9	0	1	.001	1	1.529e-3	6	NC	1	NC	1
980			min	0	1	-.555	9	-1.613	6	-3.809e-3	9	NC	9	200.59	6
981	M99A	1	max	.459	9	0	1	.001	1	3.999e-4	6	NC	1	NC	1
982			min	0	1	-.095	9	-1.803	6	-2.096e-3	9	NC	9	NC	6
983		2	max	.46	9	0	1	0	1	4.571e-4	6	NC	1	NC	1
984			min	0	1	-.093	9	-1.811	6	-2.15e-3	9	NC	9	766.069	6
985		3	max	.462	9	0	1	0	1	5.142e-4	6	NC	1	NC	1
986			min	0	1	-.091	9	-1.819	6	-2.204e-3	9	NC	9	380.682	6
987		4	max	.464	9	0	1	0	1	5.714e-4	6	NC	1	NC	1
988			min	0	1	-.089	9	-1.828	6	-2.258e-3	9	NC	9	252.265	6
989		5	max	.465	9	0	1	0	1	6.285e-4	6	NC	1	NC	1
990			min	0	1	-.087	9	-1.836	6	-2.311e-3	9	NC	9	188.09	6
991	M100A	1	max	.171	9	0	1	0	1	5.266e-5	8	NC	1	NC	1
992			min	-.274	6	0	1	-1.817	6	-1.245e-3	7	NC	1	NC	6
993		2	max	.199	9	.059	7	0	1	8.054e-4	8	9560.658	7	NC	1
994			min	-.246	6	-.003	1	-1.983	6	-1.875e-3	7	NC	1	669.115	6
995		3	max	.228	9	.112	7	0	1	1.558e-3	8	6106.4	7	NC	1
996			min	-.217	6	-.004	1	-2.169	6	-2.505e-3	7	NC	1	315.383	6
997		4	max	.257	9	.157	7	0	1	2.311e-3	8	6931.553	7	NC	1
998			min	-.188	6	-.004	1	-2.363	6	-3.135e-3	7	NC	1	203.338	6
999		5	max	.285	9	.188	7	-.001	1	3.064e-3	8	NC	7	NC	1
1000			min	-.16	6	-.001	1	-2.553	6	-3.765e-3	7	NC	1	150.792	6
1001	M101A	1	max	.228	9	.252	9	-.001	1	1.56e-3	8	NC	9	NC	1
1002			min	-.201	6	-.001	1	-2.553	6	-2.323e-3	7	NC	1	NC	6
1003		2	max	.23	9	.254	9	-.001	1	1.608e-3	8	NC	9	NC	1
1004			min	-.2	6	-.001	1	-2.564	6	-2.364e-3	7	NC	1	NC	6
1005		3	max	.231	9	.255	9	-.001	1	1.656e-3	8	NC	9	NC	1
1006			min	-.198	6	0	1	-2.575	6	-2.405e-3	7	NC	1	NC	6
1007		4	max	.233	9	.257	9	-.001	1	1.704e-3	8	NC	9	NC	1
1008			min	-.196	6	0	1	-2.586	6	-2.445e-3	7	NC	1	NC	6
1009		5	max	.234	9	.258	9	-.001	1	1.753e-3	8	NC	9	NC	1
1010			min	-.195	6	0	1	-2.597	6	-2.486e-3	7	NC	1	NC	6
1011	M102	1	max	.074	9	.341	9	-.001	1	1.649e-3	9	NC	9	NC	1
1012			min	-.239	6	0	1	-2.597	6	-2.352e-3	6	NC	1	NC	6
1013		2	max	.075	9	.342	9	-.001	1	1.597e-3	9	NC	9	NC	1
1014			min	-.238	6	0	1	-2.608	6	-2.293e-3	6	NC	1	NC	6
1015		3	max	.077	9	.344	9	-.001	1	1.544e-3	9	NC	9	NC	1
1016			min	-.236	6	0	1	-2.619	6	-2.233e-3	6	NC	1	NC	6
1017		4	max	.079	9	.345	9	-.001	1	1.492e-3	9	NC	9	NC	1
1018			min	-.235	6	0	1	-2.629	6	-2.173e-3	6	NC	1	NC	6
1019		5	max	.08	9	.346	9	-.001	1	1.439e-3	9	NC	9	NC	1
1020			min	-.233	6	0	1	-2.64	6	-2.114e-3	6	NC	1	NC	6
1021	M103	1	max	0	1	.34	9	-.001	1	4.783e-3	9	NC	9	NC	1
1022			min	-.218	6	-.088	6	-2.64	6	-5.246e-3	6	929.778	6	NC	6
1023		2	max	0	1	.341	9	-.002	1	4.732e-3	9	NC	9	NC	1
1024			min	-.216	6	-.087	6	-2.647	6	-5.191e-3	6	1251.683	6	819.785	6
1025		3	max	0	1	.342	9	-.002	1	4.682e-3	9	NC	9	NC	1
1026			min	-.215	6	-.085	6	-2.655	6	-5.135e-3	6	1895.64	6	409.165	6
1027		4	max	0	1	.343	9	-.002	1	4.631e-3	9	NC	9	NC	1

Envelope Member Section Deflections (Continued)

	Member	Sec		x [in]	lc	y [in]	lc	z [in]	lc	x Rotate [r...	lc	(n) L/y Ratio	lc	(n) L/z Ratio	lc
1028			min	-.213	6	-.083	6	-2.663	6	-5.08e-3	6	3827.808	6	272.315	6
1029		5	max	0	1	.343	9	-.002	1	4.581e-3	9	NC	9	NC	1
1030			min	-.212	6	-.082	6	-2.67	6	-5.025e-3	6	NC	6	203.907	6
1031	M104	1	max	0	1	.307	9	-.002	1	5.836e-3	9	NC	9	NC	1
1032			min	-.183	6	-.134	6	-2.67	6	-6.128e-3	6	NC	6	NC	6
1033		2	max	0	1	.302	9	-.003	1	4.564e-3	9	2556.462	9	NC	1
1034			min	-.139	6	-.098	6	-2.829	6	-4.767e-3	6	NC	6	4407.742	6
1035		3	max	0	1	.245	9	-.003	1	3.292e-3	9	2062.734	9	NC	1
1036			min	-.094	6	-.072	6	-2.982	6	-3.405e-3	6	NC	6	2377.791	6
1037		4	max	0	1	.145	9	-.003	1	2.021e-3	9	3031.04	9	NC	1
1038			min	-.049	6	-.043	6	-3.097	6	-2.044e-3	6	NC	6	2513.452	6
1039		5	max	0	1	.015	9	-.004	1	7.49e-4	9	NC	9	NC	1
1040			min	-.005	6	-.005	6	-3.148	6	-6.828e-4	6	NC	6	NC	6
1041	M105	1	max	0	1	-.003	1	.005	6	1.934e-4	7	NC	1	875.416	6
1042			min	-.819	6	-3.039	6	-.015	9	-7.055e-4	8	NC	6	NC	9
1043		2	max	0	1	-.003	1	.004	6	1.678e-4	7	NC	1	1167.419	6
1044			min	-.818	6	-3.04	6	-.012	9	-6.78e-4	8	NC	6	NC	9
1045		3	max	0	1	-.003	1	.003	6	1.423e-4	7	NC	1	1751.422	6
1046			min	-.817	6	-3.04	6	-.008	9	-6.505e-4	8	NC	6	NC	9
1047		4	max	0	1	-.003	1	.001	6	1.167e-4	7	NC	1	3503.427	6
1048			min	-.816	6	-3.04	6	-.004	9	-6.23e-4	8	NC	6	NC	9
1049		5	max	0	1	-.003	1	0	1	9.117e-5	7	NC	1	NC	1
1050			min	-.815	6	-3.04	6	0	1	-5.955e-4	8	NC	6	NC	1
1051	M106	1	max	-.002	1	-.002	1	0	1	3.549e-4	6	NC	1	NC	1
1052			min	-2.225	6	-2.225	6	0	1	-1.877e-3	9	NC	6	NC	1
1053		2	max	-.002	1	-.003	1	.003	9	3.873e-4	6	NC	1	NC	9
1054			min	-2.224	6	-2.225	6	-.001	6	-1.908e-3	9	NC	6	NC	6
1055		3	max	-.002	1	-.003	1	.006	9	4.198e-4	6	NC	1	NC	9
1056			min	-2.223	6	-2.225	6	-.003	6	-1.939e-3	9	NC	6	NC	6
1057		4	max	-.002	1	-.003	1	.009	9	4.523e-4	6	NC	1	NC	9
1058			min	-2.222	6	-2.225	6	-.004	6	-1.97e-3	9	NC	6	NC	6
1059		5	max	-.002	1	-.003	1	.013	9	4.848e-4	6	NC	1	NC	9
1060			min	-2.221	6	-2.225	6	-.005	6	-2.001e-3	9	NC	6	NC	6
1061	M107	1	max	-.003	1	0	1	.013	9	9.477e-4	6	NC	1	NC	9
1062			min	-3.036	6	-.817	6	-.005	6	-3.077e-3	9	NC	6	NC	6
1063		2	max	-.003	1	0	1	.014	9	9.673e-4	6	NC	1	NC	9
1064			min	-3.035	6	-.817	6	-.006	6	-3.096e-3	9	NC	6	NC	6
1065		3	max	-.003	1	0	1	.016	9	9.868e-4	6	NC	1	NC	9
1066			min	-3.033	6	-.817	6	-.007	6	-3.115e-3	9	NC	6	NC	6
1067		4	max	-.003	1	0	1	.017	9	1.006e-3	6	NC	1	NC	9
1068			min	-3.032	6	-.817	6	-.007	6	-3.134e-3	9	NC	6	NC	6
1069		5	max	-.003	1	0	1	.019	9	1.026e-3	6	NC	1	NC	9
1070			min	-3.031	6	-.817	6	-.008	6	-3.153e-3	9	NC	6	NC	6
1071	M108	1	max	-.004	1	0	1	.019	9	1.14e-3	6	NC	1	NC	9
1072			min	-3.139	6	-.005	4	-.008	6	-3.366e-3	9	NC	4	NC	6
1073		2	max	-.004	1	0	1	.02	9	1.174e-3	6	NC	1	NC	9
1074			min	-3.136	6	-.005	4	-.009	6	-3.399e-3	9	NC	4	NC	6
1075		3	max	-.004	1	0	1	.021	9	1.208e-3	6	NC	1	NC	9
1076			min	-3.132	6	-.005	4	-.009	6	-3.433e-3	9	NC	4	NC	6
1077		4	max	-.004	1	0	1	.021	9	1.243e-3	6	NC	1	NC	9
1078			min	-3.128	6	-.006	4	-.01	6	-3.466e-3	9	NC	4	NC	6
1079		5	max	-.004	1	0	1	.022	9	1.267e-3	6	NC	1	NC	9
1080			min	-3.125	6	-.006	4	-.01	6	-3.49e-3	9	NC	4	NC	6
1081	M109	1	max	3.125	6	0	1	.01	6	3.49e-3	9	NC	1	NC	6
1082			min	.004	1	-.006	4	-.022	9	-1.267e-3	6	NC	4	NC	9
1083		2	max	3.125	6	0	1	.01	6	3.488e-3	9	NC	1	NC	6
1084			min	.004	1	-.006	4	-.022	9	-1.264e-3	6	NC	4	NC	9
1085		3	max	3.126	6	0	1	.01	6	3.486e-3	9	NC	1	NC	6
1086			min	.004	1	-.006	4	-.022	9	-1.262e-3	6	NC	4	NC	9

Envelope Member Section Deflections (Continued)

	Member	Sec		x [in]	lc	y [in]	lc	z [in]	lc	x Rotate [r...	lc	(n) L/y Ratio	lc	(n) L/z Ratio	lc
1087		4	max	3.126	6	0	1	.01	6	3.483e-3	9	NC	1	NC	6
1088			min	.004	1	-.006	4	-.022	9	-1.26e-3	6	NC	4	NC	9
1089		5	max	3.127	6	0	1	.01	6	3.481e-3	9	NC	1	NC	6
1090			min	.004	1	-.006	4	-.022	9	-1.257e-3	6	NC	4	NC	9
1091	M110	1	max	-.004	1	0	1	.03	9	1.267e-3	6	NC	1	NC	9
1092			min	-3.125	6	-.009	4	-.011	6	-3.49e-3	9	NC	4	NC	6
1093		2	max	-.004	1	0	1	.03	9	1.267e-3	6	NC	1	NC	9
1094			min	-3.124	6	-.009	4	-.011	6	-3.491e-3	9	NC	4	NC	6
1095		3	max	-.004	1	0	1	.03	9	1.268e-3	6	NC	1	NC	9
1096			min	-3.124	6	-.009	4	-.011	6	-3.491e-3	9	NC	4	NC	6
1097		4	max	-.004	1	0	1	.03	9	1.269e-3	6	NC	1	NC	9
1098			min	-3.124	6	-.009	4	-.011	6	-3.492e-3	9	NC	4	NC	6
1099		5	max	-.004	1	0	1	.03	9	1.269e-3	6	NC	1	NC	9
1100			min	-3.124	6	-.009	4	-.011	6	-3.493e-3	9	NC	4	NC	6
1101	M111	1	max	-.003	1	.8	6	.03	9	1.232e-3	6	NC	6	NC	9
1102			min	-3.019	6	0	1	-.011	6	-3.406e-3	9	NC	1	NC	6
1103		2	max	-.003	1	.8	6	.028	9	1.236e-3	6	NC	6	NC	9
1104			min	-3.017	6	0	1	-.011	6	-3.41e-3	9	NC	1	NC	6
1105		3	max	-.003	1	.8	6	.026	9	1.24e-3	6	NC	6	NC	9
1106			min	-3.015	6	0	1	-.01	6	-3.414e-3	9	NC	1	NC	6
1107		4	max	-.003	1	.8	6	.024	9	1.243e-3	6	NC	6	NC	9
1108			min	-3.012	6	0	1	-.009	6	-3.418e-3	9	NC	1	NC	6
1109		5	max	-.003	1	.8	6	.022	9	1.247e-3	6	NC	6	NC	9
1110			min	-3.01	6	0	1	-.008	6	-3.421e-3	9	NC	1	NC	6
1111	M112	1	max	-.003	1	2.197	6	.022	9	9.224e-4	6	NC	6	NC	9
1112			min	-2.207	6	.003	1	-.008	6	-2.567e-3	9	NC	1	NC	6
1113		2	max	-.003	1	2.197	6	.017	9	9.244e-4	6	NC	6	NC	9
1114			min	-2.204	6	.003	1	-.006	6	-2.569e-3	9	NC	1	NC	6
1115		3	max	-.003	1	2.197	6	.011	9	9.264e-4	6	NC	6	NC	9
1116			min	-2.202	6	.003	1	-.004	6	-2.571e-3	9	NC	1	NC	6
1117		4	max	-.003	1	2.197	6	.006	9	9.284e-4	6	NC	6	NC	9
1118			min	-2.2	6	.003	1	-.002	6	-2.573e-3	9	NC	1	NC	6
1119		5	max	-.003	1	2.197	6	0	1	9.304e-4	6	NC	6	NC	1
1120			min	-2.197	6	.003	1	0	1	-2.575e-3	9	NC	1	NC	1
1121	M113	1	max	0	1	3.001	6	0	1	3.519e-4	6	NC	6	NC	1
1122			min	-.804	6	.003	1	0	1	-1.027e-3	9	NC	1	NC	1
1123		2	max	0	1	3.001	6	.003	6	3.521e-4	6	NC	6	3186.439	6
1124			min	-.802	6	.003	1	-.008	9	-1.027e-3	9	NC	1	1184.866	9
1125		3	max	0	1	3.001	6	.006	6	3.524e-4	6	NC	6	1591.535	6
1126			min	-.799	6	.003	1	-.016	9	-1.027e-3	9	NC	1	592.2	9
1127		4	max	0	1	3.001	6	.009	6	3.526e-4	6	NC	6	1059.945	6
1128			min	-.797	6	.003	1	-.024	9	-1.028e-3	9	NC	1	394.651	9
1129		5	max	0	1	3.001	6	.012	6	3.529e-4	6	NC	6	794.182	6
1130			min	-.795	6	.003	1	-.031	9	-1.028e-3	9	NC	1	295.88	9
1131	M114	1	max	.009	4	.031	9	3.105	6	1.435e-5	6	NC	9	NC	6
1132			min	0	1	-.012	6	.004	1	-1.175e-4	9	NC	6	NC	1
1133		2	max	.02	4	.067	9	3.105	6	1.224e-5	6	1130.282	9	NC	6
1134			min	0	1	-.025	6	.003	1	-1.154e-4	9	3039.754	6	NC	1
1135		3	max	.03	4	.102	9	3.105	6	1.013e-5	6	564.579	9	NC	6
1136			min	0	1	-.038	6	.003	1	-1.133e-4	9	1515.817	6	NC	1
1137		4	max	.04	4	.138	9	3.105	6	8.013e-6	6	376.086	9	NC	6
1138			min	0	1	-.051	6	.003	1	-1.112e-4	9	1008.384	6	NC	1
1139		5	max	.051	4	.173	9	3.105	6	5.901e-6	6	281.889	9	NC	6
1140			min	0	1	-.065	6	.003	1	-1.091e-4	9	755.028	6	NC	1
1141	M115	1	max	0	1	3.031	6	.065	6	3.163e-4	6	NC	6	NC	6
1142			min	-.676	6	.003	1	-.173	9	-9.356e-4	9	NC	1	NC	9
1143		2	max	0	1	3.031	6	.067	6	3.16e-4	6	NC	6	3092.388	6
1144			min	-.674	6	.003	1	-.181	9	-9.353e-4	9	NC	1	1165.83	9
1145		3	max	0	1	3.031	6	.07	6	3.156e-4	6	NC	6	1545.973	6

Envelope Member Section Deflections (Continued)

	Member	Sec		x [in]	lc	y [in]	lc	z [in]	lc	x Rotate [r...	lc	(n) L/y Ratio	lc	(n) L/z Ratio	lc
1146			min	-.671	6	.003	1	-.188	9	-9.349e-4	9	NC	1	582.884	9
1147		4	max	0	1	3.032	6	.073	6	3.153e-4	6	NC	6	1030.516	6
1148			min	-.669	6	.003	1	-.195	9	-9.346e-4	9	NC	1	388.57	9
1149		5	max	0	9	3.032	6	.076	6	3.15e-4	6	NC	6	772.798	6
1150			min	-.667	6	.003	1	-.202	9	-9.343e-4	9	NC	1	291.415	9
1151	M116	1	max	-.002	1	2.398	6	.076	6	8.679e-4	6	NC	6	NC	6
1152			min	-1.971	6	.002	1	-.202	9	-2.39e-3	9	NC	1	NC	9
1153		2	max	-.002	1	2.398	6	.078	6	8.677e-4	6	NC	6	3958.495	6
1154			min	-1.968	6	.002	1	-.208	9	-2.39e-3	9	NC	1	1518.669	9
1155		3	max	-.002	1	2.398	6	.08	6	8.675e-4	6	NC	6	1978.987	6
1156			min	-1.966	6	.002	1	-.213	9	-2.39e-3	9	NC	1	759.296	9
1157		4	max	-.002	1	2.398	6	.082	6	8.674e-4	6	NC	6	1319.17	6
1158			min	-1.964	6	.002	1	-.219	9	-2.39e-3	9	NC	1	506.175	9
1159		5	max	-.002	1	2.398	6	.084	6	8.672e-4	6	NC	6	989.274	6
1160			min	-1.962	6	.002	1	-.224	9	-2.389e-3	9	NC	1	379.616	9
1161	M117	1	max	-.003	1	1.246	6	.084	6	1.231e-3	6	NC	6	NC	6
1162			min	-2.837	6	0	1	-.224	9	-3.325e-3	9	NC	1	NC	9
1163		2	max	-.003	1	1.246	6	.085	6	1.231e-3	6	NC	6	7885.55	6
1164			min	-2.835	6	0	1	-.227	9	-3.325e-3	9	NC	1	3167.951	9
1165		3	max	-.003	1	1.246	6	.086	6	1.231e-3	6	NC	6	3942.16	6
1166			min	-2.833	6	0	1	-.23	9	-3.325e-3	9	NC	1	1583.876	9
1167		4	max	-.003	1	1.246	6	.087	6	1.231e-3	6	NC	6	2627.749	6
1168			min	-2.83	6	0	1	-.232	9	-3.324e-3	9	NC	1	1055.86	9
1169		5	max	-.003	1	1.246	6	.088	6	1.231e-3	6	NC	6	1970.58	6
1170			min	-2.828	6	0	1	-.235	9	-3.324e-3	9	NC	1	791.857	9
1171	M118	1	max	-.003	1	.05	9	.088	6	1.327e-3	6	NC	9	9379.117	6
1172			min	-3.086	6	-.174	6	-.235	9	-3.535e-3	9	NC	6	2604.794	9
1173		2	max	-.003	1	.049	9	.088	6	1.327e-3	6	NC	9	NC	6
1174			min	-3.084	6	-.174	6	-.234	9	-3.535e-3	9	NC	6	3473.314	9
1175		3	max	-.003	1	.049	9	.088	6	1.327e-3	6	NC	9	NC	6
1176			min	-3.082	6	-.174	6	-.233	9	-3.535e-3	9	NC	6	5210.274	9
1177		4	max	-.003	1	.049	9	.088	6	1.327e-3	6	NC	9	NC	6
1178			min	-3.079	6	-.173	6	-.233	9	-3.535e-3	9	NC	6	NC	9
1179		5	max	-.003	1	.049	9	.087	6	1.327e-3	6	NC	9	NC	6
1180			min	-3.077	6	-.173	6	-.232	9	-3.535e-3	9	NC	6	NC	9
1181	M119	1	max	-.002	1	-.002	1	.087	6	1.134e-3	6	NC	1	1433.495	6
1182			min	-2.663	6	-1.552	6	-.232	9	-2.975e-3	9	NC	6	513.58	9
1183		2	max	-.002	1	-.002	1	.086	6	1.134e-3	6	NC	1	1911.339	6
1184			min	-2.661	6	-1.552	6	-.228	9	-2.975e-3	9	NC	6	684.775	9
1185		3	max	-.002	1	-.002	1	.085	6	1.134e-3	6	NC	1	2867.017	6
1186			min	-2.659	6	-1.552	6	-.224	9	-2.975e-3	9	NC	6	1027.164	9
1187		4	max	-.002	1	-.002	1	.083	6	1.134e-3	6	NC	1	5734.042	6
1188			min	-2.657	6	-1.552	6	-.219	9	-2.975e-3	9	NC	6	2054.33	9
1189		5	max	-.002	1	-.002	1	.082	6	1.134e-3	6	NC	1	NC	6
1190			min	-2.654	6	-1.551	6	-.215	9	-2.975e-3	9	NC	6	NC	9
1191	M120	1	max	-.004	1	0	1	.022	9	1.267e-3	6	NC	1	NC	9
1192			min	-3.125	6	-.006	4	-.01	6	-3.49e-3	9	NC	4	NC	6
1193		2	max	-.004	1	0	1	.024	9	1.267e-3	6	NC	1	NC	9
1194			min	-3.125	6	-.006	4	-.01	6	-3.49e-3	9	NC	4	NC	6
1195		3	max	-.004	1	0	1	.026	9	1.267e-3	6	NC	1	NC	9
1196			min	-3.125	6	-.007	4	-.011	6	-3.49e-3	9	NC	4	NC	6
1197		4	max	-.004	1	0	1	.028	9	1.267e-3	6	NC	1	NC	9
1198			min	-3.125	6	-.008	4	-.011	6	-3.49e-3	9	NC	4	NC	6
1199		5	max	-.004	1	0	1	.03	9	1.267e-3	6	NC	1	NC	9
1200			min	-3.125	6	-.009	4	-.011	6	-3.49e-3	9	NC	4	NC	6

Envelope Member Section Stresses

	Member	Sec		Axial[ksi]	lc	y Shear[ksi]	lc	z Shear[ksi]	lc	y-Top[ksi]	lc	y-Bot[ksi]	lc	z-Top[ksi]	lc	z-Bot[ksi]	lc
1	M1	1	max	.388	7	-.092	1	.085	6	-.245	1	1.628	6	.231	6	.042	9
2			min	.024	1	-.26	8	-.034	9	-1.628	6	.245	1	-.042	9	-.231	6
3		2	max	.388	7	-.093	1	.085	6	-.291	1	1.745	3	.274	6	.059	9
4			min	.024	1	-.261	8	-.035	9	-1.745	3	.291	1	-.059	9	-.274	6
5		3	max	.389	7	-.094	1	.086	6	-.338	1	1.876	8	.317	6	.077	9
6			min	.024	1	-.262	8	-.035	9	-1.876	8	.338	1	-.077	9	-.317	6
7		4	max	.389	7	-.095	1	.087	6	-.386	1	2.008	8	.361	6	.095	9
8			min	.024	1	-.263	8	-.036	9	-2.008	8	.386	1	-.095	9	-.361	6
9		5	max	.389	7	-.096	1	.087	6	-.434	1	2.14	8	.404	6	.113	9
10			min	.024	1	-.264	8	-.036	9	-2.14	8	.434	1	-.113	9	-.404	6
11	M2	1	max	.392	7	.2	7	.087	6	-.434	1	2.14	8	.534	6	.007	1
12			min	.045	1	-.059	1	-.036	9	-2.14	8	.434	1	-.007	1	-.534	6
13		2	max	.392	7	.2	7	.088	6	-.464	1	2.098	8	.578	6	.007	1
14			min	.046	1	-.06	1	-.037	9	-2.098	8	.464	1	-.007	1	-.578	6
15		3	max	.393	7	.2	7	.088	6	-.494	1	2.056	8	.622	6	.007	1
16			min	.046	1	-.061	1	-.037	9	-2.056	8	.494	1	-.007	1	-.622	6
17		4	max	.393	7	.199	7	.089	6	-.525	1	2.015	8	.666	6	.008	1
18			min	.046	1	-.061	1	-.038	9	-2.015	8	.525	1	-.008	1	-.666	6
19		5	max	.394	7	.199	7	.089	6	-.556	1	1.974	8	.711	6	.008	1
20			min	.047	1	-.062	1	-.038	9	-1.974	8	.556	1	-.008	1	-.711	6
21	M3	1	max	.292	7	.566	7	.089	6	-.556	1	1.974	8	.673	6	.011	1
22			min	.056	1	-.007	1	-.038	9	-1.974	8	.556	1	-.011	1	-.673	6
23		2	max	.292	7	.567	7	.09	6	-.559	1	1.769	8	.718	6	.011	1
24			min	.057	1	-.007	1	-.039	9	-1.769	8	.559	1	-.011	1	-.718	6
25		3	max	.293	7	.567	7	.09	6	-.563	1	1.565	8	.764	6	.012	1
26			min	.057	1	-.008	1	-.039	9	-1.565	8	.563	1	-.012	1	-.764	6
27		4	max	.293	7	.567	7	.091	6	-.567	1	1.36	8	.809	6	.012	1
28			min	.058	1	-.008	1	-.04	9	-1.36	8	.567	1	-.012	1	-.809	6
29		5	max	.294	7	.567	7	.091	6	-.509	7	1.157	8	.855	6	.012	1
30			min	.058	1	-.008	1	-.041	9	-1.157	8	.509	7	-.012	1	-.855	6
31	M4	1	max	.183	8	-.05	1	.355	8	1.157	8	-.509	7	.013	1	.76	6
32			min	-.082	1	-.716	8	-.008	1	.509	7	-1.157	8	-.76	6	-.013	1
33		2	max	.187	8	-.05	1	.351	8	.391	1	1.688	6	.637	9	.015	1
34			min	-.078	1	-.712	8	-.008	1	-1.688	6	-.391	1	-.015	1	-.637	9
35		3	max	.191	8	-.05	1	.347	8	.21	1	3.951	3	1.766	4	.043	1
36			min	-.074	1	-.708	8	-.008	1	-3.951	3	-.21	1	-.043	1	-1.766	4
37		4	max	.089	8	-.028	1	.331	4	1.4	9	-.234	1	3.277	9	.08	1
38			min	-.026	1	-.115	8	-.008	1	.234	1	-1.4	9	-.08	1	-3.277	9
39		5	max	.093	8	-.028	1	.327	4	1.035	9	-.133	1	4.404	9	.11	1
40			min	-.022	1	-.111	8	-.008	1	.133	1	-1.035	9	-.11	1	-4.404	9
41	M5	1	max	.133	8	.22	6	.072	9	6.511	9	.165	1	.029	1	.572	9
42			min	-.025	1	.013	1	-.082	6	-.165	1	-6.511	9	-.572	9	-.029	1
43		2	max	.134	8	.219	6	.071	9	6.523	9	.16	1	.029	1	.569	7
44			min	-.024	1	.013	1	-.082	6	-.16	1	-6.523	9	-.569	7	-.029	1
45		3	max	.134	8	.219	6	.071	9	6.535	9	.156	1	.029	1	.57	7
46			min	-.023	1	.013	1	-.081	6	-.156	1	-6.535	9	-.57	7	-.029	1
47		4	max	.134	8	.218	6	.07	9	6.548	9	.151	1	.028	1	.571	7
48			min	-.023	1	.012	1	-.081	6	-.151	1	-6.548	9	-.571	7	-.028	1
49		5	max	.135	8	.217	6	.069	9	6.561	9	.146	1	.028	1	.571	7
50			min	-.022	1	.012	1	-.08	6	-.146	1	-6.561	9	-.571	7	-.028	1
51	M6	1	max	.171	8	.054	6	.069	9	6.561	9	.146	1	.022	1	.499	9
52			min	-.016	1	-.078	9	-.08	6	-.146	1	-6.561	9	-.499	9	-.022	1
53		2	max	.171	8	.053	6	.069	9	6.532	9	.134	1	.022	1	.493	7
54			min	-.016	1	-.079	9	-.079	6	-.134	1	-6.532	9	-.493	7	-.022	1
55		3	max	.171	8	.052	6	.068	9	6.521	8	.123	1	.022	1	.493	7
56			min	-.016	1	-.079	9	-.079	6	-.123	1	-6.521	8	-.493	7	-.022	1
57		4	max	.172	8	.05	6	.068	9	6.54	8	.111	1	.022	1	.493	7
58			min	-.015	1	-.079	9	-.078	6	-.111	1	-6.54	8	-.493	7	-.022	1

Envelope Member Section Stresses (Continued)

	Member	Sec		Axial[ksi]	lc	y Shear[ksi]	lc	z Shear[ksi]	lc	y-Top[ksi]	lc	y-Bot[ksi]	lc	z-Top[ksi]	lc	z-Bot[ksi]	lc
59		5	max	.172	8	.049	6	.067	9	6.557	8	.1	1	.021	1	.492	7
60			min	-.015	1	-.08	9	-.078	6	-.1	1	-6.557	8	-.492	7	-.021	1
61	M7	1	max	.161	8	.041	1	.067	9	6.557	8	.1	1	.17	6	.308	9
62			min	-.005	1	-.174	9	-.078	6	-.1	1	-6.557	8	-.308	9	-.17	6
63		2	max	.161	8	.04	1	.067	9	6.509	8	.085	1	.141	6	.284	9
64			min	-.005	1	-.174	9	-.077	6	-.085	1	-6.509	8	-.284	9	-.141	6
65		3	max	.16	8	.039	1	.066	9	6.46	8	.071	1	.134	8	.281	7
66			min	-.005	1	-.175	9	-.077	6	-.071	1	-6.46	8	-.281	7	-.134	8
67		4	max	.16	8	.037	1	.066	9	6.411	8	.057	1	.129	8	.28	7
68			min	-.005	1	-.176	9	-.076	6	-.057	1	-6.411	8	-.28	7	-.129	8
69		5	max	.16	8	.036	1	.065	9	6.361	8	.043	1	.124	8	.278	7
70			min	-.005	1	-.177	9	-.076	6	-.043	1	-6.361	8	-.278	7	-.124	8
71	M8	1	max	.137	6	.038	1	.065	9	6.361	8	.043	1	.213	8	.14	7
72			min	0	1	-.213	8	-.076	6	-.043	1	-6.361	8	-.14	7	-.213	8
73		2	max	.137	6	.037	1	.065	9	6.284	8	.03	1	.208	8	.139	7
74			min	0	1	-.214	8	-.075	6	-.03	1	-6.284	8	-.139	7	-.208	8
75		3	max	.137	6	.036	1	.064	9	6.208	8	.017	1	.202	8	.138	7
76			min	0	1	-.215	8	-.075	6	-.017	1	-6.208	8	-.138	7	-.202	8
77		4	max	.136	6	.035	1	.064	9	6.13	8	.004	1	.197	8	.136	7
78			min	0	1	-.217	8	-.074	6	-.004	1	-6.13	8	-.136	7	-.197	8
79		5	max	.136	6	.034	1	.063	9	6.053	8	-.008	1	.191	8	.134	7
80			min	0	1	-.218	8	-.074	6	.008	1	-6.053	8	-.134	7	-.191	8
81	M9	1	max	.136	8	.034	1	.063	9	6.053	8	-.008	1	.191	8	.134	7
82			min	0	1	-.218	8	-.074	6	.008	1	-6.053	8	-.134	7	-.191	8
83		2	max	.135	8	.03	1	.061	9	5.844	8	-.039	1	.175	8	.128	7
84			min	0	1	-.221	8	-.072	6	.039	1	-5.844	8	-.128	7	-.175	8
85		3	max	.135	8	.027	1	.06	9	5.632	8	-.066	1	.168	3	.131	2
86			min	0	1	-.224	8	-.071	6	.066	1	-5.632	8	-.131	2	-.168	3
87		4	max	.134	8	.024	1	.058	9	5.417	8	-.091	1	.192	3	.165	2
88			min	0	1	-.227	8	-.069	6	.091	1	-5.417	8	-.165	2	-.192	3
89		5	max	.133	8	.021	1	.057	9	5.199	8	-.112	1	.214	3	.197	2
90			min	0	1	-.23	8	-.067	6	.112	1	-5.199	8	-.197	2	-.214	3
91	M10	1	max	.11	6	.073	4	.067	3	-.659	1	3.418	9	1.245	9	1.558	6
92			min	0	1	-.073	2	-.067	2	-3.418	9	.659	1	-1.558	6	-1.245	9
93		2	max	.106	6	.055	4	.05	3	-.263	1	3.022	9	1.443	9	1.756	6
94			min	0	1	-.055	2	-.05	2	-3.022	9	.263	1	-1.756	6	-1.443	9
95		3	max	.101	6	.036	4	.033	3	.02	1	2.74	9	1.584	9	1.897	6
96			min	0	1	-.036	2	-.033	2	-2.74	9	-.02	1	-1.897	6	-1.584	9
97		4	max	.097	6	.018	4	.017	3	.189	1	2.57	9	1.669	9	1.982	6
98			min	0	1	-.018	2	-.017	2	-2.57	9	-.189	1	-1.982	6	-1.669	9
99		5	max	.092	7	0	1	0	1	.246	1	2.514	9	1.697	9	2.01	6
100			min	0	1	0	1	0	1	-2.514	9	-.246	1	-2.01	6	-1.697	9
101	M11	1	max	.075	6	.004	7	.004	3	.204	1	2.555	9	1.676	9	1.989	6
102			min	0	1	-.004	6	-.004	2	-2.555	9	-.204	1	-1.989	6	-1.676	9
103		2	max	.074	6	.003	7	.003	3	.205	1	2.554	9	1.677	9	1.99	6
104			min	0	1	-.003	6	-.003	2	-2.554	9	-.205	1	-1.99	6	-1.677	9
105		3	max	.074	6	.002	7	.002	3	.206	1	2.553	9	1.677	9	1.99	6
106			min	0	1	-.002	6	-.002	2	-2.553	9	-.206	1	-1.99	6	-1.677	9
107		4	max	.074	6	.001	7	0	3	.207	1	2.553	9	1.678	9	1.991	6
108			min	0	1	-.001	6	0	2	-2.553	9	-.207	1	-1.991	6	-1.678	9
109		5	max	.074	7	0	1	0	1	.207	1	2.552	9	1.678	9	1.991	6
110			min	0	1	0	1	0	1	-2.552	9	-.207	1	-1.991	6	-1.678	9
111	M12	1	max	.226	9	.108	6	.343	9	-.141	1	1.297	6	6.386	6	5.015	9
112			min	-.078	6	-.034	1	-.453	6	-1.297	6	-.141	1	-5.015	9	-6.386	6
113		2	max	.229	9	.093	6	.336	9	-.006	1	.795	6	4.136	6	3.313	9
114			min	-.082	6	-.02	1	-.445	6	-.795	6	.006	1	-3.313	9	-4.136	6
115		3	max	.233	9	.078	6	.329	9	.056	1	.367	6	1.924	6	1.648	9
116			min	-.086	6	-.005	1	-.438	6	-.367	6	-.056	1	-1.648	9	-1.924	6
117		4	max	.237	9	.063	6	.321	9	.043	1	.017	8	.065	7	.338	8

Envelope Member Section Stresses (Continued)

	Member	Sec		Axial[ksi]	lc	y Shear[ksi]	lc	z Shear[ksi]	lc	y-Top[ksi]	lc	y-Bot[ksi]	lc	z-Top[ksi]	lc	z-Bot[ksi]	lc
118			min	-.089	6	-.01	1	-.431	6	-.017	8	-.043	1	-.338	8	-.065	7
119		5	max	.24	9	.049	6	.314	9	.268	6	.043	1	1.57	9	2.39	6
120			min	-.093	6	-.025	1	-.423	6	-.043	1	-.268	6	-2.39	6	-1.57	9
121	M13	1	max	.24	9	.013	1	.391	6	.268	6	.043	1	1.57	9	2.39	6
122			min	-.093	6	-.008	6	-.188	9	-.043	1	-.268	6	-2.39	6	-1.57	9
123		2	max	.243	9	.002	1	.396	6	.215	6	.015	1	.841	9	.883	6
124			min	-.096	6	-.02	6	-.193	9	-.015	1	-.215	6	-.883	6	-.841	9
125		3	max	.246	9	-.01	1	.402	6	.129	8	.031	1	.958	8	.222	7
126			min	-.099	6	-.031	6	-.199	9	-.031	1	-.129	8	-.222	7	-.958	8
127		4	max	.249	9	-.021	1	.408	6	.04	9	.089	1	2.197	6	.683	9
128			min	-.102	6	-.042	6	-.204	9	-.089	1	-.04	9	-.683	9	-2.197	6
129		5	max	.252	9	-.032	1	.413	6	-.085	9	.206	6	3.77	6	1.477	9
130			min	-.104	6	-.053	6	-.21	9	-.206	6	-.085	9	-1.477	9	-3.77	6
131	M14	1	max	.38	7	.16	7	0	1	-.181	1	.411	6	3.77	6	1.477	9
132			min	0	1	.07	1	-1.073	6	-.411	6	-.181	1	-1.477	9	-3.77	6
133		2	max	.38	7	.159	7	0	1	-.156	1	.352	6	3.372	6	1.721	9
134			min	0	1	.069	1	-1.073	6	-.352	6	-.156	1	-1.721	9	-3.372	6
135		3	max	.38	7	.158	7	0	1	-.112	9	.294	6	2.975	6	1.964	9
136			min	0	1	.068	1	-1.073	6	-.294	6	.112	9	-1.964	9	-2.975	6
137		4	max	.38	7	.157	7	0	1	-.068	9	.236	6	2.577	6	2.208	9
138			min	0	1	.067	1	-1.072	6	-.236	6	.068	9	-2.208	9	-2.577	6
139		5	max	.38	7	.155	7	0	1	-.024	9	.179	6	2.18	6	2.452	9
140			min	0	1	.066	1	-1.072	6	-.179	6	.024	9	-2.452	9	-2.18	6
141	M15	1	max	.551	7	.155	7	0	1	-.04	1	.525	6	2.18	6	2.452	9
142			min	0	1	.066	1	-.894	6	-.525	6	.04	1	-2.452	9	-2.18	6
143		2	max	.551	7	.154	7	0	1	-.016	1	.468	6	1.849	6	2.533	9
144			min	0	1	.065	1	-.894	6	-.468	6	.016	1	-2.533	9	-1.849	6
145		3	max	.551	7	.153	7	0	1	.008	1	.411	6	1.518	6	2.615	9
146			min	0	1	.064	1	-.894	6	-.411	6	-.008	1	-2.615	9	-1.518	6
147		4	max	.551	7	.152	7	0	1	.032	1	.355	6	1.187	6	2.697	9
148			min	0	1	.063	1	-.894	6	-.355	6	-.032	1	-2.697	9	-1.187	6
149		5	max	.551	7	.151	7	0	1	.055	1	.299	6	.856	6	2.779	9
150			min	0	1	.061	1	-.894	6	-.299	6	-.055	1	-2.779	9	-.856	6
151	M16	1	max	.573	7	.151	7	.278	9	.094	1	.539	7	.856	6	2.779	9
152			min	0	1	.061	1	-.478	6	-.539	7	-.094	1	-2.779	9	-.856	6
153		2	max	.573	7	.15	7	.278	9	.116	1	.484	7	.681	8	2.678	7
154			min	0	1	.06	1	-.478	6	-.484	7	-.116	1	-2.678	7	-.681	8
155		3	max	.573	7	.149	7	.279	9	.138	1	.428	7	.526	8	2.597	7
156			min	0	1	.059	1	-.479	6	-.428	7	-.138	1	-2.597	7	-.526	8
157		4	max	.573	7	.148	7	.279	9	.16	1	.373	7	.37	8	2.515	7
158			min	0	1	.058	1	-.479	6	-.373	7	-.16	1	-2.515	7	-.37	8
159		5	max	.572	7	.147	7	.28	9	.181	1	.319	7	.215	8	2.434	7
160			min	0	1	.057	1	-.479	6	-.319	7	-.181	1	-2.434	7	-.215	8
161	M17	1	max	.524	6	.147	7	.51	9	.189	1	.396	7	.215	8	2.434	7
162			min	0	1	.057	1	-.215	6	-.396	7	-.189	1	-2.434	7	-.215	8
163		2	max	.523	6	.141	7	.513	9	.3	1	.101	7	.001	1	1.411	5
164			min	0	1	.051	1	-.218	6	-.101	7	-.3	1	-1.411	5	-.001	1
165		3	max	.521	6	.135	7	.516	9	.398	1	-.181	7	.001	1	.748	6
166			min	0	1	.045	1	-.221	6	-.181	7	-.398	1	-.748	6	-.001	1
167		4	max	.52	6	.129	7	.519	9	.484	1	-.451	7	.796	9	1.205	6
168			min	0	1	.039	1	-.224	6	-.451	7	-.484	1	-1.205	6	-.796	9
169		5	max	.518	6	.123	7	.522	9	.709	7	-.558	1	1.863	9	1.668	6
170			min	0	1	.033	1	-.227	6	-.558	1	-.709	7	-1.668	6	-1.863	9
171	M18	1	max	.518	6	-.1	1	.045	6	.709	7	-.558	1	1.863	9	1.668	6
172			min	0	1	-.107	7	-.054	9	-.558	1	-.709	7	-1.668	6	-1.863	9
173		2	max	.518	6	-.101	1	.044	6	.67	7	-.522	1	1.843	9	1.652	6
174			min	0	1	-.108	7	-.054	9	-.522	1	-.67	7	-1.652	6	-1.843	9
175		3	max	.518	6	-.102	1	.044	6	.631	7	-.486	1	1.824	9	1.636	6
176			min	0	1	-.11	7	-.053	9	-.486	1	-.631	7	-1.636	6	-1.824	9

Envelope Member Section Stresses (Continued)

	Member	Sec		Axial[ksi]	lc	y Shear[ksi]	lc	z Shear[ksi]	lc	y-Top[ksi]	lc	y-Bot[ksi]	lc	z-Top[ksi]	lc	z-Bot[ksi]	lc
177		4	max	.518	6	-.103	1	.043	6	.592	7	-.449	1	1.805	9	1.621	6
178			min	0	1	-.111	7	-.053	9	.449	1	-.592	7	-1.621	6	-1.805	9
179		5	max	.517	6	-.104	1	.043	6	.552	7	-.412	1	1.787	9	1.606	6
180			min	0	1	-.112	7	-.052	9	.412	1	-.552	7	-1.606	6	-1.787	9
181	M19	1	max	.503	7	.14	9	.129	4	-2.286	1	2.294	7	2.01	5	2.02	4
182			min	0	1	-.14	4	-.129	5	-2.294	7	2.286	1	-2.02	4	-2.01	5
183		2	max	.498	7	.123	9	.113	4	-1.524	1	1.532	7	1.31	5	1.32	4
184			min	0	1	-.123	4	-.113	5	-1.532	7	1.524	1	-1.32	4	-1.31	5
185		3	max	.494	7	.106	9	.098	4	-.861	1	.868	7	.701	5	.711	4
186			min	0	1	-.106	4	-.098	5	-.868	7	.861	1	-.711	4	-.701	5
187		4	max	.49	7	.089	9	.082	4	-.296	1	.303	7	.182	5	.191	4
188			min	0	1	-.089	4	-.082	5	-.303	7	.296	1	-.191	4	-.182	5
189		5	max	.486	7	.072	9	.066	4	.171	1	-.164	7	.237	4	.247	5
190			min	0	1	-.072	4	-.066	5	-.164	7	.171	1	-.247	5	-.237	4
191	M20	1	max	.588	6	-.009	7	.012	5	1.014	1	-1.007	7	1.015	4	1.025	5
192			min	0	1	-.01	1	-.012	4	1.007	7	-1.014	1	-1.025	5	-1.015	4
193		2	max	.585	6	-.021	7	.023	5	.954	1	-.947	7	.946	4	.955	5
194			min	0	1	-.021	1	-.023	4	.947	7	-.954	1	-.955	5	-.946	4
195		3	max	.582	6	-.033	7	.034	5	.847	1	-.842	7	.836	4	.843	5
196			min	0	1	-.033	1	-.033	4	.842	7	-.847	1	-.843	5	-.836	4
197		4	max	.579	6	-.044	7	.044	5	.695	1	-.691	7	.684	4	.689	5
198			min	0	1	-.044	1	-.044	4	.691	7	-.695	1	-.689	5	-.684	4
199		5	max	.576	6	-.056	7	.055	5	.498	1	-.495	7	.49	4	.494	5
200			min	0	1	-.056	1	-.055	4	.495	7	-.498	1	-.494	5	-.49	4
201	M21	1	max	.576	6	-.056	7	.055	5	.498	1	-.495	7	.49	4	.494	5
202			min	0	1	-.056	1	-.055	4	.495	7	-.498	1	-.494	5	-.49	4
203		2	max	.573	6	-.067	7	.066	5	.255	1	-.253	7	.254	4	.257	5
204			min	0	1	-.068	1	-.065	4	.253	7	-.255	1	-.257	5	-.254	4
205		3	max	.57	6	-.079	7	.076	5	-.034	1	.034	7	.022	5	.023	4
206			min	0	1	-.079	1	-.076	4	-.034	7	.034	1	-.023	4	-.022	5
207		4	max	.568	6	-.09	7	.087	5	-.367	6	.368	1	.343	5	.343	4
208			min	0	1	-.091	1	-.086	4	-.368	1	.367	6	-.343	4	-.343	5
209		5	max	.565	6	-.102	7	.097	5	-.746	6	.748	1	.706	5	.704	4
210			min	0	1	-.102	1	-.097	4	-.748	1	.746	6	-.704	4	-.706	5
211	M22	1	max	.565	6	.079	1	.073	4	-.746	6	.748	1	.706	5	.704	4
212			min	0	1	-.079	6	-.073	5	-.748	1	.746	6	-.704	4	-.706	5
213		2	max	.561	6	.064	1	.06	4	-.387	7	.388	1	.373	5	.372	4
214			min	0	1	-.064	6	-.06	5	-.388	1	.387	7	-.372	4	-.373	5
215		3	max	.557	6	.05	1	.046	4	-.101	7	.102	1	.108	5	.107	4
216			min	0	1	-.05	6	-.046	5	-.102	1	.101	7	-.107	4	-.108	5
217		4	max	.554	6	.035	1	.033	4	.111	7	-.11	1	.09	4	.089	5
218			min	0	1	-.035	6	-.033	5	-.11	1	.111	7	-.089	5	-.09	4
219		5	max	.55	6	.02	1	.019	4	.249	7	-.248	1	.219	4	.218	5
220			min	0	1	-.02	6	-.019	5	-.248	1	.249	7	-.218	5	-.219	4
221	M23	1	max	.545	6	0	1	0	6	.318	7	-.318	8	.286	4	.286	5
222			min	0	1	0	6	0	9	.318	8	-.318	7	-.286	5	-.286	4
223		2	max	.541	6	-.015	1	.013	5	.279	1	-.279	8	.253	4	.253	5
224			min	0	1	-.015	6	-.013	4	.279	8	-.279	1	-.253	5	-.253	4
225		3	max	.537	6	-.03	1	.027	5	.166	1	-.165	8	.151	4	.151	5
226			min	0	1	-.03	6	-.027	4	.165	8	-.166	1	-.151	5	-.151	4
227		4	max	.534	6	-.045	1	.041	5	-.024	1	.024	6	.02	5	.021	4
228			min	0	1	-.045	6	-.041	4	-.024	6	.024	1	-.021	4	-.02	5
229		5	max	.53	6	-.06	1	.054	5	-.288	1	.289	6	.261	5	.261	4
230			min	0	1	-.06	6	-.054	4	-.289	6	.288	1	-.261	4	-.261	5
231	M24	1	max	.53	6	.035	8	.032	4	-.288	1	.289	6	.261	5	.261	4
232			min	0	1	-.035	3	-.032	5	-.289	6	.288	1	-.261	4	-.261	5
233		2	max	.528	6	.026	8	.024	4	-.197	1	.198	6	.177	5	.177	4
234			min	0	1	-.026	3	-.024	5	-.198	6	.197	1	-.177	4	-.177	5
235		3	max	.526	6	.018	8	.016	4	-.132	1	.133	6	.117	5	.117	4

Envelope Member Section Stresses (Continued)

	Member	Sec		Axial[ksi]	lc	y Shear[ksi]	lc	z Shear[ksi]	lc	y-Top[ksi]	lc	y-Bot[ksi]	lc	z-Top[ksi]	lc	z-Bot[ksi]	lc
236			min	0	1	.018	3	-.016	5	-.133	6	.132	1	-.117	4	-.117	5
237		4	max	.523	6	.009	8	.008	4	-.092	1	.093	6	.081	5	.081	4
238			min	0	1	-.009	3	-.008	5	-.093	6	.092	1	-.081	4	-.081	5
239		5	max	.521	8	0	1	0	1	-.079	1	.08	6	.069	5	.069	4
240			min	0	1	0	1	0	1	-.08	6	.079	1	-.069	4	-.069	5
241	M25	1	max	.592	6	.03	6	.026	4	-.123	1	.124	6	.106	5	.107	4
242			min	0	1	-.03	1	-.026	5	-.124	6	.123	1	-.107	4	-.106	5
243		2	max	.589	6	.018	6	.015	4	-.021	8	.023	1	.018	5	.018	4
244			min	0	1	-.017	1	-.015	5	-.023	1	.021	8	-.018	4	-.018	5
245		3	max	.586	6	.005	6	.003	4	.028	6	-.023	1	.021	4	.021	5
246			min	0	1	-.004	1	-.003	5	.023	1	-.028	6	-.021	5	-.021	4
247		4	max	.583	6	-.007	6	.008	5	.023	6	-.015	1	.01	4	.01	5
248			min	0	1	-.008	1	-.008	4	.015	1	-.023	6	-.01	5	-.01	4
249		5	max	.58	6	-.02	6	.02	5	-.036	6	.047	1	.05	5	.05	4
250			min	0	1	-.021	1	-.02	4	-.047	1	-.036	6	-.05	4	-.05	5
251	M26	1	max	.509	8	-.012	7	.01	5	.881	6	-.757	1	.637	4	.641	5
252			min	0	1	-.012	1	-.01	4	.757	1	-.881	6	-.641	5	-.637	4
253		2	max	.515	8	-.037	7	.033	5	.676	6	-.552	1	.457	4	.461	5
254			min	0	1	-.037	1	-.033	4	.552	1	-.676	6	-.461	5	-.457	4
255		3	max	.521	8	-.061	7	.055	5	.266	6	-.143	1	.088	4	.092	5
256			min	0	1	-.061	1	-.055	4	.143	1	-.266	6	-.092	5	-.088	4
257		4	max	.527	8	-.086	5	.078	5	-.348	6	.472	1	.464	5	.468	4
258			min	0	1	-.086	1	-.078	4	-.472	1	.348	6	-.468	4	-.464	5
259		5	max	.533	8	-.11	7	.1	5	-1.168	6	1.291	1	1.209	5	1.213	4
260			min	0	1	-.11	1	-.1	4	-1.291	1	1.168	6	-1.213	4	-1.209	5
261	M27	1	max	.565	6	.051	6	.041	4	-.208	1	.251	6	.171	5	.169	4
262			min	0	1	-.047	1	-.041	5	-.251	6	.208	1	-.169	4	-.171	5
263		2	max	.561	6	.037	6	.028	4	-.009	1	.031	6	.003	4	.002	5
264			min	0	1	-.032	1	-.028	5	-.031	6	.009	1	-.002	5	-.003	4
265		3	max	.558	6	.022	6	.014	4	.116	1	-.115	6	.107	4	.107	5
266			min	0	1	-.018	1	-.014	5	.115	6	-.116	1	-.107	5	-.107	4
267		4	max	.554	6	.007	6	0	6	.188	6	-.168	1	.144	4	.145	5
268			min	0	1	-.003	1	0	9	.168	1	-.188	6	-.145	5	-.144	4
269		5	max	.55	6	-.008	6	.013	5	.187	6	-.146	1	.113	4	.114	5
270			min	0	1	-.012	1	-.013	4	.146	1	-.187	6	-.114	5	-.113	4
271	M28	1	max	.55	6	-.008	6	.013	5	.187	6	-.146	1	.113	4	.114	5
272			min	0	1	-.012	1	-.013	4	.146	1	-.187	6	-.114	5	-.113	4
273		2	max	.547	6	-.022	6	.026	5	.111	6	-.05	1	.014	4	.016	5
274			min	0	1	-.026	1	-.026	4	.05	1	-.111	6	-.016	5	-.014	4
275		3	max	.543	6	-.037	6	.04	5	-.037	6	.119	1	.149	5	.152	4
276			min	0	1	-.041	1	-.04	4	-.119	1	.037	6	-.152	4	-.149	5
277		4	max	.539	6	-.052	6	.053	5	-.26	6	.363	1	.383	5	.386	4
278			min	0	1	-.056	1	-.054	4	-.363	1	.26	6	-.386	4	-.383	5
279		5	max	.536	6	-.067	6	.067	5	-.556	6	.68	1	.684	5	.688	4
280			min	0	1	-.071	1	-.067	4	-.68	1	.556	6	-.688	4	-.684	5
281	M29	1	max	.536	6	.094	3	.086	4	-.556	6	.68	1	.684	5	.688	4
282			min	0	1	-.094	1	-.086	5	-.68	1	.556	6	-.688	4	-.684	5
283		2	max	.533	6	.085	3	.078	4	-.279	6	.403	1	.43	5	.434	4
284			min	0	1	-.085	1	-.078	5	-.403	1	.279	6	-.434	4	-.43	5
285		3	max	.531	6	.076	3	.07	4	-.03	6	.154	1	.201	5	.205	4
286			min	0	1	-.076	1	-.07	5	-.154	1	.03	6	-.205	4	-.201	5
287		4	max	.529	6	.067	3	.061	4	.19	6	-.067	1	.011	2	.015	3
288			min	0	1	-.067	1	-.061	5	.067	1	-.19	6	-.015	3	-.011	2
289		5	max	.526	6	.057	3	.053	4	.383	6	-.259	1	.174	4	.178	5
290			min	0	1	-.057	1	-.053	5	.259	1	-.383	6	-.178	5	-.174	4
291	M30	1	max	.521	6	.035	6	.032	4	.736	6	-.613	1	.499	4	.503	5
292			min	0	1	-.035	1	-.032	5	.613	1	-.736	6	-.503	5	-.499	4
293		2	max	.519	6	.026	6	.024	4	.827	6	-.704	1	.583	4	.587	5
294			min	0	1	-.026	1	-.024	5	.704	1	-.827	6	-.587	5	-.583	4

Envelope Member Section Stresses (Continued)

	Member	Sec		Axial[ksi]	lc	y Shear[ksi]	lc	z Shear[ksi]	lc	y-Top[ksi]	lc	y-Bot[ksi]	lc	z-Top[ksi]	lc	z-Bot[ksi]	lc
295		3	max	.516	6	.018	6	.016	4	.893	6	-.769	1	.643	4	.647	5
296			min	0	1	.018	1	-.016	5	.769	1	-.893	6	-.647	5	-.643	4
297		4	max	.514	6	.009	6	.008	4	.932	6	-.809	1	.679	4	.683	5
298			min	0	1	.009	1	-.008	5	.809	1	-.932	6	-.683	5	-.679	4
299		5	max	.512	8	0	1	0	1	.945	6	-.822	1	.691	4	.695	5
300			min	0	1	0	1	0	1	.822	1	-.945	6	-.695	5	-.691	4
301	M31	1	max	.507	6	.004	9	.004	4	.901	6	-.778	1	.653	4	.658	5
302			min	0	1	.004	2	-.004	5	.778	1	-.901	6	-.658	5	-.653	4
303		2	max	.507	6	.003	9	.003	4	.902	6	-.779	1	.655	4	.659	5
304			min	0	1	.003	2	-.003	5	.779	1	-.902	6	-.659	5	-.655	4
305		3	max	.506	6	.002	9	.002	4	.903	6	-.78	1	.656	4	.66	5
306			min	0	1	.002	2	-.002	5	.78	1	-.903	6	-.66	5	-.656	4
307		4	max	.506	6	.001	9	0	4	.904	6	-.78	1	.656	4	.66	5
308			min	0	1	.001	2	0	5	.78	1	-.904	6	-.66	5	-.656	4
309		5	max	.506	6	0	1	0	1	.904	6	-.781	1	.656	4	.66	5
310			min	0	1	0	1	0	1	.781	1	-.904	6	-.66	5	-.656	4
311	M32	1	max	.524	8	-.012	5	.01	5	-.103	1	.104	6	.089	5	.089	4
312			min	0	1	-.012	6	-.01	4	-.104	6	.103	1	-.089	4	-.089	5
313		2	max	.525	8	-.013	5	.011	5	-.107	1	.108	6	.093	5	.093	4
314			min	0	1	-.013	6	-.011	4	-.108	6	.107	1	-.093	4	-.093	5
315		3	max	.525	8	-.014	5	.012	5	-.112	1	.113	6	.097	5	.097	4
316			min	0	1	-.014	6	-.012	4	-.113	6	-.112	1	-.097	4	-.097	5
317		4	max	.525	8	-.015	5	.013	5	-.118	1	.119	6	.101	5	.102	4
318			min	0	1	-.015	6	-.013	4	-.119	6	-.118	1	-.102	4	-.101	5
319		5	max	.525	8	-.016	5	.014	5	-.123	1	.124	6	.106	5	.107	4
320			min	0	1	-.016	6	-.014	4	-.124	6	-.123	1	-.107	4	-.106	5
321	M33	1	max	.123	6	.079	1	.185	4	.248	7	1.656	8	-.164	1	3.05	4
322			min	0	1	-.173	7	.005	1	-1.656	8	-.248	7	-3.05	4	-.164	1
323		2	max	.119	2	.058	1	.166	4	-.441	1	2.458	6	-.131	1	1.798	4
324			min	0	1	-.194	7	.005	1	-2.458	6	.441	1	-1.798	4	-.131	1
325		3	max	.119	2	.037	1	.147	4	-.101	1	3.49	6	.122	5	.683	4
326			min	0	1	-.215	7	.005	1	-3.49	6	.101	1	-.683	4	-.122	5
327		4	max	.119	2	.016	1	.127	4	.089	1	4.671	6	.527	3	.063	1
328			min	0	1	-.236	7	.005	1	-4.671	6	-.089	1	-.063	1	-.527	3
329		5	max	.119	2	-.005	1	.108	4	.13	1	6.126	2	1.149	8	.03	1
330			min	0	1	-.257	7	.005	1	-6.126	2	-.13	1	-.03	1	-1.149	8
331	M34	1	max	.145	2	-.005	1	.108	4	.13	1	6.126	2	.566	4	.006	1
332			min	0	1	-.2	9	.005	1	-6.126	2	-.13	1	-.006	1	-.566	4
333		2	max	.145	2	-.006	1	.107	4	.128	1	6.187	2	.606	4	.005	1
334			min	0	1	-.201	9	.005	1	-6.187	2	-.128	1	-.005	1	-.606	4
335		3	max	.144	2	-.007	1	.106	2	.126	1	6.249	2	.646	4	.003	1
336			min	0	1	-.202	9	.005	1	-6.249	2	-.126	1	-.003	1	-.646	4
337		4	max	.144	2	-.008	1	.106	2	.123	1	6.311	2	.685	4	.001	1
338			min	0	1	-.203	9	.005	1	-6.311	2	-.123	1	-.001	1	-.685	4
339		5	max	.144	2	-.009	1	.106	2	.12	1	6.374	2	.724	4	0	1
340			min	0	1	-.204	9	.005	1	-6.374	2	-.12	1	0	1	-.724	4
341	M35	1	max	.167	2	0	6	.106	2	.12	1	6.374	2	.046	1	1.789	5
342			min	-.003	1	-.088	9	.005	1	-6.374	2	-.12	1	-1.789	5	-.046	1
343		2	max	.167	2	0	6	.106	2	.116	1	6.376	2	.047	1	1.755	5
344			min	-.003	1	-.088	9	.005	1	-6.376	2	-.116	1	-1.755	5	-.047	1
345		3	max	.167	2	-.002	6	.106	2	.113	1	6.378	2	.049	1	1.722	5
346			min	-.003	1	-.088	9	.005	1	-6.378	2	-.113	1	-1.722	5	-.049	1
347		4	max	.167	2	-.003	6	.106	2	.11	1	6.381	2	.051	1	1.688	5
348			min	-.004	1	-.089	9	.005	1	-6.381	2	-.11	1	-1.688	5	-.051	1
349		5	max	.167	2	-.004	6	.107	7	.106	1	6.384	2	.053	1	1.653	5
350			min	-.004	1	-.089	9	.005	1	-6.384	2	-.106	1	-1.653	5	-.053	1
351	M36	1	max	.153	7	.158	2	.107	7	.106	1	6.384	2	.085	1	3.167	5
352			min	-.006	1	-.005	1	.005	1	-6.384	2	-.106	1	-3.167	5	-.085	1
353		2	max	.154	7	.157	2	.107	7	.104	1	6.326	2	.086	1	3.133	5

Envelope Member Section Stresses (Continued)

	Member	Sec		Axial[ksi]	lc	y Shear[ksi]	lc	z Shear[ksi]	lc	y-Top[ksi]	lc	y-Bot[ksi]	lc	z-Top[ksi]	lc	z-Bot[ksi]	lc
354			min	.007	1	-.006	1	.005	1	-6.326	2	-.104	1	-3.133	5	-.086	1
355		3	max	.154	7	.156	2	.108	7	.102	1	6.268	2	.088	1	3.097	5
356			min	.007	1	-.006	1	.005	1	-6.268	2	-.102	1	-3.097	5	-.088	1
357		4	max	.155	7	.155	2	.108	7	.099	1	6.21	2	.09	1	3.062	5
358			min	.008	1	-.006	1	.005	1	-6.21	2	-.099	1	-3.062	5	-.09	1
359		5	max	.155	7	.153	2	.109	7	.097	1	6.153	2	.092	1	3.026	5
360			min	.008	1	-.006	1	.005	1	-6.153	2	-.097	1	-3.026	5	-.092	1
361	M37	1	max	.135	7	.225	2	.109	7	.097	1	6.153	2	.099	1	3.487	5
362			min	.009	1	-.002	1	.005	1	-6.153	2	-.097	1	-3.487	5	-.099	1
363		2	max	.142	7	.213	2	.116	7	.089	1	5.228	4	.12	1	3.018	5
364			min	.016	1	-.002	1	.005	1	-5.228	4	-.089	1	-3.018	5	-.12	1
365		3	max	.148	7	.201	2	.122	7	.08	1	4.669	3	.142	1	2.494	5
366			min	.022	1	-.002	1	.005	1	-4.669	3	-.08	1	-2.494	5	-.142	1
367		4	max	.155	7	.188	2	.134	5	.072	1	4.098	3	.163	1	1.915	5
368			min	.029	1	-.002	1	.005	1	-4.098	3	-.072	1	-1.915	5	-.163	1
369		5	max	.161	7	.176	2	.146	5	.063	1	3.472	3	.185	1	1.28	5
370			min	.036	1	-.002	1	.005	1	-3.472	3	-.063	1	-1.28	5	-.185	1
371	M41	1	max	.113	5	-.157	1	.002	1	4.145	5	.232	4	1.431	4	.016	1
372			min	-.016	4	-.409	7	-.223	3	-.232	4	-4.145	5	-.016	1	-1.431	4
373		2	max	.113	5	-.179	1	.002	1	1.095	5	2.902	4	.702	2	.356	3
374			min	-.016	4	-.431	7	-.243	3	-2.902	4	-1.095	5	-.356	3	-.702	2
375		3	max	.024	6	.177	4	.041	3	.558	5	2.103	4	.304	2	.304	3
376			min	0	1	-.023	5	-.041	2	-2.103	4	-.558	5	-.304	3	-.304	2
377		4	max	.019	6	.155	4	.02	3	.306	5	.858	4	.076	2	.076	3
378			min	0	1	-.045	5	-.02	2	-.858	4	-.306	5	-.076	3	-.076	2
379		5	max	.013	2	0	1	0	1	0	1	0	1	0	1	0	1
380			min	0	1	0	1	0	1	0	1	0	1	0	1	0	1
381	M42	1	max	.167	6	.046	1	.054	4	3.926	6	.358	1	3.75	7	-.017	1
382			min	0	1	-.874	6	-.215	5	-.358	1	-3.926	6	.017	1	-3.75	7
383		2	max	.164	6	.036	1	.046	4	1.32	5	.218	1	3.067	7	-.015	1
384			min	0	1	-.884	6	-.207	5	-.218	1	-1.32	5	.015	1	-3.067	7
385		3	max	.16	6	.026	1	.038	4	-.113	1	2.251	4	2.406	7	-.012	1
386			min	0	1	-.894	6	-.199	5	-2.251	4	.113	1	.012	1	-2.406	7
387		4	max	.157	6	.016	1	.03	4	-.041	1	5.287	4	1.768	7	-.009	1
388			min	0	1	-.904	6	-.191	5	-5.287	4	.041	1	.009	1	-1.768	7
389		5	max	.154	6	.006	1	.022	4	-.003	1	8.357	4	1.192	2	-.007	1
390			min	0	1	-.914	6	-.183	5	-8.357	4	.003	1	.007	1	-1.192	2
391	M43	1	max	.267	6	.006	1	.022	4	-.003	1	8.357	4	1.801	7	-.033	1
392			min	0	1	-.806	8	-.183	5	-8.357	4	.003	1	.033	1	-1.801	7
393		2	max	.266	6	.005	1	.021	4	-.001	1	8.654	4	1.736	7	-.033	1
394			min	0	1	-.807	8	-.182	5	-8.654	4	.001	1	.033	1	-1.736	7
395		3	max	.266	6	.004	1	.02	4	0	1	8.952	4	1.67	7	-.032	1
396			min	0	1	-.808	8	-.181	5	-8.952	4	0	1	.032	1	-1.67	7
397		4	max	.266	6	.003	1	.02	4	.002	1	9.251	4	1.605	7	-.032	1
398			min	0	1	-.809	8	-.181	5	-9.251	4	-.002	1	.032	1	-1.605	7
399		5	max	.266	6	.002	1	.019	4	.003	1	9.549	4	1.54	7	-.032	1
400			min	0	1	-.81	8	-.18	5	-9.549	4	-.003	1	.032	1	-1.54	7
401	M44	1	max	.432	6	.002	1	.019	4	.003	1	9.549	4	2.466	7	-.076	1
402			min	0	1	-.468	8	-.18	5	-9.549	4	-.003	1	.076	1	-2.466	7
403		2	max	.433	6	.001	1	.018	4	.004	1	9.712	4	2.401	7	-.076	1
404			min	0	1	-.469	8	-.179	5	-9.712	4	-.004	1	.076	1	-2.401	7
405		3	max	.433	6	0	1	.017	4	.004	1	9.876	4	2.337	7	-.076	1
406			min	0	1	-.469	8	-.178	5	-9.876	4	-.004	1	.076	1	-2.337	7
407		4	max	.433	6	0	1	.016	4	.004	1	10.039	4	2.273	7	-.075	1
408			min	0	1	-.47	8	-.177	5	-10.039	4	-.004	1	.075	1	-2.273	7
409		5	max	.433	6	0	1	.015	4	.004	1	10.204	4	2.209	7	-.075	1
410			min	.001	1	-.47	8	-.176	5	-10.204	4	-.004	1	.075	1	-2.209	7
411	M45	1	max	.485	6	.052	6	.015	4	.004	1	10.204	4	2.508	7	-.099	1
412			min	.001	1	-.08	9	-.176	5	-10.204	4	-.004	1	.099	1	-2.508	7

Envelope Member Section Stresses (Continued)

	Member	Sec		Axial[ksi]	lc	y Shear[ksi]	lc	z Shear[ksi]	lc	y-Top[ksi]	lc	y-Bot[ksi]	lc	z-Top[ksi]	lc	z-Bot[ksi]	lc
413		2	max	.485	6	.051	6	.014	4	.004	1	10.188	4	2.445	7	-.099	1
414			min	.002	1	-.08	9	-.175	5	-10.188	4	-.004	1	.099	1	-2.445	7
415		3	max	.486	6	.05	6	.013	4	.004	1	10.172	4	2.381	7	-.099	1
416			min	.002	1	-.079	9	-.175	5	-10.172	4	-.004	1	.099	1	-2.381	7
417		4	max	.486	6	.049	6	.013	4	.004	1	10.157	4	2.318	7	-.098	1
418			min	.003	1	-.079	9	-.174	5	-10.157	4	-.004	1	.098	1	-2.318	7
419		5	max	.487	6	.048	6	.012	4	.004	1	10.142	4	2.256	7	-.098	1
420			min	.003	1	-.078	9	-.173	5	-10.142	4	-.004	1	.098	1	-2.256	7
421	M46	1	max	.464	6	.27	6	.155	4	-.047	1	9.056	4	.089	1	4.597	4
422			min	.003	1	.002	1	-.101	5	-9.056	4	.047	1	-4.597	4	-.089	1
423		2	max	.468	6	.266	6	.147	4	-.042	1	8.386	4	.089	1	4.183	4
424			min	.007	1	.002	1	-.093	5	-8.386	4	.042	1	-4.183	4	-.089	1
425		3	max	.472	6	.262	6	.14	4	-.038	1	7.715	4	.089	1	3.789	4
426			min	.012	1	.002	1	-.086	5	-7.715	4	.038	1	-3.789	4	-.089	1
427		4	max	.476	6	.258	6	.133	4	-.034	1	7.111	8	.089	1	3.448	8
428			min	.016	1	.002	1	-.079	5	-7.111	8	.034	1	-3.448	8	-.089	1
429		5	max	.48	6	.254	6	.125	4	-.03	1	6.504	8	.089	1	3.134	8
430			min	.02	1	.002	1	-.071	5	-6.504	8	.03	1	-3.134	8	-.089	1
431	M49	1	max	.029	6	-.146	1	-.002	1	.089	1	3.37	9	.868	2	-.004	1
432			min	-.003	7	-1.067	6	-.278	3	-3.37	9	-.089	1	.004	1	-.868	2
433		2	max	.029	6	-.148	1	-.002	1	-.016	1	3.922	9	.77	2	-.003	1
434			min	-.002	7	-1.069	6	-.279	3	-3.922	9	.016	1	.003	1	-.77	2
435		3	max	.028	6	-.15	1	-.002	1	-.123	1	4.477	9	.674	2	.079	3
436			min	-.002	7	-1.071	6	-.281	3	-4.477	9	.123	1	-.079	3	-.674	2
437		4	max	.028	6	-.152	1	-.002	1	-.231	1	5.034	7	.578	2	.281	3
438			min	0	7	-1.073	6	-.283	3	-5.034	7	.231	1	-.281	3	-.578	2
439		5	max	.027	6	-.154	1	-.002	1	-.341	1	5.603	7	.485	2	.485	3
440			min	0	7	-1.075	6	-.285	3	-5.603	7	.341	1	-.485	3	-.485	2
441	M50	1	max	.027	6	.349	7	.051	3	-.341	1	5.603	7	.485	2	.485	3
442			min	0	7	.045	1	-.051	2	-5.603	7	.341	1	-.485	3	-.485	2
443		2	max	.024	6	.335	7	.038	3	-.161	1	3.98	7	.273	2	.273	3
444			min	0	1	.031	1	-.038	2	-3.98	7	.161	1	-.273	3	-.273	2
445		3	max	.02	6	.322	7	.026	3	-.048	1	2.424	7	.121	2	.121	3
446			min	0	1	.017	1	-.026	2	-2.424	7	.048	1	-.121	3	-.121	2
447		4	max	.017	6	.308	7	.013	3	0	1	.934	7	.03	2	.03	3
448			min	0	1	.003	1	-.013	2	-.934	7	0	1	-.03	3	-.03	2
449		5	max	.013	7	0	1	0	1	0	1	0	1	0	1	0	1
450			min	0	1	0	1	0	1	0	1	0	1	0	1	0	1
451	M51	1	max	.515	8	-.012	3	.01	5	.922	6	-.798	1	.671	4	.675	5
452			min	0	1	-.012	5	-.01	4	.798	1	-.922	6	-.675	5	-.671	4
453		2	max	.515	8	-.013	3	.011	5	.917	6	-.794	1	.667	4	.671	5
454			min	0	1	-.013	5	-.011	4	.794	1	-.917	6	-.671	5	-.667	4
455		3	max	.516	8	-.014	3	.012	5	.912	6	-.789	1	.663	4	.667	5
456			min	0	1	-.014	5	-.012	4	.789	1	-.912	6	-.667	5	-.663	4
457		4	max	.516	8	-.015	3	.013	5	.907	6	-.783	1	.658	4	.662	5
458			min	0	1	-.015	5	-.013	4	.783	1	-.907	6	-.662	5	-.658	4
459		5	max	.516	8	-.016	3	.014	5	.901	6	-.778	1	.653	4	.658	5
460			min	0	1	-.016	5	-.014	4	.778	1	-.901	6	-.658	5	-.653	4
461	M52	1	max	0	1	0	1	0	1	0	1	0	1	0	1	0	1
462			min	0	1	0	1	0	1	0	1	0	1	0	1	0	1
463		2	max	.002	7	-.007	1	.003	6	-.002	1	.002	1	.001	6	.001	8
464			min	-.002	6	-.007	1	-.003	8	-.002	1	.002	1	-.001	8	-.001	6
465		3	max	.003	7	-.013	1	.007	6	-.01	1	.01	1	.005	6	.005	8
466			min	-.003	6	-.013	1	-.007	8	-.01	1	.01	1	-.005	8	-.005	6
467		4	max	.005	7	-.02	1	.01	6	-.022	1	.022	1	.011	6	.011	8
468			min	-.005	6	-.02	1	-.01	8	-.022	1	.022	1	-.011	8	-.011	6
469		5	max	.007	7	-.027	1	.013	6	-.039	1	.039	1	.019	6	.019	8
470			min	-.007	6	-.027	1	-.013	8	-.039	1	.039	1	-.019	8	-.019	6
471	M54	1	max	.02	7	-.027	7	.013	6	-.039	2	.039	4	.019	6	.019	9

Envelope Member Section Stresses (Continued)

	Member	Sec		Axial[ksi]	lc	y Shear[ksi]	lc	z Shear[ksi]	lc	y-Top[ksi]	lc	y-Bot[ksi]	lc	z-Top[ksi]	lc	z-Bot[ksi]	lc
472			min	0	1	-.027	9	-.013	9	-.039	4	.039	2	-.019	9	-.019	6
473		2	max	.02	7	-.028	7	.014	6	-.043	7	.043	4	.022	6	.022	9
474			min	0	1	-.028	9	-.014	9	-.043	4	.043	7	-.022	9	-.022	6
475		3	max	.02	7	-.028	7	.014	6	-.048	7	.048	4	.024	6	.024	9
476			min	0	1	-.028	9	-.014	9	-.048	4	.048	7	-.024	9	-.024	6
477		4	max	.021	7	-.029	7	.014	6	-.054	7	.054	4	.027	6	.027	9
478			min	0	1	-.029	9	-.014	9	-.054	4	.054	7	-.027	9	-.027	6
479		5	max	.021	7	-.029	7	.015	6	-.059	7	.059	4	.029	6	.029	9
480			min	0	1	-.029	9	-.015	9	-.059	4	.059	7	-.029	9	-.029	6
481	M55	1	max	.021	7	-.029	4	.015	7	-.059	5	.059	4	.029	6	.029	9
482			min	0	1	-.029	2	-.015	8	-.059	4	.059	5	-.029	9	-.029	6
483		2	max	.023	7	-.037	4	.018	7	-.144	5	.144	3	.072	6	.072	9
484			min	0	1	-.037	2	-.018	8	-.144	3	.144	5	-.072	9	-.072	6
485		3	max	.025	9	.121	2	.145	3	-.217	2	.236	1	.095	7	.102	8
486			min	0	1	-.028	1	-.176	2	-.236	1	.217	2	-.102	8	-.095	7
487		4	max	.026	9	.113	2	.145	3	.088	2	.174	1	.408	3	.495	2
488			min	0	1	-.02	1	-.176	2	-.174	1	-.088	2	-.495	2	-.408	3
489		5	max	.028	9	.105	2	.145	3	.372	2	.132	1	.786	3	.954	2
490			min	-.001	6	-.012	1	-.176	2	-.132	1	-.372	2	-.954	2	-.786	3
491	M56	1	max	-.011	1	.046	1	0	1	4.334	2	.116	1	.255	9	.005	1
492			min	-.291	2	-.253	8	-.041	7	-.116	1	-4.334	2	-.005	1	-.255	9
493		2	max	-.011	1	.039	1	0	1	3.579	7	-.011	1	.143	9	.033	6
494			min	-.291	2	-.26	8	-.038	7	.011	1	-3.579	7	-.033	6	-.143	9
495		3	max	-.011	1	.033	1	0	1	2.81	7	-.118	1	.041	9	.082	6
496			min	-.291	2	-.266	8	-.035	7	.118	1	-2.81	7	-.082	6	-.041	9
497		4	max	-.011	1	-.007	1	0	1	2.001	7	-.184	1	0	1	.162	4
498			min	-.292	7	-.306	8	-.032	7	.184	1	-2.001	7	-.162	4	0	1
499		5	max	-.011	1	-.013	1	0	1	1.096	7	-.155	1	.003	1	.254	4
500			min	-.301	7	-.312	8	-.041	6	.155	1	-1.096	7	-.254	4	-.003	1
501	M57	1	max	-.003	1	.582	7	0	1	-.05	1	2.984	6	.494	6	.005	1
502			min	-.185	7	.036	1	-.048	6	-2.984	6	.05	1	-.005	1	-.494	6
503		2	max	-.003	1	.578	7	0	1	.01	1	1.956	6	.41	6	.004	1
504			min	-.185	7	.032	1	-.046	6	-1.956	6	-.01	1	-.004	1	-.41	6
505		3	max	-.004	1	.573	7	0	1	.064	1	.936	6	.33	6	.003	1
506			min	-.185	7	.029	1	-.044	6	-.936	6	-.064	1	-.003	1	-.33	6
507		4	max	-.005	1	.569	7	0	1	.113	1	-.047	8	.252	6	.002	1
508			min	-.185	7	.026	1	-.042	6	.047	8	-.113	1	-.002	1	-.252	6
509		5	max	-.006	1	.565	7	0	1	1.096	7	-.155	1	.184	4	.001	5
510			min	-.186	7	.022	1	-.041	6	.155	1	-1.096	7	-.001	5	-.184	4
511	M58	1	max	.023	7	-.027	4	.019	6	-.039	3	.039	1	.027	6	.027	9
512			min	0	1	-.027	5	-.019	9	-.039	1	.039	3	-.027	9	-.027	6
513		2	max	.023	7	-.028	4	.02	6	-.05	3	.05	1	.035	6	.035	9
514			min	0	1	-.028	5	-.02	9	-.05	1	.05	3	-.035	9	-.035	6
515		3	max	.024	7	-.029	4	.021	6	-.062	3	.062	1	.044	6	.044	9
516			min	0	1	-.029	5	-.021	9	-.062	1	.062	3	-.044	9	-.044	6
517		4	max	.024	7	-.031	4	.022	6	-.075	4	.075	1	.053	6	.053	9
518			min	0	1	-.031	5	-.022	9	-.075	1	.075	4	-.053	9	-.053	6
519		5	max	.025	7	-.032	4	.023	6	-.088	4	.088	1	.062	6	.062	9
520			min	0	1	-.032	5	-.023	9	-.088	1	.088	4	-.062	9	-.062	6
521	M59	1	max	.058	9	.028	5	.12	3	-.048	1	.153	4	.524	3	.692	2
522			min	-.012	6	-.014	4	-.112	2	-.153	4	.048	1	-.692	2	-.524	3
523		2	max	.061	9	.017	5	.11	3	0	1	.121	4	.939	3	1.081	2
524			min	-.015	6	-.003	4	-.103	2	-.121	4	0	1	-1.081	2	-.939	3
525		3	max	.063	9	.006	5	.1	3	.009	1	.127	4	1.319	3	1.435	2
526			min	-.017	6	-.007	4	-.093	2	-.127	4	-.009	1	-1.435	2	-1.319	3
527		4	max	.066	9	-.004	5	.09	3	-.02	1	.172	4	1.663	3	1.754	2
528			min	-.02	6	-.018	4	-.083	2	-.172	4	.02	1	-1.754	2	-1.663	3
529		5	max	.069	9	-.015	5	.08	3	-.057	5	.256	4	1.972	3	2.037	2
530			min	-.023	6	-.028	4	-.073	2	-.256	4	.057	5	-2.037	2	-1.972	3

Envelope Member Section Stresses (Continued)

	Member	Sec		Axial[ksi]	lc	y Shear[ksi]	lc	z Shear[ksi]	lc	y-Top[ksi]	lc	y-Bot[ksi]	lc	z-Top[ksi]	lc	z-Bot[ksi]	lc
531	M60	1	max	.117	9	-.026	8	.16	2	.432	4	.943	5	2	2	.8	3
532			min	-.095	6	-.161	7	-.153	3	-.943	5	-.432	4	-.8	3	-2	2
533		2	max	.117	9	-.027	8	.161	2	.408	4	.989	5	2.06	2	.857	3
534			min	-.095	6	-.162	7	-.154	3	-.989	5	-.408	4	-.857	3	-2.06	2
535		3	max	.117	9	-.028	8	.162	2	.383	4	1.035	5	2.119	2	.915	3
536			min	-.095	6	-.163	7	-.155	3	-1.035	5	-.383	4	-.915	3	-2.119	2
537		4	max	.118	9	-.029	8	.163	2	.359	4	1.081	5	2.18	2	.972	3
538			min	-.096	6	-.164	7	-.156	3	-1.081	5	-.359	4	-.972	3	-2.18	2
539		5	max	.118	9	-.03	8	.164	2	.334	4	1.128	5	2.24	2	1.03	3
540			min	-.096	6	-.166	7	-.157	3	-1.128	5	-.334	4	-1.03	3	-2.24	2
541	M61	1	max	.064	9	.069	8	.164	2	.334	4	1.128	5	2.347	2	.121	3
542			min	-.094	6	-.259	7	-.157	3	-1.128	5	-.334	4	-.121	3	-2.347	2
543		2	max	.064	9	.068	8	.165	2	.319	4	1.184	5	2.408	2	.18	3
544			min	-.095	6	-.26	7	-.158	3	-1.184	5	-.319	4	-.18	3	-2.408	2
545		3	max	.063	9	.068	8	.166	2	.308	8	1.245	7	2.469	2	.238	3
546			min	-.095	6	-.262	7	-.159	3	-1.245	7	-.308	8	-.238	3	-2.469	2
547		4	max	.063	9	.068	8	.167	2	.333	8	1.342	7	2.531	2	.297	3
548			min	-.096	6	-.263	7	-.16	3	-1.342	7	-.333	8	-.297	3	-2.531	2
549		5	max	.063	9	.067	8	.168	2	.358	8	1.44	7	2.593	2	.357	3
550			min	-.096	6	-.264	7	-.161	3	-1.44	7	-.358	8	-.357	3	-2.593	2
551	M62	1	max	.276	4	.231	5	-.017	1	.358	8	1.44	7	2.038	2	-.039	1
552			min	.055	1	.042	1	-.709	2	-1.44	7	-.358	8	.039	1	-2.038	2
553		2	max	.276	4	.23	5	-.017	1	.387	8	1.357	7	1.775	2	-.032	1
554			min	.054	1	.042	1	-.708	2	-1.357	7	-.387	8	.032	1	-1.775	2
555		3	max	.275	4	.229	5	-.017	1	.416	8	1.275	7	1.513	2	-.026	1
556			min	.053	1	.041	1	-.707	2	-1.275	7	-.416	8	.026	1	-1.513	2
557		4	max	.274	4	.228	5	-.017	1	.445	8	1.193	7	1.251	2	.079	3
558			min	.053	1	.041	1	-.706	2	-1.193	7	-.445	8	-.079	3	-1.251	2
559		5	max	.274	4	.226	5	-.017	1	.474	8	1.112	7	.99	2	.311	3
560			min	.052	1	.041	1	-.705	2	-1.112	7	-.474	8	-.311	3	-.99	2
561	M63	1	max	.275	2	.705	2	.088	5	.018	1	.527	2	.474	8	1.112	7
562			min	.056	1	.017	1	-.072	4	-.527	2	-.018	1	-1.112	7	-.474	8
563		2	max	.269	2	.694	2	.077	5	2.331	3	-.086	1	.231	8	.807	7
564			min	.05	1	.017	1	-.061	4	-.086	1	-2.331	3	-.807	7	-.231	8
565		3	max	.263	2	.684	2	.069	7	4.939	2	-.155	1	.011	8	.525	7
566			min	.044	1	.017	1	-.053	8	.155	1	-4.939	2	-.525	7	-.011	8
567		4	max	.257	2	.673	2	.063	7	7.609	2	-.223	1	-.168	5	.283	4
568			min	.039	1	.017	1	-.047	8	.223	1	-7.609	2	-.283	4	.168	5
569		5	max	.251	2	.67	3	.057	2	10.238	2	-.292	1	.031	5	.42	4
570			min	.033	1	.017	1	-.042	3	.292	1	-10.238	2	-.42	4	-.031	5
571	M64	1	max	.329	2	0	1	.042	3	-.292	1	10.238	2	.511	2	.12	3
572			min	.034	1	-.518	3	-.057	2	-10.238	2	.292	1	-.12	3	-.511	2
573		2	max	.328	2	0	1	.042	3	-.292	1	10.427	2	.489	2	.105	3
574			min	.033	1	-.52	3	-.057	2	-10.427	2	.292	1	-.105	3	-.489	2
575		3	max	.327	2	0	1	.042	3	-.292	1	10.615	2	.468	2	.09	3
576			min	.033	1	-.521	3	-.057	2	-10.615	2	.292	1	-.09	3	-.468	2
577		4	max	.327	4	0	1	.042	3	-.292	1	10.803	2	.447	2	.074	3
578			min	.032	1	-.522	3	-.057	2	-10.803	2	.292	1	-.074	3	-.447	2
579		5	max	.326	9	0	1	.042	3	-.292	1	10.991	2	.455	4	.088	5
580			min	.032	1	-.523	3	-.057	2	-10.991	2	.292	1	-.088	5	-.455	4
581	M65	1	max	.413	3	.031	1	.042	3	-.292	1	10.991	2	1.261	2	.967	3
582			min	.028	1	-.127	3	-.057	2	-10.991	2	.292	1	-.967	3	-1.261	2
583		2	max	.413	3	.03	1	.042	3	-.281	1	11.033	2	1.24	2	.952	3
584			min	.027	1	-.129	3	-.057	2	-11.033	2	.281	1	-.952	3	-1.24	2
585		3	max	.413	3	.029	1	.042	3	-.27	1	11.075	2	1.219	2	.936	3
586			min	.027	1	-.13	3	-.057	2	-11.075	2	.27	1	-.936	3	-1.219	2
587		4	max	.413	3	.029	1	.042	3	-.259	1	11.117	2	1.197	2	.921	3
588			min	.027	1	-.132	3	-.057	2	-11.117	2	.259	1	-.921	3	-1.197	2
589		5	max	.413	3	.028	1	.042	3	-.249	1	11.159	2	1.176	2	.905	3

Envelope Member Section Stresses (Continued)

	Member	Sec		Axial[ksi]	lc	y Shear[ksi]	lc	z Shear[ksi]	lc	y-Top[ksi]	lc	y-Bot[ksi]	lc	z-Top[ksi]	lc	z-Bot[ksi]	lc
590			min	-.026	1	-.133	3	-.057	2	-11.159	2	.249	1	-.905	3	-1.176	2
591	M66	1	max	.391	3	.308	2	.042	3	-.249	1	11.159	2	1.685	2	1.563	3
592			min	-.016	1	.05	1	-.057	2	-11.159	2	.249	1	-1.563	3	-1.685	2
593		2	max	.391	3	.307	2	.042	3	-.23	1	11.045	2	1.664	2	1.547	3
594			min	-.016	1	.049	1	-.057	2	-11.045	2	.23	1	-1.547	3	-1.664	2
595		3	max	.392	3	.306	2	.042	3	-.212	1	10.932	2	1.643	2	1.532	3
596			min	-.015	1	.048	1	-.057	2	-10.932	2	.212	1	-1.532	3	-1.643	2
597		4	max	.392	3	.306	2	.042	3	-.194	1	10.818	2	1.621	2	1.517	3
598			min	-.015	1	.047	1	-.057	2	-10.818	2	.194	1	-1.517	3	-1.621	2
599		5	max	.392	3	.305	2	.042	3	-.177	1	10.705	2	1.6	2	1.501	3
600			min	-.015	1	.046	1	-.057	2	-10.705	2	.177	1	-1.501	3	-1.6	2
601	M67	1	max	.341	3	.49	2	.042	3	-.177	1	10.705	2	1.692	2	1.682	3
602			min	-.009	1	.053	1	-.057	2	-10.705	2	.177	1	-1.682	3	-1.692	2
603		2	max	.346	9	.459	2	.042	3	.212	1	5.733	2	1.09	2	1.246	3
604			min	-.009	1	.022	1	-.057	2	-5.733	2	-.212	1	-1.246	3	-1.09	2
605		3	max	.353	9	.428	2	.042	3	.278	1	1.084	2	.488	2	.809	3
606			min	-.009	1	-.009	1	-.057	2	-1.084	2	.278	1	-.809	3	-.488	2
607		4	max	.361	9	.397	2	.052	5	3.245	4	-.021	1	.202	5	.688	4
608			min	-.009	1	-.04	1	-.067	4	.021	1	-3.245	4	-.688	4	-.202	5
609		5	max	.369	9	.367	2	.08	5	7.245	2	.558	1	.891	5	1.543	4
610			min	-.009	1	-.071	1	-.096	4	-.558	1	-7.245	2	-1.543	4	-.891	5
611	M68	1	max	.347	7	.414	8	.085	6	-.245	1	1.628	6	.145	9	.129	6
612			min	-.011	1	.101	1	-.034	9	-1.628	6	.245	1	-.129	6	-.145	9
613		2	max	.336	7	.372	8	.064	6	.039	1	.141	6	.257	8	.041	7
614			min	-.011	1	.06	1	-.013	9	-.141	6	-.039	1	-.041	7	-.257	8
615		3	max	.334	7	.364	8	.06	6	1.349	9	-.258	1	.49	8	.075	7
616			min	-.011	1	.052	1	-.009	9	.258	1	-1.349	9	-.075	7	-.49	8
617		4	max	.332	7	.355	8	.056	6	2.758	9	-.444	1	.706	8	.092	7
618			min	-.011	1	.043	1	-.005	9	.444	1	-2.758	9	-.092	7	-.706	8
619		5	max	.025	7	.021	6	.004	4	.376	1	1.391	6	.273	8	.358	7
620			min	0	1	.006	1	-.003	5	-1.391	6	-.376	1	-.358	7	-.273	8
621	M69	1	max	.057	9	.025	1	.063	7	5.375	9	-.248	1	.141	8	.56	7
622			min	-.044	1	-.618	9	-.012	8	.248	1	-5.375	9	-.56	7	-.141	8
623		2	max	.054	9	.023	1	.061	7	4.287	9	-.29	1	.121	8	.452	7
624			min	-.042	1	-.618	9	-.01	8	.29	1	-4.287	9	-.452	7	-.121	8
625		3	max	.052	9	.021	1	.059	7	3.2	9	-.329	1	.105	8	.347	7
626			min	-.04	1	-.618	9	-.009	8	.329	1	-3.2	9	-.347	7	-.105	8
627		4	max	.05	9	.019	1	.057	7	2.111	9	-.364	1	.091	8	.245	7
628			min	-.039	1	-.618	9	-.007	8	.364	1	-2.111	9	-.245	7	-.091	8
629		5	max	.048	9	.017	1	.055	7	1.023	9	-.396	1	.081	8	.147	7
630			min	-.037	1	-.619	9	-.005	8	.396	1	-1.023	9	-.147	7	-.081	8
631	M70	1	max	.025	7	-.032	1	.023	6	-.088	4	.088	1	.062	6	.062	9
632			min	0	1	-.032	4	-.023	9	-.088	1	.088	4	-.062	9	-.062	6
633		2	max	.029	7	.043	1	.031	6	-.237	1	.245	2	.173	6	.173	9
634			min	-.002	8	-.042	2	-.031	9	-.245	2	.237	1	-.173	9	-.173	6
635		3	max	.033	7	.031	1	.04	6	-.085	1	.442	2	.32	6	.32	9
636			min	-.006	8	-.054	2	-.04	9	-.442	2	.085	1	-.32	9	-.32	6
637		4	max	.038	7	.018	1	.048	6	.016	1	.69	2	.503	6	.503	9
638			min	-.011	8	-.066	2	-.048	9	-.69	2	-.016	1	-.503	9	-.503	6
639		5	max	.042	7	.006	1	.057	6	.067	1	.988	2	.721	6	.721	9
640			min	-.015	8	-.078	2	-.057	9	-.988	2	-.067	1	-.721	9	-.721	6
641	M71	1	max	.133	6	.021	1	.057	9	5.199	8	-.112	1	.214	3	.197	2
642			min	0	1	-.23	8	-.067	6	.112	1	-5.199	8	-.197	2	-.214	3
643		2	max	.127	6	-.002	1	.045	9	3.328	6	-.189	1	.584	9	.65	6
644			min	0	1	-.253	8	-.056	6	.189	1	-3.328	6	-.65	6	-.584	9
645		3	max	.122	6	-.025	1	.035	7	1.279	6	-.086	1	.894	9	1.042	6
646			min	0	1	-.276	8	-.045	8	.086	1	-1.279	6	-1.042	6	-.894	9
647		4	max	.116	6	-.048	1	.046	7	-.197	1	1.033	9	1.114	9	1.345	6
648			min	0	1	-.299	8	-.057	8	-1.033	9	.197	1	-1.345	6	-1.114	9

Envelope Member Section Stresses (Continued)

	Member	Sec		Axial[ksi]	lc	y Shear[ksi]	lc	z Shear[ksi]	lc	y-Top[ksi]	lc	y-Bot[ksi]	lc	z-Top[ksi]	lc	z-Bot[ksi]	lc
649		5	max	.11	6	-.071	1	.058	7	-.659	1	3.418	9	1.245	9	1.558	6
650			min	0	1	-.322	8	-.068	8	-3.418	9	.659	1	-1.558	6	-1.245	9
651	M72	1	max	.486	6	.072	5	.066	4	.171	1	-.164	7	.237	4	.247	5
652			min	0	1	.072	6	-.066	5	.164	7	-.171	1	-.247	5	-.237	4
653		2	max	.481	6	.054	5	.05	4	.559	1	-.552	7	.594	4	.603	5
654			min	0	1	.054	6	-.05	5	.552	7	-.559	1	-.603	5	-.594	4
655		3	max	.477	6	.036	5	.033	4	.837	1	-.829	7	.848	4	.858	5
656			min	0	1	.036	6	-.033	5	.829	7	-.837	1	-.858	5	-.848	4
657		4	max	.472	6	.018	5	.017	4	1.003	1	-.995	7	1.001	4	1.011	5
658			min	0	1	.018	6	-.017	5	.995	7	-1.003	1	-1.011	5	-1.001	4
659		5	max	.468	8	0	1	0	1	1.058	1	-1.051	7	1.052	4	1.062	5
660			min	0	1	0	1	0	1	1.051	7	-1.058	1	-1.062	5	-1.052	4
661	M73	1	max	.55	6	.02	1	.019	4	.249	7	-.248	1	.219	4	.218	5
662			min	0	1	.02	6	-.019	5	.248	1	-.249	7	-.218	5	-.219	4
663		2	max	.549	6	.015	1	.014	4	.279	7	-.279	1	.248	4	.247	5
664			min	0	1	.015	6	-.014	5	.279	1	-.279	7	-.247	5	-.248	4
665		3	max	.547	6	.01	1	.01	4	.301	7	-.3	1	.269	4	.268	5
666			min	0	1	.01	6	-.01	5	.3	1	-.301	7	-.268	5	-.269	4
667		4	max	.546	6	.005	1	.005	4	.314	7	-.313	1	.282	4	.281	5
668			min	0	1	.005	6	-.005	5	.313	1	-.314	7	-.281	5	-.282	4
669		5	max	.545	6	0	1	0	6	.318	7	-.318	8	.286	4	.286	5
670			min	0	1	0	6	0	9	.318	8	-.318	7	-.286	5	-.286	4
671	M74	1	max	.526	6	.057	7	.053	4	.383	6	-.259	1	.174	4	.178	5
672			min	0	1	.057	1	-.053	5	.259	1	-.383	6	-.178	5	-.174	4
673		2	max	.525	6	.052	7	.048	4	.487	6	-.364	1	.27	4	.274	5
674			min	0	1	.052	1	-.048	5	.364	1	-.487	6	-.274	5	-.27	4
675		3	max	.524	6	.046	7	.042	4	.581	6	-.457	1	.356	4	.36	5
676			min	0	1	.046	1	-.042	5	.457	1	-.581	6	-.36	5	-.356	4
677		4	max	.522	6	.041	7	.037	4	.664	6	-.54	1	.432	4	.436	5
678			min	0	1	.041	1	-.037	5	.54	1	-.664	6	-.436	5	-.432	4
679		5	max	.521	6	.035	7	.032	4	.736	6	-.613	1	.499	4	.503	5
680			min	0	1	.035	1	-.032	5	.613	1	-.736	6	-.503	5	-.499	4
681	M75	1	max	.533	8	.059	1	.079	4	-1.168	6	1.291	1	1.209	5	1.213	4
682			min	0	1	-.002	6	-.077	5	-1.291	1	1.168	6	-1.213	4	-1.209	5
683		2	max	.54	8	.033	1	.055	4	-.882	1	1.307	6	.625	5	.611	4
684			min	0	1	-.029	6	-.053	5	-1.307	6	.882	1	-.611	4	-.625	5
685		3	max	.547	8	.006	1	.031	4	-.707	1	1.682	6	.258	5	.226	4
686			min	0	1	-.055	6	-.029	5	-1.682	6	.707	1	-.226	4	-.258	5
687		4	max	.553	8	-.02	1	.01	8	-.768	1	2.292	6	.181	3	.132	2
688			min	0	1	-.081	6	-.008	7	-2.292	6	.768	1	-.132	2	-.181	3
689		5	max	.56	8	-.046	1	.019	5	-1.063	1	3.137	6	.247	3	.179	2
690			min	0	1	-.108	6	-.017	4	-3.137	6	1.063	1	-.179	2	-.247	3
691	M76	1	max	.593	8	.076	6	.059	5	3.434	6	-1	1	.224	7	.303	8
692			min	0	1	-.022	1	-.062	4	1	1	-3.434	6	-.303	8	-.224	7
693		2	max	.601	8	.048	6	.085	5	4.031	6	-.649	1	.726	5	.836	4
694			min	0	1	-.051	1	-.088	4	.649	1	-4.031	6	-.836	4	-.726	5
695		3	max	.608	8	.02	6	.111	5	4.356	6	-.026	1	1.668	5	1.809	4
696			min	0	1	-.079	1	-.114	4	.026	1	-4.356	6	-1.809	4	-1.668	5
697		4	max	.615	8	-.009	6	.137	5	4.408	6	.87	1	2.86	5	3.032	4
698			min	0	1	-.107	1	-.14	4	-.87	1	-4.408	6	-3.032	4	-2.86	5
699		5	max	.276	2	.125	1	.388	4	1.719	5	1.292	1	3.432	5	2.918	4
700			min	0	1	-.988	6	-.141	5	-1.292	1	-1.719	5	-2.918	4	-3.432	5
701	M77	1	max	.161	7	.176	2	.146	5	.063	1	3.472	3	.185	1	1.28	5
702			min	.036	1	-.002	1	.005	1	-3.472	3	-.063	1	-1.28	5	-.185	1
703		2	max	.172	7	.167	4	.166	5	.05	1	2.346	3	.219	1	.294	3
704			min	.046	1	-.002	1	.005	1	-2.346	3	-.05	1	-.294	3	-.219	1
705		3	max	.183	7	.184	3	.186	5	.036	1	1.076	3	1.145	5	.057	4
706			min	.057	1	-.002	1	.005	1	-1.076	3	-.036	1	-.057	4	-1.145	5
707		4	max	.194	7	.203	3	.205	5	.72	6	-.022	1	2.573	5	.073	4

Envelope Member Section Stresses (Continued)

	Member	Sec		Axial[ksi]	lc	y Shear[ksi]	lc	z Shear[ksi]	lc	y-Top[ksi]	lc	y-Bot[ksi]	lc	z-Top[ksi]	lc	z-Bot[ksi]	lc
708			min	.068	1	-.002	1	-.012	4	.022	1	-.72	6	-.073	4	-2.573	5
709		5	max	.204	7	.223	3	.225	5	1.92	8	-.009	1	4.145	5	.232	4
710			min	.078	1	-.002	1	-.032	4	.009	1	-1.92	8	-.232	4	-4.145	5
711	M78	1	max	.48	6	.254	6	.125	4	-.03	1	6.504	8	.089	1	3.134	8
712			min	.02	1	.002	1	-.071	5	-6.504	8	.03	1	-3.134	8	-.089	1
713		2	max	.493	6	.245	4	.101	4	-.016	1	4.413	8	.089	1	2.788	5
714			min	.033	1	.002	1	-.047	5	-4.413	8	.016	1	-2.788	5	-.089	1
715		3	max	.507	6	.25	8	.086	8	-.002	1	2.241	3	.089	1	3.101	5
716			min	.046	1	.002	1	-.032	7	-2.241	3	.002	1	-3.101	5	-.089	1
717		4	max	.52	6	.263	8	.072	8	.298	4	.101	5	.089	1	3.262	9
718			min	.06	1	.002	1	-.018	7	-.101	5	-.298	4	-3.262	9	-.089	1
719		5	max	.533	6	.278	3	.059	8	2.589	8	-.027	1	.089	1	3.37	9
720			min	.073	1	.002	1	-.005	7	-.027	1	-2.589	8	-3.37	9	-.089	1
721	M79	1	max	.517	6	-.104	1	.043	6	.552	7	-.412	1	1.787	9	1.606	6
722			min	0	1	-.112	7	-.052	9	.412	1	-.552	7	-1.606	6	-1.787	9
723		2	max	.517	6	-.107	1	.041	6	.444	7	-.311	1	1.738	9	1.566	6
724			min	0	1	-.115	7	-.051	9	.311	1	-.444	7	-1.566	6	-1.738	9
725		3	max	.516	6	-.11	1	.04	6	.333	7	-.207	1	1.69	9	1.527	6
726			min	0	1	-.118	7	-.049	9	.207	1	-.333	7	-1.527	6	-1.69	9
727		4	max	.515	6	-.113	1	.038	6	.219	7	-.1	1	1.643	9	1.49	6
728			min	0	1	-.121	7	-.048	9	.1	1	-.219	7	-1.49	6	-1.643	9
729		5	max	.515	6	-.117	1	.037	6	.102	7	.009	1	1.598	9	1.454	6
730			min	0	1	-.124	7	-.047	9	-.009	1	-.102	7	-1.454	6	-1.598	9
731	M80	1	max	.515	6	-.117	1	.037	6	.102	7	.009	1	1.598	9	1.454	6
732			min	0	1	-.124	7	-.047	9	-.009	1	-.102	7	-1.454	6	-1.598	9
733		2	max	.512	6	-.128	1	.031	6	-.424	7	.506	1	1.455	5	1.349	4
734			min	0	1	-.136	7	-.041	9	-.506	1	.424	7	-1.349	4	-1.455	5
735		3	max	.509	6	-.14	1	.04	5	-.999	7	1.051	1	1.596	5	1.528	4
736			min	0	1	-.148	7	-.05	4	-1.051	1	.999	7	-1.528	4	-1.596	5
737		4	max	.506	6	-.152	1	.051	5	-1.622	7	1.645	1	1.781	5	1.752	4
738			min	0	1	-.16	7	-.061	4	-1.645	1	1.622	7	-1.752	4	-1.781	5
739		5	max	.503	6	-.164	1	.062	5	-2.286	1	2.294	7	2.01	5	2.02	4
740			min	0	1	-.172	7	-.072	4	-2.294	7	2.286	1	-2.02	4	-2.01	5
741	M82	1	max	.58	6	.021	1	.021	4	-.036	6	.047	1	.05	5	.05	4
742			min	0	1	.019	6	-.021	5	-.047	1	.036	6	-.05	4	-.05	5
743		2	max	.576	6	.007	1	.008	4	.023	1	-.021	6	.021	4	.021	5
744			min	0	1	.004	6	-.008	5	.021	6	-.023	1	-.021	5	-.021	4
745		3	max	.572	6	-.008	1	.006	5	.02	1	-.004	6	.026	4	.025	5
746			min	0	1	-.011	6	-.006	4	.004	6	-.02	1	-.025	5	-.026	4
747		4	max	.569	6	-.023	1	.02	5	-.058	1	.086	6	.039	5	.038	4
748			min	0	1	-.025	6	-.019	4	-.086	6	.058	1	-.038	4	-.039	5
749		5	max	.565	6	-.037	1	.033	5	-.208	1	.251	6	.171	5	.169	4
750			min	0	1	-.04	6	-.033	4	-.251	6	.208	1	-.169	4	-.171	5
751	M83	1	max	0	1	0	1	0	1	.207	1	2.552	9	1.678	9	1.991	6
752			min	0	1	0	1	0	1	-2.552	9	-.207	1	-1.991	6	-1.678	9
753		2	max	0	7	-.003	1	.003	2	.206	1	2.554	9	1.677	9	1.99	6
754			min	0	6	-.003	1	-.003	3	-2.554	9	-.206	1	-1.99	6	-1.677	9
755		3	max	.002	7	-.006	1	.005	2	.201	1	2.558	9	1.675	9	1.988	6
756			min	-.002	6	-.006	1	-.005	3	-2.558	9	-.201	1	-1.988	6	-1.675	9
757		4	max	.002	7	-.009	1	.008	2	.194	1	2.566	9	1.671	9	1.984	6
758			min	-.002	6	-.009	1	-.008	3	-2.566	9	-.194	1	-1.984	6	-1.671	9
759		5	max	.003	7	-.012	1	.01	2	.184	1	2.576	9	1.666	9	1.979	6
760			min	-.003	6	-.012	1	-.01	3	-2.576	9	-.184	1	-1.979	6	-1.666	9
761	M84	1	max	.077	9	-.012	3	.01	2	.184	1	2.576	9	1.666	9	1.979	6
762			min	0	1	-.012	1	-.01	3	-2.576	9	-.184	1	-1.979	6	-1.666	9
763		2	max	.217	9	.077	9	.211	7	.23	1	1.732	6	4.27	6	3.999	9
764			min	-.07	6	-.017	1	-.112	8	-1.732	6	-.23	1	-3.999	9	-4.27	6
765		3	max	.22	9	.067	9	.217	7	.146	1	1.547	6	4.955	6	4.317	9
766			min	-.073	6	-.028	1	-.118	8	-1.547	6	-.146	1	-4.317	9	-4.955	6

Envelope Member Section Stresses (Continued)

	Member	Sec		Axial[ksi]	lc	y Shear[ksi]	lc	z Shear[ksi]	lc	y-Top[ksi]	lc	y-Bot[ksi]	lc	z-Top[ksi]	lc	z-Bot[ksi]	lc
767		4	max	.223	9	.056	9	.222	7	.023	1	1.402	6	5.661	6	4.656	9
768			min	-.076	6	-.039	1	-.123	8	-1.402	6	-.023	1	-4.656	9	-5.661	6
769		5	max	.226	9	.045	9	.228	7	-.141	1	1.297	6	6.386	6	5.015	9
770			min	-.078	6	-.05	1	-.128	8	-1.297	6	.141	1	-5.015	9	-6.386	6
771	M85	1	max	.069	9	-.015	5	.08	3	-.057	5	.256	4	1.972	3	2.037	2
772			min	-.023	6	-.028	4	-.073	2	-.256	4	.057	5	-2.037	2	-1.972	3
773		2	max	.07	9	-.02	5	.076	3	-.084	5	.305	4	2.096	3	2.15	2
774			min	-.024	6	-.033	4	-.069	2	-.305	4	.084	5	-2.15	2	-2.096	3
775		3	max	.071	9	-.024	5	.072	3	-.118	5	.361	4	2.213	3	2.255	2
776			min	-.025	6	-.038	4	-.065	2	-.361	4	.118	5	-2.255	2	-2.213	3
777		4	max	.072	9	-.029	5	.068	3	-.16	5	.424	4	2.324	3	2.355	2
778			min	-.026	6	-.042	4	-.061	2	-.424	4	.16	5	-2.355	2	-2.324	3
779		5	max	.073	9	-.033	5	.063	3	-.209	5	.494	4	2.427	3	2.447	2
780			min	-.027	6	-.047	4	-.056	2	-.494	4	.209	5	-2.447	2	-2.427	3
781	M86	1	max	.073	9	-.033	5	.063	3	-.209	5	.494	4	2.427	3	2.447	2
782			min	-.027	6	-.047	4	-.056	2	-.494	4	.209	5	-2.447	2	-2.427	3
783		2	max	.076	9	-.043	5	.054	3	-.339	5	.669	4	2.626	3	2.622	2
784			min	-.03	6	-.057	4	-.047	2	-.669	4	.339	5	-2.622	2	-2.626	3
785		3	max	.078	9	-.053	5	.045	3	-.502	5	.878	4	2.793	3	2.765	2
786			min	-.032	6	-.067	4	-.038	2	-.878	4	.502	5	-2.765	2	-2.793	3
787		4	max	.081	9	-.063	5	.036	3	-.698	5	1.12	4	2.93	3	2.879	2
788			min	-.035	6	-.077	4	-.029	2	-1.12	4	.698	5	-2.879	2	-2.93	3
789		5	max	.083	9	-.073	5	.027	3	-.927	5	1.395	4	3.037	3	2.961	2
790			min	-.037	6	-.087	4	-.02	2	-1.395	4	.927	5	-2.961	2	-3.037	3
791	M87	1	max	0	1	0	1	0	1	.386	1	1.331	6	.277	8	.36	7
792			min	0	1	0	1	0	1	-1.331	6	-.386	1	-.36	7	-.277	8
793		2	max	0	8	-.001	1	0	5	.385	1	1.332	6	.276	8	.359	7
794			min	0	6	-.001	1	0	4	-1.332	6	-.385	1	-.359	7	-.276	8
795		3	max	0	8	-.002	1	.002	5	.383	1	1.333	6	.276	8	.358	7
796			min	0	6	-.002	1	-.002	4	-1.333	6	-.383	1	-.358	7	-.276	8
797		4	max	0	8	-.004	1	.003	5	.381	1	1.336	6	.274	8	.357	7
798			min	0	6	-.004	1	-.003	4	-1.336	6	-.381	1	-.357	7	-.274	8
799		5	max	.001	8	-.005	1	.004	5	.377	1	1.34	6	.273	8	.355	7
800			min	-.001	6	-.005	1	-.004	4	-1.34	6	-.377	1	-.355	7	-.273	8
801	M88	1	max	.083	9	.125	4	.027	3	-.927	5	1.395	4	3.037	3	2.961	2
802			min	-.037	6	.098	5	-.02	2	-1.395	4	.927	5	-2.961	2	-3.037	3
803		2	max	.095	9	.076	4	.025	2	.31	1	-.29	4	3.112	3	2.918	2
804			min	-.05	6	.049	5	-.018	3	.29	4	-.31	1	-2.918	2	-3.112	3
805		3	max	.108	9	.027	4	.07	2	1.156	4	-.702	5	2.436	3	2.124	2
806			min	-.062	6	0	5	-.063	3	.702	5	-1.156	4	-2.124	2	-2.436	3
807		4	max	.12	9	-.022	4	.115	2	1.203	4	-.289	5	1.008	3	.577	2
808			min	-.074	6	-.049	5	-.108	3	.289	5	-1.203	4	-.577	2	-1.008	3
809		5	max	.132	9	-.071	4	.16	2	.432	4	.943	5	1.721	2	1.172	3
810			min	-.086	6	-.098	5	-.153	3	-.943	5	-.432	4	-1.172	3	-1.721	2
811	M90	1	max	.56	8	.211	6	.062	4	-1.063	1	3.137	6	.247	3	.179	2
812			min	0	1	-.112	1	-.065	5	-3.137	6	1.063	1	-.179	2	-.247	3
813		2	max	.568	8	.177	6	.031	4	.03	1	.916	6	.425	4	.394	5
814			min	0	1	-.079	1	-.034	5	-.916	6	-.03	1	-.394	5	-.425	4
815		3	max	.577	8	.143	6	.009	2	.919	6	-.739	1	.599	4	.605	5
816			min	0	1	-.045	1	-.012	3	.739	1	-.919	6	-.605	5	-.599	4
817		4	max	.585	8	.11	6	.028	5	2.369	6	-1.062	1	.42	4	.462	5
818			min	0	1	-.011	1	-.031	4	1.062	1	-2.369	6	-.462	5	-.42	4
819		5	max	.593	8	.076	6	.059	5	3.434	6	-1	1	.224	7	.303	8
820			min	0	1	-.022	1	-.062	4	1	1	-3.434	6	-.303	8	-.224	7
821	M91	1	max	0	1	0	1	0	1	0	1	0	1	0	1	0	1
822			min	0	1	0	1	0	1	0	1	0	1	0	1	0	1
823		2	max	.002	7	-.007	1	.003	6	-.002	1	.002	1	.001	6	.001	8
824			min	-.002	6	-.007	1	-.003	8	-.002	1	.002	1	-.001	8	-.001	6
825		3	max	.003	7	-.013	1	.007	6	-.01	1	.01	1	.005	6	.005	8

Envelope Member Section Stresses (Continued)

	Member	Sec		Axial[ksi]	lc	y Shear[ksi]	lc	z Shear[ksi]	lc	y-Top[ksi]	lc	y-Bot[ksi]	lc	z-Top[ksi]	lc	z-Bot[ksi]	lc
826			min	-.003	6	-.013	1	-.007	8	-.01	1	.01	1	-.005	8	-.005	6
827		4	max	.005	7	-.02	1	.01	6	-.022	1	.022	1	.011	6	.011	8
828			min	-.005	6	-.02	1	-.01	8	-.022	1	.022	1	-.011	8	-.011	6
829		5	max	.007	7	-.027	1	.013	6	-.039	1	.039	1	.019	6	.019	8
830			min	-.007	6	-.027	1	-.013	8	-.039	1	.039	1	-.019	8	-.019	6
831	M92	1	max	0	1	0	1	0	1	0	1	0	1	0	1	0	1
832			min	0	1	0	1	0	1	0	1	0	1	0	1	0	1
833		2	max	.002	7	-.007	1	.003	6	-.002	1	.002	1	.001	6	.001	8
834			min	-.002	6	-.007	1	-.003	8	-.002	1	.002	1	-.001	8	-.001	6
835		3	max	.003	7	-.013	1	.007	6	-.01	1	.01	1	.005	6	.005	8
836			min	-.003	6	-.013	1	-.007	8	-.01	1	.01	1	-.005	8	-.005	6
837		4	max	.005	7	-.02	1	.01	6	-.022	1	.022	1	.011	6	.011	8
838			min	-.005	6	-.02	1	-.01	8	-.022	1	.022	1	-.011	8	-.011	6
839		5	max	.007	7	-.027	1	.013	6	-.039	1	.039	1	.019	6	.019	8
840			min	-.007	6	-.027	1	-.013	8	-.039	1	.039	1	-.019	8	-.019	6
841	M93	1	max	0	1	0	1	0	1	0	1	0	1	0	1	0	1
842			min	0	1	0	1	0	1	0	1	0	1	0	1	0	1
843		2	max	.002	7	-.007	1	.005	6	-.002	4	.002	9	.002	6	.002	9
844			min	-.002	8	-.007	1	-.005	9	-.002	9	.002	4	-.002	9	-.002	6
845		3	max	.005	7	-.013	1	.01	6	-.01	4	.01	9	.007	6	.007	9
846			min	-.005	8	-.013	1	-.01	9	-.01	9	.01	4	-.007	9	-.007	6
847		4	max	.007	7	-.02	1	.014	6	-.022	4	.022	9	.015	6	.015	9
848			min	-.007	8	-.02	1	-.014	9	-.022	9	.022	4	-.015	9	-.015	6
849		5	max	.01	7	-.027	1	.019	6	-.039	4	.039	9	.027	6	.027	9
850			min	-.01	8	-.027	1	-.019	9	-.039	9	.039	4	-.027	9	-.027	6
851	M95	1	max	0	1	0	1	0	1	0	1	0	1	0	1	0	1
852			min	0	1	0	1	0	1	0	1	0	1	0	1	0	1
853		2	max	.026	1	.578	2	.045	7	.188	1	4.475	2	.003	1	.159	7
854			min	-.123	8	.022	1	0	1	-4.475	2	-.188	1	-.159	7	-.003	1
855		3	max	.03	1	.577	9	.048	7	.257	1	2.673	7	0	1	.04	6
856			min	-.12	8	.022	1	0	1	-2.673	7	-.257	1	-.04	6	0	1
857		4	max	.033	1	.58	9	.052	7	.327	1	.894	6	.145	7	.038	8
858			min	-.117	8	.022	1	-.001	8	-.894	6	-.327	1	-.038	8	-.145	7
859		5	max	.036	1	.584	9	.055	7	1.023	9	-.396	1	.313	7	.047	8
860			min	-.113	8	.022	1	-.005	8	.396	1	-1.023	9	-.047	8	-.313	7
861	M96	1	max	.133	8	-.04	1	.466	4	1.086	9	-.139	1	4.618	9	.115	1
862			min	-.032	1	-.158	8	-.012	1	.139	1	-1.086	9	-.115	1	-4.618	9
863		2	max	.134	8	-.04	1	.464	8	.938	9	-.097	1	5.088	9	.128	1
864			min	-.03	1	-.157	8	-.012	1	.097	1	-.938	9	-.128	1	-5.088	9
865		3	max	.136	8	-.04	1	.462	8	.792	9	-.055	1	5.561	9	.14	1
866			min	-.028	1	-.155	8	-.012	1	.055	1	-.792	9	-.14	1	-5.561	9
867		4	max	.137	8	-.04	1	.461	8	.663	7	-.013	1	6.035	9	.153	1
868			min	-.027	1	-.154	8	-.012	1	.013	1	-.663	7	-.153	1	-6.035	9
869		5	max	.139	8	-.04	1	.46	5	.55	7	.029	1	6.511	9	.165	1
870			min	-.025	1	-.152	8	-.012	1	.029	1	-.55	7	-.165	1	-6.511	9
871	M97	1	max	.471	8	-.012	9	.01	5	1.035	1	-1.028	7	1.032	4	1.042	5
872			min	0	1	-.012	8	-.01	4	1.028	7	-1.035	1	-1.042	5	-1.032	4
873		2	max	.471	8	-.013	9	.011	5	1.03	1	-1.023	7	1.029	4	1.038	5
874			min	0	1	-.013	8	-.011	4	1.023	7	-1.03	1	-1.038	5	-1.029	4
875		3	max	.471	8	-.014	9	.012	5	1.025	1	-1.018	7	1.024	4	1.034	5
876			min	0	1	-.014	8	-.012	4	1.018	7	-1.025	1	-1.034	5	-1.024	4
877		4	max	.471	8	-.015	9	.013	5	1.02	1	-1.013	7	1.02	4	1.029	5
878			min	0	1	-.015	8	-.013	4	1.013	7	-1.02	1	-1.029	5	-1.02	4
879		5	max	.472	8	-.016	9	.014	5	1.014	1	-1.007	7	1.015	4	1.025	5
880			min	0	1	-.016	8	-.014	4	1.007	7	-1.014	1	-1.025	5	-1.015	4
881	M98	1	max	0	1	0	1	0	1	1.058	1	-1.051	7	1.052	4	1.062	5
882			min	0	1	0	1	0	1	1.051	7	-1.058	1	-1.062	5	-1.052	4
883		2	max	0	8	-.003	1	.003	5	1.057	1	-1.049	7	1.051	4	1.06	5
884			min	0	6	-.003	1	-.003	4	1.049	7	-1.057	1	-1.06	5	-1.051	4

Envelope Member Section Stresses (Continued)

	Member	Sec		Axial[ksi]	lc	y Shear[ksi]	lc	z Shear[ksi]	lc	y-Top[ksi]	lc	y-Bot[ksi]	lc	z-Top[ksi]	lc	z-Bot[ksi]	lc
885		3	max	.002	8	-.006	1	.005	5	1.053	1	-1.045	7	1.047	4	1.057	5
886			min	-.002	6	-.006	1	-.005	4	1.045	7	-1.053	1	-1.057	5	-1.047	4
887		4	max	.002	8	-.009	1	.008	5	1.045	1	-1.038	7	1.041	4	1.051	5
888			min	-.002	6	-.009	1	-.008	4	1.038	7	-1.045	1	-1.051	5	-1.041	4
889		5	max	.003	8	-.012	1	.01	5	1.035	1	-1.028	7	1.032	4	1.042	5
890			min	-.003	6	-.012	1	-.01	4	1.028	7	-1.035	1	-1.042	5	-1.032	4
891	M99	1	max	0	1	0	1	0	1	.945	6	-.822	1	.691	4	.695	5
892			min	0	1	0	1	0	1	.822	1	-.945	6	-.695	5	-.691	4
893		2	max	0	8	-.003	1	.003	5	.944	6	-.82	1	.689	4	.693	5
894			min	0	6	-.003	1	-.003	4	.82	1	-.944	6	-.693	5	-.689	4
895		3	max	.002	8	-.006	1	.005	5	.939	6	-.816	1	.686	4	.69	5
896			min	-.002	6	-.006	1	-.005	4	.816	1	-.939	6	-.69	5	-.686	4
897		4	max	.002	8	-.009	1	.008	5	.932	6	-.808	1	.68	4	.684	5
898			min	-.002	6	-.009	1	-.008	4	.808	1	-.932	6	-.684	5	-.68	4
899		5	max	.003	8	-.012	1	.01	5	.922	6	-.798	1	.671	4	.675	5
900			min	-.003	6	-.012	1	-.01	4	.798	1	-.922	6	-.675	5	-.671	4
901	M100	1	max	0	1	0	1	0	1	.904	6	-.781	1	.656	4	.66	5
902			min	0	1	0	1	0	1	.781	1	-.904	6	-.66	5	-.656	4
903		2	max	0	8	-.003	1	.003	5	.903	6	-.779	1	.655	4	.659	5
904			min	0	6	-.003	1	-.003	4	.779	1	-.903	6	-.659	5	-.655	4
905		3	max	.002	8	-.006	1	.005	5	.898	6	-.775	1	.651	4	.655	5
906			min	-.002	6	-.006	1	-.005	4	.775	1	-.898	6	-.655	5	-.651	4
907		4	max	.002	8	-.009	1	.008	5	.891	6	-.767	1	.645	4	.649	5
908			min	-.002	6	-.009	1	-.008	4	.767	1	-.891	6	-.649	5	-.645	4
909		5	max	.003	8	-.012	1	.01	5	.881	6	-.757	1	.637	4	.641	5
910			min	-.003	6	-.012	1	-.01	4	.757	1	-.881	6	-.641	5	-.637	4
911	M101	1	max	0	1	0	1	0	1	-.079	1	.08	6	.069	5	.069	4
912			min	0	1	0	1	0	1	-.08	6	.079	1	-.069	4	-.069	5
913		2	max	0	8	-.003	1	.003	5	-.081	1	.082	6	.07	5	.071	4
914			min	0	6	-.003	1	-.003	4	-.082	6	.081	1	-.071	4	-.07	5
915		3	max	.002	8	-.006	1	.005	5	-.085	1	.086	6	.074	5	.074	4
916			min	-.002	6	-.006	1	-.005	4	-.086	6	.085	1	-.074	4	-.074	5
917		4	max	.002	8	-.009	1	.008	5	-.092	1	.094	6	.08	5	.081	4
918			min	-.002	6	-.009	1	-.008	4	.094	6	.092	1	-.081	4	-.08	5
919		5	max	.003	8	-.012	1	.01	5	-.103	1	.104	6	.089	5	.089	4
920			min	-.003	6	-.012	1	-.01	4	-.104	6	.103	1	-.089	4	-.089	5
921	M93A	1	max	.025	7	.021	6	.004	4	.376	1	1.391	6	.273	8	.358	7
922			min	0	1	-.006	1	-.003	5	-1.391	6	-.376	1	-.358	7	-.273	8
923		2	max	.024	7	.019	6	.003	4	.381	1	1.373	6	.275	8	.36	7
924			min	0	1	-.005	1	-.002	5	-1.373	6	-.381	1	-.36	7	-.275	8
925		3	max	.024	7	.017	6	.002	4	.384	1	1.358	6	.277	8	.361	7
926			min	0	1	-.003	1	-.001	5	-1.358	6	-.384	1	-.361	7	-.277	8
927		4	max	.023	7	.015	6	0	4	.386	1	1.344	6	.277	8	.36	7
928			min	0	1	0	1	0	5	-1.344	6	-.386	1	-.36	7	-.277	8
929		5	max	.023	9	.013	6	.002	7	.386	1	1.331	6	.277	8	.36	7
930			min	0	1	-.001	1	0	8	-1.331	6	-.386	1	-.36	7	-.277	8
931	M94	1	max	.095	7	-.012	6	.01	2	.224	1	2.536	9	1.686	9	1.999	6
932			min	0	1	-.012	7	-.01	3	-2.536	9	-.224	1	-1.999	6	-1.686	9
933		2	max	.095	7	-.013	6	.011	2	.219	1	2.54	9	1.684	9	1.997	6
934			min	0	1	-.013	7	-.011	3	-2.54	9	-.219	1	-1.997	6	-1.684	9
935		3	max	.095	7	-.014	6	.012	2	.215	1	2.545	9	1.681	9	1.995	6
936			min	0	1	-.014	7	-.012	3	-2.545	9	-.215	1	-1.995	6	-1.681	9
937		4	max	.096	7	-.015	6	.013	2	.21	1	2.55	9	1.679	9	1.992	6
938			min	0	1	-.015	7	-.013	3	-2.55	9	-.21	1	-1.992	6	-1.679	9
939		5	max	.096	7	-.016	6	.014	2	.204	1	2.555	9	1.676	9	1.989	6
940			min	0	1	-.016	7	-.014	3	-2.555	9	-.204	1	-1.989	6	-1.676	9
941	M95A	1	max	0	1	0	1	0	1	.246	1	2.514	9	1.697	9	2.01	6
942			min	0	1	0	1	0	1	-2.514	9	-.246	1	-2.01	6	-1.697	9
943		2	max	0	7	-.003	1	.003	2	.244	1	2.515	9	1.696	9	2.009	6

Envelope Member Section Stresses (Continued)

	Member	Sec		Axial[ksi]	lc	y Shear[ksi]	lc	z Shear[ksi]	lc	y-Top[ksi]	lc	y-Bot[ksi]	lc	z-Top[ksi]	lc	z-Bot[ksi]	lc
944			min	0	6	-.003	1	-.003	3	-2.515	9	-.244	1	-2.009	6	-1.696	9
945		3	max	.001	7	-.006	1	.005	2	.24	1	2.519	9	1.694	9	2.007	6
946			min	-.001	6	-.006	1	-.005	3	-2.519	9	-.24	1	-2.007	6	-1.694	9
947		4	max	.002	7	-.009	1	.008	2	.233	1	2.526	9	1.691	9	2.004	6
948			min	-.002	6	-.009	1	-.008	3	-2.526	9	-.233	1	-2.004	6	-1.691	9
949		5	max	.003	7	-.012	1	.01	2	.224	1	2.536	9	1.686	9	1.999	6
950			min	-.003	6	-.012	1	-.01	3	-2.536	9	-.224	1	-1.999	6	-1.686	9
951	M96A	1	max	.048	7	.098	6	.14	7	1.237	8	-.093	1	3.065	9	4.614	6
952			min	-.093	8	-.187	9	-.071	8	.093	1	-1.237	8	-4.614	6	-3.065	9
953		2	max	.046	7	.095	6	.139	7	1.368	8	.145	7	2.99	9	4.434	6
954			min	-.093	8	-.188	9	-.069	8	-.145	7	-1.368	8	-4.434	6	-2.99	9
955		3	max	.045	7	.091	6	.137	7	1.495	8	.415	7	2.918	9	4.258	6
956			min	-.094	8	-.189	9	-.067	8	-.415	7	-1.495	8	-4.258	6	-2.918	9
957		4	max	.043	7	.088	6	.136	7	1.616	8	.687	7	3.038	7	4.273	8
958			min	-.094	8	-.191	9	-.066	8	-.687	7	-1.616	8	-4.273	8	-3.038	7
959		5	max	.041	7	.084	6	.134	7	1.732	8	.961	7	3.24	7	4.371	8
960			min	-.095	8	-.192	9	-.064	8	-.961	7	-1.732	8	-4.371	8	-3.24	7
961	M97A	1	max	.057	7	.076	8	.173	6	2.05	8	.776	7	3.146	7	3.984	8
962			min	-.1	8	-.204	7	-.108	9	-.776	7	-2.05	8	-3.984	8	-3.146	7
963		2	max	.057	7	.075	8	.172	6	2.088	8	.879	7	3.176	7	3.981	8
964			min	-.1	8	-.204	7	-.107	9	-.879	7	-2.088	8	-3.981	8	-3.176	7
965		3	max	.056	7	.074	8	.171	6	2.125	8	.982	7	3.205	7	3.978	8
966			min	-.1	8	-.205	7	-.106	9	-.982	7	-2.125	8	-3.978	8	-3.205	7
967		4	max	.055	7	.072	8	.171	6	2.162	8	1.085	7	3.234	7	3.974	8
968			min	-.1	8	-.205	7	-.106	9	-1.085	7	-2.162	8	-3.974	8	-3.234	7
969		5	max	.055	7	.071	8	.17	6	2.198	8	1.188	7	3.263	7	3.97	8
970			min	-.1	8	-.205	7	-.105	9	-1.188	7	-2.198	8	-3.97	8	-3.263	7
971	M98A	1	max	.074	7	.005	8	.216	6	2.11	8	.659	7	3.767	7	3.89	8
972			min	-.09	8	-.173	7	-.176	9	-.659	7	-2.11	8	-3.89	8	-3.767	7
973		2	max	.073	7	.004	8	.215	6	2.112	8	.746	7	3.729	7	3.832	8
974			min	-.09	8	-.173	7	-.175	9	-.746	7	-2.112	8	-3.832	8	-3.729	7
975		3	max	.073	7	.002	8	.214	6	2.114	8	.833	7	3.692	7	3.774	8
976			min	-.089	8	-.174	7	-.174	9	-.833	7	-2.114	8	-3.774	8	-3.692	7
977		4	max	.072	7	.001	8	.214	6	2.115	8	.921	7	3.654	7	3.716	8
978			min	-.089	8	-.174	7	-.173	9	-.921	7	-2.115	8	-3.716	8	-3.654	7
979		5	max	.072	7	0	8	.213	6	2.115	8	1.009	7	3.616	7	3.658	8
980			min	-.089	8	-.175	7	-.173	9	-1.009	7	-2.115	8	-3.658	8	-3.616	7
981	M99A	1	max	.072	7	-.026	1	.2	6	1.543	8	.41	7	4.519	7	4.36	8
982			min	-.054	8	-.108	7	-.187	9	-.41	7	-1.543	8	-4.36	8	-4.519	7
983		2	max	.072	7	-.027	1	.2	6	1.507	8	.464	7	4.441	7	4.275	8
984			min	-.054	8	-.109	7	-.187	9	-.464	7	-1.507	8	-4.275	8	-4.441	7
985		3	max	.071	7	-.028	1	.199	6	1.47	8	.519	7	4.363	7	4.191	8
986			min	-.053	8	-.11	7	-.186	9	-.519	7	-1.47	8	-4.191	8	-4.363	7
987		4	max	.071	7	-.029	1	.199	6	1.433	8	.575	7	4.285	7	4.107	8
988			min	-.053	8	-.111	7	-.186	9	-.575	7	-1.433	8	-4.107	8	-4.285	7
989		5	max	.07	7	-.03	1	.198	6	1.395	8	.631	7	4.207	7	4.022	8
990			min	-.053	8	-.112	7	-.185	9	-.631	7	-1.395	8	-4.022	8	-4.207	7
991	M100A	1	max	.064	7	.043	1	.181	6	1.04	8	.324	7	4.575	7	4.422	8
992			min	-.029	8	-.049	9	-.181	9	-.324	7	-1.04	8	-4.422	8	-4.575	7
993		2	max	.059	7	.024	1	.171	6	.788	8	.599	7	2.992	7	2.839	8
994			min	-.024	8	-.068	9	-.171	9	-.599	7	-.788	8	-2.839	8	-2.992	7
995		3	max	.054	7	.005	1	.162	6	.361	8	1.048	7	1.496	7	1.343	8
996			min	-.019	8	-.088	9	-.162	9	-1.048	7	-.361	8	-1.343	8	-1.496	7
997		4	max	.049	7	-.015	1	.152	6	.224	1	1.67	7	.459	6	.306	9
998			min	-.014	8	-.107	9	-.152	9	-1.67	7	-.224	1	-.306	9	-.459	6
999		5	max	.044	7	-.034	1	.142	6	.004	1	2.467	7	1.781	6	1.628	9
1000			min	-.009	8	-.126	9	-.142	9	-2.467	7	-.004	1	-1.628	9	-1.781	6
1001	M101A	1	max	.056	7	-.032	1	.142	6	.004	1	2.467	7	1.195	6	1.132	9
1002			min	-.003	8	-.122	9	-.142	9	-2.467	7	-.004	1	-1.132	9	-1.195	6

Envelope Member Section Stresses (Continued)

	Member	Sec		Axial[ksi]	lc	y Shear[ksi]	lc	z Shear[ksi]	lc	y-Top[ksi]	lc	y-Bot[ksi]	lc	z-Top[ksi]	lc	z-Bot[ksi]	lc
1003		2	max	.055	7	-.033	1	.142	6	-.012	1	2.503	7	1.266	6	1.203	9
1004			min	.004	8	-.123	9	-.142	9	-2.503	7	.012	1	-1.203	9	-1.266	6
1005		3	max	.055	7	-.034	1	.141	6	-.029	1	2.54	7	1.338	6	1.274	9
1006			min	.004	8	-.124	9	-.141	9	-2.54	7	.029	1	-1.274	9	-1.338	6
1007		4	max	.055	7	-.036	1	.141	6	-.047	1	2.578	7	1.408	6	1.345	9
1008			min	.004	8	-.125	9	-.141	9	-2.578	7	.047	1	-1.345	9	-1.408	6
1009		5	max	.055	7	-.037	1	.14	6	-.065	1	2.616	7	1.479	6	1.416	9
1010			min	.005	8	-.125	9	-.14	9	-2.616	7	.065	1	-1.416	9	-1.479	6
1011	M102	1	max	.067	7	-.004	6	.14	6	-.065	1	2.616	7	.07	6	.193	9
1012			min	.014	1	-.09	9	-.14	9	-2.616	7	.065	1	-.193	9	-.07	6
1013		2	max	.067	7	-.005	6	.14	6	-.078	1	2.622	7	.14	6	.263	9
1014			min	.015	1	-.09	9	-.14	9	-2.622	7	.078	1	-.263	9	-.14	6
1015		3	max	.067	7	-.006	6	.139	6	-.091	1	2.656	9	.211	6	.333	9
1016			min	.015	1	-.091	9	-.139	9	-2.656	9	.091	1	-.333	9	-.211	6
1017		4	max	.067	7	-.008	6	.139	6	-.105	1	2.702	9	.28	6	.403	9
1018			min	.016	1	-.091	9	-.139	9	-2.702	9	.105	1	-.403	9	-.28	6
1019		5	max	.068	7	-.009	6	.138	6	-.119	1	2.748	9	.35	6	.473	9
1020			min	.016	1	-.092	9	-.138	9	-2.748	9	.119	1	-.473	9	-.35	6
1021	M103	1	max	.066	9	.054	7	.138	6	-.119	1	2.748	9	.916	7	1.193	8
1022			min	.021	1	-.041	8	-.138	9	-2.748	9	.119	1	-1.193	8	-.916	7
1023		2	max	.067	9	.053	7	.137	6	-.124	1	2.763	9	.847	7	1.123	8
1024			min	.022	1	-.041	8	-.137	9	-2.763	9	.124	1	-1.123	8	-.847	7
1025		3	max	.067	9	.052	7	.137	6	-.128	1	2.778	9	.778	7	1.054	8
1026			min	.022	1	-.041	8	-.137	9	-2.778	9	.128	1	-1.054	8	-.778	7
1027		4	max	.068	9	.051	7	.136	6	-.133	1	2.792	9	.709	7	.986	8
1028			min	.023	1	-.04	8	-.136	9	-2.792	9	.133	1	-.986	8	-.709	7
1029		5	max	.068	9	.051	7	.136	6	-.138	1	2.807	9	.641	7	.917	8
1030			min	.023	1	-.04	8	-.136	9	-2.807	9	.138	1	-.917	8	-.641	7
1031	M104	1	max	.07	9	.082	7	.136	6	-.138	1	2.807	9	1.166	9	1.493	6
1032			min	.024	1	-.012	8	-.136	9	-2.807	9	.138	1	-1.493	6	-1.166	9
1033		2	max	.085	9	.067	7	.121	6	-.104	1	2.594	9	.33	8	.657	7
1034			min	.039	1	.002	1	-.121	9	-2.594	9	.104	1	-.657	7	-.33	8
1035		3	max	.1	9	.052	7	.106	6	.12	6	2.169	9	1.916	8	2.243	7
1036			min	.054	1	.002	1	-.106	9	-2.169	9	-.12	6	-2.243	7	-1.916	8
1037		4	max	.115	9	.053	9	.091	6	.461	6	1.533	9	3.291	8	3.618	7
1038			min	.069	1	.002	1	-.091	9	-1.533	9	-.461	6	-3.618	7	-3.291	8
1039		5	max	.13	9	.068	9	.075	6	.759	2	.855	3	4.454	8	4.781	7
1040			min	.084	1	.002	6	-.075	9	-.855	3	-.759	2	-4.781	7	-4.454	8
1041	M105	1	max	.121	8	.021	6	-.002	6	4.454	8	4.781	7	.954	8	.822	7
1042			min	.081	1	-.14	9	-.068	9	-4.781	7	-4.454	8	-.822	7	-.954	8
1043		2	max	.121	8	.02	6	-.001	6	4.459	8	4.831	7	.936	8	.83	7
1044			min	.081	1	-.14	9	-.068	9	-4.831	7	-4.459	8	-.83	7	-.936	8
1045		3	max	.121	8	.02	6	0	6	4.464	8	4.881	7	.918	8	.838	7
1046			min	.082	1	-.14	9	-.069	9	-4.881	7	-4.464	8	-.838	7	-.918	8
1047		4	max	.122	8	.019	6	0	6	4.468	8	4.931	7	.9	8	.846	7
1048			min	.082	1	-.14	9	-.069	9	-4.931	7	-4.468	8	-.846	7	-.9	8
1049		5	max	.122	8	.018	6	0	6	4.473	8	4.981	7	.881	8	.854	7
1050			min	.083	1	-.14	9	-.07	9	-4.981	7	-4.473	8	-.854	7	-.881	8
1051	M106	1	max	-.009	6	.122	6	.086	9	-.111	1	.596	6	1.635	8	1.55	7
1052			min	-.06	9	.016	9	-.09	6	-.596	6	.111	1	-1.55	7	-1.635	8
1053		2	max	-.008	6	.121	6	.085	9	-.099	1	.55	6	1.619	8	1.536	7
1054			min	-.06	9	.016	9	-.089	6	-.55	6	.099	1	-1.536	7	-1.619	8
1055		3	max	-.008	6	.12	6	.085	9	-.088	1	.505	4	1.603	8	1.521	7
1056			min	-.059	9	.015	9	-.089	6	-.505	4	.088	1	-1.521	7	-1.603	8
1057		4	max	-.008	6	.119	6	.085	9	-.078	1	.461	4	1.587	8	1.507	7
1058			min	-.059	9	.015	9	-.089	6	-.461	4	.078	1	-1.507	7	-1.587	8
1059		5	max	-.008	6	.118	6	.084	9	-.067	1	.417	4	1.571	8	1.492	7
1060			min	-.059	9	.015	9	-.088	6	-.417	4	.067	1	-1.492	7	-1.571	8
1061	M107	1	max	.023	6	.11	4	.084	9	-.067	1	.417	4	1.976	6	1.861	9

Envelope Member Section Stresses (Continued)

	Member	Sec		Axial[ksi]	lc	y Shear[ksi]	lc	z Shear[ksi]	lc	y-Top[ksi]	lc	y-Bot[ksi]	lc	z-Top[ksi]	lc	z-Bot[ksi]	lc
1062			min	-.047	9	.038	1	-.088	6	-.417	4	.067	1	-1.861	9	-1.976	6
1063		2	max	.023	6	.109	4	.084	9	-.053	1	.375	4	1.943	6	1.829	9
1064			min	-.047	9	.037	1	-.088	6	-.375	4	.053	1	-1.829	9	-1.943	6
1065		3	max	.022	6	.109	4	.083	9	-.039	1	.339	9	1.91	6	1.798	9
1066			min	-.046	9	.037	1	-.087	6	-.339	9	.039	1	-1.798	9	-1.91	6
1067		4	max	.022	6	.108	4	.083	9	-.025	1	.313	9	1.877	6	1.766	9
1068			min	-.046	9	.036	1	-.087	6	-.313	9	.025	1	-1.766	9	-1.877	6
1069		5	max	.022	6	.107	4	.083	9	-.012	1	.287	9	1.844	6	1.735	9
1070			min	-.046	9	.035	1	-.087	6	-.287	9	.012	1	-1.735	9	-1.844	6
1071	M108	1	max	.035	6	.092	4	.083	9	-.012	1	.287	9	2.102	6	1.986	9
1072			min	-.035	9	.036	1	-.087	6	-.287	9	.012	1	-1.986	9	-2.102	6
1073		2	max	.035	6	.09	4	.081	9	.028	1	.187	9	2.005	6	1.893	9
1074			min	-.035	9	.034	1	-.085	6	-.187	9	-.028	1	-1.893	9	-2.005	6
1075		3	max	.034	6	.088	4	.08	9	.065	1	.089	5	1.909	6	1.802	9
1076			min	-.034	9	.031	1	-.084	6	-.089	5	-.065	1	-1.802	9	-1.909	6
1077		4	max	.034	4	.085	4	.079	9	.099	1	-.005	5	1.814	6	1.712	9
1078			min	-.034	5	.029	1	-.083	6	.005	5	-.099	1	-1.712	9	-1.814	6
1079		5	max	.017	4	.033	4	.035	9	.068	4	-.044	5	.863	6	.813	9
1080			min	-.017	5	.005	1	-.037	6	.044	5	-.068	4	-.813	9	-.863	6
1081	M109	1	max	.017	4	.011	1	.035	7	.065	4	-.042	5	.815	9	.864	6
1082			min	-.017	5	-.017	4	-.037	8	.042	5	-.065	4	-.864	6	-.815	9
1083		2	max	.017	4	.011	1	.035	7	.062	4	-.039	5	.819	9	.868	6
1084			min	-.017	5	-.017	4	-.037	8	.039	5	-.062	4	-.868	6	-.819	9
1085		3	max	.019	6	-.022	1	.043	9	.062	1	-.037	5	.823	9	.873	6
1086			min	-.019	9	-.05	4	-.045	6	.037	5	-.062	1	-.873	6	-.823	9
1087		4	max	.019	6	-.022	1	.043	9	.058	1	-.029	5	.83	9	.88	6
1088			min	-.019	9	-.05	4	-.045	6	.029	5	-.058	1	-.88	6	-.83	9
1089		5	max	.019	6	-.022	1	.043	9	.055	1	-.021	5	.837	9	.888	6
1090			min	-.019	9	-.05	4	-.045	6	.021	5	-.055	1	-.888	6	-.837	9
1091	M110	1	max	.027	4	.039	4	.049	7	.438	4	.002	1	.171	6	.163	9
1092			min	-.027	5	.005	1	-.052	8	-.002	1	-.438	4	-.163	9	-.171	6
1093		2	max	.027	4	.039	4	.049	7	.439	4	.002	1	.169	6	.161	9
1094			min	-.027	5	-.005	1	-.052	8	-.002	1	-.439	4	-.161	9	-.169	6
1095		3	max	.027	4	.039	4	.049	7	.441	4	.003	1	.167	6	.159	9
1096			min	-.027	5	-.005	1	-.053	8	-.003	1	-.441	4	-.159	9	-.167	6
1097		4	max	.027	4	.039	4	.05	7	.443	4	.003	1	.165	6	.157	9
1098			min	-.027	5	-.006	1	-.053	8	-.003	1	-.443	4	-.157	9	-.165	6
1099		5	max	.027	4	.039	4	.05	7	.445	4	.003	1	.162	6	.154	9
1100			min	-.027	5	-.006	1	-.053	8	-.003	1	-.445	4	-.154	9	-.162	6
1101	M111	1	max	.031	4	.049	5	.05	7	.445	4	.003	1	.23	6	.221	9
1102			min	-.021	5	-.006	1	-.053	8	-.003	1	-.445	4	-.221	9	-.23	6
1103		2	max	.03	4	.047	5	.05	7	.453	4	.006	1	.211	6	.203	9
1104			min	-.021	5	-.007	1	-.054	8	-.006	1	-.453	4	-.203	9	-.211	6
1105		3	max	.029	4	.045	5	.051	7	.461	4	.009	1	.192	6	.186	9
1106			min	-.02	5	-.009	1	-.054	8	-.009	1	-.461	4	-.186	9	-.192	6
1107		4	max	.028	4	.043	5	.052	7	.469	4	.012	1	.174	6	.169	9
1108			min	-.02	5	-.01	1	-.055	8	-.012	1	-.469	4	-.169	9	-.174	6
1109		5	max	.028	4	.041	5	.053	7	.476	4	.016	1	.156	6	.152	9
1110			min	-.02	5	-.012	1	-.056	8	-.016	1	-.476	4	-.152	9	-.156	6
1111	M112	1	max	.029	4	.055	5	.053	7	.476	4	.016	1	.261	2	.257	3
1112			min	-.007	5	-.012	4	-.056	8	-.016	1	-.476	4	-.257	3	-.261	2
1113		2	max	.028	4	.053	5	.054	7	.489	5	.02	1	.263	2	.26	3
1114			min	-.007	5	-.012	4	-.057	8	-.02	1	-.489	5	-.26	3	-.263	2
1115		3	max	.027	4	.051	5	.055	7	.508	5	.024	1	.266	2	.263	3
1116			min	-.007	5	-.012	4	-.058	8	-.024	1	-.508	5	-.263	3	-.266	2
1117		4	max	.025	4	.049	5	.055	7	.527	5	.028	1	.269	2	.267	3
1118			min	-.007	5	-.013	4	-.058	8	-.028	1	-.527	5	-.267	3	-.269	2
1119		5	max	.024	4	.047	5	.056	7	.545	5	.033	1	.272	2	.272	3
1120			min	-.007	5	-.013	1	-.059	8	-.033	1	-.545	5	-.272	3	-.272	2

Envelope Member Section Stresses (Continued)

	Member	Sec		Axial[ksi]	lc	y Shear[ksi]	lc	z Shear[ksi]	lc	y-Top[ksi]	lc	y-Bot[ksi]	lc	z-Top[ksi]	lc	z-Bot[ksi]	lc
1121	M113	1	max	.037	4	.059	5	.048	3	.191	4	.358	5	.327	2	.327	3
1122			min	-.025	5	-.026	4	-.048	2	-.358	5	-.191	4	-.327	3	-.327	2
1123		2	max	.036	4	.057	5	.047	3	.181	4	.336	5	.309	2	.309	3
1124			min	-.025	5	-.025	4	-.047	2	-.336	5	-.181	4	-.309	3	-.309	2
1125		3	max	.035	4	.056	5	.046	3	.172	4	.315	5	.292	2	.292	3
1126			min	-.024	5	-.024	4	-.046	2	-.315	5	-.172	4	-.292	3	-.292	2
1127		4	max	.034	4	.054	5	.044	3	.163	4	.295	5	.275	2	.275	3
1128			min	-.023	5	-.023	4	-.044	2	-.295	5	-.163	4	-.275	3	-.275	2
1129		5	max	.033	4	.052	5	.043	3	.155	4	.275	5	.259	2	.259	3
1130			min	-.023	5	-.023	4	-.043	2	-.275	5	-.155	4	-.259	3	-.259	2
1131	M114	1	max	.029	1	.043	2	.039	5	.256	3	.256	2	.155	4	.275	5
1132			min	-.029	6	-.043	3	-.039	4	-.256	2	-.256	3	-.275	5	-.155	4
1133		2	max	.025	1	.038	2	.034	5	.19	3	.19	2	.097	4	.217	5
1134			min	-.025	6	-.038	3	-.034	4	-.19	2	-.19	3	-.217	5	-.097	4
1135		3	max	.022	1	.033	2	.028	5	.134	3	.134	2	.047	4	.167	5
1136			min	-.022	6	-.033	3	-.028	4	-.134	2	-.134	3	-.167	5	-.047	4
1137		4	max	.018	1	.027	2	.023	5	.085	3	.085	2	.006	4	.126	5
1138			min	-.018	6	-.027	3	-.023	4	-.085	2	-.085	3	-.126	5	-.006	4
1139		5	max	.015	1	.022	2	.018	5	.046	3	.046	2	-.027	4	.093	5
1140			min	-.015	6	-.022	3	-.018	4	-.046	2	-.046	3	-.093	5	-.027	4
1141	M115	1	max	.016	4	.024	5	.022	3	-.027	4	.093	5	.055	2	.055	3
1142			min	-.012	5	-.01	4	-.022	2	-.093	5	-.027	4	-.055	3	-.055	2
1143		2	max	.016	4	.023	5	.021	3	-.03	4	.085	5	.048	2	.048	3
1144			min	-.012	5	-.01	4	-.021	2	-.085	5	-.03	4	-.048	3	-.048	2
1145		3	max	.015	4	.021	5	.02	3	-.033	4	.078	5	.041	2	.041	3
1146			min	-.011	5	-.009	4	-.02	2	-.078	5	-.033	4	-.041	3	-.041	2
1147		4	max	.014	4	.02	5	.019	3	-.036	4	.071	5	.034	2	.034	3
1148			min	-.01	5	-.008	4	-.019	2	-.071	5	-.036	4	-.034	3	-.034	2
1149		5	max	.013	4	.018	5	.018	3	-.039	8	.065	9	.028	2	.028	3
1150			min	-.01	5	-.007	4	-.018	2	-.065	9	-.039	8	-.028	3	-.028	2
1151	M116	1	max	.013	4	.025	5	.018	3	-.039	6	.065	9	.04	2	.04	3
1152			min	-.005	5	-.005	4	-.018	2	-.065	9	-.039	6	-.04	3	-.04	2
1153		2	max	.012	4	.024	5	.017	3	-.037	6	.057	9	.034	2	.034	3
1154			min	-.004	5	-.005	4	-.017	2	-.057	9	-.037	6	-.034	3	-.034	2
1155		3	max	.011	4	.022	5	.016	3	-.035	6	.049	9	.029	2	.029	3
1156			min	-.004	5	-.005	4	-.016	2	-.049	9	-.035	6	-.029	3	-.029	2
1157		4	max	.011	4	.02	5	.014	3	-.033	6	.042	9	.024	2	.024	3
1158			min	-.004	5	-.005	4	-.014	2	-.042	9	-.033	6	-.024	3	-.024	2
1159		5	max	.01	4	.018	5	.013	3	-.031	6	.036	9	.019	2	.019	3
1160			min	-.004	5	-.005	4	-.013	2	-.036	9	-.031	6	-.019	3	-.019	2
1161	M117	1	max	.007	4	.02	5	.013	3	-.031	6	.036	9	.025	2	.025	3
1162			min	0	5	-.013	4	-.013	2	-.036	9	-.031	6	-.025	3	-.025	2
1163		2	max	.007	6	.018	9	.012	3	-.027	8	.03	9	.02	2	.02	3
1164			min	0	7	-.012	6	-.012	2	-.03	9	-.027	8	-.02	3	-.02	2
1165		3	max	.006	6	.016	9	.011	3	-.023	5	.024	4	.016	2	.016	3
1166			min	0	7	-.011	6	-.011	2	-.024	4	-.023	5	-.016	3	-.016	2
1167		4	max	.006	6	.015	9	.01	3	-.018	5	.021	4	.013	2	.013	3
1168			min	0	7	-.01	6	-.01	2	-.021	4	-.018	5	-.013	3	-.013	2
1169		5	max	.005	6	.013	9	.009	3	-.013	5	.017	4	.01	2	.01	3
1170			min	0	7	-.009	6	-.009	2	-.017	4	-.013	5	-.01	3	-.01	2
1171	M118	1	max	.002	6	.012	8	.009	3	-.013	5	.017	4	.012	2	.012	3
1172			min	-.003	9	-.011	7	-.009	2	-.017	4	-.013	5	-.012	3	-.012	2
1173		2	max	.002	6	.011	8	.008	3	-.01	5	.013	4	.009	2	.009	3
1174			min	-.003	9	-.01	7	-.008	2	-.013	4	-.01	5	-.009	3	-.009	2
1175		3	max	.002	4	.009	4	.007	3	-.007	5	.01	4	.006	2	.006	3
1176			min	-.003	5	-.008	5	-.007	2	-.01	4	-.007	5	-.006	3	-.006	2
1177		4	max	.002	4	.008	4	.006	3	-.004	5	.007	4	.004	2	.004	3
1178			min	-.002	5	-.007	5	-.006	2	-.007	4	-.004	5	-.004	3	-.004	2
1179		5	max	.002	4	.006	4	.004	3	-.002	5	.005	4	.003	2	.003	3

Envelope Member Section Stresses (Continued)

	Member	Sec		Axial[ksi]	lc	y Shear[ksi]	lc	z Shear[ksi]	lc	y-Top[ksi]	lc	y-Bot[ksi]	lc	z-Top[ksi]	lc	z-Bot[ksi]	lc
1180			min	-.002	5	.006	5	-.004	2	-.005	4	.002	5	-.003	3	-.003	2
1181	M119	1	max	0	4	.007	4	.004	3	-.002	5	.005	4	.003	2	.003	3
1182			min	-.003	5	.003	5	-.004	2	-.005	4	.002	5	-.003	3	-.003	2
1183		2	max	0	4	.006	4	.003	3	-.001	5	.003	4	.002	2	.002	3
1184			min	-.003	5	-.002	5	-.003	2	-.003	4	-.001	5	-.002	3	-.002	2
1185		3	max	0	4	.004	4	.002	3	0	5	.001	4	0	2	0	3
1186			min	-.002	5	.001	5	-.002	2	-.001	4	0	5	0	3	0	2
1187		4	max	0	4	.002	4	.001	3	0	5	0	4	0	2	0	3
1188			min	0	5	0	5	-.001	2	0	4	0	5	0	3	0	2
1189		5	max	0	1	0	1	0	1	0	1	0	1	0	1	0	1
1190			min	0	1	0	1	0	1	0	1	0	1	0	1	0	1
1191	M120	1	max	0	4	0	1	0	1	0	1	0	1	0	1	0	1
1192			min	0	5	0	1	0	1	0	1	0	1	0	1	0	1
1193		2	max	0	4	0	1	0	1	0	1	0	1	0	1	0	1
1194			min	0	5	0	1	0	1	0	1	0	1	0	1	0	1
1195		3	max	0	4	0	1	0	1	0	1	0	1	0	1	0	1
1196			min	0	5	0	1	0	1	0	1	0	1	0	1	0	1
1197		4	max	0	4	0	1	0	1	0	1	0	1	0	1	0	1
1198			min	0	5	0	1	0	1	0	1	0	1	0	1	0	1
1199		5	max	0	4	0	1	0	1	0	1	0	1	0	1	0	1
1200			min	0	5	0	1	0	1	0	1	0	1	0	1	0	1

Envelope Member Section Torsion

	Member	Sec		Torque[lb-ft]	lc	Torsion Shear[ksi]	lc	y-y War...	lc	z-z War...	lc	z-Top W...	lc	z-Bot W...	lc
1	M1	1	max	242.226	9	.203	9	NC		NC		NC		NC	
2			min	-6.347	1	-.005	1	NC		NC		NC		NC	
3		2	max	242.226	9	.203	9	NC		NC		NC		NC	
4			min	-6.347	1	-.005	1	NC		NC		NC		NC	
5		3	max	242.226	9	.203	9	NC		NC		NC		NC	
6			min	-6.347	1	-.005	1	NC		NC		NC		NC	
7		4	max	242.226	9	.203	9	NC		NC		NC		NC	
8			min	-6.347	1	-.005	1	NC		NC		NC		NC	
9		5	max	242.226	9	.203	9	NC		NC		NC		NC	
10			min	-6.347	1	-.005	1	NC		NC		NC		NC	
11	M2	1	max	243.408	9	.204	9	NC		NC		NC		NC	
12			min	-4.956	1	-.004	1	NC		NC		NC		NC	
13		2	max	243.408	9	.204	9	NC		NC		NC		NC	
14			min	-4.956	1	-.004	1	NC		NC		NC		NC	
15		3	max	243.408	9	.204	9	NC		NC		NC		NC	
16			min	-4.956	1	-.004	1	NC		NC		NC		NC	
17		4	max	243.408	9	.204	9	NC		NC		NC		NC	
18			min	-4.956	1	-.004	1	NC		NC		NC		NC	
19		5	max	243.408	9	.204	9	NC		NC		NC		NC	
20			min	-4.956	1	-.004	1	NC		NC		NC		NC	
21	M3	1	max	201.755	9	.169	9	NC		NC		NC		NC	
22			min	-152.606	6	-.128	6	NC		NC		NC		NC	
23		2	max	201.755	9	.169	9	NC		NC		NC		NC	
24			min	-152.606	6	-.128	6	NC		NC		NC		NC	
25		3	max	201.755	9	.169	9	NC		NC		NC		NC	
26			min	-152.606	6	-.128	6	NC		NC		NC		NC	
27		4	max	201.755	9	.169	9	NC		NC		NC		NC	
28			min	-152.606	6	-.128	6	NC		NC		NC		NC	
29		5	max	201.755	9	.169	9	NC		NC		NC		NC	
30			min	-152.606	6	-.128	6	NC		NC		NC		NC	
31	M4	1	max	171.622	9	.144	9	NC		NC		NC		NC	
32			min	-279.532	6	-.234	6	NC		NC		NC		NC	
33		2	max	171.622	9	.144	9	NC		NC		NC		NC	
34			min	-279.532	6	-.234	6	NC		NC		NC		NC	

Envelope Member Section Torsion (Continued)

	Member	Sec		Torque[lb-ft]	lc	Torsion Shear[ksi]	lc	y-y War...	lc	z-z War...	lc	z-Top W...	lc	z-Bot W...	lc
35		3	max	171.622	9	.144	9	NC		NC		NC		NC	
36			min	-279.532	6	-.234	6	NC		NC		NC		NC	
37		4	max	187.52	9	.157	9	NC		NC		NC		NC	
38			min	-245.924	6	-.206	6	NC		NC		NC		NC	
39		5	max	187.52	9	.157	9	NC		NC		NC		NC	
40			min	-245.924	6	-.206	6	NC		NC		NC		NC	
41	M5	1	max	106.761	9	.094	9	NC		NC		NC		NC	
42			min	-286.277	6	-.251	6	NC		NC		NC		NC	
43		2	max	106.761	9	.094	9	NC		NC		NC		NC	
44			min	-286.277	6	-.251	6	NC		NC		NC		NC	
45		3	max	106.761	9	.094	9	NC		NC		NC		NC	
46			min	-286.277	6	-.251	6	NC		NC		NC		NC	
47		4	max	106.761	9	.094	9	NC		NC		NC		NC	
48			min	-286.277	6	-.251	6	NC		NC		NC		NC	
49		5	max	106.761	9	.094	9	NC		NC		NC		NC	
50			min	-286.277	6	-.251	6	NC		NC		NC		NC	
51	M6	1	max	10.612	1	.009	1	NC		NC		NC		NC	
52			min	-341.274	6	-.3	6	NC		NC		NC		NC	
53		2	max	10.612	1	.009	1	NC		NC		NC		NC	
54			min	-341.274	6	-.3	6	NC		NC		NC		NC	
55		3	max	10.612	1	.009	1	NC		NC		NC		NC	
56			min	-341.274	6	-.3	6	NC		NC		NC		NC	
57		4	max	10.612	1	.009	1	NC		NC		NC		NC	
58			min	-341.274	6	-.3	6	NC		NC		NC		NC	
59		5	max	10.612	1	.009	1	NC		NC		NC		NC	
60			min	-341.274	6	-.3	6	NC		NC		NC		NC	
61	M7	1	max	15.288	1	.013	1	NC		NC		NC		NC	
62			min	-338.147	6	-.297	6	NC		NC		NC		NC	
63		2	max	15.288	1	.013	1	NC		NC		NC		NC	
64			min	-338.147	6	-.297	6	NC		NC		NC		NC	
65		3	max	15.288	1	.013	1	NC		NC		NC		NC	
66			min	-338.147	6	-.297	6	NC		NC		NC		NC	
67		4	max	15.288	1	.013	1	NC		NC		NC		NC	
68			min	-338.147	6	-.297	6	NC		NC		NC		NC	
69		5	max	15.288	1	.013	1	NC		NC		NC		NC	
70			min	-338.147	6	-.297	6	NC		NC		NC		NC	
71	M8	1	max	16.044	1	.014	1	NC		NC		NC		NC	
72			min	-318.328	6	-.279	6	NC		NC		NC		NC	
73		2	max	16.044	1	.014	1	NC		NC		NC		NC	
74			min	-318.328	6	-.279	6	NC		NC		NC		NC	
75		3	max	16.044	1	.014	1	NC		NC		NC		NC	
76			min	-318.328	6	-.279	6	NC		NC		NC		NC	
77		4	max	16.044	1	.014	1	NC		NC		NC		NC	
78			min	-318.328	6	-.279	6	NC		NC		NC		NC	
79		5	max	16.044	1	.014	1	NC		NC		NC		NC	
80			min	-318.328	6	-.279	6	NC		NC		NC		NC	
81	M9	1	max	16.044	1	.014	1	NC		NC		NC		NC	
82			min	-318.328	6	-.279	6	NC		NC		NC		NC	
83		2	max	16.044	1	.014	1	NC		NC		NC		NC	
84			min	-318.328	6	-.279	6	NC		NC		NC		NC	
85		3	max	16.044	1	.014	1	NC		NC		NC		NC	
86			min	-318.328	6	-.279	6	NC		NC		NC		NC	
87		4	max	16.044	1	.014	1	NC		NC		NC		NC	
88			min	-318.328	6	-.279	6	NC		NC		NC		NC	
89		5	max	16.044	1	.014	1	NC		NC		NC		NC	
90			min	-318.328	6	-.279	6	NC		NC		NC		NC	
91	M10	1	max	16.044	1	.014	1	NC		NC		NC		NC	
92			min	-318.328	6	-.279	6	NC		NC		NC		NC	
93		2	max	16.044	1	.014	1	NC		NC		NC		NC	

Envelope Member Section Torsion (Continued)

	Member	Sec		Torque[lb-ft]	lc	Torsion Shear[ksi]	lc	y-y War...	lc	z-z War...	lc	z-Top W...	lc	z-Bot W...	lc
94			min	-318.328	6	-.279	6	NC		NC		NC		NC	
95		3	max	16.044	1	.014	1	NC		NC		NC		NC	
96			min	-318.328	6	-.279	6	NC		NC		NC		NC	
97		4	max	16.044	1	.014	1	NC		NC		NC		NC	
98			min	-318.328	6	-.279	6	NC		NC		NC		NC	
99		5	max	16.044	1	.014	1	NC		NC		NC		NC	
100			min	-318.328	6	-.279	6	NC		NC		NC		NC	
101	M11	1	max	16.044	1	.014	1	NC		NC		NC		NC	
102			min	-318.328	6	-.279	6	NC		NC		NC		NC	
103		2	max	16.044	1	.014	1	NC		NC		NC		NC	
104			min	-318.328	6	-.279	6	NC		NC		NC		NC	
105		3	max	16.044	1	.014	1	NC		NC		NC		NC	
106			min	-318.328	6	-.279	6	NC		NC		NC		NC	
107		4	max	16.044	1	.014	1	NC		NC		NC		NC	
108			min	-318.328	6	-.279	6	NC		NC		NC		NC	
109		5	max	16.044	1	.014	1	NC		NC		NC		NC	
110			min	-318.328	6	-.279	6	NC		NC		NC		NC	
111	M12	1	max	473.093	7	.415	7	NC		NC		NC		NC	
112			min	-6.576	1	-.006	1	NC		NC		NC		NC	
113		2	max	473.093	7	.415	7	NC		NC		NC		NC	
114			min	-6.576	1	-.006	1	NC		NC		NC		NC	
115		3	max	473.093	7	.415	7	NC		NC		NC		NC	
116			min	-6.576	1	-.006	1	NC		NC		NC		NC	
117		4	max	473.093	7	.415	7	NC		NC		NC		NC	
118			min	-6.576	1	-.006	1	NC		NC		NC		NC	
119		5	max	473.093	7	.415	7	NC		NC		NC		NC	
120			min	-6.576	1	-.006	1	NC		NC		NC		NC	
121	M13	1	max	473.093	7	.415	7	NC		NC		NC		NC	
122			min	-6.576	1	-.006	1	NC		NC		NC		NC	
123		2	max	473.093	7	.415	7	NC		NC		NC		NC	
124			min	-6.576	1	-.006	1	NC		NC		NC		NC	
125		3	max	473.093	7	.415	7	NC		NC		NC		NC	
126			min	-6.576	1	-.006	1	NC		NC		NC		NC	
127		4	max	473.093	7	.415	7	NC		NC		NC		NC	
128			min	-6.576	1	-.006	1	NC		NC		NC		NC	
129		5	max	473.093	7	.415	7	NC		NC		NC		NC	
130			min	-6.576	1	-.006	1	NC		NC		NC		NC	
131	M14	1	max	428.015	7	.376	7	NC		NC		NC		NC	
132			min	-34.511	1	-.03	1	NC		NC		NC		NC	
133		2	max	428.015	7	.376	7	NC		NC		NC		NC	
134			min	-34.511	1	-.03	1	NC		NC		NC		NC	
135		3	max	428.015	7	.376	7	NC		NC		NC		NC	
136			min	-34.511	1	-.03	1	NC		NC		NC		NC	
137		4	max	428.015	7	.376	7	NC		NC		NC		NC	
138			min	-34.511	1	-.03	1	NC		NC		NC		NC	
139		5	max	428.015	7	.376	7	NC		NC		NC		NC	
140			min	-34.511	1	-.03	1	NC		NC		NC		NC	
141	M15	1	max	321.957	7	.283	7	NC		NC		NC		NC	
142			min	-52.898	1	-.046	1	NC		NC		NC		NC	
143		2	max	321.957	7	.283	7	NC		NC		NC		NC	
144			min	-52.898	1	-.046	1	NC		NC		NC		NC	
145		3	max	321.957	7	.283	7	NC		NC		NC		NC	
146			min	-52.898	1	-.046	1	NC		NC		NC		NC	
147		4	max	321.957	7	.283	7	NC		NC		NC		NC	
148			min	-52.898	1	-.046	1	NC		NC		NC		NC	
149		5	max	321.957	7	.283	7	NC		NC		NC		NC	
150			min	-52.898	1	-.046	1	NC		NC		NC		NC	
151	M16	1	max	194.337	7	.171	7	NC		NC		NC		NC	
152			min	-30.264	1	-.027	1	NC		NC		NC		NC	

Envelope Member Section Torsion (Continued)

	Member	Sec		Torque[lb-ft]	lc	Torsion Shear[ksi]	lc	y-y War...	lc	z-z War...	lc	z-Top W...	lc	z-Bot W...	lc
153		2	max	194.337	7	.171	7	NC		NC		NC		NC	
154			min	-30.264	1	-.027	1	NC		NC		NC		NC	
155		3	max	194.337	7	.171	7	NC		NC		NC		NC	
156			min	-30.264	1	-.027	1	NC		NC		NC		NC	
157		4	max	194.337	7	.171	7	NC		NC		NC		NC	
158			min	-30.264	1	-.027	1	NC		NC		NC		NC	
159		5	max	194.337	7	.171	7	NC		NC		NC		NC	
160			min	-30.264	1	-.027	1	NC		NC		NC		NC	
161	M17	1	max	143.718	9	.126	9	NC		NC		NC		NC	
162			min	-2.473	1	-.002	1	NC		NC		NC		NC	
163		2	max	143.718	9	.126	9	NC		NC		NC		NC	
164			min	-2.473	1	-.002	1	NC		NC		NC		NC	
165		3	max	143.718	9	.126	9	NC		NC		NC		NC	
166			min	-2.473	1	-.002	1	NC		NC		NC		NC	
167		4	max	143.718	9	.126	9	NC		NC		NC		NC	
168			min	-2.473	1	-.002	1	NC		NC		NC		NC	
169		5	max	143.718	9	.126	9	NC		NC		NC		NC	
170			min	-2.473	1	-.002	1	NC		NC		NC		NC	
171	M18	1	max	143.718	9	.126	9	NC		NC		NC		NC	
172			min	-2.473	1	-.002	1	NC		NC		NC		NC	
173		2	max	143.718	9	.126	9	NC		NC		NC		NC	
174			min	-2.473	1	-.002	1	NC		NC		NC		NC	
175		3	max	143.718	9	.126	9	NC		NC		NC		NC	
176			min	-2.473	1	-.002	1	NC		NC		NC		NC	
177		4	max	143.718	9	.126	9	NC		NC		NC		NC	
178			min	-2.473	1	-.002	1	NC		NC		NC		NC	
179		5	max	143.718	9	.126	9	NC		NC		NC		NC	
180			min	-2.473	1	-.002	1	NC		NC		NC		NC	
181	M19	1	max	143.718	9	.126	9	NC		NC		NC		NC	
182			min	-2.473	1	-.002	1	NC		NC		NC		NC	
183		2	max	143.718	9	.126	9	NC		NC		NC		NC	
184			min	-2.473	1	-.002	1	NC		NC		NC		NC	
185		3	max	143.718	9	.126	9	NC		NC		NC		NC	
186			min	-2.473	1	-.002	1	NC		NC		NC		NC	
187		4	max	143.718	9	.126	9	NC		NC		NC		NC	
188			min	-2.473	1	-.002	1	NC		NC		NC		NC	
189		5	max	143.718	9	.126	9	NC		NC		NC		NC	
190			min	-2.473	1	-.002	1	NC		NC		NC		NC	
191	M20	1	max	143.718	9	.126	9	NC		NC		NC		NC	
192			min	-2.473	1	-.002	1	NC		NC		NC		NC	
193		2	max	143.718	9	.126	9	NC		NC		NC		NC	
194			min	-2.473	1	-.002	1	NC		NC		NC		NC	
195		3	max	143.718	9	.126	9	NC		NC		NC		NC	
196			min	-2.473	1	-.002	1	NC		NC		NC		NC	
197		4	max	143.718	9	.126	9	NC		NC		NC		NC	
198			min	-2.473	1	-.002	1	NC		NC		NC		NC	
199		5	max	143.718	9	.126	9	NC		NC		NC		NC	
200			min	-2.473	1	-.002	1	NC		NC		NC		NC	
201	M21	1	max	143.718	9	.126	9	NC		NC		NC		NC	
202			min	-2.473	1	-.002	1	NC		NC		NC		NC	
203		2	max	143.718	9	.126	9	NC		NC		NC		NC	
204			min	-2.473	1	-.002	1	NC		NC		NC		NC	
205		3	max	143.718	9	.126	9	NC		NC		NC		NC	
206			min	-2.473	1	-.002	1	NC		NC		NC		NC	
207		4	max	143.718	9	.126	9	NC		NC		NC		NC	
208			min	-2.473	1	-.002	1	NC		NC		NC		NC	
209		5	max	143.718	9	.126	9	NC		NC		NC		NC	
210			min	-2.473	1	-.002	1	NC		NC		NC		NC	
211	M22	1	max	143.718	9	.126	9	NC		NC		NC		NC	

Envelope Member Section Torsion (Continued)

	Member	Sec		Torque[lb-ft]	lc	Torsion Shear[ksi]	lc	y-y War...	lc	z-z War...	lc	z-Top W...	lc	z-Bot W...	lc
212			min	-2.473	1	-.002	1	NC		NC		NC		NC	
213		2	max	143.718	9	.126	9	NC		NC		NC		NC	
214			min	-2.473	1	-.002	1	NC		NC		NC		NC	
215		3	max	143.718	9	.126	9	NC		NC		NC		NC	
216			min	-2.473	1	-.002	1	NC		NC		NC		NC	
217		4	max	143.718	9	.126	9	NC		NC		NC		NC	
218			min	-2.473	1	-.002	1	NC		NC		NC		NC	
219		5	max	143.718	9	.126	9	NC		NC		NC		NC	
220			min	-2.473	1	-.002	1	NC		NC		NC		NC	
221	M23	1	max	143.718	9	.126	9	NC		NC		NC		NC	
222			min	-2.473	1	-.002	1	NC		NC		NC		NC	
223		2	max	143.718	9	.126	9	NC		NC		NC		NC	
224			min	-2.473	1	-.002	1	NC		NC		NC		NC	
225		3	max	143.718	9	.126	9	NC		NC		NC		NC	
226			min	-2.473	1	-.002	1	NC		NC		NC		NC	
227		4	max	143.718	9	.126	9	NC		NC		NC		NC	
228			min	-2.473	1	-.002	1	NC		NC		NC		NC	
229		5	max	143.718	9	.126	9	NC		NC		NC		NC	
230			min	-2.473	1	-.002	1	NC		NC		NC		NC	
231	M24	1	max	143.718	9	.126	9	NC		NC		NC		NC	
232			min	-2.473	1	-.002	1	NC		NC		NC		NC	
233		2	max	143.718	9	.126	9	NC		NC		NC		NC	
234			min	-2.473	1	-.002	1	NC		NC		NC		NC	
235		3	max	143.718	9	.126	9	NC		NC		NC		NC	
236			min	-2.473	1	-.002	1	NC		NC		NC		NC	
237		4	max	143.718	9	.126	9	NC		NC		NC		NC	
238			min	-2.473	1	-.002	1	NC		NC		NC		NC	
239		5	max	143.718	9	.126	9	NC		NC		NC		NC	
240			min	-2.473	1	-.002	1	NC		NC		NC		NC	
241	M25	1	max	143.718	9	.126	9	NC		NC		NC		NC	
242			min	-2.473	1	-.002	1	NC		NC		NC		NC	
243		2	max	143.718	9	.126	9	NC		NC		NC		NC	
244			min	-2.473	1	-.002	1	NC		NC		NC		NC	
245		3	max	143.718	9	.126	9	NC		NC		NC		NC	
246			min	-2.473	1	-.002	1	NC		NC		NC		NC	
247		4	max	143.718	9	.126	9	NC		NC		NC		NC	
248			min	-2.473	1	-.002	1	NC		NC		NC		NC	
249		5	max	143.718	9	.126	9	NC		NC		NC		NC	
250			min	-2.473	1	-.002	1	NC		NC		NC		NC	
251	M26	1	max	143.718	9	.126	9	NC		NC		NC		NC	
252			min	-2.473	1	-.002	1	NC		NC		NC		NC	
253		2	max	143.718	9	.126	9	NC		NC		NC		NC	
254			min	-2.473	1	-.002	1	NC		NC		NC		NC	
255		3	max	143.718	9	.126	9	NC		NC		NC		NC	
256			min	-2.473	1	-.002	1	NC		NC		NC		NC	
257		4	max	143.718	9	.126	9	NC		NC		NC		NC	
258			min	-2.473	1	-.002	1	NC		NC		NC		NC	
259		5	max	143.718	9	.126	9	NC		NC		NC		NC	
260			min	-2.473	1	-.002	1	NC		NC		NC		NC	
261	M27	1	max	143.718	9	.126	9	NC		NC		NC		NC	
262			min	-2.473	1	-.002	1	NC		NC		NC		NC	
263		2	max	143.718	9	.126	9	NC		NC		NC		NC	
264			min	-2.473	1	-.002	1	NC		NC		NC		NC	
265		3	max	143.718	9	.126	9	NC		NC		NC		NC	
266			min	-2.473	1	-.002	1	NC		NC		NC		NC	
267		4	max	143.718	9	.126	9	NC		NC		NC		NC	
268			min	-2.473	1	-.002	1	NC		NC		NC		NC	
269		5	max	143.718	9	.126	9	NC		NC		NC		NC	
270			min	-2.473	1	-.002	1	NC		NC		NC		NC	

Envelope Member Section Torsion (Continued)

	Member	Sec		Torque[lb-ft]	lc	Torsion Shear[ksi]	lc	y-y War...	lc	z-z War...	lc	z-Top W...	lc	z-Bot W...	lc
271	M28	1	max	143.718	9	.126	9	NC		NC		NC		NC	
272			min	-2.473	1	-.002	1	NC		NC		NC		NC	
273		2	max	143.718	9	.126	9	NC		NC		NC		NC	
274			min	-2.473	1	-.002	1	NC		NC		NC		NC	
275		3	max	143.718	9	.126	9	NC		NC		NC		NC	
276			min	-2.473	1	-.002	1	NC		NC		NC		NC	
277		4	max	143.718	9	.126	9	NC		NC		NC		NC	
278			min	-2.473	1	-.002	1	NC		NC		NC		NC	
279		5	max	143.718	9	.126	9	NC		NC		NC		NC	
280			min	-2.473	1	-.002	1	NC		NC		NC		NC	
281	M29	1	max	143.718	9	.126	9	NC		NC		NC		NC	
282			min	-2.473	1	-.002	1	NC		NC		NC		NC	
283		2	max	143.718	9	.126	9	NC		NC		NC		NC	
284			min	-2.473	1	-.002	1	NC		NC		NC		NC	
285		3	max	143.718	9	.126	9	NC		NC		NC		NC	
286			min	-2.473	1	-.002	1	NC		NC		NC		NC	
287		4	max	143.718	9	.126	9	NC		NC		NC		NC	
288			min	-2.473	1	-.002	1	NC		NC		NC		NC	
289		5	max	143.718	9	.126	9	NC		NC		NC		NC	
290			min	-2.473	1	-.002	1	NC		NC		NC		NC	
291	M30	1	max	143.718	9	.126	9	NC		NC		NC		NC	
292			min	-2.473	1	-.002	1	NC		NC		NC		NC	
293		2	max	143.718	9	.126	9	NC		NC		NC		NC	
294			min	-2.473	1	-.002	1	NC		NC		NC		NC	
295		3	max	143.718	9	.126	9	NC		NC		NC		NC	
296			min	-2.473	1	-.002	1	NC		NC		NC		NC	
297		4	max	143.718	9	.126	9	NC		NC		NC		NC	
298			min	-2.473	1	-.002	1	NC		NC		NC		NC	
299		5	max	143.718	9	.126	9	NC		NC		NC		NC	
300			min	-2.473	1	-.002	1	NC		NC		NC		NC	
301	M31	1	max	143.718	9	.126	9	NC		NC		NC		NC	
302			min	-2.473	1	-.002	1	NC		NC		NC		NC	
303		2	max	143.718	9	.126	9	NC		NC		NC		NC	
304			min	-2.473	1	-.002	1	NC		NC		NC		NC	
305		3	max	143.718	9	.126	9	NC		NC		NC		NC	
306			min	-2.473	1	-.002	1	NC		NC		NC		NC	
307		4	max	143.718	9	.126	9	NC		NC		NC		NC	
308			min	-2.473	1	-.002	1	NC		NC		NC		NC	
309		5	max	143.718	9	.126	9	NC		NC		NC		NC	
310			min	-2.473	1	-.002	1	NC		NC		NC		NC	
311	M32	1	max	143.718	9	.126	9	NC		NC		NC		NC	
312			min	-2.473	1	-.002	1	NC		NC		NC		NC	
313		2	max	143.718	9	.126	9	NC		NC		NC		NC	
314			min	-2.473	1	-.002	1	NC		NC		NC		NC	
315		3	max	143.718	9	.126	9	NC		NC		NC		NC	
316			min	-2.473	1	-.002	1	NC		NC		NC		NC	
317		4	max	143.718	9	.126	9	NC		NC		NC		NC	
318			min	-2.473	1	-.002	1	NC		NC		NC		NC	
319		5	max	143.718	9	.126	9	NC		NC		NC		NC	
320			min	-2.473	1	-.002	1	NC		NC		NC		NC	
321	M33	1	max	48.749	1	.043	1	NC		NC		NC		NC	
322			min	-2137.839	5	-1.876	5	NC		NC		NC		NC	
323		2	max	48.749	1	.043	1	NC		NC		NC		NC	
324			min	-2137.839	5	-1.876	5	NC		NC		NC		NC	
325		3	max	48.749	1	.043	1	NC		NC		NC		NC	
326			min	-2137.839	5	-1.876	5	NC		NC		NC		NC	
327		4	max	48.749	1	.043	1	NC		NC		NC		NC	
328			min	-2137.839	5	-1.876	5	NC		NC		NC		NC	
329		5	max	48.749	1	.043	1	NC		NC		NC		NC	

Envelope Member Section Torsion (Continued)

	Member	Sec		Torque[lb-ft]	lc	Torsion Shear[ksi]	lc	y-y War...	lc	z-z War...	lc	z-Top W...	lc	z-Bot W...	lc
330			min	-2137.839	5	-1.876	5	NC		NC		NC		NC	
331	M34	1	max	51.442	1	.045	1	NC		NC		NC		NC	
332			min	-2221.965	5	-1.95	5	NC		NC		NC		NC	
333		2	max	51.442	1	.045	1	NC		NC		NC		NC	
334			min	-2221.965	5	-1.95	5	NC		NC		NC		NC	
335		3	max	51.442	1	.045	1	NC		NC		NC		NC	
336			min	-2221.965	5	-1.95	5	NC		NC		NC		NC	
337		4	max	51.442	1	.045	1	NC		NC		NC		NC	
338			min	-2221.965	5	-1.95	5	NC		NC		NC		NC	
339		5	max	51.442	1	.045	1	NC		NC		NC		NC	
340			min	-2221.965	5	-1.95	5	NC		NC		NC		NC	
341	M35	1	max	44.375	1	.039	1	NC		NC		NC		NC	
342			min	-1977.374	5	-1.735	5	NC		NC		NC		NC	
343		2	max	44.375	1	.039	1	NC		NC		NC		NC	
344			min	-1977.374	5	-1.735	5	NC		NC		NC		NC	
345		3	max	44.375	1	.039	1	NC		NC		NC		NC	
346			min	-1977.374	5	-1.735	5	NC		NC		NC		NC	
347		4	max	44.375	1	.039	1	NC		NC		NC		NC	
348			min	-1977.374	5	-1.735	5	NC		NC		NC		NC	
349		5	max	44.375	1	.039	1	NC		NC		NC		NC	
350			min	-1977.374	5	-1.735	5	NC		NC		NC		NC	
351	M36	1	max	23.427	1	.021	1	NC		NC		NC		NC	
352			min	-1241.477	5	-1.09	5	NC		NC		NC		NC	
353		2	max	23.427	1	.021	1	NC		NC		NC		NC	
354			min	-1241.477	5	-1.09	5	NC		NC		NC		NC	
355		3	max	23.427	1	.021	1	NC		NC		NC		NC	
356			min	-1241.477	5	-1.09	5	NC		NC		NC		NC	
357		4	max	23.427	1	.021	1	NC		NC		NC		NC	
358			min	-1241.477	5	-1.09	5	NC		NC		NC		NC	
359		5	max	23.427	1	.021	1	NC		NC		NC		NC	
360			min	-1241.477	5	-1.09	5	NC		NC		NC		NC	
361	M37	1	max	9.129	1	.008	1	NC		NC		NC		NC	
362			min	-815.145	4	-.715	4	NC		NC		NC		NC	
363		2	max	9.129	1	.008	1	NC		NC		NC		NC	
364			min	-815.145	4	-.715	4	NC		NC		NC		NC	
365		3	max	9.129	1	.008	1	NC		NC		NC		NC	
366			min	-815.145	4	-.715	4	NC		NC		NC		NC	
367		4	max	9.129	1	.008	1	NC		NC		NC		NC	
368			min	-815.145	4	-.715	4	NC		NC		NC		NC	
369		5	max	9.129	1	.008	1	NC		NC		NC		NC	
370			min	-815.145	4	-.715	4	NC		NC		NC		NC	
371	M41	1	max	-4.957	1	-.004	1	NC		NC		NC		NC	
372			min	-1093.594	8	-.96	8	NC		NC		NC		NC	
373		2	max	-4.957	1	-.004	1	NC		NC		NC		NC	
374			min	-1093.594	8	-.96	8	NC		NC		NC		NC	
375		3	max	-4.957	1	-.004	1	NC		NC		NC		NC	
376			min	-1093.594	8	-.96	8	NC		NC		NC		NC	
377		4	max	-4.957	1	-.004	1	NC		NC		NC		NC	
378			min	-1093.594	8	-.96	8	NC		NC		NC		NC	
379		5	max	-4.957	1	-.004	1	NC		NC		NC		NC	
380			min	-1093.594	8	-.96	8	NC		NC		NC		NC	
381	M42	1	max	1534.063	5	1.346	5	NC		NC		NC		NC	
382			min	-58.505	1	-.051	1	NC		NC		NC		NC	
383		2	max	1534.063	5	1.346	5	NC		NC		NC		NC	
384			min	-58.505	1	-.051	1	NC		NC		NC		NC	
385		3	max	1534.063	5	1.346	5	NC		NC		NC		NC	
386			min	-58.505	1	-.051	1	NC		NC		NC		NC	
387		4	max	1534.063	5	1.346	5	NC		NC		NC		NC	
388			min	-58.505	1	-.051	1	NC		NC		NC		NC	

Envelope Member Section Torsion (Continued)

	Member	Sec		Torque[lb-ft]	lc	Torsion Shear[ksi]	lc	y-y War...	lc	z-z War...	lc	z-Top W...	lc	z-Bot W...	lc
389		5	max	1534.063	5	1.346	5	NC		NC		NC		NC	
390			min	58.505	1	.051	1	NC		NC		NC		NC	
391	M43	1	max	1334.009	5	1.171	5	NC		NC		NC		NC	
392			min	55.531	1	.049	1	NC		NC		NC		NC	
393		2	max	1334.009	5	1.171	5	NC		NC		NC		NC	
394			min	55.531	1	.049	1	NC		NC		NC		NC	
395		3	max	1334.009	5	1.171	5	NC		NC		NC		NC	
396			min	55.531	1	.049	1	NC		NC		NC		NC	
397		4	max	1334.009	5	1.171	5	NC		NC		NC		NC	
398			min	55.531	1	.049	1	NC		NC		NC		NC	
399		5	max	1334.009	5	1.171	5	NC		NC		NC		NC	
400			min	55.531	1	.049	1	NC		NC		NC		NC	
401	M44	1	max	757.587	5	.665	5	NC		NC		NC		NC	
402			min	-67.381	4	-.059	4	NC		NC		NC		NC	
403		2	max	757.587	5	.665	5	NC		NC		NC		NC	
404			min	-67.381	4	-.059	4	NC		NC		NC		NC	
405		3	max	757.587	5	.665	5	NC		NC		NC		NC	
406			min	-67.381	4	-.059	4	NC		NC		NC		NC	
407		4	max	757.587	5	.665	5	NC		NC		NC		NC	
408			min	-67.381	4	-.059	4	NC		NC		NC		NC	
409		5	max	757.587	5	.665	5	NC		NC		NC		NC	
410			min	-67.381	4	-.059	4	NC		NC		NC		NC	
411	M45	1	max	110.806	9	.097	9	NC		NC		NC		NC	
412			min	-362.073	6	-.318	6	NC		NC		NC		NC	
413		2	max	110.806	9	.097	9	NC		NC		NC		NC	
414			min	-362.073	6	-.318	6	NC		NC		NC		NC	
415		3	max	110.806	9	.097	9	NC		NC		NC		NC	
416			min	-362.073	6	-.318	6	NC		NC		NC		NC	
417		4	max	110.806	9	.097	9	NC		NC		NC		NC	
418			min	-362.073	6	-.318	6	NC		NC		NC		NC	
419		5	max	110.806	9	.097	9	NC		NC		NC		NC	
420			min	-362.073	6	-.318	6	NC		NC		NC		NC	
421	M46	1	max	-2.525	1	-.002	1	NC		NC		NC		NC	
422			min	-494.567	2	-.434	2	NC		NC		NC		NC	
423		2	max	-2.525	1	-.002	1	NC		NC		NC		NC	
424			min	-494.567	2	-.434	2	NC		NC		NC		NC	
425		3	max	-2.525	1	-.002	1	NC		NC		NC		NC	
426			min	-494.567	2	-.434	2	NC		NC		NC		NC	
427		4	max	-2.525	1	-.002	1	NC		NC		NC		NC	
428			min	-494.567	2	-.434	2	NC		NC		NC		NC	
429		5	max	-2.525	1	-.002	1	NC		NC		NC		NC	
430			min	-494.567	2	-.434	2	NC		NC		NC		NC	
431	M49	1	max	-15.143	1	-.013	1	NC		NC		NC		NC	
432			min	-1474.961	8	-1.294	8	NC		NC		NC		NC	
433		2	max	-15.143	1	-.013	1	NC		NC		NC		NC	
434			min	-1474.961	8	-1.294	8	NC		NC		NC		NC	
435		3	max	-15.143	1	-.013	1	NC		NC		NC		NC	
436			min	-1474.961	8	-1.294	8	NC		NC		NC		NC	
437		4	max	-15.143	1	-.013	1	NC		NC		NC		NC	
438			min	-1474.961	8	-1.294	8	NC		NC		NC		NC	
439		5	max	-15.143	1	-.013	1	NC		NC		NC		NC	
440			min	-1474.961	8	-1.294	8	NC		NC		NC		NC	
441	M50	1	max	-15.143	1	-.013	1	NC		NC		NC		NC	
442			min	-1474.961	8	-1.294	8	NC		NC		NC		NC	
443		2	max	-15.143	1	-.013	1	NC		NC		NC		NC	
444			min	-1474.961	8	-1.294	8	NC		NC		NC		NC	
445		3	max	-15.143	1	-.013	1	NC		NC		NC		NC	
446			min	-1474.961	8	-1.294	8	NC		NC		NC		NC	
447		4	max	-15.143	1	-.013	1	NC		NC		NC		NC	

Envelope Member Section Torsion (Continued)

	Member	Sec		Torque[lb-ft]	lc	Torsion Shear[ksi]	lc	y-y War...	lc	z-z War...	lc	z-Top W...	lc	z-Bot W...	lc
448			min	-1474.961	8	-1.294	8	NC		NC		NC		NC	
449		5	max	-15.143	1	-.013	1	NC		NC		NC		NC	
450			min	-1474.961	8	-1.294	8	NC		NC		NC		NC	
451	M51	1	max	143.718	9	.126	9	NC		NC		NC		NC	
452			min	-2.473	1	-.002	1	NC		NC		NC		NC	
453		2	max	143.718	9	.126	9	NC		NC		NC		NC	
454			min	-2.473	1	-.002	1	NC		NC		NC		NC	
455		3	max	143.718	9	.126	9	NC		NC		NC		NC	
456			min	-2.473	1	-.002	1	NC		NC		NC		NC	
457		4	max	143.718	9	.126	9	NC		NC		NC		NC	
458			min	-2.473	1	-.002	1	NC		NC		NC		NC	
459		5	max	143.718	9	.126	9	NC		NC		NC		NC	
460			min	-2.473	1	-.002	1	NC		NC		NC		NC	
461	M52	1	max	-9.479	1	-.008	1	NC		NC		NC		NC	
462			min	-248.425	4	-.218	4	NC		NC		NC		NC	
463		2	max	-9.479	1	-.008	1	NC		NC		NC		NC	
464			min	-248.425	4	-.218	4	NC		NC		NC		NC	
465		3	max	-9.479	1	-.008	1	NC		NC		NC		NC	
466			min	-248.425	4	-.218	4	NC		NC		NC		NC	
467		4	max	-9.479	1	-.008	1	NC		NC		NC		NC	
468			min	-248.425	4	-.218	4	NC		NC		NC		NC	
469		5	max	-9.479	1	-.008	1	NC		NC		NC		NC	
470			min	-248.425	4	-.218	4	NC		NC		NC		NC	
471	M54	1	max	-9.479	1	-.008	1	NC		NC		NC		NC	
472			min	-248.425	4	-.218	4	NC		NC		NC		NC	
473		2	max	-9.479	1	-.008	1	NC		NC		NC		NC	
474			min	-248.425	4	-.218	4	NC		NC		NC		NC	
475		3	max	-9.479	1	-.008	1	NC		NC		NC		NC	
476			min	-248.425	4	-.218	4	NC		NC		NC		NC	
477		4	max	-9.479	1	-.008	1	NC		NC		NC		NC	
478			min	-248.425	4	-.218	4	NC		NC		NC		NC	
479		5	max	-9.479	1	-.008	1	NC		NC		NC		NC	
480			min	-248.425	4	-.218	4	NC		NC		NC		NC	
481	M55	1	max	-9.479	1	-.008	1	NC		NC		NC		NC	
482			min	-248.425	4	-.218	4	NC		NC		NC		NC	
483		2	max	-9.479	1	-.008	1	NC		NC		NC		NC	
484			min	-248.425	4	-.218	4	NC		NC		NC		NC	
485		3	max	-9.479	1	-.008	1	NC		NC		NC		NC	
486			min	-248.425	4	-.218	4	NC		NC		NC		NC	
487		4	max	-9.479	1	-.008	1	NC		NC		NC		NC	
488			min	-248.425	4	-.218	4	NC		NC		NC		NC	
489		5	max	-9.479	1	-.008	1	NC		NC		NC		NC	
490			min	-248.425	4	-.218	4	NC		NC		NC		NC	
491	M56	1	max	107.161	7	.09	7	NC		NC		NC		NC	
492			min	-1.664	1	-.001	1	NC		NC		NC		NC	
493		2	max	107.161	7	.09	7	NC		NC		NC		NC	
494			min	-1.664	1	-.001	1	NC		NC		NC		NC	
495		3	max	107.161	7	.09	7	NC		NC		NC		NC	
496			min	-1.664	1	-.001	1	NC		NC		NC		NC	
497		4	max	107.161	7	.09	7	NC		NC		NC		NC	
498			min	-1.664	1	-.001	1	NC		NC		NC		NC	
499		5	max	107.161	7	.09	7	NC		NC		NC		NC	
500			min	-1.664	1	-.001	1	NC		NC		NC		NC	
501	M57	1	max	150.56	7	.126	7	NC		NC		NC		NC	
502			min	-2.198	1	-.002	1	NC		NC		NC		NC	
503		2	max	150.56	7	.126	7	NC		NC		NC		NC	
504			min	-2.198	1	-.002	1	NC		NC		NC		NC	
505		3	max	150.56	7	.126	7	NC		NC		NC		NC	
506			min	-2.198	1	-.002	1	NC		NC		NC		NC	

Envelope Member Section Torsion (Continued)

	Member	Sec		Torque[lb-ft]	lc	Torsion Shear[ksi]	lc	y-y War...	lc	z-z War...	lc	z-Top W...	lc	z-Bot W...	lc
507		4	max	150.56	7	.126	7	NC		NC		NC		NC	
508			min	-2.198	1	-.002	1	NC		NC		NC		NC	
509		5	max	150.56	7	.126	7	NC		NC		NC		NC	
510			min	-2.198	1	-.002	1	NC		NC		NC		NC	
511	M58	1	max	-29.376	1	-.026	1	NC		NC		NC		NC	
512			min	-177.654	4	-.156	4	NC		NC		NC		NC	
513		2	max	-29.376	1	-.026	1	NC		NC		NC		NC	
514			min	-177.654	4	-.156	4	NC		NC		NC		NC	
515		3	max	-29.376	1	-.026	1	NC		NC		NC		NC	
516			min	-177.654	4	-.156	4	NC		NC		NC		NC	
517		4	max	-29.376	1	-.026	1	NC		NC		NC		NC	
518			min	-177.654	4	-.156	4	NC		NC		NC		NC	
519		5	max	-29.376	1	-.026	1	NC		NC		NC		NC	
520			min	-177.654	4	-.156	4	NC		NC		NC		NC	
521	M59	1	max	-3.065	1	-.003	1	NC		NC		NC		NC	
522			min	-742.305	2	-.651	2	NC		NC		NC		NC	
523		2	max	-3.065	1	-.003	1	NC		NC		NC		NC	
524			min	-742.305	2	-.651	2	NC		NC		NC		NC	
525		3	max	-3.065	1	-.003	1	NC		NC		NC		NC	
526			min	-742.305	2	-.651	2	NC		NC		NC		NC	
527		4	max	-3.065	1	-.003	1	NC		NC		NC		NC	
528			min	-742.305	2	-.651	2	NC		NC		NC		NC	
529		5	max	-3.065	1	-.003	1	NC		NC		NC		NC	
530			min	-742.305	2	-.651	2	NC		NC		NC		NC	
531	M60	1	max	14.744	1	.013	1	NC		NC		NC		NC	
532			min	-878.727	3	-.771	3	NC		NC		NC		NC	
533		2	max	14.744	1	.013	1	NC		NC		NC		NC	
534			min	-878.727	3	-.771	3	NC		NC		NC		NC	
535		3	max	14.744	1	.013	1	NC		NC		NC		NC	
536			min	-878.727	3	-.771	3	NC		NC		NC		NC	
537		4	max	14.744	1	.013	1	NC		NC		NC		NC	
538			min	-878.727	3	-.771	3	NC		NC		NC		NC	
539		5	max	14.744	1	.013	1	NC		NC		NC		NC	
540			min	-878.727	3	-.771	3	NC		NC		NC		NC	
541	M61	1	max	237.08	2	.208	2	NC		NC		NC		NC	
542			min	-1054.505	3	-.925	3	NC		NC		NC		NC	
543		2	max	237.08	2	.208	2	NC		NC		NC		NC	
544			min	-1054.505	3	-.925	3	NC		NC		NC		NC	
545		3	max	237.08	2	.208	2	NC		NC		NC		NC	
546			min	-1054.505	3	-.925	3	NC		NC		NC		NC	
547		4	max	237.08	2	.208	2	NC		NC		NC		NC	
548			min	-1054.505	3	-.925	3	NC		NC		NC		NC	
549		5	max	237.08	2	.208	2	NC		NC		NC		NC	
550			min	-1054.505	3	-.925	3	NC		NC		NC		NC	
551	M62	1	max	943.975	2	.828	2	NC		NC		NC		NC	
552			min	-1014.902	3	-.891	3	NC		NC		NC		NC	
553		2	max	943.975	2	.828	2	NC		NC		NC		NC	
554			min	-1014.902	3	-.891	3	NC		NC		NC		NC	
555		3	max	943.975	2	.828	2	NC		NC		NC		NC	
556			min	-1014.902	3	-.891	3	NC		NC		NC		NC	
557		4	max	943.975	2	.828	2	NC		NC		NC		NC	
558			min	-1014.902	3	-.891	3	NC		NC		NC		NC	
559		5	max	943.975	2	.828	2	NC		NC		NC		NC	
560			min	-1014.902	3	-.891	3	NC		NC		NC		NC	
561	M63	1	max	1057.785	2	.928	2	NC		NC		NC		NC	
562			min	-1026.168	3	-.901	3	NC		NC		NC		NC	
563		2	max	1057.785	2	.928	2	NC		NC		NC		NC	
564			min	-1026.168	3	-.901	3	NC		NC		NC		NC	
565		3	max	1057.785	2	.928	2	NC		NC		NC		NC	

Envelope Member Section Torsion (Continued)

	Member	Sec		Torque[lb-ft]	lc	Torsion Shear[ksi]	lc	y-y War...	lc	z-z War...	lc	z-Top W...	lc	z-Bot W...	lc
566			min	-1026.168	3	-.901	3	NC		NC		NC		NC	
567		4	max	1057.785	2	.928	2	NC		NC		NC		NC	
568			min	-1026.168	3	-.901	3	NC		NC		NC		NC	
569		5	max	1057.785	2	.928	2	NC		NC		NC		NC	
570			min	-1026.168	3	-.901	3	NC		NC		NC		NC	
571	M64	1	max	1017.137	2	.893	2	NC		NC		NC		NC	
572			min	-1043.986	3	-.916	3	NC		NC		NC		NC	
573		2	max	1017.137	2	.893	2	NC		NC		NC		NC	
574			min	-1043.986	3	-.916	3	NC		NC		NC		NC	
575		3	max	1017.137	2	.893	2	NC		NC		NC		NC	
576			min	-1043.986	3	-.916	3	NC		NC		NC		NC	
577		4	max	1017.137	2	.893	2	NC		NC		NC		NC	
578			min	-1043.986	3	-.916	3	NC		NC		NC		NC	
579		5	max	1017.137	2	.893	2	NC		NC		NC		NC	
580			min	-1043.986	3	-.916	3	NC		NC		NC		NC	
581	M65	1	max	759.625	2	.667	2	NC		NC		NC		NC	
582			min	-887.393	3	-.779	3	NC		NC		NC		NC	
583		2	max	759.625	2	.667	2	NC		NC		NC		NC	
584			min	-887.393	3	-.779	3	NC		NC		NC		NC	
585		3	max	759.625	2	.667	2	NC		NC		NC		NC	
586			min	-887.393	3	-.779	3	NC		NC		NC		NC	
587		4	max	759.625	2	.667	2	NC		NC		NC		NC	
588			min	-887.393	3	-.779	3	NC		NC		NC		NC	
589		5	max	759.625	2	.667	2	NC		NC		NC		NC	
590			min	-887.393	3	-.779	3	NC		NC		NC		NC	
591	M66	1	max	322.812	2	.283	2	NC		NC		NC		NC	
592			min	-510.599	3	-.448	3	NC		NC		NC		NC	
593		2	max	322.812	2	.283	2	NC		NC		NC		NC	
594			min	-510.599	3	-.448	3	NC		NC		NC		NC	
595		3	max	322.812	2	.283	2	NC		NC		NC		NC	
596			min	-510.599	3	-.448	3	NC		NC		NC		NC	
597		4	max	322.812	2	.283	2	NC		NC		NC		NC	
598			min	-510.599	3	-.448	3	NC		NC		NC		NC	
599		5	max	322.812	2	.283	2	NC		NC		NC		NC	
600			min	-510.599	3	-.448	3	NC		NC		NC		NC	
601	M67	1	max	83.917	5	.074	5	NC		NC		NC		NC	
602			min	-279.9	4	-.246	4	NC		NC		NC		NC	
603		2	max	83.917	5	.074	5	NC		NC		NC		NC	
604			min	-279.9	4	-.246	4	NC		NC		NC		NC	
605		3	max	83.917	5	.074	5	NC		NC		NC		NC	
606			min	-279.9	4	-.246	4	NC		NC		NC		NC	
607		4	max	83.917	5	.074	5	NC		NC		NC		NC	
608			min	-279.9	4	-.246	4	NC		NC		NC		NC	
609		5	max	83.917	5	.074	5	NC		NC		NC		NC	
610			min	-279.9	4	-.246	4	NC		NC		NC		NC	
611	M68	1	max	252.73	4	.212	4	NC		NC		NC		NC	
612			min	-6.224	1	-.005	1	NC		NC		NC		NC	
613		2	max	252.73	4	.212	4	NC		NC		NC		NC	
614			min	-6.224	1	-.005	1	NC		NC		NC		NC	
615		3	max	252.73	4	.212	4	NC		NC		NC		NC	
616			min	-6.224	1	-.005	1	NC		NC		NC		NC	
617		4	max	252.73	4	.212	4	NC		NC		NC		NC	
618			min	-6.224	1	-.005	1	NC		NC		NC		NC	
619		5	max	315.326	9	.264	9	NC		NC		NC		NC	
620			min	-6.112	1	-.005	1	NC		NC		NC		NC	
621	M69	1	max	249.038	9	.208	9	NC		NC		NC		NC	
622			min	-3.811	1	-.003	1	NC		NC		NC		NC	
623		2	max	249.038	9	.208	9	NC		NC		NC		NC	
624			min	-3.811	1	-.003	1	NC		NC		NC		NC	

Envelope Member Section Torsion (Continued)

	Member	Sec		Torque[lb-ft]	lc	Torsion Shear[ksi]	lc	y-y War...	lc	z-z War...	lc	z-Top W...	lc	z-Bot W...	lc
625		3	max	249.038	9	.208	9	NC		NC		NC		NC	
626			min	-3.811	1	-.003	1	NC		NC		NC		NC	
627		4	max	249.038	9	.208	9	NC		NC		NC		NC	
628			min	-3.811	1	-.003	1	NC		NC		NC		NC	
629		5	max	249.038	9	.208	9	NC		NC		NC		NC	
630			min	-3.811	1	-.003	1	NC		NC		NC		NC	
631	M70	1	max	-29.376	1	-.026	1	NC		NC		NC		NC	
632			min	-177.654	4	-.156	4	NC		NC		NC		NC	
633		2	max	-29.376	1	-.026	1	NC		NC		NC		NC	
634			min	-177.654	4	-.156	4	NC		NC		NC		NC	
635		3	max	-29.376	1	-.026	1	NC		NC		NC		NC	
636			min	-177.654	4	-.156	4	NC		NC		NC		NC	
637		4	max	-29.376	1	-.026	1	NC		NC		NC		NC	
638			min	-177.654	4	-.156	4	NC		NC		NC		NC	
639		5	max	-29.376	1	-.026	1	NC		NC		NC		NC	
640			min	-177.654	4	-.156	4	NC		NC		NC		NC	
641	M71	1	max	16.044	1	.014	1	NC		NC		NC		NC	
642			min	-318.328	6	-.279	6	NC		NC		NC		NC	
643		2	max	16.044	1	.014	1	NC		NC		NC		NC	
644			min	-318.328	6	-.279	6	NC		NC		NC		NC	
645		3	max	16.044	1	.014	1	NC		NC		NC		NC	
646			min	-318.328	6	-.279	6	NC		NC		NC		NC	
647		4	max	16.044	1	.014	1	NC		NC		NC		NC	
648			min	-318.328	6	-.279	6	NC		NC		NC		NC	
649		5	max	16.044	1	.014	1	NC		NC		NC		NC	
650			min	-318.328	6	-.279	6	NC		NC		NC		NC	
651	M72	1	max	143.718	9	.126	9	NC		NC		NC		NC	
652			min	-2.473	1	-.002	1	NC		NC		NC		NC	
653		2	max	143.718	9	.126	9	NC		NC		NC		NC	
654			min	-2.473	1	-.002	1	NC		NC		NC		NC	
655		3	max	143.718	9	.126	9	NC		NC		NC		NC	
656			min	-2.473	1	-.002	1	NC		NC		NC		NC	
657		4	max	143.718	9	.126	9	NC		NC		NC		NC	
658			min	-2.473	1	-.002	1	NC		NC		NC		NC	
659		5	max	143.718	9	.126	9	NC		NC		NC		NC	
660			min	-2.473	1	-.002	1	NC		NC		NC		NC	
661	M73	1	max	143.718	9	.126	9	NC		NC		NC		NC	
662			min	-2.473	1	-.002	1	NC		NC		NC		NC	
663		2	max	143.718	9	.126	9	NC		NC		NC		NC	
664			min	-2.473	1	-.002	1	NC		NC		NC		NC	
665		3	max	143.718	9	.126	9	NC		NC		NC		NC	
666			min	-2.473	1	-.002	1	NC		NC		NC		NC	
667		4	max	143.718	9	.126	9	NC		NC		NC		NC	
668			min	-2.473	1	-.002	1	NC		NC		NC		NC	
669		5	max	143.718	9	.126	9	NC		NC		NC		NC	
670			min	-2.473	1	-.002	1	NC		NC		NC		NC	
671	M74	1	max	143.718	9	.126	9	NC		NC		NC		NC	
672			min	-2.473	1	-.002	1	NC		NC		NC		NC	
673		2	max	143.718	9	.126	9	NC		NC		NC		NC	
674			min	-2.473	1	-.002	1	NC		NC		NC		NC	
675		3	max	143.718	9	.126	9	NC		NC		NC		NC	
676			min	-2.473	1	-.002	1	NC		NC		NC		NC	
677		4	max	143.718	9	.126	9	NC		NC		NC		NC	
678			min	-2.473	1	-.002	1	NC		NC		NC		NC	
679		5	max	143.718	9	.126	9	NC		NC		NC		NC	
680			min	-2.473	1	-.002	1	NC		NC		NC		NC	
681	M75	1	max	143.718	9	.126	9	NC		NC		NC		NC	
682			min	-2.473	1	-.002	1	NC		NC		NC		NC	
683		2	max	143.718	9	.126	9	NC		NC		NC		NC	

Envelope Member Section Torsion (Continued)

	Member	Sec		Torque[lb-ft]	lc	Torsion Shear[ksi]	lc	y-y War...	lc	z-z War...	lc	z-Top W...	lc	z-Bot W...	lc
684			min	-2.473	1	-.002	1	NC		NC		NC		NC	
685		3	max	143.718	9	.126	9	NC		NC		NC		NC	
686			min	-2.473	1	-.002	1	NC		NC		NC		NC	
687		4	max	143.718	9	.126	9	NC		NC		NC		NC	
688			min	-2.473	1	-.002	1	NC		NC		NC		NC	
689		5	max	143.718	9	.126	9	NC		NC		NC		NC	
690			min	-2.473	1	-.002	1	NC		NC		NC		NC	
691	M76	1	max	143.718	9	.126	9	NC		NC		NC		NC	
692			min	-2.473	1	-.002	1	NC		NC		NC		NC	
693		2	max	143.718	9	.126	9	NC		NC		NC		NC	
694			min	-2.473	1	-.002	1	NC		NC		NC		NC	
695		3	max	143.718	9	.126	9	NC		NC		NC		NC	
696			min	-2.473	1	-.002	1	NC		NC		NC		NC	
697		4	max	143.718	9	.126	9	NC		NC		NC		NC	
698			min	-2.473	1	-.002	1	NC		NC		NC		NC	
699		5	max	143.718	9	.126	9	NC		NC		NC		NC	
700			min	-2.473	1	-.002	1	NC		NC		NC		NC	
701	M77	1	max	9.129	1	.008	1	NC		NC		NC		NC	
702			min	-815.145	4	-.715	4	NC		NC		NC		NC	
703		2	max	9.129	1	.008	1	NC		NC		NC		NC	
704			min	-815.145	4	-.715	4	NC		NC		NC		NC	
705		3	max	9.129	1	.008	1	NC		NC		NC		NC	
706			min	-815.145	4	-.715	4	NC		NC		NC		NC	
707		4	max	9.129	1	.008	1	NC		NC		NC		NC	
708			min	-815.145	4	-.715	4	NC		NC		NC		NC	
709		5	max	9.129	1	.008	1	NC		NC		NC		NC	
710			min	-815.145	4	-.715	4	NC		NC		NC		NC	
711	M78	1	max	-2.525	1	-.002	1	NC		NC		NC		NC	
712			min	-494.567	2	-.434	2	NC		NC		NC		NC	
713		2	max	-2.525	1	-.002	1	NC		NC		NC		NC	
714			min	-494.567	2	-.434	2	NC		NC		NC		NC	
715		3	max	-2.525	1	-.002	1	NC		NC		NC		NC	
716			min	-494.567	2	-.434	2	NC		NC		NC		NC	
717		4	max	-2.525	1	-.002	1	NC		NC		NC		NC	
718			min	-494.567	2	-.434	2	NC		NC		NC		NC	
719		5	max	-2.525	1	-.002	1	NC		NC		NC		NC	
720			min	-494.567	2	-.434	2	NC		NC		NC		NC	
721	M79	1	max	143.718	9	.126	9	NC		NC		NC		NC	
722			min	-2.473	1	-.002	1	NC		NC		NC		NC	
723		2	max	143.718	9	.126	9	NC		NC		NC		NC	
724			min	-2.473	1	-.002	1	NC		NC		NC		NC	
725		3	max	143.718	9	.126	9	NC		NC		NC		NC	
726			min	-2.473	1	-.002	1	NC		NC		NC		NC	
727		4	max	143.718	9	.126	9	NC		NC		NC		NC	
728			min	-2.473	1	-.002	1	NC		NC		NC		NC	
729		5	max	143.718	9	.126	9	NC		NC		NC		NC	
730			min	-2.473	1	-.002	1	NC		NC		NC		NC	
731	M80	1	max	143.718	9	.126	9	NC		NC		NC		NC	
732			min	-2.473	1	-.002	1	NC		NC		NC		NC	
733		2	max	143.718	9	.126	9	NC		NC		NC		NC	
734			min	-2.473	1	-.002	1	NC		NC		NC		NC	
735		3	max	143.718	9	.126	9	NC		NC		NC		NC	
736			min	-2.473	1	-.002	1	NC		NC		NC		NC	
737		4	max	143.718	9	.126	9	NC		NC		NC		NC	
738			min	-2.473	1	-.002	1	NC		NC		NC		NC	
739		5	max	143.718	9	.126	9	NC		NC		NC		NC	
740			min	-2.473	1	-.002	1	NC		NC		NC		NC	
741	M82	1	max	143.718	9	.126	9	NC		NC		NC		NC	
742			min	-2.473	1	-.002	1	NC		NC		NC		NC	

Envelope Member Section Torsion (Continued)

	Member	Sec		Torque[lb-ft]	lc	Torsion Shear[ksi]	lc	y-y War...	lc	z-z War...	lc	z-Top W...	lc	z-Bot W...	lc
743		2	max	143.718	9	.126	9	NC		NC		NC		NC	
744			min	-2.473	1	-.002	1	NC		NC		NC		NC	
745		3	max	143.718	9	.126	9	NC		NC		NC		NC	
746			min	-2.473	1	-.002	1	NC		NC		NC		NC	
747		4	max	143.718	9	.126	9	NC		NC		NC		NC	
748			min	-2.473	1	-.002	1	NC		NC		NC		NC	
749		5	max	143.718	9	.126	9	NC		NC		NC		NC	
750			min	-2.473	1	-.002	1	NC		NC		NC		NC	
751	M83	1	max	16.044	1	.014	1	NC		NC		NC		NC	
752			min	-318.328	6	-.279	6	NC		NC		NC		NC	
753		2	max	16.044	1	.014	1	NC		NC		NC		NC	
754			min	-318.328	6	-.279	6	NC		NC		NC		NC	
755		3	max	16.044	1	.014	1	NC		NC		NC		NC	
756			min	-318.328	6	-.279	6	NC		NC		NC		NC	
757		4	max	16.044	1	.014	1	NC		NC		NC		NC	
758			min	-318.328	6	-.279	6	NC		NC		NC		NC	
759		5	max	16.044	1	.014	1	NC		NC		NC		NC	
760			min	-318.328	6	-.279	6	NC		NC		NC		NC	
761	M84	1	max	16.044	1	.014	1	NC		NC		NC		NC	
762			min	-318.328	6	-.279	6	NC		NC		NC		NC	
763		2	max	473.093	7	.415	7	NC		NC		NC		NC	
764			min	-6.576	1	-.006	1	NC		NC		NC		NC	
765		3	max	473.093	7	.415	7	NC		NC		NC		NC	
766			min	-6.576	1	-.006	1	NC		NC		NC		NC	
767		4	max	473.093	7	.415	7	NC		NC		NC		NC	
768			min	-6.576	1	-.006	1	NC		NC		NC		NC	
769		5	max	473.093	7	.415	7	NC		NC		NC		NC	
770			min	-6.576	1	-.006	1	NC		NC		NC		NC	
771	M85	1	max	-3.065	1	-.003	1	NC		NC		NC		NC	
772			min	-742.305	2	-.651	2	NC		NC		NC		NC	
773		2	max	-3.065	1	-.003	1	NC		NC		NC		NC	
774			min	-742.305	2	-.651	2	NC		NC		NC		NC	
775		3	max	-3.065	1	-.003	1	NC		NC		NC		NC	
776			min	-742.305	2	-.651	2	NC		NC		NC		NC	
777		4	max	-3.065	1	-.003	1	NC		NC		NC		NC	
778			min	-742.305	2	-.651	2	NC		NC		NC		NC	
779		5	max	-3.065	1	-.003	1	NC		NC		NC		NC	
780			min	-742.305	2	-.651	2	NC		NC		NC		NC	
781	M86	1	max	-3.065	1	-.003	1	NC		NC		NC		NC	
782			min	-742.305	2	-.651	2	NC		NC		NC		NC	
783		2	max	-3.065	1	-.003	1	NC		NC		NC		NC	
784			min	-742.305	2	-.651	2	NC		NC		NC		NC	
785		3	max	-3.065	1	-.003	1	NC		NC		NC		NC	
786			min	-742.305	2	-.651	2	NC		NC		NC		NC	
787		4	max	-3.065	1	-.003	1	NC		NC		NC		NC	
788			min	-742.305	2	-.651	2	NC		NC		NC		NC	
789		5	max	-3.065	1	-.003	1	NC		NC		NC		NC	
790			min	-742.305	2	-.651	2	NC		NC		NC		NC	
791	M87	1	max	315.326	9	.264	9	NC		NC		NC		NC	
792			min	-6.112	1	-.005	1	NC		NC		NC		NC	
793		2	max	315.326	9	.264	9	NC		NC		NC		NC	
794			min	-6.112	1	-.005	1	NC		NC		NC		NC	
795		3	max	315.326	9	.264	9	NC		NC		NC		NC	
796			min	-6.112	1	-.005	1	NC		NC		NC		NC	
797		4	max	315.326	9	.264	9	NC		NC		NC		NC	
798			min	-6.112	1	-.005	1	NC		NC		NC		NC	
799		5	max	315.326	9	.264	9	NC		NC		NC		NC	
800			min	-6.112	1	-.005	1	NC		NC		NC		NC	
801	M88	1	max	-3.065	1	-.003	1	NC		NC		NC		NC	

Envelope Member Section Torsion (Continued)

	Member	Sec		Torquelb-ft	lc	Torsion Shearlksi	lc	y-y War...	lc	z-z War...	lc	z-Top W...	lc	z-Bot W...	lc
802			min	-742.305	2	-.651	2	NC		NC		NC		NC	
803		2	max	-3.065	1	-.003	1	NC		NC		NC		NC	
804			min	-742.305	2	-.651	2	NC		NC		NC		NC	
805		3	max	-3.065	1	-.003	1	NC		NC		NC		NC	
806			min	-742.305	2	-.651	2	NC		NC		NC		NC	
807		4	max	-3.065	1	-.003	1	NC		NC		NC		NC	
808			min	-742.305	2	-.651	2	NC		NC		NC		NC	
809		5	max	-3.065	1	-.003	1	NC		NC		NC		NC	
810			min	-742.305	2	-.651	2	NC		NC		NC		NC	
811	M90	1	max	143.718	9	.126	9	NC		NC		NC		NC	
812			min	-2.473	1	-.002	1	NC		NC		NC		NC	
813		2	max	143.718	9	.126	9	NC		NC		NC		NC	
814			min	-2.473	1	-.002	1	NC		NC		NC		NC	
815		3	max	143.718	9	.126	9	NC		NC		NC		NC	
816			min	-2.473	1	-.002	1	NC		NC		NC		NC	
817		4	max	143.718	9	.126	9	NC		NC		NC		NC	
818			min	-2.473	1	-.002	1	NC		NC		NC		NC	
819		5	max	143.718	9	.126	9	NC		NC		NC		NC	
820			min	-2.473	1	-.002	1	NC		NC		NC		NC	
821	M91	1	max	-15.143	1	-.013	1	NC		NC		NC		NC	
822			min	-1474.961	8	-1.294	8	NC		NC		NC		NC	
823		2	max	-15.143	1	-.013	1	NC		NC		NC		NC	
824			min	-1474.961	8	-1.294	8	NC		NC		NC		NC	
825		3	max	-15.143	1	-.013	1	NC		NC		NC		NC	
826			min	-1474.961	8	-1.294	8	NC		NC		NC		NC	
827		4	max	-15.143	1	-.013	1	NC		NC		NC		NC	
828			min	-1474.961	8	-1.294	8	NC		NC		NC		NC	
829		5	max	-15.143	1	-.013	1	NC		NC		NC		NC	
830			min	-1474.961	8	-1.294	8	NC		NC		NC		NC	
831	M92	1	max	-4.957	1	-.004	1	NC		NC		NC		NC	
832			min	-1093.594	8	-.96	8	NC		NC		NC		NC	
833		2	max	-4.957	1	-.004	1	NC		NC		NC		NC	
834			min	-1093.594	8	-.96	8	NC		NC		NC		NC	
835		3	max	-4.957	1	-.004	1	NC		NC		NC		NC	
836			min	-1093.594	8	-.96	8	NC		NC		NC		NC	
837		4	max	-4.957	1	-.004	1	NC		NC		NC		NC	
838			min	-1093.594	8	-.96	8	NC		NC		NC		NC	
839		5	max	-4.957	1	-.004	1	NC		NC		NC		NC	
840			min	-1093.594	8	-.96	8	NC		NC		NC		NC	
841	M93	1	max	-29.376	1	-.026	1	NC		NC		NC		NC	
842			min	-177.654	4	-.156	4	NC		NC		NC		NC	
843		2	max	-29.376	1	-.026	1	NC		NC		NC		NC	
844			min	-177.654	4	-.156	4	NC		NC		NC		NC	
845		3	max	-29.376	1	-.026	1	NC		NC		NC		NC	
846			min	-177.654	4	-.156	4	NC		NC		NC		NC	
847		4	max	-29.376	1	-.026	1	NC		NC		NC		NC	
848			min	-177.654	4	-.156	4	NC		NC		NC		NC	
849		5	max	-29.376	1	-.026	1	NC		NC		NC		NC	
850			min	-177.654	4	-.156	4	NC		NC		NC		NC	
851	M95	1	max	0	1	0	1	NC		NC		NC		NC	
852			min	0	1	0	1	NC		NC		NC		NC	
853		2	max	184.527	9	.154	9	NC		NC		NC		NC	
854			min	-3.309	1	-.003	1	NC		NC		NC		NC	
855		3	max	184.527	9	.154	9	NC		NC		NC		NC	
856			min	-3.309	1	-.003	1	NC		NC		NC		NC	
857		4	max	184.527	9	.154	9	NC		NC		NC		NC	
858			min	-3.309	1	-.003	1	NC		NC		NC		NC	
859		5	max	184.527	9	.154	9	NC		NC		NC		NC	
860			min	-3.309	1	-.003	1	NC		NC		NC		NC	

Envelope Member Section Torsion (Continued)

	Member	Sec		Torque[lb-ft]	lc	Torsion Shear[ksi]	lc	y-y War...	lc	z-z War...	lc	z-Top W...	lc	z-Bot W...	lc
861	M96	1	max	187.52	9	.165	9	NC		NC		NC		NC	
862			min	-245.924	6	-.216	6	NC		NC		NC		NC	
863		2	max	187.52	9	.165	9	NC		NC		NC		NC	
864			min	-245.924	6	-.216	6	NC		NC		NC		NC	
865		3	max	187.52	9	.165	9	NC		NC		NC		NC	
866			min	-245.924	6	-.216	6	NC		NC		NC		NC	
867		4	max	187.52	9	.165	9	NC		NC		NC		NC	
868			min	-245.924	6	-.216	6	NC		NC		NC		NC	
869		5	max	187.52	9	.165	9	NC		NC		NC		NC	
870			min	-245.924	6	-.216	6	NC		NC		NC		NC	
871	M97	1	max	143.718	9	.126	9	NC		NC		NC		NC	
872			min	-2.473	1	-.002	1	NC		NC		NC		NC	
873		2	max	143.718	9	.126	9	NC		NC		NC		NC	
874			min	-2.473	1	-.002	1	NC		NC		NC		NC	
875		3	max	143.718	9	.126	9	NC		NC		NC		NC	
876			min	-2.473	1	-.002	1	NC		NC		NC		NC	
877		4	max	143.718	9	.126	9	NC		NC		NC		NC	
878			min	-2.473	1	-.002	1	NC		NC		NC		NC	
879		5	max	143.718	9	.126	9	NC		NC		NC		NC	
880			min	-2.473	1	-.002	1	NC		NC		NC		NC	
881	M98	1	max	143.718	9	.126	9	NC		NC		NC		NC	
882			min	-2.473	1	-.002	1	NC		NC		NC		NC	
883		2	max	143.718	9	.126	9	NC		NC		NC		NC	
884			min	-2.473	1	-.002	1	NC		NC		NC		NC	
885		3	max	143.718	9	.126	9	NC		NC		NC		NC	
886			min	-2.473	1	-.002	1	NC		NC		NC		NC	
887		4	max	143.718	9	.126	9	NC		NC		NC		NC	
888			min	-2.473	1	-.002	1	NC		NC		NC		NC	
889		5	max	143.718	9	.126	9	NC		NC		NC		NC	
890			min	-2.473	1	-.002	1	NC		NC		NC		NC	
891	M99	1	max	143.718	9	.126	9	NC		NC		NC		NC	
892			min	-2.473	1	-.002	1	NC		NC		NC		NC	
893		2	max	143.718	9	.126	9	NC		NC		NC		NC	
894			min	-2.473	1	-.002	1	NC		NC		NC		NC	
895		3	max	143.718	9	.126	9	NC		NC		NC		NC	
896			min	-2.473	1	-.002	1	NC		NC		NC		NC	
897		4	max	143.718	9	.126	9	NC		NC		NC		NC	
898			min	-2.473	1	-.002	1	NC		NC		NC		NC	
899		5	max	143.718	9	.126	9	NC		NC		NC		NC	
900			min	-2.473	1	-.002	1	NC		NC		NC		NC	
901	M100	1	max	143.718	9	.126	9	NC		NC		NC		NC	
902			min	-2.473	1	-.002	1	NC		NC		NC		NC	
903		2	max	143.718	9	.126	9	NC		NC		NC		NC	
904			min	-2.473	1	-.002	1	NC		NC		NC		NC	
905		3	max	143.718	9	.126	9	NC		NC		NC		NC	
906			min	-2.473	1	-.002	1	NC		NC		NC		NC	
907		4	max	143.718	9	.126	9	NC		NC		NC		NC	
908			min	-2.473	1	-.002	1	NC		NC		NC		NC	
909		5	max	143.718	9	.126	9	NC		NC		NC		NC	
910			min	-2.473	1	-.002	1	NC		NC		NC		NC	
911	M101	1	max	143.718	9	.126	9	NC		NC		NC		NC	
912			min	-2.473	1	-.002	1	NC		NC		NC		NC	
913		2	max	143.718	9	.126	9	NC		NC		NC		NC	
914			min	-2.473	1	-.002	1	NC		NC		NC		NC	
915		3	max	143.718	9	.126	9	NC		NC		NC		NC	
916			min	-2.473	1	-.002	1	NC		NC		NC		NC	
917		4	max	143.718	9	.126	9	NC		NC		NC		NC	
918			min	-2.473	1	-.002	1	NC		NC		NC		NC	
919		5	max	143.718	9	.126	9	NC		NC		NC		NC	

Envelope Member Section Torsion (Continued)

	Member	Sec		Torque[lb-ft]	lc	Torsion Shear[ksi]	lc	y-y War...	lc	z-z War...	lc	z-Top W...	lc	z-Bot W...	lc
920			min	-2.473	1	-.002	1	NC		NC		NC		NC	
921	M93A	1	max	315.326	9	.264	9	NC		NC		NC		NC	
922			min	-6.112	1	-.005	1	NC		NC		NC		NC	
923		2	max	315.326	9	.264	9	NC		NC		NC		NC	
924			min	-6.112	1	-.005	1	NC		NC		NC		NC	
925		3	max	315.326	9	.264	9	NC		NC		NC		NC	
926			min	-6.112	1	-.005	1	NC		NC		NC		NC	
927		4	max	315.326	9	.264	9	NC		NC		NC		NC	
928			min	-6.112	1	-.005	1	NC		NC		NC		NC	
929		5	max	315.326	9	.264	9	NC		NC		NC		NC	
930			min	-6.112	1	-.005	1	NC		NC		NC		NC	
931	M94	1	max	16.044	1	.014	1	NC		NC		NC		NC	
932			min	-318.328	6	-.279	6	NC		NC		NC		NC	
933		2	max	16.044	1	.014	1	NC		NC		NC		NC	
934			min	-318.328	6	-.279	6	NC		NC		NC		NC	
935		3	max	16.044	1	.014	1	NC		NC		NC		NC	
936			min	-318.328	6	-.279	6	NC		NC		NC		NC	
937		4	max	16.044	1	.014	1	NC		NC		NC		NC	
938			min	-318.328	6	-.279	6	NC		NC		NC		NC	
939		5	max	16.044	1	.014	1	NC		NC		NC		NC	
940			min	-318.328	6	-.279	6	NC		NC		NC		NC	
941	M95A	1	max	16.044	1	.014	1	NC		NC		NC		NC	
942			min	-318.328	6	-.279	6	NC		NC		NC		NC	
943		2	max	16.044	1	.014	1	NC		NC		NC		NC	
944			min	-318.328	6	-.279	6	NC		NC		NC		NC	
945		3	max	16.044	1	.014	1	NC		NC		NC		NC	
946			min	-318.328	6	-.279	6	NC		NC		NC		NC	
947		4	max	16.044	1	.014	1	NC		NC		NC		NC	
948			min	-318.328	6	-.279	6	NC		NC		NC		NC	
949		5	max	16.044	1	.014	1	NC		NC		NC		NC	
950			min	-318.328	6	-.279	6	NC		NC		NC		NC	
951	M96A	1	max	2570.716	9	2.152	9	NC		NC		NC		NC	
952			min	-1927.977	6	-1.614	6	NC		NC		NC		NC	
953		2	max	2570.716	9	2.152	9	NC		NC		NC		NC	
954			min	-1927.977	6	-1.614	6	NC		NC		NC		NC	
955		3	max	2570.716	9	2.152	9	NC		NC		NC		NC	
956			min	-1927.977	6	-1.614	6	NC		NC		NC		NC	
957		4	max	2570.716	9	2.152	9	NC		NC		NC		NC	
958			min	-1927.977	6	-1.614	6	NC		NC		NC		NC	
959		5	max	2570.716	9	2.152	9	NC		NC		NC		NC	
960			min	-1927.977	6	-1.614	6	NC		NC		NC		NC	
961	M97A	1	max	2630.188	9	2.202	9	NC		NC		NC		NC	
962			min	-2128.542	6	-1.782	6	NC		NC		NC		NC	
963		2	max	2630.188	9	2.202	9	NC		NC		NC		NC	
964			min	-2128.542	6	-1.782	6	NC		NC		NC		NC	
965		3	max	2630.188	9	2.202	9	NC		NC		NC		NC	
966			min	-2128.542	6	-1.782	6	NC		NC		NC		NC	
967		4	max	2630.188	9	2.202	9	NC		NC		NC		NC	
968			min	-2128.542	6	-1.782	6	NC		NC		NC		NC	
969		5	max	2630.188	9	2.202	9	NC		NC		NC		NC	
970			min	-2128.542	6	-1.782	6	NC		NC		NC		NC	
971	M98A	1	max	2335.187	9	1.955	9	NC		NC		NC		NC	
972			min	-2140.018	6	-1.791	6	NC		NC		NC		NC	
973		2	max	2335.187	9	1.955	9	NC		NC		NC		NC	
974			min	-2140.018	6	-1.791	6	NC		NC		NC		NC	
975		3	max	2335.187	9	1.955	9	NC		NC		NC		NC	
976			min	-2140.018	6	-1.791	6	NC		NC		NC		NC	
977		4	max	2335.187	9	1.955	9	NC		NC		NC		NC	
978			min	-2140.018	6	-1.791	6	NC		NC		NC		NC	

Envelope Member Section Torsion (Continued)

	Member	Sec		Torque[lb-ft]	lc	Torsion Shear[ksi]	lc	y-y War...	lc	z-z War...	lc	z-Top W...	lc	z-Bot W...	lc
979		5	max	2335.187	9	1.955	9	NC		NC		NC		NC	
980			min	-2140.018	6	-1.791	6	NC		NC		NC		NC	
981	M99A	1	max	1531.008	9	1.282	9	NC		NC		NC		NC	
982			min	-1624.612	6	-1.36	6	NC		NC		NC		NC	
983		2	max	1531.008	9	1.282	9	NC		NC		NC		NC	
984			min	-1624.612	6	-1.36	6	NC		NC		NC		NC	
985		3	max	1531.008	9	1.282	9	NC		NC		NC		NC	
986			min	-1624.612	6	-1.36	6	NC		NC		NC		NC	
987		4	max	1531.008	9	1.282	9	NC		NC		NC		NC	
988			min	-1624.612	6	-1.36	6	NC		NC		NC		NC	
989		5	max	1531.008	9	1.282	9	NC		NC		NC		NC	
990			min	-1624.612	6	-1.36	6	NC		NC		NC		NC	
991	M100A	1	max	1017.201	9	.851	9	NC		NC		NC		NC	
992			min	-1212.461	6	-1.015	6	NC		NC		NC		NC	
993		2	max	1017.201	9	.851	9	NC		NC		NC		NC	
994			min	-1212.461	6	-1.015	6	NC		NC		NC		NC	
995		3	max	1017.201	9	.851	9	NC		NC		NC		NC	
996			min	-1212.461	6	-1.015	6	NC		NC		NC		NC	
997		4	max	1017.201	9	.851	9	NC		NC		NC		NC	
998			min	-1212.461	6	-1.015	6	NC		NC		NC		NC	
999		5	max	1017.201	9	.851	9	NC		NC		NC		NC	
1000			min	-1212.461	6	-1.015	6	NC		NC		NC		NC	
1001	M101A	1	max	1234.237	9	1.033	9	NC		NC		NC		NC	
1002			min	-1446.497	6	-1.211	6	NC		NC		NC		NC	
1003		2	max	1234.237	9	1.033	9	NC		NC		NC		NC	
1004			min	-1446.497	6	-1.211	6	NC		NC		NC		NC	
1005		3	max	1234.237	9	1.033	9	NC		NC		NC		NC	
1006			min	-1446.497	6	-1.211	6	NC		NC		NC		NC	
1007		4	max	1234.237	9	1.033	9	NC		NC		NC		NC	
1008			min	-1446.497	6	-1.211	6	NC		NC		NC		NC	
1009		5	max	1234.237	9	1.033	9	NC		NC		NC		NC	
1010			min	-1446.497	6	-1.211	6	NC		NC		NC		NC	
1011	M102	1	max	1491.757	9	1.249	9	NC		NC		NC		NC	
1012			min	-1694.447	6	-1.418	6	NC		NC		NC		NC	
1013		2	max	1491.757	9	1.249	9	NC		NC		NC		NC	
1014			min	-1694.447	6	-1.418	6	NC		NC		NC		NC	
1015		3	max	1491.757	9	1.249	9	NC		NC		NC		NC	
1016			min	-1694.447	6	-1.418	6	NC		NC		NC		NC	
1017		4	max	1491.757	9	1.249	9	NC		NC		NC		NC	
1018			min	-1694.447	6	-1.418	6	NC		NC		NC		NC	
1019		5	max	1491.757	9	1.249	9	NC		NC		NC		NC	
1020			min	-1694.447	6	-1.418	6	NC		NC		NC		NC	
1021	M103	1	max	1433.101	9	1.2	9	NC		NC		NC		NC	
1022			min	-1571.911	6	-1.316	6	NC		NC		NC		NC	
1023		2	max	1433.101	9	1.2	9	NC		NC		NC		NC	
1024			min	-1571.911	6	-1.316	6	NC		NC		NC		NC	
1025		3	max	1433.101	9	1.2	9	NC		NC		NC		NC	
1026			min	-1571.911	6	-1.316	6	NC		NC		NC		NC	
1027		4	max	1433.101	9	1.2	9	NC		NC		NC		NC	
1028			min	-1571.911	6	-1.316	6	NC		NC		NC		NC	
1029		5	max	1433.101	9	1.2	9	NC		NC		NC		NC	
1030			min	-1571.911	6	-1.316	6	NC		NC		NC		NC	
1031	M104	1	max	1297.091	9	1.086	9	NC		NC		NC		NC	
1032			min	-1388.478	6	-1.162	6	NC		NC		NC		NC	
1033		2	max	1297.091	9	1.086	9	NC		NC		NC		NC	
1034			min	-1388.478	6	-1.162	6	NC		NC		NC		NC	
1035		3	max	1297.091	9	1.086	9	NC		NC		NC		NC	
1036			min	-1388.478	6	-1.162	6	NC		NC		NC		NC	
1037		4	max	1297.091	9	1.086	9	NC		NC		NC		NC	

Envelope Member Section Torsion (Continued)

	Member	Sec		Torque[lb-ft]	lc	Torsion Shear[ksi]	lc	y-y War...	lc	z-z War...	lc	z-Top W...	lc	z-Bot W...	lc
1038			min	-1388.478	6	-1.162	6	NC		NC		NC		NC	
1039		5	max	1297.091	9	1.086	9	NC		NC		NC		NC	
1040			min	-1388.478	6	-1.162	6	NC		NC		NC		NC	
1041	M105	1	max	1358.911	9	1.137	9	NC		NC		NC		NC	
1042			min	-1432.368	6	-1.199	6	NC		NC		NC		NC	
1043		2	max	1358.911	9	1.137	9	NC		NC		NC		NC	
1044			min	-1432.368	6	-1.199	6	NC		NC		NC		NC	
1045		3	max	1358.911	9	1.137	9	NC		NC		NC		NC	
1046			min	-1432.368	6	-1.199	6	NC		NC		NC		NC	
1047		4	max	1358.911	9	1.137	9	NC		NC		NC		NC	
1048			min	-1432.368	6	-1.199	6	NC		NC		NC		NC	
1049		5	max	1358.911	9	1.137	9	NC		NC		NC		NC	
1050			min	-1432.368	6	-1.199	6	NC		NC		NC		NC	
1051	M106	1	max	1175.817	9	.984	9	NC		NC		NC		NC	
1052			min	-1231.35	6	-1.031	6	NC		NC		NC		NC	
1053		2	max	1175.817	9	.984	9	NC		NC		NC		NC	
1054			min	-1231.35	6	-1.031	6	NC		NC		NC		NC	
1055		3	max	1175.817	9	.984	9	NC		NC		NC		NC	
1056			min	-1231.35	6	-1.031	6	NC		NC		NC		NC	
1057		4	max	1175.817	9	.984	9	NC		NC		NC		NC	
1058			min	-1231.35	6	-1.031	6	NC		NC		NC		NC	
1059		5	max	1175.817	9	.984	9	NC		NC		NC		NC	
1060			min	-1231.35	6	-1.031	6	NC		NC		NC		NC	
1061	M107	1	max	715.971	9	.599	9	NC		NC		NC		NC	
1062			min	-740.459	6	-.62	6	NC		NC		NC		NC	
1063		2	max	715.971	9	.599	9	NC		NC		NC		NC	
1064			min	-740.459	6	-.62	6	NC		NC		NC		NC	
1065		3	max	715.971	9	.599	9	NC		NC		NC		NC	
1066			min	-740.459	6	-.62	6	NC		NC		NC		NC	
1067		4	max	715.971	9	.599	9	NC		NC		NC		NC	
1068			min	-740.459	6	-.62	6	NC		NC		NC		NC	
1069		5	max	715.971	9	.599	9	NC		NC		NC		NC	
1070			min	-740.459	6	-.62	6	NC		NC		NC		NC	
1071	M108	1	max	471.315	3	.395	3	NC		NC		NC		NC	
1072			min	-478.111	2	-.4	2	NC		NC		NC		NC	
1073		2	max	471.315	3	.395	3	NC		NC		NC		NC	
1074			min	-478.111	2	-.4	2	NC		NC		NC		NC	
1075		3	max	471.315	3	.395	3	NC		NC		NC		NC	
1076			min	-478.111	2	-.4	2	NC		NC		NC		NC	
1077		4	max	471.315	3	.395	3	NC		NC		NC		NC	
1078			min	-478.111	2	-.4	2	NC		NC		NC		NC	
1079		5	max	235.658	3	.197	3	NC		NC		NC		NC	
1080			min	-239.056	2	-.2	2	NC		NC		NC		NC	
1081	M109	1	max	235.658	3	.197	3	NC		NC		NC		NC	
1082			min	-239.056	2	-.2	2	NC		NC		NC		NC	
1083		2	max	235.658	3	.197	3	NC		NC		NC		NC	
1084			min	-239.056	2	-.2	2	NC		NC		NC		NC	
1085		3	max	235.658	3	.197	3	NC		NC		NC		NC	
1086			min	-239.056	2	-.2	2	NC		NC		NC		NC	
1087		4	max	235.658	3	.197	3	NC		NC		NC		NC	
1088			min	-239.056	2	-.2	2	NC		NC		NC		NC	
1089		5	max	235.658	3	.197	3	NC		NC		NC		NC	
1090			min	-239.056	2	-.2	2	NC		NC		NC		NC	
1091	M110	1	max	471.315	3	.154	3	NC		NC		NC		NC	
1092			min	-478.111	2	-.157	2	NC		NC		NC		NC	
1093		2	max	471.315	3	.154	3	NC		NC		NC		NC	
1094			min	-478.111	2	-.157	2	NC		NC		NC		NC	
1095		3	max	471.315	3	.154	3	NC		NC		NC		NC	
1096			min	-478.111	2	-.157	2	NC		NC		NC		NC	

Envelope Member Section Torsion (Continued)

	Member	Sec		Torque[lb-ft]	lc	Torsion Shear[ksi]	lc	y-y War...	lc	z-z War...	lc	z-Top W...	lc	z-Bot W...	lc
1097		4	max	471.315	3	.154	3	NC		NC		NC		NC	
1098			min	-478.111	2	-.157	2	NC		NC		NC		NC	
1099		5	max	471.315	3	.154	3	NC		NC		NC		NC	
1100			min	-478.111	2	-.157	2	NC		NC		NC		NC	
1101	M111	1	max	437.604	3	.143	3	NC		NC		NC		NC	
1102			min	-441.122	2	-.145	2	NC		NC		NC		NC	
1103		2	max	437.604	3	.143	3	NC		NC		NC		NC	
1104			min	-441.122	2	-.145	2	NC		NC		NC		NC	
1105		3	max	437.604	3	.143	3	NC		NC		NC		NC	
1106			min	-441.122	2	-.145	2	NC		NC		NC		NC	
1107		4	max	437.604	3	.143	3	NC		NC		NC		NC	
1108			min	-441.122	2	-.145	2	NC		NC		NC		NC	
1109		5	max	437.604	3	.143	3	NC		NC		NC		NC	
1110			min	-441.122	2	-.145	2	NC		NC		NC		NC	
1111	M112	1	max	279.13	3	.091	3	NC		NC		NC		NC	
1112			min	-279.13	2	-.091	2	NC		NC		NC		NC	
1113		2	max	279.13	3	.091	3	NC		NC		NC		NC	
1114			min	-279.13	2	-.091	2	NC		NC		NC		NC	
1115		3	max	279.13	3	.091	3	NC		NC		NC		NC	
1116			min	-279.13	2	-.091	2	NC		NC		NC		NC	
1117		4	max	279.13	3	.091	3	NC		NC		NC		NC	
1118			min	-279.13	2	-.091	2	NC		NC		NC		NC	
1119		5	max	279.13	3	.091	3	NC		NC		NC		NC	
1120			min	-279.13	2	-.091	2	NC		NC		NC		NC	
1121	M113	1	max	34.341	3	.011	3	NC		NC		NC		NC	
1122			min	-34.341	2	-.011	2	NC		NC		NC		NC	
1123		2	max	34.341	3	.011	3	NC		NC		NC		NC	
1124			min	-34.341	2	-.011	2	NC		NC		NC		NC	
1125		3	max	34.341	3	.011	3	NC		NC		NC		NC	
1126			min	-34.341	2	-.011	2	NC		NC		NC		NC	
1127		4	max	34.341	3	.011	3	NC		NC		NC		NC	
1128			min	-34.341	2	-.011	2	NC		NC		NC		NC	
1129		5	max	34.341	3	.011	3	NC		NC		NC		NC	
1130			min	-34.341	2	-.011	2	NC		NC		NC		NC	
1131	M114	1	max	68.924	2	.023	2	NC		NC		NC		NC	
1132			min	-68.924	3	-.023	3	NC		NC		NC		NC	
1133		2	max	68.924	2	.023	2	NC		NC		NC		NC	
1134			min	-68.924	3	-.023	3	NC		NC		NC		NC	
1135		3	max	68.924	2	.023	2	NC		NC		NC		NC	
1136			min	-68.924	3	-.023	3	NC		NC		NC		NC	
1137		4	max	68.924	2	.023	2	NC		NC		NC		NC	
1138			min	-68.924	3	-.023	3	NC		NC		NC		NC	
1139		5	max	68.924	2	.023	2	NC		NC		NC		NC	
1140			min	-68.924	3	-.023	3	NC		NC		NC		NC	
1141	M115	1	max	50.802	2	.017	2	NC		NC		NC		NC	
1142			min	-50.802	3	-.017	3	NC		NC		NC		NC	
1143		2	max	50.802	2	.017	2	NC		NC		NC		NC	
1144			min	-50.802	3	-.017	3	NC		NC		NC		NC	
1145		3	max	50.802	2	.017	2	NC		NC		NC		NC	
1146			min	-50.802	3	-.017	3	NC		NC		NC		NC	
1147		4	max	50.802	2	.017	2	NC		NC		NC		NC	
1148			min	-50.802	3	-.017	3	NC		NC		NC		NC	
1149		5	max	50.802	2	.017	2	NC		NC		NC		NC	
1150			min	-50.802	3	-.017	3	NC		NC		NC		NC	
1151	M116	1	max	25.931	2	.008	2	NC		NC		NC		NC	
1152			min	-25.931	3	-.008	3	NC		NC		NC		NC	
1153		2	max	25.931	2	.008	2	NC		NC		NC		NC	
1154			min	-25.931	3	-.008	3	NC		NC		NC		NC	
1155		3	max	25.931	2	.008	2	NC		NC		NC		NC	

Envelope Member Section Torsion (Continued)

	Member	Sec		Torque[lb-ft]	lc	Torsion Shear[ksi]	lc	y-y War...	lc	z-z War...	lc	z-Top W...	lc	z-Bot W...	lc
1156			min	-25.931	3	-.008	3	NC		NC		NC		NC	
1157		4	max	25.931	2	.008	2	NC		NC		NC		NC	
1158			min	-25.931	3	-.008	3	NC		NC		NC		NC	
1159		5	max	25.931	2	.008	2	NC		NC		NC		NC	
1160			min	-25.931	3	-.008	3	NC		NC		NC		NC	
1161	M117	1	max	9.903	2	.003	2	NC		NC		NC		NC	
1162			min	-9.903	3	-.003	3	NC		NC		NC		NC	
1163		2	max	9.903	2	.003	2	NC		NC		NC		NC	
1164			min	-9.903	3	-.003	3	NC		NC		NC		NC	
1165		3	max	9.903	2	.003	2	NC		NC		NC		NC	
1166			min	-9.903	3	-.003	3	NC		NC		NC		NC	
1167		4	max	9.903	2	.003	2	NC		NC		NC		NC	
1168			min	-9.903	3	-.003	3	NC		NC		NC		NC	
1169		5	max	9.903	2	.003	2	NC		NC		NC		NC	
1170			min	-9.903	3	-.003	3	NC		NC		NC		NC	
1171	M118	1	max	2.071	2	0	2	NC		NC		NC		NC	
1172			min	-2.071	3	0	3	NC		NC		NC		NC	
1173		2	max	2.071	2	0	2	NC		NC		NC		NC	
1174			min	-2.071	3	0	3	NC		NC		NC		NC	
1175		3	max	2.071	2	0	2	NC		NC		NC		NC	
1176			min	-2.071	3	0	3	NC		NC		NC		NC	
1177		4	max	2.071	2	0	2	NC		NC		NC		NC	
1178			min	-2.071	3	0	3	NC		NC		NC		NC	
1179		5	max	2.071	2	0	2	NC		NC		NC		NC	
1180			min	-2.071	3	0	3	NC		NC		NC		NC	
1181	M119	1	max	0	1	0	1	NC		NC		NC		NC	
1182			min	0	1	0	1	NC		NC		NC		NC	
1183		2	max	0	1	0	1	NC		NC		NC		NC	
1184			min	0	1	0	1	NC		NC		NC		NC	
1185		3	max	0	1	0	1	NC		NC		NC		NC	
1186			min	0	1	0	1	NC		NC		NC		NC	
1187		4	max	0	1	0	1	NC		NC		NC		NC	
1188			min	0	1	0	1	NC		NC		NC		NC	
1189		5	max	0	1	0	1	NC		NC		NC		NC	
1190			min	0	1	0	1	NC		NC		NC		NC	
1191	M120	1	max	471.315	3	0	1	NC		NC		NC		NC	
1192			min	-478.111	2	0	1	NC		NC		NC		NC	
1193		2	max	471.315	3	0	1	NC		NC		NC		NC	
1194			min	-478.111	2	0	1	NC		NC		NC		NC	
1195		3	max	471.315	3	0	1	NC		NC		NC		NC	
1196			min	-478.111	2	0	1	NC		NC		NC		NC	
1197		4	max	471.315	3	0	1	NC		NC		NC		NC	
1198			min	-478.111	2	0	1	NC		NC		NC		NC	
1199		5	max	471.315	3	0	1	NC		NC		NC		NC	
1200			min	-478.111	2	0	1	NC		NC		NC		NC	

DMJM H&N | AECOM

ATTACHMENT 5

Calculation No.: 145579-B-CA-023	Originator: J. Van Corbach JVC Date: 3/24/06
Rev. No.: 1	Checker: Kevin Jones KMJ Date: 3/25/06
Calculation Title: DBVS OGTS Bypass Structural Analysis	

Excel Spreadsheet – AG-1 Analysis and Unity Checks

Duct Size	[illegible] (ksi) Eq 10	[illegible] (ksi) Eq 6 or 7	[illegible] (ksi) Eq 8	[illegible] (ksi) Eq 9	[illegible] (ksi) Eq 9	[illegible] (ksi) Eq 10	
6in Dia. Duct	7.4	12.5	10.5	20.8	7.2	7.2	@ 275°F
8in Dia. Duct	7.6	12.6	10.5	7.8	7.2	7.2	
12in Dia. Duct	8.1	12.6	10.5	17.2	7.2	7.2	
6in Dia. Duct	9.3	15.8	13.1	32.7	9.1	9.1	@ 400°F
8in Dia. Duct	8.8	15.8	13.1	8.8	9.1	9.1	
12in Dia. Duct	10.2	15.9	13.1	14.9	9.1	9.1	

	Member	Duct Size	Temperature (°F)		Axial (ksi)	Load Case	y Shear (ksi)	Load Case	z Shear (ksi)	Load Case	y top Bending (ksi)	Load Case	y bot Bending (ksi)	Load Case	z top Bending (ksi)	Load Case	z bot Bending (ksi)	Load Case	Torque (in-lb)	Load Case	Torsional Shear (ksi)	Load Case	f_a/F_a	D-2250 f_b/F_b	f_v/F_v	D-2250 Equation 11 $f_a/F_a + f_b/F_b + f_v/F_v$	f_b (ksi)	D-2260 Equation 13 $(f_b/F_b)^2 + (f_v/F_v)^2$	D-2270 Equation 14 $f_v/F_v + f_t/F_t$
1211	M120	RGD	*	Sec 1 - max	0.000	4	0.000	1	0.000	1	0.000	1	0.000	1	0.000	1	0.000	1	471.315	3	0.000	1	NC	NC	NC	NC	NC	NC	NC
1212	M120	RGD	*	Sec 1 - min	0.000	5	0.000	1	0.000	1	0.000	1	0.000	1	0.000	1	0.000	1	-478.111	2	0.000	1	NC	NC	NC	NC	NC	NC	NC
1213	M120	RGD	*	Sec 2 - max	0.000	4	0.000	1	0.000	1	0.000	1	0.000	1	0.000	1	0.000	1	471.316	3	0.000	1	NC	NC	NC	NC	NC	NC	NC
1214	M120	RGD	*	Sec 2 - min	0.000	5	0.000	1	0.000	1	0.000	1	0.000	1	0.000	1	0.000	1	-478.111	2	0.000	1	NC	NC	NC	NC	NC	NC	NC
1215	M120	RGD	*	Sec 3 - max	0.000	4	0.000	1	0.000	1	0.000	1	0.000	1	0.000	1	0.000	1	471.318	3	0.000	1	NC	NC	NC	NC	NC	NC	NC
1216	M120	RGD	*	Sec 3 - min	0.000	5	0.000	1	0.000	1	0.000	1	0.000	1	0.000	1	0.000	1	-478.111	2	0.000	1	NC	NC	NC	NC	NC	NC	NC
1217	M120	RGD	*	Sec 4 - max	0.000	4	0.000	1	0.000	1	0.000	1	0.000	1	0.000	1	0.000	1	471.318	3	0.000	1	NC	NC	NC	NC	NC	NC	NC
1218	M120	RGD	*	Sec 4 - min	0.000	5	0.000	1	0.000	1	0.000	1	0.000	1	0.000	1	0.000	1	-478.111	2	0.000	1	NC	NC	NC	NC	NC	NC	NC
1219	M120	RGD	*	Sec 5 - max	0.000	4	0.000	1	0.000	1	0.000	1	0.000	1	0.000	1	0.000	1	471.316	3	0.000	1	NC	NC	NC	NC	NC	NC	NC
1220	M120	RGD	*	Sec 5 - min	0.000	5	0.000	1	0.000	1	0.000	1	0.000	1	0.000	1	0.000	1	-478.111	2	0.000	1	NC	NC	NC	NC	NC	NC	NC
421	M48	8in Dia. Duct	275	Sec 1 - max	0.404	6	0.270	6	0.155	4	-0.047	1	0.056	4	0.068	1	4.507	4	-2.525	1	-0.002	1	0.034	0.573	0.781	0.938	8.066	0.478	0.050
422	M48	8in Dia. Duct	275	Sec 1 - min	0.003	1	0.002	1	-0.181	5	-0.058	4	0.047	1	-4.507	4	-0.000	1	-464.567	2	-0.434	2	0.000	0.573	0.281	0.264	8.066	0.400	0.050
411	M46	8in Dia. Duct	275	Sec 1 - max	0.406	6	0.062	6	0.016	4	0.004	1	10.204	4	2.506	7	-0.000	1	110.800	6	0.007	6	0.064	0.646	0.150	0.881	10.204	0.807	0.018
601	M60	8in Dia. Duct	200	Sec 1 - max	0.301	3	0.306	2	0.042	3	-0.240	1	11.150	2	1.666	2	1.363	3	322.812	2	0.303	2	0.046	0.706	0.107	0.858	11.150	0.727	0.046
413	M48	8in Dia. Duct	275	Sec 2 - max	0.405	6	0.031	6	0.014	4	0.004	1	10.186	4	2.445	7	-0.060	1	110.808	6	0.007	6	0.038	0.646	0.155	0.858	10.186	0.805	0.018
415	M45	8in Dia. Duct	275	Sec 3 - max	0.400	6	0.050	6	0.013	4	0.004	1	10.172	4	2.341	7	-0.048	1	110.606	6	0.007	6	0.057	0.644	0.151	0.851	10.172	0.803	0.016
423	M48	8in Dia. Duct	275	Sec 2 - max	0.406	6	0.308	6	0.147	4	-0.042	1	8.300	4	0.000	1	4.103	4	-2.525	1	-0.002	1	0.064	0.531	0.266	0.830	8.306	0.410	0.028
603	M60	8in Dia. Duct	200	Sec 2 - max	0.301	3	0.307	2	0.042	3	-0.230	1	11.045	2	1.664	2	1.367	3	322.818	2	0.303	2	0.046	0.686	0.106	0.840	11.045	0.712	0.046
417	M45	8in Dia. Duct	275	Sec 4 - max	0.406	6	0.048	6	0.013	4	0.004	1	10.157	4	2.318	7	-0.060	1	110.808	6	0.007	6	0.067	0.643	0.147	0.848	10.157	0.801	0.016
605	M60	8in Dia. Duct	200	Sec 3 - max	0.302	3	0.306	2	0.042	3	-0.212	1	10.972	2	1.643	2	1.532	3	322.812	2	0.303	2	0.046	0.682	0.104	0.841	10.972	0.807	0.046
418	M45	8in Dia. Duct	275	Sec 5 - max	0.447	6	0.046	6	0.012	4	0.004	1	10.142	4	2.256	7	-0.048	1	110.806	6	0.007	6	0.037	0.642	0.143	0.841	10.142	0.800	0.016
409	M44	8in Dia. Duct	275	Sec 5 - max	0.433	6	0.000	1	0.015	4	0.004	1	10.304	4	2.200	7	-0.075	1	757.567	6	0.006	6	0.050	0.646	0.146	0.838	10.304	0.812	0.073
607	M60	8in Dia. Duct	200	Sec 4 - max	0.302	3	0.308	2	0.042	3	-0.104	1	10.818	2	1.621	2	1.517	3	322.812	2	0.303	2	0.046	0.686	0.103	0.833	10.818	0.683	0.046
407	M44	8in Dia. Duct	275	Sec 4 - max	0.430	6	0.000	1	0.010	4	0.004	1	10.036	4	2.373	7	-0.075	1	757.567	6	0.006	6	0.066	0.636	0.144	0.830	10.036	0.863	0.075
599	M65	8in Dia. Duct	200	Sec 5 - max	0.413	3	0.026	1	0.042	3	-0.246	1	11.150	2	1.178	2	0.905	3	750.075	2	0.067	2	0.046	0.706	0.074	0.829	11.150	0.731	0.078
597	M63	8in Dia. Duct	200	Sec 4 - max	0.413	3	0.026	1	0.042	3	-0.258	1	11.117	2	1.197	2	0.921	3	750.825	2	0.067	2	0.046	0.704	0.078	0.827	11.117	0.726	0.078
595	M65	8in Dia. Duct	200	Sec 3 - max	0.413	3	0.030	1	0.042	3	-0.270	1	11.075	2	1.216	2	0.838	3	750.625	2	0.067	2	0.046	0.701	0.077	0.826	11.075	0.720	0.076
593	M65	8in Dia. Duct	200	Sec 2 - max	0.413	3	0.028	1	0.042	3	-0.281	1	11.033	2	1.240	2	0.862	3	750.626	2	0.067	2	0.046	0.698	0.076	0.825	11.033	0.715	0.076
609	M60	8in Dia. Duct	200	Sec 5 - max	0.302	3	0.306	2	0.042	3	-0.177	1	10.706	2	1.600	2	1.501	3	322.812	2	0.303	2	0.046	0.676	0.101	0.824	10.706	0.688	0.066
611	M67	8in Dia. Duct	200	Sec 1 - max	0.341	3	0.400	2	0.042	3	-0.177	1	10.705	2	1.662	2	1.082	3	83.917	1	0.074	1	0.049	0.679	0.107	0.824	10.705	0.664	0.082
591	M65	8in Dia. Duct	200	Sec 1 - max	0.413	3	0.031	1	0.042	3	-0.292	1	10.991	2	1.261	2	0.907	3	750.825	2	0.067	2	0.046	0.696	0.060	0.823	10.991	0.710	0.076
406	M44	8in Dia. Duct	275	Sec 3 - max	0.433	6	0.000	1	0.017	4	0.004	1	8.870	4	2.337	7	-0.076	1	757.567	6	0.006	6	0.000	0.625	0.140	0.823	8.870	0.674	0.075
403	M44	8in Dia. Duct	275	Sec 2 - max	0.430	6	0.001	1	0.016	4	0.004	1	8.712	4	2.401	7	-0.076	1	757.567	6	0.006	6	0.050	0.616	0.142	0.817	8.712	0.665	0.075
602	M60	8in Dia. Duct	200	Sec 1 - min	0.016	1	0.050	1	-0.067	2	-11.150	2	0.240	1	-1.663	3	-1.666	2	-610.540	3	-0.448	3	0.002	0.708	0.107	0.815	11.150	0.728	0.046
401	M44	8in Dia. Duct	275	Sec 1 - max	0.432	6	0.002	1	0.019	4	0.003	1	9.546	4	2.446	7	-0.076	1	757.567	6	0.005	6	0.050	0.604	0.156	0.811	9.546	0.627	0.075
604	M60	8in Dia. Duct	200	Sec 2 - min	0.016	1	0.040	1	-0.017	2	-11.045	2	0.230	1	-1.547	3	-1.604	2	-610.540	3	-0.448	3	0.002	0.688	0.105	0.808	11.044	0.713	0.046
412	M45	8in Dia. Duct	275	Sec 1 - min	0.001	1	-0.060	6	-0.178	5	-10.204	4	-0.004	1	0.000	1	-2.506	7	-362.073	6	-0.316	6	0.000	0.646	0.160	0.805	10.204	0.808	0.054
414	M45	8in Dia. Duct	275	Sec 2 - min	0.002	1	-0.060	6	-0.175	5	-10.188	4	-0.004	1	0.000	1	-2.446	7	-362.073	6	-0.316	6	0.000	0.646	0.164	0.800	10.188	0.808	0.054
606	M60	8in Dia. Duct	200	Sec 3 - min	0.016	1	0.046	1	-0.067	2	-10.832	2	0.212	1	-1.532	3	-1.543	2	-610.500	3	-0.448	3	0.002	0.682	0.104	0.786	10.832	0.686	0.045
424	M48	8in Dia. Duct	275	Sec 2 - min	0.007	1	0.002	1	-0.093	5	-8.306	4	0.042	1	-4.103	4	-0.098	1	-464.567	2	-0.434	2	0.001	0.531	0.265	0.786	8.306	0.412	0.050
416	M45	8in Dia. Duct	275	Sec 3 - min	0.003	1	-0.078	6	-0.173	5	-10.172	4	-0.004	1	0.000	1	-2.341	7	-362.073	6	-0.316	6	0.000	0.644	0.151	0.786	10.172	0.804	0.054
419	M45	8in Dia. Duct	275	Sec 4 - min	0.000	1	-0.079	6	-0.174	5	-10.157	4	-0.004	1	0.000	1	-2.316	7	-362.073	6	-0.316	6	0.000	0.643	0.147	0.780	10.157	0.800	0.064
608	M60	8in Dia. Duct	200	Sec 4 - min	0.015	1	0.047	1	-0.067	2	-10.818	2	0.184	1	-1.517	3	-1.621	2	-610.500	3	-0.448	3	0.002	0.686	0.103	0.780	10.818	0.686	0.056
410	M44	8in Dia. Duct	275	Sec 5 - min	0.001	1	-0.470	6	-0.178	5	-10.204	4	-0.004	1	0.075	1	-2.300	7	-47.381	4	-0.066	4	0.000	0.646	0.140	0.780	10.204	0.807	0.066
612	M67	8in Dia. Duct	200	Sec 1 - min	0.009	1	0.053	1	-0.057	2	-10.705	2	0.177	1	-1.662	2	-1.082	2	-279.909	4	-0.246	4	0.001	0.679	0.107	0.780	10.705	0.666	0.032
420	M45	8in Dia. Duct	275	Sec 5 - min	0.003	1	-0.078	6	-0.173	5	-10.142	4	-0.004	1	0.260	1	-2.256	7	-362.073	6	-0.316	6	0.000	0.642	0.143	0.786	10.142	0.801	0.064
600	M66	8in Dia. Duct	200	Sec 5 - min	0.020	1	-0.133	3	-0.067	2	-11.150	2	0.240	1	-0.006	3	-1.178	2	-667.303	3	-0.778	3	0.003	0.706	0.074	0.784	11.150	0.733	0.100
425	M48	8in Dia. Duct	275	Sec 3 - max	0.472	6	0.202	6	0.140	4	-0.036	1	2.715	4	0.000	1	2.780	4	-2.525	1	-0.002	1	0.066	0.480	0.248	0.783	7.716	0.347	0.030
598	M65	8in Dia. Duct	200	Sec 4 - min	0.017	1	-0.132	3	-0.067	2	-11.117	2	0.260	1	-0.021	3	-1.107	2	-667.303	3	-0.778	3	0.003	0.704	0.076	0.783	11.117	0.728	0.100
596	M65	8in Dia. Duct	200	Sec 3 - min	0.027	1	-0.130	3	-0.057	2	-11.075	2	0.279	1	-0.026	3	-1.210	2	-667.303	3	-0.778	3	0.003	0.701	0.077	0.781	11.075	0.722	0.100
610	M60	8in Dia. Duct	200	Sec 5 - min	0.015	1	0.046	1	-0.057	2	-10.706	2	0.177	1	-1.501	3	-1.600	2	-610.540	3	-0.448	3	0.002	0.676	0.101	0.781	10.706	0.670	0.056
594	M65	8in Dia. Duct	200	Sec 2 - min	0.027	1	-0.128	3	-0.067	2	-11.033	2	0.281	1	-0.062	3	-1.240	2	-667.303	3	-0.778	3	0.003	0.698	0.076	0.780	11.033	0.717	0.100
408	M44	8in Dia. Duct	275	Sec 4 - min	0.000	1	-0.470	6	-0.177	6	-10.030	4	-0.004	1	0.075	1	-2.373	7	-47.381	4	-0.066	4	0.000	0.636	0.144	0.779	10.036	0.867	0.078
592	M65	8in Dia. Duct	200	Sec 1 - min	0.020	1	-0.127	3	-0.067	2	-10.991	2	0.262	1	-0.067	3	-1.261	2	-667.303	3	-0.778	3	0.003	0.696	0.060	0.779	10.991	0.712	0.100
405	M44	8in Dia. Duct	275	Sec 3 - min	0.000	1	-0.460	6	-0.178	5	-9.878	4	-0.004	1	0.079	1	-2.337	7	-47.381	4	-0.058	4	0.000	0.625	0.140	0.773	9.878	0.666	0.066
404	M44	8in Dia. Duct	275	Sec 2 - min	0.000	1	-0.460	6	-0.178	5	-9.712	4	-0.004	1	0.076	1	-2.401	7	-47.381	4	-0.056	4	0.000	0.615	0.132	0.767	9.712	0.650	0.056
586	M64	8in Dia. Duct	200	Sec 5 - max	0.330	6	0.000	1	0.042	3	-0.280	1	10.001	2	0.486	4	0.000	6	1017.137	2	0.003	2	0.030	0.636	0.028	0.762	10.001	0.714	0.103
402	M44	8in Dia. Duct	275	Sec 1 - min	0.000	1	-0.440	6	-0.180	5	-4.240	4	-0.003	1	0.070	1	-2.400	7	-47.381	4	-0.060	4	0.000	0.604	0.160	0.760	8.640	0.531	0.066
587	M64	8in Dia. Duct	200	Sec 4 - max	0.327	4	0.000	1	0.042	3	-0.282	1	10.403	2	0.447	2	0.074	3	1017.137	2	0.003	2	0.030	0.664	0.028	0.750	10.403	0.690	0.103
585	M64	8in Dia. Duct	200	Sec 3 - max	0.327	2	0.000	1	0.042	3	-0.297	1	10.615	2	0.400	2	0.000	3	1017.137	2	0.003	2	0.036	0.672	0.030	0.739	10.615	0.667	0.103
349	M43	8in Dia. Duct	275	Sec 5 - max	0.266	6	0.002	1	0.010	4	0.003	1	8.540	4	1.540	7	-0.032	1	1334.000	5	1.171	5	0.031	0.604	0.067	0.733	8.540	0.640	0.131
428	M48	8in Dia. Duct	275	Sec 3 - min	0.012	1	0.002	1	-0.006	5	-7.715	4	0.036	1	-3.700	4	-0.000	1	-464.567	2	-0.434	2	0.001	0.468	0.240	0.730	7.716	0.340	0.087
583	M64	8in Dia. Duct	200	Sec 2 - max	0.326	2	0.000	1	0.042	3	-0.282	1	10.427	2	0.460	2	0.166	3	1017.137	2	0.003	2	0.036	0.660	0.031	0.729	10.427	0.644	0.103
588	M64	8in Dia. Duct	200	Sec 5 - min	0.032	1	-0.623	3	-0.067	2	-10.001	2	0.202	1	-0.066	5	-0.456	4	-1043.966	3	-0.918	3	0.004	0.696	0.026	0.728	10.001	0.716	0.150
427	M48	8in Dia. Duct	275	Sec 4 - max	0.470	6	0.250	6	0.123	4	-0.034	1	7.111	6	0.000	1	2.446	6	-2.525	1	-0.002	1	0.065	0.450	0.210	0.724	7.111	0.293	0.020
581	M64	8in Dia. Duct	200	Sec 1 - max	0.320	2	0.000	1	0.042	3	-0.292	1	10.230	2	0.511	2	0.120	3	1017.137	2	0.003	2	0.038	0.646	0.032	0.718	10.230	0.621	0.103
397	M43	8in Dia. Duct	275	Sec 4 - max	0.290	6	0.003	1	0.030	4	0.002	1	8.251	4	1.806	7	-0.032	1	1334.000	5	1.171	5	0.031	0.566	0.146	0.716	8.261	0.516	0.131
584	M64	8in Dia. Duct	200	Sec 4 - min	0.032	1	-0.522	3	-0.067	2	-10.603	2	0.202	1	-0.074	3	-0.447	2	-1043.946	3	-0.916	3	0.006	0.664	0.026	0.716	10.603	0.691	0.160
586	M64	8in Dia. Duct	200	Sec 3 - min	0.033	1	-0.521	3	-0.067	2	-10.616	2	0.202	1	-0.060	3	-0.460	2	-1043.946	3	-0.916	3	0.006	0.672	0.026	0.706	10.615	0.667	0.150
579	M63	8in Dia. Duct	200	Sec 5 - max	0.251	2	0.070	1	0.057	2	10.730	2	-0.292	1	0.031	6	0.420	4	1057.795	2	0.026	2	0.029	0.649	0.027	0.704	10.730	0.627	0.178
395	M43	8in Dia. Duct	275	Sec 3 - max	0.266	6	0.204	1	0.020	4	0.000	1	8.152	4	1.670	7	-0.032	1	1334.000	5	1.171	5	0.031	0.567	0.106	0.703	8.152	0.465	0.131
400	M43	8in Dia. Duct	275	Sec 5 - min	0.000	1	-0.010	6	-0.160	5	-8.540	4	-0.003	1	0.032	1	-1.540	7	55.531	1	0.040	1	0.000	0.604	0.067	0.702	8.540	0.531	0.084
584	M64	8in Dia. Duct	200	Sec 2 - min	0.033	1	-0.520	3	-0.067	2	-10.427	2	0.202	1	-0.106	3	-0.460	3	-1043.966	3	-0.916	3	0.006	0.660	0.031	0.696	10.427	0.644	0.150
393	M43	8in Dia. Duct	275	Sec 2 - max	0.266	6	0.006	1	0.021	4	-0.001	1	8.054	4	1.726	7	-0.033	1	1334.000	5	1.171	5	0.031	0.548	0.116	0.680	8.054	0.464	0.131
396	M43	8in Dia. Duct	275	Sec 4 - min	0.000	1	-0.009	6	-0.181	5	-8.251	4	-0.002	1	0.032	1	-1.625	7	55.531	1	0.040	1	0.000	0.566	0.107	0.647	8.251	0.495	0.084
582	M64	8in Dia. Duct	200	Sec 1 - min	0.034	1	-0.516	3	-0.357	2	-10.230	2	0.262	1	-0.120	3	-0.511	2	-1043.966	3	-0.918	3	0.004	0.646	0.032	0.664	10.230	0.622	0.166
580	M63	8in Dia. Duct	200	Sec 5 - min	0.033	1	0.017	1	-0.042	3	0.202	1	-10.730	2	-0.420	4	-0.031	5	-1036.100	3	-0.001	3	0.004	0.648	0.027	0.679	10.730	0.621	0.104
391	M43	8in Dia. Duct	275	Sec 1 - max	0.267	6	0.000	1	0.022	4	-0.003	1	8.367	4	1.001	7	-0.033	1	1334.000	5	1.171	5	0.031	0.538	0.114	0.674	8.367	0.428	0.131
398	M43	8in Dia. Duct	275	Sec 3 - min	0.000	1	-0.009	6	-0.181	6	-8.052	4	0.000	1	0.032	1	-1.670	7	55.531	1	0.040	1	0.000	0.567	0.106	0.672	8.052	0.467	0.096
426	M48	8in Dia. Duct	275	Sec 4 - min	0.010	1	0.002	1	-0.079	5	-7.111	4	0.034	1	-3.446	6	-0.099	1	-464.567	2	-0.434	2	0.002	0.450	0.218	0.670	7.111	0.297	0.050
429	M48	8in Dia. Duct	275	Sec 5 - max	0.440	6	0.254	6	0.125	4	-0.030	1	6.504	6	0.069	1	3.134	6	-2.525	1	-0.002	1	0.056	0.412	0.156	0.666	6.504	0.247	0.028
721	M76	8in Dia. Duct	200	Sec 1 - max	0.460	6	0.214	6	0.125	4	-0.030	1	6.974	6	0.000	1	2.134	6	-2.525	1	-0.002	1	0.036	0.412	0.160	0.666	6.504	0.247	0.028
394	M43	8in Dia. Duct	275	Sec 2 - min	0.000	1	-0.007	4	-0.162	5	-4.654	4	8.601	1	0.036	1	-1.730	7	56.531	1	0.040	1	0.000	0.548	0.110	0.644	8.604	0.436	0.094
392	M43	8in Dia. Duct	275	Sec 1 - min	0.000	1	-0.000	6	-0.163	5	-4.357	4	0.203	1	0.033	1	-1.861	7	56.531	1	0.040	1	0.000	0.520	0.114	0.643	8.367	0.407	0.094

	Member	Duct Size	Temperature (°F)		Axial (ksi)	Load Case	y Shear (ksi)	Load Case	z Shear (ksi)	Load Case	y top Bending (ksi)	Load Case	y bot Bending (ksi)	Load Case	z top Bending (ksi)	Load Case	z bot Bending (ksi)	Load Case	Torque (in-kip)	Load Case	Torsional Shear (ksi)	Load Case	f_a/F_a	D-3250 f_b/F_b	f_v/F_v	D-3230 Equation 11 $f_a/F_a + f_b/F_b + f_v/F_v$	f (ksi)	D-3260 Equation 13 $(f_b/F_b)^2 + (f_v/F_v)^2$	D-3270 Equation 14 $f_a/F_a + f_v/F_v$
311	M12	6in Dia. Duct	800	Sec 1 - max	0.270	8	0.108	8	0.343	8	-0.141	1	1.797	6	6.366	6	5.015	8	473.092	7	0.415	7	0.032	0.103	0.507	0.642	6.366	0.373	0.103
778	M84	6in Dia. Duct	800	Sec 5 - max	0.228	8	0.043	8	0.228	7	-0.141	1	1.297	6	6.366	6	5.015	8	473.093	7	0.415	7	0.032	0.103	0.507	0.642	6.366	0.373	0.080
381	M37	6in Dia. Duct	275	Sec 1 - max	0.136	7	0.225	2	0.109	7	0.087	1	0.153	2	0.060	1	2.467	5	0.129	1	0.000	1	0.016	0.386	0.221	0.020	0.153	0.221	0.020
361	M36	6in Dia. Duct	275	Sec 1 - max	0.153	7	0.158	2	0.107	7	0.109	1	0.384	2	0.085	1	2.167	5	23.427	1	0.021	1	0.018	0.404	0.200	0.022	0.384	0.237	0.020
390	M42	6in Dia. Duct	275	Sec 5 - max	0.164	6	0.000	1	0.022	4	-0.003	1	6.357	4	1.162	2	-0.007	1	1534.063	6	1.346	6	0.016	0.800	0.078	0.022	6.357	0.430	0.130
112	M12	6in Dia. Duct	800	Sec 1 - min	-0.078	8	0.034	1	-0.453	8	-1.297	6	0.141	1	-5.015	8	-6.366	6	-4.579	1	-0.009	1	0.011	0.103	0.507	0.621	6.366	0.370	0.084
780	M84	6in Dia. Duct	800	Sec 5 - min	-0.078	6	-0.040	1	-0.128	8	-1.297	6	0.141	1	-5.015	8	-6.366	6	-4.579	1	-0.006	1	0.011	0.103	0.607	0.621	6.366	0.370	0.019
353	M36	6in Dia. Duct	275	Sec 2 - max	0.164	7	0.157	2	0.107	7	0.104	1	0.330	2	0.060	1	2.133	5	23.427	1	0.021	1	0.018	0.400	0.180	0.017	0.330	0.233	0.020
430	M40	6in Dia. Duct	275	Sec 5 - min	0.020	1	0.002	1	-0.071	5	-0.504	6	0.020	1	-3.134	6	-0.080	1	-464.367	2	-0.434	2	0.002	0.412	0.186	0.012	6.504	0.240	0.066
723	M76	6in Dia. Duct	200	Sec 1 - min	0.020	1	0.002	1	-0.071	5	-0.504	6	0.030	1	-3.134	6	-0.080	1	-464.367	2	-0.436	2	0.002	0.412	0.186	0.012	6.504	0.240	0.066
382	M37	6in Dia. Duct	275	Sec 1 - min	0.009	1	-0.002	1	0.005	1	-4.153	2	-0.097	1	-3.497	5	-0.099	1	-915.145	4	-0.715	4	0.001	0.386	0.727	0.011	4.153	0.227	0.079
355	M36	6in Dia. Duct	275	Sec 3 - max	0.164	7	0.150	2	0.106	7	0.102	1	0.286	2	0.048	1	3.007	1	23.427	1	0.021	1	0.016	0.387	0.186	0.013	0.286	0.220	0.018
352	M36	6in Dia. Duct	275	Sec 1 - min	0.000	1	-0.006	1	0.006	1	-0.384	2	-0.109	1	-3.167	5	-0.085	1	-1241.477	5	-1.000	5	0.001	0.404	0.200	0.009	0.384	0.253	0.120
357	M36	6in Dia. Duct	275	Sec 4 - max	0.156	7	0.156	2	0.108	7	0.080	1	0.210	2	0.080	1	3.062	5	23.427	1	0.021	1	0.018	0.383	0.184	0.008	0.210	0.225	0.018
390	M42	6in Dia. Duct	275	Sec 5 - min	0.000	1	-0.014	6	-0.163	5	-0.367	4	0.003	1	0.007	1	-1.162	2	56.906	1	0.054	1	0.000	0.529	0.075	0.004	0.367	0.407	0.108
354	M36	6in Dia. Duct	275	Sec 2 - min	0.007	1	-0.008	1	0.005	1	-0.329	2	-0.104	1	-3.129	5	-0.086	1	-1241.477	5	-1.000	5	0.001	0.400	0.186	0.009	0.329	0.249	0.120
810	M67	6in Dia. Duct	200	Sec 5 - max	0.380	8	0.387	2	0.040	5	7.245	2	0.566	1	0.861	5	3.543	4	82.617	5	0.074	5	0.043	0.430	0.064	0.580	7.245	0.306	0.046
350	M36	6in Dia. Duct	275	Sec 5 - max	0.158	7	0.153	2	0.109	7	0.087	1	0.153	2	0.062	1	3.026	5	23.427	1	0.021	1	0.018	0.386	0.182	0.009	0.153	0.221	0.019
340	M36	6in Dia. Duct	275	Sec 3 - min	0.007	1	-0.006	1	0.005	1	-0.386	2	-0.102	1	-3.007	5	-0.080	1	-1241.477	5	-1.000	5	0.001	0.387	0.186	0.384	0.386	0.244	0.120
777	M84	6in Dia. Duct	800	Sec 4 - max	0.223	8	0.044	8	0.222	7	0.023	1	1.402	8	5.601	6	4.030	8	472.003	7	0.415	7	0.032	0.111	0.440	0.582	5.601	0.393	0.068
358	M36	6in Dia. Duct	275	Sec 4 - min	0.008	1	-0.009	1	0.009	1	-0.219	2	-0.099	1	-3.082	5	-0.080	1	-1241.477	5	-1.000	5	0.001	0.393	0.194	0.008	0.219	0.240	0.120
49	M5	6in Dia. Duct	875	Sec 5 - max	0.136	8	0.217	6	0.000	6	0.561	8	0.146	1	0.020	1	0.571	7	106.761	8	0.094	8	0.018	0.521	0.045	0.166	0.561	0.391	0.043
51	M5	6in Dia. Duct	875	Sec 1 - max	0.171	8	0.054	6	0.000	8	0.561	8	0.146	1	0.022	1	0.400	8	10.612	1	0.000	1	0.024	0.521	0.040	0.595	0.561	0.390	0.011
47	M5	6in Dia. Duct	875	Sec 4 - max	0.134	8	0.210	6	0.070	8	0.540	8	0.151	1	0.020	1	0.571	7	106.761	8	0.094	8	0.019	0.520	0.046	0.164	0.540	0.380	0.043
50	M5	6in Dia. Duct	875	Sec 5 - max	0.172	8	0.040	6	0.007	8	0.567	8	0.100	1	0.021	1	0.402	7	10.612	1	0.000	1	0.025	0.520	0.030	0.584	0.567	0.390	0.011
48	M5	6in Dia. Duct	875	Sec 2 - max	0.134	8	0.219	6	0.071	8	0.535	8	0.150	1	0.020	1	0.570	7	106.761	8	0.094	8	0.019	0.519	0.045	0.161	0.535	0.387	0.043
57	M6	6in Dia. Duct	875	Sec 4 - max	0.172	8	0.250	6	0.306	8	0.540	8	0.111	1	0.022	1	0.463	7	16.612	1	0.009	1	0.025	0.516	0.030	0.563	0.540	0.384	0.011
43	M5	6in Dia. Duct	875	Sec 3 - max	0.134	8	0.210	6	0.071	8	0.523	8	0.100	1	0.020	1	0.500	7	106.761	8	0.094	8	0.019	0.518	0.046	0.142	0.523	0.386	0.043
53	M6	6in Dia. Duct	875	Sec 3 - max	0.171	8	0.063	6	0.000	8	0.532	8	0.134	1	0.022	1	0.403	7	16.612	1	0.000	1	0.024	0.518	0.030	0.582	0.532	0.387	0.011
360	M36	6in Dia. Duct	275	Sec 5 - min	0.000	1	-0.000	1	0.005	1	-0.153	2	-0.087	1	-3.026	5	-0.082	1	-1241.477	5	-1.000	5	0.001	0.386	0.182	0.002	0.153	0.220	0.120
41	M5	6in Dia. Duct	875	Sec 1 - max	0.133	8	0.220	8	0.072	8	0.511	8	0.105	1	0.079	1	0.572	7	106.761	8	0.094	8	0.019	0.517	0.045	0.141	0.511	0.385	0.044
55	M6	6in Dia. Duct	875	Sec 3 - max	0.171	8	0.052	6	0.340	8	0.521	8	0.123	1	0.022	1	0.463	7	10.612	1	0.000	1	0.024	0.518	0.030	0.581	0.521	0.386	0.011
660	M60	6in Dia. Duct	875	Sec 5 - max	0.130	8	-0.040	1	0.400	8	0.550	7	0.020	1	0.511	8	0.165	1	167.520	8	0.166	8	0.030	0.044	0.517	0.580	0.511	0.365	0.087
779	M84	6in Dia. Duct	800	Sec 4 - min	-0.078	6	-0.030	1	-0.123	8	-1.402	8	-0.023	1	-4.030	8	-5.601	6	-4.579	1	-0.006	1	0.011	0.111	0.440	0.571	5.601	0.391	0.018
60	M5	6in Dia. Duct	875	Sec 5 - min	-0.023	1	0.012	1	-0.080	8	-0.140	1	-0.561	8	-0.571	7	-0.020	1	-388.277	8	-0.251	8	0.003	0.521	0.046	0.560	0.561	0.391	0.040
46	M5	6in Dia. Duct	875	Sec 4 - min	-0.023	1	0.012	1	-0.091	8	-0.151	1	-0.540	8	-0.571	7	-0.020	1	-388.277	8	-0.251	8	0.003	0.520	0.045	0.560	0.540	0.390	0.040
61	M7	6in Dia. Duct	875	Sec 1 - max	0.161	8	0.041	1	0.067	8	0.557	8	0.100	1	0.170	6	0.330	8	15.240	1	0.013	1	0.023	0.520	0.024	0.590	0.557	0.390	0.013
40	M5	6in Dia. Duct	875	Sec 3 - min	-0.023	1	0.013	1	-0.081	8	-0.156	1	-0.538	8	-0.570	7	-0.020	1	-388.277	8	-0.251	8	0.003	0.519	0.046	0.567	0.538	0.386	0.040
44	M5	6in Dia. Duct	875	Sec 2 - min	-0.034	1	0.013	1	-0.043	8	-0.160	1	-0.523	8	-0.560	7	-0.020	1	-388.277	8	-0.251	8	0.003	0.519	0.046	0.566	0.523	0.387	0.040
42	M5	6in Dia. Duct	875	Sec 1 - min	-0.025	1	0.013	1	-0.082	8	-0.165	1	-0.511	8	-0.572	8	-0.020	1	-388.277	8	-0.251	8	0.004	0.517	0.045	0.566	0.511	0.386	0.040
990	M96	6in Dia. Duct	875	Sec 5 - min	-0.023	1	-0.152	8	-0.012	1	-0.079	1	-0.590	7	-0.195	1	-0.511	8	-245.924	8	-0.216	8	0.004	0.044	0.517	0.564	0.511	0.385	0.061
52	M6	6in Dia. Duct	875	Sec 1 - min	-0.016	1	-0.079	8	-0.080	8	-0.140	1	-0.441	8	-0.490	8	-0.022	1	-341.274	8	-0.300	8	0.002	0.521	0.040	0.593	0.541	0.392	0.053
63	M7	6in Dia. Duct	875	Sec 2 - max	0.101	8	0.040	1	0.067	8	0.500	8	0.065	1	0.141	8	0.284	8	15.248	1	0.013	1	0.023	0.517	0.023	0.562	0.500	0.384	0.011
60	M6	6in Dia. Duct	875	Sec 5 - min	-0.015	1	-0.080	8	-0.070	8	-0.100	1	-0.557	8	-0.402	7	-0.021	1	-341.274	8	-0.300	8	0.002	0.520	0.030	0.582	0.567	0.391	0.053
56	M6	6in Dia. Duct	875	Sec 4 - min	-0.016	1	-0.070	8	-0.070	8	-0.111	1	-0.540	8	-0.403	7	-0.022	1	-341.274	8	-0.300	8	0.002	0.519	0.030	0.580	0.540	0.390	0.053
54	M6	6in Dia. Duct	875	Sec 2 - min	-0.016	1	-0.079	8	-0.079	8	-0.134	1	-0.532	8	-0.493	7	-0.022	1	-341.274	8	-0.300	8	0.002	0.519	0.030	0.580	0.532	0.388	0.053
58	M6	6in Dia. Duct	875	Sec 3 - min	-0.016	1	-0.078	8	-0.078	8	-0.123	1	-0.521	8	-0.493	7	-0.022	1	-341.274	8	-0.300	8	0.002	0.518	0.030	0.580	0.521	0.387	0.053
66	M7	6in Dia. Duct	875	Sec 3 - max	0.100	8	0.030	1	0.060	8	0.460	8	0.071	1	0.134	8	0.281	7	15.306	1	0.013	1	0.023	0.513	0.022	0.560	0.460	0.378	0.011
830	M67	6in Dia. Duct	200	Sec 5 - min	0.000	1	-0.071	1	-0.006	4	-0.560	1	-7.248	2	-1.643	4	-0.081	5	-370.800	4	-0.246	4	0.001	0.410	0.006	0.507	7.248	0.307	0.030
67	M7	6in Dia. Duct	875	Sec 4 - max	0.100	8	0.037	1	0.060	8	0.411	8	0.067	1	0.120	8	0.280	7	15.308	1	0.013	1	0.023	0.500	0.022	0.564	0.411	0.373	0.011
667	M60	6in Dia. Duct	875	Sec 4 - max	0.137	8	-0.049	1	0.401	8	0.003	7	-0.013	1	0.035	8	0.153	1	167.520	8	0.166	8	0.020	0.053	0.479	0.561	0.072	0.331	0.087
69	M7	6in Dia. Duct	875	Sec 5 - max	0.100	8	0.038	1	0.065	8	0.381	8	0.043	1	0.124	8	0.276	7	15.200	1	0.013	1	0.023	0.500	0.022	0.590	0.381	0.367	0.011
775	M84	6in Dia. Duct	800	Sec 3 - max	0.220	8	0.007	8	0.217	7	0.140	1	1.947	8	4.055	8	4.317	8	473.003	7	0.415	7	0.031	0.123	0.365	0.547	4.066	0.226	0.068
62	M7	6in Dia. Duct	875	Sec 1 - min	-0.006	1	-0.174	8	-0.070	8	-0.100	1	-0.567	8	-0.306	8	-0.170	8	-330.147	8	-0.207	8	0.001	0.520	0.024	0.540	0.567	0.301	0.066
707	M76	6in Dia. Duct	275	Sec 6 - max	0.015	8	-0.000	8	0.137	5	4.400	8	0.070	1	3.000	8	3.032	4	143.716	8	0.120	8	0.072	0.270	0.142	0.642	4.400	0.173	0.030
71	M6	6in Dia. Duct	875	Sec 1 - max	0.137	8	0.036	1	0.095	8	0.381	8	0.042	1	0.213	8	0.140	7	16.044	1	0.014	1	0.020	0.505	0.017	0.541	0.381	0.387	0.011
64	M7	6in Dia. Duct	875	Sec 2 - min	-0.006	1	-0.174	8	-0.077	8	-0.305	1	-4.560	8	-0.284	8	-0.143	8	-336.147	8	-0.207	8	0.001	0.517	0.023	0.540	0.506	0.386	0.066
363	M37	6in Dia. Duct	275	Sec 2 - max	0.142	7	0.213	2	0.118	7	0.080	1	5.120	4	0.120	1	3.010	5	0.129	1	0.006	1	0.017	0.331	0.161	0.036	5.120	0.150	0.024
341	M36	6in Dia. Duct	275	Sec 1 - max	0.167	2	0.000	8	0.109	2	0.130	1	0.374	2	0.040	1	1.700	5	44.375	1	0.036	1	0.010	0.403	0.113	0.300	0.374	0.237	0.016
68	M7	6in Dia. Duct	875	Sec 3 - min	-0.006	1	-0.175	8	-0.077	8	-0.071	1	-0.460	8	-0.201	7	-0.134	8	-330.147	8	-0.207	8	0.001	0.513	0.022	0.536	0.460	0.300	0.066
669	M96	6in Dia. Duct	875	Sec 4 - min	-0.077	1	-0.154	8	-0.012	1	0.012	1	-0.063	7	-0.163	7	-0.079	8	-245.924	8	-0.216	8	0.004	0.052	0.479	0.537	0.079	0.331	0.071
73	M6	6in Dia. Duct	875	Sec 2 - max	0.137	8	0.037	1	0.063	8	0.294	8	0.030	1	0.230	8	0.130	7	16.044	1	0.014	1	0.020	0.400	0.017	0.538	0.294	0.368	0.011
343	M36	6in Dia. Duct	275	Sec 2 - max	0.167	2	0.000	8	0.109	2	0.116	1	0.376	2	0.047	1	1.756	5	44.375	1	0.036	1	0.010	0.404	0.111	0.534	0.376	0.237	0.016
345	M36	6in Dia. Duct	275	Sec 3 - max	0.167	2	-0.002	8	0.106	2	0.113	1	0.376	2	0.040	1	1.732	5	44.375	1	0.039	1	0.010	0.404	0.109	0.532	0.378	0.238	0.016
66	M7	6in Dia. Duct	875	Sec 4 - min	-0.006	1	-0.170	8	-0.070	8	-0.067	1	-0.411	8	-0.360	7	-0.120	8	-330.147	8	-0.207	8	0.001	0.500	0.022	0.532	0.411	0.374	0.066
347	M36	6in Dia. Duct	275	Sec 4 - max	0.167	2	-0.003	8	0.109	2	0.110	1	0.381	2	0.051	1	1.666	5	44.375	1	0.039	1	0.019	0.404	0.107	0.530	0.381	0.237	0.016
577	M63	6in Dia. Duct	200	Sec 4 - max	0.237	2	0.473	2	0.043	1	7.600	1	-0.223	1	-0.160	5	0.243	4	1057.743	2	0.028	2	0.030	0.482	0.018	0.520	7.600	0.346	0.179
75	M6	6in Dia. Duct	875	Sec 3 - max	0.137	8	0.036	1	0.064	8	0.300	8	0.017	1	0.202	8	0.130	7	16.044	1	0.014	1	0.020	0.405	0.016	0.530	0.300	0.360	0.011
340	M35	6in Dia. Duct	275	Sec 5 - max	0.167	2	-0.004	8	0.107	7	0.108	1	0.384	2	0.063	1	1.063	5	44.375	1	0.030	1	0.010	0.404	0.106	0.530	0.384	0.230	0.016
70	M7	6in Dia. Duct	875	Sec 5 - min	-0.006	1	-0.177	8	-0.070	8	-0.043	5	-0.361	8	-0.270	7	-0.124	8	-336.147	8	-0.207	8	0.001	0.505	0.022	0.520	0.361	0.360	0.066
778	M84	6in Dia. Duct	800	Sec 3 - min	-0.073	8	-0.028	1	-0.119	8	-1.947	8	-0.140	1	-4.317	8	-4.055	8	-4.579	1	-0.009	1	0.019	0.123	0.363	0.528	4.055	0.223	0.017
364	M37	6in Dia. Duct	275	Sec 2 - min	0.016	1	-0.002	1	0.005	1	-5.120	4	-0.040	1	-3.010	5	-0.120	1	-915.145	4	-0.715	4	0.002	0.331	0.161	0.534	5.120	0.160	0.076
665	M60	6in Dia. Duct	875	Sec 3 - max	0.130	8	-0.040	1	0.402	8	0.702	8	-0.056	1	0.561	8	0.140	1	167.520	8	0.166	8	0.030	0.063	0.441	0.534	0.561	0.301	0.087
72	M6	6in Dia. Duct	875	Sec 1 - min	0.000	1	-0.213	8	-0.070	8	-0.043	1	-0.381	8	-0.140	7	-0.213	8	-316.328	8	-0.270	8	0.000	0.506	0.017	0.322	0.381	0.360	0.060
77	M6	6in Dia. Duct	875	Sec 4 - max	0.130	8	0.036	1	0.064	8	0.130	8	0.004	1	0.107	8	0.130	7	16.044	1	0.014	1	0.010	0.467	0.016	0.322	0.130	0.341	0.011
342	M35	6in Dia. Duct	275	Sec 1 - min	0.003	1	-0.008	8	0.005	1	-0.374	2	-0.120	1	-1.789	5	-0.048	1	-1077.374	5	-1.736	5	0.009	0.403	0.113	0.517	0.374	0.278	0.209
74	M6	6in Dia. Duct	875	Sec 2 - min	0.000	1	-0.214	8	-0.075	8	-0.030	1	-0.284	8	-0.130	7	-0.230	8	-316.330	8	-0.279	8	0.000	0.400	0.017	0.515	0.284	0.330	0.060
78	M6	6in Dia. Duct	875	Sec 5 - max	0.130	8	0.034	1	0.063	8	0.053	8	-0.000	1	0.101	8	0.134	7	16.044	1	0.014	1	0.010	0.460	0.016	0.516	0.053	0.332	0.011
81	M6	6in Dia. Duct	875	Sec 1 - max	0.136	8	0.034	1	0.063	8	0.053	8	-0.000	1	0.101	8	0.134	7	16.044	1	0.014	1	0.010	0.460	0.016	0.516	0.053	0.332	0.011
344	M36	6in Dia. Duct	275	Sec 2 - min	0.003	1	-0.000	8	0.005	1	-0.376	2	-0.110	1	-1.756	5	-0.047	1	-1077.374	5	-1.736	5	0.000	0.404	0.111	0.518	0.376	0.276	0.300
772	M76	6in Dia. Duct	200	Sec 2 - max	0.492	8	0.241	4	0.191	4	-0.016	1	0.413	8	0.099	1	2.766	8	-2.529	1	-0.002	1	0.097	0.279	0.179	0.513	4.413	0.111	0.027
346	M35	6in Dia. Duct	275	Sec 3 - min	0.003	1	-0.068	8	0.005	1	-0.378	2	-0.113	1	-1.722	5	-0.048	1	-1077.374	5	-1.735	5	0.000	0.404	0.108	0.513	0.378	0.278	0.300
348	M36	6in Dia. Duct	275	Sec 4 - min	0.004	1	-0.000	8	0.006	1	-0.381	2	-0.110	1	-1.866	5	-0.061	1	-1077.374	5	-1.736	5	0.000	0.404	0.107	0.511	0.381	0.278	0.300
350	M36	6in Dia. Duct	275	Sec 5 - min	0.004	1	-0.000	8	0.005	1	-0.384	2	-0.108	1	-1.866	5	-0.053	1	-1077.374	5	-1.736	5	0.000	0.404	0.105	0.508	0.384	0.278	0.300
76	M6	6in Dia. Duct	875	Sec 3 - min	0.000	1	-0.215	8	-0.075	8	-0.017	1	-0.208	8	-0.130	7	-0.202	8	-316.328	8	-0.279	8	0.000	0.405	0.016	0.509	0.208	0.351	0.060
666	M99	6in Dia. Duct	875	Sec 2 - min	-0.079	1	-0.159	8	-0.012	1	0.058	1	-0.792	9	-0.140	1	-3.591	8	-245.924	8	-0.216	8	0.004	0.093	0.441	0.509	3.591	0.291	0.062
773	M84	6in Dia. Duct	800	Sec 2 - max	0.217	8	0.077	8	0.211	7	0.230	1	1.732	6	4.270	8	3.970	8	473.063	7	0.415	7	0.031	0.137	0.330	0.507	4.270	0.108	0.042
381	M42	6in Dia. Duct	275	Sec 1 - max	0.167	8	0.048	1	0.054	4	3.820	8	0.350	1	3.750	7	-0.017	5	1534.063	5	1.346	5	0.016	0.346	0.237	0.505	3.820	0.113	0.154
570	M63	6in Dia. Duct	200	Sec 4 - min	0.030	1	0.017	1	-0.043	6	0.223	1	-7.600	2	-0.283	4	0.166	6	-1056.160	3	-0.081	3	0.005	0.482	0.016	0.504	7.600	0.346	0.104
76	M6	6in Dia. Duct	875	Sec 4 - min	0.000	1	-0.217	8	-0.074	8	-0.004	1	-0.130	8	-0.130	7	-0.107	8	-316.328	8	-0.279	8	0.000	0.467	0.016	0.502	0.130	0.342	0.060
662	M60	6in Dia. Duct	875	Sec 2 - max	0.134	8	-0.049	1	0.464	8	0.938	8	-0.097	1	5.099	9	0.128	1	167.520	9	0.165	9	0.019	0.074	0.409	0.407	5.099	0.239	0.087
63	M6	6in Dia. Duct	875	Sec 2 - max	0.135	8	0.030	1	0.061	8	3.844	8	-0.030	1	0.175	8	0.128	7	16.044	1	0.014	1	0.019	0.464	0.014	0.407	3.844	0.310	0.010
80	M6	6in Dia. Duct	875	Sec 5 - min	0.006	1	-0.218	8	-0.074	8	0.008	1	-0.043	6	-0.134	7	-0.161	8	-316.328	8	-0.279	8	0.000	0.460	0.016	0.400	0.063	0.334	0.000
82	M6	6in Dia. Duct	875	Sec 1 - min	0.000	1	-0.218	8	-0.074	8	0.008	1	-0.063	6	-0.134	7	-0.161	8	-313.328	8	-0.279	8	0.000	0.460	0.015	0.400	0.063	0.334	0.000
774	M84	6in Dia. Duct	800	Sec 2 - min	-0.078	8	-0.017	1	-0.112	8	-1.732	6	-0.210	1	-3.160	8	-4.270	8	-4.579	1	-0.006	1	0.010	0.137	0.330	0.406	4.270	0.166	0.016

Node	Member	Duct Size	Temperature (°F)	Section	Axial (ksi)	Load Case	y Shear (ksi)	Load Case	z Shear (ksi)	Load Case	y top Bending (ksi)	Load Case	y bot Bending (ksi)	Load Case	z top Bending (ksi)
342	M42	6in Dia. Duct	275	Sec 1 - min	0.000	1	-0.074	8	-0.218	5	-0.338	1	-3.826	8	0.017
644	M66	6in Dia. Duct	675	Sec 2 - min	-0.030	1	-0.157	8	-0.012	1	0.087	1	-0.838	9	-0.128
613	M67	6in Dia. Duct	300	Sec 2 - max	0.348	8	0.460	2	0.042	3	0.212	1	8.733	2	1.090
66	M8	6in Dia. Duct	675	Sec 3 - max	0.136	6	0.027	1	0.000	8	5.432	8	-0.080	1	0.160
35	M4	6in Dia. Duct	675	Sec 3 - max	0.181	8	-0.080	1	0.347	8	0.210	1	3.861	3	1.700
621	M69	6in Dia. Duct	675	Sec 1 - max	0.087	9	0.025	1	0.093	7	5.375	8	-0.248	1	0.141
84	M8	6in Dia. Duct	675	Sec 3 - min	0.300	1	-0.221	8	-0.072	8	0.038	1	-5.844	8	-0.128
632	M69	6in Dia. Duct	675	Sec 1 - min	0.044	1	-0.018	8	-0.012	8	0.346	1	-4.375	9	-0.560
338	M33	6in Dia. Duct	275	Sec 5 - max	0.119	2	-0.006	1	0.108	4	0.130	1	6.128	2	1.140
861	M88	6in Dia. Duct	675	Sec 1 - max	0.133	8	-0.040	1	0.440	4	1.090	8	-0.130	1	4.810
708	M78	6in Dia. Duct	275	Sec 4 - min	0.000	1	-0.107	1	-0.148	4	-0.879	1	-4.408	8	-3.072
365	M37	6in Dia. Duct	275	Sec 3 - max	0.148	7	0.201	3	0.122	7	0.063	1	4.040	3	0.142
330	M34	6in Dia. Duct	275	Sec 5 - max	0.144	2	-0.000	1	0.108	2	0.128	1	8.374	2	0.720
387	M42	6in Dia. Duct	275	Sec 4 - max	0.157	8	0.010	1	0.030	4	-0.041	1	5.387	4	1.700
67	M8	6in Dia. Duct	675	Sec 4 - max	0.136	8	0.024	1	0.040	8	5.417	8	-0.001	1	0.102
38	M4	6in Dia. Duct	675	Sec 3 - min	-0.074	1	-0.709	8	-0.000	1	-3.951	3	-0.219	1	-0.043
706	M78	6in Dia. Duct	275	Sec 3 - max	0.000	8	0.026	8	0.111	5	4.350	8	-0.028	1	1.446
330	M33	6in Dia. Duct	275	Sec 5 - min	0.000	1	-0.287	7	0.008	1	-0.128	3	-0.130	1	-0.030
86	M8	6in Dia. Duct	675	Sec 3 - min	0.000	1	-0.234	8	-0.071	8	0.046	1	-4.632	8	-0.131
724	M78	6in Dia. Duct	300	Sec 3 - min	0.033	1	0.002	1	-0.047	5	-4.413	8	0.010	1	-2.700
337	M34	6in Dia. Duct	275	Sec 4 - max	0.144	2	-0.008	1	0.108	2	0.123	1	8.311	7	0.005
642	M66	6in Dia. Duct	675	Sec 1 - min	-0.032	1	-0.156	8	-0.312	1	0.130	1	-1.006	8	-0.115
360	M37	6in Dia. Duct	275	Sec 3 - min	0.022	1	-0.002	1	0.806	1	-4.080	3	-0.000	1	-2.404
336	M34	6in Dia. Duct	275	Sec 3 - max	0.146	2	-0.007	1	0.180	2	0.126	1	8.360	2	0.040
340	M34	6in Dia. Duct	275	Sec 5 - min	0.000	1	-0.304	8	0.008	1	-0.374	3	-0.130	1	0.000
89	M9	6in Dia. Duct	675	Sec 5 - max	0.172	8	0.021	1	1.057	9	5.199	8	-0.112	1	0.214
611	M71	6in Dia. Duct	600	Sec 1 - max	0.133	8	0.021	1	1.057	1	5.199	8	-0.112	1	0.214
333	M34	6in Dia. Duct	275	Sec 2 - max	0.146	2	-0.006	1	0.107	4	0.126	1	6.107	2	0.008
366	M42	6in Dia. Duct	275	Sec 4 - min	0.000	1	-0.004	8	-0.101	5	-4.287	4	0.041	1	0.000
66	M8	6in Dia. Duct	675	Sec 4 - min	0.000	1	-0.227	8	-0.066	8	0.001	1	-5.417	8	-0.186
39	M4	6in Dia. Duct	675	Sec 5 - max	0.093	8	-0.070	1	0.127	4	1.036	9	-0.173	3	4.404
338	M34	6in Dia. Duct	275	Sec 4 - min	0.000	1	-0.202	8	0.005	1	-4.311	2	-0.123	1	-0.001
614	M67	6in Dia. Duct	300	Sec 2 - min	0.000	1	0.022	1	-0.067	2	-4.733	3	-0.212	1	-1.246
331	M34	6in Dia. Duct	275	Sec 1 - max	0.145	2	-0.006	1	0.100	4	0.120	1	6.128	2	0.160
720	M78	6in Dia. Duct	300	Sec 5 - max	0.033	8	0.278	3	0.000	8	2.160	8	-0.027	1	0.060
339	M34	6in Dia. Duct	275	Sec 3 - min	0.009	1	-0.202	9	0.005	1	-4.240	2	-0.120	1	-0.003
40	M4	6in Dia. Duct	675	Sec 5 - min	-0.022	1	-0.111	8	-0.000	1	0.133	1	-1.035	8	-0.110
334	M34	6in Dia. Duct	275	Sec 3 - min	0.000	1	-0.201	8	0.000	1	-0.167	2	-0.120	1	-0.005
80	M8	6in Dia. Duct	675	Sec 5 - min	0.000	1	-0.230	8	-0.067	8	0.112	1	-5.100	8	-0.107
652	M71	6in Dia. Duct	600	Sec 1 - min	0.000	1	-0.230	8	-0.067	8	0.112	1	-5.100	8	-0.107
113	M12	6in Dia. Duct	600	Sec 2 - max	0.270	9	0.083	8	0.338	8	-0.009	1	0.795	8	4.130
332	M34	6in Dia. Duct	275	Sec 1 - min	0.000	1	-0.200	8	0.005	1	-4.120	2	-0.130	1	-0.004
740	M80	6in Dia. Duct	725	Sec 5 - max	0.503	8	-0.164	1	0.002	8	-2.200	1	2.204	7	2.010
101	M10	6in Dia. Duct	725	Sec 1 - max	0.503	7	0.140	8	0.120	4	-2.200	1	2.204	7	2.010
91	M10	6in Dia. Duct	600	Sec 1 - max	0.110	8	0.073	4	0.007	3	-0.050	1	3.410	8	1.245
650	M71	6in Dia. Duct	600	Sec 5 - max	0.119	8	-0.071	1	0.056	7	-0.950	1	3.410	9	1.245
719	M77	6in Dia. Duct	230	Sec 5 - max	0.204	7	0.223	3	0.225	5	1.820	8	-0.000	1	4.145
802	M58	6in Dia. Duct	675	Sec 1 - min	-0.291	2	-0.253	8	-0.041	7	-0.116	1	-4.334	2	-0.006
114	M13	6in Dia. Duct	600	Sec 2 - min	-0.063	8	0.020	1	-0.446	8	-0.706	8	0.000	1	-3.313
990	M97A	6in Dia. Duct	77	Sec 5 - min	-0.100	8	-0.206	7	-0.105	8	-1.164	7	-2.190	8	-3.070
990	M97A	6in Dia. Duct	77	Sec 4 - min	-0.100	8	-0.205	7	-0.100	9	-1.095	7	-2.187	8	-3.974
367	M37	6in Dia. Duct	275	Sec 4 - max	0.156	7	0.186	2	0.134	8	0.072	1	4.090	3	0.103
980	M97A	6in Dia. Duct	77	Sec 3 - min	-0.100	8	-0.306	7	-0.105	8	-0.082	7	-2.125	8	-3.070
725	M78	6in Dia. Duct	300	Sec 3 - max	0.307	8	0.210	8	0.000	8	-0.002	1	2.241	3	0.000
980	M98A	6in Dia. Duct	77	Sec 5 - min	-0.095	8	-0.102	8	-0.004	8	-0.061	7	-1.732	8	-4.371
990	M97A	6in Dia. Duct	77	Sec 5 - max	0.036	7	0.071	8	0.179	8	2.190	8	1.190	7	3.203
964	M97A	6in Dia. Duct	77	Sec 2 - min	-0.100	8	-0.304	7	-0.107	8	-0.678	7	-2.068	8	-3.861
680	M71	6in Dia. Duct	600	Sec 5 - min	0.000	1	-0.322	8	-0.080	8	-3.416	8	0.630	1	-1.556
92	M10	6in Dia. Duct	630	Sec 1 - min	0.000	1	0.073	2	-0.067	2	-3.418	8	0.650	1	-1.560
93	M10	6in Dia. Duct	600	Sec 2 - max	0.160	8	0.066	4	0.000	3	-0.283	1	3.022	8	1.443
967	M97A	6in Dia. Duct	77	Sec 4 - max	0.030	7	0.072	8	0.171	8	2.192	8	1.065	7	3.734
720	M77	6in Dia. Duct	200	Sec 5 - min	0.078	1	-0.002	1	-0.032	4	0.000	1	-1.920	8	-0.232
962	M97A	6in Dia. Duct	77	Sec 1 - min	-0.100	8	-0.204	7	-0.100	8	-0.778	7	-2.050	8	-3.004
965	M97A	6in Dia. Duct	77	Sec 3 - max	0.056	7	0.074	8	0.171	8	2.125	8	0.842	7	3.306
1001	M98A	6in Dia. Duct	77	Sec 1 - max	0.072	7	-0.020	1	0.200	8	1.543	8	0.410	7	4.510
979	M98A	6in Dia. Duct	77	Sec 5 - max	0.041	7	0.084	8	0.134	7	1.732	8	0.981	7	3.240
963	M97A	6in Dia. Duct	77	Sec 2 - max	0.057	7	0.075	8	0.172	8	2.066	8	0.678	7	3.170
706	M78	6in Dia. Duct	275	Sec 3 - min	0.000	1	-0.079	1	-0.114	4	0.028	1	-4.356	8	-1.800
1002	M98A	6in Dia. Duct	77	Sec 1 - min	-0.064	8	-0.166	7	-0.167	8	-0.410	7	-1.543	8	-4.380
982	M98A	6in Dia. Duct	77	Sec 1 - min	-0.080	8	-0.173	7	-0.176	8	-0.850	7	-2.110	8	-3.600
441	M50	6in Dia. Duct	200	Sec 1 - max	0.027	8	0.348	7	0.251	3	-0.341	1	5.003	7	0.465
430	M49	6in Dia. Duct	230	Sec 5 - max	0.027	8	-0.154	1	-0.002	1	-0.341	1	5.063	7	0.465
981	M97A	6in Dia. Duct	77	Sec 1 - max	0.057	7	0.078	8	0.173	8	2.050	8	0.770	7	3.340
991	M98A	6in Dia. Duct	77	Sec 1 - max	0.074	7	0.005	8	0.210	8	2.110	8	0.860	7	3.767
135	M14	6in Dia. Duct	725	Sec 1 - max	0.300	7	0.160	7	0.000	1	-0.161	1	8.411	8	3.770
994	M98A	6in Dia. Duct	77	Sec 2 - min	-0.080	8	-0.173	7	-0.179	8	-0.749	7	-2.112	8	-3.932
730	M78	6in Dia. Duct	300	Sec 5 - min	0.073	1	0.002	1	-0.005	7	0.027	1	-2.560	8	-3.370
440	M49	6in Dia. Duct	200	Sec 5 - min	0.000	7	-1.075	8	-0.305	3	-6.603	7	0.341	1	-0.405
442	M50	6in Dia. Duct	200	Sec 1 - min	0.000	7	0.046	1	-0.051	2	-6.603	7	0.341	1	-0.405
874	M96	6in Dia. Duct	675	Sec 2 - min	-0.123	8	0.022	1	0.000	1	-4.475	2	-0.160	1	-0.150
1003	M99A	6in Dia. Duct	77	Sec 2 - max	0.077	7	-0.027	1	0.200	8	1.507	8	0.404	7	4.441
1040	M105	6in Dia. Duct	77	Sec 1 - max	0.122	8	0.016	8	0.336	8	4.473	8	4.061	7	0.861
983	M98A	6in Dia. Duct	77	Sec 2 - max	0.072	7	0.006	8	0.216	8	2.112	8	0.748	7	3.720
368	M37	6in Dia. Duct	275	Sec 4 - min	0.030	1	-0.002	1	0.006	1	-4.090	3	-0.072	1	-1.016
633	M69	6in Dia. Duct	675	Sec 2 - max	0.034	8	0.023	1	0.061	7	4.287	8	-0.280	1	0.121
37	M4	6in Dia. Duct	675	Sec 4 - max	0.099	8	-0.028	1	0.231	4	1.400	8	-0.234	1	3.277
978	M98A	6in Dia. Duct	77	Sec 4 - min	-0.094	8	-0.181	8	-0.300	8	-0.667	7	-1.618	8	-4.273
96	M10	6in Dia. Duct	600	Sec 3 - max	0.101	8	0.036	4	0.033	3	0.020	1	2.740	8	1.564
980	M98A	6in Dia. Duct	77	Sec 3 - min	-0.080	8	-0.174	7	-0.176	8	-0.632	7	-2.116	8	-3.774
1004	M99A	6in Dia. Duct	77	Sec 2 - min	-0.064	8	-0.166	7	-0.167	8	-0.404	7	-1.507	8	-4.275
1067	M105	6in Dia. Duct	77	Sec 4 - max	0.122	8	0.019	8	0.330	8	4.460	8	4.121	7	0.816
634	M69	6in Dia. Duct	675	Sec 2 - min	0.042	1	-0.018	8	-0.016	8	0.290	1	-4.287	[illegible]	-0.452
995	M98A	6in Dia. Duct	77	Sec 3 - max	0.073	7	0.002	8	0.216	8	2.116	8	0.430	[illegible]	3.382
972	M98A	6in Dia. Duct	77	Sec 1 - min	-0.093	8	-0.187	8	-0.071	8	0.003	1	-1.427	[illegible]	-4.014
1066	M105	6in Dia. Duct	77	Sec 3 - max	0.121	8	0.030	8	0.000	8	4.464	8	4.631	[illegible]	0.816

Node	Load Case	z bot Bending (ksi)	Load Case	Torque (lb-in)	Load Case	Torsional Shear (ksi)	Load Case	f_a/F_a	f_b/F_b (D-2250)	f_v/F_v	D-2250 Equation 13 $f_a/F_a + f_b/F_b + f_v/F_v$	f (ksi)	D-2270 Equation 13	D-2270 Equation 14
342	1	-3.750	7	36.505	1	0.051	1	0.000	0.248	0.237	0.440	3.826	0.080	0.108
644	1	-6.066	8	-245.024	6	-0.218	6	0.004	0.874	0.404	0.443	5.066	0.236	0.082
613	2	1.240	3	63.817	5	0.074	5	0.040	0.383	0.070	0.462	8.730	0.193	0.058
66	3	0.131	2	16.046	1	0.016	1	0.010	0.447	0.013	0.480	5.632	0.300	0.010
35	4	0.043	1	171.022	8	0.144	8	0.026	0.314	0.140	0.480	3.851	0.142	0.080
621	8	5.390	7	240.938	8	0.209	8	0.009	0.427	0.044	0.479	5.375	0.262	0.070
84	7	-0.175	8	-310.320	8	-0.270	8	0.000	0.484	0.014	0.478	5.844	0.311	0.080
632	7	-0.141	8	-3.011	1	-0.003	1	0.006	0.427	0.044	0.477	4.375	0.262	0.080
338	8	0.020	1	46.740	1	0.043	1	0.014	0.380	0.073	0.474	6.130	0.210	0.017
861	8	0.116	1	167.530	8	0.165	8	0.010	0.000	0.307	0.472	4.810	0.194	0.080
708	4	-2.880	5	-2.473	1	-0.002	1	0.009	0.279	0.197	0.471	4.409	0.113	0.019
365	1	2.404	8	6.120	1	0.006	1	0.017	0.290	0.156	0.471	4.080	0.127	0.023
330	4	0.000	1	51.442	1	0.046	1	0.017	0.403	0.048	0.498	8.374	0.237	0.017
387	7	-0.008	1	1534.083	5	1.346	5	0.016	0.338	0.112	0.466	5.387	0.166	0.161
67	3	0.166	3	16.044	1	0.014	1	0.010	0.438	0.015	0.464	5.417	0.300	0.010
38	1	-1.700	4	-279.132	8	-0.274	8	0.010	0.314	0.140	0.464	3.951	0.142	0.131
706	5	1.800	4	143.718	8	0.126	8	0.071	0.376	0.114	0.461	4.350	0.111	0.030
330	1	-1.540	8	-2137.830	5	-1.870	5	0.000	0.300	0.073	0.460	6.130	0.204	0.234
86	2	-0.160	3	-310.320	8	-0.270	8	0.000	0.447	0.013	0.460	5.632	0.300	0.070
724	5	-0.000	1	-464.567	2	-0.434	2	0.004	0.278	0.178	0.460	4.413	0.116	0.062
337	4	0.001	1	51.442	1	0.045	1	0.017	0.380	0.047	0.460	8.311	0.232	0.017
642	1	-4.810	8	-245.024	8	-0.218	8	0.006	0.360	0.367	0.457	4.818	0.194	0.082
360	5	-0.142	1	-815.148	4	-0.718	4	0.003	0.290	0.160	0.456	4.080	0.134	0.070
336	4	0.003	1	51.442	1	0.046	1	0.017	0.300	0.041	0.453	6.240	0.220	0.017
340	1	-0.724	4	-2221.665	5	-1.950	5	0.000	0.403	0.046	0.449	6.374	0.290	0.237
89	3	0.197	2	18.044	1	0.014	1	0.018	0.413	0.017	0.448	5.199	0.246	0.010
611	3	0.107	2	16.044	1	0.014	1	0.018	0.413	0.017	0.448	5.199	0.245	0.010
333	4	0.005	1	51.442	1	0.046	1	0.017	0.380	0.030	0.447	6.107	0.223	0.017
366	1	-1.700	7	36.505	1	0.051	1	0.000	0.338	0.112	0.447	5.287	0.163	0.108
66	2	-0.182	3	-310.320	8	-0.270	8	0.000	0.430	0.016	0.446	5.417	0.287	0.070
39	9	0.116	1	167.520	9	0.157	8	0.013	0.082	0.380	0.444	4.404	0.170	0.087
338	1	-0.865	4	-2221.665	5	-1.950	5	0.000	0.380	0.043	0.443	6.311	0.281	0.237
614	3	-1.080	2	-278.600	4	-0.248	4	0.001	0.363	0.070	0.443	8.730	0.160	0.033
331	4	0.006	1	51.442	1	0.046	1	0.017	0.366	0.030	0.440	6.128	0.210	0.017
720	1	3.370	8	-2.525	1	-0.003	1	0.063	0.164	0.213	0.438	3.370	0.060	0.031
339	1	-0.640	4	-2221.665	5	-1.950	5	0.000	0.390	0.041	0.438	6.240	0.277	0.238
40	1	-4.404	8	-245.624	8	-0.206	8	0.003	0.082	0.350	0.435	4.404	0.178	0.044
334	1	-0.808	4	-2221.665	8	-1.950	8	0.000	0.380	0.030	0.430	6.167	0.272	0.236
80	2	-0.214	3	-310.320	8	-0.278	8	0.000	0.412	0.017	0.430	5.100	0.246	0.071
652	2	-0.214	3	-310.320	8	-0.270	8	0.000	0.413	0.017	0.430	5.100	0.246	0.071
113	8	3.313	9	477.093	7	0.418	7	0.072	0.083	0.270	0.424	4.130	0.150	0.104
332	1	-0.546	4	-2221.665	8	-1.950	8	0.000	0.380	0.030	0.424	6.120	0.260	0.236
740	8	2.020	4	143.718	8	0.126	8	0.072	0.182	0.160	0.414	2.204	0.048	0.040
101	5	2.020	4	143.718	8	0.128	8	0.072	0.182	0.160	0.414	2.204	0.048	0.037
91	8	1.550	8	16.044	1	0.014	1	0.016	0.271	0.124	0.411	3.410	0.100	0.012
650	9	1.550	8	16.044	1	0.014	1	0.016	0.271	0.124	0.411	3.410	0.100	0.012
719	3	0.232	4	6.120	1	0.006	1	0.024	0.122	0.262	0.406	4.145	0.100	0.026
802	1	-0.256	8	-1.684	5	-0.001	1	0.030	0.344	0.030	0.404	4.334	0.170	0.036
114	8	-4.120	8	-0.576	1	-0.000	1	0.012	0.063	0.320	0.403	4.130	0.150	0.063
990	8	-3.263	7	-2126.542	8	-1.762	8	0.011	0.130	0.251	0.401	3.870	0.096	0.210
990	8	-3.234	7	-2126.542	8	-1.762	8	0.011	0.137	0.252	0.399	3.974	0.095	0.210
367	1	1.015	5	6.120	1	0.006	1	0.018	0.250	0.121	0.398	4.090	0.096	0.023
980	8	-3.206	7	-2128.542	8	-1.762	8	0.011	0.134	0.252	0.397	3.070	0.096	0.210
725	1	3.101	5	-2.526	1	-0.003	1	0.060	0.142	0.160	0.397	3.101	0.060	0.030
980	8	-3.240	7	-1027.877	8	-1.614	8	0.010	0.110	0.277	0.397	4.371	0.114	0.190
990	7	3.970	8	2030.160	8	2.202	8	0.008	0.139	0.251	0.398	3.970	0.097	0.201
964	8	-3.178	7	-2126.542	8	-1.782	8	0.011	0.132	0.252	0.396	3.861	0.095	0.210
680	8	-1.246	8	-310.320	8	-0.270	8	0.000	0.271	0.134	0.390	3.410	0.107	0.063
92	8	-1.246	8	-310.320	8	-0.270	8	0.000	0.271	0.134	0.385	3.410	0.107	0.040
93	8	1.736	8	16.044	1	0.014	1	0.015	0.240	0.130	0.384	3.022	0.083	0.010
967	7	3.974	8	2030.160	8	2.202	8	0.008	0.137	0.252	0.384	3.974	0.097	0.201
720	4	-4.145	8	-815.145	4	-0.715	4	0.006	0.122	0.262	0.383	4.145	0.107	0.062
962	8	-3.140	7	-2128.542	8	-1.762	8	0.011	0.130	0.252	0.383	3.804	0.090	0.210
965	7	3.870	8	2030.160	8	2.202	8	0.008	0.134	0.252	0.382	3.870	0.097	0.201
1001	7	4.380	8	1531.008	8	1.262	8	0.006	0.000	0.280	0.381	4.510	0.121	0.103
979	7	4.371	8	2579.716	8	2.152	8	0.004	0.110	0.277	0.381	4.371	0.110	0.231
963	7	3.861	8	2030.160	8	2.202	8	0.006	0.132	0.252	0.380	3.861	0.087	0.201
706	4	-1.860	5	-2.473	1	-0.002	1	0.000	0.276	0.114	0.380	4.356	0.111	0.012
1002	8	-4.510	7	-1024.612	8	-1.380	8	0.006	0.000	0.280	0.380	4.510	0.121	0.170
982	8	-3.767	7	-2140.016	8	-1.701	8	0.010	0.134	0.240	0.380	3.600	0.091	0.210
441	2	0.465	3	-15.143	1	-0.013	1	0.003	0.359	0.031	0.384	5.003	0.162	0.040
430	2	0.465	3	-15.143	1	-0.013	1	0.003	0.338	0.031	0.380	5.063	0.163	0.016
981	7	3.864	8	2030.160	8	2.202	8	0.006	0.130	0.252	0.388	3.864	0.087	0.201
991	7	3.600	8	2336.167	8	1.966	8	0.006	0.134	0.240	0.388	3.600	0.082	0.230
135	8	1.477	8	420.016	7	0.378	7	0.064	0.033	0.300	0.388	3.770	0.131	0.014
994	8	-3.729	7	-2140.012	8	-1.791	8	0.010	0.134	0.242	0.388	3.932	0.090	0.210
730	8	-0.280	1	-464.567	2	-0.434	2	0.008	0.164	0.213	0.386	3.370	0.080	0.060
440	3	-0.405	2	-1474.061	8	-1.204	8	0.000	0.355	0.031	0.385	6.603	0.206	0.200
442	3	-0.405	2	-1474.061	8	-1.204	8	0.000	0.355	0.031	0.385	6.603	0.206	0.148
874	7	-0.003	1	-3.300	1	-0.003	1	0.017	0.366	0.013	0.384	4.475	0.162	0.003
1003	7	4.279	8	1531.008	8	1.262	8	0.009	0.095	0.281	0.384	4.441	0.117	0.163
1040	8	0.854	7	1356.811	8	1.137	8	0.012	0.315	0.056	0.384	4.861	0.148	0.127
983	7	3.832	8	2336.167	8	1.966	8	0.006	0.134	0.243	0.384	3.832	0.090	0.230
368	5	-0.183	1	-815.148	4	-0.718	4	0.003	0.250	0.131	0.384	4.090	0.104	0.070
633	8	0.432	7	240.038	8	0.208	8	0.007	0.340	0.036	0.383	4.387	0.167	0.037
37	8	0.090	1	167.520	8	0.157	8	0.012	0.111	0.260	0.383	3.277	0.097	0.080
978	8	-3.036	7	-1027.877	8	-1.614	8	0.010	0.102	0.270	0.383	4.273	0.108	0.190
96	8	1.867	8	16.044	1	0.014	1	0.014	0.217	0.151	0.382	2.740	0.060	0.007
980	8	-3.662	7	-2140.016	8	-1.791	8	0.010	0.134	0.230	0.382	3.776	0.088	0.216
1004	8	-4.441	7	-1024.612	8	-1.380	8	0.006	0.000	0.281	0.382	4.441	0.117	0.170
1067	8	0.846	7	1258.911	8	1.127	8	0.012	0.212	0.057	0.382	4.921	0.141	0.127
634	7	-0.121	8	-3.811	1	-0.003	1	0.006	0.340	0.036	0.382	4.287	0.167	0.086
995	7	2.774	8	2336.107	8	1.956	8	0.000	0.134	0.230	0.381	3.776	0.087	0.230
972	8	-3.065	8	-1027.877	8	-1.614	8	0.010	0.078	0.302	0.380	4.014	0.127	0.190
1066	8	0.836	7	1356.811	8	1.137	8	0.012	0.300	0.060	0.380	4.461	0.140	0.127

	Member	Duct Size	Temperature (°F)		Axial (ksi)	Load Case	y Shear (ksi)	Load Case	z Shear (ksi)	Load Case	y Hp Bending (ksi)	Load Case	y Bnt Bending (ksi)	Load Case	z Hp Bending (ksi)	Load Case	z Bnt Bending (ksi)	Load Case	Torque (in-lb)	Load Case	Torsional Shear (ksi)	Load Case	fa/Fa	fb/Fb (D-2230)	fv/Fv	D-2250 Equation 11: fa/Fa + fb/Fb + fb/Fb	f (ksi)	D-2260 Equation 13: (fb/Fb)² + (fv/Fv)²	D-2270 Equation 14: fv + fv
1070	M105	8in Dia. Duct	77	Sec 5 - min	0.083	1	-0.140	8	-0.070	8	-4.881	7	-4.473	8	-0.834	7	-0.841	8	-1432.368	8	-1.109	8	0.009	0.316	0.058	0.380	4.881	0.146	0.147
84	M10	8in Dia. Duct	800	Sec 2 - min	0.000	1	0.056	2	-0.350	2	-3.022	8	0.263	1	-1.756	8	-1.443	8	-316.328	8	-0.270	8	0.000	0.240	0.130	0.378	3.022	0.084	0.048
868	M68A	8in Dia. Duct	77	Sec 4 - min	-0.080	8	-0.174	7	-0.173	8	-4.021	7	-2.118	8	-3.710	8	-3.854	7	-2140.018	8	-1.701	8	0.010	0.134	0.238	0.378	3.710	0.084	0.210
1063	M108	8in Dia. Duct	77	Sec 2 - max	0.121	8	0.020	8	-0.001	8	4.430	8	4.831	7	0.036	8	0.038	7	1268.011	8	1.137	8	0.012	0.308	0.080	0.378	4.831	0.137	0.127
1068	M105	8in Dia. Duct	77	Sec 4 - min	0.082	1	-0.140	8	-0.080	8	-4.831	7	-4.488	8	-0.846	7	-0.800	8	-1432.368	8	-1.100	8	0.008	0.312	0.067	0.378	4.831	0.143	0.147
703	M78	8in Dia. Duct	275	Sec 2 - max	0.801	8	0.040	8	0.095	8	4.031	8	-0.849	1	0.778	8	0.836	4	143.718	8	0.120	8	0.070	0.295	0.053	0.378	4.031	0.095	0.053
877	M68A	8in Dia. Duct	77	Sec 4 - max	0.043	7	0.486	8	0.130	1	1.816	8	0.467	7	3.036	7	4.273	8	2570.718	8	2.152	8	0.008	0.102	0.270	0.377	4.273	0.111	0.281
874	M68A	8in Dia. Duct	77	Sec 2 - min	-0.003	8	-0.160	8	-0.080	6	-0.146	7	-1.368	8	-4.434	8	-2.000	8	-1027.077	8	-1.814	8	0.010	0.087	0.281	0.377	4.434	0.117	0.186
1005	M68A	8in Dia. Duct	77	Sec 3 - max	0.071	7	-0.026	1	0.100	6	1.470	8	0.510	7	4.363	7	4.101	8	1531.008	8	1.362	8	0.008	0.063	0.270	0.377	4.363	0.113	0.169
867	M68A	8in Dia. Duct	77	Sec 4 - max	0.072	7	0.001	8	0.314	8	2.118	8	0.821	7	3.054	7	3.710	8	2338.107	8	1.956	8	0.008	0.134	0.238	0.377	3.710	0.084	0.238
875	M63	8in Dia. Duct	200	Sec 3 - max	0.293	2	0.004	2	0.099	7	4.938	2	-0.195	1	0.011	8	0.925	7	1057.765	2	0.929	2	0.031	0.313	0.033	0.376	4.938	0.153	0.177
1061	M108	8in Dia. Duct	77	Sec 1 - max	0.121	8	0.021	8	-0.002	8	4.454	8	4.781	7	0.854	8	0.822	7	1358.811	8	1.137	8	0.013	0.303	0.080	0.376	4.781	0.134	0.127
1080	M105	8in Dia. Duct	77	Sec 3 - min	0.082	1	-0.140	8	-0.080	8	-4.881	7	-4.484	8	-0.838	7	-0.810	8	-1432.368	8	-1.100	8	0.008	0.308	0.058	0.376	4.881	0.140	0.147
871	M68A	8in Dia. Duct	77	Sec 1 - max	0.040	7	0.086	8	0.140	7	1.237	8	-0.083	1	3.068	8	4.014	8	2570.718	8	2.152	8	0.008	0.078	0.262	0.376	4.014	0.128	0.282
97	M10	8in Dia. Duct	800	Sec 4 - max	0.087	8	0.018	4	0.017	3	0.180	1	2.570	8	1.080	8	1.082	8	10.044	1	0.014	1	0.014	0.206	0.157	0.375	2.570	0.080	0.004
1009	M68A	8in Dia. Duct	77	Sec 5 - min	-0.099	8	-0.175	7	-0.173	8	-1.009	7	-2.118	8	-3.656	8	-3.818	7	-2140.018	8	-1.701	8	0.010	0.134	0.232	0.375	3.658	0.081	0.210
1066	M68A	8in Dia. Duct	77	Sec 3 - min	-0.083	8	-0.130	7	-0.180	8	-0.519	7	-1.470	8	-4.101	8	-4.363	7	-1624.812	8	-1.360	8	0.008	0.063	0.278	0.375	4.363	0.112	0.170
36	M4	8in Dia. Duct	875	Sec 4 - min	-0.028	1	-0.118	8	-0.008	1	0.234	1	-1.400	8	-3.080	1	-3.277	8	-346.834	8	-0.308	8	0.084	0.111	0.200	0.375	3.277	0.087	0.048
810	M84	8in Dia. Duct	800	Sec 5 - max	0.088	7	-0.018	8	0.014	2	0.204	1	2.566	8	1.670	8	1.080	8	10.044	1	0.014	1	0.014	0.203	0.158	0.374	2.566	0.080	0.004
870	M68A	8in Dia. Duct	77	Sec 3 - min	-0.084	8	-0.160	8	-0.087	8	-0.415	7	-1.408	8	-4.258	8	-2.818	8	-1027.077	8	-1.814	8	0.010	0.086	0.280	0.374	4.258	0.106	0.188
857	M94	8in Dia. Duct	800	Sec 4 - max	0.088	7	-0.015	8	0.013	2	0.218	1	2.560	8	1.670	8	1.092	8	10.044	1	0.014	1	0.014	0.202	0.158	0.374	2.560	0.080	0.004
855	M84	8in Dia. Duct	800	Sec 3 - max	0.085	7	-0.014	8	0.012	2	0.218	1	2.545	8	1.665	8	1.665	8	10.044	1	0.014	1	0.014	0.202	0.154	0.374	2.545	0.080	0.004
1064	M108	8in Dia. Duct	77	Sec 2 - min	0.081	1	-0.140	8	-0.080	8	-4.831	7	-4.480	8	-0.830	7	-0.830	8	-1432.368	8	-1.100	8	0.008	0.308	0.058	0.374	4.831	0.137	0.147
853	M84	8in Dia. Duct	800	Sec 2 - max	0.085	7	-0.013	8	0.011	2	0.210	1	2.540	8	1.664	8	1.667	8	10.044	1	0.014	1	0.014	0.203	0.158	0.374	2.540	0.080	0.004
851	M84	8in Dia. Duct	800	Sec 1 - max	0.085	7	-0.012	8	0.010	2	0.224	1	2.536	8	1.666	8	1.668	8	10.044	1	0.014	1	0.014	0.201	0.158	0.373	2.536	0.058	0.004
869	M68A	8in Dia. Duct	77	Sec 5 - max	0.072	7	0.008	8	0.213	8	2.118	8	1.008	7	3.818	7	3.658	8	2325.107	8	1.958	8	0.008	0.134	0.232	0.373	3.658	0.082	0.238
771	M84	8in Dia. Duct	800	Sec 1 - max	0.077	8	-0.012	3	0.010	2	0.184	1	2.576	8	1.848	8	1.678	8	10.044	1	0.014	1	0.011	0.204	0.157	0.373	2.576	0.080	0.004
873	M68A	8in Dia. Duct	77	Sec 2 - max	0.040	7	0.085	8	0.130	7	1.368	8	0.146	7	2.860	8	4.434	8	2570.718	8	2.152	8	0.008	0.087	0.281	0.372	4.434	0.110	0.282
88	M10	8in Dia. Duct	800	Sec 5 - max	0.083	7	0.000	1	0.009	1	0.246	1	2.514	8	1.867	8	2.010	8	10.044	1	0.014	1	0.013	0.200	0.140	0.372	2.514	0.087	0.002
1062	M108	8in Dia. Duct	77	Sec 1 - min	0.081	1	-0.140	8	-0.080	8	-4.761	7	-4.484	8	-0.822	7	-0.854	8	-1432.368	8	-1.100	8	0.008	0.303	0.080	0.372	4.761	0.130	0.147
101	M11	8in Dia. Duct	800	Sec 1 - max	0.079	8	0.004	7	0.004	3	0.204	1	2.595	8	1.679	8	1.909	8	10.044	1	0.014	1	0.011	0.202	0.158	0.371	2.595	0.080	0.002
673	M65	8in Dia. Duct	675	Sec 2 - max	0.020	1	0.378	2	0.045	7	0.184	1	4.476	2	0.003	1	0.150	7	164.527	8	0.164	8	0.004	0.356	0.013	0.371	4.476	0.162	0.102
103	M11	8in Dia. Duct	800	Sec 2 - max	0.074	8	0.003	7	0.003	3	0.206	1	2.564	8	1.877	8	1.080	8	10.044	1	0.014	1	0.011	0.203	0.158	0.371	2.564	0.068	0.002
107	M11	8in Dia. Duct	800	Sec 4 - max	0.074	8	0.001	7	0.000	3	0.207	1	2.553	8	1.878	8	1.081	8	10.044	1	0.014	1	0.011	0.203	0.158	0.371	2.563	0.080	0.002
109	M11	8in Dia. Duct	800	Sec 5 - max	0.074	7	0.000	1	0.000	1	0.207	1	2.562	8	1.678	8	1.081	8	10.044	1	0.014	1	0.011	0.200	0.160	0.371	2.552	0.050	0.002
105	M11	8in Dia. Duct	800	Sec 3 - max	0.074	8	0.002	7	0.002	2	0.209	1	2.553	8	1.877	8	1.090	8	10.044	1	0.014	1	0.011	0.202	0.158	0.371	2.553	0.050	0.002
1050	M104	8in Dia. Duct	77	Sec 5 - max	0.130	8	0.044	8	0.275	8	0.730	2	0.835	3	4.454	8	4.761	7	1297.061	8	1.088	8	0.014	0.054	0.303	0.371	4.761	0.134	0.130
1007	M68A	8in Dia. Duct	77	Sec 4 - max	0.071	7	-0.026	1	0.100	6	1.433	8	0.575	7	4.366	7	4.107	8	1531.008	8	1.282	8	0.008	0.081	0.271	0.370	4.366	0.108	0.163
875	M68A	8in Dia. Duct	77	Sec 3 - max	0.046	7	0.001	8	0.137	7	1.405	8	0.418	7	2.816	8	4.230	8	2570.718	8	2.153	8	0.008	0.086	0.268	0.368	4.230	0.110	0.252
86	M10	8in Dia. Duct	800	Sec 3 - min	0.008	1	0.036	2	-0.033	2	-2.740	8	-0.828	1	-1.887	8	-1.564	8	-316.328	8	-0.270	8	0.008	0.217	0.181	0.368	2.740	0.068	0.044
1006	M68A	8in Dia. Duct	77	Sec 4 - min	-0.053	8	-0.111	7	-0.180	8	-0.979	7	-1.433	8	-4.107	8	-4.298	7	-1624.812	8	-1.299	8	0.008	0.091	0.271	0.368	4.298	0.108	0.170
371	M41	8in Dia. Duct	200	Sec 1 - max	0.113	5	-0.157	1	0.002	1	4.145	5	0.232	4	1.431	4	0.018	1	-4.657	1	-0.004	1	0.013	0.262	0.081	0.368	4.145	0.100	0.018
1088	M104	8in Dia. Duct	77	Sec 5 - min	0.084	8	0.000	8	-0.075	8	-0.856	3	-4.780	2	-4.781	7	-0.454	8	-1300.478	8	-1.102	8	0.008	0.054	0.303	0.366	4.781	0.134	0.130
501	M50	8in Dia. Duct	875	Sec 1 - max	-0.011	1	0.040	1	0.008	1	4.334	3	0.110	1	0.256	8	0.006	1	107.101	7	0.090	7	0.001	0.344	0.020	0.366	4.334	0.170	0.010
1011	M100A	8in Dia. Duct	77	Sec 1 - max	0.084	7	0.043	1	0.101	8	1.640	8	0.324	7	4.575	7	4.422	8	1017.201	8	0.861	8	0.007	0.068	0.280	0.362	4.575	0.123	0.113
1000	M68A	8in Dia. Duct	77	Sec 5 - max	0.070	7	-0.020	1	0.198	8	1.295	8	0.871	7	4.707	7	4.072	8	1531.008	8	1.282	8	0.008	0.068	0.298	0.362	4.207	0.105	0.163
770	M63	8in Dia. Duct	800	Sec 5 - min	-0.002	8	-0.012	1	-0.010	3	-2.570	8	-0.164	1	-1.870	8	-1.868	8	-316.328	8	-0.270	8	0.000	0.204	0.157	0.362	2.570	0.081	0.040
769	M63	8in Dia. Duct	800	Sec 5 - max	0.003	7	-0.012	1	0.010	2	0.164	1	2.570	8	1.868	8	1.870	8	10.044	1	0.014	1	0.000	0.204	0.157	0.362	2.570	0.080	0.004
772	M64	8in Dia. Duct	800	Sec 1 - min	0.000	1	-0.012	1	-0.010	3	-2.570	8	-0.164	1	-1.870	8	-1.869	8	-316.328	8	-0.270	8	0.000	0.204	0.157	0.362	2.570	0.081	0.040
768	M63	8in Dia. Duct	800	Sec 4 - min	-0.002	8	-0.008	1	-0.008	3	-2.368	8	-0.184	1	-1.864	8	-1.871	8	-316.328	8	-0.270	8	0.000	0.204	0.157	0.361	2.568	0.081	0.040
767	M63	8in Dia. Duct	800	Sec 4 - max	0.002	7	-0.009	1	0.008	2	0.184	1	2.568	8	1.871	8	1.864	8	10.044	1	0.014	1	0.000	0.204	0.157	0.361	2.568	0.080	0.003
96	M10	8in Dia. Duct	800	Sec 4 - min	0.000	1	0.018	3	-0.017	2	-2.570	8	-0.168	1	-1.862	8	-1.860	8	-316.328	8	-0.270	8	0.000	0.204	0.157	0.361	2.570	0.081	0.041
766	M63	8in Dia. Duct	800	Sec 3 - min	-0.002	8	-0.008	1	-0.005	3	-2.556	8	-0.201	1	-1.860	8	-1.875	8	-316.328	8	-0.270	8	0.000	0.203	0.158	0.361	2.560	0.081	0.040
765	M63	8in Dia. Duct	800	Sec 3 - max	0.002	7	-0.008	1	0.006	2	0.201	1	2.558	8	1.875	8	1.860	8	10.044	1	0.014	1	0.000	0.203	0.158	0.361	2.558	0.050	0.003
860	M84	8in Dia. Duct	800	Sec 5 - min	0.000	1	-0.016	7	-0.014	3	-2.556	8	-0.204	1	-1.880	8	-1.870	8	-316.328	8	-0.270	8	0.000	0.202	0.158	0.361	2.556	0.080	0.041
102	M11	8in Dia. Duct	800	Sec 1 - min	0.000	1	0.004	8	-0.004	2	-2.555	8	-0.204	1	-1.890	8	-1.876	8	-316.328	8	-0.270	8	0.000	0.202	0.158	0.361	2.555	0.080	0.038
104	M11	8in Dia. Duct	800	Sec 2 - min	0.000	1	0.003	8	-0.003	2	-2.554	8	-0.205	1	-1.880	8	-1.877	8	-316.328	8	-0.270	8	0.000	0.203	0.158	0.361	2.554	0.080	0.038
764	M63	8in Dia. Duct	800	Sec 2 - min	0.000	8	-0.003	1	-0.003	3	-2.554	8	-0.206	1	-1.880	8	-1.877	8	-316.328	8	-0.270	8	0.000	0.203	0.158	0.361	2.554	0.080	0.038
108	M11	8in Dia. Duct	800	Sec 4 - min	0.000	1	0.001	8	0.000	2	-2.553	8	-0.207	1	-1.881	8	-1.878	8	-316.328	8	-0.270	8	0.000	0.203	0.158	0.361	2.553	0.080	0.038
763	M63	8in Dia. Duct	800	Sec 2 - max	0.000	7	-0.003	1	0.003	2	0.206	1	2.554	8	1.877	8	1.880	8	10.044	1	0.014	1	0.000	0.203	0.158	0.361	2.554	0.050	0.002
110	M11	8in Dia. Duct	800	Sec 5 - min	0.000	1	0.000	1	0.000	1	-2.552	8	-0.207	1	-1.881	8	-1.878	8	-316.328	8	-0.270	8	0.000	0.203	0.158	0.361	2.552	0.080	0.038
762	M63	8in Dia. Duct	800	Sec 1 - min	0.000	1	0.000	1	0.000	1	-2.553	8	-0.207	1	-1.881	8	-1.878	8	-316.328	8	-0.270	8	0.000	0.203	0.158	0.361	2.553	0.080	0.038
761	M63	8in Dia. Duct	800	Sec 1 - max	0.000	1	0.000	1	0.000	1	0.207	1	2.553	8	1.878	8	1.881	8	10.044	1	0.014	1	0.000	0.203	0.158	0.361	2.553	0.050	0.002
106	M11	8in Dia. Duct	800	Sec 3 - min	0.000	1	0.002	8	-0.002	2	-2.553	8	-0.206	1	-1.880	8	-1.877	8	-316.328	8	-0.270	8	0.000	0.203	0.158	0.361	2.553	0.080	0.038
856	M84	8in Dia. Duct	800	Sec 4 - min	0.000	1	-0.015	7	-0.013	3	-2.550	8	-0.210	1	-1.882	8	-1.878	8	-316.328	8	-0.270	8	0.000	0.200	0.158	0.360	2.550	0.080	0.041
970	M95A	8in Dia. Duct	800	Sec 5 - min	-0.002	8	-0.012	1	-0.010	3	-2.538	8	-0.224	1	-1.899	8	-1.888	8	-316.328	8	-0.270	8	0.000	0.201	0.158	0.360	2.538	0.080	0.040
848	M85A	8in Dia. Duct	800	Sec 5 - max	0.003	7	-0.012	1	0.010	2	0.224	1	2.538	8	1.888	8	1.899	8	10.044	1	0.014	1	0.000	0.201	0.158	0.360	2.538	0.288	0.004
1010	M68A	8in Dia. Duct	77	Sec 5 - min	-0.063	8	-0.112	7	-0.180	8	-0.831	7	-1.368	8	-4.022	8	-4.207	7	-1624.812	8	-1.360	8	0.008	0.088	0.268	0.360	4.207	0.108	0.170
850	M84	8in Dia. Duct	800	Sec 3 - min	0.000	1	-0.014	7	-0.012	3	-2.546	8	-0.215	1	-1.888	8	-1.881	8	-316.328	8	-0.270	8	0.000	0.202	0.158	0.360	2.546	0.080	0.041
854	M84	8in Dia. Duct	800	Sec 2 - min	0.000	1	-0.013	7	-0.011	3	-2.540	8	-0.210	1	-1.887	8	-1.884	8	-316.328	8	-0.270	8	0.000	0.202	0.158	0.360	2.540	0.080	0.041
852	M84	8in Dia. Duct	800	Sec 1 - min	0.000	1	-0.012	7	-0.010	3	-2.536	8	-0.224	1	-1.890	8	-1.886	8	-316.328	8	-0.270	8	0.000	0.201	0.158	0.360	2.536	0.080	0.040
868	M63A	8in Dia. Duct	800	Sec 4 - min	-0.002	8	-0.009	1	-0.004	3	-2.528	8	-0.233	1	-2.004	8	-1.861	8	-316.328	8	-0.270	8	0.000	0.200	0.150	0.360	2.528	0.078	0.040
867	M65A	8in Dia. Duct	800	Sec 4 - max	0.002	7	-0.008	1	0.008	2	0.233	1	2.528	8	1.861	8	2.004	8	10.044	1	0.014	1	0.000	0.200	0.150	0.360	2.528	0.058	0.003
866	M65A	8in Dia. Duct	800	Sec 3 - min	-0.001	8	-0.008	1	-0.006	3	-2.519	8	-0.240	1	-2.007	8	-1.864	8	-316.328	8	-0.270	8	0.000	0.200	0.150	0.360	2.519	0.058	0.040
865	M65A	8in Dia. Duct	800	Sec 3 - max	0.001	7	-0.008	1	0.005	2	0.240	1	2.519	8	1.864	8	2.007	8	10.044	1	0.014	1	0.000	0.200	0.150	0.358	2.519	0.058	0.003
864	M65A	8in Dia. Duct	800	Sec 2 - min	0.000	8	-0.003	1	-0.003	3	-2.515	8	-0.244	1	-2.008	8	-1.866	8	-316.328	8	-0.270	8	0.000	0.200	0.150	0.358	2.515	0.058	0.038
100	M10	8in Dia. Duct	800	Sec 5 - min	0.000	1	0.000	1	0.000	1	-2.514	8	-0.248	1	-2.010	8	-1.867	8	-316.328	8	-0.270	8	0.000	0.200	0.160	0.358	2.514	0.058	0.038
862	M65A	8in Dia. Duct	800	Sec 1 - min	0.000	1	0.000	1	0.000	1	-2.514	8	-0.248	1	-2.010	8	-1.867	8	-316.328	8	-0.270	8	0.000	0.200	0.160	0.358	2.514	0.058	0.038
863	M65A	8in Dia. Duct	800	Sec 2 - max	0.000	7	-0.003	1	0.003	2	0.244	1	2.515	8	1.866	8	2.008	8	10.044	1	0.014	1	0.000	0.200	0.150	0.358	2.515	0.057	0.002
861	M65A	8in Dia. Duct	800	Sec 1 - max	0.000	1	0.000	1	0.000	1	0.248	1	2.514	8	1.867	8	2.010	8	10.044	1	0.014	1	0.000	0.200	0.160	0.358	2.514	0.057	0.002
1012	M100A	8in Dia. Duct	77	Sec 5 - min	-0.079	8	-0.049	8	-0.181	8	-0.324	7	-1.049	8	-4.472	8	-4.575	7	-1212.489	8	-1.015	8	0.007	0.068	0.280	0.358	4.575	0.123	0.121
437	M49	8in Dia. Duct	200	Sec 4 - max	0.026	8	-0.152	1	-0.002	1	-0.231	1	5.034	7	0.576	2	0.761	3	-15.143	1	-0.013	1	0.003	0.316	0.037	0.356	5.034	0.148	0.010
708	M78	8in Dia. Duct	275	Sec 5 - max	0.270	2	0.125	1	0.300	6	1.710	8	1.202	1	3.432	8	2.016	4	143.718	8	0.120	8	0.032	0.100	0.217	0.355	3.432	0.080	0.086
438	M49	8in Dia. Duct	200	Sec 4 - min	0.000	7	-1.073	8	-0.303	3	-6.034	7	0.231	1	-0.281	3	-0.570	2	-1474.881	8	-1.204	8	0.000	0.310	0.037	0.355	6.034	0.168	0.260
372	M41	8in Dia. Duct	200	Sec 1 - min	-0.010	4	-0.400	7	-0.223	3	-0.232	4	-4.148	8	-0.010	1	-1.431	4	-1083.864	8	-0.888	8	0.002	0.262	0.081	0.353	4.148	0.112	0.180
129	M12	8in Dia. Duct	725	Sec 5 - max	0.232	8	-0.027	1	0.412	8	-0.005	8	0.209	8	2.770	8	1.477	8	473.093	7	0.415	7	0.036	0.018	0.209	0.352	2.770	0.132	0.115
578	M63	8in Dia. Duct	200	Sec 3 - min	0.044	1	0.017	1	-0.053	8	0.155	1	-4.838	2	-0.575	7	-0.011	8	-1028.188	3	-0.801	3	0.005	0.313	0.033	0.351	4.838	0.153	0.106
133	M14	8in Dia. Duct	725	Sec 2 - max	0.300	7	0.150	7	0.000	1	-0.150	1	0.362	6	3.372	6	1.721	8	420.016	7	0.376	7	0.054	0.026	0.298	0.350	3.372	0.106	0.074
151	M16	8in Dia. Duct	725	Sec 1 - max	0.373	7	0.151	7	0.278	8	0.004	1	0.630	7	0.630	8	2.770	8	104.337	7	0.171	7	0.082	0.043	0.221	0.346	2.770	0.071	0.042
747	M60	8in Dia. Duct	725	Sec 4 - max	0.300	8	-0.182	1	0.051	5	-1.822	7	1.046	1	1.761	5	1.752	4	143.718	8	0.120	8	0.072	0.131	0.141	0.344	1.761	0.030	0.030
728	M78	8in Dia. Duct	200	Sec 3 - min	0.040	1	0.002	1	-0.032	7	-2.241	2	0.002	1	-3.101	8	-0.089	1	-494.507	2	-0.434	2	0.005	0.142	0.194	0.343	3.101	0.058	0.081
327	M33	8in Dia. Duct	275	Sec 4 - max	0.110	2	0.018	1	0.127	4	0.680	1	4.671	8	0.527	3	0.063	1	48.740	1	0.043	1	0.014	0.296	0.033	0.343	4.671	0.127	0.010
750	M80	8in Dia. Duct	725	Sec 5 - min	0.000	1	-0.172	7	-0.072	4	-2.204	7	2.200	1	-2.020	4	-2.010	5	-2.473	1	-0.002	1	0.000	0.182	0.140	0.342	2.204	0.040	0.024
142	M19	8in Dia. Duct	725	Sec 1 - min	0.000	1	0.140	4	-0.130	3	-2.204	7	2.204	1	-2.020	4	-2.010	5	-2.473	1	-0.002	1	0.000	0.182	0.160	0.342	2.204	0.040	0.020
1057	M104	8in Dia. Duct	77	Sec 4 - max	0.113	8	0.083	8	0.201	8	0.481	8	1.643	9	3.281	8	3.610	7	1207.001	8	1.080	8	0.013	0.097	0.220	0.338	3.610	0.072	0.138

Node	Member	Duct Size	Temperature (°F)	Load	Axial (ksi)	Load Case	y Shear (ksi)	Load Case	z Shear (ksi)	Load Case	y top Bending (ksi)	Load Case	y bot Bending (ksi)	Load Case	z top Bending (ksi)	Load Case	z bot Bending (ksi)	Load Case	Torque (in-lb)	Load Case	Torsional Shear (ksi)	Load Case	L/σa	L/σb	L/σv	D-2250 Equation 11 L/σa + L/σb + L/σv	f (ksi)	D-2260 Equation 13	D-2270 Equation 14
804	M38	8in Dia. Duct	875	Sec 2 - min	-0.281	2	-0.280	4	-0.028	7	0.011	1	-3.579	7	-0.033	8	-0.143	8	-1.664	1	-0.001	1	0.038	0.244	0.011	0.328	3.579	0.116	0.008
853	M71	8in Dia. Duct	600	Sec 2 - max	0.127	6	-0.062	1	0.045	8	3.320	8	-0.160	1	0.564	8	0.630	6	16.044	1	0.014	1	0.016	0.264	0.052	0.334	3.320	0.100	0.009
1056	M104	8in Dia. Duct	77	Sec 4 - min	0.000	1	0.002	1	-0.001	6	-1.530	8	-0.401	8	-3.010	7	-3.201	6	-1366.478	6	-1.162	6	0.000	0.087	0.226	0.334	3.610	0.078	0.130
153	M18	8in Dia. Duct	725	Sec 3 - max	0.573	7	0.160	7	0.270	8	0.116	1	0.484	7	0.001	8	2.676	7	104.337	7	0.171	7	0.062	0.030	0.313	0.333	2.676	0.066	0.002
132	M14	8in Dia. Duct	725	Sec 1 - min	0.000	1	0.070	1	-1.073	6	-0.411	8	0.101	1	-1.477	8	-3.770	6	-34.611	1	-0.030	1	0.000	0.033	0.200	0.332	3.770	0.120	0.193
130	M13	8in Dia. Duct	725	Sec 5 - min	-0.104	8	-0.053	8	-0.219	8	-0.208	1	0.083	8	-1.477	8	-3.770	8	-4.576	1	-0.006	1	0.015	0.016	0.200	0.330	3.770	0.120	0.030
435	M48	8in Dia. Duct	200	Sec 3 - max	0.028	8	-0.150	1	-0.002	1	-0.123	1	4.477	8	0.474	2	0.078	3	-15.143	1	-0.013	1	0.003	0.283	0.043	0.329	4.477	0.117	0.018
328	M33	8in Dia. Duct	275	Sec 4 - min	0.000	5	-0.230	7	0.005	5	-4.071	8	-0.088	1	-0.003	1	-0.627	3	-2137.638	5	-1.878	8	0.000	0.260	0.033	0.328	4.071	0.179	0.232
430	M48	8in Dia. Duct	200	Sec 3 - min	-0.002	7	-1.071	6	-0.281	2	-4.477	8	0.123	1	-0.070	2	-0.070	2	-1474.881	6	-1.284	6	0.000	0.283	0.043	0.328	4.477	0.130	0.289
710	M78	8in Dia. Duct	375	Sec 5 - min	0.000	1	-0.008	6	-0.141	6	-1.282	1	-1.710	8	-2.810	4	-3.432	5	-8.473	1	-0.002	1	0.000	0.100	0.217	0.326	3.432	0.000	0.108
149	M15	8in Dia. Duct	725	Sec 5 - max	0.351	7	0.151	7	0.002	1	0.055	1	0.290	8	0.054	8	2.770	8	321.857	7	0.283	7	0.070	0.024	0.221	0.323	2.770	0.071	0.060
155	M18	8in Dia. Duct	725	Sec 3 - max	0.573	7	0.140	7	0.270	8	0.136	1	0.428	7	0.326	8	2.567	7	104.337	7	0.171	7	0.062	0.034	0.206	0.322	2.567	0.082	0.083
147	M15	8in Dia. Duct	725	Sec 4 - max	0.561	7	0.132	7	0.000	1	0.032	1	0.356	8	1.167	8	2.667	8	321.867	7	0.283	7	0.070	0.028	0.214	0.321	2.667	0.267	0.080
827	M88	8in Dia. Duct	875	Sec 4 - max	0.332	7	0.366	8	0.050	8	2.750	8	-0.444	1	0.700	6	0.082	7	232.730	4	0.212	4	0.046	0.210	0.056	0.320	2.750	0.080	0.078
366	M37	8in Dia. Duct	275	Sec 6 - max	0.161	7	0.170	3	0.140	8	0.083	1	3.472	3	0.160	1	1.300	8	0.120	1	0.006	1	0.010	0.230	0.081	0.319	3.472	0.070	0.020
713	M77	8in Dia. Duct	200	Sec 1 - max	0.161	7	0.170	2	0.140	1	0.083	1	3.472	3	0.195	1	1.290	5	0.120	1	0.006	1	0.019	0.270	0.081	0.318	3.472	0.070	0.020
146	M15	8in Dia. Duct	725	Sec 3 - max	0.551	7	0.153	7	0.000	1	0.008	1	0.411	8	1.616	8	2.615	8	321.857	7	0.283	7	0.076	0.033	0.204	0.316	2.615	0.080	0.061
143	M15	8in Dia. Duct	725	Sec 2 - max	0.551	7	0.154	7	0.000	1	-0.010	1	0.480	8	1.640	8	2.533	8	321.867	7	0.283	7	0.070	0.037	0.201	0.311	2.533	0.050	0.061
854	M71	8in Dia. Duct	600	Sec 2 - min	0.000	1	-0.253	8	-0.060	8	0.160	1	-3.320	8	-0.480	8	-3.364	8	-316.230	6	-0.279	8	0.000	0.264	0.052	0.310	3.320	0.102	0.074
141	M15	8in Dia. Duct	725	Sec 1 - max	0.541	7	0.155	7	0.000	1	-0.040	1	0.525	8	2.100	8	2.462	8	321.867	7	0.283	7	0.070	0.042	0.166	0.315	2.462	0.066	0.061
195	M14	8in Dia. Duct	725	Sec 2 - max	0.280	7	0.150	7	0.000	1	-0.112	8	0.294	8	2.075	8	1.864	8	470.016	7	0.376	7	0.054	0.073	0.226	0.314	2.075	0.063	0.074
365	M42	8in Dia. Duct	275	Sec 3 - max	0.180	8	0.020	1	0.224	4	-0.113	1	2.251	4	2.400	7	-0.012	1	1534.083	5	1.340	5	0.019	0.143	0.152	0.313	2.400	0.067	0.182
321	M33	8in Dia. Duct	275	Sec 1 - max	0.123	8	0.010	1	0.106	4	0.240	7	1.040	8	-0.164	1	3.000	4	40.740	1	0.043	1	0.014	0.106	0.183	0.312	3.000	0.064	0.026
157	M18	8in Dia. Duct	725	Sec 4 - max	0.573	7	0.140	7	0.270	8	0.160	1	0.373	7	0.370	8	2.516	7	104.337	7	0.171	7	0.062	0.030	0.208	0.311	2.516	0.050	0.063
704	M78	8in Dia. Duct	375	Sec 2 - min	0.000	1	-0.061	1	-0.080	4	0.040	1	-4.031	8	-0.030	4	-0.726	8	-8.473	1	-0.002	1	0.000	0.266	0.063	0.308	4.031	0.000	0.010
701	M78	8in Dia. Duct	275	Sec 1 - max	0.583	8	0.076	8	0.050	8	3.434	8	-1.000	1	0.224	7	0.303	8	143.716	8	0.120	8	0.088	0.217	0.010	0.308	3.434	0.088	0.022
629	M60	8in Dia. Duct	350	Sec 5 - max	0.583	8	0.076	8	0.050	8	3.434	8	-1.000	1	0.224	7	0.303	8	143.716	8	0.120	8	0.088	0.217	0.010	0.308	3.434	0.088	0.022
370	M37	8in Dia. Duct	275	Sec 6 - min	0.030	1	-0.003	1	0.006	1	-3.472	3	-0.063	1	-1.200	8	-0.166	1	-815.146	4	-0.716	4	0.004	0.230	0.081	0.306	3.472	0.077	0.079
712	M77	8in Dia. Duct	200	Sec 1 - min	0.030	1	-0.002	1	0.005	1	-3.472	3	-0.063	1	-1.200	8	-0.166	1	-815.146	4	-0.716	4	0.004	0.230	0.081	0.301	3.472	0.077	0.079
612	M57	8in Dia. Duct	875	Sec 1 - min	-0.185	7	0.430	1	-0.046	8	-2.864	8	0.080	1	-0.006	1	-0.404	8	-2.166	1	-0.002	1	0.025	0.237	0.030	0.301	2.864	0.081	0.007
433	M48	8in Dia. Duct	200	Sec 2 - max	0.029	8	-0.149	1	-0.002	1	-0.019	1	3.927	8	0.779	2	-0.063	1	-15.143	1	-0.013	1	0.003	0.240	0.049	0.300	3.927	0.080	0.019
160	M18	8in Dia. Duct	725	Sec 5 - max	0.572	7	0.147	7	0.280	8	0.101	1	0.210	7	0.218	8	2.434	7	104.337	7	0.171	7	0.062	0.025	0.183	0.300	2.434	0.064	0.063
181	M17	8in Dia. Duct	725	Sec 1 - max	0.534	6	0.147	7	0.510	8	0.100	1	0.300	7	0.218	8	2.434	7	143.716	8	0.120	8	0.075	0.031	0.183	0.300	2.434	0.064	0.080
322	M33	8in Dia. Duct	275	Sec 1 - min	0.000	1	-0.173	7	0.006	1	-1.850	8	-0.240	7	-3.060	4	0.164	1	-2137.638	6	-1.878	8	0.000	0.106	0.183	0.296	3.060	0.100	0.226
163	M18	8in Dia. Duct	725	Sec 2 - max	0.468	7	0.123	8	0.113	4	-1.536	1	1.532	7	1.310	5	1.330	4	143.716	8	0.128	8	0.071	0.122	0.106	0.297	1.530	0.002	0.006
434	M48	8in Dia. Duct	200	Sec 2 - min	-0.002	7	-1.089	8	-0.279	3	-3.922	8	0.019	1	0.003	1	-0.770	2	-1474.881	8	-1.284	8	0.000	0.240	0.049	0.297	3.922	0.111	0.289
563	M50	8in Dia. Duct	875	Sec 2 - max	-0.011	1	0.038	1	0.300	1	3.576	7	-0.013	1	0.143	8	0.033	8	107.161	7	0.090	7	0.001	0.254	0.011	0.297	3.576	0.116	0.018
363	M42	8in Dia. Duct	275	Sec 2 - max	0.164	8	0.038	1	0.640	4	1.320	8	0.218	1	3.087	7	-0.016	1	1534.083	8	1.340	5	0.018	0.094	0.164	0.297	3.087	0.078	0.163
134	M14	8in Dia. Duct	725	Sec 3 - min	0.000	1	0.060	1	-1.073	6	-0.362	8	0.156	1	-1.721	8	-3.372	8	-34.611	1	-0.030	1	0.000	0.026	0.200	0.298	3.372	0.102	0.193
368	M42	8in Dia. Duct	275	Sec 3 - min	0.000	1	-0.004	8	-0.100	6	-3.251	4	0.113	1	0.012	1	-3.400	7	56.505	1	0.061	1	0.000	0.142	0.152	0.296	3.400	0.034	0.104
817	M87	8in Dia. Duct	200	Sec 4 - max	0.381	8	0.397	2	0.052	8	3.246	4	-0.021	1	0.202	8	0.498	4	83.917	5	0.074	8	0.042	0.205	0.044	0.291	3.246	0.081	0.052
811	M88	8in Dia. Duct	200	Sec 1 - max	0.063	8	0.125	4	0.027	3	-0.827	8	1.365	4	3.337	3	2.961	2	-3.065	1	-0.003	1	0.010	0.046	0.162	0.290	3.037	0.054	0.014
798	M86	8in Dia. Duct	200	Sec 6 - max	0.063	8	-0.073	6	0.027	3	-0.827	6	1.366	4	3.037	3	2.001	2	-3.068	1	-0.003	1	0.010	0.040	0.162	0.290	3.037	0.064	0.009
1065	M104	8in Dia. Duct	77	Sec 3 - max	0.100	8	0.052	7	0.100	8	0.130	8	2.100	8	1.010	8	2.343	7	1207.081	8	1.066	8	0.011	0.137	0.142	0.290	2.343	0.030	0.121
836	M88	8in Dia. Duct	875	Sec 3 - max	0.052	8	0.021	1	0.060	7	3.200	8	-0.320	1	0.106	8	0.347	7	246.036	8	0.206	8	0.007	0.254	0.020	0.280	3.200	0.000	0.037
839	M88	8in Dia. Duct	875	Sec 2 - min	0.040	1	-0.018	1	-0.009	8	0.370	1	-3.200	8	-0.347	7	-0.105	8	-3.611	1	-0.002	1	0.005	0.254	0.070	0.287	3.200	0.003	0.006
727	M78	8in Dia. Duct	200	Sec 4 - max	0.530	8	0.303	6	0.072	5	0.306	4	0.101	5	0.060	1	3.262	8	-2.525	1	-0.002	1	0.060	0.010	0.226	0.286	3.262	0.062	0.020
1064	M104	8in Dia. Duct	77	Sec 3 - min	0.054	1	0.002	1	-0.100	8	-2.100	8	-0.120	8	-2.343	7	-1.010	8	-1366.478	6	-1.162	8	0.000	0.137	0.142	0.288	2.343	0.031	0.130
812	M88	8in Dia. Duct	200	Sec 1 - min	-0.037	8	0.068	5	-0.030	2	-1.306	4	0.027	5	-2.001	2	-3.037	3	-742.306	2	-0.651	2	0.004	0.060	0.182	0.285	3.037	0.060	0.082
800	M86	8in Dia. Duct	200	Sec 5 - min	-0.037	6	-0.007	4	-0.030	2	-1.306	4	0.027	8	-2.001	2	-3.037	3	-742.306	2	-0.651	2	0.004	0.060	0.182	0.286	3.037	0.030	0.041
373	M22	8in Dia. Duct	275	Sec 3 - max	0.119	7	0.056	1	0.160	4	-0.441	1	2.456	6	-0.131	1	1.790	4	40.740	1	0.043	1	0.014	0.156	0.116	0.282	2.456	0.279	0.023
745	M80	8in Dia. Duct	725	Sec 3 - max	0.806	6	-0.140	1	0.040	5	-0.848	7	1.051	1	1.646	8	1.526	4	143.716	8	0.128	8	0.073	0.063	0.127	0.283	1.566	0.323	0.037
1051	M104	8in Dia. Duct	77	Sec 1 - max	0.070	8	0.062	7	0.120	6	-0.130	1	2.607	8	1.100	8	1.463	6	1207.081	8	1.066	8	0.008	0.175	0.084	0.280	2.607	0.047	0.134
621	M60	8in Dia. Duct	350	Sec 1 - max	0.580	8	0.211	8	0.082	4	-1.063	1	3.137	8	0.247	3	0.170	2	143.716	8	0.128	8	0.066	0.186	0.016	0.279	3.137	0.060	0.007
698	M76	8in Dia. Duct	350	Sec 5 - max	0.580	8	-0.046	1	0.010	5	-1.083	1	3.137	8	0.347	3	0.170	2	143.716	8	0.128	8	0.066	0.189	0.016	0.279	3.137	0.056	0.010
169	M17	8in Dia. Duct	725	Sec 5 - max	0.518	8	0.172	7	0.322	8	0.709	7	-0.958	1	1.863	8	1.866	8	143.716	8	0.120	8	0.074	0.056	0.146	0.278	1.863	0.032	0.009
171	M18	8in Dia. Duct	725	Sec 1 - max	0.518	8	-0.100	1	0.345	8	0.700	7	-0.656	1	1.863	8	1.860	8	143.716	8	0.120	8	0.074	0.056	0.146	0.278	1.863	0.033	0.031
325	M33	8in Dia. Duct	275	Sec 3 - max	0.110	2	0.027	1	0.147	4	-0.101	5	3.460	6	0.122	6	0.883	4	40.740	1	0.043	1	0.014	0.221	0.043	0.278	3.460	0.071	0.021
364	M42	8in Dia. Duct	275	Sec 2 - min	0.000	1	-0.006	8	-0.307	5	-0.210	5	-1.320	6	0.016	1	-3.007	7	56.505	1	0.061	1	0.000	0.084	0.164	0.278	3.007	0.096	0.103
137	M14	8in Dia. Duct	725	Sec 4 - max	0.360	7	0.167	7	0.000	1	-0.060	8	0.236	8	2.577	8	1.200	8	428.016	7	0.376	7	0.064	0.019	0.206	0.278	2.577	0.063	0.074
611	M57	8in Dia. Duct	875	Sec 1 - max	-0.002	1	0.982	7	0.000	1	-0.050	1	2.994	8	0.494	8	0.005	1	150.560	7	0.126	7	0.009	0.237	0.030	0.276	2.994	0.061	0.099
620	M56	8in Dia. Duct	875	Sec 4 - min	0.011	1	0.043	1	-0.003	8	0.444	1	-2.736	8	-0.092	7	-0.706	8	-4.224	1	-0.006	1	0.001	0.218	0.056	0.276	2.736	0.060	0.007
250	M30	8in Dia. Duct	425	Sec 6 - max	0.530	8	-0.110	7	0.100	5	-1.100	8	1.201	1	1.200	5	1.212	4	143.716	8	0.130	8	0.078	0.102	0.080	0.275	1.301	0.018	0.030
1052	M104	8in Dia. Duct	77	Sec 1 - min	0.024	1	-0.012	8	-0.130	8	-3.007	8	0.130	1	-1.403	8	-1.180	8	-1366.478	8	-1.162	8	0.003	0.170	0.084	0.275	3.007	0.047	0.143
1010	M100A	8in Dia. Duct	77	Sec 5 - max	0.044	7	-0.034	1	0.142	8	0.004	1	2.467	7	1.701	8	1.620	8	1017.201	8	0.851	8	0.006	0.150	0.113	0.274	2.467	0.036	0.100
173	M18	8in Dia. Duct	725	Sec 2 - max	0.518	8	-0.101	1	0.040	8	0.170	7	-0.922	1	1.843	8	1.852	8	143.716	8	0.120	8	0.074	0.053	0.140	0.273	1.843	0.031	0.032
443	M50	8in Dia. Duct	200	Sec 2 - max	0.024	8	0.335	7	0.036	3	-0.161	1	3.660	7	0.273	2	0.273	3	-15.143	1	-0.013	1	0.003	0.252	0.017	0.272	3.660	0.062	0.030
740	M80	8in Dia. Duct	725	Sec 4 - min	0.000	1	-0.160	7	-0.061	4	-1.840	1	1.622	7	-1.782	4	-1.701	8	-8.473	1	-0.002	1	0.000	0.131	0.141	0.272	1.781	0.028	0.023
431	M48	8in Dia. Duct	200	Sec 1 - max	0.020	8	-0.140	1	-0.002	1	0.000	1	3.370	8	0.000	2	-0.004	1	-15.143	1	-0.013	1	0.003	0.213	0.066	0.272	3.370	0.000	0.017
1030	M100A	8in Dia. Duct	77	Sec 6 - min	-0.000	8	-0.130	8	-0.142	8	-2.407	7	-0.004	1	-1.620	8	-1.701	8	-1212.481	8	-1.016	8	0.001	0.160	0.113	0.270	2.407	0.030	0.127
324	M33	8in Dia. Duct	275	Sec 2 - min	0.000	1	-0.194	7	0.005	1	-2.456	8	0.441	1	-1.790	4	0.131	1	-2137.638	5	-1.878	8	0.000	0.156	0.116	0.267	2.456	0.081	0.227
444	M50	8in Dia. Duct	200	Sec 2 - min	0.000	1	0.031	1	-0.030	2	-3.660	7	0.161	1	-0.273	3	-0.273	2	-1474.881	8	-1.284	8	0.000	0.252	0.017	0.266	3.660	0.114	0.140
808	M84	8in Dia. Duct	875	Sec 3 - min	-0.281	2	-0.300	8	-0.036	7	0.110	1	-2.810	7	-0.082	8	-0.041	8	-1.664	1	-0.001	1	0.030	0.223	0.007	0.266	2.810	0.072	0.037
176	M18	8in Dia. Duct	725	Sec 3 - max	0.516	8	-0.103	1	0.044	8	0.631	7	-0.466	1	1.624	8	1.630	8	143.716	8	0.128	8	0.074	0.060	0.146	0.266	1.630	0.030	0.032
432	M48	8in Dia. Duct	200	Sec 1 - min	-0.003	7	-1.067	8	-0.270	3	-3.370	8	-0.060	1	0.004	1	-0.060	2	-1474.881	8	-1.284	8	0.000	0.213	0.016	0.266	3.370	0.066	0.280
560	M61	8in Dia. Duct	200	Sec 5 - min	-0.090	8	-0.264	7	-0.101	2	-1.440	7	-0.216	8	-0.357	2	-2.362	2	-1094.505	2	-0.925	2	0.011	0.091	0.164	0.266	2.362	0.090	0.121
19	M2	8in Dia. Duct	875	Sec 5 - max	0.384	7	0.158	7	0.040	6	-0.534	1	1.974	8	0.711	6	0.006	1	243.408	8	0.204	8	0.053	0.157	0.058	0.266	1.974	0.036	0.068
17	M2	8in Dia. Duct	875	Sec 4 - max	0.383	7	0.160	7	0.030	8	-0.525	1	2.015	8	0.608	8	0.006	1	243.408	8	0.204	8	0.063	0.160	0.063	0.266	2.015	0.037	0.060
707	M80	8in Dia. Duct	300	Sec 4 - max	0.001	8	-0.063	6	0.030	3	-0.066	6	1.120	4	2.030	3	2.670	2	-3.065	1	-0.003	1	0.000	0.071	0.166	0.266	2.630	0.050	0.007
15	M2	8in Dia. Duct	875	Sec 3 - max	0.383	7	0.200	7	0.066	6	-0.404	1	2.066	8	0.622	8	0.007	1	243.408	8	0.204	8	0.063	0.163	0.040	0.266	2.066	0.030	0.050
13	M2	8in Dia. Duct	875	Sec 2 - max	0.382	7	0.200	7	0.066	8	-0.404	1	2.099	8	0.575	8	0.007	1	243.408	8	0.204	8	0.053	0.167	0.046	0.265	2.099	0.048	0.048
11	M2	8in Dia. Duct	875	Sec 1 - max	0.382	7	0.200	7	0.067	6	-0.434	1	2.140	8	0.534	8	0.007	1	243.408	8	0.204	8	0.053	0.170	0.042	0.265	2.140	0.042	0.036
1028	M101A	8in Dia. Duct	77	Sec 5 - max	0.066	7	-0.037	1	0.160	6	-0.006	1	2.616	7	1.470	8	1.410	8	1234.237	8	1.030	8	0.008	0.180	0.084	0.265	2.616	0.041	0.120
177	M18	8in Dia. Duct	725	Sec 4 - max	0.516	8	-0.103	1	0.043	8	0.362	7	-0.440	1	1.606	8	1.621	8	143.716	8	0.128	8	0.074	0.047	0.143	0.264	1.606	0.030	0.030
326	M33	8in Dia. Duct	275	Sec 3 - min	0.000	1	-0.218	7	0.006	1	-3.460	6	0.101	1	-0.063	4	-0.122	5	-2137.638	5	-1.878	5	0.000	0.221	0.043	0.264	3.460	0.116	0.230
152	M18	8in Dia. Duct	725	Sec 1 - min	0.000	1	0.081	1	-0.470	8	-0.139	7	-0.094	1	-2.779	8	-0.856	8	-30.294	1	-0.027	1	0.000	0.043	0.221	0.263	2.779	0.070	0.010
136	M14	8in Dia. Duct	725	Sec 5 - max	0.380	7	0.156	7	0.000	1	-0.024	8	0.178	6	2.160	8	2.452	8	428.015	7	0.376	7	0.054	0.014	0.195	0.263	2.452	0.267	0.074
556	M61	8in Dia. Duct	200	Sec 5 - max	0.063	8	0.207	6	0.160	3	0.260	8	1.440	7	2.303	3	0.357	3	237.060	2	0.300	2	0.007	0.091	0.164	0.263	2.303	0.040	0.061
796	M86	8in Dia. Duct	300	Sec 6 - min	-0.636	8	-0.077	4	-0.020	2	-1.120	4	0.158	2	-2.670	3	-3.030	3	-742.306	2	-0.651	2	0.004	0.071	0.166	0.260	2.630	0.068	0.080
1038	M101A	8in Dia. Duct	77	Sec 6 - min	0.006	8	-0.126	8	-0.140	8	-2.616	7	[illegible]	[illegible]	-1.416	8	-1.475	8	-1446.407	8	-1.211	8	0.001	0.160	0.084	0.260	2.616	0.041	0.140
179	M18	8in Dia. Duct	725	Sec 5 - max	0.517	8	-0.104	1	0.043	8	0.552	7	[illegible]	[illegible]	1.797	8	1.800	8	143.716	8	0.120	8	0.074	0.044	0.142	0.259	1.797	0.079	0.022
731	M78	8in Dia. Duct	725	Sec 1 - max	0.517	8	-0.104	1	0.043	8	0.552	7	[illegible]	[illegible]	1.787	8	1.800	8	143.716	8	0.128	8	0.074	0.044	0.142	0.258	1.787	0.229	0.032
138	M14	8in Dia. Duct	725	Sec 3 - min	0.000	1	0.066	1	-1.073	8	-0.284	8	0.112	8	-1.061	8	-2.075	8	-34.611	1	-0.030	1	0.000	0.023	0.230	0.250	2.075	0.066	0.153
1027	M101A	8in Dia. Duct	77	Sec 4 - max	0.036	7	-0.030	1	0.141	8	-0.047	1	2.576	7	1.400	8	1.446	8	1234.237	8	1.033	8	0.006	0.163	0.040	0.250	2.576	0.040	0.120
1041	M103	8in Dia. Duct	77	Sec 1 - max	0.066	8	0.054	7	0.130	8	-0.110	1	2.746	8	0.616	7	1.163	6	1413.161	8	1.200	8	0.007	0.174	0.070	0.252	2.746	0.046	0.147

	Member	Duct Size	Temperature (°F)		Axial (psi)	Load Case	y Shear (psi)	Load Case	z Shear (psi)	Load Case	y top Bending (psi)	Load Case	y bot Bending (psi)	Load Case	z top Bending (psi)	Load Case	z bot Bending (psi)	Load Case	Torque (in-lb)	Load Case	Torsional Shear (psi)	Load Case	f_a/F_a	D-2250 f_b/F_b	f_v/F_v	D-2252 Section 11	S (psi)	D-2270 Section 13	D-2270 Section 14
556	M81	6in Dia. Duct	200	Sec 4 - min	-0.066	6	-0.283	7	-0.160	3	-1.342	7	-0.233	8	-0.297	3	-2.531	3	-1354.505	3	-0.125	3	0.011	0.095	0.190	0.258	2.531	0.046	0.131
8	M1	6in Dia. Duct	875	Sec 5 - max	0.309	7	-0.094	1	0.207	8	-0.434	1	2.140	8	0.404	8	0.113	8	242.226	8	0.203	8	0.053	0.170	0.032	0.254	2.140	0.042	0.041
1043	M103	6in Dia. Duct	77	Sec 2 - max	0.087	8	0.063	7	0.137	6	-0.124	1	2.703	8	0.847	7	1.123	8	1433.101	8	1.200	8	0.007	0.175	0.071	0.253	2.703	0.040	0.147
1030	M101A	6in Dia. Duct	77	Sec 4 - min	0.004	8	-0.128	8	-0.141	8	-2.570	7	0.047	1	-1.346	8	-1.406	8	-1448.407	8	-1.211	8	0.000	0.163	0.080	0.253	2.570	0.040	0.140
557	M81	6in Dia. Duct	200	Sec 4 - max	0.003	8	0.080	8	0.107	2	0.333	8	1.342	7	2.531	2	0.207	3	237.000	2	0.200	2	0.007	0.085	0.140	0.258	2.531	0.030	0.061
561	M82	6in Dia. Duct	200	Sec 1 - max	0.279	4	0.231	8	-0.017	1	0.238	8	1.440	7	2.038	2	-0.039	1	943.875	2	0.828	2	0.032	0.091	0.129	0.252	2.038	0.033	0.119
1042	M103	6in Dia. Duct	77	Sec 1 - min	0.021	1	-0.041	8	-0.126	8	-2.748	8	0.110	1	-1.103	8	-0.918	7	-1571.811	6	-1.316	6	0.002	0.174	0.076	0.252	2.748	0.048	0.160
1025	M101A	6in Dia. Duct	77	Sec 3 - max	0.056	7	-0.036	1	0.141	6	-0.020	1	2.540	7	1.338	6	1.274	8	1234.237	8	1.033	8	0.008	0.161	0.065	0.251	2.540	0.038	0.128
134	M16	6in Dia. Duct	725	Sec 2 - min	0.000	1	0.080	1	-0.470	6	-0.404	7	-0.116	1	-2.670	7	-0.881	6	-38.264	1	-0.027	1	0.000	0.038	0.213	0.251	2.670	0.066	0.079
818	M87	6in Dia. Duct	300	Sec 4 - min	0.000	1	-0.040	1	-0.087	4	0.021	1	-3.346	6	-0.666	4	-0.202	6	-670.000	4	-0.240	4	0.006	0.206	0.044	0.250	3.346	0.082	0.036
1045	M103	6in Dia. Duct	77	Sec 2 - max	0.087	8	0.052	7	0.137	8	-0.120	1	2.779	8	0.778	7	1.054	8	1433.101	8	1.200	8	0.007	0.179	0.067	0.250	2.779	0.044	0.147
21	M3	6in Dia. Duct	875	Sec 1 - max	0.282	7	0.366	7	0.069	6	-0.556	1	1.874	8	0.673	8	0.011	1	201.755	8	0.160	6	0.030	0.157	0.053	0.250	1.874	0.036	0.102
1044	M103	6in Dia. Duct	77	Sec 2 - min	0.022	1	-0.041	8	-0.137	8	-2.703	8	0.134	1	-1.123	6	-0.847	7	-1571.011	6	-1.316	8	0.002	0.175	0.071	0.248	2.703	0.044	0.160
827	M80	6in Dia. Duct	300	Sec 4 - max	0.560	8	0.110	8	0.028	6	2.300	6	-1.082	1	0.420	4	0.462	6	143.718	8	0.120	8	0.066	0.180	0.020	0.247	2.300	0.030	0.030
733	M76	6in Dia. Duct	725	Sec 2 - max	0.517	6	-0.107	1	0.041	8	0.444	7	-0.311	1	1.728	8	1.566	8	143.718	8	0.120	8	0.076	0.035	0.130	0.247	1.738	0.038	0.032
1047	M103	6in Dia. Duct	77	Sec 4 - max	0.090	8	0.051	7	0.120	8	-0.133	1	2.792	8	0.709	7	0.966	8	1433.101	8	1.200	8	0.087	0.177	0.067	0.247	2.792	0.047	0.147
556	M81	6in Dia. Duct	200	Sec 3 - min	-0.266	8	-0.262	7	-0.130	3	-1.245	7	-0.364	6	-0.236	3	-2.460	3	-1664.505	3	-0.825	3	0.011	0.079	0.156	0.246	2.460	0.047	0.130
1026	M101A	6in Dia. Duct	77	Sec 3 - min	0.004	8	-0.124	8	-0.141	8	-2.540	7	0.020	1	-1.274	8	-1.338	8	-1448.407	8	-1.211	8	0.000	0.161	0.085	0.246	2.540	0.038	0.140
101	M20	6in Dia. Duct	650	Sec 1 - max	0.560	8	-0.000	7	0.012	5	1.014	1	-1.007	7	1.016	4	1.025	6	143.716	8	0.120	8	0.064	0.060	0.001	0.246	1.025	0.010	0.010
1013	M100A	6in Dia. Duct	77	Sec 2 - max	0.060	7	0.024	1	0.171	8	0.700	6	0.166	7	2.002	7	2.430	8	1017.201	8	0.851	8	0.008	0.056	0.140	0.246	2.002	0.063	0.132
121	M13	6in Dia. Duct	725	Sec 1 - max	0.240	8	0.013	1	0.301	8	0.296	8	0.042	1	1.570	8	2.360	6	473.263	7	0.415	7	0.034	0.021	0.190	0.241	2.360	0.066	0.112
118	M12	6in Dia. Duct	600	Sec 5 - max	0.240	8	0.048	6	0.314	8	0.244	6	0.042	1	1.570	8	2.360	6	473.063	7	0.415	7	0.034	0.021	0.190	0.246	2.380	0.064	0.101
1040	M103	6in Dia. Duct	77	Sec 3 - min	0.022	1	-0.041	8	-0.137	8	-2.770	8	0.128	1	-1.064	8	-0.770	7	-1571.011	8	-1.316	6	0.002	0.178	0.067	0.245	2.770	0.047	0.160
1023	M101A	6in Dia. Duct	77	Sec 2 - max	0.065	7	-0.033	1	0.142	8	-0.012	1	2.503	7	1.360	8	1.303	8	1234.237	8	1.033	8	0.008	0.158	0.060	0.243	2.503	0.036	0.128
150	M15	6in Dia. Duct	725	Sec 5 - min	0.000	1	0.001	1	-0.004	8	-0.290	8	-0.065	1	-2.770	8	-0.066	8	-42.406	1	-0.040	1	0.000	0.404	0.221	0.244	2.770	0.070	0.131
1049	M103	6in Dia. Duct	77	Sec 5 - max	0.090	8	0.051	7	0.130	8	-0.130	1	2.807	8	0.941	7	0.917	8	1433.101	8	1.200	8	0.007	0.178	0.058	0.243	2.807	0.047	0.147
555	M81	6in Dia. Duct	200	Sec 3 - max	0.063	8	0.040	8	0.166	2	0.300	6	1.345	7	2.400	2	0.236	3	237.000	2	0.200	2	0.007	0.079	0.154	0.242	2.400	0.036	0.061
148	M15	6in Dia. Duct	725	Sec 4 - min	0.000	1	0.063	1	-0.004	6	-0.355	6	-0.032	1	-2.807	8	-1.167	8	-42.866	1	-0.040	1	0.000	0.036	0.214	0.242	2.807	0.066	0.131
1014	M100A	6in Dia. Duct	77	Sec 2 - min	-0.024	8	-0.088	8	-0.171	8	-0.500	7	-0.706	6	-2.030	8	-2.002	7	-1212.481	8	-1.015	8	0.003	0.050	0.160	0.242	2.002	0.053	0.130
1046	M103	6in Dia. Duct	77	Sec 4 - min	0.073	1	-0.040	6	-0.130	8	-2.762	8	0.133	1	-0.966	8	-0.700	7	-1571.011	8	-1.316	8	0.003	0.177	0.062	0.242	2.762	0.047	0.160
795	M86	6in Dia. Duct	200	Sec 3 - max	0.079	8	-0.053	6	0.046	3	-0.507	8	0.879	4	2.793	3	2.796	3	-3.098	1	-0.003	1	0.009	0.058	0.177	0.241	2.793	0.046	0.098
373	M41	6in Dia. Duct	200	Sec 2 - max	0.113	6	-0.170	1	0.002	1	1.065	5	2.802	4	0.702	3	0.356	3	-4.657	1	-0.004	1	0.013	0.164	0.044	0.241	2.802	0.040	0.030
7	M1	6in Dia. Duct	875	Sec 4 - max	0.300	7	-0.086	1	0.067	8	-0.300	1	2.006	8	0.361	8	0.096	8	242.226	8	0.203	8	0.053	0.150	0.030	0.241	2.006	0.037	0.041
146	M15	6in Dia. Duct	725	Sec 3 - min	0.000	1	0.064	1	-0.066	6	-0.415	6	-0.008	1	-2.018	8	-1.518	6	-42.866	1	-0.040	1	0.000	0.033	0.208	0.240	2.018	0.062	0.131
158	M16	6in Dia. Duct	725	Sec 3 - min	0.000	1	0.060	1	-0.430	6	-0.428	7	-0.128	1	-2.567	7	-0.528	8	-38.264	1	-0.027	1	0.000	0.034	0.206	0.240	2.567	0.061	0.078
815	M86	6in Dia. Duct	200	Sec 3 - max	0.108	8	0.027	4	0.079	2	1.150	4	-0.707	5	2.438	2	2.124	2	-3.098	1	-0.002	1	0.012	0.073	0.154	0.240	2.438	0.038	0.088
1024	M101A	6in Dia. Duct	77	Sec 2 - min	0.004	8	-0.123	8	-0.142	8	-2.503	7	0.012	1	-1.303	8	-1.260	8	-1444.407	8	-1.211	6	0.000	0.156	0.080	0.238	2.503	0.034	0.140
566	M81	6in Dia. Duct	200	Sec 3 - min	-0.066	8	-0.280	7	-0.156	3	-1.104	6	-0.310	4	-0.160	3	-2.408	2	-1064.506	3	-0.825	3	0.011	0.075	0.162	0.238	2.408	0.046	0.130
1060	M103	6in Dia. Duct	77	Sec 5 - min	0.023	1	-0.040	6	-0.130	8	-2.607	8	0.136	1	-0.817	8	-0.641	7	-1571.011	8	-1.316	6	0.003	0.170	0.066	0.238	2.607	0.048	0.160
144	M15	6in Dia. Duct	725	Sec 2 - min	0.000	1	0.066	1	-0.064	6	-0.406	6	0.016	1	-2.533	8	-1.040	6	-42.866	1	-0.040	1	0.000	0.037	0.201	0.238	2.533	0.060	0.131
1021	M101A	6in Dia. Duct	77	Sec 1 - max	0.056	7	-0.037	1	0.142	8	0.004	1	2.497	7	1.109	8	1.132	8	1234.237	8	1.033	8	0.008	0.158	0.070	0.238	2.497	0.034	0.128
23	M3	6in Dia. Duct	875	Sec 3 - max	0.292	7	0.367	7	0.060	6	-0.556	1	1.766	8	0.716	8	0.011	1	201.755	8	0.160	8	0.036	0.140	0.057	0.237	1.766	0.029	0.102
702	M70	6in Dia. Duct	375	Sec 1 - min	0.000	1	-0.022	1	-0.002	4	1.000	1	-3.434	6	-0.303	6	-0.224	7	-2.473	1	-0.002	1	0.000	0.217	0.010	0.237	3.434	0.080	0.007
830	M80	6in Dia. Duct	350	Sec 5 - min	0.000	1	-0.022	1	-0.002	4	1.000	1	-3.434	6	-0.303	6	-0.224	7	-2.473	1	-0.002	1	0.000	0.217	0.010	0.237	3.434	0.080	0.007
142	M15	6in Dia. Duct	725	Sec 1 - min	0.000	1	0.066	1	-0.064	6	-0.525	6	0.040	1	-2.452	8	-2.160	6	-42.866	1	-0.040	1	0.000	0.042	0.166	0.236	2.452	0.056	0.131
796	M86	6in Dia. Duct	200	Sec 3 - min	-0.032	8	-0.097	4	-0.038	2	-0.878	4	0.907	6	-2.795	2	-2.793	3	-742.306	2	-0.651	2	0.004	0.036	0.177	0.236	2.793	0.051	0.079
640	M72	6in Dia. Duct	650	Sec 5 - max	0.460	6	0.300	1	0.000	1	1.016	1	-1.041	7	1.032	4	1.062	6	143.718	8	0.120	8	0.067	0.064	0.064	0.236	1.062	0.010	0.016
103	M20	6in Dia. Duct	640	Sec 2 - max	0.566	8	-0.021	7	0.023	6	0.084	1	-0.047	7	0.846	4	0.936	5	143.718	8	0.120	8	0.084	0.070	0.070	0.230	0.856	0.008	0.021
563	M81	6in Dia. Duct	200	Sec 2 - max	0.004	8	0.000	8	0.165	2	0.310	4	1.164	5	2.406	2	0.160	3	237.000	2	0.200	2	0.007	0.075	0.152	0.236	2.406	0.034	0.041
816	M86	6in Dia. Duct	200	Sec 3 - min	-0.063	6	0.000	5	-0.063	3	0.702	6	-1.158	4	-2.124	2	-2.430	2	-742.306	2	-0.651	3	0.007	0.073	0.164	0.236	2.430	0.040	0.079
735	M76	6in Dia. Duct	725	Sec 3 - max	0.519	6	-0.110	1	0.040	6	0.773	7	-0.707	1	1.660	6	1.627	6	143.718	8	0.120	8	0.074	0.029	0.134	0.234	1.660	0.030	0.033
728	M76	6in Dia. Duct	200	Sec 4 - min	0.060	1	0.002	1	-0.316	7	-0.131	6	-0.240	4	-3.262	8	-0.068	1	-464.347	3	-0.434	3	0.007	0.010	0.208	0.232	3.262	0.064	0.060
801	M87	6in Dia. Duct	650	Sec 1 - max	0.471	6	-0.012	8	0.010	5	1.036	1	-1.020	7	1.032	4	1.042	6	143.718	8	0.120	8	0.067	0.062	0.063	0.232	1.042	0.010	0.010
1022	M101A	6in Dia. Duct	77	Sec 1 - min	0.003	6	-0.132	8	-0.140	8	-2.407	7	-0.004	1	-1.132	8	-1.166	8	-1448.407	8	-1.211	8	0.000	0.156	0.078	0.232	2.407	0.037	0.140
876	M96	6in Dia. Duct	875	Sec 3 - min	-0.120	8	0.022	1	0.000	1	-3.673	7	-0.257	1	-0.040	8	0.000	1	-3.200	1	-0.003	1	0.016	0.212	0.003	0.232	3.673	0.065	0.003
893	M97	6in Dia. Duct	950	Sec 2 - max	0.471	8	-0.013	8	0.011	5	1.038	1	-1.023	7	1.079	4	1.038	6	143.718	8	0.120	8	0.067	0.062	0.062	0.231	1.038	0.010	0.010
505	M58	6in Dia. Duct	875	Sec 3 - max	-0.011	1	0.033	1	0.300	5	2.810	7	-0.116	1	0.041	8	0.062	6	107.163	7	0.090	7	0.001	0.223	0.007	0.231	2.810	0.072	0.017
717	M77	6in Dia. Duct	200	Sec 4 - max	0.104	7	0.203	3	0.305	6	0.730	8	-0.022	1	2.573	6	0.073	4	0.120	1	0.000	1	0.025	0.046	0.163	0.231	2.673	0.030	0.073
852	M81	6in Dia. Duct	200	Sec 1 - min	-0.004	6	-0.250	7	-0.157	3	-1.138	5	-0.334	4	-0.121	3	-2.347	2	-1064.506	3	-0.825	3	0.011	0.071	0.148	0.231	2.347	0.043	0.130
866	M97	6in Dia. Duct	850	Sec 3 - max	0.471	6	-0.014	8	0.012	5	1.025	1	-1.010	7	1.034	4	1.034	6	143.716	8	0.120	8	0.067	0.061	0.062	0.231	1.034	0.010	0.010
963	M92	6in Dia. Duct	200	Sec 2 - max	0.276	4	0.230	6	-0.017	1	0.307	8	1.297	7	1.776	2	-0.032	1	943.975	2	0.828	2	0.032	0.088	0.112	0.230	1.776	0.027	0.119
374	M41	6in Dia. Duct	200	Sec 2 - min	-0.016	4	-0.431	7	-0.243	3	-2.002	4	-1.065	5	-0.356	3	-0.762	2	-1493.504	8	-0.860	8	0.002	0.164	0.044	0.230	2.002	0.081	0.153
867	M87	6in Dia. Duct	860	Sec 4 - max	0.471	6	-0.015	8	0.013	5	1.020	1	-1.013	7	1.020	4	1.026	6	143.716	8	0.120	8	0.067	0.061	0.062	0.230	1.020	0.010	0.020
573	M83	6in Dia. Duct	300	Sec 2 - max	0.300	3	0.404	3	0.077	6	2.331	3	-0.080	1	0.231	6	0.807	7	1067.706	2	0.020	2	0.031	0.148	0.061	0.230	2.331	0.043	0.116
880	M87	6in Dia. Duct	860	Sec 5 - max	0.472	8	-0.010	8	0.014	5	1.014	1	-1.007	7	1.015	6	1.075	5	143.716	6	0.120	8	0.007	0.060	0.061	0.230	1.028	0.010	0.030
158	M16	6in Dia. Duct	725	Sec 4 - min	0.000	1	0.058	1	-0.470	8	-0.373	7	-0.190	1	-2.515	7	-0.270	8	-30.264	1	-0.027	1	0.000	0.030	0.200	0.229	2.515	0.057	0.070
743	M80	6in Dia. Duct	725	Sec 2 - max	0.512	8	-0.128	1	0.031	8	-0.424	7	0.500	1	1.455	5	1.340	4	143.716	8	0.120	8	0.073	0.040	0.116	0.229	1.455	0.016	0.036
613	M80	6in Dia. Duct	300	Sec 2 - max	0.005	8	0.070	4	0.025	2	0.310	1	-0.290	4	3.112	3	2.016	2	-3.086	1	-0.003	1	0.011	0.030	0.187	0.228	3.112	0.066	0.080
561	M81	6in Dia. Duct	200	Sec 1 - max	0.004	8	0.000	6	0.164	2	0.334	4	1.126	6	2.347	2	0.121	3	237.000	2	0.200	2	0.007	0.075	0.148	0.227	2.347	0.033	0.041
607	M72	6in Dia. Duct	650	Sec 4 - max	0.472	6	0.016	5	0.017	4	1.003	1	-0.996	7	1.001	4	1.011	6	143.716	8	0.120	8	0.007	0.060	0.060	0.227	1.011	0.010	0.030
849	M92	6in Dia. Duct	200	Sec 5 - max	0.119	8	-0.030	6	0.164	2	0.334	4	1.126	3	2.249	2	1.939	2	14.744	1	0.013	1	0.014	0.071	0.142	0.227	2.249	0.027	0.019
5	M1	6in Dia. Duct	875	Sec 3 - max	0.300	7	-0.094	1	0.260	6	-0.338	1	1.478	6	0.317	8	0.077	8	242.226	8	0.203	8	0.053	0.148	0.025	0.227	1.478	0.032	0.041
962	M92	6in Dia. Duct	200	Sec 1 - min	0.036	1	0.042	1	-0.700	2	-1.440	7	-0.356	6	0.030	1	-2.030	2	-1014.002	3	-0.001	3	0.000	0.001	0.120	0.227	2.030	0.034	0.170
164	M18	6in Dia. Duct	725	Sec 2 - min	0.000	5	0.123	4	-0.113	6	-1.532	7	1.524	1	-1.320	4	-1.310	6	-2.473	1	-0.002	1	0.000	0.122	0.106	0.226	1.532	0.021	0.017
162	M17	6in Dia. Duct	725	Sec 1 - min	0.000	1	0.057	1	-0.216	6	-0.300	7	-0.160	1	-2.434	7	-0.216	8	-2.473	1	-0.002	1	0.000	0.031	0.163	0.225	2.434	0.054	0.030
25	M3	6in Dia. Duct	875	Sec 3 - max	0.292	7	0.367	7	0.200	6	-0.563	1	1.565	8	0.794	8	0.012	1	201.758	8	0.160	8	0.040	0.124	0.061	0.224	1.565	0.027	0.102
650	M80	6in Dia. Duct	200	Sec 5 - min	-0.098	6	-0.160	7	-0.157	3	-1.128	5	-0.334	4	-1.030	3	-2.240	2	-476.727	3	-0.771	3	0.011	0.071	0.142	0.224	2.240	0.037	0.103
120	M12	6in Dia. Duct	600	Sec 5 - min	-0.083	8	-0.025	5	-0.423	6	-0.043	1	-0.248	6	-2.380	6	-1.570	8	-0.576	1	-0.000	1	0.013	0.021	0.180	0.224	2.380	0.082	0.080
122	M13	6in Dia. Duct	725	Sec 1 - min	-0.083	8	-0.006	8	-0.180	8	-0.043	1	-0.248	6	-2.380	6	-1.570	8	-0.576	1	-0.000	1	0.013	0.021	0.180	0.224	2.380	0.052	0.077
138	M14	6in Dia. Duct	725	Sec 4 - min	0.000	1	0.067	1	-1.072	6	-0.338	6	0.066	8	-2.208	8	-2.677	6	-34.511	1	-0.030	1	0.000	0.010	0.206	0.223	2.577	0.080	0.163
816	M86	6in Dia. Duct	200	Sec 2 - min	-0.030	6	0.040	6	-0.019	3	0.290	4	-0.310	1	-2.018	2	-3.112	2	-742.306	2	-0.651	2	0.006	0.020	0.197	0.222	3.112	0.062	0.077
737	M76	6in Dia. Duct	725	Sec 4 - max	0.513	6	-0.113	1	0.030	6	0.218	7	-0.100	1	1.643	8	1.460	6	143.718	6	0.120	8	0.074	0.017	0.130	0.221	1.643	0.036	0.033
667	M75	6in Dia. Duct	350	Sec 4 - max	0.553	6	-0.030	1	0.010	4	-0.766	1	2.292	6	0.161	3	0.132	2	143.716	8	0.120	8	0.084	0.146	0.011	0.221	2.292	0.031	0.016
661	M75	6in Dia. Duct	360	Sec 3 - max	0.530	6	0.050	1	0.070	4	-1.160	8	1.201	1	1.200	8	1.213	6	143.716	8	0.126	8	0.082	0.082	0.077	0.220	1.201	0.010	0.023
547	M80	6in Dia. Duct	200	Sec 4 - max	0.116	8	-0.030	6	0.163	2	0.350	4	1.081	5	2.160	2	0.872	3	14.744	1	0.013	1	0.014	0.080	0.138	0.220	2.160	0.030	0.018
20	M2	6in Dia. Duct	875	Sec 5 - min	0.047	1	-0.002	1	-0.230	8	-1.874	8	0.550	1	-0.006	1	-0.711	8	-4.050	1	-0.004	1	0.006	0.157	0.050	0.219	1.874	0.026	0.009
875	M95	6in Dia. Duct	875	Sec 3 - max	0.030	1	0.577	8	0.046	7	0.257	1	2.673	7	0.000	1	0.040	8	164.527	8	0.154	8	0.004	0.212	0.003	0.219	2.673	0.065	0.162
18	M2	6in Dia. Duct	875	Sec 4 - min	0.046	1	-0.001	1	-0.038	8	-2.015	6	0.525	1	-0.008	1	-0.646	6	-4.056	1	-0.004	1	0.006	0.160	0.063	0.219	2.015	0.037	0.009
16	M2	6in Dia. Duct	875	Sec 3 - min	0.046	1	-0.001	1	-0.037	8	-2.056	6	0.484	1	-0.007	1	-0.622	8	-4.056	1	-0.004	1	0.006	0.163	0.040	0.219	2.060	0.038	0.009
14	M2	6in Dia. Duct	875	Sec 2 - min	0.046	1	-0.000	1	-0.037	6	-2.066	6	0.404	1	-0.007	1	-0.576	8	-4.056	1	-0.004	1	0.006	0.167	0.040	0.210	2.060	0.040	0.008
160	M18	6in Dia. Duct	725	Sec 5 - min	0.000	1	0.057	1	-0.470	8	-0.319	7	-0.161	1	-2.434	7	-0.215	8	-30.264	1	-0.027	1	0.000	0.026	0.192	0.219	2.434	0.054	0.070
12	M2	6in Dia. Duct	875	Sec 1 - min	0.045	1	-0.350	1	-0.036	8	-2.140	8	0.434	1	-0.007	1	-0.534	8	-4.050	1	-0.004	1	0.006	0.170	0.042	0.218	2.140	0.043	0.008
22	M3	6in Dia. Duct	875	Sec 1 - min	0.056	1	-0.007	5	-0.030	8	-1.074	6	2.166	1	-0.011	1	-0.073	6	-112.006	8	-0.120	8	0.008	0.157	0.043	0.218	1.874	0.036	0.020
546	M80	6in Dia. Duct	200	Sec 4 - min	-0.086	6	-0.164	7	-0.156	3	-1.081	5	-0.350	4	-0.872	3	-2.160	2	-476.727	3	-0.771	3	0.011	0.066	0.136	0.218	2.160	0.036	0.103
763	M84	6in Dia. Duct	200	Sec 2 - max	0.076	8	-0.043	5	0.054	3	-0.330	5	0.08[illegible]	4	2.40[illegible]	3	2.422	2	-3.066	1	-0.003	1	0.000	0.042	0.160	0.217	2.420	0.040	0.004

	Member	Duct Size	Temperature (°F)		Axial (ksi)	Load Case	y Shear (ksi)	Load Case	z Shear (ksi)	Load Case	y top Bending (ksi)	Load Case	y bot Bending (ksi)	Load Case	z top Bending (ksi)	Load Case	z bot Bending (ksi)	Load Case	Torque (lb-in)	Load Case	Torsional Shear (ksi)	Load Case	S-215 f_a/F_a	f_v/F_v	f_b/F_b	D-2250 Equation 11 $f_a/F_a + f_{bx}/F_{bx} + f_{by}/F_{by}$	f_b (ksi)	D-2260 Equation 13 $(f_v/F_v)^2 + (f_b/F_b)^2$	D-2270 Equation 14 $U_a + U_b$
195	M20	6in Dia. Duct	850	Sec 3 - max	0.382	8	-0.023	7	0.034	5	0.947	1	-0.942	7	0.639	4	0.643	5	143.718	8	0.129	8	0.083	0.087	0.087	0.217	0.847	0.007	0.022
127	M13	6in Dia. Duct	725	Sec 4 - max	0.249	8	-0.021	1	0.409	6	0.040	8	0.040	1	2.197	8	0.683	8	473.063	7	0.415	7	0.030	0.007	0.174	0.217	2.197	0.047	0.114
718	M77	6in Dia. Duct	200	Sec 4 - min	0.080	8	-0.002	1	-0.012	4	0.022	1	-0.720	8	-0.873	4	-2.373	5	-815.148	4	-0.715	4	0.000	0.046	0.163	0.216	2.373	0.046	0.080
115	M12	6in Dia. Duct	800	Sec 3 - max	0.223	8	0.076	8	0.329	8	0.038	1	0.367	8	1.834	6	1.846	8	473.060	7	0.918	7	0.033	0.020	0.160	0.215	1.834	0.036	0.103
1053	M104	6in Dia. Duct	77	Sec 2 - max	0.086	8	0.087	7	0.121	8	-0.104	1	2.904	8	0.330	6	0.657	7	1267.081	8	1.086	8	0.000	0.164	0.042	0.215	2.904	0.040	0.133
872	M99	6in Dia. Duct	200	Sec 1 - min	0.009	1	0.112	1	-0.098	1	-3.137	8	1.963	1	-0.179	2	-0.247	3	-3.473	1	-0.002	1	0.009	0.199	0.016	0.214	3.137	0.057	0.013
700	M76	6in Dia. Duct	350	Sec 5 - min	0.000	1	-0.106	8	-0.017	4	-3.137	8	1.063	1	-0.179	2	-0.247	3	-3.473	1	-0.062	1	0.000	0.199	0.016	0.214	3.137	0.057	0.012
548	M60	6in Dia. Duct	200	Sec 3 - max	0.117	8	-0.030	8	0.162	2	0.363	4	1.036	8	2.110	2	0.815	3	14.744	1	0.013	1	0.014	0.065	0.134	0.213	2.110	0.029	0.019
514	M57	6in Dia. Duct	875	Sec 3 - min	-0.186	7	0.032	1	-0.045	6	-1.958	8	-0.010	1	-0.004	1	-0.410	6	-2.180	1	-0.002	1	0.025	0.136	0.033	0.213	1.960	0.036	0.007
9	M1	6in Dia. Duct	875	Sec 2 - max	0.260	7	-0.083	1	0.006	6	-0.201	1	1.746	5	0.374	8	0.030	8	242.220	8	0.303	8	0.062	0.130	0.022	0.213	1.746	0.020	0.041
764	M86	6in Dia. Duct	200	Sec 1 - min	-0.030	8	-0.017	4	-0.047	2	-0.999	4	0.739	8	-2.072	7	-2.626	3	-742.305	2	-0.661	2	0.002	0.042	0.140	0.212	2.072	0.049	0.078
27	M3	6in Dia. Duct	875	Sec 4 - max	0.263	7	0.567	7	0.361	6	-0.567	1	1.360	8	0.639	6	0.012	1	201.756	8	0.160	6	0.040	0.106	0.064	0.212	1.360	0.017	0.102
1030	M102	6in Dia. Duct	77	Sec 5 - max	0.048	7	-0.008	8	0.135	8	-0.119	1	2.748	8	0.360	6	0.473	8	1401.757	8	1.240	8	0.007	0.174	0.020	0.211	2.748	0.046	0.132
506	M58	6in Dia. Duct	875	Sec 4 - min	-0.282	7	-0.300	8	-0.032	7	0.184	1	-2.601	7	-0.142	4	0.000	5	-1.684	1	-0.001	1	0.030	0.130	0.013	0.211	2.601	0.036	0.043
540	M60	6in Dia. Duct	200	Sec 3 - min	-0.098	8	-0.163	7	-0.138	3	-1.636	8	-0.383	4	-0.019	3	-2.110	2	-878.727	3	-0.771	3	0.011	0.040	0.134	0.211	2.110	0.036	0.103
163	M17	6in Dia. Duct	775	Sec 2 - max	0.327	8	0.141	7	0.513	8	0.709	4	0.101	7	0.001	1	1.411	5	143.718	8	0.129	8	0.079	0.024	0.112	0.211	1.411	0.018	0.089
744	M80	6in Dia. Duct	725	Sec 3 - min	0.300	1	-0.148	7	-0.650	4	-1.061	1	0.999	7	-1.528	4	-1.566	6	-2.473	1	-0.002	1	0.000	0.063	0.127	0.210	1.566	0.023	0.021
1064	M104	6in Dia. Duct	77	Sec 2 - min	0.030	1	0.002	1	-0.121	6	-2.504	8	0.104	1	-0.867	7	-0.330	6	-1366.478	6	-1.162	6	0.004	0.164	0.042	0.210	2.504	0.041	0.141
33	M4	6in Dia. Duct	875	Sec 2 - max	0.167	8	-0.090	1	0.351	8	0.381	1	1.446	8	0.037	8	0.018	1	171.022	8	0.146	8	0.025	0.134	0.061	0.210	1.446	0.030	0.084
140	M14	6in Dia. Duct	725	Sec 5 - min	0.000	1	0.088	1	-1.872	8	-0.178	8	0.024	8	-2.462	8	-2.100	6	-34.511	1	-0.030	1	0.000	0.014	0.168	0.209	2.462	0.068	0.153
739	M79	6in Dia. Duct	775	Sec 1 - max	0.519	8	-0.117	1	0.027	8	0.102	7	0.009	1	1.596	8	1.454	8	143.718	8	0.129	8	0.074	0.308	0.127	0.209	1.599	0.023	0.034
741	M80	6in Dia. Duct	725	Sec 1 - max	0.519	8	-0.117	1	0.637	6	0.102	7	0.000	1	1.500	8	1.434	8	143.718	8	0.129	8	0.074	0.308	0.127	0.208	1.566	0.023	0.034
586	M63	6in Dia. Duct	300	Sec 3 - max	0.278	4	0.229	8	-0.017	1	0.438	8	1.279	7	1.513	2	-0.820	1	843.075	2	0.828	2	0.032	0.081	0.096	0.208	1.513	0.022	0.116
167	M17	6in Dia. Duct	725	Sec 4 - max	0.529	8	0.129	7	0.519	8	0.464	1	-0.481	7	0.780	8	1.206	8	143.718	8	0.129	8	0.074	0.038	0.096	0.208	1.206	0.013	0.090
543	M60	6in Dia. Duct	200	Sec 2 - max	0.117	8	-0.027	8	0.101	2	0.408	4	0.400	8	2.080	2	0.867	5	14.746	1	0.013	1	0.014	0.063	0.130	0.207	2.080	0.029	0.010
1040	M102	6in Dia. Duct	77	Sec 5 - min	0.019	1	-0.092	8	-0.139	8	-2.748	8	0.119	1	-0.473	8	-0.350	8	-1904.447	8	-1.618	8	0.002	0.174	0.030	0.206	2.748	0.048	0.171
657	M71	6in Dia. Duct	800	Sec 4 - max	0.116	8	-0.046	1	0.048	7	-0.187	3	1.033	8	1.114	8	1.345	8	16.044	1	0.014	1	0.017	0.062	0.167	0.206	1.345	0.016	0.008
10	M1	6in Dia. Duct	875	Sec 5 - min	0.026	1	-0.304	8	-0.030	8	-2.140	8	0.434	1	-0.115	8	-0.404	8	-6.347	1	-0.006	1	0.003	0.170	0.032	0.206	2.140	0.043	0.037
34	M3	6in Dia. Duct	875	Sec 3 - min	0.067	1	-0.007	1	-0.030	8	-1.700	8	0.380	1	-0.011	1	-0.718	6	-182.800	6	-0.126	6	0.000	0.140	0.067	0.205	1.700	0.020	0.083
564	M62	6in Dia. Duct	200	Sec 2 - min	0.064	1	0.042	1	-0.700	2	-1.367	7	-0.387	8	0.032	1	-1.776	2	-1016.802	3	-0.861	3	0.000	0.066	0.112	0.205	1.776	0.020	0.170
574	M63	6in Dia. Duct	225	Sec 2 - min	0.030	1	0.017	1	-0.091	4	0.066	1	-2.331	3	-0.097	7	-2.331	1	-1026.198	2	-0.891	2	0.009	0.146	0.051	0.204	2.331	0.042	0.108
170	M17	6in Dia. Duct	775	Sec 5 - min	0.000	1	0.333	1	-0.227	8	0.558	1	-0.708	7	-1.048	8	-1.863	8	-2.473	1	-0.002	1	0.000	0.058	0.146	0.204	1.863	0.031	0.032
172	M18	6in Dia. Duct	725	Sec 1 - min	0.080	1	-0.107	7	-0.054	8	0.536	1	-0.700	7	-1.048	8	-1.863	8	-2.473	1	-0.002	1	0.000	0.066	0.146	0.204	1.863	0.031	0.018
544	M60	6in Dia. Duct	200	Sec 2 - min	-0.088	8	-0.102	7	-0.154	3	-0.800	5	-0.400	4	-0.867	3	-2.080	2	-878.727	3	-0.771	3	0.011	0.083	0.130	0.204	2.080	0.032	0.100
1037	M102	6in Dia. Duct	77	Sec 4 - max	0.087	7	-0.006	8	0.138	8	-0.106	1	2.702	8	0.260	8	0.403	8	1401.757	8	1.240	8	0.007	0.171	0.036	0.204	2.702	0.044	0.132
209	M30	6in Dia. Duct	425	Sec 1 - max	0.512	8	0.909	9	0.909	1	0.945	8	-0.872	1	0.991	4	0.895	8	143.718	8	0.129	8	0.073	0.075	0.059	0.203	0.945	0.008	0.018
645	M72	6in Dia. Duct	850	Sec 3 - max	0.477	8	0.036	5	0.033	4	0.437	1	-0.420	7	0.649	4	0.650	5	143.718	5	0.129	8	0.360	0.086	0.046	0.203	0.850	0.007	0.023
656	M71	6in Dia. Duct	800	Sec 3 - max	0.132	8	-0.025	1	0.036	7	1.270	8	-0.888	1	0.904	8	1.042	8	16.044	1	0.014	1	0.017	0.162	0.083	0.202	1.270	0.015	0.007
297	M30	6in Dia. Duct	425	Sec 4 - max	0.534	8	0.008	8	0.880	4	0.032	8	-0.800	1	0.670	4	0.883	5	143.718	8	0.129	8	0.073	0.074	0.064	0.202	0.932	0.008	0.018
461	M51	6in Dia. Duct	425	Sec 1 - max	0.518	8	-0.012	3	0.010	6	0.822	6	-0.786	1	0.671	4	0.875	6	143.718	8	0.129	8	0.074	0.073	0.064	0.200	0.922	0.008	0.019
1	M1	6in Dia. Duct	875	Sec 1 - max	0.388	7	-0.292	1	0.095	8	-0.246	1	1.678	8	0.231	6	0.042	8	242.220	8	0.303	8	0.092	0.179	0.018	0.200	1.678	0.024	0.041
541	M60	6in Dia. Duct	200	Sec 1 - max	0.117	8	-0.326	8	0.160	2	0.432	4	0.943	5	2.000	2	0.800	3	14.744	1	0.013	1	0.014	0.040	0.127	0.200	2.000	0.027	0.018
453	M51	6in Dia. Duct	425	Sec 2 - max	0.518	8	-0.013	3	0.011	6	0.917	8	-0.794	1	0.867	4	0.871	5	143.718	8	0.129	8	0.074	0.073	0.063	0.200	0.917	0.008	0.019
174	M18	6in Dia. Duct	725	Sec 2 - min	0.000	1	-0.106	7	-0.054	8	0.522	1	-0.670	7	-1.653	8	-1.643	8	-2.473	1	-0.002	1	0.000	0.063	0.146	0.199	1.643	0.031	0.015
20	M3	6in Dia. Duct	875	Sec 5 - max	0.284	7	0.567	7	0.091	8	-0.500	7	1.157	6	0.866	8	0.012	1	201.758	8	0.160	8	0.040	0.062	0.088	0.199	1.167	0.012	0.102
455	M51	6in Dia. Duct	425	Sec 3 - max	0.518	8	-0.014	3	0.012	6	0.912	8	-0.790	1	0.843	4	0.867	5	143.718	8	0.129	8	0.074	0.072	0.059	0.199	0.912	0.008	0.019
200	M28	6in Dia. Duct	425	Sec 3 - min	0.000	1	-0.110	1	-0.100	4	-1.201	1	1.166	8	-1.213	4	-1.200	5	-2.473	1	-0.002	1	0.000	0.102	0.088	0.199	1.201	0.016	0.019
1038	M102	6in Dia. Duct	77	Sec 4 - min	0.018	1	-0.091	8	-0.139	8	-2.702	8	0.506	1	-0.403	8	-0.200	8	-1904.447	8	-1.418	8	0.002	0.171	0.030	0.198	2.702	0.044	0.171
457	M51	6in Dia. Duct	425	Sec 4 - max	0.510	8	-0.015	3	0.013	8	0.887	6	-0.783	1	0.850	4	0.862	5	143.718	8	0.129	8	0.074	0.072	0.063	0.198	0.887	0.008	0.020
460	M51	6in Dia. Duct	425	Sec 5 - max	0.518	8	-0.016	3	0.014	8	0.861	6	-0.776	5	0.853	4	0.858	5	143.718	8	0.129	8	0.074	0.072	0.062	0.197	0.861	0.008	0.020
542	M60	6in Dia. Duct	200	Sec 1 - min	-0.098	8	-0.161	7	-0.153	3	-0.943	8	-0.432	4	-0.920	3	-2.000	2	-878.777	3	-0.771	3	0.011	0.090	0.127	0.197	2.000	0.031	0.102
1036	M102	6in Dia. Duct	77	Sec 3 - max	0.087	7	-0.008	8	0.136	8	-0.081	1	2.654	8	0.211	8	0.332	8	1401.757	8	1.240	8	0.007	0.164	0.021	0.196	2.656	0.043	0.153
207	M31	6in Dia. Duct	425	Sec 4 - max	0.508	8	0.001	8	0.000	4	0.804	8	-0.760	1	0.850	4	0.800	5	143.718	8	0.129	8	0.072	0.072	0.062	0.196	0.806	0.008	0.018
300	M31	6in Dia. Duct	425	Sec 5 - max	0.508	8	0.008	1	0.000	1	0.804	8	-0.781	1	0.850	4	0.800	5	143.718	8	0.129	8	0.072	0.072	0.062	0.196	0.806	0.008	0.018
305	M31	6in Dia. Duct	425	Sec 3 - max	0.508	8	0.002	8	0.003	4	0.803	8	-0.780	1	0.810	4	0.800	5	143.718	8	0.129	8	0.072	0.072	0.062	0.196	0.803	0.008	0.018
303	M31	6in Dia. Duct	425	Sec 2 - max	0.507	8	0.003	8	0.002	4	0.902	8	-0.779	1	0.855	4	0.859	5	143.718	8	0.129	8	0.072	0.072	0.052	0.196	0.902	0.008	0.018
301	M31	6in Dia. Duct	425	Sec 1 - max	0.507	8	0.004	8	0.004	4	0.901	8	-0.778	1	0.853	4	0.654	5	143.718	8	0.129	8	0.072	0.072	0.052	0.196	0.901	0.008	0.018
208	M21	6in Dia. Duct	850	Sec 5 - max	0.580	8	-0.102	7	0.097	8	-0.740	8	0.740	1	0.706	5	0.704	4	143.718	8	0.129	8	0.081	0.080	0.068	0.196	0.746	0.006	0.032
211	M22	6in Dia. Duct	850	Sec 1 - max	0.585	8	0.079	5	0.073	4	-0.740	8	0.746	1	0.708	5	0.704	4	143.718	8	0.129	8	0.081	0.080	0.068	0.196	0.746	0.006	0.026
128	M13	6in Dia. Duct	725	Sec 4 - min	-0.182	8	-0.042	8	-0.204	8	-0.080	1	-0.840	8	-0.043	8	-2.107	8	-4.870	1	-0.008	1	0.016	0.007	0.174	0.196	2.107	0.044	0.028
295	M29	6in Dia. Duct	425	Sec 2 - max	0.519	8	0.019	8	0.019	4	0.893	8	-0.799	1	0.843	4	0.847	5	143.718	8	0.129	8	0.074	0.071	0.091	0.196	0.893	0.007	0.020
166	M18	6in Dia. Duct	725	Sec 3 - max	0.494	7	0.108	8	0.086	4	-0.861	1	0.844	7	0.701	5	0.711	4	143.718	8	0.129	8	0.071	0.080	0.058	0.196	0.864	0.007	0.033
36	M4	6in Dia. Duct	875	Sec 2 - min	-0.079	1	-0.712	8	-0.038	1	-1.800	8	-0.301	1	-0.015	1	-0.637	6	-878.532	6	-0.234	6	0.011	0.134	0.081	0.195	1.446	0.026	0.131
178	M18	6in Dia. Duct	725	Sec 3 - min	0.000	1	-0.118	7	-0.083	8	0.486	1	-0.831	7	-1.030	8	-1.824	8	-2.473	1	-0.002	1	0.000	0.050	0.146	0.195	1.824	0.030	0.018
769	M85	6in Dia. Duct	200	Sec 5 - max	0.873	8	-0.033	6	0.043	3	-0.209	5	0.494	4	2.427	3	2.442	2	-3.065	1	-0.003	1	0.008	0.031	0.156	0.195	2.447	0.035	0.007
791	M89	6in Dia. Duct	200	Sec 1 - max	0.073	8	-0.033	6	0.082	3	-0.209	8	0.494	4	2.427	3	2.447	2	-3.065	1	-0.003	1	0.008	0.031	0.156	0.195	2.447	0.036	0.007
116	M12	6in Dia. Duct	800	Sec 3 - min	-0.388	8	0.085	1	-0.438	6	-0.367	8	-0.030	1	-1.648	8	-1.624	6	-4.578	1	-0.006	1	0.012	0.029	0.153	0.194	1.824	0.034	0.062
637	M69	6in Dia. Duct	875	Sec 4 - max	0.000	8	0.010	1	0.467	7	2.111	8	-0.304	1	0.001	6	0.348	7	240.036	8	0.208	8	0.007	0.146	0.019	0.194	2.111	0.040	0.067
291	M28	6in Dia. Duct	425	Sec 1 - max	0.500	8	-0.012	7	0.010	5	0.883	6	-0.757	1	0.637	4	0.841	5	143.718	8	0.129	8	0.073	0.070	0.061	0.194	0.881	0.007	0.019
107	M20	6in Dia. Duct	850	Sec 5 - max	0.570	8	-0.044	7	0.044	5	0.865	1	-0.001	7	0.884	4	0.888	5	143.718	8	0.129	8	0.003	0.066	0.065	0.193	0.886	0.006	0.034
29	M3	6in Dia. Duct	875	Sec 2 - min	0.057	1	-0.009	1	-0.039	8	-1.509	8	0.563	1	-0.012	1	-0.704	8	-152.909	8	-0.129	8	0.009	0.124	0.061	0.193	1.595	0.022	0.072
636	M69	6in Dia. Duct	875	Sec 4 - min	0.030	1	-0.416	8	-0.007	8	0.364	1	-3.111	8	-0.245	7	-0.081	8	-3.411	1	-0.003	1	0.006	0.144	0.016	0.192	2.111	0.040	0.068
8	M1	6in Dia. Duct	875	Sec 4 - min	0.024	1	-0.263	8	-0.030	8	-2.000	8	0.360	1	-0.085	8	-0.381	8	-6.347	1	-0.006	1	0.003	0.150	0.020	0.191	2.000	0.037	0.037
825	M66	6in Dia. Duct	875	Sec 3 - max	0.334	7	0.364	8	0.080	8	1.340	8	-0.258	1	0.460	4	0.078	7	252.720	4	0.212	4	0.046	0.107	0.030	0.191	1.340	0.017	0.060
1039	M102	6in Dia. Duct	77	Sec 3 - min	0.019	1	-0.081	8	-0.139	8	-2.856	8	0.061	1	-0.333	8	-0.211	8	-1904.447	8	-1.418	6	0.002	0.166	0.021	0.191	2.856	0.043	0.171
179	M18	6in Dia. Duct	725	Sec 4 - min	0.000	1	-0.111	7	-0.093	8	0.449	1	-0.907	7	-1.921	8	-1.929	8	-2.473	1	-0.002	1	0.000	0.047	0.143	0.190	1.929	0.030	0.016
1033	M102	6in Dia. Duct	77	Sec 2 - max	0.087	7	-0.008	8	0.140	6	-0.079	1	2.422	7	0.140	8	0.263	8	1401.757	8	1.240	8	0.007	0.160	0.017	0.190	2.422	0.042	0.153
790	M85	6in Dia. Duct	200	Sec 5 - min	-0.027	6	-0.047	4	-0.068	2	-0.404	4	0.300	5	-2.447	2	-2.427	2	-742.306	2	-0.661	2	0.003	0.031	0.156	0.190	2.447	0.040	0.078
792	M89	6in Dia. Duct	200	Sec 1 - min	-0.027	6	-0.047	4	-0.080	2	-0.404	4	0.300	6	-2.447	2	-2.427	3	-742.308	2	-0.661	2	0.003	0.031	0.158	0.190	2.447	0.040	0.078
658	M71	6in Dia. Duct	800	Sec 4 - min	0.000	1	-0.280	8	-0.057	8	-1.033	8	0.187	1	-1.345	8	-1.114	8	-316.326	8	-0.270	8	0.000	0.062	0.107	0.190	1.348	0.018	0.060
513	M57	6in Dia. Duct	875	Sec 2 - max	-0.003	1	0.578	7	0.009	1	0.019	1	1.858	8	0.419	8	0.004	1	150.560	7	0.129	7	0.000	0.154	0.022	0.190	1.858	0.028	0.068
821	M66	6in Dia. Duct	875	Sec 1 - max	0.347	7	0.414	5	0.065	8	-0.245	1	1.620	8	0.145	8	0.128	8	252.720	4	0.212	4	0.047	0.129	0.012	0.188	1.620	0.024	0.047
715	M77	6in Dia. Duct	200	Sec 2 - max	0.172	7	0.167	4	0.140	8	0.058	1	2.340	3	0.210	1	0.204	3	8.129	1	0.006	1	0.020	0.146	0.010	0.187	2.340	0.032	0.010
567	M62	6in Dia. Duct	200	Sec 4 - max	0.274	4	0.228	5	-0.017	1	0.445	6	1.103	7	1.251	2	0.079	3	843.075	2	0.628	2	0.032	0.079	0.079	0.187	1.251	0.018	0.118
695	M75	6in Dia. Duct	350	Sec 3 - max	0.347	8	0.008	1	0.431	4	-0.707	1	1.362	8	0.256	8	0.270	4	143.718	8	0.129	8	0.084	0.108	0.019	0.186	1.362	0.017	0.017
293	M30	6in Dia. Duct	425	Sec 2 - max	0.519	8	0.028	8	0.024	4	0.027	8	-0.701	1	0.393	4	0.567	5	143.718	8	0.129	8	0.074	0.099	0.047	0.186	0.827	0.009	0.021
180	M18	6in Dia. Duct	725	Sec 5 - min	0.000	1	-0.112	7	-0.052	8	0.412	1	-0.932	7	-1.650	8	-1.787	8	-2.473	1	-0.002	1	0.000	0.044	0.142	0.186	1.787	0.028	0.019
732	M78	6in Dia. Duct	725	Sec 1 - min	0.000	1	-0.112	7	-0.062	8	0.412	1	-0.932	7	-1.648	8	-1.787	8	-2.473	1	-0.002	1	0.000	0.044	0.142	0.186	1.787	0.028	0.019
201	M28	6in Dia. Duct	600	Sec 1 - max	0.536	8	0.004	3	0.086	4	-0.516	8	0.630	1	0.664	5	0.648	4	143.718	8	0.129	8	0.077	0.084	0.036	0.186	0.666	0.006	0.031
278	M28	6in Dia. Duct	600	Sec 5 - max	0.536	8	-0.067	5	0.047	5	-0.560	6	0.665	1	0.634	5	0.648	4	143.718	8	0.129	8	0.077	0.084	0.066	0.186	0.666	0.006	0.027
693	M75	6in Dia. Duct	350	Sec 2 - max	0.549	8	0.633	1	0.096	4	-0.967	1	1.772	5	0.672	5	0.911	4	143.718	8	0.129	8	0.063	0.083	0.049	0.186	1.307	0.010	0.020
1031	M102	6in Dia. Duct	77	Sec 1 - max	0.067	7	-0.104	6	0.140	8	-1.065	1	2.616	[illegible]	0.370	8	0.163	8	1401.757	8	1.240	8	0.007	0.166	0.012	0.185	2.616	0.041	0.153
787	M86	6in Dia. Duct	200	Sec 4 - max	0.072	8	-0.029	5	0.160	3	-0.160	6	0.424	[illegible]	2.324	3	3.366	2	-3.065	1	-0.003	1	0.000	0.027	0.140	0.184	2.360	0.032	0.008
1034	M102	6in Dia. Duct	77	Sec 2 - min	0.018	1	-0.090	8	-0.140	8	-2.622	7	[illegible]	[illegible]	-0.363	8	-0.143	8	-1904.447	8	-1.418	8	0.002	0.160	0.017	0.184	2.622	0.042	0.171
658	M71	6in Dia. Duct	800	Sec 5 - min	0.080	1	-0.270	8	-0.616	6	0.666	1	[illegible]	5	-1.442	8	-0.804	8	-316.320	8	-0.270	8	0.000	0.102	0.083	0.184	1.276	0.016	0.077

	Member	Duct Size	Temperature (°F)		Axial (ksi)	Load Case	y Shear (ksi)	Load Case	z Shear (ksi)	Load Case	y top Bending (ksi)	Load Case	y bot Bending (ksi)	Load Case	z top Bending (ksi)	Load Case	z bot Bending (ksi)	Load Case	Torque (in-lb)	Load Case	Torsional Shear (ksi)	Load Case	D-2250 f_a/F_a	f_b/F_b	f_v/F_v	D-2250 Equation 11	f (ksi)	D-2270 Equation 13	D-2270 Equation 14
818	M88	8in Dia. Duct	200	Sec 5 - max	0.132	8	-0.071	4	0.140	2	0.472	4	0.943	5	1.721	2	1.172	2	-3.095	1	-0.003	1	0.015	0.090	0.109	0.184	1.721	0.017	0.018
546	M42	8in Dia. Duct	200	Sec 3 - min	0.053	1	0.041	1	-0.707	2	-1.275	7	-0.410	8	0.020	1	-1.513	2	-1014.862	3	-0.861	3	0.004	0.061	0.066	0.183	1.513	0.034	0.179
28	M3	8in Dia. Duct	875	Sec 4 - min	0.050	1	-0.000	1	-0.040	8	-1.300	8	0.107	1	-0.012	1	-0.600	8	-192.000	8	-0.120	8	0.006	0.100	0.064	0.180	1.300	0.017	0.223
1032	M107	8in Dia. Duct	77	Sec 1 - min	0.014	1	-0.000	8	-0.140	8	-2.010	7	0.066	1	-0.163	8	-0.070	8	-1086.467	8	-1.410	8	0.002	0.166	0.012	0.179	2.010	0.043	0.171
828	M90	8in Dia. Duct	390	Sec 4 - min	0.000	1	0.011	1	-0.031	4	1.062	1	-2.300	8	-0.402	6	-0.420	4	-2.473	1	-0.002	1	0.000	0.150	0.030	0.179	2.300	0.033	0.004
788	M95	8in Dia. Duct	200	Sec 4 - min	-0.026	8	-0.042	4	-0.001	2	-0.474	4	0.160	5	-2.255	2	-2.324	3	-742.305	2	-0.851	2	0.003	0.027	0.149	0.179	2.255	0.038	0.078
820	M88	8in Dia. Duct	200	Sec 5 - min	-0.086	6	-0.096	5	-0.153	3	-0.043	5	-0.432	4	-1.172	3	-1.721	2	-742.305	2	-0.851	2	0.010	0.060	0.109	0.178	1.721	0.023	0.068
8	M1	8in Dia. Duct	875	Sec 3 - min	0.034	1	-0.282	8	-0.036	8	-1.676	6	0.336	1	-0.077	6	-0.317	6	-4.347	1	-0.006	1	0.003	0.140	0.025	0.177	1.676	0.032	0.037
31	M4	8in Dia. Duct	875	Sec 1 - max	0.163	8	-0.060	1	0.366	8	1.167	8	-0.508	7	0.013	1	0.780	6	171.422	8	0.140	8	0.025	0.082	0.080	0.177	1.167	0.012	0.080
766	M86	8in Dia. Duct	300	Sec 3 - max	0.071	8	-0.024	6	0.072	3	-0.110	6	0.361	4	2.213	3	2.256	2	-3.066	1	-0.003	1	0.008	0.023	0.143	0.174	2.256	0.030	0.009
734	M79	8in Dia. Duct	725	Sec 2 - min	0.009	1	-0.115	7	-0.051	5	0.311	1	-0.444	7	-1.506	8	-1.738	9	-2.473	1	-0.002	1	0.009	0.035	0.130	0.173	1.738	0.027	0.016
307	M30	8in Dia. Duct	875	Sec 4 - max	-0.011	1	-0.007	1	0.000	1	2.001	7	-0.184	1	0.000	1	0.182	4	107.161	7	0.080	7	0.001	0.150	0.012	0.173	2.001	0.038	0.013
291	M28	8in Dia. Duct	425	Sec 1 - max	0.521	8	0.036	8	0.032	4	0.730	8	-0.013	1	0.400	4	0.503	6	143.718	8	0.120	8	0.074	0.056	0.040	0.173	0.736	0.006	0.022
660	M74	8in Dia. Duct	425	Sec 5 - max	0.521	8	0.036	7	0.032	4	0.730	8	-0.013	1	0.400	4	0.503	6	143.718	8	0.120	8	0.074	0.066	0.040	0.173	0.736	0.006	0.022
714	M77	8in Dia. Duct	300	Sec 2 - min	0.040	1	-0.002	1	0.066	1	-2.340	3	-0.050	1	-0.204	3	-0.210	1	-815.148	4	-0.716	4	0.008	0.140	0.010	0.172	2.340	0.038	0.079
798	M95	8in Dia. Duct	300	Sec 2 - min	-0.023	8	-0.030	4	-0.005	2	-0.281	4	0.118	8	-2.255	2	-2.213	3	-742.305	2	-0.851	2	0.003	0.023	0.143	0.188	2.256	0.028	0.079
901	M88	8in Dia. Duct	850	Sec 1 - max	0.000	1	0.000	1	0.000	1	1.056	1	-1.051	7	1.052	4	1.062	5	143.718	8	0.120	8	0.000	0.064	0.064	0.188	1.062	0.010	0.018
870	M72	8in Dia. Duct	850	Sec 5 - min	0.000	1	0.000	1	0.000	1	1.061	7	-1.066	1	-1.042	5	-1.052	4	-2.473	1	-0.002	1	0.000	0.064	0.064	0.186	1.062	0.010	0.000
902	M88	8in Dia. Duct	850	Sec 1 - min	0.000	1	0.000	1	0.000	1	1.061	7	-1.050	1	-1.062	5	-1.063	4	-2.473	1	-0.002	1	0.000	0.064	0.064	0.188	1.062	0.010	0.000
903	M88	8in Dia. Duct	850	Sec 2 - max	0.000	8	-0.003	6	0.003	5	1.057	1	-1.040	7	1.061	4	1.060	6	143.718	8	0.120	8	0.000	0.064	0.064	0.186	1.060	0.010	0.016
904	M99	8in Dia. Duct	850	Sec 2 - min	0.000	8	-0.002	1	-0.202	4	1.049	7	-1.057	1	-1.060	5	-1.051	4	-2.473	1	-0.002	1	0.000	0.064	0.064	0.186	1.060	0.010	0.001
905	M88	8in Dia. Duct	850	Sec 3 - max	0.002	8	-0.006	1	0.306	5	1.053	1	-1.045	7	1.047	4	1.057	5	143.718	8	0.120	8	0.000	0.064	0.064	0.188	1.057	0.010	0.016
906	M88	8in Dia. Duct	850	Sec 3 - min	-0.002	6	-0.006	1	-0.006	4	1.046	7	-1.063	1	-1.067	6	-1.047	4	-2.473	1	-0.002	1	0.000	0.064	0.064	0.186	1.067	0.010	0.001
29	M3	8in Dia. Duct	875	Sec 5 - min	0.050	1	-0.006	1	-0.041	8	-1.167	8	0.500	7	-0.012	1	-0.600	8	-152.000	8	-0.120	8	0.006	0.082	0.060	0.186	1.167	0.012	0.033
1015	M100A	8in Dia. Duct	77	Sec 3 - max	0.054	7	0.006	1	0.102	6	0.381	8	1.040	7	1.406	7	1.243	6	1017.201	8	0.861	8	0.006	0.080	0.086	0.187	1.406	0.014	0.111
907	M88	8in Dia. Duct	850	Sec 4 - max	0.002	8	-0.009	1	0.006	6	1.045	1	-1.038	7	1.041	4	1.051	5	143.718	8	0.120	8	0.000	0.063	0.063	0.187	1.051	0.010	0.019
908	M88	8in Dia. Duct	850	Sec 4 - min	-0.002	8	-0.006	1	-0.004	4	1.036	7	-1.045	1	-1.051	5	-1.041	4	-2.473	1	-0.002	1	0.000	0.063	0.063	0.187	1.051	0.010	0.002
186	M17	8in Dia. Duct	725	Sec 3 - max	0.521	6	0.136	7	0.510	8	0.360	1	-0.161	7	0.801	1	0.746	6	143.718	8	0.120	8	0.074	0.032	0.080	0.186	0.740	0.008	0.080
909	M88	8in Dia. Duct	850	Sec 5 - max	0.003	8	-0.012	1	0.010	5	1.036	1	-1.028	7	1.032	4	1.042	5	143.718	8	0.120	8	0.000	0.062	0.063	0.186	1.042	0.010	0.018
910	M88	8in Dia. Duct	850	Sec 5 - min	-0.003	6	-0.012	1	-0.010	4	1.028	7	-1.036	1	-1.042	6	-1.032	4	-2.473	1	-0.002	1	0.000	0.062	0.063	0.186	1.042	0.010	0.002
549	M92	8in Dia. Duct	200	Sec 5 - max	0.274	4	0.226	5	-0.017	1	0.474	8	1.112	7	0.990	2	0.311	3	942.875	7	0.820	7	0.032	0.070	0.092	0.183	1.112	0.018	0.118
842	M87	8in Dia. Duct	850	Sec 1 - min	0.000	1	-0.013	8	-0.010	4	1.020	7	-1.035	1	-1.042	5	-1.032	4	-2.473	1	-0.002	1	0.000	0.062	0.063	0.185	1.042	0.010	0.002
864	M87	8in Dia. Duct	850	Sec 2 - min	0.000	1	-0.013	6	-0.011	4	1.023	7	-1.030	1	-1.030	6	-1.020	4	-2.473	1	-0.002	1	0.000	0.062	0.062	0.184	1.030	0.010	0.002
283	M28	8in Dia. Duct	425	Sec 2 - max	0.515	8	-0.037	7	0.033	5	0.670	8	-0.562	1	0.467	4	0.461	5	143.718	8	0.120	8	0.074	0.054	0.037	0.184	0.670	0.004	0.023
829	M88	8in Dia. Duct	330	Sec 3 - max	0.577	6	0.143	6	0.000	2	0.810	8	-0.730	1	0.500	4	0.606	6	143.718	8	0.120	8	0.087	0.066	0.036	0.184	0.810	0.006	0.030
793	M95	8in Dia. Duct	200	Sec 2 - max	0.079	8	-0.020	5	0.079	3	-0.084	5	0.305	4	2.090	3	2.150	2	-3.095	1	-0.003	1	0.009	0.019	0.130	0.184	2.150	0.027	0.008
4	M1	8in Dia. Duct	875	Sec 2 - min	0.024	1	-0.261	8	-0.035	8	-1.745	3	0.261	1	-0.010	8	-0.274	8	-4.347	1	-0.005	1	0.003	0.136	0.022	0.183	1.745	0.028	0.037
860	M67	8in Dia. Duct	850	Sec 3 - min	0.000	1	-0.014	6	-0.012	4	1.018	7	-1.025	1	-1.024	5	-1.024	4	-2.473	1	-0.002	1	0.000	0.061	0.062	0.183	1.034	0.010	0.002
445	M38	8in Dia. Duct	300	Sec 3 - max	0.020	8	0.272	7	0.020	3	-0.040	1	2.434	7	0.121	2	0.121	3	-16.143	1	-0.013	1	0.002	0.150	0.008	0.183	2.434	0.034	0.037
32	M4	8in Dia. Duct	875	Sec 1 - min	-0.002	1	-0.710	8	-0.000	1	0.500	7	-1.157	8	-0.760	6	-0.013	5	-279.532	6	-0.234	6	0.011	0.082	0.080	0.183	1.157	0.012	0.132
1019	M100A	8in Dia. Duct	77	Sec 3 - min	-0.019	8	-0.098	8	-0.102	8	-1.040	7	-0.281	8	-1.343	8	-1.498	7	-1212.481	8	-1.015	8	0.002	0.096	0.095	0.183	1.498	0.014	0.120
866	M67	8in Dia. Duct	850	Sec 4 - min	0.000	1	-0.015	8	-0.013	4	1.013	7	-1.020	1	-1.020	5	-1.020	4	-2.473	1	-0.002	1	0.000	0.061	0.062	0.183	1.020	0.010	0.002
667	M74	8in Dia. Duct	425	Sec 4 - max	0.522	8	0.041	7	0.037	4	0.884	8	-0.540	1	0.432	4	0.436	5	143.718	8	0.120	8	0.075	0.053	0.036	0.182	0.884	0.004	0.023
715	M77	8in Dia. Duct	200	Sec 3 - max	0.163	7	0.104	3	0.100	5	0.036	1	1.070	3	1.145	8	0.067	4	6.120	1	0.006	1	0.021	0.060	0.072	0.182	1.145	0.008	0.021
800	M67	8in Dia. Duct	850	Sec 5 - min	0.000	1	-0.016	6	-0.014	4	1.007	7	-1.014	1	-1.025	5	-1.015	4	-2.473	1	-0.002	1	0.000	0.060	0.061	0.182	1.025	0.010	0.000
192	M20	8in Dia. Duct	850	Sec 1 - min	0.000	1	-0.010	1	-0.012	4	1.007	7	-1.014	1	-1.025	5	-1.015	4	-2.473	1	-0.002	1	0.000	0.060	0.061	0.182	1.025	0.010	0.002
448	M50	8in Dia. Duct	200	Sec 3 - min	0.000	1	0.017	1	-0.328	2	-2.424	7	0.046	1	-0.121	3	-0.121	2	-1474.661	8	-1.284	8	0.080	0.133	0.006	0.181	2.424	0.036	0.146
180	M20	8in Dia. Duct	650	Sec 5 - max	0.570	8	-0.050	7	0.056	5	0.466	1	-0.406	7	0.400	4	0.404	6	143.718	8	0.120	8	0.082	0.040	0.030	0.181	0.670	0.003	0.020
201	M21	8in Dia. Duct	650	Sec 1 - max	0.570	8	-0.050	7	0.056	5	0.466	1	-0.405	7	0.400	4	0.404	5	143.718	8	0.120	8	0.082	0.040	0.030	0.181	0.570	0.003	0.023
663	M72	8in Dia. Duct	650	Sec 2 - max	0.401	8	0.034	5	0.050	4	0.660	1	-0.562	7	0.564	4	0.603	6	143.718	8	0.120	6	0.060	0.044	0.046	0.181	0.603	-0.004	0.026
815	M87	8in Dia. Duct	200	Sec 3 - max	0.253	8	0.428	2	0.042	3	0.270	1	1.094	7	0.446	2	0.009	3	83.017	5	0.074	5	0.041	0.099	0.091	0.181	1.094	0.027	0.086
546	M42	8in Dia. Duct	200	Sec 4 - min	0.053	1	0.041	1	-0.706	2	-1.183	7	-0.445	8	-0.079	3	-1.251	2	-1014.802	3	-0.861	3	0.006	0.070	0.070	0.161	1.251	0.019	0.175
736	M79	8in Dia. Duct	725	Sec 3 - min	0.000	1	-0.110	7	-0.040	8	0.207	1	-0.333	7	-1.527	8	-1.080	8	-2.473	1	-0.002	1	0.000	0.036	0.134	0.161	1.080	0.030	0.017
868	M72	8in Dia. Duct	850	Sec 4 - min	0.000	1	0.010	8	-0.017	5	0.866	7	-1.003	1	-1.011	5	-1.001	4	-2.473	1	-0.002	1	0.000	0.060	0.060	0.160	1.011	0.008	0.000
682	M75	8in Dia. Duct	300	Sec 1 - min	0.000	1	-0.002	8	-0.077	5	-1.201	1	1.160	6	-1.213	4	-1.200	5	-2.473	1	-0.002	1	0.000	0.062	0.077	0.156	1.201	0.010	0.008
794	M95	8in Dia. Duct	200	Sec 2 - min	-0.024	8	-0.023	4	-0.009	2	-0.305	4	0.094	5	-2.190	2	-2.098	2	-742.305	2	-0.851	2	0.003	0.019	0.130	0.158	2.190	0.032	0.079
1042	M107	8in Dia. Duct	77	Sec 1 - min	-0.047	8	0.036	1	-0.660	8	-0.417	4	0.607	1	-1.861	8	-1.876	6	-746.458	8	-0.620	6	0.005	0.030	0.125	0.157	1.876	0.023	0.078
890	M75	8in Dia. Duct	300	Sec 4 - min	0.000	1	-0.001	6	-0.006	7	-2.292	8	0.760	1	-0.132	2	-0.161	3	-2.473	1	-0.002	1	0.000	0.146	0.011	0.157	2.300	0.033	0.000
744	M80	8in Dia. Duct	725	Sec 3 - min	0.000	1	-0.130	7	-0.041	8	-0.500	1	0.424	7	-1.340	4	-1.466	8	-2.473	1	-0.002	1	0.000	0.040	0.116	0.156	1.466	0.019	0.010
375	M41	8in Dia. Duct	300	Sec 3 - max	0.024	8	0.177	4	0.041	3	0.558	8	2.103	4	0.304	2	0.304	3	-4.067	1	-0.004	1	0.003	0.133	0.010	0.156	2.103	0.036	0.030
1091	M108	8in Dia. Duct	77	Sec 1 - max	0.025	8	0.097	4	0.063	8	-0.012	1	0.287	8	2.102	8	1.946	8	471.315	3	0.395	3	0.004	0.018	0.133	0.155	2.102	0.028	0.094
1092	M108	8in Dia. Duct	77	Sec 1 - min	-0.036	8	0.036	1	-0.067	8	-0.287	8	0.612	1	-1.886	6	-2.102	6	-476.111	3	-0.400	3	0.004	0.018	0.133	0.155	2.102	0.036	0.084
1081	M107	8in Dia. Duct	77	Sec 1 - max	0.023	8	0.110	4	0.004	8	-0.007	1	0.417	4	1.876	8	1.881	8	716.071	8	0.500	8	0.003	0.030	0.125	0.154	1.876	0.023	0.078
817	M88	8in Dia. Duct	200	Sec 4 - max	0.120	8	-0.022	4	0.115	2	1.303	4	-0.280	5	1.000	3	0.577	2	-3.066	1	-0.003	1	0.014	0.076	0.064	0.154	1.303	0.008	0.013
530	M50	8in Dia. Duct	200	Sec 5 - max	0.000	8	-0.015	5	0.000	3	-0.067	5	0.256	4	1.072	3	2.037	2	-3.066	1	-0.003	1	0.006	0.016	0.120	0.152	2.037	0.024	0.000
781	M95	8in Dia. Duct	200	Sec 1 - max	0.090	8	-0.015	5	0.000	3	-0.057	5	0.256	4	1.072	3	2.037	2	-3.095	1	-0.003	1	0.006	0.019	0.120	0.152	2.037	0.024	0.000
378	M41	8in Dia. Duct	200	Sec 3 - min	0.000	1	-0.023	5	-0.041	2	-2.103	4	-0.316	5	-0.304	3	-0.304	2	-1003.564	8	-0.860	8	0.000	0.133	0.010	0.152	2.103	0.036	0.110
1086	M107	8in Dia. Duct	77	Sec 2 - min	-0.047	8	0.037	1	-0.000	6	-0.375	4	0.063	1	-1.429	8	-1.843	6	-740.400	8	-0.620	6	0.005	0.024	0.123	0.152	1.843	0.022	0.078
194	M20	8in Dia. Duct	850	Sec 3 - min	0.000	1	-0.021	1	-0.023	4	0.847	7	-0.054	1	-0.046	5	-0.040	4	-2.473	1	-0.002	1	0.000	0.076	0.076	0.152	0.866	0.008	0.000
823	M90	8in Dia. Duct	360	Sec 2 - max	0.300	8	0.177	8	0.031	4	0.030	1	0.816	8	0.425	4	0.304	6	143.718	8	0.120	8	0.040	0.060	0.027	0.151	0.816	0.006	0.003
2	M1	8in Dia. Duct	875	Sec 3 - min	0.024	1	-0.200	8	-0.034	8	-1.619	8	0.248	1	-0.042	9	-0.231	8	-4.347	1	-0.005	1	0.003	0.120	0.019	0.151	1.620	0.024	0.037
257	M26	8in Dia. Duct	425	Sec 4 - max	0.327	6	-0.000	4	0.076	5	-0.346	6	0.472	1	0.484	5	0.480	4	143.718	6	0.126	8	0.075	0.037	0.037	0.150	0.527	0.003	0.028
685	M74	8in Dia. Duct	425	Sec 3 - max	0.534	8	0.046	7	0.042	4	0.361	8	-0.457	1	0.266	4	0.360	5	143.718	8	0.120	8	0.075	0.046	0.020	0.150	0.561	0.005	0.024
1083	M107	8in Dia. Duct	77	Sec 2 - max	0.023	6	0.100	4	0.004	8	-0.063	1	0.375	4	1.043	8	1.839	8	716.071	8	0.500	8	0.003	0.024	0.123	0.150	1.843	0.022	0.078
810	M88	8in Dia. Duct	300	Sec 4 - min	-0.074	6	-0.040	5	-0.105	3	0.300	5	-1.203	4	-0.577	2	-1.000	3	-742.305	2	-0.861	2	0.008	0.076	0.064	0.148	1.303	0.014	0.082
519	M54	8in Dia. Duct	875	Sec 5 - min	-0.201	7	-0.212	8	-0.041	8	0.195	1	-1.090	7	-0.754	4	-0.092	1	-1.994	1	-0.001	1	0.041	0.067	0.020	0.148	1.090	0.011	0.043
540	M50	8in Dia. Duct	300	Sec 5 - min	-0.023	8	-0.028	4	-0.672	2	-0.256	4	0.057	5	-2.037	2	-1.872	3	-742.305	2	-0.861	2	0.003	0.016	0.120	0.148	2.037	0.030	0.080
762	M86	8in Dia. Duct	200	Sec 1 - min	-0.023	6	-0.030	4	-0.073	2	-0.256	4	0.067	5	-2.037	2	-1.872	3	-742.305	2	-0.861	2	0.003	0.016	0.120	0.148	2.037	0.030	0.080
728	M79	8in Dia. Duct	725	Sec 4 - min	0.000	1	-0.121	7	-0.040	8	0.100	1	-0.310	7	-1.400	8	-1.043	8	-2.473	1	-0.002	1	0.000	0.017	0.130	0.146	1.043	0.024	0.017
1072	M106	8in Dia. Duct	77	Sec 1 - min	-0.006	8	0.010	8	-0.000	8	-0.600	8	0.111	1	-1.550	7	-1.636	7	-1231.330	8	-1.001	8	0.007	0.030	0.103	0.148	1.636	0.017	0.123
828	M88	8in Dia. Duct	875	Sec 3 - min	0.011	1	0.092	1	-0.099	8	0.230	1	-1.340	8	-0.875	7	-0.490	8	-4.224	1	-0.005	1	0.001	0.107	0.030	0.147	1.349	0.017	0.006
1088	M107	8in Dia. Duct	77	Sec 3 - min	-0.346	8	0.037	1	-0.347	8	-0.330	8	0.030	1	-1.796	9	-1.810	6	-740.456	8	-0.620	6	0.005	0.021	0.121	0.147	1.810	0.022	0.078
716	M77	8in Dia. Duct	300	Sec 3 - min	0.067	1	-0.002	1	0.006	1	-1.070	3	-0.030	1	-0.057	4	-1.146	5	-816.146	4	-0.715	4	0.007	0.066	0.072	0.147	1.146	0.014	0.078
1085	M107	8in Dia. Duct	77	Sec 3 - max	0.022	8	0.100	4	0.063	8	-0.030	1	0.330	8	1.810	8	1.790	8	716.071	8	0.500	8	0.002	0.021	0.121	0.145	1.810	0.022	0.078
1074	M108	8in Dia. Duct	77	Sec 2 - min	-0.060	8	0.010	8	-0.040	8	-0.550	8	0.090	1	-1.536	7	-1.816	6	-1231.380	8	-1.031	8	0.007	0.036	0.102	0.144	1.816	0.018	0.123
1090	M107	8in Dia. Duct	77	Sec 4 - min	-0.049	8	0.030	1	-0.007	8	-0.313	8	0.025	1	-1.760	9	-1.877	8	-740.490	8	-0.620	8	0.005	0.020	0.118	0.144	1.877	0.021	0.078
283	M28	8in Dia. Duct	500	Sec 2 - max	0.333	8	0.065	3	0.078	4	-0.279	8	0.403	1	0.430	5	0.434	4	143.718	8	0.126	8	0.070	0.032	0.034	0.143	0.533	0.003	0.078
1064	M106	8in Dia. Duct	77	Sec 2 - min	-0.035	8	0.034	1	-0.065	8	-0.107	8	-0.020	1	-1.063	8	-2.006	6	-476.115	2	-0.400	2	0.004	0.012	0.127	0.143	2.006	0.034	0.063
1063	M106	8in Dia. Duct	77	Sec 2 - max	0.036	8	0.000	4	0.001	8	0.020	1	0.107	8	2.006	8	1.883	8	471.316	3	0.306	3	0.004	0.012	0.127	0.143	2.006	0.034	0.063
622	M88	8in Dia. Duct	875	Sec 1 - min	0.011	1	0.101	1	-0.036	8	-1.020	6	0.246	1	-0.120	8	-0.145	6	-4.224	1	-0.006	1	0.001	0.120	0.012	0.142	1.026	0.024	0.016
929	M88	8in Dia. Duct	875	Sec 5 - max	0.025	7	0.021	8	0.004	4	0.379	1	1.301	8	0.273	8	0.356	7	315.320	8	0.264	8	0.003	0.110	0.020	0.142	1.301	0.018	0.040
941	M83A	8in Dia. Duct	875	Sec 1 - max	0.025	7	0.021	8	0.074	4	0.376	1	1.301	8	0.273	8	0.356	7	315.326	8	0.264	8	0.003	0.110	0.020	0.142	1.301	0.018	0.040
1071	M106	8in Dia. Duct	77	Sec 1 - max	-0.000	8	0.122	6	0.000	8	-0.111	1	0.566	8	1.636	8	1.550	7	1175.817	8	0.864	8	0.001	0.036	0.103	0.142	1.636	0.017	0.122
1087	M107	8in Dia. Duct	77	Sec 4 - max	0.022	8	0.106	4	0.013	8	-0.025	1	0.313	8	1.677	8	1.766	8	715.071	8	0.500	8	0.002	0.020	0.110	0.141	1.677	0.021	0.078
943	M83A	8in Dia. Duct	875	Sec 2 - max	0.034	7	0.010	8	0.003	4	0.381	1	1.373	8	0.275	8	0.340	7	315.330	8	0.364	8	0.003	0.100	0.020	0.141	1.373	0.017	0.030

	Member	Duct Size	Temperature (°F)		Axial (kip)	Load Case	y Shear (kip)	Load Case	z Shear (kip)	Load Case	y top Bending (ksi)	Load Case	y bot Bending (ksi)	Load Case	z top Bending (ksi)	Load Case	z bot Bending (ksi)	Load Case	Torque (in-lb)	Load Case	Torsional Shear (ksi)	Load Case	D-3210 f_a/F_a	f_b/F_b	f_c/F_c	D-3200 Equation 11 $f_a/F_a + f_b/F_b + f_c/F_c \le 1.0$	f (ksi)	D-3210 Equation 13 $(f_t/F_t)^2 + (f_v/F_v)^2 \le 1$	D-3210 Equation 14 f_v/F_v
212	M22	8in Dia Duct	650	Sec 2 - max	0.381	6	0.004	1	0.000	4	-0.387	7	0.344	1	0.372	6	0.372	4	143.718	9	0.128	9	0.090	0.031	0.030	0.181	0.381	0.000	0.039
1017	M100A	8in Dia Duct	77	Sec 4 - max	0.049	7	-0.015	1	0.152	6	0.224	1	1.679	7	0.450	6	1.320	9	1017.201	8	0.641	8	0.003	0.108	0.029	0.140	1.679	0.017	0.130
1068	M107	8in Dia Duct	77	Sec 5 - min	-0.040	8	0.035	1	-0.007	6	-0.287	8	0.012	1	-1.736	8	-1.644	8	-746.488	8	-0.620	8	0.000	0.018	0.117	0.140	1.644	0.020	0.078
1070	M108	8in Dia Duct	77	Sec 3 - min	-0.060	8	0.015	8	-0.000	6	-0.506	4	0.000	1	-1.921	7	-1.803	8	-1231.380	8	-1.031	8	0.000	0.032	0.101	0.140	1.803	0.016	0.123
946	M93A	8in Dia Duct	875	Sec 3 - max	0.024	7	0.017	6	0.002	4	0.304	1	1.350	8	0.277	8	0.301	7	316.320	8	0.304	8	0.003	0.100	0.020	0.140	1.350	0.017	0.030
170	M82	8in Dia Duct	200	Sec 5 - min	0.037	1	0.041	1	-0.705	2	-1.112	7	-0.474	5	-0.311	3	-0.090	2	-2014.902	3	-0.991	3	0.009	0.070	0.063	0.138	1.112	0.017	0.175
830	M88	8in Dia Duct	875	Sec 5 - min	0.000	1	0.000	1	-0.303	5	-1.301	8	-0.378	1	-0.358	7	-0.273	6	-4.112	1	-0.305	1	0.000	0.110	0.026	0.138	1.301	0.016	0.002
942	M93A	8in Dia Duct	875	Sec 1 - min	0.000	1	0.000	1	-0.003	5	-1.301	8	-0.378	1	-0.358	7	-0.273	8	-4.112	1	-0.006	1	0.000	0.110	0.026	0.138	1.301	0.016	0.002
947	M93A	8in Dia Duct	875	Sec 4 - max	0.023	7	0.016	8	0.000	4	0.360	1	1.344	8	0.277	8	0.300	7	315.320	8	0.304	8	0.003	0.107	0.020	0.138	1.344	0.016	0.030
1073	M108	8in Dia Duct	77	Sec 3 - max	-0.038	8	0.121	8	0.000	8	-0.080	1	0.550	8	1.818	6	1.520	7	1175.617	8	0.984	8	0.001	0.036	0.102	0.138	1.818	0.016	0.121
207	M21	8in Dia Duct	950	Sec 4 - max	0.160	8	-0.080	7	0.387	5	-0.387	6	0.300	1	0.343	6	0.343	4	143.718	9	0.128	9	0.061	0.029	0.027	0.138	0.960	0.003	0.039
944	M93A	8in Dia Duct	875	Sec 2 - min	0.000	1	0.005	1	-0.303	5	-1.372	8	-0.381	1	-0.380	7	-0.275	6	-4.112	1	-0.305	1	0.000	0.100	0.028	0.138	1.373	0.017	0.001
948	M93A	8in Dia Duct	875	Sec 5 - max	0.013	8	0.013	6	0.000	7	0.300	1	1.331	8	0.277	8	0.300	7	316.320	8	0.304	8	0.003	0.100	0.020	0.137	1.331	0.016	0.030
1069	M107	8in Dia Duct	77	Sec 5 - max	0.022	6	0.107	4	0.063	8	-0.012	1	0.307	8	1.644	6	1.736	8	715.671	8	0.500	8	0.002	0.018	0.117	0.137	1.644	0.020	0.078
277	M28	8in Dia Duct	500	Sec 4 - max	0.630	6	-0.062	6	0.063	5	-0.380	6	0.303	1	0.303	5	0.306	4	143.718	8	0.128	8	0.077	0.020	0.031	0.138	0.630	0.003	0.026
949	M93A	8in Dia Duct	875	Sec 2 - min	0.008	1	0.003	1	-0.001	5	-1.354	6	-0.364	1	-0.301	7	-0.277	6	-4.112	1	-0.006	1	0.000	0.100	0.028	0.138	1.368	0.017	0.001
1018	M100A	8in Dia Duct	77	Sec 4 - min	-0.014	8	-0.107	6	-0.152	6	-1.078	7	-0.224	1	-0.308	6	-0.450	6	-1212.461	6	-1.015	6	0.002	0.108	0.029	0.138	1.070	0.017	0.138
1076	M108	8in Dia Duct	77	Sec 4 - min	-0.060	8	0.018	8	-0.000	6	-0.401	4	0.078	1	-1.507	7	-1.507	8	-1231.380	8	-1.031	8	0.000	0.020	0.108	0.138	1.507	0.010	0.123
184	M17	8in Dia Duct	725	Sec 2 - min	0.000	1	0.051	1	-0.218	8	-0.101	7	-0.300	1	-1.411	5	-0.001	1	-2.473	1	-0.002	1	0.000	0.034	0.112	0.138	1.411	0.010	0.031
871	M83	8in Dia Duct	200	Sec 1 - max	0.276	3	0.705	8	0.000	5	0.010	1	0.527	2	0.474	6	1.112	7	1057.760	2	0.620	2	0.032	0.033	0.070	0.138	1.112	0.018	0.179
863	M74	8in Dia Duct	425	Sec 2 - max	0.525	8	0.052	7	0.040	4	0.407	6	-0.264	1	0.279	4	0.274	8	143.718	9	0.128	9	0.075	0.029	0.027	0.138	0.525	0.003	0.001
940	M93A	8in Dia Duct	875	Sec 4 - min	0.000	1	0.000	1	0.000	5	-1.344	8	-0.360	1	-0.380	7	-0.277	6	-4.112	1	-0.005	1	0.000	0.107	0.028	0.138	1.344	0.016	0.001
740	M79	8in Dia Duct	725	Sec 5 - min	0.000	1	-0.134	7	-0.047	8	-0.000	1	-0.102	7	-1.464	6	-1.500	8	-2.473	1	-0.002	1	0.000	0.000	0.127	0.138	1.500	0.023	0.010
742	M80	8in Dia Duct	725	Sec 1 - min	0.000	1	-0.134	7	-0.047	8	-0.000	1	-0.102	7	-1.464	8	-1.500	8	-2.473	1	-0.002	1	0.000	0.000	0.127	0.138	1.500	0.023	0.010
809	M87	8in Dia Duct	875	Sec 5 - max	0.001	6	-0.008	1	0.004	5	0.377	1	1.340	8	0.272	6	0.364	7	315.320	8	0.304	8	0.000	0.100	0.028	0.138	1.340	0.014	0.037
810	M87	8in Dia Duct	875	Sec 5 - min	-0.001	8	-0.005	1	-0.006	4	-1.348	8	-0.377	1	-0.295	7	-0.273	6	-4.112	1	-0.006	1	0.000	0.108	0.028	0.138	1.348	0.016	0.001
666	M72	8in Dia Duct	660	Sec 3 - min	0.000	1	0.036	6	-0.013	5	0.620	7	-0.837	1	-0.856	6	-0.846	4	-2.473	1	-0.002	1	0.000	0.000	0.066	0.136	0.856	0.007	0.006
807	M87	8in Dia Duct	875	Sec 4 - max	0.000	8	-0.004	1	0.003	5	0.301	1	1.330	8	0.274	6	0.367	7	315.320	8	0.304	8	0.000	0.100	0.028	0.134	1.330	0.016	0.037
808	M87	8in Dia Duct	875	Sec 4 - min	0.000	6	-0.004	1	-0.003	4	-1.330	8	-0.361	1	-0.357	7	-0.274	8	-4.112	1	-0.006	1	0.000	0.100	0.028	0.134	1.330	0.016	0.001
1075	M108	8in Dia Duct	77	Sec 3 - max	-0.008	6	0.120	8	0.006	8	-0.066	1	0.506	4	1.803	8	1.521	7	1175.617	8	0.984	8	0.001	0.032	0.101	0.134	1.803	0.016	0.121
803	M87	8in Dia Duct	875	Sec 2 - max	0.000	8	-0.001	1	0.000	5	0.305	1	1.332	8	0.279	8	0.359	7	315.320	9	0.304	9	0.000	0.108	0.028	0.134	1.332	0.016	0.037
801	M87	8in Dia Duct	875	Sec 1 - max	0.000	1	0.000	1	0.000	1	0.344	1	1.331	8	0.277	8	0.360	7	315.320	8	0.304	1	0.000	0.108	0.029	0.134	1.331	0.016	0.037
804	M87	8in Dia Duct	875	Sec 2 - min	0.000	8	-0.001	1	0.000	4	-1.332	8	-0.360	1	-0.360	7	-0.278	8	-4.112	1	-0.006	1	0.000	0.108	0.028	0.134	1.332	0.016	0.001
950	M93A	8in Dia Duct	875	Sec 5 - min	0.000	1	-0.001	1	0.000	8	-1.331	8	-0.364	1	-0.360	7	-0.277	8	-4.112	1	-0.006	1	0.000	0.108	0.028	0.134	1.334	0.016	0.001
802	M87	8in Dia Duct	875	Sec 1 - min	0.000	1	0.000	1	0.000	1	-1.331	8	-0.360	1	-0.360	7	-0.277	6	-4.112	1	-0.006	1	0.000	0.108	0.028	0.134	1.331	0.016	0.001
805	M87	8in Dia Duct	875	Sec 3 - max	0.000	8	-0.002	1	0.002	4	0.303	1	1.332	8	0.279	8	0.359	7	315.320	9	0.304	9	0.000	0.108	0.028	0.134	1.333	0.016	0.037
806	M87	8in Dia Duct	875	Sec 3 - min	0.000	8	-0.002	1	-0.002	4	-1.333	8	-0.363	1	-0.358	7	-0.278	8	-4.112	1	-0.005	1	0.000	0.108	0.028	0.134	1.333	0.016	0.001
196	M20	8in Dia Duct	650	Sec 3 - min	0.000	1	-0.033	1	-0.033	4	0.842	7	-0.847	1	-0.843	8	-0.836	4	-2.473	1	-0.002	1	0.000	0.067	0.067	0.134	0.847	0.007	0.006
188	M17	8in Dia Duct	725	Sec 4 - min	0.000	1	0.030	1	-0.226	6	0.451	7	-0.404	1	-1.206	6	-0.796	8	-2.473	1	-0.002	1	0.000	0.036	0.096	0.134	1.206	0.019	0.031
1080	M108	8in Dia Duct	77	Sec 5 - min	-0.050	8	0.016	8	-0.000	6	-0.417	4	0.067	1	-1.482	7	-1.571	8	-1231.380	8	-1.031	8	0.000	0.026	0.100	0.132	1.571	0.016	0.123
1077	M108	8in Dia Duct	77	Sec 4 - max	-0.006	8	0.119	8	0.005	8	-0.078	1	0.461	4	1.567	8	1.907	7	1175.617	8	0.984	8	0.003	0.029	0.108	0.132	1.907	0.016	0.121
811	M90	8in Dia Duct	425	Sec 1 - max	0.000	1	0.000	1	0.000	1	0.845	8	-0.822	1	0.601	4	0.595	8	143.718	8	0.128	8	0.000	0.075	0.055	0.130	0.845	0.008	0.018
300	M30	8in Dia Duct	425	Sec 5 - min	0.000	1	0.000	1	0.000	1	0.822	1	-0.846	8	-0.005	5	-0.001	4	-2.473	1	-0.002	1	0.000	0.075	0.066	0.130	0.846	0.008	0.000
812	M90	8in Dia Duct	425	Sec 1 - min	0.000	1	0.000	1	0.000	1	0.822	1	-0.846	8	-0.006	5	-0.001	4	-2.473	1	-0.002	1	0.000	0.075	0.056	0.130	0.846	0.008	0.000
1088	M108	8in Dia Duct	77	Sec 5 - min	-0.034	8	0.031	1	-0.004	8	-0.080	8	-0.065	1	-1.002	8	-1.900	8	-478.111	2	-0.400	2	0.004	0.006	0.121	0.130	1.900	0.021	0.063
1089	M108	8in Dia Duct	77	Sec 2 - max	0.024	4	0.080	4	0.009	8	0.065	1	0.000	5	1.900	8	1.907	9	471.318	3	0.292	3	0.004	0.009	0.121	0.130	1.909	0.021	0.063
813	M90	8in Dia Duct	425	Sec 2 - max	0.000	8	-0.003	1	0.003	5	0.844	8	-0.820	1	0.600	4	0.593	8	143.718	8	0.128	8	0.000	0.075	0.056	0.130	0.844	0.008	0.018
814	M90	8in Dia Duct	425	Sec 3 - min	0.000	8	-0.003	1	-0.003	4	0.820	1	-0.844	8	-0.003	5	-0.000	4	-2.473	1	-0.002	1	0.000	0.075	0.046	0.130	0.844	0.008	0.001
537	M58	8in Dia Duct	200	Sec 4 - min	0.000	8	-0.004	6	0.000	3	-0.020	1	0.177	4	1.063	3	1.754	2	-3.088	1	-0.003	1	0.008	0.011	0.111	0.130	1.754	0.018	0.010
815	M90	8in Dia Duct	425	Sec 3 - max	0.002	8	-0.008	1	0.006	8	0.830	8	-0.810	1	0.000	4	0.000	5	143.718	8	0.128	8	0.000	0.075	0.066	0.130	0.830	0.008	0.018
816	M90	8in Dia Duct	425	Sec 3 - min	-0.002	8	-0.008	1	-0.005	4	0.819	1	-0.830	8	-0.090	5	-0.090	4	-2.473	1	-0.002	1	0.000	0.075	0.092	0.130	0.830	0.008	0.001
817	M90	8in Dia Duct	425	Sec 4 - max	0.002	8	-0.008	1	0.006	8	0.832	8	-0.808	1	0.680	4	0.664	5	143.718	8	0.128	8	0.000	0.074	0.054	0.129	0.832	0.008	0.018
818	M90	8in Dia Duct	425	Sec 4 - min	-0.002	8	-0.008	1	-0.006	4	0.808	1	-0.832	8	-0.684	5	-0.660	4	-2.473	1	-0.002	1	0.000	0.074	0.064	0.129	0.832	0.008	0.002
298	M30	8in Dia Duct	425	Sec 4 - min	0.000	1	0.000	1	-0.000	5	0.800	1	-0.832	8	-0.683	5	-0.670	4	-2.473	1	-0.002	1	0.000	0.074	0.064	0.128	0.832	0.008	0.002
819	M90	8in Dia Duct	425	Sec 5 - max	0.003	8	-0.012	1	0.010	5	0.822	8	-0.798	1	0.671	4	0.676	5	143.718	8	0.128	8	0.000	0.073	0.064	0.127	0.822	0.008	0.018
820	M90	8in Dia Duct	425	Sec 5 - min	-0.003	8	-0.012	1	-0.010	4	0.798	1	-0.822	8	-0.671	5	-0.671	4	-2.473	1	-0.002	1	0.000	0.072	0.064	0.127	0.822	0.008	0.002
452	M51	8in Dia Duct	425	Sec 1 - min	0.000	1	-0.012	5	-0.010	4	0.798	1	-0.822	8	-0.671	5	-0.671	4	-2.473	1	-0.002	1	0.000	0.073	0.064	0.127	0.822	0.008	0.002
630	M57	8in Dia Duct	875	Sec 5 - min	-0.180	7	0.022	1	-0.041	8	0.156	5	-1.006	7	-0.001	6	-0.184	6	-3.100	1	-0.002	1	0.025	0.087	0.018	0.127	1.006	0.011	0.006
1079	M108	8in Dia Duct	77	Sec 5 - max	-0.006	8	0.118	8	0.004	8	-0.067	1	0.617	4	1.571	8	1.602	7	1175.617	8	0.984	8	0.001	0.030	0.100	0.127	1.571	0.018	0.121
454	M51	8in Dia Duct	425	Sec 2 - min	0.000	1	-0.013	5	-0.011	4	0.794	1	-0.817	8	-0.671	5	-0.667	4	-2.473	1	-0.002	1	0.000	0.075	0.063	0.130	0.817	0.008	0.002
221	M23	8in Dia Duct	575	Sec 1 - max	0.545	8	0.000	1	0.000	4	0.318	7	-0.318	8	0.298	4	0.298	8	143.718	9	0.128	9	0.075	0.025	0.023	0.128	0.545	0.003	0.018
679	M73	8in Dia Duct	575	Sec 1 - min	0.545	8	0.000	1	0.000	8	0.318	7	-0.318	8	0.280	4	0.284	5	143.718	8	0.128	8	0.076	0.025	0.023	0.128	0.545	0.003	0.018
516	M57	8in Dia Duct	875	Sec 5 - min	-0.165	7	0.020	1	-0.044	8	-0.838	8	-0.004	1	-0.003	1	-0.330	8	-3.100	1	-0.002	1	0.025	0.074	0.026	0.123	0.830	0.008	0.006
186	M18	8in Dia Duct	725	Sec 3 - min	0.000	1	0.100	4	-0.000	5	-0.040	7	0.001	1	-0.711	4	-0.701	6	-2.473	1	-0.002	1	0.000	0.040	0.066	0.123	0.880	0.007	0.016
450	M51	8in Dia Duct	425	Sec 3 - min	0.000	1	-0.014	5	-0.012	4	0.788	1	-0.812	8	-0.667	5	-0.663	4	-2.473	1	-0.002	1	0.000	0.072	0.063	0.123	0.812	0.008	0.002
677	M73	8in Dia Duct	575	Sec 4 - max	0.540	8	0.005	1	0.005	4	0.314	7	-0.312	1	0.292	4	0.281	5	143.718	8	0.128	8	0.075	0.025	0.022	0.123	0.540	0.003	0.018
1098	M108	8in Dia Duct	77	Sec 4 - min	-0.034	8	0.020	1	-0.063	8	0.308	5	-0.099	1	-1.712	8	-1.814	8	-478.111	2	-0.400	2	0.004	0.008	0.118	0.125	1.814	0.018	0.063
1097	M108	8in Dia Duct	77	Sec 4 - max	0.034	4	0.065	4	0.078	8	0.000	1	-0.006	8	1.814	8	1.712	8	471.318	3	0.298	3	0.004	0.008	0.118	0.125	1.814	0.018	0.053
460	M51	8in Dia Duct	425	Sec 4 - min	0.000	1	-0.015	5	-0.013	4	0.763	1	-0.807	8	-0.662	5	-0.658	4	-2.473	1	-0.002	1	0.000	0.072	0.063	0.125	0.807	0.007	0.002
538	M58	8in Dia Duct	200	Sec 4 - min	-0.028	8	-0.010	4	-0.063	2	-0.172	6	0.020	1	-1.754	2	-1.003	3	-742.308	2	-0.061	2	0.002	0.011	0.111	0.124	1.754	0.023	0.061
821	M100	8in Dia Duct	425	Sec 1 - max	0.000	1	0.000	1	0.000	1	0.804	8	-0.781	1	0.658	4	0.660	5	143.718	8	0.128	8	0.000	0.072	0.052	0.124	0.804	0.008	0.018
308	M31	8in Dia Duct	425	Sec 4 - min	0.000	1	0.001	2	0.000	8	0.780	1	-0.804	8	-0.660	5	-0.658	4	-2.473	1	-0.002	1	0.000	0.072	0.052	0.124	0.804	0.007	0.000
310	M31	8in Dia Duct	425	Sec 5 - min	0.000	1	0.000	1	0.000	1	0.781	5	-0.804	8	-0.660	5	-0.658	4	-2.473	1	-0.002	1	0.000	0.072	0.052	0.124	0.804	0.007	0.000
822	M100	8in Dia Duct	425	Sec 1 - min	0.000	1	0.000	1	0.000	1	0.781	1	-0.804	8	-0.660	5	-0.658	4	-2.473	1	-0.002	1	0.000	0.072	0.052	0.124	0.804	0.007	0.000
306	M31	8in Dia Duct	425	Sec 3 - min	0.000	1	0.003	2	-0.003	5	0.780	1	-0.803	8	-0.660	6	-0.658	4	-2.473	1	-0.002	1	0.000	0.072	0.052	0.124	0.803	0.007	0.001
823	M100	8in Dia Duct	425	Sec 2 - max	0.000	8	-0.002	1	0.002	4	0.802	8	-0.779	1	0.659	4	0.659	5	143.718	8	0.128	8	0.000	0.072	0.052	0.124	0.802	0.008	0.018
824	M100	8in Dia Duct	425	Sec 2 - min	0.000	8	-0.003	1	-0.003	4	0.779	1	-0.803	8	-0.658	5	-0.655	4	-2.473	1	-0.002	1	0.000	0.072	0.052	0.124	0.803	0.007	0.001
304	M31	8in Dia Duct	425	Sec 2 - min	0.000	1	0.003	2	-0.003	5	0.779	1	-0.802	8	-0.658	5	-0.656	4	-2.473	1	-0.002	1	0.000	0.072	0.052	0.124	0.802	0.007	0.001
462	M51	8in Dia Duct	425	Sec 5 - min	0.000	1	-0.016	5	-0.014	4	0.778	1	-0.801	8	-0.658	5	-0.653	4	-2.473	1	-0.002	1	0.000	0.072	0.052	0.124	0.801	0.007	0.002
302	M31	8in Dia Duct	425	Sec 1 - min	0.000	1	0.004	2	-0.004	8	0.778	1	-0.801	8	-0.658	6	-0.653	4	-2.473	1	-0.002	1	0.000	0.072	0.048	0.124	0.801	0.007	0.001
825	M100	8in Dia Duct	425	Sec 2 - max	0.002	8	-0.008	1	0.005	5	0.800	8	-0.775	1	0.651	4	0.650	5	143.718	8	0.128	8	0.000	0.071	0.052	0.124	0.800	0.008	0.018
826	M100	8in Dia Duct	425	Sec 3 - min	-0.002	4	-0.006	1	-0.005	4	0.775	1	-0.800	8	-0.653	5	-0.651	4	-2.473	1	-0.002	1	0.000	0.071	0.052	0.124	0.800	0.007	0.001
678	M73	8in Dia Duct	575	Sec 3 - max	0.547	8	0.010	1	0.010	4	0.301	7	-0.300	1	0.300	4	0.300	5	143.718	8	0.128	8	0.076	0.024	0.021	0.123	0.547	0.003	0.018
698	M75	8in Dia Duct	350	Sec 3 - min	0.000	1	-0.038	8	-0.020	8	-1.642	8	0.707	1	-0.220	4	-0.250	5	-2.473	1	-0.002	1	0.000	0.100	0.016	0.123	1.642	0.016	0.008
827	M100	8in Dia Duct	425	Sec 4 - max	0.002	8	-0.008	1	0.006	5	0.801	8	-0.767	1	0.645	4	0.648	8	143.718	8	0.128	8	0.000	0.071	0.052	0.123	0.801	0.007	0.018
828	M100	8in Dia Duct	425	Sec 4 - min	-0.002	8	-0.009	1	-0.006	4	0.767	1	-0.801	8	-0.649	4	-0.648	4	-2.473	1	-0.002	1	0.000	0.071	0.052	0.123	0.801	0.007	0.002
203	M21	8in Dia Duct	650	Sec 2 - max	0.373	8	-0.067	7	0.066	5	0.254	1	-0.133	[illegible]	0.254	4	0.257	5	143.718	8	0.128	8	0.063	0.020	0.020	0.122	0.373	0.003	0.027
694	M75	8in Dia Duct	350	Sec 3 - min	0.000	1	-0.028	8	-0.063	5	-1.207	8	0.162	1	-0.611	4	-0.625	5	-2.473	1	-0.002	1	0.000	0.083	0.040	0.122	1.207	0.010	0.008
296	M30	8in Dia Duct	425	Sec 3 - min	0.000	1	0.010	1	-0.010	5	0.780	1	-0.803	6	-0.047	5	-0.043	4	-3.473	1	-0.002	1	0.000	0.071	0.051	0.122	0.803	0.007	0.003
123	M13	8in Dia Duct	725	Sec 2 - max	0.343	8	0.002	1	0.208	8	0.216	8	1.015	1	0.841	8	0.863	8	473.263	7	0.416	7	0.036	0.017	0.070	0.122	0.863	0.010	0.113
125	M13	8in Dia Duct	775	Sec 3 - max	0.240	8	-0.019	1	0.412	8	0.170	8	0.031	1	0.959	2	0.272	7	473.063	7	0.419	7	0.035	0.019	0.079	0.121	0.959	0.011	0.113
840	M95	8in Dia Duct	875	Sec 3 - min	-0.113	8	0.022	1	-0.025	8	0.366	1	[illegible]	[illegible]	-0.547	8	-0.313	7	-3.100	1	-0.003	1	0.015	0.081	0.025	0.121	1.023	0.008	0.033
829	M100	8in Dia Duct	425	Sec 5 - max	0.003	8	-0.012	1	0.010	5	0.801	8	-0.757	[illegible]	0.637	4	0.641	5	143.718	8	0.128	8	0.000	0.070	0.061	0.121	0.801	0.002	0.018
830	M100	8in Dia Duct	425	Sec 5 - min	-0.003	8	-0.012	1	-0.010	4	0.757	1	-0.801	[illegible]	-0.641	5	-0.647	4	-2.473	1	-0.002	1	0.000	0.070	0.061	0.121	0.801	0.007	0.002
818	M87	8in Dia Duct	200	Sec 3 - min	0.000	1	-0.660	1	-0.157	2	-1.064	8	[illegible]	[illegible]	-0.450	3	-0.448	2	-279.000	4	-0.340	4	0.001	0.000	0.061	0.121	1.064	0.008	0.033

	Member	Duct Size	Temperature (°F)		Axial (ksi)	Load Case	y Shear (ksi)	Load Case	z Shear (ksi)	Load Case	y top Bending (ksi)	Load Case	y bot Bending (ksi)	Load Case	z top Bending (ksi)	Load Case	z bot Bending (ksi)	Load Case	Torque (in-lb)	Load Case	Torsional Shear (ksi)	Load Case	D-2250 f_a/F_a	f_b/F_b	f_v/F_v	D-2300 Equation 11	f_b (ksi)	D-2300 Equation 12	D-2310 Equation 14
252	M28	8in Dia. Duct	425	Sec 1-min	0.000	1	-0.012	1	-0.018	4	0.757	1	-0.881	6	-0.841	5	-0.837	4	-2.473	1	-0.002	1	0.000	0.070	0.051	0.121	0.881	0.207	0.002
673	M73	8in Dia. Duct	575	Sec 2-max	0.540	6	0.015	1	0.014	4	0.270	7	-0.270	1	0.248	4	0.243	5	143.718	8	0.128	8	0.078	0.022	0.020	0.120	0.540	0.003	0.020
288	M28	8in Dia. Duct	500	Sec 5-max	0.528	6	0.087	3	0.063	4	0.383	6	-0.250	1	0.174	4	0.170	6	143.718	8	0.128	8	0.075	0.030	0.014	0.120	0.528	0.003	0.025
681	M74	8in Dia. Duct	425	Sec 1-max	0.528	6	0.087	7	0.053	4	0.383	6	-0.250	1	0.174	4	0.170	5	143.718	8	0.128	8	0.075	0.030	0.014	0.120	0.528	0.000	0.025
223	M23	8in Dia. Duct	575	Sec 2-max	0.541	6	-0.015	1	0.015	5	0.270	5	-0.270	6	0.253	4	0.250	6	143.718	8	0.128	8	0.077	0.022	0.020	0.120	0.541	0.000	0.000
229	M23	8in Dia. Duct	575	Sec 5-max	0.530	6	-0.060	1	0.054	5	-0.200	1	0.200	6	0.261	5	0.261	4	143.718	8	0.128	8	0.076	0.023	0.021	0.119	0.530	0.203	0.020
231	M24	8in Dia. Duct	575	Sec 1-max	0.530	6	0.035	6	0.032	4	-0.250	1	0.280	6	0.281	5	0.281	4	143.718	8	0.128	8	0.076	0.023	0.021	0.118	0.530	0.203	0.022
318	M22	8in Dia. Duct	650	Sec 5-max	0.560	6	0.030	1	0.018	4	0.240	7	-0.240	5	0.218	4	0.216	5	143.718	8	0.128	8	0.079	0.020	0.017	0.118	0.560	0.000	0.080
671	M73	8in Dia. Duct	575	Sec 1-max	0.550	6	0.030	1	0.018	4	0.240	7	-0.240	5	0.218	6	0.216	5	143.718	8	0.128	8	0.079	0.020	0.017	0.118	0.560	0.008	0.030
210	M21	8in Dia. Duct	650	Sec 5-min	0.000	1	-0.102	1	-0.087	4	-0.740	5	0.748	6	-0.706	4	-0.706	5	-2.473	1	-0.002	1	0.000	0.048	0.068	0.115	0.748	0.006	0.014
212	M22	8in Dia. Duct	650	Sec 1-min	0.000	1	0.079	8	-0.072	5	-0.740	1	0.748	6	-0.704	4	-0.706	5	-2.473	1	-0.002	1	0.000	0.056	0.058	0.115	0.748	0.006	0.011
281	M27	8in Dia. Duct	500	Sec 1-max	0.565	6	0.051	8	0.041	4	-0.208	1	0.251	8	0.171	5	0.168	4	143.718	8	0.128	8	0.081	0.020	0.014	0.114	0.565	0.002	0.026
758	M82	8in Dia. Duct	500	Sec 6-max	0.565	6	-0.037	1	0.030	5	-0.208	1	0.265	6	0.171	5	0.168	4	143.718	8	0.128	8	0.081	0.020	0.014	0.114	0.563	0.003	0.023
640	M70	8in Dia. Duct	200	Sec 5-max	0.043	7	0.000	1	0.087	6	0.087	1	0.000	7	0.721	6	0.721	8	-20.370	1	-0.028	1	0.006	0.063	0.048	0.113	0.000	0.006	0.009
294	M30	8in Dia. Duct	425	Sec 3-min	0.000	1	0.026	1	-0.024	5	0.704	1	-0.627	6	-0.567	6	-0.563	4	-2.473	1	-0.002	1	0.000	0.085	0.047	0.112	0.627	0.008	0.004
879	M93	8in Dia. Duct	875	Sec 5-max	0.028	1	0.584	8	0.256	7	1.073	8	-0.288	1	0.313	7	0.847	8	164.527	8	0.184	8	0.005	0.091	0.079	0.111	1.073	0.010	0.103
672	M63	8in Dia. Duct	200	Sec 1-min	0.256	1	0.017	1	-0.072	4	-0.527	2	-0.018	1	-1.112	7	-0.474	6	-1026.166	3	-0.901	3	0.007	0.032	0.070	0.110	1.112	0.016	0.107
650	M70	8in Dia. Duct	200	Sec 5-min	-0.016	6	-0.078	3	-0.067	8	-0.068	2	-0.087	1	-0.721	6	-0.721	6	-177.884	4	-0.158	4	0.002	0.063	0.048	0.110	0.868	0.006	0.008
188	M28	8in Dia. Duct	850	Sec 4-min	0.000	1	-0.044	1	-0.044	4	0.001	7	-0.088	1	-0.888	8	-0.884	4	-2.473	1	-0.002	1	0.000	0.068	0.046	0.110	0.868	0.004	0.008
187	M18	8in Dia. Duct	725	Sec 4-max	0.488	7	0.000	8	0.082	4	-0.288	1	0.303	7	0.182	6	0.101	4	143.718	8	0.128	8	0.070	0.024	0.016	0.108	0.480	0.002	0.030
309	M58	8in Dia. Duct	875	Sec 5-max	-0.011	1	-0.012	1	0.000	1	1.098	7	-0.195	1	0.003	1	0.256	4	107.161	7	0.090	7	0.001	0.087	0.029	0.108	1.098	0.211	0.014
282	M29	8in Dia. Duct	500	Sec 1-min	0.060	1	0.064	1	-0.348	5	-0.680	1	0.536	6	-0.688	4	-0.684	5	-2.473	1	-0.002	1	0.000	0.034	0.051	0.108	0.688	0.204	0.013
280	M28	8in Dia. Duct	500	Sec 5-min	0.000	1	-0.071	1	-0.087	4	-0.680	1	0.680	6	-0.686	4	-0.684	6	-2.473	1	-0.002	1	0.000	0.054	0.046	0.108	0.888	0.004	0.018
536	M58	8in Dia. Duct	200	Sec 3-max	0.063	8	0.608	6	0.100	3	0.008	1	0.127	4	1.310	3	1.436	2	-3.085	1	-0.003	1	0.007	0.086	0.081	0.108	1.436	0.012	0.011
287	M27	8in Dia. Duct	500	Sec 4-max	0.554	6	0.007	6	0.000	6	0.160	6	-0.168	1	0.144	4	0.146	5	143.718	8	0.128	8	0.078	0.015	0.012	0.108	0.864	0.003	0.018
233	M24	8in Dia. Duct	575	Sec 2-max	0.530	8	0.076	8	0.024	4	-0.197	1	0.198	5	0.177	5	0.177	4	143.718	8	0.128	8	0.075	0.016	0.014	0.102	0.528	0.007	0.021
285	M29	8in Dia. Duct	500	Sec 3-max	0.531	6	0.076	3	0.070	4	-0.030	6	0.154	1	0.201	5	0.206	4	143.718	8	0.128	8	0.074	0.012	0.018	0.104	0.531	0.003	0.020
341	M25	8in Dia. Duct	575	Sec 1-max	0.582	8	0.020	6	0.020	4	-0.123	1	0.124	6	0.100	6	0.107	4	143.718	8	0.128	8	0.084	0.010	0.008	0.103	0.582	0.003	0.023
236	M28	8in Dia. Duct	425	Sec 3-max	0.521	6	-0.081	7	0.086	5	0.280	6	-0.143	1	0.086	4	0.082	6	143.718	8	0.128	8	0.074	0.021	0.007	0.100	0.521	0.000	0.000
188	M18	8in Dia. Duct	725	Sec 6-max	0.466	7	0.072	8	0.000	4	0.171	1	-0.164	7	0.237	4	0.247	5	143.718	8	0.128	8	0.080	0.014	0.020	0.103	0.466	0.002	0.008
881	M72	8in Dia. Duct	950	Sec 1-max	0.466	8	0.072	5	0.066	4	0.171	1	-0.164	7	0.237	4	0.247	5	143.718	8	0.128	8	0.060	0.014	0.020	0.101	0.466	0.002	0.008
240	M27	8in Dia. Duct	500	Sec 6-max	0.550	6	-0.008	8	0.013	5	0.187	6	-0.148	1	0.112	4	0.114	5	143.718	8	0.128	8	0.078	0.015	0.008	0.102	0.550	0.003	0.019
271	M28	8in Dia. Duct	500	Sec 1-max	0.560	6	-0.008	6	0.013	5	0.187	8	-0.140	1	0.113	4	0.114	5	143.718	8	0.128	8	0.079	0.018	0.008	0.102	0.560	0.003	0.019
518	M57	8in Dia. Duct	875	Sec 5-max	-0.006	1	0.546	7	0.000	1	1.000	7	-0.156	5	0.164	4	0.001	6	150.560	7	0.128	7	0.001	0.087	0.016	0.102	1.060	0.011	0.006
225	M23	8in Dia. Duct	575	Sec 3-max	0.537	6	-0.030	5	0.027	5	0.168	1	-0.166	8	0.161	4	0.191	5	143.718	8	0.128	8	0.077	0.013	0.012	0.102	0.537	0.003	0.002
515	M57	8in Dia. Duct	875	Sec 3-max	-0.006	1	0.573	7	0.000	1	0.064	1	0.938	8	0.330	4	0.003	1	150.560	7	0.128	7	0.001	0.074	0.076	0.101	0.938	0.008	0.287
124	M13	8in Dia. Duct	725	Sec 2-min	-0.086	6	-0.030	6	-0.163	8	-0.016	1	-0.215	6	-0.843	6	-0.841	8	-6.576	1	-0.006	1	0.014	0.017	0.070	0.101	0.843	0.007	0.020
638	M58	8in Dia. Duct	300	Sec 3-min	-0.017	6	-0.067	4	-0.063	3	-0.127	4	-0.000	1	-1.436	2	-1.318	3	-742.306	2	-0.661	2	0.002	0.000	0.081	0.101	1.436	0.017	0.082
128	M13	8in Dia. Duct	725	Sec 3-min	-0.000	6	-0.031	6	-0.180	8	-0.031	5	-0.120	6	-0.222	7	-0.968	6	-6.576	1	-0.006	1	0.014	0.018	0.076	0.100	0.968	0.006	0.020
830	M88	8in Dia. Duct	875	Sec 5-max	0.048	8	0.017	5	0.056	7	1.023	8	-0.300	1	0.001	6	0.147	7	246.038	8	0.208	8	0.008	0.061	0.012	0.099	1.023	0.010	0.037
275	M29	8in Dia. Duct	500	Sec 3-max	0.542	6	-0.077	8	0.040	5	-0.037	8	0.119	1	0.149	5	0.152	4	143.718	8	0.128	8	0.079	0.009	0.012	0.098	0.542	0.007	0.023
292	M30	8in Dia. Duct	425	Sec 3-min	0.000	1	0.035	1	-0.032	5	0.813	1	-0.738	6	-0.503	5	-0.460	4	-2.473	1	-0.002	1	0.000	0.058	0.040	0.088	0.738	0.006	0.006
660	M74	8in Dia. Duct	425	Sec 6-min	0.000	1	0.036	1	-0.032	5	0.813	1	-0.738	6	-0.503	5	-0.480	4	-2.473	1	-0.002	1	0.000	0.068	0.040	0.088	0.736	0.008	0.006
870	M86	8in Dia. Duct	875	Sec 4-min	-0.117	8	0.022	1	-0.301	6	-0.884	6	-0.327	1	-0.038	8	-0.146	7	-3.300	1	-0.003	1	0.016	0.071	0.012	0.088	0.884	0.007	0.003
840	M88	8in Dia. Duct	875	Sec 6-min	0.037	1	-0.018	8	-0.005	6	0.308	1	-1.023	8	-0.167	7	-0.061	6	-3.811	1	-0.003	1	0.006	0.081	0.012	0.088	1.023	0.008	0.086
293	M27	8in Dia. Duct	500	Sec 3-max	0.550	6	0.022	8	0.014	6	0.119	1	-0.115	8	0.107	4	0.107	5	143.718	8	0.128	8	0.060	0.009	0.009	0.087	0.550	0.001	0.021
428	M80	8in Dia. Duct	300	Sec 3-min	0.000	1	0.045	1	-0.012	3	0.738	1	-0.818	6	-0.805	5	-0.500	4	-2.473	1	-0.002	1	0.000	0.058	0.038	0.086	0.818	0.006	0.006
316	M22	8in Dia. Duct	650	Sec 3-max	0.567	6	0.050	1	0.040	4	-0.101	7	0.100	1	0.108	5	0.107	4	143.718	8	0.128	8	0.080	0.008	0.008	0.086	0.567	0.003	0.004
217	M22	8in Dia. Duct	650	Sec 4-max	0.554	6	0.036	1	0.033	4	0.111	7	-0.118	1	0.080	4	0.080	5	143.718	8	0.128	8	0.079	0.009	0.007	0.086	0.554	0.003	0.022
235	M24	8in Dia. Duct	575	Sec 3-max	0.526	6	0.018	8	0.018	4	-0.132	1	0.133	6	0.117	5	0.117	4	143.718	8	0.128	8	0.075	0.011	0.008	0.086	0.528	0.003	0.000
219	M22	8in Dia. Duct	575	Sec 5-max	0.525	6	-0.018	5	0.014	5	-0.122	1	0.124	6	0.108	5	0.107	4	143.718	8	0.128	8	0.075	0.010	0.009	0.087	0.525	0.003	0.020
317	M32	8in Dia. Duct	575	Sec 4-max	0.525	6	-0.018	5	0.013	6	-0.118	1	0.118	6	0.101	5	0.102	4	143.718	8	0.128	8	0.075	0.009	0.008	0.083	0.525	0.003	0.020
684	M72	8in Dia. Duct	650	Sec 2-min	0.000	1	0.064	8	-0.030	5	0.852	7	-0.588	1	-0.003	6	-0.566	4	-2.473	1	-0.002	1	0.000	0.044	0.048	0.082	0.852	0.003	0.008
287	M28	8in Dia. Duct	500	Sec 4-max	0.520	6	0.067	3	0.061	4	0.160	8	-0.007	1	0.011	2	0.015	3	143.718	8	0.128	8	0.076	0.016	0.001	0.082	0.520	0.003	0.027
315	M32	8in Dia. Duct	675	Sec 3-max	0.528	6	-0.014	6	0.012	5	-0.112	1	0.113	8	0.007	5	0.007	4	143.718	8	0.128	8	0.075	0.009	0.008	0.082	0.525	0.003	0.016
757	M82	8in Dia. Duct	500	Sec 4-max	0.569	6	-0.022	1	0.020	1	-0.058	1	0.090	8	0.038	8	0.038	4	143.718	8	0.128	8	0.081	0.007	0.007	0.081	0.569	0.003	0.021
108	M17	8in Dia. Duct	725	Sec 3-min	0.000	1	0.045	1	-0.221	6	0.181	7	-0.348	1	-0.748	6	-0.001	1	-2.473	1	-0.002	1	0.000	0.032	0.050	0.081	0.748	0.005	0.031
313	M32	8in Dia. Duct	675	Sec 2-max	0.525	6	-0.013	8	0.011	6	-0.107	1	0.100	6	0.003	5	0.003	4	143.718	8	0.128	8	0.076	0.008	0.007	0.081	0.525	0.003	0.019
751	M82	8in Dia. Duct	500	Sec 1-max	0.560	6	0.021	1	0.021	4	-0.030	6	0.047	1	0.050	5	0.050	4	143.718	8	0.128	8	0.083	0.004	0.004	0.081	0.560	0.003	0.020
249	M25	8in Dia. Duct	675	Sec 5-max	0.560	6	-0.030	6	0.030	5	-0.030	6	0.047	1	0.010	5	0.050	4	143.718	8	0.128	8	0.083	0.004	0.004	0.081	0.560	0.003	0.020
254	M28	8in Dia. Duct	425	Sec 2-min	0.000	1	-0.037	1	-0.033	4	0.352	1	-0.878	6	-0.461	5	-0.497	4	-2.473	1	-0.002	1	0.000	0.054	0.037	0.080	0.878	0.004	0.006
311	M32	8in Dia. Duct	675	Sec 1-max	0.524	6	-0.012	5	0.010	6	-0.103	1	0.104	6	0.080	5	0.080	4	143.718	8	0.128	8	0.075	0.006	0.007	0.080	0.524	0.003	0.019
237	M24	8in Dia. Duct	575	Sec 4-max	0.523	6	0.000	6	0.008	4	-0.082	1	0.083	6	0.061	5	0.061	4	143.718	8	0.128	8	0.075	0.007	0.008	0.080	0.523	0.003	0.019
273	M28	8in Dia. Duct	500	Sec 2-max	0.547	6	-0.022	6	0.020	5	0.111	8	-0.058	1	0.014	4	0.010	5	143.718	8	0.128	8	0.078	0.006	0.001	0.080	0.547	0.003	0.021
348	M25	8in Dia. Duct	675	Sec 3-max	0.588	6	0.006	8	0.003	4	0.038	8	-0.023	1	0.021	4	0.021	5	143.718	8	0.128	8	0.084	0.002	0.002	0.088	0.588	0.003	0.018
243	M25	8in Dia. Duct	575	Sec 2-max	0.588	6	0.010	8	0.011	4	-0.021	8	0.073	1	0.019	5	0.019	4	143.718	8	0.128	8	0.084	0.007	0.001	0.087	0.588	0.002	0.020
668	M74	8in Dia. Duct	425	Sec 4-min	0.000	1	0.041	1	-0.037	5	0.540	1	-0.864	6	-0.438	5	-0.432	4	-2.473	1	-0.002	1	0.000	0.053	0.036	0.087	0.864	0.004	0.006
488	M65	8in Dia. Duct	200	Sec 5-max	0.028	8	0.108	3	0.146	3	0.372	2	0.132	1	0.788	3	0.954	2	-4.470	1	-0.008	1	0.003	0.034	0.080	0.087	0.954	0.008	0.017
877	M95	8in Dia. Duct	875	Sec 4-max	0.038	1	0.588	8	0.062	7	0.327	1	0.884	6	0.148	7	0.038	6	164.527	8	0.184	8	0.004	0.071	0.012	0.087	0.884	0.007	0.102
238	M24	8in Dia. Duct	575	Sec 5-max	0.521	6	0.000	1	0.000	1	-0.070	1	0.060	6	0.060	6	0.060	4	143.718	8	0.128	8	0.074	0.006	0.006	0.086	0.521	0.003	0.018
209	M21	8in Dia. Duct	650	Sec 2-max	0.570	8	-0.079	7	0.079	5	-0.034	1	0.034	7	0.072	5	0.073	4	143.718	8	0.128	8	0.081	0.003	0.003	0.088	0.570	0.003	0.020
247	M25	8in Dia. Duct	575	Sec 4-max	0.563	6	-0.007	6	0.008	5	0.033	6	-0.015	1	0.010	4	0.010	5	143.718	8	0.128	8	0.083	0.003	0.001	0.086	0.563	0.003	0.016
753	M82	8in Dia. Duct	500	Sec 2-max	0.578	6	0.007	1	0.008	4	0.023	1	-0.021	5	0.021	4	0.021	5	143.718	8	0.128	8	0.082	0.002	0.002	0.086	0.578	0.003	0.010
756	M82	8in Dia. Duct	500	Sec 3-max	0.572	6	-0.008	1	0.006	5	0.030	1	-0.004	6	0.026	4	0.025	5	143.718	8	0.128	8	0.082	0.003	0.002	0.085	0.572	0.003	0.010
834	M88	8in Dia. Duct	350	Sec 2-min	0.000	1	0.070	1	-0.034	5	-0.018	6	-0.038	1	-0.304	6	-0.425	4	-2.473	1	-0.002	1	0.000	0.046	0.037	0.085	0.816	0.006	0.008
300	M58	8in Dia. Duct	200	Sec 5-min	-0.001	8	0.012	1	-0.179	2	-0.132	1	-0.372	2	-0.954	2	-0.796	3	-246.425	4	-0.218	4	0.000	0.024	0.080	0.084	0.954	0.008	0.043
533	M38	8in Dia. Duct	200	Sec 2-max	0.061	8	0.017	5	0.110	3	0.000	1	0.121	4	0.838	3	1.061	2	-3.085	1	-0.003	1	0.007	0.006	0.068	0.083	1.061	0.007	0.012
283	M27	8in Dia. Duct	500	Sec 2-max	0.561	6	0.037	6	0.030	4	-0.008	1	0.031	6	0.003	4	0.002	5	143.718	8	0.128	8	0.080	0.002	0.000	0.083	0.561	0.003	0.023
647	M70	8in Dia. Duct	200	Sec 4-max	0.030	7	0.018	1	0.048	6	0.016	1	0.000	3	0.303	6	0.303	8	-88.370	1	-0.028	1	0.004	0.044	0.032	0.080	[illegible]	0.003	0.009
227	M23	8in Dia. Duct	575	Sec 4-max	0.534	6	-0.045	1	0.041	6	-0.024	1	0.024	8	0.030	6	0.021	4	143.718	8	0.128	8	0.076	0.002	0.002	0.080	0.534	0.003	0.004
208	M20	8in Dia. Duct	650	Sec 5-min	0.000	1	-0.016	1	-0.095	4	0.495	7	-0.495	1	-0.464	5	-0.460	4	-2.473	1	-0.002	1	0.000	0.049	0.038	0.079	0.498	0.002	0.006
202	M21	8in Dia. Duct	650	Sec 1-min	0.000	1	-0.016	1	-0.565	4	0.465	7	-0.468	1	-0.464	5	-0.460	4	-2.473	1	-0.002	1	0.000	0.040	0.038	0.079	0.468	0.003	0.008
534	M58	8in Dia. Duct	200	Sec 3-min	-0.015	6	0.003	4	-0.103	3	-0.121	4	0.000	1	-1.081	2	-0.938	3	-742.306	2	-0.661	2	0.002	0.006	0.048	0.078	1.081	0.012	0.063
833	M88	8in Dia. Duct	875	Sec 3-max	0.336	7	0.372	6	0.084	8	0.030	1	0.141	6	0.267	8	0.041	7	252.730	4	0.212	4	0.048	0.011	0.030	0.077	0.336	0.001	0.081
648	M70	8in Dia. Duct	200	Sec 4-min	-0.011	6	-0.000	2	-0.040	8	-0.090	2	-0.010	1	-0.303	8	-0.303	6	-177.884	4	-0.158	4	0.001	0.044	0.032	0.077	0.000	0.000	0.004
666	M74	8in Dia. Duct	425	Sec 3-min	0.000	1	0.048	1	-0.042	5	0.457	1	-0.381	6	-0.360	5	-0.356	4	-2.473	1	-0.002	1	0.000	0.048	0.029	0.076	0.461	0.003	0.007
256	M28	8in Dia. Duct	425	Sec 4-min	0.000	1	-0.044	1	-0.076	4	-0.472	1	0.348	6	-0.448	4	-0.464	5	-2.473	1	-0.002	1	0.000	0.037	0.037	0.075	0.472	0.002	0.012
284	M29	8in Dia. Duct	500	Sec 2-min	0.000	1	0.086	5	-0.076	5	-0.403	1	0.270	6	-0.434	4	-0.430	5	-2.473	1	-0.002	1	0.000	0.032	0.034	0.066	0.434	0.002	0.012
117	M12	8in Dia. Duct	800	Sec 4-max	0.237	6	0.063	6	0.301	8	0.043	1	0.017	6	0.003	7	0.330	6	473.063	7	0.416	7	0.034	0.003	0.027	0.064	0.330	0.004	0.102
447	M39	8in Dia. Duct	200	Sec 4-max	0.017	8	0.300	7	0.013	3	0.000	1	0.034	7	0.030	3	0.030	3	-18.143	1	-0.013	1	0.002	0.060	0.002	0.083	0.034	0.008	0.038
1110	M109	8in Dia. Duct	77	Sec 5-min	-0.019	8	-0.019	4	-0.046	6	0.021	5	-0.058	1	-0.040	6	-0.037	8	-230.050	2	-0.200	2	0.003	0.003	0.058	0.082	0.060	0.008	0.027
1108	M108	8in Dia. Duct	77	Sec 5-max	0.018	8	-0.022	1	0.043	6	0.055	1	-0.021	5	0.837	8	0.840	6	230.858	3	0.187	3	0.002	0.003	0.058	0.082	0.840	0.006	0.028
1108	M108	8in Dia. Duct	77	Sec 4-min	-0.018	6	-0.018	4	-0.046	6	0.029	5	-0.058	1	-0.840	6	-0.830	6	-230.058	2	-0.200	2	0.003	0.004	0.066	0.081	0.840	0.006	0.077
1107	M108	8in Dia. Duct	77	Sec 4-max	0.010	8	-0.022	1	0.043	8	0.058	1	-0.038	8	0.830	6	0.848	6	235.636	3	0.187	3	0.002	0.004	0.066	0.081	0.848	0.005	0.028
377	M41	8in Dia. Duct	200	Sec 4-max	0.010	6	0.156	4	0.003	3	0.308	5	0.038	4	0.070	3	0.078	3	-4.067	1	-0.004	1	0.002	0.004	0.006	0.081	0.848	0.004	0.017

	Member	Duct Size	Temperature (°F)		Axial (ksi)	Load Case	y Shear (ksi)	Load Case	z Shear (ksi)	Load Case	y top Bending (ksi)	Load Case	y bot Bending (ksi)	Load Case	z top Bending (ksi)	Load Case	z bot Bending (ksi)	Load Case
1108	M109	8in Dia. Duct	77	Set 3 - min	-0.018	8	-0.050	4	-0.045	8	0.037	5	-0.082	1	-0.173	6	-0.173	8
1106	M109	8in Dia. Duct	77	Set 3 - max	0.018	4	-0.022	1	0.043	8	0.082	6	-0.037	5	0.173	8	0.173	6
448	M10	8in Dia. Duct	200	Set 4 - min	0.000	1	0.002	1	-0.013	2	-0.034	7	0.000	1	-0.030	3	-0.030	2
1100	M109	8in Dia. Duct	77	Set 5 - min	-0.017	5	0.006	1	-0.037	6	0.044	5	-0.088	4	-0.013	8	-0.083	8
1099	M108	8in Dia. Duct	77	Set 5 - max	0.017	4	0.033	4	0.036	8	0.088	4	-0.044	5	0.083	8	0.013	8
1104	M109	8in Dia. Duct	77	Set 2 - min	-0.017	8	-0.017	4	-0.037	8	0.030	5	-0.082	4	-0.088	8	-0.019	8
1103	M108	8in Dia. Duct	77	Set 2 - max	0.017	4	0.011	1	0.036	7	0.082	4	-0.030	5	0.018	8	0.088	8
1102	M109	8in Dia. Duct	77	Set 1 - min	-0.017	5	-0.017	4	-0.037	6	0.042	5	-0.088	4	-0.084	8	-0.015	8
1101	M109	8in Dia. Duct	77	Set 1 - max	0.017	4	0.011	1	0.036	7	0.086	4	-0.042	5	0.016	8	0.084	8
214	M22	8in Dia. Duct	650	Set 2 - min	0.000	1	0.084	8	-0.088	5	-0.388	1	0.367	7	-0.372	4	-0.373	5
664	M74	8in Dia. Duct	425	Set 2 - min	0.000	1	0.052	1	-0.048	5	0.364	1	-0.407	8	-0.274	5	-0.279	4
531	M58	8in Dia. Duct	200	Set 1 - max	0.048	8	0.328	5	0.120	3	-0.048	1	0.153	4	0.524	3	0.002	3
279	M28	8in Dia. Duct	500	Set 4 - min	0.000	1	-0.060	1	-0.084	4	-0.383	1	0.288	8	-0.366	4	-0.383	8
378	M41	8in Dia. Duct	200	Set 4 - min	0.000	1	-0.045	8	-0.039	2	-0.468	4	-0.308	5	-0.078	3	-0.078	2
208	M21	8in Dia. Duct	650	Set 4 - min	0.000	1	-0.001	1	-0.086	4	-0.388	1	0.387	8	-0.343	4	-0.343	5
532	M58	8in Dia. Duct	200	Set 1 - min	-0.012	4	0.014	4	-0.112	2	-0.153	4	0.048	1	-0.082	2	-0.524	3
1130	M112	12in Dia. Duct	77	Set 5 - max	0.024	4	0.047	5	0.036	7	0.545	5	0.033	1	0.272	2	0.272	3
616	M67	8in Dia. Duct	675	Set 4 - min	-0.188	7	0.030	5	-0.042	8	0.047	8	-0.113	1	-0.002	1	-0.252	8
1137	M112	12in Dia. Duct	77	Set 4 - max	0.025	4	0.040	5	0.055	7	0.527	5	0.020	1	0.288	2	0.287	3
1140	M112	12in Dia. Duct	77	Set 5 - min	-0.007	5	-0.013	1	-0.068	8	-0.033	1	-0.545	5	-0.272	3	-0.272	2
645	M70	8in Dia. Duct	200	Set 3 - max	0.073	7	0.031	1	0.049	6	-0.065	1	0.442	2	0.320	6	0.320	8
1135	M112	12in Dia. Duct	77	Set 3 - max	0.027	4	0.051	8	0.256	7	0.506	5	0.024	1	0.284	2	0.283	3
1136	M112	12in Dia. Duct	77	Set 4 - min	-0.007	5	-0.013	4	-0.058	8	-0.028	1	-0.527	8	-0.287	3	-0.288	2
1133	M112	12in Dia. Duct	77	Set 2 - max	0.028	4	0.053	8	0.064	7	0.488	5	0.020	1	0.283	2	0.280	3
1138	M112	12in Dia. Duct	77	Set 3 - min	-0.007	6	-0.012	4	-0.058	8	-0.024	1	-0.508	6	-0.283	3	-0.284	2
1131	M112	12in Dia. Duct	77	Set 1 - max	0.029	4	0.056	8	0.063	7	0.478	4	0.016	1	0.281	2	0.257	3
646	M70	8in Dia. Duct	200	Set 3 - min	-0.008	8	-0.054	2	-0.046	8	-0.442	2	0.045	1	-0.320	6	-0.320	4
1134	M112	12in Dia. Duct	77	Set 2 - min	-0.007	5	-0.013	4	-0.067	8	-0.020	1	-0.488	5	-0.280	3	-0.283	2
222	M23	8in Dia. Duct	675	Set 1 - min	0.000	1	0.008	8	0.009	8	0.318	8	-0.318	7	-0.288	5	-0.288	4
660	M73	8in Dia. Duct	675	Set 5 - min	0.000	1	0.000	8	0.008	8	0.318	8	-0.318	7	-0.288	6	-0.288	4
1132	M112	12in Dia. Duct	77	Set 1 - min	-0.007	5	-0.012	4	-0.058	8	-0.016	1	-0.479	4	-0.257	2	-0.281	2
678	M73	8in Dia. Duct	675	Set 4 - min	0.000	1	0.005	8	-0.005	5	0.313	1	-0.314	7	-0.301	5	-0.262	4
1141	M113	12in Dia. Duct	77	Set 1 - max	0.037	4	0.050	5	0.046	3	0.181	4	0.368	5	0.327	2	0.327	3
1142	M113	12in Dia. Duct	77	Set 1 - min	0.025	6	-0.035	4	-0.040	2	-0.350	5	-0.181	6	-0.327	3	-0.327	2
1121	M111	12in Dia. Duct	77	Set 5 - max	0.031	4	0.040	5	0.050	7	0.445	4	0.003	1	0.230	6	0.271	8
497	M55	8in Dia. Duct	200	Set 4 - max	0.028	8	0.113	2	0.145	3	0.088	2	0.174	1	0.409	3	0.492	2
676	M73	8in Dia. Duct	675	Set 3 - min	0.000	1	0.010	8	-0.010	6	0.300	1	-0.301	7	-0.288	6	-0.289	4
1123	M111	12in Dia. Duct	77	Set 2 - max	0.030	4	0.047	5	0.080	7	0.463	4	0.008	1	0.211	8	0.203	8
1122	M111	12in Dia. Duct	77	Set 1 - min	-0.021	5	-0.008	1	-0.063	8	-0.003	1	-0.446	6	-0.221	8	-0.230	6
280	M29	8in Dia. Duct	500	Set 5 - min	0.000	1	0.057	1	-0.063	8	0.250	1	-0.383	6	-0.178	5	-0.174	4
662	M74	8in Dia. Duct	425	Set 1 - min	0.000	1	0.057	1	-0.053	8	0.250	1	-0.383	8	-0.179	5	-0.174	4
1143	M113	12in Dia. Duct	77	Set 2 - max	0.030	4	0.037	5	0.047	3	0.181	4	0.336	5	0.309	2	0.309	3
1125	M111	12in Dia. Duct	77	Set 3 - max	0.028	4	0.046	6	0.061	7	0.461	4	0.008	1	0.182	6	0.188	8
1124	M111	12in Dia. Duct	77	Set 2 - min	-0.021	5	-0.007	1	-0.084	8	-0.008	1	-0.463	4	-0.203	8	-0.211	8
230	M23	8in Dia. Duct	575	Set 5 - min	0.000	1	-0.080	8	-0.084	4	-0.280	8	0.280	1	-0.281	4	-0.281	5
232	M24	8in Dia. Duct	575	Set 1 - min	0.000	1	0.038	3	-0.012	8	-0.280	8	0.280	1	-0.281	4	-0.281	5
1127	M111	12in Dia. Duct	77	Set 4 - max	0.026	4	0.043	5	0.312	7	0.488	4	0.012	1	0.174	6	0.188	8
1128	M111	12in Dia. Duct	77	Set 3 - min	-0.020	5	-0.009	1	-0.064	8	-0.008	1	-0.481	4	-0.188	8	-0.182	8
1144	M113	12in Dia. Duct	77	Set 2 - min	0.025	6	-0.025	4	-0.047	2	-0.330	6	-0.181	4	-0.308	3	-0.308	2
118	M12	8in Dia. Duct	800	Set 4 - min	-0.008	8	-0.018	1	-0.431	8	-0.017	6	-0.043	1	-0.338	8	-0.008	7
1129	M111	12in Dia. Duct	77	Set 5 - max	0.028	4	0.041	5	0.053	7	0.479	4	0.010	1	0.158	8	0.182	8
1126	M111	12in Dia. Duct	77	Set 4 - min	-0.020	6	-0.010	1	-0.055	8	-0.012	1	-0.488	4	-0.188	8	-0.174	8
498	M56	8in Dia. Duct	200	Set 4 - min	0.000	1	0.036	1	-0.178	2	-0.176	1	-0.088	2	-0.405	2	-0.408	3
224	M23	8in Dia. Duct	575	Set 3 - min	0.000	1	-0.016	8	-0.013	4	0.270	8	-0.270	1	-0.263	5	-0.253	4
1139	M111	12in Dia. Duct	77	Set 5 - min	-0.020	5	-0.012	1	-0.056	6	-0.016	1	-0.476	4	-0.163	8	-0.158	8
1145	M113	12in Dia. Duct	77	Set 3 - max	0.036	4	0.056	6	0.049	3	0.172	4	0.315	5	0.292	2	0.292	3
674	M73	8in Dia. Duct	575	Set 2 - min	0.000	1	0.015	8	-0.014	5	0.270	1	-0.270	7	-0.247	5	-0.248	4
1112	M110	12in Dia. Duct	77	Set 1 - min	-0.027	5	-0.005	1	-0.002	8	-0.002	1	-0.430	4	-0.183	8	-0.171	8
1111	M110	12in Dia. Duct	77	Set 1 - max	0.027	4	0.030	4	0.040	7	0.428	4	0.002	1	0.171	6	0.183	8
1116	M110	12in Dia. Duct	77	Set 4 - min	-0.027	5	-0.008	1	-0.053	8	-0.003	1	-0.443	4	-0.157	8	-0.165	8
1118	M110	12in Dia. Duct	77	Set 3 - min	-0.027	5	-0.003	1	-0.053	8	-0.003	1	-0.441	4	-0.158	8	-0.187	6
1114	M110	12in Dia. Duct	77	Set 2 - min	-0.027	5	-0.005	1	-0.052	8	-0.002	1	-0.430	4	-0.181	8	-0.180	6
1117	M110	12in Dia. Duct	77	Set 4 - max	0.027	4	0.030	4	0.050	7	0.443	4	0.003	1	0.165	8	0.157	8
1115	M110	12in Dia. Duct	77	Set 3 - max	0.027	4	0.030	4	0.040	7	0.441	4	0.003	1	0.167	6	0.160	8
1113	M110	12in Dia. Duct	77	Set 2 - max	0.027	4	0.030	4	0.040	7	0.430	4	0.002	1	0.180	6	0.181	8
1120	M110	12in Dia. Duct	77	Set 5 - min	-0.027	5	-0.008	1	-0.053	8	-0.002	1	-0.445	4	-0.154	8	-0.162	8
1119	M110	12in Dia. Duct	77	Set 5 - max	0.027	4	0.030	4	0.010	7	0.445	4	0.003	1	0.162	6	0.154	8
1146	M113	12in Dia. Duct	77	Set 3 - min	0.024	6	-0.024	4	-0.048	2	-0.315	5	-0.172	4	-0.292	3	-0.292	2
204	M21	8in Dia. Duct	650	Set 2 - min	0.000	1	-0.008	1	-0.086	4	0.253	7	-0.256	1	-0.257	5	-0.254	4
1147	M113	12in Dia. Duct	77	Set 4 - max	0.034	4	0.064	5	0.044	3	0.163	4	0.295	5	0.275	2	0.275	3
188	M19	8in Dia. Duct	725	Set 4 - min	0.000	1	0.088	4	-0.082	5	-0.303	7	0.299	1	-0.181	4	-0.182	5
1148	M113	12in Dia. Duct	77	Set 4 - min	0.023	5	-0.023	4	-0.044	2	-0.295	5	-0.163	4	-0.275	3	-0.275	2
220	M23	8in Dia. Duct	650	Set 5 - min	0.000	1	0.030	8	-0.010	6	0.240	1	-0.240	7	-0.210	6	-0.210	4
672	M73	8in Dia. Duct	575	Set 1 - min	0.000	1	0.030	8	-0.010	5	0.240	1	-0.240	7	-0.210	5	-0.210	4
1149	M113	12in Dia. Duct	77	Set 5 - max	0.033	4	0.052	5	0.043	3	0.156	4	0.275	6	0.250	2	0.250	3
1151	M114	12in Dia. Duct	77	Set 1 - max	0.079	1	0.047	2	0.178	2	0.256	3	0.256	2	0.155	4	0.275	5
1152	M114	12in Dia. Duct	77	Set 1 - min	0.020	8	-0.043	3	-0.430	4	-0.256	2	-0.256	3	-0.275	5	-0.156	4
1150	M113	12in Dia. Duct	77	Set 5 - min	0.023	5	-0.023	4	-0.043	2	-0.275	5	-0.156	4	-0.250	3	-0.250	2
262	M27	8in Dia. Duct	500	Set 1 - min	0.000	1	0.047	1	-0.041	6	-0.251	8	0.208	1	-0.180	4	-0.171	5
760	M82	8in Dia. Duct	300	Set 5 - min	0.008	1	-0.040	6	-0.033	4	-0.251	8	0.208	1	-0.180	4	-0.171	5
190	M19	8in Dia. Duct	725	Set 5 - min	0.000	1	0.077	4	-0.088	5	0.184	7	-0.171	1	-0.247	5	-0.237	4
662	M72	8in Dia. Duct	650	Set 1 - min	0.000	1	0.072	6	-0.288	5	0.184	7	-0.171	1	-0.247	6	-0.237	4
624	M68	8in Dia. Duct	675	Set 2 - min	0.011	1	0.000	1	-0.013	8	-0.141	8	-0.030	1	-0.041	7	-0.267	6
643	M70	8in Dia. Duct	200	Set 2 - max	0.020	7	0.043	1	0.001	6	-0.237	1	0.245	2	0.173	8	0.173	8
234	M24	8in Dia. Duct	575	Set 2 - min	0.000	1	0.026	3	-0.024	5	-0.188	6	0.187	1	-0.177	4	-0.177	5
517	M57	8in Dia. Duct	675	Set 4 - max	-0.005	1	0.100	7	0.109	1	0.117	1	-0.047	8	0.752	8	0.002	1
236	M29	8in Dia. Duct	500	Set 3 - min	0.000	1	0.070	1	-0.075	5	-0.154	1	0.030	6	-0.206	4	-0.201	5
258	M26	8in Dia. Duct	425	Set 3 - min	0.000	1	-0.001	1	-0.088	4	0.143	1	-0.208	8	-0.002	5	-0.088	6
1153	M114	12in Dia. Duct	77	Set 2 - max	0.025	1	0.030	2	0.034	8	0.180	3	0.180	2	0.087	4	0.217	6
1154	M114	12in Dia. Duct	77	Set 2 - min	0.025	8	-0.030	3	-0.034	4	-0.180	2	-0.180	3	-0.217	5	-0.087	4
644	M70	8in Dia. Duct	200	Set 2 - min	-0.009	8	-0.042	2	-0.031	8	-0.245	2	0.237	1	-0.173	8	-0.173	4
288	M27	8in Dia. Duct	500	Set 4 - min	0.000	1	0.003	1	0.000	8	0.166	1	-0.166	8	-0.135	5	-0.144	4
226	M23	8in Dia. Duct	575	Set 3 - min	0.000	1	-0.030	8	-0.027	4	0.166	8	-0.166	1	-0.161	5	-0.161	4
495	M56	8in Dia. Duct	200	Set 3 - max	0.025	8	0.121	2	0.146	3	-0.217	2	0.236	1	0.005	7	0.102	8
279	M27	8in Dia. Duct	600	Set 5 - min	0.000	1	-0.012	1	-0.113	4	0.146	1	-0.187	6	-0.114	5	-0.113	4

	Torque (in-lb)	Load Case	Torsional Shear (ksi)	Load Case	f_a/F_a	f_b/F_b	f_v/F_v	D-2250 Equation 11: $f_a/F_a + f_b/F_b + f_v/F_v$	f (ksi)	D-2260 Equation 13: $(f/F_t)^2 + (f_v/F_v)^2$	D-2270 Equation 14: $f/F_t + f_v/F_v$
1108	-238.056	2	-0.200	2	0.002	0.004	0.215	0.061	0.173	0.004	0.027
1106	235.858	3	0.187	3	0.002	0.004	0.255	0.061	0.173	0.004	0.038
448	-1474.881	8	-1.204	8	0.000	0.000	0.002	0.061	0.034	0.027	0.144
1100	-238.056	2	-0.200	2	0.002	0.004	0.066	0.061	0.083	0.004	0.038
1099	235.858	3	0.187	3	0.002	0.004	0.066	0.061	0.083	0.004	0.038
1104	-238.056	2	-0.200	2	0.002	0.004	0.038	0.061	0.088	0.004	0.038
1103	235.858	3	0.187	3	0.002	0.004	0.038	0.061	0.088	0.004	0.035
1102	-238.056	2	-0.200	2	0.002	0.004	0.066	0.061	0.084	0.004	0.038
1101	235.858	3	0.187	3	0.002	0.004	0.038	0.061	0.084	0.004	0.025
214	-2.473	1	-0.002	1	0.000	0.031	0.020	0.080	0.388	0.001	0.009
664	-2.473	1	-0.002	1	0.028	0.029	0.072	0.080	0.407	0.002	0.208
531	-3.065	1	-0.003	1	0.007	0.019	0.044	0.080	0.482	0.009	0.014
279	-2.473	1	-0.002	1	0.000	0.029	0.031	0.080	0.388	0.001	0.009
378	-1083.584	8	-0.880	8	0.000	0.064	0.006	0.080	0.464	0.018	0.118
208	-2.473	1	-0.002	1	0.000	0.029	0.027	0.080	0.388	0.001	0.013
532	-742.385	2	-0.651	2	0.001	0.010	0.044	0.085	0.082	0.009	0.084
1130	276.130	3	0.001	3	0.002	0.034	0.017	0.054	0.545	0.002	0.016
616	-2.188	1	-0.002	1	0.025	0.008	0.030	0.064	0.252	0.001	0.008
1137	276.130	3	0.001	3	0.002	0.033	0.017	0.063	0.527	0.002	0.016
1140	-276.130	2	-0.001	2	0.001	0.034	0.017	0.052	0.546	0.002	0.016
645	-29.278	1	-0.026	1	0.004	0.028	0.020	0.062	0.442	0.001	0.007
1135	276.130	3	0.001	3	0.003	0.032	0.017	0.052	0.506	0.002	0.016
1136	-276.130	2	-0.001	2	0.001	0.033	0.017	0.051	0.527	0.002	0.016
1133	276.130	3	0.001	3	0.003	0.031	0.017	0.080	0.488	0.001	0.019
1138	-276.130	2	-0.001	2	0.001	0.032	0.017	0.080	0.508	0.002	0.016
1131	276.130	3	0.001	3	0.003	0.030	0.017	0.048	0.479	0.001	0.019
646	-177.684	4	-0.158	4	0.001	0.028	0.020	0.048	0.442	0.001	0.023
1134	-276.130	2	-0.001	2	0.001	0.031	0.017	0.048	0.488	0.001	0.018
222	-2.473	1	-0.002	1	0.000	0.025	0.023	0.048	0.318	0.001	0.008
660	-2.473	1	-0.002	1	0.000	0.025	0.023	0.048	0.318	0.001	0.008
1132	-276.130	2	-0.001	2	0.001	0.030	0.017	0.047	0.479	0.001	0.016
678	-2.473	1	-0.002	1	0.000	0.025	0.022	0.047	0.314	0.001	0.001
1141	34.341	3	0.011	3	0.004	0.023	0.021	0.047	0.348	0.001	0.008
1142	-34.341	2	-0.011	2	0.002	0.023	0.021	0.046	0.348	0.001	0.008
1121	437.804	3	0.143	3	0.003	0.028	0.015	0.046	0.445	0.001	0.021
497	-8.479	1	-0.008	1	0.003	0.011	0.031	0.045	0.495	0.001	0.017
676	-2.473	1	-0.002	1	0.000	0.024	0.021	0.045	0.301	0.001	0.002
1123	437.804	3	0.143	3	0.003	0.029	0.013	0.046	0.463	0.001	0.021
1122	-441.122	2	-0.145	2	0.002	0.028	0.015	0.045	0.446	0.001	0.022
280	-2.473	1	-0.002	1	0.000	0.030	0.014	0.044	0.383	0.001	0.008
662	-2.473	1	-0.002	1	0.000	0.030	0.014	0.044	0.383	0.001	0.008
1143	34.341	3	0.011	3	0.004	0.021	0.020	0.044	0.336	0.001	0.007
1125	437.806	3	0.143	3	0.003	0.028	0.013	0.044	0.461	0.001	0.021
1124	-441.122	2	-0.146	2	0.002	0.028	0.013	0.044	0.463	0.001	0.022
230	-2.473	1	-0.002	1	0.000	0.023	0.021	0.044	0.280	0.001	0.008
232	-2.473	1	-0.002	1	0.000	0.023	0.021	0.044	0.280	0.001	0.004
1127	437.804	3	0.143	3	0.003	0.030	0.011	0.043	0.488	0.001	0.021
1128	-441.122	2	-0.148	2	0.002	0.029	0.012	0.043	0.481	0.001	0.022
1144	-34.341	2	-0.011	2	0.002	0.021	0.020	0.043	0.330	0.001	0.006
118	-4.576	1	-0.008	1	0.013	0.003	0.027	0.043	0.338	0.001	0.061
1129	437.804	3	0.143	3	0.002	0.030	0.010	0.043	0.479	0.001	0.022
1126	-441.122	2	-0.145	2	0.002	0.030	0.011	0.043	0.488	0.001	0.023
498	-248.428	4	-0.218	4	0.000	0.015	0.031	0.047	0.408	0.002	0.043
224	-2.473	1	-0.002	1	0.000	0.022	0.020	0.042	0.270	0.001	0.006
1139	-441.122	2	-0.145	2	0.002	0.030	0.010	0.042	0.476	0.001	0.022
1145	34.341	3	0.011	3	0.003	0.020	0.018	0.042	0.315	0.001	0.007
674	-2.473	1	-0.002	1	0.000	0.022	0.020	0.042	0.270	0.001	0.002
1112	-478.111	2	-0.157	2	0.003	0.028	0.011	0.041	0.430	0.001	0.023
1111	471.318	3	0.164	3	0.003	0.028	0.011	0.041	0.428	0.001	0.022
1116	-478.111	2	-0.157	2	0.003	0.028	0.010	0.041	0.443	0.001	0.023
1118	-478.111	2	-0.187	2	0.003	0.029	0.011	0.041	0.441	0.001	0.023
1114	-478.111	2	-0.157	2	0.003	0.028	0.011	0.041	0.430	0.001	0.023
1117	471.318	3	0.164	3	0.003	0.028	0.010	0.041	0.443	0.001	0.022
1115	471.316	3	0.164	3	0.003	0.028	0.011	0.041	0.441	0.001	0.022
1113	471.318	3	0.164	3	0.003	0.028	0.011	0.041	0.430	0.001	0.022
1120	-478.111	2	-0.157	2	0.003	0.029	0.010	0.041	0.445	0.001	0.023
1119	471.318	3	0.164	3	0.003	0.028	0.010	0.041	0.445	0.001	0.022
1146	-34.341	2	-0.011	2	0.002	0.020	0.018	0.041	0.315	0.001	0.006
204	-2.473	1	-0.002	1	0.000	0.020	0.020	0.041	0.257	0.001	0.010
1147	34.341	3	0.011	3	0.003	0.018	0.017	0.038	0.295	0.001	0.007
188	-2.473	1	-0.002	1	0.000	0.024	0.015	0.038	0.303	0.001	0.013
1148	-34.341	2	-0.011	2	0.002	0.018	0.017	0.038	0.295	0.001	0.006
220	-2.473	1	-0.002	1	0.000	0.020	0.017	0.037	0.240	0.001	0.003
672	-2.473	1	-0.002	1	0.000	0.020	0.017	0.037	0.240	0.001	0.003
1149	34.341	3	0.011	3	0.003	0.017	0.016	0.037	0.275	0.000	0.007
1151	88.924	2	0.022	2	0.003	0.016	0.017	0.036	0.275	0.000	0.007
1152	-88.924	3	-0.022	3	0.003	0.018	0.017	0.036	0.275	0.000	0.007
1150	-34.341	2	-0.011	2	0.002	0.017	0.016	0.036	0.275	0.000	0.006
262	-2.473	1	-0.002	1	0.000	0.020	0.014	0.033	0.251	0.001	0.007
760	-2.473	1	-0.002	1	0.000	0.020	0.014	0.033	0.251	0.001	0.008
190	-2.473	1	-0.002	1	0.000	0.014	0.020	0.033	0.247	0.001	0.010
662	-2.473	1	-0.002	1	0.000	0.014	0.020	0.033	0.247	0.001	0.010
624	-4.224	1	-0.004	1	0.001	0.011	0.030	0.033	0.267	0.001	0.008
643	-28.378	1	-0.026	1	0.003	0.018	0.011	0.030	0.245	0.000	0.008
234	-2.473	1	-0.008	1	0.008	0.016	0.014	0.030	0.188	0.000	0.004
517	150.588	7	0.176	7	0.001	0.009	0.020	0.030	0.752	0.001	0.007
236	-2.473	1	-0.002	1	0.000	0.012	0.018	0.028	0.206	0.000	0.011
258	-2.473	1	-0.003	1	0.000	0.021	0.007	0.028	0.208	0.001	0.008
1153	88.924	2	0.023	2	0.002	0.012	0.014	0.028	0.217	0.000	0.007
1154	-88.924	3	-0.023	3	0.002	0.012	0.014	0.026	0.217	0.000	0.007
644	-177.654	4	-0.158	4	0.000	0.018	0.011	0.027	0.245	0.001	0.022
288	-2.473	1	-0.002	1	0.000	0.013	0.012	0.026	0.166	0.000	0.001
226	-2.473	1	-0.002	1	0.000	0.013	0.012	0.025	0.166	0.000	0.004
495	-0.470	1	-0.006	1	0.003	0.016	0.006	0.024	0.236	0.000	0.017
279	-2.473	1	-0.002	1	0.000	0.015	0.008	0.024	0.187	0.000	0.008

	Member	Duct Size	Temperature (°F)		Axial (ksi)	Load Case	y Shear (ksi)	Load Case	z Shear (ksi)	Load Case	y top Bending (ksi)	Load Case	y bot Bending (ksi)	Load Case	z top Bending (ksi)	Load Case	z bot Bending (ksi)	Load Case	Torque (in-k)	Load Case	Torsional Shear (ksi)	Load Case	D-2250 f_a/F_a	f_b/F_b	f_v/F_v	D-2290 Equation 11 $f_a/F_a + f_b/F_b + f_v/F_v \le 1$	f_t (ksi)	D-2290 Equation 12 $(f_t/F_t)^2 + (f_v/F_v)^2$	D-2270 Equation 14 f_v/F_v
272	M28	8in Dia. Duct	300	Sec 1-min	0.000	1	-0.012	1	-0.013	4	0.149	1	-0.107	8	-0.114	5	-0.113	4	-2.473	1	-0.002	1	0.000	0.015	0.009	0.024	0.187	0.000	0.007
278	M28	8in Dia. Duct	300	Sec 3-min	0.000	1	-0.041	1	-0.040	4	-0.110	1	0.037	6	-0.152	4	-0.140	5	-2.473	1	-0.002	1	0.000	0.008	0.012	0.022	0.152	0.000	0.008
406	M55	8in Dia. Duct	200	Sec 3-min	0.000	1	0.030	1	-0.170	2	-0.230	1	0.217	3	-0.102	8	-0.086	7	-248.425	4	-0.216	4	0.000	0.016	0.008	0.021	0.230	0.001	0.043
1156	M114	12in Dia. Duct	77	Sec 3-max	0.022	1	0.033	2	0.030	5	0.134	3	0.134	2	0.047	4	0.167	5	66.024	2	0.023	2	0.008	0.009	0.011	0.021	0.167	0.000	0.006
1158	M114	12in Dia. Duct	77	Sec 3-max	0.022	8	-0.033	3	-0.030	4	-0.134	3	-0.134	3	-0.167	5	-0.047	4	-66.024	3	-0.023	3	0.002	0.008	0.011	0.021	0.167	0.000	0.006
236	M24	8in Dia. Duct	575	Sec 2-min	0.000	1	0.019	3	-0.019	5	-0.133	4	0.132	1	-0.117	4	-0.117	5	-2.473	1	-0.002	1	0.000	0.011	0.009	0.020	0.133	0.000	0.003
242	M26	8in Dia. Duct	575	Sec 1-min	0.000	1	0.020	1	-0.020	5	-0.124	8	0.123	1	-0.107	4	-0.106	5	-2.473	1	-0.002	1	0.000	0.010	0.008	0.018	0.124	0.000	0.004
320	M32	8in Dia. Duct	575	Sec 5-min	0.000	1	-0.016	8	-0.014	4	-0.124	8	0.123	1	-0.107	4	-0.106	5	-2.473	1	-0.002	1	0.000	0.010	0.006	0.016	0.124	0.000	0.003
266	M27	8in Dia. Duct	300	Sec 3-min	0.000	1	0.016	1	-0.016	5	0.116	8	-0.116	1	-0.107	6	-0.107	4	-2.473	1	-0.002	1	0.000	0.008	0.008	0.016	0.116	0.000	0.006
310	M32	8in Dia. Duct	575	Sec 6-min	0.000	1	-0.016	6	-0.013	4	-0.110	8	0.116	1	-0.102	4	-0.101	5	-2.473	1	-0.002	1	0.000	0.009	0.008	0.016	0.116	0.000	0.002
316	M22	8in Dia. Duct	575	Sec 2-min	0.000	1	-0.014	6	-0.012	4	-0.113	4	0.112	1	-0.097	4	-0.097	5	-2.473	1	-0.002	1	0.000	0.009	0.009	0.017	0.113	0.000	0.002
216	M22	8in Dia. Duct	650	Sec 3-max	0.000	1	0.050	6	-0.040	5	-0.162	1	0.101	7	-0.107	4	-0.106	5	-2.473	1	-0.002	1	0.000	0.008	0.006	0.017	0.166	0.000	0.007
403	M55	8in Dia. Duct	300	Sec 2-max	0.023	7	-0.037	4	0.016	7	-0.144	5	0.144	3	0.072	6	0.072	8	-0.470	1	-0.008	1	0.003	0.008	0.008	0.016	0.144	0.000	0.006
266	M28	8in Dia. Duct	300	Sec 4-min	0.000	1	0.007	1	-0.061	8	0.087	1	-0.100	6	-0.016	3	-0.015	2	-2.473	1	-0.002	1	0.000	0.019	0.001	0.016	0.100	0.000	0.010
216	M23	8in Dia. Duct	650	Sec 4-max	0.000	1	0.035	6	-0.033	5	0.110	1	-0.111	7	-0.080	6	-0.080	4	-2.473	1	-0.002	1	0.000	0.008	0.007	0.016	0.111	0.000	0.006
214	M32	8in Dia. Duct	575	Sec 2-min	0.000	1	-0.013	5	-0.011	4	-0.109	8	0.107	1	-0.093	4	-0.093	5	-2.473	1	-0.002	1	0.000	0.009	0.007	0.016	0.109	0.000	0.002
936	M101	8in Dia. Duct	575	Sec 5-max	0.003	8	-0.012	1	0.010	5	-0.103	1	0.104	8	0.080	5	0.080	4	143.718	8	0.126	8	0.000	0.008	0.007	0.016	0.104	0.000	0.019
940	M101	8in Dia. Duct	575	Sec 6-max	-0.003	8	-0.012	1	-0.010	4	-0.104	6	0.103	1	-0.080	4	-0.080	5	-2.473	1	-0.002	1	0.000	0.008	0.007	0.016	0.104	0.000	0.002
312	M32	8in Dia. Duct	575	Sec 1-min	0.000	1	-0.012	8	-0.010	4	-0.104	6	0.103	1	-0.080	4	-0.080	5	-2.473	1	-0.002	1	0.000	0.008	0.007	0.015	0.104	0.000	0.002
1157	M114	12in Dia. Duct	77	Sec 4-max	0.018	1	0.027	3	0.023	8	0.086	3	0.085	2	0.008	4	0.128	5	66.024	2	0.023	2	0.002	0.006	0.008	0.015	0.128	0.000	0.006
1159	M114	12in Dia. Duct	77	Sec 4-min	0.018	8	-0.027	2	-0.023	4	-0.095	7	-0.095	3	-0.128	5	-0.008	4	-66.024	3	-0.023	3	0.002	0.009	0.009	0.019	0.128	0.000	0.006
937	M101	8in Dia. Duct	575	Sec 4-max	0.002	8	-0.006	1	0.006	5	-0.092	1	0.094	8	0.080	5	0.081	4	143.718	8	0.126	8	0.006	0.007	0.006	0.014	0.094	0.000	0.016
938	M101	8in Dia. Duct	575	Sec 4-min	-0.003	8	-0.008	1	-0.008	4	-0.084	6	0.082	1	-0.081	4	-0.080	5	-2.473	1	-0.002	1	0.000	0.007	0.006	0.014	0.084	0.000	0.002
238	M24	8in Dia. Duct	575	Sec 4-min	0.000	1	0.008	3	-0.008	5	-0.083	8	0.082	1	-0.081	4	-0.081	5	-2.473	1	-0.002	1	0.000	0.007	0.006	0.014	0.083	0.000	0.002
404	M55	8in Dia. Duct	300	Sec 2-min	0.000	1	-0.037	2	-0.016	8	-0.144	3	0.144	5	-0.072	8	-0.072	8	-248.425	4	-0.216	4	0.000	0.009	0.008	0.014	0.144	0.001	0.026
935	M101	8in Dia. Duct	575	Sec 2-max	0.002	8	-0.009	1	0.005	5	-0.095	1	0.095	8	0.074	5	0.074	4	143.718	8	0.126	8	0.000	0.007	0.006	0.013	0.095	0.000	0.018
930	M101	8in Dia. Duct	575	Sec 3-min	-0.002	8	-0.006	1	-0.006	4	-0.064	8	0.065	1	-0.074	4	-0.074	5	-2.473	1	-0.002	1	0.000	0.007	0.006	0.013	0.044	0.000	0.001
520	M50	8in Dia. Duct	300	Sec 6-max	0.025	7	-0.032	4	0.022	8	-0.060	4	0.060	1	0.062	6	0.062	8	-28.376	1	-0.028	1	0.003	0.005	0.004	0.012	0.060	0.000	0.006
941	M70	8in Dia. Duct	300	Sec 1-max	0.025	7	-0.032	1	0.023	6	-0.046	4	0.060	5	0.062	6	0.062	8	-28.376	1	-0.028	1	0.003	0.006	0.004	0.012	0.060	0.000	0.006
933	M101	8in Dia. Duct	575	Sec 2-max	0.000	8	-0.003	1	0.003	5	-0.061	1	0.062	8	0.070	5	0.071	4	143.718	8	0.128	8	0.000	0.007	0.005	0.012	0.062	0.000	0.019
934	M101	8in Dia. Duct	575	Sec 2-min	0.000	8	-0.003	1	-0.001	4	-0.062	8	0.061	1	-0.071	4	-0.070	5	-2.473	1	-0.002	1	0.000	0.007	0.006	0.012	0.062	0.000	0.001
931	M101	8in Dia. Duct	575	Sec 1-max	0.000	1	0.000	1	0.000	1	-0.079	1	0.080	6	0.060	5	0.060	4	143.718	8	0.126	8	0.000	0.008	0.004	0.012	0.080	0.000	0.019
240	M24	8in Dia. Duct	575	Sec 5-min	0.000	1	0.000	1	0.000	1	-0.080	8	0.079	1	-0.060	4	-0.060	5	-2.473	1	-0.002	1	0.000	0.006	0.006	0.012	0.080	0.000	0.000
932	M101	8in Dia. Duct	575	Sec 1-min	0.000	1	0.000	1	0.000	1	-0.080	8	0.079	1	-0.060	4	-0.060	5	-2.473	1	-0.002	1	0.000	0.006	0.006	0.012	0.080	0.000	0.000
1161	M115	12in Dia. Duct	77	Sec 1-max	0.016	4	0.024	5	0.022	3	-0.027	4	0.083	8	0.056	2	0.046	3	30.802	2	0.017	2	0.002	0.006	0.003	0.011	0.083	0.000	0.005
527	M50	8in Dia. Duct	200	Sec 4-max	0.024	7	-0.031	4	0.022	8	-0.075	4	0.075	1	0.053	8	0.053	8	-28.376	1	-0.028	1	0.003	0.005	0.003	0.011	0.075	0.000	0.006
1162	M115	12in Dia. Duct	77	Sec 1-min	0.012	8	-0.010	4	-0.022	3	-0.083	5	0.027	4	-0.355	3	-0.056	2	-60.802	3	-0.017	3	0.001	0.006	0.003	0.011	0.083	0.000	0.004
1150	M114	12in Dia. Duct	77	Sec 6-max	0.015	1	0.022	2	0.018	5	0.048	3	0.046	2	-0.027	4	0.083	5	66.024	2	0.023	2	0.001	0.003	0.006	0.010	0.083	0.000	0.008
1160	M114	12in Dia. Duct	77	Sec 5-min	0.015	8	-0.012	3	-0.016	4	-0.048	2	-0.046	3	-0.083	5	0.027	4	-66.024	3	-0.023	3	0.001	0.003	0.006	0.010	0.083	0.000	0.008
274	M28	8in Dia. Duct	300	Sec 2-min	0.000	1	-0.030	1	-0.030	4	0.040	1	-0.111	8	-0.016	8	-0.014	4	-2.473	1	-0.002	1	0.000	0.008	0.001	0.010	0.111	0.000	0.004
1163	M115	12in Dia. Duct	77	Sec 2-max	0.019	4	0.027	3	0.021	3	-0.030	4	0.083	5	0.049	2	0.049	3	30.802	2	0.017	2	0.002	0.005	0.003	0.010	0.083	0.000	0.004
758	M42	8in Dia. Duct	300	Sec 4-min	0.000	1	-0.025	8	-0.018	4	-0.066	6	0.058	1	-0.038	4	-0.038	5	-2.473	1	-0.002	1	0.000	0.007	0.003	0.010	0.066	0.000	0.004
1164	M115	12in Dia. Duct	77	Sec 3-min	0.012	5	-0.016	4	-0.021	2	-0.066	6	0.030	4	-0.046	3	-0.046	2	-60.802	3	-0.017	3	0.001	0.006	0.003	0.010	0.066	0.000	0.004
525	M50	8in Dia. Duct	300	Sec 3-max	0.034	7	-0.020	4	0.021	8	-0.062	3	0.062	1	0.044	6	0.044	8	-28.376	1	-0.028	1	0.003	0.004	0.003	0.009	0.062	0.000	0.006
530	M50	8in Dia. Duct	300	Sec 5-min	0.000	1	-0.032	8	-0.023	8	-0.060	1	0.060	4	-0.062	8	-0.062	8	-177.654	4	-0.156	4	0.000	0.006	0.004	0.008	0.060	0.000	0.021
942	M70	8in Dia. Duct	300	Sec 1-min	0.000	1	-0.032	4	-0.023	8	-0.049	1	0.049	4	-0.067	8	-0.062	8	-177.654	4	-0.156	4	0.000	0.006	0.004	0.009	0.066	0.000	0.021
1165	M115	12in Dia. Duct	77	Sec 3-max	0.015	4	0.021	5	0.020	3	-0.033	4	0.076	5	0.041	3	0.041	3	30.802	2	0.017	2	0.001	0.006	0.003	0.009	0.076	0.000	0.004
1166	M115	12in Dia. Duct	77	Sec 3-min	0.011	5	-0.008	4	-0.030	2	-0.076	5	0.033	4	-0.041	3	-0.041	2	-60.802	3	-0.017	3	0.001	0.006	0.003	0.009	0.076	0.000	0.004
530	M60	8in Dia. Duct	300	Sec 4-min	0.020	1	-0.021	5	-0.022	8	-0.075	1	0.073	4	-0.063	8	-0.063	8	-177.654	4	-0.156	4	0.000	0.006	0.003	0.008	0.075	0.000	0.021
523	M50	8in Dia. Duct	300	Sec 2-max	0.023	7	-0.028	4	0.020	8	-0.060	3	0.050	1	0.036	6	0.035	8	-28.376	1	-0.028	1	0.003	0.003	0.002	0.008	0.060	0.000	0.006
1167	M115	12in Dia. Duct	77	Sec 4-max	0.014	4	0.020	5	0.019	3	-0.036	4	0.071	5	0.034	2	0.034	3	30.802	2	0.017	2	0.001	0.004	0.002	0.008	0.071	0.000	0.004
468	M54	8in Dia. Duct	300	Sec 5-max	0.021	7	-0.026	7	0.015	6	-0.058	7	0.050	4	0.026	6	0.026	8	-0.470	1	-0.008	1	0.002	0.004	0.002	0.008	0.058	0.000	0.004
461	M56	8in Dia. Duct	300	Sec 1-max	0.021	7	-0.020	4	0.015	7	-0.060	8	0.056	4	0.020	6	0.020	8	-0.470	1	-0.008	1	0.002	0.004	0.003	0.008	0.060	0.000	0.004
1171	M116	12in Dia. Duct	77	Sec 1-max	0.013	4	0.025	5	0.016	3	-0.030	8	0.066	8	0.040	2	0.040	3	25.831	2	0.008	2	0.001	0.004	0.003	0.008	0.066	0.000	0.004
230	M26	8in Dia. Duct	575	Sec 5-min	0.000	1	-0.021	1	-0.020	4	-0.047	1	0.030	8	-0.020	4	-0.080	5	-2.473	1	-0.003	1	0.000	0.004	0.004	0.006	0.050	0.000	0.003
762	M42	8in Dia. Duct	300	Sec 1-min	0.000	1	0.019	6	-0.021	5	-0.047	1	0.030	8	-0.050	4	-0.050	5	-2.473	1	-0.002	1	0.000	0.004	0.004	0.008	0.050	0.000	0.003
1168	M116	12in Dia. Duct	77	Sec 4-min	0.010	5	-0.306	4	-0.218	2	-0.071	5	0.036	4	-0.034	3	-0.034	2	-50.842	3	-0.017	3	0.001	0.004	0.002	0.008	0.071	0.000	0.004
467	M54	8in Dia. Duct	300	Sec 4-max	0.021	7	-0.026	7	0.014	8	-0.064	7	0.064	4	0.027	6	0.027	8	-0.470	1	-0.008	1	0.002	0.003	0.002	0.008	0.064	0.000	0.004
1169	M116	12in Dia. Duct	77	Sec 5-max	0.013	4	0.016	6	0.016	3	-0.030	8	0.066	8	0.028	3	0.028	3	80.802	2	0.017	2	0.001	0.004	0.002	0.007	0.066	0.000	0.004
1172	M116	12in Dia. Duct	77	Sec 1-min	0.005	5	0.005	4	-0.018	3	-0.066	8	0.030	6	-0.040	3	-0.040	2	-25.831	3	-0.008	3	0.000	0.004	0.003	0.007	0.066	0.000	0.009
1173	M116	12in Dia. Duct	77	Sec 2-max	0.012	4	0.024	5	0.017	3	-0.037	5	0.057	5	0.034	2	0.034	3	25.831	2	0.008	2	0.001	0.004	0.002	0.007	0.057	0.000	0.004
465	M54	8in Dia. Duct	300	Sec 3-max	0.020	7	-0.026	7	0.014	6	-0.048	7	0.048	4	0.024	6	0.024	8	-0.470	1	-0.008	1	0.002	0.003	0.002	0.007	0.048	0.000	0.004
1170	M116	12in Dia. Duct	77	Sec 5-min	0.010	5	-0.007	4	-0.016	3	-0.066	8	0.030	8	-0.026	3	-0.028	2	-80.802	3	-0.017	3	0.001	0.004	0.002	0.007	0.066	0.000	0.004
521	M50	8in Dia. Duct	300	Sec 1-max	0.023	7	-0.027	4	0.016	8	-0.030	3	0.030	1	0.027	6	0.027	8	-28.376	1	-0.026	1	0.003	0.002	0.002	0.007	0.030	0.000	0.008
526	M56	8in Dia. Duct	300	Sec 3-min	0.000	1	-0.020	6	-0.021	8	-0.062	1	0.062	3	-0.044	6	-0.044	8	-177.654	4	-0.156	4	0.000	0.004	0.003	0.007	0.062	0.000	0.020
463	M54	8in Dia. Duct	300	Sec 2-max	0.020	7	-0.026	7	0.014	6	-0.043	7	0.043	4	0.022	8	0.022	8	-0.470	1	-0.008	1	0.002	0.003	0.001	0.006	0.043	0.000	0.004
1174	M116	12in Dia. Duct	77	Sec 2-min	0.004	5	0.005	4	-0.017	2	-0.047	8	0.037	8	-0.034	3	-0.034	2	-25.831	3	-0.008	3	0.000	0.004	0.002	0.006	0.047	0.000	0.003
1175	M116	12in Dia. Duct	77	Sec 3-max	0.011	4	0.022	5	0.016	3	-0.036	8	0.040	8	0.028	2	0.028	3	25.831	2	0.008	2	0.001	0.003	0.002	0.006	0.040	0.000	0.003
461	M54	8in Dia. Duct	300	Sec 1-max	0.020	7	-0.027	7	0.013	6	-0.036	2	0.030	4	0.016	6	0.016	8	-0.470	1	-0.008	1	0.002	0.003	0.001	0.006	0.036	0.000	0.004
466	M54	8in Dia. Duct	300	Sec 5-min	0.000	1	-0.020	8	-0.016	8	-0.066	4	0.050	7	-0.020	6	-0.020	8	-248.425	4	-0.216	4	0.000	0.004	0.002	0.006	0.066	0.001	0.027
462	M55	8in Dia. Duct	300	Sec 1-min	0.020	1	-0.029	2	-0.015	8	-0.050	4	0.050	5	-0.020	8	-0.020	8	-248.425	4	-0.216	4	0.000	0.004	0.002	0.006	0.050	0.001	0.027
524	M56	8in Dia. Duct	200	Sec 2-min	0.000	1	-0.028	5	-0.020	8	-0.050	1	0.050	3	-0.035	8	-0.035	6	-177.654	4	-0.156	4	0.000	0.003	0.002	0.005	0.050	0.000	0.020
660	M63	8in Dia. Duct	200	Sec 6-min	-0.010	8	-0.027	1	-0.010	8	-0.030	8	0.030	4	-0.027	8	-0.027	8	-177.654	4	-0.156	4	0.001	0.002	0.002	0.006	0.030	0.000	0.020
638	M63	8in Dia. Duct	300	Sec 5-max	0.010	7	-0.027	1	0.016	8	-0.030	8	0.030	8	0.027	8	0.027	8	-28.376	1	-0.028	1	0.001	0.002	0.002	0.005	0.030	0.000	0.006
1176	M116	12in Dia. Duct	77	Sec 3-min	0.006	5	0.005	4	-0.010	2	-0.040	8	0.036	6	-0.020	3	-0.020	2	-25.831	3	-0.008	3	0.000	0.003	0.002	0.005	0.040	0.000	0.003
1177	M116	12in Dia. Duct	77	Sec 4-max	0.011	4	0.020	6	0.014	3	-0.033	8	0.042	8	0.024	2	0.024	3	25.831	2	0.008	2	0.001	0.003	0.002	0.005	0.042	0.000	0.003
446	M54	8in Dia. Duct	200	Sec 4-min	0.000	1	-0.028	8	-0.014	8	-0.054	4	0.054	7	-0.027	8	-0.027	6	-248.425	4	-0.216	4	0.000	0.003	0.002	0.005	0.054	0.001	0.027
1176	M116	12in Dia. Duct	77	Sec 4-min	0.004	5	0.006	4	-0.014	2	-0.042	8	0.033	6	-0.024	3	-0.024	2	-25.831	3	-0.008	3	0.000	0.003	0.002	0.005	0.042	0.000	0.003
468	M54	8in Dia. Duct	300	Sec 3-min	0.000	1	-0.026	8	-0.014	8	-0.048	4	0.048	7	-0.024	6	-0.024	6	-248.425	4	-0.216	4	0.000	0.003	0.002	0.005	0.046	0.001	0.027
1181	M117	12in Dia. Duct	77	Sec 1-max	0.007	4	0.030	8	0.013	3	-0.031	8	0.030	8	0.025	2	0.025	3	8.803	2	0.003	2	0.001	0.002	0.002	0.005	0.030	0.000	0.003
208	M21	8in Dia. Duct	650	Sec 3-min	0.000	1	-0.029	1	-0.029	4	-0.034	7	0.034	1	-0.027	4	-0.027	5	-2.473	1	-0.002	1	0.000	0.003	0.002	0.005	0.034	0.000	0.011
640	M61	8in Dia. Duct	200	Sec 6-min	-0.007	8	-0.027	1	-0.013	8	-0.030	1	0.030	1	-0.019	8	-0.018	6	-1474.961	8	-1.294	8	0.001	0.002	0.001	0.004	0.030	0.022	0.146
650	M62	8in Dia. Duct	300	Sec 5-min	-0.007	8	-0.027	1	-0.013	8	-0.030	1	0.030	1	-0.019	8	-0.019	6	-1083.584	8	-0.960	8	0.001	0.002	0.001	0.004	0.030	0.012	0.106
470	M52	8in Dia. Duct	300	Sec 5-min	-0.007	8	-0.027	1	-0.013	8	-0.030	1	0.030	1	-0.019	8	-0.019	8	-248.425	4	-0.216	4	0.001	0.002	0.001	0.004	0.030	0.001	0.027
630	M61	8in Dia. Duct	200	Sec 6-max	0.007	7	-0.027	1	0.013	8	-0.030	1	0.030	1	0.019	6	0.019	6	-16.143	1	-0.013	1	0.001	0.002	0.001	0.004	0.030	0.000	0.004
469	M52	8in Dia. Duct	200	Sec 6-max	0.007	7	-0.027	1	0.013	8	-0.030	1	0.030	1	0.019	8	0.019	8	-0.470	1	-0.008	1	0.001	0.002	0.001	0.004	0.030	0.000	0.004
649	M62	8in Dia. Duct	200	Sec 6-max	0.007	7	-0.027	1	0.013	6	-0.030	1	0.030	1	0.019	8	0.019	8	-4.967	1	-0.004	1	0.001	0.002	0.001	0.004	0.030	0.000	0.003
1179	M116	12in Dia. Duct	77	Sec 6-max	0.010	4	0.016	5	0.013	3	-0.031	8	0.030	8	0.016	2	0.016	3	25.831	2	0.008	2	0.001	0.002	0.001	0.004	0.030	0.000	0.003
522	M58	8in Dia. Duct	300	Sec 1-min	0.000	1	-0.027	5	-0.016	8	-0.030	1	0.030	3	-0.027	8	-0.027	8	-177.654	4	-0.156	4	0.000	0.002	0.002	0.004	0.030	0.000	0.020
464	M54	8in Dia. Duct	300	Sec 2-min	0.000	1	-0.026	8	-0.014	8	-0.043	4	0.043	7	-0.022	8	-0.022	6	-248.425	4	-0.216	4	0.000	0.003	0.001	0.004	0.043	0.001	0.027
246	M25	8in Dia. Duct	575	Sec 2-min	0.000	1	0.004	1	-0.007	5	0.022	1	-0.029	8	-0.021	5	-0.021	4	-2.473	1	-0.002	1	0.000	0.002	0.002	0.004	0.029	0.000	0.001
1180	M116	12in Dia. Duct	77	Sec 6-min	0.004	5	0.006	4	-0.013	2	-0.036	8	0.031	6	-0.019	3	-0.019	2	-25.831	3	-0.006	3	0.000	0.002	0.001	0.004	0.036	0.000	0.002
1182	M117	12in Dia. Duct	77	Sec 1-min	0.000	5	0.013	4	-0.013	2	-0.036	8	0.031	6	-0.025	3	-0.025	2	-8.803	3	-0.003	3	0.000	0.003	0.002	0.004	0.036	0.000	0.002
1183	M117	12in Dia. Duct	77	Sec 2-max	0.007	8	0.016	8	0.012	3	-0.027	8	0.030	5	0.030	2	0.020	3	8.803	2	0.003	2	0.001	0.003	0.001	0.004	0.030	0.000	0.002
462	M54	8in Dia. Duct	300	Sec 1-min	0.000	1	-0.027	8	-0.013	8	-0.030	4	0.030	2	-0.010	8	-0.010	8	-248.425	4	-0.216	4	0.000	0.003	0.001	0.004	0.030	0.001	0.027

	Member	Duct Size	Temperature (°F)		Axial (ksi)	Load Case	y Shear (ksi)	Load Case	z Shear (ksi)	Load Case	y inp Bending (ksi)	Load Case	y out Bending (ksi)	Load Case	z inp Bending (ksi)	Load Case	z out Bending (ksi)	Load Case	Torque (in-lb)	Load Case	Torsional Shear (ksi)	Load Case	f_a/F_a	f_b/F_b	f_v/F_v	D-2230 Equation 11 $f_a/F_a + f_b/F_b + f_v/F_v \le 1$	f_t (ksi)	D-2230 Equation 13 $(f_t/F_t)^2 + (f_v/F_v)^2$	D-2270 Equation 14
756	M62	8in Dia. Duct	300	Sec 2 - min	0.000	1	-0.011	6	-0.009	4	0.004	6	-0.020	1	-0.025	5	-0.026	4	-2.473	1	-0.002	1	0.000	0.002	0.002	0.004	0.026	0.000	0.002
326	M23	6in Dia. Duct	575	Sec 4 - min	0.000	1	-0.045	6	-0.041	4	-0.024	6	0.024	1	-0.021	4	-0.020	5	-2.473	1	-0.002	1	0.000	0.002	0.002	0.004	0.024	0.000	0.007
754	M62	8in Dia. Duct	300	Sec 2 - min	0.000	1	0.004	6	-0.008	5	0.021	6	-0.023	1	-0.021	5	-0.021	4	-2.473	1	-0.002	1	0.000	0.002	0.002	0.003	0.023	0.000	0.001
246	M25	8in Dia. Duct	575	Sec 2 - min	0.000	5	0.017	5	-0.018	6	-0.023	1	0.021	6	-0.018	4	-0.018	5	-2.473	1	-0.002	1	0.000	0.002	0.001	0.003	0.023	0.000	0.003
1164	M117	12in Dia. Duct	77	Sec 2 - min	0.000	7	0.012	6	-0.012	2	-0.020	6	0.027	6	-0.020	3	-0.020	2	-6.803	3	-0.003	3	0.000	0.002	0.001	0.003	0.030	0.000	0.002
856	M93	8in Dia. Duct	200	Sec 4 - min	-0.007	6	-0.020	1	-0.014	6	-0.022	6	0.022	4	-0.015	6	-0.015	6	-177.954	4	-0.156	4	0.001	0.001	0.001	0.002	0.022	0.000	0.019
837	M62	8in Dia. Duct	200	Sec 4 - max	0.007	7	-0.020	1	0.014	6	-0.022	4	0.022	6	0.015	6	0.015	6	-29.376	1	-0.026	1	0.001	0.001	0.001	0.003	0.022	0.000	0.006
1165	M117	12in Dia. Duct	77	Sec 3 - max	0.000	6	0.016	6	0.011	3	-0.023	5	0.024	4	0.016	2	0.016	3	6.803	2	0.003	2	0.001	0.002	0.001	0.003	0.024	0.000	0.002
1167	M117	12in Dia. Duct	77	Sec 4 - max	0.000	6	0.015	6	0.010	3	-0.018	5	0.021	4	0.013	2	0.013	3	6.803	2	0.003	2	0.001	0.001	0.001	0.003	0.021	0.000	0.002
304	M27	8in Dia. Duct	500	Sec 3 - min	0.000	1	0.032	1	-0.030	5	-0.031	6	0.000	1	-0.002	5	-0.003	4	-2.473	1	-0.002	1	0.000	0.002	0.000	0.003	0.031	0.000	0.006
838	M91	8in Dia. Duct	200	Sec 4 - min	-0.005	6	-0.020	1	-0.016	6	-0.022	1	0.022	1	-0.011	6	-0.011	6	+1474.961	6	+1.294	6	0.001	0.001	0.001	0.003	0.022	0.022	0.144
848	M62	8in Dia. Duct	200	Sec 4 - min	-0.005	6	-0.020	1	-0.010	6	-0.022	1	0.022	1	-0.011	6	-0.011	6	+1083.564	6	-0.960	6	0.001	0.001	0.001	0.003	0.022	0.012	0.108
466	M53	8in Dia. Duct	200	Sec 4 - min	-0.006	6	-0.020	1	-0.010	6	-0.022	1	0.022	1	-0.011	6	-0.011	6	-246.425	4	-0.216	4	0.001	0.001	0.001	0.003	0.022	0.001	0.030
837	M91	8in Dia. Duct	200	Sec 4 - max	0.006	7	-0.020	1	0.010	6	-0.022	1	0.022	1	0.011	6	0.011	6	+15.143	1	-0.013	1	0.001	0.001	0.001	0.003	0.022	0.000	0.004
467	M52	8in Dia. Duct	200	Sec 4 - max	0.006	7	-0.020	1	0.010	6	-0.022	1	0.022	1	0.011	6	0.011	6	-6.479	1	-0.006	1	0.001	0.001	0.001	0.003	0.022	0.000	0.003
847	M92	8in Dia. Duct	200	Sec 4 - max	0.005	7	-0.020	1	0.010	6	-0.022	1	0.022	1	0.011	6	0.011	6	-4.657	1	-0.004	1	0.001	0.001	0.001	0.003	0.022	0.000	0.003
246	M25	6in Dia. Duct	575	Sec 4 - min	0.000	1	-0.006	1	-0.006	4	0.015	1	-0.023	6	-0.010	5	-0.010	4	-2.473	1	-0.002	1	0.000	0.002	0.001	0.003	0.023	0.000	0.001
1166	M117	12in Dia. Duct	77	Sec 3 - min	0.000	7	0.011	6	-0.011	2	-0.024	4	0.023	5	-0.018	3	-0.018	2	-6.803	3	-0.003	3	0.000	0.002	0.001	0.003	0.024	0.000	0.002
1160	M117	12in Dia. Duct	77	Sec 6 - max	0.000	6	0.013	6	0.010	3	-0.013	6	0.017	4	0.010	2	0.010	3	6.803	2	0.003	2	0.000	0.001	0.001	0.002	0.017	0.000	0.002
1164	M117	12in Dia. Duct	77	Sec 4 - min	0.000	7	0.010	6	-0.010	2	-0.021	4	0.010	5	-0.013	3	-0.013	2	-6.803	3	-0.003	3	0.000	0.001	0.001	0.002	0.021	0.000	0.001
1192	M118	12in Dia. Duct	77	Sec 1 - min	-0.003	6	0.011	7	-0.009	2	-0.017	4	0.013	5	-0.012	3	-0.012	2	-2.071	3	0.000	3	0.000	0.001	0.001	0.002	0.017	0.000	0.001
1191	M118	12in Dia. Duct	77	Sec 1 - max	0.002	6	0.012	6	0.006	3	-0.013	6	0.017	4	0.012	2	0.012	3	2.071	2	0.000	2	0.000	0.001	0.001	0.002	0.017	0.000	0.001
1190	M117	12in Dia. Duct	77	Sec 6 - min	0.000	7	0.009	6	-0.008	2	-0.017	4	0.013	5	-0.010	3	-0.010	2	-6.803	3	-0.003	3	0.000	0.001	0.001	0.002	0.017	0.000	0.001
1194	M118	12in Dia. Duct	77	Sec 2 - min	-0.003	6	0.010	7	-0.008	2	-0.013	4	0.010	5	-0.009	3	-0.009	2	-2.071	3	0.000	3	0.000	0.001	0.001	0.002	0.013	0.000	0.001
856	M93	8in Dia. Duct	200	Sec 3 - min	-0.006	6	-0.013	1	-0.010	6	-0.010	6	0.010	4	-0.007	6	-0.007	6	+177.954	4	-0.156	4	0.001	0.001	0.000	0.002	0.010	0.000	0.016
855	M93	8in Dia. Duct	200	Sec 3 - max	0.005	7	-0.013	1	0.010	6	-0.010	6	0.010	4	0.007	6	0.007	6	-29.376	1	-0.026	1	0.001	0.001	0.000	0.002	0.010	0.000	0.004
1193	M118	12in Dia. Duct	77	Sec 2 - max	0.002	6	0.011	6	0.006	3	-0.010	6	0.013	4	0.009	2	0.009	3	2.071	2	0.000	2	0.000	0.001	0.001	0.002	0.013	0.000	0.001
440	M50	6in Dia. Duct	300	Sec 6 - max	0.013	7	0.000	1	0.000	1	0.000	1	0.000	1	0.000	1	0.000	1	+15.143	1	-0.013	1	0.002	0.000	0.000	0.002	0.013	0.000	0.001
376	M41	8in Dia. Duct	200	Sec 6 - max	0.013	2	0.000	1	0.000	1	0.000	1	0.000	1	0.000	1	0.000	1	-4.657	1	-0.004	1	0.002	0.000	0.000	0.002	0.013	0.000	0.000
1196	M118	12in Dia. Duct	77	Sec 3 - min	-0.003	6	0.000	6	-0.007	2	-0.010	4	0.007	6	-0.008	3	-0.008	2	-2.071	3	0.000	3	0.000	0.001	0.000	0.001	0.010	0.000	0.001
839	M91	8in Dia. Duct	200	Sec 3 - min	-0.003	6	-0.013	1	-0.007	6	-0.010	1	0.010	1	-0.005	6	-0.005	6	+1474.961	6	+1.294	6	0.000	0.001	0.000	0.001	0.010	0.022	0.144
846	M62	8in Dia. Duct	200	Sec 3 - min	-0.003	6	-0.013	1	-0.007	6	-0.010	1	0.010	1	-0.005	6	-0.005	6	+1083.564	6	-0.960	6	0.000	0.001	0.000	0.001	0.010	0.012	0.107
466	M52	8in Dia. Duct	200	Sec 3 - min	-0.003	6	-0.012	1	-0.007	6	-0.010	1	0.010	1	-0.005	6	-0.005	6	-246.425	4	-0.216	4	0.000	0.001	0.000	0.001	0.010	0.001	0.025
836	M91	8in Dia. Duct	200	Sec 3 - max	0.003	7	-0.013	1	0.007	6	-0.010	1	0.010	1	0.005	6	0.005	6	+15.143	1	-0.013	1	0.000	0.001	0.000	0.001	0.010	0.000	0.003
465	M52	8in Dia. Duct	200	Sec 3 - max	0.003	7	-0.013	1	0.007	6	-0.010	1	0.010	1	0.005	6	0.005	6	-6.478	1	-0.006	1	0.000	0.001	0.000	0.001	0.010	0.000	0.002
845	M92	8in Dia. Duct	200	Sec 3 - max	0.003	7	-0.013	1	0.007	6	-0.010	1	0.010	1	0.005	6	0.005	6	-4.657	1	-0.004	1	0.000	0.001	0.000	0.001	0.010	0.000	0.002
1185	M118	12in Dia. Duct	77	Sec 3 - max	0.002	4	0.008	4	0.007	3	-0.007	6	0.010	4	0.006	2	0.006	3	2.071	2	0.000	2	0.000	0.001	0.000	0.001	0.010	0.000	0.001
1197	M118	12in Dia. Duct	77	Sec 4 - max	0.002	4	0.006	4	0.006	3	-0.004	6	0.007	4	0.004	3	0.004	3	2.071	2	0.000	2	0.000	0.000	0.000	0.001	0.007	0.000	0.001
1198	M118	12in Dia. Duct	77	Sec 4 - min	-0.002	6	0.007	6	-0.006	2	-0.007	4	0.004	6	-0.004	3	-0.004	2	-2.071	3	0.000	2	0.000	0.000	0.000	0.001	0.007	0.000	0.001
1202	M118	12in Dia. Duct	77	Sec 1 - min	-0.003	6	0.003	5	-0.004	2	-0.006	4	0.002	6	-0.003	3	-0.003	2	0.000	1	0.000	1	0.000	0.000	0.000	0.001	0.006	0.000	0.000
1199	M118	12in Dia. Duct	77	Sec 6 - max	0.002	4	0.006	4	0.004	3	-0.002	6	0.005	4	0.003	2	0.003	3	2.071	2	0.000	2	0.000	0.000	0.000	0.001	0.005	0.000	0.001
1200	M118	12in Dia. Duct	77	Sec 6 - min	-0.002	5	0.006	5	-0.004	2	-0.005	4	0.002	5	-0.003	3	-0.003	2	-2.071	3	0.000	3	0.000	0.000	0.000	0.001	0.006	0.000	0.001
1204	M119	12in Dia. Duct	77	Sec 2 - min	-0.003	6	0.002	5	-0.003	2	-0.003	4	0.001	5	-0.002	3	-0.002	2	0.000	1	0.000	1	0.000	0.000	0.000	0.001	0.003	0.000	0.000
1201	M119	12in Dia. Duct	77	Sec 1 - max	0.000	4	0.007	4	0.004	3	-0.002	5	0.006	4	0.003	2	0.003	3	0.000	1	0.000	1	0.000	0.000	0.000	0.001	0.006	0.000	0.001
844	M93	8in Dia. Duct	200	Sec 2 - min	-0.002	6	-0.007	1	-0.005	6	-0.002	6	0.002	4	-0.002	6	-0.002	6	+177.964	4	-0.156	4	0.000	0.000	0.000	0.000	0.002	0.000	0.016
853	M93	8in Dia. Duct	200	Sec 2 - max	0.002	7	-0.007	1	0.005	6	-0.002	4	0.002	6	0.002	6	0.002	6	-29.376	1	-0.026	1	0.000	0.000	0.000	0.000	0.002	0.000	0.004
834	M91	8in Dia. Duct	200	Sec 2 - min	-0.002	6	-0.007	1	-0.003	6	-0.002	1	0.002	1	-0.001	6	-0.001	6	+1474.961	6	+1.294	6	0.000	0.000	0.000	0.000	0.002	0.022	0.143
844	M62	8in Dia. Duct	200	Sec 2 - min	-0.002	6	-0.007	1	-0.003	6	-0.002	1	0.002	1	-0.001	6	-0.001	6	+1083.564	6	-0.960	6	0.000	0.000	0.000	0.000	0.002	0.012	0.108
464	M52	8in Dia. Duct	200	Sec 2 - min	-0.002	6	-0.007	1	-0.003	6	-0.002	1	0.002	1	-0.001	6	-0.001	6	-246.425	4	-0.216	4	0.000	0.000	0.000	0.000	0.002	0.001	0.025
835	M91	8in Dia. Duct	200	Sec 2 - max	0.002	7	-0.007	1	0.003	6	-0.002	1	0.002	1	0.001	6	0.001	6	+15.143	1	-0.013	1	0.000	0.000	0.000	0.000	0.002	0.000	0.002
463	M52	8in Dia. Duct	200	Sec 2 - max	0.002	7	-0.007	1	0.003	6	-0.002	1	0.002	1	0.001	6	0.001	6	-6.479	1	-0.006	1	0.000	0.000	0.000	0.000	0.002	0.000	0.002
843	M62	8in Dia. Duct	200	Sec 2 - max	0.002	7	-0.007	1	0.003	6	-0.002	1	0.002	1	0.001	6	0.001	6	-4.657	1	-0.004	1	0.000	0.000	0.000	0.000	0.002	0.000	0.001
1203	M119	12in Dia. Duct	77	Sec 2 - max	0.000	4	0.000	4	0.003	3	-0.001	6	0.003	4	0.002	2	0.002	3	0.000	1	0.000	1	0.000	0.000	0.000	0.000	0.003	0.000	0.001
1206	M119	12in Dia. Duct	77	Sec 3 - min	-0.002	5	0.001	5	-0.002	2	-0.001	4	0.000	5	0.000	3	0.000	2	0.000	1	0.000	1	0.000	0.000	0.000	0.000	0.002	0.000	0.000
1205	M119	12in Dia. Duct	77	Sec 3 - max	0.000	4	0.004	4	0.002	3	0.000	5	0.001	4	0.000	2	0.000	3	0.000	1	0.000	1	0.000	0.000	0.000	0.000	0.001	0.000	0.000
450	M50	8in Dia. Duct	200	Sec 5 - min	0.000	1	0.000	1	0.000	1	0.000	1	0.000	1	0.000	1	0.000	1	+1474.961	6	+1.294	6	0.000	0.000	0.000	0.000	0.000	0.022	0.142
832	M91	8in Dia. Duct	200	Sec 1 - min	0.000	1	0.000	1	0.000	1	0.000	1	0.000	1	0.000	1	0.000	1	+1474.961	6	+1.294	6	0.000	0.000	0.000	0.000	0.000	0.022	0.142
380	M41	8in Dia. Duct	200	Sec 5 - min	0.000	1	0.000	1	0.000	1	0.000	1	0.000	1	0.000	1	0.000	1	+1083.564	6	-0.960	6	0.000	0.000	0.000	0.000	0.000	0.012	0.108
842	M62	8in Dia. Duct	200	Sec 1 - min	0.000	1	0.000	1	0.000	1	0.000	1	0.000	1	0.000	1	0.000	1	+1083.564	6	-0.960	6	0.000	0.000	0.000	0.000	0.000	0.012	0.108
462	M53	8in Dia. Duct	200	Sec 1 - min	0.000	1	0.000	1	0.000	1	0.000	1	0.000	1	0.000	1	0.000	1	-246.425	4	-0.216	4	0.000	0.000	0.000	0.000	0.000	0.001	0.024
852	M93	8in Dia. Duct	200	Sec 1 - min	0.000	1	0.000	1	0.000	1	0.000	1	0.000	1	0.000	1	0.000	1	-177.954	4	-0.156	4	0.000	0.000	0.000	0.000	0.000	0.000	0.017
851	M93	8in Dia. Duct	200	Sec 1 - max	0.000	1	0.000	1	0.000	1	0.000	1	0.000	1	0.000	1	0.000	1	-29.376	1	-0.026	1	0.000	0.000	0.000	0.000	0.000	0.000	0.003
831	M91	8in Dia. Duct	200	Sec 1 - max	0.000	1	0.000	1	0.000	1	0.000	1	0.000	1	0.000	1	0.000	1	+15.143	1	-0.013	1	0.000	0.000	0.000	0.000	0.000	0.000	0.001
461	M52	8in Dia. Duct	200	Sec 1 - max	0.000	1	0.000	1	0.000	1	0.000	1	0.000	1	0.000	1	0.000	1	-6.478	1	-0.006	1	0.000	0.000	0.000	0.000	0.000	0.000	0.001
841	M62	8in Dia. Duct	200	Sec 1 - max	0.000	1	0.000	1	0.000	1	0.000	1	0.000	1	0.000	1	0.000	1	-4.657	1	-0.004	1	0.000	0.000	0.000	0.000	0.000	0.000	0.000
1207	M119	12in Dia. Duct	77	Sec 4 - max	0.000	4	0.002	4	0.001	3	0.000	5	0.000	4	0.000	2	0.000	3	0.000	1	0.000	1	0.000	0.000	0.000	0.000	0.000	0.000	0.000
1208	M119	12in Dia. Duct	77	Sec 4 - min	0.000	5	0.000	5	-0.001	2	0.000	4	0.000	5	0.000	3	0.000	2	0.000	1	0.000	1	0.000	0.000	0.000	0.000	0.000	0.000	0.000
871	M06	6in Dia. Duct	575	Sec 1 - max	0.000	1	0.000	1	0.000	1	0.000	1	0.000	1	0.000	1	0.000	1	0.000	1	0.000	1	0.000	0.000	0.000	0.000	0.000	0.000	0.000
872	M06	6in Dia. Duct	575	Sec 1 - min	0.000	1	0.000	1	0.000	1	0.000	1	0.000	1	0.000	1	0.000	1	0.000	1	0.000	1	0.000	0.000	0.000	0.000	0.000	0.000	0.000
1209	M119	12in Dia. Duct	77	Sec 5 - max	0.000	1	0.000	1	0.000	1	0.000	1	0.000	1	0.000	1	0.000	1	0.000	1	0.000	1	0.000	0.000	0.000	0.000	0.000	0.000	0.000
1210	M119	12in Dia. Duct	77	Sec 5 - min	0.000	1	0.000	1	0.000	1	0.000	1	0.000	1	0.000	1	0.000	1	0.000	1	0.000	1	0.000	0.000	0.000	0.000	0.000	0.000	0.000

DMJM H&N | AECOM

ATTACHMENT 6

Calculation No.: 145579-B-CA-023	
Rev. No.: 1	
Calculation Title: DBVS OGTS Bypass Structural Analysis	

RISA 3D Validation & Verification Cover Sheet

DMJMH+N

VERIFICATION & VALIDATION REVIEW AND APPROVAL FORM

SOFTWARE TITLE	DMJM H+N SOFTWARE ID NO.	DMJM H+N COMPUTER ID NO.
RISA-3D Rapid Interactive Structural Analysis – 3 Dimensional	3D03875	102561

VALIDATION PERFORMED BY (Print Name/Sign): James Van Corbach DATE: Nov. 10, 2004

PURPOSE AND SCOPE OF VALIDATION:

PURPOSE:

The purpose of this verification and validation is to ensure RISA-3D produces reliable data consistent with industry standards.

SCOPE:

The scope of this verification and validation includes static analysis of structures for deflection, stress, thermal loading, and "code check" values on standard steel shapes as well as tapered wide flanges and wooden structures.

REQUIREMENTS FOR SOFTWARE (INPUT RANGE, ETC):

Perform standard checks on structures to determine structural adequacy.

REV.	AFFECTED PAGES	REVISION DESCRIPTION	PREPARER	APPROVED BY	DATE:
0	All	Initial V & V	James Van Corbach	Michael R Curtis	1/17/05

DESCRIPTION OF SOFTWARE/USE:

RISA-3D is a three-dimensional structural analysis modeling package used to reduce the length of time necessary to calculate stresses/forces in structures by hand.

ORIGIN OF SOFTWARE: © 2001 RISA Technologies

REVISION	DOCUMENT NUMBER	TITLE	DATE	
N/A	N/A	RISA-3D Rapid Interactive Structural Analysis – 3 Dimensional Verification Problems	N/A	V&V REFERENCE
5.0d	N/A	RISA-3D Rapid Interactive Structural Analysis – 3 Dimensional Version 5.0d User's Guide	©2004	USER MANUAL

METHOD OF SOFTWARE VALIDATION	METHOD OF HARDWARE VALIDATION
A. ☒ COMPARE TO HAND CALCULATIONS B. ☒ COMPARE TO VALIDATED COMPUTER ANALYSIS RESULTS C. ☒ OTHER (DESCRIBE): Compare output to that in the V & V reference which compares previous output to both hand calculations and computer analysis results.	A. ☒ COMPARE TO HAND CALCULATIONS B. ☒ COMPARE TO VALIDATED COMPUTER ANALYSIS RESULTS C. ☒ OTHER (DESCRIBE): Compare output to that in the V & V reference which compares previous output to both hand calculations and computer analysis results.

RESULTS: The Verification and Validation of RISA-3D on DMJMH+N computer # 102561 is acceptable.

ATTACHMENTS

Attachment	Name	Sheets
A	RISA-3D Verification Problems	37
B	RISA Technologies Letter	1

Total number of pages of this V&V, including cover sheets and attachments – 86

DMJM H&N | AECOM

ATTACHMENT 7

Calculation No.: 145579-B-CA-023	
Rev. No.: 1	
Calculation Title: DBVS OGTS Bypass Structural Analysis	

UBC 1997 Seismic Force Evaluation

DMJM H&N | AECOM

UBC 1997—Evaluation and Application of Seismic Force Components in the Design Analysis of PC-2 Duct and Duct Supports

January 2006

Idea DMJM Technology
9250 Port of Benton Blvd.
Richland, WA 99354-1670
Phone: 509.375.7774
Fax: 509.375.8331

The *Demonstration Bulk Vitrification System Specification* (RPP-17403) provides a list of the codes and standards to be applied in the design and analysis of the Demonstration Bulk Vitrification (DBVS) project. The document by direct reference and through another listed reference—*Design Loads for Tank Farm Facilities* [TFC-ENG-STD-06], CH2M HILL Hanford Group, Inc. provides the requirements and design basis information for the structural design and analysis of the DBVS facilities.

Further reference within TFC-ENG-STD-06 (per Section 3.6.5.1) requires earthquake loads applied in the design of PC-2 SSCs to comply with the *1997 Uniform Building Code* (UBC 1997) for Seismic Zone 2B, essential facilities.

The UBC, as indicated in Section 1630.0, "Minimum Design Lateral Forces and Related Effects," describes the general application and requirements for earthquake loads and states in general that the vertical, seismic component may be taken as zero for Allowable Stress Design.

Further review of the UBC reveals in Section 1632 (Eq. 32-2): "Lateral Force on Elements of Structures, Nonstructural components and Equipment Supported by Structures" was determined appropriate for application in establishing the required, seismic forces to be applied in the design of PC-2, ASME AG-1, HVAC systems and support structures. (Information from calculations for the Off-Gas Treatment System Pipe Stress Analysis [i.e., Calculation 145579-V-CA-005] is provided as an example analysis for reference.) In applications, such as those performed in accordance with ASME AG-1, the 1/3 increase in allowable stresses normally permitted under Section 1612.3.3 by the UBC code in the load combinations in Section 1612.3.2 would not be implemented, rather, the load combinations, allowable stresses and deflection limits imposed by ASME AG-1 would be applied in the design, based on the Service Level requirements of the system.

Equation 32-2 from the UBC is evaluated as follows:

F_P = [(ap Ca Ip)/ Rp] [1 + 3 (hx/ hr)] Wp

a_P	= 1.0	(UBC 1997, Table 16-0, Item 3.B, "Electrical, mechanical, and plumbing equipment and associated conduit and ductwork and piping).
Rp	= 3.0	(UBC 1997, Table 16-0, Item 3.B, "Electrical, mechanical, and plumbing equipment and associated conduit and ductwork and piping).
Ca	= 0.24	(Report of Geotechnical Engineering Services, AMEC, Earth & Environmental, Report No. 4-94M-000310-660)
Ip	= 1.5	(UBC 1997, Table 16-K)
hx	= 45.69 ft	(Element or component attachment elevation with respect to grade. Actual dimensional references are from calculation

145579-V-CA-005 for the Off-Gas Treatment System Pipe Stress Analysis)

hr = 42.75 (Structure roof elevation with respect to grade. Actual dimensional references are from calculation 145579-V-CA-005 for the Off-Gas Treatment System Pipe Stress Analysis)

Wp (Weight of element or component)

F_P = 0.50 Wp

Fp not required to be greater than the following:

Fp max = 4.0 Ca Ip Wp (UBC 1997, Eq. 32-3)

Fp max = 1.44 Wp

Fp shall not be less than the following:

Fp min = 0.7 Ca Ip Wp (UBC 1997, Eq. 32-3)

Fp min = 0.25 Wp

Fp = 0.50 Wp would be the total, design lateral seismic force applied in the analysis performed under the UBC code.

The ASCE 7-98 (also a referenced design code in TFC-ENG-STD-06) provides design requirements for analysis of ductwork, as described in Section 9.6.3.10, "HVAC Ductwork." The following equation in Section 9.6.1.3-1 is referenced from Section 9.6.3.10 for determining the seismic forces to be applied in the design of the ductwork and supports. The equation is somewhat similar to that per the UBC, shown as follows:

$F_P = [(0.4\, a_P\, S_{DS})\, I_P / R_p]\, [1 + 2\,(z / h)]\, W_p$

a_P = 1.0 (ASCE 7-98, Table 9.6.2.2)

Rp = 2.5 (ASCE 7-98, Table 9.6.2.2)

S_s = 0.5 (ASCE 7-98, Figure 9.4.1.1)

F_a = 1.2 (ASCE 7-98, Table 9.4.1.2.4a, Site Class C)

$S_{MS} = F_a * S_s = 0.6$ (ASCE 7-98, Equation 9.4.1.2.4-1)

$S_{DS} = 2/3 * S_{MS} = 0.4$ (ASCE 7-98, Equation 9.4.1.2.5-1)

Ip = 1.5 (ASCE 7-98, Section 9.6.3.10)

z	=	45.69 ft	(Height in the structure at point of attachment of component. Dimensional references indicated are from calculation 145579-V-CA-005 for the Off-Gas Treatment System Pipe Stress Analysis)
h	=	42.75 ft	(Average roof height of structure relative to grade elevation. Dimensional references are from calculation 145579-V-CA-005 for the Off-Gas Treatment System Pipe Stress Analysis)
Wp			(component operating weight)

$F_P = 0.30$ Wp

Fp not required to be greater than the following:

Fp max = 1.6 S_{DS} Ip Wp (ASCE 7-98, Eq. 9.6.1.3-1)

Fp max = 0.96 Wp

Fp shall not be less than the following:

Fp min = 0.3 S_{DS} Ip Wp (ASCE 7-98, Eq. 9.6.1.3-2)

Fp min = 0.18 Wp

Fp = 0.30 Wp would be the total design lateral seismic force applied in the analysis performed under the ASCE 7-98 Standard.

Total seismic force, E for application in load combinations per ASCE 7-98, Section 2.4.1 is determined as defined under Section 9.5.2.7, "Combination of Load Effects," as follows:

$E = \rho Q_E + 0.2S_{DS} D$ (ASCE 7-98, Eq. 9.5.2.7-1), (D, Effect of Dead Load)

$Q_E = F_P$, $\rho = 1.0$ (ASCE 7-98, Section 9.6.1.3)

The horizontal and vertical components as shown are summed for application in the load combination, however the more appropriate application of these components in the analysis is by vectorial combination of the components by square root of-the-sum of the squares, as follows:

Horizontal Seismic Force Component, $E_H = 0.30$ Wp

Vertical Seismic Force Component, $E_V = 0.08$ D

$E = [(E_H)^2 + (E_V)^2]^{1/2}$

E = 0.31 (Combined SRSS)

The ASCE approach provides a less conservative loading using the SRSS value, as compared to the loading per UBC.

Based on the preceding information and considering that the UBC 1997 is the principal code for determining the earthquake loads for this analysis, sufficient direction and basis is presented to provide a conservative design for the subject ductwork and support system, and application of other referenced codes is not necessary.

References

ASCE 7-98, *Minimum Design Loads for Buildings and Other Structures*, American Society of Civil Engineers, Reston, Virginia.

ASME AG-1, *Code on Nuclear Air and Gas Treatment*, American Society of Mechanical Engineers, New York, New York.

CH2M HILL, 2005, *Demonstration Bulk Vitrification System Specification*, RPP-17403, Revision 3, CH2M HILL Hanford Group, Inc., Richland, Washington.

TFC-ENG-STD-06, *Design Loads for Tank Farm Facilities*, Revision A, CH2M HILL Hanford Group, Inc., Richland, Washington.

UBC, 1997, *1997 Uniform Building Code*, International Conference of Building Officials, Whittier, California.

DMJMH+N CALCULATION DESIGN VERIFICATION CHECKLIST	Task/Project #: A77977	
Calculation Number: 145579-B-CA-023 DBVS OGTS Bypass Structural Analysis	Revision 1	Safety Related N/A
Reviewer/Checker (print name): Douglas M. Chenault Reviewer performed or supervised subject calculation. _X_ NO ____YES Justification Attachment _____, _____ pages Alternate Verification method approved ___N/A_____ Method _____		Date 3/26/2006

ITEM(S) CHECKED	Accept Y/N	OBJECTIVE EVIDENCE Sheets		INITIAL/ DATE
1. Cover forms properly completed.	Y	1	of 157	DMC/3/26/06
2. Calculation Sheet headers complete with calc. no., rev., etc.	Y	1	thru 31	DMC/3/26/06
3. Calculation Sheet contents complete per format.	Y	2	thru 31	DMC/3/26/06
4. Listed attachments included.	Y	32	thru 157	DMC/3/26/06
5. Calculation Objective clearly described.	Y	2	Section 1.0,1.1,1.2	DMC/3/26/06
6 Criteria are suitable and properly referenced to task-specific documents.	Y	3	Section 2.2	DMC/3/26/06
7. Assumptions and data described and attached or referenced to task documents.	Y	3, 4	Section 2.3	DMC/3/26/06
8. Calculation method identified and appropriate for the design activity.	Y	6, 7, & 8	Section 4.0	DMC/3/26/06
9. Calculation results reasonable and correctly described in Results and Conclusions.	Y	8, 9, &10	Section 5.0	DMC/3/26/06
10. Computer Program identified with version and revision.	Y	6	Section 4.0	DMC/3/26/06
11. Computer Program references method used, etc.	N/A			
12. Computer input/output provided.	Y	1 thru 94	Attachment 4	DMC/3/26/06
13. Computer run traceable to calculation.	Y	1 thru 94 header	Attachment 4	DMC/3/26/06
14. Computer input data within permissible design input range.	Y	7 thru 27	Attachment 4	DMC/3/26/06
15. Computer Program validation/verification addressed.	Y	6	Section 4.0	DMC/3/26/06

REMARKS:

_D. M. Chenault Douglas M. Chenault _____ Date _3/26/06__

Reviewer/Checker Signature

Printed Name

Form EP 3.3-3F, Dec. 2000

Subcontractor Calculation Review Checklist
DBVS OGTS Calculations

Page 1 of 1

Subject: Off-Gas Treatment System

The subject document has been reviewed by the undersigned.
The checker reviewed and verified the following items as applicable.

Documents Reviewed: 145570- B-CA-023, By-Pass Structural Analysis

Analysis Performed By: DMJM/AMEC

- Design Input
- Basic Assumptions
- Approach/Design Methodology
- Consistency with item or document supported by the calculation
- Conclusion/Results Interpretation
- Impact on existing requirements
- _____

Checker (printed name, signature, and date)

Tom Mackey T. T. Mackey 4/24/2006

Organizational Manager (printed name, signature and date)

Mike Sutey 4/24/06

The drawings need to be updated to match the analysis. Calculations are needed for each duct support type. Detailed location of duct supports needs to be shown on the drawings. Update calculations to clearly state that the duct is analyzed to 0.5 Wp.