This document was too large to scan as a single document. It has been divided into smaller sections.

Section 2 of 13

Document Information			
Document #	RPP-24544	Revision	1D
Title	DEMONSTRATION BULK VITRIFICATION SYS INDEPENDENT QUALIFIED REGISTERED PROFESSIONAL ENGINEER (IQRPE & RCRA DESIGN REVIEW PACKAGE		
Date	05/11/2006		
Originator	SHUFORD DH	ORG CO	CH2M
Recipient		Recipient Co.	
References	ECN-723118-R5, RPP-24544-R0, RPP-24544-R1, RPP-24544-R1A, RPP-24544-R1B, RPP-24544-R1C, EDT-821657, ECN-723118-R0, ECN-723118-R1, ECN-723118-R3, ECN-723118-R4		
Keywords	SUPPL TREATMENT		
Projects			

145579-C-CA-015

amec

CALCULATION COVER SHEET

CALC. NO.: 145579-C-CA-015 REV: 2 DATE: 26 March 2006

CALC. TITLE: OGTS Steel Stack Foundation (Foundation #10) (Total Pages =113)

PROJECT NO.: 145579 PROJECT TITLE: Final DBVS Design

Design Verification Required: ☒ Yes ☐ No

Calculation Type: ☐ Scoping ☐ Preliminary ☒ Final

Superseded by Calculation No.: ☐ Voided

ORIGINAL AND REVISED CALCULATIONS/ANALYSIS APPROVAL

REV.	ORIGINATOR:	DATE:	CHECKED:	DATE:	APPROVED	DATE
0	Paul Meyer	24-Feb-05	Divana Whitley	24-Feb-05	Tony Heim	25-Feb-05
1	Paul Meyer	05-May-05	Divana Whitely	05-May-05	Tony Heim	05-May-05
2	Mike Custer MRC	28 Mar 06	Doug Chenault	3-28-06	Michael R. Custer	3-28-06

AFFECTED DOCUMENTS

DOCUMENT NUMBER:	TITLE:	REV. NO.:	DISC. LEAD INITIALS
H-14-106789	Bulk Vitrification Civil Site Improvements Plans	1	MRC
H-14-106796	Bulk Vitrification Off-Gas Area Fdns Plans & Sections	0	MRC

RECORD OF REVISION

REV. NO.	REASON FOR REVISION:
0	Issued for Construction
1	Corrected safety factor in sections 4 and 5. Clarified relevant allowable soil bearing pressure. No changes to any attachments.
2	Revised to delete foundation #19 and update foundation #10 analysis based on vendor data.

ATTACHMENTS

DOCUMENT NUMBER/ID:	TITLE:	TOTAL PAGES
Attachment 1	OGTS Steel Stack Foundation Drawings	5
Attachment 2	RISA 3D Input/ Output and screen views for Foundation #10	14
Attachment 3	Stack vendor calculations	33
Attachment 4	Foundation Information Chart Showing Performance Category	3
Attachment 5	e-mail from Brad Hupy, Senior Geotechnical Engineer, to P. Meyer	2
Attachment 6	Vendor drawings for Stack and Fan/ motor	26
Attachment 7	Technical Data Sheet 145579-V-DS-005.1 Rev. 2	6
Attachment 8	OGTS STACK Foundation Plan and Section Sketch	1

amec

CALCULATION SHEET

CALC. NO.:	145579-C-CA-015	REV:	2	DATE:	26 March 2006
CALC. TITLE:	OGTS Steel Stack Foundation (Foundation #10)				
PROJECT NO.:	145579	PROJECT TITLE:	Final DBVS Design		

1 INTRODUCTION

1.1 Purpose

The purpose of this calculation is to provide the analysis and design for the Off-Gas stack foundation (#10) and to incorporate vendor submittal data and requirements. This revision of the calculation removes the analysis for the Inlet Stack foundation #19, as it is no longer required.

1.2 Scope

The scope of this calculation includes determining the loads that the stack places on the foundation due to wind, gravity and seismic forces. It is assumed that the stack is self-supporting and will be secured rigidly to the foundation. The foundation is sized to ensure that the anchors will have adequate depth and edge distances (min 12") to develop the full shear and tensile capacities of the anchors. Reinforcing bar design is included in this calculation. Foundation details were provided to the stack vendor to allow development of the anchorage design. This calculation verifies that the foundations will not exceed the soil bearing capacity and that adequate reinforcement bars are provided to support the loads and loading combinations, as required by design, the design criteria and codes to satisfy Performance Category 2 (PC-2) requirements.

2 BASIS

2.1 Design Inputs

Technical Data Sheet 145579-V-DS-005.1 Rev 2, prepared by AMEC Trail Mechanical Group, Issued February 02, 2005 (Attachment 7) provided the preliminary dimensions and weight of the Off-Gas Exhaust stack as applied in the design and analysis per revision 1 of the calculation. The stack is listed as 155 feet tall and 24 inches in diameter with a maximum weight of 40,000 pounds. The equipment sizes and anchorage increased beyond the original estimates. The stack height remains at 155 feet, the maximum stack diameter is now 48" and weight of the stack is 45,730 lbs including the access ladder and platform. Revision 2 of the calculation updates this input information, based on the information provided by the stack and equipment vendors. The stack and fan/motor vendor drawings are provided in Attachment 6.

amec

CALCULATION SHEET

CALC. NO.:	145579-C-CA-015	REV:	2	DATE:	26 March 2006
CALC. TITLE:	OGTS Steel Stack Foundation (Foundation #10)				
PROJECT NO.:	145579	PROJECT TITLE:	Final DBVS Design		

Drawing F-145579-36-V-0015 Rev A (included in Attachment 1) gives the location and overall dimensions of the stack. Vendor drawings from Busby Marine and Tank, Inc. provide the detailed information for fabrication and assembly of the stack. Robinson Industries, Inc. drawings DA-58RB1806-5-104, Revision 1 and DA-58RB1806-5-105, Revision 1 provide the detailed information for the OGTS fan/ motor assemblies located on the stack foundation also included in Attachment 1. Attachment 3 is the design calculation developed for the analysis of the OGTS Stack provided by the vendor.

The Off-Gas Stack foundation is Performance Category PC-2 as provided at the March 11, 2004, biweekly design review meeting. The attached foundations chart (Attachment 4) was included in an e-mail from David Shuford CH2MHill to John Stephens AMEC confirming the Performance Categories of SSCs.

The foundation is a minimum of 48" thick, as required by TFC-ENG-STD-06 listed in Section 3.0 of the calculation. The foundation footprint, as required for the equipment layout provides in excess of the area necessary to adequately support the stack within the allowable capacity of the supporting soil. In addition, the center portion of the foundation extends 82" below the top of the foundation to accommodate the anchorage for the stack. The attributable weight of the concrete has been included in the overturning analysis for the foundation. Finished grade of the compacted granular surface adjacent to the foundation will be approximately 3" below the top of the foundation depending on final grade accuracy.

Frost heaving has been considered in the design and will be negligible as confirmed in an e-mail from the author of the DBVS Site Geotechnical report and is included as Attachment 5.

The RISA 3D computer analysis and associated screen views of the OGTS Stack used in determining the maximum loading on the foundation is provided in Attachment 2.

Design Loads:

Dead load = Self weight of stack and foundation. The stack weight applied in the seismic design is 45,730 lbs, as provided by the stack vendor.

Wind Load = The magnitude and distribution of the wind loading is determined

amec

CALCULATION SHEET

CALC. NO.:	145579-C-CA-015	REV:	2	DATE:	26 March 2006
CALC. TITLE:	OGTS Steel Stack Foundation (Foundation #10)				
PROJECT NO.:	145579	PROJECT TITLE:	Final DBVS Design		

using the stack dimensions based on the stack vendor design drawings and the following site specific information:

Wind Load = 3-second gust 85 mph,

Exposure Category "C"

Importance factor 1.15

Seismic load: the seismic forces on the structure have been calculated using Zone 2B per UBC. The soil profile type is "Sc" as confirmed in the Geotechnical Report.

Live load: the main live load on the slab will be foot traffic beside and around the perimeter of supported equipment skids. By inspection, a 48" thick reinforced concrete slab will withstand foot traffic, and this load may safely be ignored. Likewise, dynamic loads imparted by fans on the 48" deep stack foundation are very small compared to the size of the foundations and may safely be ignored. Foundation self-weight is approximately 740,000 pounds, so the effect of the weight of the two fan/motor assemblies of 22,500 pounds is negligible.

Snow load: the ground snow load on the Hanford site is 15 psf. By inspection, a 48" thick reinforced concrete slab will not be affected by a 9" depth of snow, and this load may safely be ignored.

Volcanic ashfall: the ashfall load on the Hanford site is 5 psf for PC-2 SSCs. By inspection, a 48" thick reinforced slab-on-grade will not be affected by such a minor load, and this load may safely be ignored.

Flood: the DBVS site is at elevation 663 feet and is not in any of the flood areas identified in HNF-SD-GN-ER-501. Flood loads may safely be ignored.

Groundwater Pressure: the DBVS site is at elevation 663 feet. The Geotechnical report notes that groundwater levels are approximately 300 feet below the ground surface. Groundwater pressure may safely be ignored.

Thermal: like any exterior concrete slab on grade, the foundations are subjected to normal annual and daily temperature variations. They are not constrained from expanding or contraction by the surrounding soil. The foundations are simple rectangular prisms, and no change in the foundations' geometry occurs due to

ORIGINATOR:	DATE:	CHECKER:	DATE:
Michael R Curtis	3-28-06	Doug Chenault	3-28-06

amec

CALCULATION SHEET

CALC. NO.:	145579-C-CA-015	REV:	2	DATE:	26 March 2006
CALC. TITLE:	OGTS Steel Stack Foundation (Foundation #10)				
PROJECT NO.:	145579	PROJECT TITLE:	Final DBVS Design		

thermal stresses. Thermal stresses will be very small and may safely be ignored.

Concrete creep: the foundations will be cast in place on a firm compacted soil subgrade. Long term creep of a non-suspended slab will be negligible. Concrete creep stresses may safely be ignored.

Lightning: the entire DBVS site will have a grounding grid installed. Pigtails are provided from the grounding grid through foundations for attachment to the supported equipment. Details of the grounding system are not part of the scope of this calculation.

2.2 Assumptions - None

3 REFERENCES

1. *Uniform Building Code*, 1997. International Conference of Building Officials, Whittier, California.

2. *ACI Manual of Concrete Practice*, (5 volume set including all current ACI standards, and in particular ACI-318 and ACI-336) 1997. American Concrete Institute, Farmington Hills, Michigan.

3. TFC-ENG-STD-06 Rev B-1, *Design Loads for Tank Farm Facilities*, Issued October 22, 2003 by CH2M Hill Hanford Group Inc. Hanford, Washington.

4. ASCE 7-02 *Minimum Design Loads for Buildings and Other Structures*, 2002. American Society of Civil Engineers, Reston, Virginia.

5. *Report of Geotechnical Engineering Services, Bulk Vitrification Process Partial DBVS Richland, Washington.* April 2004. AMEC Earth & Environmental Inc., Portland, Oregon.

6. HNF-SD-GN-ER-501 Rev 1B, *Natural Phenomena Hazards, Hanford Site, Washington.* As revised by ECN 672877, May 15, 2002. Numatec Hanford Company, Richland, Washington.

7. DOE-STD-1020-2002 *Natural Phenomena Hazards Design and Evaluation Criteria for Department of Energy Facilities* January 2002. U.S. Department of Energy, Washington, D.C.

amec

CALCULATION SHEET

CALC. NO.:	145579-C-CA-015	REV:	2	DATE:	26 March 2006
CALC. TITLE:	OGTS Steel Stack Foundation (Foundation #10)				
PROJECT NO.:	145579	PROJECT TITLE:	Final DBVS Design		

8. MathCAD software, version 12. Published by Mathsoft Engineering & Education Inc., Cambridge, Massachusetts.

9. G-LI-001 DBVS Equipment List Revision N, 08-Feb 2005. AMEC.

10. "Design of Reinforced Concrete", by McCormac, 2nd edition.

11. G-LI-001 DBVS Equipment List Revision N, 08-Feb 2005. AMEC.

4 METHODS

Determination of loads, analysis of effects and determination of concrete strength follow the procedures of the *Uniform Building Code* and ASCE 7-98 as applicable. Calculations were performed using MathCAD 12 computer software. Reactions on the concrete foundation due to the stack loads were determine using RISA 3D, version 5.5, verified and validation for use on computer # DMJM 102518.

Calculations determine soil bearing pressures on the leeward and windward sides of the foundations during both wind and seismic loading. For seismic design, "windward" is understood to mean the side an earthquake "pushes" from.

Provided that the calculated bearing pressure on the soil is always compressive (i.e. no uplift) and less than the allowable soil bearing pressure of 3000 pounds per square foot, the foundations are stable against overturning with a safety factor of at least 3.0.

Due to the height of the stacks, we have conservatively not used the 4000 psf allowable soil bearing capacity for short-term loading (wind/seismic) permitted by the Geotechnical Report. This ensures that no permanent soil deformation or stack tilt will occur under either the design wind or seismic loads.

Slab bending strengths on a per-foot basis (as well as minimum reinforcement) have been calculated following the UBC/ACI-318 method and provided in Attachment 2. Overturning due to wind/seismic loads are calculated and compared to the slab moment capacity in both directions. The full slab width is considered to resist bending.

The foundation has been sized as a rectangular prism, based on the dimensions provided by the vendor information. Stack weight applied in the analysis is actual

CALCULATION SHEET

amec

CALC. NO.:	145579-C-CA-015	REV:	2	DATE:	26 March 2006
CALC. TITLE:	OGTS Steel Stack Foundation (Foundation #10)				
PROJECT NO.:	145579	PROJECT TITLE:	Final DBVS Design		

weight as provided by the vendor. The weight of the equipment supported on the slab is included in this revision of the calculation, since the total weight of the two fan/motor assemblies total 22,500 lbs, adding significant weight (approximately 50%) increase in the dead weight on the foundation. In addition, the center of gravity of the fan/motor assemblies are located approximately 7'-9" south of the east–west center of the foundation, resulting in an eccentric loading condition.

Based on the actual weights of the structure, gravity, wind and seismic forces on the foundation have been calculated using the Tank Farm Facilities Design Loads and the methods prescribed in the Uniform Building Code (UBC) and ASCE 7-98 Foundation allowable resisting forces and soil bearing pressures have been calculated using the methods in the UBC and ACI-336. This condition is included in the analysis of the foundation.

5 RESULTS AND CONCLUSIONS

The concrete foundation will support the stack under the design loads. Soil bearing pressures are always compressive, and are less than 3000 psf with no uplift under either wind or seismic loading. A soil bearing pressure of 0 psf on the windward edge implies a safety factor against overturning of 3.0. As bearing pressures are always positive (compressive) on the windward edge, the safety factor against overturning exceeds 3.0.

Other safety factors are:

Loading condition	FDN#10
Soil bearing capacity without wind or seismic loads	3.5
Friction (sliding) resistance subject to wind load	15.9
Friction (sliding) resistance subject to seismic load	18.1
Passive soil resistance to sliding subject to wind load	17.8
Passive soil resistance to sliding subject to seismic load	19.8

amec

CALCULATION SHEET

CALC. NO.:	145579-C-CA-015	REV:	2	DATE:	26 March 2006
CALC. TITLE:	OGTS Steel Stack Foundation (Foundation #10)				
PROJECT NO.:	145579	PROJECT TITLE:	Final DBVS Design		

The maximum factored slab bending moment resistance per foot of width exceeds the maximum factored slab bending moment force per foot of width in the foundation in both directions, and meets the UBC/ACI requirement for strength. The maximum factored slab bending moment per foot of width occurs in the east-west direction (across the narrower 24 foot dimension) under wind load and is equal to 172.0 kip-ft/ft.

The foundation designs have been added to the 3-D computer model of the project. Foundation drawings are attached.

ORIGINATOR:	DATE:	CHECKER:	DATE:
Michael R. Curtis	3-25-06	Doug Chenault	3-28-06

DMJM technology	CALCULATION SHEET	Project Number: 145579 Page 9 of 23
Calculation No. 145579-B-CA-015 Rev. No. 2 Calc. Title OGTS Steel Stack Foundation		Originator: M.R Custer Date: 03-28-06 Checker: D. Chenault Date: 3-28-06

6.0 Calculation / Analysis

This analysis provides the design of the foundation for the Off-gas Stack. The stack is constructed of 1/2" plate and is a cantilevered structure supported at the base of the stack. The analysis incorporates the vendor dimensions and anchorage requirements into the design reinforced concrete foundation.

Constants Defined

$k := kip$ $\quad kft := kip \cdot ft$ $\quad kin := kip \cdot in$ — Units defined.

$plf := \frac{lbf}{ft}$ $\quad psf := \frac{1}{144}psi$ $\quad pcf := \frac{psf}{ft}$ $\quad psi := \frac{lbf}{in^2}$

$klf := 1000plf$ $\quad ksf := 1000psf$ $\quad kcf := 1000pcf$

Material Properties for Soil

$q_a := 3000psf$ — ECN 722466, Drawing H-14-106789, Rev.1

Material Properties for Concrete

$\gamma_c := .150kcf$ — ASCE 7-98 (Reference 6, Table C3-2, page 230), Maximum unit weight, or density, of the reinforced concrete.

$f_c := 4000psi$ — Specified minimum compressive stress of concrete at 28 days.

Material Properties for Reinforcing Steel

$fyr := 60000psi$ — Yield strength of ASTM A-615 reinforcing steel

Material Properties for Anchor Bolts

$Fy := 36ksi$ — Yield strength of ASTM A-36 steel, AISC Manual, 9TH edition page 1-7.

$E := 29000ksi$ — Modulus of Elasticity of steel, AISC Manual, 9TH edition page 6-30.

CALCULATION SHEET

DMJM technology

Calculation No. 145579-B-CA-015
Rev. No. 2
Calc. Title OGTS Steel Stack Foundation

Project Number: 145579
Page 10 of 23
Originator: M.R Custer
Date: 03-28-06

Checker: D. Chenault
Date: 3-28-06

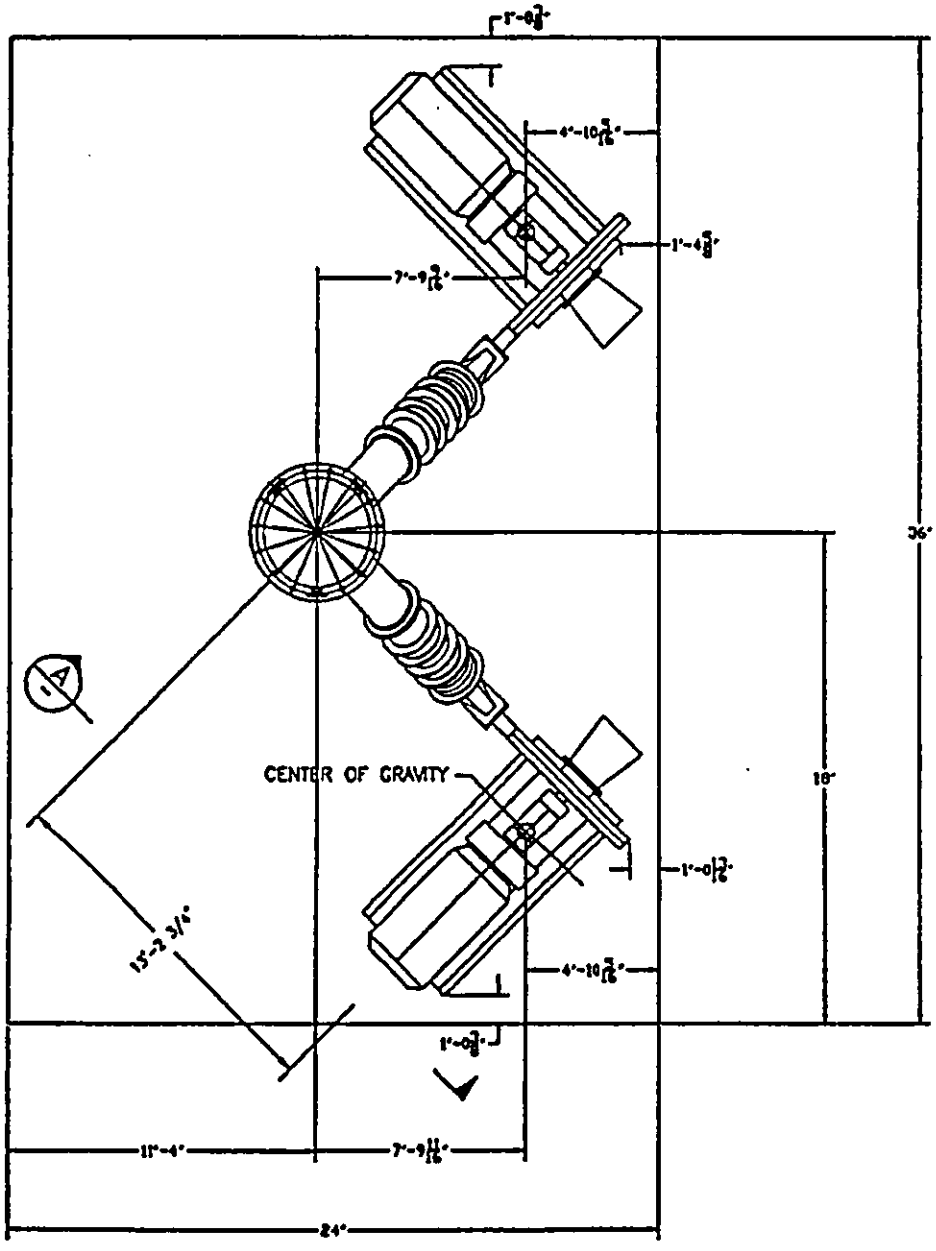

FIGURE 1 - Off-Gas Stack Foundation Plan

DMJM technology	CALCULATION SHEET	Project Number: 145579 Page 11 of 23
Calculation No. 145579-B-CA-015 Rev. No. 2 Calc. Title OGTS Steel Stack Foundation		Originator: M.R Custer Date: 03-28-06 Checker: D. Chenault Date: 3-28-06

DESIGN LOADS:

Dead Load: The dead loads are determined based on the weight of the members consisting of the self-weight of the 2" thick cover plate and the structural framing system, columns and beams.

$Ws := 45.73k$ — Weight of the Off-Gas Stack, reference Vendor Stack Drawings, Attachment 6 Including the weight of the access ladder and platform.

$Wfm := 22.5k$ — Weight of the Fan/ Motor assemblies per Attachment 6.

$wc := 24ft$ — Width of the foundation, Attachment 1

$tc := 4ft$ — Thickness of the foundation, Attachment 1

$Lc := 36ft$ — Length of the concrete foundation, Attachment 1

$Ac := wc \cdot Lc$ $\quad Ac = 864\ ft^2$ — Area of the foundation

$Scl := \frac{(Lc) \cdot wc^2}{6}$ $\quad Scl = 3456\ ft^3$ — Section Modulus of the concrete about the length dimension of the foundation.

$Scw := \frac{(wc) \cdot Lc^2}{6}$ $\quad Scw = 5184\ ft^3$ — Section Modulus of the concrete about the width dimension of the foundation.

$Wc1 := tc \cdot wc \cdot Lc \cdot \gamma_c$ $\quad Wc1 = 518400\ lbf$ — Weight of 48" portion of the concrete foundation

$dmax := 7ft$ $\quad Lt := 17.0ft$ $\quad Lb := 5.67ft$

$At := Lt^2$ $\quad At = 289\ ft^2$

$Ab := Lb^2$ $\quad Ab = 32.15\ ft^2$

$Wc2 := \frac{dmax}{3} \cdot \left(At + Ab + \sqrt{At \cdot Ab}\right) \gamma_c$

Weight of center portion of the concrete foundation from a depth of 48" to a depth of 84".

$Wc2 = 146138.61$ lbf

$Wt := Wc1 + Wc2 + Ws + Wfm$

$Wt = 732768.61$ lbf

Total dead weight of the stack and concrete foundation.

$hs1 := 102ft$

Height of the 48" diameter stack

$hs2 := 53ft$

Height of the 24" diameter stack

$ws1 := 4ft$

4 ft width of the stack

$ws2 := 2ft$

2 ft width of the stack

Live Load: A minimum live load of 50 psf is included and considered over the entire area of the elevated platform per ASME STS-1a-2003, Section 4.3.2 for maintainence access.
Wll = 7000 lbs (negligible)

Wind Force:

The wind force is determined, based the design procedure of ASCE 7-98 (Reference 6) and the Hanford site specific requirements per TFC-ENG-STD-06 (Reference 2):

Exposure Category, C		TFC-ENG-STD-06, Table 3, page 24
Vg = "Three-second-gust wind velocity	$Vg := 85 \frac{mi}{hr}$	TFC-ENG-STD-06, Table 3, page 24
Importance Factor, I	$I := 1.15$	TFC-ENG-STD-06, Table 3, page 24
Kz, Velocity Pressure Exposure Coefficient,	$Kz := 1.39$	ASCE 7-98, Table 6-5, page 60. Height above ground level is 155 feet

Kzt = Topographic Factor	$Kzt := 1.0$	ASCE 7-98, Section 6.4.1, page 26
Kd = Wind Directionality Factor	$Kd := 0.95$	ASCE 7-98, Table 6-6, page 61. round structure
$qz := 0.00256 \cdot Kz \cdot Kzt \cdot Kd \cdot Vg^2 \cdot I \cdot \left(\frac{hr}{mi \cdot ft}\right)^2 \cdot lbf$		ASCE 7-98, Eq. 6-13, page 30
$qz = 28.09\,psf$		Applied wind pressure on the structure
Gf = Gust Factor,	$Gf := 0.88$	ASCE 7-98, Section 6.5.8, page 29 as calculated in stack vendor calculation Attachment 3
Cf = Net Force Coefficient	$Cf := 1.2$	ASCE 7-98, Table 6-10, page 65
$Pw1 := qz \cdot Gf \cdot Cf$		
$Pw1 = 29.66\,psf$		Wind pressure per square foot of area , ASCE 7-98, Equation 6-20, page 33.
$Pfw1 := qz \cdot Gf \cdot Cf \cdot ws1$	$Pfw1 = 118.64\,plf$	Wind pressure applied on the 48" diameter portion of the stack structure per ASCE 7-98, Equation 6-20, page 33.
$Pfw2 := qz \cdot Gf \cdot Cf \cdot ws2$	$Pfw2 = 59.32\,plf$	Wind pressure applied on the 24" diameter portion of the stack structure per ASCE 7-98, Equation 6-20, page 33.
$Vmaxw := Pfw1 \cdot hs1 + Pfw2 \cdot hs2$		
$Vmaxw = 15245.48\,lbf$		

Seismic Force:

The seismic force is determined based on the Uniform Building Code (UBC 1997), as defined by TFC-ENG-STD-06,(Reference 3). The maximum base shear or lateral force was determined using equations in Section 1632.2 and 1634.5 for the analysis.

DMJM technology	**CALCULATION SHEET**	**Project Number:** 145579 Page 14 of 23 **Originator:** M.R Custer **Date:** 03-28-06
Calculation No. 145579-B-CA-015 **Rev. No.** 2 **Calc. Title** OGTS Steel Stack Foundation		**Checker:** D. Chenault **Date:** 3-28-06

Earthquake loads applied to PC-2 SSCs shall comply with the UBC, Seismic Zone 2B for essential facilities, per TFC-ENG-STD-06 (Reference 2, Section 3.6.5.1).

Seismic Zone = 2B	TFC-ENG-STD-06, Rev. A (Reference 2, Section 3.6.5.1). UBC 1997, Figure 16-2, page 2-37
Soil Profile = Sc	AMEC Soils Report (Reference 3, page 11)
Seismic Zone Factor, Z = 0.2	UBC 1997, Table 16-I, page 2-30
Seismic Coefficient, $Cv := 0.32$	UBC 1997, Table 16-R, page 2-35
Seismic Coefficient, $Ct := 0.020$	UBC 1997, Section 1630.2.2, page 2-14
Importance Factor, Ie $Ie := 1.25$	UBC 1997, Table 16-K, Occupancy Category, page 2-30, Essential Facility.
Seismic Coefficient, $Ca := 0.24$	AMEC Soils Report (Reference 3, page 11) UBC 1997, Table 16-Q, page 2-34
$hss := 155$	Height (feet) to top of the structure, Attachment 1.
$T := Ct \cdot hss^{.75}$ $T = 0.88$	Structure period, UBC 1997, Equation 30-8, page 2-14

Determine the Lateral Seismic Force based on UBC 1997, Section 1634.5:

$V := 0.56 \cdot Ca \cdot Ie \cdot Ws$ $V = 7682.64$ lbf

Determine the Lateral Seismic Force based on UBC 1997, Section 1632.2:

$ap := 2.5$

$Rp := 3.0$

$Ip := 1.5$

$hx := 0ft$

$hr := 155ft$

$$Fp := \frac{ap \cdot Ca \cdot Ip}{Rp}\left(1 + 3 \cdot \frac{hx}{hr}\right) \cdot Ws$$

$Fp = 13719\ lbf$

$Fpmax := 4 \cdot Ca \cdot Ip \cdot Ws$ $\quad Fpmax = 65851.2\ lbf$

$Fpmin := 0.7 \cdot Ca \cdot Ip \cdot Ws$ $\quad Fpmin = 11523.96\ lbf$

$Fseismic := 13719lbf$ — Maximum force on the stack due to the seismic loading

DESIGN LOAD COMBINATIONS FOR THE SUPPORT STRUCTURE:

The design load combinations used in the analysis of the stack structure are in accordance with UBC 1997, Section 1612, as defined per Reference 2, Section 3.6.12, page 10 for allowable stress design.

FOUNDATION DESIGN FOR THE OGTS STACK STRUCTURE:

Overturning Moment

Determine the overturning moment due to the seismic force applied at the center of gravity of the structure.

Location of the Center of Gravity of the OGTS Stack Structure:

$Ycg := 63.65ft$ — Location of the center of gravity of the OGTS stack in the vertical direction. Attachment 2.

$$Ycgw := \frac{hs1 \cdot Pfw1 \cdot \frac{hs1}{2} + hs2 \cdot Pfw2 \cdot \left(\frac{hs2}{2} + hs1\right)}{Pfw1 \cdot hs1 + Pfw2 \cdot hs2}$$

Location of the resultant wind force on OGTS stack.

$Ycgw = 66.98\ ft$

$Fseismic := 13719lbf$

Maximum seismic base shear on the structure applied at the C.G of the structure.

$Vmaxw = 15245.48\ lbf$

Maximum base shear force due to maximum wind force on the structure

$Vmaxw = 15245.48\ lbs > Fseismic = 13719\ lbs$

Wind force on the stack governs the design over the maximum seismic load.

$Mot := Vmaxw \cdot Ycgw$ $\quad Mot = 1021.18\,kft$

Maximum overturning moment due to the wind force on the structure.

Determine the resisting moment due to the dead load of the stack structure, Ws and the foundations, Wc1 and Wc2 and determine the Factor of Safety against overturning. The force is applied at the center of gravity of the the structure parallel to the least dimension of the stack structure foundation.

$ws3 := 4.5ft$

Diameter at the anchor bolt circle.

$Mres := Wt \cdot \frac{ws3}{2}$

Conservative, since the compression portion of the couple is applied over the edge of the plate which adds any additional distance for the lever arm for the moment.

$Mres = 1648.73\,kft$

Safety Factor Overturning, $SFot := \frac{Mres}{Mot}$

$SFot = 1.61$ $\quad$ > Factor of Safety = 1.5 ... O.K

Determine the Factor of Safety for the Soil;

$qact := \frac{Wt}{wc \cdot Lc}$ $\quad qact = 848.11\,psf$

Soil bearing pressure Safety Factor without wind or seismic loadings.

$SFsoil := \frac{q_a}{qact}$

$SFsoil = 3.54$

Determine the Factor of Safety against sliding due to the wind force and dead load of the stack structure and foundation. The resisting force is provided along the perimeter of the foundation for the stack structure.

$Fslw := 15.6k$

Sliding Force on the stack structure Vmaxw, due to the wind force.

$\mu := 0.34$

Friction coefficient for concrete on the soil Reference 3, AMEC Geotech Report, page 4.

$Frsl := \mu \cdot Wt$

Force resisting sliding of the stack

$Frsl = 249.14\,k$

$SFslw := Frsl + Fslw$ $\quad SFslw = 15.97 \quad > 1.5$ ..O.K

Determine the Factor of Safety against sliding due to the seismic force and dead load of the stack structure and foundation.The resisting force is provided along the perimeter of the foundation for the stack structure.

$Fseismic := 13.7k$

Sliding Force on the stack structure Fseismic, due to the seismic force.

$Frsl = 249.14\,k$

$SFsls := Frsl + Fseismic$ $\quad SFsls = 18.19 \quad > 1.5$ ..O.K

Determine the Factor of Safety against sliding due to the soil pressure. Dead load of the support

structure, Wt. The resisting force is applied at the bottom of the foundation for the stack structure.

$\delta dry := 85pcf$ — Dry density of the soil, AMEC Geotech Report reference, page 4.

$\phi i := 28deg$ — Angle of internal friction, AMEC Geotech Report reference, page 4.

$Kp := \tan\left(45deg + \frac{\phi i}{2}\right)^2$ $Kp = 2.77$ — Reference 8, page 277.

$Pp := \delta dry \cdot tc \cdot Kp$ $Pp = 941.74\,psf$ — Passive soil pressure, reference 8, page 276 modified Eq. 6-19.

$Fpsoil := \left(Pp \cdot \frac{tc}{2} \cdot Lc\right)4$ $Fpsoil = 271.22\,k$ — Lateral Force from the soil on the foundation Reference 8, page 277, based on the 48" depth of the foundation.

Wind Force, Vmaxw = 15.25 kips

Seismic Force, Fseismic

$SFsw := \frac{Fpsoil}{Fseismic}$ $SFsw = 19.8$ >1.5 ..O.K — Safety Factor, soil resisting seismic force

$SFse := \frac{Fpsoil}{Vmaxw}$ $SFse = 17.79$ >1.5 ..O.K — Safety Factor, soil resisting wind force

Determine the Maximum Soil Pressure under the Stack Structure Foundation:

The connection points for the stack structure are fixed at the foundations, as established in the RISA 3-D model. The horizontal reaction loads on the foundation are applied at or below the center of the foundation, however an eccentric loading or moment is applied to the foundation due to the off-center location of the stack on the foundation in adition to the eccentricity caused by the overturnig moment. This moment is included in determining the maximum soil pressure.

$Paxial := Ws + Wfm$ — Weight of the stack.

$Paxial = 68230\,lbf$

CALCULATION SHEET

DMJM technology

Calculation No. 145579-B-CA-015
Rev. No. 2
Calc. Title OGTS Steel Stack Foundation

Project Number: 145579
Page 19 of 23
Originator: M.R Custer
Date: 03-28-06

Checker: D. Chenault
Date: 3-28-06

$e := .67ft$

Eccentricity due to the layout location of the stack on the foundation.

$efm := 7.75ft$

Eccentricity due to the layout location of the fan/ motor assemblies on the foundation.

$$esum := \frac{-e \cdot Ws}{Paxial} + efm \cdot \frac{Wfm}{Paxial}$$

Net eccentricity on the foundation due to the location of the stack and the Fan/Motor assemblies

$esum = 2.11\ ft$

$Mec := Ycgw \cdot Vmaxw$

Maximum moment due to the maximum force (wind) applied on the foundation.

$Mec = 1021.18\ kft$

$$et := \frac{Ycgw \cdot Vmaxw}{Paxial + Wc1 + Wc2}$$

Eccentricity of the vertical forces on the foundation.

$et = 1.39\ ft$

$$ew := \frac{wc}{6} \qquad ew = 4\ ft$$

Middle third of the slab width.

et < ew, use qmax = P/A (+/-) M/S to determine the maximum soil pressure

Reference 10 page 212, Formula (5-7)

Determine the maximum soil pressure:

$$qmax := \left(\frac{Wt}{Ac}\right) + \left(\frac{Mec}{Scw}\right)$$

Maximum pressure on the soil.

$qmax = 1045.1\ psf$

qmax < qa = 3000 psf ....O.K

Provide a foundation 4.0 ft deep x 24.0 ft wide x 36.0 ft long

with a thickened center area of the foundation at the stack anchorage 5.67 ft square at a depth 6.83 ft.

$deff := tc - 3in - 0.69in$ $\quad deff = 44.31\,in$

Minimum effective depth of the concrete (conservative), the distance from the extreme compressive face of the concrete (at the top of the concrete) to the center of the tensile reinforcement steel. Reference Section B, drawing DBVS-SK-C006, Rev.A.

Determine the Concrete Reinforcement in the Foundation:

$\phi f := 0.90$

Strength reduction factor for ultimate stress design method per UBC 1997, Section 1909.3.2.2.

$Asmin := \frac{200}{60000} \cdot 12in\,deff$

Minimum reinforcing steel required per UBC 1997, Section 1910.5.1.

$Asmin = 1.77\,in^2$

Determine the minimum cross-sectional area of rebar required per foot of width of the foundation, based the applied moment.

Mu is the usable moment capacity of the section, based on the area of reinforcement required for the 48" section depth.
Mu = Mn/ϕ, Mn is the ultimate moment.

$Mreqd := 1021.18kft$

Required moment capacity by design on the 24 ft width of the foundation. Refer to Attachment 2.

$Mreqdft := 1.4 \cdot 42.71kft$

Required moment capacity by design per foot width of the foundation over the 24 ft width.

$Mreqdft = 59.79\,kft$ per foot width of the foundation

The moment capacity, based on Revision 1 updated with the current loads requires #10 bars at 12" on centers. Additional, the core area around the anchor bolt group will require the same reinforcement.

DMJM technology	CALCULATION SHEET	Project Number: 145579 Page 21 of 23
Calculation No. 145579-B-CA-015 Rev. No. 2 Calc. Title OGTS Steel Stack Foundation		Originator: M.R Custer Date: 03-28-06 Checker: D. Chenault Date: 3-28-06

Anchor Bolt Requirement Check based on Mreqd:

$Dbc := 54in$ — Diameter of stack bolt circle as determined by the stack vendor per Attachment 3.

$N := 15$ — Number of Anchor Bolts defined by the stack vendor per Attachment 3.

$P := 45.73k$ — Weight of OGTS stack as determined by the stack vendor per Attachment 3.

$Treqd := 4 \cdot \frac{Mreqd}{N \cdot Dbc} - \frac{P}{N}$ — Required anchorage per ASME STS-1a-2003

$Treqd = 57.47k$ — Required capacity per anchor bolt per Mreqd.

$At := 3.25in^2$ — Tensile area of 2 1/4 Dia.of anchor bolt

$Ft := 19.1ksi$ — As determined by the stack vendor per Attachment 3.

$P := Ft \cdot At \quad P = 62.08k$ — Load Capacity provided by each 2 1/4" dia anchor.

CALCULATION SHEET

DMJM technology

Calculation No. 145579-B-CA-015
Rev. No. 2
Calc. Title OGTS Steel Stack Foundation

Project Number: 145579
Page 22 of 23
Originator: M.R Custer
Date: 03-28-06

Checker: D. Chenault
Date: 3-28-06

Project: GeoMelt - Final DBVS
Foundation description:

Reference: 145579-C-CA-015, Rev.2
Foundation # 10

Re-bar Design For Fdn Pads or Slabs Ref: ACI 318		(inputs in shaded)	
Bars: Top or Bot only =1, Top & Bot =2		2	
fy	psi	60000	60 ksi normal
f'c	psi	4000	3-4 ksi normal
□		0.9	0.9 normal
Mu	k-ft	69.79	required Mu
b	in	12	*unit width or full width*
h	in	54	slab thickness
d	in	50.38	depth of steel
A = 0.59 * fy/f'c		8.85	
B = -1		-1	
C = Mu /(□bd^2fy)		0.0004	
□Ru = Mu /bd^2		23.6	
□0		0.1126	
□2		0.00044	
□temp		0.00180	0.18% typical
□min		0.0033	
Selected □ for design		0.00044	
Check □ < □ max		OK	
As req'd per ft (temp)	in2	0.58	considers top and/or bottom
As req'd (design)	in2	0.26	
As req'd (1.33 *design)	in2	0.35	
As req'd(min)	in2	2.02	applies if 1.33 not used
Select design, 1.33design or min		0.35	
As required	in2	0.35	
Bar #		6	(diameter in eighths)
As per Bar		0.442	
Bar Spacing	in	12	
Total As per ft		0.44	
		OK	OK or NG (no good)

Determine □ max			
f'c		4000	
fy		60000	
β1 = 0.85-0.05*(f'c-4), >=0.65		0.85	
pb=0.85*□1*f'c*87000/(fy*(fy+87000))=		0.0285	
pmax =0.75*pb =		0.0214	

Two options if slab depth known:
Enter Mu required and iterate with bar size and spacing to get "OK" message
For a given bar size and spacing, iterate M<u until As/ft = As requ'd and message = OK

FIGURE 2

(Minimum reinforcement required, based on latest vendor information)

CALCULATION SHEET

DMJM technology

Calculation No. 145579-B-CA-015
Rev. No. 2
Calc. Title OGTS Steel Stack Foundation

Project Number: 145579
Page 23 of 23
Originator: M.R Custer
Date: 03-28-06

Checker: D. Chenault
Date: 3-28-06

Project: GeoMelt - Final DBVS
Foundation description:

Reference: 145579-C-CA-015, Rev.2
Foundation # 10

Re-bar Design For Fdn Pads or Slabs Ref: ACI 318		(inputs in shaded)	
Bars: Top or Bot only =1, Top & Bot =2		2	
fy	psi	60000	60 ksi normal
f'c	psi	4000	3-4 ksi normal
ϕ		0.9	0.9 normal
Mu	k-ft	172	required Mu
b	in	12	*unit width or full width*
h	in	48	slab thickness
d	in	44.5	depth of steel
A = 0.59 * fy/f'c		8.85	
B = -1		-1	
C = Mu /(ϕbd^2fy)		0.0016	
ϕRu = Mu /bd^2		86.9	
ρ		0.1114	
ρ		0.00163	
ρ temp		0.00180	0.18% typical
ρmin		0.0033	
Selected ρ for design		0.00163	
Check ρ < ρmax		OK	
As req'd per ft (temp)	in2	0.52	considers top and/or bottom
As req'd (design)	in2	0.87	
As req'd (1.33 *design)	in2	1.16	
As req'd(min)	in2	1.78	applies if 1.33 not used
Select design, 1.33design or min		1.16	
As required	in2	1.16	
Bar #		10	(diameter in eighths)
As per Bar		1.227	
Bar Spacing	in	12	
Total As per ft		1.23	
		OK	OK or NG (no good)

Determine ρmax			
f'c		4000	
fy		60000	
β1 = 0.85-0.05*(f'c-4), >=0.65		0.85	
pb=0.85*β1*f'c*87000/(fy*(fy+87000))=		0.0285	
pmax =0.75*pb =		0.0214	

Two options if slab depth known:
Enter Mu required and iterate with bar size and spacing to get "OK" message
For a given bar size and spacing, iterate M<u until As/ft = As requ'd and message = OK

FIGURE 3

(Minimum reinforcement required, based on revision 1 design and latest vendor information)

145579-C-CA-015

Attachment 1

OGTS Steel Stack Foundations Drawings

H-14-106789 Rev. 1
Bulk Vitrification Civil Site Improvements Plan

H-14-106798 Rev. 0
Bulk Vitrification Minor Foundations General Arrangement

H-14-106796 Rev. 0
Bulk Vitrification Off-Gas Area Fdns - Plans & Sections

F-145579-36-V-0021 Rev. H
Bulk Vitrification Off-Gas Exhaust Stack Details

C:\Documents and Settings\custerm\My Documents\Bulk Vitrification Project\Drawings\Civil and Structural\AutoCAD Drawings\H-14-106789 Rev.1 Civil Site Improvements Plan AMEC FINAL.DWG, 3/28/2006 12:05:04 PM, mtc

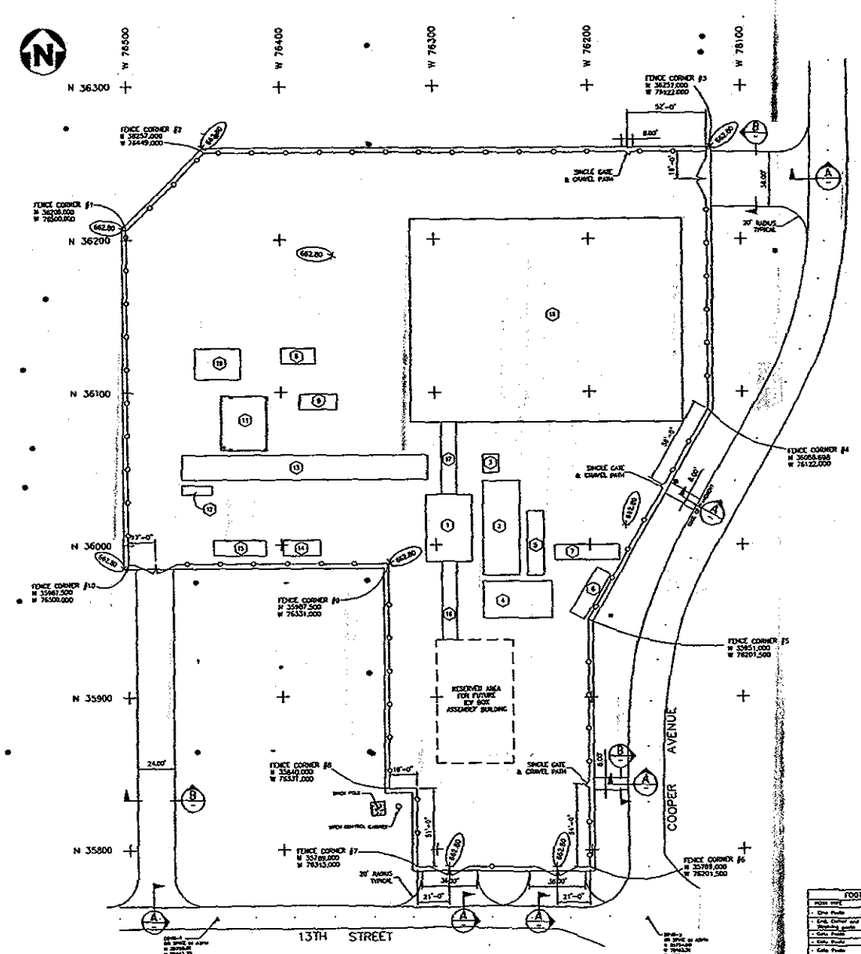

LEGEND

- SURVEY CONTROL POINT
- RISER
- UNDERGROUND CABLE MARKER
- TELEPHONE BOX
- MONITORING WELL
- BURIAL GROUND MARKER POST
- SIGN – UG BUD MATERIAL AREA
- PROPOSED SPOT ELEVATION
- FOUNDATION NUMBER

In making requests for transmittal of data by any electronic media, the Company receiving such data agrees that AMEC Americas Limited cannot be held responsible for uses of the data outside of or beyond the scope of our original agreement. Also, because data stored in electronic media or transmitted by electronic means can deteriorate undetected or be modified without the consultant's knowledge, the Company receiving data agrees that AMEC Americas Limited cannot be held liable for the compatibility, completeness or correctness of the data.

Equipment Foundation Locations				
FDN #	Equipment Name	Center of foundation Northing	Center of foundation Westing	Drawing # (Reference)
1	Melt Area Support Structure (Superflat)	36011.00	76291.00	H-14-106792
2	Waste Dryer Support Structure	36011.00	76267.00	H-14-106793
3	Clean Soil Baghouse Equipment	36062.00	76264.00	H-14-106794
4	Dryer Chiller Equipment	36084.20	76247.00	H-14-106784
5	Waste Dryer Steam Supply Skid	36201.00	76335.00	H-14-106794
6	Boiler Diesel Fuel Storage Tank	35968.00	76200.00	H-14-106794
7	Liquid Waste Pump skid	35935.00	76202.00	H-14-106794
8	Secondary Waste Pump Skid	36124.00	76249.00	H-14-106796
9	Compressed Air Skid	36094.00	76378.00	H-14-106786
10	Off-gas Stack	36119.00	76441.00	H-14-106795
11	Tri-Mer Scrubber	36060.00	76424.00	H-14-106795
12	Liquid ammonia Storage Tank	36038.00	76455.00	H-14-106795
13	Off-gas Treatment Equipment	36051.00	76385.00	H-14-106796
14	480V Generator Set	35896.00	76387.00	H-14-106787
15	Diesel Generator Fuel Tank	35898.00	76427.00	H-14-106791
16	Melt Area Access Slab South	35988.25	76291.00	H-14-106792
17	Melt Area Access Slab North (Superflat)	36054.75	76291.00	H-14-106792
18	ICV Box Storage Area (Superflat)	36147.00	76277.00	H-14-106790

DRAWING NOTES:

1) THE BATTERY LIMITS FOR FILL OPERATIONS EXTENDS TO 3 FEET BEYOND THE FENCE LINES SHOWN. FILL WILL ALSO BE REQUIRED AS CONNECTIONS TO EXISTING ROADS

2) ALL AREAS WITHIN THE BATTERY LIMITS SHALL BE BROUGHT TO ELEVATION 661.00 WITH COMPACTED NATIVE SOIL WITH ALL ORGANIC MATERIAL REMOVED. IF ADDITIONAL MATERIAL IS REQUIRED TO REACH THIS ELEVATION, IT SHALL BE "PIT RUN SAND AND GRAVEL" AS LISTED IN THE SPECIFICATIONS.

3) ALL AREAS BETWEEN FOUNDATIONS AND SLABS SHALL BE BROUGHT UP TO ELEVATION 662.80±0.3 WITH COMPACTED CRUSHED GRAVEL AS LISTED IN THE SPECIFICATIONS.

4) AREAS OUTSIDE BATTERY LIMITS SHALL BE SLOPED AT A MAXIMUM OF 4:1 TO MATCH EXISTING GRADES. WHERE FILL IS REQUIRED, IT SHALL BE COMPACTED NATIVE SOIL.

5) FOUNDATIONS MUST BE ELECTRICALLY GROUNDED. SEE DRAWINGS H-14-106812 AND H-14-106813 FOR DETAILS. SEE DRAWING H-14-106808 FOR ELECTRICAL SITE GENERAL ARRANGEMENT.

6) ALL ELEVATIONS IN FEET.

GENERAL NOTES:

* ALL MATERIALS AND WORKMANSHIP SHALL CONFORM TO THE "CONSTRUCTION SPECIFICATION FOR THE SITE IMPROVEMENTS AT THE DEMONSTRATION BULK VITRIFICATION SYSTEM" DOCUMENT # 145579-C-SPE-001.

* THE FOLLOWING SPECIFIC REQUIREMENTS APPLY TO CAST-IN-PLACE CONCRETE. REFER TO THE CONSTRUCTION SPECIFICATION FOR DETAILS.

A) MINIMUM COMPRESSIVE STRENGTH SHALL BE 4000 PSI AT 28 DAYS
B) MAXIMUM WATER/CEMENT RATIO SHALL BE 0.5
C) AIR CONTENT SHALL BE 3-8%
D) ALL EXPOSED HORIZONTAL CONCRETE SURFACES WHERE LOADED AIR PALLET TRAFFIC WILL OCCUR MUST BE "SUPERFLAT" CONCRETE AND HAVE A MINIMUM FLATNESS NUMBERS OF F-100 AND F-50 AS DESCRIBED IN ACI 302.1R.
ALL OTHER CONCRETE SHALL HAVE MINIMUM FLATNESS OF F-50 AND F-15.
E) CONSTRUCTION JOINTS SHALL BE PER ACI 330R FOR ICV BOX STORAGE SLAB. SEE DRAWING C-0005 FOR DETAILS.
F) OTHER FOUNDATIONS: CONSTRUCTION / CONTRACTION JOINTS SHALL BE PER ACI 224.3R AND ACI 302.1R AND AS DETAILED.

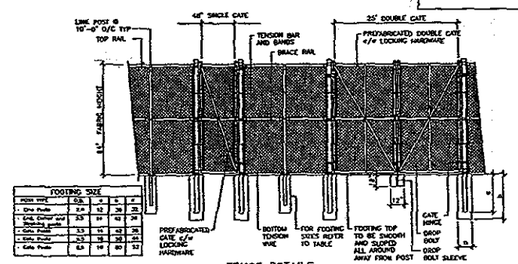

FOOTING SIZE				
FDN NO.	A	B	C	D
1 - Corner Footer	3.0	12	36	36
2 - Line Footer (typ)	3.0	24	42	37
3 - Corner Footer Gate Post	3.0	14	42	36
4 - Gate Footer	3.0	14	42	36
5 - Gate Footer	3.0	18	36	44
6 - Gate Footer	3.0	18	36	44
7 - Gate Footer	6.0	18	80	52

FENCE DETAILS
N.T.S.

ACCESS CROSS-SECTION
SECTION B
1/8"=1'-0"

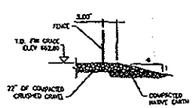

TYPICAL SECTION AT FENCE
N.T.S.

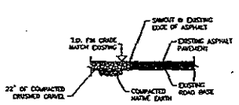

SECTION A
N.T.S.

DWG NO	TITLE	REF NUMBER	TITLE
	DRAWING TRACEABILITY LIST	NEXT USED ON DWG ITEM	REFERENCES

REV NO	REV DATE	DESCRIPTION	DRN	DES	CHK	APPROVED
1	12 Aug 05	ADDED FENCE DETAIL	D.L. HURLEY	MIKE MEYER		

REVISIONS

THIS DRAWING PREVIOUSLY ISSUED AS AMEC DRAWING F-145579-00-C-0004.

amec

NAME	DATE
D.P. KROEMER	
D. BAYER	
K.J. SMITH	
D. MEYER	
J. STEPHENS	

DESIGN AGENCY

DESIGN PROGRAM

DESIGN PHASE: 145579-FINAL DBVS DESIGN

U.S. DEPARTMENT OF ENERGY
Office of River Protection

BULK VITRIFICATION
CIVIL
SITE IMPROVEMENTS PLAN

SIZE	FILE NO	DESIGN NO	DRAWING NO	REV NO
F	241G	0110	H-14-106789	1

SCALE 1"=30' | REF 821144 | SHEET 1 OF 1

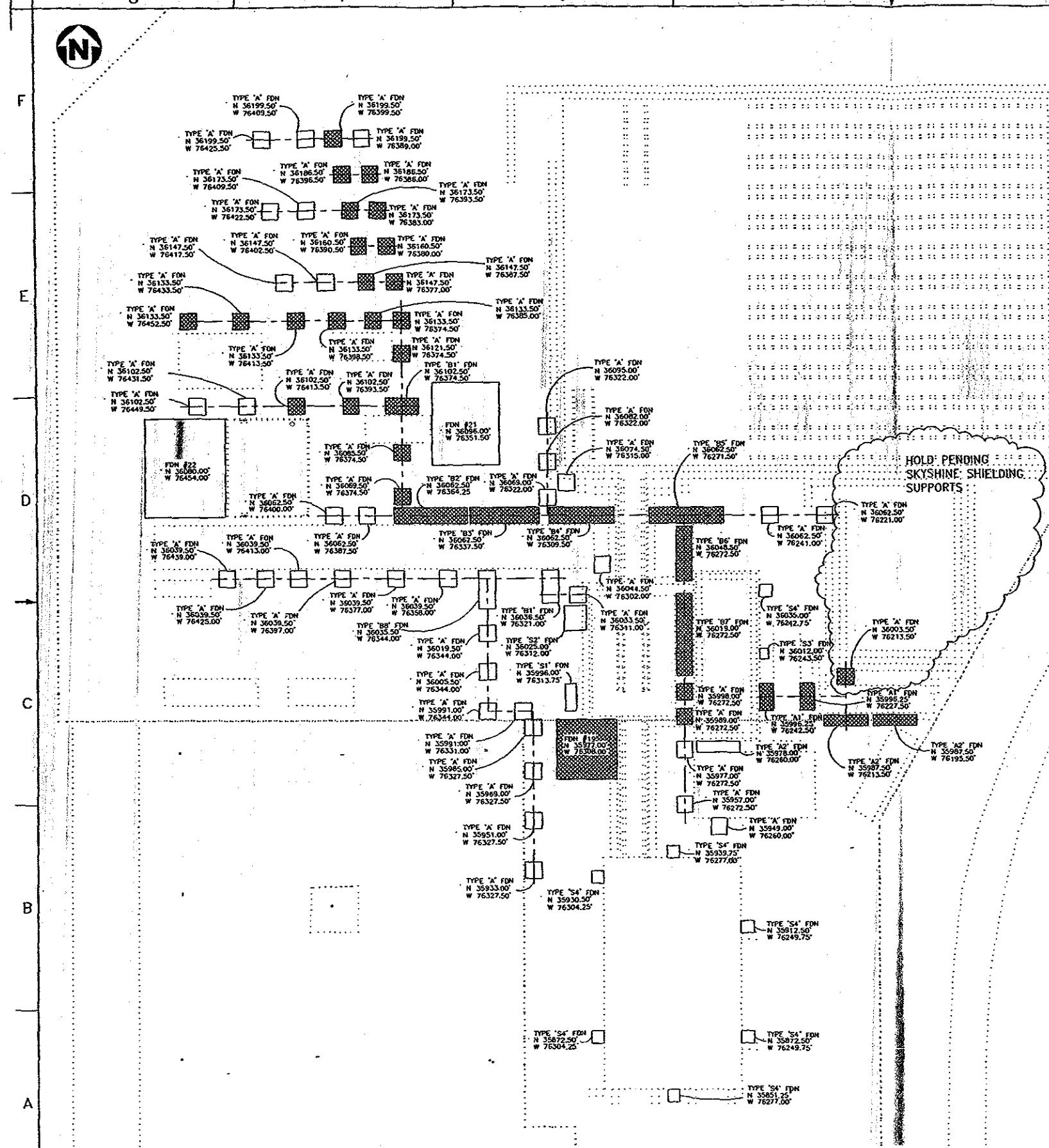

In making requests for transmittal of data by any electronic media, the Company receiving such data agrees that AMEC Americas Limited cannot be held responsible for uses of the data outside of or beyond the scope of our original agreement. Also, because data stored in electronic media or transmitted by electronic means can deteriorate undetected or be modified without the consultant's knowledge, the Company receiving data agrees that AMEC Americas Limited cannot be held liable for the compatibility, completeness or correctness of the data.

NOTES:

1. ALL CONSTRUCTION SHALL CONFORM TO CONSTRUCTION SPECIFICATION 145579-G-SP-001.

2. FOUNDATION DETAILS FOR #19, #21 AND #22 ARE SHOWN ON DRAWING H-14-106800. OTHER FOUNDATION DETAILS ARE SHOWN ON DRAWINGS H-14-106799 & H-14-106801.

3. THE FOLLOWING SPECIFIC REQUIREMENTS APPLY TO CAST-IN-PLACE CONCRETE. REFER TO CONSTRUCTION SPECIFICATION 145579-G-SP-001 SECTION 03300 FOR DETAILS.

   a) MINIMUM COMPRESSIVE STRENGTH = 4000psi @ 28 DAYS.
   b) MAXIMUM WATER/CEMENT RATIO = 0.5.
   c) AIR CONTENT SHALL BE 5%-8%.

4. ALL DISTURBED TOP LAYER OF COMPACTED CRUSHED GRAVEL SHALL BE REPLACED BETWEEN FOUNDATIONS TO NOMINAL ELEVATION 662.8±0.2 FEET.

MECHANICAL COMPACTION OF THE TOP SURFACE OF THE GRANULAR BACKFILL IS NOT REQUIRED FOR SPACES BETWEEN FOUNDATIONS WHERE SPACE IS LESS THAN 12" WIDE. FILL TO ELEVATION 662.8 ±0.1 FEET.

ALTERNATIVELY, THE SPACE MAY BE FILLED WITH UNREINFORCED CONCRETE. TOP OF CONCRETE TO BE 663.000 MATCHING ADJACENT FOUNDATIONS. EXISTING SOLID CONCRETE FOUNDATIONS MAY BE USED AS FORMS FOR NEW CONCRETE FOUNDATIONS IF THE SECOND ALTERNATIVE IS CHOSEN; PROVIDE A BOND BREAKER (6 MIL POLYETHYLENE SHEET, OR ½" THICK FIBERBOARD) BETWEEN NEW AND OLD CONCRETE.

5. COORDINATES ARE BASED ON HANFORD 200 WEST DATUM. CONTROL POINTS ARE RR SPIKES IN ASPHALT ON 13TH ST (DBVS-1 AND DBVS-2) SEE DRAWING H-14-106788 FOR LOCATIONS.

6. COORDINATES SHOWN ARE CENTERLINE REFERENCE POINTS OF EACH FOUNDATION.

7. FOR FOUNDATIONS #1 THROUGH #18 LOCATIONS SEE DRAWING H-14-106789. (INSTALLED UNDER SEPARATE CONTRACT)

8. FOR FOUNDATION #20 (ICV BOX ASSEMBLY BUILDING) LOCATION AND DETAILS SEE DRAWING H-14-106797.

9. SHADED FOUNDATIONS ARE SUBJECT TO THE REQUIREMENTS OF THE RESOURCE CONSERVATION AND RECOVERY ACT OF 1976. (RCRA)

10. EXISTING 4/0 AWG GROUND CONDUCTORS ARE LOCATED APPROXIMATELY 30 INCHES BELOW FINISHED GRADE. REFER TO DRAWING F-145579-DD-E-0500 FOR APPROXIMATE LOCATIONS. RE-ROUTE AND REPAIR ANY DAMAGE TO EXISTING GROUNDING CONDUCTORS AS DETAILED ON THE ELECTRICAL GROUNDING DRAWINGS AND IN THE CONSTRUCTION SPECIFICATION.

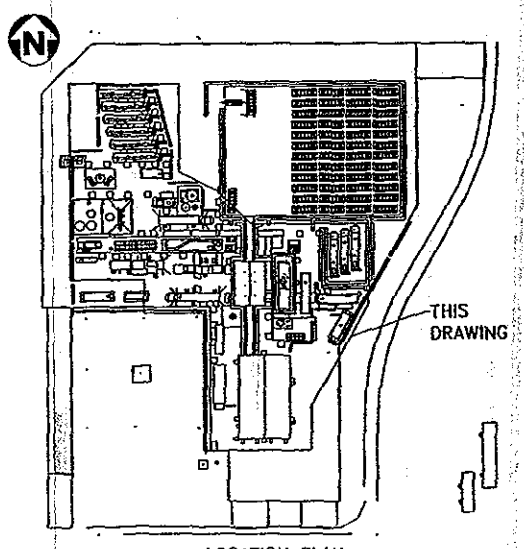

LOCATION PLAN

Rev.	REVISION DESCRIPTION	Date	By	Ch'd	Approved Design Agency	Approved Proj. Mgr.
0	ISSUED FOR CONSTRUCTION	13 APR 05	DPK		PM	TH
D	ISSUED FOR CH2M HILL APPROVAL & 90% REPORT	01 APR 05	DPK		PM	TH
C	ISSUED FOR CH2M HILL REVIEW	01 MAR 05	DPK		PM	TH
B	ISSUED FOR INTERNAL APPROVAL	15 FEB 05	DPK		PM	TH
A	ISSUED FOR INTERNAL REVIEW	27 JAN 05	DPK		PM	TH

AMEC DRAWING NO: H-14-106798 REV: 0

amec

AMEC PROJECT: 145579-FINAL DBVS DESIGN

U.S. DEPARTMENT OF ENERGY
Office of River Protection

BULK VITRIFICATION
MINOR FOUNDATIONS
GENERAL ARRANGEMENT

NAME	DATE
DRAWN BY D. P. Kroeker	30 DEC 04
CHECKED BY D.L. Whitley	13 JAN 05
ENGINEER BY P. Meyer	13 JAN 05
ISSUED FOR USE P. Meyer	13 JAN 05
PROJECT MANAGER T. Heim	13 JAN 05
PROJECT ENGINEER T. Heim	13 JAN 05
DESIGN AUTHORITY	

SIZE	BLOCK NO	INDEX NO	DWG NO	REV
F	2410	0110	H-14-106798	0

SCALE 1/16"=1'-0" CDH 821562 SHEET 1 OF 1

DWG NO	TITLE
DRAWING TRACEABILITY LIST	

REF NUMBER	TITLE
NEXT USED ON	REFERENCES

REV NO	DESCRIPTION	REV BY	REV DATE	CHECKED BY	DATE	COMPANY
REVISIONS						

C:\Documents and Settings\custem\My Documents\Bulk Vitrification Project\Drawings\Civil and Structural\AutoCAD Drawings\H-14-106798 Rev.0 Minor Fnds AMEC Final.DWG, 3/28/2006 12:05:53 PM, mrc

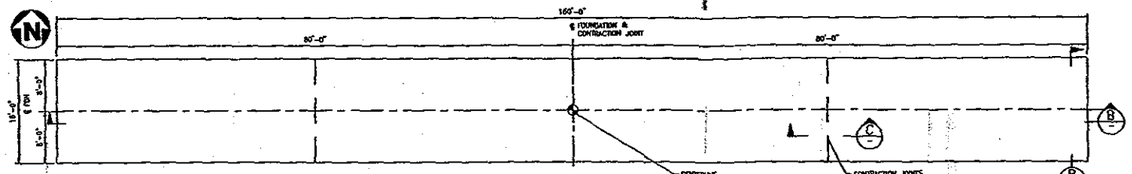

OFF-GAS TREATMENT EQUIPMENT
FOUNDATION #13 - PLAN
1/8"=1'-0"

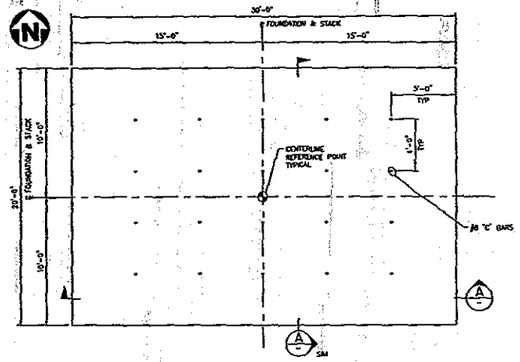

OFF-GAS STACK
FOUNDATION #10 - PLAN
1/4"=1'-0"

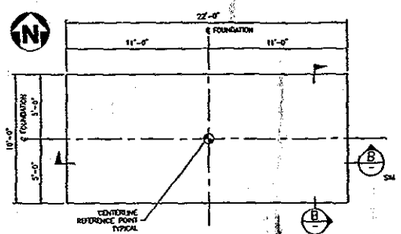

SECONDARY WASTE PUMP SKID
FOUNDATION #8 - PLAN
1/4"=1'-0"

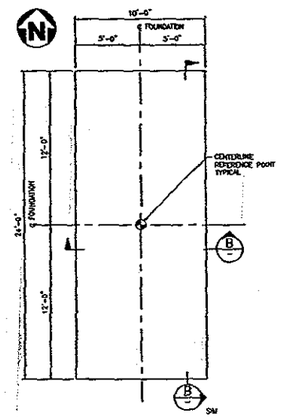

COMPRESSED AIR SKID
FOUNDATION #9 - PLAN
1/4"=1'-0"

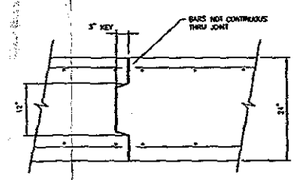

CONTRACTION JOINT
TYPICAL 3 LOCATIONS
SECTION C
1"=1'-0"

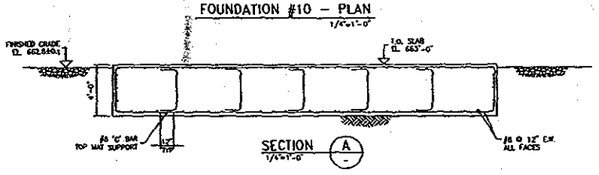

SECTION A
1/4"=1'-0"

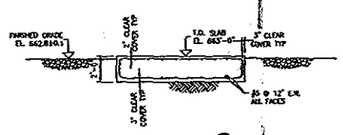

SECTION B
1/4"=1'-0"

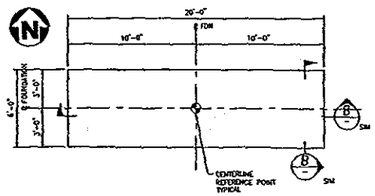

LIQUID AMMONIA STORAGE TANK
FOUNDATION #12 - PLAN
1/4"=1'-0"

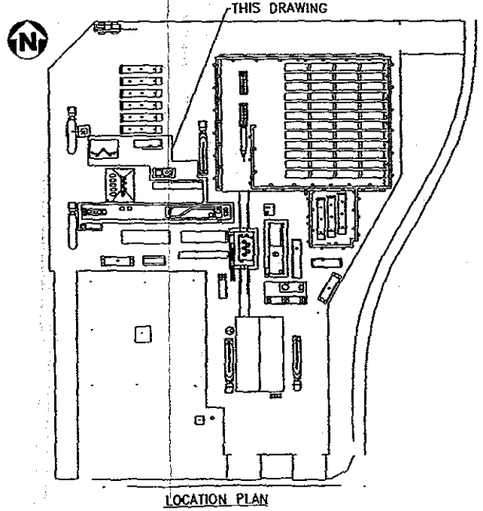

LOCATION PLAN

NOTES:

FOR GENERAL NOTES, DESIGN CRITERIA, MATERIAL SPECIFICATIONS, AND FOUNDATION LOCATIONS REFER TO DRAWING H-14-106789 "BULK VITRIFICATION -CIVIL SITE IMPROVEMENTS"

THIS DRAWING FORMERLY ISSUED AS AMEC DRAWING F-143643-00-C-0011.

DRAWING TRACEABILITY LIST			
DWG NO	TITLE	REF NUMBER / REFERENCES	TITLE
-	-	-	-
		NEXT USED ON H-14-106789	

REVISIONS: REV NO | DESCRIPTION | CHK | DWN | COMPANY

amec

NAME	DATE
DESIGN D.P. KROCKER	
DRAWN D.T. WHITLEY	
CHKD P. MEYER	
APPD P. MEYER	
PROJECT ENGINEER P. MEYER	
PROJECT MANAGER J. STEPHENS	

145579-FINAL DBVS DESIGN

U.S. DEPARTMENT OF ENERGY
Office of River Protection

BULK VITRIFICATION
OFF-GAS AREA
FDNS - PLANS & SECTIONS

REV F | SIZE 24G | CODE 0900 | H-14-106796 | REV 0

SCALE AS SHOWN | BY B21145 | SHEET 1 OF 1

C:\Documents and Settings\custerm\My Documents\Bulk Vitrification Project\Drawings\Civil and Structural\AutoCAD Drawings\H-14-106796 Rev.0 Off-Gas Areas Frnds.DWG, 3/28/2006 12:06:17 PM, mrc

In making requests for transmittal of data by any electronic media, the Company receiving such data agrees that AMEC Americas Limited cannot be held responsible for uses of the data outside of or beyond the scope of our original agreement. Also, because data stored in electronic media or transmitted by electronic means can deteriorate undetected or be modified without the consultant's knowledge, the Company receiving data agrees that AMEC Americas Limited cannot be held liable for the compatibility, completeness or correctness of the data.

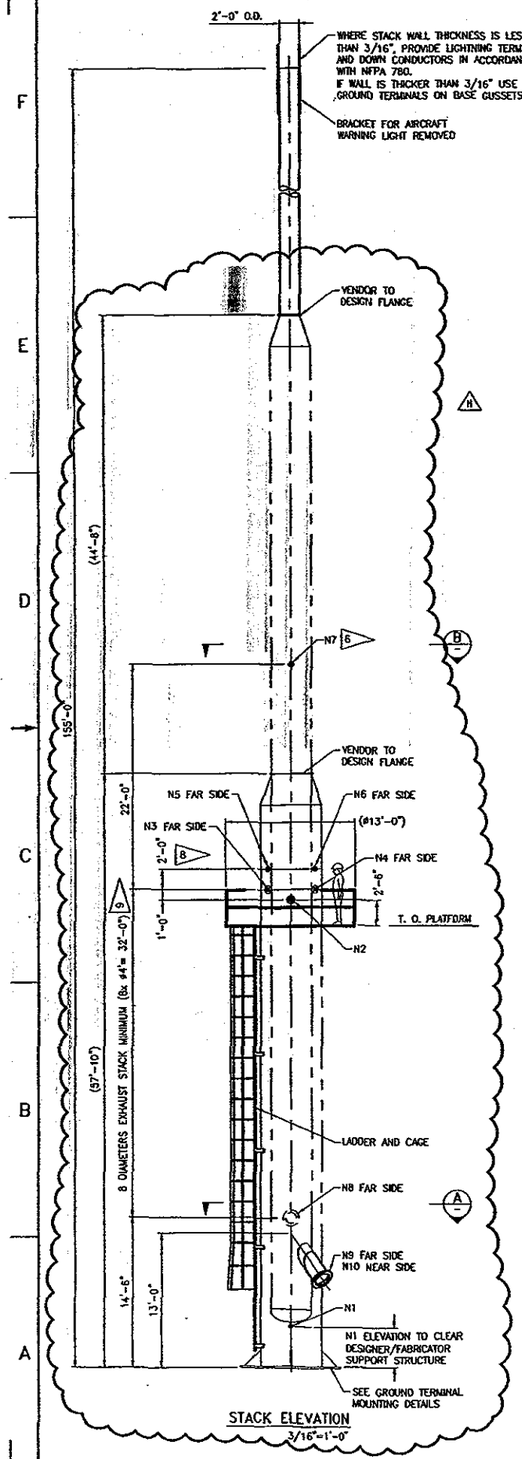

STACK ELEVATION
3/16"=1'-0"

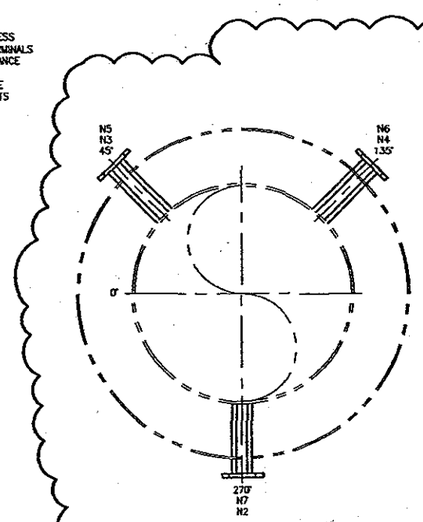

SECTION B
1"=1'-0"

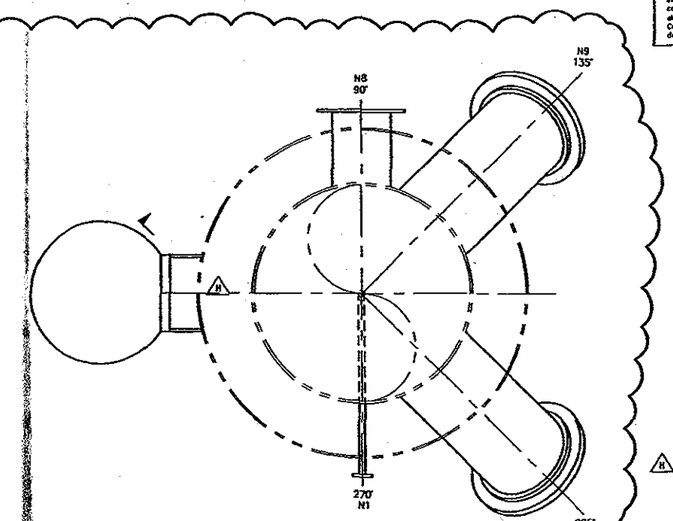

SECTION A
1"=1'-0"

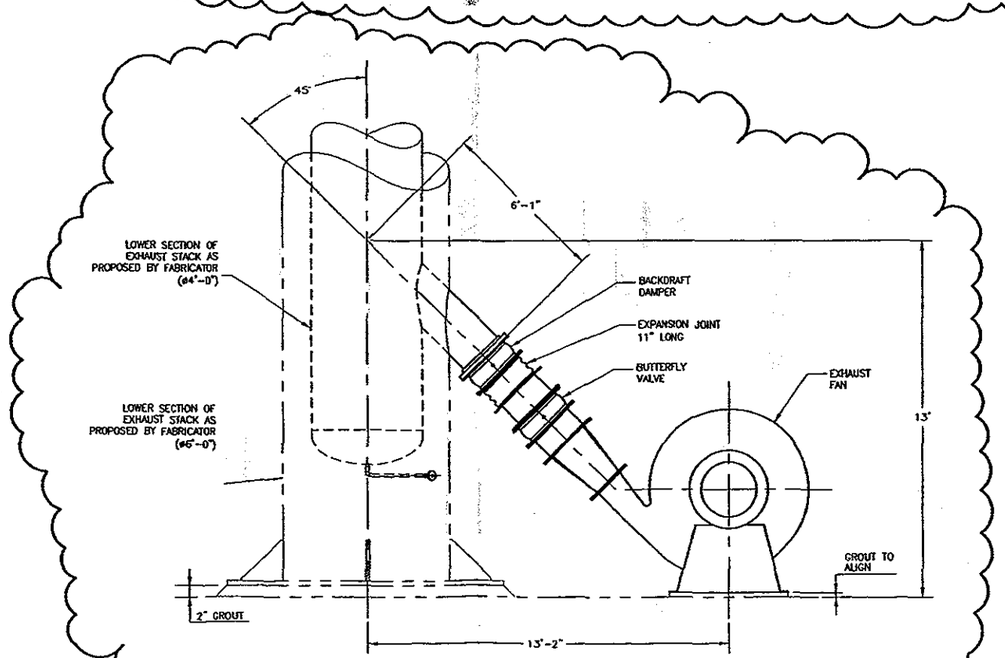

SECTION C
1/2"=1'-0"
FAN INSTALLATION CONFIGURATION

NOZZLE No.	SERVICE	SIZE	PROJECTION
N1	STACK DRAIN	1" SCHED 10	4"
N2	VISUAL INSPECTION	4" SCHED 10	4"
N3	SAMPLE LINE	4" SCHED 10	4"
N4	SAMPLE LINE	4" SCHED 10	4"
N5	SAMPLE RETURN LINE	2" SCHED 10	4"
N6	SAMPLE RETURN LINE	2" SCHED 10	4"
N7	FLOW ELEMENT	2" SCHED 10	4"
N8	BYPASS LINE	12" SCHED 10	4"
N9	OFF-GAS INLET	20" SCHED 10	AS SHOWN
N10	OFF-GAS INLET	20" SCHED 10	AS SHOWN

NOTES:

1. DRAWING TO BE READ IN CONJUNCTION WITH DATA SHEET 145579-V-DS-005.1
2. ALL NOZZLES TO BE SUPPLIED WITH 150# R.F. S.O. FLANGES
3. N2 TO BE COVERED WITH CLEAR GLASS COVER c/w GASKET
4. SAMPLE LINES ARE NOT SHOWN. CONNECT SHROUDED PROBES TO ANALYZERS LOCATED BY STACK MONITOR VENDOR.
5. VENDOR TO DESIGN STACK ANCHORAGE ASSUMING DRILLED AND GROUTED ANCHORS. FOUNDATION DESIGN SHOWN ON DWG H-14-106796-FOUNDATION #10
6. UTILIZE MOBILE MANBASKET FOR PERIODIC ACCESS TO THE FLOW ELEMENT
7. STYLE, LOCATION AND SIZE OF NOZZLES TO BE CONFIRMED BY SELECTED ANALYZER VENDOR.
8. NOZZLE ELEVATION TO BE CONFIRMED BY BUYER.
9. SAMPLE LINE NOZZLE LOCATIONS SHALL BE LOCATED A MINIMUM OF 8 STACK DIAMETERS DOWN STREAM OF FLOW DISTURBANCE TRANSITIONS OR CONNECTIONS PER 40 CFR 60 METHOD 1 SECTION 11.0.
10. VENDOR SHALL PROVIDE DETAILS OF PENETRATIONS THROUGH 6' DIAMETER LOWER STACK ASSEMBLY.
11. EXHAUST STACK DESIGN, FABRICATION AND TESTING SHALL BE TO SPECIFICATION 145579-V-SP-005 AND DATA SHEET 145579-V-DS-005.1.

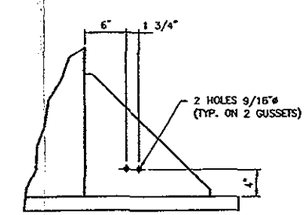

GROUND TERMINAL MOUNTING DETAILS
1 1/2"=1'-0"

DWG NO	TITLE
-	

DRAWING TRACEABILITY LIST

REF NUMBER	TITLE
-	

REFERENCES — NEXT USED ON

REV NO	REV DATE	DESCRIPTION	REV BY	REV DATE	CHECKED BY	DWN COMPANY
H		REVISED PER ENGINEERING DIRECTION	1-24-06	CBT	KJM	N/A
G		REVISED PER ENGINEERING DIRECTION	11 JAN 06	SNM	KJM	N/A
F		REVISED PER ENGINEERING DIRECTION	11-3-05	CBT	JL	N/A
E		REISSUED FOR CH2M HILL REVIEW/90% REPORT (AREA 36 ONLY)	13 APR 05	JCH	PCF	FWS
D		ISSUED FOR CH2M HILL REVIEW/90% REPORT (AREA 36 ONLY)	15 MAR 05	RDB	PCF	FWS
C		ISSUED FOR INFORMATION	01 FEB 05	RDB	AP	FWS
B		ISSUED FOR INTERNAL APPROVAL	15 DEC 04	RDB	AP	FWS
A		ISSUED FOR REVIEW	13/OCT/04	RDB	AP	FWS

REVISIONS

Rev.	REVISION DESCRIPTION	Date	By	Chk'd	Approved Design Engr	Approved Project Engr

AMEC DRAWING NO: F-145579-36-V-0021 REV: H

amec

AMEC PROJECT: 145579-FINAL DBVS DESIGN

U.S. DEPARTMENT OF ENERGY
Office of River Protection

BULK VITRIFICATION
OFF-GAS EXHAUST STACK
DETAILS

NAME	DATE
DRAWN BY DW	
DESIGNED BY	
CHECKED BY	
DESIGN F. ENGR LEAD	
ENGINEERING MANAGER	
PROJECT MANAGER	
DESIGN AUTHORITY	

SIZE F | BLDG NO | MODEL NO | DRG NO | REV H

SCALE A/N | SHEET 1 OF 1

145579-C-CA-015

Attachment 2 (14 pages)

RISA 3D Input/ Output Files
Stack Foundation (Fdn #10)

ORIGINATOR: Michael R Custer DATE: 3-28-06
CHECKER: Doug Chouault DATE: 3-28-06

Global

Display Sections for Member Calcs	5
Max Internal Sections for Member Calcs	97
Include Shear Deformation	Yes
Include Warping	Yes
Area Load Mesh (in^2)	144
Merge Tolerance (in)	.12
P-Delta Analysis Tolerance	0.50%
Vertical Axis	Y

Hot Rolled Steel Code	AISC: ASD 9th
Cold Formed Steel Code	AISI 99: ASD
NDS Wood Code	NDS 91: ASD
NDS Temperature	< 100F
Concrete Code	ACI 1999

Number of Shear Regions	4
Region Spacing Increment (in)	4
Biaxial Column Method	PCA Load Contour
Parme Beta Factor (PCA)	.65
Concrete Stress Block	Rectangular
Use Cracked Sections	Yes
Bad Framing Warnings	No
Unused Force Warnings	Yes

Joint Coordinates and Temperatures

	Label	X [ft]	Y [ft]	Z [ft]	Temp [F]	Detach From Diaphragm
1	N1A	0	95	0	0	
2	N1	0	0	0	0	
3	N8612A	0	100	0	0	
4	N8613A	0	155	0	0	
5	N20	0	43	0	0	

Joint Boundary Conditions

	Joint Label	X [k/in]	Y [k/in]	Z [k/in]	X Rot.[k-ft/rad]	Y Rot.[k-ft/rad]	Z Rot.[k-ft/rad]
1	N1	Reaction	Reaction	Reaction	Reaction	Reaction	Reaction
2	N8613A						

Hot Rolled Steel Properties

	Label	E [ksi]	G [ksi]	Nu	Therm (\1E5 F)	Density[k/ft^3]	Yield[ksi]
1	A36	29000	11154	.3	.65	.49	36
2	A572Grade50	29000	11154	.3	.65	.49	50
3	A992	29000	11154	.3	.65	.49	50
4	A500_42	29000	11154	.3	.65	.49	42
5	A500_46	29000	11154	.3	.65	.49	46

Hot Rolled Steel Section Sets

	Label	Shape	Design List	Type	Material	Design Rules	A [in2]	Iyy [in4]	Izz [in4]	J [in4]
1	HR1A	W10X17	Wide Flange	Beam	A36	Typical	4.99	3.56	81.9	.16

Member Primary Data

	Label	I Joint	J Joint	K Joint	Rotate(d...	Section/Shape	Design List	Type	Material	Design Rules
1	M46	N1	N1A			Pipe 48 DIA 1/...	Channel	Beam	A36	Typical

Member Primary Data (Continued)

	Label	I Joint	J Joint	K Joint	Rotate(d...	Section/Shape	Design List	Type	Material	Design Rules
2	M47	N8612A	N8613A			PIPE 24" Dia 1/...	Channel	Beam	A36	Typical
3	M48	N1A	N8612A			Pipe 48 DIA 1/...	Wide Flange	Beam	A36	- Typical

Basic Load Cases

	BLC Description	Category	X Gravity	Y Gravity	Z Gravity	Joint	Point	Distributed	Area (Mem...	Surface (...
1	DEAD LOAD	DL		-1						
2	LIVE LOAD	LL				1				
3	SEISMIC X	ELZ+X	.17							
4	WIND Z	WLZ						3		

Joint Loads and Enforced Displacements (BLC 2 : LIVE LOAD)

	Joint Label	L,D,M	Direction	Magnitude[k,k-ft in,rad k*s^2/ft]
1	N20	L	Y	-6

Member Distributed Loads (BLC 4 : WIND Z)

	Member Label	Direction	Start Magnitude[k/ft,deg]	End Magnitude[k/ft,deg]	Start Location[ft...	End Location[ft,%]
1	M47	Z	.059	.059	0	0
2	M48	Z	.119	.119	0	0
3	M46	Z	.119	.119	0	0

Load Combinations

	Description	Solve	PDelta	SRSS	BLC	Fact.	BLC	Fact.	BLC	Fact.	BLC	Fact.	BLC	Fact.	BLC	Fact.	BLC	Fact.	BLC	Fact.
1	DEAD LOAD	Yes	Y		1	1														
2	DEAD LOAD + LIVE LOAD...	Yes	Y		1	1	2	1	3	1										
3	DEAD LOAD +LIVE LOAD +...	Yes	Y		1	1	2	1	4	1										
4	LIVE LOAD	Yes	Y		2	1														

Envelope Joint Reactions

	Joint		X [k]	lc	Y [k]	lc	Z [k]	lc	MX [k-ft]	lc	MY [k-ft]	lc	MZ [k-ft]	lc
1	N1	max	0	1	45.235	2	0	1	0	1	0	1	431.997	2
2		min	-6.67	2	6	4	-15.105	3	-1024.934	3	0	1	0	1
3	Totals:	max	0	1	45.235	2	0	1						
4		min	-6.67	2	6	4	-15.105	3						

Envelope Member Section Forces

	Member	Sec		Axial[k]	lc	y Shear[k]	lc	z Shear[k]	lc	Torque[k-ft]	lc	y-y Moment[k-ft]	lc	z-z Moment[k-ft]	lc
1	M46	1	max	45.235	2	6.737	2	0	1	0	1	1024.934	3	431.997	2
2			min	6	4	0	1	-15.266	3	0	1	0	1	0	1
3		2	max	37.557	2	5.432	2	0	1	0	1	695.818	3	287.492	2
4			min	6	4	0	1	-12.449	3	0	1	0	1	0	1
5		3	max	23.88	2	4.125	2	0	1	0	1	433.606	3	173.991	2
6			min	0	4	0	1	-9.632	3	0	1	0	1	0	1
7		4	max	16.202	2	2.82	2	0	1	0	1	238.3	3	91.513	2
8			min	0	4	0	1	-6.815	3	0	1	0	1	0	1
9		5	max	8.525	2	1.515	2	0	1	0	1	109.891	3	40.033	2
10			min	0	4	0	1	-3.998	3	0	1	0	1	0	1
11	M47	1	max	6.908	1	1.193	2	0	1	0	1	91.768	3	33.305	2
12			min	0	4	0	1	-3.291	3	0	1	0	1	0	1
13		2	max	5.181	1	.899	2	0	1	0	1	52.094	3	18.923	2
14			min	0	4	0	1	-2.48	3	0	1	0	1	0	1

Envelope Member Section Forces (Continued)

	Member	Sec		Axial[k]	lc	y Shear[k]	lc	z Shear[k]	lc	Torque[k-ft]	lc	y-y Moment[k-ft]	lc	z-z Moment[k-ft]	lc
15		3	max	3.454	1	.606	2	0	1	0	1	23.574	3	8.578	2
16			min	0	4	0	1	-1.669	3	0	1	0	1	0	1
17		4	max	1.727	1	.312	2	0	1	0	1	6.21	3	2.271	2
18			min	0	4	0	1	-.857	3	0	1	0	1	0	1
19		5	max	0	1	.018	2	0	1	0	1	0	1	0	1
20			min	0	1	0	1	-.046	3	0	1	0	1	0	1
21	M48	1	max	8.525	1	1.483	2	0	1	0	1	109.891	3	40.033	2
22			min	0	4	0	1	-3.921	3	0	1	0	1	0	1
23		2	max	8.121	1	1.414	2	0	1	0	1	105.082	3	38.222	2
24			min	0	4	0	1	-3.773	3	0	1	0	1	0	1
25		3	max	7.717	1	1.346	2	0	1	0	1	100.459	3	36.497	2
26			min	0	4	0	1	-3.625	3	0	1	0	1	0	1
27		4	max	7.312	1	1.277	2	0	1	0	1	96.021	3	34.858	2
28			min	0	4	0	1	-3.476	3	0	1	0	1	0	1
29		5	max	6.908	1	1.208	2	0	1	0	1	91.768	3	33.305	2
30			min	0	4	0	1	-3.328	3	0	1	0	1	0	1

DMJM technology

ATTACHMENT 2	
Calculation No.: 145579-C-CA-015	
Rev. No.: 2	
Calculation Title: DBVS OGTS Stack	

RISA model showing Boundary Conditions with Node and Member Labels:

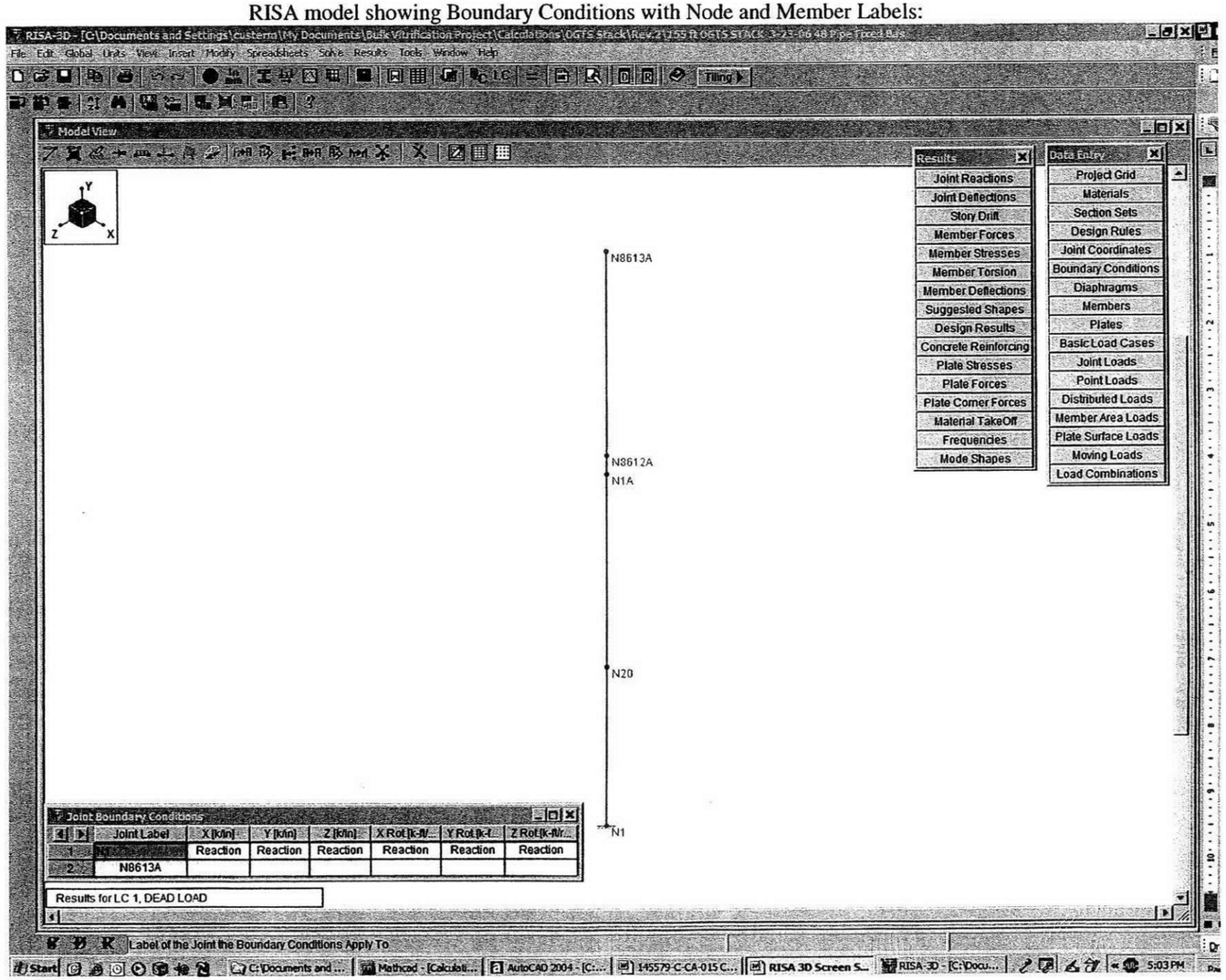

DMJM technology

ATTACHMENT 2	
Calculation No.: 145579-C-CA-015	
Rev. No.: 2	
Calculation Title: DBVS OGTS Stack	

RISA model showing Material Properties:

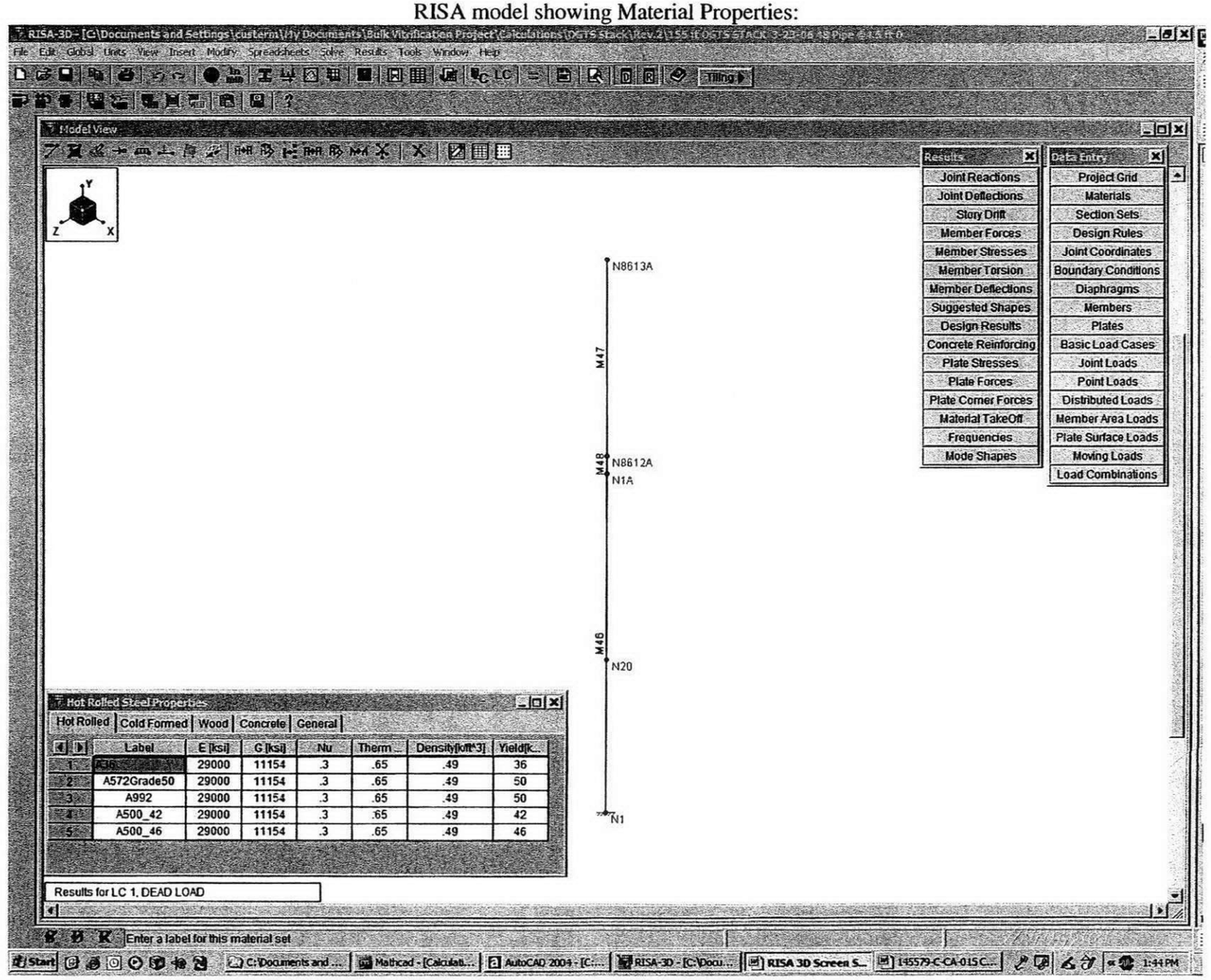

	Label	E [ksi]	G [ksi]	Nu	Therm...	Density[kf/ft^3]	Yield[k...
1	A36	29000	11154	.3	.65	.49	36
2	A572Grade50	29000	11154	.3	.65	.49	50
3	A992	29000	11154	.3	.65	.49	50
4	A500_42	29000	11154	.3	.65	.49	42
5	A500_46	29000	11154	.3	.65	.49	46

DMJM technology

ATTACHMENT 2	
Calculation No.: 145579-C-CA-015	
Rev. No.: 2	
Calculation Title: DBVS OGTS Stack	

RISA model showing Basic Load Cases:

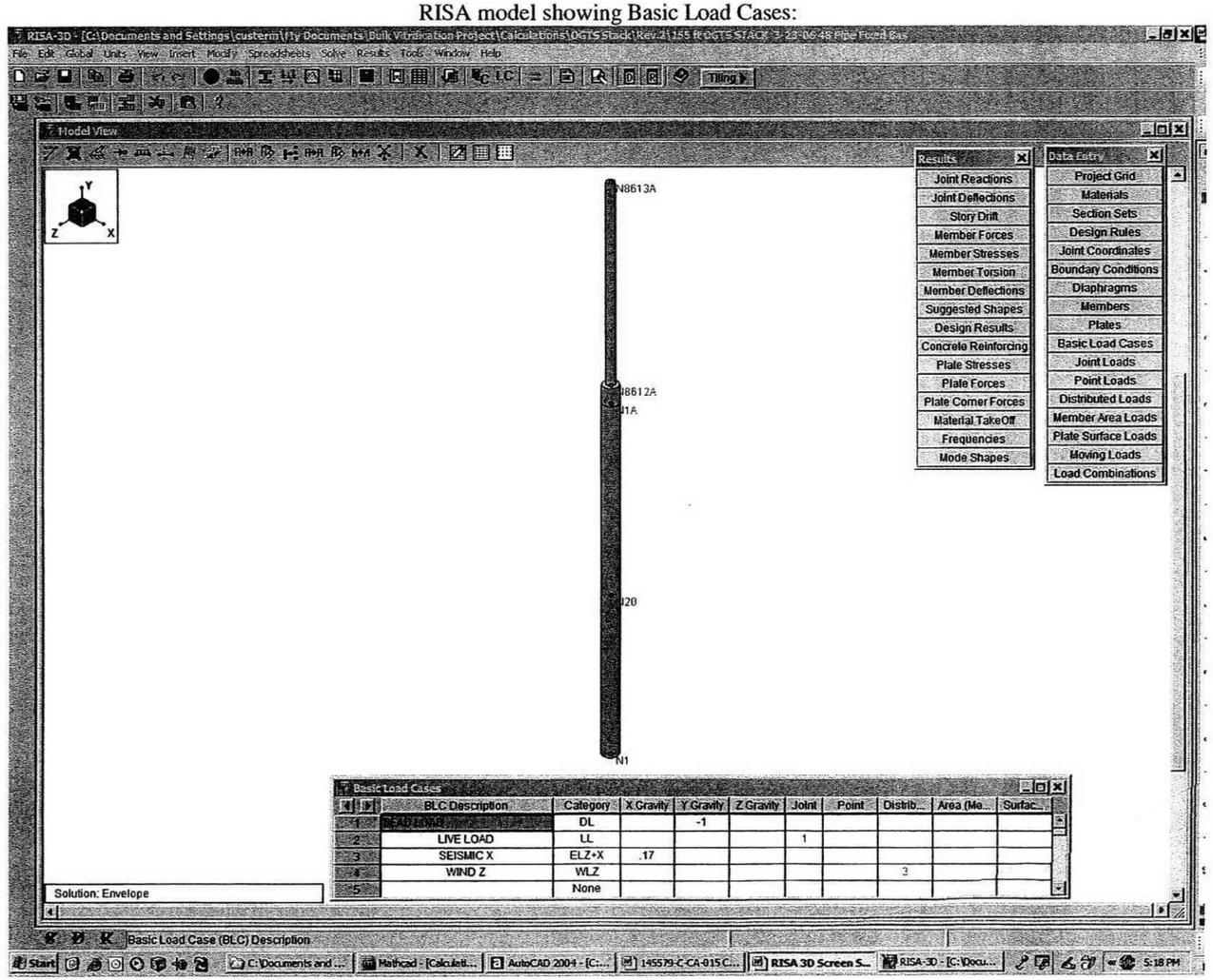

DMJM technology

ATTACHMENT 2	
Calculation No.: 145579-C-CA-015	
Rev. No.: 2	
Calculation Title: DBVS OGTS Stack	

RISA model showing Basic Load Combinations:

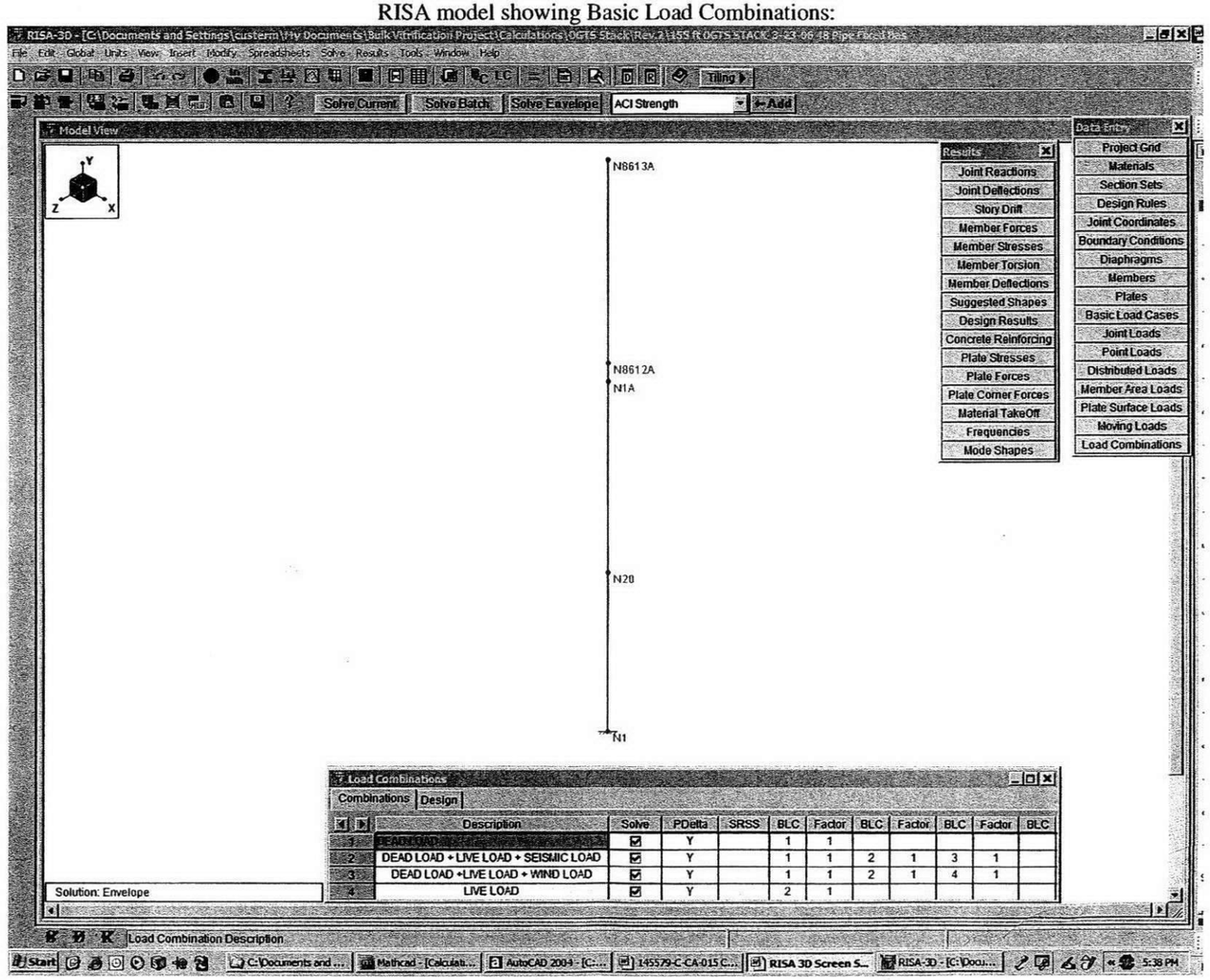

DMJM technology

ATTACHMENT 2	
Calculation No.: 145579-C-CA-015	
Rev. No.: 2	
Calculation Title: DBVS OGTS Stack	

RISA model showing Z-Direction Wind Loads:

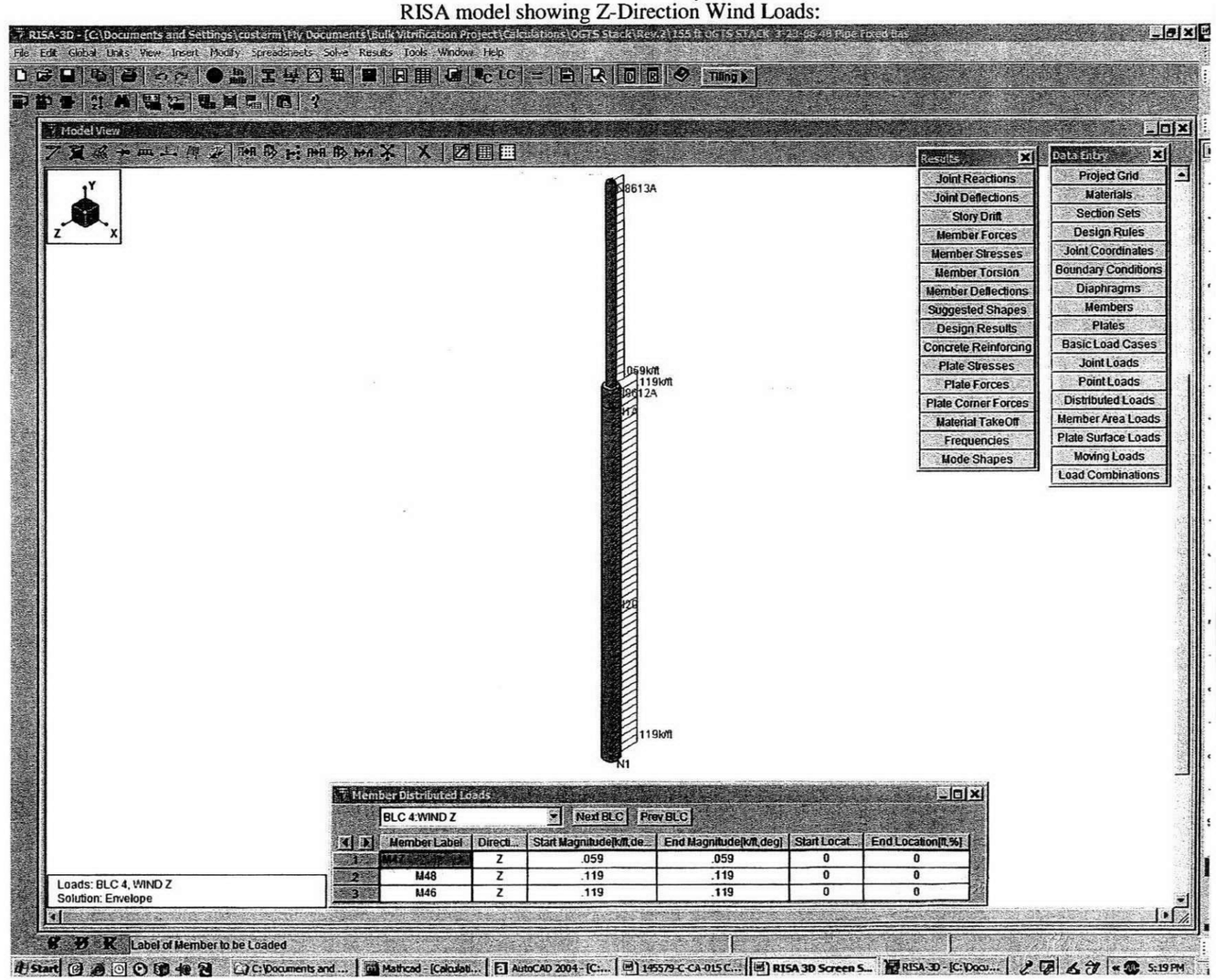

DMJM technology

ATTACHMENT 2	
Calculation No.: 145579-C-CA-015	
Rev. No.: 2	
Calculation Title: DBVS OGTS Stack	

RISA 3D showing Dead Load Reaction and Center of Gravity:

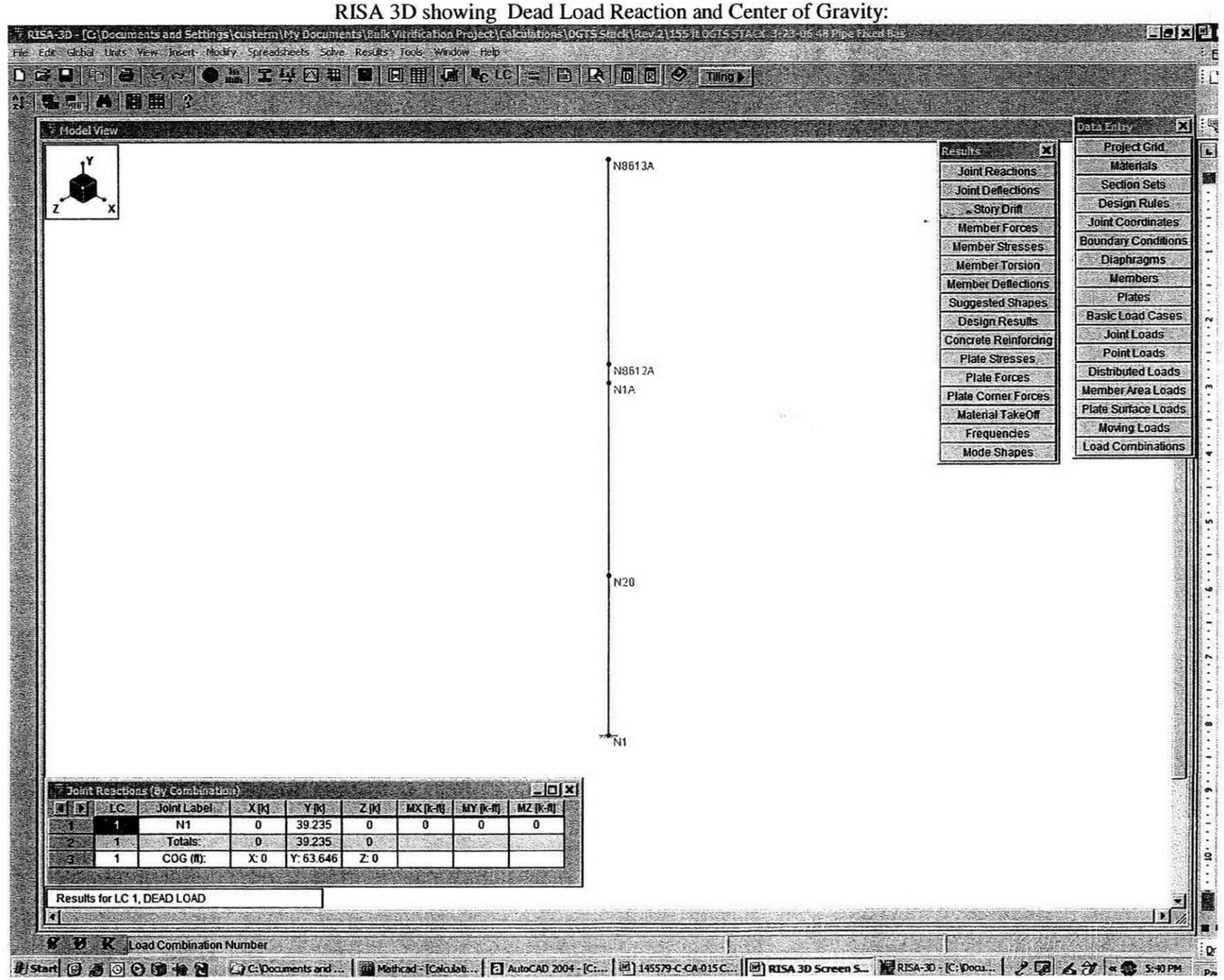

DMJM technology

ATTACHMENT 2	
Calculation No.: 145579-C-CA-015	
Rev. No.: 2	
Calculation Title: DBVS OGTS Stack	

RISA 3D showing the Maximum Deflections w/o Stiffening

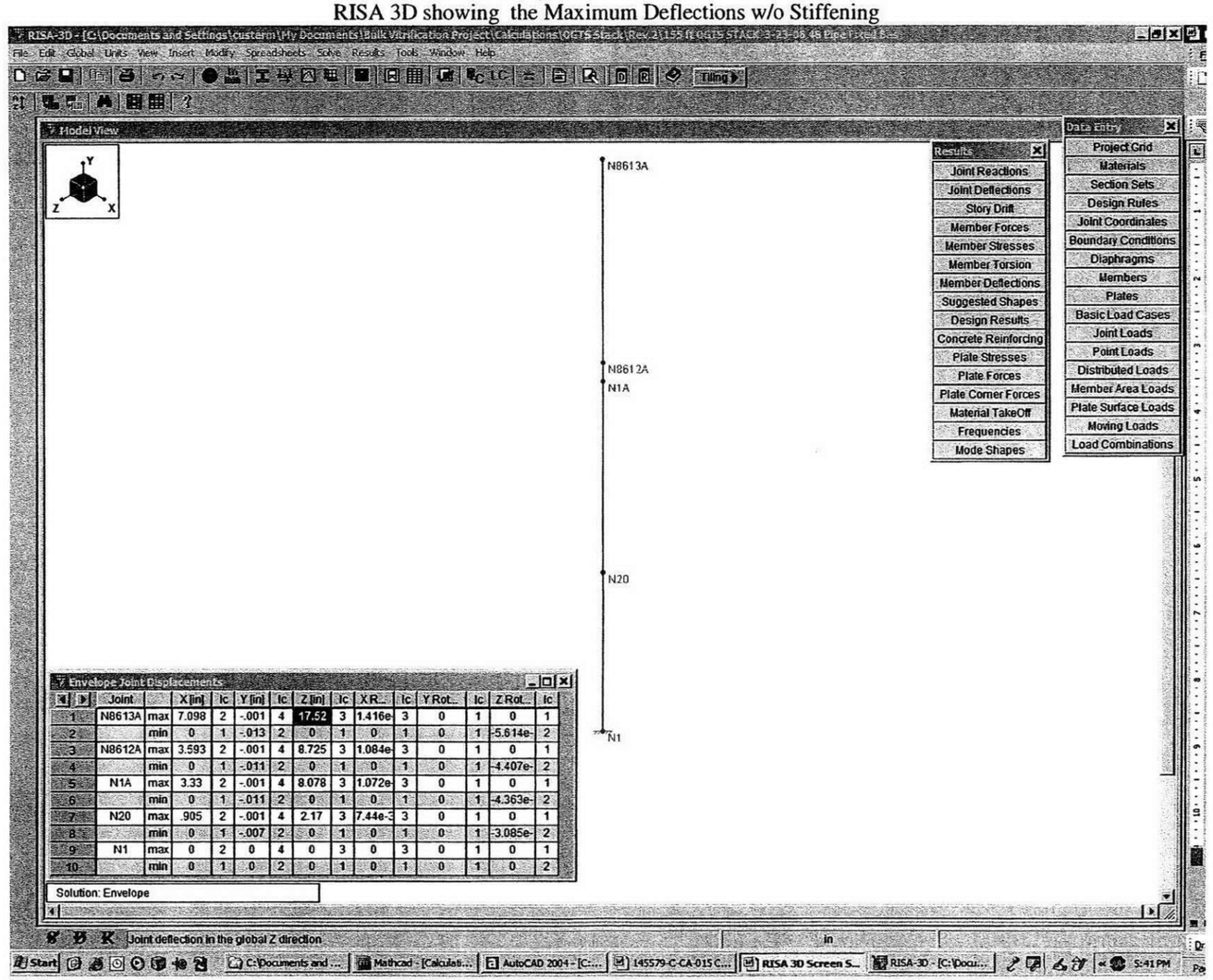

	Joint		X [in]	Ic	Y [in]	Ic	Z [in]	Ic	X R...	Ic	Y Rot...	Ic	Z Rot...	Ic
1	N8613A	max	7.098	2	-.001	4	17.52	3	1.416e-	3	0	1	0	1
2		min	0	1	-.013	2	0	1	0	1	0	1	-5.614e-	2
3	N8612A	max	3.593	2	-.001	4	8.725	3	1.084e-	3	0	1	0	1
4		min	0	1	-.011	2	0	1	0	1	0	1	-4.407e-	2
5	N1A	max	3.33	2	-.001	4	8.078	3	1.072e-	3	0	1	0	1
6		min	0	1	-.011	2	0	1	0	1	0	1	-4.363e-	2
7	N20	max	.905	2	-.001	4	2.17	3	7.44e-3	3	0	1	0	1
8		min	0	1	-.007	2	0	1	0	1	0	1	-3.085e-	2
9	N1	max	0	2	0	4	0	3	0	3	0	1	0	1
10		min	0	1	0	2	0	1	0	1	0	1	0	2

DMJM technology

ATTACHMENT 2	
Calculation No.: 145579-C-CA-015	
Rev. No.: 2	
Calculation Title: DBVS OGTS Stack	

RISA 3D showing Maximum Enveloped Reactions using (15) Support Locations

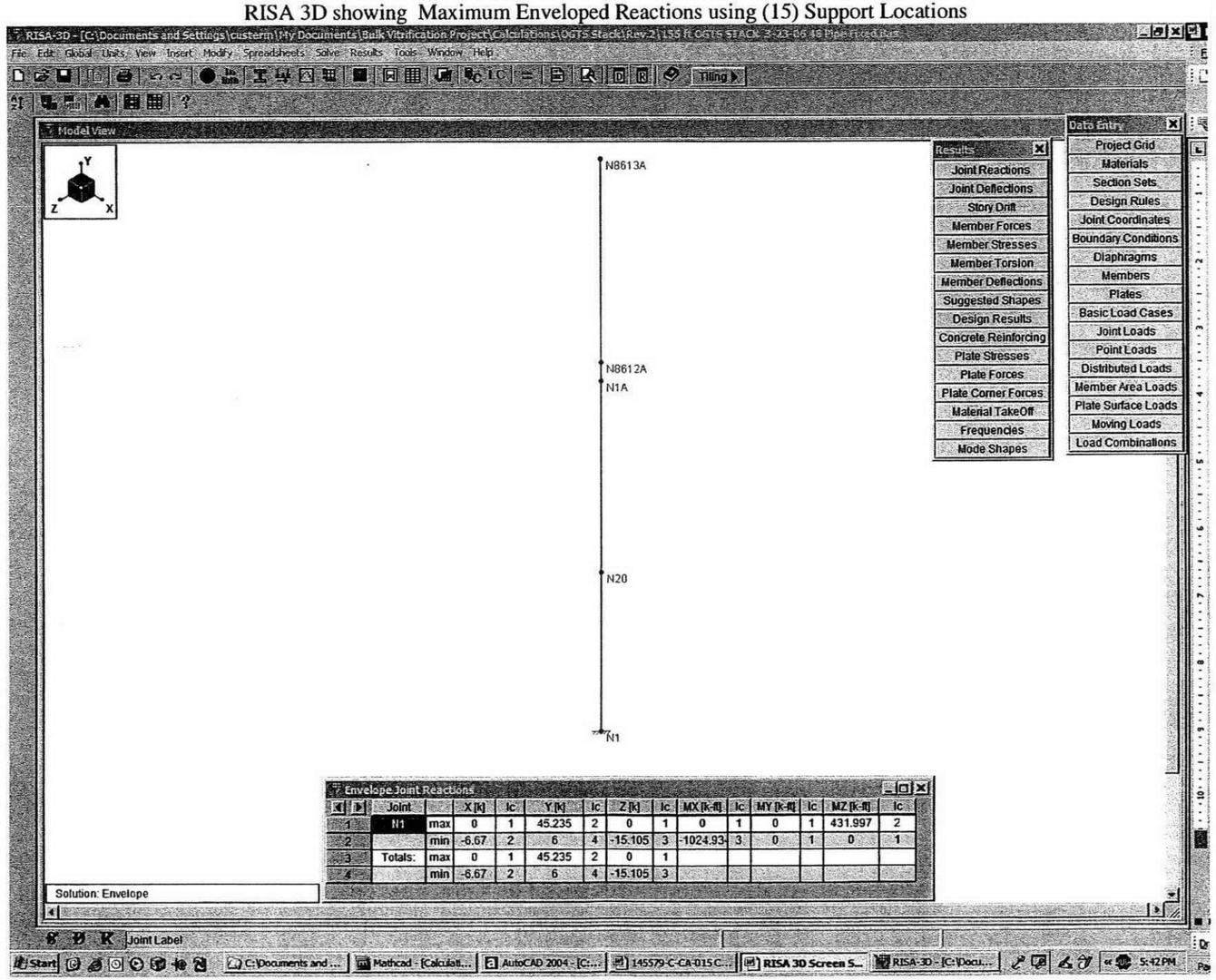

DMJM technology

ATTACHMENT 2	
Calculation No.: 145579-C-CA-015	
Rev. No.: 2	
Calculation Title: DBVS OGTS Stack	

RISA 3D showing "Enveloped ASD Steel Code Checks" Results

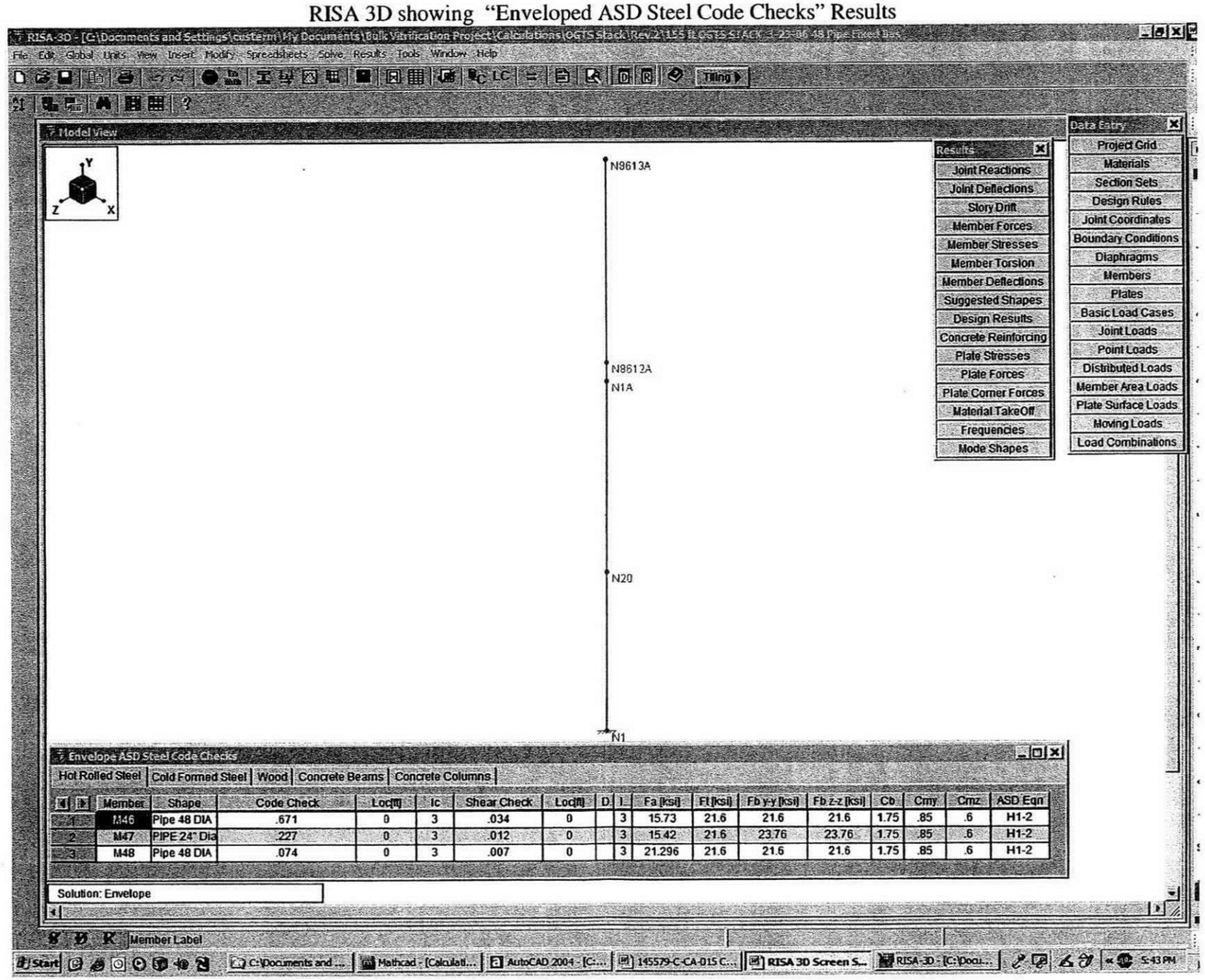

DMJM technology

ATTACHMENT 2	
Calculation No.: 145579-C-CA-015	
Rev. No.: 2	
Calculation Title: DBVS OGTS Stack	

RISA 3D showing the Maximum Moment on the OGTS Stack at the Foundation

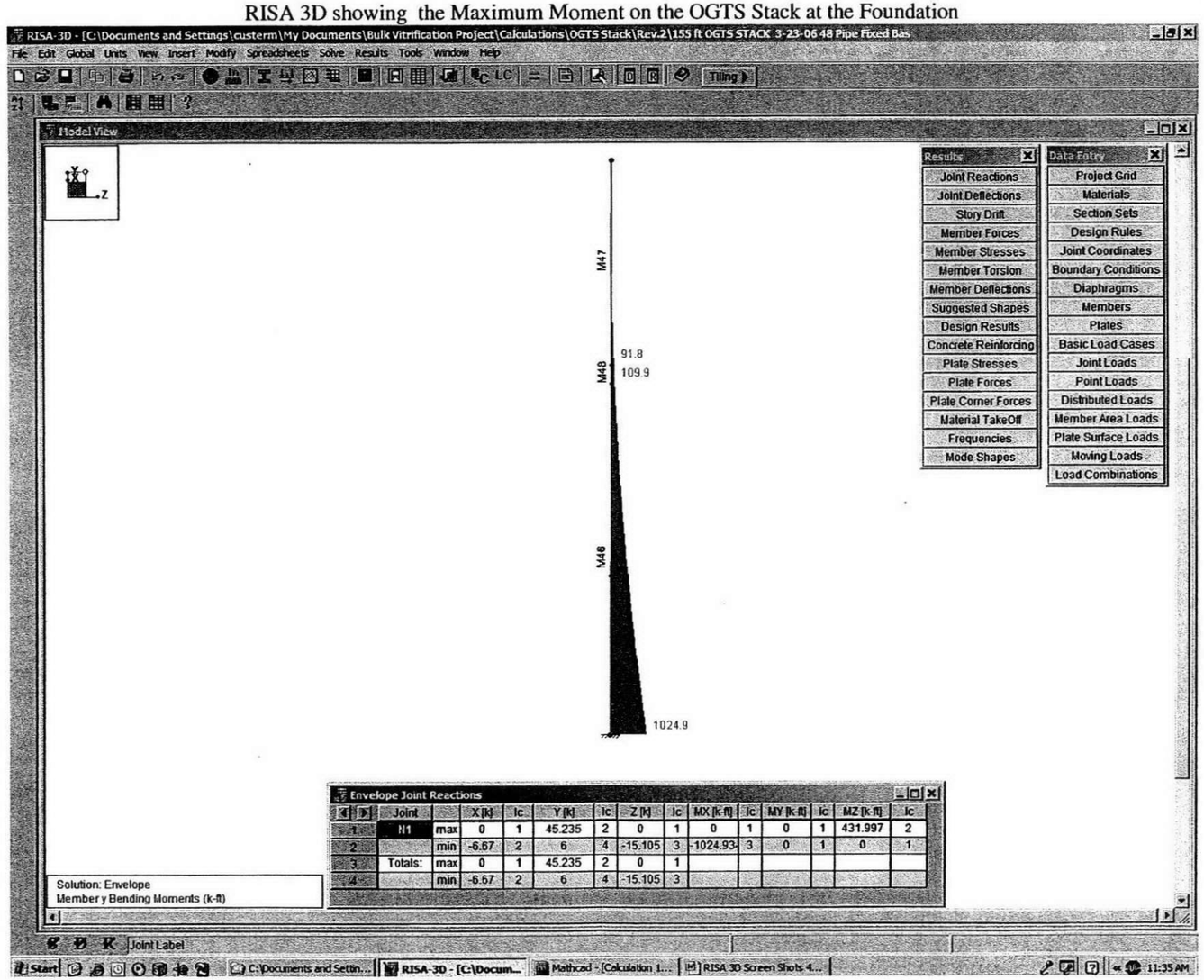

145579-C-CA-015

Attachment 3

Stack Vendor Calculation (Fdn #10)

Demonstration Bulk Vitrification System, (DBVS), Off-Gas Treatment System, (OGTS), Steel Exhaust Stack

Calculation Number 4697.1

February 28, 2006

Prepared for

Thompson Mechanical

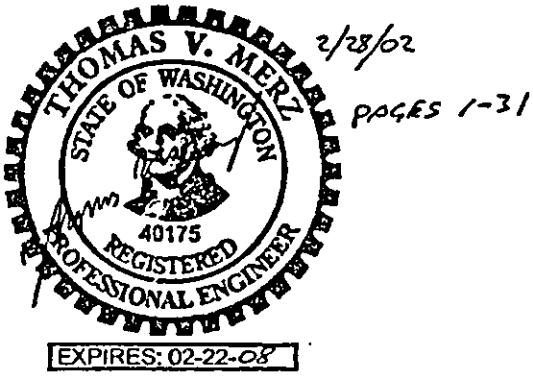

Prepared by

Meier Enterprises, Inc
8697 Gage Boulevard
Kennewick, Washington 99336
(509) 735-1589
(509) 783-5075 Fax

Project 4697.1

MEIER Enterprises, Inc.
8657 Gage Boulevard Kennewick, WA 99336
phone 509 735.1589 fax 509 783.5075
www.meierenc.com

Project No. 4697.1 Page: 1 of 31

Date: 2/6/2006 By: TM Checked By: PMG

Customer Job Number: 145579 Calculation Number: 4697.1

Customer: THOMPSON MECHANICAL Job Description: Steel Stack

STRUCTURAL CALCULATIONS for STEEL EXHAUST STACK

Calculation Number: 4697.1
Revision Number: 1

Originator: Tom V. Merz, PE

Signed: Thomas Merz

Checker: Paul M. Giever, SE

Signed: Paul M. Giever

Approved: Steve J. Strecker, PE

Signed: Steve J. Strecker

MEIER Enterprises, Inc.
8697 Gage Boulevard Kennewick, WA 99336
phone 509.735 1589 fax 509.783.5075
www.meierinc.com

Project No. 4697.1 Page: 2 of 31

Date: 2/6/06 By: TTT Checked By: [illegible]

Customer Job Number: 145579 Calculation Number: 4697.1

Customer: THOMPSON MECHANICAL Job Description: Steel Stack

STRUCTURAL CALCULATIONS
For
Steel Exhaust Stack

Index

		Page
1.0	Purpose	3
2.0	Basis	3
3.0	Methods	4
4.0	Calculations and analysis	8-31
5.0	Results and Conclusions	5-6
6.0	References	7

MEIER Enterprises, Inc.
8697 Gage Boulevard Kennewick, WA 99336
phone 509 735.1509 fax 509.783.5075

Project No. 4697.1 Page: 3 of 31

Date: 2/6/06 By: TM Checked By: MAG

Customer Job Number: 145579 Calculation Number: 4697.1

Customer: THOMPSON MECHANICAL Job Description: Steel Stack

1.0 INTRODUCTION

1.1 Purpose

This calculation consists of structural calculations for a 155'-0" tall steel exhaust stack to be placed on the Hanford site, Washington. The stack is part of the demonstration bulk vitrification system project

1.2 Scope

This calculation is limited to the steel stack and the anchors of the stack to a concrete foundation. The concrete foundation and all inlet piping equipment are beyond the scope of this calculation.

2.0 Basis

2.1 Design Inputs

1. Technical Specification 145579, REV. 3, written by AMEC.
2. Drawing No. F-145579-36-V-0021 Rev. H showing 155'-0" tall, 2'-0" minimum diameter steel exhaust stack
3. Exhaust stack technical data sheet

2.2 Criteria

1. Design Loads:
   a. Design Wind Speed, 85 mph, exposure C, $I_w = 1.15$
   b. Snow Loads: use 15 PSF ground snow load
   c. Live Load applied to catwalk: 50 PSF
   d. Seismic Loads per 1997 UBC for zone 2B, and soil type S_E, I_E=1.25
   e. Maximum exhaust stack temperature = 372° F, Minimum temperature = -25° F
   f. Corrosion Allowance = 1/16"

MEIER Enterprises, Inc.
8697 Gage Boulevard Kennewick, WA 99336
phone 509 735.1589 fax 509.783 5075
www.meierinc.com

Project No. 4697.1 Page: 8 of 31

Date: 2/6/06 By: TM Checked By: [illegible]

Customer Job Number: 145579 Calculation Number: 4697.1

Customer: THOMPSON MECHANICAL Job Description: Steel Stack

3.0 Methods

1. Each unique cross-section and / or elevation throughout the height of the exhaust stack shall be analyzed to determine its state of stress utilizing the methods outlined in ASME STS-1. Loads shall be combined as outlined in ASME STS-1. These stress values shall be compared to allowable stress values to confirm that each individual cross-section is not overstressed.
2. The connection between stack sections shall be analyzed to determine the number and arrangement of bolts. Bolts shall be sized per AISC ASD 9th.
3. Special structural checks that are unique to steel stacks shall be checked as outlined in ASME STS-1, such as Ovalling Oscillation and Vortex Shedding induced by wind loads .
4. The size, quantity, and embedment depth of the cast-in-place concrete anchors required to connect the stack to the concrete foundation, (by others), shall be designed per ACI 318 Appendix D. The method presented by ASME shall be utilized to determine the maximum anchor bolt tension at the stack base.

4.0 Calculations and Analyses

See attached hand calculations.

MEIER Enterprises, Inc.
8697 Gage Boulevard Kennewick, WA 99336
phone 509 735.1589 fax 509.783 5075
www.meierinc.com

Project No. 4697.1 Page: 5 of 31

Date: 2/6/06 By: TTZ Checked By: PJH

Customer Job Number: 145579 Calculation Number: 4697.1

Customer: THOMPSON MECHANICAL Job Description: Steel Stack

5.0 Results and Conclusions

The steel stack shall have the following design characteristics:

1. The stack shall have an overall height of 155'-0", and shall be fabricated in three segments. The top segment shall be 53'-0" long and fabricated from 24" diameter schedule 20 pipe. Pipe material shall conform to ASTM A53 grade B. The middle segment shall be 4'-0" diameter and fabricated from1/2" thick steel plate and shall be 42'-0' tall. The lower segment shall also be 4'-0" diameter, 1/2" thick, and be 60'-0" tall.
2. The upper segment shall have 1/2" thick 3" wide stiffener rings at 10'-0" C/C. The lower two segments shall have the same stiffener rings at 12'-0" C/C. These stiffeners are placed to negate the effects of ovalling oscillation.
3. The upper segment shall have helical strakes. These strakes are intended to negate the effects of vortex shedding.
4. Both the segments shall be connected together using (12) 7/8" diameter ASTM A325 bolts. The bolts shall bear on a 1" thick 3" wide ring bearing plate. 1/2" thick, 12" long stiffener plates shall be placed on either side of the bolts. The bottom bearing plate shall match the upper plate. See page 45 of the SMACNA stack manual for a similar detail,
5. The connection of the lower segment to the concrete foundation shall be similar to the other connections except the upper bolt bearing plate shall be 1" thick and 6" wide and the bottom plate shall be a solid circular plate 5'-0" in diameter. The lower bearing plate shall be 60" in diameter and 1" thick. The stack shall be anchored using (15) 1 3/4" diameter ASTM A307 rods. 52" below the top concrete surface a 8"x8"x3/4" plate shall be connected to the rods with double nuts.
6. Breeches at 20" diameter pipe penetrations shall utilize a 3" wide, 1/2" thick doubler plates all around the breeches. L4x4x3/8 angles shall be paced vertically adjacent to the doubler plate. These angles shall extend the height of the breech above and below the breech locations. A stiffener ring as described above shall be placed above and below the breech. Other smaller breeches shall utilize similar detailing.
7. The concrete foundation that is to support the stack shall be a minimum 17'-6" square and 58" thick. The concrete foundation shall have a top mat of steel above the anchor bottom plates. The footing shall be proportioned such that the top surface shall not crack at service loads.
8. All steel plate shall conform to ASTM A36. All plate in "end-to-end" contact, such as the plate to used in fabricating the cylindrical stack segments, shall be connected together using full penetration groove welds.
9. All welds shall be special inspected. All welding shall comply with AWS D1.1 and be performed by AWS certified welders using E70XX electrodes.
10. All bolts shall be placed per the "turn of the nut" method as described in AISC LRFD 3rd edition. No special inspection of bolt placement is required.

MEIER Enterprises, Inc.
8697 Gage Boulevard Kennewick, WA 99336
phone 509 735 1569 fax 509.783.5075

Project No. 4697.1 Page: 6 of 31

Date: 2/6/06 By: TT Checked By: PMG

Customer Job Number: 145579 Calculation Number: 4697.1

Customer: THOMPSON MECHANICAL Job Description: Steel Stack

5.0 Results and Conclusions (Continued)

The results of the structural evaluation of the stack are summarized in the below table. The design allowable, and actual stress or capacity are compared.

Description	Applicable Code	Design Allowable	Design Actual	Result
Normal Stress at base of upper section	Both AISC EQ H1-1 and ASME EQ 4.8 or 4.9	Scl = 24 Ksi Fa = 5.83 Ksi Fb = 23.76 Ksi	Normal Stress = 5.75 Ksi Axial Stress = .25 Ksi Bending Stress = 5.5 Ksi Interaction Equation = .28	OK
Normal Stress at base of upper section (With Corrosion and Temperature)	AISC EQ H1-1	Fa = 5.54 Ksi Fb = 19.3 Ksi	Axial Stress = .30 Ksi Bending Stress = 6.55 Ksi Interaction Equation = .41	OK
Normal Stress at tower base	ASME EQ 4.8 or 4.9	Scl = 23.6 Ksi	Normal Stress = 9.22 Ksi	OK
Normal Stress at tower base (With Corrosion and Temperature)	ASME EQ 4.8 or 4.9	Scl = 19.24 Ksi	Normal Stress = 10.5 Ksi	OK
Normal Stress at breech	ASME EQ 4.8 or 4.9	Scl = 23.6 Ksi	Normal Stress = 9.3 Ksi	OK
Normal Stress at breech (With Corrosion and Temperature)	ASME EQ 4.8 or 4.9	Scl = 19.24 Ksi	Normal Stress = 10.1 Ksi	OK
Vortex Shedding	ASME 5.2.2 (a)	Strakes and stiffener rings provided		OK
Ovalling	ASME 5.2.2 (b)	Strakes and stiffener rings provided		OK
Anchor Bolts at base (steel stress)	AISC ASD 9th,	A(Req'd) = 1.52 in^2	A(prov.) = 1.90 in^2	OK
Anchor Bolts at base (Concrete Embedment)	ACI 318 APP. D	ϕNcb = 57.4 K	Nu = 55.63 K	OK
Concrete Bearing Stress	ACI 318	ϕNbr = 161.5 K	Nu = 64 K	OK
Connecting Bolts at upper segment	AISC ASD 9th	Tmax = 26.5 K	T = 20.9 K	OK
Connecting bolts at lower segment	AISC ASD 9th	Tmax = 26.5 K	T = 25.0 K	OK

MEIER Enterprises, Inc.
8697 Gage Boulevard Kennewick, WA 99336
phone 509.735 1589 fax 509.783.5075
www.meierinc.com

Project No. 4697.1 Page: 7 of 31

Date: 2/6/06 By: TR Checked By: RHR

Customer Job Number: 145579 Calculation Number: 4697.1

Customer: THOMPSON MECHANICAL Job Description: Steel Stack

6.0 References

Documents:

1. Tubular Steel Structures, Lincoln Arc Welding Foundation, (as a design reference)
2. SMACNA steel stack design manual

Design Codes:

1. 1997 Uniform Building Code
2. ASCE 7-02, Minimum Design Loads fopr Buildings or other Structures
3. ASME STS-1-2000
4. ACI 318-05, Building Code Requirements for Structural Concrete
5. SMACNA Steel Stack design Manual.
6. AISC ASD 9th
7. AISC LRFD 3rd

MEIER Enterprises, Inc.
8697 Gage Boulevard Kennewick, WA 99336
phone 509.735.1589 fax 509.783.5075

Proposal No. ____ Project No. 4692.1 Date 2/3/06 By TM Ck. By [illegible]

Customer THOMPSON MECHANICAL Job Description STEEL STACK

DETERMINE APPLIED WIND LOAD:

SEE ASCE 7-02, 6.5.13

$$\frac{F}{A_f} = q_z G C_f$$

$$q_z = .00256 K_z K_{zt} K_d V^2 I$$

K_z, TABLE 6-3, 6-2

$z_g = 900$, $\alpha = 9.5$

$$K_z = 2.01 \left(z/z_g\right)^{2/\alpha}$$

$$= 2.01 * \left(155/900\right)^{2/9.5}$$

$$= 1.39$$

DET. C_f (FIG. 6-19)

$$h/D = \frac{155}{2} = 77.5$$

USE $C_f = 1.2$ (CONSER.)

DET. GUST EFFECT FACTOR:

IF STRUCTURE HAS FUNDAMENTAL FREQUENCY ≥ 1 HZ, STRUCTURE IS RIGID.

$n_1 = .668$ HZ PER VISUAL ANALYSIS COMPUTER PROGRAM

∴ STACK IS FLEXIBLE (6.5.8.2)

$$G_f = 0.925\left(\frac{1 + 1.7 I_z \sqrt{g_Q^2 Q^2 + g_R^2 R^2}}{1 + 1.7 g_v I_z}\right)$$

$$g_Q = g_v = 3.4$$

$$g_R = \sqrt{2 \ln(3600 n_1)} + \frac{.577}{\sqrt{2 \ln(3600 n_1)}}$$

n_1 = NATURAL FREQUENCY (HZ) = .668 HZ

$$g_R = \sqrt{2 \ln(3600 * .668)} + \frac{.577}{\sqrt{2 * \ln(3600 * .668)}}$$

$$= 4.09$$

MEIER Enterprises, Inc.
8697 Gage Boulevard Kennewick, WA 99336
phone 509.735.1589 fax 509.783.5075

Proposal No. _____ Project No. 46921 Date 2/4/06 By TH Ck. By [illegible]

Customer THOMPSON MECHANICAL Job Description STEEL STACK

$$Q = \sqrt{\frac{1}{1 + .63\left(\frac{B+h}{L_{\bar{z}}}\right)^{.63}}}$$

$B = 4'$

$h = 155$

$L_{\bar{z}} = \ell\left(\bar{z}/33\right)^{\bar{\varepsilon}}$

$\bar{\varepsilon} = 1/5.0$

$\ell = 500$

$\bar{z}$ = GREATER OR z_{min} OR $.6h$

$z_{min} = 15$

$.6h = 93\ ft$

$L_{\bar{z}} = 500 * \left(93/33\right)^{1/5.0}$

$= 615.1$

$$Q = \sqrt{\frac{1}{1 + .63 * \left(\frac{4+155}{615.1}\right)^{.63}}}$$

$Q = .888$

$$R = \sqrt{\frac{1}{\beta} R_n R_h R_B (0.53 + 0.47 R_L)}$$

$$R_n = \frac{7.47 N_1}{(1 + 10.3 N_1)^{5/3}}$$

$$N_1 = \frac{n_1 L_{\bar{z}}}{\bar{V}_{\bar{z}}}$$

$$\bar{V}_{\bar{z}} = \bar{b}\left(\frac{\bar{z}}{33}\right)^{\bar{\alpha}} V\left(\frac{88}{60}\right), \quad \bar{\alpha} = 1/6.5$$

$$= .65\left(\frac{93}{33}\right)^{1/6.5} * 45 * \left(\frac{88}{60}\right)$$

$\bar{V}_{\bar{z}} = 95.0$

$$N_1 = \frac{.668 * 615.1}{95.0}$$

$N_1 = 4.32$

$$R_n = \frac{7.47 * 4.32}{(1 + 10.3 * 4.32)^{5/3}} = .056$$

MEIER Enterprises, Inc.
8697 Gage Boulevard Kennewick, WA 99336
phone 509.735.1589 fax 509.783.5075

Proposal No. ____ Project No. 4692.1 Date 2/4/06 By TH Ck. By [illegible]

Customer THOMPSON MECHANICAL Job Description STEEL STACK

$R_l = \frac{1}{\eta} - \frac{1}{2\eta^2}(1 - e^{-2\eta})$

R_h:

$\eta = 4.6 \mu_1 \frac{h}{\sqrt{\tau}}$

$= 4.6 * .668 * \frac{155}{95}$

$= 5.01$

$R_h = \frac{1}{5.01} - \frac{1}{2*5.01^2}(1 - e^{-2*5.01})$

$= .219$

R_B:

$\eta = \frac{4.6 \mu_1}{\sqrt{\tau}}$

$= \frac{4.6 * .668}{95}$

$= .032$

$R_B = \frac{1}{.032} - \frac{1}{2*.032^2}(1 - e^{-2*.032})$

$= .98$

R_L:

$\eta = 15.4 \mu_1 L/\sqrt{\tau}$

$= 15.4 * .668 * 4/95$

$= .441$, $R_l = \frac{1}{.441} - \frac{1}{2*.441^2}(1 - e^{-2*.441})$

$= .76$

use $\beta = 5\%$

$R = \sqrt{\frac{1}{5} * .056 * .219 * .98 * (.53 + .4) * .76}$

$= .046$

$J_\tau = c(33/\tau)^{1/6}$

$= .2(33/93)^{1/6}$

$= .168$

$G_t = .925\left(\frac{1 + 1.3 * .168 * \sqrt{3.4^2 * .868^2 + 4.09^2 * .046^2}}{1 + 1.3 * 3.4 * .168}\right)$

$= .825$

MEIER Enterprises, Inc.
8697 Gage Boulevard Kennewick, WA 99336
phone 509.735.1589 fax 509.783.5075

Proposal No. ____ Project No. 4692.1 Date 2/4/06 By TM Ck. By [illegible]

Customer THOMPSON MECHANICAL Job Description STEEL STACK

$F/A_t = q_z G C_n$

$q_z = .00256 * 1.39 * 1.0 * .85 * 85^2 * 1.15$

$= 25.13$ PSF

$F/A_t = 25.13 * .875 * 1.2$

$F/A_t = 26.4$ PSF

MEIER Enterprises, Inc.
8697 Gage Boulevard Kennewick, WA 99336
phone 509.735.1589 fax 509.783.5075

Proposal No. ____ Project No. 4692-1 Date 2/4/06 By TM Ck. By [illegible]

Customer THOMPSON MECHANICAL Job Description STEEL STACK

DET. SEISMIC COEFFICIENT:

• USE 97 UBC, 1634.1

$T = 1/\omega = \frac{1}{.668} = 1.5$ SECS

∴ STACK IS NOT RIGID.

$V = .56\, C_a I W$

$C_a = .34$ ← CONSERVATIVE, $I = 1.25$

$V = .56 * .34\, W * 1.25$

$V = .238\, W$

SELF WT OF LOWER SEGMENT = 355.9 lb/ft

$V = .238 * 355.9 = 84.7$ lb/ft

WIND = 4' * 26.4 PSF = 105.6 PLF

∴ WIND CONTROLS DESIGN THROUGHOUT.

MEIER Enterprises, Inc.
8697 Gage Boulevard Kennewick, WA 99336
phone 509.735.1589 fax 509.783.5075
www.meierinc.com

Proposal No. _____ Project No. 4692.1 Date 2/24/06 By TM Ck. By [illegible]

Customer THOMPSON MECHANICAL Job Description STEEL STACK

DET. STACK SELF WTS: (ESTIMATE FOR CALC PURPOSES)

• USE 40% INCREASE TO ACCOUNT FOR STIFFENER PLATES, ETC.

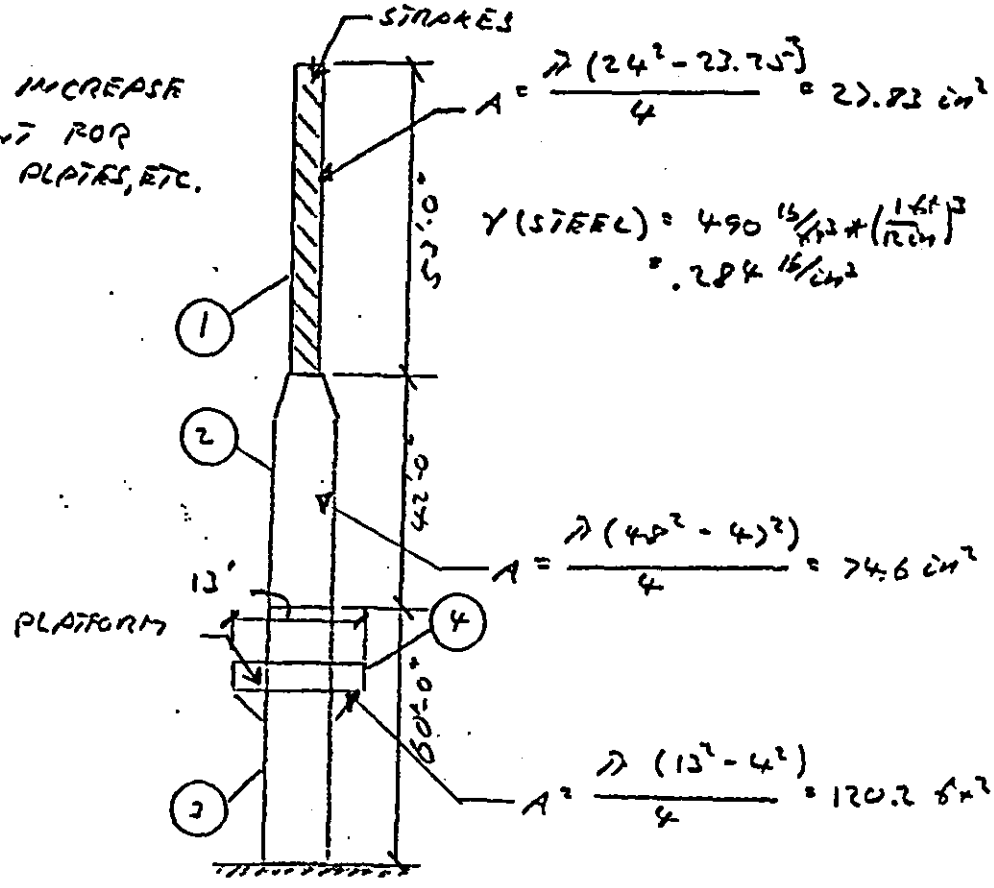

ITEM	AREA	UNIT SELF WT	INCREASED	LENGTH	TOTAL
1	27.83 in²	94.8 lb/ft	132.7 lb/ft	53'-0"	7.03k
2	74.6 in²	254.2 lb/ft	355.9 lb/ft	42'-0"	14.95k
3	74.6 in²	254.2 lb/ft	355.9 lb/ft	60'-0"	21.35k
4	120.2 ft²	USE 20 lb/ft²	—	—	2.4k
				TOTAL STACK WT =	45.73k

MEIER Enterprises, Inc.
8697 Gage Boulevard Kennewick, WA 99336
phone 509.735.1589 fax 509.783.5075

Proposal No. ____ Project No. 4692.1 Date 2/4/06 By TM Ck. By RMB

Customer THOMPSON MECHANICAL Job Description STEEL STACK

CHK TOP SEGMENT:

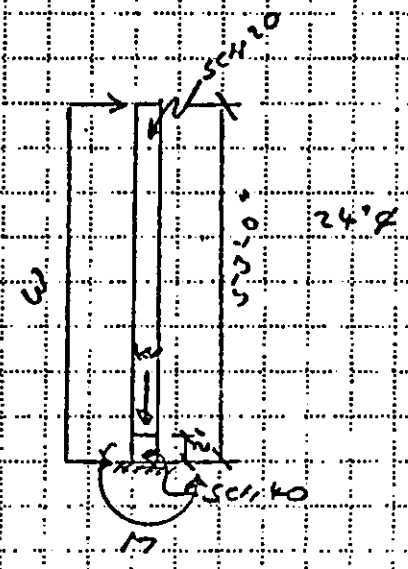

WT = 7.03k

24"Ø SCH 20 PIPE:

A = 27.83 in²

I = 1942 in⁴

r = 8.35 in

DET. ALLOWABLE STRESS:

SEE ASME STS-1 4.4

STACK TYPE ALLOWABLE, APPLICABLE IF:

$$\frac{t}{D} \le \frac{10F_y}{E}$$

$$\frac{t}{D} = \frac{.325}{24} = .016$$

$$\frac{10F_y}{E} = \frac{10 \times 36}{29000} = .012$$

NOTE:
CURRENT STEEL PLATE ACTUAL WELD STRESS ≈ 50 KSI

$$\frac{50 \times 10}{29000} = .017$$

∴ CHECK UPPER SEGMENT BUT WAIVE (AISC & ASME)

MEIER Enterprises, Inc.
8697 Gage Boulevard Kennewick, WA 99336
phone 509.735.1589 fax 509.783.5075

Proposal No. ____ Project No. 4697.1 Date 2/6/06 By TM Ck. By [illegible]

Customer THOMPSON MECHANICAL Job Description STEEL STACK

DET. S_{cL}:

USE F.S. = 1.50 TYP THROUGHOUT

$\frac{t}{D} = \frac{.325}{24} = .016$

$\frac{2.8 F_y}{E} = \frac{2.8 \times 36}{29000} = .0035$

$S_{cL} = \frac{F_y (1 - 0.3 k_s) V}{(F.S.)}$

$L_e = 155 \times 2 = 310$ ft
$= 3720$ in

$\frac{L_e}{r} = \frac{3720}{8.35} = 445$, $\psi = 1.0$

$k_s = \left[\frac{\frac{10 F_y}{E} - t/D}{\frac{2.2 F_y}{E}} \right]^2$

$k_s = \left[\frac{\frac{10 \times 36}{29000} - .016}{\frac{2.2 \times 36}{29000}} \right]^2$

= 0 BECAUSE $\frac{10 F_y}{E} < t/D$

$S_{cL} = \frac{F_y}{(F.S.)} = \frac{36}{1.5} = 24$ ksi

$f = \frac{P}{A} + \frac{Mc}{I}$

• WIND CONTROLS OVER SEISMIC

$w = 2' \times (26.4 \text{ PSF}) = 52.8$ PLF

$M = \frac{52.8 \times 53^2}{2}$

$= 74152.6$ lb·ft

$= 889.9$ k·in

$f = \frac{P}{A} + \frac{Mc}{I}$

$= \frac{2.03}{22.83} + \frac{889.9 \times 12}{1942}$

$= 5.25$ ksi $< S_{cL} = 24$ ksi

OK

MEIER Enterprises, Inc.
8697 Gage Boulevard Kennewick, WA 99336
phone 509.735.1589 fax 509.783.5075

Proposal No. ____ Project No. 46921 Date 2/6/06 By TTJ Ck. By RMB

Customer THOMPSON MECHANICAL Job Description STEEL STACK

CHK UPPER SEGMENT USING AISC METHOD:

$k = 2.10$

$r = 8.35$ in

$\frac{kl}{r} = \frac{2.10 * 53 * 12}{8.35}$

$= 159.9$

$F_a = 5.83$ ksi AISC 9th Ed 3-16

$F_b = .66 F_y$

$= .66 * 36 = 23.76$ ksi

$F_e = 5.83$ ksi Pg 5-122

$\frac{f_a}{F_a} + \frac{f_b}{(1 - \frac{f_a}{F_e}) F_b}$

$f_a = \frac{203}{27.83} = .25$ ksi

$f_b = \frac{889 * 12}{1942} = 5.5$ ksi

$\frac{.25}{5.83} + \frac{5.5}{(1 - \frac{.25}{5.83}) * .66 * 36}$

$= .28 \leq 1.0$ O.K.

MEIER Enterprises, Inc.
8697 Gage Boulevard Kennewick, WA 99336
phone 509.735.1589 fax 509.783.5075

Proposal No. ____ Project No. 4697.11 Date 2/9/06 By TM Ck. By [illegible]

Customer THOMPSON MECH. Job Description STEEL STACK

CHK TOP SEGMENT WITH CORROSION ALLOWANCE & HIGH TEMPERATURE:

TEMP	F_y
300°F	30.2 ksi
500°F	27.8 ksi

SEE ASME STS-1, TABLE B-1(b)

$T = 372°$

$F_y = 30.2 - \frac{372-300}{200} * (30.2-27.8)$

$F_y = 29.3$ ksi

$E(t) = E_o - M t$

$M = \frac{4000}{700-80}$

$= 4.89$ ksi/°F

$E(t=372) = 29000 - 4.89 * 372$

$= 27180.9$ ksi

$t = .375 - 1/16 = .3125$

$I = \frac{\pi (d_1^4 - d_o^4)}{64}$, $d_o = 24 - 2*.3125 = 23.375$

$= \frac{\pi * (24^4 - 23.375^4)}{64}$

$= 1631.3$ in^4

$A = \frac{\pi (d_1^2 - d_o^2)}{4}$

$= \frac{\pi (24^2 - 23.375^2)}{4} = 23.3$ in^2

$\frac{t}{D} = \frac{.3125}{24} = .013$

$\frac{10 F_y}{E} = \frac{10 * 29.3}{27180.9} = .01 = t/D$

∴ ASC METHOD IS APPLICABLE

MEIER Enterprises, Inc.
8697 Gage Boulevard Kennewick, WA 99336
phone 509.735.1589 fax 509.783.5075

Proposal No. ____ Project No. 4692.1 Date 2/9/06 By TM Ck. By [illegible]

Customer THOMPSON TECH. Job Description STEEL STACK

TOP SEGMENT (CONT.)

$$r = \sqrt{\frac{1631.3}{23.3}} = 8.4$$

$$\frac{Kl}{r} = \frac{2.1 * 53 * 12}{8.4}$$

$$= 159$$

$$C_c = \sqrt{\frac{2\pi^2 E}{F_y}}$$

$$= \sqrt{\frac{2\pi^2 * 27180.9}{29.3}}$$

$$= 135.3$$

$$\frac{Kl}{r} \geq C_c$$

$$\therefore F_a = F_e = \frac{12\pi^2 * 27180.9}{23 * 159^2}$$

$$= 5.54 \text{ ksi}$$

$$f_a = \frac{7.03}{23.3} = .302 \text{ ksi}$$

$$f_b = \frac{889.9 * 12}{1631.3} = 6.55 \text{ ksi}$$

$$\frac{.302}{5.54} + \frac{6.55}{\left(1 - \frac{.302}{5.54}\right) * 66.429.3}$$

$$= .41 \leq 1.0 \quad \underline{\text{O.K.}}$$

MEIER Enterprises, Inc.
8697 Gage Boulevard Kennewick, WA 99336
phone 509.735.1589 fax 509.783.5075

Proposal No. ____ Project No. 4697.1 Date 2/7/06 By TIT Ck. By [illegible]

Customer THOMPSON ARCH. Job Description STEEL STACK

CH4 LOWER STACK SECTION:

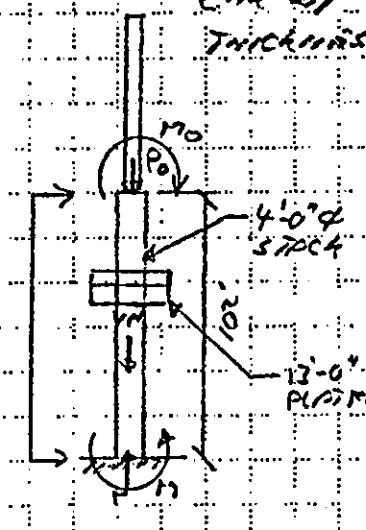

$w = 4' \times 26.4\ PSF = 105.6\ PLF$

$M_o = 74157.6\ lb\cdot ft$

$P_o = 7.03\ k$

A = AREA OF PLATFORM

$= \frac{\pi}{4} \times 13^2 - \frac{\pi}{4} \times 4^2$

$= 120.1\ ft^2$

$P_{PL} = 120.1 \times (50\ PSF)$

$= 6.0\ k$

* CONSERVATIVELY ADD 100% OF LIVE + WIND LOAD.

$A\ (STACK) = \frac{\pi(d^2 - d_1^2)}{4}$

$= \frac{\pi \times (48^2 - 47^2)}{4}$

$= 74.6\ in^2$

$I = \frac{\pi(d^4 - d_1^4)}{64}$

$= \frac{\pi(48^4 - 47^4)}{64} = 21045.5\ in^4$

$M = M_o + \frac{wl^2}{2}$

$= 74157.6 + \frac{105.6 \times 10^2}{2}$

$= 623487.8\ lb\cdot ft$

$= 7481.8\ k\cdot in$

$f_b = \frac{Mc}{I} = \frac{7481.8 \times 24}{21045.5}$

$= 8.53\ ksi$

$\Sigma w = 45.73\ k$

MEIER Enterprises, Inc.
8697 Gage Boulevard Kennewick, WA 99336
phone 509.735.1589 fax 509.783.5075

Proposal No. ____ Project No. 4693.1 Date 2/2/06 By TAT Ck. By RMK

Customer THOMPSON MECH. Job Description STEEL STACK

$P = 2k_{pT} + P_{pL} = 45.23 + 6.0$

$= 51.23k$

$f_a = \frac{51.23}{74.6} = .69 \text{ ksi}$

DET. ALLOWABLE STRESSES:

$$K_s = \left[\frac{\frac{10F_b}{E} - \frac{t}{D}}{\frac{2.2F_b}{E}}\right]^2 \quad (4.4.1)$$

$$K_s = \left[\frac{\frac{10 \times 36}{29000} - \frac{1/2}{48}}{\frac{2.2 \times 36}{29000}}\right]^2$$

$= .05$

$$S_{cl} = \frac{F_b(1 - 0.3K_s)\eta}{(F.S.)}$$

$$= \frac{36 \times (1 - 0.3 \times .05) \times 1.0}{1.5}$$

$= 23.64 \text{ ksi}$

$f_a + f_b = .69 + 8.53 = 9.22 \text{ ksi} \leq S_{cl}$

0.4.

MEIER Enterprises, Inc.
8697 Gage Boulevard Kennewick, WA 99336
phone 509.735.1589 fax 509.783.5075

Proposal No. ____ Project No. 46921 Date 2/9/06 By TJJ Ck. By [illegible]

Customer THOMPSON MECH. Job Description STEEL STACK

CHK LOWER STACK SEGMENT WITH INCREASED TEMPERATURE & 1/16" CORROSION ALLOWANCE:

$E = 27180.9$ ksi

$F_y = 29.3$ ksi

$t = 1/2 - 1/16 = 7/16"$

$d_o = 48 - 2 * 7/16 = 47.125"$

$$A = \frac{\pi (d_i^2 - d_o^2)}{4}$$

$$A = \frac{\pi * (48^2 - 47.125^2)}{4}$$

$= 65.33$ in²

$$I = \frac{\pi (48^4 - 47.125^4)}{64}$$

$I = 18483.1$

$$K_s = \left[\frac{\frac{10 * 29.3}{27180.9} - \frac{7/16}{48}}{\frac{2.2 * 29.3}{27180.9}}\right]^2$$

$= .05$

$$S_{cl} = \frac{F_y (1 - 0.3 K_s) \eta}{1.5}$$

$$= \frac{29.3 * (1 - 0.3 * .05) * 1.0}{1.5}$$

$= 19.24$ ksi

$$f = \frac{P}{A} + \frac{M c}{I}$$

$$= \frac{51.33}{65.33} + \frac{7481.8 * 24}{18483.1}$$

$= 10.5$ ksi $\leq S_{cl} = 19.24$ ksi

O.K.

MEIER Enterprises, Inc.
8697 Gage Boulevard Kennewick, WA 99336
phone 509.735.1589 fax 509.783.5075

Proposal No. ____ Project No. 4692.1 Date 2/2/06 By TM Ck. By [illegible]

Customer THOMPSON MECH. Job Description STEEL STACK

CHK STACK @ BREECH LOCATION:

SECTION PROPERTY OUTPUT FROM SOLID WORKS PROGRAM:

NOW: $f = \frac{P}{A} + \frac{(Pe + M) * c}{I}$

$= \frac{51.23}{71.35} + \frac{(51.23 * .65 + 2481.8) * 24}{21058.9}$

$= 9.34 ksi \leq S_{cl} = 23.64 ksi$

O.K.

Section properties of Sketch1 of Breeched with Stiffners2

Area = 71.35 square inches

Centroid relative to sketch origin: (inches)
X = -0.65 ← e
Y = -0.65

Centroid relative to part origin: (inches)
X = -0.65
Y = 0.00
Z = 0.65

Moments of inertia, of an area, at the centroid: (inches ^ 4)
Lxx = 21089.47 Lxy = 0.00
Lyx = 0.00 Lyy = 42178.93

Polar moment of inertia, of an area, at the centroid = 42178.93 inches ^ 4

Angle between principal axes and sketch axes = 0.00 degrees

Principal moments of inertia, of an area, at the centroid: (inches ^ 4)
Mx = 21058.92 ← I
My = 21120.01

MEIER Enterprises, Inc.
8697 Gage Boulevard Kennewick, WA 99336
phone 509.735.1589 fax 509.783.5075

Proposal No. ____ Project No. 4692.1 Date 2/8/06 By TM Ck. By [illegible]

Customer THOMPSON MECH. Job Description STEEL STACK

BREECHED CROSS-SECTION:

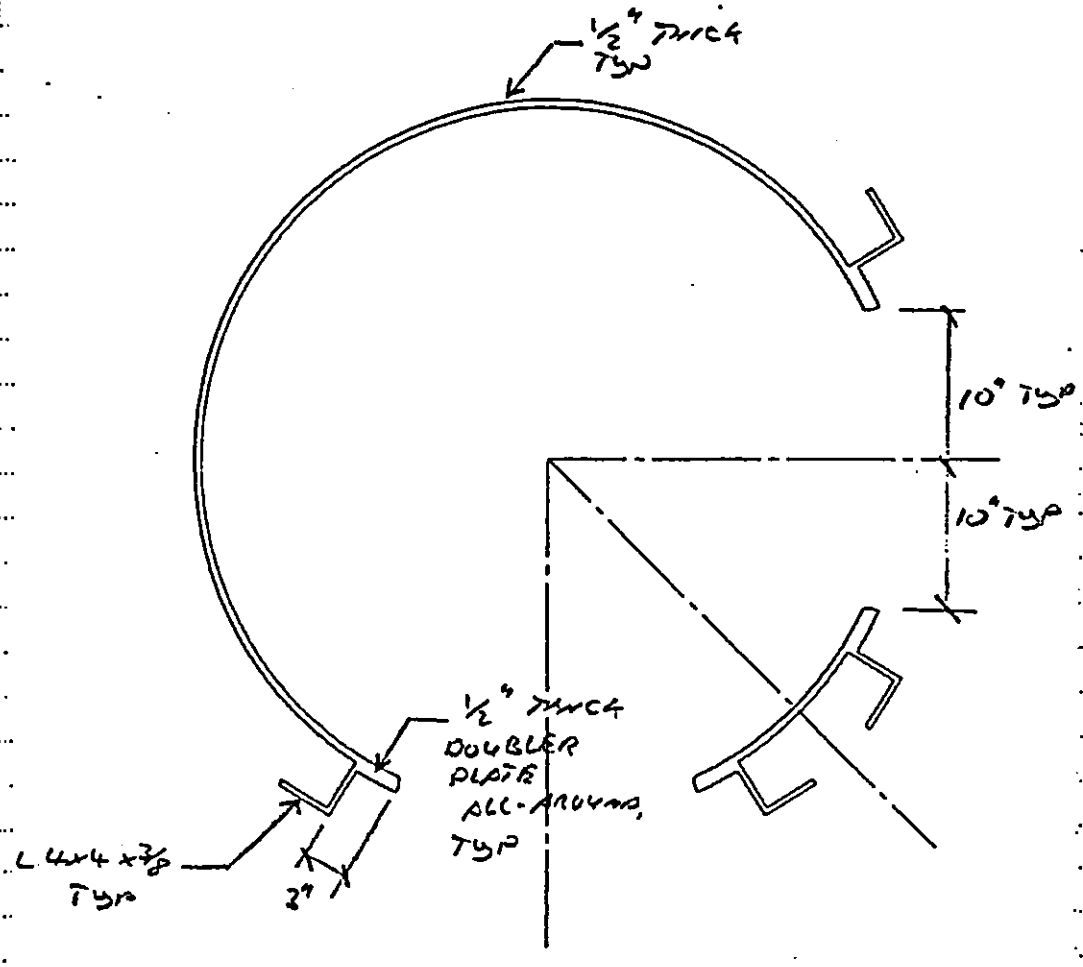

SECTION @ ELEVATION 13'0"

SCALE 1" = 1'-0"

MEIER Enterprises, Inc.
8697 Gage Boulevard Kennewick, WA 99336
phone 509.735.1589 fax 509.783.5075

Proposal No. _____ Project No. 4692.1 Date 2/9/06 By TM Ck. By [illegible]

Customer THOMPSON MECH. Job Description STEEL STACK

CHK BREECHED X-SECTION WITH INCREASED TEMP. & CORROSION ALLOWANCE:

E = 27180.9

Fy = 29.3 ksi

$$f = \frac{P}{A} + \frac{(Pe + M)c}{I}$$

$$= \frac{51.73}{64.69} + \frac{(51.73 * .27) + 7481.8) * 24}{19267.3}$$

= 10.1 ksi ≤ 19.24 ksi

O.K.

Section properties of Sketch1 of Breeched with Stiffners .4375

Area = 64.69 square inches

Centroid relative to sketch origin: (inches)
X = -0.27
Y = -0.27

Centroid relative to part origin: (inches)
X = -0.27
Y = 0.00
Z = 0.27

Moments of inertia, of an area, at the centroid: (inches ^ 4)
Lxx = 19271.90 Lxy = 0.00
Lyx = 0.00 Lyy = 38543.81

Polar moment of inertia, of an area, at the centroid = 38543.81 inches ^ 4

Angle between principal axes and sketch axes = 0.00 degrees

Principal moments of inertia, of an area, at the centroid: (inches ^ 4)
Mx = 19267.29
My = 19276.51

MEIER Enterprises, Inc.
8697 Gage Boulevard Kennewick, WA 99336
phone 509.735.1589 fax 509.783.5075

Proposal No. ____ Project No. 4697.1 Date 2/2/06 By TM Ck. By NJB

Customer THOMPSON MECH. Job Description STEEL STACK

CH4 VORTEX SHEDDING:

SEE ASME STS-1, S3.2

$V_{2CH} = \bar{b}\left(\frac{z_{CH}}{33}\right)^{\bar{\alpha}} \frac{22}{15} V_R$

= MEAN HOURLY SPEED

$\bar{b} = .65$ TABLE I-2

$z_{CH} = 5/6 * 155 = 129.2$

$\bar{\alpha} = 1/6.5$ TABLE I-2

$V_R = 85 * \sqrt{1.15} = 91.15$

$V_{2CH} = .65 * \left(\frac{129.2}{33}\right)^{1/6.5} * \frac{22}{15} * 91.15$

$V_{2CH} = 107.2$ ft/sec

V_c = CRITICAL WIND SPEED FOR VORTEX SHEDDING

$V_c = n_1 \frac{D}{S}$

$n_1 = .668$ HZ

$n_2 = 1.923$ HZ

$n_3 = 5.853$ HZ

BY VISUAL ANALYSIS PROGRAM

$D = 4'$, $S = 0.2$

MODE	V_c
1	13.36 ft/sec
2	38.46 ft/sec
3	117.06 ft/sec

• BECAUSE $V_{2CH} \leq V_c$ PLACE STRAKES ON UPPER V_3 OF STACK, SEE ASME STS-1, S.3.1

OVALLING:

• SIMPLY PROVIDE STIFFENERS PER TABLE 4.2, WILL NEGATE THE EFFECTS OF OVALLING

MEIER Enterprises, Inc.
8697 Gage Boulevard Kennewick, WA 99336
phone 509.735.1589 fax 509.783.5075
www.meierinc.com

Proposal No. _____ Project No. 4692.1 Date 7/28/06 By TM Ck. By [illegible]

Customer THOMPSON MISCAL Job Description STEEL STACK

DET REQ'D ANCHOR SIZE AT BASE:

USE ASME STS-1 (4.17)

$$T(REQ'D) = \frac{4M_b}{N D_{bc}} - \frac{P}{N}$$

$M_b = 7481.8$ k in

$D_{bc} = 48 + 3 + 3 = 54$ in

$P = \frac{45.33}{1.4} = 32.66$ k

"BACK-OUT" WEIGHT INCREASE ESTIMATE, CONSERVATIVE.

$N = 15$

$$T(REQ'D) = \frac{4 * 7481.8}{15 * 54} - \frac{32.66}{15}$$

$= 34.33$ k

F_t (A36 ROD) = 19.1 ksi

$$F_t = \frac{T}{\frac{\pi}{4} d^2}$$

$$d(REQ'D) = \sqrt{\frac{4}{\pi} * \frac{T}{F_t}}$$

$$= \sqrt{\frac{4}{\pi} * \frac{34.33}{19.1}}$$

$= 1.52$ in^2

USE 1 3/4" ⌀ A36 ROD

A(PROV.) = 1.90 in^2 (SEE AISC ASD 9th ED 4-143)

MEIER Enterprises, Inc.
8697 Gage Boulevard Kennewick, WA 99336
phone 509.735.1589 fax 509.783.5075
www.meierinc.com

Proposal No. _____ Project No. 4697.1 Date 2/28/06 By TIJ Ck. By [illegible]

Customer THOMPSON MECH. Job Description STEEL STACK

ANCHOR STACK TO CONCRETE FOUNDATION:

SEE ACI 318-05 APP. D

$N_u = 1.6 * 34.77 = 55.63\ k$

TRY $h_{ef} = 52"$

$A_{Nco} = 9 h_{ef}^2 = 9 * 52^2$

$= 24336\ in^2$

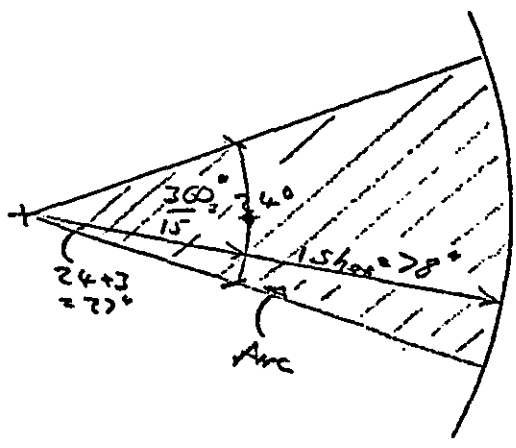

$A_{Nc} = \frac{1}{15} * \pi r^2$

$= \frac{1}{15} * \pi * (27 + 78)^2 = 2309.1\ in^2$

$\phi = .85$

$\psi_{ec,N} = 1.25$

$\phi N_{cb} = \phi \frac{A_{Nc}}{A_{Nco}} \psi_{ec,N} N_b$

$N_b = k_c \lambda_a \sqrt{f'_c}\, h_{ef}^{1.5}$

$= 24 * \sqrt{4000} * 52^{1.5}$

$= 569.24$

$\phi N_{cb} = .85 * \frac{2309.1}{24336} * 1.25 * 569.2$

$= 57.44 \geq 55.63 = N_u$

O.K.

MEIER Enterprises, Inc.
8697 Gage Boulevard Kennewick, WA 99336
phone 509.735.1589 fax 509.783.5075
www.meierinc.com

Proposal No. _____ Project No. 4692.1 Date 2/28/06 By TJ Ck. By RJB

Customer THOMPSON MECH. Job Description STEEL STACK

CHK CONCRETE BEARING STRESS:

- CONSERVATIVELY ASSUME N_u FORCE IS TRANSFERED TO FOUNDATION IN COMPRESSION

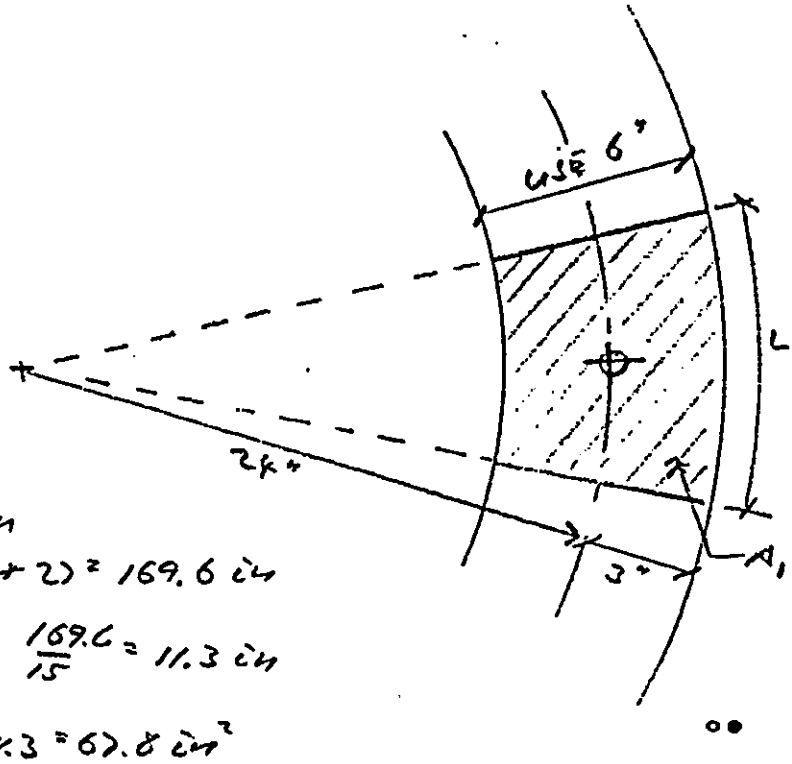

$C = 27'$
$= 27 * 2\pi = 169.6$ in

$L = \frac{C}{15} = \frac{169.6}{15} = 11.3$ in

$A_1 = 6 * 11.3 = 67.8$ in^2

$\phi N_{br} = \phi(.85 f_c' A_1) = .70 * .85 * 4000 * 67.8$
$= 161.5$ k

$N_u = 1.6 * \left[\frac{4 * 3481.8}{15 * 54} + \frac{45.33}{15}\right] = 64$ k

$\phi N_{br} \geq N_u$ O.K.

MEIER Enterprises, Inc.
8697 Gage Boulevard Kennewick, WA 99336
phone 509.735.1589 fax 509.783.5075

Proposal No. _____ Project No. 46921 Date 2/8/06 By TM Ck. By RMB

Customer THOMPSON MECH. Job Description STEEL STACK

CONNECTION BETWEEN STACK SEGMENTS:

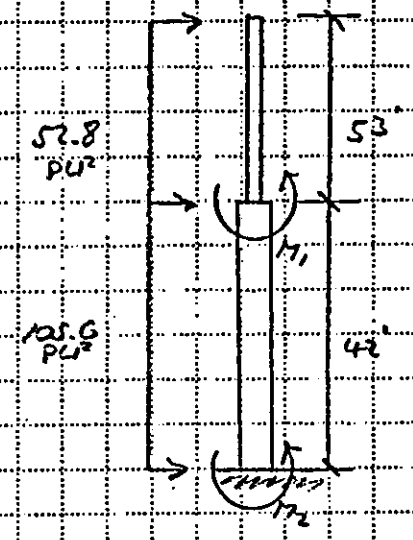

$$M_1 = \frac{52.8 * 53^2}{2} = 74152.6 \text{ lb-ft}$$

$$M_2 = \frac{105.6 * 42^2}{2} + 74152.6$$

$$= 167296.8 \text{ lb-ft}$$

$M_1 = 889.9$ k-in

$M_2 = 2007.6$ k-in

MEIER Enterprises, Inc.
8697 Gage Boulevard Kennewick, WA 99336
phone 509.735.1589 fax 509.783.5075

Proposal No. _____ Project No. 4692.1 Date 2/8/96 By TTT Ck. By RKH

Customer THOMPSON [illegible] Job Description STEEL STACK

EQN 1: $T_T = T_1 + T_2 + T_3$

EQN 2: $\frac{T_1}{d_1} = \frac{T_2}{d_2}$

EQN 3: $\frac{T_1}{d_1} = \frac{T_3}{d_3}$

$T_3 = \frac{d_3}{d_1} T_1$

$T_2 = \frac{d_2}{d_1} T_1$

$T_T = \frac{M}{12''} = \frac{889.8}{18} = 49.44$

$T_T = T_1 + \frac{d_2}{d_1} T_1 + \frac{d_3}{d_1} T_1$

$= \left(1 + \frac{d_2}{d_1} + \frac{d_3}{d_1}\right) T_1$

$= \left(1 + \frac{11.69}{13.5} + \frac{6.75}{13.5}\right) T_1$

$T_1 = \frac{T_T}{2.36} = \frac{49.4}{2.36} = 20.94$

USE (12) 7/8" Ø A325 BOLT.

$T_{MAX} = 26.54$

• SHEAR LOAD SMALL, NEGLECT.

LOWER CONNECTION:

$d_1 = 25\frac{1}{2}''$

$d_2 = (25\frac{1}{2}) * \cos 30° = 22.1''$

$d_3 = (25\frac{1}{2}) * \cos 60° = 12.75''$

$T_T = \frac{2007.6}{2 * 2/3 * 25\frac{1}{2}} = 59.0\ k$

$T_T = \left(1 + \frac{22.1}{25.5} + \frac{12.75}{25.5}\right) T_1$

$T_1 = \frac{T_T}{2.36} = \frac{59.0}{2.36} = 25.0\ k$

$< T_{MAX} = 26.5\ k$

USE (12) 7/8" Ø A325 BOLTS

MEIER Enterprises, Inc.
8697 Gage Boulevard Kennewick, WA 99336
phone 509.735.1589 fax 509.783.5075
www.meierinc.com

Proposal No. _____ Project No. 46921 Date 2/20/06 By TJ Ck. By PSR

Customer THOMPSON MECH. Job Description STEEL STACK

CHK INTERIOR CONE WELD:

CAP = .928 D L :

• CONSERVATIVELY SAY FILLET WELD.

L = π D = π * 48
= 150.8 in

CAP = .928 * 6 * 150.8

= 839.6 # >> WT OF ENTIRE STACK

O.K.

145579-C-CA-015

Attachment 4

Foundation Information Chart Showing Performance Category

GeoMat Structures Systems and Components Foundations or site development	Length (ft.)	Width (ft.)	Depth (ft.)	Notes from Martin Meeting category	Comment
Items with elevated tanks or stacks. 48" deep foundation req'd					
Melt Area Support structure	44	26	4	PC-2	
(slab directly under melt is 24" thick)					
Waste Dryer structure			4	PC-2	
Off-gas Stack (75' x 2')	16	16	4	PC-2	
Baghouse Stack (40'x1')	8	8	4	PC-2 if a separate stack.	Baghouse could be on top of soil tank and therefore high enough itself. Mech to determine.
Items that are considered "permanent" and require 24" deep foundations					
Tri-Mer scrubber	36	30	2	GS (PC-1)	
Selective Catalytic Reduction Unit				PC-2	
SCR Scrubber				with SCR	
Any Pre-engineered buildings				GS (PC-1)	
Items that are considered temporary, but will be anchored to prevent movement					
60x12 Off-Gas Trailer	64	15	2	GS (PC-2)	Block wheels and provide levelers. Tie-downs against wind. Req'd
32x12 elect trailers (2) (13.8 kV and Power Module	34	14	1	GS (PC-1)	Block wheels and provide levelers. Tie-downs against wind. Req'd
32x8 elect trailers (2) (both 480V)	34	10	1	GS (PC-1)	Block wheels and provide levelers. Tie-downs against wind. Req'd
40x8 control trailer	42	10	1	GS (PC-1)	Block wheels and provide levelers. Tie-downs against wind. Req'd
22x9 Generator set	24	11	2	GS (PC-1)	
10,000 usg Diesel fuel storage tanks (2)	34	10	2	GS (PC-1)	Containment and anchor for wind. Req'd
Baghouse near 40'stack	8	8	2	GS (PC-1)	
Air Compressor package	10	8	2	GS (PC-1)	May not need anchoring
30x8 Liquid Waste Pump skid	32	10	1	PC-2	Anchored
30x8 Effluent pump skid	32	10	1	GS (PC-1)	Anchored
Waste dryer steam supply skid	22	10	2	GS (PC-1)	
Dryer Chilled Water System	22	10	2	GS (PC-1)	
OGTS Chiller	11	6	2	GS (PC-1)	
Ammonia evaporator skid				GS (PC-1)	
Sintered Metal filters				PC-2	
Items that are considered temporary and which may not require anchorage					
ICV hood support stand				GS (PC-1)	
All non-producton portable buildings	(office/washroom/change/lunch)			GS (PC-1)	Check wind for anchor requirements
All "Baker" tanks except fuel storage				GS (PC-1)	Check wind for anchor requirements
Waste Receipt tanks (baker)				(PC-2)	Check wind for anchor requirements
Storage and other similar ISO containers				GS (PC-1)	
Other site development concrete or paving					
ICV Box Storage area concrete pad	to be determined		1		
Concrete paved area at box receipt	to be determined		1		
DBVS North access road		24	0.5		
DBVS West side road - (is there room for this???)		?	0.5		
Fencing to surround site - gates at truck entry			post depth varies		
Foundation Chart March 11, 2004.xls	Prepared by	paul.meyer	01/12/2005		Page 1

Attachment: 4
Calc. No.: 145579-C-CA-015
Rev. No.: 02 MK 3-25-06
Sheet 1 of 1

145579-C-CA-015

Attachment 5

E-mail Dec 17, 2004 from Brad Hupy, P.E. (author of DBVS Geotechnical Report) to P. Meyer

Paul Meyer (Trail)

From: Brad Hupy
Sent: Friday, December 17, 2004 2:47 PM
To: Paul Meyer (Trail)
Subject: RE: Questions about the soils and report at Hanford

In order to have frost heave three things are needed; water, low temperature, and soil fine for enough for capillary potential to raise the water to the freezing front. Because Hanford is a near desert climate, there is little water near the ground surface. Within a The tabulated capillary rise for fine sand is in the range of 1 to 11 feet and for medium sand in the range of 0.3 to 1.5 feet. Hanford certainly is cold enough in the winter to freeze water.

The little water in the near surface soil does freeze but the associated heave is negligible. The sand will not support capillary rise of several hundred feet that would be required to produce (feed) a growing freezing front and cause damaging heave. In our opinion, there is little risk of frost heave in the soil at the project site.

—Original Message—
From: Paul Meyer (Trail)
Sent: Friday, December 17, 2004 1:47 PM
To: Brad Hupy
Subject: RE: Questions about the soils and report at Hanford

Question: Is it possible to state that a soil identified as "SP" (i.e. sand with few fines) will not be subject to frost heaving? Especially if it is very deep (e.g. our site at Hanford)

-Paul

—Original Message—
From: Brad Hupy
Sent: Tuesday, December 07, 2004 9:09 AM
To: Paul Meyer (Trail)
Cc: Tony Heim
Subject: RE: Questions about the soils and report at Hanford

Attachment: 5
Calc. No.: 145579-C-CA-015
Rev. No.: 03 MLL 3-28-05
Sheet 1 of 2

Paul,

This is really pretty simple. The frost depth cited in our report is from statewide tabulation. If Hanford has determined and published site specific frost depth measurements then they may be used in lieu of the tabulated data. Site specific data is commonly used in this is way. A very good example is seismic ground motions.

—Original Message—
From: Paul Meyer (Trail)
Sent: Monday, December 06, 2004 4:33 PM
To: Brad Hupy
Cc: Tony Heim
Subject: Questions about the soils and report at Hanford

We are still awaiting approval from the "Independent Qualified Registered Professional Engineer" (IQRPE) who is checking our foundation designs to ensure they will satisfy all design criteria.

He has raised the following points/questions:

Your report indicates a frost depth of 45 inches for granular soil and recommends a foundation depth of 48 inches for critical structures. This is at odds with Hanford's' own measurements (See pages 26 through 28 of the attached Hanford document) which indicate that a temperature of 32 F has never been achieved at depths of only 36 inches. This is causing some problems for us, as the IQRPE wants us to conform to the requirements of the Geotech report in addition to Hanford's own design criteria

For your information, we have three types of foundations on the site. Foundation depths below grade are 45.6, 36.6 and 21.6 inches. Actual concrete thicknesses are 48, 39 and 24 inches, with the top of concrete set at 663.00 feet, while surrounding grade is at 662.8 feet. We removed the native soil to elevation 661.000 and

brought the local grade up to 662.8 with compacted crushed rock.

The four 48" foundations consist of two chimneys, and two large steel structures. These are all "critical structures" to use the phrase from your report. Foundations are uniformly 48" thick, and are 10'x12' and 20'x30' feet for the two chimneys, and 30x44 and 24x62 for the two steel structures. Foundations are not enclosed.

The single 39" foundation is a pre-engineered building, measuring 50 feet wide by 84 feet long by foundation consist of a single 12" thick slab with a thickened (to 39") edge. The building will be heated, and have an overhead crane.

The many (~100) 24" deep foundations support single pieces of freestanding equipment or "utility poles" that are connected by pipes, cable trays and ducts. Foundations are uniformly 24" thick and vary in size from 44x24 to 6x6 feet. Most are the 6x6 ones. Minor seasonal movement of the foundations would not be a problem. Actual gravity loads are quite light, typical values are substantially under 250 psf, yes, that's 250, not 2500. Foundations are not enclosed.

All the foundations will bear on compacted native soil, which was prepared as recommended in your report. As noted, the native soil is basically a gravelly sand, with few fines. I don't believe it is frost-susceptible.

Could you please reply to the following questions, raised by our reviewers?

1) Is the frost depth of 45 inches correct? Seems deep compared to other references.

2) Is the frost depth of 45 inches still valid, given we have removed some native soil, and the surface is now covered with 1.8 feet (21.6") of compacted crushed rock? Does the crushed rock make a difference?

3) Are the depths of foundations shown above for the various types of foundations suitable for the uses described?

4) IS frost heave an issue for the foundations as described?

Thanks for your help on this. I'll be traveling to Hanford on Tuesday Dec 07, for a meeting Wednesday, Dec 08. I will have e-mail access while there. I will be traveling back to Trail Thursday, Dec 09 and back in the office Friday, Dec 10. Best way to contact me is via e-mail until Friday, phone after that.

Paul Meyer, P.Eng.
Senior Structural Engineer
AMEC Americas Limited
Energy and Mining Division
1385 Cedar Avenue
Trail BC Canada V1R 4C3
1-250-368-2407, fax 2455
paul.meyer@amec.com

<< File: HNF-SD-GN-ER-501 (Rev. 1).pdf >>

Attachment: 5
Calc. No.: 145579-C-CA-015
Rev. No.: Ø 2 MRC 3-28-06
Sheet 2 of 2

145579-C-CA-015

Attachment 6

Stack and Equipment Vendor Drawings

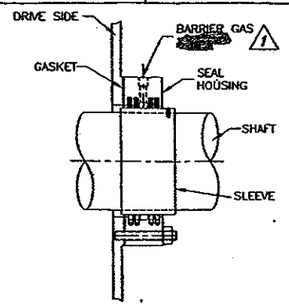

DETAIL "B"
ESPEY BURGMANN SHAFT SEAL

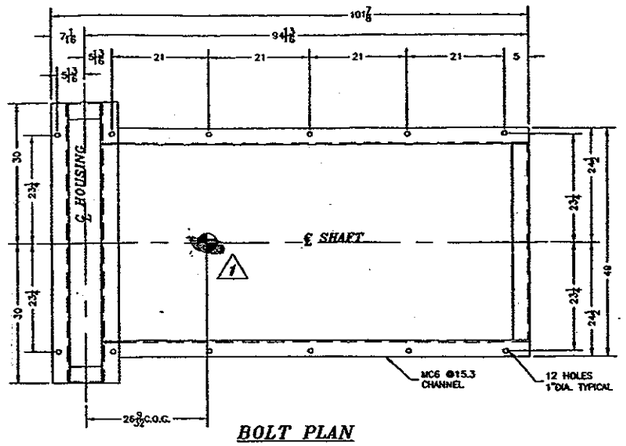

BOLT PLAN

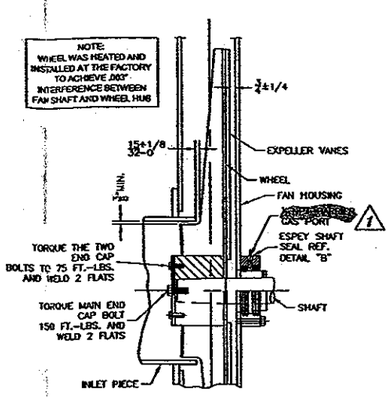

DETAIL "A"
WHEEL TO INLET PIECE CLEARANCE
WHEEL MUST BE LOCATED THAT ALL EXPELLER VANES CLEAR CASING SIDE BY A MIN. OF ½" SOME FIELD ADJUSTMENT MAY BE NECESSARY TO OBTAIN ABOVE CLEARANCES

NOTES CONTINUED:

10. *EXPANSION JOINTS IN ALL DUCTWORK AND PIPING TO AND FROM FAN ARE REQUIRED. THESE JOINTS ARE TO BE IMMEDIATELY ADJACENT TO THE FAN. CUSTOMERS DUCTWORK MUST BE STRUCTURALLY ANCHORED WITHIN APPROXIMATELY 24" OF EXPANSION JOINT.*
11. *FAN IS TO BE WELDED PER ASTM D14.6 AND D1.1. QUALIFIED WELDERS ARE REQUIRED.*
12. *FAN HOUSING TO BE DESIGNED FOR 50PSI CONTAINMENT.*
13. *FAN HOUSING TO BE CONTINUOUSLY WELDED INSIDE AND OUTSIDE. FAN BASE TO BE STITCH WELDED.*
14. *WELD MAPS TO BE PROVIDED BEFORE FABRICATION IS TO BEGIN.*
15. *CERTIFIED WELD INSPECTION IS REQUIRED WITH DOCUMENTATION.*
16. *FAN HOUSING TO RECIEVE A PRESSURE TEST AT 1.25x FAN OPERATING PRESSURE (SOAP BUBBLE TEST).*
17. *OVERSPEED (10 min.) TEST REQUIRED AT 4083 RPM (115% OF OPERATING)*
18. *FAN TO HAVE A 1 HOUR MECHANICAL RUN TEST.*
19. *SOUND TEST REQUIRED TO AMCA 300.*
20. *COVERS OVER INLET AND OUTLET REQUIRED FOR SHIPPING. DRAIN TO BE PLUGGED.*
21. *ROBINSON TO SUPPLY LUBE POWER CIRCULATING OIL LUBE UNIT. MODEL NUMBER LI-2x.5[20]/2x.1[90]W-2K -0KW-CS/CS-NEMA 4. 2x.5 GPM, 4000 BTU/HR. HEAT LOAD DISSIPATED ONE LUBE OIL SYSTEM WILL HANDLE BOTH CW AND CCW FANS.*

MATERIAL LIST		
ITEM	REQ'D	DESCRIPTION
A_{46}	2	BEARING SHIM– MILD STEEL MATERIAL
A_{12}	1	DRAIN– HALF OF A STD. 2" PIPE COUPLING WITH PLUG
A_{17}	1	INSPECTION DOOR–16"DIA. OPENING WITH A PLUG APPROX. WT. OF PLUG= 50lbs.
C	1	WHEEL– A-36 MATERIAL
C_9	1	SHAFT– AISI 1018 CRS
C_{9A}	1	SHAFT SEAL– ESPEY–BURGMANN SHAFT SEAL– TYPE WDKS/20/4N04, ESPEY–BURGMANN SHAFT SLEEVE– TYPE WDSB 210/ 4, 4 RINGS–MATERIAL: ANTIMONY IMPREGNATED GRAPHITE WITH 316TI SS SPRING. SEE DETAIL "B"
D_8	1	BEARING– PDNF–316 WITH SQUEEZE FILM DAMPER DRIVE END BEARING (FIXED)– 6316–C3, 80mm BORE. OPPOSITE DRIVE END BEARING (FLOAT)– NU216ECM/C3, 80mm BORE. TO BE LUBRICATED WITH CIRCULATING OIL SYSTEM. SEE NOTE #9 AND NOTE #21
D_{12}	1	MOTOR– 400HP, 3600RPM, 460V, 3PH, 60HZ, 1.15SF, CLASS F INSUL. INVERTER DUTY, BEARING RTD'S, STATOR WINDING RTD'S, EPOXY PAINT, DRAINS,TACHOMETER, FRAME NUMBER 5009A
D_{14}	1	COUPLING– RENOLD PM–3 FAN HALF BORE– 2.873 +.0010 –.0000 K'WAY– ⅜"x⅜" MOTOR HALF BORE– 2.623 +.0010 –.0000 K'WAY– ⅝"x⅜"
D_{16}	1	COUPLING GUARD– A-36 MATERIAL
D_{19}	2	T–TEC #1060–A–12–S–A, PLATINUM, 100ohms @ 0°c, SINGLE ELEMENT
D_{19A}	2	T–TEC #1060–33 SPRING LOADED FITTING C/W O–RING.
D_{19B}	2	T–TEC #1060–34 WEATHER PROOF HEAD, C/W #1060–29 TERMINAL BLOCK.
E_6	1	INLET PIECE– A–36 MATERIAL

NOTES:

1. *FAN TO BE FABRICATED FROM A-36 STEEL MATERIAL, WITH WHEEL AND SHAFT TO BE AS NOTED ABOVE. CERTIFIED MATERIAL REPORTS REQ'D FOR ALL MATERIAL AND FASTENERS.*
2. *ALL MILD STEEL TO BE CLEANED PER SSPC-SP10 AND PAINTED WITH ONE PRIME COAT OF CARBOZINC 11 WITH A TOP COAT OF CARBOLINE CARBOGUARD 888. FINAL COLOR TO BE GRAY (0700). LIFT LUGS ON FAN TO BE PAINTED SAFETY YELLOW (0600)*
3. *FAN HOUSING TO BE SPLIT FOR WHEEL AND SHAFT REMOVAL.*
4. *GASKET MATERIAL TO BE ZETEX TAPE.*
5. *TOTAL APPROX. WHEEL AND SHAFT WEIGHT= 390 lbs.*
6. *TOTAL APPROX. FAN WEIGHT INCLUDING MOTOR AND BASE= 11250 lbs.*
7. *ROBINSON RECOMMENDS A CONCRETE MASS UNDER THE FAN OF 56250 lbs.*
8. *MAXIMUM DYNAMIC LOAD ON FIXED BEARING BASED ON .25 IN/S. VIBRATION AT 3550 RPM=54 LBS. MAXIMUM DYNAMIC LOAD ON FLOAT BEARING BASED ON .25 IN/S. VIBRATION AT 3550 RPM=175.8 LBS.*
9. *BEARINGS ITEMS D8 AND D9 ARE TO BE CIRCULATING OIL LUBRICATED. USE ISO-VC-32 OIL.*

T= 5927 lb-in (each)
W_f= 11,250 lbs (each)

NOTE:
ROBINSON TO SUPPLY COMPLETE BENTLY NEVADA SYSTEM INCLUDING RACK WITH MONITORS FOR MOTOR RTD'S ALONG WITH FAN RTD'S FOR BOTH FANS. RACK WILL ALSO INCLUDE MONITORS FOR 2 PROXIMITY PROBES PER BEARING (RADIAL OPPOSITE DRIVE END FAN BEARING) AND 1 ACCELEROMETER (RADIAL) ON DRIVE END BEARING. THERE WILL ALSO BE MONITORS FOR AXIAL ACCELERATION PROBE ON COUPLING FACE FOR BOTH FANS. ONE RACK WILL INCLUDE MONITORS FOR BOTH FANS. COMPLETE PART NUMBERS AND DESCRIPTIONS TO BE PROVIDED ON DRAWING DA-59RB1806-5-104-1 UPON RECEIPT OF INFORMATION FROM VENDOR.

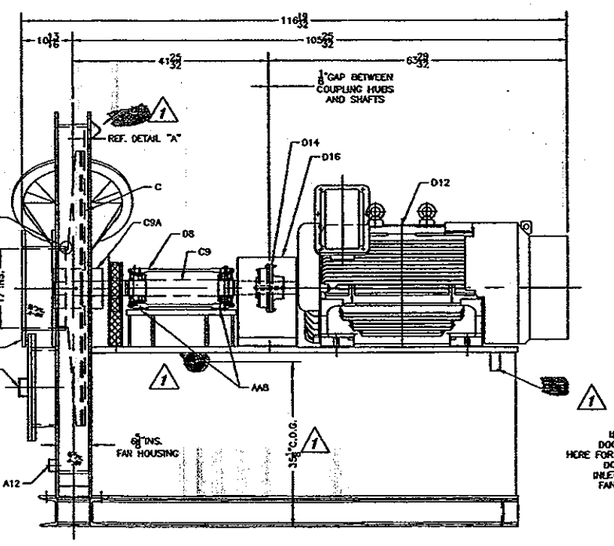

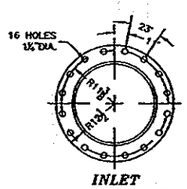

INLET
FLANGE DRILLING
(BOLTING BASE ON 18" 150lb. FLANGE DRILLING)

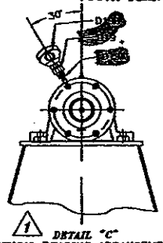

DETAIL "C"
TYPICAL BEARING ARRANGEMENT (VIEWED FROM DRIVE SIDE) ONE TEMPERATURE DETECTOR OVER EACH BEARING

REV.#1- ADDED DET."C" AND C.O.G. ALONG WITH LIFT LUGS. REV. TAG AND AMBIENT CONDITIONS FOR BEARINGS. CHANGED OUTLET FLANGE AND SHOW PORT SIZE IN SHAFT SEAL.

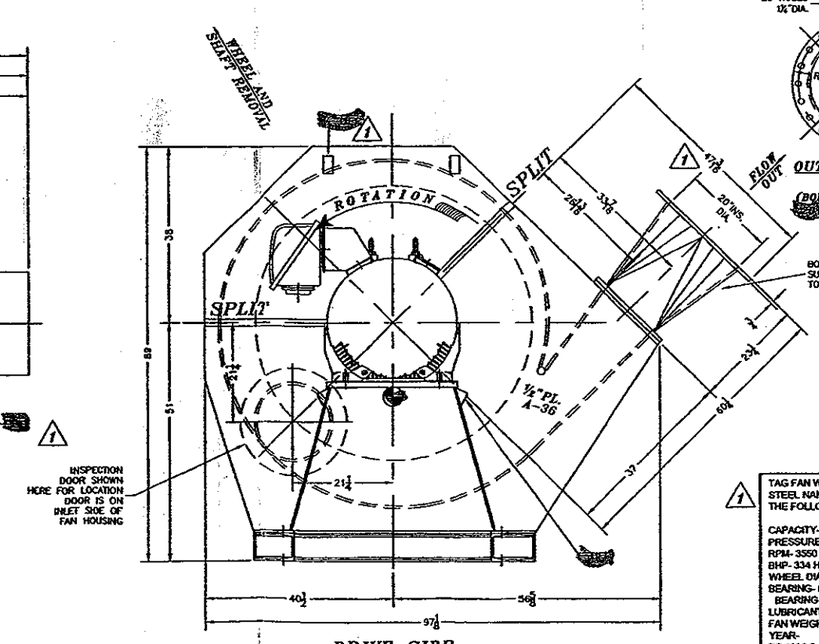

DRIVE SIDE
CLOCKWISE ROTATION

OUTLET FLANGE DRILLING
(BOLTING BASED ON 150lb. FLANGE DRILLING)

TAG FAN WITH STAINLESS STEEL NAMEPLATE INCLUDING THE FOLLOWING:

CAPACITY- 11,400 CFM
PRESSURE- 121"H2O
RPM- 3550
BHP- 334 HP
WHEEL DIA.- 59"DIA.
BEARING- 80mm TUNNEL BEARING WITH SFD
LUBRICANT- ISO VG 32
FAN WEIGHT- 11,250 lbs.
YEAR-
RB 1806-5
FOI- 107972
EQUIP[redacted]
EX[redacted]

WHEEL & SHAFT WK^2 = 791 lbs. ft²

CADD DRAWING #SA107972–CCW

UNITS PER ORDER ONE

FAN PERFORMANCE						
MAXIMUM FAN DESIGN TEMPERATURE 250°F @ 3550 RPM						
3550	11,400	121.0	.0374	248	663	334.0
RPM	CFM	FSPR	DENSITY	TEMP	ELEV	BHP

CERTIFIED FOR	
YOUR ORDER	05-40S-A79870
OUR JOB NO.	107972
BY TS	DATE 2-6-06

TOLERANCES UNLESS OTHERWISE MARKED FRACTIONS ±1/32, ANGLES ±1/2°, DEC ±.005
FAN TOLERANCE ON OVERALL DIMENSIONS FOR SET, PA VIA, F/C 24" DIA FAN & ABOVE ±1/16" –1/8"

ROBINSON INDUSTRIES, INC
ZELIENOPLE, PENNSYLVANIA 16063

TYPE 59"x1-1/16"RB1806-5, CCW ROT.0315" DISCH.ARR.40,SWSI,CL.IV
FOR AMEC EARTH & ENVIRONMENTAL INC.
RICHARD, WA

ALL DIMENSIONS ARE IN INCHES

	BY	DATE
DRAWN	TS	2-6-06
CHECKED		
MICRO		

DA-58RB1806-5-105 — 1 REV

NO.	REVISION	DATE	BY	MICRO. DATE
4				
3				
2				
1				
0	DRAWING REVISED PER CUSTOMER REVIEW	3-2-06	TS	

CAD GENERATED DRAWING, DO NOT CHANGE BY HAND

COMPONENT	SUFFIX #
WHEEL	1
CASING	2
PEDESTAL	
DAMPER	
HUB	5
SHAFT	6

FOR ROBINSON INTERNAL USE ONLY

THIS DRAWING IS THE PROPERTY OF ROBINSON IND., INC. AND IS LOANED UPON CONDITION THAT IT IS NOT TO BE REPRODUCED OR COPIED IN WHOLE OR PART FOR FURNISHING INFORMATION TO OTHERS FOR ANY PURPOSE DETRIMENTAL TO OUR INTERESTS AND WILL BE RETURNED UPON REQUEST.

BEARINGS ARE DESIGNED FOR A MAXIMUM AMBIENT TEMPERATURE OF [redacted]

DO NOT USE SUBSTITUTE LUBRICANTS OR OVER LUBRICATE. WARRANTY WILL BE VOIDED UNLESS ROBINSON LUBRICATION INSTRUCTIONS ARE FOLLOWED.

FAN UNIT WILL BE SHIPPED WITH OUTLET TRANSITION TO SHIP LOOSE

☒ ASSEMBLED
☐ DISASSEMBLED

FINAL ALIGNMENT OF BEARINGS, COUPLING, V-BELTS, WHEEL & SHAFT ASSY. MUST BE CHECKED BEFORE OPERATION OF THIS EQUIPMENT. NOTE ALL ITEMS ARE TO BE CHECKED FOR PROPER SETTINGS PER INSTRUCTION MANUAL AND CERTIFIED DRAWING

C:\Documents and Settings\McChecken\Local Settings\Temporary Internet Files\OLK9D5\SA107972 CCW.dwg, 3/6/2006 12:55:52 PM, KMT

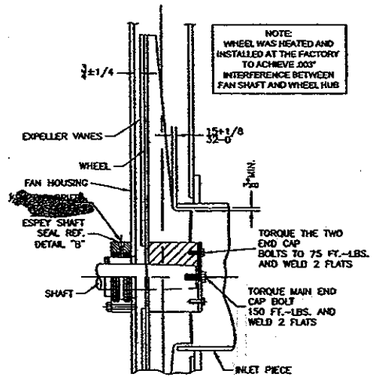

DETAIL "A"
WHEEL TO INLET PIECE CLEARANCE
WHEEL MUST BE LOCATED THAT ALL EXPELLER VANES CLEAR CASING SIDE BY A MIN. OF ⅞"
SOME FIELD ADJUSTMENT MAY BE NECESSARY TO OBTAIN ABOVE CLEARANCES

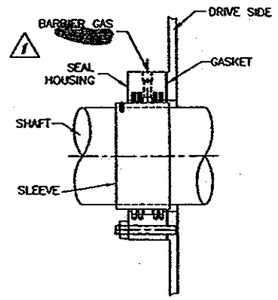

DETAIL "B"
ESPEY BURGMANN SHAFT SEAL

NOTE:
ROBINSON TO SUPPLY COMPLETE BENTLY NEVADA SYSTEM INCLUDING RACK WITH MONITORS FOR MOTOR RTD'S ALONG WITH FAN RTD'S FOR BOTH FANS. RACK WILL ALSO INCLUDE MONITORS FOR 2 PROXIMITY PROBES PER BEARING (RADIAL OPPOSITE DRIVE END FAN BEARING) AND 1 ACCELEROMETER (RADIAL) ON DRIVE END BEARING. THERE WILL ALSO BE MONITORS FOR AXIAL ACCELERATION PROBE ON COUPLING FACE FOR BOTH FANS. ONE RACK WILL INCLUDE MONITORS FOR BOTH FANS. COMPLETE PART NUMBERS AND DESCRIPTIONS TO BE PROVIDED ON DRAWING DA-59RB1806-5-104-1 UPON RECEIPT OF INFORMATION FROM VENDOR.

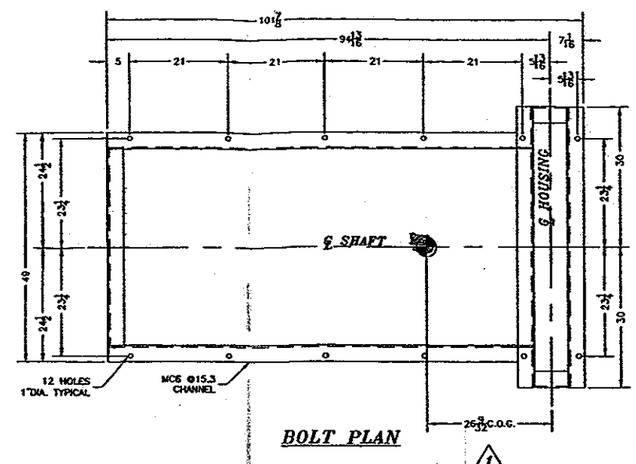

BOLT PLAN

NOTES CONTINUED:

10. EXPANSION JOINTS IN ALL DUCTWORK AND PIPING TO AND FROM FAN ARE REQUIRED. THESE JOINTS ARE TO BE IMMEDIATELY ADJACENT TO THE FAN. CUSTOMERS DUCTWORK MUST BE STRUCTURALLY ANCHORED WITHIN APPROXIMATELY 24" OF EXPANSION JOINT.
11. FAN IS TO BE WELDED PER ASTM D14.6 AND D1.1. QUALIFIED WELDERS ARE REQUIRED.
12. FAN HOUSING TO BE DESIGNED FOR 50PSI CONTAINMENT.
13. FAN HOUSING TO BE CONTINUOUSLY WELDED INSIDE AND OUTSIDE. FAN BASE TO BE STITCH WELDED.
14. WELD MAPS TO BE PROVIDED BEFORE FABRICATION IS TO BEGIN.
15. CERTIFIED WELD INSPECTION IS REQUIRED WITH DOCUMENTATION.
16. FAN HOUSING TO RECIEVE A PRESSURE TEST AT 1.25x FAN OPERATING PRESSURE (SOAP BUBBLE TEST).
17. OVERSPEED (10 min.) TEST REQUIRED AT 4083 RPM (115% OF OPERATING)
18. FAN TO HAVE A 1 HOUR MECHANICAL RUN TEST.
19. SOUND TEST REQUIRED TO AMCA 300.
20. COVERS OVER INLET AND OUTLET REQUIRED FOR SHIPPING. DRAIN TO BE PLUGGED.
21. ROBINSON TO SUPPLY LUBE POWER CIRCULATING OIL LUBE UNIT. MODEL NUMBER LI-2x.5[20]/2x.1[90]W-2K -OKW-CS/CS-NEMA 4. 2x.5 GPM, 4000 BTU/HR. HEAT LOAD DISSIPATED ONE LUBE OIL SYSTEM WILL HANDLE BOTH CW AND CCW FANS.

MATERIAL LIST

ITEM	REQ'D	DESCRIPTION
A_{48}	2	BEARING SHIM-- MILD STEEL MATERIAL
A_{12}	1	DRAIN-- HALF OF A STD. 2" PIPE COUPLING WITH PLUG
A_{17}	1	INSPECTION DOOR--18"DIA. OPENING WITH A PLUG APPROX. WT. OF PLUG= 50lbs.
C	1	WHEEL-- A-36 MATERIAL
C_9	1	SHAFT-- AISI 1018 CRS
C_{9A}	1	SHAFT SEAL-- ESPEY-BURGMANN SHAFT SEAL-- TYPE WOKS/20/4ND4, ESPEY-BURGMANN SHAFT SLEEVE-- TYPE WOSB 210/ 4, 4 RINGS--MATERIAL: ANTIMONY IMPREGNATED GRAPHITE WITH 316Ti SS SPRING. SEE DETAIL "B"
D_8	1	BEARING-- PDNF--316 WITH SQUEEZE FILM DAMPER DRIVE END BEARING (FIXED)-- 6316-C3, 80mm BORE. OPPOSITE DRIVE END BEARING (FLOAT)-- NU216ECM/C3, 80mm BORE. TO BE LUBRICATED WITH CIRCULATING OIL SYSTEM. SEE NOTE #9 AND NOTE #21
D_{12}	1	MOTOR-- 400HP, 3600RPM, 460V, 3PH, 60HZ, 1.15SF, CLASS F INSUL. INVERTER DUTY, BEARING RTD'S, STATOR WINDING RTD'S, EPOXY PAINT, DRAINS,TACHOMETER, FRAME NUMBER 5009A
D_{14}	1	COUPLING-- RENOLD PM--3 FAN HALF BORE-- 2.873 +.0010 -.0000 K'WAY-- ¾"x¾" MOTOR HALF BORE-- 2.823 +.0010 -.0000 K'WAY-- ¾"x¾"
D_{16}	1	COUPLING GUARD-- A-36 MATERIAL
D_{19}	2	T-TEC #1060--A--12--S--A, PLATINUM, 100ohms @ 0°c, SINGLE ELEMENT
D_{19A}	2	T-TEC #1060--33 SPRING LOADED FITTING C/W O-RING.
D_{19B}	2	T-TEC #1060--34 WEATHER PROOF HEAD, C/W #1060--29 TERMINAL BLOCK.
E_6	1	INLET PIECE-- A-36 MATERIAL

NOTES:
1. FAN TO BE FABRICATED FROM A-36 STEEL MATERIAL, WITH WHEEL AND SHAFT TO BE AS NOTED ABOVE. CERTIFIED MATERIAL REPORTS REQ'D FOR ALL MATERIAL AND FASTENERS.
2. ALL MILD STEEL TO BE CLEANED PER SSPC-SP10 AND PAINTED WITH ONE PRIME COAT OF CARBOZINC 11 WITH A TOP COAT OF CARBOLINE CARBOGUARD 888. FINAL COLOR TO BE GRAY (0700). LIFT LUGS ON FAN TO BE PAINTED SAFETY YELLOW (0600)
3. FAN HOUSING TO BE SPLIT FOR WHEEL AND SHAFT REMOVAL.
4. GASKET MATERIAL TO BE ZETEX TAPE.
5. TOTAL APPROX. WHEEL AND SHAFT WEIGHT= 390 lbs.
6. TOTAL APPROX. FAN WEIGHT INCLUDING MOTOR AND BASE= 11250 lbs.
7. ROBINSON RECOMMENDS A CONCRETE MASS UNDER THE FAN OF 56250 lbs.
8. MAXIMUM DYNAMIC LOAD ON FIXED BEARING BASED ON .25 IN/S. VIBRATION AT 3550 RPM=54 LBS. MAXIMUM DYNAMIC LOAD ON FLOAT BEARING BASED ON .25 IN/S. VIBRATION AT 3550 RPM=175.8 LBS.
9. BEARINGS ITEMS D8 AND D9 ARE TO BE CIRCULATING OIL LUBRICATED. USE ISO-VG-32 OIL.

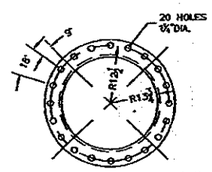

OUTLET FLANGE DRILLING
(BOLTING BASED ON [redacted] 150lb. FLANGE DRILLING)

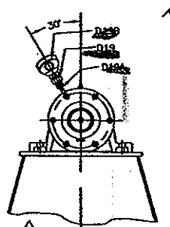

DETAIL "C"
TYPICAL BEARING ARRANGEMENT (VIEWED FROM DRIVE SIDE)
ONE TEMPERATURE DETECTOR OVER EACH BEARING

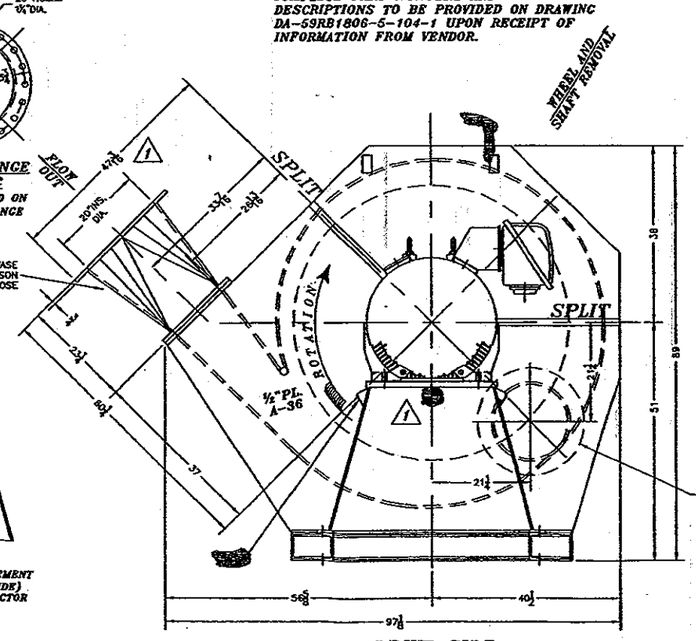

DRIVE SIDE
CLOCKWISE ROTATION

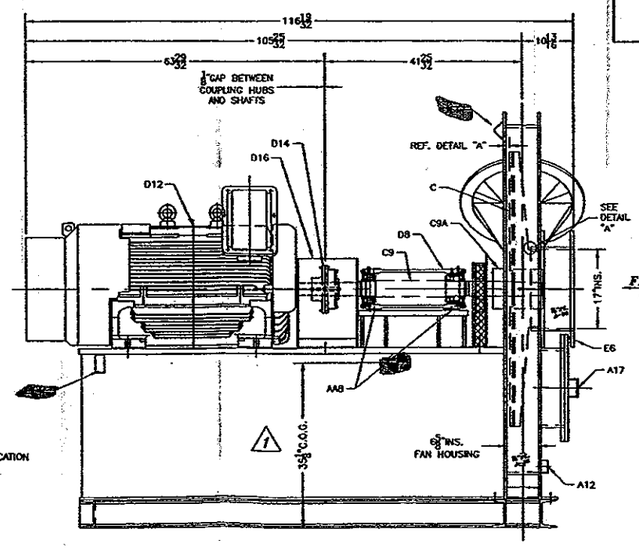

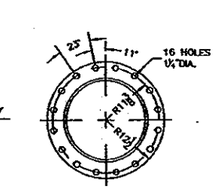

INLET FLANGE DRILLING
(BOLTING BASE ON 18" 150lb. FLANGE DRILLING)

TAG FAN WITH STAINLESS STEEL NAMEPLATE INCLUDING THE FOLLOWING:

CAPACITY- 11,400 CFM
PRESSURE- 121"H2O
RPM- 3550
BHP- 334 HP
WHEEL DIA.- 59"DIA.
BEARING- 80mm TUNNEL BEARING WITH SFD
LUBRICANT- ISO VG 32
FAN WEIGHT- 11,250 lbs.
YEAR-
RB 1806-5
FO#- 107972
[redacted]

REV.#1- ADDED DET."C" AND C.O.G. ALONG WITH LIFT LUGS. REV. TAG AND AMBIENT CONDITIONS FOR BEARINGS. CHANGED OUTLET FLANGE AND SHOW PORT SIZE IN SHAFT SEAL.

NO.	REVISION	DATE	BY	MICRO. DATE
1	DRAWING REVISED PER CUSTOMER REVIEW	3-2-06	TS	

CAD GENERATED DRAWING, DO NOT CHANGE BY HAND

COMPONENT	SUFFIX #
WHEEL	1
CASING	2
PEDESTAL	
DAMPER	
HUB	5
SHAFT	6

FOR ROBINSON IND. INC. INTERNAL USE ONLY

THIS DRAWING IS THE PROPERTY OF ROBINSON IND., INC. AND IS LOANED UPON CONDITION THAT IT IS NOT TO BE REPRODUCED OR COPIED IN WHOLE OR PART FOR FURNISHING INFORMATION TO OTHERS FOR ANY PURPOSE DETRIMENTAL TO OUR INTERESTS AND WILL BE RETURNED UPON REQUEST.

BEARINGS ARE DESIGNED FOR A MAXIMUM AMBIENT TEMPERATURE OF [redacted]

DO NOT USE SUBSTITUTE LUBRICANTS OR OVER LUBRICATE. WARRANTY WILL BE VOIDED UNLESS ROBINSON LUBRICATION INSTRUCTIONS ARE FOLLOWED.

FAN UNIT WILL BE SHIPPED WITH OUTLET TRANSITION TO SHIP LOOSE

☒ ASSEMBLED
☐ DISASSEMBLED

FINAL ALIGNMENT OF BEARINGS, COUPLING, V-BELTS, WHEEL & SHAFT ASSY. MUST BE CHECKED BEFORE OPERATION OF THIS EQUIPMENT. NOTE ALL ITEMS ARE TO BE CHECKED FOR PROPER SETTINGS PER INSTRUCTION MANUAL AND CERTIFIED DRAWING

UNITS PER ORDER ONE

CERTIFIED FOR
YOUR ORDER 06-403-A79670
OUR JOB NO. 107972
BY TS DATE 2-6-06

TOLERANCES UNLESS OTHERWISE MARKED
FRACTIONS ±1/32 ANGLES ±1° DEC ±.005
FAN TOLERANCE ON OVERALL DIMENSIONS INCH 24 - PM FAN ±1/8"
24" DIA FAN & ABOVE +3/16" -1/8"

FAN PERFORMANCE

MAXIMUM FAN DESIGN TEMPERATURE 250°F @ 3550 RPM

RPM	CFM	FSPR	DENSITY	TEMP	ELEV	BHP
3550	11,400	121.0	.0374	248	663	334.0

WHEEL & SHAFT WR² = 791 lbs. ft²

ROBINSON INDUSTRIES, INC
ZELIENOPLE, PENNSYLVANIA 16063

TYPE 59"x1-1/16"RB1806-5, CW ROT.0316" BLDG.ARR.D8,SVSI,CL.IV
FOR AMEC EARTH & ENVIRONMENTAL INC.
RICHARD, WA

ALL DIMENSIONS ARE IN INCHES

	BY	DATE
DRAWN	TS	2-6-06
CHECKED		
MICRO		

DA-58RB1806-5-104 REV 1

C:\Documents and Settings\McCPackenK\Local Settings\Temporary Internet Files\OLK9D5\8a107972 CW.dwg, 3/6/2006 12:55:30 PM, kjm

THESE DOCUMENTS ARE THE PROPERTY OF
BUSBY MARINE & TANK INC.
IT IS TO BE USED ONLY FOR THE PURPOSE OF WHICH IT WAS LENT AND MUST NOT BE REPRODUCED WITHOUT WRITTEN PERMISSION OR USED IN ANY WAY DETRIMENTAL TO THE INTEREST OF THIS COMPANY.
IT IS SUBJECT TO RETURN UPON REQUEST.

THOMAS V. MERZ
STATE OF WASHINGTON
40175
REGISTERED
PROFESSIONAL ENGINEER
3/1/06
EXPIRES: 02-22-08

DESIGN CHANGES

Customer requested design changes after the design has been completed will incur additional costs and may affect delivery date.
No design changes are allowed after production has begun.

NOTICE:

Exhaust Stack will be invoiced 30 days after its completion or upon delivery if sooner. Storage fees will also start to accrue 30 days after scheduled delivery.
If stack was not completed on time storage fees will not start accruing until 60 days after completion
(For details see our standard terms and conditions)

AUTHORIZED CUSTOMER SIGNATURE TITLE DATE

UNLESS OTHERWISE SPECIFIED:
NOTE:

1. ALL CONSTRUCTION SHALL BE IN ACCORDANCE WITH THE 2003 EDITION OF THE INTERNATIONAL BUILDING CODE (IBC), LOCAL RULES AND STANDARDS OF GOVERNING AGENCIES HAVING JURISDICTION.
2. DESIGN LOADS: PER AMEC SPECIFICATION 145579-V-005, REV. 3, ASCE 7-02, ASME STS-1-2000, AND 1997 UBC, (FOR SEISMIC LOADS)
   LIVE LOADS: PLATFORM = 50 PSF
   SNOW: PLATFORM = 25 PSF; IS = 1.1
   WIND: SPEED = 85 MPH; EXPOSURE = C; IW = 1.15
   SEISMIC: ZONE = 2B; IE = 1.25; SOIL TYPE = SE
   THERMAL: MAXIMUM TEMPERATURE = 372 DEG F
   CORROSION: ALLOWANCE = 1/16"
3. STEEL STACK FOUNDATION DESIGN SHALL BE BY OTHERS. FOUNDATION SHALL BE MINIMUM 17'6" IN PLAN DIMENSION AND 60" DEEP. FOUNDATION CONCRETE SHALL HAVE A MINIMUM COMPRESSIVE STRENGTH OF 4000 PSI AT 28 DAYS. FOUNDATION SHALL BE PROPORTIONED SUCH THAT CRACKING DOES NOT OCCUR AT SERVICE LOADS.
4. GROUT SHALL BE A NONMETALLIC TYPE SUCH AS MASTER BUILDERS MASTERFLOW 928, DAYTON SUPERIOR 1107, EUCLID NX GROUT, OR ENGINEER APPROVED EQUAL. ENSURE ANCHOR BOLT PIPE SLEEVES ARE FULLY GROUTED.
5. ALL STEEL PLATE AND ANGLE SHALL CONFORM TO ASTM A36 / ASME SA36. ALL STEEL "W" SECTIONS SHALL CONFORM TO ASTM A992. ALL STEEL TUBE SHALL CONFORM TO ASTM A500 GRADE B. ALL STEEL PIPE SHALL CONFORM TO ASTM A53 GRADE B / ASME SA53 GRADE B.
6. ALL BOLTS USED FOR THE CONNECTION OF PRIMARY STEEL STACK SEGMENTS TO OTHER PRIMARY STEEL STACK SEGMENTS SHALL BE HIGH STRENGTH BOLTS CONFORMING TO ASTM A325 OR ASTM A449. NUTS FOR HIGH STRENGTH BOLTS SHALL CONFORM TO ASTM A563. WASHERS FOR HIGH STRENGTH BOLTS SHALL CONFORM TO ASTM F436.

DRAWING INDEX:

SHEET	REV	DESCRIPTION
1	4	TITLE – CUSTOMER AUTHORIZATION
2	4	EXHAUST STACK – BILL OF MATERIAL
3	4	EXHAUST STACK ASSEMBLY
4	4	STACK BOTTOM SECTION ASSEMBLY
5	4	HOLDDOWN ASSEMBLY
6	4	NOZZLE 1 ASSEMBLY
7	4	NOZZLE 2, 3 AND 4 ASSEMBLY
8	4	NOZZLE 5 AND 6 ASSEMBLY
9	4	NOZZLE 8 ASSEMBLY
10	4	NOZZLE 9 AND 10 ASSEMBLY
11	4	NOZZLE 9 AND 10 ASSEMBLY
12	4	STACK MIDDLE SECTION ASSEMBLY
13	4	NOZZLE 7 ASSEMBLY
14	4	CONNECTION PLATE – BOTTOM/MIDDLE – ASSEMBLY
15	4	CONNECTION PLATE – MIDDLE/TOP – ASSEMBLY
16	4	STACK TOP SECTION ASSEMBLY
17	4	TOP STACK SECTION DETAILS
18	4	LADDER – DETAILS
19	4	LADDER – PLATFORM – DETAILS
20	4	PLATFORM HANDRAIL – DETAILS
21	4	PLATFORM GRATING – DETAILS
22	4	PLATFORM SUPPORTS – DETAILS
23	4	PLATFORM SUPPORTS – DETAILS
24	4	SPREADER BAR – DETAILS

UNLESS OTHERWISE SPECIFIED:
NOTE CONTINUED:

7. ALL BOLTS USED TO CONNECT PLATFORM MEMBERS SHALL BE CARBON STEEL BOLTS CONFORMING TO ASTM A307 CONCRETE ANCHOR BOLTS SHALL BE THREADED ROD CONFORMING TO ASTM A36. NUTS FOR CARBON STEEL BOLTS SHALL CONFORM TO ASTM A563. WASHERS FOR CARBON STEEL BOLTS SHALL CONFORM TO ANSI B18.22.1
8. BOLT HOLES SHALL BE BOLT DIAMETER +1/8" UNLESS NOTED OTHERWISE. BOLT END AND EDGE DISTANCES AND BOLT LENGTHS SHALL BE PER AISC, UNLESS NOTED OTHERWISE
9. ALL WELDING SHALL BE DONE BY AWS CERTIFIED WELDERS AND SHALL CONFORM TO AWS D-1.1. ELECTRODES SHALL BE E70 MINIMUM. ALL WELDING SHALL BE SPECIAL INSPECTED PER IBC 1704.3.1.
10. BOLTED CONNECTIONS SHALL BE "SNUG TIGHT" WITH NO SPECIAL INSPECTION REQUIRED.
11. PAINT ALL FERROUS METALS FOR EXTERIOR EXPOSURE.
12. ALL CONNECTING PIPING HARDWARE (NOZZLES) SHALL BE RAISED-FACE, SLIP ON 150#
13. N2 GLASS & GASKET COVER TO BE SUPPLIED AND INSTALLED BY CUSTOMER
14. SAMPLE LINES TO BE SUPPLIED AND INSTALLED BY CUSTOMER
15. MOBILE MANBASKET TO BE SUPPLIED BY CUSTOMER
16. STYLE LOCATION AND SIZE OF NOZZLES TO BE CONFIRMED BY THOMPSON (ANALYZER VENDOR)
17. NOZZLE ELEVATIONS TO BE CONFIRMED BY THOMPSON
18. SAMPLE LINE NOZZLE LOCATIONS SHALL BE LOCATED A MINIMUM OF 8 STACK DIAMETERS (48"X) DOWN STREAM OF FLOW DISTURBANCE TRANSITIONS OR CONNECTIONS PER 40 CFR 60 METHOD 1 SECTION 11.0
19. THERMAL PROTECTION COMPLYING WITH ASME STS-1 SECTION 6.6 SHALL BE PROVIDED BY OTHERS.
20. WEIGHT OF STACK IS 45,730 LBS, TOP SECTION=7,030 MIDDLE SECTION=14,950 LBS, BOTTOM SECTION=21,350 LADDER AND PLATFORM=2,400 LBS

LTR	REVISION	APP	DATE
4	CUSTOMER REDISIGNED STACK PER CN 001	TM	2-10-06
3	ADD SHEET 1A AND CHNG 1 TO 1B ALSO ADDED ORIENTATION AND ELEVATIONS TO NOZZLE CHART & ADD ORIENTATION DEG TO DWG TITLES & DETAILS & ADD WELD MAP DWGS	GN	12-12-05
2	CHANGE STACK DESIGN	GN	6-7-05
1	1ST SUBMITTAL	GN	5-4-05

CUSTOMER:	THOMPSON MECHANICAL
CUSTOMER STACK No.	145579
PURCHASE ORDER No.	–
JOB ID No.	298701
ENGG No.	5E008

BUSBY MARINE AND TANK, INC.

TACOMA (253) 383-5000
FAX (253) 593-3742

BUSBY MARINE & TANK INC.
1840 MARINE VIEW DRIVE
TACOMA, WA 98422

COPYRIGHT 2003 BUSBY MARINE & TANK INC.

DRAWN: DJB	DATE: 02-27-06	BUSBY DRAWING No.	BMASMESTACK
CHECKED: KO	DATE: 02-27-06		
CHECKED: RA	DATE: 02-27-06		
ENG: TOM MERZ	DATE: 02-27-06		
APPROVED: MM	DATE: 02-27-06	QTY: 1 REV: 4	SHEET 1 OF –

ITEM	QTY	Description	Material
11301	1	HOLDDOWN BASE RING PL 1" X 60" OD	ASME SA36
11302	30	HOLDDOWN GUSSET PL 1/2" X 5 1/2" X 12"	ASME SA36
11303	1	HOLDDOWN UPPER PL 1" X 48 1/4" ID X 60" OD	ASME SA36
11304	15	HOLDDOWN FOUNDATION ANCHOR PL 3/4 X 8 X 8 WITH 1 5/8" DIA HOLE CENTERED IN PLATE FOR ROD	ASME SA36
11305	15	HOLDDOWN FOUNDATION PIPE SLEEVE 3" SCH 40 X 6" LONG	ASME SA53 GR B
11306	75	NUT 1 3/4" DIA - NC	ASTM A563
11307	15	ROD THRD 1 3/4" DIA - NC X 60" LONG (THRD LAST 6" EACH END)	ASTM A307
11308	15	WASHER FOR 1 3/4" DIA ROD	ANSI B18.22.1
11401	1	ELLIPITICAL 2:1 ASME CODE HEAD 47" OD 3/8" PLATE	ASME SA36
11402	7	STACK BOTTOM PL 1/2 X ROLL TO 360 DEG AT 48" OD X 96" H	ASME SA36
11403	1	STACK BOTTOM PL 1/2 X ROLL TO 360 DEG AT 48" OD X 47" H	ASME SA36
11501	45	STACK STIFFENER RING PL 1/2" X 48 1/4" ID X 54 1/4" OD EACH RING IS TO BE MADE IN 2 EACH 180 DEG HALVES	ASME SA36
11502	10	STACK STIFFENER RING PL 1/2" X 24 1/4" ID X 30 1/4" OD EACH RING IS TO BE MADE IN 2 EACH 180 DEG HALVES	ASME SA36
11601	4	CONNECTION PL 1" X 48 1/4" ID X 54 1/4" OD	ASME SA36
11602	120	CONNECTION GUSSET PL 1/2" X 2 1/2" X 12"	ASME SA36
11603	24	WASHER FOR 7/8" DIA - NC BOLT	ASTM F436
11604	12	BOLT 7/8" DIA - NC X 32" LONG	ASTM A325
11605	24	NUT 7/8" DIA - NC	ASTM A563
21101	4	STACK MIDDLE PL 1/2 X ROLL TO 360 DEG AT 48" OD X 96" H	ASME SA36
21102	1	STACK MIDDLE IN - PL 3/8 X ROLL TO 360 DEG AT 48" OD X 36" H	ASME SA36
21201	2	TOP TRANSITION PL 1/2" X TOP 24" OD X BOTTOM 48" OD X 60" H (180 DEG EACH HALF)	ASME SA36
21301	1	STACK MIDDLE PIPE 24" SCH 40 (.687" WALL) X 24" H	ASME SA53 GR B
31101	1	STACK TOP PIPE 24" SCH 40 (.687" WALL) X 24" H	ASME SA53 GR B
31102	1	STACK TOP PIPE 24" SCH 20 (.375" WALL) X 612" (51'-0") H	ASME SA53 GR B
31201	6	CONNECTION PL 1" X 24 1/4" ID X 30 1/4" OD	ASME SA36
31301	15	HELICAL STRAKES PL 1/4" X 3" X 12'-0" LONG (HELIX TO 26" ID X 9'-10" FIN LONG)(PITCH: 120" X REVALUTIONS: 1)	ASME SA36
31302	60	HELICAL STRAKES WELD TAB PL 1/4" X 2" X 2" SPACE AT 90 DEG	ASME SA36
50011	1	N1 PIPE 1" X SCH 40 X 26" LONG	ASTM A312 GR TP304
50012	1	N1 FLANGE SLIP-ON 150 # RF 1"	ASTM A312 GR TP304
50013	1	N1 ELBOW BW 1" SCH 40 X 90 DEG LR	ASTM A312 GR TP304
50014	1	N1 PIPE 1" X SCH 40 X 10 3/4" LONG	ASTM A312 GR TP304
50015	2	N1 L4X4X3/8 X 12 1/2" LONG	ASME SA36
50016	1	N1 DOULBLER PL 1/2 X 12 3/8" X 12 3/8" ROLL TO 48" ID WITH 6" DIA HOLE IN CENTER	ASME SA36
50021	1	N2 PIPE 4" X SCH 40 X 5" COPE TO STACK ID	ASME SA53 GR B
50022	1	N2 FLANGE SLIP-ON 150 # RF 4"	ASME SA182-F1
50023	2	N2 L4X4X3/8 X 11 1/2" LONG	ASME SA36
50024	1	N2 DOULBLER PL 1/2 X 11 3/8" X 11 3/8" ROLL TO 48" ID WITH 4 3/4" DIA HOLE IN CENTER	ASME SA36
50031	1	N3 PIPE 4" X SCH 40 X 5" COPE TO STACK ID	ASME SA53 GR B
50032	1	N3 FLANGE SLIP-ON 150 # RF 4"	ASME SA182-F1
50033	2	N3 L4X4X3/8 X 11 1/2" LONG	ASME SA36
50034	1	N3 DOULBLER PL 1/2 X 11 3/8" X 11 3/8" ROLL TO 48" ID WITH 4 3/4" DIA HOLE IN CENTER	ASME SA36
50041	1	N4 PIPE 4" X SCH 40 X 5" COPE TO STACK ID	ASME SA53 GR B
50042	1	N4 FLANGE SLIP-ON 150 # RF 4"	ASME SA182-F1
50043	2	N4 L4X4X3/8 X 11 1/2" LONG	ASME SA36
50044	1	N4 DOULBLER PL 1/2 X 11 3/8" X 11 3/8" ROLL TO 48" ID WITH 4 3/4" DIA HOLE IN CENTER	ASME SA36
50051	1	N5 PIPE 2" X SCH 40 X 5" COPE TO STACK ID	ASME SA53 GR B
50052	1	N5 FLANGE SLIP-ON 150 # RF 2"	ASME SA182-F1
50053	2	N5 L4X4X3/8 X 8 1/2" LONG	ASME SA36
50054	1	N5 DOULBLER PL 1/2 X 8 3/8" X 8 3/8" ROLL TO 48" ID WITH 2 1/2" DIA HOLE IN CENTER	ASME SA36

ITEM	QTY	Description	Material
50061	1	N6 PIPE 2" X SCH 40 X 5" COPE TO STACK ID	ASME SA53 GR B
50062	1	N6 FLANGE SLIP-ON 150 # RF 2"	ASME SA182-F1
50063	2	N6 L4X4X3/8 X 8 1/2" LONG	ASME SA36
50064	1	N6 DOULBLER PL 1/2 X 8 3/8" X 8 3/8" ROLL TO 48" ID WITH 2 1/2" DIA HOLE IN CENTER	ASME SA36
50071	1	N7 PIPE 2" X SCH 40 X 5" COPE TO STACK ID	ASME SA53 GR B
50072	1	N7 FLANGE SLIP-ON 150 # RF 2"	ASME SA182-F1
50073	2	N7 L4X4X3/8 X 8 1/2" LONG	ASME SA36
50074	1	N7 DOULBLER PL 1/2 X 8 3/8" X 8 3/8" ROLL TO 48" ID WITH 2 1/2" DIA HOLE IN CENTER	ASME SA36
50081	1	N8 PIPE 12" X SCH 40 X 5" COPE TO STACK ID	ASME SA53 GR B
50082	1	N8 FLANGE SLIP-ON 150 # RF 12"	ASME SA182-F1
50083	2	N8 L4X4X3/8 X 35" LONG COPE OVER STIFFENERS	ASME SA36
50084	1	N8 DOULBLER PL 1/2 X 19 7/8" X 19 7/8" ROLL TO 48" ID WITH 12 7/8" DIA HOLE IN CENTER	ASME SA36
50091	1	N9 PIPE 20" X SCH 40 X 33" COPE TO STACK ID	ASME SA53 GR B
50092	1	N9 FLANGE SLIP-ON 150 # RF 20"	ASME SA182-F1
50093	2	N9 L4X4X3/8 X 87" LONG COPE OVER STIFFENERS	ASME SA36
50094	1	N9 DOULBLER PL 1/2 X 26 1/4" X 35 3/4" ROLL TO 48" ID WITH ELLIPTICAL HOLE IN CENTER APPROX. 20 1/4" X 29"	ASME SA36
50101	1	N10 PIPE 20" X SCH 40 X 33" COPE TO STACK ID	ASME SA53 GR B
50102	1	N10 FLANGE SLIP-ON 150 # RF 20"	ASME SA182-F1
50103	2	N10 L4X4X3/8 X 87" LONG VERT	ASME SA36
50104	1	N10 DOULBLER PL 1/2 X 26 1/4" X 35 3/4" ROLL TO 48" ID WITH ELLIPTICAL HOLE IN CENTER APPROX. 20 1/4" X 29"	ASME SA36
61001	2	STRINGER 3/8 X 2 1/2 FLAT BAR X 46'-2" LONG	ASME SA36
61002	47	RUNG 3/4" DIA X 24" LONG	ASME SA36
61003	12	FASTENING 3/8 X 2 1/2 FLAT BAR X 14 5/8" LONG	ASME SA36
61004	12	STUD 1/2" DIA NC X 1 1/2" LONG	ASTM A307
	12	NUT 1/2" DIA - NC	ASTM A563
	12	WASHER FOR 1/2" DIA - NC STUD	ANSI B18.22.1
61005	1	SAF-T-CLIMB FALL PREVENTION SYSTEM CARRIER RAIL AND RUNG CLAMPS X 46'-0"	BY MANUFAC
			ASME SA36
62001	7	CAGE VERT BARS 1/4 X 2 FLAT BAR X 30'-4 3/4" LONG	ASME SA36
62002	1	BAND TOP 1/4 X 3 FLAT BAR X 60" LONG	ASME SA36
62003	7	BAND MID 1/4 X 2 FLAT BAR X 60" LONG	ASME SA36
62004	1	BAND CONNECTION 1/4 X 3 FLAT BAR X 60" LONG	ASME SA36
62005	1	BAND BOTTOM 1/4 X 3 FLAT BAR X 68" LONG	ASME SA36
62006	7	CAGE VERT BARS BOTTOM 1/4 X 2 FLAT BAR X 50" LONG	ASME SA36
			ASME SA36
63001	2	L5X3X1/4 X 20'-4" LONG ROLL TO 13'-0" OD (180 DEG) 5" TOE UP 3" TOE IN	ASME SA36
63002	2	L5X3X1/4 X 84 3/4" LONG ROLL TO 54" ID (180 DEG) 5" TOE UP 3" TOE OUT	ASME SA36
63003	4	L3X3X1/4 X 69" LONG COPE END	ASME SA36
63004	4	L3X3X1/4 X 30" LONG COPE END	ASME SA36
63005	2	L3X3X1/4 X 53" LONG COPE ENDS	ASME SA36
63006	1	L3X3X1/4 X 28" LONG	ASME SA36
63007	4	L3X3X1/4 X 36" LONG COPE ENDS	ASME SA36
63008	2	L3X3X1/4 X 20 3/4" LONG COPE END	ASME SA36
63009	1	L3X3X1/4 X 51" LONG COPE ENDS	ASME SA36
63010	1	L3X3X1/4 X 36 1/4" LONG COPE END	ASME SA36
63011	2	L3X3X1/4 X 33 1/2" LONG	ASME SA36
63012	2	L3X3X1/4 X 36" LONG COPE END (3/4" HOLE)	ASME SA36
63013	1	BAR GRATING; BEARING BARS 3/4 X 3/16 X 59'-10" LONG CROSS BARS 1/4 DIA X 36" WIDE CUT LONG X WIDE AS REQD STEEL TYPE W-19 (STANDARD MESH RY-WELD OPEN STEEL	ASME SA36 GALV
63014	6	BOLT TAB PLATE 1/4 X 2 3/4" X 2 3/4" (3/4" HOLE)	ASME SA36

ITEM	QTY	Description	Material
65001	14	L3X3X1/4 X 4" LONG (3/4" HOLE)	ASME SA36
65002	6	L3X3X1/4 X 71 1/4" LONG (2 EACH 3/4" HOLES)	ASME SA36
65003	18	BOLT 5/8"-NC X 1 1/2" LONG	ASTM A307
65004	6	L3X3X1/4 X 5 3/8" LONG (3/4" HOLE)	ASME SA36
65005	8	FLAT BAR 2 X 1/4 X 3" LONG (3/4" HOLE)	ASME SA36
65006	4	FLAT BAR 6 X 1/2 X 75 3/4" LONG ROLLED TO 48 1/4" ID (180 DEG)	ASME SA36
65007	18	NUT 5/8"-NC	ASTM A563
65008	18	WASHER FOR 5/8" DIA BOLT	ANSI B18.22.1
66001	1	1 1/4" SCH 40 PIPE X 19'-8" LONG ROLL TO 75 3/4" IR (180 DEG)	ASME SA53 GR B
66002	2	1 1/4" SCH 40 PIPE X 73" LONG X ROLL TO 75 3/4" IR (55 DEG)	ASME SA53 GR B
66003	6	1 1/4" SCH 40 PIPE X 59" LONG ROLL TO 75 3/4" IR (45 DEG)	ASME SA53 GR B
66004	2	1 1/4" SCH 40 PIPE X 16" LONG ROLL TO 75 3/4" IR COPE END	ASME SA53 GR B
66005	5	MID POST FLAT BAR 2 X 1/2 X 41 7/8" LONG COPE END	ASME SA36
66006	4	END POST FLAT BAR 2 X 1/2 X 43" LONG	ASME SA36
67001	1	SQUARE TUBE 2 X 2 X 120 X 86" LONG CUT ENDS AT 45 DEG	ASTM A500 GR B
67002	3	SQUARE TUBE 2 X 2 X 120 X 42 3/4" LONG CUT ONE END AT 45 DEG	ASTM A500 GR B
67003	2	SQUARE TUBE 2 X 2 X 120 X 40 3/4" LONG	ASTM A500 GR B
67004	3	RUNG 3/4" DIA X 28 7/8" LONG	ASME SA36
67005	1	SQUARE TUBE 2 X 2 X 120 X 38 7/8" LONG CUT ONE END AT 45 DEG	ASTM A500 GR B
67006	3	RUNG 3/4" DIA X 36 7/8" LONG	ASME SA36
67007	2	SQUARE TUBE 2 X 2 X 120 X 24 1/2" LONG	ASTM A500 GR B
71001	1	W12 X 15 X 47 1/2" LONG COPE ENDS	ASTM A992
71002	2	W12 X 15 X 29" LONG	ASTM A992
71003	4	W12 X 15 X 11 3/8" LONG COPE END	ASTM A992
71004	16	PLATE 1/2 X 3" X 11 5/16" HIGH	ASME SA36
71005	1	LIFT LUG PLATE 1 1/2 X 7 1/2" X 7 1/2" HIGH (3" DIA HOLE)	ASME SA36

NOZZLE TABLE

NO	ORIENT	ELEV	NOZZLE SERVICE	SIZE/PROJECTION
N1	270	3'-6"	STACK DRAIN	1" SCH 40 / 4"
N2	270	45'-6"	VISUAL INSPECTION	4" SCH 40 / 4"
N3	45	46'-6"	SAMPLE LINE	4" SCH 40 / 4"
N4	135	46'-6"	SAMPLE LINE	4" SCH 40 / 4"
N5	45	48'-6"	SAMPLE RETURN LINE	2" SCH 40 / 4"
N6	135	48'-6"	SAMPLE RETURN LINE	2" SCH 40 / 4"
N7	270	68'-6"	FLOW ELEMENT	2" SCH 40 / 4"
N8	90	14'-6"	BYPASS LINE	12" SCH 40 /4"
N9	135	13'-6.5"	OFF-GAS INLET	20" SCH 40 /SEE DTL 10 AND 11
N10	225	13'-6.5"	OFF-GAS INLET	20" SCH 40 /SEE DTL 10 AND 11

THOMAS V. MERK
STATE OF WASHINGTON
40175
REGISTERED PROFESSIONAL ENGINEER
3/1/06

EXPIRES 02-22-08

No	REVISION	BY	APR	DATE
3	ADD SHEET 1A AND CHNG 1 TO 1B ORIENTATION & ELEV TO NOZZLE CHART	DJB	GN	12-12-05
4	CUSTOMER CHNG DESIGN	DJB	TM	02-02-06

253-383-5000 COPYRIGHT 2003

BUSBY MARINE AND TANK INC.

TOLERANCE UNLESS NOTED OTHERWISE
STACK HEIGHT + 1/2" / - 1/2"
STACK DIA + 1/8" / - 1/8"
NOZZLES + 1/8" / - 1/8"
PLATES/STIFFENERS/GUSSETS +.06 / -.03

PROPRIETARY
THE DESIGN DETAIL AND INFORMATION IN THIS DRAWING IS THE PROPERTY OF BUSBY MARINE & TANK INC. AND IS LOANED SUBJECT TO RETURN UPON REQUEST, UNDER THE EXPRESS CONDITION THAT IT MUST NOT BE REPRODUCED, DISCLOSED OR USED IN WHOLE OR IN PART EXCEPT BY PERMISSION AUTHORIZED IN WRITING

SCALE	NA	
DRAWN	DJB	02-27-06
CHECKED	KO	-
CHECKED	RA	-
ENG.	TM	02-27-06
APPROVED	MM	-

ITEM/ASSEMBLY: EXHAUST STACK - BILL OF MATERIAL
ASSEMBLY: EXHAUST STACK ASSEMBLY - 10001
PRODUCT: BMASMESTACK

MANUF.	BUSBY	SHEET 2 OF -
ENG NO.	5E008	
JOB NO.	298701	
DWG NO.	02-BOM	REV 4

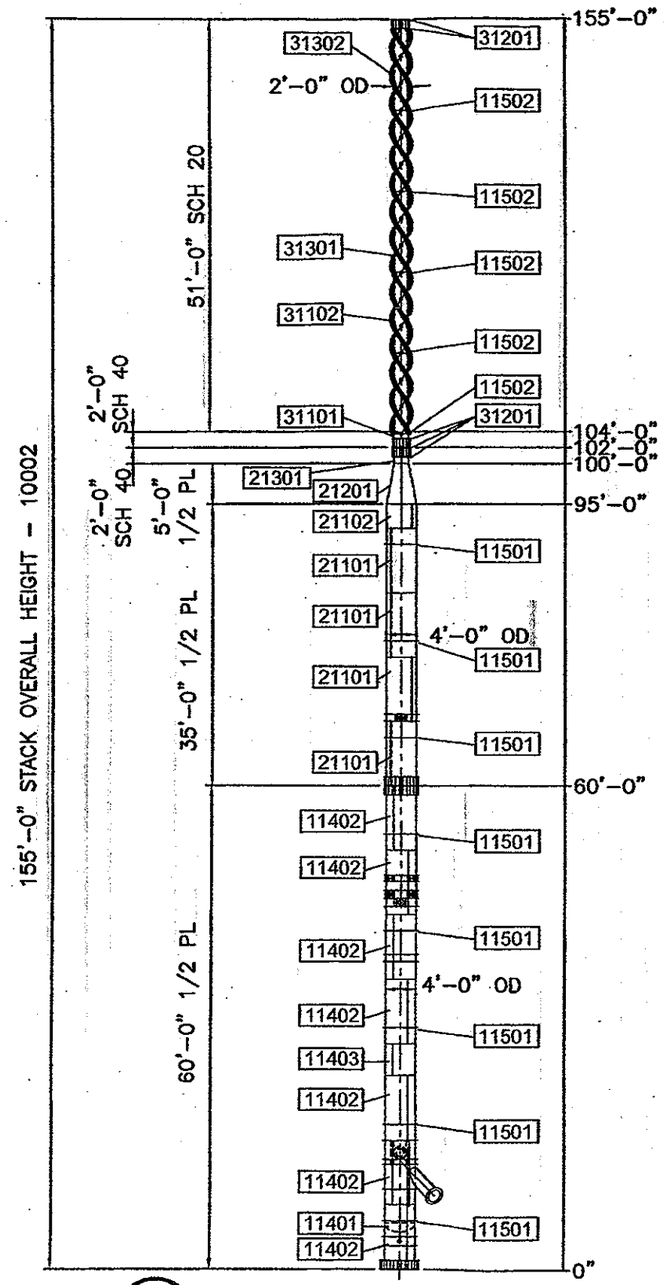

10002 STACK - ELEVATION VIEW AT 270°

NOTE:
THE TOTAL WEIGHT OF THE STACK IS 45,730 LBS
THE WEIGHT OF THE BOTTOM SECTION IS 21,350 LBS
THE WEIGHT OF THE MIDDLE SECTION IS 14,950 LBS
THE WEIGHT OF THE TOP SECTION IS 7,030 LBS
THE WEIGHT OF THE LADDER AND PLATFORM IS 2,400 LBS

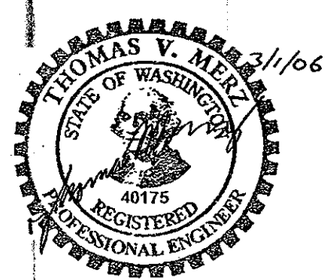

EXPIRES: 02-22-08

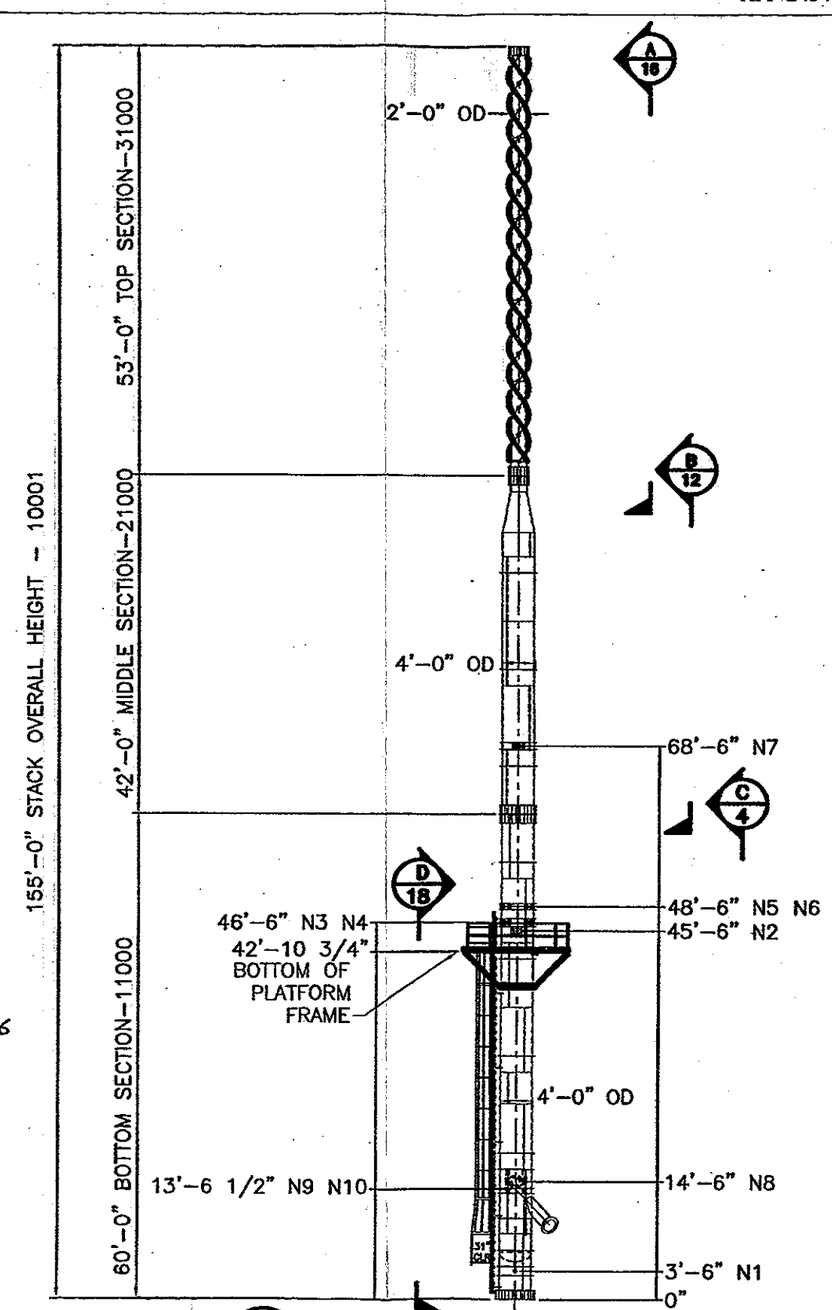

10001 STACK - ELEVATION VIEW AT 270°

No	REVISION	BY	APR	DATE
3	ADD SHEET 1A AND CHNG 1 TO 1B ORIENTATION & ELEV TO NOZZLE CHART	DJB	GN	12-12-05
4	CUSTOMER CHNG DESIGN	DJB	GN	02-02-06

253-383-5009 COPYRIGHT 2003 BUSBY MARINE AND TANK, INC.

TOLERANCE
SEE SHEET 2

PROPRIETARY
THE DESIGN REVEAL AND INFORMATION IN THIS DRAWING IS THE PROPERTY OF BUSBY MARINE & TANK INC AND CLEARNER. SUBJECT TO RETURN UPON REQUEST. UNDER THE EXPRESS CONDITION THAT IT MUST NOT BE REPRODUCED, DISCLOSED OR USED IN WHOLE OR IN PART EXCEPT BY PERMISSION AUTHORIZED IN WRITING

NTS

		DATE
SCALE	1:200	
DRAWN	DJB	02-27-06
CHECKED	KO	-
CHECKED	RA	-
ENG.	TM	02-27-06
APPROVED	MM	-

BMASSEMBLY: EXHAUST STACK ASSEMBLY
ASSEMBLY: EXHAUST STACK ASSEMBLY - 10001 10002 AND 11002
PRODUCT: BMASMESTACK

MANUF: BUSBY
ENGNO: 5E008
JOBNO: 298701
DWGNO: 03-STACK
SHEET 3 OF -
REV 4

NOTE:
THE TOTAL WEIGHT OF THE BOTTOM STACK SECTION IS 21,350 LBS

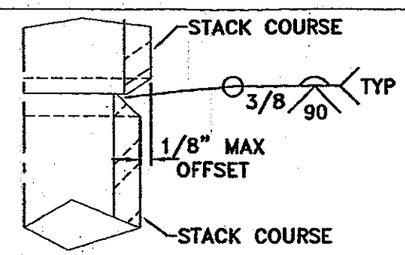

③ TYP COURSE WELD DTL
SCALE: NTS

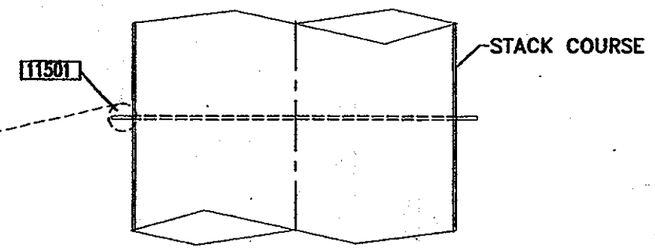

CA TYP COURSE WELD DTL
SCALE: 1:20

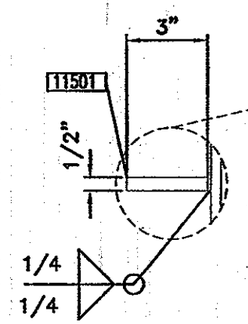

⑤ STIFFENER DTL
SCALE: 1:5
NTS

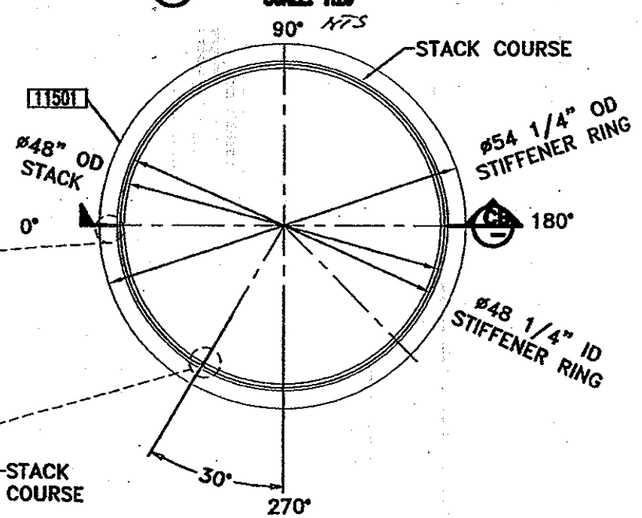

CA TYP COURSE DTL
SCALE: 1:20
NTS

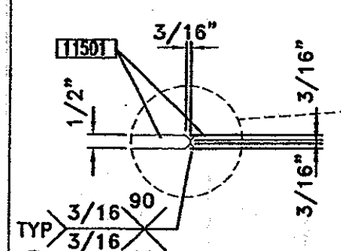

② STIFFENER DTL
SCALE: 1:5
NTS

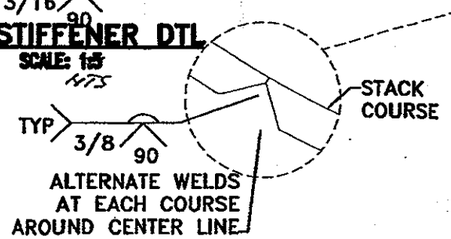

④ TYP COURSE WELD DTL
SCALE: NTS NTS

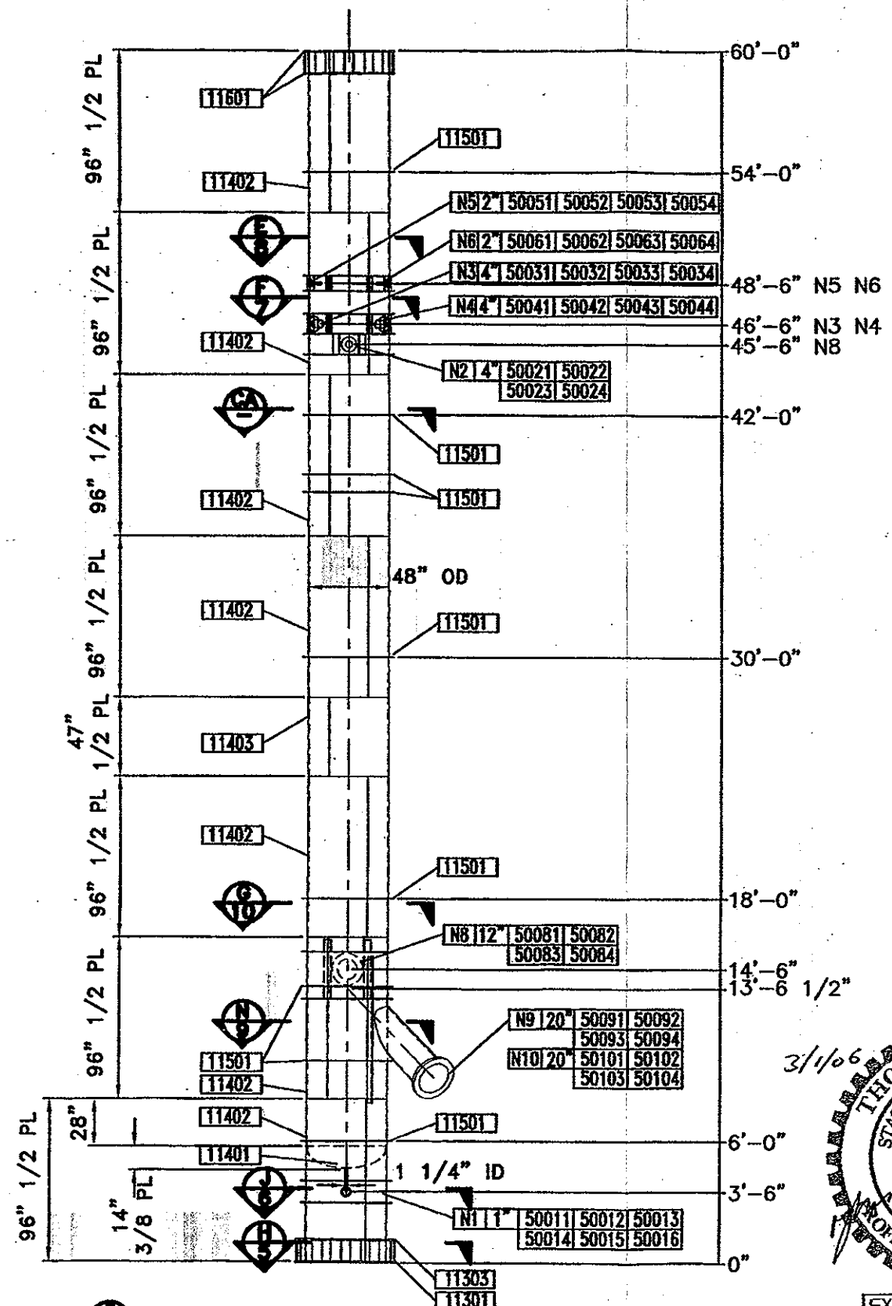

CA BOTTOM SECTION (ELEVATION AT 270°)

3/1/06
THOMAS V. MERZ
STATE OF WASHINGTON
40175
REGISTERED PROFESSIONAL ENGINEER
EXPIRES: 02-22-08

No	REVISION	BY	APR	DATE
1	1ST SUBMITTAL	DJB	GN	-
2	CHNG STACK DESIGN	DJB	GN	5-20-05
3	ADD ORIENT DEG TO DWG TITLES & DTL	DJB	GN	12-12-05
4	CUSTOMER CHNG DESIGN	DJB	GN	02-02-06

253-383-5000 COPYRIGHT 2003
BUSBY MARINE AND TANK, INC.

TOLERANCE
SEE SHEET 2

PROPRIETARY
THIS DESIGN DETAIL AND INFORMATION IN THIS DRAWING IS THE PROPERTY OF BUSBY MARINE & TANK INC. AND IS LOANED, SUBJECT TO RETURN UPON DEMAND, UNDER THE EXPRESS CONDITION THAT IT MUST NOT BE REPRODUCED, DISCLOSED OR USED IN WHOLE OR IN PART EXCEPT BY PERMISSION AUTHORIZED IN WRITING

SCALE: ~~1:80~~ 1:27		DATE
DRAWN	DJB	02-27-06
CHECKED	KO	-
CHECKED	RA	-
ENG.	TM	02-27-06
APPROVED	MM	-

TITLE/ASSEMBLY: STACK BOTTOM SECTION ASSEMBLY
ASSEMBLY: STACK BOTTOM SECTION ASSEMBLY - 11000
PRODUCT: BMASMESTACK

MANUF: BUSBY
DWG NO.: 5E008
JOB NO.: 298701
DWG NO.: 04-BOTTOM
SHEET 4 OF -
REV 4

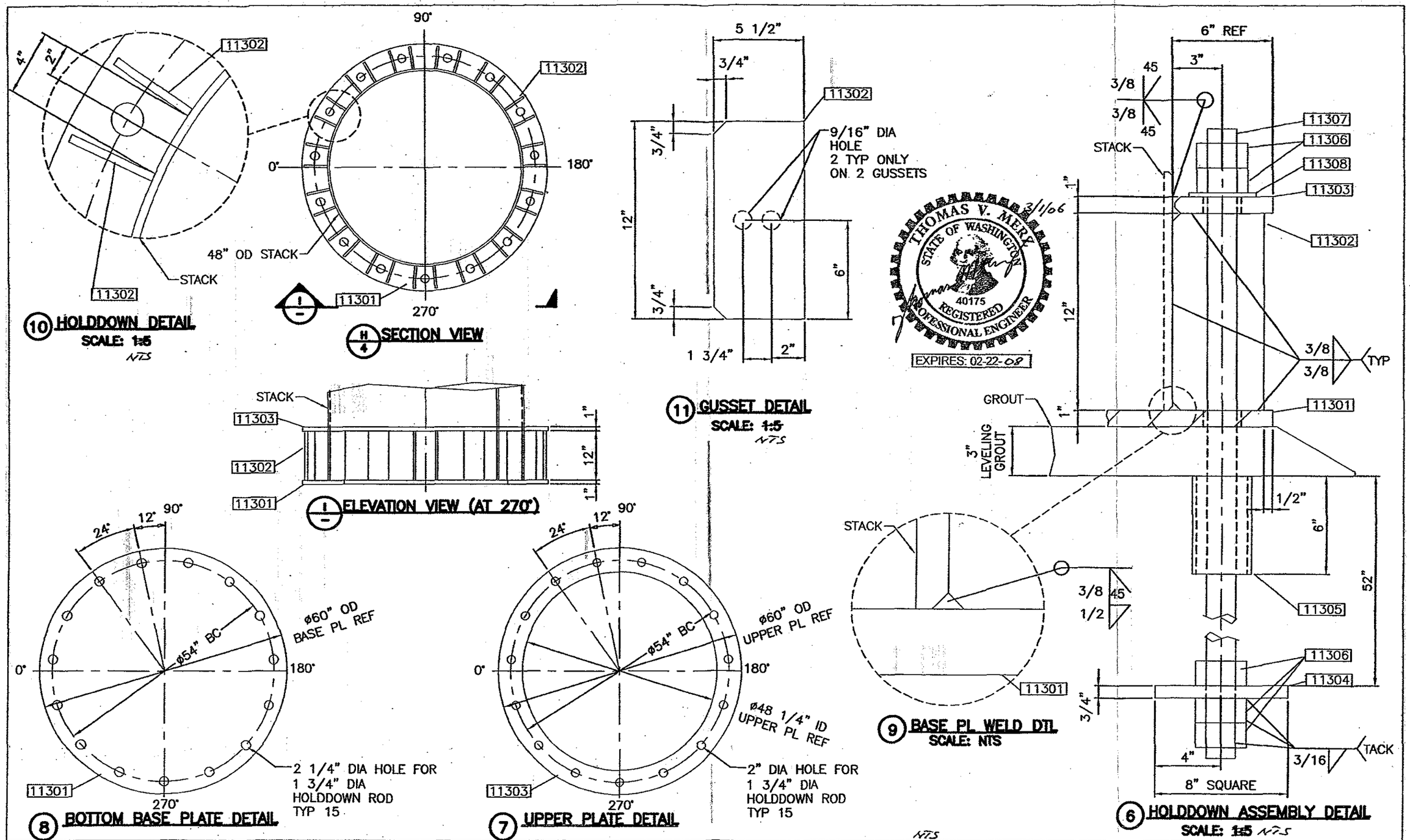

No	REASON	BY	APR	DATE
3	ADD ORIENTATION DEG TO DWG TITLES & DTL	DJB	GN	12-12-05
4	CUSTOMER CHNG DESIGN	DJB	GN	02-02-06

No	REVISION	BY	APR	DATE
-	-	-	-	-

253-383-5000 COPYRIGHT 2003

BUSBY MARINE AND TANK, INC.

TOLERANCE
SEE SHEET 2

PROPRIETARY

THE DESIGN DETAIL AND INFORMATION IN THIS DRAWING IS THE PROPERTY OF BUSBY MARINE & TANK INC AND IS LOANED, SUBJECT TO RETURN UPON DEMAND, UNDER THE EXPRESS CONDITION THAT IT MUST NOT BE REPRODUCED, DISCLOSED OR USED IN WHOLE OR IN PART EXCEPT BY PERMISSION AUTHORIZED IN WRITING

SCALE:	1:20 NTS	DATE
DRAWN	DJB	02-27-06
CHECKED	KO	-
CHECKED	RA	-
ENG.	TM	02-27-06
APPROVED	MM	-

ITEM/ASSEMBLY: HOLDDOWN ASSEMBLY
SYSTEM: BOTTOM SECTION ASSEMBLY - 11000
PRODUCT: BMASMESTACK

MANUF: BUSBY
ENG NO.: 5E008
JOB NO.: 298701
DWG NO.: 05-HOLDDOWN
REV: 4
SHEET: 5 OF -

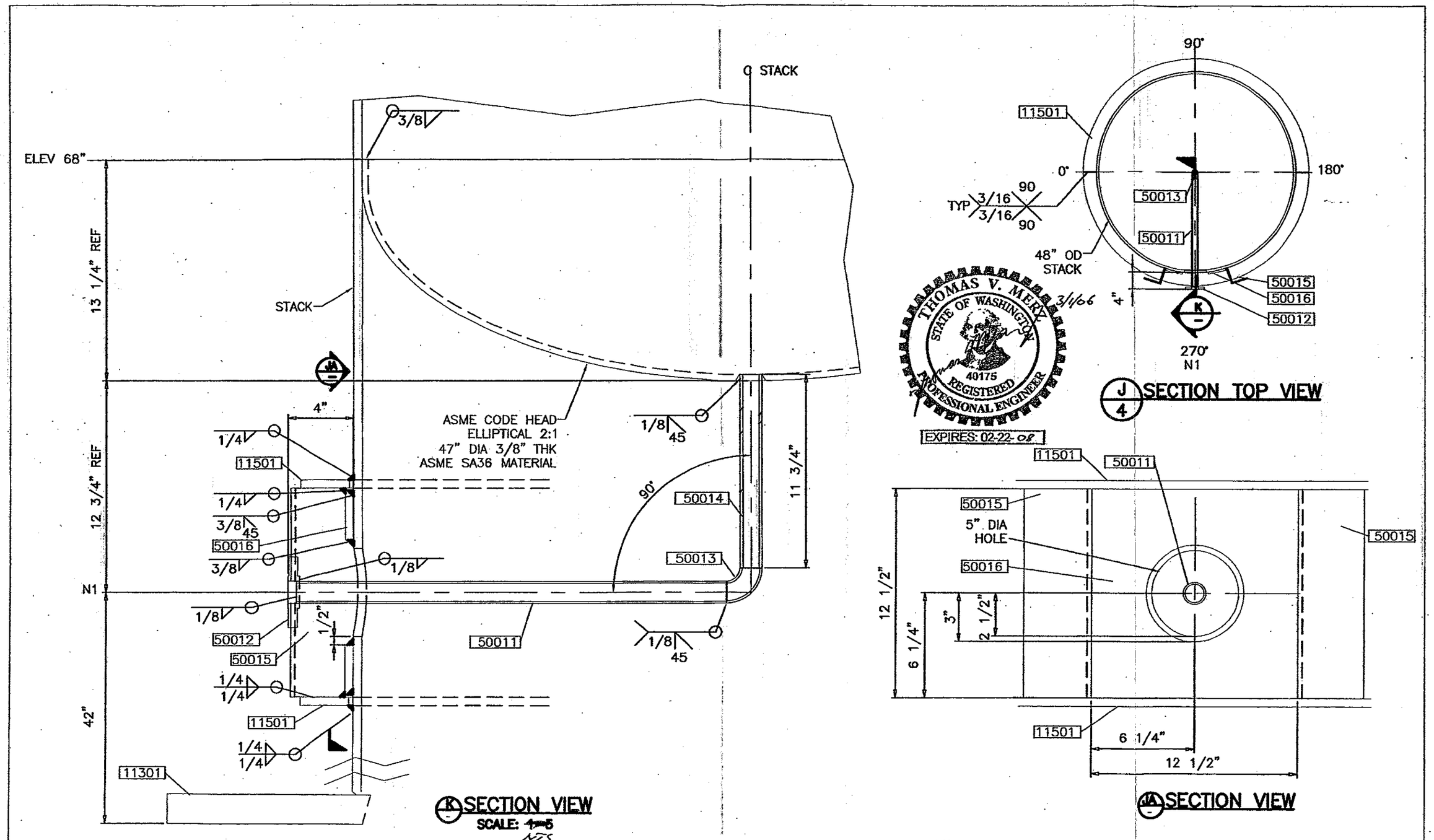

No	REVISION	BY	APR	DATE	No	REVISION	BY	APR	DATE
4	CUSTOMER CHNG DESIGN	DJB	GN	02-02-06	-	-	-	-	-

253-393-6009 COPYRIGHT 2003
BUSBY MARINE AND TANK, INC.

TOLERANCE
SEE SHEET 2

PROPRIETARY
THIS DESIGN DETAIL AND INFORMATION IN THIS DRAWING IS THE PROPERTY OF BUSBY MARINE & TANK INC AND IS LOANED, SUBJECT TO RETURN UPON DEMAND, UNDER THE EXPRESS CONDITION THAT IT MUST NOT BE REPRODUCED, DISCLOSED OR USED IN WHOLE OR IN PART EXCEPT BY PERMISSION AUTHORIZED IN WRITING

SCALE: ~~1=20~~ NTS		
DRAWN DJB	02-27-06	
CHECKED KO	-	
CHECKED RA	-	
ENG. TM	02-27-06	
APPROVED MM	-	

ITEM/ASSEMBLY: NOZZLE 1 ASSEMBLY
ASSEMBLY: BOTTOM SECTION ASSEMBLY - 11000
PRODUCT: BMASMESTACK

MANUF: BUSBY
DWG NO.: 5E008
JOB NO.: 298701
DWG NO.: 06-N-01
SHEET 6 OF -
REV 4

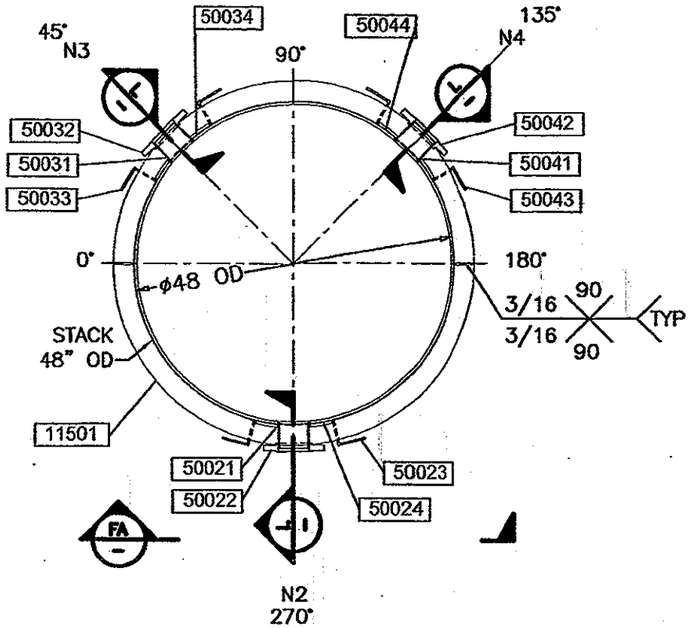

F/4 SECTION TOP VIEW

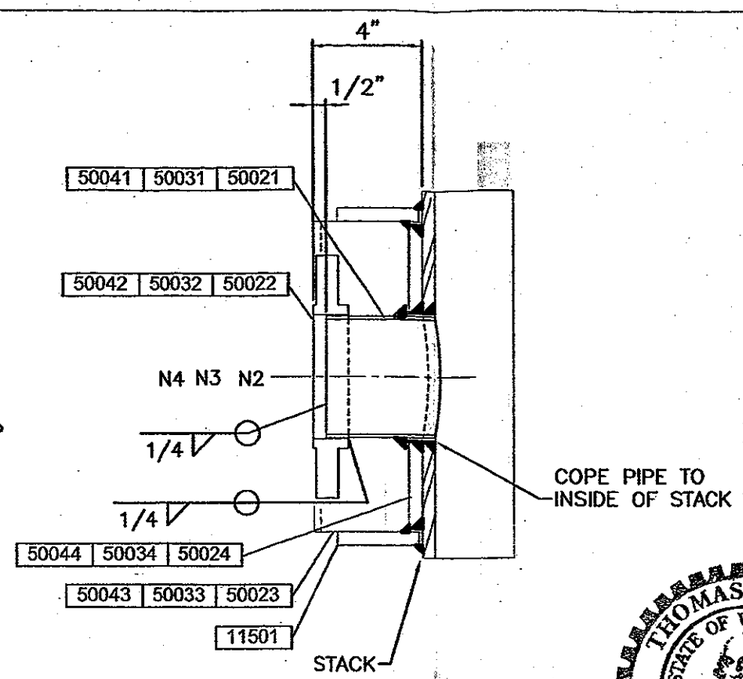

L SECTION VIEW
SCALE: ~~4-5~~ NTS

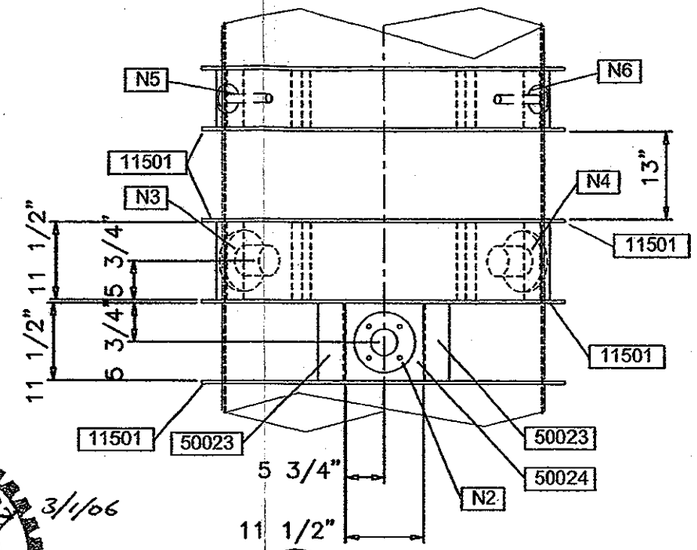

FA ELEVATION VIEW AT 270°

NOTE:
5 3/4" AND 11 1/2" DIM SPACING TYPICAL FOR N2, N3 AND N4
4 1/4" AND 8 1/2" DIM SPACING TYPICAL FOR N5 AND N6

THOMAS V. MERZ
STATE OF WASHINGTON
40175
REGISTERED PROFESSIONAL ENGINEER
3/1/06
EXPIRES: 02-22-08

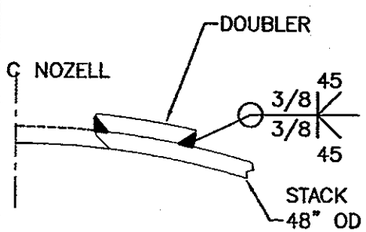

TOP VIEW
56 WELD DETAIL
NTS

NOTE
1. CUT OUT HOLE IN STACK 1/8" LARGER THAN NOZZLE
2. WELD DOUBLER TO STACK

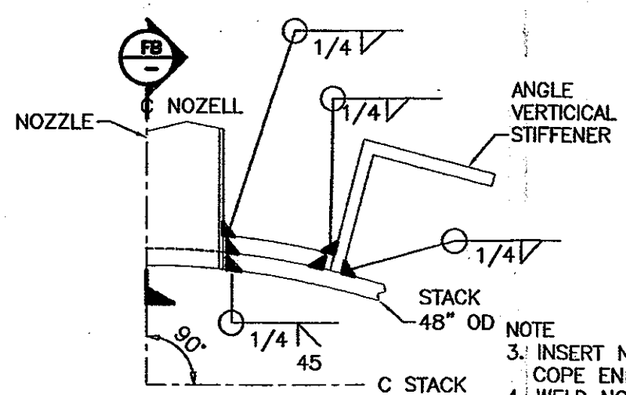

TOP VIEW
57 WELD DETAIL
NTS

NOTE
3. INSERT NOZZLE INTO HOLE COPE END TO STACK ID
4. WELD NOZZLE TO STACK WALL
5. WELD NOZZLE TO DOUBLER
6. WELD ANGLE VERTICAL STIFFENER TO DOUBLER
7. WELD ANGLE VERTICAL STIFFENER TO STACK

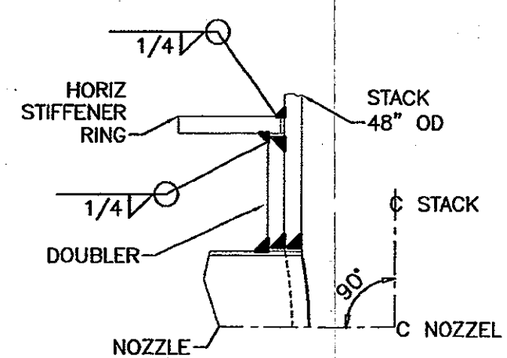

FB ELEVATION VIEW
SECTION VIEW
NTS

NOTE
8. WELD HORIZ STIFFENER RING TO STACK
9. WELD HORIZ STIFFENER RING TO DOUBLER

No	REVISION	BY	APR	DATE	No	REVISION	BY	APR	DATE
4	CUSTOMER CHNG DESIGN	DJB	GN	02-02-06	-	-	-	-	-

253-383-6000 COPYRIGHT 2003
BUSBY MARINE AND TANK, INC.

TOLERANCE
SEE SHEET 2

PROPRIETARY
THE DESIGN DETAIL AND INFORMATION IN THIS DRAWING IS THE PROPERTY OF BUSBY MARINE & TANK INC AND IS LOANED SUBJECT TO RETURN UPON DEMAND UNDER THE EXPRESS CONDITION THAT IT MUST NOT BE REPRODUCED DISCLOSED OR USED IN WHOLE OR IN PART EXCEPT BY PERMISSION AUTHORIZED IN WRITING

SCALE	NTS	
DRAWN	DJB	02-27-06
CHECKED	KO	-
CHECKED	RA	-
ENG.	TM	02-27-06
APPROVED	MM	-

ITEM/ASSEMBLY: NOZZLE 2, 3 AND 4 ASSEMBLY
ASSEMBLY: BOTTOM SECTION ASSEMBLY - 11000
PRODUCT: BMASMESTACK

MANUF: BUSBY
ENG NO. 5E008
DOC NO. 298701
DWG NO. 07-N-02-03-04
SHEET 7 OF -
REV 4

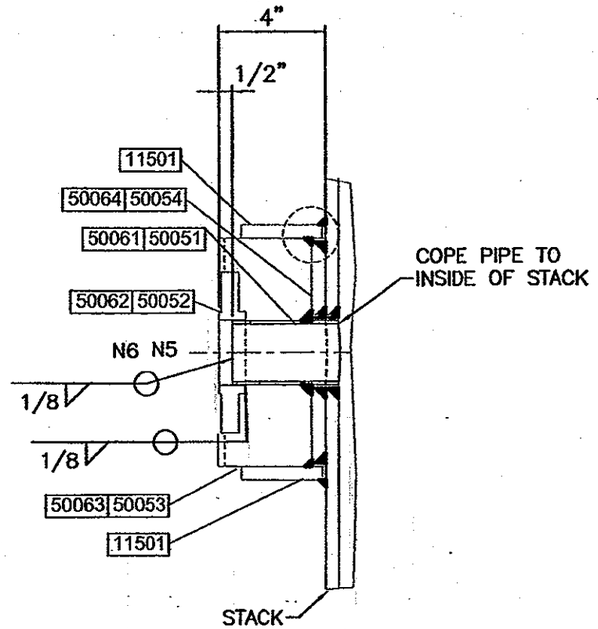

M SECTION VIEW
NTS

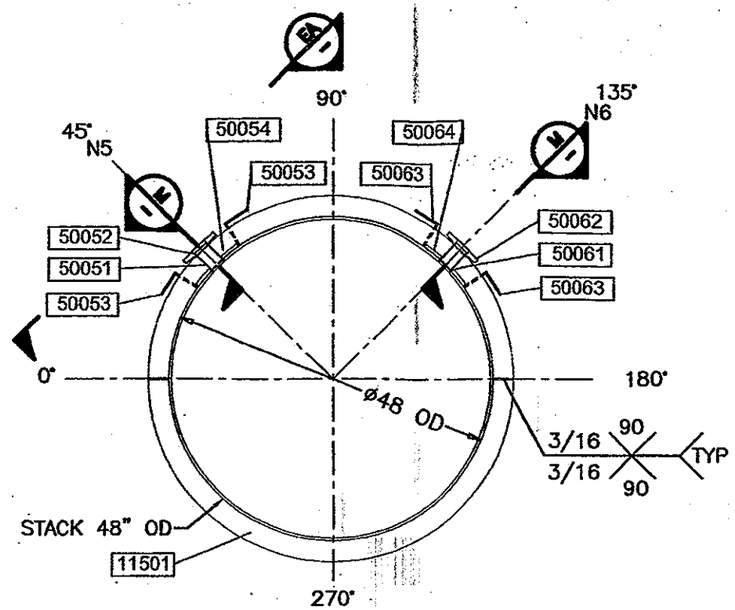

E SECTION TOP VIEW
4

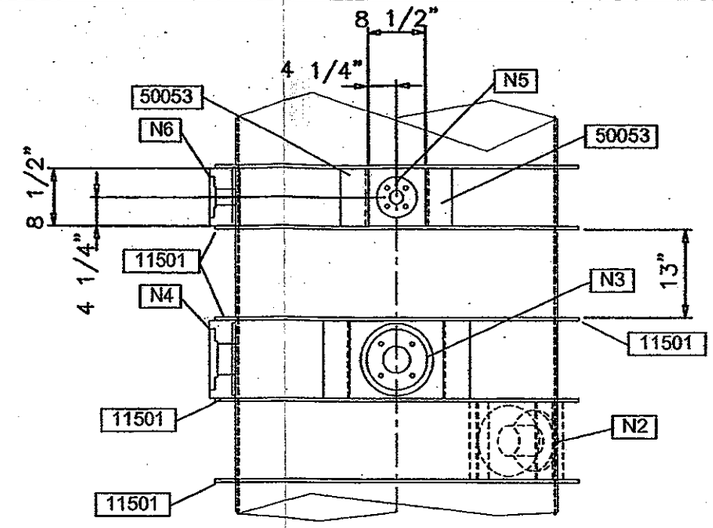

EA ELEVATION VIEW AT 45°
—

NOTE:
5 3/4" AND 11 1/2" DIM SPACING TYPICAL FOR N2, N3 AND N4
4 1/4" AND 8 1/2" DIM SPACING TYPICAL FOR N5 AND N6

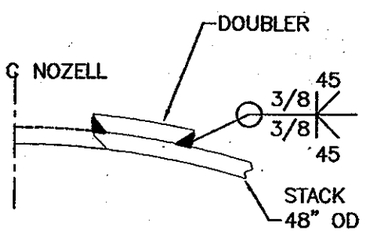

TOP VIEW
5B WELD DETAIL
~~NTS~~
NTS

NOTE
1. CUT OUT HOLE IN STACK 1/8" LARGER THAN NOZZLE
2. WELD DOUBLER TO STACK

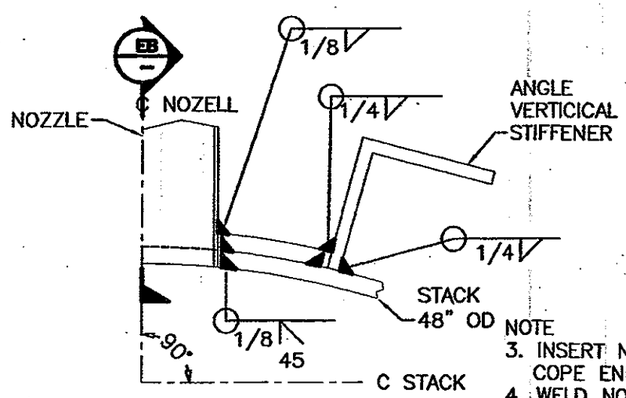

TOP VIEW
5B WELD DETAIL
~~NTS~~
NTS

NOTE
3. INSERT NOZZLE INTO HOLE COPE END TO STACK ID
4. WELD NOZZLE TO STACK WALL
5. WELD NOZZLE TO DOUBLER
6. WELD ANGLE VERTICAL STIFFENER TO DOUBLER
7. WELD ANGLE VERTICAL STIFFENER TO STACK

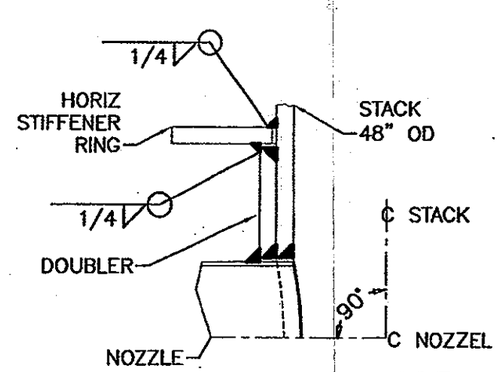

ELEVATION VIEW
EB SECTION VIEW
NTS

NOTE
8. WELD HORIZ STIFFENER RING TO STACK
9. WELD HORIZ STIFFENER RING TO DOUBLER

THOMAS V. MERZ
STATE OF WASHINGTON
40175
REGISTERED PROFESSIONAL ENGINEER
3/1/06
EXPIRES: 02-22-08

No	REVISION	BY	APR	DATE	No	REVISION	BY	APR	DATE
4	CUSTOMER CHNG DESIGN	DJB	GN	02-02-06	-	-	-	-	-

253-383-6000 COPYRIGHT 2003
BUSBY MARINE AND TANK, INC.

TOLERANCE
SEE SHEET 2

PROPRIETARY
THE DESIGN DETAIL AND INFORMATION IN THIS DRAWING IS THE PROPERTY OF BUSBY MARINE & TANK INC AND IS LOANED, SUBJECT TO RETURN UPON DEMAND, UNDER THE EXPRESS CONDITION THAT IT MUST NOT BE REPRODUCED, DISCLOSED OR USED IN WHOLE OR IN PART EXCEPT BY PERMISSION AUTHORIZED IN WRITING

SCALE ~~1:20~~ NTS		
DRAWN DJB	02-27-06	
CHECKED KO	-	
CHECKED RA	-	
ENG. TM	02-27-06	
APPROVED MM	-	

ITEM/ASSEMBLY: NOZZLE 5 AND 6 ASSEMBLY
ASSEMBLY: BOTTOM SECTION ASSEMBLY - 11000
PRODUCT: BMASMESTACK

MAKE: BUSBY
EST NO. 5E008
JOB NO. 298701
DWG NO. 08-N-05-06
SHEET 8 OF -
REV 4

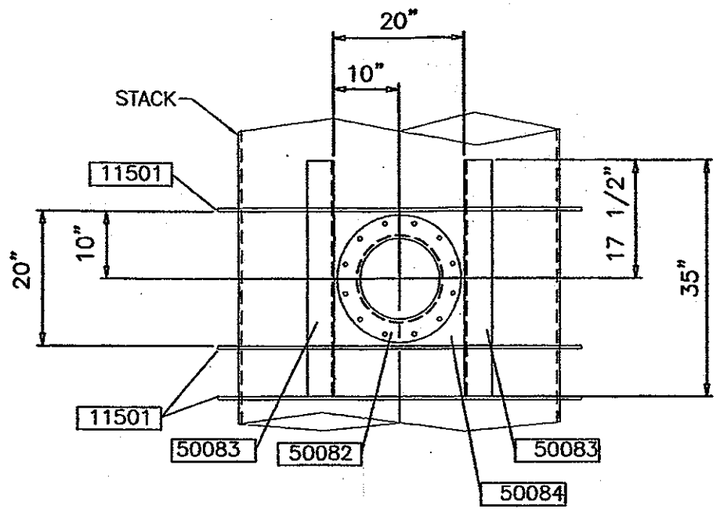

NA SECTION VIEW

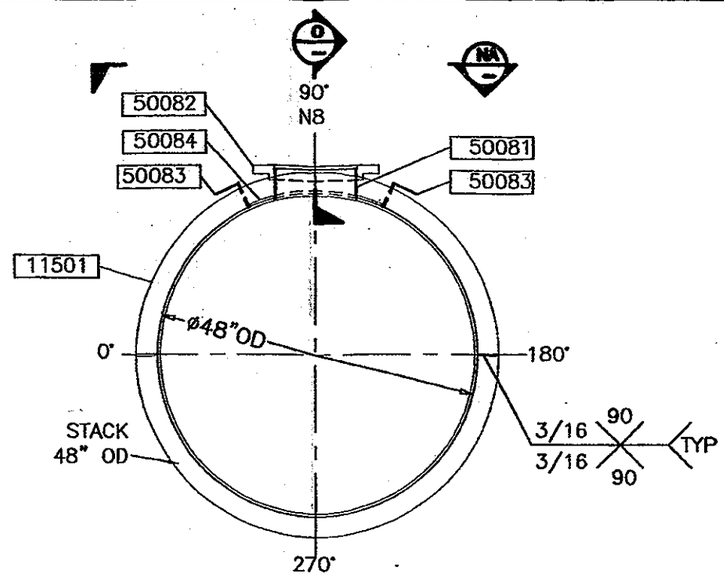

N 4 SECTION TOP VIEW

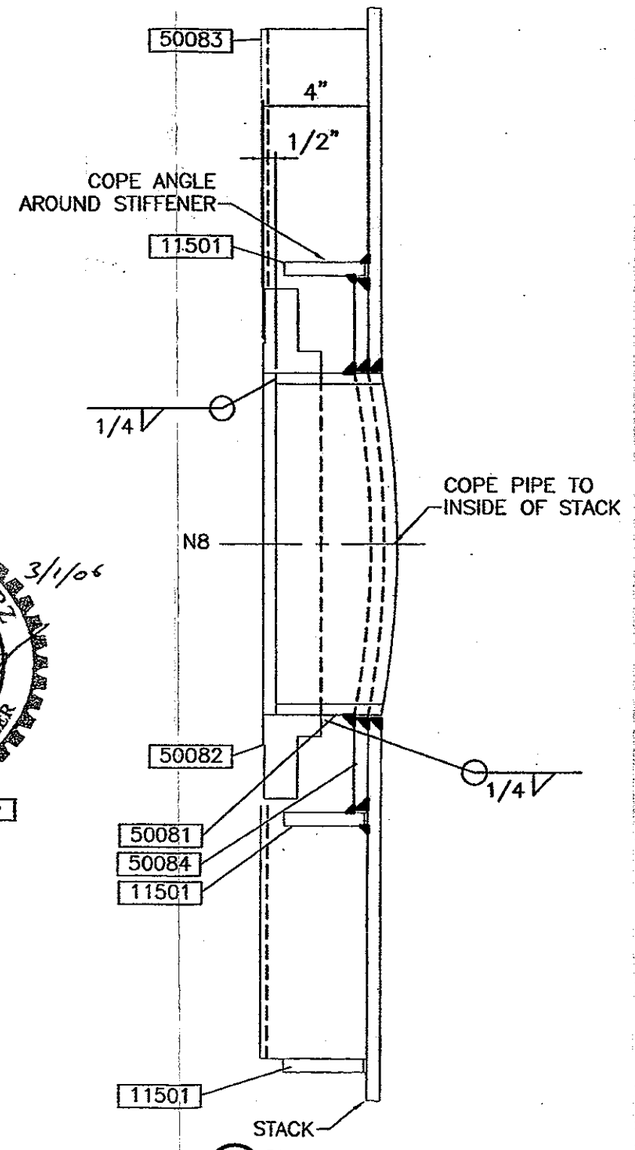

O SECTION VIEW
NTS

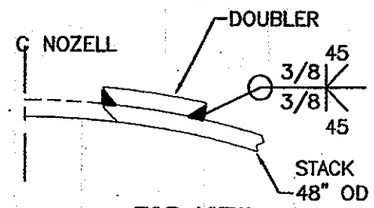

TOP VIEW
60 WELD DETAIL
NTS

NOTE
1. CUT OUT HOLE IN STACK 1/8" LARGER THAN NOZZLE
2. WELD DOUBLER TO STACK

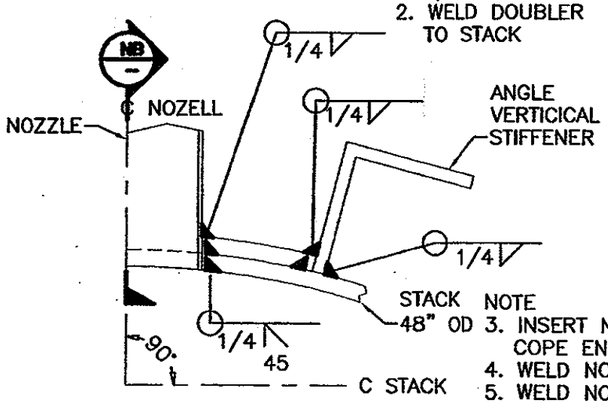

TOP VIEW
61 WELD DETAIL
NTS

NOTE
3. INSERT NOZZLE INTO HOLE COPE END TO STACK ID
4. WELD NOZZLE TO STACK WALL
5. WELD NOZZLE TO DOUBLER
6. WELD ANGLE VERTICAL STIFFENER TO DOUBLER
7. WELD ANGLE VERTICAL STIFFENER TO STACK

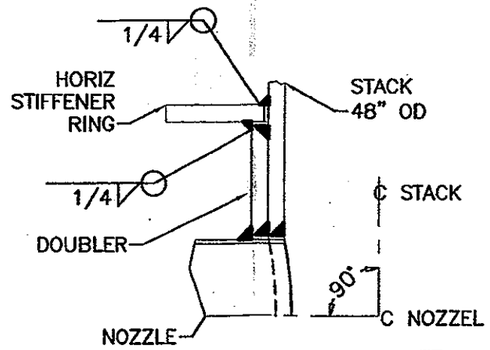

ELEVATION VIEW
NB SECTION VIEW
NTS

NOTE
8. WELD HORIZ STIFFENER RING TO STACK
9. WELD HORIZ STIFFENER RING TO DOUBLER

THOMAS V. MERZ
STATE OF WASHINGTON
40175
REGISTERED
PROFESSIONAL ENGINEER
3/1/06
EXPIRES: 02-22-08

No	REVISION	BY	APR	DATE	No	REVISION	BY	APR	DATE
4	CUSTOMER CHNG DESIGN	DJB	GN	02-02-06	-	-	-	-	-

253-383-5000 COPYRIGHT 2003
BUSBY
MARINE AND TANK, INC.

TOLERANCE
SEE SHEET 2

PROPRIETARY
THE DESIGN DETAIL AND INFORMATION IN THIS DRAWING IS THE PROPERTY OF BUSBY MARINE & TANK, INC AND IS LOANED, WITH REQUEST TO RETURN UPON DEMAND, UNDER THE EXPRESS CONDITION THAT IT MUST NOT BE REPRODUCED, DISCLOSED OR USED IN WHOLE OR IN PART EXCEPT BY PERMISSION AUTHORIZED IN WRITING

		DATE
SCALE	~~1:20~~ NTS	
DRAWN	DJB	02-27-06
CHECKED	KO	-
CHECKED	RA	-
ENG.	TM	02-27-06
APPROVED	MM	-

ITEM/ASSEMBLY: NOZZLE 8 ASSEMBLY
ASSEMBLY: BOTTOM SECTION ASSEMBLY - 11000
PRODUCT: BMASMESTACK

MAKE	BUSBY
ENG NO.	5E008
JOB NO.	298701
DWG NO.	09-N-08
SHEET	9 of -
REV	4

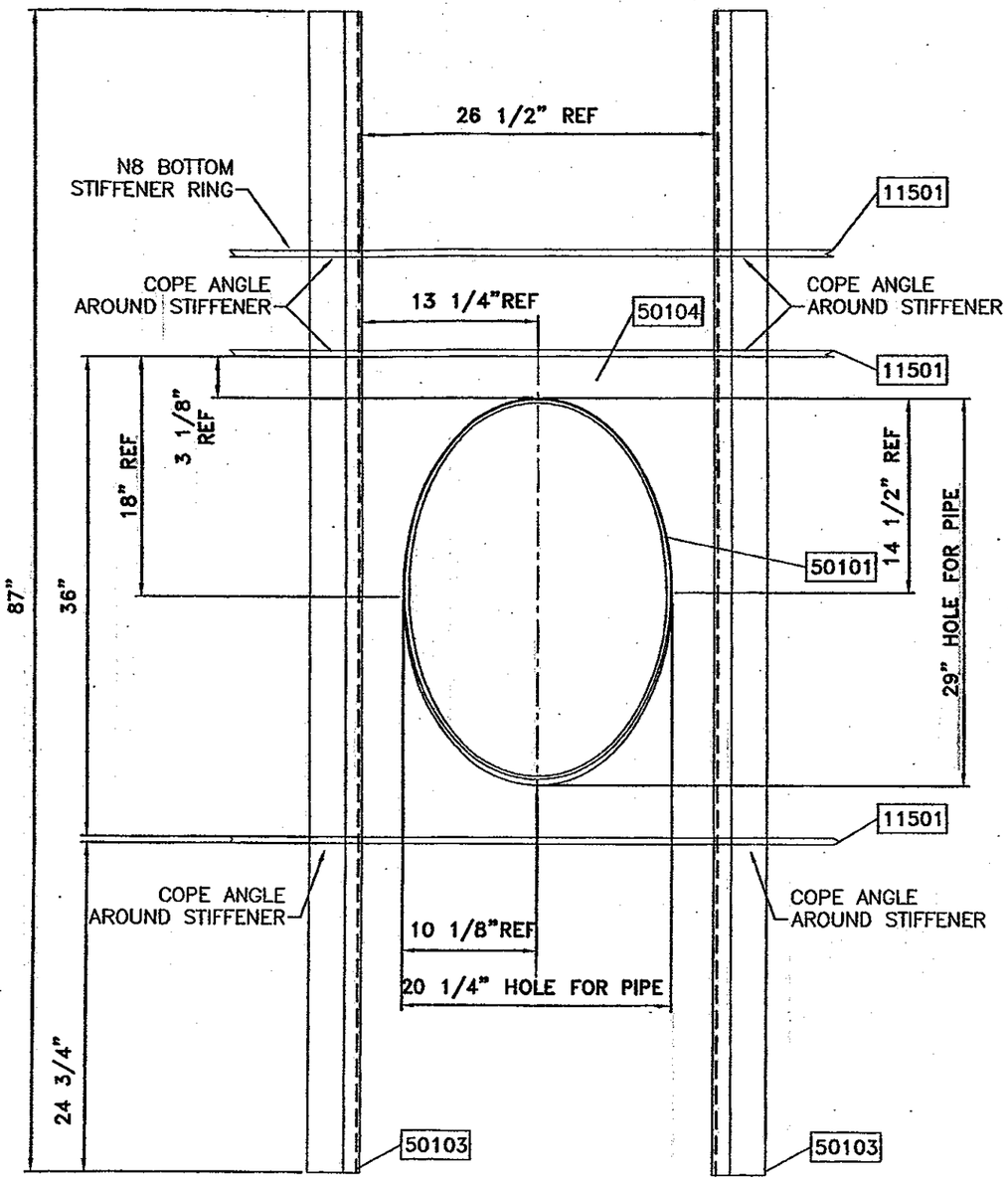

NOZZLE 10

PA 10 **SECTION VIEW**

NOTE
CUT HOLE OUT OF DOUBLER FOR PIPE
ALLOW 1/8" ALL AROUND

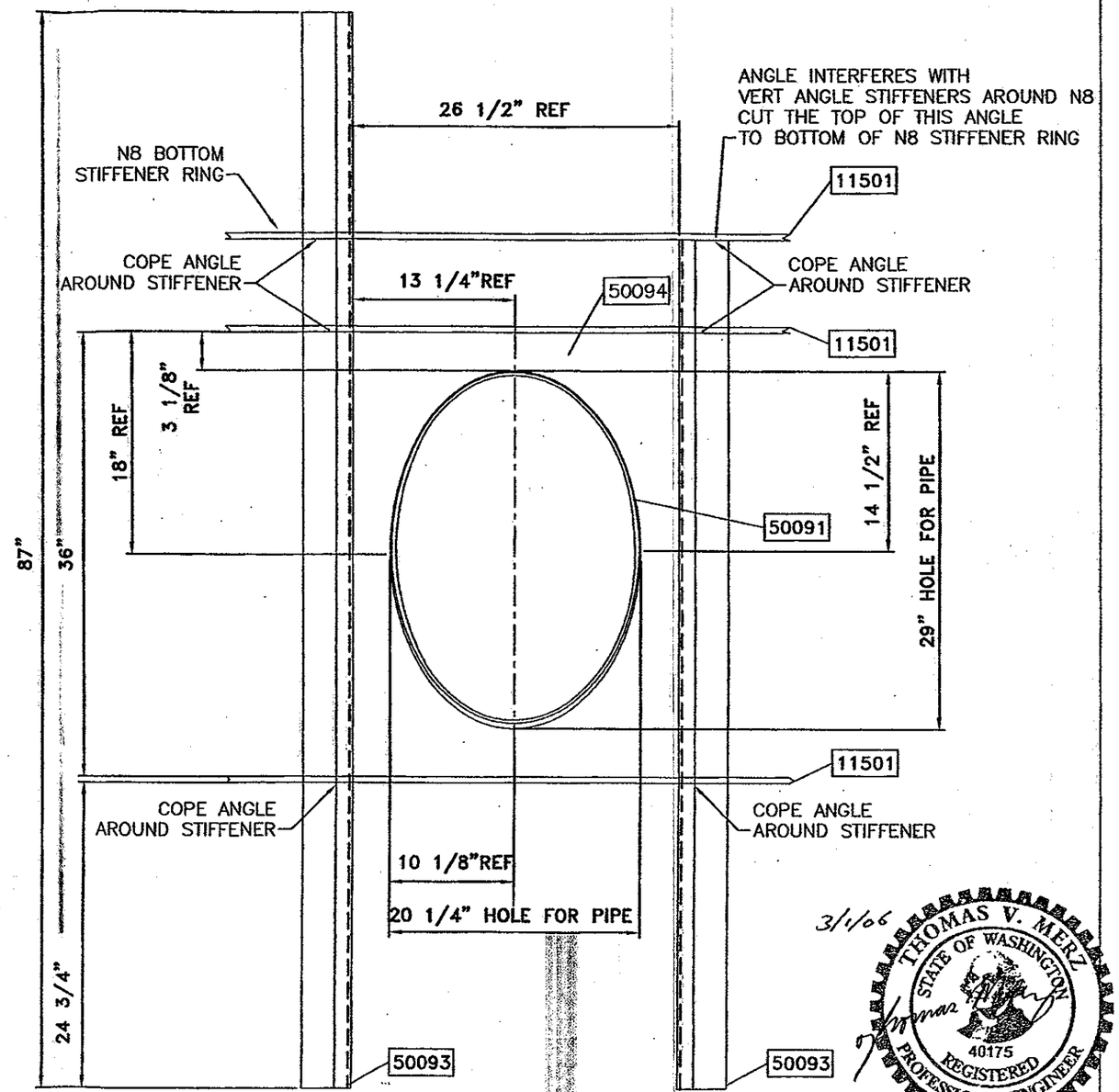

3/1/06

THOMAS V. MERZ
STATE OF WASHINGTON
40175
REGISTERED
PROFESSIONAL ENGINEER

EXPIRES: 02-22-08

NOZZLE 9

PA 10 **SECTION VIEW**

NOTE
CUT HOLE OUT OF DOUBLER FOR PIPE
ALLOW 1/8" ALL AROUND

No	REVISION	BY	APR	DATE	No	REVISION	BY	APR	DATE
4	CUSTOMER CHNG DESIGN	DJB	GN	02-02-06	-	-	-	-	-

253-383-5000 COPYRIGHT 2003

BUSBY MARINE AND TANK, INC.

TOLERANCE
SEE SHEET 2

PROPRIETARY

THE DESIGN IDEAS AND INFORMATION IN THIS DRAWING IS THE PROPERTY OF BUSBY MARINE & TANK INC. AND IS LOANED, SUBJECT TO RETURN UPON REQUEST, UNDER ITS CURRENT CONDITION THAT IT MAY NOT BE REPRODUCED, DISCLOSED OR USED IN WHOLE OR IN PART EXCEPT BY PERMISSION AUTHORIZED IN WRITING

SCALE	~~1:10~~ N.T.S.	
DRAWN	DJB	02-27-06
CHECKED	KO	-
CHECKED	RA	-
ENG.	TM	02-27-06
APPROVED	MM	-

ITEM/ASSEMBLY: NOZZLE 9 AND 10 ASSEMBLY
ASSEMBLY: BOTTOM SECTION ASSEMBLY - 11000
PRODUCT: BMASMESTACK

MANUF: BUSBY
EAO NO. 5E008
JOB NO. 298701
DWG NO. 11-N-09-10
SHEET 11 OF -
REV 4

NOTE:
THE TOTAL WEIGHT OF THE MIDDLE STACK SECTION IS 14,950 LBS

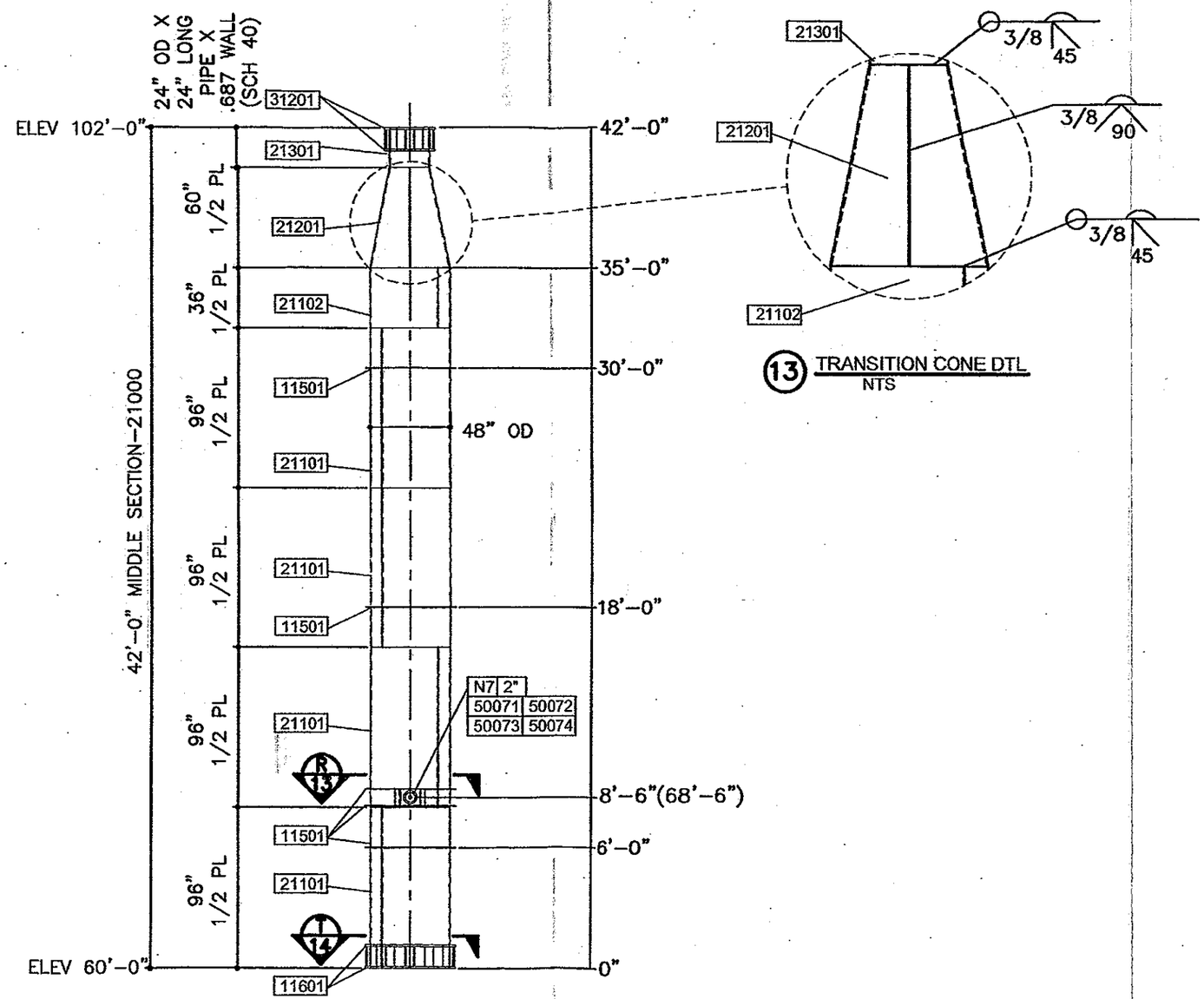

THOMAS V. MERZ
STATE OF WASHINGTON
40175
REGISTERED PROFESSIONAL ENGINEER
3/1/06
EXPIRES: 02-22-08

No	REVISION	BY	APR	DATE
3	ADD ORIENT DEG TO DWG TITLES & DTL	DJB	GN	12-12-05
4	CUSTOMER CHNG DESIGN	DJB	GN	02-02-06

253-383-5000 COPYRIGHT 2003
BUSBY MARINE AND TANK, INC.

TOLERANCE
SEE SHEET 2

PROPRIETARY
THIS DESIGN DETAIL AND INFORMATION IN THIS DRAWING IS THE PROPERTY OF BUSBY MARINE & TANK INC. AND IS LOANED, SUBJECT TO RETURN UPON DEMAND, UNDER THE EXPRESS CONDITION THAT IT SHALL NOT BE REPRODUCED, DISCLOSED OR USED IN WHOLE OR IN PART EXCEPT BY PERMISSION AUTHORIZED IN WRITING

SCALE	~~1:10~~ NTS	
DRAWN	DJB	02-27-06
CHECKED	KO	-
CHECKED	RA	-
ENG.	TM	02-27-06
APPROVED	MM	-

ITEM/ASSEMBLY: STACK MIDDLE SECTION ASSEMBLY
ASSEMBLY: STACK MIDDLE SECTION ASSEMBLY - 21000
PRODUCT: BMASMESTACK

MANUF: BUSBY
ENG NO.: 5E008
CONTRO.: 298701
DWG NO.: 12-MIDDLE-21000
SHEET 12 OF -
REV 4

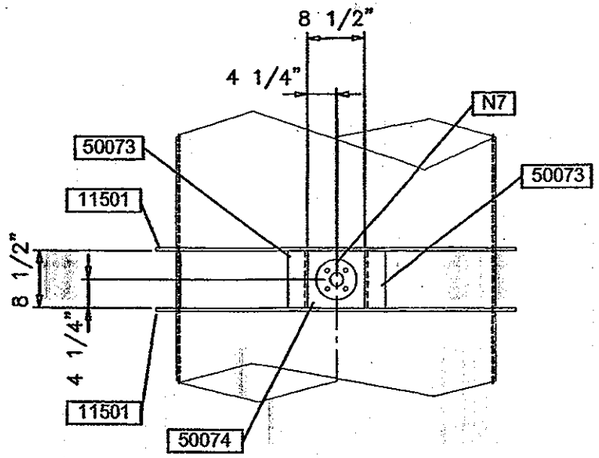

SA ELEVATION VIEW AT 270°

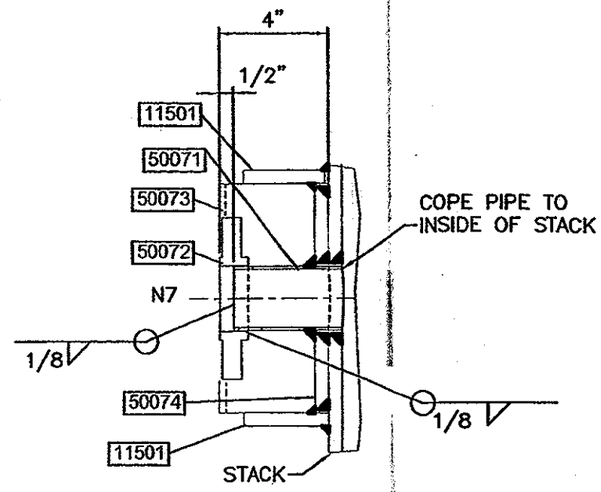

S SECTION VIEW
NTS

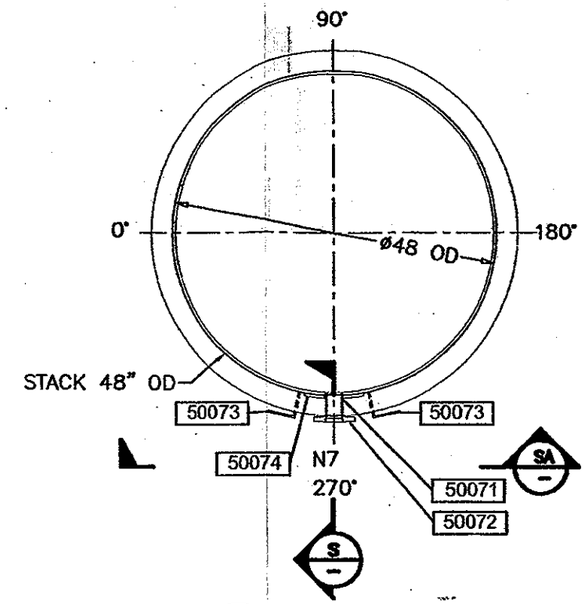

R 12 SECTION TOP VIEW

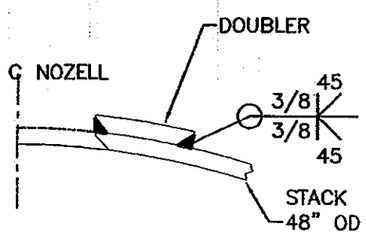

TOP VIEW
62 WELD DETAIL
NTS

NOTE
1. CUT OUT HOLE IN STACK 1/8" LARGER THAN NOZZLE
2. WELD DOUBLER TO STACK

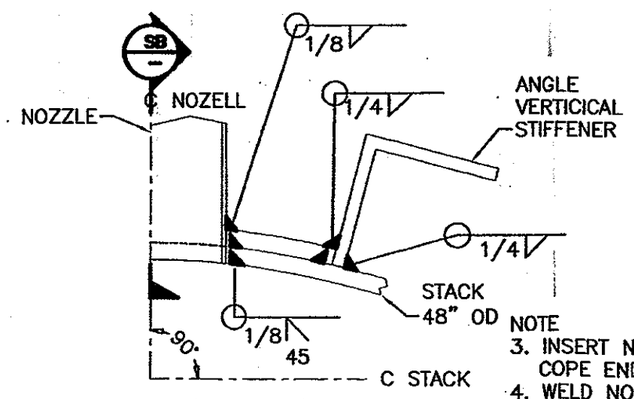

TOP VIEW
63 WELD DETAIL
NTS

NOTE
3. INSERT NOZZLE INTO HOLE COPE END TO STACK ID
4. WELD NOZZLE TO STACK WALL
5. WELD NOZZLE TO DOUBLER
6. WELD ANGLE VERTICAL STIFFENER TO DOUBLER
7. WELD ANGLE VERTICAL STIFFENER TO STACK

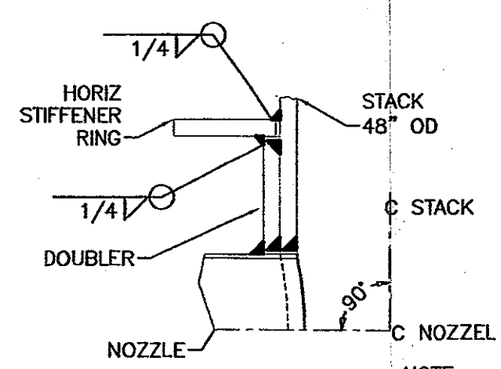

ELEVATION VIEW
SB SECTION VIEW
NTS

NOTE
8. WELD HORIZ STIFFENER RING TO STACK
9. WELD HORIZ STIFFENER RING TO DOUBLER

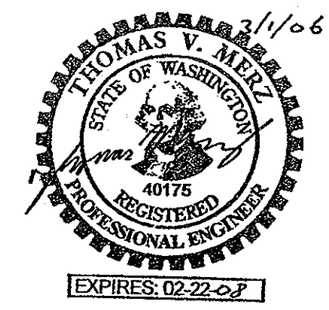

No	REVISION	BY	APR	DATE	No	REVISION	BY	APR	DATE
4	CUSTOMER CHNG DESIGN	DJB	GN	02-02-06	-	-	-	-	-

253-383-5000 COPYRIGHT 2003

BUSBY MARINE AND TANK, INC.

TOLERANCE
SEE SHEET 2

PROPRIETARY
THIS DESIGN DETAIL AND INFORMATION IN THIS DRAWING IS THE PROPERTY OF BUSBY MARINE & TANK, INC AND IS LOANED, SUBJECT TO RETURN UPON DEMAND, UNDER THE EXPRESS CONDITION THAT IT MUST NOT BE REPRODUCED, DISCLOSED OR USED IN WHOLE OR IN PART EXCEPT BY PERMISSION AUTHORIZED IN WRITING

SCALE	~~1:20~~ NTS	DATE
DRAWN	DJB	02-27-06
CHECKED	KO	-
CHECKED	RA	-
ENG.	TM	02-27-06
APPROVED	MM	-

MEMASSEMBLY	NOZZLE 7 ASSEMBLY
ASSEMBLY	STACK MIDDLE SECTION ASSEMBLY - 21000
PRODUCT	BMASMESTACK
DRAWN	BUSBY
DWG NO.	5E008
CONTRACT	298701
DWG NO.	13-N-07
SHEET	13 OF -
REV	4

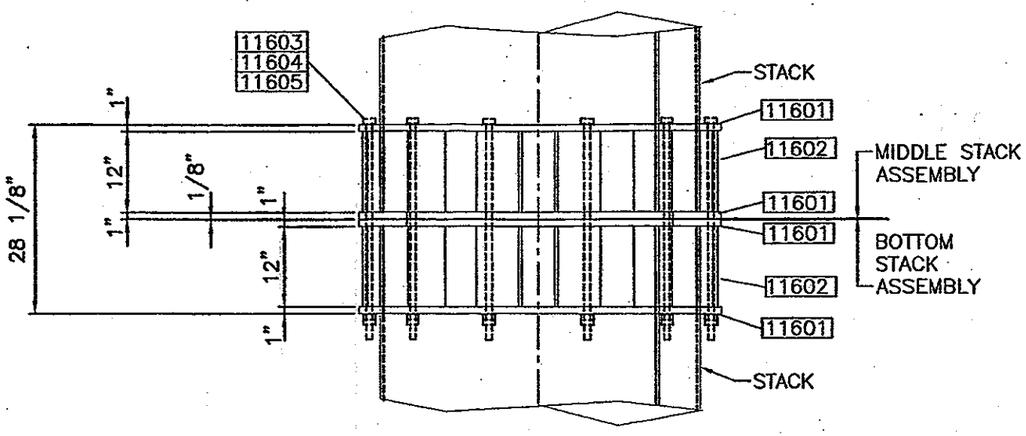

W ELEVATION VIEW (AT 270°)

NOTE:
1. AT TIME OF FINAL STACK ERECTION. PLACE A UNIFORM BEED OF FLUID HIGH TEMPERATURE SILICONE GASKET MATERIAL BETWEEN STACK SEGMENTS
2. ITEM 11604 BOLT 7/8" DIA–NC X 32" LONG CAN BE SUBSTITUTED WITH ROD 7/8" DIA–NC X 36" LONG THE MATERIAL MUST BE EQUAL TO OR BETTER THAN ASTM A325 OR ASTM A449

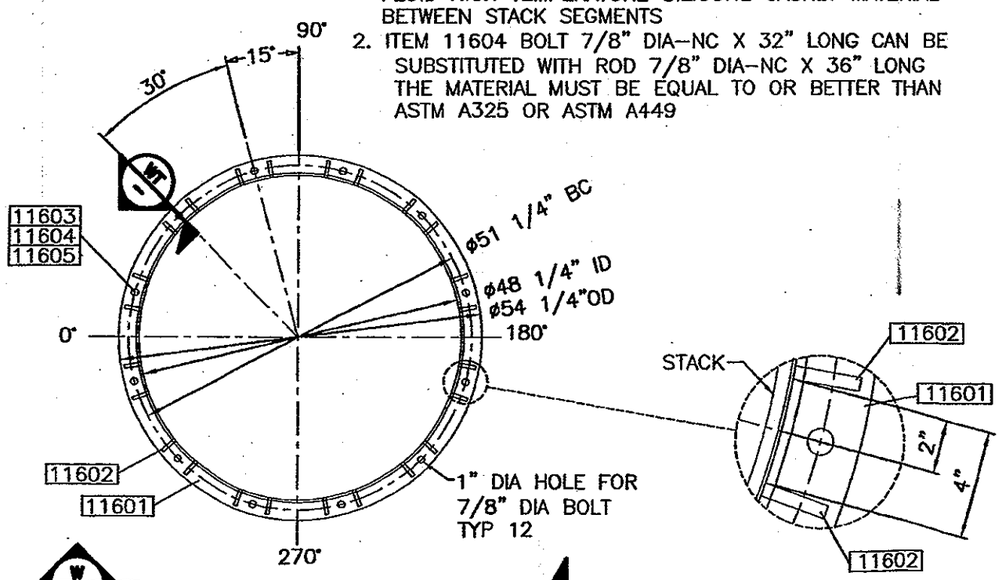

T 12 SECTION TOP VIEW

15 GUSSET SPACING DETAIL
SCALE: 1-5

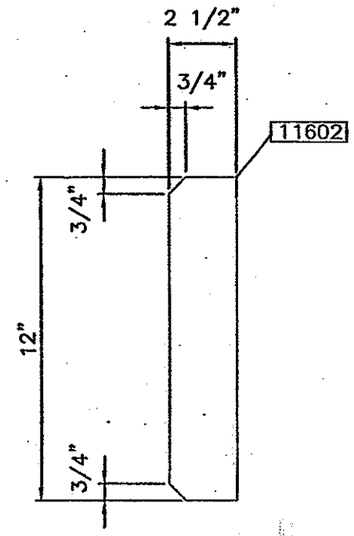

14 GUSSET DETAIL
NTS

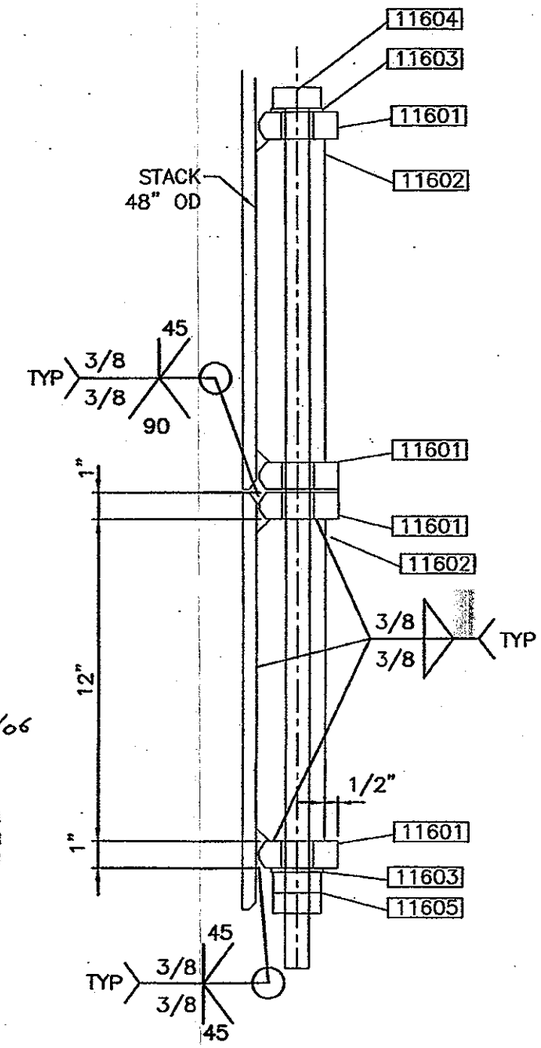

WT GUSSET PLATE DETAIL
NTS

No	REVISION	BY	APR	DATE	No	REVISION	BY	APR	DATE
3	ADD ORIENTATION DEG TO DWG TITLES & DTL	DJB	GN	12-12-05	-	-	-	-	-
4	CUSTOMER CHNG DESIGN	DJB	GN	02-02-06					

253-383-5000 COPYRIGHT 2003
BUSBY MARINE AND TANK, INC.

TOLERANCE
SEE SHEET 2

PROPRIETARY
THE DESIGN DETAIL AND INFORMATION IN THIS DRAWING IS THE PROPERTY OF BUSBY MARINE & TANK INC AND IS LOANED, SUBJECT TO RECALL UPON DEMAND, UNDER THE EXPRESS CONDITION THAT IT MUST NOT BE REPRODUCED, DISCLOSED OR USED IN WHOLE OR IN PART EXCEPT BY PERMISSION AUTHORIZED IN WRITING

SCALE ~~1:20~~ NTS		DATE
DRAWN	DJB	02-27-06
CHECKED	KO	-
CHECKED	RA	-
ENG	TM	02-27-06
APPROVED	MM	-

ITEM/ASSEMBLY	CONNECTION PLATE - BOTTOM/MIDDLE - ASSEMBLY
ASSEMBLY	STACK MIDDLE SECTION ASSEMBLY - 21000
PRODUCT	BMASMESTACK
MANUF	BUSBY
ENG NO.	5E008
JOB NO.	298701
DWG NO.	14-CONNPL
SHEET	14 OF -
REV	4

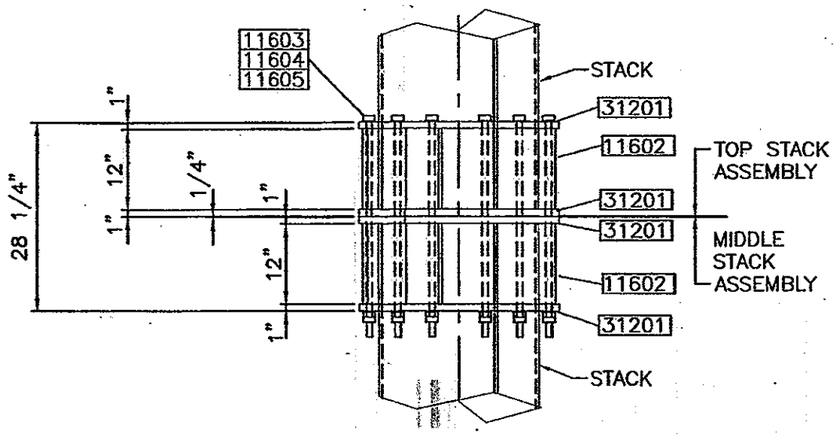

V ELEVATION VIEW (AT 270°)

NOTE:
1. AT TIME OF FINAL STACK ERECTION. PLACE A UNIFORM BEED OF FLUID HIGH TEMPERATURE SILICONE GASKET MATERIAL BETWEEN STACK SEGMENTS
2. ITEM 11604 BOLT 7/8" DIA–NC X 32" LONG CAN BE SUBSTITUTED WITH ROD 7/8" DIA–NC X 36" LONG THE MATERIAL MUST BE EQUAL TO OR BETTER THAN ASTM A325 OR ASTM A449

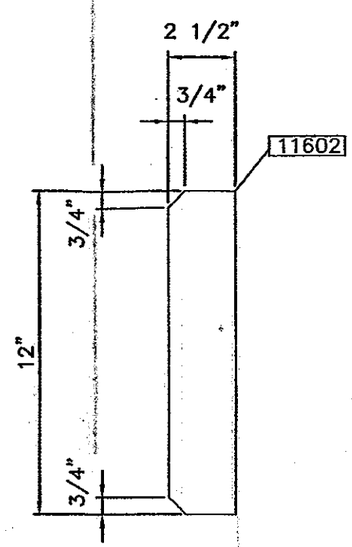

17 GUSSET DETAIL
NTS

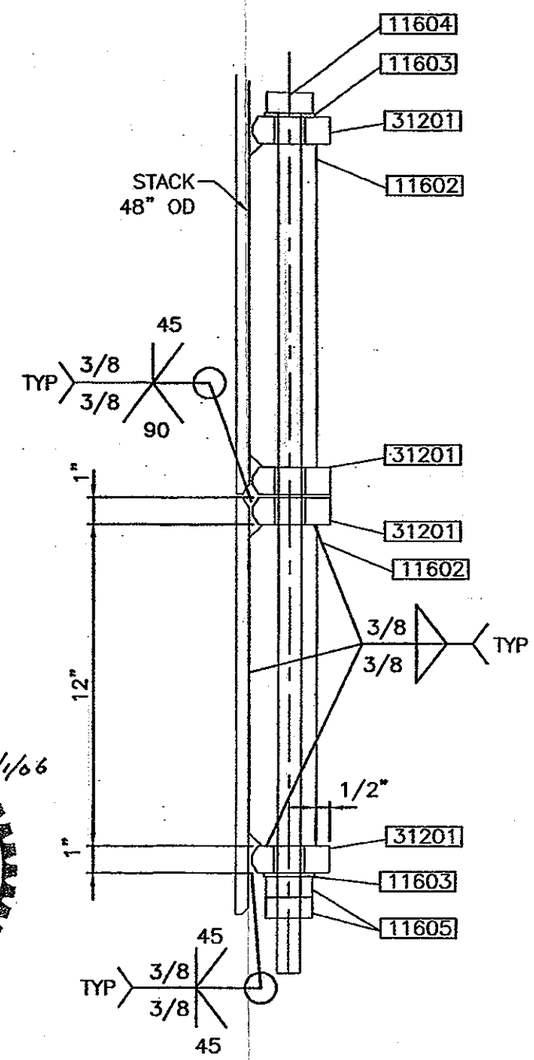

UV GUSSET PLATE DETAIL
NTS

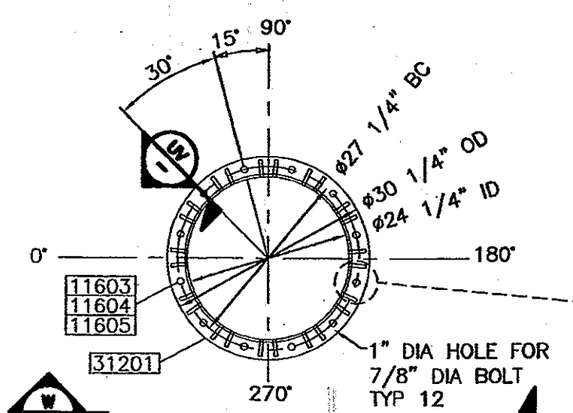

U 16 SECTION TOP VIEW

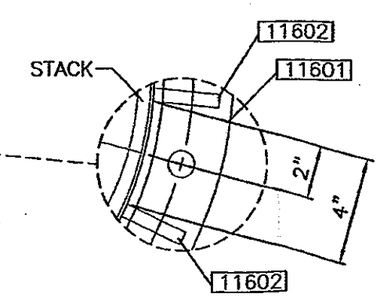

16 GUSSET SPACING DETAIL
SCALE: ~~1=5~~ NTS

No	REVISION	BY	APR	DATE	No	REVISION	BY	APR	DATE
3	ADD ORIENTATION DEG TO DWG TITLES & DTL	DJB	GN	12-12-05	-	-	-	-	-
4	CUSTOMER CHNG DESIGN	DJB	GN	02-02-06					

253-333-6000 COPYRIGHT 2003 BUSBY MARINE AND TANK, INC.

TOLERANCE SEE SHEET 2

PROPRIETARY — THE DESIGN DETAIL AND INFORMATION IN THIS DRAWING IS THE PROPERTY OF BUSBY MARINE & TANK INC AND IS LOANED, SUBJECT TO RETURN UPON DEMAND, UNDER THE EXPRESS CONDITION THAT IT MUST NOT BE REPRODUCED, DISCLOSED OR USED IN WHOLE OR IN PART EXCEPT BY PERMISSION AUTHORIZED IN WRITING

SCALE ~~1:20~~ NTS	DATE	ITEM/ASSEMBLY: CONNECTION PLATE - TOP - ASSEMBLY
DRAWN DJB	02-27-06	ASSEMBLY: STACK MIDDLE SECTION ASSEMBLY - 21000
CHECKED KO	-	PRODUCT: BMASMESTACK
CHECKED RA	-	
ENG. TM	02-27-06	
APPROVED MM	-	

MANUF: BUSBY
ENG NO. 5E008
JOB NO. 298701
DWG NO. 15-CONNPL
SHEET 15 OF -
REV 4

NOTE:
THE TOTAL WEIGHT OF THE TOP STACK SECTION IS 7,030 LBS

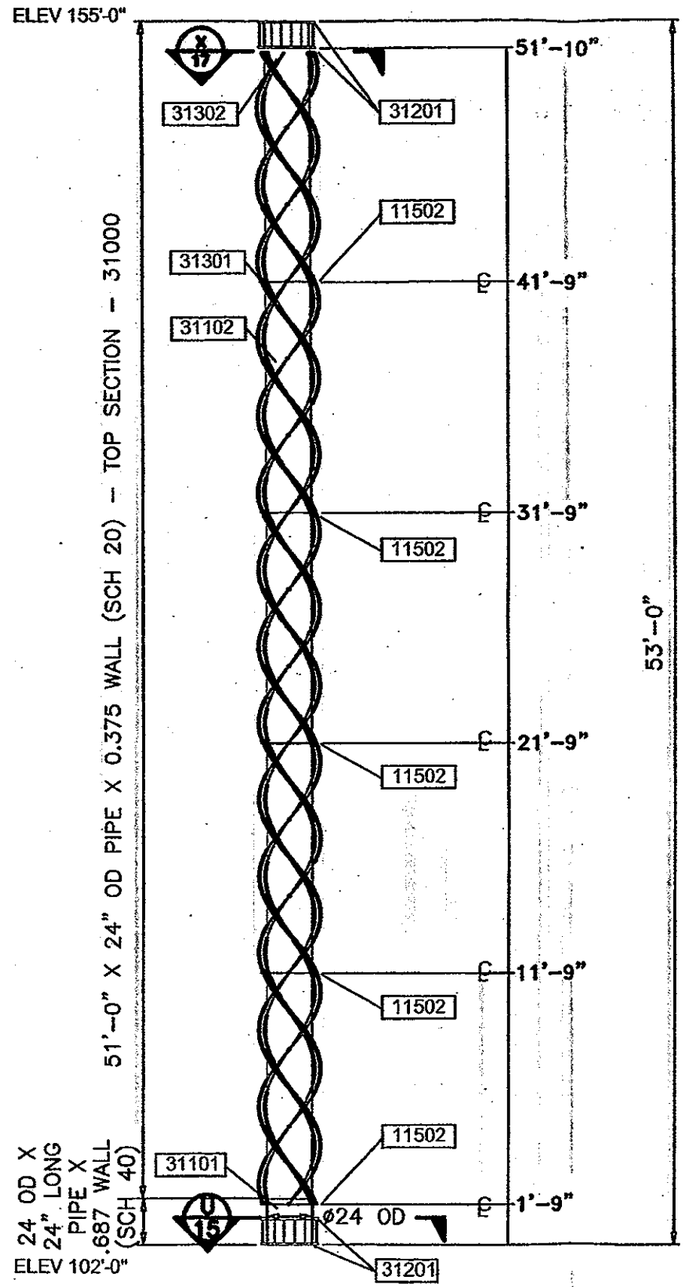

A/3 TOP SECTION (ELEVATION AT 270°)

3/1/06
THOMAS V. MERZ
STATE OF WASHINGTON
40175
REGISTERED
PROFESSIONAL ENGINEER
EXPIRES: 02-22-08

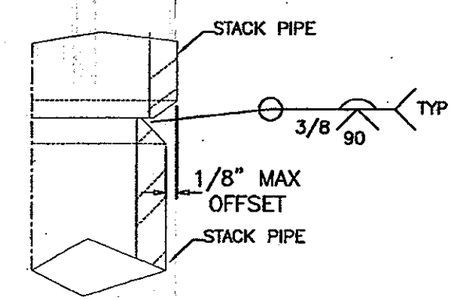

19 TYP COURSE WELD DTL
SCALE: NTS

No	REVISION	BY	APR	DATE
3	ADD ORIENT DEG TO DWG TITLES & DTLS	DJB	GN	12-12-05
4	CUSTOMER CHNG DESIGN	DJB	GN	02-02-06

253-383-5000 COPYRIGHT 2003
BUSBY MARINE AND TANK, INC.

TOLERANCE
SEE SHEET 2

PROPRIETARY
THE DESIGN DETAIL AND INFORMATION IN THIS DRAWING IS THE PROPERTY OF BUSBY MARINE & TANK INC AND IS LOANED, SUBJECT TO RETURN UPON DEMAND, UNDER THE EXPRESS CONDITION THAT IT MUST NOT BE REPRODUCED, DISCLOSED OR USED IN WHOLE OR IN PART EXCEPT BY PERMISSION AUTHORIZED IN WRITING

SCALE	~~1:70~~ NTS	
DRAWN	DJB	02-27-06
CHECKED	KO	-
CHECKED	RA	-
ENG.	TM	02-27-06
APPROVED	MM	-

ITEM/ASSEMBLY: STACK TOP SECTION ASSEMBLY
ASSEMBLY: STACK TOP SECTION ASSEMBLY - 31000
PRODUCT: BMASMESTACK

MANUF: BUSBY
END NO.: 5E008
JOB NO.: 298701
DWG NO.: 16-TOP-31000
SHEET 16 OF -
REV 4

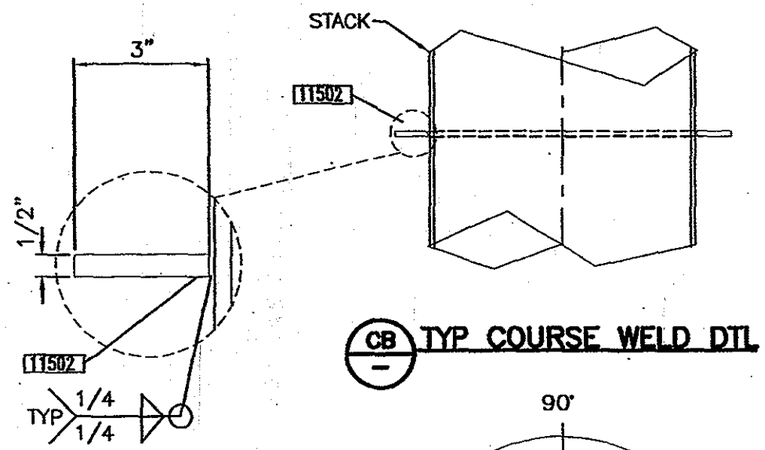

CB TYP COURSE WELD DTL

20 STIFFENER DETAIL
SCALE: 1=5 NTS

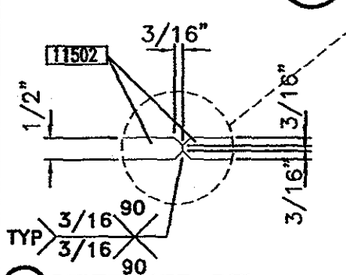

2 STIFFENER DTL
SCALE: 1=5 NTS

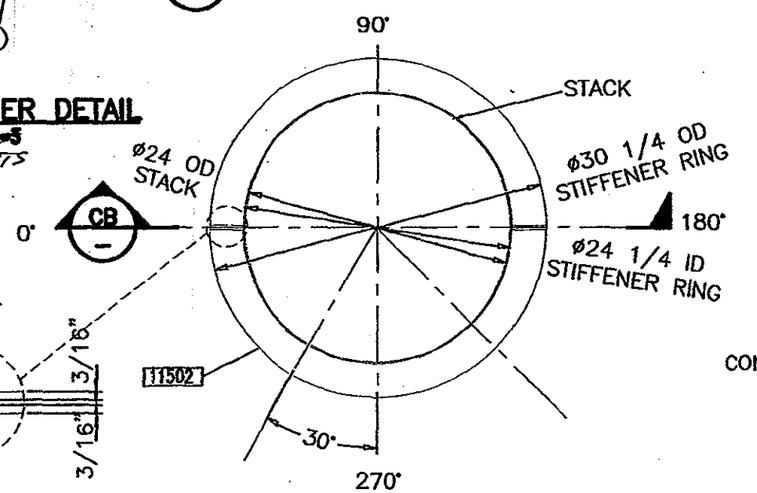

CA TYP COURSE WELD DTL

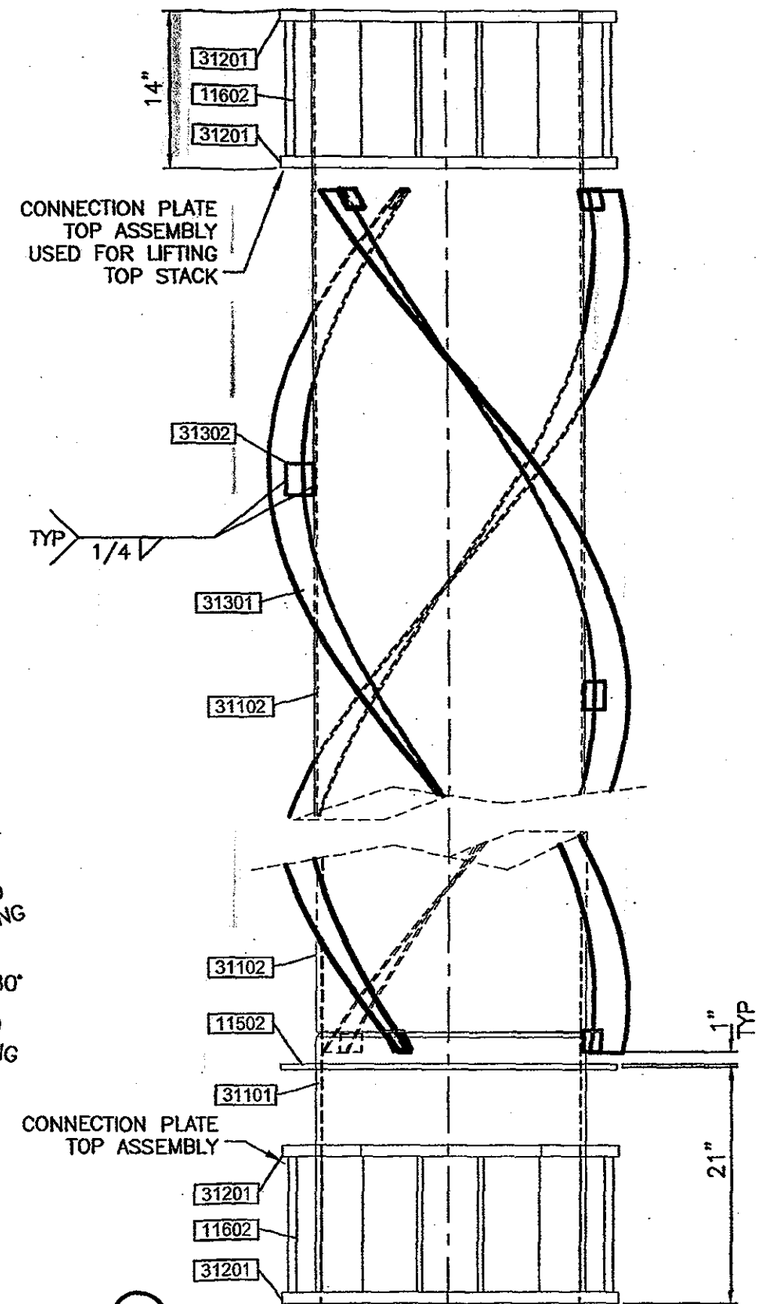

31000 HELICAL STRAKES DETAIL (AT 270°) NTS

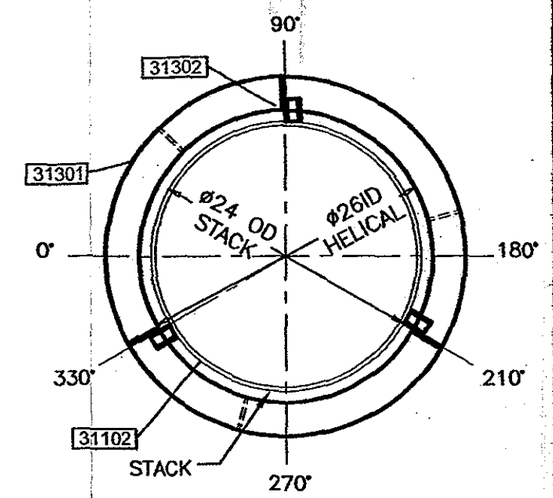

X/16 STACK TOP VIEW

NOTE:
HELICAL STRAKES ASSEMBLY SET (TYP 5)
EACH ASSEMBLY SET IS COMPRISED OF
3 EACH ITEM 31301 = 1/4 X 3 FLAT BAR
HELCAL: 26" ID X 32" OD X
118" PITCH X 1 REVOLUTION
START EACH SET AT
ORIENTATION 90, 210 AND 330
WELD EACH IN PLACE WITH (3102)
PL 1/4 X 2 X 2 WELD TABS
TYP AT 90 DEG APART

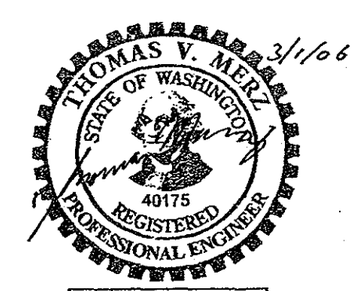

EXPIRES: 02-22-08

No	REVISION	BY	APR	DATE	No	REVISION	BY	APR	DATE
3	ADD ORIENT DEG TO DWG TITLES & DTLS	DJB	GN	12-12-05	-	-	-	-	-
4	CUSTOMER CHNG DESIGN	DJB	GN	02-02-06					

253-383-6003 COPYRIGHT 2003
BUSBY MARINE AND TANK, INC.

TOLERANCE
SEE SHEET 2

PROPRIETARY
THE DESIGN DETAIL AND INFORMATION IN THIS DRAWING IS THE PROPERTY OF BUSBY MARINE & TANK INC AND IS LOANED, SUBJECT TO RETURN UPON DEMAND, UNDER THE EXPRESS CONDITION THAT IT MUST NOT BE REPRODUCED, DISCLOSED OR USED IN WHOLE OR IN PART EXCEPT BY PERMISSION AND UNDER WRITTING

SCALE	~~1=12~~	DATE
DRAWN	DJB	02-27-06
CHECKED	KO	-
CHECKED	RA	-
ENG.	TM	02-27-06
APPROVED	MM	-

ITEM/ASSEMBLY: TOP STACK SECTION DETAILS
ASSEMBLY: STACK TOP SECTION ASSEMBLY - 31000
PROJECT: BMASMESTACK

MFG/F: BUSBY
ENG NO.: 5E008
JOB NO.: 298701
DWG NO.: 17-TOP-DTLS
SHEET 17 OF -
REV 4

NOTE:
1. THIS LADDER COMPLIES WITH TITLE 29 – LABOR, CHAPTER XVII OCCUPATIONAL SAFETY AND HEALTH ADMINISTRATION DEPARTMENT OF LABOR. PART 1910 OCCUPATIONAL SAFETY AND HEALTH STANDARDS. SUBPART D WALKING WORKING SURFACES. SEC. 1910.27 FIXED LADDERS
2. ALL BOLT OR STUD CONNECTIONS ARE 3/4" HOLE FOR 5/8" BOLTS (ITEMS 65003, 65007 AND 65008)
3. LADDER AND PLATFORM SHIP LOOSE AND ATTACH TO STACK AFTER STACK IS ASSEMBLED
4. RUNGS ARE SPACED AT 10" FROM STACK TO ALLOW FOR THERMAL PROTECTION.
5. THE TOTAL WEIGHT OF THE LADDER AND PLATFORM IS 2,400 LBS

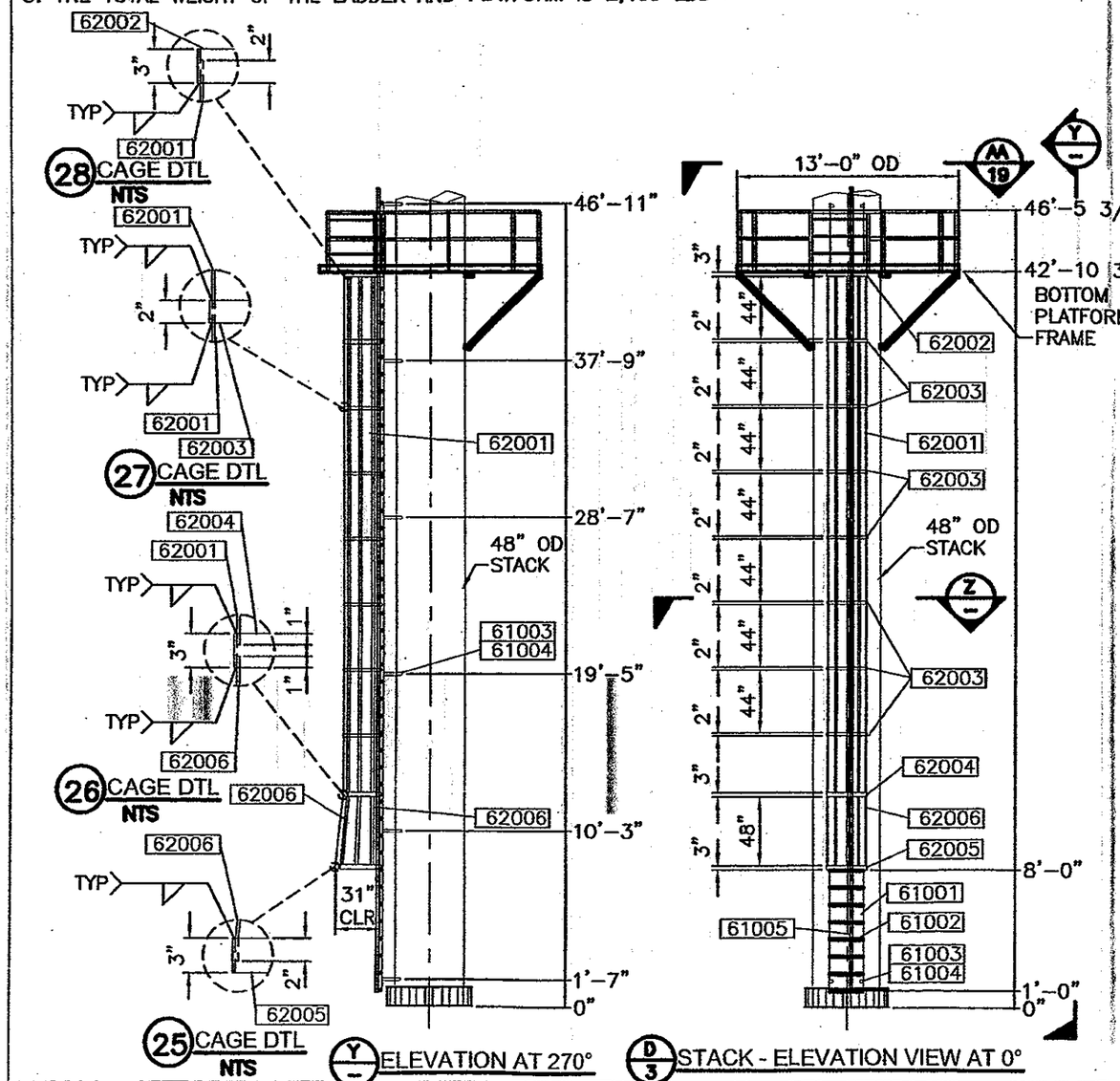

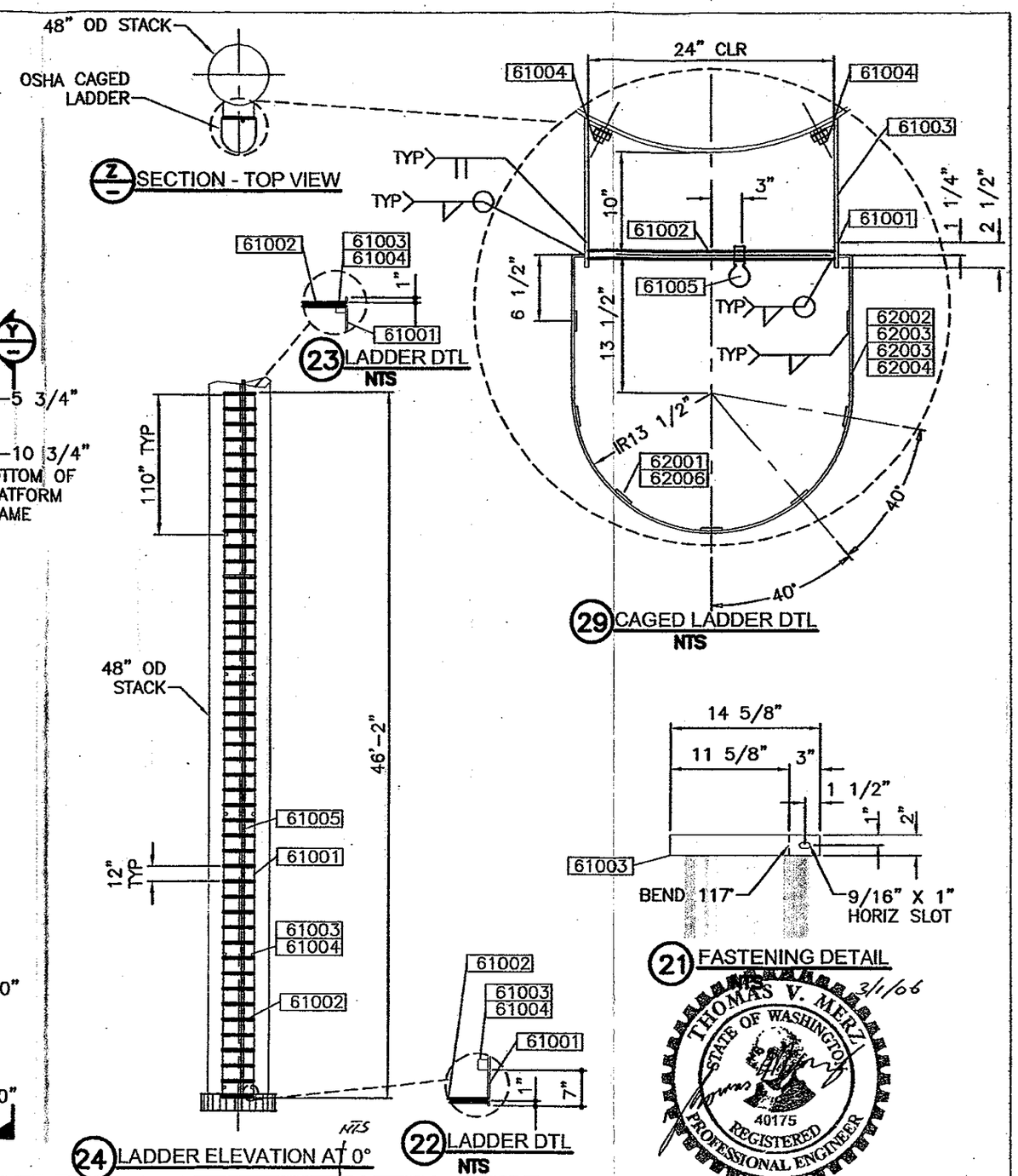

No	REVISION	BY	APR	DATE
3	ADD SHEET 1A AND CHNG 1 TO 1B ORIENTATION & ELEV TO NOZZLE CHART	DJB	GN	12-12-05
1	CUSTOMER CHNG DESIGN	DJB	GN	02-02-06

253-383-5000 COPYRIGHT 2003 BUSBY MARINE AND TANK, INC.

TOLERANCE SEE SHEET 2

PROPRIETARY

SCALE	NONE	
DRAWN	DJB	02-27-06
CHECKED	KO	-
CHECKED	RA	-
ENG.	TM	02-27-06
APPROVED	MM	-

LADDER - DETAILS

EXPIRES: 02-22-08

EXHAUST STACK LADDER DETAILS - 20001

BMASMESTACK

BUSBY | 5E008 | 298701 | 18-LADDER | SHEET 18 | REV 1

THOMAS V. MERZ STATE OF WASHINGTON 40175 REGISTERED PROFESSIONAL ENGINEER 3/1/06

NOTE:
1. THIS PLATFORM COMPLIES WITH TITLE 29 – LABOR, CHAPTER XVII OCCUPATIONAL SAFETY AND HEALTH ADMINISTRATION DEPARTMENT OF LABOR. PART 1910 OCCUPATIONAL SAFETY AND HEALTH STANDARDS. SUBPART D WALKING WORKING SURFACES.
2. ALL BOLT CONNECTIONS ARE 3/4" HOLE FOR 5/8" BOLTS (ITEMS 65003 65007 AND 65008)
3. LADDER AND PLATFORM SHIP LOOSE AND ATTACH TO STACK AFTER STACK IS ASSEMBLED

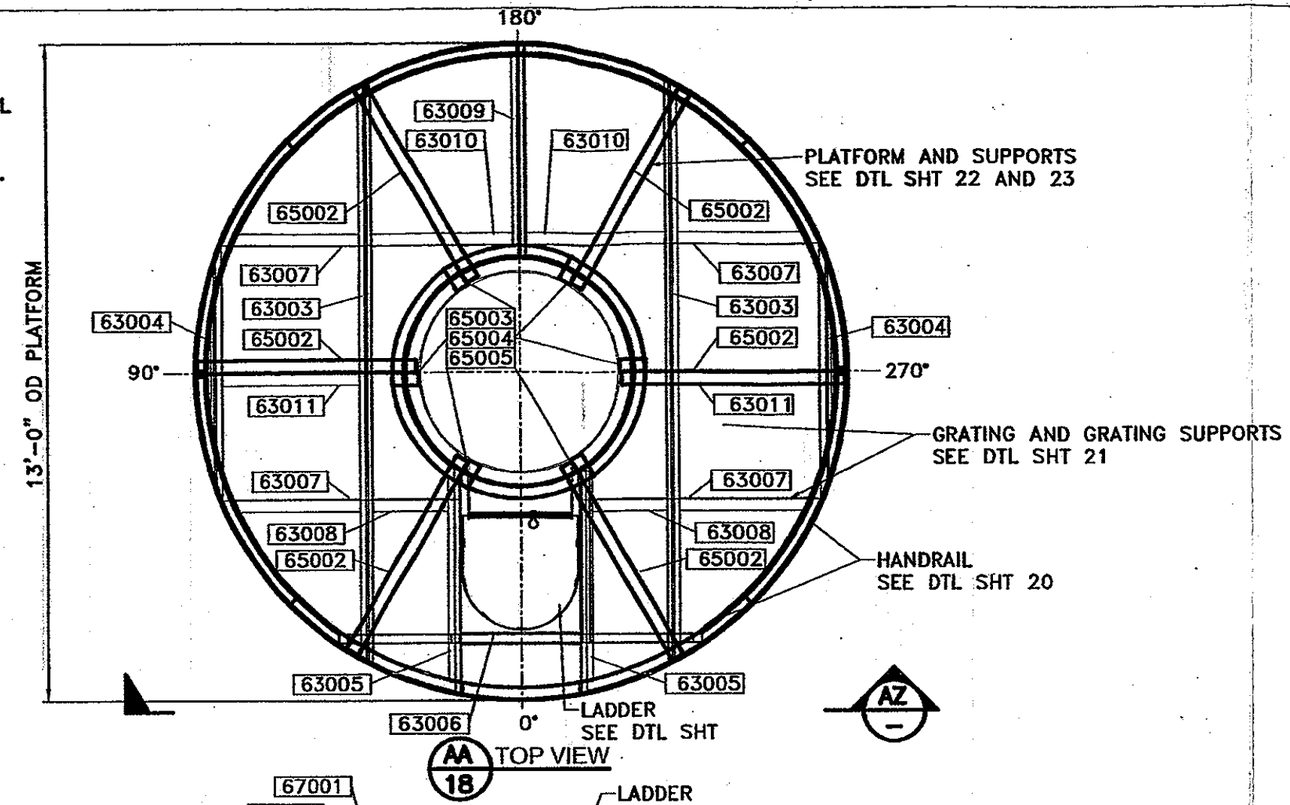

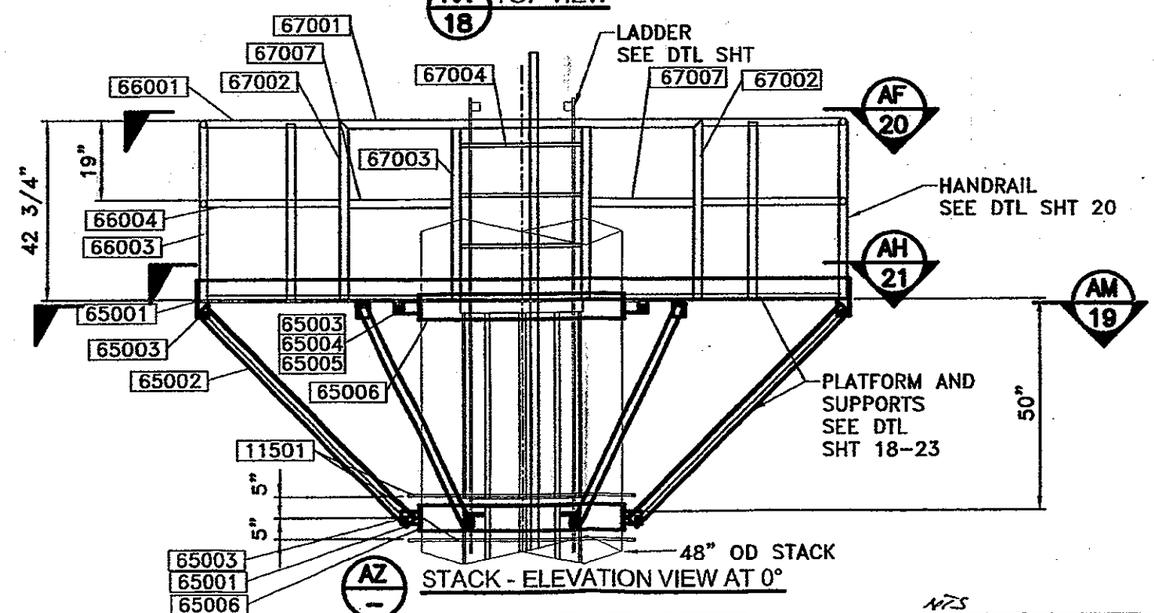

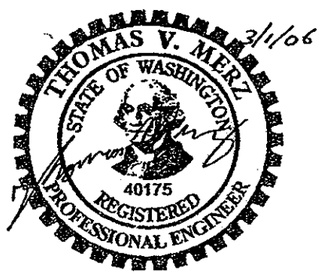

EXPIRES: 02-22-08

No	REVISION	BY	APR	DATE	No	REVISION	BY	APR	DATE
3	ADD SHEET 1A AND CHNG 1 TO 1B ORIENTATION & ELEV TO NOZZLE CHART	DJB	GN	12-12-05	-	-	-	-	-
4	CUSTOMER CHNG DESIGN	DJB	GN	02-02-06					

253-335-5500 COPYRIGHT 2003

BUSBY MARINE AND TANK, INC.

TOLERANCE
SEE SHEET 2

PROPRIETARY

THE DESIGN DETAILS AND INFORMATION IN THIS DRAWING IS THE PROPERTY OF BUSBY MARINE & TANK INC. AND IS LOANED, SUBJECT TO RETURN UPON DEMAND, UNDER THE EXPRESS CONDITION THAT IT MUST NOT BE REPRODUCED, DISCLOSED OR USED IN WHOLE OR IN PART EXCEPT BY PERMISSION AUTHORIZED IN WRITING

NTS

SCALE: 1:32	DATE
DRAWN DJB	02-27-06
CHECKED KO	-
CHECKED RA	-
ENG. TM	02-27-06
APPROVED MM	-

MAIN ASSEMBLY: LADDER - PLATFORM - DETAILS
ASSEMBLY: EXHAUST STACK LADDER DETAILS - 20001
PRODUCT: BMASMESTACK

NAME: BUSBY
DWG NO. 5E008
JOB NO. 298701
DWG NO. 19-PLATFORM
SHEET 19 OF -
REV 4

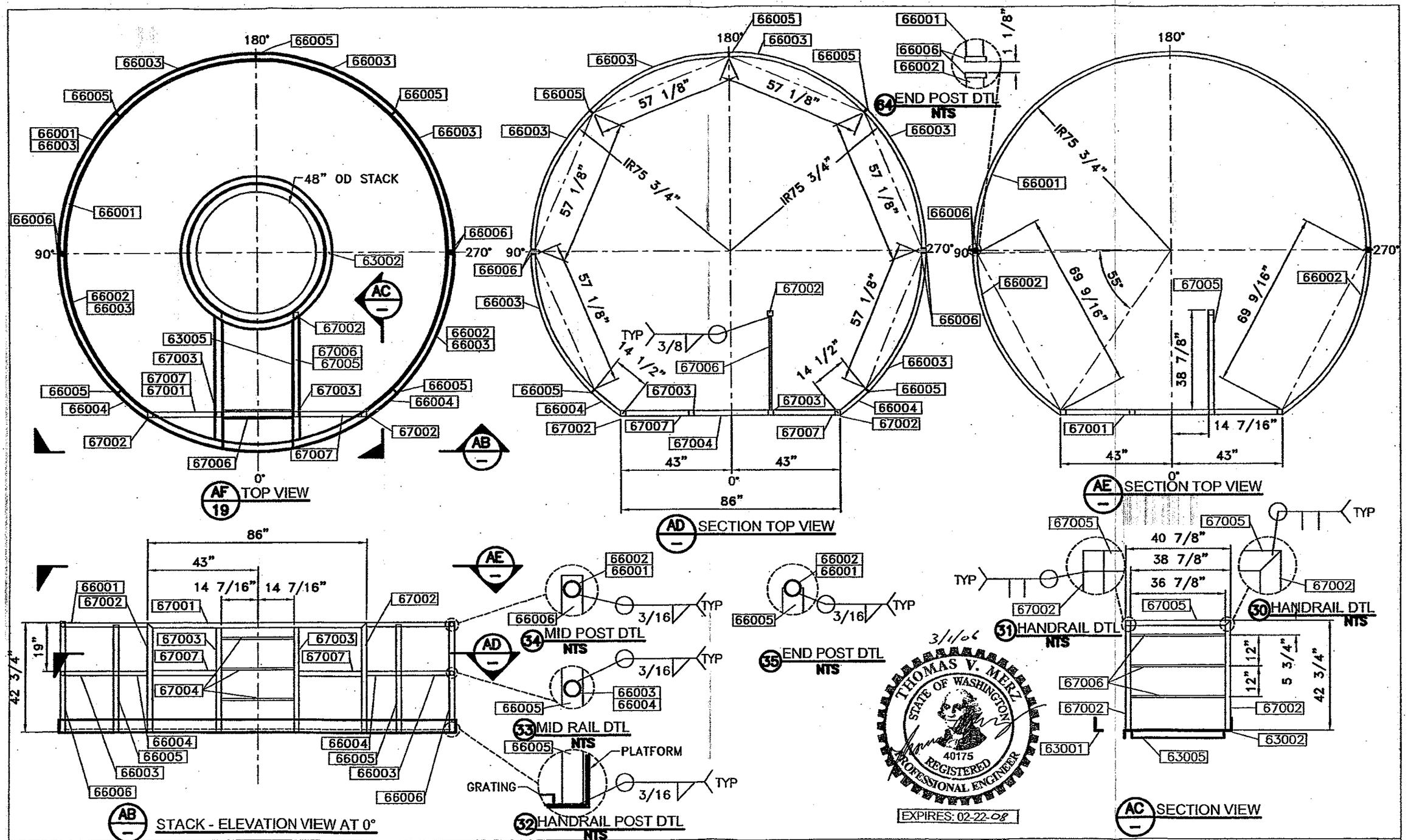

No	REVISION	BY	APR	DATE
3	ADD SHEET 1A AND CHNG 1 TO 1B ORIENTATION & ELEV TO NOZZLE CHART	DJB	GN	12-12-05
4	CUSTOMER CHNG DESIGN	DJB	GN	02-02-06

253-383-5000 COPYRIGHT 2003 BUSBY MARINE AND TANK, INC.

TOLERANCE
SEE SHEET 2

PROPRIETARY

THE DESIGN DETAIL AND INFORMATION IN THIS DRAWING IS THE PROPERTY OF BUSBY MARINE & TANK INC. AND IS LOANED, SUBJECT TO RETURN UPON DEMAND, UNDER THE EXPRESS CONDITION THAT IT MUST NOT BE REPRODUCED, DISCLOSED OR USED IN WHOLE OR IN PART EXCEPT BY PERMISSION AUTHORIZED IN WRITING

		DATE
SCALE	~~1:32~~ NTS	
DRAWN	DJB	02-27-06
CHECKED	KO	-
CHECKED	RA	-
ENG.	TM	02-27-06
APPROVED	MM	-

ISSUED FOR/SUBMITTAL: PLATFORM HANDRAIL - DETAILS
ASSEMBLY: EXHAUST STACK LADDER DETAILS - 20001
PRODUCT: BMASMESTACK

MANUF: BUSBY
DWG NO. 5E008
JOB NO. 298701
DWG NO. 20-PLATFORM
SHEET 20 OF -
REV 4

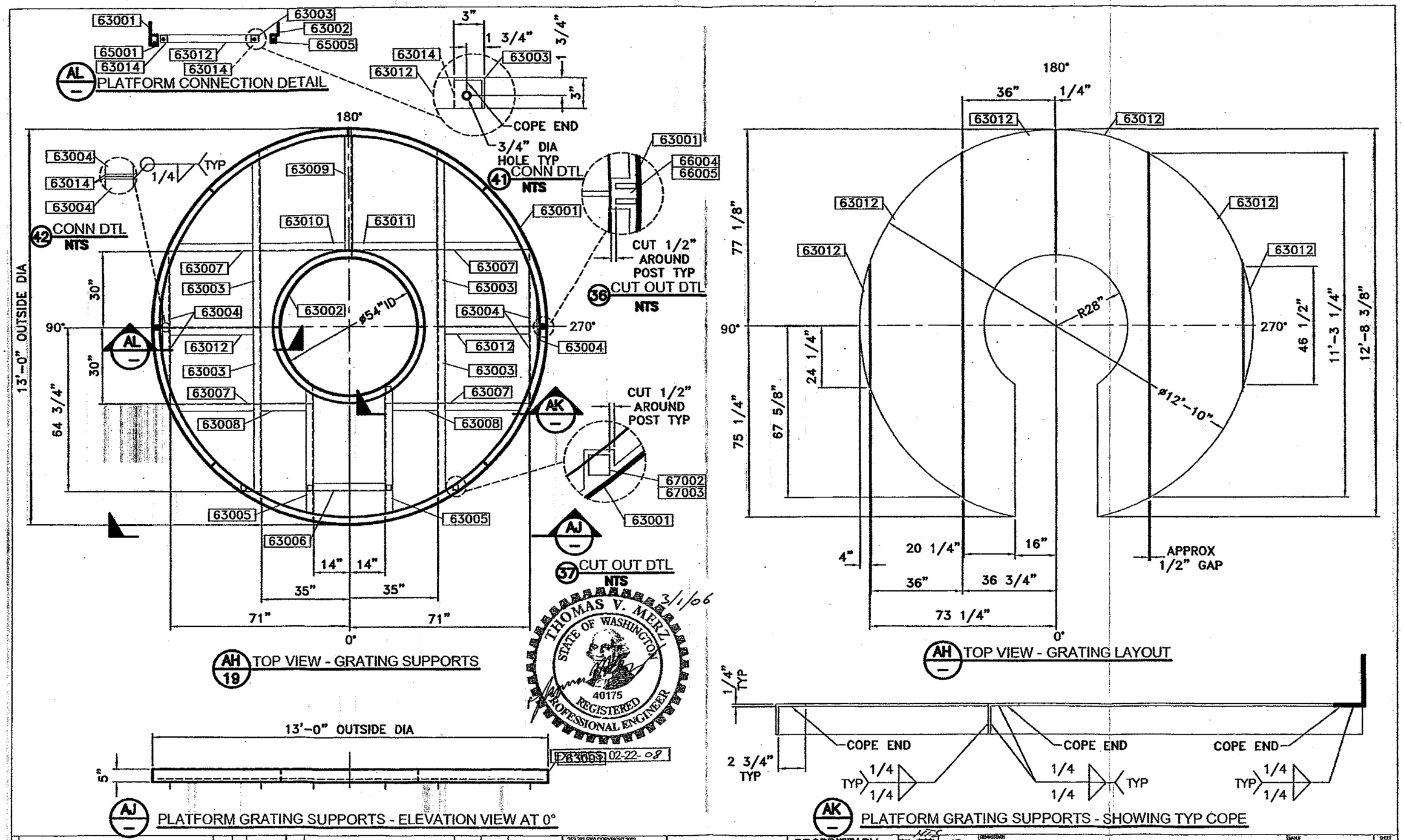

No	REVISION	BY	APR	DATE
3	ADD SHEET 1A AND CHNG 1 TO 1B ORIENTATION & ELEV TO NOZZLE CHART	DJB	GN	12-12-05
4	CUSTOMER CHNG DESIGN	DJB	GN	02-02-06

253-383-5000 COPYRIGHT 2003 BUSBY MARINE AND TANK, INC.

TOLERANCE SEE SHEET 2

PROPRIETARY

SCALE	NTS	
DRAWN	DJB	02-27-06
CHECKED	KO	
CHECKED	RA	
ENG.	TM	02-27-06
APPROVED	MM	

DRAWING: PLATFORM GRATING - DETAILS
ASSEMBLY: EXHAUST STACK LADDER DETAILS - 20001
PRODUCT: BMASMESTACK

MANUF: BUSBY
ENG NO. 5E008
JOB NO. 298701
CHG NO. 21-PLATFORM
SHEET 21 OF -
REV 4

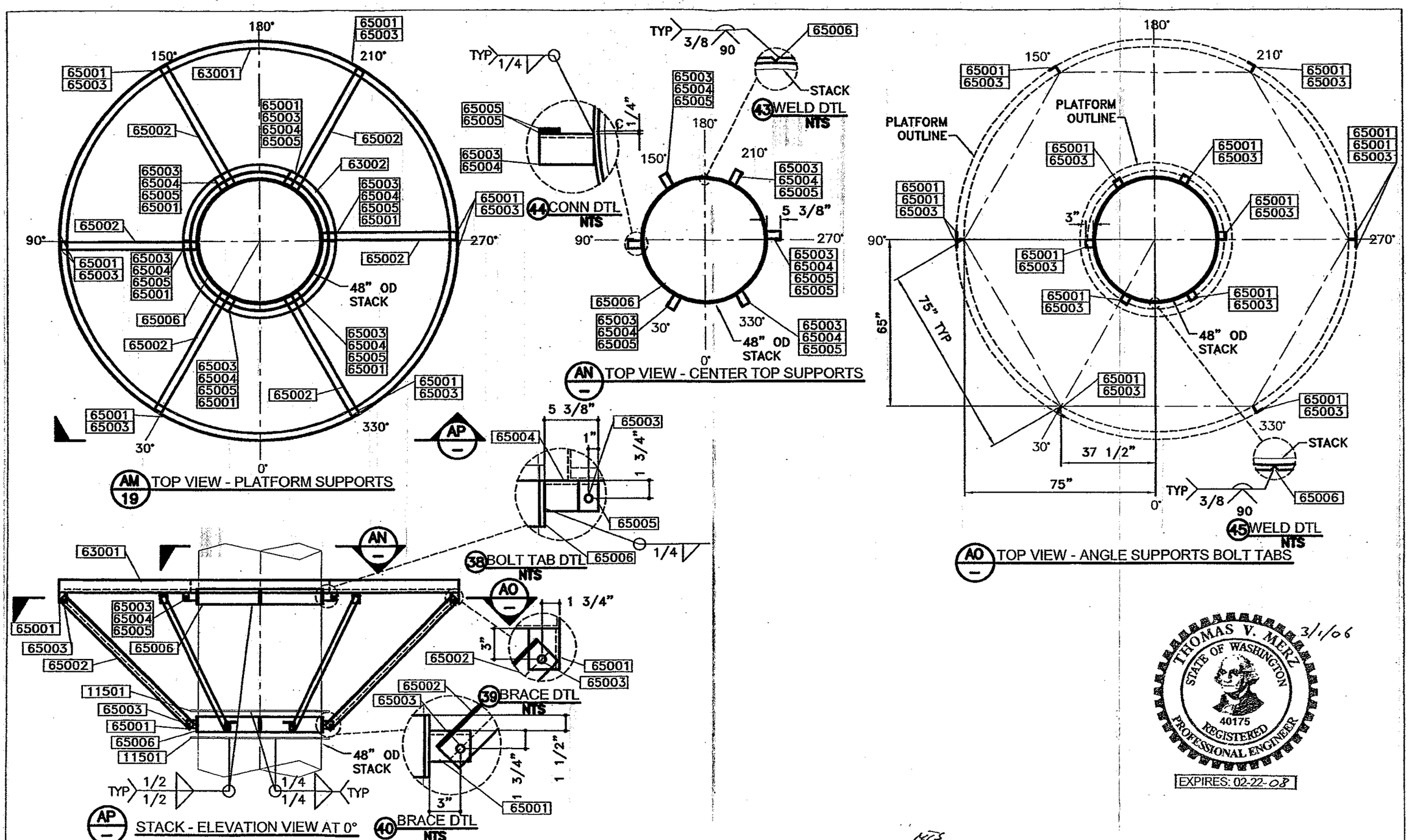

THOMAS V. MERZ
STATE OF WASHINGTON
40175
REGISTERED PROFESSIONAL ENGINEER
3/1/06
EXPIRES: 02-22-08

No	REVISION	BY	APR	DATE	No	REVISION	BY	APR	DATE
3	ADD SHEET 1A AND CHNG 1 TO 1B ORIENTATION & ELEV TO NOZZLE CHART	DJB	GN	12-12-05	-	-	-	-	-
4	CUSTOMER CHNG DESIGN	DJB	GN	02-02-06					

253-383-5000 COPYRIGHT 2003
BUSBY MARINE AND TANK, INC.

TOLERANCE
SEE SHEET 2

PROPRIETARY
THE DESIGN DETAIL AND INFORMATION IN THIS DRAWING IS THE PROPERTY OF BUSBY MARINE & TANK INC AND IS LOANED, SUBJECT TO RETURN UPON REQUEST, UNDER THE EXPRESS CONDITION THAT IT MUST NOT BE REPRODUCED, DISCLOSED OR USED IN WHOLE OR IN PART EXCEPT BY PERMISSION AUTHORIZED IN WRITING

		DATE
SCALE: ~~1:20~~ NTS		
DRAWN	DJB	02-27-06
CHECKED	KO	-
CHECKED	RA	-
ENG.	TM	02-27-06
APPROVED	MM	-

ITEM/ASSEMBLY: PLATFORM SUPPORTS - DETAILS
ASSEMBLY: EXHAUST STACK LADDER DETAILS - 20001
PRODUCT: BMASMESTACK

MANUF: BUSBY
ENG NO.: 5E008
JOB NO.: 298701
DWG NO.: 22-PLATFORM
SHEET 22 OF -
REV 4

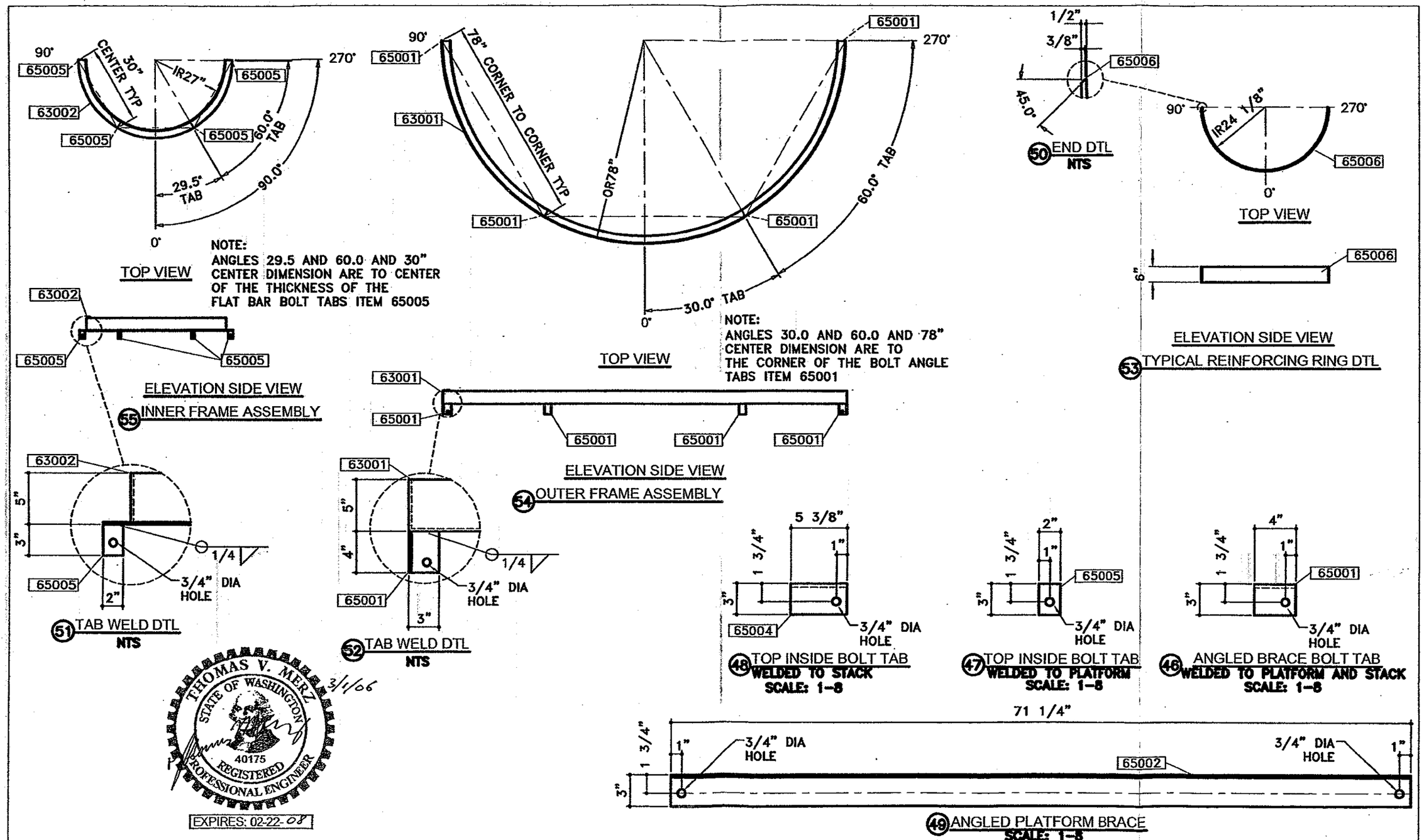

No	REVISION	BY	APR	DATE
3	ADD SHEET 1A AND CHNG 1 TO 1B ORIENTATION & ELEV TO NOZZLE CHART	DJB	GN	12-12-05
4	CUSTOMER CHNG DESIGN	DJB	GN	02-02-06

253-383-6000 COPYRIGHT 2003 BUSBY MARINE AND TANK, INC.

TOLERANCE
SEE SHEET 2

PROPRIETARY
THE DESIGN DETAIL AND INFORMATION IN THIS DRAWING IS THE PROPERTY OF BUSBY MARINE & TANK INC. AND IS LOANED, SUBJECT TO RECALL UPON DEMAND, UNDER THE EXPRESS CONDITION THAT IT MUST NOT BE REPRODUCED, DISCLOSED OR USED IN WHOLE OR IN PART EXCEPT BY PERMISSION AUTHORIZED IN WRITING

SCALE: 1:32" NTS	DATE	
DRAWN DJB	02-27-06	PLATFORM SUPPORTS - DETAILS
CHECKED KO	-	EXHAUST STACK LADDER DETAILS - 20001
CHECKED RA	-	
ENG. TM	02-27-06	BMASMESTACK
APPROVED MM	-	

MAKE: BUSBY
DWG NO. 5E008
JOB NO. 298701
DWG NO. 23-PLATFORM
SHEET 23 OF -
REV 4

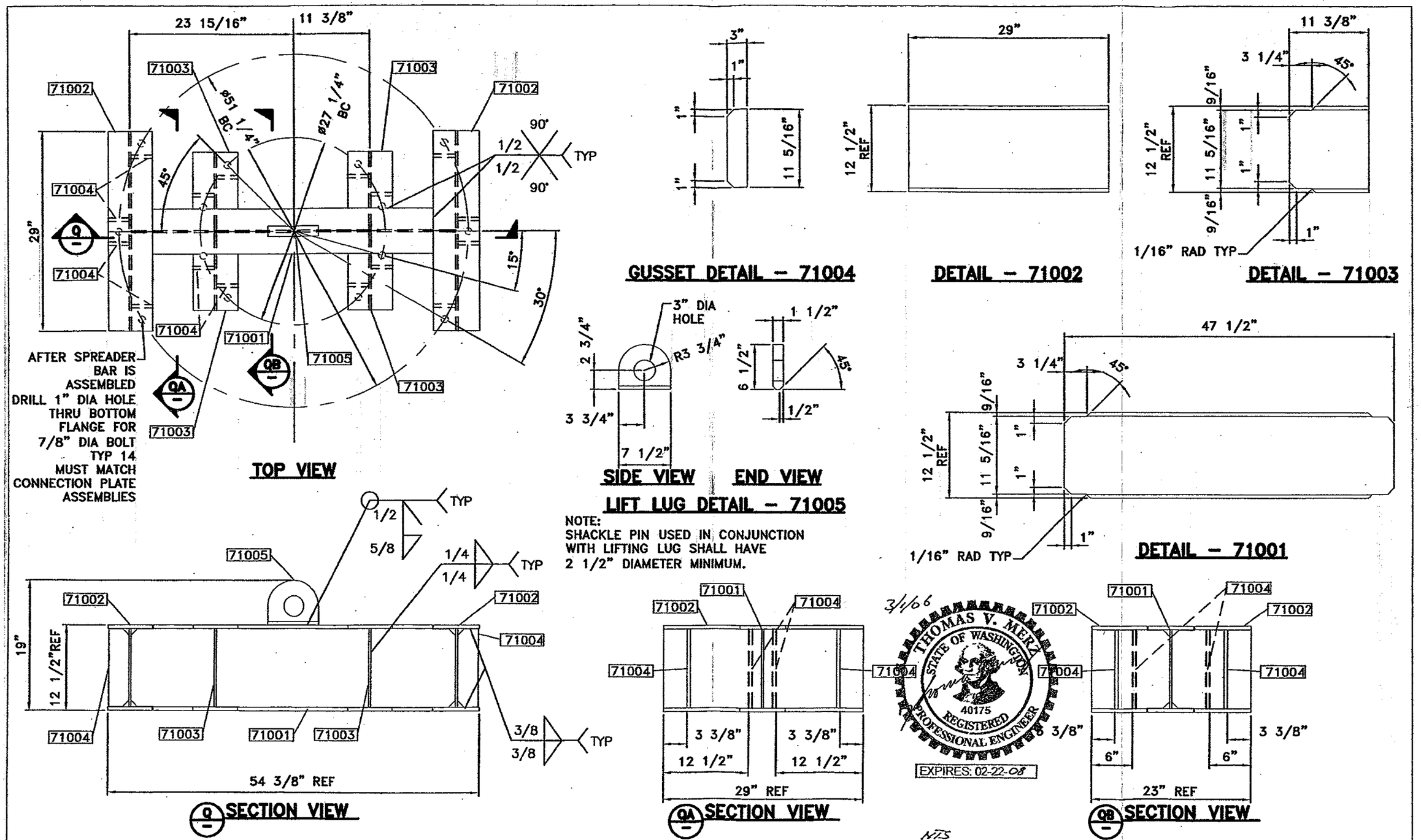

No	REVISION	BY	APR	DATE	No	REVISION	BY	APR	DATE
4	CUSTOMER CHNG DESIGN	DJB	GN	02-02-06	-	-	-	-	-

253-383-6000 COPYRIGHT 2003 BUSBY MARINE AND TANK, INC.

TOLERANCE
SEE SHEET 2

PROPRIETARY
THE DESIGN DETAIL AND INFORMATION IN THIS DRAWING IS THE PROPERTY OF BUSBY MARINE & TANK INC. AND RELOANED, SUBJECT TO RETURN UPON DEMAND, UNDER THE EXPRESS CONDITION THAT IT MUST NOT BE REPRODUCED, DISCLOSED OR USED IN WHOLE OR IN PART EXCEPT BY PERMISSION AUTHORIZED IN WRITING

		DATE
SCALE	1:12	
DRAWN	DJB	02-27-06
CHECKED	KO	-
CHECKED	RA	-
ENG.	TM	02-27-06
APPROVED	MM	-

ITEM/ASSEMBLY: SPREADER BAR - ASSEMBLY
ASSEMBLY: SPREADER BAR - ASSEMBLY - 61000
PRODUCT: BMASMESTACK

SEARLF: BUSBY
ENG NO.: 5E008
JOB NO.: 298701
DWG NO.: 24-SPREADER BAR
SHEET 24 OF -
REV 4

145579-C-CA-015

Attachment 7

Technical Data Sheet
145579-V-DS-005.1 Rev. 2

TECHNICAL DATA SHEET
AMEC Americas Limited

amec

The document revision number is indicated below. Please replace all revised pages of this document and destroy the superseded copies.

PROJECT:	**Final DBVS Design**	**145579-V-DS-005.1**	**REV. 2**
PROJECT NO.:	**145579**	**EXHAUST STACK**	
CLIENT:	**AMEC E&E - Richland Washington**	**EQ. NO.:**	**36-N26-024**

REV. NO.	ISSUED FOR	ORIGIN	DATE	INITIAL
A	Internal Review	DW	02-Sep-04	DW
B	Internal Approval	DW	12-Oct-04	DW
C	CH2M Hill Review	DW	19-Oct-04	DW
0	Construction	DW	15-Dec-04	DW
1	Bid Request	DW	11-Jan-05	DW
2	Bid Request	DW	02-Feb-05	DW

DOCUMENT APPROVAL

CLIENT APPROVAL (AMEC RICHLAND)
Original Approvals on File

Project Manager: _____

Date: _____

Q.A. Rep.: _____

Date: _____

CLIENT APPROVAL (CH2M HILL)

Project Manager: _____

Date: _____

AMEC AMERICAS LIMITED (TRAIL)
Original Approvals on File

Project Manager: J. Hum

Date: Feb 2, 2005

Discipline Lead: [signature]

Date: Feb 2/05

Originator: [signature]

Date: Feb 2, 2005

Attachment: 7
Calc. No.: 145579-C-CA-015
Rev. No.: 02 MEC 3-28-04
Sheet 1 of 5

amec

TECHNICAL DATA SHEET

PROJECT:	**Final DBVS Design**	**145579-V-DS-005.1**	**REV. 2**
PROJECT NO.:	**145579**	**EXHAUST STACK**	
CLIENT:	**AMEC E&E - Richland Washington**	**EQ. NO.:**	**36-N26-024**

REFERENCE SPECIFICATION

Document No.	Specification
145579-V-SP-005	EXHAUST STACK

CONTENTS

Data Sheet _____ 2 Pages

Bidders Drawing & Data Commitments Sheet _____ 1 Page

Attachment: 7
Calc. No.: 145579-C-CA-015
Rev. No.: 02 MRC 3-28-06
Sheet 2 of 5

amec

TECHNICAL DATA SHEETS

PROJECT:	**Final DBVS Design**	**145579-V-DS-005.1**	**REV. 2**
PROJECT NO.:	**145579**	**EXHAUST STACK**	
CLIENT:	**AMEC E&E - Richland Washington**	**EQ. NO.:**	**36-N26-024**

Data Sheet 1 of 2

No. Required	1	**Area**	36
PFD #	F-145579-00-A-0023	**Stream Number**	46
Reference Specification:	145579-V-SP-005	**Quality Assurance Level**	EQ

Operating Conditions			**Rev**				**Rev**
Location (Indoors/Outdoors)		Outdoors		Environment			
Operation (Cont. / Intermittent)		Continuous		-Radioactive		No	
Days per year		365		-Toxic		No	
Hours per day		24		-Corrosive		Yes	
Availability	(%)	100		-Flammable		No	
Site Elevation	(ft)	663		Ambient temp - min	(°F)	-25	
Stack Temperature - max	(°F)	248	0	Ambient temp - max	(°F)	115	
Stack Temperature - min	(°F)	-25					

Description							
Service				Process Data:			
Outside Diameter	(in)	24		Design Temp	(°F)	248 to -25	
Wall Thickness	(in) *			Design Pressure	(in WG)	2	
Height	(ft)	155	2	Gas Flow	(ACFM)	7305	0
Top of Stack El.	(ft)	818		Gas Velocity	(fpm) *		2
Weight	No greater than (lbs)	40,000	2	Stack Exit Velocity	(fpm)	2677	0
Concrete Pad Dimensions				Minimum Stack Exit Velocity	(fpm)	2500	1
- Height	(ft)	4		Corrosion Allowance	(in)	0.0625	
- Width	(ft)	20		Wind Loads:			
- Length	(ft)	30		Velocity (3 second gust)	(mph)	85	
Supports:	*			Importance Factor		1.15	
				Exposure Category		C	
				Seismic Loads: (Zone 2b, soil type SE)			
				Coeff Aa	*		2
Anchor Bolts:	*			Coeff Av	*		2
Number	*			Grating Floor Load	(psf) *		2
Size	(in) *						

Construction

		Type	Material	Number	Thickness	Comments	Rev
Shell	*						
Bottom	*						
Strakes	*						
Stiffeners	*						
Internal Pipe	*						
Internal Plate	*						

Attachment: 7
Calc. No.: 145579-C-CA-015
Rev. No.: 02 MRC 3-28-06
Sheet 3 of 5

Date	02-Sep-04	12-Oct-04	18-Oct-04	15-Dec-04	11-Jan-05	02-Feb-05
By	DJW	DW	DW	DW	DW	
Chked	AP	AP	AP	AP	AP	
Rev.	A	B	C	0	1	2

amec

TECHNICAL DATA SHEETS

Data sheet 2 of 2

Construction cont'd

	Type	Material	Number	Thickness	Comments	Rev
Pipe Supports						
Platforms	Landing at 17.5 ft.		1		See ASME STS-1	
Grating	Floor of landing				See ASME STS-1	
Ladder	Up to landing		1		See ASME STS-1	
Handrails	Around Landing				See ASME STS-1	
Supports *						
Gaskets, externa *						
Gaskets, internal *						
Bolts, external *						
Bolts, internal *						
Nuts, internal *						
Insulation *						
Grounding Lugs	Terminals	Steel	2	3/16" min	Opposite sides	
Lifting Lugs *						
Lining *						
Grout *						

Testing & Inspections

		Witness Req'd	Rev
Dye Penetrant	welds	as per STS-1	2
Magnetic Particle	welds	as per STS-1	2
Radiograph	welds	as per STS-1	

Coatings and Insulation

External Surface Preparation	*	
External Coatings, Primer	*	
External Coatings, Finish	*	
Internal Surface Preparation	*	
Internal Coating	*	

Instrumentation Connection Ports - Minimum nozzles required indicated below

Purpose	Size	Number	Rating	Elevation(s)	Comments
Sample Return Lines	2"	2	150#	31'-6"	at 90° offset
Sample Lines	4"	2	150#	29'-6"	at 90° offset
Visual Inspection	4"	1	150#	28'-6"	
Flow Element	2"	1	150#	51'-6"	
Inlet	24"	1	150#	20'	Angled -45° from horizontal
Stack Drain	1"	1	150#	Lowest drainage point	

Comments:

1. Items marked with an * shall be filled in by VENDOR

*** For the exact locations of the grounding lugs see drawing F-145579-36-V-0021

Attachment: 7
Calc. No.: 145579-C-CA-015
Rev. No.: 02 MRC 3-28-06
Sheet 4 of 5

Date	02-Sep-04	12-Oct-04	18-Oct-04	15-Dec-04	11-Jan-05	02-Feb-05	
By	DW	DW	DW	DW	DW		
Chked	AP	AP	AP	AP	AP		
Rev.	A	B	C	0	1	2	

amec

TECHNICAL DATA SHEETS

PROJECT:	**Final DBVS Design**	**145579-V-DS-005.1**	**REV. 2**
PROJECT NO.:	**145579**	**EXHAUST STACK**	
CLIENT:	**AMEC E&E - Richland, Washington**		

BIDDERS DRAWING AND DATA COMMITMENTS

Vendor shall supply all drawings, manuals and documentation in the quantities indicated. Approval drawings are due within the listed number of calendar days after issue of the Purchase Order or Letter of Intent. The dates set out for drawing and data su

SEND ALL DOCUMENTS TO:

Submit all documents via courier service
Faxed documents must be followed by the originals.
Electronic E-mail or FTP transmissions of drawings & data must be copied to Document Control
Always include a transmittal

AMEC Americas Limited
1385 Cedar Avenue
Trail, BC, Canada
V1R 4C3
Attn: Document Control
Phone: (250) 368-2400
Fax: (250) 368-2401

BIDDERS MUST PROVIDE ESTIMATED LEAD TIMES FOR APPROVAL DRAWINGS

Proposal	Bidder shall include this data for each item			REVIEW ITEMS DUE WITHIN	VENDOR COMMITMENT (SEE NOTE 4)
	Review	Required before ordering or start of fabrication			
		Final	Required within 7 days prior to shipment and before final payment		
PROPOSAL	**REVIEW**	**FINAL**	**DESCRIPTION**	**(DAYS)**	**(DAYS)**
1			QA program	Bid	
1			Experience list and maintainability information	Bid	
E+3			Design, fabrication & delivery schedule	PO+7	
E+3	E+3	E+6	Outline drawings and layout drawings indicating weights and dimensions	PO+14	
E+3	E+3	E+6	Technical brochures on purchased components	PO+21	
	E+3	E+6	Calculations	PO+14	
	E+1	E+6	Spare parts list	Del-14	
	E+1	E+6	Set of installation and maintenance manuals c/w technical literature for all equipment and devices	Del-14	
		6	Site commissioning record & test results	COM+14	

THE TIMELY RECEIPT OF THE VENDOR DOCUMENTS IS CRITICAL TO THIS PROJECT

I agree to provide the listed documentation and data and the dates shown above.

Vendor Signature _____ Date _____

Attachment: 7
Calc. No.: 145579-C-CA-015
Rev. No.: Ø 2 MRC 3-28-06
Sheet 5 of 5

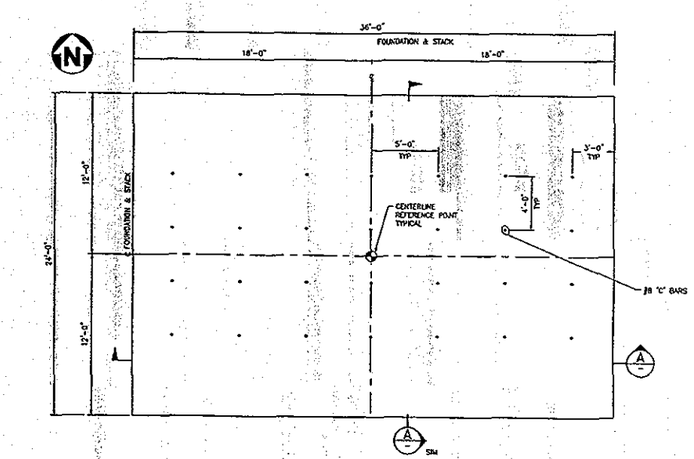

OFF-GAS STACK
FOUNDATION #10 – PLAN
1/4"=1'-0"

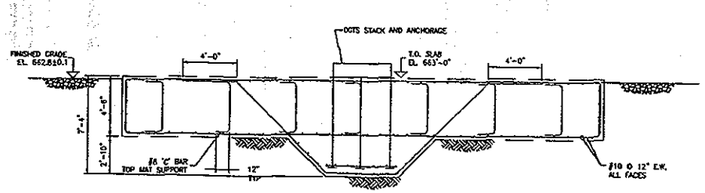

SECTION A
1/4"=1'-0"

ATTACHMENT 8
CALCULATION 145579-C-CA-015
REVISION 2
SHEET 1 OF 1

PRELIMINARY
NOT APPROVED FOR CONSTRUCTION

DMJM Technology

amec

AMEC PROJECT	145579-FINAL DBVS DESIGN
	U.S. DEPARTMENT OF ENERGY Office of River Protection
	BULK VITRIFICATION OGTS STACK FOUNDATION
SIZE F	DWG NO DBVS-SK-S001 REV A
SCALE NOTED	SHEET 1 OF 1

NAME: ERIC CUSTER

DWG NO	TITLE	REF NUMBER	TITLE
DRAWING TRACEABILITY LIST		NEXT USED ON END ITEM	REFERENCES

REVISIONS

C:\Documents and Settings\custerm\My Documents\Bulk Vitrification Project\Calculations\OGTS Stack\Rev.2\Drawings and Sketches for Rev.2\OGTS STACK Found Plan and Elev.dwg, 3/28/2006 11:42:18 AM, mrc

DMJM technology

CALCULATION DESIGN VERIFICATION CHECKLIST

Task/Project #: Demonstration Bulk Vitrification System A77977

Calculation Number:	Revision	Safety Related?
145579-C-CA-015	2	Y-SS

Reviewer/Checker (print name): K. J. McCracken
Reviewer performed or supervised subject calculation.
__X__NO ___YES Justification Attachment __--_____, _____ pages
Alternate Verification method approved _N/A_____ Method _Calculation Independently Checked_

Date 03/28/06

ITEM (S) CHECKED	ACCEPT Y/N	OBJECTIVE EVIDENCE SHEETS	INITIAL/DATE
1. Cover forms properly completed.	Y	Pg 1-23	KJM on 3/28/06
2. Calculation Sheet headers complete with calc. no., rev., etc.	Y	Pg 1-23	KJM on 3/28/06
3. Calculation Sheet contents complete per format.	Y	Pg 1-23	KJM on 3/28/06
4. Listed attachments included.	Y	Pg 1	KJM 3/28/06
5. Calculation Objective clearly described.	Y	Pg 2 Section 1.1 and 1.2	KJM on 3/28/06
6. Criteria are suitable and properly referenced to task-specific documents.	Y	Pg 3 2nd paragraph Section 2.1	KJM on 3/28/06
7. Assumptions and data described and attached or referenced to task documents.	N/A	No assumptions required	KJM on 3/28/06
8. Calculation method identified and appropriate for the design activity.	Y	Pg 6 Section 4.0	KJM on 3/28/06
9. Calculation results reasonable and correctly described in Results & Conclusions.	Y	Pg 7-8 Section 5.0	KJM on 3/28/06
10. Computer Program identified with version and revision.	Y	Pg 6 Section 4.0 1st Paragraph	KJM on 3/28/06
11. Computer Program references method used, etc.	Y	Pg 6 Section 4.0 Paragraphs 1, 5, and 7	KJM on 3/28/06
12. Computer input/output provided.	Y	Attachment 2	KJM on 3/28/06
13. Computer runs traceable to calculation.	Y	Attachment 2 and Section 6.0	KJM on 3/28/06
14. Computer input data within permissible design input range.	Y	Attachment 2	KJM on 3/28/06
15. Computer Program validation/verification addressed.	Y	Pg 6 Section 4.0 1st Paragraph	KJM on 3/28/06

REMARKS
None

K. J. McCracken KJM on 3/28/06 Date 3/28/06
Reviewer/Checker Print Name & Signature

M. R. Custer [signature] for Jackie Luna Date 3/28/06
Originator Print Name & Signature

EP 3.9-4F October 2003

Subcontractor Calculation Review Checklist.

Page 1 of 1

Subject: OGTS STEEL STACK FOUNDATION (#10)

The subject document has been reviewed by the undersigned.
The reviewer reviewed and verified the following items as applicable.

Documents Reviewed: CALC # 145579-C-CA-015, REV. 2

Analysis Performed By: AMEC (M. CUSTER)

- Design Input
- Basic Assumptions
- Approach/Design Methodology
- Consistency with item or document supported by the calculation
- Conclusion/Results Interpretation
- Impact on existing requirements
- Reflects current stack design by Busby Marine (included as Att. 3)

Reviewer (printed name, signature, and date) A.H. FRIBERG AH Friberg 4/19/06

*Organizational Manager (printed name, signature and date) D.H. Shuford David H. Shuford 4/20/06

*Note that drawing H-14-106796 Rev 0 gives the off-gas stack foundation dimensions as 30' x 20'. This calculation provides dimensions of 36' x 24'. The off-gas stack foundation drawing must be updated.

This page intentionally left blank.

145579-C-CA-016

amec

CALCULATION COVER SHEET

CALC. NO.: 145579-C-CA-016 REV: 0 DATE: 10 March 2005

CALC. TITLE: Reagent Tank Foundations (Fdns #21, 22)

PROJECT NO.: 145579 PROJECT TITLE: Final DBVS Design

Design Verification Required: ☐ Yes ☐ No

Calculation Type: ☐ Scoping ☐ Preliminary ☒ Final

Superseded by Calculation No.: ☐ Voided

ORIGINAL AND REVISED CALCULATIONS/ANALYSIS APPROVAL

REV.	ORIGINATOR:	DATE:	CHECKED:	DATE:	APPROVED	DATE
0	[illegible]	10 mar 05	Dirana Whitley	10 March 05	J. Heim	10 Mar 05

AFFECTED DOCUMENTS

DOCUMENT NUMBER:	TITLE:	REV. NO.:	DISC. LEAD INITIALS
H-14-106800	Bulk Vitrification Miscellaneous Foundations Plans and Details	C	

RECORD OF REVISION

REV. NO.	REASON FOR REVISION:
0	Issued for Construction

ATTACHMENTS

DOCUMENT NUMBER/ID:	TITLE:	TOTAL PAGES
Attachment 1	Reagent Tank Foundations Drawings	2
Attachment 2	East Reagent Tank Foundation (Fdn #21) (MathCAD Calculations)	22
Attachment 3	West Reagent Tank Foundation (Fdn #22) (MathCAD Calculations)	15
Attachment 4	Rebar Design for Foundation Pads or Slabs	1
Attachment 5	e-mail from Brad Hupy, Senior Geotechnical Engineer, to P. Meyer	3
Attachment 6	Reagent Tank Technical Data Sheets	4

amec

CALCULATION SHEET

CALC. NO.:	145579-C-CA-016	REV:	0	DATE:	10 March 2005
CALC. TITLE:	Reagent Tank Foundations (Fdns #21, 22)				
PROJECT NO.:	145579	PROJECT TITLE:	Final DBVS Design		

1 INTRODUCTION

1.1 Purpose

The purpose of these calculations is to verify foundation designs and confirm that the foundation/slabs will support attached tanks under design loadings.

1.2 Scope

The scope of this calculation includes determining the loads that each tank places on its associated foundation due to wind, gravity and seismic forces. It is assumed that the tanks will be secured rigidly to the foundations using drilled-in and grouted ASTM A36 anchors of up to 1 inch in diameter. Foundations are sized to ensure that anchors will have adequate depth and edge distances (min 12") to develop their full shear and tensile capacities. Foundation details will be given to tank vendors to allow for anchorage designs by them. This calculation verifies that the foundations will not exceed the soil bearing capacity under gravity, wind or seismic loading, and that the foundations have adequate overturning capacity and strength.

2 BASIS

2.1 Design Inputs

G-LI-001 Rev O, *DBVS Equipment List* prepared by AMEC Trail Mechanical Group, Issued March 4, 2005. This provides data for the filtered water tank.

Individual Data Sheets are provided from the Mechanical group for each of the Reagent tanks. These are included in attachment 6.

2.2 Criteria

From: TFC-ENG-STD-06 Rev B-1, October 27, 2003.

The foundations are 24" thick, as required by the standard listed above. The foundations are large enough that they act as the local "top of grade" compared to the equipment supported. Finished grade of the granular surface adjacent to the foundation will be approximately 22"-24" depending on final grade accuracy. Frost heaving has been considered and will be negligible. This is confirmed in an e-mail from the author of the Geotechnical report and is included as Attachment 5.

amec

CALCULATION SHEET

CALC. NO.:	145579-C-CA-016	REV:	0	DATE:	10 March 2005
CALC. TITLE:	Reagent Tank Foundations (Fdns #21, 22)				
PROJECT NO.:	145579	PROJECT TITLE:	Final DBVS Design		

Design Loads:

Dead load = Self weight of tanks.

Wind Load = 3-second gust 85 mph,

Exposure Category "C"

Importance factor 1.15

Seismic Load = Zone 2B per UBC

Live load: Tank contents. Weights are based on the known contents of the tanks. For the purposes of seismic analysis, the tanks are assumed to be full, whereas for wind loading the tanks are assumed to be empty.

An additional live load on the slabs will be foot traffic beside and around the perimeter of the tanks. By inspection, a 24" thick reinforced slab will withstand foot traffic, and this load may safely be ignored.

Snow load: the ground snow load on the Hanford site is 15 psf. By inspection, a 24" thick reinforced slab will not be affected by a 9" depth of snow, and this load may safely be ignored.

Volcanic ashfall: the ashfall load on the Hanford site is 5 psf for PC-2 SSCs. By inspection, a 24" thick reinforced slab-on-grade will not be affected by such a minor load, and this load may safely be ignored.

Flood: the DBVS site is at elevation 663 feet and is not in any of the flood areas identified in HNF-SD-GN-ER-501. Flood loads may safely be ignored.

Groundwater Pressure: the DBVS site is at elevation 663 feet. The Geotechnical report notes that groundwater levels are approximately 300 feet below the ground surface. Groundwater pressure may safely be ignored.

Thermal: like any exterior concrete slab on grade, the foundations are subjected to normal annual and daily temperature variations. They are not constrained from expanding or contraction by the surrounding soil. The foundations are simple rectangular prisms, and no change in the foundations' geometry occurs due to thermal stresses. Thermal stresses will be very small and may safely be ignored.

amec

CALCULATION SHEET

CALC. NO.:	145579-C-CA-016	REV:	0	DATE:	10 March 2005
CALC. TITLE:	Reagent Tank Foundations (Fdns #21, 22)				
PROJECT NO.:	145579	PROJECT TITLE:	Final DBVS Design		

Concrete creep: the foundations will be cast in place on a firm compacted soil subgrade. Long term creep of a non-suspended slab will be negligible. Concrete creep stresses may safely be ignored.

Lightning: the entire DBVS site will have a grounding grid installed. Pigtails are provided from the grounding grid through foundations for attachment to equipment. Details of the grounding system are not part of the scope of this calculation.

2.3 Assumptions

1. For the UBC method of analysis, tanks are assumed to be rigid cylinders with their centre of gravity at 0.5 of their height.

2. For the API method of analysis, the tank self weight has been assumed to be distributed 30% top surface, 50% walls and 20% base. This is slightly conservative for single wall tanks with an aspect ratio of ~1:1 (25%-50%-25% is correct) and is reasonable to conservative for double wall tanks. The contents have a far greater effect on the total seismic load than the tank self-weight.

3. Tanks will be provided with mounting holes in their bases suitable for mounting on a concrete pad. The precise sizes and locations of these mounting holes are not known at this time. It is assumed the equipment will be secured to the concrete foundation with field-installed drill-in anchors in all mounting holes and that these anchors will be adequate to provide lateral and vertical support for the base of the tanks. Vendors are required to design and supply tanks conforming to Hanford site standards. Drill-in anchors for this size of tank are typically one-half inch to one inch in diameter. It is assumed that one inch anchors will be used. Anchors will be located more than 12" away from the edge of a 24" deep slab, and are therefore able to develop their full tensile and shear capacities, regardless of their precise locations.

4. Stability analysis assumes the foundations are round and have a top diameter equal to that of the tanks. Foundations are 24" thick and forces from the tanks transfer through the concrete towards the ground at a 45 degree angle. It is assumed that there is a minimum 4" flange around the base of tanks. The average diameter of the effective conic foundation is 2'-8" greater than the diameter of the tanks, and the effective diameter of the base of the foundation is 4'-8" greater than the tanks. The actual rectangular foundation sizes are larger than the assumed circular foundations; this assumption is conservative.

amec

CALCULATION SHEET

CALC. NO.:	145579-C-CA-016	REV:	0	DATE:	10 March 2005
CALC. TITLE:	Reagent Tank Foundations (Fdns #21, 22)				
PROJECT NO.:	145579	PROJECT TITLE:	Final DBVS Design		

5. The reagent tanks are assumed to be Performance Category PC-2 pending confirmation from the design authority. As all SSCs in this project are either PC-1 or PC-2, this assumption is conservative.

3 REFERENCES

1. *Uniform Building Code*, 1997. International Conference of Building Officials, Whittier, California.

2. *ACI Manual of Concrete Practice*, 1997. American Concrete Institute, Farmington Hills, Michigan.

3. TFC-ENG-STD-06 Rev B-1, *Design Loads for Tank Farm Facilities*, Issued October 22, 2003 by CH2M Hill Hanford Group Inc. Hanford, Washington.

4. ASCE 7-02 *Minimum Design Loads for Buildings and Other Structures*, 2002. American Society of Civil Engineers, Reston, Virginia.

5. *Report of Geotechnical Engineering Services, Bulk Vitrification Process Partial DBVS Richland, Washington.* April 2004. AMEC Earth & Environmental Inc., Portland, Oregon.

6. HNF-SD-GN-ER-501 Rev 1B, *Natural Phenomena Hazards, Hanford Site, Washington.* As revised by ECN 672877, May 15, 2002. Numatec Hanford Company, Richland, Washington.

7. DOE-STD-1020-2002 *Natural Phenomena Hazards Design and Evaluation Criteria for Department of Energy Facilities* January 2002. U.S. Department of Energy, Washington, D.C.

8. G-LI-001 Rev O, *DBVS Equipment List* prepared by AMEC Trail Mechanical Group, Issued March 4, 2005.

9. MathCAD software, version 11. Published by Mathsoft Engineering & Education Inc., Cambridge, Massachusetts.

10. American Petroleum Institute, 2000. *Welded Steel Tanks for Oil Storage.* API 650, 10th Edition, Addendum 1.

amec

CALCULATION SHEET

CALC. NO.:	145579-C-CA-016	REV:	0	DATE:	10 March 2005
CALC. TITLE:	Reagent Tank Foundations (Fdns #21, 22)				
PROJECT NO.:	145579	PROJECT TITLE:	Final DBVS Design		

4 METHODS

Loads have been calculated using the Tank Farm Facilities Design Loads and the analysis of load effects follows the procedures of the *Uniform Building Code*, and ASCE-7 as applicable. Foundation allowable resisting forces have been calculated using the methods in the Uniform Building Code and ACI-318. Calculations were performed using MathCAD 11 computer software.

Calculations determine soil bearing pressures on the leeward and windward sides of the foundations during both wind and seismic loading. For seismic design, "windward" is understood to mean the side an earthquake "pushes" from.

Provided that the calculated bearing pressure on the soil is always compressive (i.e. no uplift) and less than the allowable soil bearing pressure of 3000 pounds per square foot, the foundations are stable with a safety factor of at least 2.0.

We have conservatively not used the 4000 psf allowable soil bearing capacity for short-term loading (wind/seismic) permitted by the Geotechnical Report.

Positive bending moment in the slabs (bottom bars in tension) are calculated by taking the maximum factored soil bearing pressure times the lever arm of the assumed foundation base back to the tank walls. To consider negative (top bars in tension) bending, the maximum factored net upward pressure on the foundation has been conservatively assumed to apply across the full width of the tank and the resultant negative bending moment calculated for a one-foot wide strip.

Slab bending strengths on a per-foot width basis, and minimum reinforcement have been calculated following the UBC/ACI-318 method and provided in Attachment 4.

Given the low absolute bearing pressures and the very large tank perimeters, punching shear stresses will be negligible.

For greater certainty, we have also calculated the base shear and slab bottom overturning moments using the methods for flat bottom tanks provided in *API 650 Appendix E "Seismic Design for Storage Tanks."* It is found that the "rigid body" model analysis from the UBC gives conservative results.

amec

CALCULATION SHEET

CALC. NO.:	145579-C-CA-016	REV:	0	DATE:	10 March 2005
CALC. TITLE:	Reagent Tank Foundations (Fdns #21, 22)				
PROJECT NO.:	145579	PROJECT TITLE:	Final DBVS Design		

5 RESULTS AND CONCLUSIONS

Each concrete base will support the specified equipment against design loads. Bearing pressures on the soil are always compressive (no uplift) and always less than the allowable 3000 psf soil bearing pressure under gravity, wind and seismic loads.

The maximum calculated bearing pressure is under the $NaClO_2$ Tank #1 and #2 under seismic loading and is 1380 psf. The minimum bearing pressure occurs under the $NaClO_2$ Tank #1 and #2 under seismic loading and is 41 psf. Both are within acceptable limits.

The maximum uniform bearing pressure under gravity load occurs under the Filtered Water Storage Tank and is 792 psf.

The maximum bending moment in any slab occurs in the Filtered Water Storage Tank under seismic loading and is 11 kip-ft/ft, compared to a calculated slab bending moment resistance of 40 kip-ft/ft.

The foundation designs have been added to the 3-D computer model of the project. Foundation drawings are attached.

A check of the equipment Vendor Drawings will be made once they become available to verify the equipment loading is within assumed values. Corrective action will be taken if tank size assumptions are found to be non-conservative.

A check of the equipment Vendor drawings will be made to confirm that the proposed method of anchoring the equipment is acceptable

ORIGINATOR:	DATE:	CHECKER:	DATE:
Ian Mayo	MAR 10 05	Dirana Whitley	March 10/05

145579-C-CA-016

Attachment 1

Reagent Tank Foundations Drawings

H-14-106798 Rev. C
Bulk Vitrification Minor Foundations General Arrangement

H-14-106800 Rev. C
Bulk Vitrification Miscellaneous Foundations Plans & Details

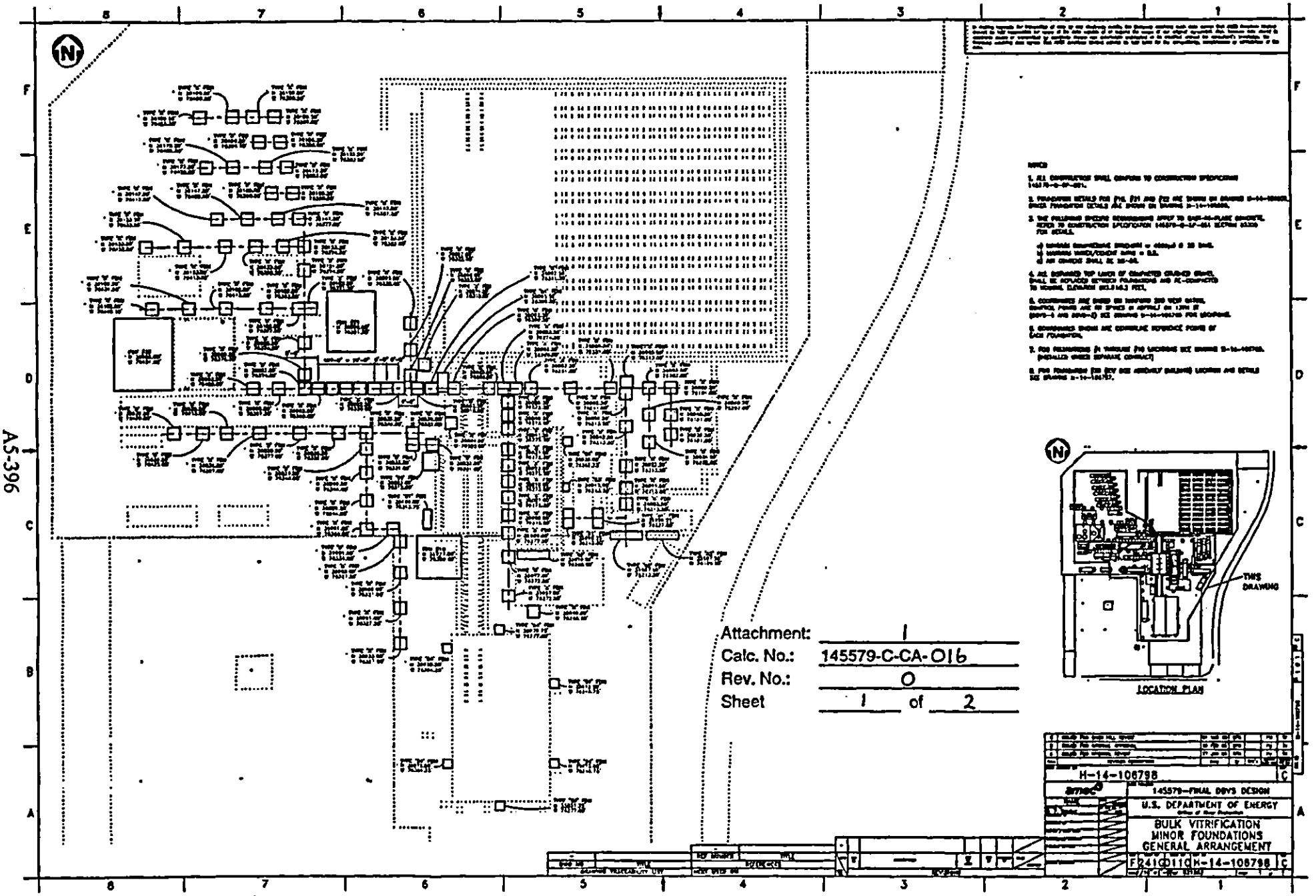
Attachment: 1
Calc. No.: 145579-C-CA-016
Rev. No.: 0
Sheet 1 of 2
LOCATION PLAN
THIS DRAWING
H-14-106798
145579-FINAL DBVS DESIGN
U.S. DEPARTMENT OF ENERGY
BULK VITRIFICATION
MINOR FOUNDATIONS
GENERAL ARRANGEMENT
F241C011C H-14-106798 C

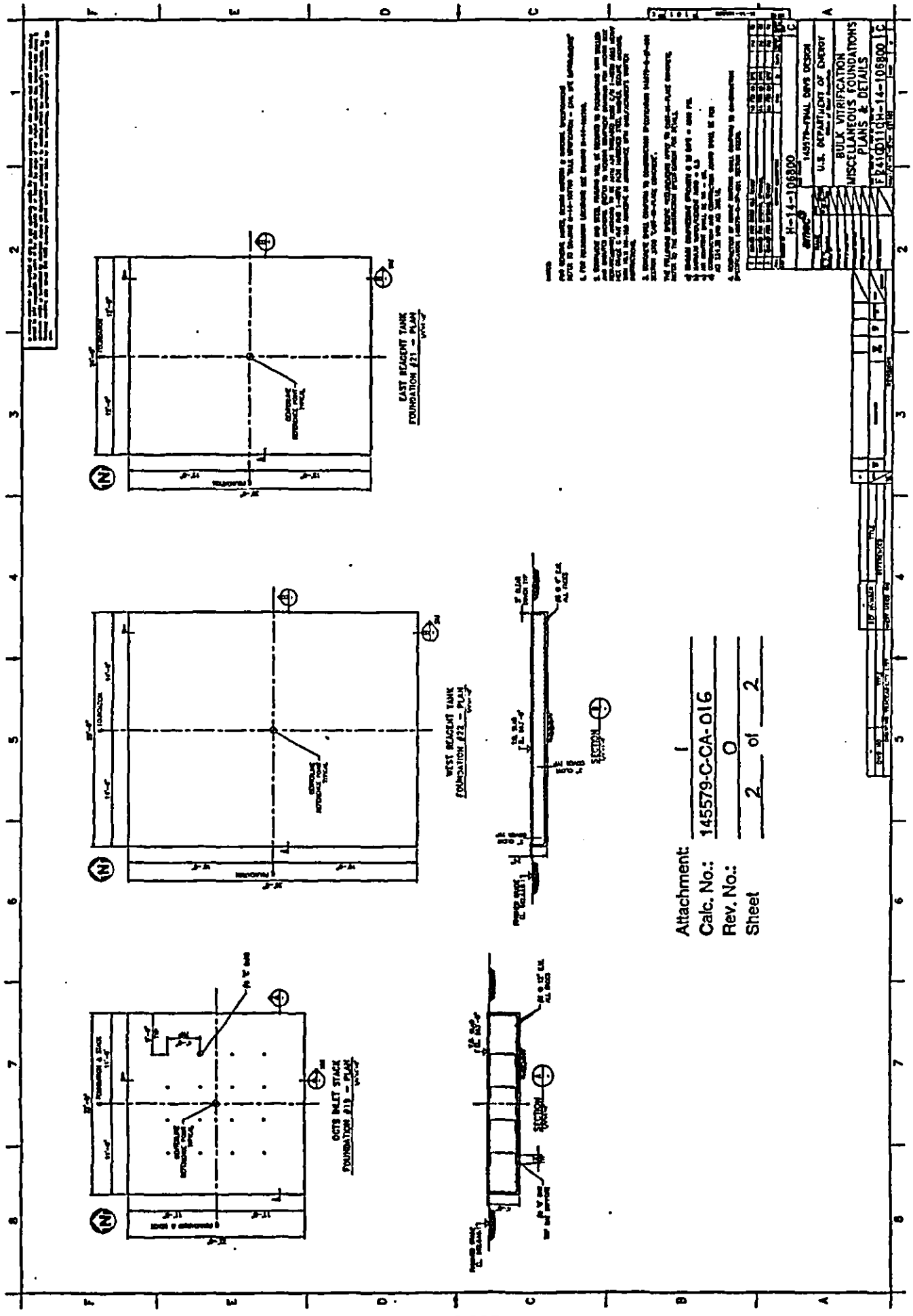

Attachment: 1
Calc. No.: 145579-C-CA-016
Rev. No.: 0
Sheet 2 of 2

145579-C-CA-016

Attachment 2

East Reagent Tank Foundation (Fdn #21)
(MathCAD Calculations)

CALCULATION SHEET

amec

CALC.: NO: 145579-C-CA-016 REV: 0
CALC. TITLE: Reagent Tank Foundations (Fdn #21 and 22) ISSUE DATE: 10 March 2005
PROJECT NO.: 145579
ATTACHMENT: 2 PROJECT TITLE: Final DBVS Design
ATTACHMENT TITLE: East Reagent Tank Foundation (Fdn #21) Page: 1 of 22
ORIGINATOR: Diana Whitley CHECKER: [illegible]
DATE: March 10/05 DATE: MAR 10 2005

FILTERED WATER STORAGE TANK (00-D74-017B)

GENERAL DIMENSION

PC = Performance Class		$PC := 2$	
H = Height of tank		$H := 16ft$	
D = Diameter of tank		$D := 12ft$	
Hcg = Height to center of gravity of tank	$Hcg := 0.5 \cdot H$	$Hcg = 8\,ft$	
Wt_f = Weight of full tank		$Wt_f := 110000lb$	Equipment List
Vt = Volume tank		$Vt := 12000gal$	Equipment List
ρ = density of water		$\rho := 62.4 \frac{lb}{ft^3}$	
Wt_c = Weight of tank contents	$Wt_c := \rho \cdot Vt$	$Wt_c = 100100\,lb$	
Wt_e = Weight of empty tank	$Wt_e := Wt_f - Wt_c$	$Wt_e = 9900\,lb$	
h = Height of concrete foundation		$h := 2ft$	
D1 = Diameter of concrete foundation for weight	$D1 := D + 2ft + 8in$	$D1 = 14.667\,ft$	
D2 = Diameter of effective area of concrete foundation in contact with the soil	$D2 := D + 4ft + 8in$	$D2 = 16.667\,ft$	
A2 = Area of D2	$A2 := \frac{\pi \cdot D2^2}{4}$	$A2 = 218.2\,ft^2$	
wc = unit weight of concrete		$wc := 150 \frac{lb}{ft^3}$	ASCE 7 Table C3-2 pg 250
Wc1 = Weight of concrete foundation	$Wc1 := wc \cdot h \cdot \pi \cdot \left(\frac{D1}{2}\right)^2$	$Wc1 = 50684\,lb$	
S2 = Elastic section modulus of foundation	$S2 := \frac{\pi \cdot D2^3}{32}$	$S2 = 455\,ft^3$	

CALCULATION SHEET

amec

CALC.: NO: 145579-C-CA-016 REV: 0
CALC. TITLE: Reagent Tank Foundations (Fdn #21 and 22) ISSUE DATE: 10 March 2005
PROJECT NO.: 145579
ATTACHMENT: 2 PROJECT TITLE: Final DBVS Design
ATTACHMENT TITLE: East Reagent Tank Foundation (Fdn #21) Page: 2 of 22
ORIGINATOR: Diana Whitley CHECKER: Pam Moya
DATE: March 10/05 DATE: MAR 10 2005

SOIL BEARING CAPACITY

AllowBC = Allowable bearing capacity $\quad AllowBC := 3000\frac{lb}{ft^2}$ Reference 5 Figure 4

ActBC = Actual bearing pressure $\quad ActBC := \frac{Wt_f + Wcl}{A2} \quad ActBC = 736.523\frac{lb}{ft^2}$

FOS = Factor of Safety $\quad FOS := \frac{AllowBC}{ActBC} \quad FOS = 4.073$

WIND

Following DOE-STD-1020-2002 and ASCE 7 standards
Method 2 6.5.13

Exposure C — TFC-ENG-STD-06 REV B-1 Table 3 Page 24

Kz = Velocity Pressure Exposure Coefficient

$$Kz(H) := \begin{cases} 0.86 & \text{if } H \le 16ft \\ 0.98 & \text{if } H = 30ft \\ 1.04 & \text{if } H = 40ft \\ 1.19 & \text{if } H = 75ft \\ \text{"prob"} & \text{otherwise} \end{cases}$$

$Kz(H) = 0.86$ — ASCE 7 page 75

Kzt = Topographic Factor $\quad Kzt := 1$ — ASCE 7 page 47 flat ground

Kd = Wind Directionality Factor $\quad Kd := 0.95$ — ASCE 7 page 76 round

V = "Three-second gust" wind velocity $\quad V := 85\frac{mi}{hr}$ — TFC-ENG-STD-06 REV B-1 Table 3 Page 24

I = Importance Factor

$$I(PC) := \begin{cases} 1.15 & \text{if } PC = 2 \\ 1.0 & \text{if } PC = 1 \\ \text{"prob"} & \text{otherwise} \end{cases} \quad I(PC) = 1.15$$

TFC-ENG-STD-06 REV B-1 Table 3 Page 24

qz = Velocity Pressure $\quad qz := 0.00256\left(\frac{hr}{mi \cdot ft}\right)^2 \cdot lb \cdot Kz(H) \cdot Kzt \cdot Kd \cdot V^2 \cdot I(PC)$ — ASCE 7 page 31

$$qz = 17.38\frac{lb}{ft^2}$$

CALCULATION SHEET

amec

CALC.: NO: 145579-C-CA-016 REV: 0
CALC. TITLE: Reagent Tank Foundations (Fdn #21 and 22) ISSUE DATE: 10 March 2005
PROJECT NO.: 145579
ATTACHMENT: 2 PROJECT TITLE: Final DBVS Design
ATTACHMENT TITLE: East Reagent Tank Foundation (Fdn #21) Page: 3 of 22
ORIGINATOR: Diana Whitley CHECKER: Tim Meyer
DATE: March 10/05 DATE: MAR 10 2005

G = Gust factor $G := 0.85$ ASCE 7 page 30

$$\text{if}\left(D\cdot\sqrt{qz} > 2.5\sqrt{lb}, \text{"Use shown Cf factors"}, \text{"Change factors"}\right) = \text{"Use shown Cf factors"}$$

Cf = Force Coefficient ASCE 7 page 69

$$Cf(x) := \begin{cases} 0.5 & \text{if } \frac{H}{D} < 7 \\ 0.7 & \text{if } 7 \le \frac{H}{D} < 25 \\ 0.8 & \text{if } 25 \le \frac{H}{D} \\ \text{"prob"} & \text{otherwise} \end{cases}$$

$$Cf\left(\frac{H}{D}\right) = 0.5$$

Cp = Pressure Coefficient $Cp := 0.8$ UBC page 2-29 Table H

Af = Area normal to the wind $Af := H\cdot D$ $Af = 192\,ft^2$

Pw = Wind pressure $Pw := qz\cdot G\cdot Cp$ $Pw = 11.82\,\frac{lb}{ft^2}$

Fw = Wind force $Fw := qz\cdot G\cdot Cp\cdot Af$ $Fw = 2269\,lb$

Mw = Wind moment $Mw := Fw\cdot(Hcg + h)$ $Mw = 22689\,lb\,ft$

W_u = Unfactored wind pressure $W1_u := \frac{Wt_f + Wcl}{A2} + \frac{Mw}{S2}$

$$W1_u = 786\,\frac{lb}{ft^2}$$

$$\text{if}\left(W1_u \le 3000\,\frac{lb}{ft^2}, \text{"Design is Good"}, \text{"Design is Bad"}\right) = \text{"Design is Good"}$$

$$W2_u := \frac{Wt_e + Wcl}{A2} - \frac{Mw}{S2}$$

$$W2_u = 228\,\frac{lb}{ft^2}$$

$$\text{if}\left(0 \le W2_u, \text{"Design is Good"}, \text{"Design is Bad"}\right) = \text{"Design is Good"}$$

CALCULATION SHEET

amec

CALC.: NO: 145579-C-CA-016 REV: 0
CALC. TITLE: Reagent Tank Foundations (Fdn #21 and 22) ISSUE DATE: 10 March 2005
PROJECT NO.: 145579
ATTACHMENT: 2 PROJECT TITLE: Final DBVS Design
ATTACHMENT TITLE: East Reagent Tank Foundation (Fdn #21) Page: 4 of 22
ORIGINATOR: Diana Whitley CHECKER: [illegible]
DATE: March 10/05 DATE: Mar 10 2005

SEISMIC

Following 1997 Uniform Building Code (UBC) standards

Seismic Zone = 2B			UBC page 2-37 Figure 16-2
Soil Profile = Sc			Reference 5 Page 11
Ip = Importance Factor	$Ip(PC) := \begin{cases} 1.5 & \text{if } PC = 2 \\ 1.0 & \text{if } PC = 1 \\ \text{"prob"} & \text{otherwise} \end{cases}$	$Ip(PC) = 1.5$	UBC page 2-30 Table 16-K
Z = Seismic zone factor		$Z := 0.2$	UBC page 2-30 Table 16-I
Ca = Seismic coefficient		$Ca := 0.24$	UBC page 2-34 Table 16-Q
ap = Horizontal Force Factor 1		$ap := 1$	UBC page 2-33 Table 16-O
Rp = Horizontal Force Factor 2		$Rp := 3$	UBC page 2-33 Table 16-O
hx = Height from ground to bottom of element		$hx := 0.0ft$	
Fe = Earthquake Force	$Fea := \frac{ap \cdot Ca \cdot Ip(PC)}{Rp} \cdot \left(1 + 3 \cdot \frac{hx}{H}\right) \cdot Wt_f$	$Fea = 13200\,lb$	UBC page 2-18 1632.2
Femax = Max earthquake force	$Femax := 4.0 \cdot Ca \cdot Ip(PC) \cdot Wt_f$	$Femax = 158400\,lb$	UBC page 2-18 1632.2
Femin = Min earthquake force	$Femin := 0.7 \cdot Ca \cdot Ip(PC) \cdot Wt_f$	$Femin = 27720\,lb$	UBC page 2-18 1632.2
	$Fe := \begin{cases} Femin & \text{if } Femin > Fea \\ Femax & \text{if } Fea > Femax \\ Fea & \text{otherwise} \end{cases}$	$Fe = 27720\,lb$	
Me = Seismic moment	$Me := Fe \cdot (Hcg + h)$	$Me = 277200\,lb\,ft$	

CALCULATION SHEET

amec

CALC.: NO: 145579-C-CA-016 REV: 0
CALC. TITLE: Reagent Tank Foundations (Fdn #21 and 22) ISSUE DATE: 10 March 2005
PROJECT NO.: 145579
ATTACHMENT: 2 PROJECT TITLE: Final DBVS Design
ATTACHMENT TITLE: East Reagent Tank Foundation (Fdn #21) Page: 5 of 22
ORIGINATOR: Dirana Whitley CHECKER: Tom Moran
DATE: March 10/05 DATE: Mar 10 2005

E_u = Unfactored seismic pressure

$$E1_u := \frac{Wt_f + Wcl}{A2} + \frac{Me}{S2}$$

$$E1_u = 1346 \frac{lb}{ft^2}$$

$$if\left(E1_u \le 3000 \frac{lb}{ft^2}, \text{"Design is Good"}, \text{"Design is Bad"}\right) = \text{"Design is Good"}$$

$$E2_u := \frac{Wt_f + Wcl}{A2} - \frac{Me}{S2}$$

$$E2_u = 127 \frac{lb}{ft^2}$$

$$if\left(0 \le E2_u, \text{"Design is Good"}, \text{"Design is Bad"}\right) = \text{"Design is Good"}$$

LOAD CASES - FACTORED PRESSURE

UBC page 2-4
1612.2.1

LC 1 = 1.4D

$$LC1 := \frac{1.4 \cdot (Wt_e + Wcl)}{A2} \quad (12\text{-}1)$$

$$LC1 = 389 \frac{lb}{ft^2}$$

LC 2 = 1.2D+1.6L

$$LC2 := \frac{1.2(Wt_e + Wcl) + 1.6 \cdot Wt_c}{A2} \quad (12\text{-}2)$$

$$LC2 = 1067 \frac{lb}{ft^2}$$

LC 3 = 1.2D+1.0L+1.3W

$$LC3 := \frac{1.2 \cdot (Wt_e + Wcl) + 1.0 \cdot Wt_c}{A2} + \frac{1.3 \cdot Mw}{S2} \quad (12\text{-}4)$$

$$LC3 = 857 \frac{lb}{ft^2}$$

LC 4 = 1.2D+1.0L+1.0E

$$LC4 := \frac{1.2 \cdot (Wt_e + Wcl) + 1.0 \cdot Wt_c}{A2} + \frac{1.0 \cdot Me}{S2} \quad (12\text{-}5)$$

$$LC4 = 1402 \frac{lb}{ft^2}$$

$$\max(LC1, LC2, LC3, LC4) = 1402 \frac{lb}{ft^2}$$

CALCULATION SHEET

amec

CALC.: NO: 145579-C-CA-016 REV: 0
CALC. TITLE: Reagent Tank Foundations (Fdn #21 and 22) ISSUE DATE: 10 March 2005
PROJECT NO.: 145579
ATTACHMENT: 2 PROJECT TITLE: Final DBVS Design
ATTACHMENT TITLE: East Reagent Tank Foundation (Fdn #21) Page: 6 of 22
ORIGINATOR: Dirana Whitley CHECKER: [illegible]
DATE: March 10/05 DATE: MAR 10 2005

SLAB MOMENT CAPACITY CHECK

$\text{if}(Mc \le Mw, \text{"Wind Governs"}, \text{"Seismic Governs"}) = \text{"Seismic Governs"}$

Between the seismic and wind moments, seismic has a larger moment.

P_f = Factored downward pressure from tank and contents $P_f := \dfrac{1.2\cdot(Wt_e + Wcl) + 1.0\cdot Wt_c}{A2}$

$P_f = 792\,\dfrac{lb}{ft^2}$

LC4 is the maximum factored upwards pressure. Subtracting the downwards pressure from the upwards pressure and assuming that the result is a uniformly distributred load along a simple beam, the diameter of the tank, a conservative moment at the center or the foundation in the top rebar will be found.

M_{tr} = Top rebar moment $M_{tr} := \dfrac{(LC4 - P_f)\cdot D^2}{8}$ $M_{tr} = 10978\,\dfrac{lb\cdot ft}{ft}$

Assuming a catilever of 2 feet with the maximum factored pressure LC4 acting as a uniformly distributed load, the moment in the bottom rebar will be found.

L = Assumed overhang $L := 2ft$

M_{br} = Bottom rebar moment $M_{br} := \dfrac{LC4\cdot L^2}{2}$ $M_{br} = 2804\,\dfrac{lb\cdot ft}{ft}$

Mu = Moment resistance per foot $Mu := 40000\,\dfrac{lb\cdot ft}{ft}$ Attachment 4

$\text{if}(M_{tr} \wedge M_{br} \le Mu, \text{"Rebar is sufficient"}, \text{"More rebar is neeced"}) = \text{"Rebar is sufficient"}$

American Petroleum Institute - shear and moment check

UBC page 2-22
1634.4 2

Of the empty weight: 30% is the weight of the roof,
50% is the weight of the walls and
20% is the weight of the floor

W_r = Weight of roof $W_r := 0.3\cdot Wt_e$ $W_r = 2970\,lb$

W_s = Weight of tank shell $W_s := 0.5\cdot Wt_e$ $W_s = 4950\,lb$

A_r = Area of top and bottom of tank $A_r := \pi\cdot\left(\dfrac{D + 6in}{2}\right)^2$ $A_r = 123\,ft^2$

A_w = Area of walls $A_w := \pi\cdot D\cdot H$ $A_w = 603\,ft^2$

H_L = Height of liquid $H_L := H - 1ft$ $H_L = 15\,ft$

D/H_L = Diameter to height ratio $\dfrac{D}{H_L} = 0.8$

CALCULATION SHEET

amec

CALC.: NO: 145579-C-CA-016 REV: 0
CALC. TITLE: Reagent Tank Foundations (Fdn #21 and 22) ISSUE DATE: 10 March 2005
PROJECT NO.: 145579
ATTACHMENT: 2 PROJECT TITLE: Final DBVS Design
ATTACHMENT TITLE: East Reagent Tank Foundation (Fdn #21) Page: 7 of 22
ORIGINATOR: Dirana Whitley CHECKER: Tom Mayor
DATE: March 10/05 DATE: Mar 10 2005

I_{API} = Importance factor		$I_{API} := 1.25$	API E.3.1
S = Site Coefficient		$S := 1.2$	API Table E-2
k = Factor		$k := 0.59$	API Figure E-4
T = Factor	$T := k \cdot \sqrt{\frac{D}{ft}}$	$T = 2.04$	API E.3.3.2
C1 = Factor		$C1 := 0.6$	API E.3.3.1
C2 = Factor	$C2 := \begin{cases} \frac{0.75S}{T} & \text{if } T \le 4.5 \\ \frac{3.375 \cdot S}{T^2} & \text{if } T > 4.5 \end{cases}$	$C2 = 0.44$	API E.3.3.2
W1 = Mass in unison	$W1 := 0.86 \cdot Wt_c$	$W1 = 86086\ lb$	
W2 = Mass sloshing	$W2 := 0.18 \cdot Wt_c$	$W2 = 18018\ lb$	
X1 = Height for W_1	$X1 := 0.42 \cdot H_L$	$X1 = 6.3\ ft$	
X2 = Height for W_2	$X2 := 0.79 \cdot H_L$	$X2 = 11.85\ ft$	
X_s = Tank centre of gravity	$X_s := \frac{H}{2}$	$X_s = 8\ ft$	

S_b = Base shear

$$S_b := Z \cdot I_{API} \cdot (C1 \cdot W_s + C1 \cdot W_r + C1 \cdot W1 + C2 \cdot W2)$$

$$S_b = 16084\ lb$$

$$\text{if}(Fe \vee Fw > S_b, \text{"UBC Governs, OK"}, \text{"API Governs, Redo"}) = \text{"UBC Governs, OK"}$$

M_b = Moment at bottom of foundation

$$M_b := Z \cdot I_{API} \cdot [C1 \cdot W_s \cdot (X_s + h) + C1 \cdot W_r \cdot (H + h) + C1 \cdot W1 \cdot (X1 + h) + C2 \cdot W2 \cdot (X2 + h)]$$

$$M_b = 150093\ lb\ ft$$

$$\text{if}(Me \vee Mw > M_b, \text{"UBC Governs, OK"}, \text{"API Governs, Redo"}) = \text{"UBC Governs, OK"}$$

CALCULATION SHEET

amec

CALC.: NO: 145579-C-CA-016 REV: 0
CALC. TITLE: Reagent Tank Foundations (Fdn #21 and 22) ISSUE DATE: 10 March 2005
PROJECT NO.: 145579
ATTACHMENT: 2 PROJECT TITLE: Final DBVS Design
ATTACHMENT TITLE: East Reagent Tank Foundation (Fdn #21) Page: 8 of 22
ORIGINATOR: Dirana Whitley CHECKER: [illegible]
DATE: March 10 /05 DATE: Mar 10 2005

NaOH 15% SOLUTION TANK (36-D74-113)

GENERAL DIMENSION

PC = Performance Class		$PC := 2$	
H_1 = Height of tank		$H_1 := 16ft$	
D_1 = Diameter of tank		$D_1 := 10ft$	
Hcg_1 = Height to center of gravity of tank	$Hcg_1 := 0.5 \cdot H_1$	$Hcg_1 = 8\,ft$	
Wt_{f1} = Weight of full tank		$Wt_{f1} := 54000lb$	Attachment 6
Wt_{e1} = Weight of empty tank		$Wt_{e1} := 10000lb$	Attachment 6
Wt_{c1} = Weight of tank contents	$Wt_{c1} := Wt_{f1} - Wt_{e1}$	$Wt_{c1} = 44000\,lb$	
h = Height of concrete foundation		$h := 2ft$	
$D1_1$ = Diameter of concrete foundation for weight	$D1_1 := D_1 + 2ft + 8in$	$D1_1 = 12.667\,ft$	
$D2_1$ = Diameter of effective area of concrete foundation in contact with the soil	$D2_1 := D_1 + 4ft + 8in$	$D2_1 = 14.667\,ft$	
$A2_1$ = Area of D2	$A2_1 := \frac{\pi \cdot D2_1^2}{4}$	$A2_1 = 168.9\,ft^2$	
wc = unit weight of concrete		$wc := 150\frac{lb}{ft^3}$	ASCE 7 Table C3-2 pg 250
$Wc1_1$ = Weight of concrete foundation	$Wc1_1 := wc \cdot h \cdot \pi \cdot \left(\frac{D1_1}{2}\right)^2$	$Wc1_1 = 37804\,lb$	
$S2_1$ = Elastic section modulus of foundation	$S2_1 := \frac{\pi \cdot D2_1^3}{32}$	$S2_1 = 310\,ft^3$	

CALCULATION SHEET

amec

CALC.: NO: 145579-C-CA-016 REV: 0
CALC. TITLE: Reagent Tank Foundations (Fdn #21 and 22) ISSUE DATE: 10 March 2005
PROJECT NO.: 145579
ATTACHMENT: 2 PROJECT TITLE: Final DBVS Design
ATTACHMENT TITLE: East Reagent Tank Foundation (Fdn #21) Page: 9 of 22
ORIGINATOR: Dirana Whitley CHECKER: [illegible]
DATE: March 10/05 DATE: MAR 10 2005

SOIL BEARING CAPACITY

AllowBC = Allowable bearing capacity $AllowBC := 3000 \frac{lb}{ft^2}$ Reference 5 Figure 4

$ActBC_1$ = Actual bearing pressure $ActBC_1 := \frac{Wt_{f1} + Wcl_1}{A2_1}$ $ActBC_1 = 543.386 \frac{lb}{ft^2}$

FOS_1 = Factor of Safety $FOS_1 := \frac{AllowBC}{ActBC_1}$ $FOS_1 = 5.521$

WIND

Following DOE-STD-1020-2002 and ASCE 7 standards
Method 2 6.5.13

Exposure C — TFC-ENG-STD-06 REV B-1 Table 3 Page 24

Kz = Velocity Pressure Exposure Coefficient

$$Kz(H_1) := \begin{cases} 0.86 & \text{if } H_1 \le 16ft \\ 0.98 & \text{if } H_1 = 30ft \\ 1.04 & \text{if } H_1 = 40ft \\ 1.19 & \text{if } H_1 = 75ft \\ \text{"prob"} & \text{otherwise} \end{cases}$$

ASCE 7 page 75

$Kz(H_1) = 0.86$

Kzt = Topographic Factor $Kzt := 1$ ASCE 7 page 47 flat ground

Kd = Wind Directionality Factor $Kd := 0.95$ ASCE 7 page 76 round

V = "Three-second gust" wind velocity $V := 85 \frac{mi}{hr}$ TFC-ENG-STD-06 REV B-1 Table 3 Page 24

I = Importance Factor

$$I(PC) := \begin{cases} 1.15 & \text{if } PC = 2 \\ 1.0 & \text{if } PC = 1 \\ \text{"prob"} & \text{otherwise} \end{cases}$$

$I(PC) = 1.15$ TFC-ENG-STD-06 REV B-1 Table 3 Page 24

qz = Velocity Pressure $qz := 0.00256 \left(\frac{hr}{mi \cdot ft}\right)^2 \cdot lb \cdot Kz(H_1) \cdot Kzt \cdot Kd \cdot V^2 \cdot I(PC)$ ASCE 7 page 31

CALCULATION SHEET

amec

CALC.: NO: 145579-C-CA-016 REV: 0
CALC. TITLE: Reagent Tank Foundations (Fdn #21 and 22) ISSUE DATE: 10 March 2005
PROJECT NO.: 145579
ATTACHMENT: 2 PROJECT TITLE: Final DBVS Design
ATTACHMENT TITLE: East Reagent Tank Foundation (Fdn #21) Page: 10 of 22
ORIGINATOR: Diana Whitley CHECKER: [illegible]
DATE: March 10/05 DATE: Mar 10 2005

$qz = 17.38 \frac{lb}{ft^2}$

G = Gust factor $G := 0.85$ ASCE 7 page 30

$\text{if}\left(D_1\sqrt{qz} > 2.5\sqrt{lb}, \text{"Use shown Cf factors"}, \text{"Change factors"}\right) = \text{"Use shown Cf factors"}$

Cf = Force Coefficient

$$Cf(x) := \begin{cases} 0.5 & \text{if } \frac{H_1}{D_1} < 7 \\ 0.7 & \text{if } 7 \le \frac{H_1}{D_1} < 25 \\ 0.8 & \text{if } 25 \le \frac{H_1}{D_1} \\ \text{"prob"} & \text{otherwise} \end{cases}$$

ASCE 7 page 69

$Cf\left(\frac{H_1}{D_1}\right) = 0.5$

Cp = Pressure Coefficient $Cp := 0.8$ UBC page 2-29 Table H

Af_1 = Area normal to the wind $Af_1 := H_1 \cdot D_1$ $Af_1 = 160\,ft^2$

Pw = Wind pressure $Pw := qz \cdot G \cdot Cp$ $Pw = 11.82 \frac{lb}{ft^2}$

Fw_1 = Wind force $Fw_1 := qz \cdot G \cdot Cp \cdot Af_1$ $Fw_1 = 1891\,lb$

Mw_1 = Wind moment $Mw_1 := Fw_1 \cdot (Hcg_1 + h)$ $Mw_1 = 18907\,lb\,ft$

W_{u1} = Unfactored wind pressure $W1_{u1} := \frac{Wt_{f1} + Wc1_1}{A2_1} + \frac{Mw_1}{S2_1}$

$W1_{u1} = 604 \frac{lb}{ft^2}$

$\text{if}\left(W1_{u1} \le 3000 \frac{lb}{ft^2}, \text{"Design is Good"}, \text{"Design is Bad"}\right) = \text{"Design is Good"}$

$W2_{u1} := \frac{Wt_{e1} + Wc1_1}{A2_1} - \frac{Mw_1}{S2_1}$

$W2_{u1} = 222 \frac{lb}{ft^2}$

$\text{if}\left(0 \le W2_{u1}, \text{"Design is Good"}, \text{"Design is Bad"}\right) = \text{"Design is Good"}$

CALCULATION SHEET

amec

CALC.: NO: 145579-C-CA-016 REV: 0
CALC. TITLE: Reagent Tank Foundations (Fdn #21 and 22) ISSUE DATE: 10 March 2005
PROJECT NO.: 145579
ATTACHMENT: 2 PROJECT TITLE: Final DBVS Design
ATTACHMENT TITLE: East Reagent Tank Foundation (Fdn #21) Page: 11 of 22
ORIGINATOR: Dirana Whitley CHECKER: Tan Moya
DATE: March 10/05 DATE: Mar 10 2005

SEISMIC

Following 1997 Uniform Building Code (UBC) standards

Seismic Zone = 2B — UBC page 2-37 Figure 16-2

Soil Profile = Sc — Reference 5 Page 11

Ip = Importance Factor — UBC page 2-30 Table 16-K

$$Ip(PC) := \begin{cases} 1.5 & \text{if } PC = 2 \\ 1.0 & \text{if } PC = 1 \\ \text{"prob"} & \text{otherwise} \end{cases}$$

$Ip(PC) = 1.5$

Z = Seismic zone factor — $Z := 0.2$ — UBC page 2-30 Table 16-I

Ca = Seismic coefficient — $Ca := 0.24$ — UBC page 2-34 Table 16-Q

ap = Horizontal Force Factor 1 — $ap := 1$ — UBC page 2-33 Table 16-O

Rp = Horizontal Force Factor 2 — $Rp := 3$ — UBC page 2-33 Table 16-O

hx = Height from ground to bottom of element — $hx := 0.0ft$

Fe_1 = Earthquake Force — UBC page 2-18 1632.2

$$Fea_1 := \frac{ap \cdot Ca \cdot Ip(PC)}{Rp} \cdot \left(1 + 3 \cdot \frac{hx}{H_1}\right) \cdot Wt_{f1}$$

$Fea_1 = 6480\,lb$

$Femax_1$ = Max earthquake force — $Femax_1 := 4.0 \cdot Ca \cdot Ip(PC) \cdot Wt_{f1}$ — UBC page 2-18 1632.2

$Femax_1 = 77760\,lb$

$Femin_1$ = Min earthquake force — $Femin_1 := 0.7 \cdot Ca \cdot Ip(PC) \cdot Wt_{f1}$ — UBC page 2-18 1632.2

$Femin_1 = 13608\,lb$

$$Fe_1 := \begin{cases} Femin_1 & \text{if } Femin_1 > Fea_1 \\ Femax_1 & \text{if } Fea_1 > Femax_1 \\ Fea_1 & \text{otherwise} \end{cases}$$

$Fe_1 = 13608\,lb$

Me_1 = Seismic moment — $Me_1 := Fe_1 \cdot (Hcg_1 + h)$ — $Me_1 = 136080\,lb\,ft$

CALCULATION SHEET

amec

CALC.: NO: 145579-C-CA-016 REV: 0 ISSUE DATE: 10 March 2005
CALC. TITLE: Reagent Tank Foundations (Fdn #21 and 22)
PROJECT NO.: 145579
ATTACHMENT: 2 PROJECT TITLE: Final DBVS Design
ATTACHMENT TITLE: East Reagent Tank Foundation (Fdn #21) Page: 12 of 22
ORIGINATOR: Diana Whitley CHECKER: [illegible]
DATE: March 10/05 DATE: Mar 10 2005

E_{u1} = Unfactored seismic pressure

$$El_{u1} := \frac{Wt_{f1} + Wcl_1}{A2_1} + \frac{Me_1}{S2_1}$$

$$El_{u1} = 983 \frac{lb}{ft^2}$$

$$\text{if}\left(El_{u1} \le 3000 \frac{lb}{ft^2}, \text{"Design is Good"}, \text{"Design is Bad"}\right) = \text{"Design is Good"}$$

$$E2_{u1} := \frac{Wt_{f1} + Wcl_1}{A2_1} - \frac{Me_1}{S2_1}$$

$$E2_{u1} = 104 \frac{lb}{ft^2}$$

$$\text{if}\left(0 \le E2_{u1}, \text{"Design is Good"}, \text{"Design is Bad"}\right) = \text{"Design is Good"}$$

LOAD CASES - FACTORED PRESSURE

UBC page 2-4
1612.2.1

LC 1 = 1.4D

$$LC1_1 := \frac{1.4 \cdot (Wt_{e1} + Wcl_1)}{A2_1} \quad (12\text{-}1)$$

$$LC1_1 = 396 \frac{lb}{ft^2}$$

LC 2 = 1.2D+1.6L

$$LC2_1 := \frac{1.2(Wt_{e1} + Wcl_1) + 1.6 \cdot Wt_{c1}}{A2_1} \quad (12\text{-}2)$$

$$LC2_1 = 756 \frac{lb}{ft^2}$$

LC 3 = 1.2D+1.0L+1.3W

$$LC3_1 := \frac{1.2 \cdot (Wt_{e1} + Wcl_1) + 1.0 \cdot Wt_{c1}}{A2_1} + \frac{1.3 \cdot Mw_1}{S2_1} \quad 12\text{-}4)$$

$$LC3_1 = 679 \frac{lb}{ft^2}$$

LC 4 = 1.2D+1.0L+1.0E

$$LC4_1 := \frac{1.2 \cdot (Wt_{e1} + Wcl_1) + 1.0 \cdot Wt_{c1}}{A2_1} + \frac{1.0 \cdot Me_1}{S2_1} \quad (12\text{-}5)$$

$$LC4_1 = 1039 \frac{lb}{ft^2}$$

$$\max(LC1_1, LC2_1, LC3_1, LC4_1) = 1039 \frac{lb}{ft^2}$$

CALCULATION SHEET

amec

CALC.: NO: 145579-C-CA-016 REV: 0
CALC. TITLE: Reagent Tank Foundations (Fdn #21 and 22) ISSUE DATE: 10 March 2005
PROJECT NO.: 145579
ATTACHMENT: 2 PROJECT TITLE: Final DBVS Design
ATTACHMENT TITLE: East Reagent Tank Foundation (Fdn #21) Page: 13 of 22
ORIGINATOR: Dirana Whitley CHECKER: [illegible]
DATE: March 10/05 DATE: Mar 10 2005

SLAB MOMENT CAPACITY CHECK

$$\text{if}\left(Me_1 \le Mw_1, \text{"Wind Governs"}, \text{"Seismic Governs"}\right) = \text{"Seismic Governs"}$$

Between the seismic and wind moments, seismic has a larger moment.

P_{f1} = Factored downward pressure from tank and contents

$$P_{f1} := \frac{1.2\cdot\left(Wt_{e1} + Wcl_1\right) + 1.0\cdot Wt_{c1}}{A2_1}$$

$$P_{f1} = 600\,\frac{lb}{ft^2}$$

$LC4_1$ is the maximum factored upwards pressure. Subtracting the downwards pressure from the upwards pressure and assuming that the result is a uniformly distributred load along a simple beam, the diameter of the tank, a conservative moment at the center or the foundation in the top rebar will be found.

M_{tr1} = Top rebar moment

$$M_{tr1} := \frac{\left(LC4_1 - P_{f1}\right)\cdot D_1^{\,2}}{8} \qquad M_{tr1} = 5492\,\frac{lb\cdot ft}{ft}$$

Assuming a catilever of 2 feet with the maximum factored pressure $LC4_1$ acting as a uniformly distributed load, the moment in the bottom rebar will be found.

L = Assumed overhang $\qquad L := 2ft$

M_{br1} = Bottom rebar moment

$$M_{br1} := \frac{LC4_1\cdot L^2}{2} \qquad M_{br1} = 2079\,\frac{lb\cdot ft}{ft}$$

Mu_1 = Moment resistance per foot $\qquad Mu_1 := 40000\,\frac{lb\cdot ft}{ft}$ $\qquad$ Attachment 4

$$\text{if}\left(M_{tr1} \wedge M_{br1} \le Mu_1, \text{"Rebar is sufficient"}, \text{"More rebar is neeced"}\right) = \text{"Rebar is sufficient"}$$

American Petroleum Institute - shear and moment check

UBC page 2-22
1634.4 2

Of the empty weight: 30% is the weight of the roof,
50% is the weight of the walls and
20% is the weight of the floor

W_{r1} = Weight of roof $\qquad W_{r1} := 0.3\cdot Wt_{e1} \qquad W_{r1} = 3000\,lb$

W_{s1} = Weight of tank shell $\qquad W_{s1} := 0.5\cdot Wt_{e1} \qquad W_{s1} = 5000\,lb$

A_{r1} = Area of top and bottom of tank $\qquad A_{r1} := \pi\cdot\left(\frac{D_1 + 6in}{2}\right)^2 \qquad A_{r1} = 87\,ft^2$

A_{w1} = Area of walls $\qquad A_{w1} := \pi\cdot D_1\cdot H_1 \qquad A_{w1} = 503\,ft^2$

H_{L1} = Height of liquid $\qquad H_{L1} := H_1 - 1ft \qquad H_{L1} = 15\,ft$

CALCULATION SHEET

amec

CALC.: NO: 145579-C-CA-016 REV: 0
CALC. TITLE: Reagent Tank Foundations (Fdn #21 and 22) ISSUE DATE: 10 March 2005
PROJECT NO.: 145579
ATTACHMENT: 2 PROJECT TITLE: Final DBVS Design
ATTACHMENT TITLE: East Reagent Tank Foundation (Fdn #21) Page: 14 of 22
ORIGINATOR: Dirana Whitley CHECKER: Paul Meyer
DATE: March 10/05 DATE: Mar 10 2005

D_1/H_{L1} = Diameter to height ratio $\frac{D_1}{H_{L1}} = 0.667$

I_{API} = Importance factor $I_{API} := 1.25$ API E.3.1

S = Site Coefficient $S := 1.2$ API Table E-2

k = Factor $k := 0.59$ API Figure E-4

T_1 = Factor $T_1 := k \cdot \sqrt{\frac{D_1}{ft}}$ $T_1 = 1.87$ API E.3.3.2

C1 = Factor $C1 := 0.6$ API E.3.3.1

$C2_1$ = Factor $C2_1 := \begin{cases} \frac{0.75S}{T_1} & \text{if } T_1 \le 4.5 \\ \frac{3.375 \cdot S}{T_1^2} & \text{if } T_1 > 4.5 \end{cases}$ API E.3.3.2

$C2_1 = 0.48$

$W1_1$ = Mass in unison $W1_1 := 0.86 \cdot Wt_{c1}$ $W1_1 = 37840\,lb$

$W2_1$ = Mass sloshing $W2_1 := 0.18 \cdot Wt_{c1}$ $W2_1 = 7920\,lb$

$X1_1$ = Height for W_1 $X1_1 := 0.42 \cdot H_{L1}$ $X1_1 = 6.3\,ft$

$X2_1$ = Height for W_2 $X2_1 := 0.79 \cdot H_{L1}$ $X2_1 = 11.85\,ft$

X_{s1} = Tank centre of gravity $X_{s1} := \frac{H_1}{2}$ $X_{s1} = 8\,ft$

S_{b1} = Base shear

$$S_{b1} := Z \cdot I_{API} \cdot (C1 \cdot W_{s1} + C1 \cdot W_{r1} + C1 \cdot W1_1 + C2_1 \cdot W2_1)$$

$$S_{b1} = 7831\,lb$$

$$\text{if}(Fe_1 \vee Fw_1 > S_{b1}, \text{"UBC Governs, OK"}, \text{"API Governs, Redo"}) = \text{"UBC Governs, OK"}$$

M_b = Moment at bottom of foundation

$$M_{b1} := Z \cdot I_{API} \left[C1 \cdot W_{s1} \cdot (X_{s1} + h) + C1 \cdot W_{r1} \cdot (H_1 + h) + C1 \cdot W1_1 \cdot (X1_1 + h) + C2_1 \cdot W2_1 \cdot (X2_1 + h) \right]$$

$$M_{b1} = 75939\,lb\,ft$$

$$\text{if}(Me_1 \vee Mw_1 > M_{b1}, \text{"UBC Governs, OK"}, \text{"API Governs, Redo"}) = \text{"UBC Governs, OK"}$$

CALCULATION SHEET

amec

CALC.: NO: 145579-C-CA-016 REV: 0
CALC. TITLE: Reagent Tank Foundations (Fdn #21 and 22) ISSUE DATE: 10 March 2005
PROJECT NO.: 145579
ATTACHMENT: 2 PROJECT TITLE: Final DBVS Design
ATTACHMENT TITLE: East Reagent Tank Foundation (Fdn #21) Page: 15 of 22
ORIGINATOR: Dirana Whitley CHECKER: Pam Moya
DATE: March 10/05 DATE: Mar 10 2005

NaOH 50% SOLUTION TANK (36-D74-007)

GENERAL DIMENSION

PC = Performance Class		$PC := 2$	
H_2 = Height of tank		$H_2 := 12ft$	
D_2 = Diameter of tank		$D_2 := 6ft$	
Hcg_2 = Height to center of gravity of tank	$Hcg_2 := 0.5 \cdot H_2$	$Hcg_2 = 6\,ft$	
Wt_{f2} = Weight of full tank		$Wt_{f2} := 27000lb$	Attachment 6
Wt_{e2} = Weight of empty tank		$Wt_{e2} := 5000lb$	Attachment 6
Wt_{c2} = Weight of tank contents	$Wt_{c2} := Wt_{f2} - Wt_{e2}$	$Wt_{c2} = 22000\,lb$	
h = Height of concrete foundation		$h := 2ft$	
$D1_2$ = Diameter of concrete foundation for weight	$D1_2 := D_2 + 2ft + 8in$	$D1_2 = 8.667\,ft$	
$D2_2$ = Diameter of effective area of concrete foundation in contact with the soil	$D2_2 := D_2 + 4ft + 8in$	$D2_2 = 10.667\,ft$	
$A2_2$ = Area of $D2_2$	$A2_2 := \frac{\pi \cdot D2_2^2}{4}$	$A2_2 = 89.4\,ft^2$	
wc = unit weight of concrete		$wc := 150 \frac{lb}{ft^3}$	ASCE 7 Table C3-2 pg 250
$Wc1_2$ = Weight of concrete foundation	$Wc1_2 := wc \cdot h \cdot \pi \cdot \left(\frac{D1_2}{2}\right)^2$	$Wc1_2 = 17697.6\,lb$	
$S2_2$ = Elastic section modulus of foundation	$S2_2 := \frac{\pi \cdot D2_2^3}{32}$	$S2_2 = 119.148\,ft^3$	

CALCULATION SHEET

amec

CALC.: NO: 145579-C-CA-016 REV: 0
CALC. TITLE: Reagent Tank Foundations (Fdn #21 and 22) ISSUE DATE: 10 March 2005
PROJECT NO.: 145579
ATTACHMENT: 2 PROJECT TITLE: Final DBVS Design
ATTACHMENT TITLE: East Reagent Tank Foundation (Fdn #21) Page: 16 of 22
ORIGINATOR: Diana Whitley CHECKER: [illegible]
DATE: March 10/05 DATE: Mar 10 2005

SOIL BEARING CAPACITY

AllowBC = Allowable bearing capacity $\quad AllowBC := 3000\frac{lb}{ft^2}$ Reference 5 Figure 4

$ActBC_2$ = Actual bearing pressure $\quad ActBC_2 := \frac{Wt_{f2} + Wcl_2}{A2_2} \quad ActBC_2 = 500.193\frac{lb}{ft^2}$

FOS_2 = Factor of Safety $\quad FOS_2 := \frac{AllowBC}{ActBC_2} \quad FOS_2 = 5.998$

WIND

Following DOE-STD-1020-2002 and ASCE 7 standards
Method 2 6.5.13

Exposure C — TFC-ENG-STD-06 REV B-1 Table 3 Page 24

Kz = Velocity Pressure Exposure Coefficient — ASCE 7 page 75

$$Kz(H_2) := \begin{cases} 0.86 & \text{if } H_2 \le 16ft \\ 0.98 & \text{if } H_2 = 30ft \\ 1.04 & \text{if } H_2 = 40ft \\ 1.19 & \text{if } H_2 = 75ft \\ \text{"prob"} & \text{otherwise} \end{cases}$$

$Kz(H_2) = 0.86$

Kzt = Topographic Factor $\quad Kzt := 1$ — ASCE 7 page 47 flat ground

Kd = Wind Directionality Factor $\quad Kd := 0.95$ — ASCE 7 page 76 round

V = "Three-second gust" wind velocity $\quad V := 85\frac{mi}{hr}$ — TFC-ENG-STD-06 REV B-1 Table 3 Page 24

I = Importance Factor

$$I(PC) := \begin{cases} 1.15 & \text{if } PC = 2 \\ 1.0 & \text{if } PC = 1 \\ \text{"prob"} & \text{otherwise} \end{cases} \qquad I(PC) = 1.15$$

TFC-ENG-STD-06 REV B-1 Table 3 Page 24

qz = Velocity Pressure $\quad qz := 0.00256\left(\frac{hr}{mi \cdot ft}\right)^2 \cdot lb \cdot Kz(H_2) \cdot Kzt \cdot Kd \cdot V^2 \cdot I(PC)$ ASCE 7 page 31

CALCULATION SHEET

amec

CALC.: NO: 145579-C-CA-016 REV: 0
CALC. TITLE: Reagent Tank Foundations (Fdn #21 and 22) ISSUE DATE: 10 March 2005
PROJECT NO.: 145579
ATTACHMENT: 2 PROJECT TITLE: Final DBVS Design
ATTACHMENT TITLE: East Reagent Tank Foundation (Fdn #21) Page: 17 of 22
ORIGINATOR: Dirvana Whitley CHECKER: Paul Moya
DATE: March 10/05 DATE: Mar 10 2005

$qz = 17.38 \frac{lb}{ft^2}$

G = Gust factor $G := 0.85$ ASCE 7 page 30

$\text{if}\left(D_2 \cdot \sqrt{qz} > 2.5\sqrt{lb}, \text{"Use shown Cf factors"}, \text{"Change factors"}\right) = \text{"Use shown Cf factors"}$

Cf = Force Coefficient

$$Cf(x) := \begin{cases} 0.5 & \text{if } \frac{H_2}{D_2} < 7 \\ 0.7 & \text{if } 7 \le \frac{H_2}{D_2} < 25 \\ 0.8 & \text{if } 25 \le \frac{H_2}{D_2} \\ \text{"prob"} & \text{otherwise} \end{cases}$$

ASCE 7 page 69

$Cf\left(\frac{H_2}{D_2}\right) = 0.5$

Cp = Pressure Coefficient $Cp := 0.8$ UBC page 2-29 Table H

Af_2 = Area normal to the wind $Af_2 := H_2 \cdot D_2$ $Af_2 = 72\,ft^2$

Pw = Wind pressure $Pw := qz \cdot G \cdot Cp$ $Pw = 11.82 \frac{lb}{ft^2}$

Fw_2 = Wind force $Fw_2 := qz \cdot G \cdot Cp \cdot Af_2$ $Fw_2 = 851\,lb$

Mw_2 = Wind moment $Mw_2 := Fw_2 \cdot (Hcg_2 + h)$ $Mw_2 = 6807\,lb\,ft$

W_{u2} = Unfactored wind pressure $W1_{u2} := \frac{Wt_{f2} + Wcl_2}{A2_2} + \frac{Mw_2}{S2_2}$

$W1_{u2} = 557 \frac{lb}{ft^2}$

$\text{if}\left(W1_{u2} \le 3000 \frac{lb}{ft^2}, \text{"Design is Good"}, \text{"Design is Bad"}\right) = \text{"Design is Good"}$

$W2_{u2} := \frac{Wt_{e2} + Wcl_2}{A2_2} - \frac{Mw_2}{S2_2}$

$W2_{u2} = 197 \frac{lb}{ft^2}$

$\text{if}\left(0 \le W2_{u2}, \text{"Design is Good"}, \text{"Design is Bad"}\right) = \text{"Design is Good"}$

CALCULATION SHEET

amec

CALC.: NO: 145579-C-CA-016 REV: 0
CALC. TITLE: Reagent Tank Foundations (Fdn #21 and 22) ISSUE DATE: 10 March 2005
PROJECT NO.: 145579
ATTACHMENT: 2 PROJECT TITLE: Final DBVS Design
ATTACHMENT TITLE: East Reagent Tank Foundation (Fdn #21) Page: 18 of 22
ORIGINATOR: Diana Whitley CHECKER: Paul Moya
DATE: March 10/05 DATE: MAR 10 2005

SEISMIC

Following 1997 Uniform Building Code (UBC) standards

Seismic Zone = 2B — UBC page 2-37 Figure 16-2

Soil Profile = Sc — Reference 5 Page 11

Ip = Importance Factor — UBC page 2-30 Table 16-K

$$Ip(PC) := \begin{cases} 1.5 & \text{if } PC = 2 \\ 1.0 & \text{if } PC = 1 \\ \text{"prob"} & \text{otherwise} \end{cases}$$

$Ip(PC) = 1.5$

Z = Seismic zone factor — $Z := 0.2$ — UBC page 2-30 Table 16-I

Ca = Seismic coefficient — $Ca := 0.24$ — UBC page 2-34 Table 16-Q

ap = Horizontal Force Factor 1 — $ap := 1$ — UBC page 2-33 Table 16-O

Rp = Horizontal Force Factor 2 — $Rp := 3$ — UBC page 2-33 Table 16-O

hx = Height from ground to bottom of element — $hx := 0.0ft$

Fe_2 = Earthquake Force — UBC page 2-18 1632.2

$$Fea_2 := \frac{ap \cdot Ca \cdot Ip(PC)}{Rp} \cdot \left(1 + 3 \cdot \frac{hx}{H_2}\right) \cdot Wt_{f2}$$

$Fea_2 = 3240\,lb$

$Femax_2$ = Max earthquake force — $Femax_2 := 4.0 \cdot Ca \cdot Ip(PC) \cdot Wt_{f2}$ — UBC page 2-18 1632.2

$Femax_2 = 38880\,lb$

$Femin_2$ = Min earthquake force — $Femin_2 := 0.7 \cdot Ca \cdot Ip(PC) \cdot Wt_{f2}$ — UBC page 2-18 1632.2

$Femin_2 = 6804\,lb$

$$Fe_2 := \begin{cases} Femin_2 & \text{if } Femin_2 > Fea_2 \\ Femax_2 & \text{if } Fea_2 > Femax_2 \\ Fea_2 & \text{otherwise} \end{cases}$$

$Fe_2 = 6804\,lb$

Me_2 = Seismic moment — $Me_2 := Fe_2 \cdot (Hcg_2 + h)$ — $Me_2 = 54432\,lb\,ft$

CALCULATION SHEET

amec

CALC.: NO: 145579-C-CA-016 REV: 0
CALC. TITLE: Reagent Tank Foundations (Fdn #21 and 22) ISSUE DATE: 10 March 2005
PROJECT NO.: 145579
ATTACHMENT: 2 PROJECT TITLE: Final DBVS Design
ATTACHMENT TITLE: East Reagent Tank Foundation (Fdn #21) Page: 19 of 22
ORIGINATOR: Dirana Whitley CHECKER: Tan Moya
DATE: March 10/05 DATE: Mar 10 2005

E_{u2} = Unfactored seismic pressure

$$El_{u2} := \frac{Wt_{f2} + Wcl_2}{A2_2} + \frac{Me_2}{S2_2}$$

$$El_{u2} = 957 \frac{lb}{ft^2}$$

$$\text{if}\left(El_{u2} \le 3000 \frac{lb}{ft^2}, \text{"Design is Good"}, \text{"Design is Bad"}\right) = \text{"Design is Good"}$$

$$E2_{u2} := \frac{Wt_{f2} + Wcl_2}{A2_2} - \frac{Me_2}{S2_2}$$

$$E2_{u2} = 43 \frac{lb}{ft^2}$$

$$\text{if}\left(0 \le E2_{u2}, \text{"Design is Good"}, \text{"Design is Bad"}\right) = \text{"Design is Good"}$$

LOAD CASES - FACTORED PRESSURE

UBC page 2-4
1612.2.1

LC 1 = 1.4D

$$LC1_2 := \frac{1.4 \cdot (Wt_{e2} + Wcl_2)}{A2_2} \quad (12\text{-}1)$$

$$LC1_2 = 356 \frac{lb}{ft^2}$$

LC 2 = 1.2D+1.6L

$$LC2_2 := \frac{1.2(Wt_{e2} + Wcl_2) + 1.6 \cdot Wt_{c2}}{A2_2} \quad (12\text{-}2)$$

$$LC2_2 = 699 \frac{lb}{ft^2}$$

LC 3 = 1.2D+1.0L+1.3W

$$LC3_2 := \frac{1.2 \cdot (Wt_{e2} + Wcl_2) + 1.0 \cdot Wt_{c2}}{A2_2} + \frac{1.3 \cdot Mw_2}{S2_2} \quad (12\text{-}4)$$

$$LC3_2 = 625 \frac{lb}{ft^2}$$

LC 4 = 1.2D+1.0L+1.0E

$$LC4_2 := \frac{1.2 \cdot (Wt_{e2} + Wcl_2) + 1.0 \cdot Wt_{c2}}{A2_2} + \frac{1.0 \cdot Me_2}{S2_2} \quad (12\text{-}5)$$

$$LC4_2 = 1008 \frac{lb}{ft^2}$$

$$\max(LC1_2, LC2_2, LC3_2, LC4_2) = 1008 \frac{lb}{ft^2}$$

CALCULATION SHEET

amec

CALC.: NO: 145579-C-CA-016 REV: 0
CALC. TITLE: Reagent Tank Foundations (Fdn #21 and 22) ISSUE DATE: 10 March 2005
PROJECT NO.: 145579
ATTACHMENT: 2 PROJECT TITLE: Final DBVS Design
ATTACHMENT TITLE: East Reagent Tank Foundation (Fdn #21) Page: 20 of 22
ORIGINATOR: Dirana Whitley CHECKER: Ron Moyer
DATE: March 10/05 DATE: Mar 10 2005

SLAB MOMENT CAPACITY CHECK

$$\text{if}\left(Mc_2 \le Mw_2, \text{"Wind Governs"}, \text{"Seismic Governs"}\right) = \text{"Seismic Governs"}$$

Between the seismic and wind moments, seismic has a larger moment.

P_{f2} = Factored downward pressure from tank and contents

$$P_{f2} := \frac{1.2\cdot\left(Wt_{c2} + Wcl_2\right) + 1.0\cdot Wt_{c2}}{A2_2}$$

$$P_{f2} = 551\,\frac{lb}{ft^2}$$

$LC4_2$ is the maximum factored upwards pressure. Subtracting the downwards pressure from the upwards pressure and assuming that the result is a uniformly distributred load along a simple beam, the diameter of the tank, a conservative moment at the center or the foundation in the top rebar will be found.

M_{tr2} = Top rebar moment

$$M_{tr2} := \frac{\left(LC4_2 - P_{f2}\right)\cdot D_2^{\,2}}{8} \qquad M_{tr2} = 2056\,\frac{lb\cdot ft}{ft}$$

Assuming a catilever of 2 feet with the maximum factored pressure LC4 acting as a uniformly distributed load, the moment in the bottom rebar will be found.

L = Assumed overhang $\qquad L := 2ft$

M_{br2} = Bottom rebar moment

$$M_{br2} := \frac{LC4_2\cdot L^2}{2} \qquad M_{br2} = 2016\,\frac{lb\cdot ft}{ft}$$

Mu_2 = Moment resistance per foot $\qquad Mu_2 := 40000\,\frac{lb\cdot ft}{ft}$ $\qquad$ Attachment 4

$$\text{if}\left(M_{tr2} \wedge M_{br2} \le Mu_2, \text{"Rebar is sufficient"}, \text{"More rebar is neeced"}\right) = \text{"Rebar is sufficient"}$$

American Petroleum Institute - shear and moment check

UBC page 2-22
1634.4 2

Of the empty weight: 30% is the weight of the roof,
50% is the weight of the walls and
20% is the weight of the floor

W_{r2} = Weight of roof $\qquad W_{r2} := 0.3\cdot Wt_{c2} \qquad W_{r2} = 1500\,lb$

W_{s2} = Weight of tank shell $\qquad W_{s2} := 0.5\cdot Wt_{c2} \qquad W_{s2} = 2500\,lb$

A_{r2} = Area of top and bottom of tank $\qquad A_{r2} := \pi\cdot\left(\frac{D_2 + 6in}{2}\right)^2 \qquad A_{r2} = 33\,ft^2$

A_{w2} = Area of walls $\qquad A_{w2} := \pi\cdot D_2\cdot H_2 \qquad A_{w2} = 226\,ft^2$

H_{L2} = Height of liquid $\qquad H_{L2} := H_2 - 1ft \qquad H_{L2} = 11\,ft$

CALCULATION SHEET

amec

CALC.: NO: 145579-C-CA-016 REV: 0
CALC. TITLE: Reagent Tank Foundations (Fdn #21 and 22) ISSUE DATE: 10 March 2005
PROJECT NO.: 145579
ATTACHMENT: 2 PROJECT TITLE: Final DBVS Design
ATTACHMENT TITLE: East Reagent Tank Foundation (Fdn #21) Page: 21 of 22
ORIGINATOR: Dirana Whitley CHECKER: Pam Moyon
DATE: March 10/05 DATE: Mar 10 2005

D_2/H_{L2} = Diameter to height ratio		$\frac{D_2}{H_{L2}} = 0.545$	
I_{API} = Importance factor		$I_{API} := 1.25$	API E.3.1
S = Site Coefficient		$S := 1.2$	API Table E-2
k = Factor		$k := 0.59$	API Figure E-4
T_2 = Factor	$T_2 := k \cdot \sqrt{\frac{D_2}{ft}}$	$T_2 = 1.45$	API E.3.3.2
C1 = Factor		$C1 := 0.6$	API E.3.3.1
$C2_2$ = Factor	$C2_2 := \begin{cases} \frac{0.75S}{T_2} & \text{if } T_2 \le 4.5 \\ \frac{3.375 \cdot S}{T_2^2} & \text{if } T_2 > 4.5 \end{cases}$	$C2_2 = 0.62$	API E.3.3.2
$W1_2$ = Mass in unison	$W1_2 := 0.86 \cdot Wt_{c2}$	$W1_2 = 18920\,lb$	
$W2_2$ = Mass sloshing	$W2_2 := 0.18 \cdot Wt_{c2}$	$W2_2 = 3960\,lb$	
$X1_2$ = Height for W_1	$X1_2 := 0.42 \cdot H_{L2}$	$X1_2 = 4.62\,ft$	
$X2_2$ = Height for W_2	$X2_2 := 0.79 \cdot H_{L2}$	$X2_2 = 8.69\,ft$	
X_{s2} = Tank centre of gravity	$X_{s2} := \frac{H_2}{2}$	$X_{s2} = 6\,ft$	

S_{b2} = Base shear

$$S_{b2} := Z \cdot I_{API} \cdot (C1 \cdot W_{s2} + C1 \cdot W_{r2} + C1 \cdot W1_2 + C2_2 \cdot W2_2)$$

$$S_{b2} = 4055\,lb$$

$$\text{if}(Fe_2 \vee Fw_2 > S_{b2}, \text{"UBC Governs, OK"}, \text{"API Governs, Redo"}) = \text{"UBC Governs, OK"}$$

M_{b2} = Moment at bottom of foundation

$$M_{b2} := Z \cdot I_{API} \cdot [C1 \cdot W_{s2} \cdot (X_{s2} + h) + C1 \cdot W_{r2} \cdot (H_2 + h) + C1 \cdot W1_2 \cdot (X1_2 + h) + C2_2 \cdot W2_2 \cdot (X2_2 + h)]$$

$$M_{b2} = 31528\,lb\,ft$$

$$\text{if}(Me_2 \vee Mw_2 > M_{b2}, \text{"UBC Governs, OK"}, \text{"API Governs, Redo"}) = \text{"UBC Governs, OK"}$$

CALCULATION SHEET

amec

CALC.: NO: 145579-C-CA-016 REV: 0
CALC. TITLE: Reagent Tank Foundations (Fdn #21 and 22) ISSUE DATE: 10 March 2005
PROJECT NO.: 145579
ATTACHMENT: 2 PROJECT TITLE: Final DBVS Design
ATTACHMENT TITLE: East Reagent Tank Foundation (Fdn #21) Page: 22 of 22
ORIGINATOR: Diana Whitley CHECKER: Tan Moyo
DATE: March 10/05 DATE: MAR 10 2005

GENERAL DIMENSIONS OF WHOLE FOUNDATION

l = Lenght of foundation $l := 30ft$

b = Width of foundation $b := 24ft$

W_T = Total Weight $W_T := Wcl + Wcl_1 + Wcl_2 + Wt_f + Wt_{f1} + Wt_{f2}$

$W_T = 297186 lb$

Fw_T = Total Wind Force $Fw_T := Fw + Fw_1 + Fw_2$ $Fw_T = 5011 lb$

Fe_T = Total Seismic Force $Fe_T := Fe + Fe_1 + Fe_2$ $Fe_T = 48132 lb$

FRICTION

f = friction coefficient $f := 0.34$ Reference 5 Page 4 Table 1

ResSD = Resistance from siding $ResSD := W_T \cdot f$ $ResSD = 101043 lb$

$$if(Fw_T \le ResSD, \text{"Design is Good"}, \text{"Design is Bad"}) = \text{"Design is Good"}$$

FOS4 = Factor of Safety $FOS4 := \frac{ResSD}{Fw_T}$ $FOS4 = 20.16$

$$if(Fe_T \le ResSD, \text{"Design is Good"}, \text{"Design is Bad"}) = \text{"Design is Good"}$$

FOS5 = Factor of Safety $FOS5 := \frac{ResSD}{Fe_T}$ $FOS5 = 2.1$

145579-C-CA-016

Attachment 3

West Reagent Tank Foundation (Fdn #22)
(MathCAD Calculations)

CALCULATION SHEET

amec

CALC.: NO: 145579-C-CA-016 REV: 0
CALC. TITLE: Reagent Tank Foundations (Fdn #21 and 22) ISSUE DATE: 10 March 2005
PROJECT NO.: 145579
ATTACHMENT: 3 PROJECT TITLE: Final DBVS Design
ATTACHMENT TITLE: West Reagent Tank Foundation (Fdn #22) Page: 1 of 15
ORIGINATOR: Diana Whitley CHECKER: [illegible]
DATE: March 10/05 DATE: mar 10 2005

NaClO2 TANK NO. 1 (36-D74-005) & NaClO2 TANK NO. 2 (36-D74-112)

GENERAL DIMENSION

PC = Performance Class		$PC := 2$	
H = Height of tank		$H := 16ft$	
D = Diameter of tank		$D := 10ft$	
Hcg = Height to center of gravity of tank	$Hcg := 0.5 \cdot H$	$Hcg = 8\,ft$	
Wt_f = Weight of tank		$Wt_f := 82300lb$	Attachment 6
Wt_e = Weight of empty tank		$Wt_e := 8500lb$	Attachment 6
Wt_c = Weight of tank contents	$Wt_c := Wt_f - Wt_e$	$Wt_c = 73800\,lb$	
h = Height of concrete foundation		$h := 2ft$	
D1 = Diameter of concrete foundation for weight	$D1 := D + 2ft + 8in$	$D1 = 12.667\,ft$	
D2 = Diameter of effective area of concrete foundation in contact with the soil	$D2 := D + 4ft + 8in$	$D2 = 14.667\,ft$	
A2 = Area of D2	$A2 := \frac{\pi \cdot D2^2}{4}$	$A2 = 168.9\,ft^2$	
wc = unit weight of concrete		$wc := 150 \frac{lb}{ft^3}$	ASCE 7 Table C3-2 pg 250
Wc1 = Weight of concrete foundation	$Wc1 := wc \cdot h \cdot \pi \cdot \left(\frac{D1}{2}\right)^2$	$Wc1 = 37804\,lb$	
S2 = Elastic section modulus of foundation	$S2 := \frac{\pi \cdot D2^3}{32}$	$S2 = 310\,ft^3$	

CALCULATION SHEET

amec

CALC.: NO: 145579-C-CA-016 REV: 0
CALC. TITLE: Reagent Tank Foundations (Fdn #21 and 22) ISSUE DATE: 10 March 2005
PROJECT NO.: 145579
ATTACHMENT: 3 PROJECT TITLE: Final DBVS Design
ATTACHMENT TITLE: West Reagent Tank Foundation (Fdn #22) Page: 2 of 15
ORIGINATOR: Dirana Whitley CHECKER: Pam Moyer
DATE: March 10/05 DATE: MAR 10 2005

SOIL BEARING CAPACITY

AllowBC = Allowable bearing capacity $\quad AllowBC := 3000 \frac{lb}{ft^2}$ Reference 5 Figure 4

ActBC = Actual bearing pressure $\quad ActBC := \frac{Wt_f + Wcl}{A2} \quad ActBC = 711 \frac{lb}{ft^2}$

FOS = Factor of Safety $\quad FOS := \frac{AllowBC}{ActBC} \quad FOS = 4.22$

WIND

Following DOE-STD-1020-2002 and ASCE 7 standards
Method 2 6.5.13

Exposure C — TFC-ENG-STD-06 REV B-1 Table 3 Page 24

Kz = Velocity Pressure Exposure Coefficient — ASCE 7 page 75

$$Kz(H) := \begin{cases} 0.86 & \text{if } H \le 16ft \\ 0.98 & \text{if } H = 30ft \\ 1.04 & \text{if } H = 40ft \\ 1.19 & \text{if } H = 75ft \\ \text{"prob"} & \text{otherwise} \end{cases}$$

$Kz(H) = 0.86$

Kzt = Topographic Factor $\quad Kzt := 1$ — ASCE 7 page 47 flat ground

Kd = Wind Directionality Factor $\quad Kd := 0.95$ — ASCE 7 page 76 round

V = "Three-second gust" wind velocity $\quad V := 85 \frac{mi}{hr}$ — TFC-ENG-STD-06 REV B-1 Table 3 Page 24

I = Importance Factor

$$I(PC) := \begin{cases} 1.15 & \text{if } PC = 2 \\ 1.0 & \text{if } PC = 1 \\ \text{"prob"} & \text{otherwise} \end{cases} \qquad I(PC) = 1.15$$

TFC-ENG-STD-06 REV B-1 Table 3 Page 24

qz = Velocity Pressure

$$qz := 0.00256\left(\frac{hr}{mi \cdot ft}\right)^2 \cdot lb \cdot Kz(H) \cdot Kzt \cdot Kd \cdot V^2 \cdot I(PC)$$

ASCE 7 page 31

$$qz = 17.38 \frac{lb}{ft^2}$$

CALCULATION SHEET

amec

CALC.: NO: 145579-C-CA-016 REV: 0
CALC. TITLE: Reagent Tank Foundations (Fdn #21 and 22) ISSUE DATE: 10 March 2005
PROJECT NO.: 145579
ATTACHMENT: 3 PROJECT TITLE: Final DBVS Design
ATTACHMENT TITLE: West Reagent Tank Foundation (Fdn #22) Page: 3 of 15
ORIGINATOR: Dirana Whitley CHECKER: [illegible]
DATE: March 10/05 DATE: MAR 10 2005

G = Gust factor $G := 0.85$ ASCE 7 page 30

$$\text{if}\left(D\cdot\sqrt{qz} > 2.5\sqrt{lb}, \text{"Use shown Cf factors"}, \text{"Change factors"}\right) = \text{"Use shown Cf factors"}$$

Cf = Force Coefficient ASCE 7 page 69

$$Cf(x) := \begin{cases} 0.5 & \text{if } \frac{H}{D} < 7 \\ 0.7 & \text{if } 7 \le \frac{H}{D} < 25 \\ 0.8 & \text{if } 25 \le \frac{H}{D} \\ \text{"prob"} & \text{otherwise} \end{cases}$$

$$Cf\left(\frac{H}{D}\right) = 0.5$$

Cp = Pressure Coefficient $Cp := 0.8$ UBC page 2-29 Table H

Af = Area normal to the wind $Af := H\cdot D$ $Af = 160\,ft^2$

Pw = Wind pressure $Pw := qz\cdot G\cdot Cp$ $Pw = 11.82\,\frac{lb}{ft^2}$

Fw = Wind force $Fw := qz\cdot G\cdot Cp\cdot Af$ $Fw = 1891\,lb$

Mw = Wind moment $Mw := Fw\cdot(Hcg + h)$ $Mw = 18907\,lb\,ft$

W_u = Unfactored wind pressure $W1_u := \frac{Wt_f + Wcl}{A2} + \frac{Mw}{S2}$

$$W1_u = 772\,\frac{lb}{ft^2}$$

$$\text{if}\left(W1_u \le 3000\,\frac{lb}{ft^2}, \text{"Design is Good"}, \text{"Design is Bad"}\right) = \text{"Design is Good"}$$

$$W2_u := \frac{Wt_e + Wcl}{A2} - \frac{Mw}{S2}$$

$$W2_u = 213\,\frac{lb}{ft^2}$$

$$\text{if}\left(0 \le W2_u, \text{"Design is Good"}, \text{"Design is Bad"}\right) = \text{"Design is Good"}$$

CALCULATION SHEET

amec

CALC.: NO: 145579-C-CA-016 REV: 0
CALC. TITLE: Reagent Tank Foundations (Fdn #21 and 22) ISSUE DATE: 10 March 2005
PROJECT NO.: 145579
ATTACHMENT: 3 PROJECT TITLE: Final DBVS Design
ATTACHMENT TITLE: West Reagent Tank Foundation (Fdn #22) Page: 4 of 15
ORIGINATOR: Dirana Whitley CHECKER: Pan Moran
DATE: March 10/05 DATE: MAR 10 2005

SEISMIC

Following 1997 Uniform Building Code (UBC) standards

Seismic Zone = 2B		UBC page 2-37 Figure 16-2
Soil Profile = Sc		Reference 5 Page 11
Ip = Importance Factor	$Ip(PC) := \begin{cases} 1.5 & \text{if } PC = 2 \\ 1.0 & \text{if } PC = 1 \\ \text{"prob"} & \text{otherwise} \end{cases}$ $Ip(PC) = 1.5$	UBC page 2-30 Table 16-K
Z = Seismic zone factor	$Z := 0.2$	UBC page 2-30 Table 16-I
Ca = Seismic coefficient	$Ca := 0.24$	UBC page 2-34 Table 16-Q
ap = Horizontal Force Factor 1	$ap := 1$	UBC page 2-33 Table 16-O
Rp = Horizontal Force Factor 2	$Rp := 3$	UBC page 2-33 Table 16-O
hx = Height from ground to bottom of element	$hx := 0.0ft$	
Fe = Earthquake Force	$Fea := \frac{ap \cdot Ca \cdot Ip(PC)}{Rp} \cdot \left(1 + 3 \cdot \frac{hx}{H}\right) \cdot Wt_f$ $Fea = 9876\,lb$	UBC page 2-18 1632.2
Femax = Max earthquake force	$Femax := 4.0 \cdot Ca \cdot Ip(PC) \cdot Wt_f$ $Femax = 118512\,lb$	UBC page 2-18 1632.2
Femin = Min earthquake force	$Femin := 0.7 \cdot Ca \cdot Ip(PC) \cdot Wt_f$ $Femin = 20739.6\,lb$	UBC page 2-18 1632.2
	$Fe := \begin{cases} Femin & \text{if } Femin > Fea \\ Femax & \text{if } Fea > Femax \\ Fea & \text{otherwise} \end{cases}$ $Fe = 20740\,lb$	
Me = Seismic moment	$Me := Fe \cdot (Hcg + h)$ $Me = 207396\,lb\,ft$	

CALCULATION SHEET

amec

CALC.: NO: 145579-C-CA-016 REV: 0
CALC. TITLE: Reagent Tank Foundations (Fdn #21 and 22) ISSUE DATE: 10 March 2005
PROJECT NO.: 145579
ATTACHMENT: 3 PROJECT TITLE: Final DBVS Design
ATTACHMENT TITLE: West Reagent Tank Foundation (Fdn #22) Page: 5 of 15
ORIGINATOR: Dirana Whitley CHECKER: Paul Moyer
DATE: March 10/05 DATE: Mar 10 2005

E_u = Unfactored seismic pressure

$$E1_u := \frac{Wt_f + Wcl}{A2} + \frac{Me}{S2}$$

$$E1_u = 1380 \frac{lb}{ft^2}$$

$$\text{if}\left(E1_u \le 3000 \frac{lb}{ft^2}, \text{"Design is Good"}, \text{"Design is Bad"}\right) = \text{"Design is Good"}$$

$$E2_u := \frac{Wt_f + Wcl}{A2} - \frac{Me}{S2}$$

$$E2_u = 41 \frac{lb}{ft^2}$$

$$\text{if}\left(0 \le E2_u, \text{"Design is Good"}, \text{"Design is Bad"}\right) = \text{"Design is Good"}$$

LOAD CASES - FACTORED PRESSURE

UBC page 2-4
1612.2.1

LC 1 = 1.4D

$$LC1 := \frac{1.4 \cdot (Wt_e + Wcl)}{A2} \quad (12\text{-}1)$$

$$LC1 = 384 \frac{lb}{ft^2}$$

LC 2 = 1.2D+1.6L

$$LC2 := \frac{1.2(Wt_e + Wcl) + 1.6 \cdot Wt_c}{A2} \quad (12\text{-}2)$$

$$LC2 = 1028 \frac{lb}{ft^2}$$

LC 3 = 1.2D+1.0L+1.3W

$$LC3 := \frac{1.2 \cdot (Wt_e + Wcl) + 1.0 \cdot Wt_c}{A2} + \frac{1.3 \cdot Mw}{S2} \quad (12\text{-}4)$$

$$LC3 = 845 \frac{lb}{ft^2}$$

LC 4 = 1.2D+1.0L+1.0E

$$LC4 := \frac{1.2 \cdot (Wt_e + Wcl) + 1.0 \cdot Wt_c}{A2} + \frac{1.0 \cdot Me}{S2} \quad (12\text{-}5)$$

$$LC4 = 1435 \frac{lb}{ft^2}$$

$$\max(LC1, LC2, LC3, LC4) = 1435 \frac{lb}{ft^2}$$

CALCULATION SHEET

amec

CALC.: NO: 145579-C-CA-016 REV: 0
CALC. TITLE: Reagent Tank Foundations (Fdn #21 and 22) ISSUE DATE: 10 March 2005
PROJECT NO.: 145579
ATTACHMENT: 3 PROJECT TITLE: Final DBVS Design
ATTACHMENT TITLE: West Reagent Tank Foundation (Fdn #22) Page: 6 of 15
ORIGINATOR: Diana Whitley CHECKER: Ron Moyer
DATE: March 10/05 DATE: MAR 10 05

SLAB MOMENT CAPACITY CHECK

$$\text{if}(Me \le Mw, \text{"Wind Governs"}, \text{"Seismic Governs"}) = \text{"Seismic Governs"}$$

Between the seismic and wind moments, seismic has a larger moment.

P_f = Factored downward pressure from tank and contents $\quad P_f := \dfrac{1.2\cdot(Wt_e + Wc1) + 1.0\cdot Wt_c}{A2}$

$$P_f = 766\,\frac{lb}{ft^2}$$

LC4 is the maximum factored upwards pressure. Subtracting the downwards pressure from the upwards pressure and assuming that the result is a uniformly distributred load along a simple beam, the diameter of the tank, a conservative moment at the center or the foundation in the top rebar will be found.

M_{tr} = Top rebar moment $\quad M_{tr} := \dfrac{(LC4 - P_f)\cdot D^2}{8} \quad M_{tr} = 8370\,\dfrac{lb\cdot ft}{ft}$

Assuming a catilever of 2 feet with the maximum factored pressure LC4 acting as a uniformly distributed load, the moment in the bottom rebar will be found.

L = Assumed overhang $\quad L := 2ft$

M_{br} = Bottom rebar moment $\quad M_{br} := \dfrac{LC4\cdot L^2}{2} \quad M_{br} = 2871\,\dfrac{lb\cdot ft}{ft}$

Mu = Moment resistance per foot $\quad Mu := 40000\,\dfrac{lb\cdot ft}{ft}$ Attachment 4

$$\text{if}(M_{tr} \wedge M_{br} \le Mu, \text{"Rebar is sufficient"}, \text{"More rebar is needed"}) = \text{"Rebar is sufficient"}$$

American Petroleum Institute - shear and moment check

UBC page 2-22
1634.4 2

Of the empty weight: 30% is the weight of the roof,
50% is the weight of the walls and
20% is the weight of the floor

W_r = Weight of roof $\quad W_r := 0.3\cdot Wt_e \quad W_r = 2550\,lb$

W_s = Weight of tank shell $\quad W_s := 0.5\cdot Wt_e \quad W_s = 4250\,lb$

A_r = Area of top and bottom of tank $\quad A_r := \pi\cdot\left(\dfrac{D + 6in}{2}\right)^2 \quad A_r = 87\,ft^2$

A_w = Area of walls $\quad A_w := \pi\cdot D\cdot H \quad A_w = 503\,ft^2$

H_L = Height of liquid $\quad H_L := H - 1ft \quad H_L = 15\,ft$

D/H_L = Diameter to height ratio $\quad \dfrac{D}{H_L} = 0.667$

CALCULATION SHEET

amec

CALC.: NO: 145579-C-CA-016 REV: 0
CALC. TITLE: Reagent Tank Foundations (Fdn #21 and 22) ISSUE DATE: 10 March 2005
PROJECT NO.: 145579
ATTACHMENT: 3 PROJECT TITLE: Final DBVS Design
ATTACHMENT TITLE: West Reagent Tank Foundation (Fdn #22) Page: 7 of 15
ORIGINATOR: Dirana Whitley CHECKER: [illegible]
DATE: March 10/05 DATE: MAR 10 05

I_{API} = Importance factor		$I_{API} := 1.25$	API E.3.1
S = Site Coefficient		$S := 1.2$	API Table E-2
k = Factor		$k := 0.59$	API Figure E-4
T = Factor	$T := k \cdot \sqrt{\frac{D}{ft}}$	$T = 1.87$	API E.3.3.2
C1 = Factor		$C1 := 0.6$	API E.3.3.1
C2 = Factor	$C2 := \begin{cases} \frac{0.75S}{T} & \text{if } T \le 4.5 \\ \frac{3.375 \cdot S}{T^2} & \text{if } T > 4.5 \end{cases}$	$C2 = 0.48$	API E.3.3.2
W1 = Mass in unison	$W1 := 0.86 \cdot Wt_c$	$W1 = 63468\ lb$	
W2 = Mass sloshing	$W2 := 0.18 \cdot Wt_c$	$W2 = 13284\ lb$	
X1 = Height for W_1	$X1 := 0.42 \cdot H_L$	$X1 = 6.3\ ft$	
X2 = Height for W_2	$X2 := 0.79 \cdot H_L$	$X2 = 11.85\ ft$	
X_s = Tank centre of gravity	$X_s := \frac{H}{2}$	$X_s = 8\ ft$	

S_b = Base shear

$$S_b := Z \cdot I_{API} \cdot (C1 \cdot W_s + C1 \cdot W_r + C1 \cdot W1 + C2 \cdot W2)$$

$$S_b = 12142\ lb$$

$$\text{if}(Fe \vee Fw > S_b, \text{"UBC Governs, OK"}, \text{"API Governs, Redo"}) = \text{"UBC Governs, OK"}$$

M_b = Moment at bottom of foundation

$$M_b := Z \cdot I_{API} \left[C1 \cdot W_s \cdot (X_s + h) + C1 \cdot W_r \cdot (H + h) + C1 \cdot W1 \cdot (X1 + h) + C2 \cdot W2 \cdot (X2 + h) \right]$$

$$M_b = 114465\ lb\ ft$$

$$\text{if}(Me \vee Mw > M_b, \text{"UBC Governs, OK"}, \text{"API Governs, Redo"}) = \text{"UBC Governs, OK"}$$

CALCULATION SHEET

amec

CALC.: NO: 145579-C-CA-016 REV: 0
CALC. TITLE: Reagent Tank Foundations (Fdn #21 and 22) ISSUE DATE: 10 March 2005
PROJECT NO.: 145579
ATTACHMENT: 3 PROJECT TITLE: Final DBVS Design
ATTACHMENT TITLE: West Reagent Tank Foundation (Fdn #22) Page: 8 of 15
ORIGINATOR: Diana Whitley CHECKER: [illegible]
DATE: March 10/05 DATE: Mar 10 05

Na2S TANK (36-D74-006)

GENERAL DIMENSION

PC = Performance Class		$PC := 2$	
H_1 = Height of tank	$H_1 := 121.25in$	$H_1 = 10.1\,ft$	
D_1 = Diameter of tank	$D_1 := 102in$	$D_1 = 8.5\,ft$	
Hcg_1 = Height to center of gravity of tank	$Hcg_1 := 0.5 \cdot H_1$	$Hcg_1 = 5.052\,ft$	
Wt_{f1} = Weight of full tank		$Wt_{f1} := 31200lb$	Attachment 6
Wt_{e1} = Weight of empty tank		$Wt_{e1} := 4000lb$	Attachment 6
Wt_{c1} = Weight of tank contents	$Wt_{c1} := Wt_{f1} - Wt_{e1}$	$Wt_{c1} = 27200\,lb$	
h = Height of concrete foundation		$h := 2ft$	
$D1_1$ = Diameter of concrete foundation for weight	$D1_1 := D_1 + 2ft + 8in$	$D1_1 = 11.167\,ft$	
$D2_1$ = Diameter of effective area of concrete foundation in contact with the soil	$D2_1 := D_1 + 4ft + 8in$	$D2_1 = 13.167\,ft$	
$A2_1$ = Area of D2	$A2_1 := \frac{\pi \cdot D2_1^2}{4}$	$A2_1 = 136.2\,ft^2$	
wc = unit weight of concrete		$wc := 150 \frac{lb}{ft^3}$	ASCE 7 Table C3-2 pg 250
$Wc1_1$ = Weight of concrete foundation	$Wc1_1 := wc \cdot h \cdot \pi \cdot \left(\frac{D1_1}{2}\right)^2$	$Wc1_1 = 29380\,lb$	
$S2_1$ = Elastic section modulus of foundation	$S2_1 := \frac{\pi \cdot D2_1^3}{32}$	$S2_1 = 224\,ft^3$	

CALCULATION SHEET

amec

CALC.: NO: 145579-C-CA-016 REV: 0
CALC. TITLE: Reagent Tank Foundations (Fdn #21 and 22) ISSUE DATE: 10 March 2005
PROJECT NO.: 145579
ATTACHMENT: 3 PROJECT TITLE: Final DBVS Design
ATTACHMENT TITLE: West Reagent Tank Foundation (Fdn #22) Page: 9 of 15
ORIGINATOR: Divana Whitley CHECKER: [illegible]
DATE: March 10/05 DATE: Mar 10 05

SOIL BEARING CAPACITY

AllowBC = Allowable bearing capacity $\quad AllowBC := 3000\frac{lb}{ft^2}$ Reference 5 Figure 4

$ActBC_1$ = Actual bearing pressure $\quad ActBC_1 := \frac{Wt_{f1} + Wcl_1}{A2_1} \quad ActBC_1 = 444.929\frac{lb}{ft^2}$

FOS_1 = Factor of Safety $\quad FOS_1 := \frac{AllowBC}{ActBC_1} \quad FOS_1 = 6.743$

WIND

Following DOE-STD-1020-2002 and ASCE 7 standards
Method 2 6.5.13

Exposure C — TFC-ENG-STD-06 REV B-1 Table 3 Page 24

Kz = Velocity Pressure Exposure Coefficient — ASCE 7 page 75

$$Kz(H_1) := \begin{cases} 0.86 & \text{if } H_1 \le 16ft \\ 0.98 & \text{if } H_1 = 30ft \\ 1.04 & \text{if } H_1 = 40ft \\ 1.19 & \text{if } H_1 = 75ft \\ \text{"prob"} & \text{otherwise} \end{cases}$$

$Kz(H_1) = 0.86$

Kzt = Topographic Factor $\quad Kzt := 1$ — ASCE 7 page 47 flat ground

Kd = Wind Directionality Factor $\quad Kd := 0.95$ — ASCE 7 page 76 round

V = "Three-second gust" wind velocity $\quad V := 85\frac{mi}{hr}$ — TFC-ENG-STD-06 REV B-1 Table 3 Page 24

I = Importance Factor

$$I(PC) := \begin{cases} 1.15 & \text{if } PC = 2 \\ 1.0 & \text{if } PC = 1 \\ \text{"prob"} & \text{otherwise} \end{cases} \qquad I(PC) = 1.15$$

TFC-ENG-STD-06 REV B-1 Table 3 Page 24

qz = Velocity Pressure $\quad qz := 0.00256\left(\frac{hr}{mi \cdot ft}\right)^2 \cdot lb \cdot Kz(H_1) \cdot Kzt \cdot Kd \cdot V^2 \cdot I(PC)$ ASCE 7 page 31

CALCULATION SHEET

amec

CALC.: NO: 145579-C-CA-016 REV: 0
CALC. TITLE: Reagent Tank Foundations (Fdn #21 and 22) ISSUE DATE: 10 March 2005
PROJECT NO.: 145579
ATTACHMENT: 3 PROJECT TITLE: Final DBVS Design
ATTACHMENT TITLE: West Reagent Tank Foundation (Fdn #22) Page: 10 of 15
ORIGINATOR: Dirana Whitley CHECKER: [illegible]
DATE: March 10/05 DATE: Mar 10.05

$$qz = 17.38 \frac{lb}{ft^2}$$

G = Gust factor $G := 0.85$ ASCE 7 page 30

$$\text{if}\left(D_1\sqrt{qz} > 2.5\sqrt{lb}, \text{"Use shown Cf factors"}, \text{"Change factors"}\right) = \text{"Use shown Cf factors"}$$

Cf = Force Coefficient ASCE 7 page 69

$$Cf(x) := \begin{cases} 0.5 & \text{if } \frac{H_1}{D_1} < 7 \\ 0.7 & \text{if } 7 \le \frac{H_1}{D_1} < 25 \\ 0.8 & \text{if } 25 \le \frac{H_1}{D_1} \\ \text{"prob"} & \text{otherwise} \end{cases}$$

$$Cf\left(\frac{H_1}{D_1}\right) = 0.5$$

Cp = Pressure Coefficient $Cp := 0.8$ UBC page 2-29 Table H

Af_1 = Area normal to the wind $Af_1 := H_1 \cdot D_1$ $Af_1 = 85.885\,ft^2$

Pw = Wind pressure $Pw := qz \cdot G \cdot Cp$ $Pw = 11.82 \frac{lb}{ft^2}$

Fw_1 = Wind force $Fw_1 := qz \cdot G \cdot Cp \cdot Af_1$ $Fw_1 = 1015\,lb$

Mw_1 = Wind moment $Mw_1 := Fw_1 \cdot (Hcg_1 + h)$ $Mw_1 = 7157\,lb\,ft$

W_{u1} = Unfactored wind pressure $W1_{u1} := \frac{Wt_{f1} + Wc1_1}{A2_1} + \frac{Mw_1}{S2_1}$

$$W1_{u1} = 477 \frac{lb}{ft^2}$$

$$\text{if}\left(W1_{u1} \le 3000 \frac{lb}{ft^2}, \text{"Design is Good"}, \text{"Design is Bad"}\right) = \text{"Design is Good"}$$

$$W2_{u1} := \frac{Wt_{e1} + Wc1_1}{A2_1} - \frac{Mw_1}{S2_1}$$

$$W2_{u1} = 213 \frac{lb}{ft^2}$$

$$\text{if}\left(0 \le W2_{u1}, \text{"Design is Good"}, \text{"Design is Bad"}\right) = \text{"Design is Good"}$$

CALCULATION SHEET

amec

CALC.: NO: 145579-C-CA-016 REV: 0
CALC. TITLE: Reagent Tank Foundations (Fdn #21 and 22) ISSUE DATE: 10 March 2005
PROJECT NO.: 145579
ATTACHMENT: 3 PROJECT TITLE: Final DBVS Design
ATTACHMENT TITLE: West Reagent Tank Foundation (Fdn #22) Page: 11 of 15
ORIGINATOR: Diana Whitley CHECKER: [illegible]
DATE: March 10/05 DATE: MAR 10 05

SEISMIC

Following 1997 Uniform Building Code (UBC) standards

Seismic Zone = 2B — UBC page 2-37 Figure 16-2

Soil Profile = Sc — Reference 5 Page 11

Ip = Importance Factor

$$Ip(PC) := \begin{cases} 1.5 & \text{if } PC = 2 \\ 1.0 & \text{if } PC = 1 \\ \text{"prob"} & \text{otherwise} \end{cases}$$

$Ip(PC) = 1.5$ — UBC page 2-30 Table 16-K

Z = Seismic zone factor — $Z := 0.2$ — UBC page 2-30 Table 16-I

Ca = Seismic coefficient — $Ca := 0.24$ — UBC page 2-34 Table 16-Q

ap = Horizontal Force Factor 1 — $ap := 1$ — UBC page 2-33 Table 16-O

Rp = Horizontal Force Factor 2 — $Rp := 3$ — UBC page 2-33 Table 16-O

hx = Height from ground to bottom of element — $hx := 0.0ft$

Fe_1 = Earthquake Force

$$Fea_1 := \frac{ap \cdot Ca \cdot Ip(PC)}{Rp} \cdot \left(1 + 3 \cdot \frac{hx}{H_1}\right) \cdot Wt_{f1}$$

$Fea_1 = 3744\,lb$ — UBC page 2-18 1632.2

$Femax_1$ = Max earthquake force

$$Femax_1 := 4.0 \cdot Ca \cdot Ip(PC) \cdot Wt_{f1}$$

$Femax_1 = 44928\,lb$ — UBC page 2-18 1632.2

$Femin_1$ = Min earthquake force

$$Femin_1 := 0.7 \cdot Ca \cdot Ip(PC) \cdot Wt_{f1}$$

$Femin_1 = 7862.4\,lb$ — UBC page 2-18 1632.2

$$Fe_1 := \begin{cases} Femin_1 & \text{if } Femin_1 > Fea_1 \\ Femax_1 & \text{if } Fea_1 > Femax_1 \\ Fea_1 & \text{otherwise} \end{cases}$$

$Fe_1 = 7862.4\,lb$

Me_1 = Seismic moment — $Me_1 := Fe_1 \cdot (Hcg_1 + h)$ — $Me_1 = 55446.3\,lb\,ft$

CALCULATION SHEET

amec

CALC.: NO: 145579-C-CA-016 REV: 0
CALC. TITLE: Reagent Tank Foundations (Fdn #21 and 22) ISSUE DATE: 10 March 2005
PROJECT NO.: 145579
ATTACHMENT: 3 PROJECT TITLE: Final DBVS Design
ATTACHMENT TITLE: West Reagent Tank Foundation (Fdn #22) Page: 12 of 15
ORIGINATOR: Dirana Whitley CHECKER: Ron Moyer
DATE: March 10/05 DATE: March 10 2005

E_{u1} = Unfactored seismic pressure

$$El_{u1} := \frac{Wt_{f1} + Wcl_1}{A2_1} + \frac{Me_1}{S2_1}$$

$$El_{u1} = 692 \frac{lb}{ft^2}$$

$$\text{if}\left(El_{u1} \le 3000 \frac{lb}{ft^2}, \text{"Design is Good"}, \text{"Design is Bad"}\right) = \text{"Design is Good"}$$

$$E2_{u1} := \frac{Wt_{f1} + Wcl_1}{A2_1} - \frac{Me_1}{S2_1}$$

$$E2_{u1} = 198 \frac{lb}{ft^2}$$

$$\text{if}\left(0 \le E2_{u1}, \text{"Design is Good"}, \text{"Design is Bad"}\right) = \text{"Design is Good"}$$

LOAD CASES - FACTORED PRESSURE

UBC page 2-4
1612.2.1

LC 1 = 1.4D

$$LC1_1 := \frac{1.4 \cdot (Wt_{c1} + Wcl_1)}{A2_1} \quad (12\text{-}1)$$

$$LC1_1 = 343 \frac{lb}{ft^2}$$

LC 2 = 1.2D+1.6L

$$LC2_1 := \frac{1.2(Wt_{c1} + Wcl_1) + 1.6 \cdot Wt_{c1}}{A2_1} \quad (12\text{-}2)$$

$$LC2_1 = 614 \frac{lb}{ft^2}$$

LC 3 = 1.2D+1.0L+1.3W

$$LC3_1 := \frac{1.2 \cdot (Wt_{c1} + Wcl_1) + 1.0 \cdot Wt_{c1}}{A2_1} + \frac{1.3 \cdot Mw_1}{S2_1} \quad (12\text{-}4)$$

$$LC3_1 = 535 \frac{lb}{ft^2}$$

LC 4 = 1.2D+1.0L+1.0E

$$LC4_1 := \frac{1.2 \cdot (Wt_{c1} + Wcl_1) + 1.0 \cdot Wt_{c1}}{A2_1} + \frac{1.0 \cdot Me_1}{S2_1} \quad (12\text{-}5)$$

$$LC4_1 = 741 \frac{lb}{ft^2}$$

$$\max(LC1_1, LC2_1, LC3_1, LC4_1) = 741 \frac{lb}{ft^2}$$

CALCULATION SHEET

amec

CALC.: NO: 145579-C-CA-016 REV: 0
CALC. TITLE: Reagent Tank Foundations (Fdn #21 and 22) ISSUE DATE: 10 March 2005
PROJECT NO.: 145579
ATTACHMENT: 3 PROJECT TITLE: Final DBVS Design
ATTACHMENT TITLE: West Reagent Tank Foundation (Fdn #22) Page: 13 of 15
ORIGINATOR: Dirana Whitley CHECKER: [illegible]
DATE: March 10/05 DATE: Mar. 10 2005

SLAB MOMENT CAPACITY CHECK

$$\text{if}\left(Me_1 \le Mw_1, \text{"Wind Governs"}, \text{"Seismic Governs"}\right) = \text{"Seismic Governs"}$$

Between the seismic and wind moments, seismic has a larger moment.

P_{f1} = Factored downward pressure from tank and contents

$$P_{f1} := \frac{1.2\cdot\left(Wt_{e1} + Wcl_1\right) + 1.0\cdot Wt_{c1}}{A2_1} \qquad P_{f1} = 494\,\frac{lb}{ft^2}$$

$LC4_1$ is the maximum factored upwards pressure. Subtracting the downwards pressure from the upwards pressure and assuming that the result is a uniformly distributred load along a simple beam, the diameter of the tank, a conservative moment at the center or the foundation in the top rebar will be found.

M_{tr1} = Top rebar moment

$$M_{tr1} := \frac{\left(LC4_1 - P_{f1}\right)\cdot D_1^{\,2}}{8} \qquad M_{tr1} = 2235\,\frac{lb\cdot ft}{ft}$$

Assuming a catilever of 2 feet with the maximum factored pressure $LC4_1$ acting as a uniformly distributed load, the moment in the bottom rebar will be found.

L = Assumed overhang $\qquad L := 2ft$

M_{br1} = Bottom rebar moment

$$M_{br1} := \frac{LC4_1\cdot L^2}{2} \qquad M_{br1} = 1483\,\frac{lb\cdot ft}{ft}$$

Mu_1 = Moment resistance per foot $\qquad Mu_1 := 40000\,\frac{lb\cdot ft}{ft}$ $\qquad$ Attachment 4

$$\text{if}\left(M_{tr1} \wedge M_{br1} \le Mu_1, \text{"Rebar is sufficient"}, \text{"More rebar is needed"}\right) = \text{"Rebar is sufficient"}$$

American Petroleum Institute - shear and moment check

UBC page 2-22
1634.4 2

Of the empty weight: 30% is the weight of the roof,
50% is the weight of the walls and
20% is the weight of the floor

W_{r1} = Weight of roof $\qquad W_{r1} := 0.3\cdot Wt_{e1} \qquad W_{r1} = 1200\,lb$

W_{s1} = Weight of tank shell $\qquad W_{s1} := 0.5\cdot Wt_{e1} \qquad W_{s1} = 2000\,lb$

A_{r1} = Area of top and bottom of tank $\qquad A_{r1} := \pi\cdot\left(\frac{D_1 + 6in}{2}\right)^2 \qquad A_{r1} = 64\,ft^2$

A_{w1} = Area of walls $\qquad A_{w1} := \pi\cdot D_1\cdot H_1 \qquad A_{w1} = 270\,ft^2$

H_{L1} = Height of liquid $\qquad H_{L1} := H_1 - 1ft \qquad H_{L1} = 9.104\,ft$

CALCULATION SHEET

amec

CALC.: NO: 145579-C-CA-016 REV: 0
CALC. TITLE: Reagent Tank Foundations (Fdn #21 and 22) ISSUE DATE: 10 March 2005
PROJECT NO.: 145579
ATTACHMENT: 3 PROJECT TITLE: Final DBVS Design
ATTACHMENT TITLE: West Reagent Tank Foundation (Fdn #22) Page: 14 of 15
ORIGINATOR: Dirana Whitley CHECKER: [illegible]
DATE: March 10/05 DATE: Mar 10 2005.

D_1/H_{L1} = Diameter to height ratio		$\frac{D_1}{H_{L1}} = 0.934$	
I_{API} = Importance factor		$I_{API} := 1.25$	API E.3.1
S = Site Coefficient		$S := 1.2$	API Table E-2
k = Factor		$k := 0.59$	API Figure E-4
T_1 = Factor	$T_1 := k \cdot \sqrt{\frac{D_1}{ft}}$	$T_1 = 1.72$	API E.3.3.2
C1 = Factor		$C1 := 0.6$	API E.3.3.1
$C2_1$ = Factor	$C2_1 := \begin{cases} \frac{0.75S}{T_1} & \text{if } T_1 \le 4.5 \\ \frac{3.375 \cdot S}{T_1^2} & \text{if } T_1 > 4.5 \end{cases}$	$C2_1 = 0.52$	API E.3.3.2
$W1_1$ = Mass in unison	$W1_1 := 0.86 \cdot Wt_{c1}$	$W1_1 = 23392\,lb$	
$W2_1$ = Mass sloshing	$W2_1 := 0.18 \cdot Wt_{c1}$	$W2_1 = 4896\,lb$	
$X1_1$ = Height for W_1	$X1_1 := 0.42 \cdot H_{L1}$	$X1_1 = 3.824\,ft$	
$X2_1$ = Height for W_2	$X2_1 := 0.79 \cdot H_{L1}$	$X2_1 = 7.192\,ft$	
X_{s1} = Tank centre of gravity	$X_{s1} := \frac{H_1}{2}$	$X_{s1} = 5.052\,ft$	

S_{b1} = Base shear

$$S_{b1} := Z \cdot I_{API} \cdot (C1 \cdot W_{s1} + C1 \cdot W_{r1} + C1 \cdot W1_1 + C2_1 \cdot W2_1)$$

$$S_{b1} = 4629\,lb$$

$$\text{if}(Fe_1 \vee Fw_1 > S_{b1}, \text{"UBC Governs, OK"}, \text{"API Governs, Redo"}) = \text{"UBC Governs, OK"}$$

M_b = Moment at bottom of foundation

$$M_{b1} := Z \cdot I_{API} \cdot [C1 \cdot W_{s1} \cdot (X_{s1} + h) + C1 \cdot W_{r1} \cdot (H_1 + h) + C1 \cdot W1_1 \cdot (X1_1 + h) + C2_1 \cdot W2_1 \cdot (X2_1 + h)]$$

$$M_{b1} = 30616\,lb\,ft$$

$$\text{if}(Me_1 \vee Mw_1 > M_{b1}, \text{"UBC Governs, OK"}, \text{"API Governs, Redo"}) = \text{"UBC Governs, OK"}$$

CALCULATION SHEET

amec

CALC.: NO: 145579-C-CA-016 REV: 0
CALC. TITLE: Reagent Tank Foundations (Fdn #21 and 22) ISSUE DATE: 10 March 2005
PROJECT NO.: 145579
ATTACHMENT: 3 PROJECT TITLE: Final DBVS Design
ATTACHMENT TITLE: West Reagent Tank Foundation (Fdn #22) Page: 15 of 15
ORIGINATOR: Diana Whitley CHECKER: Tom Moyer
DATE: March 10/05 DATE: Mar 10 2005

GENERAL DIMENSIONS OF WHOLE FOUNDATION

l = Lenght of foundation $l := 36ft$

b = Width of foundation $b := 29ft$

W_T = Total Weight $W_T := 2Wcl + Wcl_1 + 2Wt_f + Wt_{f1}$

$W_T = 300788\,lb$

Fw_T = Total Wind Force $Fw_T := 2Fw + Fw_1$ $Fw_T = 4797\,lb$

Fe_T = Total Seismic Force $Fe_T := 2Fe + Fe_1$ $Fe_T = 49342\,lb$

FRICTION

f = friction coefficient $f := 0.34$ Reference 5 Page 4 Table 1

ResSD = Resistance from siding $ResSD := W_T \cdot f$ $ResSD = 102268.068\,lb$

$$if\left(Fw_T \le ResSD, \text{"Design is Good"}, \text{"Design is Bad"}\right) = \text{"Design is Good"}$$

FOS4 = Factor of Safety $FOS4 := \frac{ResSD}{Fw_T}$ $FOS4 = 21.32$

$$if\left(Fe_T \le ResSD, \text{"Design is Good"}, \text{"Design is Bad"}\right) = \text{"Design is Good"}$$

FOS5 = Factor of Safety $FOS5 := \frac{ResSD}{Fe_T}$ $FOS5 = 2.073$

145579-C-CA-016

Attachment 4

Rebar Design for Foundation Pads or Slabs

Project: GeoMelt - Final DBVS
Foundation description:

Reference: 145579-C-CA-016
Foundation # 21& 22

Re-bar Design For Fdn Pads or Slabs Ref: ACI 318		Input (shaded)	
Bars: Top or Bot only =1, Top & Bot =2		2	
fy	psi	60000	60 ksi normal
f'c	psi	4000	3-4 ksi normal
ϕ		0.9	0.9 normal
Mu	k-ft	40	required Mu
b	in	12	*unit width or full width*
h	in	12	slab thickness
d	in	10	depth of steel
A = 0.59 * fy/f'c		8.85	
B = -1		-1	
C = Mu /(ϕ bd^2fy)		0.0019	
ϕ Ru = Mu /bd^2		100.0	
ρ (1)		0.1111	
ρ (2)		0.00188	
ρ (temp)		0.00180	0.18% typical
ρ min		0.0033	
Selected ρ for design		0.00188	
Check ρ < ρ max		OK	
As req'd per ft (temp)	in2	**0.26**	considers top and/or bottom
As req'd (design)	in2	0.45	
As req'd (1.33 *design)	in2	0.60	
As req'd(min)	in2	0.80	applies if 1.33 not used
Select design, 1.33design or min		**0.60**	
As required	in2	**0.60**	
Bar #		5	(diameter in eighths)
As per Bar		0.307	
Bar Spacing	in	6	
Total As per ft		**0.61**	
		OK	OK or NG (no good)

Check Selection ρmax		
f'c		4000
fy		60000
β1 = 0.85-0.05*(f'c-4), >=0.65		0.85
ρb=0.85*β1*f'c*87000/(fy*(fy+87000))=		0.0285
ρmax =0.75*ρb =		0.0214

Attachment: 4
Calc. No.: 145579-C-CA-016
Rev. No.: 0
Sheet 1 of 1

145579-C-CA-016

Attachment 5

E-mail Dec 17, 2004 from Brad Hupy, P.E. (author of DBVS Geotechnical Report) to P. Meyer

Paul Meyer (Trail)

From: Brad Hupy
Sent: Friday, December 17, 2004 2:47 PM
To: Paul Meyer (Trail)
Subject: RE: Questions about the soils and report at Hanford

In order to have frost heave three things are needed; water, low temperature, and soil fine for enough for capillary potential to raise the water to the freezing front. Because Hanford is a near desert climate, there is little water near the ground surface. Within a The tabulated capillary rise for fine sand is in the range of 1 to 11 feet and for medium sand in the range of 0.3 to 1.5 feet. Hanford certainly is cold enough in the winter to freeze water.

The little water in the near surface soil does freeze but the associated heave is negligible. The sand will not support capillary rise of several hundred feet that would be required to produce (feed) a growing freezing front and cause damaging heave. In our opinion, there is little risk of frost heave in the soil at the project site.

Attachment:	5
Calc. No.:	145579-C-CA-016
Rev. No.:	0
Sheet	1 of 3

—Original Message—
From: Paul Meyer (Trail)
Sent: Friday, December 17, 2004 1:47 PM
To: Brad Hupy
Subject: RE: Questions about the soils and report at Hanford

Question: is it possible to state that a soil identified as "SP" (i.e. sand with few fines) will not be subject to frost heaving? Especially if it is very deep (e.g. our site at Hanford)

-Paul

—Original Message—
From: Brad Hupy
Sent: Tuesday, December 07, 2004 9:09 AM
To: Paul Meyer (Trail)
Cc: Tony Heim
Subject: RE: Questions about the soils and report at Hanford

Paul,

This is really pretty simple. The frost depth cited in our report is from statewide tabulation. If Hanford has determined and published site specific frost depth measurements then they may be used in lieu of the tabulated data. Site specific data is commonly used in this is way. A very good example is seismic ground motions.

—Original Message—
From: Paul Meyer (Trail)
Sent: Monday, December 06, 2004 4:33 PM
To: Brad Hupy
Cc: Tony Heim
Subject: Questions about the soils and report at Hanford

We are still awaiting approval from the "Independent Qualified Registered Professional Engineer" (IQRPE) who is checking our foundation designs to ensure they will satisfy all design criteria.

He has raised the following points/questions:

Your report indicates a frost depth of 45 inches for granular soil and recommends a foundation depth of 48 inches for critical structures. This is at odds with Hanford's' own measurements (See pages 26 through 28 of the attached Hanford document) which indicate that a temperature of 32 F has never been achieved at depths of only 36 inches. This is causing some problems for us, as the IQRPE wants us to conform to the requirements of the Geotech report in addition to Hanford's own design criteria

For your information, we have three types of foundations on the site. Foundation depths below grade are 45.6, 36.6 and 21.6 inches. Actual concrete thicknesses are 48, 39 and 24 inches, with the top of concrete set at 663.00 feet, while surrounding grade is at 662.8 feet. We removed the native soil to elevation 661.000 and

brought the local grade up to 662.8 with compacted crushed rock.

The four 48" foundations consist of two chimneys, and two large steel structures. These are all "critical structures" to use the phrase from your report. Foundations are uniformly 48" thick, and are 10'x12' and 20'x30' feet for the two chimneys, and 30x44 and 24x62 for the two steel structures. Foundations are not enclosed.

The single 39" foundation is a pre-engineered building, measuring 50 feet wide by 84 feet long by foundation consist of a single 12" thick slab with a thickened (to 39") edge. The building will be heated, and have an overhead crane.

The many (~100) 24" deep foundations support single pieces of freestanding equipment or "utility poles" that are connected by pipes, cable trays and ducts. Foundations are uniformly 24" thick and vary in size from 44x24 to 6x6 feet. Most are the 6x6 ones. Minor seasonal movement of the foundations would not be a problem. Actual gravity loads are quite light, typical values are substantially under 250 psf, yes, that's 250, not 2500. Foundations are not enclosed.

All the foundations will bear on compacted native soil, which was prepared as recommended in your report. As noted, the native soil is basically a gravelly sand, with few fines. I don't believe it is frost-susceptible.

Could you please reply to the following questions, raised by our reviewers?

1) Is the frost depth of 45 inches correct? Seems deep compared to other references.

2) Is the frost depth of 45 inches still valid, given we have removed some native soil, and the surface is now covered with 1.8 feet (21.6") of compacted crushed rock? Does the crushed rock make a difference?

3) Are the depths of foundations shown above for the various types of foundations suitable for the uses described?

4) IS frost heave an issue for the foundations as described?

Thanks for your help on this. I'll be traveling to Hanford on Tuesday Dec 07, for a meeting Wednesday, Dec 08. I will have e-mail access while there. I will be traveling back to Trail Thursday, Dec 09 and back in the office Friday, Dec 10. Best way to contact me is via e-mail until Friday, phone after that.

Paul Meyer, P.Eng.
Senior Structural Engineer
AMEC Americas Limited
Energy and Mining Division
1385 Cedar Avenue
Trail BC Canada V1R 4C3
1-250-368-2407, fax 2455
paul.meyer@amec.com

Attachment:	5
Calc. No.:	145579-C-CA-016
Rev. No.:	0
Sheet	2 of 3

<< File: HNF-SD-GN-ER-501 (Rev. 1).pdf >>

Paul Meyer (Trail)

From: Brad Hupy
Sent: Wednesday, October 20, 2004 8:31 AM
To: Paul Meyer (Trail)
Cc: 'michael.custer@dmjm.com'; John Stephens (TRL); Tony Heim
Subject: RE: Allowable soil bearing pressure at the DBVS Project in Hanford Washington

Paul,

As we discussed yesterday aftemoon, the near surface sand at the DBVS site is a relatively good foundation soil. All of the loads imposed on foundations at the DBVS can be considered light and allowable bearing capacity is controlled by elastic deflection rather than shear failure. It would be appropriate to use a single allowable bearing capacity for all foundations of 3000 psf. Our analysis indicates that foundations loaded to 3000 psf will deflect under full loading in the range of 0.1 to 0.3 inches.

---Original Message---
From: Paul Meyer (Trail)
Sent: Tuesday, October 19, 2004 2:20 PM
To: Brad Hupy
Cc: 'michael.custer@dmjm.com'; John Stephens (TRL); Tony Heim
Subject: Allowable soil bearing pressure at the DBVS Project in Hanford Washington

Would it be possible for you to provide a simplifying statement to me concerning the allowable bearing pressure for the compacted native soil at the Hanford DBVS Project? This site was the subject of your report 4-94M-000310-660, April 2004.

While Mike Custer and I understand the load/settlement curve presented as Figure 4 in your report, and that the allowable bearing pressure increases with greater loads, it doesn't seem to be translating well for the non-civil/Geotech audience. Most of them are used to seeing a single "allowable pressure" number.

I have assumed a minimum safe bearing pressure of 3000 psf, which I believe to be conservative. I have also advised that, as per your report, and increase of 1/3, i.e. to 4000 psf, is appropriate for transient loads such as wind or seismic.

Would it be possible for you to confirm this by return e-mail? Thanks. If you have any questions, please call.

Paul Meyer, P.Eng.
Senior Structural Engineer
AMEC Americas Limited
Energy and Mining Division
1385 Cedar Avenue
Trail BC Canada V1R 4C3
1-250-368-2407, fax 2455
paul.meyer@amec.com

Attachment: 5
Calc. No.: 145579-C-CA-016
Rev. No.: 0
Sheet 3 of 3

145579-C-CA-016

Attachment 6

Technical Data Sheets

amec

TECHNICAL DATA SHEETS

PROJECT:	Final DBVS Design	145579-D-DS-058.5	REV. C
PROJECT NO.:	145579	NaOH 15% Solution Tank	
CLIENT:	AMEC E&E - Richland Washington	EQ. NO.:	36-D74-113; 36-D74-113A; 36-D74-113B

No. Required	1	Area	Off Gas	36	
P&ID#	F-145579-36-A-0102	Stream No.			
Reference Specification:	N/A	Quality Assurance Level		CQ	

Operating Conditions			Rev	Environmental Conditions			Rev
Location (Indoors/Outdoors)		Outdoors					
Operation (Continuous / Intermittent)		Intermittent		Ambient Temperature Range	(°F)	-25 to 115	
Days per year		365		Relative Humidity Range	(%)	10 to 100	
Hours per day		24		Hail Diameter	(in)	< or = 0.75	
Noise Level Allowable per 8 hr shift (dB - Lex)		85		Sand and dust concentrations	(lbm/ft³)	1.1×10^{-5}	
Shift Length	(hrs)	8		- typical size	(mm)	0.15	
Noise Level Allowable	(dB)	85		Solar Radiation (12-hour period)	(langleys)	900	
Site Elevation	(ft)	663		Availability	(%)	95	
Min Outdoor Operational Service	(years)	2		Environment - Radioactive		No	
Max Outdoor Operational Time	(years)	5		- Toxic		Yes	
Maintained Operating Temperature	(°F)	77		- Corrosive to steel on ambient tem.		No	
				- Flammable		No	

Storage Tank Information				Tank Attachments			
General							
Manufacturer (or approved equal)		Highland Tank		Site Level Gage		No	
Model Number		Double Wall UI-142		Manway and Fill Cap (Non-sealed	(in)	18	
Fluid to be stored Composition				Vent Pipe		Yes	
-water	%	85		Tank Accessories			
-NaOH - caustic	%	15		Ladders		Yes	
Viscosity	(cP)	2.07		Tie Down System		Yes	
Specific Gravity		1.16		Tank Level Sensing System		Yes	
Double Wall Storage Capacity	USG	4000		Power Supply		24 VDC	
Overall Dimensions				- Interface options for client control system		yes	
Diameter	(in)	96		Fluid Isolation Valves			
Height	(in)	126		- Suction Line		Yes	
Material		Carbon Steel		- Discharge Line		Yes	
Density		n/a		Process temperature sensor for heater controller		Yes	
Shipping Weight	(lbs)*	10000		36-D57-113F Mixer/Agitator			
Operating Weight	(lbs) *	54000		Manufacturer		Cleveland Eastern Mixers	
Fluid pressure				Type-top entry, propeller type, electrically driven		BHD	
Tank Fittings (Nozzles)				Motor	(hp)	2	
Fill-in				Voltage/Phase/Hertz	(V/Ph/Hz)	480/3/60	
N1 -Caustic	(in)	2					
N2 -Water	(in)	2		36- D91 - 0113B NaOH Tank Heater			
N3 Draw-out	(in)	2		Voltage	(V/Ph/Hz)	480/3/60	
N4 Level Transmitter	(in)	3		Electrical power	(kW)	53	
Fitting -Drain		Yes		Over-temperature sensor (Type K - thermocouple)		Yes	
Lining -Inside		Yes		Heater controller (refer comment 3)		No	
-type	*			Process sensor for heater controller (RTD)		Yes	
Thermal Insulation		Yes		36- D61 - 0113A NaOH 15% Tank Pump			
-type	*			Pump Manufacturer		Wilden	
				Air Diaphragm Displacement, Air Driven Pump Type		P1	
				Flow	(gpm)	1.27	
				Suction Head	(ftWG)	28.8	
				Total Dynamic Head	(ftWG)	54.5	

Date	09-Feb-05	24-Feb-05	07-Mar-05
By	AP	AP	
Chkd	DW	DW	
Rev.	A	B	C

Attachment: 6
Calc. No.: 145579-C-CA-016
Rev. No.: 0
Sheet 1 of 4

amec

TECHNICAL DATA SHEETS

PROJECT:	Final DBVS Design	145579-D-DS-058.4	REV. C
PROJECT NO.:	145579	NaOH 50% Solution Tank	
CLIENT:	AMEC E&E - Richland Washington	EQ. NO.:	36-D74-007A36-D91-007B

No. Required	1	Area	Off Gas 36
P&ID#	F-145579-36-A-0104	Stream No.	
Reference Specification:	N/A	Quality Assurance Level	CQ

Operating Conditions			Rev	Environmental Conditions			Rev
Location (Indoors/Outdoors)		Outdoors		Ambient Temperature Range	(°F)	-25 to 115	
Operation (Continuous / Intermittent)		Intermittent		Relative Humidity Range	(%)	10 to 100	
Days per year		365		Hail Diameter	(in)	< or = 0.75	
Hours per day		24		Sand and dust concentrations	(lbm/ft³)	1.1×10^{-5}	
Noise Level Allowable per 8 hr shift (dB - Lex)		85		- typical size	(mm)	0.15	
Shift Length	(hrs)	8		Solar Radiation (12-hour period)	(langleys)	900	
Noise Level Allowable	(dB)	85		Availability	(%)	95	
Site Elevation	(ft)	663		Environment - Radioactive		No	
Min Outdoor Operational Service	(years)	2		- Toxic		Yes	
Max Outdoor Operational Time	(years)	5		- Corrosive to steel at ambient		No	
Maintained Operating Temperature	(°F)	77		- Flammable		No	

Storage Tank Information							
General				Tank Attachments			
Manufacturer (or approved equal)		Highland Tank		Site Level Gage		No	
Model Number		Double Wall UL-142					
Fluid to be stored Composition				Manway and Fill Cap (Non-sealed	(in)	18	
-water	%	50		Down Pipe		No	
-NaOH-Caustic	%	50		Vent Pipe	(in)	6	
Double Wall Storage Capacity	USG	2000					
Overall Dimensions				Tank Accessories			
Diameter	(in)	64		Ladders		Yes	
Height	(in)	144		Tie Down System		Yes	
Material		Carbon Steel		Fluid Isolation Valves			
Density		n/a		- Suction Line		Yes	
Shipping Weight	(lbs)*	5000		- Discharge Line		Yes	
Operating Weight	(lbs) *	27000		Fluid Temperature Indicator/Transducers-by Others		Yes	
Fluid pressure		atmospheric		- Entering		n/a	
Tank Fittings (Nozzles)				- Leaving		n/a	
N1 Fill-in	(in)	4		Tank Level Sensing System-by Others		Yes	
N2 Draw-out	(in)	2		Power Supply		24 VDC	
N3 Level Transmitter	(in)	2		- Interface options for client control system		yes	
N4 Spare	(in)	2					
				36- D91 - 007B NaOH Immersion Heater & Controller			
Fitting -Drain		Yes		- Single-point non-fused disconnect switch		Yes	
Lining -Inside		Yes		- Electrical Power	(kW)*	2	
-type	*			- Voltage/Phase/Hertz	(V/Ph/Hz)	240/1/60	
Thermal Insulation		Yes		- Line voltage thermostat		Yes	
-type	*			- Resettable over-temperature cut-out		Yes	
	*						
	*						

Date	09-Feb-05	24-Feb-05	07-Mar-05
By	AP	AP	
Chked	DW	DW	
Rev.	A	B	C

Attachment: 6
Calc. No.: 145579-C-CA-016
Rev. No.: 0
Sheet 2 of 4

amec

TECHNICAL DATA SHEETS

PROJECT:	Final DBVS Design	145579-D-DS-058.2	REV. C
PROJECT NO.:	145579	NaClO2 Tank No.1 and No.2	
CLIENT:	AMEC E&E - Richland Washington	EQ. NO.:	36-D74-005 & 36-D74-112

No. Required	2	Area	Off Gas 36
P&ID#	F-145579-36-A-0104	Stream No.	:
Reference Specification:	N/A	Quality Assurance Level	CQ

Data Sheet 1 of 3

Operating Conditions			Rev	Environmental Conditions			Rev
Location (Indoors/Outdoors)		Outdoors					
Operation (Continuous / Intermittent)		Intermittent		Ambient Temperature Range	(°F)	-25 to 115	
Days per year		365		Relative Humidity Range	(%)	10 to 100	
Hours per day		24		Hail Diameter	(in)	< or = 0.75	
Noise Level Allowable per 8 hr shift (dB - Lex)		n/a		Sand and dust concentrations	(lbm/ft³)	1.1×10^{-3}	
Shift Length	(hrs)	8		- typical size	(mm)	0.15	
Noise Level Allowable	(dB)	n/a		Solar Radiation (12-hour period)	(langleys)	900	
Site Elevation	(ft)	663		Availability	(%)	95	
Min Outdoor Operational Service	(years)	2		Environment - Radioactive		No	
Max Outdoor Operational Time	(years)	5		- Toxic		Yes	
Maintained Operating Temperature	(°F)	77		- Corrosive		Yes	
				- Flammable		No	

Storage Tank Information				Tank Attachments			
General							
Manufacturer (or approved equal)		KBFCO		Site Level Gage		Yes	
Model Number		S670600N97201L		Float Level Gage		Yes	
Fluid to be stored Composition				Manway and Fill Cap (Non-sealed	(in)	18	
-water	%	87.5		Down Pipe		No	
-NaClO2 Sodium Chlorite	%	12.5		Vent Pipe	(in)	6	
Double Wall Storage Capacity	USG	6500					
Overall Dimensions				Tank Accessories			
Diameter	(in)	120		Ladders Tank-Saver Platform		Yes	
Height	(in)	198 1/4		Tie Down System		No	
Material		HDPE High Density Polyethylene		Tank Level Sensing System-by Others		Yes	
Density	*			Power Supply		24 VDC	
Shipping Weight	(lbs)*	8500		- Interface options for client control system		yes	
Operating Weight	(lbs) *	82300		Fluid Isolation Valves			
Fluid pressure		Atmospheric		- Suction Line		Yes	
Tank Fittings (Nozzles) as per Fig.1				- Discharge Line		Yes	
N1 Fill-in	(in)	4		Fluid Temperature Indicator/Transducers-by Others		Yes	
N2 Draw-out	(in)	2					
N3 Level Transmitter	(in)	2		36-D91-005B NaClO2 Immersion Heater& Controller			
N4 Spare	(in)	2		- Single-point non-fused disconnect switch		Yes	
Nozzle Elevations	*			- Electrical Power	(kW)*	2	
Fitting -Drain				- Voltage/Phase/Hertz	(V/Ph/Hz)	240/1/60	
Lining -Inside	*	Alkaline		- Line voltage thermostat		Yes	
-type	*			- Resettable over-temperature (212F) cut-out		Yes	
Thermal Insulation		Yes		36-D91-112B NaClO2 Immersion Heater& Controller			
-type	*			- Single-point non-fused disconnect switch		Yes	
				- Electrical Power	(kW)*	2	
				- Voltage/Phase/Hertz	(V/Ph/Hz)	240/1/60	
				- Line voltage thermostat		Yes	
				- Resettable over-temperature (212F) cut-out		Yes	

Date	09-Feb-05	24-Feb-05	07-Mar-05
By	AP	AP	
Chked	DW	DW	
Rev.	A	B	C

Attachment: 6
Calc. No.: 145579-C-CA-016
Rev. No.: 0
Sheet 3 of 4

amec

TECHNICAL DATA SHEETS

PROJECT:	Final DBVS Design	145579-D-DS-058.3	REV. C
PROJECT NO.:	145579	Na2S Storage Tank	
CLIENT:	AMEC E&E - Richland Washington	EQ. NO.:	36-D74-006 & 36-D61-006B

No. Required	1	Area	Off Gas 36
P&ID#	F-145579-36-A-0104	Stream No.	
Reference Specification:	N/A	Quality Assurance Level	CQ

Data Sheet 1 of 2

Operating Conditions			Rev	Environmental Conditions			Rev
Location (Indoors/Outdoors)		Outdoors					
Operation (Continuous / Intermittent)		Intermittent		Ambient Temperature Range.	(°F)	-25 to 115	
Days per year		365		Relative Humidity Range	(%)	10 to 100	
Hours per day		24		Hail Diameter	(in)	< or = 0.75	
Noise Level Allowable per 8 hr shift (dB - Lex)		85		Sand and dust concentrations	(lbm/ft³)	1.1×10^{-5}	
Shift Length	(hrs)	8		- typical size	(mm)	0.15	
Noise Level Allowable	(dB)	85		Solar Radiation (12-hour period)	(langleys)	900	
Site Elevation	(ft)	663		Availability	(%)	95	
Min Outdoor Operational Service	(years)	2		Environment - Radioactive		No	
Max Outdoor Operational Time	(years)	5		- Toxic		Yes	
Maintained Operating Temperature	(°F)	77		- Corrosive		Yes	
				- Flammable		No	

Storage Tank Information							
General				Tank Attachments			
Manufacturer (or approved equal)		KEFCO		Site Level Gage		No	
Model Number		5580600N97201L		Float Level Gage		Yes	
Fluid to be stored Composition				Manway and Fill Cap (Non-sealed	(in)	18	
-water	%	90		Down Pipe		*	
-Na2S-Sodium Sulfide	%	10		Vent Pipe	(in)	6	
Double Wall Storage Capacity	(USG)	2500					
Overall Dimensions							
Diameter	(in)	102					
Height	(in)	121 1/4		Tank Accessories			
Material		HDPE High Density Polyethylene		Ladders		Yes	
Density	*			Tie Down System		Yes	
Shipping Weight	(lbs)*	4000		Fluid Isolation Valves			
Operating Weight	(lbs) *	31200		- Suction Line		Yes	
Fluid pressure		atmospheric		- Discharge Line		Yes	
N1 Fill-in	(in)	4		Fluid Temperature Indicator/Transducers-By Others		Yes	
N2 Draw-out	(in)	2		- Entering		n/a	
N3 Level Transmitter	(in)	2		- Leaving		n/a	
N4 Spare	(in)	2		Tank Level Sensing System-By Others		Yes	
				Power Supply		24 VDC	
				- Interface options for client control system		yes	
Fitting -Drain	*						
Lining -Inside	*			36-D91-006B Na2S Immersion Heater & Controller			
-type	*			- Single-point non-fused disconnect switch		Yes	
Thermal Insulation		Yes		- Electrical Power	(kW)*	2	
-type	*			- Voltage/Phase/Hertz	(V/Ph/Hz)	240/1/60	
				- Line voltage thermostat		Yes	
				- Resettable over-temperature cut-out		Yes	

Date	09-Feb-05	24-Feb-05	07-Mar-05
By	AP	AP	[illegible]
Chked	DW	DW	[illegible]
Rev.	A	B	C

Attachment: 6
Calc. No.: 145579-C-CA-016
Rev. No.: 0
Sheet 4 of 4

Subcontractor Calculation Review Checklist.

Page 1 of 1

Subject: REAGENT TANK FOUNDATIONS (FDNS #21 & #22)

The subject document has been reviewed by the undersigned.
The reviewer reviewed and verified the following items as applicable.

Documents Reviewed: CALC # 145579-C-CA-016, REV. 0

Analysis Performed By: AMEC (MEYER)

- Design Input
- Basic Assumptions
- Approach/Design Methodology
- Consistency with item or document supported by the calculation
- Conclusion/Results Interpretation
- Impact on existing requirements
- _____

NOTE: FDN #21: 50% NaOH TANK HAS BEEN DELETED BUT IS IN CALC.
FDN # 22: BOTH TANKS HAVE BEEN DELETED.

Reviewer (printed name, signature, and date) A.H. FRIBERG AHFriberg 4/20/06

Organizational Manager (printed name, signature and date) D.H. Shuford David H Shuford 4/20/06

This page intentionally left blank.

145579-D-CA-043

amec

DMJM technology

CALCULATION COVER SHEET

Date: 04/22/05

Calculation No: 145579-D-CA-043
Calculation Title: DBVS Detectable Leak Volume for the OGTS Wet Scrubber System
Project No. & Title: 145579 DBVS, Demonstration Bulk Vitrification System
Design Verification Required: ☐ Yes ☒ No
Calculation Type: ☐ Scoping ☒ Preliminary ☐ Final
☐ Superseded by Calculation No: _____ ☐ Voided

ORIGINAL AND REVISED CALCULATION/ANALYSIS APPROVAL

	Rev. A Printed Name/Signature/Initials/D	Rev. B Printed Name/Signature/Initials/D	Rev. __ Printed Name/Signature/Initials/
Originator:	John J Irwin 4/22/05		
Checked By:	Charles E. Grenard CEG 4/25/05		
Approved By:			
Other:			

AFFECTED DOCUMENTS

Document Number	Document Title	Rev. Number	Responsible Discipline Lead Initials

RECORD OF REVISION

Rev.	Reason for Revision
A	Initial review

ATTACHMENTS

Attachments	Title	Total Pages
A	DBVS P&IDs	4

TOTAL CALCULATION PAGE COUNT 10

amec DMJM technology

CALCULATION SHEET

Date: 04/22/05

Calculation No. 145579-D-CA-043	
Rev. No. A	ORIGINATOR: J. J. Irwin
Calculation Title: DBVS Detectable Leak Volume for the OGTS Wet Scrubber System	CHECKER: C. E. Grenard

1.0 Introduction

1.1 Purpose

The purpose of this calculation is to determine the maximum credible fluid volumes for leaks in the primary waste caustic piping in the DBVS OGTS Wet Scrubber system. The Wet Scrubber system's waste caustic load out is comprised of the wet scrubber enclosure interconnected by hose-in-hose transfer lines (HIHTLs) to two waste storage tanks. The scrubber skid and the storage tanks transfer line contains interface piping connection points. The connection points allow leakage in the HIHTLs to drain back to the wet scrubber enclosure and into its containment sump which contains a leak detector. The connection point on the storage tanks is at a higher elevation than the connection point on the wet scrubber enclosure.

1.2 Scope

The scope of this calculation is to determine the maximum credible fluid volumes resulting from a leak in the primary interconnecting piping prior to a leak detection alarm. For the purpose of this report, leaks are assumed to occur at one of the secondary waste storage tanks, at the HIHTL penetration, and it flows by gravity to the wet scrubber enclosure.

2.0 Basis

2.1 Design Inputs

The fluid flow network for the OGTS wet scrubber system is depicted on the system P&IDs, F-145579-F-36-0100, F-145579-F-36-0101, F-145579-F-36-0102 and F-145579-F-37-0101 (Attachment A). A depiction of the wet scrubber enclosure plan layout is depicted in Figure 1. A discrete depiction of the fluid leak paths are listed in Table 1.

amec DMJM technology

CALCULATION SHEET

Date: 04/22/05

Calculation No. 145579-D-CA-043	
Rev. No. A	ORIGINATOR: J. J. Irwin
Calculation Title: DBVS Detectable Leak Volume for the OGTS Wet Scrubber System	CHECKER: C. E. Grenard

Figure 1. OGTS Wet Scrubber Assembly Plan Layout.

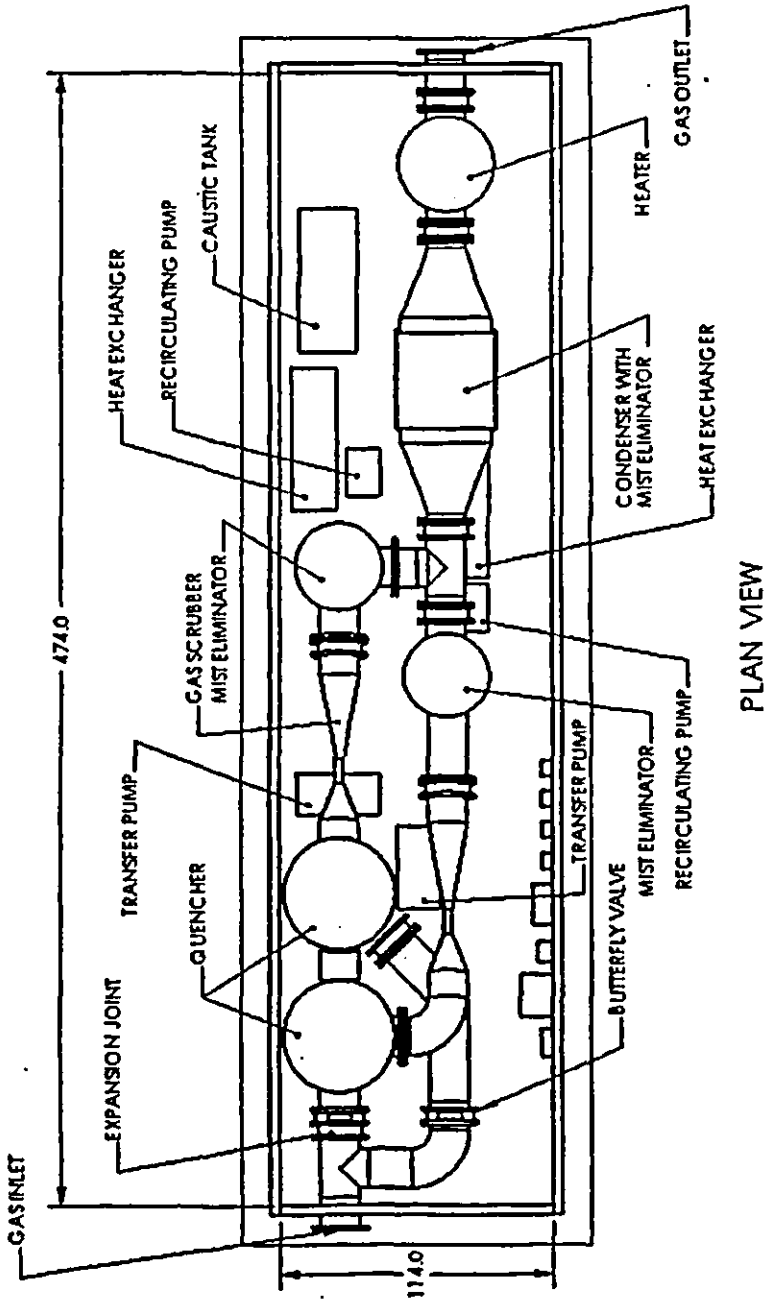

amec DMJM technology

CALCULATION SHEET

Date: 04/22/05

Calculation No. 145579-D-CA-043	
Rev. No. A	ORIGINATOR: J. J. Irwin
Calculation Title: DBVS Detectable Leak Volume for the OGTS Wet Scrubber System	CHECKER: C. E. Grenard

Table 1. Wet Scrubber Fluid Leak Configurations

Input Description	Reference Dimensions	Reference Location
OGTS Wet scrubber enclosure , leak containment	114 inches wide by 474 inches long	Figure 1.
2 inch HIHTL, 2-PSS-36-0311, waste caustic feed to secondary waste storage tank	130 ft Long(1)	145579-D-SP-010, Appendix C

Notes:
1) The 2 inch HIHTL contains a 2.0 inch OD primary and a 4 inch ID Secondary.

2.2 Criteria

There are no pre-determined acceptance criteria.

2.3 Assumptions

The assumptions used in the calculation are as stated below and within the body of the calculation and/or attachments.

The OGTS wet scrubber enclosure dimensions are determined from Figure 1 (submitted by the wet scrubber fabrication vendor).

Piping external to the OGTS wet scrubber enclosure or secondary waste storage tanks are Hose-in Hose Transfer Lines (HIHTLs). Hose lengths are determined from the DBVS HIHTL technical specification and are assumed to be bounding. Drain slopes in the HIHTLs are as specified on the P&IDs (Attachment A). Note: the drain slope depicted on F-145579-F-37-0101 is in error, it should show drain slope from the storage tank to the wet scrubber enclosure.

A leak originating in the primary of a HIHTL fills the annular region between the inner and outer hose before draining through a connection point penetration assembly to the wet scrubber enclosure. The HIHTL leak is assumed to result from a complete rupture of the primary.

Fluid leaking into the wet scrubber enclosure covers its catch basin to a depth of ¼ inch before draining to the skid's leak detector sump. The leak detector sump and pump-out port were assumed to have a volume of 0.2 cu ft (1.5 gallons), this is an engineering assumption.

amec DMJM technology

CALCULATION SHEET

Date: 04/22/05

Calculation No. 145579-D-CA-043	
Rev. No. A	ORIGINATOR: J. J. Irwin
Calculation Title: DBVS Detectable Leak Volume for the OGTS Wet Scrubber System	CHECKER: C. E. Grenard

3.0 References

145579-D-SP-010, Hose-In-Hose Transfer Line Assemblies, Rev. 0, DMJM, December, 2004.

145579-D-SP-037, Wet Scrubber Skid Assembly Design and Fabrication, Rev. 0, DMJM, December, 2004.

F-145579-F-36-0100, Revision I, Sheet 1, "Bulk Vitrification Wet Scrubber Skid No. 1 P&ID" (Attachment A).

F-145579-F-36-0101, Revision I, Sheet 1, "Bulk Vitrification Wet Scrubber Skid No. 2 P&ID" (Attachment A).

F-145579-F-36-0102, Revision I, Sheet 1, "Bulk Vitrification Off-Gas Trailer Scrubber Filter P&ID" (Attachment A).

F-145579-F-37-0101, Revision 0, Sheet 1, "Bulk Vitrification Secondary Waste Storage P&ID" (Attachment A).

4.0 Methods

Standard mathematical expressions are utilized to calculate the volumes in the annulus of the HIHTLs or the wet scrubber enclosure catch pan.

5.0 Results and Conclusions

The result of the calculation shows that a leak from waste caustic HIHTL to the OGTS wet scrubber enclosure catch pan will result in a leak volume of 123.7 gallons.

6.0 Calculations and Analysis

Using standard mathematical techniques the volumes of simple geometries can be calculate for the various elements of the wet scrubber waste caustic components. Table 2 lists the results of the fluid volume calculations.

amec DMJM technology

CALCULATION SHEET

Date: 04/22/05

Calculation No. 145579-D-CA-043	
Rev. No. A	ORIGINATOR: J. J. Irwin
Calculation Title: DBVS Detectable Leak Volume for the OGTS Wet Scrubber System	CHECKER: C. E. Grenard

Table 2. Calculated Fluid Volumes for Wet Scrubber Components

Wet Scrubber Component	Volume, cu.ft.	Volume, gallons
Wet scrubber enclosure catch pan at ¼ inch depth plus leak detector sump.	8.02	60.0
2 inch HIHTL, 2-PSS-36-0311, OGTS Scrubber Enclosure to secondary waste storage tank	8.51	63.7
Total:	16.53	123.7

Notes:
1) Volume of a rectangular enclosure is width x length x height of fluid
2) Volume of a cylindrical annulus is Pi x (D2^2 – D1^2)/4 * length of fluid
3) Volume of a cylinder is Pi x D1^2/4 * length of fluid

Where:
D2 = ID of HIHTL outer hose, 2.0 inches
D1 = OD of HIHTL inner hose or ID of Flex Line, 4.0 inches
Pi = Approx. 3.1

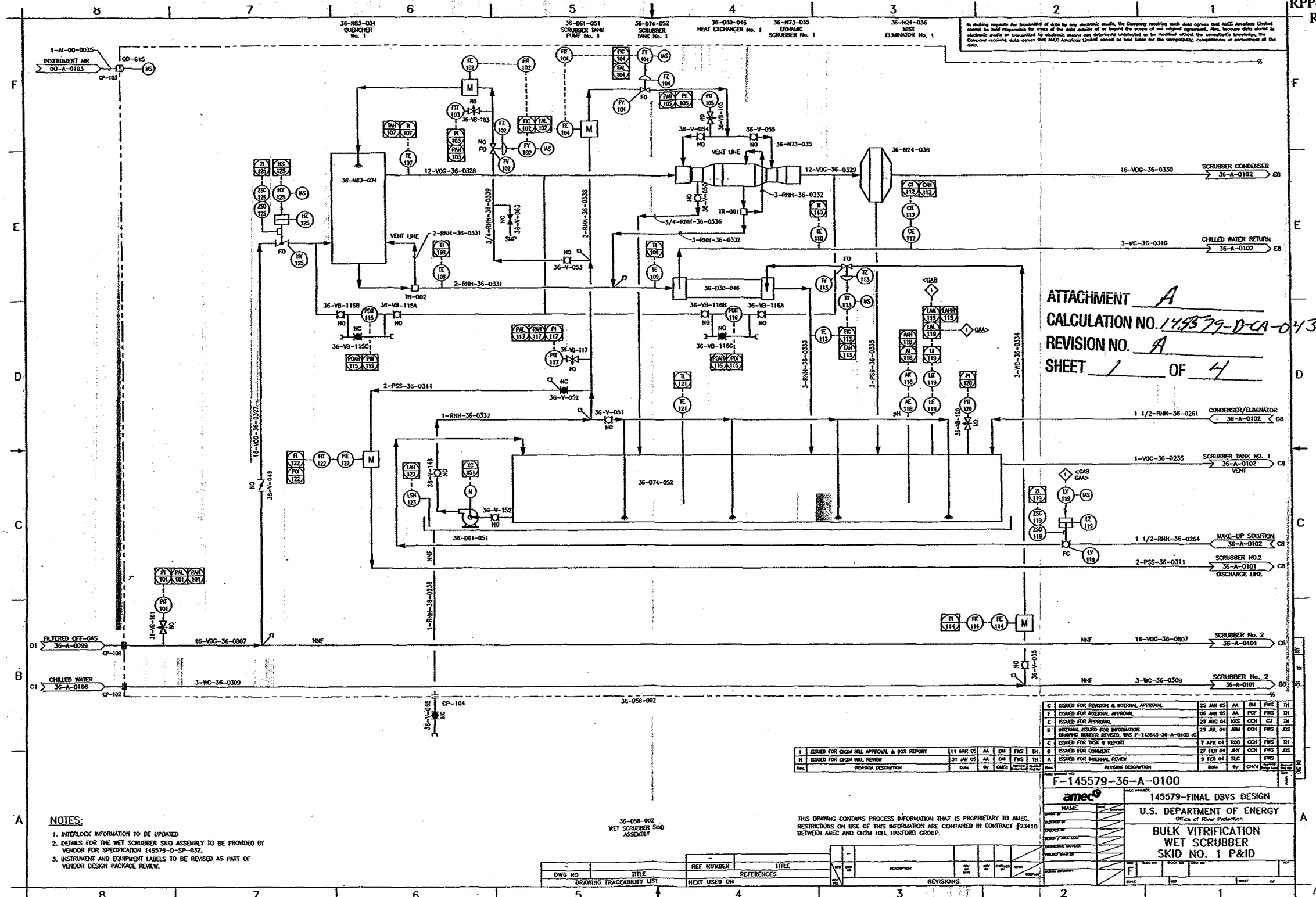
36-N83-034 QUENCHER No. 1
36-061-051 SCRUBBER TANK PUMP No. 1
36-074-052 SCRUBBER TANK No. 1
36-030-046 HEAT EXCHANGER No. 1
36-N73-035 DYNAMIC SCRUBBER No. 1
36-N24-036 MIST ELIMINATOR No. 1
INSTRUMENT AIR
00-A-0103
12-VOG-36-0328
12-VOG-36-0329
16-VOG-36-0330
SCRUBBER CONDENSER
36-A-0102
3-WC-36-0310
CHILLED WATER RETURN
36-A-0102
VENT LINE
2-RNH-36-0331
3/4-RNH-36-0339
2-RNH-36-0338
3/4-RNH-36-0336
3-RNH-36-0332
2-PSS-36-0311
1-RNH-36-0337
1 1/2-RNH-36-0261
CONDENSER/ELIMINATOR
36-A-0102
1-VOC-36-0235
SCRUBBER TANK NO. 1
36-A-0102
VENT
1 1/2-RNH-36-0264
MAKE-UP SOLUTION
36-A-0102
2-PSS-36-0311
SCRUBBER NO.2
36-A-0101
DISCHARGE LINE
16-VOC-36-0327
1-RNH-36-0239
FILTERED OFF-GAS
36-A-0099
16-VOG-36-0807
SCRUBBER No. 2
36-A-0101
CHILLED WATER
36-A-0106
3-WC-36-0309
SCRUBBER No. 2
36-A-0101
36-058-002
36-074-052
36-061-051
36-030-046
3-RNH-36-0333
3-PSS-36-0335
3-WC-36-0334
ATTACHMENT A
CALCULATION NO. 145579-D-CA-043
REVISION NO. A
SHEET 1 OF 4
F-145579-36-A-0100
145579-FINAL DBVS DESIGN
U.S. DEPARTMENT OF ENERGY
Office of River Protection
BULK VITRIFICATION
WET SCRUBBER
SKID NO. 1 P&ID
NOTES:
1. INTERLOCK INFORMATION TO BE UPDATED
2. DETAILS FOR THE WET SCRUBBER SKID ASSEMBLY TO BE PROVIDED BY VENDOR FOR SPECIFICATION 145579-D-SP-037.
3. INSTRUMENT AND EQUIPMENT LABELS TO BE REVISED AS PART OF VENDOR DESIGN PACKAGE REVIEW.
36-058-002
WET SCRUBBER SKID
ASSEMBLY
THIS DRAWING CONTAINS PROCESS INFORMATION THAT IS PROPRIETARY TO AMEC. RESTRICTIONS ON USE OF THIS INFORMATION ARE CONTAINED IN CONTRACT #23410 BETWEEN AMEC AND CH2M HILL HANFORD GROUP.
DRAWING TRACEABILITY LIST
REFERENCES
REVISIONS
G ISSUED FOR REVISION & INTERNAL APPROVAL 25 JAN 05
F ISSUED FOR INTERNAL APPROVAL 06 JAN 05
E ISSUED FOR APPROVAL 20 AUG 04
D INTERNAL ISSUED FOR INFORMATION 23 JUL 04
C ISSUED FOR TASK 6 REPORT 7 APR 04
B ISSUED FOR COMMENT 27 FEB 04
A ISSUED FOR INTERNAL REVIEW 9 FEB 04
I ISSUED FOR CH2M HILL APPROVAL & 90% REPORT 11 MAR 05
H ISSUED FOR CH2M HILL REVIEW 31 JAN 05

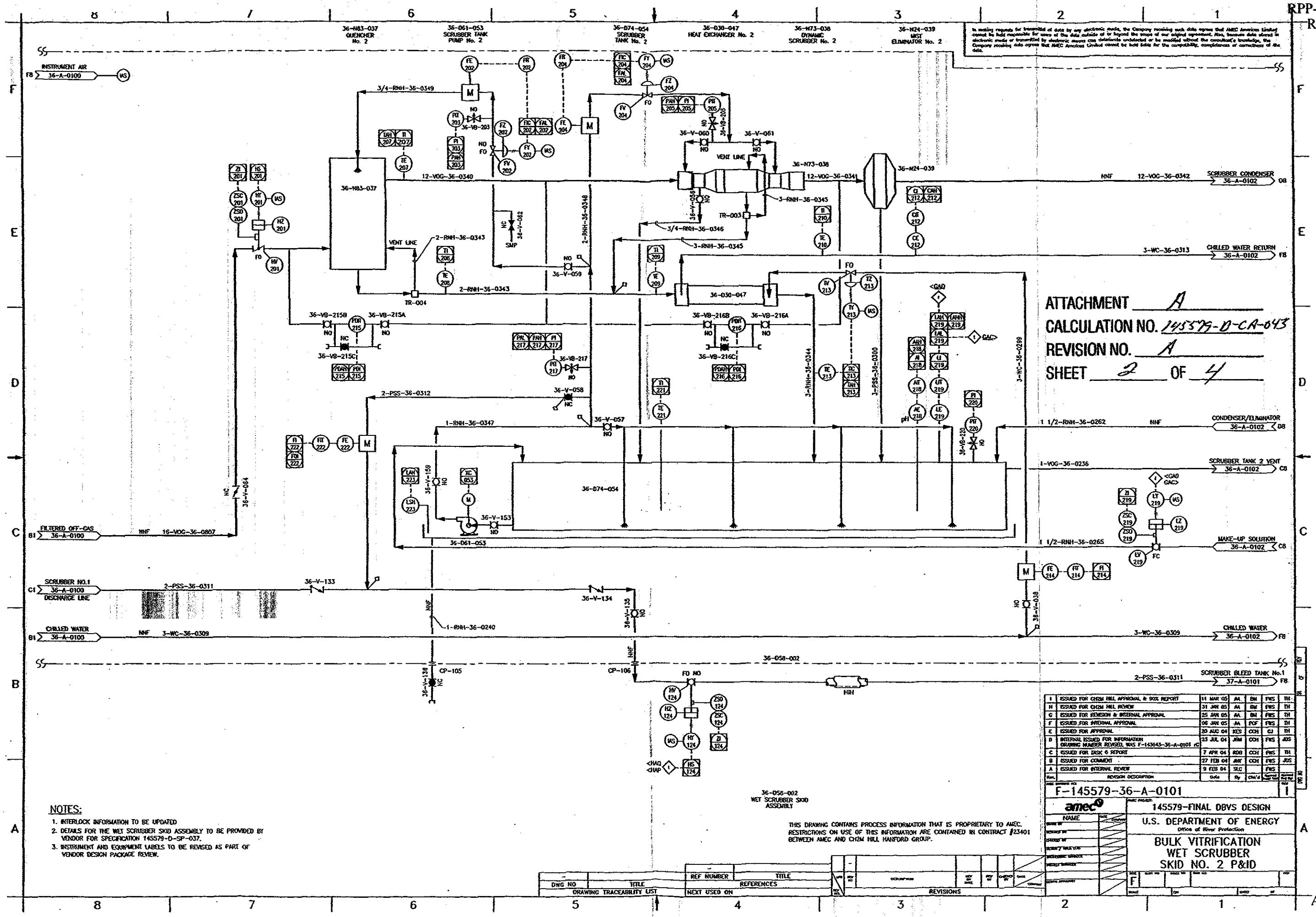
36-N83-037 QUENCHER No. 2
36-D61-053 SCRUBBER TANK PUMP No. 2
36-D74-054 SCRUBBER TANK No. 2
36-D30-047 HEAT EXCHANGER No. 2
36-N73-038 DYNAMIC SCRUBBER No. 2
36-N24-039 MIST ELIMINATOR No. 2
INSTRUMENT AIR 36-A-0100
3/4-RNH-36-0349
12-VOG-36-0340
12-VOG-36-0341
12-VOG-36-0342
SCRUBBER CONDENSER 36-A-0102
3-WC-36-0313
CHILLED WATER RETURN 36-A-0102
VENT LINE
2-RNH-36-0343
3/4-RNH-36-0346
3-RNH-36-0345
1 1/2-RNH-36-0262
CONDENSER/ELIMINATOR 36-A-0102
1-VOG-36-0236
SCRUBBER TANK 2 VENT 36-A-0102
1 1/2-RNH-36-0265
MAKE-UP SOLUTION 36-A-0102
FILTERED OFF-GAS 36-A-0100
16-VOG-36-0807
SCRUBBER NO.1 36-A-0100 DISCHARGE LINE
2-PSS-36-0311
CHILLED WATER 36-A-0100
3-WC-36-0309
CHILLED WATER 36-A-0102
36-058-002
SCRUBBER BLEED TANK No.1 37-A-0101
36-058-002 WET SCRUBBER SKID ASSEMBLY
ATTACHMENT A
CALCULATION NO. 145579-D-CA-043
REVISION NO. A
SHEET 2 OF 4
F-145579-36-A-0101
145579-FINAL DBVS DESIGN
U.S. DEPARTMENT OF ENERGY
Office of River Protection
BULK VITRIFICATION WET SCRUBBER SKID NO. 2 P&ID
NOTES:
1. INTERLOCK INFORMATION TO BE UPDATED
2. DETAILS FOR THE WET SCRUBBER SKID ASSEMBLY TO BE PROVIDED BY VENDOR FOR SPECIFICATION 145579-D-SP-037.
3. INSTRUMENT AND EQUIPMENT LABELS TO BE REVISED AS PART OF VENDOR DESIGN PACKAGE REVIEW.
THIS DRAWING CONTAINS PROCESS INFORMATION THAT IS PROPRIETARY TO AMEC. RESTRICTIONS ON USE OF THIS INFORMATION ARE CONTAINED IN CONTRACT #23401 BETWEEN AMEC AND CH2M HILL HANFORD GROUP.
DRAWING TRACEABILITY LIST
REVISIONS

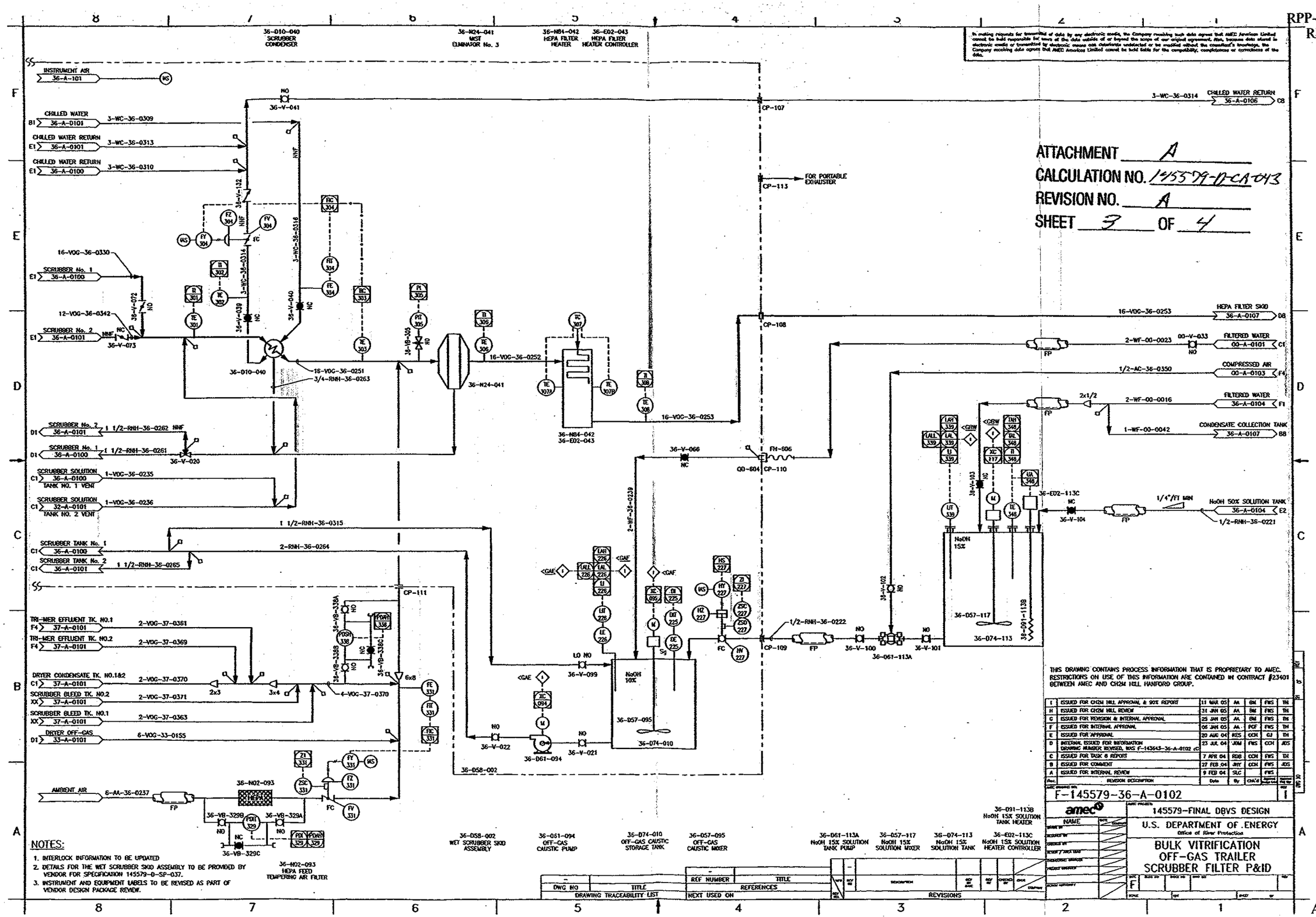
36-D10-040 SCRUBBER CONDENSER
36-N24-041 WET ELIMINATOR No. 3
36-NB4-042 HEPA FILTER HEATER
36-E02-043 HEPA FILTER HEATER CONTROLLER
INSTRUMENT AIR 36-A-101
CHILLED WATER 36-A-0101 3-WC-36-0309
CHILLED WATER RETURN 36-A-0101 3-WC-36-0313
CHILLED WATER RETURN 36-A-0100 3-WC-36-0310
3-WC-36-0314 CHILLED WATER RETURN 36-A-0106
CP-107
CP-113 FOR PORTABLE EXHAUSTER
ATTACHMENT A
CALCULATION NO. 145579-D-CA-043
REVISION NO. A
SHEET 3 OF 4
16-VOG-36-0330
SCRUBBER No. 1 36-A-0100
12-VOG-36-0342
SCRUBBER No. 2 36-A-0101
36-V-073
36-V-041
36-V-132
3-WC-36-0316
3-WC-36-0314
36-V-039
36-V-040
36-V-072
36-D10-040
18-VOG-36-0251
3/4-RNH-36-0263
36-V-305
16-VOG-36-0252
36-N24-041
36-NB4-042
36-E02-043
16-VOG-36-0253
CP-108
16-VOG-36-0253 HEPA FILTER SKID 36-A-0107
2-WF-00-0023 00-V-033 FILTERED WATER 00-A-0101
1/2-AC-36-0350 COMPRESSED AIR 00-A-0103
2-WF-00-0016 FILTERED WATER 36-A-0104
1-WF-00-0042 CONDENSATE COLLECTION TANK 36-A-0107
SCRUBBER No. 2 36-A-0101 1 1/2-RNH-36-0262
SCRUBBER No. 1 36-A-0100 1 1/2-RNH-36-0261
36-V-020
SCRUBBER SOLUTION 36-A-0100 TANK NO. 1 VENT 1-VOG-36-0235
SCRUBBER SOLUTION 32-A-0101 TANK NO. 2 VENT 1-VOG-36-0236
1 1/2-RNH-36-0315
SCRUBBER TANK No. 1 36-A-0100
SCRUBBER TANK No. 2 36-A-0101
2-RNH-36-0264
1 1/2-RNH-36-0265
36-V-066
FH-606
00-604 CP-110
2-WF-36-0239
36-V-103
36-E02-113C
36-V-104
1/4"/FT MIN
NaOH 50% SOLUTION TANK 36-A-0104
1/2-RNH-36-0221
NaOH 15%
36-D57-117
36-074-113
36-091-113B
36-V-102
1/2-RNH-36-0222
CP-109
36-V-100
36-V-101
36-061-113A
CP-111
TRI-MER EFFLUENT TK. NO.1 37-A-0101 2-VOG-37-0361
TRI-MER EFFLUENT TK. NO.2 37-A-0101 2-VOG-37-0369
DRYER CONDENSATE TK. NO.1&2 37-A-0101 2-VOG-37-0370
SCRUBBER BLEED TK. NO.2 37-A-0101 2-VOG-37-0371
SCRUBBER BLEED TK. NO.1 37-A-0101 2-VOG-37-0363
DRYER OFF-GAS 33-A-0101 6-VOG-33-0155
36-VB-338A
36-VB-338B
36-VB-338C
6x8
36-V-099
36-V-022
36-V-021
36-061-094
NaOH 10%
36-D57-095
36-074-010
36-D58-002
AMBIENT AIR 6-AA-36-0237
36-N02-093
36-VB-329B
36-VB-329A
36-VB-329C
NOTES:
1. INTERLOCK INFORMATION TO BE UPDATED
2. DETAILS FOR THE WET SCRUBBER SKID ASSEMBLY TO BE PROVIDED BY VENDOR FOR SPECIFICATION 145579-D-SP-037.
3. INSTRUMENT AND EQUIPMENT LABELS TO BE REVISED AS PART OF VENDOR DESIGN PACKAGE REVIEW.
36-D58-002 WET SCRUBBER SKID ASSEMBLY
36-061-094 OFF-GAS CAUSTIC PUMP
36-074-010 OFF-GAS CAUSTIC STORAGE TANK
36-057-095 OFF-GAS CAUSTIC MIXER
36-061-113A NaOH 15% SOLUTION TANK PUMP
36-057-117 NaOH 15% SOLUTION MIXER
36-074-113 NaOH 15% SOLUTION TANK
36-091-113B NaOH 15% SOLUTION TANK HEATER
36-E02-113C NaOH 15% SOLUTION HEATER CONTROLLER
36-N02-093 HEPA FEED TEMPERING AIR FILTER
DRAWING TRACEABILITY LIST
REVISIONS
THIS DRAWING CONTAINS PROCESS INFORMATION THAT IS PROPRIETARY TO AMEC. RESTRICTIONS ON USE OF THIS INFORMATION ARE CONTAINED IN CONTRACT #23401 BETWEEN AMEC AND CH2M HILL HANFORD GROUP.
I ISSUED FOR CH2M HILL APPROVAL & 90% REPORT 11 MAR 05
H ISSUED FOR CH2M HILL REVIEW 31 JAN 05
G ISSUED FOR REVISION & INTERNAL APPROVAL 25 JAN 05
F ISSUED FOR INTERNAL APPROVAL 06 JAN 05
E ISSUED FOR APPROVAL 20 AUG 04
D INTERNAL ISSUED FOR INFORMATION DRAWING NUMBER REVISED, WAS F-143643-36-A-0102 23 JUL 04
C ISSUED FOR TASK 6 REPORT 7 APR 04
B ISSUED FOR COMMENT 27 FEB 04
A ISSUED FOR INTERNAL REVIEW 9 FEB 04
F-145579-36-A-0102
amec
145579-FINAL DBVS DESIGN
U.S. DEPARTMENT OF ENERGY
Office of River Protection
BULK VITRIFICATION OFF-GAS TRAILER SCRUBBER FILTER P&ID

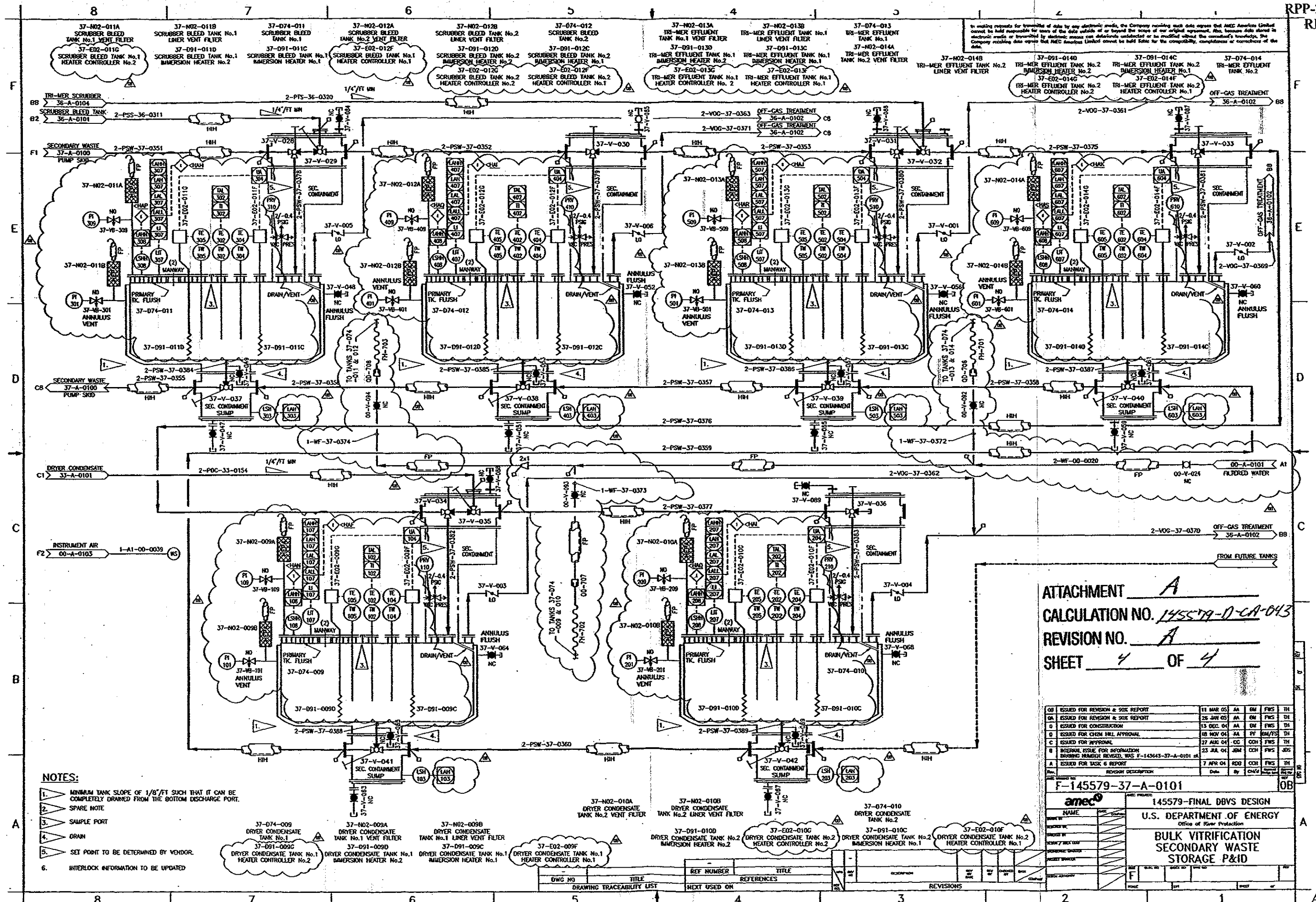
37-N02-011A SCRUBBER BLEED TANK No.1 VENT FILTER
37-E02-011G SCRUBBER BLEED TANK No.1 HEATER CONTROLLER No.2
37-N02-011B SCRUBBER BLEED TANK No.1 LINER VENT FILTER
37-091-011D SCRUBBER BLEED TANK No.1 IMMERSION HEATER No.2
37-074-011 SCRUBBER BLEED TANK No.1
37-091-011C SCRUBBER BLEED TANK No.1 IMMERSION HEATER No.1
37-N02-012A SCRUBBER BLEED TANK No.2 VENT FILTER
37-E02-012F SCRUBBER BLEED TANK No.1 HEATER CONTROLLER No.1
37-N02-012B SCRUBBER BLEED TANK No.2 LINER VENT FILTER
37-091-012D SCRUBBER BLEED TANK No.2 IMMERSION HEATER No.2
37-E02-012G SCRUBBER BLEED TANK No.2 HEATER CONTROLLER No.2
37-074-012 SCRUBBER BLEED TANK No.2
37-091-012C SCRUBBER BLEED TANK No.2 IMMERSION HEATER No.1
37-E02-012E SCRUBBER BLEED TANK No.2 HEATER CONTROLLER No.1
37-N02-013A TRI-MER EFFLUENT TANK No.1 VENT FILTER
37-091-013D TRI-MER EFFLUENT TANK No.1 IMMERSION HEATER No.2
37-E02-013G TRI-MER EFFLUENT TANK No.1 HEATER CONTROLLER No. 2
37-N02-013B TRI-MER EFFLUENT TANK No.1 LINER VENT FILTER
37-091-013C TRI-MER EFFLUENT TANK No.1 IMMERSION HEATER No.1
37-E02-013E TRI-MER EFFLUENT TANK No.1 HEATER CONTROLLER No.1
37-074-013 TRI-MER EFFLUENT TANK No.1
37-N02-014A TRI-MER EFFLUENT TANK No.2 VENT FILTER
37-N02-014B TRI-MER EFFLUENT TANK No.2 LINER VENT FILTER
37-091-014D TRI-MER EFFLUENT TANK No.2 IMMERSION HEATER No.2
37-E02-014G TRI-MER EFFLUENT TANK No.2 HEATER CONTROLLER No.2
37-091-014C TRI-MER EFFLUENT TANK No.2 IMMERSION HEATER No.1
37-E02-014F TRI-MER EFFLUENT TANK No.2 HEATER CONTOLLER No.1
37-074-014 TRI-MER EFFLUENT TANK No.2
TRI-MER SCRUBBER 36-A-0104
SCRUBBER BLEED TANK 36-A-0101
SECONDARY WASTE 37-A-0100 PUMP SKID
DRYER CONDENSATE 33-A-0101
INSTRUMENT AIR 00-A-0103
OFF-GAS TREATMENT 36-A-0102
FILTERED WATER
FROM FUTURE TANKS
SEC. CONTAINMENT SUMP
ANNULUS FLUSH
PRIMARY TK. FLUSH
DRAIN/VENT
ANNULUS VENT
MANWAY
TO TANKS 37-074-011 & 012
TO TANKS 37-074-013 & 014
TO TANKS 37-074-009 & 010
37-074-009 DRYER CONDENSATE TANK No.1
37-091-009G DRYER CONDENSATE TANK No.1 HEATER CONTROLLER No.2
37-N02-009A DRYER CONDENSATE TANK No.1 VENT FILTER
37-091-009D DRYER CONDENSATE TANK No.1 IMMERSION HEATER No.2
37-N02-009B DRYER CONDENSATE TANK No.1 LINER VENT FILTER
37-091-009C DRYER CONDENSATE TANK No.1 IMMERSION HEATER No.1
37-E02-009F DRYER CONDENSATE TANK No.1 HEATER CONTROLLER No.1
37-N02-010A DRYER CONDENSATE TANK No.2 VENT FILTER
37-091-010D DRYER CONDENSATE TANK No.2 IMMERSION HEATER No.2
37-E02-010G DRYER CONDENSATE TANK No.2 HEATER CONTROLLER No.2
37-N02-010B DRYER CONDENSATE TANK No.2 LINER VENT FILTER
37-074-010 DRYER CONDENSATE TANK No.2
37-091-010C DRYER CONDENSATE TANK No.2 IMMERSION HEATER No.1
37-E02-010F DRYER CONDENSATE TANK No.2 HEATER CONTROLLER No.1
ATTACHMENT A
CALCULATION NO. 145579-D-CA-043
REVISION NO. A
SHEET 4 OF 4
F-145579-37-A-0101
0B
145579-FINAL DBVS DESIGN
U.S. DEPARTMENT OF ENERGY
Office of River Protection
BULK VITRIFICATION SECONDARY WASTE STORAGE P&ID
NOTES:
1. MINIMUM TANK SLOPE OF 1/8"/FT SUCH THAT IT CAN BE COMPLETELY DRAINED FROM THE BOTTOM DISCHARGE PORT.
2. SPARE NOTE
3. SAMPLE PORT
4. DRAIN
5. SET POINT TO BE DETERMINED BY VENDOR.
6. INTERLOCK INFORMATION TO BE UPDATED
DRAWING TRACEABILITY LIST
REFERENCES
REVISIONS

**** SAMPLE ****

FORM EP 3.3-3F – CALCULATION PROCEDURE CHECKLIST

#	ACTION ACCORDING TO PROCEDURE EP 3.3 [a]	INITIAL/DATE
1	The calculation number has been obtained from Document Control and the calculation number is logged in the hard copy Calculation Log.	CEB / 4/25/05
2	The calculation has been prepared using the forms associated with this procedure (i.e., calculation cover sheet, summary sheet, and calculation sheet).	CEB / 4/25/05
3	The calculation has been formatted per this procedure (header, page number, etc).	CEB / 4/25/05
4	The appropriate revision number has been assigned.	CEB / 4/25/05
5	The discipline lead of affected documents has been notified of any changes.	NA /
6	All calculation sheets have been signed/initialed and dated.	CEB / 4/25/05
7	Attachments to the calculation are formatted as required and are included in the calculation package.	CEB / 4/25/05
8	The calculation package is complete and submitted to the assigned checker.	CEB / 4/25/05
9	The checker has accepted comment resolution and signed the cover sheet.	CEB / 4/25/05
10	The Calculation package has been submitted to Document Control (Preliminary) or Discipline Lead (Final).	CEB / 4/26/05
Final Only		/
11	Design Verifications, where applicable, are complete in accordance with EP3.9.	/
12	The calculations are stamped by a Registered PE (when required).	/
13	The Discipline Lead has approved the calculation and signed the cover sheet.	/
14	The Discipline Lead has forwarded the calculation package to the Document Control.	/
Calculation Revisions		
15	The calculation cover page is updated, noting the reason for revision.	/
16	Calculation sheets are updated in accordance with this procedure.	/
17	The appropriate revision number has been assigned.	/
18	The checking and approval (when required) have been completed and cover sheet is signed.	/

Form EP 3.3-3F (09/02)
[a] Each action is to be verified by the Originator.
[b] This checklist applies to preliminary and final calculations.

Figure 1. Subcontractor Calculation Review Checklist.

Page 1 of 1

Subject: DBVS Detectable Leak Volume for the OGTS Wet Scrubber System

The subject document has been reviewed by the undersigned.
The checker reviewed and verified the following items as applicable.

Documents Reviewed: 145570-D-CA-043 rev A

Analysis Performed By: DMJM

- Design Input
- Basic Assumptions
- Approach/Design Methodology
- Consistency with item or document supported by the calculation
- Conclusion/Results Interpretation
- Impact on existing requirements
- _____

Checker (printed name, signature, and date)
Thomas H May Thomas H May 4/19/06

Organizational Manager (printed name, signature and date)

Dave Shuford David H Shuford 4/19/06

The following correction need to be made to the text:

1. The calculation is acceptable for the IQRPE package, but lacks an approval signature by DMJM.

This page intentionally left blank.