008894

USEPA CONTRACT LABORATORY PROGRAM

STATEMENT OF WORK

FOR

ORGANICS ANALYSIS

Multi-Media

Multi-Concentration

2/88

MAY 1990
RECEIVED
EDMC

STATEMENT OF WORK

Table of Contents

EXHIBIT A: SUMMARY OF REQUIREMENTS

EXHIBIT B: REPORTING AND DELIVERABLES REQUIREMENTS

EXHIBIT C: TARGET COMPOUND LIST (TCL) AND CONTRACT REQUIRED QUANTITATION LIMITS (CRQL)

EXHIBIT D: ANALYTICAL METHODS

EXHIBIT E: QUALITY ASSURANCE/QUALITY CONTROL REQUIREMENTS

EXHIBIT F: CHAIN-OF-CUSTODY, DOCUMENT CONTROL AND STANDARD OPERATING PROCEDURES

EXHIBIT G: GLOSSARY OF TERMS

EXHIBIT H: DATA DICTIONARY AND FORMAT FOR DATA DELIVERABLES IN COMPUTER-READABLE FORMAT

EXHIBIT A

SUMMARY OF REQUIREMENTS

SECTION I

GENERAL REQUIREMENTS

The Contractor shall use proven instruments and techniques to identify and measure the concentrations of volatile, semivolatile and pesticide compounds listed on the Target Compound List (TCL) in Exhibit C. The Contractor shall employ state-of-the-art GC/MS and/or GC procedures to perform all analyses, including all necessary preparations for analysis.

In Exhibit D, the EPA provides the Contractor with the specific analytical procedures to be used and defines the specific application of these procedures to this contract. This includes instructions for sample preparation, gas chromatographic screening, mass spectrometric identification and data evaluation. Specific ions used for searching the mass spectral data for each compound are included.

The Contractor shall prepare extracts and dilutions of samples. The Contractor shall screen extracts by methods of his choice (soil characterization mandatory; water characterization optional) at an initial extract concentration. Then, based on the screening response, the Contractor shall use the specific analytical methods described in Exhibit D to extract and concentrate samples to achieve the Contract Required Quantitation Limits (CRQL) listed in Exhibit C. Exhibit D lists the analytical methods and starting points to be achieved for each of the TCL compounds.

During preparation, the Contractor shall fortify all samples, blanks, matrix spikes, and matrix spike duplicates with the surrogate spiking compounds listed in Exhibit E. Additionally, all sample semivolatile extracts and aliquots for volatile organics analysis shall be spiked with the internal standard compounds listed in Exhibit E before injection or purging.

Additionally, for each sample analyzed by GC/MS, the Contractor shall conduct mass spectral library searches to determine the possible identity of up to ten (10) nonsurrogate volatile components and up to twenty (20) nonsurrogate semivolatile components that are not on the Target Compound List (Exhibit C).

Exhibit F contains chain-of-custody and sample documentation requirements which the Contractor must follow in processing samples under this contract, and specifies requirements for written laboratory standard operating procedures.

Sample analysis data, sample documentation and other deliverables shall be reported as specified in Exhibit B. Specifications for reporting data in computer-readable form appear in Exhibit H.

To ensure proper understanding of language utilized in this contract, Exhibit G contains a glossary of terms. When a term is used in the text without explanation, the glossary meaning shall be applicable.

The samples to be analyzed by the Contractor are from known or suspected hazardous waste sites and, potentially, may contain hazardous organic and/or inorganic materials at high concentration levels. The Contractor should be aware of the potential hazards associated with the handling and analyses of these samples. It is the Contractor's responsibility to take all necessary measures to ensure the health and safety of its employees.

SECTION II

SPECIFIC REQUIREMENTS

A. For each sample, the Contractor shall perform the following tasks:

Task I: Receive and Prepare Hazardous Waste Samples.

1. Receive and handle samples under the chain-of-custody procedures described in Exhibit F.

2. Prepare samples as described in Exhibit D. VOA analysis of water or soil samples must be completed within 10 days of VTSR (Validated Time of Sample Receipt). If separatory funnel or sonication procedures are employed for extractions for semivolatile and pesticide analyses, extraction of water samples shall be completed within 5 days of VTSR, and extraction of soil samples shall be completed within 10 days of VTSR. If continuous liquid-liquid extraction procedures are employed, extraction of water samples shall be started within 5 days of VTSR.

   Extracts of either water or soil samples must be analyzed within 40 days of VTSR. This does not release the Contractor from the data turnaround time specified in Exhibit B, Section I.

Task II: Extraction and Analysis for Identification of Specific Organic Compounds.

1. Extracts and aliquots prepared in Task I shall be analyzed by GC and GC/MS techniques given in Exhibit D for the target compounds listed in Exhibit C.

2. The target compounds listed in Exhibit C shall be identified as described in the methodologies given in Exhibit D. Automated computer programs may be used to facilitate the identification.

Task III: Qualitative Verification of the Compounds Identified in Task II.

1. The compounds analyzed by GC/MS techniques and initially identified in Task II shall be verified by an analyst competent in the interpretation of mass spectra by comparison of the suspect mass spectrum to the mass spectrum of a standard of the suspected compound. Two criteria must be satisfied to verify the identifications:

   a. Elution of the sample component at the same GC relative retention time as the standard component, and

   b. Correspondence of the sample component and standard component mass spectra. This procedure requires the use of multiple internal standards.

2. For establishing correspondence of the GC relative retention time (RRT), the sample component RRT must compare within ± 0.06 RRT units of the RRT of the standard component. For reference, the calibration standard must be run on the same 12-hour time period as the sample.

For comparison of standard and sample component mass spectra, mass spectra obtained on the Contractor's GC/MS are required. Once obtained, these standard spectra may be used for identification purposes only if the Contractor's GC/MS meets the DFTPP or BFB daily tuning requirements of Tables 1.1 and 1.2 in Exhibit E. The standard spectra used may be from a laboratory generated library on the same instrument or obtained from the calibration standard run used to obtain reference RRTs. The requirements for qualitative verification by comparison of mass spectra are as follows:

a. All ions present in the standard mass spectrum at a relative intensity greater than 10 percent (most abundant ion in the spectrum equals 100 percent) <u>must</u> be present in the sample spectrum.

b. The relative intensities of ions specified in (1) must agree within plus or minus 20 percent between the standard and sample spectra.

c. Ions greater than 10 percent in the <u>sample</u> spectrum but not present in the <u>standard</u> spectrum must be considered and accounted for by the analyst making the comparison. When GC/MS computer data processing programs are used to obtain the sample component spectrum, both the processed and the raw spectra must be evaluated. In Task III, the verification process should favor false positives.

3. If a compound analyzed by GC/MS techniques and initially identified in Task II cannot be verified by all of the criteria in items 1 and 2 above, but in the technical judgement of the mass spectral interpretation specialist the identification is correct, then the Contractor shall report that identification, and proceed with quantification in Task IV.

4. The pesticide/PCB compounds listed in Exhibit C and analyzed by GC/EC techniques shall have their identifications verified by an analyst competent in the interpretation of gas chromatograms. Two criteria must be satisfied to verify the identifications:

a. Elution of the sample component within the retention time window (established by the procedures in Exhibit E) of the standard component analyzed on the same GC column and instrument, as part of the same 72-hour analytical sequence specified in Exhibit D PEST.

b. Analysis of the sample and standard on a second GC column with a stationary phase with retention characteristics dissimilar to that used in a. above, and meeting the same criteria for elution of the sample component and the standard as in a. above.

Task IV: Quantification of Compounds Verified in Task III.

1. The Contractor shall quantify components analyzed by GC/MS techniques and identified in Task II and verified in Task III by the internal standard method stipulated in Exhibit D. Where multiple internal standards are required by EPA, the Contractor shall perform quantitation utilizing the internal standards specified in Exhibit E, Part 2, Tables 2.1 or 2.2.

2. The Contractor shall determine response factors for each 12-hour time period of GC/MS analysis and shall include a calibration check of the initial five point calibration as described in Exhibit E.

3. The Contractor shall quantify components analyzed by GC/EC techniques and identified in Task II and verified in Task III by the external standard method stipulated in Exhibit D PEST.

4. The Contractor shall perform an initial three-point calibration, verify its linearity, determine the degradation of labile components, and determine calibration factors for all standards analyzed by GC/EC techniques as part of a 72-hour analytical sequence, as described in Exhibit D PEST and Exhibit E.

Task V: Tentative Identification of Non-TCL Sample Components.

1. For each analysis of a sample, the Contractor shall conduct mass spectral library searches to determine tentative compound identifications as follows. For each volatile fraction, the Contractor shall conduct a search to determine the possible identity of the ten (10) nonsurrogate organic compounds of greatest concentration which are not listed in Exhibit C. For each base/neutral/acid fraction, the Contractor shall conduct a search to determine the possible identification of the (20) nonsurrogate organic compounds of greatest concentration which are not listed in Exhibit C. In performing searches, the 1985 (or most recent) release of the National Bureau of Standards library (containing 42,261 spectra) must be used. NOTE: Substances with responses less than 10 percent of the nearest internal standard are not required to be searched in this fashion.

   Only after visual comparison of sample spectra with the spectra from the library searches will the mass spectral interpretation specialist assign a tentative identification. If the compound does not meet the identification criteria of Task III, it shall be reported as unknown. The mass spectral specialist should give additional classification of the unknown compound, if possible (i.e., unknown aromatic, unknown hydrocarbon, unknown acid type,

unknown chlorinated compound). If probable molecular weights can be distinguished, include them.

The Contractor shall not report as tentatively identified compounds (TIC) any TCL compounds from another analytical fraction (i.e., do not report late eluting volatile compounds as TICs in the semivolatile analysis).

Task VI: Quality Assurance/Quality Control Procedures.

1. All specific quality assurance procedures prescribed in Exhibit E shall be strictly adhered to by the Contractor. Records documenting the use of the protocol shall be maintained in accordance with the document control procedures prescribed in Exhibit F, and shall be reported in accordance with Exhibit B, Reporting Requirements and Deliverables.

2. The Contractor shall perform one spiked sample analysis (matrix spike) and one duplicate spiked sample analysis (matrix spike duplicate) for each group of samples of a similar matrix (for water or soil samples) and concentration level (for soil samples only), once:

   - each Case of field samples received, OR
   - each 20 samples in a Case, OR
   - each 14 calendar day period during which field samples in a Case were received (said period beginning with the receipt of the first sample in that Sample Delivery Group),

   whichever is most frequent.

   Matrix spikes and matrix spike duplicates shall be carried through the entire analytical process from extraction to final GC/MS or GC/EC analysis, including all Contract Performance/Delivery Requirements (see Contract Schedule).

3. The Contractor shall prepare and analyze one laboratory reagent blank (method blank) for each group of samples of a similar matrix (for water or soil samples), extracted by a similar method (separatory funnel or continuous liquid-liquid extraction), and a similar concentration level (for soil samples only), once:

   - each Case of field samples received, OR
   - each 20 samples in a Case, including matrix spikes and reanalyses, OR
   - each 14 calendar day period during which field samples in a Case were received (said period beginning with the receipt of the first sample in that Sample Delivery Group), OR
   - whenever samples are extracted,

   whichever is most frequent

   Volatile analysis requires one method blank for each 12-hour time period when volatile TCL compounds are analyzed.

Semivolatile and pesticide method blanks shall be carried through the entire analytical process from extraction to final GC/MS or GC/EC analysis, including all Contract Performance/Delivery Requirements (see Contract Schedule).

4. The Contractor shall perform instrument calibration (by "hardware tune") for each 12-hour time period, to include: decafluorotriphenylphosphine (DFTPP) and/or bromofluorobenzene (BFB) as applicable, and a specific calibration using standards of defined concentration to monitor response, retention time and mass spectra.

   Additional quality control shall be conducted in the form of the analysis of Performance Evaluation check samples submitted to the laboratory by EPA. The results of comparison studies are due as stipulated in the Delivery Schedule in Exhibit B, Section I. The results of all such control or PE check samples may be used as grounds for termination of noncompliant contractors. "Compliant performance" is defined as that which yields correct compound identification and concentration values as determined by EPA, as well as meeting the contract requirements for analysis (Exhibits C and D), quality assurance/quality control (Exhibit E), data reporting and other deliverables (Exhibits B and H), and sample custody, sample documentation and SOP documentation (Exhibit F).

B. EPA has provided to the Contractor formats for the reporting of data (Exhibits B and H). The Contractor shall be responsible for completing and returning analysis data sheets and submitting computer-readable data on floppy diskette in the format specified in this SOW and within the time specified in the Contract Performance/Delivery Schedule.

   1. Use of formats other than those designated by EPA will be deemed as noncompliance. Such data are unacceptable. Resubmission in the specified format at no additional cost to the government will be required.

   2. Computer generated forms may be submitted in the hardcopy data package(s) provided that the forms are in EXACT EPA FORMAT. This means that the order of data elements is the same as on each EPA required form, including form numbers and titles, page numbers and header information.

   3. The data reported by the Contractor on the hardcopy data forms and the associated computer-readable data submitted by the Contractor must contain identical information. If during government inspection discrepancies are found, the Contractor shall be required to resubmit either or both sets of data at no additional cost to the government.

C. The Contractor shall provide analytical equipment and technical expertise for this contract as specified following:

1. The Contractor shall have sufficient gas chromatograph (GC) and gas chromatograph/mass spectrometer/data system (GC/MS/DS) capability to meet all the terms and conditions of the Contract. Instrument requirements are defined in Section III, Detailed Technical & Management Requirements. The Contractor shall maintain, at a minimum, all analytical equipment allocated for this contract at the time of contract award.

2. The Contractor's instrument systems shall have the following:

   a. The GC/MS shall be equipped with a glass jet separator when using packed columns.

   b. The computer shall be interfaced by hardware to the mass spectrometer and be capable of acquiring continuous mass scans for the duration of the chromatographic program.

   c. The computer shall be equipped with mass storage devices for saving all data from the GC/MS runs.

   d. Computer software shall be available to allow searching GC/MS runs for specific ions and plotting the intensity of the ions with respect to time or scan number.

   e. The GC/MS shall be equipped with a GC to MS interface capable of extending a fused silica capillary column into the ion source. The column is to be 30 meters long by 0.25 or 0.32 mm inside diameter, bonded DB-5, fused silica or equivalent.

   f. The GC for pesticide analysis shall be equipped with packed columns or wide bore capillary columns (see Exhibit D, Section IV, for an optional FSCC confirmation column) and a suitable detector as described in Exhibit D.

3. The Contractor shall use a magnetic tape storage device capable of recording data and suitable for long-term, off-line storage. The Contractor shall retain all raw GC/MS data acquired under this contract on magnetic tape in appropriate instrument manufacturer's format. The Contractor is required to retain the magnetic tapes with associated hardcopy tape logbook identifying tape contents (see Exhibit B) for 365 days after data submission. During that time, the Contractor shall submit tapes and logbook within 7 days of request, as specified in the Contract Performance/Delivery Schedule.

4. The Contractor shall have a computerized MS library search system capable of providing a forward comparison, utilizing the standard spectra contained in the mass spectral library. The 1985 (or most recent) release of the National Bureau of Standards library (containing 42,261 spectra) must be used.

a. The system shall provide a numerical ranking of the standard spectra most closely corresponding to the sample spectra examined.

b. The data system shall have software capable of removing background signals from spectra.

5. The Contractor shall have, in-house and operable, a device capable of analyzing purgeable organics as described in Exhibit D.

6. The Contractor shall have, in-house, the appropriate standards for <u>all</u> target compounds listed in Exhibit C prior to accepting any samples from SMO. Standards provided by EPA for use in the Preaward Performance Evaluation may not contain all the target compounds and thus must <u>not</u> be used for routine analyses unless or until they have been supplemented with commercially-available standard materials.

D. The Contractor shall have an IBM or IBM-compatible mini-computer or PC capable of recording required sample data on 5.25 inch floppy double-sided double-density 360 K-byte or 1.2 M-byte diskettes, in ASCII text file format and in accordance with the file, record and field specifications listed in Exhibit H.

E. The minimum functional requirements necessary to meet the terms and conditions of this contract are listed below. The Contractor shall designate and utilize key personnel to perform these functions. The EPA reserves the right to review personnel qualifications and experience See Section III, Detailed Technical & Management Requirements.

- o GC/MS/DS operation.
- o Mass spectral interpretation.
- o Sample extraction and concentration
- o Purge and trap volatile organic compounds analysis.
- o Pesticide residue analysis of organochlorine pesticides and PCBs, including clean-up procedures.
- o Quality assurance/quality control
- o Sample receipt, storage, and tracking, including chain-of-custody procedures.

F. The Contractor shall respond in a timely manner to requests from data recipients for additional information or explanations that result from the Government's inspection activities.

G. The Contractor shall preserve all sample extracts after analysis in bottles/ vials with Teflon-lined septa and shall maintain stored extracts at 4°C (±2°C). The Contractor is required to retain the sample extracts for 365 days after data submission. During that time, the Contractor shall submit the extracts within 7 days after request, as specified in the Contract Performance/Delivery Schedule.

H. The Contractor shall adhere to chain-of-custody procedures described in Exhibit F. Documentation, as described therein, shall be required to show that all procedures are being strictly followed. This documentation shall be reported as the complete Case file purge (see Exhibit B).

I. Sample shipments to the Contractor's facility will be scheduled and coordinated by the EPA CLP Sample Management Office (SMO) acting on behalf of the Project Officer. The Contractor shall communicate with SMO personnel by telephone as necessary throughout the process of sample scheduling, shipment, analysis and data reporting, to ensure that samples are properly processed.

If there are problems with the samples (e.g., mixed media, containers broken or leaking) or sample documentation/paperwork (e.g., Traffic Reports not with shipment, sample and Traffic Report numbers do not correspond) the Contractor shall immediately contact SMO for resolution. The Contractor shall immediately notify SMO regarding any problems and laboratory conditions that affect the timeliness of analyses and data reporting. In particular, the Contractor shall notify SMO personnel in advance regarding sample data that will be delivered late and shall specify the estimated delivery date.

J. Sample analyses will be scheduled by groups of samples, each defined as a Case and identified by a unique EPA Case number assigned by SMO. A Case signifies a group of samples collected at one site or geographical area over a finite time period, and will include one or more field samples with associated blanks. Samples may be shipped to the Contractor in a single shipment or multiple shipments over a period of time, depending on the size of the Case.

A Case consists of one or more Sample Delivery Group(s). A Sample Delivery Group (SDG) is defined by the following, <u>whichever is most frequent</u>:

- each Case of field samples received, OR
- each 20 field samples within a Case, OR
- each 14 calendar day period during which field samples in a Case are received (said period beginning with the receipt of the first sample in the Sample Delivery Group).

Samples may be assigned to Sample Delivery Groups by matrix (i.e., all soils in one SDG, all waters in another), at the discretion of the laboratory. Such assignment must be made at the time the samples are received, and may not be made retroactively.

Data for all samples in a Sample Delivery Group are due concurrently as stipulated in the Delivery Schedule in Exhibit B, Section I. Data for all samples in a Sample Delivery Group must be submitted together (in one package) in the order specified in Exhibit B. The Sample Delivery Group number is the EPA sample number of the first sample received in the SDG. When several samples are received together in the first SDG shipment, the SDG number shall be the lowest sample number (considering

both alpha and numeric designations) in the first group of samples received under the SDG. The SDG number is reported on all data reporting forms.

The SDG Receipt Date is the day the last sample in the SDG is received. Data for all samples in the SDG are due as stipulated in the Delivery Schedule in Exhibit B, Section I.

The Contractor is responsible for identifying each Sample Delivery Group as samples are received, through proper sample documentation (see Exhibit B) and communication with SMO personnel.

K. Each sample received by the Contractor will be labeled with an EPA sample number, and accompanied by a Traffic Report form bearing the sample number and descriptive information regarding the sample. The Contractor shall complete and sign the Traffic Report, recording the date of sample receipt and sample condition on receipt for each sample container.

The Contractor shall submit signed copies of Traffic Reports for all samples in a Sample Delivery Group to SMO within 3 calendar days following receipt of the last sample in the Sample Delivery Group. Traffic Reports shall be submitted in Sample Delivery Group sets (i.e., all Traffic Reports for a Sample Delivery Group shall be clipped together) with an SDG Cover Sheet containing information regarding the Sample Delivery Group, as specified in Exhibit B.

L. EPA Case numbers (including SDG numbers) and EPA sample numbers shall be used by the Contractor in identifying samples received under this contract both verbally and in reports/correspondence.

M. Samples will routinely be shipped to the Contractor through an overnight delivery service. However, as necessary, the Contractor shall be responsible for any handling or processing required for the receipt of sample shipments, including pick-up of samples at the nearest servicing airport, bus station or other carrier service within the Contractor's geographical area. The Contractor shall be available to receive sample shipments at any time the delivery service is operating, including Saturdays.

N. The Contractor shall accept all samples scheduled by SMO, provided that the total number of samples received in any calendar month does not exceed the monthly limitation expressed in the contract. Should the Contractor elect to accept additional samples, the Contractor shall remain bound by all contract requirements for analysis of those samples accepted.

SECTION III

DETAILED TECHNICAL & MANAGEMENT REQUIREMENTS

As cited in Section II, Task VI, the Contractor shall have the following technical and management capabilities:

A. TECHNICAL CAPABILITY

1. Technical Functions

a. GC/MS Laboratory Supervisor

(1) Responsible for all technical efforts of the GC/MS laboratory to meet all terms and conditions of the EPA contract.

(2) Qualifications:

(a) Education:

Minimum of Bachelor's degree in chemistry or any physical science.

(b) Experience:

Minimum of three years of laboratory experience, including at least one year of supervisory experience.

b. GC/MS Operator Qualifications

(1) Education:

Minimum of Bachelor's degree in chemistry or any physical science.

(2) Experience:

One year of experience in operating and maintaining GC/MS/DS with degree in chemistry or a physical science, or three years of experience in operating and maintaining GC/MS/DS.

c. Mass Spectral Interpretation Specialist Qualifications

(1) Education:

- Minimum of Bachelor's degree in chemistry or any physical science.
- Training course(s) in mass spectral interpretation.

(2) Experience:

Minimum of two years of experience.

d. GC Laboratory Supervisor

(1) Responsible for all technical efforts of the GC laboratory.

(2) Qualifications:

(a) Education:

Minimum of Bachelor's degree in chemistry or any physical science.

(b) Experience:

Minimum of three years of laboratory experience, including at least one year of supervisory experience.

e. Pesticide Residue Analysis Expert Qualifications

(1) Education:

Minimum of Bachelor's degree in chemistry or any physical science.

(2) Experience:

Minimum of two years of experience in operating and maintaining GC and interpreting GC chromatograms.

f. Sample Preparation Laboratory Supervisor

(1) Responsible for all technical efforts of sample preparations to meet all terms and conditions of the EPA contract.

(2) Qualifications:

(a) Education:

Minimum of Bachelor's degree in chemistry or any physical science.

(b) Experience:

Minimum of three years of laboratory experience, including at least one year of supervisory experience.

g. Extraction/Concentration Expert Qualifications

(1) Education:

Minimum of High school diploma and knowledge of general chemistry.

(2) Experience:

Minimum of one year of experience.

h. Technical Staff Redundancy

The bidder shall have a minimum of one (1) chemist available at any one time as a back-up technical person with the following qualifications, to ensure continuous operations to accomplish the required work as specified by EPA contract.

(1) Education:

Minimum of Bachelor's degree in chemistry or any physical science.

(2) Experience: Minimum of one year in each of the following areas -

- o GC/MS operation and maintenance for volatiles and semivolatiles analyses.
- o Mass spectral interpretation.
- o Extraction.
- o Pesticide analysis.

2. Facilities

The adequacy of the facilities and equipment is of equal importance as the technical staff to accomplish the required work as specified by the EPA contract.

a. Sample Receipt Area

Adequate, contamination-free, well ventilated work space provided with chemical resistant bench top for receipt and safe handling of EPA samples.

b. Storage Area

Sufficient refrigerator space to maintain unused EPA sample volume for 60 days after data submission and sample extracts for 365 days after data submission. NOTE: Volatiles, semivolatiles, extracts, and standards must each be stored separately.

c. Sample Preparation Area

Adequate, contamination-free, well-ventilated work space provided with:

(1) Benches with chemical resistant tops, exhaust hoods. Note: Standards must be prepared in a glove box or isolated area.

(2) Source of distilled or demineralized organic-free water.

(3) Analytical balance(s) located away from draft and rapid change in temperature.

3. Instrumentation

At a minimum, the Contractor shall have the following instruments operative at the time of the Preaward Site Evaluation and committed for the full duration of the contract.

NOTE: The following primary and secondary instrument requirements (a. and b. below) have been provided for both 100 samples/month capacity contracts (Open Market) and 50 samples/month capacity contracts (Small Business). The Contractor is responsible for the requirements for their contract(s) (i.e., if you have an open market (100 samples/month capacity) contract, you need to refer to the open market requirements, and if you have a small business (50 samples/month capacity) contract, you need to refer to the small business requirements).

a. Primary Instrument Requirements

(1) 100 Samples/Month Capacity (Open Market Contracts Only)

Fraction	No. of Instrument(s)	Type of Instrument
Volatiles	1	GC/MS/DS with purge and trap device
Semivolatiles (BNA)	2	GC/MS/DS
Pesticides/PCBs	2	GC/EC with dual column

(2) 50 Samples/Month Capacity (Small Business Contracts Only)

Fraction	No. of Instrument(s)	Type of Instrument
Volatiles	1	GC/MS/DS with purge and trap device
Semivolatiles (BNA)	1	GC/MS/DS
Pesticides/PCBs	1	GC/EC with dual column

For contracts with three (3) bid lots or more:

- o Minimum of three (3) GC/MS/DS and two (2) GC sytems are required at time of bidding.
- o An additional one (1) GC/MS/DS and one (1) GC system are required as a back-up system

b. Secondary Instrument Requirements

(1) 100 Samples/Month Capacity (Open Market Contracts Only)

The Contractor shall have the following instruments in place and operational at any one time as a back-up system;

Quantity	Instruments
One	GC/MS/DS
One	Purge and Trap Device
One	GC

These instruments must be included in the bidder's inventory of equipment along with those in (1). above.

In addition, the Contractor shall have an in-house stock of instrument parts and circuit boards to ensure continuous operation to meet contract-specified holding and turnaround times.

(2) 50 Samples/Month Capacity (Small Business Contracts Only)

The Contractor shall have one GC/MS/DS as a back-up system, to be in place within 6 months from the date of contract award.

In addition, the Contractor shall have an in-house stock of instrument parts and circuit boards to ensure continuous operation to meet contract-specified holding and turnaround times.

c. Instrument Specifications

Instrument specifications are described in detail in the Statement of Work (SOW) in the following Exhibits.

o Purge and trap device	Exhibit D
o GC/MS/DS	Exhibits A and D
o GC	Exhibit D

4. Data Handling and Packaging

The Contractor shall be able to submit reports and data packages as specified in the Statement of Work Exhibit B. To complete this task, the Contractor shall be required to:

a. Provide space, tables and copy machines to meet the contract requirements.

b. Designate personnel.

B. LABORATORY MANAGEMENT CAPABILITY

The Contractor must have an organization with well-defined responsibilities for each individual in the management system to ensure sufficient resources for EPA contract(s)and to maintain a successful operation. To establish this capability, the Contractor shall designate personnel to carry out the following responsibilities for the EPA contract. Functions include, but are not limited to, the following:

1. Technical Staff

Responsible for all technical efforts for the EPA contract.

2. Project Manager

Responsible for overall aspects of EPA contract(s) (from sample receipt through data delivery) and shall be the primary contact for EPA Headquarters Project Officer and Regional Deputy Project Officers.

3. Sample Custodian

Responsible for receiving the EPA samples (logging, handling and storage).

4. Quality Assurance Officer

Responsible for overseeing the quality assurance aspects of the data and reporting directly to upper management.

5. Data Reporting and Delivery Officer

Responsible for all aspects of data deliverables: organization, packaging, copying, and delivery.

EXHIBIT B

REPORTING AND DELIVERABLES REQUIREMENTS

Table of Contents

		Page
SECTION I:	Contract Reports/Deliverables Distribution	B-3
SECTION II:	Report Descriptions and Order of Data Deliverables	B-6
SECTION III:	Forms Instruction Guide	B-23
SECTION IV:	Data Reporting Forms	B-43

SECTION I

CONTRACT REPORTS/DELIVERABLES DISTRIBUTION

The following table reiterates the Contract reporting and deliverables requirements specified in the Contract Schedule and specifies the distribution that is required for each deliverable. NOTE: Specific recipient names and addresses are subject to change during the term of the contract. The Project Officer will notify the Contractor in writing of such changes when they occur.

	Item	No. Copies	Delivery Schedule	Distribution (1)	(2)
*A.	Contract Start-Up Plan	2	7 days after contract receipt.	X	X
B.	Updated SOPs	1	120 days after contract receipt.	X	

	Item	No. Copies	Delivery Schedule	Distribution (3)	(4)	(5)	(6)
**C.	Sample Traffic Reports	1	3 days after receipt of last sample in Sample Delivery Group (SDG).****	X			
***D.	Sample Data Summary Package	1	21 days after receipt of last sample in SDG.	X			
***E.	Sample Data Package	3	21 days after receipt of last sample in SDG.	X	X	X	
***F.	Data in Computer-Readable Form	1	21 days after receipt of last sample in SDG.	X			

Distribution:
(1) Project Officer (PO)
(2) Contract Officer (CO)
(3) Sample Management Office (SMO)
(4) EMSL-LV
(5) Region-Client
(6) NEIC

	Item	No. Copies	Delivery Schedule	Distribution (3)	(4)	(5)	(6)
G.	GC/MS Tapes	Lot	Retain for 365 days after data submission, or submit within 7 days after receipt of written request by PO and/or EMSL/LV.	As Directed			
H.	Extracts	Lot	Retain for 365 days after data submission, or submit within 7 days after receipt of written request by PO or SMO.	As Directed			
I.	Complete Case File Purge	1 Pkg	Submit no less than 180 and no more than 240 days after data submission or 7 days after receipt of written request by PO or SMO.				X

* Contractor must be prepared to receive samples within 30 days of contract award. NOTE: EPA can't guarantee exact adherence to start-up plan that is agreed upon by the PO & Contractor, but will attempt to meet it as close as possible.

** Also required in the Sample Data Package.

*** Concurrent delivery required. Delivery shall be made such that all designated recipients receive the item on the same calendar day.

**** Sample Delivery Group (SDG) is a group of samples within a Case, received over a period of 14 days or less and not exceeding 20 samples. Data for all samples in the SDG are due concurrently. (See SOW Exhibit A, paragraph J., for further description).

NOTE: As specified in the Contract Schedule (G.6 Government Furnished Supplies and Materials), unless otherwise instructed by the CLP Sample Management Office, the Contractor shall dispose of unused sample volume and used sample bottles/ containers no earlier than sixty (60) days following submission of analytical data.

Distribution Addresses:

(1) USEPA Analytical Operations Branch (WH 548A)
401 M Street, SW
Washington, DC 20460
ATTN: (Project Officer's Name)

(2) USEPA Office of Administration
Procurements & Contracts Management Division (PM-214)
401 M Street, SW
Washington, DC 20460
ATTN: (Contract Officer's Name)

(3) USEPA Contract Lab Program
Sample Management Office (SMO)
P. O. Box 818
Alexandria, VA 22313

For overnight delivery service, use street address:
209 Madison Street, Suite 200
Alexandria, VA 22314

(4) USEPA Environmental Monitoring
Systems Laboratory (EMSL-LV)
P. O. Box 15027
Las Vegas, NV 89114
ATTN: Data Audit Staff

For overnight delivery service, use street address:
944 E. Harmon, Executive Center
Las Vegas, NV 89109
ATTN: Data Audit Staff

(5) USEPA REGIONS:

The CLP Sample Management Office, acting on behalf of the Project Officer, will provide the Contractor with the list of addressees for the ten EPA Regions. SMO will provide the Contractor with updated Regional address/name lists as necessary throughout the period of the contract and identify other client recipients on a case-by-case basis.

(6) NEIC, Contractor Evidence Audit Team
12600 West Colfax, Suite 310
Lakewood, Colorado 80215

SECTION II

REPORT DESCRIPTIONS AND ORDER OF DATA DELIVERABLES

The Contractor laboratory shall provide reports and other deliverables as specified in the Contract Schedule (Performance/Delivery Schedule, Section F.1). The required content and form of each deliverable is described in this Exhibit.

All reports and documentation MUST BE:

- Legible,
- Clearly labeled and completed in accordance with instructions in this Exhibit,
- Arranged in the order specified in this Section, and
- Paginated.

If submitted documentation does not conform to the above criteria, the Contractor will be required to resubmit such documentation with deficiency(ies) corrected, at no additional cost to the Agency.

Whenever the Contractor is required to submit or resubmit data as a result of an on-site laboratory evaluation or through a PO/DPO action, the data must be clearly marked as ADDITIONAL DATA and must be sent to all three contractual data recipients (SMO, EMSL-LV, and Region). A cover letter shall be included which describes what data is being delivered, to which EPA Case(s) it pertains, and <u>who requested the data</u>.

Whenever the Contractor is required to submit or resubmit data as a result of Contract Compliance Screening (CCS) review by SMO, the data must be sent to all three contractual data recipients (SMO, EMSL/LV and Region), and in all three instances must be accompanied by a color-coded COVER SHEET (Laboratory Response To Results of Contract Compliance Screening) provided by SMO.

Section III of this Exhibit contains copies of the required data reporting forms in Agency-specified formats, along with instructions to assist the Contractor in accurately providing the Agency all required data. Data elements with field parameters for reporting data in computer readable form are contained in Exhibit H.

Descriptions of the requirements for each deliverable item cited in the Contract Performance/Delivery Schedule (Contract Schedule, Section F.1) are specified in parts A-G of this Section. Items submitted concurrently MUST BE arranged in the order listed. Additionally, the components of each item MUST BE arranged in the order presented in this Section when the item is submitted.

Examples of specific data deliverables not included herein may be obtained by submitting a written request to the EPA Project Officer, stating the information requested, and signed by the Laboratory Manager.

A. Contract Start-Up Plan

The Contractor shall submit a contract start-up plan for EPA approval as specified in the Contract Performance/Delivery Schedule. The plan shall set forth the Contractor's proposed schedule for receiving samples starting with the 30th calendar day after award and ending with the date the Contractor is capable of receiving the full monthly sample allotment stipulated in the Contract. The Project Officer will review the contract start-up plan within 7 days of submission and will notify the Contractor of the plan's status.

NOTE: The Contractor shall be required to receive samples within 30 days of contract award. EPA can't guarantee exact adherence to start-up plan that is agreed upon by the PO and Contractor, but will attempt to meet it as close as possible.

B. Updated SOPs

The Contractor shall submit updated copies of all required Standard Operating Procedures (SOPs) that were submitted with the prebid Performance Evaluation sample results. The updated SOPs must address any and all issues of laboratory performance and operation identified through the review of the Performanc Evaluation sample data and the evaluation of Bidder-Supplied Documentation.

The Contractor must supply SOPs for:

1. Sample receipt and logging.
2. Sample and extract storage.
3. Preventing sample contamination.
4. Security for laboratory and samples.
5. Traceability/Equivalency of standards.
6. Maintaining instrument records and logbooks.
7. Sample analysis and data control systems.
8. Glassware cleaning.
9. Technical and managerial review of laboratory operation and data package preparation.
10. Internal review of contractually-required quality assurance and quality control data for each individual data package.
11. Sample analysis, data handling and reporting.
12. Chain-of-custody.
13. Document control, including case file preparation.

Note: Such documentation is not required to conform specifically (i.e., in every detail) to this contract's requirements, but shall be representative of standard laboratory operations, and shall give clear evidence of the Contractor's ability to successfully fulfill all contract requirements.

C. Sample Traffic Reports

Original Sample Traffic Report page marked "Lab Copy for Return to SMO" with lab receipt information and signed in original Contractor signature. for each sample in the Sample Delivery Group.

Traffic Reports (TRs) shall be submitted in Sample Delivery Group (SDG) sets (i.e., TRs for all samples in an SDG shall be clipped together), with an SDG Cover Sheet attached.

The SDG Cover Sheet shall contain the following items:

- Lab name
- Contract number
- Sample Analysis Price - full sample price from contract.
- Case Number
- List of EPA sample numbers of all samples in the SDG, identifying the first and last samples received, and their dates of receipt (LRDs). NOTE: When more than one sample is received in the first or last SDG shipment, the "first" sample received would be the lowest sample number (considering both alpha and numeric designations); the "last" sample received would be the highest sample number (considering both alpha and numeric designations).

In addition, each Traffic Report must be clearly marked with the SDG Number, the sample number of the first sample in the SDG (as described in the following paragraph). This information should be entered below the Lab Receipt Date on the TR. In addition, the TR for the last sample received in the SDG must be clearly marked "SDG - FINAL SAMPLE."

The EPA sample number of the first sample received in the SDG is the SDG number. When several samples are received together in the first SDG shipment, the SDG number shall be the lowest sample number (considering both alpha and numeric designations) in the first group of samples received under the SDG. (The SDG number is also reported on all data reporting forms. See Section III, Forms Instruction Guide.)

If samples are received at the laboratory with multi-sample Traffic Reports (TRs), all the samples on one multi-sample TR may not necessarily be in the same SDG. In this instance, the laboratory must make the appropriate number of photocopies of the TR, and submit one copy with each SDG cover sheet.

D. Sample Data Summary Package

As specified in the Delivery Schedule, one Sample Data Summary Package shall be delivered to SMO concurrently with delivery of other required sample data. The Sample Data Summary Package consists of copies of specified items from the Sample Data Package. These items are listed below and described under part E, Sample Data Package.

The Sample Data Summary Package shall be ordered as follows and shall be submitted separately (i.e., separated by rubber bands, clips or other means) directly preceding the Sample Data Package. Sample data forms shall be arranged in increasing EPA sample number order, considering both letters and numbers. BE400 is a lower sample number than BF100, as E precedes F in the alphabet.

The Sample Data Summary Package shall contain data for samples in one Sample Delivery Group of the Case, as follows:

1. Case Narrative

2. By fraction (VOA, SV, PEST) and by sample within each fraction - tabulated target compound results (Form I) and tentatively identified compounds (Form I, TIC)(VOA and SV only)

3. By fraction (VOA, SV, PEST) - surrogate spike analysis results (Form II) by matrix (water and/or soil) and for soil, by concentration (low or medium)

4. By fraction (VOA, SV, PEST) - matrix spike/matrix spike duplicate results (Form III)

5. By fraction (VOA, SV, PEST) - blank data (Form IV) and tabulated results (Form I) including tentatively identified compounds (Form I, TIC)(VOA and SV only).

6. By fraction (VOA, SV only) - internal standard area data (Form VIII).

E. Sample Data Package

The Sample Data Package is divided into the five major units described below. The last three units are each specific to an analytical fraction (volatiles, semivolatiles, pesticides/PCBs). If the analysis of a fraction is not required, then that fraction-specific unit is not required as a deliverable.

The Sample Data Package shall include data for analyses of all samples in one Sample Delivery Group, including field samples, reanalyses, blanks, matrix spikes, and matrix spike duplicates.

1. Case Narrative

This document shall be clearly labeled "Case Narrative" and shall contain: laboratory name; Case number; sample numbers in the Sample Delivery Group (SDG), differentiating between initial analyses and re-analyses; SDG number; Contract number; and detailed documentation of any quality control, sample, shipment and/or analytical problems encountered in processing the samples reported in the data package.

Whenever data from sample re-analyses are submitted, the Contractor shall state in the Case Narrative for each re-analysis, whether it considers the re-analysis to be billable, and if so, why.

The Contractor must also include any problems encountered: both technical and administrative, the corrective actions taken, and resolution.

The Case Narrative shall contain the following statement, verbatim: "I certify that this data package is in compliance with the terms and conditions of the contract, both technically and for completeness, for other than the conditions detailed above. Release of the data contained in this hardcopy data package and in the computer-readable data submitted on floppy diskette has been authorized by the Laboratory Manager or his designee, as verified by the following signature." This statement shall be directly followed by signature of the Laboratory Manager or his designee with a typed line below it containing the signer's name and title, and the date of signature.

Additionally, the Case Narrative itself must be signed in original signature by the Laboratory Manager or his designee and dated.

2. Traffic Reports

A copy of the Sample Traffic Reports submitted in Item A for all of the samples in the SDG. The Traffic Reports shall be arranged in increasing EPA sample number order, considering both letters and numbering in ordering samples. Copies of the SDG cover sheet is to be included with the copies of the Traffic Reports.

If samples are received at the laboratory with multi-sample Traffic Reports (TRs), all the samples on one multi-sample TR may not necessarily be in the same SDG. In this instance, the laboratory must make the appropriate number of photocopies of the TR so that a copy is submitted with each data package to which it applies. In addition, in any instance where samples from more than one multi-sample TR are in the same data package, the laboratory must submit a copy of the SDG cover sheet with copies of the TRs.

3. Volatiles Data

a. QC Summary

(1) Surrogate Percent Recovery Summary (Form II VOA)

(2) Matrix Spike/Matrix Spike Duplicate Summary (Form III VOA)

(3) Method Blank Summary (Form IV VOA)

(If more than a single form is necessary, forms must be arranged in chronological order by date of analysis of the blank.)

(4) GC/MS Tuning and Mass Calibration (Form V VOA)

BFB in chronological order; by instrument.

(5) Internal Standard Area Summary (Form VIII VOA)

In chronological order; by instrument.

b. Sample Data

Sample data shall be arranged in packets with the Organic Analysis Data Sheet (Form I VOA, including Form I VOA-TIC), followed by the raw data for volatile samples. These sample packets should then be placed in increasing EPA sample number order, considering both letters and numbers in ordering samples.

(1) TCL Results - Organic Analysis Data Sheet (Form I VOA).

Tabulated results (identification and quantitation) of the specified target compounds (Exhibit C). The validation and release of these results is authorized by a specific, signed statement in the Case Narrative (reference C.1). In the event that the Laboratory Manager cannot validate all data reported for each sample, the Laboratory Manager shall provide a detailed description of the problems associated with the sample in the Case Narrative.

On Form I, the appropriate concentration units shall be entered. For example, ug/L for water samples or ug/Kg for soil/sediment samples. No other units are acceptable. NOTE: Report analytical results to one significant figure if the value is less than 10; to two significant figures above 10.

(2) Tentatively Identified Compounds (Form I VOA-TIC).

This form must be included even if no compounds are found. If so, indicate this on the form by entering "0" in the field for "Number found."

Form I VOA-TIC is the tabulated list of the highest probable match for up to 10 of the nonsurrogate organic compounds not listed in Exhibit C (TCL), including the CAS (Chemical Abstracts Registry) number, tentative identification and estimated concentration. For estimating concentration, assume a response factor of 1, and estimate the concentration by comparison of the compound peak height or total area count to the peak height or total area count of the nearest internal standard free of interferences on the reconstructed ion chromatogram. NOTE: The laboratory must be consistent (i.e., use peak height for all comparisons <u>or</u> use total area count for all comparisons).

(3) Reconstructed total ion chromatograms (RIC) for each sample or sample extract.

RICs must be normalized to the largest nonsolvent component, and must contain the following header information:

- o EPA sample number
- o Date and time of analysis
- o GC/MS instrument ID
- o Lab file ID

Internal standard and surrogate spiking compounds are to be labeled with the names of compounds, either directly out from the peak, or on a print-out of retention times if retention times are printed over the peak. If automated data system procedures are used for preliminary identification and/or quantification of the Target Compound List (TCL) compounds, the complete data system report must be included in all sample data packages, in addition to the reconstructed ion chromatogram. The complete data system report shall include all of the information listed below. For laboratories which do not use the automated data system procedures, a laboratory "raw data sheet," containing the following information, must be included in the sample data package in addition to the chromatogram.

- o EPA sample number
- o Date and time of analysis
- o RT or scan number of identified TCL compounds
- o Ion used for quantitation with measured area
- o Copy of area table from data system
- o GC/MS instrument ID
- o Lab file ID

(4) For each sample, by each compound identified:

(a) Copies of raw spectra and copies of background-subtracted mass spectra of target compounds listed in Exhibit C (TCL) that are identified in the sample and corresponding background-subtracted TCL standard mass spectra. Spectra must be labeled with EPA sample number, lab file ID, date and time of analysis, and GC/MS instrument ID; compound names must be clearly marked on all spectra.

(b) Copies of mass spectra of nonsurrogate organic compounds not listed in Exhibit C (TCL) (Tentatively Identified Compounds) with associated best-match spectra (three best matches), labeled as in (4)(a) above.

c. Standards Data

(1) Initial Calibration Data (Form VI VOA) - in order by instrument, if more than one instrument used.

(a) VOA standard(s) reconstructed ion chromatograms and quantitation reports (or legible facsimile) for the initial (five point) calibration, labeled as in b.(3) above. Spectra are not required.

(b) All initial calibration data must be included, regardless of when it was performed and for which case. When more than one initial calibration is performed, the data must be put in chronological order, by instrument.

(2) Continuing Calibration (Form VII VOA) - in order by instrument, if more than one instrument used.

(a) VOA standard(s) reconstructed ion chromatograms and quantitation reports (or legible facsimile) for all continuing (12 hour) calibrations, labeled as in b.(3) above. Spectra are not required.

(b) When more than one continuing calibration is performed, forms must be in chronological order, within fraction and instrument.

(3) Internal Standard Area Summary (Form VIII VOA) - in order by instrument, if more than one instrument used.

When more than one continuing calibration is performed, forms must be in chronological order, by instrument.

d. Raw QC Data

(1) BFB (for each 12-hour period, for each GC/MS system utilized)

(a) Bar graph spectrum, labeled as in b.(3) above.

(b) Mass listing, labeled as in b.(3) above.

(2) Blank Data - in chronological order. NOTE: This order is different from that used for samples.

(a) Tabulated results (Form I VOA)

(b) Tentatively Identified Compounds (Form I VOA-TIC) even if none found.

(c) Reconstructed ion chromatogram(s) and quantitation report(s) or legible facsimile (GC/MS), labeled as in b.(3) above.

(d) TCL spectra with lab generated standard, labeled as in b.(4) above. Data systems which are incapable of dual display shall provide spectra in order:

- o Raw TCL compound spectra
- o Enhanced or background subtracted spectra
- o Laboratory generated TCL standard spectra

(e) GC/MS library search spectra for Tentatively Identified Compounds (TIC), labeled as in b.(4) above.

(f) Quantitation/Calculation of Tentatively Identified Compound(s) (TIC) concentrations

(3) Matrix Spike Data

(a) Tabulated results (Form I VOA) of nonspiked TCL compounds. Form I VOA-TIC <u>not</u> required.

(b) Reconstructed ion chromatogram(s) and quantitation report(s) or legible facsimile (GC/MS), labeled as in b.(4) above. Spectra <u>not</u> required.

(4) Matrix Spike Duplicate Data

(a) Tabulated results (Form I VOA) of nonspiked TCL compounds. Form I VOA-TIC <u>not</u> required.

(b) Reconstructed ion chromatogram(s) and quantitation report(s) or legible facsimile (GC/MS), labeled as in b.(4) above. Spectra <u>not</u> required.

4. Semivolatiles Data

a. QC Summary

(1) Surrogate Percent Recovery Summary (Form II SV)

(2) Matrix Spike/Matrix Spike Duplicate Summary (Form III SV)

(3) Method Blank Summary (Form IV SV)

(If more than a single form is necessary, forms must be arranged in chronological order by date of analysis of the blank.)

(4) GC/MS Tuning and Mass Calibration (Form V SV)

DFTPP in chronological order; by instrument.

(5) Internal Standard Area Summary (Form VIII SV)

In chronological order; by instrument.

b. Sample Data

Sample data shall be arranged in packets with the Organic Analysis Data Sheet (Form I SV, including Form I SV-TIC), followed by the raw data for semivolatile samples. These sample packets should then be placed in increasing EPA sample number order, considering both letters and numbers in ordering samples.

(1) TCL Results - Organic Analysis Data Sheet (Form I SV-1, SV-2).

Tabulated results (identification and quantitation) of the specified target compounds (Exhibit C). The validation and release of these results is authorized by a specific, signed statement in the Case Narrative (reference E.1). In the event that the Laboratory Manager cannot validate all data reported for each sample, the Laboratory Manager shall provide a detailed description of the problems associated with the sample in the Case Narrative.

On Form I, the appropriate concentration units shall be entered. For example, ug/L for water samples or ug/Kg for soil/sediment samples. No other units are acceptable. NOTE: Report analytical results to one significant figure if the value is less than 10; to two significant figures above 10.

(2) Tentatively Identified Compounds (Form I SV-TIC).

This form must be included even if no compounds are found. If so, indicate this on the form by entering "0" in the field for "Number found".

Form I SV-TIC is the tabulated list of the highest probable match for up to 20 of the nonsurrogate organic compounds not listed in Exhibit C (TCL), including the CAS (Chemical Abstracts Registry) number, tentative identification and estimated concentration. For estimating concentration, assume a response factor of 1, and estimate the concentration by comparison of the compound peak height or total area count to the peak height or total area count of the nearest internal standard free of interferences on the reconstructed ion chromatogram. NOTE: The laboratory must be consistent (i.e., use peak height for all comparisons <u>or</u> use total area count for all comparisons).

(3) Reconstructed total ion chromatograms (RIC) for each sample, sample extract, standard, blank, and spiked sample.

RICs must be normalized to the largest nonsolvent component, and must contain the following header information:

- o EPA sample number
- o Date and time of analysis
- o GC/MS instrument ID
- o Lab file ID

Internal standard and surrogate spiking compounds are to be labeled with the names of compounds, either directly out from the peak, or on a print-out of retention times if retention times are printed over the peak. If automated data system procedures are used for preliminary identification and/or quantification of the Target Compound List (TCL) compounds, the complete data system report must be included in all sample data packages, in addition to the reconstructed ion chromatogram. The complete data system report shall include all of the information listed below. For laboratories which do not use the automated data system procedures, a laboratory "raw data sheet," containing the following information, must be included in the sample data package in addition to the chromatogram.

- o EPA sample number
- o Date and time of analysis
- o RT or scan number of identified TCL compounds
- o Ion used for quantitation with measured area
- o Copy of area table from data system
- o GC/MS instrument ID
- o Lab file ID

(4) For each sample, by each compound identified:

(a) Copies of raw spectra and copies of background-subtracted mass spectra of target compounds listed in Exhibit C (TCL) that are identified in the sample and corresponding background-subtracted TCL standard mass spectra. Spectra must be labeled with EPA sample number, lab file ID, date and time of analysis, and GC/MS instrument ID; compound names must be clearly marked on all spectra.

(b) Copies of mass spectra of nonsurrogate organic compounds not listed in Exhibit C (TCL) (Tentatively Identified Compounds) with associated best-match spectra (three best matches), labeled as in (4)(a) above.

(c) GPC chromatograms (if GPC performed).

c. Standards Data

(1) Initial Calibration Data (Form VI SV-1, SV-2) - in order by instrument, if more than one instrument used.

(a) BNA standard(s) reconstructed ion chromatograms and quantitation reports (or legible facsimile) for the initial (five point) calibration, labeled as in b.(3) above. Spectra are not required.

(b) All initial calibration data must be included, regardless of when it was performed and for which case. When more than one initial calibration is performed, the data must be put in chronological order, by instrument.

(2) Continuing Calibration (Form VII SV-1, SV-2) - in order by instrument, if more than one instrument used.

(a) BNA standard(s) reconstructed ion chromatograms and quantitation reports (or legible facsimile) for all continuing (12 hour) calibrations, labeled as in b.(3) above. Spectra are not required.

(b) When more than one continuing calibration is performed, forms must be in chronological order, by instrument.

(3) Internal Standard Area Summary (Form VIII SV-1, SV-2) - in order by instrument, if more than one instrument used.

When more than one continuing calibration is performed, forms must be in chronological order by instrument.

d. Raw QC Data

(1) DFTPP (for each 12-hour period, for each GC/MS system utilized)

(a) Bar graph spectrum, labeled as in b.(3) above.

(b) Mass listing, labeled as in b.(3) above.

(2) Blank Data - in chronological order. NOTE: This order is different from that used for samples.

(a) Tabulated results (Form I SV-1, SV-2)

(b) Tentatively Identified Compounds (Form I SV-TIC) - even if none found.

(c) Reconstructed ion chromatogram(s) and quantitation report(s) or legible facsimile (GC/MS), labeled as in b.(3) above.

(d) TCL spectra with lab generated standard, labeled as in b.(4) above. Data systems which are incapable of dual display shall provide spectra in order:

- o Raw TCL compound spectra
- o Enhanced or background subtracted spectra
- o Laboratory generated TCL standard spectra

(e) GC/MS library search spectra for Tentatively Identified Compounds (TIC), labeled as in b.(4) above.

(f) Quantitation/Calculation of Tentatively Identified Compound(s) (TIC) concentrations

(3) Matrix Spike Data

(a) Tabulated results (Form I) of nonspiked TCL compounds. Form 1 SV-TIC <u>not</u> required.

(b) Reconstructed ion chromatogram(s) and quantitation report(s) or legible facsimile (GC/MS), labeled as in b.(3) above. Spectra <u>not</u> required.

(4) Matrix Spike Duplicate Data

(a) Tabulated results (Form I SV-1, SV-2) of nonspiked TCL compounds. Form 1 SV-TIC <u>not</u> required.

(b) Reconstructed ion chromatogram(s) and quantitation report(s) or legible facsimile (GC/MS), labeled as in b.(3) above. Spectra <u>not</u> required.

5. Pesticide/PCB Data

a. QC Summary

(1) Surrogate Percent Recovery Summary (Form II PEST)

(2) Matrix Spike/Matrix Spike Duplicate Summary (Form III PEST)

(3) Method Blank Summary (Form IV PEST)

(If more than a single form is necessary, forms must be arranged in chronological order by date of analysis of the blank.)

b. Sample Data

Sample data shall be arranged in packets with the Organic Analysis Data Sheet (Form I PEST), followed by the raw data for pesticide samples. These sample packets should then be placed in increasing EPA sample number order, considering both letters and numbers in ordering samples.

(1) TCL Results - Organic Analysis Data Sheet (Form I PEST).

Tabulated results (identification and quantitation) of the specified target compounds (Exhibit C). The validation and release of these results is authorized by a specific, signed statement in the Case Narrative (reference E.1). In the event that the Laboratory Manager cannot validate all data reported for each sample, the Laboratory Manager shall provide a detailed description of the problems associated with the sample in the Case Narrative.

On Form I PEST, the appropriate concentration units shall be entered. For example, ug/L for water samples or ug/Kg for soil/sediment samples. No other units are acceptable.

NOTE: Report analytical results to two significant figures for all pesticide/PCB samples.

(2) Copies of pesticide chromatograms.

All chromatograms must be labeled with the following information:

- o EPA sample number
- o Volume injected (ul)
- o Date and time of injection
- o GC column identification (by stationary phase)
- o GC instrument identification
- o Positively identified compounds must be labeled with the names of compounds, either directly out from the peak, or on a print-out of retention times if retention times are printed over the peak.

(3) Copies of pesticide chromatograms from second GC column confirmation. Chromatograms to be labeled as in (2) above.

(4) GC Integration report or data system printout and calibration plots (area vs. concentration) for 4,4'-DDT, 4,4'-DDD, 4,4'-DDE or toxaphene (where appropriate).

(5) Manual work sheets.

(6) UV traces from GPC (if available).

(7) If pesticide/PCBs are confirmed by GC/MS, the Contractor shall submit copies of raw spectra and copies of background-subtracted mass spectra of target compounds listed in Exhibit C (TCL) that are identified in the sample and corresponding background-subtracted TCL standard mass spectra. Compound names must be clearly marked on all spectra. For multicomponent pesticides/PCBs confirmed by GC/MS, the Contractor shall submit mass spectra of 3 major peaks of multicomponent compounds from samples and standards.

c. Standards Data

(1) Form VIII PEST - Pesticide Evaluation Standards Summary (all GC columns)

(2) Form IX PEST - Pesticide/PCB Standards Summary (all GC columns)

(3) Form X PEST - Pesticide/PCB Identification (only required for positive results)

(4) Pesticide standard chromatograms and data system printouts for <u>all</u> standards to include:

- o Evaluation Standard Mix A
- o Evaluation Standard Mix B
- o Evaluation Standard Mix C
- o Individual Standard Mix A
- o Individual Standard Mix B
- o All multiresponse pesticides/PCBs
- o All quantitation standards
- o A copy of the computer reproduction or strip chart recorder output covering the 100 fold range

(a) All chromatograms are required to have the following:

- o Label all chromatograms with the "EPA Sample Number" for standards, i.e. EVALA, EVALB, etc. (See Forms Instructions for details).

- Label all standard peaks for all individual compounds either directly out from the peak or on the printout of retention times if retention times are printed over the peak.
- List total ng injected for each standard.
- A printout of retention times and corresponding peak areas must accompany each chromatogram.
- Date and time of injection.
- GC column identification (by stationary phase).
- GC instrument identification.

d. Raw QC Data

(1) Blank Data - in chronological order. NOTE: This order is different from that used for samples.

(a) Tabulated results (Form I PEST).

(b) Chromatogram(s) and data system printout(s) (GC) for each GC column and instrument used for analysis, labeled as in b.(2) above.

(2) Matrix Spike Data

(a) Tabulated results (Form I PEST) of nonspike TCL compounds.

(b) Chromatogram(s) and data system printout(s) (GC), labeled as in b.(2) above.

(3) Matrix Spike Duplicate Data

(a) Tabulated results (Form I PEST) of nonspike TCL compounds.

(b) Chromatogram(s) and data system printout(s) (GC), labeled as in b.(2) above.

F. <u>Data in Computer-Readable Form</u>

The Contractor shall provide a computer-readable copy of the data on data reporting Forms I-X for all samples in the Sample Delivery Group, as specified in the Contract Performance/Delivery Schedule. Computer-readable data deliverables shall be submitted on IBM or IBM-compatible, 5.25 inch floppy double-sided, double density 360 K-byte or a high density 1.2 M-byte diskette.

When submitted, floppy diskettes shall be packaged and shipped in such a manner that the diskette(s) cannot be bent or folded, and will not be exposed to extreme heat or cold or any type of electromagnetic radiation. The diskette(s) must be included in the same shipment as the hardcopy data and shall, at a minimum, be enclosed in a diskette mailer.

The data shall be recorded in ASCII, text file format, and shall adhere to the file, record and field specifications listed in Exhibit H, Data Dictionary and Format for Data Deliverables in Computer-Readable Format.

If the Contractor wishes to use a reporting format other than the one specified, equivalence must be demonstrated and approved by the Project Officer prior to the award of the contract.

G. GC/MS Tapes

The Contractor must store all raw and processed GC/MS data on magnetic tape, in appropriate instrument manufacturer's format. This tape must include data for samples, blanks, matrix spikes, matrix spike duplicates, initial calibrations, continuing calibrations, BFB and DFTPP, as well as all laboratory-generated spectral libraries and quantitation reports required to generate the data package. The Contractor shall maintain a written reference logbook of tape files to EPA sample number, calibration data, standards, blanks, matrix spikes, and matrix spike duplicates. The logbook should include EPA sample numbers and standard and blank ID's, identified by Case and Sample Delivery Group.

The Contractor is required to retain the GC/MS tapes for 365 days after data submission. During that time, the Contractor shall submit tapes and associated logbook pages within seven days after receipt of a written request from the Project Officer.

H. Extracts

The Contractor shall preserve sample extracts at 4°C (±2°C) in bottles/vials with Teflon-lined septa. Extract bottles/vials shall be labeled with EPA sample number, Case number and Sample Delivery Group (SDG) number. A logbook of stored extracts shall be maintained, listing EPA sample numbers and associated Case and SDG numbers.

The Contractor is required to retain extracts for 365 days following data submission. During that time, the Contractor shall submit extracts and associated logbook pages within seven days following receipt of a written request from the Project Officer or the Sample Management Office.

I. Complete Case File Purge

(Formerly, Document Control and Chain-of-Custody Package).

The complete case file purge includes all laboratory records received or generated for a specific Case that have not been previously submitted to EPA as a deliverable. These items include but are not limited to: sample tags, custody records, sample tracking records, analysts logbook pages, bench sheets, chromatographic charts, computer printouts, raw data summaries, instrument logbook pages, correspondence, and the document inventory (see Exhibit F).

SECTION III

FORM INSTRUCTION GUIDE

This section includes specific instructions for the completion of all required forms. Each of the forms is specific to a given fraction (volatile, semivolatile, pesticide/PCB), and in some instances specific to a given matrix (water or soil) within each fraction. The contractor shall submit only those forms pertaining to the fractions analyzed for a given sample or samples. For instance, if a sample is scheduled for volatile analysis only, provide only VOA forms. There are two pages relating to the semivolatile fraction for Forms I, VI, VII, and VIII. Whenever semivolatiles are analyzed and one of the above-named forms is required, both pages (SV-1 and SV-2) must be submitted. These instructions are arranged in the following order:

A. General Information and Header Information

B. Organic Analysis Data Sheets (Form I, All Fractions)

C. Surrogate Recovery (Form II, All Fractions)

D. Matrix Spike/Matrix Spike Duplicate Recovery (Form III, All Fractions)

E. Method Blank Summary (Form IV, All Fractions)

F. GC/MS Tuning and Mass Calibration (Form V VOA, Form V SV)

G. Initial Calibration Data (Form VI VOA, Form VI SV)

H. Continuing Calibration Data (Form VII VOA, Form VII SV)

I. Internal Standard Area Summary (Form VIII VOA, Form VIII SV)

J. Pesticide Evaluation Standards Summary (Form VIII Pest)

K. Pesticide/PCB Standards Summary (Form IX Pest)

L. Pesticide/PCB Identification (Form X Pest)

A. General Information and Header Information

The data reporting forms presented in Section IV have been designed in conjunction with the computer-readable data format specified in Exhibit H, Data Dictionary and Format for Data Deliverables in Computer-Readable Format. The specific length of each variable for computer-readable data transmission purposes is given in the data dictionary (Exhibit H). Information entered on these forms must not exceed the size of the field given on the form, including such laboratory-generated items as Lab Name and Lab Sample ID.

Note that on the hardcopy forms (Section IV), the space provided for entries is greater in some instances than the length prescribed for the variable as written to diskette (see Exhibit H). Greater space is provided on the hardcopy forms for the sake of visual clarity.

Values must be reported on the hardcopy forms according to the individual form instructions in this Section. For example, results for concentrations of VOA TCL compounds must be reported to two significant figures if the value is greater than or equal to 10. Values can be written to the diskette file in any format that does not exceed the field specification as given in the record specifications and discussed in "Record Structure", paragraph 5 of Exhibit H.

All characters which appear on the data reporting forms presented in the contract (Exhibit B, Section IV) must be reproduced by the Contractor when submitting data, and the format of the forms submitted must be identical to that shown in the contract. No information may be added, deleted, or moved from its specified position without prior written approval of the EPA Project Officer. The names of the various fields and compounds (i.e., "Lab Code," "Chloromethane") must appear as they do on the forms in the contract, including the options specified in the form (i.e., "Matrix: (soil/water)" must appear, not just "Matrix"). For items appearing on the uncompleted forms (Section IV), the use of uppercase and lowercase letters is optional.

Alphabetic entries made onto the forms by the Contractor shall be in ALL UPPERCASE letters (i.e., "LOW", not "Low" or "low"). If an entry does not fill the entire blank space provided on the form, null characters shall be used to remove the remaining underscores that comprise the blank line. (See Exhibit H for more detailed instructions.) However, do not remove the underscores or vertical bar characters that delineate "boxes" on the forms. The only exception would be those underscores at the bottom of a "box" that are intended as a data entry line (for instance, see Form 2A, line 30. If data must be entered on line 30, it will replace the underscores).

Six pieces of information are common to the header sections of each data reporting form. They are: Lab Name, Contract, Lab Code, Case No., SAS No., and SDG No. This information must be entered on every form and must match on every form.

The "Lab Name" shall be the name chosen by the Contractor to identify the laboratory. It may not exceed 25 characters.

The "Lab Code" is an alphabetical abbreviation of up to 6 letters, assigned by EPA, to identify the laboratory and aid in data processing. This lab code shall be assigned by EPA at the time a contract is awarded, and shall not be modified by the Contractor, except at the direction of EPA.

The "Case No." is the EPA-assigned Case number (up to 5 digits) associated with the sample, and reported on the Traffic Report.

The "Contract" is the number of the EPA contract under which the analyses were performed.

The "SDG No." is the Sample Delivery Group number. The Sample Delivery Group (SDG) number is the EPA Sample Number of the first sample received in the SDG. When several samples are received together in the first SDG shipment, the SDG number shall be the lowest sample number (considering both alpha and numeric designations) in the first group of samples received under the SDG.

The "SAS No." is the EPA-assigned number for analyses performed under Special Analytical Services. If samples are to be analyzed under SAS only, and reported on these forms, then enter SAS No., and leave Case No. blank. If samples are analyzed according to the "Routine Analytical Services" (IFB) protocols and have additional "SAS" requirements, list both Case No. and SAS No. on all forms. If the analyses have no SAS requirements, leave "SAS No." blank. NOTE: Some samples in an SDG may have a SAS No. while others do not.

The other information common to most of the forms is the "EPA Sample No.". This number appears either in the upper righthand corner of the form, or as the left column of a table summarizing data from a number of samples. When "EPA Sample No." is entered into the triple-spaced box in the upper righthand corner of Form I or Form X, it should be entered on the middle line of the three lines that comprise the box.

All samples, matrix spikes, matrix spike duplicates, blanks and standards shall be identified with an EPA Sample Number. For samples, matrix spikes and matrix spike duplicates, the EPA Sample Number is the unique identifying number given in the Traffic Report that accompanied that sample.

In order to facilitate data assessment, the following sample suffixes must be used:

XXXXX - EPA sample number
XXXXXMS - matrix spike sample
XXXXXMSD - matrix spike duplicate sample
XXXXXRE - re-analyzed sample
XXXXXDL - sample analyzed at a secondary dilution

Form VIII Pest requires that all samples analyzed in a given 72-hour analytical sequence be specified, regardless of whether or not they are part of the SDG being reported. Therefore, use "ZZZZZ" as the EPA

Sample No. for any sample analyses not associated with the SDG being reported.

For blanks and standards, the following identification scheme must be used as the "EPA Sample No."

1. Volatile blanks shall be identified as VBLK##.

2. Semivolatile blanks shall be identified as SBLK##.

3. Pesticide/PCB blanks shall be identified as PBLK##.

The "EPA Sample No." must be unique for each blank within an SDG. Within a fraction, a laboratory must achieve this by replacing the two-character "##" terminator of the identifier with one or two characters or numbers, or a combination of both. For example, possible identifiers for volatile blanks would be VBLK1, VBLK2, VBLKA1, VBLKB2, VBLK10, VBLKAB, etc.

4. Volatile and semivolatile standards shall be identified as FSTD###, where:

   F - fraction (V for volatiles; S for semivolatiles).

   STD - indicates a standard.

   ### - the concentration in ug/L of volatile standards (i.e., 20, 50, 100, 150, and 200) or the amount injected in ng for semivolatile standards (i.e., 20, 50, 80, 120, and 160).

   As for the blank identifiers, these designations will have to be concatenated with other information to uniquely identify each standard.

5. Pesticide/PCB standards shall be identified as specified in the instructions for Form VIII.

   Several other pieces of information are common to many of the Data Reporting Forms. These include: Matrix, Sample wt/vol, Level, Lab Sample ID, and Lab File ID.

   For "Matrix" enter "SOIL" for soil/sediment samples, and enter "WATER" for water samples. NOTE: The matrix must be spelled out. Abbreviations such as "S" or "W" shall not be used.

   For "Sample wt/vol" enter the number of grams (for soil) or milliliters (for water) of sample used in the first blank line, and the units, either "G" or "ML" in the second blank.

   For "Level" enter the determination of concentration level made from the mandatory screening of soils. Enter as "LOW" or "MED", not "L" or "M". All water samples are "LOW" level and shall be entered as such.

"Lab Sample ID" is an optional laboratory-generated internal identifier. Up to 12 alpha-numeric characters may be reported here.

"Lab File ID" is the laboratory-generated name of the GC/MS data system file containing information pertaining to a particular analysis. Up to 14 alpha-numeric characters may be used here.

Forms II, IV, V, VIII, IX, and X contain a field labeled "page _ of _" in the bottom lefthand corner. If the number of entries required on any of these forms exceeds the available space, continue entries on another copy of the same fraction-specific form, duplicating all header information. If a second page is required, number them consecutively, as "page 1 of 2" and "page 2 of 2". If a second page is <u>not</u> required, number the page "page 1 of 1." NOTE: These forms are fraction-specific, and often matrix-specific within fraction. For example, Form II VOA-1 and Form II VOA-2 are for different data. Therefore, <u>do not</u> number the pages of all six versions of Form II as "1 of 6, 2 of 6, etc." Only number pages <u>within</u> a fraction-specific and matrix-specific form.

For rounding off numbers to the appropriate level of precision, observe the following common rules. If the figure following those to be retained is less than 5, drop it (round down). If the figure is greater than 5, drop it and increase the last digit to be retained by 1 (round up). If the figure following the last digit to be retained equals 5, round up if the digit to be retained is odd, and round down if that digit is even.

B. Organic Analysis Data Sheet (Form I)

1. Form I VOA, Form I SV-1, Form I SV-2, Form I Pest

This form is used for tabulating and reporting sample analysis results for Target Compound List (TCL) compounds. If all fractions are not requested to be analyzed, only the pages specifically required must be submitted. If VOA analysis only is requested, Form I VOA and Form I VOA TIC must be submitted. If the pesticide/PCB analysis is the only analysis requested, only Form I Pest must be submitted for that sample.

Complete the header information on each page of Form I required, according to the instructions in part A. and as follows:

For volatiles, for "% moisture not dec.", enter the nondecanted percent moisture. For semivolatiles and pesticides/PCB, enter values for <u>both</u> nondecanted percent moisture and decanted percent moisture, in the appropriate fields. Report percent moisture (decanted or not decanted) to the nearest whole percentage point (i.e., 5%, not 5.3%). If a decanted percent moisture is not determined, because the sample has no standing water over it, leave "% moisture dec." blank. Leave these fields blank for Form I for method blanks.

For volatiles, enter the type of GC column used in "Column: (pack/cap)." Enter "PACK" for packed columns, and "CAP" for capillary columns, whether megabore or narrow bore.

For semivolatiles and pesticides/PCBs, enter the method of extraction as "SEPF" for separatory funnel, and "CONT" for continuous liquid-liquid extraction, or "SONC" for sonication (soils only).

If gel permeation chromatography, "GPC Cleanup" was performed, enter "Y" for yes. Otherwise, enter "N" for no, if GPC was not performed.

For soil samples only, enter pH for semivolatile and pesticides/PCBs, reported to 0.1 pH units.

"Date Received" is the date of sample receipt at the laboratory, as noted on the Traffic Report (i.e., the VTSR). It should be entered as MM/DD/YY.

"Date Extracted" and "Date Analyzed" should be entered in a similar fashion. If continuous liquid-liquid extraction procedures are used, enter the date on which the procedure was <u>started</u> for "Date Extracted". If separatory funnel or sonication procedures are used, enter the date on which the procedure was <u>completed</u>. For pesticide/PCB samples, the date of analysis should be the date of the first GC analysis performed. The date of sample receipt will be compared with the extraction and analysis dates of each fraction to ensure that contract holding times were not exceeded.

If a sample has been diluted for analysis, enter the "Dilution Factor" as a single number, such as 100 for a 1 to 100 dilution of the sample. Enter 0.1 for a concentration of 10 to 1. If a sample was not diluted, enter 1.

For positively identified TCL compounds, the Contractor shall report the concentrations detected as <u>uncorrected</u> for blank contaminants.

For volatile and semivolatile results, report analytical results to one significant figure if the value is less than 10, and two significant figures above 10.

Report all pesticides/PCB results to two significant figures.

The appropriate concentration units, ug/L or ug/kg, must be entered.

If the result is a value greater than or equal to the quantitation limit, report the value.

Under the column labeled "Q" for qualifier, flag each result with the specific Data Reporting Qualifiers listed below. The Contractor is encouraged to use additional flags or footnotes. The definition of such flags must be explicit and must be included in the Case Narrative.

For reporting results to the USEPA, the following contract specific qualifiers are to be used. The seven qualifiers defined below <u>are not</u> subject to modification by the laboratory. Up to five qualifiers may be reported on Form I for each compound.

The seven EPA-defined qualifiers to be used are as follows:

U - Indicates compound was analyzed for but not detected. The sample quantitation limit must be corrected for dilution and for percent moisture. For example, 10 U for phenol in water if the sample final volume is the protocol-specified final volume. If a 1 to 10 dilution of extract is necessary, the reported limit is 100 U. For a soil sample, the value must <u>also</u> be adjusted for percent moisture. For example, if the sample had 24% moisture <u>and</u> a 1 to 10 dilution factor, the sample quantitation limit for phenol (330 U) would be corrected to:

$$\frac{(330\ U)}{D} \times df \qquad \text{where } D = \frac{100 - \%\ \text{moisture}}{100}$$

and df = dilution factor

$$\text{at } 24\%\ \text{moisture, } D = \frac{100-24}{100} = 0.76$$

$$\frac{(330\ U)}{.76} \times 10 = 4300\ U$$ rounded to the appropriate number of significant figures

For soil samples subjected to GPC clean-up procedures, the CRQL is also multiplied by 2, to account for the fact that only half of the extract is recovered. Note: If GPC procedures are employed do <u>not</u> include the factor of 2 in the dilution factor reported on Form I. <u>Do</u> enter "Y" under GPC(Y/N).

J - Indicates an estimated value. This flag is used either when estimating a concentration for tentatively identified compounds where a 1:1 response is assumed, or when the mass spectral data indicate the presence of a compound that meets the identification criteria but the result is less than the sample quantitation limit but greater than zero. For example, if the sample quantitation limit is 10 ug/L, but a concentration of 3 ug/L is calculated, report it as 3J. The sample quantitation limit must be adjusted for <u>both</u> dilution and percent moisture as discussed for the U flag, so that if a sample with 24% moisture and a 1 to 10 dilution factor has a calculated concentration of 300 ug/L and a sample quantitation limit of 430 ug/kg, report the concentration as 300J on Form I.

C - This flag applies to pesticide results where the identification has been confirmed by GC/MS. Single component pesticides $\geq$10 ng/ul in the final extract shall be confirmed by GC/MS.

B - This flag is used when the analyte is found in the associated blank as well as in the sample. It indicates possible/probable blank contamination and warns the data user to take appropriate action. This flag must be used for a TIC as well as for a positively identified TCL compound.

E - This flag identifies compounds whose concentrations exceed the calibration range of the GC/MS instrument for that specific analysis. This flag will not apply to pesticides/PCBs analyzed by GC/EC methods. If one or more compounds have a response greater than full scale, the sample or extract must be diluted and re-analyzed according to the specifications in Exhibit D. All such compounds with a response greater than full scale should have the concentration flagged with an "E" on the Form I for the original analysis. If the dilution of the extract causes any compounds identified in the first analysis to be below the calibration range in the second analysis, then the results of both analyses shall be reported on separate Forms I. The Form I for the diluted sample shall have the "DL" suffix appended to the sample number. NOTE: For total xylenes, where three isomers are quantified as two peaks, the calibration range of each peak should be considered separately, e.g., a diluted analysis is not required for total xylenes unless the concentration of either peak separately exceeds 200 ug/L.

D - This flag identifies all compounds identified in an analysis at a secondary dilution factor. If a sample or extract is re-analyzed at a higher dilution factor, as in the "E" flag above, the "DL" suffix is appended to the sample number on the Form I for the diluted sample, and all concentration values reported on that Form I are flagged with the "D" flag.

A - This flag indicates that a TIC is a suspected aldol-condensation product.

X - Other specific flags may be required to properly define the results. If used, they must be fully described and such description attached to the Sample Data Summary Package and the Case Narrative. Begin by using "X". If more than one flag is required, use "Y" and "Z", as needed. If more than five qualifiers are required for a sample result, use the "X" flag to combine several flags, as needed. For instance, the "X" flag might combine the "A", "B", and "D" flags for some sample.

The combination of flags "BU" or"UB" is expressly prohibited. Blank contaminants are flagged "B" only when they are also detected in the sample.

If analyses at two different dilution factors are required (see Exhibit D), follow the data reporting instructions given in Exhibit D and with the "D" and "E" flags above.

2. Form I VOA-TIC and Form I SV-TIC

Fill in all header information as above.

Report Tentatively Identified Compounds (TIC) including CAS number, compound name, retention time, and the estimated concentration (criteria for reporting TICs are given in Exhibit D, Section IV). Retention time must be reported in minutes and decimal minutes, not seconds or minutes:seconds.

If in the opinion of the mass spectral interpretation specialist, no valid tentative identification can be made, the compound shall be reported as unknown.

Include a Form I VOA-TIC or SV-TIC for every volatile and semivolatile fraction of every sample and method blank analyzed, even if no TICs are found. Total the number of TICs found, including aldol-condensation products (but see below), and enter this number in the "Number TICs found." If none were found, enter "0" (zero). Form I VOA-TIC or SV-TIC must be provided for every analysis, including required dilutions and reanalyses, even if no TICs are found.

If the name of a compound exceeds the 28 spaces in the TIC column, truncate the name to 28 characters. If the compound is an unknown, restrict description to no more than 28 characters (i.e., unknown hydrocarbon, etc.).

Peaks that are suspected as aldol-condensation reaction products (i.e., 4-methyl-4-hydroxy-2-pentanone and 4-methyl-3-pentene-2-one) shall be summarized on this form, flagged "A", and included in the total "Number TICs found," but not counted as part of the 20 most intense non-TCL semivolatile compounds to be searched.

C. Surrogate Recovery (Form II)

Form II is used to report the recoveries of the surrogate compounds added to each sample, blank, matrix spike, and matrix spike duplicate. Form II is matrix-specific as well as fraction-specific, so that surrogate recoveries for volatile water samples are reported on a different version of Form II than volatile soil sample surrogate recoveries.

Complete the header information and enter EPA Sample Numbers as described in part A. For soil samples only, specify the "level" as "LOW" or "MED", as on Form I. Do not mix low and medium level samples on one form. Complete one for each level. For each surrogate, report the percent recovery to the number of significant figures given by the QC limits at the bottom of the form.

Flag each surrogate recovery outside the QC limits with an asterisk (*). The asterisk must be placed in the last space in each appropriate column, under the "#" symbol. In the far righthand column, total the number of surrogate recoveries outside the QC limits for each sample.

If no surrogates were outside the limits, enter "0".

If the surrogates are diluted out in any analysis, enter the calculated recovery or "0" (zero) if the surrogate is not detected, and flag the surrogate recoveries with a "D" in the column under the "#" symbol. Do not include results flagged "D" in the total number of recoveries for each sample outside the QC limits.

The pesticide surrogate recovery limits are only advisory, but the Contractor must flag those recoveries outside the advisory QC limits or diluted out, nonetheless.

Number all pages as described in part A.

D. Matrix Spike/Matrix Spike Duplicate Recovery (Form III)

This form is used to report the results of the analyses of a matrix spike and matrix spike duplicate. As with the surrogate recovery form (II), the form is matrix-specific within each fraction.

Complete the header information as instructed in Part A, including the EPA Sample Number for the matrix spike without the suffixes MS or MSD.

For soil samples, specify "level" as "LOW" or "MED", as on Form I. Cases containing soil samples at both levels require MS/MSD at each level, therefore, for soils, prepare one form for each level.

All water samples are "Low" Therefore, there is no MS/MSD for "medium level waters", and none shall be reported.

In the upper box in Form III, under "SPIKE ADDED", enter the calculated concentration in ug/L or ug/Kg (according to the matrix) that results from adding each spiked compound to the aliquot chosen for the matrix spike (MS). For instance, for base/neutral compounds in medium level soils, if 100 ug of spike are added to 1 g of soil, the resulting concentration is 100,000 ug/Kg. Enter the "SAMPLE CONCENTRATION", in similar units, of each spike compound detected in the original sample. If a spike compound was not detected during the analysis of the original sample, enter the sample result as "0" (zero). Under "MS CONCENTRATION", enter the actual concentration of each spike compound detected in the matrix spike aliquot. Calculate the percent recovery of each spike compound in the matrix spike aliquot to the nearest whole percent, according to Exhibit E, and enter under "MS % REC". Flag all percent recoveries outside the QC limits with an asterisk (*). The asterisk must be placed in the last space of the percent recovery column, under the "#" symbol.

Complete the lower box on Form III in a similar fashion, using the results of the analysis of the matrix spike duplicate (MSD) aliquot. Calculate the relative percent difference (RPD) between the matrix spike recovery and the matrix spike duplicate recovery, and enter this value in the lower box under "% RPD". Compare the RPDs to the QC limits given on the form, and flag each RPD outside the QC limits with an asterisk (*) in the last space of the "% RPD" column, under the "#" symbol.

Summarize the values outside the QC limits at the bottom of the page. No further action is required by the laboratory. Performance-based QC limits will be generated and updated from recovery and RPD data.

E. Method Blank Summary (Form IV)

This form summarizes the samples associated with each method blank analysis. A copy of the appropriate Form IV is required for each blank.

Complete the header information on Form IV as described in Part A.

For volatile and semivolatile blanks, enter the "Instrument ID", "Date Analyzed", "Matrix" and "Level". All water blanks are "LOW". The "Time Analyzed" shall be in military time.

For semivolatile and pesticide/PCB blanks, enter the method of extraction as "SEPF" for separatory funnel, or "SONC" for sonication, or "CONT" for continuous liquid-liquid extraction. For semivolatile and pesticide/PCB method blanks, enter the date of extraction of the blank.

Pesticide/PCB contaminants must meet the identification criteria in Exhibit D PEST, which requires analysis of the blank on two different GC Columns. Therefore, enter the date, time and instrument ID of both analyses on the pesticide method blank summary. The information on the two analyses is differentiated as Date Analyzed (1), Date Analyzed (2), etc. If the analyses were run simultaneously, the order of reporting is not important, but must be consistent with the information reported on Form X. Otherwise (1) shall be the first analysis, and (2) the second. Identify both GC columns <u>by stationary phase</u> under "GC Column ID". For mixed phase columns, do not enter "mixed". If the stationary phase identifier contains a manufacturer's identifier, such as "SP" or "DB", these characters may be deleted in order to fit the identifier into the 10-character field.

For Pesticide/PCB blanks, enter "Matrix" and "Level" in a similar fashion as for the other fractions. All water samples are "<u>LOW</u>". Enter "Lab File ID" only if GC/MS confirmation was required. Otherwise, leave blank.

For all three fractions, as appropriate, summarize the samples associated with a given method blank in the table below the header, entering EPA Sample Number, and Lab Sample ID. For volatiles, enter the Lab File ID and time of analysis of each sample. For semivolatiles, enter Lab File ID. For semivolatiles and pesticides/PCBs, enter the date of analysis of each sample. For pesticide/PCBs, if only one analysis is required (i.e., no pesticides/PCBs to be confirmed), leave blank the fields for the second analysis.

Number all pages as described in part A.

F. GC/MS Tuning and Mass Calibration (Form V)

This form is used to report the results of GC/MS tuning for volatiles and semivolatiles, and to summarize the date and time of analysis of samples, standards, blanks, matrix spikes, and matrix spike duplicates associated with each GC/MS tune.

Complete the header information as in part A. Enter the "Lab File ID" for the injection containing the GC/MS tuning compound (BFB for volatiles, DFTPP for semivolatiles). Enter the "Instrument ID". Enter the date and time of injection of the tuning compound. Enter time as military time. For volatiles, enter the matrix and level, as there are separate calibrations for water samples, low soil samples, and medium samples (see Exhibit D). For volatiles, also enter the type of GC column used as "PACK" or "CAP", under "Column."

For each ion listed on the form, enter the percent relative abundance in the righthand column. Report relative abundances to the number of significant figures given for each ion in the ion abundance criteria column.

All relative abundances must be reported as a number. If zero, enter "0", not a dash or other non-numeric character. Where parentheses appear, compute the percentage of the ion abundance of the mass given in the appropriate footnote, and enter that value in the parentheses.

In the lower half of the form, list all samples, standards, blanks, matrix spikes, and matrix spike duplicates analyzed under that tune in chronological order, by time of analysis (in military time). Refer to part A. for specific instructions for identifying standards and blanks. Enter "EPA Sample No.", "Lab Sample ID", "Lab File ID", "Date Analyzed", and "Time Analyzed" for all standards, samples, blanks, matrix spikes, and matrix spike duplicates.

The GC/MS tune expires twelve hours from the time of injection of the tuning compound (BFB or DFTPP) listed at the top of the form. In order to meet the tuning requirements, a sample, standard, blank, matrix spike, or matrix spike duplicate must be injected within twelve hours of the injection of the tuning compound.

Number all pages as described in part A.

G. Initial Calibration Data (Form VI)

After a GC/MS system has undergone an initial five-point[1] calibration at the specific concentration levels described in Exhibit E, and after all initial calibration criteria have been met, the laboratory must complete and submit a Form VI for each volatile or semivolatile TCL initial calibration performed which is relevant to the samples, blanks, matrix spikes, matrix spike duplicates in the SDG, regardless of when that calibration was performed.

---

[1] For Semivolatiles, nine compounds: Benzoic Acid, 2,4-Dinitrophenol, 2,4,5-Trichlorophenol, 2-Nitroaniline, 3-Nitroaniline, 4-Nitroaniline, 4-Nitrophenol, 4,6-Dinito-2-Methylphenol, and Pentachlorophenol will only require a four-point initial calibration at 50, 80, 120, and 160 total nanograms because detection at less than 50 nanograms per injection is difficult. If a four-point calibration is performed for these compounds, leave RF20 blank.

Complete all header information as in part A. Enter the "Case No." and "SDG No." for the current data package, regardless of the original Case for which the initial calibration was performed. Enter "Instrument ID" and the date(s) of the calibration. If the calendar date changes during the calibration procedure, the inclusive dates should be given on Form VI. For volatiles, enter matrix, level, and column, as on Form V. Enter the "Lab File ID" for each of the five calibration standards injected. Complete the response factor data for the five calibration points, and then calculate and report the average relative response factor (RRF) for all TCL and surrogate compounds. The laboratory must report the %RSD for all compounds. All CCC compounds must have a %RSD of less than or equal to 30.0 percent. All VOA SPCC compounds must have a minimum average relative response factor (RRF) of 0.300 (0.250 for Bromoform). All Semivolatile (BNA) SPCC compounds must have a minimum average relative response factor (RRF) of 0.050.

$$\%RSD = \frac{SD}{\bar{x}} \times 100$$

where:

%RSD = Relative Standard Deviation

SD = Standard Deviation of initial 5 response factors (per compound)

where: $$SD = \sqrt{\frac{\sum_{i=1}^{N} (x_i - \bar{x})^2}{N-1}}$$

$\bar{x}$ = mean of initial 5 response factors (per compound)

H. Continuing Calibration Data (Form VII)

The Continuing Calibration Data Form is used to verify the calibration of the GC/MS system by the analysis of specific calibration standards. A Continuing Calibration Data Form is required for each twelve (12) hour time period for both volatile and semivolatile TCL compound analyses.

The Contractor laboratory must analyze calibration standards and meet all criteria outlined in Exhibit E. After meeting specific criteria for both SPCC and CCC compounds, a Continuing Calibration Data Form must be completed and submitted.

Complete all header information as in part A. Enter instrument ID, date and time of continuing calibration, the Lab File ID of the continuing calibration standard, and date of initial calibration (give inclusive dates if initial calibration is performed over more than one date). For volatiles, enter matrix, level, and column, as on Forms V and VI. Using the appropriate Initial Calibration (Volatile or Semivolatile) fill in the average relative response factor (RRF) for each TCL compound.

Report the relative response factor (RRF50) from the continuing calibration standard analysis. Calculate the Percent Difference (%D) for all compounds. For CCC compounds, ensure that the %D is less than or equal to 25.0 percent. After this criterion has been met, report the Percent Difference for <u>all</u> TCL and surrogate compounds.

$$\% \text{ Difference} = \frac{\overline{RRF_I} - RRF_c}{\overline{RRF_I}} \times 100$$

where,

$\overline{RRF_I}$ = average relative response factor from initial calibration.

RRF_c = relative response factor from continuing calibration standard.

<u>All</u> semivolatile standards are analyzed at 50 total ng.

I. Internal Standard Area Summary (Form VIII VOA and SV)

This form is used to summarize the peak areas of the internal standards added to all volatile and semivolatile samples, blanks, matrix spikes, and matrix spike duplicates. The data are used to determine when changes in internal standard responses will adversely affect quantification of target compounds. This form must be completed each time a continuing calibration is performed, or when samples are analyzed under the same GC/MS tune as an initial calibration.

Complete the header information as in part A. Enter the Lab File ID of the continuing calibration standard, as well as the date and time of analysis of the continuing calibration standard. If samples are analyzed immediately following an initial calibration, before another GC/MS tune and a continuing calibration, Form VIII shall be completed on the basis of the internal standard areas of the 50 ug/L initial calibration standard for volatiles, and the 50 ng initial calibration standard for semivolatiles. Use the date and time of analysis of this standard, and its Lab File ID and areas in place of those of a continuing calibration standard.

For volatiles, enter matrix, level, and column, as on Forms V, VI, and VII.

From the results of the analysis of the continuing calibration standard, enter the area measured for each internal standard and its retention time under the appropriate column in the row labeled "12 HOUR STD". For each internal standard, calculate the upper limit as the area of the particular standard plus 100% of its area (i.e., two times the area in the 12 HOUR STD box), and the lower limit as the area of the internal standard minus 50% of its area (i.e., one half the area in the 12 HOUR STD box). Report these values in the boxes labeled "UPPER LIMIT" and "LOWER LIMIT" respectively.

For each sample, blank, matrix spike, and matrix spike duplicate analyzed under a given continuing calibration, enter the EPA Sample Number and the area measured for each internal standard and its retention time. If the internal standard area is outside the upper or lower limits calculated above, flag that area with an asterisk (*). The asterisk must be placed in the far right hand space of the box for each internal standard area, directly under the "#" symbol.

Number all pages as described in part A.

J. Pesticide Evaluation Standards Summary (Form VIII Pest)

This form is used to report the seventy-two (72) hour analytical sequence for pesticide analysis.

The laboratory shall complete all the header information as in Part A. Enter dates of analyses, GC column ID and Instrument ID. Identify GC Column by stationary phase. For mixed phase columns, do not enter "mixed". If the stationary phase identifier contains a manufacturer's identifier, such as "SP" or "DB", these characters may be deleted in order to fit the identifier into the 10-character field.

Evaluation Standard Mix A, B, and C must be analyzed at the initiation of every 72 hour sequence to check the linearity of the GC system. Calculate and report the Calibration Factor (total peak area[2]/amount injected in nanograms) for each of the three pesticides and the surrogate (Aldrin, Endrin, 4,4'-DDT and Dibutylchlorendate) at each concentration level (see Exhibit D). Calculate and report the percent relative standard deviation (%RSD) for each of the four compounds (Eq. 1.1). The RSD must be less than 10.0 percent for Aldrin, Endrin, and Dibutylchlorendate. The 10% RSD criteria pertain only to the column being used for quantitation, however, to determine that no pesticides/PCBs are present is a form of quantitation.

If the %RSD for 4,4'-DDT exceeds 10.0 percent, plot a standard curve and determine the ng for each sample from that curve.

$$\%RSD = \frac{SD}{\bar{x}} \times 100 \qquad \text{Eq. 1.1}$$

$$\text{where: } SD = \sqrt{\frac{\sum_{i=1}^{N} (x_i - \bar{x})^2}{N-1}}$$

$\bar{x}$ = mean of initial three Calibration factors (per compound)

Evaluation Standard Mix B must be analyzed near the beginning of the analytical sequence, after the first five samples, and then every ten samples thereafter during a 72-hour period (see Exhibits D and E).

---

2 The term peak height may be substituted for the term peak area.

Calculate and report the percent breakdown for 4,4'-DDT and/or Endrin for the mixed phase GC column using Equations 1.2 and 1.3. (See Exhibit E). Enter the Date Analyzed and Time Analyzed for each analysis of the Evaluation Standard Mix B.

Calculate the percent breakdown for Endrin and/or 4,4'-DDT on the OV-1 or equivalent GC column using Equations 1.2 and 1.3. The combined percent breakdown must not exceed 20.0 percent for Endrin and 4,4'-DDT.

$$\text{\% breakdown for 4,4'-DDT} = \frac{\text{Total DDT degradation peak area}^{3}\text{(DDE + DDD)}}{\text{Total DDT peak area}^{3}\text{ (DDT + DDE + DDD)}} \times 100 \quad \text{Eq. 1.2}$$

$$\text{\% breakdown for Endrin} = \frac{\text{Total Endrin degradation peak areas}^{3}\text{ (Endrin Aldehyde + Endrin Ketone)}}{\text{Total Endrin Peak Area}^{3}\text{(Endrin + Endrin Aldehyde + Endrin Ketone)}} \times 100 \quad \text{Eq. 1.3}$$

Enter the values for the breakdown of Endrin and 4,4'-DDT in their respective columns.

If Endrin cannot be separated from 4,4'-DDT on the OV-1 or equivalent GC column, calculate a combined percent breakdown for Endrin/4,4'-DDT using Equation 1.4. The combined degradation must not exceed 20.0 percent. Leave the endrin and 4,4'-DDT columns blank if they cannot be separated, and report only the combined breakdown.

$$\text{Combined \% breakdown} = \frac{\text{Total Endrin/DDT degradation peak area}^{3}\text{ (DDD, DDE, Endrin Aldehyde, Endrin Ketone)}}{\text{Total Endrin/DDT degradation peak area}^{3}\text{ (Endrin, Endrin Aldehyde, Endrin Ketone, DDD, DDE, DDT)}} \times 100 \quad \text{Eq. 1.4}$$

Complete the header information on the second page of Form VIII Pest as on the first page.

For each sample, standard, matrix spike, matrix spike duplicate, and blank, enter the EPA sample number, lab sample ID, date and time of analysis. Each sample analyzed as part of the 72-hour analytical sequence must be reported on the second page of Form VIII PEST even if it is not associated with the SDG, in order to determine if the proper sequence of samples and standards was followed. However, the laboratory may use the EPA Sample No. of "ZZZZZ" to distinguish all samples that are not part of the SDG being reported.

---

3 The term peak height may be substituted for the term peak area.

For pesticide/PCB standards, the following scheme shall be used to enter "EPA Sample Number".

Name	EPA Sample Number
Evaluation Mix A	EVALA
Evaluation Mix B	EVALB
Evaluation Mix C	EVALC
Individual Mix A	INDA
Individual Mix B	INDB
Toxaphene	TOXAPH
Aroclor 1016	AR1016
Aroclor 1221	AR1221
Aroclor 1232	AR1232
Aroclor 1242	AR1242
Aroclor 1248	AR1248
Aroclor 1254	AR1254
Aroclor 1260	AR1260

If Individual Mix A and Individual Mix B are combined into one mixture (see Exhibit D), the EPA Sample Number shall be entered as INDAB. Similarly, the permitted mixture of Aroclor 1016 and Aroclor 1260 shall be entered as AR1660

Every standard, sample, matrix spike, matrix spike duplicate, and blank must contain the surrogate dibutylchlorendate (DBC) at the specified level for both water or soil/sediment samples. The retention time shift for Dibutylchlorendate on packed columns must not exceed 2.0 percent (0.3 percent for capillary columns) difference (%D) between the initial standard (Evaluation Standard Mix A) and any blank, standard, sample, matrix spike, or matrix spike duplicate analyzed during the 72-hour time period. Calculate and report the percent difference (%D) for all samples, matrix spike, matrix spike duplicate, standards, and blanks, according to Eq. 1.5.

$$\% \text{ Difference} = \frac{RT_i - RT_s}{RT_i} \times 100 \qquad \text{Eq 1.5}$$

where,

RT_i = absolute retention time of dibutylchlorendate in the initial standard (Evaluation Mixture A).

RT_s = absolute retention time of dibutylchlorendate in the sample, matrix spike, matrix spike duplicate, blank, or any standard analyzed after Evaluation Mixture A.

Enter the retention time shift for DBC in the "%D" column. Flag all those values outside the QC limits by entering an asterisk (*) in the last column, under the "*". If the retention time shift cannot be calculated due to interfering peaks, leave the %D column blank, flag the value with an asterisk, and document the problem in the Case Narrative.

Number this page as described in Part A.

Form VIII PEST is required for each seventy-two (72) hour period, for each GC system and for each GC column used to analyze TCL Pesticide/PCBs.

K. Pesticide/PCB Standards Summary (Form IX)

This form is used to monitor variations in the Calibration Factor and retention time for each pesticide/PCB standard during each seventy-two (72) hour period.

The laboratory shall complete the header information as in Part A. Enter dates of analyses, GC column ID and instrument ID. Identify GC column identification must be by stationary phase. For mixed phase columns, do not enter "mixed." If the stationary phase identifier contains a manufacturer's identifier, such as "SP" or "DB", these characters may be deleted in order to fit the identifier into the 10-character field.

Individual Standard Mix A and B must be analyzed at or near the beginning of a seventy-two (72) hour sequence (before the analysis of any samples). Individual Standard Mix A and B must also be analyzed periodically during sample analysis (at the intervals specified in Exhibits D and E), and at the end of the seventy-two (72) hour sequence. Form IX is designed to compare the first analysis of each of the standards to each subsequent analysis. Therefore, a copy of Form IX must be completed for each analysis of Individual Standard Mix A and B, and each multiresponse standard after the analysis of samples has begun. For each copy of Form IX for a given analytical sequence, the data entered in the lefthand column <u>will be</u> identical. The header over the lefthand column contains the inclusive dates and times of analysis of the standards reported on the left side of Form IX. Considering the <u>first</u> analysis of Individual Standard Mix A, Individual Mix B, <u>and</u> all the multiresponse pesticides and PCBs, enter the <u>first</u> and <u>last</u> dates and times of analysis of these standards. If Aroclors 1221 and 1232 are <u>not</u> analyzed as part of the sequence being reported, do <u>not</u> include the dates and times of their analyses, but <u>do</u> include the data on Form IX.

Report the retention time of each compound in the left hand column labeled "RT". Retention times <u>must be</u> reported in minutes and decimal minutes (i.e., 1.99 minutes), <u>not</u> in seconds, or minutes:seconds. Calculate the retention time window for each compound, according to the instructions in Exhibit E, Section III, Part 4. Report the retention time window for each compound as a range of two values, i.e., from 1.48 to 1.54. Enter the lower value of the range in the column under "RT WINDOW" labeled "FROM". Enter the upper value of the range in the column under "TO". Do <u>not</u> separate the two values with a hyphen, and do <u>not</u> enter the retention time window as a plus/minus value such as ± 0.03. NOTE: By definition, the center of the retention time window must be the retention time listed immediately to the left of the retention time window.

Calculate the calibration factor for each compound according to Equation 1.6, and the value report under the left hand column labeled "CALIBRATION FACTOR".

For each subsequent analysis of an Individual Standard Mix A or B, or a multiresponse compound, complete the right hand spaces for date and time of analysis and the EPA Sample No. for the standard (see Section J), and the columns labeled "RT" and "CALIBRATION FACTOR" with the results from that analysis. NOTE: While the lefthand side of Form IX will contain retention times, retention time windows, and calibration factors for all the compounds, the righthand side will contain data from the analysis of only some of the compounds.

$$\text{Calibration Factor} = \frac{\text{Total peak area}^4 \text{ of a Standard}}{\text{Total mass injected (ng)}} \qquad \text{Eq 1.6}$$

Calculate and report the percent difference in the Calibration Factor for each pesticide/PCB using Equation 1.7.

$$\text{Percent Difference (\%D)} = \frac{|Ab_1 - Ab_2|}{Ab_1} \times 100 \qquad \text{Eq. 1.7}$$

where,

Ab_1 = Calibration Factor from the initial standard for the 72-hour period

Ab_2 = Calibration Factor from each subsequent standard

The absolute percent difference between the individual Calibration Factors for each compound in the pesticide standard may vary no more than 15.0 percent for a quantitation run, or more than 20.0 percent for a confirmation run. Primary runs must meet the criteria required for quantitation if no other analyses are performed.

If the results of analyses of compounds in the Individual Standard Mix are to be used for quantifying pesticide/PCB concentrations in the samples preceding the analysis on the right hand side of the form, then enter "Y" for yes, in the column labeled "QNT Y/N" for each compound quantified. If the results are not used for quantitation of a particular compound, enter "N", for no. Determining that no compounds are present above the CRQL is a form of quantitation.

For each subsequent analysis of an Individual Standard Mix A or B, or multiresponse compound, complete the right hand side of a copy of Form IX, with the results of the initial analyses of all the compounds as the data in the left hand side.

For multicomponent analytes, the single largest peak characteristic of the compound must be used. A characteristic peak will not exist for similar compounds such as Aroclor 1016 and Aroclor 1242. In these cases utilization of a common peak is acceptable.

---

4 The term peak height may be substituted for the term peak area.

Regardless of which standards are reported on subsequent pages of Form IX, number all pages sequentially as described in Part A. As Individual Mix A and Mix B must be analyzed at the end of an analytical sequence, there will always be at least two pages of Form IX, 1 of 2, and 2 of 2, except where Mixes A & B have been combined for capillary column analysis.

L. Pesticide/PCB Identification (Form X)

This form summarizes the tentative and confirmed identity of all TCL pesticides/PCBs detected in a given sample. It reports the retention times of the compound on both columns on which it was analyzed, as well as the retention time windows of the standard for that compound on both of these columns. One copy of Form X is required for each sample or blank in which TCL pesticides or PCBs are detected. If none are detected in a given sample, no copy of Form X is required for that sample.

Complete the header information as in Part A. Enter the GC Column ID (by stationary phase) for each of the two columns, one as GC Column (1), the other as (2). For mixed phase columns, do not enter "mixed". If the stationary phase identifier contains a manufacturer's identifier, such as "SP" or "DB", these characters may be deleted in order to fit the identifier into the 10-character field. Enter the Instrument ID associated with each GC column directly below. Enter Lab File ID only if the compounds were confirmed by GC/MS.

For each TCL pesticide or PCB detected, enter the name of the compound as it appears abbreviated on Form IX (limited to 14 characters) under "PESTICIDE/PCB". Use the abbreviations of compound names given on Form IX. Enter the retention times on each column of the compounds detected in the sample next to the appropriate column designation (1 or 2). Enter the retention time windows on each column of the appropriate standard. These data must correspond with those on Form IX, and are entered in a similar manner. The lower value is entered under the "FROM" column, the upper value under the "TO" column. Do not use a hyphen.

Under "Quant? (Y/N)" enter "Y" for the GC column (1 or 2) used for quantitation, and "N" for the other column, for each compound. Do not leave this field blank for either GC column.

Under "GC/MS? (Y/N)" enter "Y" for both GC columns if the compound was confirmed by GC/MS. Enter "N" for both GC columns if the compound was not confirmed by GC/MS.

If more Pesticide/PCB TCL compounds are identified in an individual sample than can be reported on one copy of Form X, then complete as many additional copies of Form X as necessary, duplicating all header information, and numbering the pages as described in Part A.

SECTION IV

DATA REPORTING FORMS

1A
VOLATILE ORGANICS ANALYSIS DATA SHEET

EPA SAMPLE NO.

Lab Name: _____ Contract: _____

Lab Code: _____ **Case No.:** _____ SAS No.: _____ SDG No.: _____

Matrix: (soil/water) _____ Lab Sample ID: _____

Sample wt/vol: _____ (g/mL) ____ Lab File ID: _____

Level: (low/med) _____ Date Received: _____

% Moisture: not dec. _____ Date Analyzed: _____

Column: (pack/cap) _____ Dilution Factor: _____

CAS NO.	COMPOUND	CONCENTRATION UNITS: (ug/L or ug/Kg) _____	Q
74-87-3	Chloromethane		
74-83-9	Bromomethane		
75-01-4	Vinyl Chloride		
75-00-3	Chloroethane		
75-09-2	Methylene Chloride		
67-64-1	Acetone		
75-15-0	Carbon Disulfide		
75-35-4	1,1-Dichloroethene		
75-34-3	1,1-Dichloroethane		
540-59-0	1,2-Dichloroethene (total)		
67-66-3	Chloroform		
107-06-2	1,2-Dichloroethane		
78-93-3	2-Butanone		
71-55-6	1,1,1-Trichloroethane		
56-23-5	Carbon Tetrachloride		
108-05-4	Vinyl Acetate		
75-27-4	Bromodichloromethane		
78-87-5	1,2-Dichloropropane		
10061-01-5	cis-1,3-Dichloropropene		
79-01-6	Trichloroethene		
124-48-1	Dibromochloromethane		
79-00-5	1,1,2-Trichloroethane		
71-43-2	Benzene		
10061-02-6	trans-1,3-Dichloropropene		
75-25-2	Bromoform		
108-10-1	4-Methyl-2-Pentanone		
591-78-6	2-Hexanone		
127-18-4	Tetrachloroethene		
79-34-5	1,1,2,2-Tetrachloroethane		
108-88-3	Toluene		
108-90-7	Chlorobenzene		
100-41-4	Ethylbenzene		
100-42-5	Styrene		
1330-20-7	Xylene (total)		

1B
SEMIVOLATILE ORGANICS ANALYSIS DATA SHEET

EPA SAMPLE NO.

b Name: _____ Contract: _____

Lab Code: _____ Case No.: _____ SAS No.: _____ SDG No.: _____

Matrix: (soil/water) _____ Lab Sample ID: _____

Sample wt/vol: _____(g/mL)____ Lab File ID: _____

Level: (low/med) _____ Date Received: _____

% Moisture: not dec._____ dec._____ Date Extracted: _____

Extraction: (SepF/Cont/Sonc) _____ Date Analyzed: _____

GPC Cleanup: (Y/N)___ pH:____ Dilution Factor: _____

CAS NO.	COMPOUND	CONCENTRATION UNITS: (ug/L or ug/Kg)_____	Q
108-95-2	Phenol		
111-44-4	bis(2-Chloroethyl)ether		
95-57-8	2-Chlorophenol		
541-73-1	1,3-Dichlorobenzene		
106-46-7	1,4-Dichlorobenzene		
100-51-6	Benzyl alcohol		
95-50-1	1,2-Dichlorobenzene		
95-48-7	2-Methylphenol		
108-60-1	bis(2-Chloroisopropyl)ether		
106-44-5	4-Methylphenol		
621-64-7	N-Nitroso-di-n-propylamine		
67-72-1	Hexachloroethane		
98-95-3	Nitrobenzene		
78-59-1	Isophorone		
88-75-5	2-Nitrophenol		
105-67-9	2,4-Dimethylphenol		
65-85-0	Benzoic acid		
111-91-1	bis(2-Chloroethoxy)methane		
120-83-2	2,4-Dichlorophenol		
120-82-1	1,2,4-Trichlorobenzene		
91-20-3	Naphthalene		
106-47-8	4-Chloroaniline		
87-68-3	Hexachlorobutadiene		
59-50-7	4-Chloro-3-methylphenol		
91-57-6	2-Methylnaphthalene		
77-47-4	Hexachlorocyclopentadiene		
88-06-2	2,4,6-Trichlorophenol		
95-95-4	2,4,5-Trichlorophenol		
91-58-7	2-Chloronaphthalene		
88-74-4	2-Nitroaniline		
131-11-3	Dimethylphthalate		
208-96-8	Acenaphthylene		
606-20-2	2,6-Dinitrotoluene		

1C
SEMIVOLATILE ORGANICS ANALYSIS DATA SHEET

EPA SAMPLE NO.

Lab Name: _____ Contract: _____

Lab Code: _____ Case No.: _____ SAS No.: _____ SDG No.: _____

Matrix: (soil/water) _____ Lab Sample ID: _____

Sample wt/vol: _____ (g/mL) ____ Lab File ID: _____

Level: (low/med) _____ Date Received: _____

% Moisture: not dec. _____ dec. _____ Date Extracted: _____

Extraction: (SepF/Cont/Sonc) _____ Date Analyzed: _____

GPC Cleanup: (Y/N) ___ pH: ____ Dilution Factor: _____

CAS NO.	COMPOUND	CONCENTRATION UNITS: (ug/L or ug/Kg) _____	Q
99-09-2	3-Nitroaniline		
83-32-9	Acenaphthene		
51-28-5	2,4-Dinitrophenol		
100-02-7	4-Nitrophenol		
132-64-9	Dibenzofuran		
121-14-2	2,4-Dinitrotoluene		
84-66-2	Diethylphthalate		
7005-72-3	4-Chlorophenyl-phenylether		
86-73-7	Fluorene		
100-01-6	4-Nitroaniline		
534-52-1	4,6-Dinitro-2-methylphenol		
86-30-6	N-Nitrosodiphenylamine (1)		
101-55-3	4-Bromophenyl-phenylether		
118-74-1	Hexachlorobenzene		
87-86-5	Pentachlorophenol		
85-01-8	Phenanthrene		
120-12-7	Anthracene		
84-74-2	Di-n-butylphthalate		
206-44-0	Fluoranthene		
129-00-0	Pyrene		
85-68-7	Butylbenzylphthalate		
91-94-1	3,3'-Dichlorobenzidine		
56-55-3	Benzo(a)anthracene		
218-01-9	Chrysene		
117-81-7	bis(2-Ethylhexyl)phthalate		
117-84-0	Di-n-octylphthalate		
205-99-2	Benzo(b)fluoranthene		
207-08-9	Benzo(k)fluoranthene		
50-32-8	Benzo(a)pyrene		
193-39-5	Indeno(1,2,3-cd)pyrene		
53-70-3	Dibenz(a,h)anthracene		
191-24-2	Benzo(g,h,i)perylene		

(1) - Cannot be separated from Diphenylamine

1D
PESTICIDE ORGANICS ANALYSIS DATA SHEET

EPA SAMPLE NO.

ab Name:_____ Contract:_____

Lab Code: _____ Case No.: _____ SAS No.: _____ SDG No.: _____

Matrix: (soil/water)_____ Lab Sample ID: _____

Sample wt/vol: _____(g/mL)____ Lab File ID: _____

Level: (low/med) _____ Date Received: _____

% Moisture: not dec._____ dec._____ Date Extracted:_____

Extraction: (SepF/Cont/Sonc) _____ Date Analyzed: _____

GPC Cleanup: (Y/N)___ pH:____ Dilution Factor: _____

CAS NO.	COMPOUND	CONCENTRATION UNITS: (ug/L or ug/Kg)_____	Q
319-84-6	alpha-BHC		
319-85-7	beta-BHC		
319-86-8	delta-BHC		
58-89-9	gamma-BHC (Lindane)		
76-44-8	Heptachlor		
309-00-2	Aldrin		
1024-57-3	Heptachlor epoxide		
959-98-8	Endosulfan I		
60-57-1	Dieldrin		
72-55-9	4,4'-DDE		
72-20-8	Endrin		
33213-65-9	Endosulfan II		
72-54-8	4,4'-DDD		
1031-07-8	Endosulfan sulfate		
50-29-3	4,4'-DDT		
72-43-5	Methoxychlor		
53494-70-5	Endrin ketone		
5103-71-9	alpha-Chlordane		
5103-74-2	gamma-Chlordane		
8001-35-2	Toxaphene		
12674-11-2	Aroclor-1016		
11104-28-2	Aroclor-1221		
11141-16-5	Aroclor-1232		
53469-21-9	Aroclor-1242		
12672-29-6	Aroclor-1248		
11097-69-1	Aroclor-1254		
11096-82-5	Aroclor-1260		

1E

VOLATILE ORGANICS ANALYSIS DATA SHEET
TENTATIVELY IDENTIFIED COMPOUNDS

EPA SAMPLE NO.

Lab Name: _____ Contract: _____

Lab Code: _____ Case No.: _____ SAS No.: _____ SDG No.: _____

Matrix: (soil/water) _____ Lab Sample ID: _____

Sample wt/vol: _____ (g/mL) ____ Lab File ID: _____

Level: (low/med) _____ Date Received: _____

% Moisture: not dec. _____ Date Analyzed: _____

Column: (pack/cap) _____ Dilution Factor: _____

Number TICs found: _____

CONCENTRATION UNITS:
(ug/L or ug/Kg) _____

CAS NUMBER	COMPOUND NAME	RT	EST. CONC.	Q
1.				
2.				
3.				
4.				
5.				
6.				
7.				
8.				
9.				
10.				
11.				
12.				
13.				
14.				
15.				
16.				
17.				
18.				
19.				
20.				
21.				
22.				
23.				
24.				
25.				
26.				
27.				
28.				
29.				
30.				

1F

SEMIVOLATILE ORGANICS ANALYSIS DATA SHEET
TENTATIVELY IDENTIFIED COMPOUNDS

EPA SAMPLE NO.

Name: _____ Contract: _____

Lab Code: _____ Case No.: _____ SAS No.: _____ SDG No.: _____

Matrix: (soil/water) _____ Lab Sample ID: _____

Sample wt/vol: _____ (g/mL) ____ Lab File ID: _____

Level: (low/med) _____ Date Received: _____

% Moisture: not dec. _____ dec. _____ Date Extracted: _____

Extraction: (SepF/Cont/Sonc) _____ Date Analyzed: _____

GPC Cleanup: (Y/N) ___ pH: ____ Dilution Factor: _____

Number TICs found: _____

CONCENTRATION UNITS:
(ug/L or ug/Kg) _____

	CAS NUMBER	COMPOUND NAME	RT	EST. CONC.	Q
1.					
2.					
3.					
4.					
5.					
6.					
7.					
8.					
9.					
10.					
11.					
12.					
13.					
14.					
15.					
16.					
17.					
18.					
19.					
20.					
21.					
22.					
23.					
24.					
25.					
26.					
27.					
28.					
29.					
30.					

2A
WATER VOLATILE SURROGATE RECOVERY

Lab Name:_____ Contract:_____

Lab Code: _____ Case No.: _____ SAS No.: _____ SDG No.: _____

	EPA SAMPLE NO.	S1 (TOL) #	S2 (BFB) #	S3 (DCE) #	OTHER	TOT OUT
01						
02						
03						
04						
05						
06						
07						
08						
09						
10						
11						
12						
13						
14						
15						
16						
17						
18						
19						
20						
21						
22						
23						
24						
25						
26						
27						
28						
29						
30						

		QC LIMITS
S1 (TOL)	= Toluene-d8	(88-110)
S2 (BFB)	= Bromofluorobenzene	(86-115)
S3 (DCE)	= 1,2-Dichloroethane-d4	(76-114)

Column to be used to flag recovery values

* Values outside of contract required QC limits

D Surrogates diluted out

page __ of __

2B
SOIL VOLATILE SURROGATE RECOVERY

ab Name: _____ Contract: _____

Lab Code: _____ Case No.: _____ SAS No.: _____ SDG No.: _____

Level: (low/med) _____

	EPA SAMPLE NO.	S1 (TOL) #	S2 (BFB) #	S3 (DCE) #	OTHER	TOT OUT
01						
02						
03						
04						
05						
06						
07						
08						
09						
10						
11						
12						
13						
14						
15						
16						
17						
18						
19						
20						
21						
22						
23						
24						
25						
26						
27						
28						
29						
30						

		QC LIMITS
S1 (TOL)	= Toluene-d8	(81-117)
S2 (BFB)	= Bromofluorobenzene	(74-121)
S3 (DCE)	= 1,2-Dichloroethane-d4	(70-121)

Column to be used to flag recovery values

* Values outside of contract required QC limits

D Surrogates diluted out

2C
WATER SEMIVOLATILE SURROGATE RECOVERY

Lab Name: _____ Contract: _____

Lab Code: _____ Case No.: _____ SAS No.: _____ SDG No.: _____

	EPA SAMPLE NO.	S1 (NBZ) #	S2 (FBP) #	S3 (TPH) #	S4 (PHL) #	S5 (2FP) #	S6 (TBP) #	OTHER	TOT OUT
01									
02									
03									
04									
05									
06									
07									
08									
09									
10									
11									
12									
13									
14									
15									
16									
17									
18									
19									
20									
21									
22									
23									
24									
25									
26									
27									
28									
29									
30									

		QC LIMITS
S1 (NBZ)	= Nitrobenzene-d5	(35-114)
S2 (FBP)	= 2-Fluorobiphenyl	(43-116)
S3 (TPH)	= Terphenyl-d14	(33-141)
S4 (PHL)	= Phenol-d6	(10-94)
S5 (2FP)	= 2-Fluorophenol	(21-100)
S6 (TBP)	= 2,4,6-Tribromophenol	(10-123)

Column to be used to flag recovery values
* Values outside of contract required QC limits
D Surrogates diluted out

2D
SOIL SEMIVOLATILE SURROGATE RECOVERY

Name:_____ Contract:_____

Lab Code: _____ Case No.: _____ SAS No.: _____ SDG No.: _____

Level:(low/med)_____

	EPA SAMPLE NO.	S1 (NBZ) #	S2 (FBP) #	S3 (TPH) #	S4 (PHL) #	S5 (2FP) #	S6 (TBP) #	OTHER	TOT OUT
01									
02									
03									
04									
05									
06									
07									
08									
09									
10									
11									
12									
13									
14									
15									
16									
17									
18									
19									
20									
21									
22									
23									
24									
25									
26									
27									
28									
29									
30									

		QC LIMITS
S1 (NBZ)	= Nitrobenzene-d5	(23-120)
S2 (FBP)	= 2-Fluorobiphenyl	(30-115)
S3 (TPH)	= Terphenyl-d14	(18-137)
S4 (PHL)	= Phenol-d6	(24-113)
S5 (2FP)	= 2-Fluorophenol	(25-121)
S6 (TBP)	= 2,4,6-Tribromophenol	(19-122)

Column to be used to flag recovery values
* Values outside of contract required QC limits
D Surrogates diluted out

2E
WATER PESTICIDE SURROGATE RECOVERY

Lab Name:_____ Contract:_____

Lab Code: _____ Case No.: _____ SAS No.: _____ SDG No.:_____

	EPA SAMPLE NO.	S1 (DBC) #	OTHER
01			
02			
03			
04			
05			
06			
07			
08			
09			
10			
11			
12			
13			
14			
15			
16			
17			
18			
19			
20			
21			
22			
23			
24			
25			
26			
27			
28			
29			
30			

ADVISORY
QC LIMITS
(24-154)

S1 (DBC) = Dibutylchlorendate

Column to be used to flag recovery values

* Values outside of QC limits

D Surrogates diluted out

2F
SOIL PESTICIDE SURROGATE RECOVERY

Lab Name: _____ Contract: _____

Lab Code: _____ Case No.: _____ SAS No.: _____ SDG No.: _____

Level: (low/med) _____

	EPA SAMPLE NO.	S1 (DBC) #	OTHER
01			
02			
03			
04			
05			
06			
07			
08			
09			
10			
11			
12			
13			
14			
15			
16			
17			
18			
19			
20			
21			
22			
23			
24			
25			
26			
27			
28			
29			
30			

S1 (DBC) = Dibutylchlorendate

ADVISORY QC LIMITS (24-150)

Column to be used to flag recovery values

* Values outside of QC limits

D Surrogates diluted out

3A

WATER VOLATILE MATRIX SPIKE/MATRIX SPIKE DUPLICATE RECOVERY

Lab Name: _____ Contract: _____

Lab Code: _____ Case No.: _____ SAS No.: _____ SDG No.: _____

Matrix Spike - EPA Sample No.: _____

COMPOUND	SPIKE ADDED (ug/L)	SAMPLE CONCENTRATION (ug/L)	MS CONCENTRATION (ug/L)	MS % REC #	QC LIMITS REC.
1,1-Dichloroethene					61-145
Trichloroethene					71-120
Benzene					76-127
Toluene					76-125
Chlorobenzene					75-130

COMPOUND	SPIKE ADDED (ug/L)	MSD CONCENTRATION (ug/L)	MSD % REC #	% RPD #	QC LIMITS RPD	QC LIMITS REC.
1,1-Dichloroethene					14	61-145
Trichloroethene					14	71-120
Benzene					11	76-127
Toluene					13	76-125
Chlorobenzene					13	75-130

Column to be used to flag recovery and RPD values with an asterisk

* Values outside of QC limits

RPD: _____ out of _____ outside limits
Spike Recovery: _____ out of _____ outside limits

COMMENTS: _____

3B

SOIL VOLATILE MATRIX SPIKE/MATRIX SPIKE DUPLICATE RECOVERY

Lab Name:_____ Contract:_____

Lab Code: _____ Case No.: _____ SAS No.: _____ SDG No.: _____

Matrix Spike - EPA Sample No.: _____ Level:(low/med) _____

COMPOUND	SPIKE ADDED (ug/Kg)	SAMPLE CONCENTRATION (ug/Kg)	MS CONCENTRATION (ug/Kg)	MS % REC #	QC LIMITS REC.
1,1-Dichloroethene					59-172
Trichloroethene					62-137
Benzene					66-142
Toluene					59-139
Chlorobenzene					60-133

COMPOUND	SPIKE ADDED (ug/Kg)	MSD CONCENTRATION (ug/Kg)	MSD % REC #	% RPD #	QC LIMITS RPD	QC LIMITS REC.
1,1-Dichloroethene					22	59-172
Trichloroethene					24	62-137
Benzene					21	66-142
Toluene					21	59-139
Chlorobenzene					21	60-133

Column to be used to flag recovery and RPD values with an asterisk

* Values outside of QC limits

RPD:_____ out of _____ outside limits
Spike Recovery:_____ out of _____ outside limits

COMMENTS: _____

3C

WATER SEMIVOLATILE MATRIX SPIKE/MATRIX SPIKE DUPLICATE RECOVERY

Lab Name: _____ Contract: _____

Lab Code: _____ Case No.: _____ SAS No.: _____ SDG No.: _____

Matrix Spike - EPA Sample No.: _____

COMPOUND	SPIKE ADDED (ug/L)	SAMPLE CONCENTRATION (ug/L)	MS CONCENTRATION (ug/L)	MS % REC #	QC LIMITS REC.
Phenol					12- 89
2-Chlorophenol					27-123
1,4-Dichlorobenzene					36- 97
N-Nitroso-di-n-prop.(1)					41-116
1,2,4-Trichlorobenzene					39- 98
4-Chloro-3-methylphenol					23- 97
Acenaphthene					46-118
4-Nitrophenol					10- 80
2,4-Dinitrotoluene					24- 96
Pentachlorophenol					9-103
Pyrene					26-127

COMPOUND	SPIKE ADDED (ug/L)	MSD CONCENTRATION (ug/L)	MSD % REC #	% RPD #	QC LIMITS RPD	QC LIMITS REC.
Phenol					42	12- 89
2-Chlorophenol					40	27-123
1,4-Dichlorobenzene					28	36- 97
N-Nitroso-di-n-prop.(1)					38	41-116
1,2,4-Trichlorobenzene					28	39- 98
4-Chloro-3-methylphenol					42	23- 97
Acenaphthene					31	46-118
4-Nitrophenol					50	10- 80
2,4-Dinitrotoluene					38	24- 96
Pentachlorophenol					50	9-103
Pyrene					31	26-127

(1) N-Nitroso-di-n-propylamine

Column to be used to flag recovery and RPD values with an asterisk
* Values outside of QC limits

RPD: _____ out of _____ outside limits
Spike Recovery: _____ out of _____ outside limits

COMMENTS: _____

3D
SOIL SEMIVOLATILE MATRIX SPIKE/MATRIX SPIKE DUPLICATE RECOVERY

Name: _____ Contract: _____

Lab Code: _____ Case No.: _____ SAS No.: _____ SDG No.: _____

Matrix Spike - EPA Sample No.: _____ Level:(low/med) _____

COMPOUND	SPIKE ADDED (ug/Kg)	SAMPLE CONCENTRATION (ug/Kg)	MS CONCENTRATION (ug/Kg)	MS % REC #	QC LIMITS REC.
Phenol					26- 90
2-Chlorophenol					25-102
1,4-Dichlorobenzene					28-104
N-Nitroso-di-n-prop.(1)					41-126
1,2,4-Trichlorobenzene					38-107
4-Chloro-3-methylphenol					26-103
Acenaphthene					31-137
4-Nitrophenol					11-114
2,4-Dinitrotoluene					28- 89
Pentachlorophenol					17-109
Pyrene					35-142

COMPOUND	SPIKE ADDED (ug/Kg)	MSD CONCENTRATION (ug/Kg)	MSD % REC #	% RPD #	QC LIMITS RPD	QC LIMITS REC.
Phenol					35	26- 90
2-Chlorophenol					50	25-102
1,4-Dichlorobenzene					27	28-104
N-Nitroso-di-n-prop.(1)					38	41-126
1,2,4-Trichlorobenzene					23	38-107
4-Chloro-3-methylphenol					33	26-103
Acenaphthene					19	31-137
4-Nitrophenol					50	11-114
2,4-Dinitrotoluene					47	28- 89
Pentachlorophenol					47	17-109
Pyrene					36	35-142

(1) N-Nitroso-di-n-propylamine

Column to be used to flag recovery and RPD values with an asterisk
* Values outside of QC limits

RPD: _____ out of _____ outside limits
Spike Recovery: _____ out of _____ outside limits

COMMENTS: _____

3E

WATER PESTICIDE MATRIX SPIKE/MATRIX SPIKE DUPLICATE RECOVERY

Lab Name:_____ Contract:_____

Lab Code: _____ Case No.: _____ SAS No.: _____ SDG No.: _____

Matrix Spike - EPA Sample No.: _____

COMPOUND	SPIKE ADDED (ug/L)	SAMPLE CONCENTRATION (ug/L)	MS CONCENTRATION (ug/L)	MS % REC #	QC. LIMITS REC.
gamma-BHC (Lindane)					56-123
Heptachlor					40-131
Aldrin					40-120
Dieldrin					52-126
Endrin					56-121
4,4'-DDT					38-127

COMPOUND	SPIKE ADDED (ug/L)	MSD CONCENTRATION (ug/L)	MSD % REC #	% RPD #	QC LIMITS RPD	QC LIMITS REC.
gamma-BHC (Lindane)					15	56-123
Heptachlor					20	40-131
Aldrin					22	40-120
Dieldrin					18	52-126
Endrin					21	56-121
4,4'-DDT					27	38-127

Column to be used to flag recovery and RPD values with an asterisk

* Values outside of QC limits

RPD:_____ out of _____ outside limits
Spike Recovery:_____ out of _____ outside limits

COMMENTS: _____

3F

SOIL PESTICIDE MATRIX SPIKE/MATRIX SPIKE DUPLICATE RECOVERY

ɔ Name:_____ Contract:_____

ıb Code: _____ Case No.: _____ SAS No.: _____ SDG No.: _____

Matrix Spike - EPA Sample No.: _____ Level:(low/med) _____

COMPOUND	SPIKE ADDED (ug/Kg)	SAMPLE CONCENTRATION (ug/Kg)	MS CONCENTRATION (ug/Kg)	MS % REC #	QC. LIMITS REC.
gamma-BHC (Lindane)					46-127
Heptachlor					35-130
Aldrin					34-132
Dieldrin					31-134
Endrin					42-139
4,4'-DDT					23-134

COMPOUND	SPIKE ADDED (ug/Kg)	MSD CONCENTRATION (ug/Kg)	MSD % REC #	% RPD #	QC LIMITS RPD	QC LIMITS REC.
gamma-BHC (Lindane)					50	46-127
Heptachlor					31	35-130
Aldrin					43	34-132
Dieldrin					38	31-134
Endrin					45	42-139
4,4'-DDT					50	23-134

Column to be used to flag recovery and RPD values with an asterisk

* Values outside of QC limits

RPD:_____ ɔut of _____ outside limits
Spike Recovery:_____ out of _____ outside limits

COMMENTS: _____

4A

VOLATILE METHOD BLANK SUMMARY

Lab Name: _____ Contract: _____

Lab Code: _____ Case No.: _____ SAS No.: _____ SDG No.: _____

Lab File ID: _____ Lab Sample ID: _____

Date Analyzed: _____ Time Analyzed: _____

Matrix: (soil/water) _____ Level:(low/med) _____

Instrument ID: _____

THIS METHOD BLANK APPLIES TO THE FOLLOWING SAMPLES, MS AND MSD:

	EPA SAMPLE NO.	LAB SAMPLE ID	LAB FILE ID	TIME ANALYZED
01				
02				
03				
04				
05				
06				
07				
08				
09				
10				
11				
12				
13				
14				
15				
16				
17				
18				
19				
20				
21				
22				
23				
24				
25				
26				
27				
28				
29				
30				

COMMENTS: _____

page __ of __

4B
SEMIVOLATILE METHOD BLANK SUMMARY

,b Name: _____ Contract: _____

Lab Code: _____ Case No.: _____ SAS No.: _____ SDG No.: _____

Lab File ID: _____ Lab Sample ID: _____

Date Extracted: _____ Extraction:(SepF/Cont/Sonc) _____

Date Analyzed: _____ Time Analyzed: _____

Matrix: (soil/water) _____ Level:(low/med) _____

Instrument ID: _____

THIS METHOD BLANK APPLIES TO THE FOLLOWING SAMPLES, MS AND MSD:

	EPA SAMPLE NO.	LAB SAMPLE ID	LAB FILE ID	DATE ANALYZED
01				
02				
03				
04				
05				
06				
07				
08				
09				
10				
11				
12				
13				
14				
15				
16				
17				
18				
19				
20				
21				
22				
23				
24				
25				
26				
27				
28				
29				
30				

MMENTS: _____

4C

PESTICIDE METHOD BLANK SUMMARY

Lab Name: _____ Contract: _____

Lab Code: _____ Case No.: _____ SAS No.: _____ SDG No.: _____

Lab Sample ID: _____ Lab File ID: _____

Matrix: (soil/water) _____ Level: (low/med) _____

Date Extracted: _____ Extraction: (SepF/Cont/Sonc) _____

Date Analyzed (1): _____ Date Analyzed (2): _____

Time Analyzed (1): _____ Time Analyzed (2): _____

Instrument ID (2): _____ Instrument ID (2): _____

GC Column ID (1): _____ GC Column ID (1): _____

THIS METHOD BLANK APPLIES TO THE FOLLOWING SAMPLES, MS AND MSD:

	EPA SAMPLE NO.	LAB SAMPLE ID	DATE ANALYZED 1	DATE ANALYZED 2
01				
02				
03				
04				
05				
06				
07				
08				
09				
10				
11				
12				
13				
14				
15				
16				
17				
18				
19				
20				
21				
22				
23				
24				
25				
26				

COMMENTS: _____

_____

5A

VOLATILE ORGANIC GC/MS TUNING AND MASS CALIBRATION - BROMOFLUOROBENZENE (BFB)

b Name: _____ Contract: _____

Code: _____ Case No.: _____ SAS No.: _____ SDG No.: _____

Lab File ID: _____ BFB Injection Date: _____

Instrument ID: _____ BFB Injection Time: _____

Matrix: (soil/water) _____ Level: (low/med) _____ Column: (pack/cap) _____

m/e	ION ABUNDANCE CRITERIA	% RELATIVE ABUNDANCE
50	15.0 - 40.0% of mass 95	
75	30.0 - 60.0% of mass 95	
95	Base peak, 100% relative abundance	
96	5.0 - 9.0% of mass 95	
173	Less than 2.0% of mass 174	( )1
174	Greater than 50.0% of mass 95	
175	5.0 - 9.0% of mass 174	( )1
176	Greater than 95.0%, but less than 101.0% of mass 174	( )1
177	5.0 - 9.0% of mass 176	( )2

1-Value is % mass 174 2-Value is % mass 176

IIS TUNE APPLIES TO THE FOLLOWING SAMPLES, MS, MSD, BLANKS, AND STANDARDS:

	EPA SAMPLE NO.	LAB SAMPLE ID	LAB FILE ID	DATE ANALYZED	TIME ANALYZED
01					
02					
03					
04					
05					
06					
07					
08					
09					
10					
11					
12					
13					
14					
15					
16					
17					
18					
19					
20					
21					
22					

5B

SEMIVOLATILE ORGANIC GC/MS TUNING AND MASS CALIBRATION - DECAFLUOROTRIPHENYLPHOSPHINE (DFTPP)

Lab Name: _____ Contract: _____

Lab Code: _____ Case No.: _____ SAS No.: _____ SDG No.: _____

Lab File ID: _____ DFTPP Injection Date: _____

Instrument ID: _____ DFTPP Injection Time: _____

m/e	ION ABUNDANCE CRITERIA	% RELATIVE ABUNDANCE
51	30.0 - 60.0% of mass 198	
68	Less than 2.0% of mass 69	_____( )1
69	Mass 69 relative abundance	
70	Less than 2.0% of mass 69	_____( )1
127	40.0 - 60.0% of mass 198	
197	Less than 1.0% of mass 198	
198	Base Peak, 100% relative abundance	
199	5.0 to 9.0% of mass 198	
275	10.0 - 30.0% of mass 198	
365	Greater than 1.00% of mass 198	
441	Present, but less than mass 443	
442	Greater than 40.0% of mass 198	
443	17.0 - 23.0% of mass 442	_____( )2

1-Value is % mass 69 2-Value is % mass 442

THIS TUNE APPLIES TO THE FOLLOWING SAMPLES, MS, MSD, BLANKS, AND STANDARDS:

	EPA SAMPLE NO.	LAB SAMPLE ID	LAB FILE ID	DATE ANALYZED	TIME ANALYZED
01					
02					
03					
04					
05					
06					
07					
08					
09					
10					
11					
12					
13					
14					
15					
16					
17					
18					
19					
20					
21					
22					

page __ of __

6A

VOLATILE ORGANICS INITIAL CALIBRATION DATA

Lab Name: _____ Contract: _____

Lab Code: _____ Case No.: _____ SAS No.: _____ SDG No.: _____

Instrument ID: _____ Calibration Date(s): _____ _____

Matrix: (soil/water) _____ Level: (low/med) _____ Column: (pack/cap) _____

Min $\overline{RRF}$ for SPCC(#) = 0.300 (0.250 for Bromoform) Max %RSD for CCC(*) = 30.0%

LAB FILE ID: RRF20 = _____ RRF50 = _____
RRF100= _____ RRF150= _____ RRF200= _____

COMPOUND	RRF20	RRF50	RRF100	RRF150	RRF200	$\overline{RRF}$	% RSD
Chloromethane	#						#
Bromomethane							
Vinyl Chloride	*						*
Chloroethane							
Methylene Chloride							
Acetone							
Carbon Disulfide							
1,1-Dichloroethene	*						*
1,1-Dichloroethane	#						#
1,2-Dichloroethene (total)							
loroform	*						*
,2-Dichloroethane							
2-Butanone							
1,1,1-Trichloroethane							
Carbon Tetrachloride							
Vinyl Acetate							
Bromodichloromethane							
1,2-Dichloropropane	*						*
cis-1,3-Dichloropropene							
Trichloroethene							
Dibromochloromethane							
1,1,2-Trichloroethane							
Benzene							
trans-1,3-Dichloropropene							
Bromoform	#						#
4-Methyl-2-Pentanone							
2-Hexanone							
Tetrachloroethene							
1,1,2,2-Tetrachloroethane	#						#
Toluene	*						*
Chlorobenzene	#						#
Ethylbenzene	*						*
Styrene							
Xylene (total)							
luene-d8							
omofluorobenzene							
1,2-Dichloroethane-d4							

6B

SEMIVOLATILE ORGANICS INITIAL CALIBRATION DATA

Lab Name: _____ Contract: _____

Lab Code: _____ Case No.: _____ SAS No.: _____ SDG No.: _____

Instrument ID: _____ Calibration Date(s): _____ _____

Min $\overline{RRF}$ for SPCC(#) = 0.050 Max %RSD for CCC(*) = 30.0%

LAB FILE ID: RRF20 = _____ RRF50 = _____
RRF80 = _____ RRF120= _____ RRF160= _____

COMPOUND	RRF20	RRF50	RRF80	RRF120	RRF160	$\overline{RRF}$	% RSD
Phenol	*						*
bis(2-Chloroethyl)ether							
2-Chlorophenol							
1,3-Dichlorobenzene							
1,4-Dichlorobenzene	*						*
Benzyl alcohol							
1,2-Dichlorobenzene							
2-Methylphenol							
bis(2-Chloroisopropyl)ether							
4-Methylphenol							
N-Nitroso-di-n-propylamine	#						#
Hexachloroethane							
Nitrobenzene							
Isophorone							
2-Nitrophenol	*						*
2,4-Dimethylphenol							
Benzoic acid							
bis(2-Chloroethoxy)methane							
2,4-Dichlorophenol	*						*
1,2,4-Trichlorobenzene							
Naphthalene							
4-Chloroaniline							
Hexachlorobutadiene	*						*
4-Chloro-3-methylphenol	*						*
2-Methylnaphthalene							
Hexachlorocyclopentadiene	#						#
2,4,6-Trichlorophenol	*						*
2,4,5-Trichlorophenol							
2-Chloronaphthalene							
2-Nitroaniline							
Dimethylphthalate							
Acenaphthylene							
2,6-Dinitrotoluene							
3-Nitroaniline							
Acenaphthene	*						*
2,4-Dinitrophenol	#						#
4-Nitrophenol	#						#

6C

SEMIVOLATILE ORGANICS INITIAL CALIBRATION DATA

Lab Name: _____ Contract: _____

Lab Code: _____ Case No.: _____ SAS No.: _____ SDG No.: _____

Instrument ID: _____ Calibration Date(s): _____ _____

Min $\overline{RRF}$ for SPCC(#) = 0.050 Max %RSD for CCC(*) = 30.0%

LAB FILE ID: RRF20 = _____ RRF50 = _____
RRF80 = _____ RRF120= _____ RRF160= _____

COMPOUND	RRF20	RRF50	RRF80	RRF120	RRF160	$\overline{RRF}$	% RSD
Dibenzofuran							
2,4-Dinitrotoluene							
Diethylphthalate							
4-Chlorophenyl-phenylether							
Fluorene							
4-Nitroaniline							
4,6-Dinitro-2-methylphenol							
N-Nitrosodiphenylamine (1)	*						*
4-Bromophenyl-phenylether							
Hexachlorobenzene							
Pentachlorophenol	*						*
Phenanthrene							
Anthracene							
Di-n-butylphthalate							
Fluoranthene	*						*
Pyrene							
Butylbenzylphthalate							
3,3'-Dichlorobenzidine							
Benzo(a)anthracene							
Chrysene							
bis(2-Ethylhexyl)phthalate							
Di-n-octylphthalate	*						*
Benzo(b)fluoranthene							
Benzo(k)fluoranthene							
Benzo(a)pyrene	*						*
Indeno(1,2,3-cd)pyrene							
Dibenz(a,h)anthracene							
Benzo(g,h,i)perylene							
Nitrobenzene-d5							
2-Fluorobiphenyl							
Terphenyl-d14							
Phenol-d6							
2-Fluorophenol							
2,4,6-Tribromophenol							

Cannot be separated from Diphenylamine

7A

VOLATILE CONTINUING CALIBRATION CHECK

Lab Name: _____ Contract: _____

Lab Code: _____ Case No.: _____ SAS No.: _____ SDG No.: _____

Instrument ID: _____ Calibration Date: _____ Time: _____

Lab File ID: _____ Init. Calib. Date(s): _____ _____

Matrix: (soil/water) _____ Level: (low/med) _____ Column: (pack/cap) _____

Min RRF50 for SPCC(#) = 0.300 (0.250 for Bromoform) Max %D for CCC(*) = 25.0%

COMPOUND	$\overline{RRF}$	RRF50	%D
Chloromethane	#		#
Bromomethane			
Vinyl Chloride	*		*
Chloroethane			
Methylene Chloride			
Acetone			
Carbon Disulfide			
1,1-Dichloroethene	*		*
1,1-Dichloroethane	#		#
1,2-Dichloroethene (total)			
Chloroform	*		*
1,2-Dichloroethane			
2-Butanone			
1,1,1-Trichloroethane			
Carbon Tetrachloride			
Vinyl Acetate			
Bromodichloromethane			
1,2-Dichloropropane	*		*
cis-1,3-Dichloropropene			
Trichloroethene			
Dibromochloromethane			
1,1,2-Trichloroethane			
Benzene			
trans-1,3-Dichloropropene			
Bromoform	#		#
4-Methyl-2-Pentanone			
2-Hexanone			
Tetrachloroethene			
1,1,2,2-Tetrachloroethane	#		#
Toluene	*		*
Chlorobenzene	#		#
Ethylbenzene	*		*
Styrene			
Xylene (total)			
Toluene-d8			
Bromofluorobenzene			
1,2-Dichloroethane-d4			

7B

SEMIVOLATILE CONTINUING CALIBRATION CHECK

Lab Name:_____ Contract:_____

Lab Code: _____ Case No.: _____ SAS No.: _____ SDG No.: _____

Instrument ID: _____ Calibration Date:_____ Time:_____

Lab File ID: _____ Init. Calib. Date(s):_____ _____

Min RRF50 for SPCC(#) = 0.050 Max %D for CCC(*) = 25.0%

COMPOUND	$\overline{RRF}$	RRF50	%D
Phenol	*		*
bis(2-Chloroethyl)ether			
2-Chlorophenol			
1,3-Dichlorobenzene			
1,4-Dichlorobenzene	*		*
Benzyl alcohol			
1,2-Dichlorobenzene			
2-Methylphenol			
bis(2-Chloroisopropyl)ether			
4-Methylphenol			
N-Nitroso-di-n-propylamine	#		#
Hexachloroethane			
Nitrobenzene			
Isophorone			
2-Nitrophenol	*		*
2,4-Dimethylphenol			
Benzoic acid			
bis(2-Chloroethoxy)methane			
2,4-Dichlorophenol	*		*
1,2,4-Trichlorobenzene			
Naphthalene			
4-Chloroaniline			
Hexachlorobutadiene	*		*
4-Chloro-3-methylphenol	*		*
2-Methylnaphthalene			
Hexachlorocyclopentadiene	#		#
2,4,6-Trichlorophenol	*		*
2,4,5-Trichlorophenol			
2-Chloronaphthalene			
2-Nitroaniline			
Dimethylphthalate			
Acenaphthylene			
2,6-Dinitrotoluene			
3-Nitroaniline			
Acenaphthene	*		*
2,4-Dinitrophenol	#		#
4-Nitrophenol	#		#

7C

SEMIVOLATILE CONTINUING CALIBRATION CHECK

Lab Name:_____ Contract:_____

Lab Code: _____ Case No.: _____ SAS No.: _____ SDG No.: _____

Instrument ID: _____ Calibration Date:_____ Time:_____

Lab File ID: _____ Init. Calib. Date(s):_____ _____

Min RRF50 for SPCC(#) = 0.050 Max %D for CCC(*) = 25.0%

COMPOUND	$\overline{RRF}$	RRF50	%D
Dibenzofuran			
2,4-Dinitrotoluene			
Diethylphthalate			
4-Chlorophenyl-phenylether			
Fluorene			
4-Nitroaniline			
4,6-Dinitro-2-methylphenol			
N-Nitrosodiphenylamine (1) *			*
4-Bromophenyl-phenylether			
Hexachlorobenzene			
Pentachlorophenol *			*
Phenanthrene			
Anthracene			
Di-n-butylphthalate			
Flucranthene *			*
Pyrene			
Butylbenzylphthalate			
3,3'-Dichlorobenzidine			
Benzo(a)anthracene			
Chrysene			
bis(2-Ethylhexyl)phthalate			
Di-n-octylphthalate *			*
Benzo(b)fluoranthene			
Benzo(k)fluoranthene			
Benzo(a)pyrene *			*
Indeno(1,2,3-cd)pyrene			
Dibenz(a,h)anthracene			
Benzo(g,h,i)perylene			
Nitrobenzene-d5			
2-Fluorobiphenyl			
Terphenyl-d14			
Phenol-d6			
2-Fluorophenol			
2,4,6-Tribromophenol			

(1) Cannot be separated from Diphenylamine

8A
VOLATILE INTERNAL STANDARD AREA SUMMARY

Lab Name: _____ Contract: _____

Lab Code: _____ Case No.: _____ SAS No.: _____ SDG No.: _____

Lab File ID (Standard): _____ Date Analyzed: _____

Instrument ID: _____ Time Analyzed: _____

Matrix: (soil/water) _____ Level: (low/med) _____ Column: (pack/cap) _____

		IS1(BCM) AREA #	RT	IS2(DFB) AREA #	RT	IS3(CBZ) AREA #	RT
	12 HOUR STD						
	UPPER LIMIT						
	LOWER LIMIT						
	EPA SAMPLE NO.						
01							
02							
03							
04							
05							
06							
07							
08							
09							
10							
11							
12							
13							
14							
15							
16							
17							
18							
19							
20							
21							
22							

IS1 (BCM) = Bromochloromethane
IS2 (DFB) = 1,4-Difluorobenzene
IS3 (CBZ) = Chlorobenzene-d5

UPPER LIMIT = + 100% of internal standard area.
LOWER LIMIT = - 50% of internal standard area.

Column used to flag internal standard area values with an asterisk

page __ of __

8B

SEMIVOLATILE INTERNAL STANDARD AREA SUMMARY

Lab Name: _____ Contract: _____

Lab Code: _____ Case No.: _____ SAS No.: _____ SDG No.: _____

Lab File ID (Standard): _____ Date Analyzed: _____

Instrument ID: _____ Time Analyzed: _____

	IS1(DCB) AREA #	RT	IS2(NPT) AREA #	RT	IS3(ANT) AREA #	RT
12 HOUR STD						
UPPER LIMIT						
LOWER LIMIT						
EPA SAMPLE NO.						
01						
02						
03						
04						
05						
06						
07						
08						
09						
10						
11						
12						
13						
14						
15						
16						
17						
18						
19						
20						
21						
22						

IS1 (DCB) = 1,4-Dichlorobenzene-d4
IS2 (NPT) = Naphthalene-d8
IS3 (ANT) = Acenaphthene-d10

UPPER LIMIT = + 100% of internal standard area.
LOWER LIMIT = - 50% of internal standard area.

Column used to flag internal standard area values with an asterisk

page __ of __

8C

SEMIVOLATILE INTERNAL STANDARD AREA SUMMARY

Lab Name: _____ Contract: _____

Lab Code: _____ Case No.: _____ SAS No.: _____ SDG No.: _____

Lab File ID (Standard): _____ Date Analyzed: _____

Instrument ID: _____ Time Analyzed: _____

		IS4(PHN) AREA #	RT	IS5(CRY) AREA #	RT	IS6(PRY) AREA #	RT
	12 HOUR STD						
	UPPER LIMIT						
	LOWER LIMIT						
	EPA SAMPLE NO.						
01							
02							
03							
04							
05							
06							
07							
08							
09							
10							
11							
12							
13							
14							
15							
16							
17							
18							
19							
20							
21							
22							

IS4 (PHN) = Phenanthrene-d10
IS5 (CRY) = Chrysene-d12
IS6 (PRY) = Perylene-d12

UPPER LIMIT = + 100% of internal standard area.
LOWER LIMIT = - 50% of internal standard area.

Column used to flag internal standard area values with an asterisk

page __ of __

8D
PESTICIDE EVALUATION STANDARDS SUMMARY

Lab Name:_____ Contract:_____

Lab Code: _____ Case No.: _____ SAS No.: _____ SDG No.: _____

Instrument ID:_____ GC Column ID: _____

Dates of Analyses:_____ to _____

Evaluation Check for Linearity

PESTICIDE	CALIBRATION FACTOR EVAL MIX A	CALIBRATION FACTOR EVAL MIX B	CALIBRATION FACTOR EVAL MIX C	%RSD (</= 10.0%)	
Aldrin					
Endrin					
4,4'-DDT					(1)
DBC					

(1) If > 10.0% RSD, plot a standard curve and determine the ng for each sample in that set from the curve.

Evaluation Check for 4,4'-DDT/Endrin Breakdown
(percent breakdown expressed as total degradation)

		DATE ANALYZED	TIME ANALYZED	ENDRIN	4,4'-DDT	COMBINED (2)
	INITIAL					
01	EVAL MIX B					
02	EVAL MIX B					
03	EVAL MIX B					
04	EVAL MIX B					
05	EVAL MIX B					
06	EVAL MIX B					
07	EVAL MIX B					
08	EVAL MIX B					
09	EVAL MIX B					
10	EVAL MIX B					
11	EVAL MIX B					
12	EVAL MIX B					
13	EVAL MIX B					
14	EVAL MIX B					

(2) See Form instructions.

8E
PESTICIDE EVALUATION STANDARDS SUMMARY
Evaluation of Retention Time Shift for Dibutylchlorendate

Lab Name:_____ Contract:_____

Lab Code: _____ Case No.: _____ SAS No.: _____ SDG No.: _____

Instrument ID:_____ GC Column ID: _____

Dates of Analyses:_____ to _____

	EPA SAMPLE NO.	LAB SAMPLE ID	DATE ANALYZED	TIME ANALYZED	% D	*
01						
02						
03						
04						
05						
06						
07						
08						
09						
10						
11						
12						
13						
14						
15						
16						
17						
18						
19						
20						
21						
22						
23						
24						
25						
26						
27						
28						
29						
30						
31						
32						
33						
34						
35						
36						
37						
38						

* Values outside of QC limits (2.0% for packed columns, 0.3% for capillary columns)

page __ of __

PESTICIDE/PCB STANDARDS SUMMARY

Lab Name:_____ Contract:_____

Lab Code: _____ Case No.: _____ SAS No.: _____ SDG No.: _____

Instrument ID:_____ GC Column ID: _____

	DATE(S) OF ANALYSIS	FROM:			DATE OF ANALYSIS			
		TO:			TIME OF ANALYSIS			
	TIME(S) OF ANALYSIS	FROM:			EPA SAMPLE NO. (STANDARD)			
		TO:						
COMPOUND	RT	RT WINDOW FROM	RT WINDOW TO	CALIBRATION FACTOR	RT	CALIBRATION FACTOR	QNT Y/N	%D
alpha-BHC								
beta-BHC								
delta-BHC								
gamma-BHC								
Heptachlor								
Aldrin								
Hept. epoxide								
Endosulfan I								
Dieldrin								
4,4'-DDE								
Endrin								
Endosulfan II								
4,4'-DDD								
Endo. sulfate								
4,4'-DDT								
Methoxychlor								
Endrin ketone								
a. Chlordane								
g. Chlordane								
Toxaphene								
Aroclor-1016								
Aroclor-1221								
Aroclor-1232								
Aroclor-1242								
Aroclor-1248								
Aroclor-1254								
Aroclor-1260								

Under QNT Y/N: enter Y if quantitation was performed, N if not performed. %D must be less than or equal to 15.0% for quantitation, and less than or equal to 20.0% for confirmation.

Note: Determining that no compounds were found above the CRQL is a form of quantitation, and therefore at least one column must meet the 15.0% criteria.

For multicomponent analytes, the single largest peak that is characteristic of the component should be used to establish retention time and %D. Identification of such analytes is based primarily on pattern recognition.

page __ of __

10

PESTICIDE/PCB IDENTIFICATION

EPA SAMPLE NO.

Name: _____ Contract: _____

Lab Code: _____ Case No.: _____ SAS No.: _____ SDG No.: _____

GC Column ID (1): _____ GC Column ID (2): _____

Instrument ID (1): _____ Instrument ID (2): _____

Lab Sample ID: _____

Lab File ID: _____ (only if confirmed by GC/MS)

PESTICIDE/PCB	RETENTION TIME		RT WINDOW OF STANDARD From	TO	QUANT? (Y/N)	GC/MS? (Y/N)
01 _____	Column 1	_____	_____	_____	_	_
02	Column 2	_____	_____	_____	_	_
03 _____	Column 1	_____	_____	_____	_	_
	Column 2	_____	_____	_____	_	_
05 _____	Column 1	_____	_____	_____	_	_
06	Column 2	_____	_____	_____	_	_
07 _____	Column 1	_____	_____	_____	_	_
08	Column 2	_____	_____	_____	_	_
09 _____	Column 1	_____	_____	_____	_	_
10	Column 2	_____	_____	_____	_	_
11 _____	Column 1	_____	_____	_____	_	_
12	Column 2	_____	_____	_____	_	_

Comments: _____

EXHIBIT C

TARGET COMPOUND LIST (TCL) AND CONTRACT REQUIRED QUANTITATION LIMITS (CRQL)

Target Compound List (TCL) and Contract Required Quantitation Limits (CRQL)*

Volatiles	CAS Number	Quantitation Limits** Water ug/L	Low Soil/Sediment[a] ug/Kg
1. Chloromethane	74-87-3	10	10
2. Bromomethane	74-83-9	10	10
3. Vinyl Chloride	75-01-4	10	10
4. Chloroethane	75-00-3	10	10
5. Methylene Chloride	75-09-2	5	5
6. Acetone	67-64-1	10	10
7. Carbon Disulfide	75-15-0	5	5
8. 1,1-Dichloroethene	75-35-4	5	5
9. 1,1-Dichloroethane	75-34-3	5	5
10. 1,2-Dichloroethene (total)	540-59-0	5	5
11. Chloroform	67-66-3	5	5
12. 1,2-Dichloroethane	107-06-2	5	5
13. 2-Butanone	78-93-3	10	10
14. 1,1,1-Trichloroethane	71-55-6	5	5
15. Carbon Tetrachloride	56-23-5	5	5
16. Vinyl Acetate	108-05-4	10	10
17. Bromodichloromethane	75-27-4	5	5
18. 1,2-Dichloropropane	78-87-5	5	5
19. cis-1,3-Dichloropropene	10061-01-5	5	5
20. Trichloroethene	79-01-6	5	5
21. Dibromochloromethane	124-48-1	5	5
22. 1,1,2-Trichloroethane	79-00-5	5	5
23. Benzene	71-43-2	5	5
24. trans-1,3-Dichloropropene	10061-02-6	5	5
25. Bromoform	75-25-2	5	5
26. 4-Methyl-2-pentanone	108-10-1	10	10
27. 2-Hexanone	591-78-6	10	10
28. Tetrachloroethene	127-18-4	5	5
29. Toluene	108-88-3	5	5
30. 1,1,2,2-Tetrachloroethane	79-34-5	5	5

(continued)

Volatiles	CAS Number	Quantitation Limits** Water ug/L	Low Soil/Sediment[a] ug/Kg
31. Chlorobenzene	108-90-7	5	5
32. Ethyl Benzene	100-41-4	5	5
33. Styrene	100-42-5	5	5
34. Xylenes (Total)	1330-20-7	5	5

[a] Medium Soil/Sediment Contract Required Quantitation Limits (CRQL) for Volatile TCL Compounds are 125 times the individual Low Soil/Sediment CRQL.

* Specific quantitation limits are highly matrix dependent. The quantitation limits listed herein are provided for guidance and may not always be achievable.

** Quantitation limits listed for soil/sediment are based on wet weight. The quantitation limits calculated by the laboratory for soil/sediment, calculated on dry weight basis as required by the contract, will be higher.

Target Compound List (TCL) and
Contract Required Quantitation Limits (CRQL)*

Semivolatiles	CAS Number	Quantitation Limits** Water ug/L	Low Soil/Sediment[5] ug/Kg
35. Phenol	108-95-2	10	330
36. bis(2-Chloroethyl) ether	111-44-4	10	330
37. 2-Chlorophenol	95-57-8	10	330
38. 1,3-Dichlorobenzene	541-73-1	10	330
39. 1,4-Dichlorobenzene	106-46-7	10	330
40. Benzyl alcohol	100-51-6	10	330
41. 1,2-Dichlorobenzene	95-50-1	10	330
42. 2-Methylphenol	95-48-7	10	330
43. bis(2-Chloroisopropyl) ether	108-60-1	10	330
44. 4-Methylphenol	106-44-5	10	330
45. N-Nitroso-di-n-dipropylamine	621-64-7	10	330
46. Hexachloroethane	67-72-1	10	330
47. Nitrobenzene	98-95-3	10	330
48. Isophorone	78-59-1	10	330
49. 2-Nitrophenol	88-75-5	10	330
50. 2,4-Dimethylphenol	105-67-9	10	330
51. Benzoic acid	65-85-0	50	1600
52. bis(2-Chloroethoxy) methane	111-91-1	10	330
53 2,4-Dichlorophenol	120-83-2	10	330
54. 1,2,4-Trichlorobenzene	120-82-1	10	330
55. Naphthalene	91-20-3	10	330
56. 4-Chloroaniline	106-47-8	10	330
57. Hexachlorobutadiene	87-68-3	10	330
58. 4-Chloro-3-methylphenol (para-chloro-meta-cresol)	59-50-7	10	330
59. 2-Methylnaphthalene	91-57-6	10	330
60. Hexachlorocyclopentadiene	77-47-4	10	330
61. 2,4,6-Trichlorophenol	88-06-2	10	330
62. 2,4,5-Trichlorophenol	95-95-4	50	1600
63. 2-Chloronaphthalene	91-58-7	10	330
64. 2-Nitroaniline	88-74-4	50	1600
65. Dimethylphthalate	131-11-3	10	330
66. Acenaphthylene	208-96-8	10	330
67. 2,6-Dinitrotoluene	606-20-2	10	330
68. 3-Nitroaniline	99-09-2	50	1600
69. Acenaphthene	83-32-9	10	330

(continued)

Semivolatiles	CAS Number	Quantitation Limits** Water ug/L	Low Soil/Sediment[b] ug/Kg
70. 2,4-Dinitrophenol	51-28-5	50	1600
71. 4-Nitrophenol	100-02-7	50	1600
72. Dibenzofuran	132-64-9	10	330
73. 2,4-Dinitrotoluene	121-14-2	10	330
74. Diethylphthalate	84-66-2	10	330
75. 4-Chlorophenyl-phenyl ether	7005-72-3	10	330
76. Fluorene	86-73-7	10	330
77. 4-Nitroaniline	100-01-6	50	1600
78. 4,6-Dinitro-2-methylphenol	534-52-1	50	1600
79. N-nitrosodiphenylamine	86-30-6	10	330
80. 4-Bromophenyl-phenylether	101-55-3	10	330
81. Hexachlorobenzene	118-74-1	10	330
82. Pentachlorophenol	87-86-5	50	1600
83. Phenanthrene	85-01-8	10	330
84. Anthracene	120-12-7	10	330
85. Di-n-butylphthalate	84-74-2	10	330
86. Fluoranthene	206-44-0	10	330
87. Pyrene	129-00-0	10	330
88. Butylbenzylphthalate	85-68-7	10	330
89. 3,3'-Dichlorobenzidine	91-94-1	20	660
90. Benzo(a)anthracene	56-55-3	10	330
91. Chrysene	218-01-9	10	330
92. bis(2-Ethylhexyl)phthalate	117-81-7	10	330
93. Di-n-octylphthalate	117-84-0	10	330
94. Benzo(b)fluoranthene	205-99-2	10	330
95. Benzo(k)fluoranthene	207-08-9	10	330
96. Benzo(a)pyrene	50-32-8	10	330
97. Indeno(1,2,3-cd)pyrene	193-39-5	10	330
98. Dibenz(a,h)anthracene	53-70-3	10	330
99. Benzo(g,h,i)perylene	191-24-2	10	330

[b] Medium Soil/Sediment Contract Required Quantitation Limits (CRQL) for SemiVolatile TCL Compounds are 60 times the individual Low Soil/Sediment CRQL.

* Specific quantitation limits are highly matrix dependent. The quantitation limits listed herein are provided for guidance and may not always be achievable.

** Quantitation limits listed for soil/sediment are based on wet weight. The quantitation limits calculated by the laboratory for soil/sediment, calculated on dry weight basis as required by the contract, will be higher.

Target Compound List (TCL) and Contract Required Quantitation Limits (CRQL)*

Pesticides/PCBs	CAS Number	Quantitation Limits** Water ug/L	Low Soil/Sediment[c] ug/Kg
100. alpha-BHC	319-84-6	0.05	8.0
101. beta-BHC	319-85-7	0.05	8.0
102. delta-BHC	319-86-8	0.05	8.0
103. gamma-BHC (Lindane)	58-89-9	0.05	8.0
104. Heptachlor	76-44-8	0.05	8.0
105. Aldrin	309-00-2	0.05	8.0
106. Heptachlor epoxide	1024-57-3	0.05	8.0
107. Endosulfan I	959-98-8	0.05	8.0
108. Dieldrin	60-57-1	0.10	16.0
109. 4,4'-DDE	72-55-9	0.10	16.0
110. Endrin	72-20-8	0.10	16.0
111. Endosulfan II	33213-65-9	0.10	16.0
112. 4,4'-DDD	72-54-8	0.10	16.0
113. Endosulfan sulfate	1031-07-8	0.10	16.0
114. 4,4'-DDT	50-29-3	0.10	16.0
115. Methoxychlor	72-43-5	0.5	80.0
116. Endrin ketone	53494-70-5	0.10	16.0
117. alpha-Chlordane	5103-71-9	0.5	80.0
118. gamma-Chlordane	5103-74-2	0.5	80.0
119. Toxaphene	8001-35-2	1.0	160.0
120. Aroclor-1016	12674-11-2	0.5	80.0
121. Aroclor-1221	11104-28-2	0.5	80.0
122. Aroclor-1232	11141-16-5	0.5	80.0
123. Aroclor-1242	53469-21-9	0.5	80.0
124. Aroclor-1248	12672-29-6	0.5	80.0
125. Aroclor-1254	11097-69-1	1.0	160.0
126. Aroclor-1260	11096-82-5	1.0	160.0

[c] Medium Soil/Sediment Contract Required Quantitation Limits (CRQL) for Pesticide/PCB TCL compounds are 15 times the individual Low Soil/Sediment CRQL.

* Specific quantitation limits are highly matrix dependent. The quantitation limits listed herein are provided for guidance and may not always be achievable.

** Quantitation limits listed for soil/sediment are based on wet weight. The quantitation Limits calculated by the laboratory for soil/sediment, calculated on dry weight basis as required by the contract, will be higher.

EXHIBIT D

ANALYTICAL METHODS FOR VOLATILES

Table of Contents

		Page
SECTION I -	Introduction	D-3/VOA
SECTION II -	Sample Preparation and Storage	D-5/VOA
	PART A - Sample Storage and Holding Times	D-6/VOA
	PART B - Protocols for Hexadecane Extraction of Volatiles from Water and Soil/Sediment for Optional Screening	D-7/VOA
SECTION III -	Optional Screening of Hexadecane Extracts for Volatiles	D-10/VOA
SECTION IV -	GC/MS Analysis of Volatiles	D-14/VOA

SECTION I

INTRODUCTION

The analytical methods that follow are designed to analyze water, sediment and soil from hazardous waste sites for the organic compounds on the Target Compounds List (TCL) (See Exhibit C). The methods are based on EPA Method 624 (Purgeables).

The methods are divided into the following sections: sample preparation, screening, and analysis. Sample preparation covers sample storage, sample holding times, and medium level sample extraction. As described in the screening section, a portion of a hexadecane extract may be screened on a gas chromatograph with appropriate detectors to determine the concentration level of organics. The analysis section contains the GC/MS analytical methods for organics. The purge and trap technique, including related sample preparation, is included in the analysis section because GC/MS operation and the purge and trap technique are interrelated.

1. Method for the Determination of Volatile (Purgeable) Organic Compounds.

1.1 Scope and Application

This method covers the determination of the TCL volatile (purgeable) organics as listed in Exhibit C. The contract required quantitation limits are also listed in Exhibit C. The method includes an optional hexadecane screening procedure. The extract is screened on a gas chromatograph/ flame ionization detector (GC/FID) to determine the approximate concentration of organic constituents in the sample. The actual analysis is based on a purge and trap gas chromatographic/mass spectrometer (GC/MS) method. For soil/sediment samples, the purge device is heated.

SECTION II

SAMPLE PREPARATION AND STORAGE

PART A - SAMPLE STORAGE AND HOLDING TIMES

1. Procedures for Sample Storage

1.1 The samples must be protected from light and refrigerated at 4°C (±2°C) from the time of receipt until analysis or extraction.

2. Contract Required Holding Times

2.1 VOA analysis of water or soil/sediment samples must be completed within 10 days of VTSR.

PART B - PROTOCOLS FOR HEXADECANE EXTRACTION OF VOLATILES FROM WATER AND SOIL/SEDIMENT FOR OPTIONAL SCREENING

1. Summary of Method

WATER - a 40 ml aliquot of sample is extracted with 2 ml of hexadecane. This provides a minimum quantitation limit (MQL) of:

Compounds	MQL ug/L
non-halogenated aromatics	40- 50
halogenated methanes	800-1000
halogenated ethanes	400- 500

SOIL/SEDIMENT - Forty mL of reagent water are added to 10 g (wet weight) of soil and shaken. The water phase is in turn extracted with 2 mL of hexadecane. This provides a minimum quantitation limit of approximately four times higher than those listed for water.

The hexadecane extraction and screening protocols for purgeables are optional. These protocols are included to aid the analyst in deciding whether a sample is low or medium level. The use of these or other screening protocols could prevent saturation of the purge and trap system and/or the GC/MS system. It is recommended that these or other screening protocols be used, particularly if there is some doubt about the level of organics in a sample. This is especially true in soil/sediment analysis.

2. Limitations

These extraction and preparation procedures were developed for rapid screening of water samples from hazardous waste sites. The design of the methods thus does not stress efficient recoveries or low limits of quantitation. Rather, the procedures were designed to screen at moderate recovery and sufficient sensitivity for a broad spectrum of organic chemicals. The results of the analyses thus may reflect only a minimum of the amount actually present in some samples. This is especially true if water soluble solvents are present.

3. Interferences

3.1 Method interferences may be caused by contaminants in solvents, reagents, glassware, and other sample processing hardware that lead to discrete artifacts and/or elevated baselines in the total ion current profiles. All of these materials must be routinely demonstrated to be free from interferences under the conditions of the analysis by running laboratory reagent blanks. Matrix interferences may be caused by contaminants that are coextracted from the sample. The extent of matrix interferences will vary considerably from source to source, depending upon the nature and diversity of the site being sampled.

4. Apparatus and Materials

4.1 Vials and caps, 2 mL for GC auto sampler.

4.2 Volumetric flask, 50 mL with ground glass stopper.

4.3 Pasteur pipets, disposable.

4.4 Centrifuge tube, 50 mL with ground glass stopper or Teflon-lined screw cap.

4.5 Balance - Analytical, capable of accurately weighing ± 0.0001 g.

5. Reagents

5.1 Hexadecane and methanol - pesticide residue analysis grade or equivalent.

5.2 Reagent water - Reagent water is defined as water in which an interferent is not observed at the CRQL of each parameter of interest.

5.3 Standard mixture #1 containing benzene, toluene, ethyl benzene and xylene. Standard mixture #2 containing n-nonane and n-dodecane.

5.3.1 Stock standard solutions (1.00 ug/uL)- Stock standard solutions can be prepared from pure standard materials or purchased as certified solutions.

5.3.1.1 Prepare stock standard solutions by accurately weighing about 0.0100 g of pure material. Dissolve the material in methanol dilute to volume in a 10 mL volumetric flask. Larger volumes can be used at the convenience of the analyst. If compound purity is certified at 96% or greater, the weight can be used without correction to calculate the concentration of the stock standard.

5.3.1.2 Transfer the stock standard solutions into multiple Teflon-sealed screw-cap vials. Store, with no head-space, at -10°C to -20°C, and protect from light. Stock standard solutions should be checked frequently for signs of degradation or evaporation, especially just prior to preparing calibration standards from them. These solutions must be replaced after six months, or sooner if comparison with quality control check samples indicates a problem. Standards prepared from gases or reactive compounds such as styrene must be replaced after two months, or sooner if comparison with quality control check samples indicates a problem.

5.3.2 Prepare working standards of mixtures #1 and #2 at 100 ng/uL of each compound in methanol. Store these solutions as in 5.3.1.2 above.

6. Sample Extraction

6.1 Water

6.1.1 Allow the contents of the 40 mL sample vial to come to room temperature. Quickly transfer the contents of the 40 mL sample vial to a 50 mL volumetric flask. Immediately add 2.0 mL of hexadecane, cap the flask, and shake vigorously for 1 minute. Let phases separate. Open the flask and add sufficient reagent water to bring the hexadecane layer into the neck of the flask.

6.1.2 Transfer approximately 1 mL of the hexadecane layer to a 2.0 mL GC vial. If an emulsion is present after shaking the sample, break it by:

- o pulling the emulsion through a small plug of Pyrex glass wool packed in a pipet, or
- o transferring the emulsion to a centrifuge tube and centrifuging for several minutes.

6.1.3 Add 200 uL of working standard mixture #1 and #2 to separate 40 mL portions of reagent water. Follow steps 6.1.1 - 6.1.2 beginning with the immediate addition of 2.0 mL of hexadecane.

6.2 Soil/Sediment

6.2.1 Add approximately 10 g of soil (wet weight) to 40 mL of reagent water in a 50 mL centrifuge tube with a ground glass stopper or teflon-lined cap. Cap and shake vigorously for one minute. Centrifuge the capped flask briefly. Quickly transfer supernatant water to a 50 mL volumetric flask equipped with a ground glass stopper.

6.2.2 Follow 6.1, starting with the addition of 2.0 mL of hexadecane.

7. Sample Analysis

The sample is ready for GC/FID screening. Proceed to Section III, Optional Screening of Hexadecane Extracts for Volatiles.

SECTION III

OPTIONAL SCREENING OF HEXADECANE EXTRACTS FOR VOLATILES

1. Summary of Method

1.1 The hexadecane extracts of water and soil/sediment are screened on a gas chromatograph/flame ionization detector (GC/FID). The results of the screen will determine if volatile organics are to be analyzed by low or medium level GC/MS procedures if the sample is a soil/sediment, or to determine the appropriate dilution factor if the sample is water.

2. Apparatus and Materials

2.1 Gas chromatograph - An analytical system complete with gas chromatograph suitable for on-column injection and all required accessories including syringes, analytical columns, gases, detector, and strip-chart recorder. A data system is recommended for measuring peak areas.

2.1.1 Above-described GC, equipped with flame ionization detector.

2.1.2 GC column - 3 m x 2 mm ID glass column packed with 10% OV-101 on 100-120 mesh Chromosorb W-HP (or equivalent). The column temperature should be programmed from 80°C to 280°C at 16°C/min. and held at 280°C for 10 minutes.

3. Reagents

3.1 Hexadecane - pesticide residue analysis grade or equivalent.

4. Limitations

4.1 The flame ionization detector varies considerably in sensitivity when comparing aromatics and halogenated methanes and ethanes. Halomethanes are approximately 20 X less sensitive than aromatics and haloethanes approximately 10 X less sensitive. Low molecular weight, water soluble solvents e.g. alcohols and ketones, will not extract from the water, and therefore will not be detected by the GC/FID.

4.2 Following are two options for interpreting the GC/FID chromatogram.

4.2.1 Option A is to use standard mixture #1 containing the aromatics to calculate an approximate concentration of the aromatics in the sample. Use this information to determine the proper dilution for purge and trap if the sample is a water or whether to use the low or medium level GC/MS purge and trap methods if the sample is a soil/sediment (see Table 1, paragraph 6.2.1.3 for guidance). This should be the best approach, however, the aromatics may be absent or obscured by higher concentrations of other purgeables. In these cases, Option B may be the best approach.

4.2.2 Option B is to use standard mixture #2 containing nonane and dodecane to calculate a factor. Use the factor to calculate a dilution for purge and trap of a water sample or to determine whether to use the low or medium level GC/MS purge and trap methods for soil/sediment samples (see Table 1, paragraph

6.2.1.3 for guidance). All purgeables of interest have retention times less than the n-dodecane.

5. Extract Screening

5.1 External standard calibration - Standardize the GC/FID each 12 hr. shift for half scale response. This is done by injecting 1-5 uL of the extracts that contain approximately 10 ng/uL of the mix #1 and mix #2 compounds, prepared in paragraph 5.3.1 of Section II, Part B. Use the GC conditions specified in 2.1.2.

5.2 Inject the same volume of hexadecane extract as the extracted standard mixture in 5.1. Use the GC conditions specified in 2.1.2.

6. Analytical Decision Point

6.1 Water

6.1.1 Compare the chromatograms of the hexadecane extract of the sample with those of the reagent blank and extract of the standard.

6.1.1.1 If no peaks are noted, other than those also in the reagent blank, analyze a 5 mL water sample by purge and trap GC/MS.

6.1.1.2 If peaks are present prior to the n-dodecane and the aromatics are distinguishable, follow Option A (4.2.1).

6.1.1.3 If peaks are present prior to the n-dodecane but the aromatics are absent or indistinguishable, use Option B as follows: If all peaks are $\leq$3% of the n-nonane, analyze a 5 mL water sample by purge and trap GC/MS. If any peaks are $\geq$3% of the n-nonane, measure the peak height or area of the major peak and calculate the dilution factor as follows:

$$\frac{\text{peak area of sample major peak}}{\text{peak area of n-nonane}} \times 50 = \text{dilution factor}$$

The water sample will be diluted using the calculated factor just prior to purge and trap GC/MS analysis.

6.2 Soil/Sediment

6.2.1 Compare the chromatograms of the hexadecane extract of the sample with those of the reagent blank and extract of the standard.

6.2.1.1 If no peaks are noted, other than those also in the reagent blank, analyze a 5 g sample by low level GC/MS.

6.2.1.2 If peaks are present prior to the n-dodecane and the aromatics are distinguishable, follow Option A (paragraph 4.2.1) and the concentration information in Table 1, paragraph 6.2.1.3, to determine whether to analyze by low or medium level method.

6.2.1.3 If peaks are present prior to the n-dodecane but the aromatics are absent or indistinguishable, use Option B as follows: Calculate a factor using the following formula:

$$\frac{\text{peak area of sample major peak}}{\text{peak area of n-nonane}} = \text{X Factor}$$

Table 1 - Determination of GC/MS Purge & Trap Method

X Factor	Analyze by	Approximate Concentration Range* (ug/kg)
0-1.0	low level method	0-1,000
>1.0	medium level method	>1,000

* This concentration range is based on the response of aromatics to GC/FID. When comparing GC/FID responses, the concentration for halomethanes is 20X higher, and that for haloethanes 10X higher.

6.3 Sample Analysis

Proceed to Section IV, GC/MS Analysis of Volatiles.

SECTION IV

GC/MS ANALYSIS OF VOLATILES

1. Summary of Methods

1.1 Water samples

An inert gas is bubbled through a 5 mL sample contained in a specifically designed purging chamber at ambient temperature. The purgeables are efficiently transferred from the aqueous phase to the vapor phase. The vapor is swept through a sorbent column where the purgeables are trapped. After purging is completed, the sorbent column is heated and backflushed with the inert gas to desorb the purgeables onto a gas chromatographic column. The gas chromatograph is temperature programmed to separate the purgeables which are then detected with a mass spectrometer.

An aliquot of the sample is diluted with reagent water when dilution is necessary. A 5 mL aliquot of the dilution is taken for purging.

1.2 Soil/Sediment Samples

1.2.1 Low Level. An inert gas is bubbled through a mixture of a 5 g sample and reagent water contained in a suggested specially designed purging chamber (illustrated in Figure 5) at elevated temperatures. The purgeables are efficiently transferred from the aqueous phase to the vapor phase. The vapor is swept through a sorbent column where the purgeables are trapped. After purging is completed, the sorbent column is heated and backflushed with the inert gas to desorb the purgeables onto a gas chromatographic column. The gas chromatograph is temperature programmed to separate the purgeables which are then detected with a mass spectrometer.

1.2.2 Medium Level. A measured amount of soil is extracted with methanol. A portion of the methanol extract is diluted to 5 mL with reagent water. An inert gas is bubbled through this solution in a specifically designed purging chamber at ambient temperature. The purgeables are effectively transferred from the aqueous phase to the vapor phase. The vapor is swept through a sorbent column where the purgeables are trapped. After purging is completed, the sorbent column is heated and backflushed with the inert gas to desorb the purgeables onto a gas chromatographic column. The gas chromatograph is temperature programmed to separate the purgeables which are then detected with a mass spectrometer.

2. Interferences

2.1 Impurities in the purge gas, organic compounds out-gassing from the plumbing ahead of the trap, and solvent vapors in the laboratory account for the majority of contamination problems. The analytical system must be demonstrated to be free from contamination under the conditions of the analysis by running laboratory reagent blanks as described in Exhibit E. The use of non-TFE tubing, non-TFE thread sealants, or flow controllers with rubber components in the purging device should be avoided.

2.2 Samples can be contaminated by diffusion of volatile organics (particularly fluorocarbons and methylene chloride) through the septum seal into the sample during storage and handling. A holding blank prepared from reagent water and carried through the holding period and the analysis protocol serves as a check on such contamination. One holding blank per case should be analyzed. Data must be retained by laboratory and made available for inspection during on-site evaluations.

2.3 Contamination by carry-over can occur whenever high level and low level samples are sequentially analyzed. To reduce carryover, the purging device and sampling syringe must be rinsed with reagent water between sample analyses. Whenever an unusually concentrated sample is encountered, it should be followed by an analysis of reagent water to check for cross contamination. For samples containing large amounts of water soluble materials, suspended solids, high boiling compounds or high purgeable levels, it may be necessary to wash out the purging device with a detergent solution, rinse it with distilled water, and then dry it in a 105°C oven between analyses. The trap and other parts of the system are also subject to contamination; therefore, frequent bakeout and purging of the entire system may be required.

2.4 The laboratory where volatile analysis is performed should be completely free of solvents.

3. <u>Apparatus and Materials</u>

3.1 Micro syringes - 25 uL and larger, 0.006 inch ID needle.

3.2 Syringe valve - two-way, with Luer ends (three each), if applicable to the purging device.

3.3 Syringe - 5 mL, gas tight with shut-off valve.

3.4 Balance-Analytical, capable of accurately weighing ± 0.0001 g. and a top-loading balance capable of weighing ± 0.1 g.

3.5 Glassware

3.5.1
- Bottle - 15 mL, screw cap, with Teflon cap liner.
- Volumetric flasks - class A with ground-glass stoppers.
- Vials - 2 mL for GC autosampler.

3.6 Purge and trap device - The purge and trap device consists of three separate pieces of equipment; the sample purger, trap and the desorber. Several complete devices are now commercially available.

3.6.1 The sample purger must be designed to accept 5 mL samples with a water column at least 3 cm deep. The gaseous head space between the water column and the trap must have a total volume of less than 15 mL. The purge gas must pass through the water column as finely divided bubbles, each with a diameter of less than 3 mm at the origin. The purge gas must be introduced no

more than 5 mm from the base of the water column. The sample purger, illustrated in Figure 1, meets these design criteria. Alternate sample purge devices may be utilized provided equivalent performance is demonstrated.

3.6.2 The trap must be at least 25 cm long and have an inside diameter of at least 0.105 inch. The trap must be packed to contain the following minimum lengths of absorbents: 15 cm of 2,6-diphenylene oxide polymer (Tenax-GC 60/80 mesh) and 8 cm of silica gel (Davison Chemical, 35/60 mesh, grade 15, or equivalent). The minimum specifications for the trap are illustrated in Figure 2.

3.6.3 The desorber should be capable of rapidly heating the trap to 180°C. The polymer section of the trap should not be heated higher than 180°C and the remaining sections should not exceed 220°C during bakeout mode. The desorber design, illustrated in Figure 2, meets these criteria.

3.6.4 The purge and trap device may be assembled as a separate unit or be coupled to a gas chromatograph as illustrated in Figures 3 and 4.

3.6.5 A heater or heated bath capable of maintaining the purge device at 40°C ± 1°C.

3.7 GC/MS system

3.7.1 Gas chromatograph - An analytical system complete with a temperature programmable gas chromatograph suitable for on-column injection and all required accessories including syringes, analytical columns, and gases.

3.7.2 Column - 6 ft long x 0.1 in ID glass, packed with 1% SP-1000 on Carbopack B (60/80 mesh) or equivalent. NOTE: Capillary columns may be used for analysis of volatiles, as long as the Contractor uses the instrumental parameters in EPA Method 524.2 as guidelines, uses the internal standards and surrogates specified in this contract, <u>and</u> demonstrates that the analysis meets all of the performance and QA/QC criteria contained in this contract.

3.7.3 Mass spectrometer - Capable of scanning from 35 to 260 amu every 3 seconds or less, utilizing 70 volts (nominal) electron energy in the electron impact ionization mode and producing a mass spectrum which meets all the criteria in Table 2 when 50 ng of 4-bromofluorobenzene (BFB) is injected through the gas chromatograph inlet.

3.7.4 GC/MS interface - Any gas chromatograph to mass spectrometer interface that gives acceptable calibration points at 50 ng or less per injection for each of the parameters of interest and achieves all acceptable performance criteria (Exhibit E) may be used. Gas chromatograph to mass spectrometer interfaces

constructed of all-glass or glass-lined materials are recommended. Glass can be deactivated by silanizing with dichlorodimethylsilane.

3.7.5 Data system - A computer system must be interfaced to the mass spectrometer that allows the continuous acquisition and storage on machine readable media of all mass spectra obtained throughout the duration of the chromatographic program. The computer must have software that allows searching any GC/MS data file for ions of a specified mass and plotting such ion abundances versus time or scan number. This type of plot is defined as an Extracted Ion Current Profile (EICP). Software must also be available that allows integrating the abundance in any EICP between specified time or scan number limits.

4. Reagents

4.1 Reagent water - Reagent water is defined as water in which an interferent is not observed at or above the CRQL of the parameters of interest.

4.1.1 Reagent water may be generated by passing tap water through a carbon filter bed containing about 453 g of activated carbon (Calgon Corp., Filtrasorb-300 or equivalent).

4.1.2 A water purification system (Millipore Super-Q or equivalent) may be used to generate reagent water.

4.1.3 Reagent water may also be prepared by boiling water for 15 minutes. Subsequently, while maintaining the temperature at 90°C, bubble a contaminant-free inert gas through the water for one hour. While still hot, transfer the water to a narrow-mouth screw-cap bottle and seal with a Teflon-lined septum and cap.

4.2 Sodium thiosulfate - (ACS) Granular.

4.3 Methanol - Pesticide quality or equivalent.

4.4 Stock standard solutions - Stock standard solutions may be prepared from pure standard materials or purchased and must be traceable to EMSL/LV supplied standards. Prepare stock standard solutions in methanol using assayed liquids or gases as appropriate.

4.4.1 Place about 9.8 mL of methanol into a 10.0 mL tared ground glass stoppered volumetric flask. Allow the flask to stand, unstoppered, for about 10 minutes or until all alcohol wetted surfaces have dried. Weigh the flask to the nearest 0.1 mg.

4.4.2 Add the assayed reference material as described below.

4.4.2.1 Liquids - Using a 100 uL syringe, immediately add two or more drops of assayed reference material to the flask then reweigh. The liquid must fall

directly into the alcohol without contacting the neck of the flask.

4.4.2.2 Gases - To prepare standards for any of the four halocarbons that boil below 30°C (bromomethane, chloroethane, chloromethane, and vinyl chloride), fill a 5 mL valved gas-tight syringe with the reference standard to the 5.0 mL mark. Lower the needle to 5 mm above the methanol meniscus. Slowly introduce the reference standard above the surface of the liquid. The heavy gas rapidly dissolves in the methanol. This may also be accomplished by using a lecture bottle equipped with a Hamilton Lecture Bottle Septum (#86600). Attach Teflon tubing to the side-arm relief value and direct a gentle stream of gas into the methanol meniscus.

4.4.3 Reweigh, dilute to volume, stopper, then mix by inverting the flask several times. Calculate the concentration in micrograms per microliter from the net gain in weight. When compound purity is assayed to be 96% or greater, the weight may be used without correction to calculate the concentration of the stock standard. Commercially prepared standards may be used at any concentration if they are certified by the manufacturer. Commercial standards must be traceable to EMSL/LV-supplied standards.

4.4.4 Transfer the stock standard solution into multiple Teflon-sealed screw-cap bottles. Store with no headspace at -10°C to -20°C and protect from light. Once one of the bottles containing the standard solution has been opened, it may be used for at most one week.

4.4.5 Prepare fresh standards every two months for gases or for reactive compounds such as styrene. All other standards must be replaced after six months, or sooner if comparison with check standards indicates a problem.

4.5 Secondary dilution standards - Using stock standard solutions, prepare secondary dilution standards in methanol that contain the compounds of interest, either singly or mixed together. (See GC/MS Calibration in Exhibit E). Secondary dilution standards should be stored with minimal headspace and should be checked frequently for signs of degradation or evaporation, especially just prior to preparing calibration standards from them.

4.6 Surrogate standard spiking solution. Prepare stock standard solutions for toluene-d_8, p-bromofluorobenzene, and 1,2-dichloroethane-d_4 in methanol as described in paragraph 4.4. Prepare a surrogate standard spiking solution from these stock standards at a concentration of 250 ug/10 mL in methanol.

4.7 Purgeable Organic Matrix Standard Spiking Solution

4.7.1 Prepare a spiking solution in methanol that contains the following compounds at a concentration of 250 ug/10.0 mL:

Purgeable Organics
1,1-dichloroethene
trichloroethene
chlorobenzene
toluene
benzene

4.7.2 Matrix spikes also serve as duplicates; therefore, add an aliquot of this solution to each of two portions from one sample chosen for spiking.

4.8 BFB Standard - Prepare a 25 ng/uL solution of BFB in methanol.

4.9 Great care must be taken to maintain the integrity of all standard solutions. Store all standard solutions at -10°C to -20°C in screw-cap amber bottles with teflon liners.

5. Calibration

5.1 Assemble a purge and trap device that meets the specification in paragraph 3.6. Condition the trap overnight at 180°C in the purge mode with an inert gas flow of at least 20 cm^3/min. Daily, prior to use, condition the traps for 10 minutes while backflushing at 180°C with the column at 220°C.

5.2 Connect the purge and trap device to a gas chromatograph. The gas chromatograph must be operated using temperature and flow rate parameters equivalent to those in paragraph 7.1.2. Calibrate the purge and trap-GC/MS system using the internal standard technique (paragraph 5.3).

5.3 Internal standard calibration procedure. The three internal standards are bromochloromethane, 1,4-difluorobenzene, and chlorobenzene-d_5, at 50 ug/L at time of purge. Separate initial and continuing calibrations must be performed for water samples, and medium level soil samples.

5.3.1 Prepare calibration standards at a minimum of five concentration levels for each TCL parameter and each surrogate compound. The concentration levels are specified in Exhibit E. Standards may be stored up to 24 hours, if held in sealed vials with zero headspace at -10°C to -20°C and protected from light. If not so stored, they must be discarded after an hour.

5.3.2 Prepare a spiking solution containing each of the internal standards using the procedures described in paragraphs 4.4 and 4.5. It is recommended that the secondary dilution standard be prepared at a concentration of 25 ug/mL of each internal standard compound. The addition of 10 uL of this standard to

5.0 mL of sample or calibration standard would be equivalent of 50 ug/L.

5.3.3 Tune the GC/MS system to meet the criteria in Exhibit E by injecting BFB. Analyze each calibration standard, according to paragraph 7, adding 10 uL of internal standard spiking solution directly to the syringe. Tabulate the area response of the characteristic ions against concentration for each compound and internal standard and calculate relative response factors (RRF) for each compound using equation 1.

$$\text{EQ. 1} \qquad RRF = \frac{A_x}{A_{is}} \times \frac{C_{is}}{C_x}$$

Where:

Ax = Area of the characteristic ion for the compound to be measured.

A_{is} = Area of the characteristic ion for the specific internal standard from Exhibit E.

C_{is} = Concentration of the internal standard.

C_x = Concentration of the compound to be measured.

5.3.4 The average relative response factor ($\overline{RRF}$) must be calculated for all compounds. A system performance check must be made before this calibration curve is used. Five compounds (the system performance check compounds) are checked for a minimum average relative response factor. These compounds (the SPCC) are chloromethane, 1,1-dichloroethane, bromoform, 1,1,2,2-tetrachloroethane, and chlorobenzene. Six compounds (the calibration check compounds, CCC) are used to evaluate the curve. These compounds the (CCC) are 1,1-Dichloroethene, Chloroform, 1,2,-Dichloropropane, Toluene, Ethylbenzene, and Vinyl Chloride. Calculate the % Relative Standard Deviation (%RSD) of RRF values over the working range of the curve. A minimum %RSD for each CCC must be met before the curve is valid.

$$\%RSD = \frac{\text{Standard deviation}}{\text{mean}} \times 100$$

See instructions for Form VI, Initial Calibration Data for more details.

5.3.5 Check of the calibration curve must be performed once every 12 hours. These criteria are described in detail in the instructions for Form VII, Continuing Calibration Check. (see Exhibit B, Section III). The minimum relative response factor for the system performance check compounds must be checked. If this criteria is met, the relative response factor of all

compounds are calculated and reported. A percent difference of the daily relative response factor (12 hour) compared to the average relative response factor from the initial curve is calculated. The maximum percent difference allowed for each compound flagged as 'CCC' in Form VII is checked. Only after both these criteria are met can sample analysis begin.

5.3.6 Internal standard responses and retention times in all standards must be evaluated during or immediately after data acquisition. If the retention time for any internal standard changes by more than 30 seconds from the latest daily (12 hour) calibration standard, the chromatographic system must be inspected for malfunctions, and corrections made as required. The extracted ion current profile (EICP) of the internal standards must be monitored and evaluated for each standard. If the EICP area for any internal standard changes by more than a factor of two (-50% to +100%), the mass spectrometric system must be inspected for malfunction and corrections made as appropriate. When corrections are made, re-analysis of samples analyzed while the system was malfunctioning is necessary.

GC/MS Operating Conditions

1 These performance tests require the following instrumental parameters:

Electron Energy:	70 Volts (nominal)
Mass Range:	35 - 260
Scan Time:	to give at least 5 scans per peak and not to exceed 3 seconds per scan.

Sample Analysis

1 Water Samples

7.1.1 All samples and standard solutions must be allowed to warm to ambient temperature before analysis.

7.1.2 Recommended operating conditions for the gas chromatograph Packed column conditions: Carbopak B (60/80 mesh) with 1% SP-1000 packed in a 6 foot by 2 mm ID glass column with helium carrier gas at a flow rate of 30 cm^3/min. Column temperature is isothermal at 45°C for 3 minutes, then programmed at 8°C per minute to 220°C and held for 15 minutes. Injector temperature is 200-225°C. Source temperature is set according to the manufacturer's specifications. Transfer line temperature is 250-300°C. The recommended carrier gas is helium at 30 cm^3/sec. (See EPA Method 5.2.4.2 for capillary column condition.)

7.1.3 After achieving the key ion abundance criteria, calibrate the system daily as described in Exhibit E.

7.1.4 Adjust the purge gas (helium) flow rate to 25-40 cm^3/min. Variations from this flow rate may be necessary to achieve better purging and collection efficiencies for some compounds, particularly chloromethane and bromoform.

7.1.5 Remove the plunger from a 5 mL syringe and attach a closed syringe valve. Open the sample or standard bottle which has been allowed to come to ambient temperature, and carefully pour the sample into the syringe barrel to just short of overflowing. Replace the syringe plunger and compress the sample. Open the syringe valve and vent any residual air while adjusting the sample volume to 5.0 mL. This process of taking an aliquot destroys the validity of the sample for future analysis so if there is only one VOA vial, the analyst should fill a second syringe at this time to protect against possible loss of sample integrity. This second sample is maintained only until such a time when the analyst has determined that the first sample has been analyzed properly. Filling one 20 mL syringe would allow the use of only one syringe. If a second analysis is needed from the 20 mL syringe, it must be analyzed within 24 hours. Care must also be taken to prevent air from leaking into the syringe.

7.1.6 The purgeable organics screening procedure (Section III), if used, will have shown the approximate concentrations of major sample components. If a dilution of the sample was indicated, this dilution shall be made just prior to GC/MS analysis of the sample. All steps in the dilution procedure must be performed without delays until the point at which the diluted sample is in a gas tight syringe.

7.1.6.1 The following procedure will allow for dilutions near the calculated dilution factor from the screening procedure:

7.1.6.1.1 All dilutions are made in volumetric flasks (10 mL to 100 mL).

7.1.6.1.2 Select the volumetric flask that will allow for the necessary dilution. Intermediate dilutions may be necessary for extremely large dilutions.

7.1.6.1.3 Calculate the approximate volume of reagent water which will be added to the volumetric flask selected and add slightly less than this quantity of reagent water to the flask.

7.1.6.1.4 Inject the proper aliquot from the syringe prepared in paragraph 7.1.5 into the volumetric flask. Aliquots of less than 1 mL increments are prohibited. Dilute the flask to the

mark with reagent water. Cap the flask, invert, and shake three times.

7.1.6.1.5 Fill a 5 mL syringe with the diluted sample as in paragraph 7.1.5.

7.1.6.1.6 If this is an intermediate dilution, use it and repeat above procedure to achieve larger dilutions.

7.1.7 Add 10.0 uL of the surrogate spiking solution (4.6) and 10.0 uL of the internal standard spiking solution (5.3.2) through the valve bore of the syringe, then close the valve. The surrogate and internal standards may be mixed and added as a single spiking solution. The addition of 10 uL of the surrogate spiking solution to 5 mL of sample is equivalent to a concentration of 50 ug/L of each surrogate standard.

7.1.8 Attach the syringe-syringe valve assembly to the syringe valve on the purging device. Open the syringe valves and inject the sample into the purging chamber.

7.1.9 Close both valves and purge the sample for 11.0 ± 0.1 minutes at ambient temperature.

7.1.10 At the conclusion of the purge time, attach the trap to the chromatograph, adjust the device to the desorb mode, and begin the gas chromatographic temperature program. Concurrently, introduce the trapped materials to the gas chromatographic column by rapidly heating the trap to 180°C while backflushing the trap with an inert gas between 20 and 60 cm^3/min for four minutes. If this rapid heating requirement cannot be met, the gas chromatographic column must be used as a secondary trap by cooling it to 30°C (or subambient, if problems persist) instead of the recommended initial temperature of 45°C.

7.1.11 While the trap is being desorbed into the gas chromatograph, empty the purging chamber. Wash the chamber with a minimum of two 5 mL flushes of reagent water to avoid carryover of pollutant compounds.

7.1.12 After desorbing the sample for four minutes, recondition the trap by returning the purge and trap device to the purge mode Wait 15 seconds, then close the syringe valve on the purging device to begin gas flow through the trap. The trap temperature should be maintained at 180°C. Trap temperatures up to 220°C may be employed, however the higher temperature will shorten the useful life of the trap. After approximately seven minutes, turn off the trap heater and open the syringe valve to stop the gas flow through the trap. When cool, the trap is ready for the next sample.

7.1.13 If the initial analysis of a sample or a dilution of a sample has concentration of TCL compounds that exceeds the initial

calibration range, the sample must be reanalyzed at a higher dilution. Note: For total xylenes, where three isomers are quantified as two peaks, the calibration range of each peak should be considered separately, e.g., a diluted analysis is not required for total xylenes unless the concentration of either peak separately exceeds 200 ug/L. Secondary ion quantitation is only allowed when there are sample interferences with the primary ion. If secondary ion quantitation is used, document the reasons in the Case Narrative. When a sample is analyzed that has saturated ions from a compound, this analysis must be followed by a blank reagent water analysis. If the blank analysis is not free of interferences, the system must be decontaminated. Sample analysis may not resume until a blank can be analyzed that is free of interferences.

7.1.14 For water samples, add 10 uL of the matrix spike solution (paragraph 4.7) to the 5 mL of sample purged. Disregarding any dilutions, this is equivalent to a concentration of 50 ug/L of each matrix spike standard.

7.1.15 All dilutions must keep the response of the major constituents (previously saturated peaks) in the upper half of the linear range of the curve.

7.2 Soil/Sediment Samples

Two approaches may be taken to determine whether the low level or medium level method may be followed.

- Assume the sample is low level and analyze a 5 g sample.
- Use the X factor calculated from the optional hexadecane screen (Section III, paragraph 6.2.1.3).

If peaks are saturated from the analysis of a 5 g sample, a smaller sample size must be analyzed to prevent saturation. However, the smallest sample size permitted is 1 g. If smaller than 1 g sample size is needed to prevent saturation, the medium level method must be used.

7.2.1 Low Level Soil Method

The low level soil method is based on purging a heated sediment/ soil sample mixed with reagent water containing the surrogate and internal standards. Analyze all reagent blanks and standards under the same conditions as the samples.

Use 5 grams of sample or use the X Factor to determine the sample size for purging.

- If the X Factor is 0 (no peaks noted on the hexadecane screen), analyze a 5 g sample.
- If the X Factor is between 0 and 1.0, analyze a minimum of a 1 g sample.

7.2.1.1 The GC/MS system should be set up as in 7.1.2-7.1.4. This should be done prior to the preparation of the sample to avoid loss of volatiles from standards and sample. A heated purge calibration curve must be prepared and used for the quantitation of all samples analyzed with the low-level method. Follow the initial and daily calibration instructions (5.3) except for the addition of a 40°C purge temperature.

7.2.1.2 To prepare the reagent water containing the surrogates and internal standards, remove the plunger from a 5 mL "Luerlock" type syringe equipped with a syringe valve and fill until overflowing with reagent water. Replace the plunger and compress the water to vent trapped air. Adjust the volume to 5.0 mL. Add 10 uL each of the surrogate spiking solution (4.6) and the internal standard solution to the syringe through the valve. (Surrogate spiking solution and internal standard solution may be mixed together). The addition of 10 uL of the surrogate spiking solution to 5 g of soil/sediment is equivalent to 50 ug/kg of each surrogate standard.

7.2.1.3 The sample (for volatile organics) consists of the <u>entire</u> contents of the sample container. Do not discard any supernatant liquids. Mix the contents of the sample container with a narrow metal spatula. Weigh the amount determined in 7.2.1 into a tared purge device. Use a top loading balance. Note and record the actual weight to the nearest 0.1 g.

7.2.1.4 Immediately after weighing the sample, weigh 5-10 g of the sediment into a tared crucible. Determine the percent moisture by drying overnight at 105°C. Allow to cool in a desiccator before weighing. Concentrations of individual analytes will be reported relative to the dry weight of sediment.

Percent moisture

$$\frac{\text{g of sample - g of dry sample}}{\text{g of sample}} \times 100 = \%\ \text{moisture}$$

7.2.1.5 Add the spiked reagent water to the purge device and connect the device to the purge and trap system. <u>Note</u>: Prior to the attachment of the purge device, steps 7.2.1.2 and 7.2.1.3 must be performed rapidly to avoid loss of volatile organics. These steps must be performed in a laboratory free of solvent fumes.

7.2.1.6 Heat the sample to 40°C ± 1°C and purge the sample for 11.0 ± 0.1 minutes.

7.2.1.7 Proceed with the analysis as outlined in 7.1.10 7.1.13. Use 5 mL of the same reagent water as the reagent blank.

7.2.1.8 For low level soils/sediment add 10 uL of the matrix spike solution (4.7) to the 5 mL of water (7.2.1.2). The concentration for a 5 g sample would be equivalent to 50 ug/kg of each matrix spike standard.

7.2.2 Medium Level Soil Method

The medium level soil method is based on extracting the soil/sediment sample with methanol. An aliquot of the methanol extract is added to reagent water containing the surrogate and internal standards. This is purged at ambient temperature. All samples with an X Factor >1.0 should be analyzed by the medium level method. If saturated peaks occurred or would occur when a 1 g sample was analyzed, the medium level method must be used.

7.2.2.1 The GC/MS system should be set up as in 7.1.2 - 7.1.4. This should be done prior to the addition of the methanol extract to reagent water. Initial and continuing calibrations (5.3) are performed by adding standards in methanol to reagent water and purging at ambient temperature.

7.2.2.2 The sample (for volatile organics) consists of the entire contents of the sample container. Do not discard any supernatant liquids. Mix the contents of the sample container with a narrow metal spatula. Weigh 4 g (wet weight) into a tared 15 mL vial. Use a top loading balance. Note and record the actual weight to the nearest 0.1 g. Determine the percent moisture as in 7.2.1.4.

7.2.2.3 Quickly add 9.0 mL of methanol, then 1.0 mL of the surrogate spiking solution to the vial. Cap and shake for 2 minutes. NOTE: Steps 7.2.2.1 and 7.2.2.2 must be performed rapidly to avoid loss of volatile organics. These steps must be performed in a laboratory free of solvent fumes.

7.2.2.4 Using a disposable pipette, transfer approximately 1 mL of extract into a GC vial for storage. The remainder may be disposed of. Transfer approximately 1 mL of the reagent methanol to a GC vial for use as the method blank for each case or set of 20 samples, whichever is more frequent. These extracts may be stored in the dark at 4°C (±2°C) prior to analysis.

The addition of a 100 uL aliquot of each of these extracts in paragraph 7.2.2.6 will give a concentration equivalent to 6,200 ug/kg of each surrogate standard.

7.2.2.5 The following table can be used to determine the volume of methanol extract to add to the 5 mL of reagent water for analysis. If the Hexadecane screen procedure was followed, use the X factor (Option B) or the estimated concentration (Option A) to determine the appropriate volume. Otherwise, estimate the concentration range of the sample from the low level analysis to determine the appropriate volume. If the sample was submitted as a medium level sample, start with 100 uL.

All dilutions must keep the response of the major constituents (previously saturated peaks) in the upper half of linear range of the curve.

X Factor	Estimated Concentration Range[1] ug/kg	Take this Volume of Methanol Extract[2] uL
0.25 - 5.0	500 - 10,000	100
0.5 - 10.0	1000 - 20,000	50
2.5 - 50.0	5000 - 100,000	10
12.5 - 250	25,000 - 500,000	100 of 1/50 dilution[3]

Calculate appropriate dilution factor for concentrations exceeding the table.

1 Actual concentration ranges could be 10 to 20 times higher than this if the compounds are halogenated and the estimates are from GC/FID.

2 The volume of methanol added to the 5 mL of water being purged should be kept constant. Therefore, add to the 5 mL syringe whatever volume of methanol is necessary to maintain a volume of 100 uL added to the syringe.

3 Dilute an aliquot of the methanol extract and then take 100 uL for analysis.

7.2.2.6 Remove the plunger from a 5 mL "Luerlock" type syringe equipped with a syringe valve and fill until overflowing with reagent water. Replace the plunger and compress the water to vent trapped air. Adjust the volume to 4.9 mL. Pull the plunger back to 5 mL to allow volume for the addition of sample and standards. Add 10 uL of the internal standard solution. Also add the volume of methanol extract determined in 7.2.2.5 and a volume of methanol solvent to total 100 uL (excluding methanol in standards).

7.2.2.7 Attach the syringe-syringe valve assembly to the syringe valve on the purging device. Open the syringe valve and inject the water/methanol sample into the purging chamber.

7.2.2.8 Proceed with the analysis as outlined in 7.1.9 - 7.1.13. Analyze all reagent blanks on the same instrument as the samples. The standards should also contain 100 uL of methanol to simulate the sample conditions.

7.2.2.9 For a matrix spike in the medium level sediment/soil samples, add 8.0 mL of methanol, 1.0 mL of surrogate spike solution (4.6), and 1.0 mL of matrix spike solution (4.7) in paragraph 7.2.2.2. This results in a 6,200 ug/kg concentration of each matrix spike standard when added to a 4 g sample. Add a 100 uL aliquot of this extract to 5 mL of water for purging (as per paragraph 7.2.2.6).

8. Qualitative Analysis

8.1 The compounds listed in the Target Compound List (TCL), Exhibit C, shall be identified by an analyst competent in the interpretation of mass spectra (see Bidder Responsibility description) by comparison of the sample mass spectrum to the mass spectrum of a standard of the suspected compound. Two criteria must be satisfied to verify the identifications: (1) elution of the sample component at the same GC relative retention time as the standard component, and (2) correspondence of the sample component and standard component mass spectra.

8.1.1 For establishing correspondence of the GC relative retention time (RRT), the sample component RRT must compare within ± 0.06 RRT units of the RRT of the standard component. For reference, the standard must be run on the same shift as the sample. If coelution of interfering components prohibits accurate assignment of the sample component RRT from the total ion chromatogram, the RRT should be assigned by using extracted ion current profiles for ions unique to the component of interest.

8.1.2 For comparison of standard and sample component mass spectra, mass spectra obtained on the Contractor's GC/MS are required. Once obtained, these standard spectra may be used for identification purposes, only if the Contractor's GC/MS meets the daily tuning requirements for BFB. These standard spectra may be obtained from the run used to obtain reference RRTs.

8.1.3 The requirements for qualitative verification by comparison of mass spectra are as follows:

8.1.3.1 All ions present in the standard mass spectra at a relative intensity greater than 10% (most abundant

ion in the spectrum equals 100%) must be present in the sample spectrum.

8.1.3.2 The relative intensities of ions specified in 8.1.3.1 must agree within plus or minus 20% between the standard and sample spectra. (Example: For an ion with an abundance of 50% in the standard spectra, the corresponding sample abundance must be between 30 and 70 percent).

8.1.3.3 Ions greater than 10% in the sample spectrum but not present in the standard spectrum must be considered and accounted for by the analyst making the comparison. In Task III, the verification process should favor false negatives. All compounds meeting the identification criteria must be reported with their spectra. For all compounds below the CRQL report the actual value followed by a "J", e.g., "3J."

8.1.4 If a compound cannot be verified by all of the criteria in 8.1.3.3, but in the technical judgement of the mass spectral interpretation specialist, the identification is correct, then the Contractor shall report that identification and proceed with quantification in 9.

8.2 A library search shall be executed for non-TCL sample components for the purpose of tentative identification. For this purpose, the 1985 release of the National Bureau of Standards Mass Spectral Library (or more recent release), containing 42,261 spectra, shall be used. Computer generated library search routines must not use normalization routines that would misrepresent the library or unknown spectra when compared to each other.

8.2.1 Up to 10 nonsurrogate organic compounds of greatest apparent concentration not listed in Exhibit C for the purgeable organic fraction shall be tentatively identified via a forward search of the NBS mass spectral library. (Substances with responses less than 10% of the internal standard are not required to be searched in this fashion). Only after visual comparison of sample spectra with the nearest library searches will the mass spectral interpretation specialist assign a tentative identification. Computer generated library search routines must not use normalization routines that would misrepresent the library or unknown spectra when compared to each other.

8.2.2 Guidelines for making tentative identification:

8.2.2.1 Relative intensities of major ions in the reference spectrum (ions greater than 10% of the most abundant ion) should be present in the sample spectrum.

8.2.2.2 The relative intensities of the major ions should agree within ± 20%. (Example: For an ion with an

abundance of 50 percent of the standard spectra, the corresponding sample ion abundance must be between 30 and 70 percent.)

8.2.2.3 Molecular ions present in reference spectrum should be present in sample spectrum.

8.2.2.4 Ions present in the sample spectrum but not in the reference spectrum should be reviewed for possible background contamination or presence of co-eluting compounds.

8.2.2.5 Ions present in the reference spectrum but not in the sample spectrum should be reviewed for possible subtraction from the sample spectrum because of background contamination or co-eluting compounds. Data system library reduction programs can sometimes create these discrepancies.

8.2.3 If in the technical judgement of the mass spectral interpretation specialist, no valid tentative identification can be made, the compound should be reported as unknown. The mass spectral specialist should give additional classification of the unknown compound, if possible (i.e. unknown aromatic, unknown hydrocarbon, unknown acid type, unknown chlorinated compound). If probable molecular weights can be distinguished, include them.

9. Quantitative Analysis

9.1 TCL components identified shall be quantified by the internal standard method. The internal standard used shall be that which is listed in Exhibit E, Table 2.1. The EICP area of the characteristic ions of analytes listed in Tables 2 and 3 in this Section are used.

9.2 Internal standard responses and retention times in all standards must be evaluated during or immediately after data acquisition. If the retention time for any internal standard changes by more than 30 seconds from the latest daily (12 hour) calibration standard, the chromatographic system must be inspected for malfunctions, and corrections made as required. The extracted ion current profile (EICP) of the internal standards must be monitored and evaluated for each sample, blank, matrix spike and matrix spike duplicate. If the EICP area for any internal standard changes by more than a factor of two (-50% to +100%), the mass spectrometric system must be inspected for malfunction and corrections made as appropriate. When corrections are made, reanalysis of samples analyzed while the system was malfunctioning is necessary.

9.2.1 If after re-analysis, the EICP areas for all internal standards are inside the contract limits (-50% to +100%), then the problem with the first analysis is considered to have been within the control of the laboratory. Therefore, only submit data from the analysis with EICPs within the contract limits.

This is considered the initial analysis and must be reported as such on all data deliverables.

9.2.2 If the re-analysis of the sample does not solve the problem, i.e., the EICP areas are outside the contract limits for both analyses, then submit the EICP data and sample data from both analyses. Distinguish between the initial analysis and the re-analysis on all data deliverables, using the sample suffixes specified in Exhibit B. Document in the Case Narrative all inspection and corrective actions taken.

9.3 The relative response factor (RRF) from the daily standard analysis is used to calculate the concentration in the sample. Use the relative response factor as determined in paragraph 5.3.3 and the equations below. When TCL compounds are below contract required quantitation limits (CRQL) but the spectra meet the identification criteria, report the concentration with a "J." For example, if CRQL is 10 ug/L and concentration of 3 ug/L is calculated, report as "3J."

Water

Concentration ug/L = $$\frac{(A_x)(I_s)}{(A_{is})(RRF)(V_o)}$$

Where:

A_x = Area of the characteristic ion for the compound to be measured

A_{is} = Area of the characteristic ion for the specific internal standard from Exhibit E.

I_s = Amount of internal standard added in nanograms (ng)

V_o = Volume of water purged in milliliters (mL) (take into account any dilutions)

Sediment/Soil (medium level)

Concentration ug/kg = $$\frac{(A_x)(I_s)(V_t)}{(A_{is})(RRF)(V_i)(W_s)(D)}$$

Sediment/Soil (low level)

Concentration (Dry weight basis) ug/kg = $$\frac{(A_x)(I_s)}{(A_{is})(RRF)(W_s)(D)}$$

Where:

A_x, I_s, A_{is} = same as for water, above

V_t = Volume of total extract (uL) (use 10,000 uL or a factor of this when dilutions are made)

V_i = Volume of extract added (uL) for purging

$D = \frac{100 - \% \text{ moisture}}{100}$

W_s = Weight of sample extracted (g) or purged

9.4 An estimated concentration for non-TCL components tentatively identified shall be quantified by the internal standard method. For quantification, the nearest internal standard free of interferences shall be used.

9.4.1 The formula for calculating concentrations is the same as in paragraph 9.3. Total area counts (or peak heights) from the total ion chromatograms are to be used for both the compound to be measured and the internal standard. A relative response factor (RRF) of one (1) is to be assumed. The value from this quantitation shall be qualified as estimated. This estimated concentration should be calculated for all tentatively identified compounds as well as those identified as unknowns.

9.5 Xylenes (o-,m-, & p- isomers) are to be reported as Xylenes (total). Since o- and p-Xylene overlap, the Xylenes must be quantitated as m-Xylene. The concentration of all Xylene isomers must be added together to give the total.

9.6 1,2-Dichloroethene (trans and cis stereoisomers) are to be reported as 1,2-Dichloroethene (total). The concentrations of both isomers must be added together to give the total.

9.7 Calculate surrogate standard recovery on all samples, blanks and spikes. Determine if recovery is within limits and report on appropriate form.

9.7.1 Calculation for surrogate recovery.

$$\text{Percent Surrogate Recovery} = \frac{Q_d}{Q_a} \times 100\%$$

Where:

Q_d = quantity determined by analysis

Q_a = quantity added to sample

9.7.2 If recovery is not within limits, the following is required:

- Check to be sure there are no errors in calculations, surrogate solutions and internal standards. Also, check instrument performance.
- Reanalyze the sample if none of the above reveal a problem.

9.7.3 If the reanalysis of the sample solves the problem, then the problem was within the laboratory's control. Therefore, only

submit data from the analysis with surrogate spike recoveries within the contract limits. This shall be considered the initial analysis and shall be reported as such on all data deliverables.

9.7.4 If the reanalysis of the sample does not solve the problem, i.e., surrogate recoveries are outside the contract limits for both analyses, then submit the surrogate spike recovery data and the sample data from both analyses. Distinguish between the initial analysis and the reanalysis on all data deliverables, using the sample suffixes specified in Exhibit B.

9.7.5 If the sample with surrogate recoveries outside the limits is the sample used for the matrix spike and matrix spike duplicate, and the surrogate recoveries of the matrix spike and matrix spike duplicate show the same pattern (i.e., outside the limits), then the sample, matrix spike, and matrix spike duplicate do not require reanalysis. Document in the narrative the similarity in surrogate recoveries.

Table 2

Characteristic Ions for Surrogate and Internal Standards for Volatile Organic Compounds

Compound	Primary Ion	Secondary Ion(s)
SURROGATE STANDARDS		
4-Bromofluorobenzene	95	174, 176
1,2-Dichloroethane d-4	65	102
Toluene d-8	98	70, 100
INTERNAL STANDARDS		
Bromochloromethane	128	49, 130, 51
1,4-Difluorobenzene	114	63, 88
Chlorobenzene d-5	117	82, 119

Table 3
Characteristic Ions for Volatile TCL Compounds

Parameter	Primary Ion*	Secondary Ion(s)
Chloromethane	50	52
Bromomethane	94	96
Vinyl chloride	62	64
Chloroethane	64	66
Methylene chloride	84	49, 51, 86
Acetone	43	58
Carbon disulfide	76	78
1,1-Dichloroethene	96	61, 98
1,1-Dichloroethane	63	65, 83, 85, 98, 100
1,2-Dichloroethene	96	61, 98
Chloroform	83	85
1,2-Dichloroethane	62	64, 100, 98
2-Butanone	72	57
1,1,1-Trichloroethane	97	99, 117, 119
Carbon tetrachloride	117	119, 121
Vinyl acetate	43	86
Bromodichloromethane	83	85
1,1,2,2-Tetrachloroethane	83	85, 131, 133, 166
1,2-Dichloropropane	63	65, 114
trans-1,3-Dichloropropene	75	77
Trichloroethene	130	95, 97, 132
Dibromochloromethane	129	208, 206
1,1,2-Trichloroethane	97	83, 85, 99, 132, 134
Benzene	78	-
cis-1,3-Dichloropropene	75	77
Bromoform	173	171, 175, 250, 252, 254, 256
2-Hexanone	43	58, 57, 100
4-Methyl-2-pentanone	43	58, 100
Tetrachloroethene	164	129, 131, 166
Toluene	92	91
Chlorobenzene	112	114
Ethyl benzene	106	91
Styrene	104	78, 103
Total xylenes	106	91

* The primary ion should be used unless interferences are present, in which case, a secondary ion may be used.

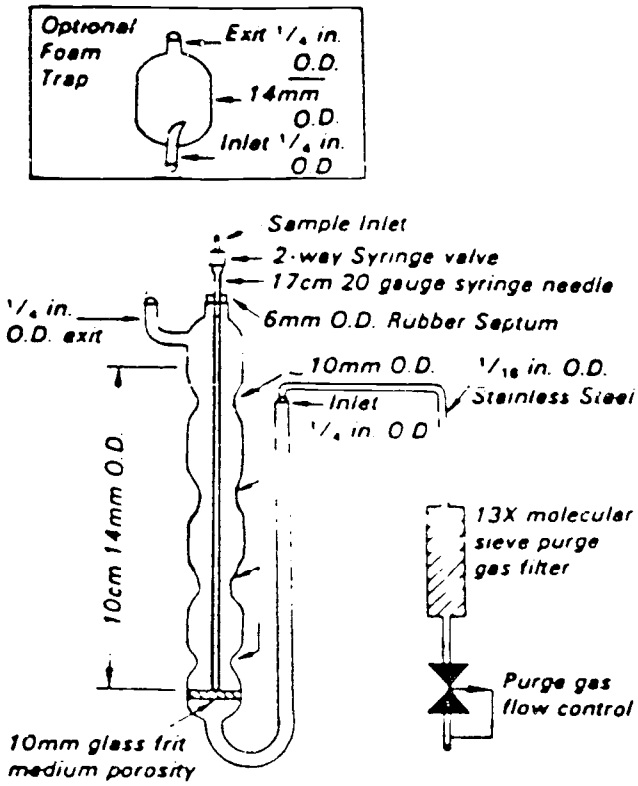

Figure 1. *Purging device*

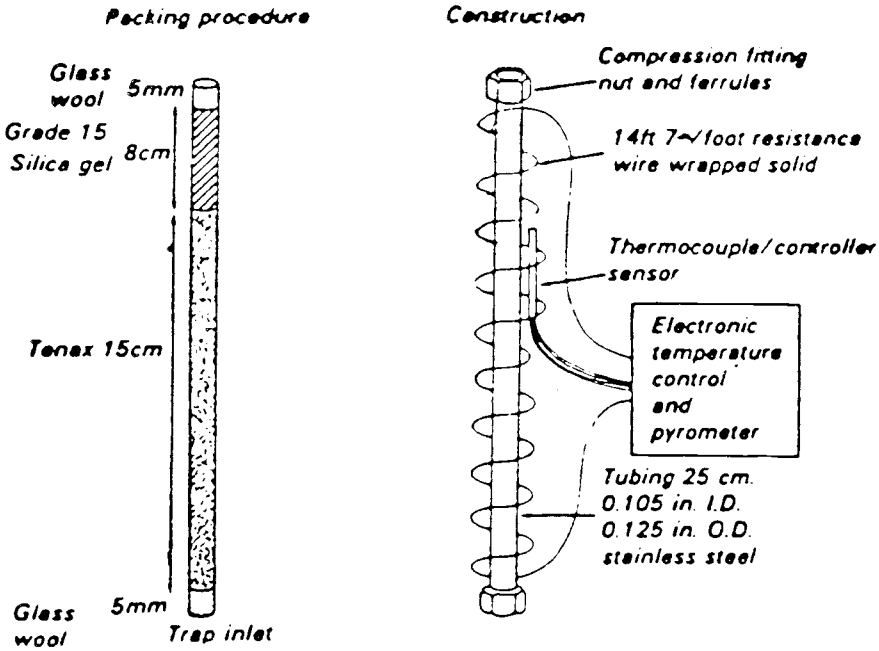

Figure 2. *Trap packings and construction to include desorb capability*

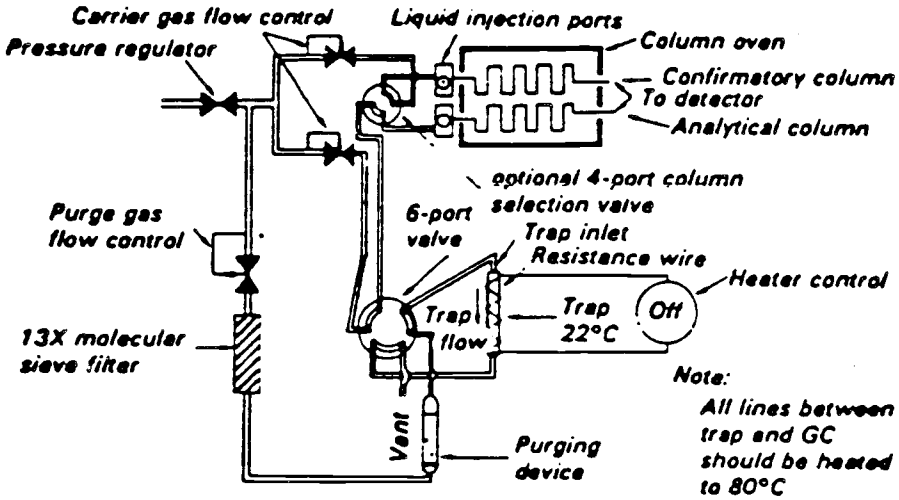

Figure 3. *Schematic of purge and trap device — purge mode*

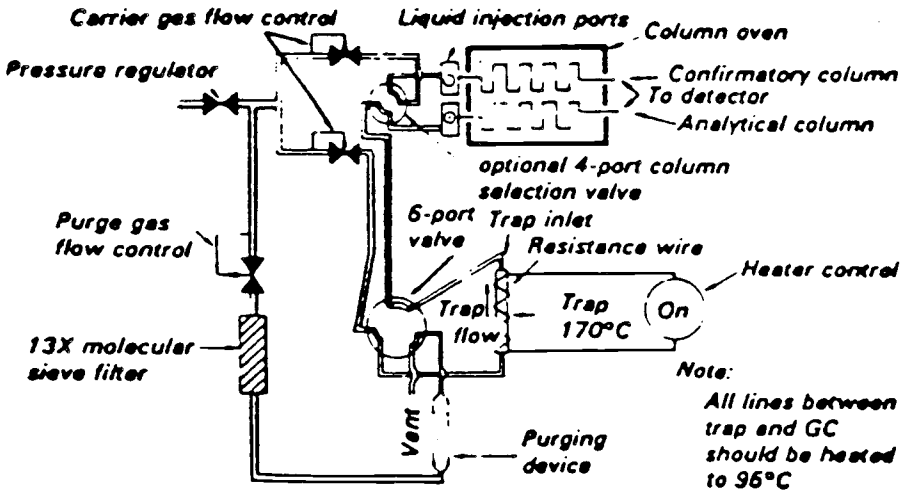

Figure 4. *Schematic of purge and trap device — desorb mode*

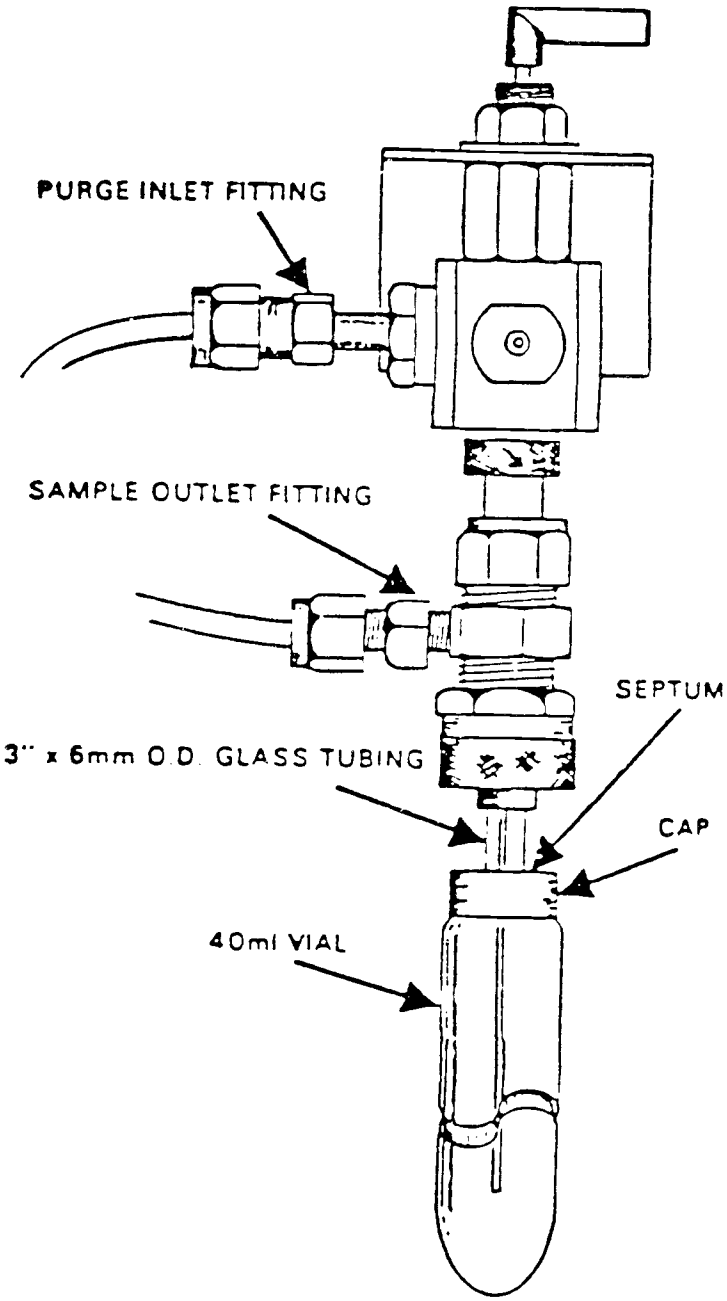

Figure 5. Low Soils Impinger

EXHIBIT D

ANALYTICAL METHODS
FOR SEMIVOLATILES

Table of Contents

		Page
SECTION I -	INTRODUCTION	D-3/SV
SECTION II -	SAMPLE PREPARATION AND STORAGE	D-5/SV
	PART A - SAMPLE STORAGE AND HOLDING TIMES	D-6/SV
	PART B - SAMPLE PREPARATION FOR EXTRACTABLE SEMIVOLATILES (BNA) IN WATER	D-7/SV
	PART C - PROTOCOLS FOR SOIL/SEDIMENT	D-12/SV
	1. Medium Level Preparation for Screening and Analysis of Semivolatiles (BNA)	D-12/SV
	2. Low Level Preparation for Screening and Analysis of Semivolatiles (BNA)	D-16/SV
SECTION III -	SCREENING OF SEMIVOLATILE ORGANIC EXTRACTS	D-27/SV
SECTION IV -	GC/MS ANALYSIS OF SEMIVOLATILES	D-31/SV

SECTION I

INTRODUCTION

The analytical methods that follow are designed to analyze water, soil and sediment from hazardous waste sites for the organic compounds on the Target Compound List (TCL) (See Exhibit C). The methods are based on EPA Method 625 (Base/Neutrals and Acids).

The methods are divided into the following sections: sample preparation, screening and analysis. Sample preparation covers sample extraction and cleanup techniques. As described in the screening section, a portion of the extracts may be screened on a gas chromatograph with appropriate detectors to determine the concentration level of organics. The analysis section contains the GC/MS analytical methods for organics.

1. Method for the Determination of Extractable Semivolatiles (Base/Neutral and Acid) Organic Compounds.

1.1 Scope and Application

This method covers the determination of a number of organic compounds that are partitioned into an organic solvent and are amenable to gas chromatography. These TCL compounds and the contract required quantitation limits are listed in Exhibit C.

Problems have been associated with the following compounds covered by this method. Dichlorobenzidine and 4-chloroaniline can be subject to oxidative losses during solvent concentration. This is especially true in the soil/sediment method when concentrating the methylene chloride/acetone extraction solvent. Hexachlorocyclopentadiene is subject to thermal decomposition in the inlet of the gas chromatograph, chemical reaction in acetone solution and photochemical decomposition. N-nitrosodiphenylamine decomposes in the gas chromatographic inlet forming diphenylamine and, consequently, cannot be separated from diphenylamine native to the sample.

1.2 The method involves solvent extraction of the matrix sample characterization to determine the appropriate analytical protocol to be used, and GC/MS analysis to determine semivolatile (BNA) organic compounds present in the sample.

SECTION II

SAMPLE PREPARATION AND STORAGE

PART A - SAMPLE STORAGE AND HOLDING TIMES

1. Procedures for Sample Storage

1.1 The samples must be protected from light and refrigerated at 4°C (±2°C) from the time of receipt until extraction and analysis.

1.2 After analysis, extracts and unused sample volume must be protected from light and refrigerated at 4°C (±2°C) for the periods specified in the contract schedule.

2. Contract Required Holding Times

2.1 If separatory funnel or sonication procedures are employed for extractions for semivolatile analyses, extraction of water samples shall be completed within 5 days of VTSR (Validated Time of Sample Receipt), and extraction of soil/sediment samples shall be completed within 10 days of VTSR. If continuous liquid-liquid extraction procedures are employed, extraction of water samples shall be started within 5 days of VTSR.

Extracts of either water or soil/sediment samples must be analyzed within 40 days following extraction.

PART B - SAMPLE PREPARATION FOR EXTRACTABLE SEMIVOLATILES (BNA) IN WATER

1. Summary of Method

A measured volume of sample, approximately one liter, is serially extracted with methylene chloride at a pH greater than 11 and again at pH less than 2, using a separatory funnel or a continuous extractor. The methylene chloride extracts are dried and concentrated separately to a volume of 1 mL.

2. Interferences

2.1 Method interferences may be caused by contaminants in solvents, reagents, glassware and other sample processing hardware, that lead to discrete artifacts and/or elevated baselines in the total ion current profiles (TICPs). All of these materials must be routinely demonstrated to be free from interferences under the conditions of the analysis by running laboratory reagent blanks. Matrix interferences may be caused by contaminants that are coextracted from the sample. The extent of matrix interferences will vary considerably from source to source.

3. Apparatus and Materials

3.1 Glassware (Brand names and catalog numbers are included for illustration purposes only).

3.1.1 Separatory funnel - 2,000 mL, with teflon stopcock.

3.1.2 Drying column - 19 mm ID chromatographic column with coarse frit. (Substitution of a small pad of Pyrex glass wool for the frit will prevent cross contamination of sample extracts.)

3.1.3 Concentrator tube - Kuderna-Danish, 10 mL, graduated (Kontes K-570050-1025 or equivalent). Calibration must be checked at the volumes employed in the test. Ground glass stopper is used to prevent evaporation of extracts.

3.1.4 Evaporative flask - Kuderna-Danish, 500 mL (Kontes K-570001-0500 or equivalent). Attach to concentrator tube with springs.

3.1.5 Snyder column - Kuderna-Danish, Three-ball macro (Kontes K-503000-0121 or equivalent).

3.1.6 Snyder column - Kuderna-Danish, Two-ball micro (Kontes K569001-0219 or equivalent).

3.1.7 Vials - Amber glass, 2 mL capacity with Teflon-lined screw cap.

3.1.8 Continuous liquid-liquid extractors - Equipped with Teflon or glass connnecting joints and stopcocks requiring no lubrication (Hershberg-Wolf Extractor-Ace Glass Company, Vineland, NJ P/N 6841-10 or equivalent.)

3.2 Silicon carbide boiling chips - approximately 10/40 mesh. Heat to 400°C for 30 minutes or Soxhlet extract with methylene chloride.

3.3 Water bath - Heated, with concentric ring cover, capable of temperature control (± 2°C). The bath should be used in a hood.

3.4 Balance - Analytical, capable of accurately weighing ± 0.0001 g.

3.5 Nitrogen evaporation device equipped with a water bath that can be maintained at 35-40°C. The N-Evap by Organomation Associates, Inc., South Berlin, MA (or equivalent) is suitable.

4. Reagents

4.1 Reagent water - Reagent water is defined as a water in which an interferent is not observed at or above the CRQL of each parameter of interest.

4.2 Sodium hydroxide solution (10N) - Dissolve 40 g NaOH in reagent water and dilute to 100 mL.

4.3 Sodium thiosulfate - (ACS) Granular.

4.4 Sulfuric acid solution (1+1) - Slowly add 50 mL of H_2SO_4 (sp gr.1.84) to 50 mL of reagent water.

4.5 Acetone, methanol, methylene chloride - Pesticide quality or equivalent.

4.6 Sodium sulfate - (ACS) Powdered, anhydrous. Purify by heating at 400°C for four hours in a shallow tray, cool in a desiccator and store in a glass bottle. Baker anhydrous powder, catalog #73898 or equivalent.

4.7 Surrogate standard spiking solution.

4.7.1 Surrogate standards are added to all samples and calibration solutions; the compounds specified for this purpose are phenol-d_6; 2,4,6 tribromophenol; 2-fluorophenol; nitrobenzene-d_5; terphenyl-d_{14} and 2-fluorobiphenyl. Two additional surrogates, one base/neutral and one acid, may be added.

4.7.2 Prepare a surrogate standard spiking solution that contains the base/neutral compounds at a concentration of 100 ug/mL, and the acid compounds at 200 ug/mL. Store the spiking solutions at 4°C (±2°C) in Teflon-sealed containers. The solutions should checked frequently for stability. These solutions must be replaced after twelve months, or sooner if comparison with quality control check samples indicates a problem.

4.8 BNA Matrix standard spiking solution. The matrix spike solution consists of:

Base/Neutrals	Acids
1,2,4-trichlorobenzene	pentachlorophenol
acenaphthene	phenol
2,4-dinitrotoluene	2-chlorophenol
pyrene	4-chloro-3-methylphenol
N-nitroso-di-n-propylamine	4-nitrophenol
1,4-dichlorobenzene	

Prepare a spiking solution that contains each of the base/neutral compounds above at 100 ug/1.0 mL in methanol and the acid compounds at 200 ug/1.0 ml in methanol. Analyze duplicate aliquots of a sample spiked with BNA matrix spiking solution.

5. Sample Extraction - Separatory Funnel

5.1 Samples may be extracted using separatory funnel techniques. If emulsions prevent acceptable solvent recovery with separatory funnel extraction, continuous extraction (paragraph 6.) may be used. The separatory funnel extraction scheme described below assumes a sample volume of 1-liter.

5.2 Using a 1-liter graduated cylinder, measure out a 1-liter sample aliquot and place it into a 2-liter separatory funnel. Pipet 1.0 mL surrogate standard spiking solution into the separatory funnel and mix well. Check the pH of the sample with wide range pH paper and adjust to pH >11 with 10N sodium hydroxide. Add 1.0 mL of BNA matrix spiking solution to each of two 1-liter portions from the sample selected for spiking.

5.3 Add 60 mL methylene chloride to the separatory funnel and extract the sample by shaking the funnel for two minutes, with periodic venting to release excess pressure. Allow the organic layer to separate from the water phase for a minimum of 10 minutes. If the emulsion interface between layers is more than one-third the volume of the solvent layer, the analyst must employ mechanical techniques to complete the phase separation. The optimum technique depends upon the sample, and may include: stirring, filtration of the emulsion through glass wool, centrifugation or other physical methods.

Collect the methylene chloride extract in a 250-mL Erlenmeyer flask. If the emulsion cannot be broken (recovery of less than 80% of the methylene chloride, corrected for the water solubility of methylene chloride), transfer the sample, solvent and emulsion into the extraction chamber of a continuous extractor. Proceed as described in paragraph 6.3.

5.4 Add a second 60-mL volume of methylene chloride to the sample bottle and repeat the extraction procedure a second time, combining the extracts in the Erlenmeyer flask. Perform a third extraction in the same manner. Label the combined extract as the base/neutral fraction.

5.5 Adjust the pH of the aqueous phase to less than 2 using sulfuric acid (1 + 1). Serially extract three times with 60-mL aliquots of methylene

chloride, as per paragraph 5.3. Collect and combine the extracts in a 250-mL Erlenmeyer flask and label the combined extract as the acid fraction.

5.6 Assemble a Kuderna-Danish (K-D) concentrator by attaching a 10-mL concentrator tube to a 500-mL evaporative flask. Other concentration devices or techniques may be used in place of the K-D, if equivalency is demonstrated for all extractable organics listed in Exhibit C.

5.7 Transfer the individual base/neutral and acid fractions by pouring extracts through separate drying columns containing about 10 cm of anhydrous granular sodium sulfate, and collect the extracts in the separate K-D concentrators. Rinse the Erlenmeyer flasks and columns with 20 to 30 mL of methylene chloride to complete the quantitative transfer.

5.8 Add one or two clean boiling chips and attach a three-ball Snyder column to the evaporative flask. Pre-wet the Snyder column by adding about 1 mL methylene chloride to the top of the column. Place the K-D apparatus on a hot water bath (80° to 90°C) so that the concentrator tube is partially immersed in the hot water, and the entire lower rounded surface of the flask is bathed with hot vapor. Adjust the vertical position of the apparatus and the water temperature as required to complete the concentration in 10 to 15 minutes. At the proper rate of distillation, the balls of the column will actively chatter but the chambers will not flood with condensed solvent. When the apparent volume of liquid reaches 1 mL, remove the K-D apparatus from the water bath and allow it to drain and cool for at least 10 minutes. Remove the Snyder column and rinse the flask and its lower joint into the concentrator tube with 1-2 mL of methylene chloride. A 5-mL syringe is recommended for this operation.

5.9 Micro Snyder column technique - Add another one or two clean boiling chips to the concentrator tube and attach a two-ball micro Snyder column. Pre-wet the Snyder column by adding about 0.5 mL of methylene chloride to the top of the column. Place the K-D apparatus on a a hot water bath (80° to 90°C) so that the concentrator tube is partially immersed in the hot water. Adjust the vertical position of the apparatus and the water temperature as required to complete the concentration in 5 to 10 minutes. At the proper rate of distillation the balls of the column will actively chatter but the chambers will not flood with condensed solvent. When the apparent volume of liquid reaches about 0.5 mL, remove the K-D apparatus from the water bath and allow it to drain for at least 10 minutes while cooling. Remove the Snyder column and rinse its flask and its lower joint into the concentrator tube with 0.2 mL of methylene chloride. Adjust the final volume to 1.0 mL with methylene chloride. If GC/MS analysis will not be performed immediately, stopper the concentrator tube and store refrigerated. If the extracts will be stored longer than two days, they should be transferred to individual Teflon-sealed screw cap bottles and labeled base/neutral or acid fraction, as appropriate.

5.10 Nitrogen blowdown technique (taken from ASTM Method D3086)

The following method may be used for final concentration, instead of the procedure outlined in paragraph 5.9. Place the concentrator tube in a warm water bath (35°C) and evaporate the solvent volume to just below 1 mL using a gentle stream of clean, dry nitrogen filtered through a column of activated carbon). Caution: New plastic tubing must not be used between the carbon trap and the sample, as it may introduce interferences. The internal wall of the tube must be rinsed down several times with methylene chloride during the operation and the final volume brought to 1 mL with methylene chloride. During evaporation, the tube solvent level must be kept below the water level of the bath. The extract must never be allowed to become dry.

6. Sample Extraction - Continuous Liquid-Liquid Extractor

6.1 Check the pH of the sample with wide-range pH paper and adjust to pH 11 with 10 N sodium hydroxide. Transfer a 1-liter sample aliquot to the continuous extractor; using a pipet, add 1 mL of surrogate standard spiking solution and mix well.

6.2 Add 500 mL of methylene chloride to the distilling flask. Add sufficient reagent water to ensure proper operation and extract for 18 hours. Allow to cool, then detach the boiling flask and dry. Concentrate the extract as in paragraphs 5.6 through 5.8. Hold the concentrated extract for combining with the acid extract (see paragraph 6.4).

6.3 Add 500 mL of methylene chloride to a clean distilling flask and attach it to the continuous extractor. Carefully adjust the pH of the aqueous phase to less than 2 using sulfuric acid (1 + 1). Extract for 18 hours. Dry and concentrate the extract as described in paragraphs 5.6 through 5.8. Hold the concentrated extract and label as the acid extract.

6.3.1 If the base/neutral and/or acid extracts cannot be concentrated to a final volume of 1 mL, dilute the more concentrated extract to the final volume of the least concentrated extract.

7. The samples extracts are ready for GC/MS analysis. Proceed to Section IV, GC/MS Analysis of Semivolatiles. If high concentrations are suspected (e.g., highly colored extracts), the optional GC/FID screen in Section III is recommended.

PART C - PROTOCOLS FOR SOIL/SEDIMENT

It is mandatory that all soil/sediment samples be characterized as to concentration level so that the appropriate analytical protocol is chosen to ensure proper quantitation limits for the sample. Note that the terms "low level" and "medium level" are not used here as a judgement of degree of contamination but rather as a description of the concentration ranges that are encompassed by the "low" and "medium" level procedures.

The laboratory is at liberty to determine the method of characterization. The following two screening methods may be used for soil/sediment sample characterization:

- Screen an aliquot from the "low level" 30 g extract or an aliquot from the "medium level" 1 g extract.
- Screen using either GC/FID or GC/MS as the screening instrument.

The concentration ranges covered by these two procedures may be considered to be approximately 330 ug/kg - 20,000 ug/kg for the low level analysis and >20,000 ug/kg for medium level analysis for BNA extractables. For soils only, the extract for pesticide/PCB analysis may be prepared from an aliquot of the extract for semivolatiles, or in a separate extraction procedure. If it is prepared from the semivolatile extract, refer to Exhibit D PEST for the procedures for extraction of pesticides/PCBs.

Screen from the Medium Level Method

Take 5.0 mL from the 10.0 mL total extract and concentrate to 1.0 mL and screen. If the sample concentration is >20,000 ug/kg proceed with GC/MS analysis of the organics. If the sample concentration is <20,000 ug/kg discard the medium level extract and follow the low level method.

Screen from Low Level Method

Take 5.0 mL from the 300 mL (approximate) total extract from the 30 g sample and concentrate to 1.0 mL and screen. If the concentration is >20,000 ug/kg in the original sample, discard the 30 g extract and follow the medium level methods for organics, using medium level surrogates. If the sample concentration is <20,000 ug/kg, proceed with concentration and the remainder of the low level method.

1. Medium Level Preparation for Screening and Analysis of Semivolatiles (BNA)

1.1 Scope and Application

This procedure is designed for the preparation of sediment/soil samples which may contain organic chemicals at a level greater than 20,000 ug/kg.

1.1.1. The extracts and sample aliquots prepared using this method are screened by GC/MS or FID, using capillary columns for base/neutral and acid priority pollutants, and related organic chemicals. The results of these screens will determine whether

sufficient quantities of pollutants are present to warrant analysis by low or medium protocol.

1.1.2 If the screenings indicate no detectable pollutants at the lower limits of quantitation, the sample should be prepared by the low level protocol in Section II, Part C, paragraph 2.

1.2 Summary of Method

1.2.1. Approximately 1 g portions of sediment/soil are transferred to vials and extracted with methylene chloride. The methylene chloride extract is screened for extractable organics by GC/FID or GC/MS.

1.2.2 If organic compounds are detected by the screen, the methylene chloride extract is analyzed by GC/MS for extractable organics.

1.2.3 If no organic compounds are detected by the medium level screen, then a low level sample preparation is required.

1.3 Interferences

1.3.1. Method interferences may be caused by contaminants in solvents, reagents, glassware, and other sample processing hardware that lead to discrete artifacts and/or elevated baselines in the total ion current profiles. All of these materials must be routinely demonstrated to be free from interferences under the conditions of the analysis by running laboratory reagent blanks. Matrix interferences may be caused by contaminants that are coextracted from the sample. The extent of matrix interferences will vary considerably from source to source.

1.4 Limitations

1.4.1. The procedure is designed to allow quantitation limits for screening purposes as low as 20,000 ug/kg for extractable organics. For analysis purposes, the quantitation limits are 20,000 ug/kg for extractable organics. If peaks are present based on the GC/FID screen, the sample is determined to require a medium level analysis by GC/MS. Some samples may contain high concentrations of chemicals that interfere with the analysis of other components at lower levels; the quantitation limits in those cases may be significantly higher.

1.4.2 These extraction and preparation procedures were developed for rapid and safe handling of high concentration hazardous waste samples. The design of the methods thus does not stress efficient recoveries or low limits of quantitation of all components. Rather, the procedures were designed to screen at moderate recovery and sufficient sensitivity, a broad spectrum of organic chemicals. The results of the analyses thus may reflect only a minimum of the amount actually present in some samples.

1.5 Reagents

1.5.1. Sodium Sulfate - anhydrous powdered reagent grade, heated at 400°C for four hours, cooled in a desiccator, and stored in a glass bottle Baker anhydrous powder, catalog # 73898 or equivalent.

1.5.2 Methylene chloride. Pesticide residue analysis grade or equivalent.

1.5.3 Methanol. Pesticide residue analysis grade or equivalent.

1.5.4 Acetone. Pesticide residue analysis grade or equivalent.

1.5.5 Base/Neutral and Acid Surrogate Standard Spiking Solution

The compounds specified are phenol-d_6, 2,4,6-tribromophenol, 2-fluorophenol, nitrobenzene-d_5, terphenyl-d_{14} and 2-fluorobiphenyl. Prepare a solution containing these compounds for base/neutral surrogates at a concentration of 100 ug/1.0 mL, and for acid surrogate standards at a concentration of 200 ug/1.0 mL in methanol. Store the spiking solutions at 4°C (±2°C) in Teflon-sealed containers. The solutions should be checked frequently for stability. These solutions must be replaced after twelve months, or sooner, if comparison with quality control check samples indicates a problem.

1.5.6 Base/Neutral and Acid Matrix Standard Spiking solution.

Prepare a spiking solution in methanol that contains the following compounds at a concentration of 100 ug/1.0 mL for base/neutrals and 200 ug/1.0 mL for acids. Store the spiking solutions at 4°C (±2°C) in Teflon-sealed containers. The solutions should be checked frequently for stability. These solutions must be replaced after twelve months, or sooner, if comparison with quality control check samples indicates a problem.

Base Neutrals	Acids
1,2,4-trichlorobenzene	pentachlorophenol
acenaphthene	phenol
2,4-dinitrotoluene	2-chlorophenol
pyrene	4-chloro-3-methylphenol
N-nitroso-di-n-propylamine	4-nitrophenol
1,4-dichlorobenzene	

1.6 Equipment

1.6.1. Glass scintillation vials, at least 20 mL, with screw cap and teflon or aluminum foil liner.

1.6.2 Spatula. Stainless steel or Teflon.

1.6.3 Balance capable of weighing 100 g to ± 0.01 g.

1.6.4 Vials and caps, 2 mL for GC auto sampler.

1.6.5 Disposable pipets, Pasteur; glass wool rinsed with methylene chloride.

1.6.6 15-mL concentrator tubes.

1.6.7 Ultrasonic cell disruptor, Heat Systems Ultrasonics, Inc., Model W-385 SONICATOR (475 Watt with pulsing capability, No. 200 1/2 inch tapped disruptor horn plus No. 207 3/4 inch tapped disruptor horn, and No. 419 1/8 inch standard tapered MICROTIP probe), or equivalent device with a minimum of 375 Watt output capability. NOTE: In order to ensure that sufficient energy is transferred to the sample during extraction, the MICROTIP probe <u>must</u> be replaced if the tip begins to erode. Erosion of the tip is evidenced by a rough surface.

1.6.8 Sonabox acoustic enclosure - recommended with above disruptors for decreasing cavitation sound.

1.6.9 Test tube rack.

1.6.10 Oven, drying.

1.6.11 Desiccator.

1.6.12 Crucibles, porcelain.

1.7 Medium Level Sample Preparation.

1.7.1. Transfer the sample container into a fume hood. Open the sample vial. Decant and discard any water layer and then mix the sample. Transfer approximately 1 g (record weight to the nearest 0.1 g) of sample to a 20-mL vial. Wipe the mouth of the vial with a tissue to remove any sample material. Record the exact weight of sample taken. Cap the vial before proceeding with the next sample to avoid any cross-contamination.

1.7.1.1 Transfer 50 g of soil/sediment to 100 mL beaker. Add 50 mL of water and stir for 1 hour. Determine pH of sample with glass electrode and pH meter while stirring. Report pH value on appropriate data sheets. If the pH of the soil is greater than 11 or less than 5, contact the Deputy Project Officer cited in the contract for instructions on how to handle the sample. Document the instructions in the Case Narrative. Discard this portion of sample.

1.7.2 Immediately after weighing the sample for extraction, weigh 5-10 g of the sediment into a tared crucible. Determine the percent moisture by drying overnight at 105°C. Allow to cool

in a desiccator before weighing. Concentrations of individual analytes will be reported relative to the dry weight of sediment.

$$\frac{\text{g of sample - g of dry sample}}{\text{g of sample}} \times 100 = \text{\% moisture}$$

1.7.3 Add 2.0 g of anhydrous powdered sodium sulfate to sample in the 20 mL vial from paragraph 1.7.1 and mix well.

1.7.4 Surrogate Standards are added to all samples, spikes, and blanks. Add 1.0 mL of surrogate spiking solution to sample mixture.

1.7.5 Add 1.0 mL of matrix standard spiking solution to each of two 1 g portions from the sample chosen for spiking.

1.7.6 Immediately add 9.0 mL of methylene chloride to the sample and disrupt the sample with the 1/8 inch tapered MICROTIP ultrasonic probe for 2 minutes at output control setting 5, in continuous mode. (If using a sonicator other than Models W-375 or W-385, contact the Project Officer for appropriate output settings). Before extraction, make certain that the sodium sulfate is free flowing and not a consolidated mass. As required, break up large lumps with a clean spatula, or very carefully with the tip of the unenergized probe.

1.7.6.1. Add only 8.0 mL of methylene chloride to the matrix spike samples to achieve a final volume of 10 mL.

1.7.7 Loosely pack disposable Pasteur pipets with 2-3 cm glass wool plugs. Filter the extract through the glass wool and collect 5.0 mL in a concentrator tube.

1.7.8 Concentrate the extract to 1.0 mL by the nitrogen blowdown technique described in paragraph 2.7.3.

1.7.9 Transfer the concentrate to an autosampler vial for GC/FID or GC/MS capillary column screening. If the concentrate is screened, the quantitation limits should be approximately 20,000 ug/kg.

1.7.10 Proceed to Section III, paragraph 1.

2. Low Level Preparation for Screening and Analysis of Semivolatiles (BNA)

2.1 Summary of Method

A 30 gram portion of sediment is mixed with anhydrous powdered sodium sulfate and extracted with 1:1 methylene chloride/acetone using an ultrasonic probe. If the optional low level screen is used, a portion of this dilute extract is concentrated fivefold and is screened by GC/FID or GC/MS. If peaks are present at greater than 20,000 ug/kg, discard the extract and prepare the sample by the medium level method.

If no peaks are present at greater than 20,000 ug/kg, the extract is concentrated. An optional gel permeation column cleanup may be used before analysis.

2.2 Interferences

Method interferences may be caused by contaminants in solvents, reagents, glassware and other sample processing hardware that lead to discrete artifacts and/or elevated baselines in the total ion current profiles.

All of these materials must be routinely demonstrated to be free from interferences under the conditions of the analysis by running laboratory reagent blanks. Matrix interferences may be caused by contaminants that are coextracted from the sample. The extent of matrix interferences will vary considerably from source to source.

2.3 Apparatus and Materials

2.3.1 Apparatus for determining percent moisture

2.3.1.1 Oven, drying

2.3.1.2 Desiccator

2.3.1.3 Crucibles, porcelain

2.3.2 Disposable Pasteur glass pipets, 1 mL

2.3.3 Ultrasonic cell disruptor, Heat Systems - Ultrasonics, Inc. Model 385 SONICATOR (475 Watt with pulsing capability, No. 305 3/4 inch tapped high gain "Q" disruptor horn or No. 208 3/4 inch standard solid disruptor horn), or equivalent device with a minimum of 375 Watt output capability. NOTE: In order to ensure that sufficient energy is transferred to the sample during extraction, the horn <u>must</u> be replaced if the tip begins to erode. Erosion of the tip is evidenced by a rough surface.

2.3.3.1 Sonabox acoustic enclosure - recommended with above disruptors for decreasing cavitation sound.

2.3.4 Beakers, 400 mL

2.3.5 Vacuum filtration apparatus

2.3.5.1 Buchner funnel.

2.3.5.2 Filter paper, Whatman No. 41 or equivalent.

2.3.6 Kuderna-Danish (K-D) apparatus.

2.3.6.1 Concentrator tube - 10 mL, graduated (Kontes K-570040-1025 or equivalent).

2.3.6.2 Evaporative flask - 500 mL (Kontes K-570001-0500 or equivalent).

2.3.6.3 Snyder column - three-ball macro (Kontes K-503000-0121 or equivalent).

2.3.6.4 Snyder column - two-ball micro (Kontes K-569001-0219) or equivalent).

2.3.7 Silicon carbide boiling chips - approximately 10/40 mesh. Heat to 400°C for 30 minutes or Soxhlet extract with methylene chloride.

2.3.8 Water bath - heated, with concentric ring cover, capable of temperature control (±2°C). The bath should be used in a hood.

2.3.9 Balance, capable of accurately weighing ± 0.01 g.

2.3.10 Vials and caps, 2 mL for GC auto sampler.

2.3.11 Balance - Analytical, capable of accurately weighing ± 0.0001g.

2.3.12 Nitrogen evaporation device equipped with a water bath that can be maintained at 35-40°C. The N-Evap by Organomation Associates, Inc., South Berlin, MA (or equivalent) is suitable.

2.3.13 Gel permeation chromatography (GPC) cleanup device. NOTE: GPC cleanup is <u>highly recommended</u> for all extracts for low level soils.

2.3.13.1 Automated system

2.3.13.1.1 Gel permeation chromatograph Analytical Biochemical Labs, Inc. GPC Autoprep 1002 or equivalent including:

2.3.13.1.2 25 mm ID X 600 - 700 mm glass column packed with 70 g of Bio-Beads SX-3.

2.3.13.1.3 Syringe, 10 mL with Luer-Lock fitting.

2.3.13.1.4 Syringe filter holder and filters - stainless steel and TFE, Gelman 4310 or equivalent.

2.3.13.2 Manual system assembled from parts. (Wise, R.H., Bishop, D.F., Williams, R.T. & Austern, B.M. "Gel Permeation Chromatography in the GC/MS Analysis of Organics in Sludges" U.S. EPA, Municipal Environmental Research Laboratory - Cincinnati, Ohio 45268)

2.3.13.2.1 25 mm ID X 600 - 700 mm heavy wall glass column packed with 70 g of BIO-Beads SX-3.

2.3.13.2.2 Pump: Altex Scientific, Model No. 1001A, semipreparative, solvent metering system. Pump capacity = 28 mL/min.

2.3.13.2.3 Detector: Altex Scientific, Model No. 153, with 254 nm UV source and 8-ul semi-preparative flowcells (2-mm pathlengths)

2.3.13.2.4 Microprocessor/controller: Altex Scientific, Model No. 420, Microprocessor System Controller, with extended memory.

2.3.13.2.5 Injector: Altex Scientific, Catalog No. 201-56, sample injection valve, Tefzel, with 10 mL sample loop.

2.3.13.2.6 Recorder: Linear Instruments, Model No. 385, 10-inch recorder.

2.3.13.2.7 Effluent Switching Valve: Teflon slider valve, 3-way with 0.060" ports.

2.3.13.2.8 Supplemental Pressure Gauge with connecting Tee: U.S.Gauge, 0-200 psi, stainless steel. Installed as a "downstream" monitoring device between column and detector.

Flow rate was typically 5 mL/min. of methylene chloride. Recorder chart speed was 0.50 cm/min.

2.3.14 Pyrex glass wool.

2.3.15 Pasteur pipets, disposable.

2.4 Reagents

2.4.1 Sodium Sulfate - anhydrous <u>powdered</u> reagent grade, heated at 400°C for four hours, cooled in a desiccator, and stored in a glass bottle. Baker anhydrous powder, catalog #73898 or equivalent.

2.4.2 Methylene chloride, methanol, acetone, isooctane, 2-propanol and benzene pesticide quality or equivalent.

2.4.3 Reagent water - Reagent water is defined as a water in which an interferent is not observed at or above the CRQL of each parameter of interest.

2.4.4 GPC calibration solutions:

2.4.4.1 Corn oil - 200 mg/mL in methylene chloride.

2.4.4.2 Bis(2-ethylhexylphthalate) and pentachlorophenol 4.0 mg/mL in methylene chloride.

2.4.5 Sodium Sulfite, reagent grade.

2.4.6 Surrogate standard spiking solution.

2.4.6.1 Base/neutral and acid surrogate solution.

2.4.6.1.1 Surrogate standards are added to all samples, blanks, matrix spikes, matrix spike duplicates, and calibration solutions; the compounds specified for this purpose are phenol-d_6, 2,4,6-tribromophenol, 2-fluorophenol, nitrobenzene-d_5, terphenyl-d_{14} and 2-fluorobiphenyl. Two additional surrogates, one base/neutral and one acid may be added.

2.4.6.1.2 Prepare a surrogate standard spiking solution at a concentration of 100 ug/1.0 mL for base/ neutral and 200 ug/1.0 mL for acids in methanol. Store the spiking solutions at 4°C (±2°C) in Teflon-sealed containers. The solutions must be replaced after twelve months, or sooner if comparison with quality control check samples indicate a problem.

2.4.7 Matrix standard spiking solutions.

2.4.7.1 Base/neutral and acid matrix spiking solution consists of:

Base/Neutrals (100 ug/1.0 mL)	Acids (200 ug/1.0 mL)
1,2,4-trichlorobenzene	pentachlorophenol
acenaphthene	phenol
2,4-dinitrotoluene	2-chlorophenol
pyrene	4-chloro-3-methylphenol
N-nitroso-di-n-propylamine	4-nitrophenol
1,4-dichlorobenzene	

Prepare a spiking solution that contains each of the above in methanol. Store the spiking solutions at 4°C (±2°C) in Teflon-sealed containers. The solutions should be checked frequently for stability. These solutions must be replaced after twelve months, or sooner if comparison with quality control check samples indicate a problem.

Matrix spikes also serve as duplicates, therefore, add volume specified in Sample Extraction section to each of two 30-g portions from one sample chosen for spiking.

2.5 Low Level Sample Preparation

2.5.1 Decant and discard any water layer on a sediment sample. Mix samples thoroughly, especially composited samples. Discard any foreign objects such as sticks, leaves, and rocks.

2.5.1.1 Transfer 50 g of soil/sediment to 100 mL beaker. Add 50 mL of water and stir for 1 hour. Determine pH of sample with glass electrode and pH meter while stirring. Report pH value on appropriate data sheets. If the pH of the soil is greater than 11 or less than 5, contact the Deputy Project Officer cited in the contract for instructions on how to handle the sample. Document the instructions in the Case Narrative. Discard this portion of sample.

2.5.2 The following steps should be performed rapidly to avoid loss of the more volatile extractables. Weigh approximately 30 g of sample to the nearest 0.1 g into a 400-mL beaker and add 60 g of anhydrous powdered sodium sulfate. Mix well. The sample should have a sandy texture at this point. Immediately, add 100 mL of 1:1 methylene chloride - acetone to the sample, then add the surrogates according to paragraph 2.5.2.3.

2.5.2.1 Immediately after weighing the sample for extraction, weigh 5-10 g of the sediment into a tared crucible. Determine the percent moisture by drying overnight at 105°C. Allow to cool in a desiccator before weighing. Concentrations of individual analytes will be reported relative to the dry weight of sediment.

$$\frac{\text{g of sample - g of dry sample}}{\text{g of sample}} \times 100 = \%\ \text{moisture}$$

2.5.2.2 Weigh out two 30 g (record weight to nearest 0.1 g) portions for use as matrix and matrix spike duplicates according to 2.5.2. When using GPC cleanup, add 2.0 mL of the base/neutral and acid matrix spike to each of two portions. When <u>not</u>

using GPC cleanup, add 1.0 mL of base/neutral and acid matrix spike to each of the other two portions.

2.5.2.3 When using GPC, add 1.0 mL of base/neutral and acid surrogate standard to the sample. When not using GPC, add 0.5 mL of BNA surrogate standard to the sample.

2.5.3 Place the bottom surface of the tip of the 3/4 inch disruptor horn about 1/2 inch below the surface of the solvent but above the sediment layer.

2.5.4 Sonicate for 1 1/2 minutes with the W-385 (or 3 minutes with the W-375), using No. 208 3/4 inch standard disruptor horn with output control knob set at 10 (or No. 305 3/4 inch tapped high gain "Q" disruptor horn at 5) and mode switch on "1 sec. pulse" and % duty cycle knob set at 50%. Do NOT use MICROTIP probe. (If using a sonicator other than Models W-375 or W-385, contact the Project Officer for appropriate output settings).

2.5.5 Decant and filter extracts through Whatman #41 filter paper using vacuum filtration or centrifuge and decant extraction solvent.

2.5.6 Repeat the extraction two more times with 2 additional 100 mL portions of 1:1 methylene chloride - acetone. Before each extraction, make certain that the sodium sulfate is free flowing and not a consolidated mass. As required, break up large lumps with a clean spatula, or very carefully with the tip of the probe. Decant off the extraction solvent after each sonication. On the final sonication, pour the entire sample into the Buchner funnel and rinse with 1:1 methylene chloride acetone.

2.5.6.1 If the sample is to be screened from the low level method, take 5.0 mL and concentrate to 1.0 mL following paragraph 2.7.2 or 2.7.3. Note that the sample volume in this case is 5.0 mL not 10.0 mL as given in 2.7.2. Screen the extract as per Section III, paragraph 1., "Screening of Extractable Organic Extracts." Transfer the remainder of the 1 mL back to the total extract from paragraph 2.5.6 after GC/FID or GC/MS screening. (CAUTION: To minimize sample loss, autosamplers which pre-flush samples through the syringe should not be used.)

2.5.7 Transfer the extract to a Kuderna-Danish (K-D) concentrator consisting of a 10 mL concentrator tube and a 500 mL evaporative flask. Other concentration devices or techniques may be used if equivalency is demonstrated for all extractable compounds listed in Exhibit C.

2.5.8 Add one or two clean boiling chips to the evaporative flask and attach a three-ball Snyder column. Pre-wet the Snyder column

by adding about 1 mL methylene chloride to the top. Place the K-D apparatus on a hot water bath (80 to 90°C) so that the concentrator tube is partially immersed in the hot water and the entire lower rounded surface of the flask is bathed with hot vapor. Adjust the vertical position of the apparatus and the water temperature as required to complete the concentration in 10 to 15 minutes. At the proper rate of distillation the balls of the column will actively chatter but the chambers will not flood with condensed solvent. When the apparent volume of liquid reaches 1 mL, remove the K-D apparatus and allow it to drain and cool for at least 10 minutes, and make up to 10 mL volume with methylene chloride.

2.5.9 If GPC cleanup is not used proceed to paragraph 2.7.

2.6. Extract Cleanup

2.6.1 GPC Setup and Calibration

2.6.1.1 Packing the column - Place 70 g of Bio Beads SX-3 in a 400 mL beaker. Cover the beads with methylene chloride; allow the beads to swell overnight (before packing the columns). Transfer the swelled beads to the column and start pumping solvent through the column, from bottom to top, at 5.0 mL/min. After approximately 1 hour, adjust the pressure on the column to 7 to 10 psi and pump an additional 4 hours to remove air from the column. Adjust the column pressure periodically as required to maintain 7 to 10 psi.

2.6.1.2 Calibration of the column - Load 5 mL of the corn oil solution into sample loop No. 1 and 5 mL of the phthalatephenol solution into loop No. 2. Inject the corn oil and collect 10 mL fraction (i.e., change fraction at 2-minute intervals) for 36 minutes. Inject the phthalate-phenol solution and collect 15 mL fractions for 60 minutes. Determine the corn oil elution pattern by evaporation of each fraction to dryness followed by a gravimetric determination of the residue. Analyze the phthalate-phenol fractions by GC/FID on the DB-5 capillary column, a UV spectrophotometer or a GC/MS system. Plot the concentration of each component in each fraction versus total eluent volume (or time) from the injection points. Choose a "dump time" which allows ≥85% removal of the corn oil and ≥85% recovery of the bis(2-ethylhexyl)-phthalate. Choose the "collect time" to extend at least 10 minutes after the elution of pentachlorophenol. Wash the column at least 15 minutes between samples. Typical parameters selected are: Dump time, 30 minutes (150 mL), collect time, 36 minutes (180 mL) and wash time, 15 minutes (75 mL). The column can also be

calibrated by the use of a 254 mm UV detector in place of gravimetric and GC analyses of fractions. Measure the peak areas at various elution times to determine appropriate fractions.

The SX-3 Bio Beads column may be reused for several months, even if discoloration occurs. System calibration usually remains constant over this period of time if column flowrate remains constant.

2.6.2 GPC Extract Cleanup

Prefilter or load all extracts via the filter holder to avoid particulates that might stop the flow. Load one 5.0 mL aliquot of the extract onto the GPC column. Do not apply excessive pressure when loading the GPC. Purge the sample loading tubing thoroughly with solvent between extracts. After especially dirty extracts, run a GPC blank (methylene chloride) to check for carry-over. Process the extracts using the dump, collect and wash parameters determined from the calibration and collect the cleaned extracts in 400 mL beakers tightly covered with aluminum foil. The phthalate-phenol calibration solution shall be taken through the cleanup cycle with each set of 23 extracts loaded into the GPC. The recovery for each compound must be ≥85%. This must be determined on a GC/FID, using a DB-5 capillary column, a UV recording spectrophotometer or a GC/MS system. A copy of the printouts of standard and check solution are required as deliverables with each case. Show % recovery on the copy.

2.6.3 Concentrate the extract as per paragraphs 2.5.7 and 2.5.8.

2.7 Final Concentration of Extract with Optional Extract Splitting Procedure

If the extract in 2.5.8 is to be used only for semivolatile analysis, it must be concentrated to a volume of 1.0 mL, following the procedure in 2.7.2.1.

If the extract in 2.5.8 is to be used for <u>both</u> semivolatile and pesticide/PCB analyses, then it must be split into two portions. In that case, follow the procedure in 2.7.1 to obtain the pesticide portion, and follow that with the procedure in 2.7.2.2 to obtain the semivolatile portion.

Refer to Exhibit D PEST for specific instructions regarding the treatment of extracts for pesticide analysis.

2.7.1 If the same extract is used for both semivolatile and pesticide/PCB analyses, to split out the pesticide extract, transfer 0.5 mL of the 10 mL methylene chloride extract from 2.5.8 to a separate concentrator tube. Add 5 mL of hexane and a silicon carbide boiling chip and mix using vortex mixer. Attach a two-ball micro-Snyder column. Pre-wet the Snyder

column by adding 0.5 mL of hexane to the top of the column. Place the K-D apparatus on a hot water bath (80 - 90°C) so that the concentrator tube is partially immersed in the hot water. Adjust the vertical position of the apparatus and the water temperature as required to complete the concentration in 5 to 10 minutes. Concentrate the extract to an apparent volume of less than 1 mL. Use Nitrogen blowdown (see 2.7.3) to reduce the volume to 0.5 mL. Add 0.5 mL of acetone. The pesticide extract must now be passed through an alumina column to remove the BNA surrogates and polar interferences. Proceed to paragraph 2.8 of the pesticide/PCB method (Exhibit D PEST).

2.7.2 Concentration of the semivolatile extract.

2.7.2.1 If the extract in 2.5.8 was <u>not</u> split to obtain a portion for pesticide analysis, reattach the micro-Snyder column to the concentrator tube used in 2.5.8 which contains the 10 mL extract and add a fresh silicon carbide boiling chip to the concentrator tube. Pre-wet the Snyder column with 0.5 mL of methylene chloride. Place the K-D apparatus on the hot water bath (80 - 90°C) so that the concentrator tube is partially immersed in the hot water. Adjust the vertical position of the apparatus and the water temperature as required to complete the concentration in 5 to 10 minutes. When the apparent volume of the liquid reaches 0.5 mL, remove the K-D apparatus from the water bath and allow it to drain for at least 10 minutes while cooling. Remove the Snyder column and rinse the lower joint into the concentrator tube with 0.2 mL of methylene chloride. Adjust the final volume to 1.0 mL with methylene chloride. If GPC cleanup was used, this 1.0 mL represents a two-fold dilution to account for only half of the extract going through the GPC.

2.7.2.2 If the extract in 2.5.8 <u>was</u> split in 2.7.1 to obtain a portion for pesticide analysis, reattach the micro-Snyder column to the concentrator tube used in 2.5.8 which contains the 9.5 mL extract and add a fresh silicon carbide boiling chip to the concentrator tube. Pre-wet the Snyder column with 0.5 mL of methylene chloride. Place the K-D apparatus on the hot water bath (80 - 90°C) so that the concentrator tube in partially immersed in the hot water. Adjust the vertical position of the apparatus and the water temperature as required to complete the concentration in 5 to 10 minutes. When the apparent volume of the liquid reaches 0.5 mL, remove the K-D apparatus from the water bath and allow it to drain for at least 10 minutes while cooling. Remove the Snyder column and rinse the lower joint into the concentrator tube with 0.2 mL

of methylene chloride. Adjust the final volume to 0.95 mL with methylene chloride. If GPC cleanup was used, this 0.95 mL represents a twofold dilution to account for only half of the extract going through the GPC, and therefore, the sample detection limit for the sample would be 2x CRQL (see Exhibit B).

2.7.3 Nitrogen blowdown technique (taken from ASTM Method D 3086). The following method may be used for final concentration of the BNA extract instead of the procedures in paragraph 2.7.2. Place the concentrator tube in a warm water bath (35°C) and evaporate the solvent volume to below 1 mL using a gentle stream of clean, dry nitrogen (filtered through a column of activated carbon). Caution: New plastic tubing must not be used between the carbon trap and the sample, since it may introduce interferences.

The internal wall of the tube must be rinsed down several times with methylene chloride during the operation. During evaporation, the tube solvent level must be kept below the water level of the bath. The extract must never be allowed to become dry.

If the extract in 2.5.8 was not split for both semivolatile and pesticide analyses, bring the final volume of the extract to 1.0 mL with methylene chloride. This represents a ten-fold concentration. If the extract in 2.5.8 was split in 2.7.1, then bring the final volume of the semivolatile portion to 0.95 mL with methylene chloride. This represents a similar ten-fold concentration. In either case, if GPC cleanup techniques were employed, the final volume (1.0 or 0.95 mL) represents a two-fold dilution to account for the fact that only half the extract went through the GPC.

2.7.4 Store all extracts at 4°C (±2°C) in the dark in Teflon-sealed containers.

SECTION III

SCREENING OF SEMIVOLATILE ORGANIC EXTRACTS

1. Summary of Method

1.1 The solvent extracts of water and sediment/soil are screened on a gas chromatograph/flame ionization detector (GC/FID) using a fused silica capillary column (FSCC). The results of the screen will determine the concentration of extract taken for GC/MS analysis.

2. Apparatus and Materials

2.1 Gas chromatograph - An analytical system complete with a temperature programmable gas chromatograph and all required accessories including syringes, analytical columns, and gases. The injection port must be designed for on-column injection when using packed columns and for splitless injection when using capillary columns.

2.1.1 Above GC equipped with flame ionization detector.

2.1.2 GC column - 30 m x 0.32 mm, 1 micron film thickness, silicone coated, fused silica capillary column (J & W Scientific DB-5 or equivalent).

3. Reagents

3.1 Methylene chloride - pesticide residue analysis grade or equivalent.

3.2 GC calibration standard. Prepare a standard solution containing phenol, phenanthrene and di-n-octylphthalate.

3.2.1 Stock standard solutions (1.00 ug/uL)-Stock standard solutions can be prepared from pure standard materials or purchased solutions.

3.2.1.1 Prepare stock standard solutions by accurately weighing about 0.0100 g of pure material. Dissolve the material in pesticide quality methylene chloride and dilute to volume in a 10 mL volumetric flask. Larger volumes may be used at the convenience of the analyst. If compound purity is assayed at 96% or greater, the weight may be used without correction to calculate the concentration of the stock standard. Commercially prepared stock standards may be used at any concentration if they are certified by the manufacturer or by an independent source and are traceable to EMSL/LV-supplied standards.

3.2.1.2 Transfer the stock standard solutions into Teflon sealed screw-cap bottles. Store at -10°C to -20°C and protect from light. Stock standard solutions should be checked frequently for signs of degradation or evaporation, especially just prior to preparing calibration standards from them. Stock standard solutions must be replaced after six months or sooner if comparison with quality control

check samples indicates a problem. Standards prepared from gases or reactive compounds such as styrene must be replaced after two months, or sooner if comparison with quality control check samples indicates a problem.

3.2.2 Prepare a working standard mixture of the three compounds in methylene chloride. The concentration must be such that the volume injected equals 50 ng of each compound. The storage and stability requirements are the same as specified in 3.2.1.2.

4. GC Calibration

4.1 At the beginning of each 12 hour shift, inject the GC calibration standard. The following criteria must be:

4.1.1 Standardized for half scale response from 50 ng of phenanthrene.

4.1.2 Adequately separates phenol from the solvent front.

4.1.3 Minimum of quarter scale response for 50 ng of di-n-octylphthalate.

5. GC/FID Screening

5.1 Suggested GC operating conditions:

Initial Column Temperature Hold - 50°C for 4 minutes

Column Temperature Program - 50 - 280°C at 8 degrees/min.

Final Column Temperature Hold - 280°C for 8 minutes

Injector - Grob-type, splitless

Sample Volume - 1 uL - 2 uL

Carrier Gas - Helium at 30 cm^3/sec

5.2 Inject the GC calibration standard and ensure the criteria specified in 4. are met before injecting samples. Estimate the response for 10 ng of phenanthrene.

5.3 Inject the appropriate extracts from Section II, including blanks.

6. Interpretation of Chromatograms

6.1 Water

6.1.1 If no sample peaks are detected, or all are less than full scale deflection, the undiluted extract is analyzed on GC/MS.

6.1.2 If any sample peaks are greater than full scale deflection, calculate the dilution necessary to reduce the major peaks to between half and full scale deflection. Use this dilution factor to dilute the extract for GC/MS analysis.

6.2 Soil/Sediment

6.2.1 If no sample peaks from the extract (from low or medium level preparation) are detected, or all are less than 10% full scale deflection, the sample must be prepared by the low level protocol, Section II, Part C, paragraph 2.

6.2.2 Peaks are detected at greater than 10% full scale deflection and less than or equal to full scale deflection.

6.2.2.1 If the screen is from the medium level extract, proceed with GC/MS analysis of this extract with appropriate dilution if necessary.

6.2.2.2 If screen is from the low level extract, discard extract and prepare sample by medium level method for GC/MS analysis.

6.2.3 Peaks are detected at greater than full scale deflection:

6.2.3.1 If the screen is from the medium level preparation, calculate the dilution necessary to reduce the major peaks to between half and full scale deflection. Use this dilution factor to dilute the extract. This dilution is analyzed by GC/MS for extractable organics.

6.2.3.2 If the screen is from the low level preparation, discard the extract and prepare a sample by the medium level method for GC/MS analysis.

7. <u>GC/MS Analysis</u>

7.1 Use the information from 6. to perform the GC/MS analysis of extractables in Section IV, GC/MS Analysis of Semivolatiles, paragraph 1.

SECTION IV

GC/MS ANALYSIS OF SEMIVOLATILES

1. Summary of Method

This method is to be used for the GC/MS analysis of semivolatiles screened by Section III protocols and for confirmation of pesticides/PCBs identified by GC/EC, if concentrations permit.

2. Apparatus and Materials

2.1 Gas chromatograph/mass spectrometer system.

2.1.1 Gas chromatograph - An analytical system complete with a temperature programmable gas chromatograph suitable for splitless injection and all required accessories including syringes, analytical columns and gases.

2.1.2 Column - 30 m x 0.25 mm ID (or 0.32 mm) bonded-phase silicone coated fused silica capillary column (J&W Scientific DB-5 or equivalent). A film thickness of 1.0 micron is recommended because of its larger capacity. A film thickness of 0.25 micron may be used.

2.1.3 Mass Spectrometer - Capable of scanning from 35 to 500 amu every 1 second or less, utilizing 70 volts (nominal) electron energy in the electron impact ionization mode and producing a mass spectrum which meets all required criteria when 50 ng of decafluorotriphenylphosphine (DFTPP) is injected through the GC inlet. NOTE: DFTPP criteria must be met before any sample extracts are analyzed. Any samples analyzed when DFTPP criteria have not been met will require reanalysis at no cost to the Government.

2.1.4 Data system - A computer system must be interfaced to the mass spectrometer that allows the continuous acquisition and storage on machine readable media of all mass spectra obtained throughout the duration of the chromatographic program. The computer must have software that allows searching any GC/MS data file for ions of a specific mass and plotting such ion abundances versus time or scan number. This type of plot is defined as an Extracted Ion Current Profile (EICP). Software must also be available that allows integrating the abundance in any EICP between specified time or scan number limits.

3. Reagents

3.1 Internal standards - 1,4 dichlorobenzene-d_4, naphthalene-d_8, acenaphthene-d_{10}, phenanthrene-d_{10}, chrysene-d_{12}, perylene-d_{12}.

An internal standard solution can be prepared by dissolving 200 mg of each compound in 50 mL of methylene chloride. It may be necessary to use 5 to 10 percent benzene or toluene in this solution and a few minutes of ultrasonic mixing in order to dissolve all the constituents. The resulting solution will contain each standard at a concentration of 4000 ng/uL. A 10 uL portion of this solution should be added to each 1

mL of sample extract. This will give a concentration of 40 ng/uL of each constituent.

3.2 Prepare calibration standards at a minimum of five concentration levels. Each calibration standard should contain each compound of interest and each surrogate standard. (See GC/MS calibration in Exhibit E for calibration standard concentration.)Great care must be taken to maintain the integrity of all standard solutions. Store all standard solutions at -10°C to -20°C in screw-cap amber bottles with teflon liners. Fresh standards should be prepared every twelve months at a minimum. The continuing calibration standard should be prepared weekly and stored at 4°C (±2°C).

4. Calibration

4.1 Each GC/MS system must have the hardware tuned to meet the criteria listed in Exhibit E for a 50 ng injection of decafluorotriphenyl phosphine (DFTPP). No sample analyses can begin until all these criteria are met. This criteria must be demonstrated each 12 hour shift. DFTPP has to be injected to meet this criterion. Post-acquisition manipulation of abundances is not acceptable.

4.2 The internal standards selected in paragraph 2.3.1 should permit most components of interest in a chromatogram to have retention times of 0.80 to 1.20 relative to the internal standards (see instructions for Form VI, Initial Calibration Data). Use the base peak ion from the specific internal standard as the primary ion for quantification, found in Exhibit E, Table 2.2. If interferences are noted, use the next most intense ion as the secondary ion, i.e. For 1,4-dichlorobenzene-d_4 use m/z 152 for quantification.

4.2.1 The internal standards are added to all calibration standards and all sample extracts just prior to analysis by GC/MS. A 10 uL aliquot of the internal standard solution should be added to a 1 mL aliquot of calibration standards.

4.3 Analyze 1 uL of each calibration standard and tabulate the area of the primary characteristic ion against concentration for each compound including the surrogate compounds. Calculate relative response factors (RRF) for each compound using Equation 1.

$$RRF = \frac{A_x}{A_{is}} \times \frac{C_{is}}{C_x} \qquad \text{Equation 1.}$$

Where:

A_x = Area of the characteristic ion for the compound to be measured.

A_{is} = Area of the characteristic ion for the specific internal standard from Exhibit E.

C_{is} = Concentration of the internal standard (ng/uL).

C_x = Concentration of the compound to be measured (ng/uL).

4.3.1 The average relative response factor (RRF) should be calculated for all compounds. A system performance check must be made before this calibration curve is used. Four compounds (the system performance check compounds) are checked for a minimum average relative response factor. These compounds (the SPCC) are N-nitroso-di-n-propylamine, hexachlorocyclopentadiene, 2,4-dinitrophenol, 4-nitrophenol. See instructions in Exhibit E for Form VI, Initial Calibration Data for more details.

4.3.2 A % Relative Standard Deviation (%RSD) is calculated for thirteen compounds labeled the Calibration Check Compounds (CCC) on Form VI SV and in Table 2.3, Exhibit E, III SV. A maximum % RSD is also specified for these compounds. These criteria must be met for the calibration curve to be valid.

4.4 A check of the calibration curve must be performed once every 12 hours during analysis. These criteria are described in detail in the instructions for Form VII, Calibration Check. The minimum relative response factor for the system performance check compounds must be checked. If this criteria is met, the relative response factors of all compounds are calculated. A percent difference of the daily (12 hour) relative response factor compared to the average relative response factor from the initial curve is calculated. A maximum percent difference is allowed for each compound flagged as 'CCC' on Form VII. Only after both these criteria are met can sample analysis begin.

4.5 Internal standard responses and retention times in all standards must be evaluated during or immediately after data acquisition. If the retention time for any internal standard changes by more than 30 seconds from the latest daily (12 hour) calibration standard, the chromatographic system must be inspected for malfunctions, and corrections made as required. The extracted ion current profile (EICP) of the internal standards must be monitored and evaluated for each standard. If EICP area for any internal standard changes by more than a factor of two (-50% to +100%), the mass spectrometric system must be inspected for malfunction and corrections made as appropriate. When corrections are made, reanalysis of samples analyzed while the system was malfunctioning is necessary.

5. <u>GC/MS Analysis</u>

5.1 The following instrumental parameters are required for all performance tests and for all sample analyses:

Electron Energy - 70 volts (nominal)
Mass Range - 35 to 500 amu
Scan Time - not to exceed 1 second per scan

5.2 Combine 0.5 mL of the base/neutral extract and 0.5 mL of acid from the water extract prior to analysis.

5.3 Internal standard solution is added to each sample extract. For water and/or medium soil extracts, add 10 uL of internal standard solution to each accurately measured 1.0 mL of sample extract. If the low soil

extracts required a pesticide split (see Section II, Part C, paragraph 2.7), add 9.5 uL of internal standard solution to each accurately measured 0.95 mL of sample extract. Analyze the 1.0 mL extract by GC/MS using a bonded-phase silicone-coated fused silica capillary column. The recommended GC operating conditions to be used are as follows:

Initial Column Temperature Hold	–	40°C for 4 minutes
Column Temperature Program	–	40-270°C at 10 degrees/min.
Final Column Temperature Hold	–	270°C for 10 minutes
Injector Temperature	–	250-300°C
Transfer Line Temperature	–	250-300°C
Source Temperature	–	according to manufacturer's specifications
Injector	–	Grob-type, splitless
Sample Volume	–	1 - 2 uL
Carrier Gas	–	Helium at 30 cm^3/sec

NOTE: Make any extract dilution indicated by characterization prior to the addition of internal standards. If any further dilutions of water or soil/sediment extracts are made, additional internal standards must be added to maintain the required 40 ng/uL of each constituent in the extract volume. If the concentration on the column of any compound exceeds the initial calibration range, the extract must be diluted and reanalyzed. See Exhibit E, Section III, SV, Part 6. Secondary ion quantitation is <u>only</u> allowed when there are sample interferences with the primary ion. If secondary ion quantitation is performed, document the reasons in the Case Narrative.

6. <u>Qualitative Analysis</u>

6.1 The compounds listed in the Target Compound List (TCL), Exhibit C, shall be identified by an analyst competent in the interpretation of mass spectra (see PreAward Bid Confirmation description) by comparison of the sample mass spectrum to the mass spectrum of a standard of the suspected compound. Two criteria must be satisfied to verify the identifications: (1) elution of the sample component at the GC relative retention time as the standard component, and (2) correspondence of the sample component and standard component mass spectra.

6.1.1 For establishing correspondence of the GC relative retention time (RRT), the sample component RRT must compare within ± 0.06 RRT units of the RRT of the standard component. For reference, the standard must be run on the same shift as the sample. If coelution of interfering components prohibits accurate

assignment of the sample component RRT from the total ion chromatogram, the RRT should be assigned by using extracted ion current profiles for ions unique to the component of interest.

6.1.2 For comparison of standard and sample component mass spectra, mass spectra obtained on the contractor's GC/MS are required. Once obtained, these standard spectra may be used for identification purposes, only if the contractor's GC/MS meets the DFTPP daily tuning requirements. These standard spectra may be obtained from the run used to obtain reference RRTs.

6.1.3 The requirements for qualitative verification by comparison of mass spectra are as follows:

6.1.3.1 All ions present in the standard mass spectra at a relative intensity greater than 10% (most abundant ion in the spectrum equals 100%) must be present in the sample spectrum.

6.1.3.2 The relative intensities of ions specified in (1) must agree within plus or minus 20% between the standard and sample spectra. (Example: For an ion with an abundance of 50% in the standard spectra, the corresponding sample ion abundance must be between 30 and 70 percent.)

6.1.3.3 Ions greater than 10% in the sample spectrum but not present in the standard spectrum must be considered and accounted for by the analyst making the comparison. In Task III, the verification process should favor false positives. All compounds meeting the identification criteria must be reported with their spectra. For all compounds below the CRQL report the actual value followed by "J", e.g. "3J."

6.1.4 If a compound cannot be verified by all of the criteria in 6.1.3, but in the technical judgement of the mass spectral interpretation specialist, the identification is correct, then the Contractor shall report that identification and proceed with quantification in 7.

6.2 A library search shall be executed for non-TCL sample components for the purpose of tentative identification. For this purpose, the 1985 release of the National Bureau of Standards Mass Spectral Library (or more recent release), containing 42,261 spectra, shall be used.

6.2.1 Up to 20 nonsurrogate organic compounds of greatest apparent concentration not listed in Exhibit C for the combined base/neutral/acid fraction shall be tentatively identified via a forward search of the NBS mass spectral library. (Substances with responses less than 10% of the nearest internal standard are not required to be searched in this fashion). Only after visual comparison of sample spectra with the nearest library searches will the mass spectral interpretation specialist

assign a tentative identification. NOTE: Computer generated library search routines must not use normalization routines that would misrepresent the library or unknown spectra when compared to each other.

6.2.2 Guidelines for making tentative identification:

6.2.2.1 Relative intensities of major ions in the reference spectrum (ions greater than 10% of the most abundant ion) should be present in the sample spectrum.

6.2.2.2 The relative intensities of the major ions should agree within ± 20%. (Example: For an ion with an abundance of 50% in the standard spectra, the corresponding sample ion abundance must be between 30 and 70 percent.)

6.2.2.3 Molecular ions present in reference spectrum should be present in sample spectrum.

6.2.2.4 Ions present in the sample spectrum but not in the reference spectrum should be reviewed for possible background contamination or presence of co-eluting compounds.

6.2.2.5 Ions present in the reference spectrum but not in the sample spectrum should be reviewed for possible subtraction from the sample spectrum because of background contamination or coeluting compounds. NOTE: Data system library reduction programs can sometimes create these discrepancies.

6.2.3 If in the technical judgement of the mass interpretation spectral specialist, no valid tentative identification can be made, the compound should be reported as unknown. The mass spectral specialist should give additional classification of the unknown compound, if possible (i.e., unknown phthalate, unknown hydrocarbon, unknown acid type, unknown chlorinated compound). If probable molecular weights can be distinguished, include them.

7. Quantitation

7.1 TCL components identified shall be quantified by the internal standard method. The internal standard used shall be the one nearest the retention time to that of a given analyte (see Exhibit E, Tables 2.1 and 2.2). The EICP area of characteristic ions of analytes listed in Tables 4, 5 and 6 are used.

Internal standard responses and retention times in all samples must be evaluated during or immediately after data acquisition. If the retention time for any internal standard changes by more than 30 seconds from the latest daily (12 hour) calibration standard, the chromatographic system must be inspected for malfunctions, and

corrections made as required. The extracted ion current profile (EICP) of the internal standards must be monitored and evaluated for each sample, blank, matrix spike and matrix spike duplicate. The criteria are described in detail in the instructions for Form VIII, Internal Standard Area Summary. If the EICP area for any internal standard changes by more than a factor of two (-50% to +100%), the mass spectrometric system must be inspected for malfunction and corrections made as appropriate. If the analysis of a subsequent sample or standard indicates that the system is functioning properly, then corrections may not be required. The samples or standards with EICP areas outside the limits must be re-analyzed, and treated according to 7.1.1 and 7.1.2 below. If corrections are made, then the laboratory must demonstrate that the mass spectrometric system is functioning properly. This must be accomplished by the analysis of a standard or sample that does meet the EICP criteria. After corrections are made, the re-analysis of samples analyzed while the system was malfunctioning is required.

7.1.1 If after re-analysis, the EICP areas for all internal standards are inside the contract limits (-50% to +100%), then the problem with the first analysis is considered to have been within the control of the laboratory. Therefore, only submit data from the analysis with EICPs within the contract limits. This is considered the initial analysis and must be reported as such on all data deliverables.

7.1.2 If the re-analysis of the sample does not solve the problem, i.e., the EICP areas are outside the contract limits for both analyses, then submit the EICP data and sample data from both analyses. Distinguish between the initial analysis and the re-analysis on all data deliverables, using the sample suffixes specified in Exhibit B. Document in the Case Narrative all inspection and corrective actions taken.

7.2 The relative response factor (RRF) from the daily standard analysis is used to calculate the concentration in the sample. Secondary ions may be used if interferences are present. The area of a secondary ion cannot be substituted for the area of a primary ion unless a relative response factor is calculated using the secondary ion. When TCL Compounds are below contract required quantitation limits (CRQL) but the spectra meets the identification criteria, report the concentration with a "J." For example, if CRQL is 10 ug/L and concentration of 3 ug/L is calculated, report as "3J."

7.2.1 Calculate the concentration in the sample using the relative response factor (RRF) as determined in paragraph 4.3 and the following equation:

Water

$$\text{Concentration} \quad \text{ug/L} = \frac{(A_x)(I_s)(V_t)}{(A_{is})(RRF)(V_o)(V_i)}$$

A_x = Area of the characteristic ion for the compound to be measured

A_{is} = Area of the characteristic ion for the internal standard

I_s = Amount of internal standard injected in nanograms (ng)

V_o = Volume of water extracted in milliliters (mL)

V_i = Volume of extract injected (uL)

V_t = Volume of total extract

(Use 2000 uL or a factor of this when dilutions are made. The 2,000 uL is derived from combining half of the 1 mL BN extract and half of the 1 mL A extract.)

Soil/Sediment

$$\text{Concentration (Dry weight basis)} \quad \text{ug/kg} = \frac{(A_x)(I_s)(V_t)}{(A_{is})(RRF)(V_i)(W_s)(D)}$$

Where:

A_x, I_s, A_{is} = Same as given for water, above

V_t = Volume of low level total extract (Use 1000 uL or a factor of this when dilutions are made. If GPC cleanup is used, the volume is 2,000 uL. The 1000 uL is derived from concentrating the 9.5 mL extract to 0.95 mL.)

- OR -

V_t = Volume of medium level extract (Use 2,000 uL or a factor of this when dilutions are made. The 2,000 uL is derived from concentrating 5 mL of the 10 mL extract to 1 mL.)

V_i = Volume of extract injected (uL)

D = $\frac{100 - \%\ \text{moisture}}{100}$

W_s = Weight of sample extracted (grams)

7.3 An estimated concentration for non-TCL components tentatively identified shall be quantified by the internal standard method. For quantification, the nearest internal standard free of interferences shall be used.

7.3.1 The formula for calculating concentrations is the same as in paragraph 7.2.1. Total area counts (or peak heights) from the total ion chromatograms are to be used for both the compound to be measured and the internal standard. A relative response factor (RRF) of one (1) is to be assumed. The value from this quantitation shall be qualified as estimated. This estimated concentration should be calculated for all tentatively identified compounds as well as those identified as unknowns.

7.4 Calculate surrogate standard recovery on all samples, blanks and spikes. Determine if recovery is within limits and report on appropriate form.

7.4.1 If recovery is not within limits (i.e., if two surrogates from either base/neutral or acid fractions are out of limits or if recovery of any one surrogate in either fraction is below 10%), the following is required.

- Check to be sure there are no errors in calculations, surrogate solutions and internal standards. Also, check instrument performance.

- Reanalyze the sample if none of the above reveal a problem.

7.4.2 If the reanalysis of the sample solves the problem, then the problem was within the laboratory's control. Therefore, only submit data from the analysis with surrogate spike recoveries within the contract windows. This shall be considered the initial analysis and shall be reported as such on all data deliverables.

7.4.3 If none of the steps in 7.4.1 or 7.4.2 solve the problem, then reextract and reanalyze the sample. If the reextraction and reanalysis of the sample solves the problem, then the problem was within the laboratory's control. Therefore, only submit data from the analysis with surrogate spike recoveries within the contract windows. This shall be considered the initial analysis and shall be reported as such on all data deliverables.

7.4.4 If the reextraction and reanalysis of the sample does not solve the problem, i.e., the surrogate recoveries are outside the contract limits for both analyses, then submit the surrogate spike recovery data and the sample analysis data from analysis of both sample extracts. Distinguish between the initial analysis and the reanalysis on all data deliverables, using the sample suffixes specified in Exhibit B.

7.4.5 If the sample with surrogate recoveries outside the limits is the sample used for the matrix spike and matrix spike duplicate and the surrogate recoveries of the matrix spike and matrix spike duplicate show the same pattern (i.e., outside the limits), then the sample, matrix spike and matrix spike duplicate do <u>not</u> require re-analysis.

Document in the narrative the similarity in surrogate recoveries.

Table 4.

Characteristic Ions for Semivolatile TCL Compounds

Parameter	Primary Ion	Secondary Ion(s)
Phenol	94	65, 66
bis(-2-Chloroethyl)Ether	93	63, 95
2-Chlorophenol	128	64, 130
1,3-Dichlorobenzene	146	148, 113
1,4-Dichlorobenzene	146	148, 113
Benzyl Alcohol	108	79, 77
1,2-Dichlorobenzene	146	148, 113
2-Methylphenol	108	107
bis(2-chloroisopropyl)Ether	45	77, 79
4-Methylphenol	108	107
N-Nitroso-Di-Propylamine	70	42, 101, 130
Hexachloroethane	117	201, 199
Nitrobenzene	77	123, 65
Isophorone	82	95, 138
2-Nitrophenol	139	65, 109
2,4-Dimethylphenol	107	121, 122
Benzoic Acid	122	105, 77
bis(-2-Chloroethoxy)Methane	93	95, 123
2,4-Dichlorophenol	162	164, 98
1,2,4-Trichlorobenzene	180	182, 145
Naphthalene	128	129, 127
4-Chloroaniline	127	129
Hexachlorobutadiene	225	223, 227
4-Chloro-3-Methylphenol	107	144, 142
2-Methylnaphthalene	142	141
Hexachlorocyclopentadiene	237	235, 272
2,4,6-Trichlorophenol	196	198, 200
2,4,5-Trichlorophenol	196	198, 200
2-Chloronaphthalene	162	164, 127

(continued)

Table 4. (continued)
Characteristic Ions for Semivolatile TCL Compounds

Parameter	Primary Ion	Secondary Ion(s)
2-Nitroaniline	65	92, 138
Dimethyl Phthalate	163	194, 164
Acenaphthylene	152	151, 153
3-Nitroaniline	138	108, 92
Acenaphthene	153	152, 154
2,4-Dinitrophenol	184	63, 154
4-Nitrophenol	109	139, 65
Dibenzofuran	168	139
2,4-Dinitrotoluene	165	63, 182
2,6-Dinitrotoluene	165	89, 121
Diethylphthalate	149	177, 150
4-Chlorophenyl-phenylether	204	206, 141
Fluorene	166	165, 167
4-Nitroaniline	138	92, 108
4,6-Dinitro-2-Methylphenol	198	182, 77
N-Nitrosodiphenylamine	169	168, 167
4-Bromophenyl-phenylether	248	250, 141
Hexachlorobenzene	284	142, 249
Pentachlorophenol	266	264, 268
Phenanthrene	178	179, 176
Anthracene	178	179, 176
Di-N-Butylphthalate	149	150, 104
Fluoranthene	202	101, 100
Pyrene	202	101, 100
Butylbenzylphthalate	149	91, 206
3,3'-Dichlorobenzidine	252	254, 126
Benzo(a)Anthracene	228	229, 226
bis(2-Ethylhexyl)Phthalate	149	167, 279
Chrysene	228	226, 229
Di-N-Octyl Phthalate	149	
Benzo(b)Fluoranthene	252	253, 125
Benzo(k)Fluoranthene	252	253, 125
Benzo(a)Pyrene	252	253, 125
Indeno(1,2,3-cd)Pyrene	276	138, 227
Dibenz(a, h)Anthracene	278	139, 279
Benzo(g, h, i)Perylene	276	138, 277

Table 5.

Characteristic Ions for Pesticides/PCBs

Parameter	Primary Ion	Secondary Ion(s)
Alpha-BHC	183	181, 109
Beta-BHC	181	183, 109
Delta-BHC	183	181, 109
Gamma-BHC (Lindane)	183	181, 109
Heptachlor	100	272, 274
Aldrin	66	263, 220
Heptachlor Epoxide	353	355, 351
Endosulfan I	195	339, 341
Dieldrin	79	263, 279
4,4'-DDE	246	248, 176
Endrin	263	82, 81
Endosulfan II	337	339, 341
4,4'-DDD	235	237, 165
Endosulfan Sulfate	272	387, 422
4,4'-DDT	235	237, 165
Methoxychlor	227	228
Chlordane (alpha and/or gamma)	373	375, 377
Toxaphene	159	231, 233
Aroclor-1016	222	260, 292
Aroclor-1221	190	222, 260
Aroclor-1232	190	222, 260
Aroclor-1242	222	256, 292
Aroclor-1248	292	362, 326
Aroclor-1254	292	362, 326
Aroclor-1260	360	362, 394
Endrin Ketone	317	67, 319

Table 6.

Characteristic Ions for Surrogates and
Internal Standards for Semivolatile Compounds

SURROGATES	Primary Ion	Secondary Ion(s)
Phenol-d_5	99	42, 71
2-Fluorophenol	112	64
2,4,6-Tribromophenol	330	332, 141
d-5 Nitrobenzene	82	128, 54
2-Fluorobiphenyl	172	171
Terphenyl	244	122, 212
INTERNAL STANDARDS		
1,4-Dichlorobenzene-d_4	152	115
Naphthalene-d_8	136	68
Acenapthene-d_{10}	164	162, 160
Phenanthrene-d_{10}	188	94, 80
Chrysene-d_{12}	240	120, 236
Perylene-d_{12}	264	260, 265

EXHIBIT D

ANALYTICAL METHODS
FOR PESTICIDES/PCBs

Table of Contents

		Page
SECTION I	INTRODUCTION	D-3/PEST
SECTION II	SAMPLE PREPARATION AND STORAGE	D-5/PEST
	PART A SAMPLE STORAGE AND HOLDING TIMES	D-6/PEST
	PART B SAMPLE PREPARATION FOR PESTICIDES/PCBs IN WATER	D-7/PEST
	PART C PROTOCOLS FOR SOIL/SEDIMENT	D-14/PEST
	1. Medium Level Preparation for Analysis of Pesticide/PCBs	D-14/PEST
	2. Low Level Preparation for Analysis of Pesticide/PCBs	D-19/PEST
SECTION III	SCREENING OF PESTICIDE/PCB EXTRACTS	D-31/PEST
SECTION IV	GC/EC ANALYSIS OF PESTICIDES/PCBs	D-33/PEST

SECTION I

INTRODUCTION

The analytical methods that follow are designed to analyze water, soil and sediment from hazardous waste sites for the organic compounds on the Target Compound List (TCL) (See Exhibit C). The methods are based on EPA Method 608 (Pesticides and PCBs).

The methods are divided into the following sections: sample preparation, screening and analysis. Sample preparation covers sample extraction and cleanup techniques. As described in the screening section, a portion of the extracts may be screened on a gas chromatograph with appropriate detector to determine the concentration level of pesticides/PCBs. The analysis section contains the gas chromatograph/electron capture detector (GC/EC) method for pesticides and PCBs.

1. Method for the Determination of Pesticides

1.1 Scope and Application

This method covers the determination of certain TCL organochloride pesticides and polychlorinated biphenyls as listed in Exhibit C. The contract required quantitation limits are also listed in Exhibit C. Because weathering and/or different formulations of chlordane usually modify the chromatographic pattern exhibited by technical chlordane, the use of this method is not appropriate for the determination of technical chlordane.

The analysis of the isomers alpha chlordane and gamma chlordane by this method is appropriate however.

1.2 The method involves solvent extraction of the matrix, analysis of the extract on a gas chromatograph/electron capture detector (GC/EC) using a packed column, and confirmation on a GC/EC using a second packed column. (An optional fused silica capillary column may be used for confirmation.) If concentration permits, confirmation is to be done on GC/MS.

SECTION II

SAMPLE PREPARATION AND STORAGE

PART A - SAMPLE STORAGE AND HOLDING TIMES

1. Procedures for Sample Storage

1.1 The samples must be protected from light and refrigerated at 4°C (± 2°C) from the time of receipt until extraction and analysis.

1.2 After analysis, extracts and unused sample volume must be protected from light and refrigerated at 4° C (± 2° C) for the periods specified in the contract schedule.

2. Contract Required Holding Times

2.1 If separatory funnel or sonication procedures are employed for extractions for pesticide/ PCB analyses, extraction of water samples shall be completed within 5 days of VTSR (Validated Time of Sample Receipt), and extraction of soil/ sediment samples shall be completed within 10 days of VTSR. If continuous liquid-liquid extraction procedures are employed, extraction of water samples shall be started within 5 days of VTSR.

2.2 Extracts of either water or soil/sediment samples must be analyzed within 40 days following extraction.

PART B - SAMPLE PREPARATION FOR PESTICIDES/PCBs IN WATER

1. Summary of Method

A measured volume of sample, approximately one-liter, is solvent extracted with methylene chloride using a separatory funnel or a continuous extractor. The methylene chloride extract is dried, exchanged to hexane and adjusted to a final volume of 10 mL.

2. Interferences

2.1 Method interferences may be caused by contaminants in solvents, reagents, glassware, and other sample processing hardware that lead to discrete artifacts and/or elevated baselines in gas chromatograms. All of these materials must be routinely demonstrated to be free from interferences under the conditions of the analysis by running laboratory reagent blanks. Interferences by phthalate esters can pose a major problem in pesticide analysis when using the electron capture detector. These compounds generally appear in the chromatogram as broad eluting peaks. Common flexible plastics contain varying amounts of phthalates. These phthalates are easily extracted or leached from such materials during laboratory operations. Cross-contamination of clean glassware routinely occurs when plastics are handled. Interferences from phthalates can best be minimized by avoiding the use of plastics in the laboratory. Exhaustive cleanup of reagents and glassware may be required to eliminate background phthalate contamination.

2.2 Matrix interferences may be caused by contaminants that are coextracted from the sample. The extent of matrix interferences will vary considerably from source to source, depending upon the nature and diversity of the site being sampled. The cleanup procedures in paragraphs 7.1 thru 7.5 must be used to overcome such interferences to attempt to achieve the CRQLs. The cleanup procedures in paragraph 8.1 through 8.5 may be used to remove sulfur interferences.

3. Apparatus and Materials

3.1 Glassware (Brand names and catalog numbers included for illustration purposes only).

3.1.1 Separatory funnel - 2000 mL with Teflon stopcock.

3.1.2 Drying column - Chromatographic column approximately 400 mm long x 19 mm ID, with coarse frit. (Substitution of a small pad of disposable Pyrex glass wool for the frit will help prevent cross-contamination of sample extracts.)

3.1.3 Concentrator tube - Kuderna-Danish, 10 mL, graduated (Kontes K-570050-1025 or equivalent). Calibration must be checked at the volumes employed in the test. Ground glass stopper is used to prevent evaporation of extracts.

3.1.4 Evaporative flask - Kuderna-Danish, 500 mL (Kontes K-570001-0500 or equivalent). Attach to concentrator tube with springs.

3.1.5 Snyder oolumn - Kuderna-Danish, Three-ball macro (Kontes K-503000-0121 or equivalent).

3.1.6 Snyder column - Kuderna-Danish, Two-ball micro (Kontes K-569001-0219 or equivalent).

3.1.7 Continuous liquid-liquid extractors - Equipped with Teflon or glass connecting joints and stopcocks requiring no lubrication. (Hershberg-Wolf Extractor-Ace Glass Company, Vineland, NJ P/N 6841-10, or equivalent.)

3.1.8 Vials - Amber glass, 10 to 15 mL capacity, with Teflon-lined screw cap.

3.1.9 Bottle or test tube - 50 mL with Teflon-lined screw cap for sulfur removal.

3.1.10 Chromatographic column for alumina - 8 mL (200 mm X 8 mm ID) Polypropylene column (Kontes K-420160 or equivalent) or 6 mL (150 mm x 8 mm ID) glass column (Kontes K-420155 or equivalent) or 5 mL serological pipettes plugged with a small piece of Pyrex glass wool in the tip. The Kontes columns may be plugged with Pyrex glass wool or a polyethylene porous disk (Kontes K-420162).

3.2 Pyrex glass wool - Pre-rinse glass wool with appropriate solvents to ensure its cleanliness.

3.3 Silicon carbide boiling chips - Approximately 10/40 mesh. Heat to 400°C for 30 minutes or Soxhlet extract with methylene chloride.

3.4 Water bath - Heated, with concentric ring cover, capable of temperature control (± 2°C). The bath should be used in a hood.

3.5 Balance - Analytical, capable of accurately weighing ± 0.0001 g.

3.6 Nitrogen evaporation device equipped with a water bath that can be maintained at 35-40°C. The N-Evap by Organomation Associates, Inc. South Berlin, MA (or equivalent) is suitable.

4. <u>Reagents</u>

4.1 Reagent water - Reagent water is defined as a water in which an interferent is not observed at or above the CRQL of each parameter of interest.

4.2 Acetone, hexane, isooctane (2,2,4-trimethylpentane), methylene chloride Pesticide quality or equivalent.

4.3 Sodium sulfate - (ACS) granular, anhydrous. Purify by heating at 400°C for 4 hours in a shallow tray.

4.4 Alumina - Neutral, Super I Woelm (Universal Scientific, Incorporated, Atlanta, Georgia) or equivalent. Prepare activity III by adding 7%

(v/w) reagent water to the Super I neutral alumina. Tumble or shake in a wrist action shaker for a minimum of 2 hours or preferably overnight. There should be no lumps present. Store in a tightly sealed glass container. A 25 cycle soxhlet extraction of the alumina with methylene chloride is required if a solvent blank analyzed by the pesticide technique indicates any interferences for the compounds of interest.

4.4.1 Alumina Equivalency Check. Test the alumina by adding the BNA surrogates (see Exhibit D SV) in 1:1 acetone/hexane to the alumina and following paragraph 7.1. The tribromophenol should not be detected by GC/EC if the alumina and its activation are acceptable. Also check recovery of all single component pesticides following the same procedure. The percent recovery for all single component pesticides must be ≥80%, except for endosulfan sulfate which must be ≥60% and endrin aldehyde which is not recovered. The data must be retained by the laboratory and made available for inspection during on-site evaluations. If the alumina deactivated with 7% (v/w) reagent water does not prove adequate to remove the BNA surrogates and other interferences, the alumina may be deactivated with as much as 9% reagent water, so long as the criteria for tribromophenol and the recovery of all single component pesticides can be met.

4.5 Sodium hydroxide solution (10N)-(ACS). Dissolve 40 g NaOH in reagent water and dilute to 100 mL.

4.6 Tetrabutylammonium (TBA) - Sulfite reagent. Dissolve 3.39 g tetrabutylammonium hydrogen sulfate in 100 mL distilled water. To remove impurities, extract this solution three times with 20 mL portions of hexane. Discard the hexane extracts, and add 25 g sodium sulfite to the water solution. Store the resulting solution, which is saturated with sodium sulfite, in an amber bottle with a Teflon-lined screw cap. This solution can be stored at room temperature for at least one month.

4.7 Pesticide surrogate standard spiking solution.

4.7.1 The surrogate standard is added to all samples and calibration solutions; the compound specified for this purpose is dibutylchlorendate.

4.7.2 Prepare a surrogate standard spiking solution at a concentration of 1 ug/1.00 mL in acetone. Store the spiking solutions at 4°C (± 2°C) in Teflon-sealed containers. The solutions should be checked frequently for stability. These solutions must be replaced after twelve months, or sooner, if comparison with quality control check samples indicates a problem.

4.8 Sulfuric acid solution (1+1)-(ACS). Slowly, add 50 mL H_2SO_4 (sp. gr. 1.84) to 50 mL of reagent water.

4.9 Pesticide matrix standard spiking solution. Prepare a spiking solution of acetone or methanol that contains the following pesticides in the concentrations specified.

Pesticide	ug/1.0 mL
Lindane	0.2
Heptachlor	0.2
Aldrin	0.2
Dieldrin	0.5
Endrin	0.5
4,4' DDT	0.5

Matrix spikes are also to serve as duplicates by spiking two 1-liter portions from the one sample chosen for spiking.

4.10 See Exhibit A for a summary of the quality control requirements of this contract. See Exhibit E for contract-required quality assurance/quality control procedures.

5. Sample Extraction - Separatory Funnel

5.1 Samples may be extracted using separatory funnel techniques. If emulsions prevent acceptable solvent recovery with separatory funnel extractions, continuous liquid-liquid extraction (paragraph 6.1) may be used. The separatory funnel extraction scheme described below assumes a sample volume of one liter.

5.2 Using a 1-liter graduated cylinder, measure out a 1-liter sample aliquot and place it into a 2-liter separatory funnel. Check the pH of the sample with wide range pH paper and adjust to between 5 and 9 pH with 10 N sodium hydroxide and/or 1:1 sulfuric acid solution. (NOTE: Recovery of dibutylchlorendate will be low if pH is outside this range. Alpha-BHC, gamma-BHC, Endosulfan I and II and Endrin are subject to decomposition under alkaline conditions and therefore may not be detected if the pH is above 9.) Pipet 1.0 mL surrogate standard spiking solution into the separatory funnel and mix well. Add 1.0 mL of pesticide matrix spiking solution to each of two 1-liter portions from the sample selected for spiking.

5.3 Add 60 mL methylene chloride to the separatory funnel and extract the sample by shaking the funnel for two minutes, with periodic venting to release excess pressure. Allow the organic layer to separate from the water phase for a minimum of 10 minutes. If the emulsion interface between layers is more than one-third the volume of the solvent layer, the analyst must employ mechanical techniques to complete the phase separation. The optimum technique depends upon the sample, and may include: stirring, filtration of the emulsion through glass wool, centrifugation or other physical means. Drain methylene chloride into a 250 mL Erlenmeyer flask.

5.4 Add a second 60 mL volume of methylene chloride to the sample bottle and repeat the extraction procedure a second time, combining the extracts in the Erlenmeyer flask. Perform a third extraction in the same manner.

5.5 Assemble a Kuderna-Danish (K-D) concentrator by attaching a 10-mL concentrator tube to a 500-mL evaporative flask. Other concentration devices or techniques may be used in place of the K-D if equivalency is demonstrated for all pesticides listed in Exhibit C.

5.6 Pour the combined extract through a drying column containing about 10 cm of anhydrous granular sodium sulfate, and collect the extract in the K-D concentrator. Rinse the Erlenmeyer flask and column with 20 to 30 mL of methylene chloride to complete the quantitative transfer.

5.7 Add one or two clean boiling chips to the evaporative flask and attach a three-ball Snyder column. Pre-wet the Snyder column by adding about 1 mL methylene chloride to the top. Place the K-D apparatus on a hot water bath (80 to 90°C) so that the concentrator tube is partially immersed in the hot water and the entire lower rounded surface of the flask is bathed with hot vapor. Adjust the vertical position of the apparatus and the water temperature as required to complete the concentration in 10 to 15 minutes. At the proper rate of distillation, the balls of the column will actively chatter but the chambers will not flood with condensed solvent. When the apparent volume of liquid reaches 1 mL, remove the K-D apparatus. Allow it to drain and cool for at least 10 minutes.

5.8 Momentarily remove the Snyder column, add 50 mL of hexane and a new boiling chip and re-attach the Snyder column. Pre-wet the column by adding about 1 mL of hexane to the top. Concentrate the solvent extract as before. The elapsed time of concentration should be 5 to 10 minutes. When the apparent volume of liquid reaches 1 mL, remove the K-D apparatus and allow it to drain and cool at least 10 minutes.

5.9 Remove the Snyder column, rinse the flask and its lower joint into the concentrator tube with 1 to 2 mL of hexane. If sulfur crystals are a problem, proceed to paragraph 8.1: otherwise continue to paragraph 5.10.

5.10 Nitrogen blowdown technique (taken from ASTM Method D 3086)

Place the concentrator tube in a warm water bath (35°C) and evaporate the solvent volume to 0.5 mL using a gentle stream of clean, dry nitrogen (filtered through a column of activated carbon). Caution: New plastic tubing must not be used between the carbon trap and the sample, as it may introduce interferences. The internal wall of the tube must be rinsed down several times with hexane during the operation and the final volume brought to 0.5 mL. During evaporation, the tube solvent level must be kept below the water level of the bath. The extract must never be allowed to become dry.

5.11 Dilute the extract to 1 mL with acetone and proceed to 7.1 (Alumina Column Cleanup).

6. Sample Extraction - Continuous Liquid-Liquid Extractor

6.1 When experience with a sample from a given source indicates that a serious emulsion problem will result, or if an emulsion is encountered

in paragraph 5.3 using a separatory funnel, a continuous extractor should be used.

6.2 Using a 1-liter graduated cylinder, measure out a 1-liter sample aliquot and place it into the continuous extractor. Pipet 1.0 mL surrogate standard spiking solution into the continuous extractor and mix well. Check the pH of the sample with wide range pH paper and adjust to between 5 and 9 pH with 10N sodium hydroxide and/or 1:1 sulfuric acid solution.

6.3 Add 500 mL of methylene chloride to the distilling flask. Add sufficient reagent water to ensure proper operation and extract for 18 hours. Allow to cool, then detach the boiling flask and dry. Concentrate the extract as in paragraphs 5.5 through 5.11.

7. Alumina Column Cleanup

7.1 Add 3 g of activity III neutral alumina to the 10-mL chromatographic column. Tap the column to settle the alumina. Do not pre-wet the alumina.

7.2 Transfer the 1 mL of hexane/acetone extract from paragraph 5.11 to the top of the alumina using a disposable Pasteur pipet. Collect the eluate in a clean 10-mL concentrator tube.

7.3 Add 1 mL of hexane to the original extract concentrator tube to rinse it. Transfer these rinsings to the alumina column. Elute the column with an additional 9 mL of hexane. Do not allow the column to go dry during the addition and elution of the sample.

7.4 Adjust the extract to a final volume of 10 mL using hexane.

7.5 The pesticide/PCB fraction is ready for analysis. Proceed to Section IV, paragraph 3. Store the extracts at 4°C (±2°C) in the dark in Teflon-sealed containers until analyses are performed.

8. Optional Sulfur Cleanup

8.1 Concentrate the hexane extract from paragraph 5.9 to 1 mL.

8.2 Transfer the 1 mL to a 50 mL clear glass bottle or vial with a Teflon-lined screw cap. Rinse the concentrator tube with 1 mL of hexane, adding the rinsings to the 50 mL bottle.

8.3 Add 1 mL TBA-sulfite reagent and 2 mL 2-propanol, cap the bottle, and shake for at least 1 min. If the sample is colorless or if the initial color is unchanged, and if clear crystals (precipitated sodium sulfite) are observed, sufficient sodium sulfite is present. If the precipitated sodium sulfite disappears, add more crystalline sodium

sulfite in approximately 100 mg portions until a solid residue remains after repeated shaking.

8.4 Add 5 mL distilled water and shake for at least 1 minute. Allow the sample to stand 5-10 minutes. Transfer the hexane layer (top) to a concentrator ampule and go back to paragraph 5.10.

PART C - PROTOCOLS FOR SOIL/SEDIMENT

It is mandatory that all soil/sediment samples be characterized as to concentration level so that the appropriate analytical protocol may be chosen to ensure proper quantitation limits for the sample.

The use of GC/EC methods is recommended for screening soil/sediment samples for pesticides/PCBs, however, the Contractor is at liberty to determine the specific method of characterization.

Note that the terms "low level" and "medium level" are not used here as a judgement of degree of contamination but rather as a description of the concentration ranges that are encompassed by the "low" and "medium" level procedures.

The concentration range covered by the low level analysis may be considered to be less than 1000 ug/kg of pesticides/PCBs. The concentration range covered by the medium level analysis is greater than 1000 ug/kg.

1. Medium Level Preparation for Analysis of Pesticides/PCBs in Soil/Sediment

1.1 Scope and Application

This procedure is designed for the preparation of sediment/soil samples which may contain pesticides/PCBs at a level greater than 1,000 ug/kg.

1.1.1 Samples to be prepared and analyzed by this method should have been screened by GC/EC techniques. The results of those screens will determine whether sufficient quantities of pesticides/PCBs are present to warrant analysis by the medium level protocol.

1.1.2 If the screenings indicate no detectable pollutants at a level of quantitation of 1000 ug/kg, the sample should be prepared by the low level protocol in this Section.

1.1.3 If the extract for pesticide/PCB analysis is to be prepared from an aliquot of the semivolatile extract, also refer to the specific instructions in Exhibit D SV.

1.2 Summary of Method

1.2.1 Portions of soil/sediment are extracted and screened by methods of the Contractor's choice.

1.2.2 If pesticides/PCBs are detected in the screen at levels above approximately 1000 ug/kg, a 1 g sample is extracted with 10.0 mL of hexane for analysis by GC/EC.

1.2.3 If no pesticides/PCBs are detected above 1000 ug/kg, then the sample shall be prepared by the low level protocol.

1.3 Interferences

1.3.1 Method interferences may be caused by contaminants in solvents, reagents, glassware and other sample processing hardware that lead to discrete artifacts and/or elevated baselines in the total ion current profiles. All of these materials must be routinely demonstrated to be free from interferences under the conditions of the analysis by running laboratory reagent blanks. Matrix interferences may be caused by contaminants that are coextracted from the sample. The extent of matrix interferences will vary considerably from source to source.

1.4 Limitations

1.4.1 The procedure is designed to allow quantitation limits as low as 1000 ug/kg for pesticides/PCBs. If peaks are present based on GC screen, the sample is determined to require a medium level analysis by GC/EC. Some samples may contain high concentrations of chemicals that interfere with the analysis of other components at lower levels; the quantitation limits in those cases may be significantly higher.

1.5 Reagents

1.5.1 Sodium Sulfate - anhydrous powdered reagent grade, heated at 400°C for four hours, cooled in a desiccator and stored in a glass bottle Baker anhydrous powder, catalog # 73898 or equivalent.

1.5.2 Methylene chloride. Pesticide residue analysis grade or equivalent.

1.5.3 Hexane. Pesticide residue analysis grade or equivalent.

1.5.4 Methanol. Pesticide residue analysis grade or equivalent.

1.5.5 Acetone. Pesticide residue analysis grade or equivalent.

1.5.6 Pesticide/PCB Surrogate Standard Spiking solution.

1.5.6.1 The compound specified is dibutylchlorendate. Prepare a solution at a concentration of 20 ug/1.0 mL in methanol. Store the spiking solutions at 4°C (±2°C) in Teflon-sealed containers. The solutions should be checked frequently for stability. These solutions must be replaced after twelve months, or sooner, if comparison with quality control check samples indicates a problem.

1.5.7 Pesticide/PCB Matrix Standard Spiking solution

1.5.7.1 Prepare a spiking solution in methanol that contains the following pesticides in the concentrations specified below. Store the spiking solutions at 4°C

(±2°C) in Teflon-sealed containers. The solutions should be checked frequently for stability. These solutions must be replaced after twelve months, or sooner, if comparison with quality control check samples indicates a problem.

Pesticide	ug/1.0mL
lindane	2.0
heptachlor	2.0
aldrin	2.0
dieldrin	5.0
endrin	5.0
4,4' DDT	5.0

1.5.8 Alumina - neutral, super I Woelm (Universal Scientific, Atlanta, GA) or equivalent. Prepare activity III by adding 7% (v/w) reagent water to the Super I neutral alumina. Tumble or shake on a wrist action shaker for a minimum of 2 hours or preferably overnight. There should be no lumps present. Store in a tightly sealed glass container. A 25 cycle soxhlet extraction of the alumina with methylene chloride is required if a solvent blank analyzed by the pesticide techniques indicates any interferences for the compounds of interest.

1.5.8.1 Alumina Equivalency Check. Test the alumina by adding the BNA surrogates (see Exhibit D SV) in 1:1 acetone/hexane to the alumina and following paragraph 2.8.1. The tri-bromophenol should not be detected by GC/EC if the alumina and its activation are acceptable. Also check recovery of all single component pesticides following the same procedure. The percent recovery for all single component pesticides must be ≥80%, except for endosulfan sulfate which must be ≥60% and endrin aldehyde which is not recovered. The data must be retained by the laboratory and made available for inspection during on-site evaluations. If the alumina deactivated with 7% (v/w) reagent water does not prove adequate to remove the BNA surrogates and other interferences, the alumina may be deactivated with as much as 9% reagent water, so long as the criteria for tribromophenol and the recovery of all single component pesticides can be met.

1.5.9 Reagent Water - Reagent water is defined as water in which an interferent is not observed at or above the CRQL of each parameter of interest.

1.6 Equipment

1.6.1 Glass scintillation vials, at least 20 mL, with screw cap and teflon or aluminum foil liner.

1.6.2 Spatula. Stainless steel or Teflon.

1.6.3 Balance capable of weighing 100 g to the nearest 0.01 g.

1.6.4 Vials and caps, 2 mL for GC auto sampler.

1.6.5 Disposable pipettes, Pasteur; glass wool rinsed with methylene chloride.

1.6.6 15-mL concentrator tubes.

1.6.7 Ultrasonic cell disruptor, Heat Systems-Ultrasonics, Inc., Model W-385 SONICATOR (475 Watt with pulsing capability, No. 200 1/2 inch tapped disruptor horn, and No. 419 1/8 inch standard tapered MICROTIP probe), or equivalent device with a minimum of 375 Watt output capability. NOTE: In order to ensure that sufficient energy is transferred to the sample during extraction, the MICROTIP probe must be replaced if the tip begins to erode. Erosion of the tip is evidenced by a rough surface.

1.6.8 Sonabox acoustic enclosure - recommended with above disruptors for decreasing cavitation sound.

1.6.9 Test tube rack.

1.6.10 Oven, drying.

1.6.11 Desiccator.

1.6.12 Crucibles, porcelain.

1.6.13 Chromatography column for alumina. 8 mL (200 mm & 8 mm ID) Polypropylene column (Kontes K-420160 or equivalent) or 6 mL (150 mm X 8 mm ID) glass column (Kontes K-420155 or equivalent) or 5 mL serological pipettes plugged with a small piece of Pyrex glass wool in the tip. (Pyrex glass wool shall be pre-rinsed with appropriate solvents to insure its cleanliness). The Kontes columns may be plugged with Pyrex glass wool or a polyethylene porous disk (Kontes K-420162).

1.7 Sample Preparation

1.7.1 Medium Level preparation for analysis of Pesticide/PCBs (Determine results of GC/EC screen before proceeding.)

1.7.1.1 Transfer the sample container into a fume hood. Open the sample vial and mix the sample. Transfer approximately 1 g (record weight to nearest 0.1 g) of sample to a 20 mL vial. Wipe the mouth of the vial with a tissue to remove any sample material. Record the exact weight of the sample taken. Cap the vial before proceeding with the next sample to avoid any cross contamination.

1.7.1.1.1 Transfer 50 g of soil/sediment to 100 mL beaker. Add 50 mL of water and stir for 1 hour. Determine pH of sample with glass electrode and pH meter while stirring. Report pH value on appropriate data sheets. If the pH of the soil is greater than 11 or less than 5, contact the Deputy Project Officer cited in the contract for instructions on how to handle the sample. Document the instructions in the Case Narrative. Discard this portion of sample. NOTE: Recovery of dibutylchlorendate will be low if pH is outside this range.

1.7.1.2 Add at least 2 g of anhydrous powdered sodium sulfate to the sample and mix well.

1.7.1.3 Surrogate standards are added to all samples, spikes and blanks. Add 50 uL of surrogate spiking solution to the sample mixture.

1.7.1.4 Add 1.0 mL of matrix standard spiking solution to each of two 1 g portions from the sample chosen for spiking.

1.7.1.5 Immediately add 10.0 mL (only 9.0 mL for the matrix spike sample) of hexane to the sample and disrupt the sample with the 1/8 inch tapered MICROTIP ultrasonic probe for 1 minute with the W-385 (or 2 minutes with the W-375) with output control setting at 5 and mode switch on "1 sec. pulse" and % duty cycle set at 50%. (If using a sonicator other than Models W-375 or W-385, contact the Project Officer for appropriate output settings.) Before extraction, make certain that the sodium sulfate is free flowing and not a consolidated mass. As required, break up large lumps with a clear spatula, or very carefully with the tip of the unenergized probe.

1.7.1.6 Loosely pack disposable Pasteur pipettes with 2-3 cm glass wool plugs. Filter the extract through the glass wool and collect at approximately 5 mL in a concentrator tube.

1.7.1.7 Transfer 1.0 mL of the hexane extract to a glass concentrator tube and concentrate to 0.5 mL using Nitrogen blowdown. Add 0.5 mL of acetone to 0.5 mL of hexane extract. Swirl to mix. The pesticide extract must now be passed through an alumina column to remove polar interferences.

1.7.1.8 Follow the procedures for low level soil sediment preparation outlined in paragraphs 2.8.1.1 through 2.8.3.3 for alumina cleanup and sulfur removal.

2. Low Level Preparation for Analysis of Pesticides/PCBs in Soil/Sediment

2.1 Summary of Method

2.1.1 If based on the results of a GC/EC screen, no pesticides/PCBs are present in the sample above 1000 ug/kg, a 30 gram portion of soil/ sediment is mixed with anhydrous powdered sodium sulfate and extracted with 1:1 methylene chloride/acetone using an ultrasonic probe. The extract is concentrated and an optional gel permeation column cleanup may be used. The extract is cleaned up using a micro alumina column and analyzed by GC/EC for pesticides.

2.2 Interferences

2.2.1 Method interferences may be caused by contaminants in solvents, reagents, glassware and other sample processing hardware that lead to discrete artifacts and/or elevated baselines in the total ion current profiles. All of these materials must be routinely demonstrated to be free from interferences under the conditions of the analysis by running laboratory reagent blanks. Matrix interferences may be caused by contaminants that are coextracted from the sample. The extent of matrix interferences will vary considerably from source to source.

2.3 Apparatus and Materials

2.3.1 Apparatus for determining percent moisture

2.3.1.1 Oven, drying.

2.3.1.2 Desiccator.

2.3.1.3 Crucibles, porcelain.

2.3.2 Disposable Pasteur glass pipettes, 1 mL

2.3.3 Ultrasonic cell disruptor, Heat Systems - Ultrasonics, Inc. Model W-385 SONICATOR (475 watt with pulsing capability, No. 305 3/4 inch tapped high gain "Q" disruptor horn or No. 208 3/4 inch standard solid disruptor horn), or equivalent device with a minimum of 375 watt output capability. NOTE: In order to ensure that sufficient energy is transferred to the sample during extraction, the probe must be replaced if the tip begins to erode. Erosion of the tip is evidenced by a rough surface.

2.3.3.1 Sonabox acoustic enclosure - recommended with above disruptors for decreasing cavitation sound.

2.3.4 Beakers, 400 mL

2.3.5 Vacuum filtration apparatus

2.3.5.1 Buchner funnel.

2.3.5.2 Filter paper, Whatman No. 41 or equivalent.

2.3.6 Kuderna-Danish (K-D) apparatus.

2.3.6.1 Concentrator tube - 10 mL, graduated (Kontes K-570040-1025 or equivalent).

2.3.6.2 Evaporative flask - 500 mL (Kontes K-570001-0500 or equivalent).

2.3.6.3 Snyder column - three-ball macro (Kontes K-503000-0121 or equivalent).

2.3.6.4 Snyder column - two-ball micro (Kontes K-569001-0219) or equivalent).

2.3.7 Silicon carbide boiling chips - approximately 10/40 mesh. Heat to 400°C for 30 minutes or Soxhlet extract with methylene chloride.

2.3.8 Water bath - heated, with concentric ring cover, capable of temperature control (±2°C). The bath should be used in a hood.

2.3.9 Balance, capable of accurately weighing ± 0.01 g.

2.3.10 Vials and caps, 2 mL for GC auto sampler.

2.3.11 Balance - Analytical, capable of accurately weighing ± 0.0001 g.

2.3.12 Nitrogen evaporation device equipped with a water bath that can be maintained at 35-40°C. The N-Evap by Organomation Associates, Inc. South Berlin, MA (or equivalent) is suitable.

2.3.13 Gel permeation chromatography (GPC) cleanup device. NOTE: GPC cleanup is <u>highly recommended</u> for all extracts for low level soils.

2.3.13.1 Automated system

2.3.13.1.1 Gel permeation chromatograph Analytical Biochemical Labs, Inc. GPC Autoprep 1002 or equivalent including:

2.3.13.1.2 25 mm ID X 600 - 700 mm glass column packed with 70 g of Bio-Beads SX-3.

2.3.13.1.3 Syringe, 10 mL with Luer-Lock fitting.

2.3.13.1.4 Syringe filter holder and filters - stainless steel and TFE, Gelman 4310 or equivalent.

2.3.13.2 Manual system assembled from parts. (Wise, R.H., Bishop, D.F., Williams, R.T. & Austern, B.M. "Gel Permeation Chromatography in the GC/MS Analysis of Organics in Sludges" U.S. EPA, Municipal Environmental Research Laboratory - Cincinnati, Ohio 45268.)

2.3.13.2.1 25 mm ID X 600 - 700 mm heavy wall glass column packed with 70 g of BIO-Beads SX-3.

2.3.13.2.2 Pump: Altex Scientific, Model No. 1001A, semipreparative, solvent metering system.
Pump capacity = 28 mL/min.

2.3.13.2.3 Detector: Altex Scientific, Model No. 153, with 254 nm UV source and 8-ul semi-preparative flowcells (2-mm pathlengths)

2.3.13.2.4 Microprocessor/controller: Altex Scientific, Model No. 420, Microprocessor System Controller, with extended memory.

2.3.13.2.5 Injector: Altex Scientific, catalog No. 201-56, sample injection valve, Tefzel, with 10 mL sample loop.

2.3.13.2.6 Recorder: Linear Instruments, Model No. 385, 10-inch recorder.

2.3.13.2.7 Effluent Switching Valve: Teflon slider valve, 3-way with 0.060" ports.

2.3.13.2.8 Supplemental Pressure Gauge with connecting Tee: U.S.Gauge, 0-200 psi, stainless steel. Installed as a "downstream" monitoring device between column and detector. Flow rate was typically 5 mL/min. of methylene chloride. Recorder chart speed was 0.50 cm/min.

2.3.14 Chromatography column for alumina. 8 mL (200 mm & 8 mm ID) Polypropylene column (Kontes K-420160 or equivalent) or 6 mL (150 mm X 8 mm ID) glass column (Kontes K-420155 or equivalent) or 5 mL serological pipettes plugged with a small piece of Pyrex glass wool in the tip. (Pyrex glass wool shall be

pre-rinsed with appropriate solvents to ensure its cleanliness). The Kontes columns may be plugged with Pyrex glass wool or a polyethylene porous disk (Kontes K-420162).

2.3.15 Pyrex glass wool.

2.3.16 Bottle or test tube, 50 mL with Teflon-lined screw cap for sulfur removal.

2.3.17 Pasteur pipettes, disposable.

2.4 Reagents

2.4.1 Sodium Sulfate - anhydrous powdered reagent grade, heated at 400°C for four hours, cooled in a desiccator, and stored in a glass bottle. Baker anhydrous powder, catalog #73898 or equivalent.

2.4.2 Methylene chloride, hexane, acetone, isooctane, 2-propanol and benzene - pesticide quality or equivalent.

2.4.3 Alumina - neutral, super I Woelm (Universal Scientific, Atlanta, GA) or equivalent. Prepare activity III by adding 7% (v/w) reagent water to the Super I neutral alumina. Tumble or shake on a wrist action shaker for a minimum of 2 hours or preferably overnight. There should be no lumps present. Store in a tightly sealed glass container. A 25 cycle soxhlet extraction of the alumina with methylene chloride is required if a solvent blank analyzed by the pesticide techniques indicate any interferences for the compounds of interest.

2.4.3.1 Alumina Equivalency Check. Test the alumina by adding the BNA surrogates (see Exhibit D SV) in 1:1 acetone/hexane to the alumina and following paragraph 2.8.1. The tribromophenol should not be detected by GC/EC if the alumina and its activation are acceptable. Also check recovery of all single component pesticides following the same procedure. The percent recovery for all single component pesticides must be ≥80%, except for endosulfan sulfate which must be ≥60% and endrin aldehyde which is not recovered. The data must be retained by the Contractor and made available for inspection during on-site evaluations. If the alumina deactivated with 7% (v/w) reagent water does not prove adequate to remove the BNA surrogates and other interferences, the alumina may be deactivated with as much as 9% reagent water, so long as the criteria for tribromophenol and the recovery of all single component pesticides can be met.

2.4.4 Reagent water - Reagent water is defined as water in which an interferent is not observed at or above the CRQL of each parameter of interest.

2.4.5 Tetrabutylammonium (TBA) - sulfite reagent. Dissolve 3.39 g tetrabutylammonium hydrogen sulfate in 100 mL distilled water. To remove impurities, extract this solution three times with 20 mL portions of hexane. Discard the hexane extracts and add 25 g sodium sulfite to the water solution. Store the resulting solution, which is saturated with sodium sulfite, in an amber bottle with a Teflon-lined screw cap. This solution can be stored at room temperature for at least one month.

2.4.6 GPC calibration solutions:

2.4.6.1 Corn oil - 200 mg/mL in methylene chloride.

2.4.6.2 Bis(2-ethylhexylphthalate) and pentachlorophenol - 4.0 mg/mL in methylene chloride.

2.4.7 Sodium Sulfite, reagent grade.

2.4.8 Surrogate standard spiking solution.

2.4.8.1 Pesticide surrogate standard spiking solution.

2.4.8.1.1 The surrogate standard is added to all samples, blanks, matrix spike, matrix spike duplicates and calibrations solutions; the compound specified for this purpose is dibutylchlorendate.

2.4.8.1.2 Prepare a surrogate standard spiking solution at a concentration of 20 ug/1.0 mL in methanol. Store the spiking solutions at 4°C (±2°C) Teflon-sealed containers. The solutions should be checked frequently for stability. These solutions must be replaced after twelve months, or sooner if comparison with quality control check samples indicates a problem.

2.4.9 Matrix standard spiking solutions.

2.4.9.1 Pesticide matrix standard spiking solution. Prepare a spiking solution in methanol that contains the following pesticides in the concentrations specified below. Store spiking solutions at 4°C (±2°) in Teflon-sealed containers. The solutions should be checked frequently for stability. These solutions must be replaced after twelve months, or sooner if comparison with quality control check samples indicate a problem.

Pesticide	ug/1.0 mL
lindane	2.0
heptachlor	2.0
aldrin	2.0
dieldrin	5.0
endrin	5.0
4,4' DDT	5.0

Matrix spikes are also to serve as duplicates, therefore, add volume specified in Sample Extraction section to each of two 30 g portions from one sample chosen for spiking.

2.5 Sample Extraction

2.5.1 Decant and discard any water layer on a sediment sample. Mix samples thoroughly, especially composited samples. Discard any foreign objects such as sticks, leaves and rocks.

2.5.1.1 Transfer 50 g of soil/sediment to 100 mL beaker. Add 50 mL of water and stir for 1 hour. Determine pH of sample with glass electrode and pH meter while stirring. Report pH value on appropriate data sheets. If the pH of the soil is greater than 11 or less than 5, contact the Deputy Project Officer cited in the contract for instructions on how to handle the sample. Document the instructions in the Case Narrative. Discard this portion of sample. NOTE: Recovery of dibutylchlorendate will be low if pH is outside this range.

2.5.2 The following step should be performed rapidly to avoid loss of the more volatile extractables. Weigh approximately 30 g of sample to the nearest 0.1 g into a 400-mL beaker and add 60 g of anhydrous powdered sodium sulfate. Mix well. The sample should have a sandy texture at this point. Immediately, add 100 mL of 1:1 methylene chloride - acetone to the sample.

2.5.2.1 Immediately after weighing the sample for extraction, weigh 5-10 g of the sediment into a tared crucible. Determine the percent moisture by drying overnight at 105°C. Allow to cool in a desiccator before weighing. Concentrations of individual analytes will be reported relative to the dry weight of sediment.

$$\frac{\text{g of sample - g of dry sample}}{\text{g of sample}} \times 100 = \%\ \text{moisture}$$

2.5.2.2 Weigh out two 30 g (record weight to nearest 0.1 g) portions for use as matrix and matrix spike duplicates. Follow 2.5.2. When using GPC cleanup, add 800 uL of the pesticide matrix spike to each of

the other two portions. When not using GPC cleanup, add 400 uL of the pesticide matrix spike to each of the two portions.

2.5.2.3 When using GPC, add 200 uL of pesticide surrogate to the sample. When not using GPC, add 100 uL of pesticide surrogate to the sample.

2.5.3 Place the bottom surface of the tip of the 3/4 inch disruptor horn about 1/2 inch below the surface of the solvent but above the sediment layer.

2.5.4 Sonicate for 1 1/2 minutes with the W-385 (or 3 minutes with the W-375), using No. 208 3/4 inch standard disruptor horn with output control knob set at 10 (or No. 305 3/4 inch tapped high gain "Q" disruptor horn at 5) and mode switch on "1 sec. pulse" and % duty cycle knob set at 50%. Do NOT use MICROTIP probe. (If using a sonicator other than Models W-375 or W-385, contact the Project Officer for appropriate output settings).

2.5.5 Decant and filter extracts through Whatman #41 filter paper using vacuum filtration or centrifuge and decant extraction solvent.

2.5.6 Repeat the extraction two more times with 2 additional 100 mL portions of 1:1 methylene chloride - acetone. Before each extraction, make certain that the sodium sulfate is free flowing and not a consolidated mass. As required, break up large lumps with a clean spatula, or very carefully with the tip of the unenergized probe. Decant off the extraction solvent after each sonication. On the final sonication, pour the entire sample into the Buchner funnel and rinse with 1:1 methylene chloride - acetone.

2.5.7 Transfer the extract to a Kuderna-Danish (K-D) concentrator consisting of a 10 mL concentrator tube and a 500 mL evaporative flask. Other concentration devices or techniques may be used if equivalency is demonstrated for all extractable and pesticide compounds listed in Exhibit C.

2.5.8 Add one or two clean boiling chips to the evaporative flask and attach a three-ball Snyder column. Pre-wet the Snyder column by adding about 1 mL methylene chloride to the top. Place the K-D apparatus on a hot water bath (80 to 90°C) so that the concentrator tube is partially immersed in the hot water and the entire lower rounded surface of the flask is bathed with hot vapor. Adjust the vertical position of the apparatus and the water temperature as required to complete the concentration in 10 to 15 minutes. At the proper rate of distillation the balls of the column will actively chatter but the chambers will not flood with condensed solvent. When the apparent volume of liquid reaches 1 mL, remove the K-D apparatus and allow it to drain and cool for at least 10 minutes, and make up to 10 mL volume with methylene chloride.

2.5.9 If GPC cleanup is not used proceed to paragraph 2.7.

2.6. Extract Cleanup

2.6.1 GPC Setup and Calibration

2.6.1.1 Packing the column - Place 70 g of Bio Beads SX-3 in a 400 mL beaker. Cover the beads with methylene chloride; allow the beads to swell overnight (before packing the columns). Transfer the swelled beads to the column and start pumping solvent through the column, from bottom to top, at 5.0 mL/min. After approximately 1 hour, adjust the pressure on the column to 7 to 10 psi and pump an additional 4 hours to remove air from the column. Adjust the column pressure periodically as required to maintain 7 to 10 psi.

2.6.1.2 Calibration of the column - Load 5 mL of the corn oil solution into sample loop No. 1 and 5 mL of the phthalate-phenol solution into loop No. 2. Inject the corn oil and collect 10 mL fraction (i.e., change fraction at 2-minute intervals) for 36 minutes. Inject the phthalate-phenol solution and collect 15 mL fractions for 60 minutes. Determine the corn oil elution pattern by evaporation of each fraction to dryness followed by a gravimetric determination of the residue. Analyze the phthalate-phenol fractions by GC/FID on the DB-5 capillary column, a UV spectrophotometer or a GC/MS system. Plot the concentration of each component in each fraction versus total eluent volume (or time) from the injection points. Choose a "dump time" which allows ≥85% removal of the corn oil and ≥85% recovery of the bis(2-ethylhexyl)-phthalate. Choose the "collect time" to extend at least 10 minutes after the elution of pentachlorophenol. Wash the column at least 15 minutes between samples. Typical parameters selected are: Dump time, 30 minutes (150 mL), collect time, 36 minutes (180 mL), and wash time, 15 minutes (75 mL). The column can also be calibrated by the use of a 254 mm UV detector in place of gravimetric and GC analyses of fractions. Measure the peak areas at various elution times to determine appropriate fractions.

The SX-3 Bio Beads column may be reused for several months, even if discoloration occurs. System calibration usually remains constant over this period of time if column flow rate remains constant.

2.6.2 GPC Extract Cleanup

Prefilter or load all extracts via the filter holder to avoid particulates that might stop the flow. Load one 5.0 mL aliquot of the extract onto the GPC column. Do not apply excessive pressure when loading the GPC. Purge the sample loading tubing thoroughly with solvent between extracts. After especially dirty extracts, run a GPC blank (methylene chloride) to check for carry-over. Process the extracts using the dump, collect and wash parameters determined from the calibration and collect the cleaned extracts in 400 mL beakers tightly covered with aluminum foil. The phthalate-phenol calibration solution shall be taken through the cleanup cycle with each set of 23 extracts loaded into the GPC. The recovery for each compound must be ≥85%. This must be determined on a GC/FID, using a DB-5 capillary column, a UV recording spectrophotometer or a GC/MS system. A copy of the printouts of standard and check solution are required as deliverables with each case. Show % recovery on the copy.

2.6.2.1 If GPC cleanup of samples is required because of poor GC/ EC chromatography in Section IV, dilute the extract to 10 mL with methylene chloride and perform GPC cleanup as per paragraph 2.6.2. The reagent blank accompanying the samples should be included, unless only one or a partial group of samples requires cleanup. In this case, set up a new reagent blank with 10 mL of methylene chloride and appropriate surrogate standard added.

2.6.3 Concentrate the extract as per paragraphs 2.5.7 and 2.5.8.

2.7 Final Concentration of Extract with Optional Extract Splitting Procedure

If the extract in 2.5.8 is to be used only for pesticide/PCB analysis, it must be concentrated to a volume of 1.0 mL, following the procedure in 2.7.1.

If the extract in 2.5.8 is to be used for <u>both</u> semivolatile and pesticide/ PCB analyses, then it must be split into two portions. In that case, follow the procedure in 2.7.1 to obtain the pesticide portion, and follow that with the procedure in 2.7.2 to obtain the semivolatile portion. Refer to Exhibit D SV for specific instructions regarding the treatment of extracts for semivolatile analysis.

2.7.1 If the extract is to be used only for the pesticide/PCB analysis, or if the same extract is used for both semivolatile and pesticide/ PCB analyses, to split out the pesticide/PCB extract, transfer 0.5 mL of the 10 mL methylene chloride extract to a separate concentrator tube. Add 5 mL of hexane and a silicon carbide boiling chip and mix using vortex mixer. Attach a two-ball micro-Snyder column. Pre-wet the Snyder column by adding 0.5 mL of hexane to the top of the column.

Place the K-D apparatus on a hot water bath (80 - 90°C) so that the concentrator tube is partially immersed in the hot water. Adjust the vertical position of the apparatus and the water temperature as required to complete the concentration in 5 to 10 minutes. Concentrate the extract to an apparent volume of less than 1 mL. Use Nitrogen blowdown (see 2.7.3) to reduce the volume to 0.5 mL. Add 0.5 mL of acetone. The pesticide extract must now be passed through an alumina column to remove the BNA surrogates and polar interferences. Proceed to paragraph 2.8.

2.7.2 If the extract in 2.5.8 <u>was</u> split in 2.7.1 to obtain a portion for pesticides analysis, the portion for semivolatile analysis must be treated according to the procedures in Exhibit D SV, Section II, Part C, paragraph 2.7.2.2.

2.7.3 Nitrogen blowdown technique (taken from ASTM Method D 3086). Place the concentrator tube in a warm water bath (35°C) and evaporate the solvent volume to below 1 mL using a gentle stream of clean, dry nitrogen (filtered through a column of activated carbon). <u>Caution</u>: New plastic tubing must not be used between the carbon trap and the sample, since it may introduce interferences.

The internal wall of the tube must be rinsed down several times with hexane during the operation. During evaporation, the tube solvent level must be kept below the water level of the bath. The extract must never be allowed to become dry. If GPC cleanup techniques were employed, the 0.5 mL volume represents a two-fold dilution to account for the fact that only half the extract went through the GPC, and therefore, the sample detection limit would be 2x CRQL (see Exhibit B).

2.7.4 Store all extracts at 4°C (±2°C) in the dark in Teflon-sealed containers until all analyses are performed.

2.8 Pesticide/PCB

2.8.1 Alumina Column Cleanup

All samples prepared from the same extract as used for the semivolatile analysis must be taken through this cleanup technique to eliminate BNA surrogates that will interfere in the GC/EC analysis.

2.8.1.1 Add 3 g of activity III neutral alumina to the 10 mL chromatographic column. Tap the column to settle the alumina. Do not pre-wet the alumina.

2.8.1.2 Transfer the 1.0 mL of hexane/acetone extract from paragraph 2.7.1 to the top of the alumina using a disposable Pasteur pipette. Collect the eluate in a clean, 10 mL concentrator tube.

2.8.1.3 Add 1 mL of hexane to the original extract concentrator tube to rinse it. Transfer these rinsings to the alumina column. Elute the column with an additional 9 mL of hexane. Do not allow the column to go dry during the addition and elution of the sample.

2.8.1.4 Concentrate the extract to 1.0 mL following either paragraph 2.7.1 or 2.7.3, using hexane where methylene chloride is specified. When concentrating medium level extracts, the Nitrogen blowdown technique should be used to avoid contaminating the micro Snyder column.

2.8.2 Observe the appearance of the extract.

2.8.2.1 If crystals of sulfur are evident or sulfur is expected to be present, proceed to paragraph 2.8.3.

2.8.2.2 If the sulfur is not expected to be a problem, transfer the 1.0 mL to a GC vial and label as Pesticide/PCB fraction. The extract is ready for GC/EC analysis. Proceed to Section IV. Store the extracts at 4°C (±2°C) in the dark until analyses are performed.

2.8.3 Optional Sulfur Cleanup

2.8.3.1 Transfer the 1.0 mL from paragraph 2.8.2 to a 50 mL clear glass bottle or vial with a Teflon-lined screw cap. Rinse the concentrator tube with 1.0 mL of hexane, adding the rinsings to the 50 mL bottle. If only a partial set of samples requires sulfur cleanup, set up a new reagent blank with 1.0 mL of hexane and take it through the sulfur cleanup. Include the surrogate standards.

2.8.3.2 Add 1 mL TBA-sulfite reagent and 1 mL 2-propanol, cap the bottle, and shake for at least 1 min. If the sample is colorless or if the initial color is unchanged, and if clear crystals (precipitated sodium sulfite) are observed, sufficient sodium sulfite is present. If the precipitated sodium sulfite disappears, add more crystalline sodium sulfite in approximately 100 mg portions until a solid residue remains after repeated shaking.

2.8.3.3 Add 5 mL distilled water and shake for at least 1 min. Allow the sample to stand for 5-10 min. and remove the hexane layer (top) for analysis. Concentrate the hexane to 1.0 mL as per paragraphs

2.7.1 and 2.7.3 using hexane where methylene chloride is specified. The temperature for the water bath should be about 80°C for the micro Snyder column technique. Continue as outlined in paragraph 2.8.2.2.

SECTION III

SCREENING OF PESTICIDE/PCB EXTRACTS

1. It is mandatory that all soil/sediment samples be characterized as to concentration level so that the appropriate analytical protocol may be chosen to ensure proper quantitation limits for the sample.

   The use of GC/EC methods is recommended for screening soil/sediment samples for pesticides/PCBs. The contractor is at liberty to determine the specific method of characterization. The protocols for sample preparation (Section II) and sample analysis (Section IV) are broken down by concentration level.

2. The terms "low level" and "medium level" are not used as a judgement of the degree of contamination, but rather as a description of the concentration ranges that are encompassed by the "low" and "medium" protocols.

   The concentration range encompassed by the low level protocols may be considered to be appropriate for those samples with less than 1000 ug/kg of pesticides/ PCBs. The concentration range encompassed by the medium level protocols may be considered to appropriate for those samples with more than 1000 ug/kg of pesticides/PCBs.

SECTION IV

GC/EC ANALYSIS OF PESTICIDES/PCBs

1. Summary of Method

1.1 The hexane extracts of water and soil/sediment are analyzed on a gas chromatograph/electron capture detector (GC/EC). If pesticides or PCBs are tentatively identified, a second GC/EC analysis is required using an alternate column. Quantitation must be on a packed column or a wide bore capillary column (ID >0.32 mm), whereas, confirmation can be on either a packed or a capillary column. NOTE: To determine that no pesticides/PCBs are present at or above the contract required quantitation limit is a form of quantitation.

2. Interferences

2.1 Method interferences may be caused by contaminants in solvents, reagents, glassware, and other sample processing hardware that lead to discrete artifacts and/or elevated baselines in gas chromatograms. All of these materials must be routinely demonstrated to be free from interferences under the conditions of the analysis by running laboratory method blanks.

3. Apparatus and Materials

3.1 Gas chromatograph - An analytical system complete with gas chromatograph and all required accessories including syringes, analytical columns, gases, electron capture detector and strip-chart recorder with recording integrator. A data system is required for measuring peak areas or peak heights and recording retention times. An electrolytic conductivity detector is also acceptable if the required quantitation limits are met. Overlapping peaks on chromatograms are not acceptable.

3.1.1 Quantitation and/or confirmation columns.

3.1.1.1 Column 1 - Gas Chrom Q (100/120 mesh) or equivalent coated with 1.5% OV-17/1.95% OV-210 or equivalent packed in a 1.8m long x 4 mm ID (6 mm OD) glass column.

NOTE: The 2mm ID column cited in Table 7 as Column 1 will not adequately separate dibutylchlorendate and endrin ketone.

3.1.1.2 Column 2 - Gas Chrom Q (100/120 mesh) or equivalent coated with 3% OV-1 or equivalent packed in a 1.8 m long x 2 mm ID (6 mm OD) glass column.

3.1.1.3 Column 3 - Gas Chrom Q (80/100 mesh) or equivalent coated with 5% OV-210 or equivalent packed in a 1.8 m long x 2 mm ID (6 mm OD) glass column.

3.1.1.4 Wide bore capillary columns (ID >0.32 mm) may be employed for these analyses in place of packed columns. Strictly speaking, there are no equivalent wide bore columns for the mixed phase

Column 1 above. However, wide bore columns such as DB-5 or DB-1701 may provide equivalent performance. It is the responsibility of the Contractor to demonstrate the equivalence of any wide bore columns employed for these analyses. Equivalence is demonstrated by meeting all of the performance criteria for pesticide analyses given in Exhibit D and E. Such data should be kept on file by the laboratory, and be available during on-site evaluations.

3.1.2 Confirmation column <u>only</u>. Column - 30 m X 0.25 mm ID, 0.25 micron film thickness, bonded-phase silicone coated, fused silica capillary column (J&W Scientific DB-5 or DB-1701 or equivalent). <u>NOTE</u>: DB-1701 provides better separation of TCL

pesticides. Column 10 m x 0.32 mm ID, 1 micron film thickness has been used.

3.2 Balance - analytical, capable of accurately weighing ±0.0001 g.

4. Reagents

4.1 Isooctane (2,2,4-trimethylpentane), hexane and toluene - Pesticide quality or equivalent.

4.2 Stock standard solutions (1.00 ug/uL) - Stock standard solution can be prepared from pure standard materials or purchased as certified solutions.

4.2.1 Prepare stock standard solutions by accurately weighing about 0.0100 g of pure material. Dissolve the material in toluene, dilute to volume in a 10 mL volumetric flask with isooctane. Larger volumes can be used at the convenience of the analyst. If compound purity is certified at 96% or greater, the weight can be used without correction to calculate the concentration of the stock standard. Commercially prepared stock standards can be used at any concentration if they are traceable to EMSL/LV supplied standards.

4.2.2 Transfer the stock standard solutions into a bottle/vial with Teflon-lined septa. Store at 4°C (±2°C) and protect from light. Stock standard solutions must be replaced after twelve months, or sooner if comparison with check standards indicate a problem.

4.3 Working standards solutions - Prepare mixtures of standards diluted with hexane that will provide approximately half scale response for all the compounds of interest. This should be at the attenuation setting capable of achieving the contract-required quantitation limits (Exhibit C). (This would be approximately 0.01 ng/uL for aldrin.) Two mixtures of the individual component standards are recommended to prevent co-elution of components on packed columns. However, all individual component standards may be included in one mixture on packed <u>or</u> capillary columns <u>if</u> the laboratory demonstrates that the components may be separated with <u>no</u> overlap of peaks. Include dibutylchlorendate in all standard mixtures. All multicomponent standards, i.e., PCB Aroclors and toxaphene must be in separate solutions with the exception of Aroclors 1016/1260. Include dibutylchlorendate in all multicomponent standard mixtures.

4.3.1 Evaluation Standard Mixtures - Prepare working standard mixtures diluted with hexane containing aldrin, endrin, 4,4' DDT and dibutylchlorendate to evaluate the GC column. Prepare three concentration levels to provide the following criteria:

4.3.1.1 Low level will be approximately 20% above base line (Evaluation Standard Mix A).

4.3.1.2 Mid level will be approximately half scale (Evaluation Standard Mix B).

4.3.1.3 High level will be approximately full scale (Evaluation Standard Mix C). (Dibutylchlorendate must be 0.1 ng/uL to correspond with 100% surrogate recovery in 10 mL final volume. This may be slightly greater than full scale but should still be in linear range).

4.3.2 Individual Standard Mixtures - These include all single component TCL pesticides plus alpha chlordane, gamma chlordane, endrin ketone, endrin aldehyde and dibutylchlorendate (see paragraph 6.1.4 for suggested mixtures). Alpha and gamma chlordane should be in Mixture B to avoid overlap with other pesticides.

5. Calibration

5.1 The gas chromatographic system must be calibrated using the external standard technique for all packed columns used for quantitation.

5.2 External standard calibration procedure:

5.2.1 Prepare calibration standards at a minimum of three concentration levels for each parameter of interest by adding volumes of one or more stock standards to a volumetric flask and diluting to volume with hexane. One of the external standards should be at a concentration near, but above, the CRQL and the other concentrations should correspond to the expected range of concentrations found in real samples or should define the working range of the detector. This should be done on each quantitation column and each instrument at the beginning of the contract period and each time a new column is installed. The data must be retained by the laboratory and made available for inspection during on-site evaluations.

5.2.2 Using injections of 2 to 5 uL of each calibration standard, tabulate peak height or area responses against the mass injected. The results can be used to prepare a calibration curve for each compound.

6. GC/EC Primary Analysis (Quantitation may be performed on primary or confirmation analyses.)

Adjust oven temperature and carrier gas flow rates so that the retention time for 4,4'-DDT is equal to or greater than 12 minutes.

Table 7 provides examples of operating conditions for the gas chromatograph. Separation should be $\geq$ 25% resolution between peaks. Percent resolution is calculated by dividing the height of the valley by the peak height of the smaller peak being resolved, multiplied by 100. This criterion must be considered when determining whether to quantitate on the Primary Analysis or the Confirmation Analysis. When

this criterion cannot be met, quantitation is adversely affected because of the difficulty in determining where to establish the baseline.

6.1 Inject 2 to 5 uL of the sample or standard extract using the solvent-flush technique or auto sampler. Smaller (1.0 uL) volumes can be injected only if automatic devices are employed. Record the volume injected to the nearest 0.05 uL and the total extract volume. NOTE: Dibutylchlorendate recovery may be calculated from a capillary or packed column GC/EC meeting all QC requirements for quantitation However, matrix spike duplicates must be quantitated on a packed column or wide bore capillary column.

6.1.1 Inject Individual Standard Mix A and B and all multiresponse pesticides/PCBs at the beginning of each 72 hour sequence. (See paragraph 6.1.3.5) To establish the RT window within each 72-hour sequence for the pesticide/PCB of interest, use the absolute RT from the above chromatograms as the mid-point, and ± three times the standard deviation calculated in Exhibit E for each compound. Individual Standard Mix A and B are analyzed alternately and intermittently throughout the analysis as shown in 6.1.3.5. Any pesticide outside of its established retention time window requires immediate investigation and correction before continuing the analysis. The laboratory must reanalyze all affected samples.

6.1.2 Sample analysis of extracts from Section II, Sample Preparation, can begin when linearity and degradation QA/QC requirements specified in Exhibit E have been met.

NOTE: The 10.0% RSD linearity criterion is <u>only</u> required on the column(s) being used for pesticide/PCBs quantitation. If a column is used for surrogate quantitation only, the 10.0% RSD is required only for dibutylchlorendate.

Analyze samples in groups of no more than 5 samples. After the analysis of the first group of up to 5 samples, analyze Evaluation Mix B. Analyze another group of up to 5 samples, followed by the analysis of Individual Mix A or B. Subsequent groups of up to 5 samples may be analyzed by repeating this sequence, alternately analyzing Evaluation Mix B and Individual Mix A or B between the groups as shown in 6.1.3.5. The Pesticide/PCB analytical sequence <u>must</u> end with Individual Mix A <u>and</u> B regardless of the number of samples analyzed (see 6.1.3.5).

If a multiresponse pesticide/PCB is detected in either of the preceding groups of 5 samples, the appropriate multiresponse pesticide/PCB may be substituted for Individual Mix A or B. All standards listed in 6.1.3.5 must be included for every Case and must be analyzed within the same 72-hour period as the samples, with the exception of Aroclors 1221 and 1232 which are analyzed at a minimum of once per month (see footnote in 6.1.3.5). If the samples are split between 2 or more instruments, the

complete set of standards must be analyzed on each instrument with the same 72-hour requirement. All standards must be analyzed prior to the samples to avoid the effects of poor chromatography caused by the unsuspected injection of a highly concentrated sample.

6.1.3 Paragraphs 6.1.3.1 - 6.1.3.5 contain GC performance criteria. If it is determined during the course of a 72-hour sequence that one or more of the criteria have been violated, stop the run and take corrective action (see Exhibit E, Section III PEST, 4.3.3.8). After the corrective action has been taken, the 72-hour sequence may be restarted as follows. If a standard violated the criterion, restart the sequence with that standard, determine that the criteria have been met and continue with sample analyses, according to 6.1.3.5. If a sample violated the criterion, restart the sequence with the standard that would have <u>followed</u> that group of samples (thereby preserving the sequence of standards in 6.1.3.5), determine that the criteria have been met and continue with sample analyses, according to 6.1.3.5.

If it is determined after the completion of a 72-hour sequence that one or more of the criteria have been violated, proceed as follows. If a standard violated the criterion, all samples analyzed after that standard must be re-analyzed as part of a new 72-hour sequence. If a subsequent standard in the original sequence met all the criteria, then only those samples analyzed between the standard that did not meet the criterion and the standard that did meet the criterion must be re-analyzed as part of a new 72-hour sequence. If only samples violated the criteria, then those samples must be re-analyzed as part of a new 72-hour sequence.

6.1.3.1 Differences in the Calibration Factors for each standard in Individual Standard Mix A and B must not exceed 20.0% (15.0% for any standard compound used for quantitation) during the 72-hour Primary Analysis. Calculate the % difference using the initial Individual Standard Mix versus all subsequent Individual Standard Mixes analyzed during the 72-hour sequence. (The equations for calculation of Calibration Factor and % difference are in Exhibit E, Section III PEST, paragraph 4.3.4.2.) NOTE: To determine that no pesticides/PCBs are present at or above the contract required quantitation limit <u>is</u> a form of quantitation.

The retention time shift of dibutylchlorendate in any standard or sample must be less than 2.0% difference for packed columns, less than 1.5% difference for wide bore capillary columns (ID greater than 0.32 mm) and less than 0.3% difference

for narrow bore capillary columns (ID less than 0.32 mm).

6.1.3.2 Samples must also be repeated if the degradation of DDT and/or endrin exceeds 20.0% respectively on the intermittent analysis of Evaluation Standard Mix B.

6.1.3.3 All pesticide standards must fall within the established 72-hour retention time windows.

6.1.3.4 Highly colored extracts may require a dilution.

6.1.3.5 The 72-hour sequence must be as follows.

72-Hour Sequence for Pesticide/PCB Analysis:

1. Evaluation Standard Mix A
2. Evaluation Standard Mix B
3. Evaluation Standard Mix C
4. Individual Standard Mix A*
5. Individual Standard Mix B*
6. Toxaphene
7. Aroclors 1016/1260
8. Aroclor 1221**
9. Aroclor 1232**
10. Aroclor 1242
11. Aroclor 1248
12. Aroclor 1254
13. 5 samples
14. Evaluation Standard Mix B
15. 5 samples
16. Individual Standard Mix A or B
17. 5 samples
18. Evaluation Standard Mix B
19. 5 samples
20. Individual Standard Mix A or B (whichever not run in step 16)
21. 5 samples
22. Repeat the above sequence starting with Evaluation Standard Mix B (step 14 above).
23. Pesticide/PCB analysis sequence must end with the analyses of <u>both</u> Individual Standard Mix A <u>and</u> B regardless of number of samples analyzed.

*These may be combined into one mixture (see paragraph 4.3).

**Aroclors 1221 and 1232 must be analyzed on each instrument and each column at a minimum of <u>once per month</u>.

Copies of these chromatograms must be submitted for sample analyses performed during the applicable month.

6.1.4 Suggested groups of compounds and concentrations for Individual Standard Mix A and B follow, which are recommended to prevent overlap of compounds on the two packed columns (3% OV-1 and 1.5% OV-17/1.95% OV-210). Some of the compounds overlap on the 5% OV-210 column (see Table 7). The concentration is based on a 5 uL injection.

Individual Standard Mix A	ng/uL	Individual Standard Mix B	ng/uL
gamma-BHC	0.005	alpha-BHC	0.005
heptachlor	0.010	beta-BHC	0.010
aldrin*	0.010	delta-BHC	0.010
heptachlor epoxide	0.010	aldrin*	0.010
endosulfan I	0.010	p,p'-DDE	0.010
dieldrin	0.010	endrin	0.010
p,p'-DDT	0.020	p,p'-DDD	0.020
endrin aldehyde	0.025	endosulfan sulfate	0.020
endosulfan II	0.020	endrin ketone	0.020
methoxychlor	0.100	alpha chlordane	0.010
dibutylchlorendate	0.050	gamma chlordane	0.010
		dibutylchlorendate	0.050

*For RRT determination.

6.1.5 Inject the method blank (extracted with each set of samples) on every instrument and GC column on which the samples are analyzed.

6.2 Evaluation of Chromatograms.

6.2.1 Consider the sample negative when its peaks, depending on the pesticide's response factor, result in concentrations less than the required quantitation level. The sample is complete at this point. Confirmation is not required.

6.2.2 Tentative identification is made when the unknown's retention time matches the retention time of a corresponding standard that was chromatographed on the same instrument within a 72-hour period.

6.2.3 Determine if any pesticides/PCBs listed in Exhibit C are present. Pattern recognition techniques, based on chromatograms of standards, are recommended for the identification of PCB compounds.

6.2.3.1 If the response for any of these compounds is 100% or less of full scale, the extract is ready for confirmation and quantitation.

6.2.3.2 If the response for any compound is greater than full scale, dilute the extract so that the peak will be between 50 and 100% full scale and reanalyze on the packed column. Use this dilution also for confirmation and quantitation.

6.2.3.3 For dilution >10 fold. Also inject an aliquot of a dilution 10 fold more concentrated to determine if other compounds of interest are present at lower concentrations.

6.2.3.4 Computer reproductions of chromatograms manipulated to ensure all peaks are on scale over a 100 fold range are an accepted substitute. However, this can be no greater than a 100 fold range. This is to prevent retention time shifts by column or detector overload. Linearity must be demonstrated over the 100 fold range using higher concentrations of the evaluation mixture.

6.2.4 Quantitation may be performed on the primary analysis, with the exception of toxaphene and possibly the DDT series. If DDT exceeds the 10.0% RSD linearity criterion, then quantitations for any DDE, DDD and DDT in a sample must be on the confirmation analysis. Toxaphene must always be quantitated on the confirmation analysis. See Exhibit E for special QC requirements for quantitation.

6.2.5 If identification of compounds of interest are prevented by the presence of interferences, further cleanup is required. If sulfur is evident go to Sulfur Cleanup (Section II, Part B, paragraph 8.). If unknown interferences or poor chromatography are noted only in the sample chromatogram, it is recommended that gel permeation chromatography cleanup (Section II, Part C, paragraph 2.6) be applied.

6.2.6 When selecting a GC column for confirmation and/or quantitation, be sure that none of the compounds to be confirmed/quantitated overlap, i.e., do not select the 3% OV-1 column if DDE and dieldrin are to be confirmed and/or quantitated. When samples are very complex, it may be necessary to use all three packed columns to achieve adequate separation (≥25% resolution) of all compounds being quantitated.

7. <u>GC/EC Confirmation Analysis</u>

7.1 Confirmation Analysis is to confirm the presence of all compounds tentatively identified in the Primary Analysis. Therefore, the only standards that are required are the Evaluation Standard Mixes (to check linearity and degradation criteria) and standards of all compounds to be confirmed. The linearity criterion on the confirmation column for pesticides is not required unless the column is used for quantitation. The 72-hour sequence in 6.1.3.5 is, therefore, modified

to fit each case. Quantitation may be performed on the confirmation analysis. If toxaphene or DDT is to be quantitated, additional linearity requirements are specified in 7.3.1.

7.2 Table 7 provides examples of operating conditions for the gas chromatograph. Separation should be ≥25% resolution between peaks. Percent resolution is calculated by dividing the height of the valley by the peak height of the smaller peak being resolved, multiplied by 100. This criterion must be considered when determining whether to quantitate on the Primary Analysis or the Confirmation Analysis. When this criterion cannot be met, quantitation is adversely affected because of the difficulty in determining where to establish the baseline.

For a fused silica capillary column (FSCC) confirmation, there must be ≥25 percent resolution (valley) between the following pesticide pairs:

- o beta-BHC and delta-BHC
- o Dieldrin and 4,4'-DDT
- o 4,4'-DDD and Endrin Aldehyde
- o Endosulfan Sulfate and 4,4'-DDT

All QC requirements specified in Exhibit E must be adhered to, i.e., the ≥12 min. retention time for 4,4'-DDT, the criteria for 4,4'-DDT and endrin degradation, linearity, calibration factor for standards and retention time shift for dibutylchlorendate. The retention time criterion for 4,4'-DDT does <u>not</u> have to be met if the confirmation column is OV-1 or OV-101. Apply instructions from 6.1.3 to the confirmation analysis

7.3 Inject 2 to 5 uL (1-2 uL for capillary columns) of the sample extract and standards using the solvent-flush technique or auto samplers. A volume of 1 uL can be injected only if automatic devices are employed. Record the volume injected to the nearest 0.05 uL and the total extract volume. The detector attenuation must provide peak response equivalent to the Primary Analysis response for each compound to be confirmed.

7.3.1 Begin the Confirmation Analysis GC sequence with the three concentration levels of Evaluation Standard Mixes A, B and C The exception to this occurs when toxaphene and/or DDT series are to be confirmed and quantitated. There are four combinations of pesticides that could occur, therefore, the following sequences must be followed depending on the situation.

7.3.1.1 Toxaphene only - Begin the sequence with Evaluation Mix B to check degradation, followed by three concentration levels of toxaphene. Check linearity by calculating %RSD.

If ≤10.0% RSD, use the appropriate equation in paragraph 8 for calculation. If >10.0% RSD, plot a standard curve and determine the ng for each sample in that set from the curve.

7.3.1.2 DDT, DDE, DDD only - Begin the sequence with Evaluation Mix B. Then inject three concentration levels of a standard containing DDE, DDD and DDT. Calculate linearity and follow the requirements specified in 7.3.1.1 for each compound to be quantitated.

7.3.1.3 DDT series and toxaphene - Begin the sequence with Evaluation Mix B. Then inject three concentration levels of toxaphene and another three levels of the DDT series. Calculate linearity and follow the requirements specified in 7.3.1.1 for each compound to be quantitated. NOTE: Capillary quantitation would be allowed <u>only</u> in this situation.

7.3.1.4 Other pesticides/PCBs plus DDT series and/or toxaphene – Begin the sequence with Evaluation Standard Mixes A, B and C. Calculate linearity on the four compounds in the Evaluation Standard mixes. If DDT and/or one or more of the other compounds are >10.0% RSD and/or degradation exceeds the criterion, corrective maintenance as outlined in Exhibit E, Section III PEST, paragraph 4.3.3.8, should be performed before repeating the above chromatography evaluations. If only DDT exceeds the linearity criterion and one or more of the DDT series is to be quantitated, follow 7.3.1.2 (do not repeat Evaluation Mix B).

If none of the DDT series is to be quantitated and DDT exceeds the 10.0% RSD, simply record the % RSD on the proper form. Any time toxaphene is to be quantitated, follow 7.3.1.1.

7.3.2 After the linearity standards required in 7.3.1 are injected, continue the confirmation analysis sequence by injecting standards for all compounds tentatively identified in the primary analysis, to establish the 72-hour retention time windows. (See paragraph 6.1.1.) Analyze all confirmation standards for a case at the beginning, at intervals specified in 7.3.3 and at the end. Any pesticide outside of its established retention time window requires immediate investigation and correction before continuing the analysis. The laboratory must reanalyze all samples which follow the standard that exceeds the criterion.

7.3.3 After injection of the appropriate standards (see 7.3.2), begin injection of samples. Analyze groups of 5 samples. Analyze Evaluation Mix B after the first group of 5 samples. After the second group of 5 samples, analyze a standard pertaining to the samples in the preceding groups (i.e., substitute standards pertaining to the preceding samples for Individual Mix A or B in 6.1.3.5). Continue analyzing groups of 5 samples, alternately analyzing Evaluation Mix B and standards pertaining

to the preceding samples between groups of 5 samples. The alternating standard's calibration factors must be within 15.0% of each other if quantitation is performed. Deviations larger than 15.0% require the laboratory to repeat the analyses of samples which were analyzed after the standard that exceeded the criterion. The 15.0% criterion only pertains to compounds being quantitated.

If more than one standard is required to confirm all compounds tentatively identified in the Primary Analysis, alternate the standards with Evaluation Mix B. Samples must also be repeated if the degradation of either DDT and/or endrin exceeds 20.0% on the intermittent Evaluation Standard Mix B.

If the samples are split between 2 or more instruments, all standards and blanks pertaining to those samples must be analyzed on each instrument.

7.3.4 Inject the method blank (extracted with each set of samples) on every GC and GC column on which the samples are analyzed.

7.4 Evaluation of Chromatograms

7.4.1 A compound tentatively identified in the primary analysis is confirmed if the retention time from the confirmation analysis falls within the retention time window of a corresponding standard that was chromatographed on the same instrument within a 72-hour period.

7.4.2 Quantitation should be on the packed column or wide bore capillary column chromatogram (primary or confirmation) that provides the best separation from interfering peaks. NOTE: To determine that no pesticides/PCBS are present at or above the contract required quantitation limit <u>is</u> a form of quantitation.

7.4.2.1 Quantitation of Chlordane - Because weathering and/or different formulations of chlordane usually modify the pattern exhibited by technical chlordane, this method is not appropriate for determining technical chlordane. Instead, standards for alpha chlordane and gamma chlordane are used for quantitation, and each isomer of chlordane is reported separately.

7.4.3 Computer reproductions of chromatograms that are attenuated to ensure all peaks are on scale over a 100 fold range are acceptable. However, this can be no greater than a 100 fold range. This is to prevent retention time shifts by column or detector overload. Also, peak response must be >25% of full scale deflection to allow visual pattern recognition of multicomponent compounds, and individual compounds must be visible.

7.4.4 If identification of compounds of interest are prevented by the presence of interferences, further cleanup is required. If sulfur is evident, go to Sulfur Cleanup (Section II, Part B, paragraph 8).

If unknown interferences or poor chromatography are noted only in the sample chromatogram, it is recommended that gel permeation chromatography cleanup (Section II, Part C, paragraph 2.6) be applied.

7.4.5 Calculate surrogate standard recovery on all samples, blanks and spikes unless the surrogate was diluted out. Determine if recovery is within limits and report on Form II. See formula for calculation in 8.3.

7.4.6 If TCL pesticide/PCB compounds were identified in the unspiked sample from which the matrix spike and matrix spike duplicate were prepared, confirmation analysis is required for the matrix spike and matrix spike duplicate. If TCL pesticide/PCB compounds were not identified in the unspiked sample, confirmation of the matrix spike and matrix spike duplicate is not required. Calculate matrix spike duplicate recoveries and report on Form III (see Exhibit B, Section III).

8. Calculations

8.1 Calculate the concentration in the sample using the following equation for external standards. Response can be measured by the manual peak height technique or by automated peak height or peak area measurements from an integrator.

8.1.1 Water

$$\text{Concentration} \quad \text{ug/L} = \frac{(A_x)(I_s)(V_t)}{(A_s)(V_i)(V_s)}$$

Where:

A_x = Response for the parameter to be measured.
A_s = Response for the external standard.
V_t = Volume of total extract (uL) (take into account any dilutions)
I_s = Amount of standard injected in nanograms (ng)
V_i = Volume of extract injected (uL)
V_s = Volume of water extracted (mL)

8.1.2 Sediment/Soil

$$\text{Concentration (Dry weight basis)} \quad \text{ug/kg} = \frac{(A_x)(I_s)(V_t)}{(A_s)(V_i)(W_s)(D)}$$

Where:

A_x, I_s, A_s, V_i = same as given above in 8.1.1

V_t = Volume of <u>low level</u> total extract (Use 20,000 uL or a factor of this when dilutions are made other than those accounted for below):

- o 1/20 total extract taken for pesticide analysis (derived from 0.5 mL of 10 mL extract)
- o final concentration to 1.0 mL for pesticide analysis

- or -

V_t = Volume of <u>medium level</u> total extract (Use 10,000 uL or a factor of this when dilutions are made.)

D = $\frac{100 - \%\ moisture}{100}$ (% moisture from Section II, Part C)

W_s = Weight of sample extracted (g)

8.2 For multicomponent mixtures (chlordane, toxaphene and PCBs) match retention times of peaks in the standards with peaks in the sample. Quantitate every identifiable peak (>50% of the total area must be used) unless interference with individual peaks persist after cleanup. Add peak height or peak area of each identified peak in the chromatogram. Calculate as total response in the sample versus total response in the standard.

8.3 Calculation for surrogate and matrix spike recoveries.

$$\text{Percent Recovery} = \frac{Q_d}{Q_a} \times 100\%$$

where,

Q_d = quantity determined by analysis

Q_a = quantity added to sample.

Be sure all dilutions are taken into account. Soil/Sediment has a 20-fold dilution factor built into the method when accounting for one-twentieth of extract taken for pesticide analysis and final dilution to 1 mL.

8.4 Report results in micrograms per liter or micrograms per kilogram <u>without</u> <u>correction</u> for recovery data.

9. GC/MS Confirmation of Pesticides

9.1 Any compounds confirmed by two columns must also be confirmed by GC/MS if the concentration is sufficient for detection by GC/MS. The following paragraphs should be used as guidance when determining if a pesticide/PCB compound can be confirmed by GC/MS.

9.1.1 The GC/MS analysis normally requires a minimum concentration of 10 ng/uL in the final extract, for each single component compound. For the BNA extract of a water sample, a concentration of 10 ng/uL in extract is approximately 20 ug/L (ppb) in the sample. For the BNA extract of a low level soil sample, the equivalent sample concentration would be approximatly 170 ug/Kg if no GPC was performed. For the BNA extract of a medium soil, the equivalent sample concentration is on the order of 10,000 ug/Kg.

9.1.2 The pesticide extract and associated blank should be analyzed by GC/MS as per Exhibit D SV, Section IV, paragraph 5.

9.1.3 The confirmation may be from the GC/MS analysis of the semivolatile extracts (sample and blank). However, if the compounds are not detected in the semivolatile extract even though the concentration is high enough, a GC/MS analysis of the pesticide extract is required.

9.1.4 A reference standard for the compound must also be analyzed by GC/MS. The concentration of the reference standard must be at a level that would demonstrate the ability to confirm the pesticides/PCBs identified by GC/EC. Use the sample concentration calculated from the GC/EC results as guidance. The concentration of the reference standards must be no greater than the sample extract concentration predicted from the GC/EC sample concentration. For instance, as in paragraph 9.1.1 above, a 20 ug/L sample result from GC/EC requires a 10 ng/uL GC/MS reference standards in order to demonstrate adequate sensitivity for a water sample.

9.1.5 In the event the GC/MS does not confirm the presence of the pesticides/PCBs identified by GC/ECD, those compounds should be reported as not detected. The minimum quantitation limits ("U" values) should be adjusted to reflect the interferences. The inability to confirm the compounds by GC/MS must be noted in the Case Narrative.

9.1.6 For GC/MS confirmation of multicomponent pesticides and PCBs, required deliverables are spectra of 3 major peaks of multicomponent compounds from samples and standards.

9.1.7 Quantitation by GC/MS must use the characteristic quantitation ions for pesticides/PCBs given in Table 5 of Exhibit D SV.

Table 7

Examples of Orders of Elution of Pesticides/PCBs

Parameter	Column 1	Column 2	Column 3
alpha-BHC	1.45	1.64	1.86
gamma-BHC	1.86	1.94	2.37
beta-BHC	2.18	1.76	2.75
Heptachlor	2.27	3.21	2.55
delta-BHC	2.55	2.01	2.80
Aldrin	2.76	4.01	2.93
Heptachlor epoxide	4.31	4.98	5.53
Endosulfan I	5.46	6.26	7.08
4,4'-DDE	6.37	7.51	6.03
Dieldrin	6.74	7.38	8.59
Endrin	8.25	8.35	10.14
4,4'-DDD	10.08	9.53	10.57
Endosulfan II	10.14	8.35	12.88
4,4'-DDT	12.06	12.75	11.55
endrin aldehyde	13.64	9.53	21.11
Endosulfan sulfate	16.73	11.09	31.27
Endrin ketone	22.70	-	33.16
gamma Chlordane	4.77	5.74	5.25
alpha Chlordane	5.24	6.39	5.70
Toxaphene	mr	mr	mr
Aroclor-1016	mr	mr	mr
Aroclor-1221	mr	mr	mr
Aroclor-1232	mr	mr	mr
Aroclor-1242	mr	mr	mr
Aroclor-1248	mr	mr	mr
Aroclor-1254	mr	mr	mr
Aroclor-1260	mr	mr	mr
methoxychlor	24.07	19.60	18.12
dibutylchlorendate	21.80	27.21	22.26

mr = multiresponse compounds.

Column 1 conditions: Gas Chrom Q (80/100 mesh) or equivalent coated with 1.5% OV-17/1.95% OV-210 or equivalent packed in a 1.8 m long x 2 mm ID (6 mm OD) glass column with 5% methane/95% argon carrier gas at a flow rate of 30 mL/min. (HP 5880) Column temperature, isothermal at 192°C. 2 mm ID column with 80/100 mesh does not adequately resolve dibutyl chlorendate and endrin ketone.

Column 2 conditions: Gas Chrom Q (100/120 mesh) or equivalent coated with 3% OV-1 or equivalent packed in a 1.8 m long x 2 mm ID (6 mm OD) glass column with 5% methane/95% argon carrier gas at a flow rate of 30 mL/min. (30 mL/min makeup gas). (Tracor 222). Column temperature, isothermal at 194°C.

Table 7 (continued)

Column 3 conditions: Gas Chrom Q (80/100 mesh) or equivalent coated with 5% OV-210 packed in a 1.8 m x 2 mm ID (6 mm OD) glass column with 5% methane/ 95% argon carrier gas at a flow rate of 30 mL/min. (30 mL/min. make-up gas). HP5840. Column temperature, isothermal at 183°C.

Capillary column 1 conditions: 30 m x 0.25 mm ID, 0.25 micron film thickness, fused silica DB-5 (or equivalent) splitless mode

Helium carrier gas: 4 mL/min at 280°C and 25 PSI
Septum purge: 15 mL/min
Split vent: none
Initial temperature: 160°C, initial hold - 2 min
Program at 5°C/min
Final temperature: 270°C, final hold - 4 min
Injection port temperature: 225°C

Capillary column 2 conditions: 10 m x 0.32 mm ID, 1 micron film thickness, fused silica DB-1701, splitless mode

Helium carrier gas: 4 mL/min at 280°C and 25 PSI
Septum purge: 15 mL/min
Split vent: none
Initial temperature: 160°C, initial hold - 3 min
Program at 10°C/min to 240°C
Program from 240 to 270°C at 5°C/min
Final Hold: 4 min
Injection port temperature: 235°C

EXHIBIT E

QUALITY ASSURANCE/QUALITY CONTROL REQUIREMENTS

Table of Contents

Section		Page
I	INTRODUCTION	E-3
II	QA/QC STANDARD OPERATING PROCEDURES	E-4
III	QA/QC REQUIREMENTS	
	Volatiles (VOA) QA/QC Requirements	E-10/VOA
	Semivolatiles (SV) QA/QC Requirements	E-28/SV
	Pesticides/PCBs (PEST) QA/QC Requirements	E-47/PEST
IV	ANALYTICAL STANDARDS	E-65
V	LABORATORY EVALUATION PROCEDURES	E-67

SECTION I

INTRODUCTION

The purpose of the Quality Assurance/Quality Control (QA/QC) program outlined herein is the definition of procedures for the evaluation and documentation of subsampling, analytical methodologies, and the reduction and reporting of data. The objective is to provide a uniform basis for subsampling, sample handling, instrument conditions, methods control, performance evaluation, and analytical data generation and reporting.

The scope of the program is for all laboratory operations (from sample receipt, through analysis, to data reduction/reporting) applied to trace organics samples. The scope includes those audit procedures used to evaluate the application of the procedures defined within this QA/QC program.

SECTION II

QA/QC STANDARD OPERATING PROCEDURES

1. The Contractor shall have a written QA/QC standard operating procedures (SOP) which describes the in-house procedures that he employs to guarantee, to the extent possible, the quality of all analysis activities. It should describe the quality assurance and the quality control procedures used during the analysis. Each Contractor should prepare his own SOPs to suit the needs of his organization as he has best determined. The QA/QC SOP should contain the essential elements described in this section.

2. Elements of a QA/QC SOP

2.1 All routine laboratory tasks should have written QA/QC Standard Operating Procedures. Standard Operating Procedures should be detailed documents describing who does what, when, where, how, and why. They shall be sufficiently complete and detailed to ensure that:

2.1.1 Data of known quality and integrity are generated.

2.1.2 The loss of data due to out-of-control conditions is minimized.

2.2 Standard Operating Procedures shall be:

2.2.1 Adequate to establish the traceability of standards, instrumentation, samples, and environmental data.

2.2.2 Simple, so a user with basic education, experience and/or training can properly use them.

2.2.3 Complete enough so the user can follow the directions in a stepwise manner.

2.2.4 Consistent with sound scientific principles.

2.2.5 Consistent with current EPA regulations, guidelines, and contract requirements.

2.2.6 Consistent with the instrument manufacturer's specific instruction manuals.

2.3 Standard Operating Procedures shall also provide for documentation sufficiently complete to:

2.3.1 Record the performance of all tasks and their results.

2.3.2 Explain the cause of missing data.

2.3.3 Demonstrate the validation of data each time they are recorded, calculated, or transcribed.

2.4 To accomplish these objectives, Standard Operating Procedures should address the major elements upon which the final quality of the Contractor's work depends. In the following descriptions these six major areas have been divided into sub-elements, where applicable. These elements include but are not limited to:

2.4.1 Organization and personnel,

2.4.2 Facilities and equipment,

2.4.3 Analytical methodology,

2.4.4 Sample custody procedures,

2.4.5 Quality control, and

2.4.6 Data handling.

3. Organization and Personnel

3.1 QA Policy and Objectives - Each organization should have a written quality assurance policy that should be made known to all organization personnel. Objectives should be established to produce data that meet contract requirements in terms of completeness, precision, accuracy, representativeness, documentation, and comparability. The SOP should require the preparation of a specific QA plan for the analysis.

3.2 QA Organization - The organization and management of the QA function should be described in the Contractor's SOP. Reporting relationships and responsibilities should be clearly defined. A QA Coordinator or Supervisor should be appointed and his responsibilities established. A description of the QC paperwork flow should be available. There should be a clear designation of those who are authorized to approve data and results. Responsibilities for taking corrective action should be assigned to appropriate management personnel.

3.3 Personnel training - It is highly desirable that there be a training program for employees. This system should include motivation toward producing data of acceptable quality and should involve "practice work" by the new employee. The quality of this work can be immediately verified and discussed by the supervisor, with appropriate corrective action taken.

3.4 Document Control and Revisions. The SOP should include a system for documenting:

3.4.1 Calibration procedures,

3.4.2 Analytical procedures,

3.4.3 Computational procedures,

3.4.4 Quality control procedures,

3.4.5 Bench data,

3.4.6 Operating procedures, or any changes to these procedures, and

3.4.7 Laboratory notebook policy.

3.5 Procedures for making revisions to technical procedures or documents must be clearly defined, with the lines of authority indicated. Procedural revisions should be written and distributed to all affected individuals, thus ensuring implementation of changes.

4. Facilities and Equipment

4.1 Procurement and Inventory Procedures - Purchasing guidelines for all equipment and reagents having an effect on data quality should be well-defined and documented. Similarly, performance specifications should be documented for all items of equipment having an effect on data quality. Once any item which is critical to the analysis such as an *in situ* instrument, or reagent is received and accepted by the organization, documentation should be retained of the type, age, and acceptance status of the item. Reagents should be dated upon receipt in order to establish their order of use and to minimize the possibility of exceeding their useful shelf life.

4.2 Preventive Maintenance - Preventive maintenance procedures should be clearly defined and written for each measurement system and required support equipment. When maintenance activity is necessary, it should be documented on standard forms maintained in logbooks. A history of the maintenance record of each system serves as an indication of the adequacy of maintenance schedules and parts inventory.

5. Analytical Methodology

5.1 Calibration and Operating Procedures - Calibration is the process of establishing the relationship of a measurement system output to a known stimulus. In essence, calibration is a reproducible reference point to which all sample measurements can be correlated. A sound calibration SOP should include provisions for documentation of frequency, conditions, standards, and records reflecting the calibration history of a measurement system.

5.1.1 The accuracy of the calibration standards is an important point to consider since all data will be in reference to the standards used. An SOP for verifying the accuracy of all working standards against primary grade standards should be routinely followed.

5.2 Feedback and corrective action - The SOP should specify the corrective action that is to be taken when an analytical or sampling error is discovered or the analytical system is determined to be out of control. The SOP should require documentation of the corrective action and notification of the analyst of the error and correct procedures.

6. Sample Custody

6.1 Sample custody is a part of any good laboratory or field operation. Where samples may be needed for legal purposes, "chain-of-custody" procedures, as defined in Exhibit F must be used. However, at a minimum, the following sample custody procedures should be addressed in the QA/QC SOP.

6.2 Chain-of-custody in laboratory operations

6.2.1 Identification of responsible party to act as sample custodian at the laboratory facility authorized to sign for incoming field samples, obtain documents of shipment (e.g., bill of lading number or mail receipt), and verify the data entered onto the sample custody records.

6.2.2 Provision for a laboratory sample custody log consisting of serially numbered standard lab-tracking report sheets.

6.2.3 Specification of laboratory sample custody procedures for sample handling, storage and dispersement for analysis.

7. Quality Control

7.1 Quality Control Procedures - The quality control procedures used during analysis should be described and must conform to those described in Exhibit E. The quality control checks routinely performed during sample analysis include method blank analysis to establish analyte levels, duplicate analysis to establish analytical precision, spiked and blank sample analysis to determine analytical accuracy. The frequency of these quality control checks are defined in the contract. Limits of acceptance or rejection are also defined for analysis and control charts should be used. Confirmation procedures should be described in the SOP.

7.2 Control Checks and Internal Audits - A good SOP will make provision for and describe control checks and internal audits by the Contractor. Several approaches are used for control checks. These include:

7.2.1 Reference material analysis. Analytical reference materials are available from several commercial and government sources, or they may be prepared in-house. The chemical analysis of these materials has been well established. Such materials can be analyzed alongside routine samples and the results used to check the accuracy of analytical procedures.

7.2.2 Blank analysis. The procedures and the frequency of blank analyses are defined in the contract.

7.2.3 Matrix spike and matrix spike duplicate analysis. The procedures and the frequency of matrix spike analyses are defined in the contract.

7.2.4 Internal audits. Internal audits should be periodically conducted to evaluate the functioning of the QA SOP. This involves an independent check of the performance of the laboratory analysts to determine if prescribed procedures are closely followed.

8. Data Handling

8.1 Data Handling, Reporting, and Recordkeeping - Data handling, reporting, and recordkeeping procedures should be described. Data handling and reporting includes all procedures used to record data on standard forms, and in laboratory notebooks. The reporting format for different types of bench data should be described and the forms provided. The contents of notebooks should be specified.

8.1.1 Recordkeeping of this type serves at least two useful functions: (1) it makes possible the reanalysis of a set of data at a future time, and (2) it may be used in support of the experimental conclusions if various aspects of the analysis are called into question.

8.2 Data Validation - Data validation procedures, defined ideally as a set of computerized and manual checks applied at various appropriate levels of the measurement process, should be in written form and clearly defined for all measurement systems.

8.2.1 Criteria for data validation must be documented and include limits on:

8.2.1.1 Operational parameters such as GC conditions;

8.2.1.2 Calibration data;

8.2.1.3 Special checks unique to each measurement, e.g., successive values/averages;

8.2.1.4 Statistical tests, e.g., outliers; and

8.2.1.5 Manual checks such as hand calculations.

8.2.2 The limits defined in the contract ensure a high probability of detecting invalid data for either all or the majority of the measurement systems. The required data validation activities (GC operating conditions, analytical precision, etc.) should be recorded on standard forms in a logbook.

SECTION III

VOLATILES QA/QC REQUIREMENTS

This section outlines the minimum quality control (QC) operations necessary to satisfy the analytical requirements associated with the determination of volatile organic TCL compounds in water and soil/sediment samples. These QC operations are as follows:

- Documentation of GC/MS Mass Calibration and Abundance Pattern
- Documentation of GC/MS Response Factor Stability
- Internal Standard Response and Retention Time Monitoring
- Method Blank Analysis
- Surrogate Spike Response Monitoring
- Matrix Spike and Matrix Spike Duplicate Analysis

PART 1 - TUNING AND GC/MS MASS CALIBRATION

1. Summary

It is necessary to establish that a given GC/MS meets the standard mass spectral abundance criteria prior to initiating any on-going data collection. This is accomplished through the analysis of p-Bromofluorobenzene (BFB).

Definition: The twelve (12) hour time period for GC/MS system tuning, standards calibration (initial or continuing calibration criteria) and method blank analysis begins at the moment of injection of the BFB analysis that the laboratory submits as documentation of a compliant tune. The time period ends after twelve (12) hours has elapsed according to the system clock.

1.1 p-Bromofluorobenzene (BFB)

1.1.1 Each GC/MS system used for the analysis of volatile TCL compounds must be hardware tuned to meet the abundance criteria listed in Table 1.1 for a maximum of a 50 nanogram injection of BFB. Alternately, add 50 ng of BFB solution to 5.0 ml of reagent water and analyze according to Exhibit D VOA, Section IV. BFB shall <u>not</u> be analyzed simultaneously with any calibration standards or blanks. This criterion must be demonstrated daily or for each twelve-hour time period, whichever is more frequent. If required, background subtraction must be straightforward and designed only to eliminate column bleed or instrument background ions. Background subtraction actions resulting in spectral distortions for the sole purpose of meeting the contract specifications are unacceptable.

NOTE: All instrument conditions must be identical to those used in sample analysis, except that a different temperature program may be used.

1.1.2 BFB criteria <u>MUST</u> be met before any standards, samples, or blanks are analyzed. Any samples analyzed when tuning criteria

have not been met may require reanalysis at no cost to the Agency.

1.1.3 Whenever the Contractor takes corrective action which may change or affect the tuning criteria for BFB (e.g., ion source cleaning or repair, etc.), the tune must be verified irrespective of the twelve-hour tuning requirements.

TABLE 1.1. BFB KEY IONS AND ABUNDANCE CRITERIA

Mass	Ion Abundance Criteria
50	15.0 - 40.0 percent of the base peak
75	30.0 - 60.0 percent of the base peak
95	base peak, 100 percent relative abundance
96	5.0 - 9.0 percent of the base peak
173	less than 2.0 percent of mass 174
174	greater than 50.0 percent of the base peak
175	5.0 - 9.0 percent of mass 174
176	greater than 95.0 percent but less than 101.0 percent of mass 174
177	5.0 - 9.0 percent of mass 176

1.2 Documentation

The Contractor shall provide documentation of the calibration in the form of a bar graph spectrum and as a mass listing.

1.2.1 The Contractor shall complete a Form V (GC/MS Tuning and Mass Calibration) each time an analytical system is tuned. In addition, all standards, samples, blanks, matrix spikes, and matrix spike duplicates analyzed during a particular tune must be summarized in chronological order on the bottom of the appropriate Form V. Detailed instructions for the completion of Form V are in Exhibit B, Section III.

PART 2 - CALIBRATION OF THE GC/MS SYSTEM

2. Summary

Prior to the analysis of samples and required blanks and after tuning criteria have been met, the GC/MS system must be initially calibrated at a minimum of five concentrations to determine the linearity of response utilizing TCL compound standards. Once the system has been calibrated, the calibration must be verified each twelve (12) hour time period for each GC/MS system.

2.1 Prepare calibration standards as described in Exhibit D VOA, Section IV, to yield the following specific concentrations:

2.1.1 Volatile TCL Compounds

Initial calibration of volatile TCL compounds is required at 20, 50, 100, 150 and 200 ug/L. Surrogate and internal standards shall be used with each of the calibration standards. Utilizing the analytical protocol specified in Exhibit D this will result in 100-1000 total ng analyzed. If an analyte saturates at the 200 ug/L concentration level, and the GC/MS system is calibrated to achieve a detection sensitivity of no less than 5 ug/L, the laboratory must document it in the Case Narrative, and attach a quantitation report and RIC. In this instance, the laboratory should calculate the results based on a four-point initial calibration for the specific analyte that saturates. The use of separate calibration methods which reflect the two different low and medium soil/sediment methods is required. Secondary ion quantitation is only allowed when there are sample interferences with the primary ion. If secondary ion quantitation is used, document the reasons in the Case Narrative. Analyze all method blanks and standards under the same conditions as the samples.

2.2 The USEPA plans to develop performance based criteria for response factor data acquired during this program. To accomplish this goal, the Agency has specified both the concentration levels for initial calibration and has also specified the specific internal standard to be used on a compound-by-compound basis for quantitation (see Table 2.1). Establishment of standard calibration procedures is necessary and deviations by the Contractor will not be allowed.

2.3 Analyze each calibration standard and tabulate the area of the primary characteristic ion (Exhibit D VOA, Table 3) against concentration for each compound including all contract required surrogate compounds. The relative retention times of each compound in each calibration run should agree within 0.06 relative retention time units. Late eluting compounds usually will have much better agreement.

Using Table 2.1 and Equation 2.1, calculate the relative response factors (RRF) for each compound at each concentration level.

$$RRF = \frac{A_x}{A_{is}} \times \frac{C_{is}}{C_x} \qquad \text{Eq. 2.1}$$

where,

A_x = Area of the characteristic ion for the compound to be measured.

A_{is} = Area of the characteristic ion for the specific internal standards from Table 2.1 or 2.2.

C_{is} = Concentration of the internal standard (ng/uL).

C_x = Concentration of the compound to be measured (ng/uL).

TABLE 2.1. VOLATILE INTERNAL STANDARDS WITH CORRESPONDING TCL ANALYTES ASSIGNED FOR QUANTITATION

Bromochloromethane	1,4-Difluorobenzene	Chlorobenzene-d_5
Chloromethane	1,1,1-Trichloroethane	2-Hexanone
Bromomethane	Carbon Tetrachloride	4-Methyl-2-Pentanone
Vinyl Chloride	Vinyl Acetate	Tetrachloroethene
Chloroethane	Bromodichloromethane	1,1,2,2-Tetrachloroethane
Methylene Chloride	1,2-Dichloropropane	Toluene
Acetone	trans-1,3-Dichloropropene	Chlorobenzene
Carbon Disulfide	Trichloroethene	Ethylbenzene
1,1-Dichloroethene	Dibromochloromethane	Styrene
1,1-Dichloroethane	1,1,2-Trichloroethane	Xylene(total)
1,2-Dichloroethene(tot.)	Benzene	Bromofluorobenzene (surr)
Chloroform	cis-1,3-Dichloropropene	Toluene-d_8 (surr)
1,2-Dichloroethane	Bromoform	
2-Butanone		
1,2-Dichloroethane-d_4 (surr)		

(surr) = surrogate compound

2.3.1 Using the relative response factors (RRF) from the initial calibration, calculate the percent relative standard deviations (%RSD) for compounds labeled on Form VI as Calibration Check Compounds and shown in Table 2.2 (see 2.6.2), using Equation 2.2 below.

$$\%RSD = \frac{SD}{x} \times 100 \qquad \text{Eq. 2.2}$$

where,

RSD = Relative Standard Deviation

SD = Standard Deviation of initial relative response factors (per compound)

where: $$SD = \sqrt{\sum_{i=1}^{N} \frac{(x_i - \bar{x})^2}{N-1}}$$

x = mean of initial relative response factors (per compound)

The %RSD for each individual Calibration Check Compound must be less than or equal to 30.0 percent. This criteria must be met for the initial calibration to be valid.

2.4 A system performance check must be performed to ensure that minimum average relative response factors are met before the calibration curve is used.

2.4.1 For volatiles, the five System Performance Check Compounds (SPCCs) are: chloromethane, 1,1-dichloroethane, bromoform, 1,1,2,2-tetrachloroethane and chlorobenzene. The minimum acceptable average relative response factor (RRF) for these compounds is 0.300, 0.250 for Bromoform. These compounds typically have RRFs of 0.4-0.6 and are used to check compound instability and check for degradation caused by contaminated lines or active sites in the system. For instance:

- Chloromethane - this compound is the most likely compound to be lost if the purge flow is too fast.

- Bromoform - this compound is one of the compounds most likely to be purged very poorly if the purge flow is too slow. Cold spots and/or active sites in the transfer lines may adversely affect response. Response of the quantitation ion (m/z 173) is directly affected by the tuning of BFB at ions m/z 174/176. Increasing the m/z 174/176 ratio may improve bromoform response.

- Tetrachloroethane, 1,1-Dichloroethane - These compounds can be deteriorated by contaminated transfer lines in purge and trap systems and/or active sites in trapping materials.

2.4.2 The initial calibration is valid only after both the %RSD for CCC compounds and the minimum RRF for SPCC have been met. Only after both these criteria are met can sample analysis begin.

2.5 Documentation

Once the initial calibration is validated, calculate and report the average relative response factor (RRF) and percent relative standard deviation (%RSD) for all TCL compounds. The Contractor shall complete and submit Form V (the GC/MS tune for the initial calibration) and Form VI (Initial Calibration Data) for each instrument used to analyze samples under this protocol. Detailed instructions for completion of Form VI are in Exhibit B, Section III.

2.6 Continuing Calibration

A calibration standard(s) containing all volatile TCL compounds, including all required surrogates, must be performed each twelve hours during analysis (see definition of twelve hour time period, paragraph 1. of this Section). Compare the relative response factor data from the standards each twelve hours with the average relative response

factor from the initial calibration for a specific instrument. A system performance check must be made each twelve hours. If the SPCC criteria are met, a comparison of relative response factors is made for all compounds. This is the same check that is applied during the initial calibration (Form VI). If the minimum relative response factors are not met, the system must be evaluated and corrective action must be taken before sample analysis begins.

2.6.1 Some possible problems are standard mixture degradation, injection port inlet contamination, contamination at the front end of the analytical column, and active sites in the column or chromatography system. This check must be met before analysis begins. The minimum relative response factor (RRF) for volatile System Performance Check Compounds (SPCC) is 0.300 (0.250 for Bromoform).

2.6.2 Calibration Check Compounds (CCC)

After the system performance check is met, Calibration Check Compounds listed in Table 2.2 are used to check the validity of the initial calibration. Calculate the percent difference using Equation 2.3.

$$\% \text{ Difference} = \frac{\overline{RRF}_I - RRF_c}{\overline{RRF}_I} \times 100 \qquad \text{Eq. 2.3}$$

where

$\overline{RRF}_I$ = average relative response factor from initial calibration

RRF_c = relative response factor from current calibration check standard

2.6.2.1 If the percent difference for any compound is greater than 20%, the laboratory should consider this a warning limit. If the percent difference for each CCC is less than or equal to 25.0%, the initial calibration is assumed to be valid. If the criteria are not met (>25.0% difference), for any one calibration check compound, corrective action MUST be taken. Problems similar to those listed under SPCC could affect this criteria. If no source of the problem can be determined after corrective action has been taken, a new initial five point calibration MUST be generated. These criteria MUST be met before sample analysis begins.

TABLE 2.2 VOLATILE CALIBRATION CHECKCOMPOUNDS

1,1-Dichloroethene
Chloroform
1,2-Dichloropropane
Toluene
Ethylbenzene
Vinyl Chloride

2.6.3 Concentration Levels for Continuing Calibration Check

The USEPA plans to evaluate the long term stability of relative response factors during this program. Standardization among contract laboratories is necessary to reach these long term goals. Along with contract specified concentrations for initial calibration, the USEPA is requiring specific concentrations for each continuing calibration standard(s).

2.6.3.1 The concentration for each volatile TCL compound in the continuing calibration standard(s) is 50 ug/L.

2.7 Documentation

The Contractor shall complete and submit a Form VII for each GC/MS system utilized for each twelve hour time period. Calculate and report the relative response factor and percent difference (%D) for all compounds. Ensure that the minimum RRF for volatile SPCCs is 0.300 and 0.250 for Bromoform. The percent difference (%D) for each CCC compound must be less than or equal to 25.0 percent. Additional instructions for completing Form VII are in Exhibit B, Section III.

PART 3 - METHOD BLANK ANALYSIS

3. Summary

A method blank is a volume of deionized, distilled laboratory water for water samples, or a purified solid matrix for soil/sediment samples, carried through the entire analytical scheme. The method blank volume or weight must be approximately equal to the sample volumes or sample weights being processed.

3.1 Method blank analysis must be performed at the following frequency:

3.1.1 For the analysis of volatile TCL compounds, a method blank analysis must be performed once for each 12-hour time period. See Part 1, paragraph 1 for the definition of the 12-hour time period. The method blank must be analyzed after the calibration standard(s).

3.2 It is the Contractor's responsibility to ensure that method interferences caused by contaminants in solvents, reagents, glassware, and other sample processing hardware that lead to discrete artifacts and/or elevated baselines in gas chromatograms be minimized.

3.2.1 For the purposes of this protocol, an acceptable laboratory method blank should meet the criteria of paragraphs 3.2.1.1 and 3.2.1.2.

3.2.1.1 A method blank for volatile analysis must contain less than or equal to five times (5X) the Contract Required Quantitation Limit (CRQL from Exhibit C) of methylene chloride, acetone, toluene, and 2-butanone.

3.2.1.2 For all other TCL compounds not listed above, the method blank must contain less than or equal to the Contract Required Quantitation Limit of any single TCL analyte.

3.2.2 If a laboratory method blank exceeds these criteria, the Contractor must consider the analytical system to be out of control. The source of the contamination must be investigated and appropriate corrective measures MUST be taken and documented before further sample analysis proceeds. All samples processed with a method blank that is out of control (i.e., contaminated) MUST be reextracted/repurged and reanalyzed at no additional cost to the Agency. The Laboratory Manager, or his designee, must address problems and solutions in the Case Narrative (Exhibit B).

3.3 Documentation

The Contractor shall report results of method blank analysis using the Organic Analysis Data Sheet (Form I) and the form for tentatively identified compounds (Form I, TIC). In addition, the samples associated with each method blank must be summarized on Form IV (Method Blank Summary). Detailed instructions for the completion of these forms can be found in Exhibit B, Section III.

3.3.1 The Contractor shall report ALL sample concentration data as UNCORRECTED for blanks.

PART 4 - SURROGATE SPIKE (SS) ANALYSIS

4. Summary

Surrogate standard determinations are performed on all samples and blanks. All samples and blanks are fortified with surrogate spiking compounds before purging or extraction in order to monitor preparation and analysis of samples.

4.1 Each sample, matrix spike, matrix spike duplicate, and blank are spiked with surrogate compounds prior to purging or extraction. The surrogate spiking compounds shown in Table 4.1 are used to fortify each sample, matrix spike, matrix spike duplicate, and blank with the proper concentrations. Performance based criteria are generated from laboratory results. Therefore, deviations from the spiking protocol will not be permitted.

TABLE 4.1 SURROGATE SPIKING COMPOUNDS

Compounds	Fraction	Amount in Sample/Extract* (before any optional dilutions) Water	Low/Medium Soil
Toluene-d_8	VOA	50 ug	50 ug
4-Bromofluorobenzene	VOA	50 ug	50 ug
1,2-Dichloroethane-d_4	VOA	50 ug	50 ug

* At the time of injection.

4.2 Surrogate spike recovery must be evaluated by determining whether the concentration (measured as percent recovery) falls inside the contract required recovery limits listed in Table 4.2.

TABLE 4.2 CONTRACT REQUIRED SURROGATE SPIKE RECOVERY LIMITS

Fraction	Surrogate Compound	Water	Low/Medium Soil
VOA	Toluene-d_8	88-110	81-117
VOA	4-Bromofluorobenzene	86-115	74-121
VOA	1,2-Dichloroethane-d_4	76-114	70-121

4.3 Treatment of surrogate spike recovery information is according to paragraphs 4.3.1 through 4.3.2.

4.3.1 Method Blank Surrogate Spike Recovery

The laboratory must take the actions listed below if recovery of any one surrogate compound in the volatiles fraction of the method blank is outside of the required surrogate spike recovery limits.

4.3.1.1 Check calculations to ensure that there are no errors; check internal standard and surrogate spiking solutions for degradation, contamination, etc; also check instrument performance.

4.3.1.2 Reanalyze the blank or extract if steps in 4.3.1.1 fail to reveal the cause of the noncompliant surrogate recoveries.

4.3.1.3 If the blank is a methanol extract for medium level soil samples, reextract and reanalyze the blank if steps in 4.3.1.2 fail to reveal the cause of the noncompliant surrogate recoveries.

4.3.1.4 If the measures listed in 4.3.1.1 thru 4.3.1.3 fail to correct the problem, the analytical system must be considered out of control. The problem MUST be corrected before continuing.

This may mean recalibrating the instrumentation but it may also mean more extensive action. The specific corrective action is left up to the GC/MS operator. When surrogate recovery(ies) in the blank is outside of the contract required windows, all samples associated with that blank MUST be reanalyzed at no additional cost to the Agency.

4.3.2 Sample Surrogate Spike Recovery

The laboratory must take the actions listed below if recovery of any one surrogate compound in the volatiles fraction of the sample is outside of the contract surrogate spike recovery limits.

4.3.2.1 The Contractor laboratory shall document (in this instance, document means to write down and discuss problem and corrective action taken in the Case Narrative (see Exhibit B) deviations outside of acceptable quality control limits by taking the following actions:

4.3.2.1.1 Check calculations to ensure that there are no errors; check internal standard and surrogate spiking solutions for degradation, contamination, etc; also check instrument performance.

4.3.2.1.2 If the steps in 4.3.2.1.1 fail to reveal a problem, then reanalyze the sample or extract. If reanalysis of the sample or extract solves the problem, then the problem was within the laboratory's control. Therefore, only submit data from the analysis with surrogate spike recoveries within the contract windows. This shall be considered the initial analysis and shall be reported as such on all data deliverables.

4.3.2.1.3 If the sample was a soil extracted with methanol and the steps in 4.3.2.1.2 fail to solve the problem, then reextract and reanalyze the sample. If the reextraction and reanalysis solves the problem, then the problem was in the laboratory's control. Therefore, only submit data from the extraction

and analysis with surrogate spike recoveries <u>within</u> the contract windows. This shall be considered the <u>initial</u> analysis and shall be reported as such on all data deliverables.

4.3.2.1.4 If the reextraction and/or reanalysis of the sample does not solve the problem; i.e., surrogate recoveries are outside the contract windows for both analyses, then submit the surrogate spike recovery data and the sample data from <u>both</u> analyses according to paragraph 4.4. Distinguish between the initial analysis and the reanalysis on all data deliverables, using the sample suffixes specified in Exhibit B.

4.4 Documentation

The Contractor is required to report surrogate recovery data for the following:

- Method Blank Analysis
- Sample Analysis
- Matrix Spike/Matrix Spike Duplicate Analyses
- All sample reanalyses that substantiate a matrix effect

The surrogate spike recovery data are summarized on the Surrogate Spike Percent Recovery Summary (Form II). Detailed instructions for the completion of Form II are in Exhibit B, Section III.

<u>PART 5</u> - <u>MATRIX SPIKE/MATRIX SPIKE DUPLICATE ANALYSIS (MS/MSD)</u>

5. <u>Summary</u>

In order to evaluate the matrix effect of the sample upon the analytical methodology, the USEPA has developed the standard mixes listed in Table 5.1 to be used for matrix spike and matrix spike duplicate analyses. These compounds are subject to change depending upon availability and suitability for use as matrix spikes.

5.1 MS/MSD Frequency of Analysis

A matrix spike and matrix spike duplicate must be performed for each group of samples of a similar matrix, once:

- each Case of field samples received, OR
- each 20 field samples in a Case, OR

- each group of field samples of a similar concentration level (soils only), OR

- each 14 calendar day period during which field samples in a Case were received (said period beginning with the receipt of the first sample in that Sample Delivery Group),

<u>whichever is most frequent</u>.

5.2 Use the compounds listed in Table 5.1 to prepare matrix spiking solutions according to protocols described in Exhibit D VOA. The analytical protocols in Exhibit D VOA stipulate the amount of matrix spiking solution to be added to the sample aliquots. Each method allows for optional dilution steps which must be accounted for when calculating percent recovery of the matrix spike and matrix spike duplicate samples.

TABLE 5.1. MATRIX SPIKING SOLUTIONS

Volatiles	
Chlorobenzene	1,1-Dichloroethene
Toluene	Trichloroethene
Benzene	

5.2.1 Samples requiring optional dilutions and chosen as the matrix spike/ matrix spike duplicate samples, must be analyzed at the same dilution as the original unspiked sample.

5.3 Individual component recoveries of the matrix spike are calculated using Equation 5.1.

$$\text{Matrix Spike Percent Recovery} = \frac{SSR - SR}{SA} \times 100 \qquad \text{Eq. 5.1}$$

where,

SSR = Spike Sample Results

SR = Sample Result

SA = Spike Added From Spiking Mix

5.4 Relative Percent Difference (RPD)

The Contractor is required to calculate the relative percent difference between the matrix spike and matrix spike duplicate. The relative percent differences (RPD) for each component are calculated using Equation 5.2.

$$RPD = \frac{D_1 - D_2}{(D_1 + D_2)/2} \times 100 \qquad \text{Eq. 5.2}$$

where,

RPD - Relative Percent Difference

D_1 - First Sample Value

D_2 - Second Sample Value (duplicate)

5.5 Documentation

The matrix spike (MS) results (concentrations) for nonspiked volatile TCL compounds shall be reported on Form I (Organic Analysis Data Sheet) and the matrix spike percent recoveries shall be summarized on Form III (MS/MSD Recovery). These values will be used by EPA to periodically update existing performance based QC recovery limits (Table 5.2).

The results for nonspiked volatile TCL compounds in the matrix spike duplicate (MSD) analysis shall be reported on Form I (Organic Analysis Data Sheet) and the percent recovery and the relative percent difference shall be summarized on Form III (MS/MSD Recovery). The RPD data will be used by EPA to evaluate the long term precision of the analytical method. Detailed instructions for the completion of Form III are in Exhibit B, Section III.

TABLE 5.2. MATRIX SPIKE RECOVERY LIMITS

Fraction	Matrix Spike Compound	Water	Soil/Sediment
VOA	1,1-Dichloroethene	61-145	59-172
VOA	Trichlorethene	71-120	62-137
VOA	Chlorobenzene	75-130	60-133
VOA	Toluene	76-125	59-139
VOA	Benzene	76-127	66-142

PART 6 - SAMPLE ANALYSIS

6. Summary

The intent of Part 6 is to provide the Contractor with a brief summary of ongoing QC activities involved with sample analysis. Specific references are provided to help the Contractor meet specific reporting and deliverables requirements of this contract.

6.1 Sample Analysis

Samples can be analyzed upon successful completion of the initial QC activities. When twelve (12) hours have elapsed since the initial tune

was completed, it is necessary to conduct an instrument tune and calibration check analysis (described in Part 2 of this Section). Any major system maintenance, such as a source cleaning or installation of a new column, may necessitate a retune and recalibration irrespective of the twelve-hour requirement (see Initial Calibration, Part 2). Minor maintenance should necessitate only the calibration verification (Continuing Calibration, Part 2)

6.1.1 Internal Standards Evaluation - Internal standard responses and retention times in all samples must be evaluated immediately after or during data acquisition. If the retention time for any internal standard changes by more than 30 seconds, the chromatographic system must be inspected for malfunctions, and corrections made as required. The extracted ion current profile (EICP) of the internal standards must be monitored and evaluated for each sample, blank, matrix spike, and matrix spike duplicate. The criteria are described in detail in the instructions for Form VIII, Internal Standard Area Summary (see Exhibit B, Section III). If the extracted ion current profile (EICP) area for any internal standard changes by more than a factor of two (-50% to 100%), from the latest daily (12 hour time period) calibration standard, the mass spectrometric system must be inspected for malfunction, and corrections made as appropriate. Breaking off 1 foot of the column (when using capillary column) or cleaning the injector sleeve (when using either packed or capillary column) will often improve high end sensitivity for the late eluting compounds; repositioning or repacking the front end of the column will often improve front end column performance. Poor injection technique can also lead to variable IS ratios. When corrections are made, re-analysis of samples analyzed while the system was malfunctioning is necessary.

6.1.1.1 If after reanalysis, the EICP areas for all internal standards are inside the contract limits (-50% to +100%), then the problem with the first analysis is considered to have been within the control of the laboratory. Therefore, <u>only</u> <u>submit</u> data from the analysis with EICPs within the contract limits. This is considered the <u>initial</u> analysis and must be reported as such on all data deliverables.

6.1.1.2 If the reanalysis of the sample does not solve the problem, i.e., the EICP areas are outside the contract limits for both analyses, then submit the EICP data and sample data from <u>both</u> analyses. Distinguish between the initial analysis and the reanalysis on all data deliverables, using the sample suffixes specified in Exhibit B. Document in the Case Narrative all inspection and corrective actions taken.

6.1.2 Each analytical run must also be checked for saturation. The level at which an individual compound will saturate the detection system is a function of the overall system sensitivity and the mass spectral characteristics of that compound. The initial method calibration (Part 2) requires that the system should not be saturated for high response compounds at 200 ug/L for VOA TCL compounds.

6.1.2.1 If the on-column concentration of any compound in any sample exceeds the initial calibration range, that sample must be diluted, the internal standard concentration readjusted, and the sample reinjected, as described in specific methodologies in Exhibit D VOA. Note: For total xylenes, where three isomers are quantified as two peaks, the calibration of each peak should be considered separately, i.e., a diluted analysis is not required for total xylenes unless the concentration of either peak separately exceeds 200 ug/L. Secondary ion quantitation is only allowed when there are sample matrix interferences with the primary ion. If secondary ion quantitation is performed, document the reasons in the Case Narrative.

6.1.2.2 If the dilution of the sample causes any compound detected in the first analysis to be undetectable in the second analysis, then the results of both analyses shall be reported on separate Forms I, according to the instructions in Exhibit B.

6.1.3 Qualitative Analysis

The compounds listed in the Target Compound List (TCL), Exhibit C, shall be identified by an analyst competent in the interpretation of mass spectra, by comparison of the suspect mass spectrum to the mass spectrum of a standard of the suspected compound. Two criteria must be satisfied to verify the identifications: (1) elution of the sample component at the same GC relative retention time as the standard component, and (2) correspondence of the sample component and standard component mass spectra (Exhibit D, Section IV).

6.1.3.1 For establishing correspondence of the GC relative retention time (RRT), the sample component RRT must compare within ±0.06 RRT units of the RRT of the standard component. For reference, the standard must be run on the same shift as the sample.

6.1.3.2 For comparison of standard and sample component mass spectra, mass spectra obtained on the Contractor's GC/MS are required. The BFB tuning requirements listed in Part 1 of this Section must be met on that same GC/MS.

6.1.3.2.1 The requirements for qualitative verification by comparison of mass spectra are as follows:

- All ions present in the standard mass spectra at a relative intensity greater than 10% (most abundant ion in the spectrum equals 100%) <u>must</u> be present in the sample spectrum.

- The relative intensities of ions specified in the above paragraph must agree within ±20% between the standard and sample spectra.

- Ions greater than 10% in the <u>sample</u> spectrum but not present in the <u>standard</u> spectrum must be considered and accounted for by the analyst making the comparison. When GC/MS computer data processing programs are used to obtain the sample component spectrum, both the processed and the raw spectra must be evaluated. In Task III, the verification process should favor false positives (Exhibit D, Section IV).

6.1.3.2.2 If a compound cannot be verified by <u>all</u> of the criteria in 6.1.3.2.1, but in the technical judgement of the mass spectral interpretation specialist the identification is correct, the Contractor shall report the identification and proceed with the quantitation.

6.1.3.3 A library search shall be executed for nonsurrogate and non-TCL sample components for the purpose of tentative identification. For this purpose, the 1985 or most recent available version of the National Bureau of Standards Mass Spectral Library, containing 42,261 spectra should be used.

6.1.4 Quantitation

6.1.4.1 TCL components identified shall be quantitated by the internal standard method. The internal standards used shall be the ones assigned in Table 2.1 of this Section. The EICP area of characteristic ions of TCL analytes are used (Exhibit D VOA, Section IV).

6.1.4.2 An estimated concentration for non-TCL components tentatively identified shall be quantitated by the internal standard method. For quantification, the nearest internal standard free of interferences must be used.

6.1.4.3 Calculate surrogate standard recovery (see Part 4) for all surrogate compounds in all samples, blanks, matrix spikes, and matrix spike duplicates. If recovery is within contractual limits, report on Form II (see Exhibit B). If recovery is outside contractual limits, take specific steps listed in Surrogate Spike Recoveries (Part 4).

6.1.4.4 Calculate matrix spike and matrix spike duplicate percent recovery (see Part 5 of this Section) for all compounds and report results on Form III (see Exhibit B). Calculate Relative Percent Differences (RPDs) for all matrix spiking compounds and report results on Form III. Ensure that the proper frequency of MS/MSD analysis is maintained.

6.1.5 Reporting and Deliverables

Refer to Exhibit B of this Statement of Work for specific details on contract deliverables and reporting formats. Exhibit B contains specific instructions for completing all required Forms, as well as a detailed itemization of reporting and deliverables requirements. Exhibit H contains the format requirements for delivery of data in computer-readable format.

SECTION III SV

SEMIVOLATILES QA/QC
REQUIREMENTS

This Section outlines the minimum quality control (QC) operations necessary to satisfy the analytical requirements associated with the determination of semivolatile organic TCL compounds in water and soil/sediment samples. These QC operations are as follows:

- Documentation of GC/MS Mass Calibration and Abundance Pattern
- Documentation of GC/MS Response Factor Stability
- Internal Standard Response and Retention Time Monitoring
- Method Blank Analysis
- Surrogate Spike Response Monitoring
- Matrix Spike and Matrix Spike Duplicate Analysis

PART 1 - TUNING AND GC/MS MASS CALIBRATION

1. Summary

It is necessary to establish that a given GC/MS meets the standard mass spectral abundance criteria prior to initiating any on-going data collection. This is accomplished through the analysis of Decafluorotriphenylphosphine (DFTPP).

Definition: The twelve (12) hour time period for GC/MS system tuning and standards calibration (initial or continuing calibration criteria) begins at the moment of injection of the DFTPP analysis that the laboratory submits as documentation of a compliant tune. The time period ends after twelve (12) hours has elapsed according to the system clock.

1.1 Decafluorotriphenylphosphine (DFTPP)

1.1.1 Each GC/MS system used for the analysis of semivolatile or pesticide TCL compounds must be hardware tuned to meet the abundance criteria listed in Table 1.2 for a 50 ng injection of decafluorotriphenylphosphine (DFTPP). DFTPP may be analyzed separately or as part of the calibration standard. The criteria must be demonstrated daily or for each twelve (12) hour period, whichever is more frequent, before samples can be analyzed. DFTPP must be injected to meet this criterion. If required, background subtraction must be straightforward and designed only to eliminate column bleed or instrument background ions. Background subtraction actions resulting in spectral distortions for the sole purpose of meeting the contract specifications are unacceptable. NOTE: All instrument conditions must be identical to those used in sample analysis, except that a different temperature program may be used.

1.1.2 Whenever the Contractor takes corrective action which may change or affect the tuning criteria for DFTPP (e.g., ion source cleaning or repair, etc.), the tune must be verified irrespective of the 12-hour tuning requirements.

TABLE 1.2. DFTPP KEY IONS AND ION ABUNDANCE CRITERIA

Mass	Ion Abundance Criteria
51	30.0 - 60.0 percent of mass 198
68	less than 2.0 percent of mass 69
70	less than 2.0 percent of mass 69
127	40.0 - 60.0 percent of mass 198
197	less than 1.0 percent of mass 198
198	base peak, 100 percent relative abundance
199	5.0 - 9.0 percent of mass 198
275	10.0 - 30.0 percent of mass 198
365	greater than 1.00 percent of mass 198
441	present but less than mass 443
442	greater than 40.0 percent of mass 198
443	17.0 - 23.0 percent of mass 442

1.2 Documentation

The Contractor shall provide documentation of the calibration in the form of a bar graph spectrum and as a mass listing.

1.2.1 The Contractor shall complete a Form V (GC/MS Tuning and Mass Calibration) each time an analytical system is tuned. In addition, all samples, standards, blanks, matrix spikes, and matrix spike duplicates analyzed during a particular tune must be summarized in chronological order on the bottom of the appropriate Form V. Detailed instructions for the completion of Form V are found in Exhibit B, Section III.

PART 2 - CALIBRATION OF THE GC/MS SYSTEM

2. Summary

Prior to the analysis of samples and required blanks and after tuning criteria have been met, the GC/MS system must be initially calibrated at a minimum of five concentrations to determine the linearity of response utilizing TCL compound standards. Once the system has been calibrated, the calibration must be verified each twelve (12) hour time period for each GC/MS system.

2.1 Prepare calibration standards as described in Exhibit D SV, Section IV, to yield the following specific concentrations:

2.1.1 Semivolatile TCL Compounds

Initial calibration of semivolatile TCL compounds is required at 20, 50, 80, 120, and 160 total nanograms. If an analyte saturates at the 160 total nanogram concentration level, and the GC/MS system is calibrated to achieve a detection sensitivity of no less than the CRQL, the laboratory must document it on Form VI and in the Case Narrative, and attach a quantitation report and RIC. In this instance, the laboratory

should calculate the results based on a four-point initial calibration for the specific analyte. The use of a secondary ion for quantitation is only allowed when there are sample interferences with the primary ion. If secondary ion quantitation is performed, document the reasons in the Case Narrative. Nine compounds: Benzoic Acid, 2,4-Dinitrophenol, 2,4,5-Trichlorophenol, 2-Nitroaniline, 3-Nitroaniline, 4-Nitroaniline, 4-Nitrophenol, 4,6-Dinitro-2-Methylphenol, and Pentachlorophenol will only require a four-point initial calibration at 50, 80, 120, and 160 total nanograms since detection at less than 50 nanograms per injection is difficult.

2.2 The USEPA plans to develop performance based criteria for response factor data acquired during this program. To accomplish this goal, the Agency has specified both the concentration levels for initial calibration and has also specified the specific internal standard to be used on a compound-by-compound basis for quantitation (Table 2.2). Establishment of standard calibration procedures is necessary and deviations by the Contractor will not be allowed.

2.3 Analyze each calibration standard and tabulate the area of the primary characteristic ion (Exhibit D SV, Table 4) against concentration for each compound including all contract required surrogate compounds. The relative retention times of each compound in each calibration run should agree within 0.06 relative retention time units. Late eluting compounds usually will have much better agreement.

Using Table 2.2, calculate the relative response factors (RRF) for each compound at each concentration level using Equation 2.1.

$$RRF = \frac{A_x}{A_{is}} \times \frac{C_{is}}{C_x} \qquad \text{Eq. 2.1}$$

where,

A_x = Area of the characteristic ion for the compound to be measured.

A_{is} = Area of the characteristic ion for the specific internal standards from Table 2.1 or 2.2.

C_{is} = Concentration of the internal standard (ng/uL).

C_x = Concentration of the compound to be measured (ng/uL).

2.3.1 Using the relative response factors (RRF) from the initial calibration, calculate the percent relative standard deviations (%RSD) for compounds labeled on Form VI as Calibration Check Compounds and shown in Table 2.3 (see 2.6.2) using Equation 2.2.

$$\%RSD = \frac{SD}{\bar{x}} \times 100 \qquad \text{Eq. 2.2}$$

where,

RSD = Relative Standard Deviation

SD = Standard Deviation of initial response factors (per compound)

where: $$SD = \sqrt{\frac{\sum_{i=1}^{N} (x_i - \bar{x})^2}{N-1}}$$

$\bar{x}$ = mean of initial relative response factors (per compound)

The %RSD for each individual Calibration Check Compound must be <u>less</u> than or equal to 30.0 percent. This criteria must be met for the initial calibration to be valid.

2.4 A system performance check must be performed to ensure that minimum average relative response factors are met before the calibration curve is used.

2.4.1 For semivolatiles, the System Performance Check Compounds (SPCCs) are: N-Nitroso-Di-n-Propylamine, Hexachlorocyclopentadiene, 2,4-Dinitrophenol and 4-Nitrophenol. The minimum acceptable average relative response factor ($\overline{RRF}$) for these compounds is 0.050. SPCCs typically have very low RRFs (0.1-0.2) and tend to decrease in response as the chromatographic system begins to deteriorate or the standard material begins to deteriorate. These compounds are usually the first to show poor performance. Therefore, they must meet the minimum requirement when the system is calibrated.

2.4.2 The initial calibration is valid only after both the %RSD for CCC compounds and the minimum $\overline{RRF}$ for SPCC have been met. Only after both these criteria are met can sample analysis begin.

2.5 Documentation

Once the initial calibration is validated, calculate and report the average relative response factor ($\overline{RRF}$) and percent relative standard deviation (%RSD) for all TCL compounds. The Contractor shall complete and submit Form V (the GC/MS tune for the initial calibration) and Form VI (Initial Calibration Data) for each instrument used to analyze samples under this protocol. Detailed instructions for completion of Form VI are in Exhibit B, Section III.

2.6 Continuing Calibration

A calibration standard(s) containing all semivolatile TCL compounds, including all required surrogates, must be analyzed each twelve hours during analysis (see definition of twelve hour time period, paragraph 1. of this Section). Compare the relative response factor data from the standards each twelve hours with the average relative response factor from the initial calibration for a specific instrument. A system performance check must be made each twelve hours. If the SPCC

TABLE 2.2. SEMIVOLATILE INTERNAL STANDARDS WITH CORRESPONDING TCL ANALYTES ASSIGNED FOR QUANTITATION

1,4-Dichlorobenzene-d_4	Naphthalene-d_8	Acenaphthene-d_{10}	Phenanthrene-d_{10}	Chrysene-d_{12}	Perylene-d_{12}
Phenol	Nitrobenzene	Hexachlorocyclo-pentadiene	4,6-Dinitro-2-methylphenol	Pyrene	Di-n-octyl Phthalate
bis(2-Chloroethyl) ether	Isophorone	2,4,6-Trichloro-phenol	N-nitrosodi-phenylamine	Butylbenzyl Phthalate	Benzo(b)fluor-anthene
2-Chlorophenol	2-Nitrophenol	2,4,5-Trichloro-phenol	1,2-Diphenylhy-drazine	3,3'-Dichloro-benzidine	Benzo(k)fluor-anthene
1,3-Dichlorobenzene	2,4-Dimethyl-phenol	2-Chloronaphthalene	4-Bromophenyl Phenyl Ether	Benzo(a)-anthracene	Benzo(a)pyrene
1,4-Dichlorobenzene	Benzoic acid	2-Nitroaniline	Hexachloro-benzene	bis(2-ethylhexyl) Phthalate	Indeno(1,2,3-cd) pyrene
Benzyl Alcohol	bis(2-Chloro-ethoxy)methane	Dimethyl Phthalate	Pentachloro-phenol	Chrysene	Dibenz(a,h) anthracene
1,2-Dichlorobenzene	2,4-Dichloro-phenol	Acenaphthylene	Phenanthrene	Terphenyl-d_{14} (surr)	Benzo(g,h,i) perylene
2-Methylphenol	1,2,4-Trichloro-benzene	3-Nitroaniline	Anthracene		
bis(2-Chloroiso-propyl)ether	Naphthalene	Acenaphthene	Di-n-butyl Phthalate		
4-Methylphenol	4-Chloroaniline	2,4-Dinitrophenol	Fluoranthene		
N-nitroso-Di-n-propylamine	Hexachloro-butadiene	4-Nitrophenol			
Hexachloroethane	4-Chloro-3-methylphenol	Dibenzofuran			
2-Fluorophenol (surr)	2-Methylnaphth-alene	2,4-Dinitrotoluene			
Phenol-d_6 (surr)	Nitrobenzene-d_5 (surr)	2,6-Dinitrotoluene			
		Diethyl Phthalate			
		4-Chlorophenyl phenyl ether			
		Fluorene			
		4-Nitroaniline			
		2-Fluorobiphenyl (surr)			
		2,4,6-Tribromo Phenol (surr)			

Surr = surrogate compound

criteria are met, a comparison of relative response factors is made for all compounds. This is the same check that is applied during the initial calibration (Form VI). If the minimum relative response factors are not met, the system must be evaluated and corrective action must be taken before sample analysis begins.

2.6.1 Some possible problems are standard mixture degradation, injection port inlet contamination, contamination at the front end of the analytical column, and active sites in the column or chromatography system. This check must be met before analysis begins. The minimum relative response factor (RRF) for semivolatile System Performance Check Compounds (SPCC) is 0.050.

2.6.2 Calibration Check Compounds (CCC)

After the system performance check is met, Calibration Check Compounds listed in Table 2.3 are used to check the validity of the initial calibration. Calculate the percent difference using Equation 2.3.

$$\% \text{ Difference} = \frac{\overline{RRF}_I - RRF_c}{\overline{RRF}_I} \times 100 \qquad \text{Eq. 2.3}$$

where,

$\overline{RRF}_I$ = average response factor from initial calibration.

RRF_c = response factor from current verification check standard.

2.6.2.1 If the percent difference for any compound is greater than 20%, the laboratory should consider this a warning limit. If the percent difference for each CCC is less than or equal to 25.0%, the initial calibration is assumed to be valid. If the criteria are not met (>25.0% difference), for any one calibration check compound, corrective action <u>MUST</u> be taken. Problems similar to those listed under SPCC could affect this criteria. If no source of the problem can be determined after corrective action has been taken, a new initial five point calibration <u>MUST</u> be generated. These criteria <u>MUST</u> be met before sample analysis begins.

TABLE 2.3. CALIBRATION CHECK COMPOUNDS

Base/Neutral Fraction	Acid Fraction
Acenaphthene	4-Chloro-3-Methylphenol
1,4-Dichlorobenzene	2,4-Dichlorophenol
Hexachlorobutadiene	2-Nitrophenol
N-Nitroso-di-n-phenylamine	Phenol
Di-n-octylphthalate	Pentachlorophenol
Fluoranthene	2,4,6-Trichlorophenol
Benzo(a)pyrene	

2.6.3 Concentration Levels for Continuing Calibration Check

The USEPA plans to evaluate the long term stability of response factors during this program. Standardization among contract laboratories is necessary to reach these long term goals. Along with contract specified concentrations for initial calibration, the USEPA is requiring specific concentrations for each continuing calibration standard(s).

2.6.3.1 The concentration for each semivolatile TCL compound in the continuing calibration standard(s) is 50 total nanograms for <u>all</u> compounds.

2.7 Documentation

The Contractor shall complete and submit a Form VII for each GC/MS system utilized for each twelve hour time period. Calculate and report the relative response factor and percent difference (%D) for all compounds. Ensure that the minimum RRF for semivolatile SPCCs is <u>0.050</u>. The percent difference (%D) for each CCC compound must be less than or equal to 25.0 percent. Additional instructions for completing Form VII are found in Exhibit B, Section III.

PART 3 - METHOD BLANK ANALYSIS

3.0 Summary

A method blank is a volume of deionized, distilled laboratory water for water samples, or a purified solid matrix for soil/sediment samples, carried through the entire analytical scheme (extraction, concentration, and analysis). For soil/sediment samples, a solid matrix suitable for semivolatile analyses is available from EMSL/LV. The method blank volume or weight must be approximately equal to the sample volumes or sample weights being processed.

3.1 Method blank analysis must be performed at the following frequency.

3.1.1 For the analysis of semivolatile TCL compounds, a method blank analysis must be performed once:

- each Case, OR

- each 14 calendar day period during which samples in a Case are received (said period beginning with the receipt of the first sample in that Sample Delivery Group), OR

- each 20 samples in a Case, including matrix spikes and reanalyses, that are of similar matrix (water or soil) or similar concentration (soil only), OR

- whenever samples are extracted by the same procedure (separatory funnel, continuous liquid-liquid extraction, or sonication),

<u>whichever is most frequent</u>, on each GC/MS or GC system used to analyze samples.

3.2 It is the Contractor's responsibility to ensure that method interferences caused by contaminants in solvents, reagents, glassware, and other sample processing hardware that lead to discrete artifacts and/or elevated baselines in gas chromatograms be minimized.

3.2.1 For the purposes of this protocol, an acceptable laboratory method blank should meet the criteria of paragraphs 3.2.1.1 and 3.2.1.2.

3.2.1.1 A method blank for semivolatile analysis must contain less than or equal to five times (5X) the Contract Required Quantitation Limit (CRQL from Exhibit C) of the phthalate esters in the TCL.

3.2.1.2 For all other TCL compounds not listed above, the method blank must contain less than or equal to the Contract Required Quantitation Limit of any single TCL analyte.

3.2.2 If a laboratory method blank exceeds these criteria, the Contractor must consider the analytical system to be out of control. The source of the contamination must be investigated and appropriate corrective measures <u>MUST</u> be taken and documented before further sample analysis proceeds. All samples processed with a method blank that is out of control (i.e., contaminated) MUST be reextracted and reanalyzed at no additional cost to the Agency. The Laboratory Manager, or his designee, must address problems and solutions in the Case Narrative (Exhibit B).

3.3 Documentation

The Contractor shall report results of method blank analysis using the Organic Analysis Data Sheet (Form I) and the form for tentatively identified compounds (Form I, TIC). In addition, the samples associated with each method blank must be summarized on Form IV (Method

Blank Summary). Detailed instructions for the completion of these forms are in Exhibit B, Section III.

3.3.1 The Contractor shall report ALL sample concentration data as UNCORRECTED for blanks.

PART 4 - SURROGATE SPIKE (SS) ANALYSIS

4. Summary

Surrogate standard determinations are performed on all samples and blanks. All samples and blanks are fortified with surrogate spiking compounds before purging or extraction in order to monitor preparation and analysis of samples.

4.1 Each sample, matrix spike, matrix spike duplicate, and blank are spiked with surrogate compounds prior to extraction. The surrogate spiking compounds shown in Table 4.1 are used to fortify each sample, matrix spike, matrix spike duplicate, and blank with the proper concentrations. Performance based criteria are generated from laboratory results. Therefore, deviations from the spiking protocol will not be permitted.

TABLE 4.1. SURROGATE SPIKING COMPOUNDS

Compounds	Amount in Sample Extract* (before any optional dilutions)		
	Fraction	Water	Low/Medium Soil
Nitrobenzene-d_5	BNA	50 ug	50 ug
2-Fluorobiphenyl	BNA	50 ug	50 ug
p-Terphenyl-d_{14}	BNA	50 ug	50 ug
Phenol-d_5	BNA	100 ug	100 ug
2-Fluorophenol	BNA	100 ug	100 ug
2,4,6-Tribromophenol	BNA	100 ug	100 ug

* At the time of injection.

4.2 Surrogate spike recovery must be evaluated by determining whether the concentration (measured as percent recovery) falls inside the contract required recovery limits listed in Table 4.2.

TABLE 4.2. CONTRACT REQUIRED SURROGATE SPIKE RECOVERY LIMITS

Fraction	Surrogate Compound	Water	Low/Medium Soil
BNA	Nitrobenzene-d_5	35-114	23-120
BNA	2-Fluorobiphenyl	43-116	30-115
BNA	p-Terphenyl-d_{14}	33-141	18-137
BNA	Phenol-d_5	10-94	24-113
BNA	2-Fluorophenol	21-100	25-121
BNA	2,4,6-Tribromophenol	10-123	19-122

4.3 Treatment of surrogate spike recovery information is according to paragraphs 4.3.1 through 4.3.2.

4.3.1 Method Blank Surrogate Spike Recovery

The laboratory must take the actions listed below if recovery of any one surrogate compound in <u>either</u> the base/neutral or acid fraction is outside of contract surrogate spike recovery limits.

4.3.1.1 Check calculations to ensure that there are no errors; check internal standard and surrogate spiking solutions for degradation, contamination, etc; also check instrument performance.

4.3.1.2 Reanalyze the blank extract if steps in 4.3.1.1 fail to reveal the cause of the noncompliant surrogate recoveries.

4.3.1.3 Reextract and reanalyze the blank.

4.3.1.4 If the measures listed in 4.3.1.1 thru 4.3.1.3 fail to correct the problem, the analytical system must be considered to be out of control. The problem <u>MUST</u> be corrected before continuing. This may mean recalibrating the instrumentation but it may also mean more extensive action. The specific corrective action is left up to the GC/MS operator. When surrogate recovery(ies) in the blank is outside of the contract required windows, all samples associated with that blank <u>MUST</u> be reanalyzed at no additional cost to the Agency.

4.3.2 Sample Surrogate Spike Recovery

The laboratory must take the actions listed below if either of the following conditions exists:

- Recovery of any one surrogate compound in <u>either</u> base neutral or acid fraction is below 10%.

- Recoveries of two surrogate compounds in <u>either</u> base neutral or acid fractions are outside surrogate spike recovery limits.

4.3.2.1 The Contractor shall document (in this instance, document means to write down and discuss the problem and corrective action taken in the Case Narrative, see Exhibit B) deviations outside of acceptable quality control limits and take the following actions:

4.3.2.1.1 Check calculations to ensure that there are no errors; check internal standard and surrogate spiking solutions for degradation, contamination, etc.; also check instrument performance.

4.3.2.1.2 If the steps in 4.3.2.1.1 fail to reveal a problem, then reanalyze the extract. If reanalysis of the extract solves the problem, then the problem was within the laboratory's control. Therefore, <u>only submit</u> data from the analysis with surrogate spike recoveries <u>within</u> the contract windows. This shall be considered the <u>initial</u> analysis and shall be reported as such on all data deliverables.

4.3.2.1.3 If the steps in 4.3.2.1.2 fail to solve the problem, then reextract and reanalyze the sample. If the reextraction and reanalysis solves the problem, then the problem was in the laboratory's control. Therefore, <u>only submit</u> data from the extraction and analysis with surrogate spike recoveries <u>within</u> the contract windows. This shall be considered the <u>initial</u> analysis and shall be reported as such on all data deliverables.

If the reextraction and reanalysis of the sample does not solve the problem; i.e., surrogate recoveries are outside the contract windows for both analyses, then submit the surrogate spike recovery data and the sample data from <u>both</u> analyses according to paragraph 4.4. Distinguish between the initial analysis and the reanalysis on all data

deliverables, using the sample suffixes specified in Exhibit B.

4.4 Documentation

The Contractor shall report surrogate recovery data for the following:

- o Method Blank Analysis
- o Sample Analysis
- o Matrix Spike/Matrix Spike Duplicate Analyses
- o All sample reanalyses that substantiate a matrix effect

The surrogate spike recovery data is summarized on the Surrogate Spike Percent Recovery Summary (Form II). Detailed instructions for the completion of Form II are in Exhibit B, Section III.

PART 5 - MATRIX SPIKE/MATRIX SPIKE DUPLICATE ANALYSIS (MS/MSD)

5. Summary

In order to evaluate the matrix effect of the sample upon the analytical methodology, the USEPA has developed the standard mixes listed in Table 5.1 to be used for matrix spike and matrix spike duplicate analyses. These compounds are subject to change depending upon availability and suitability for use as matrix spikes.

5.1 MS/MSD Frequency of Analysis

A matrix spike and matrix spike duplicate must be performed for each group of samples of a similar matrix, once:

- o each Case of field samples received, OR
- o each 20 field samples in a Case, OR
- o each group of field samples of a similar concentration level (soils only), OR
- o each 14 calendar day period during which field samples in a Case were received (said period beginning with the receipt of the first sample in that Sample Delivery Group),

whichever is most frequent.

5.2 Use the compounds listed in Table 5.1 to prepare matrix spiking solutions according to protocols described in Exhibit D SV. The analytical protocols in Exhibit D SV stipulate the amount of matrix spiking solution to be added to the sample aliquots prior to extraction. Each method allows for optional dilution steps which must be accounted for when calculating percent recovery of the matrix spike and matrix spike duplicate samples.

TABLE 5.1. MATRIX SPIKING SOLUTIONS

Base/Neutrals	Acids
1,2,4-Trichlorobenzene	Pentachlorophenol
Acenaphthene	Phenol
2,4-Dinitrotoluene	2-Chlorophenol
Pyrene	4-Chloro-3-Methylphenol
N-Nitroso-Di-n-Propylamine	4-Nitrophenol
1,4-Dichlorobenzene	

5.2.1 Samples requiring optional dilutions and chosen as the matrix spike/ matrix spike duplicate samples, must be analyzed at the same dilution as the original unspiked sample.

5.3 Individual component recoveries of the matrix spike are calculated using Equation 5.1.

$$\text{Matrix Spike Percent Recovery} = \frac{SSR - SR}{SA} \times 100 \qquad \text{Eq. 5.1}$$

where

SSR - Spike Sample Results
SR - Sample Result
SA - Spike Added from spiking mix

5.4 Relative Percent Difference (RPD)

The Contractor is required to calculate the relative percent difference between the matrix spike and matrix spike duplicate. The relative percent differences (RPD) for each component are calculated using Equation 5.2.

$$RPD = \frac{D1 - D2}{(D1 + D2)/2} \times 100 \qquad \text{Eq. 5.2}$$

where

RPD - Relative Percent Difference
D1 - First Sample Value
D2 - Second Sample Value (duplicate)

5.5 Documentation

The matrix spike (MS) results (concentrations) for nonspiked semivolatile TCL compounds shall be reported on Form I (Organic Analysis Data Sheet) and the matrix spike percent recoveries shall be summarized on Form III (MS/MSD Recovery). These values will be used by

EPA to periodically update existing performance based QC recovery limits (Table 5.2).

The results for nonspiked semivolatile TCL compounds in the matrix spike duplicate (MSD) analysis shall be reported on Form I (Organic Analysis Data Sheet) and the percent recovery and the relative percent difference shall be summarized on Form III (MS/MSD Recovery). The RPD data will be used by EPA to evaluate the long term precision of the analytical method. Detailed instructions for the completion of Form III are in Exhibit B, Section III.

TABLE 5.2. MATRIX SPIKE RECOVERY LIMITS*

Fraction	Matrix Spike Compound	Water	Soil/Sediment
BN	1,2,4-Trichlorobenzene	39-98	38-107
BN	Acenaphthene	46-118	31-137
BN	2,4-Dinitrotoluene	24-96	28-89
BN	Pyrene	26-127	35-142
BN	N-Nitroso-Di-n-Propylamine	41-116	41-126
BN	1,4-Dichlorobenzene	36-97	28-104
Acid	Pentachlorophenol	9-103	17-109
Acid	Phenol	12-89	26-90
Acid	2-Chlorophenol	27-123	25-102
Acid	4-Chloro-3-Methylphenol	23-97	26-103
Acid	4-Nitrophenol	10-80	11-114

PART 6 - SAMPLE ANALYSIS

6. Summary

The intent of Part 6 is to provide the Contractor with a brief summary of ongoing QC activities involved with sample analysis. Specific references are provided to help the Contractor meet specific reporting and deliverables requirements of this contract.

6.1 Sample Analysis

Samples can be analyzed upon successful completion of the initial QC activities. When twelve (12) hours have elapsed since the initial tune was completed, it is necessary to conduct an instrument tune and calibration check analysis (described in Part 2 of this Section). Any major system maintenance, such as a source cleaning or installation of a new column, may necessitate a retune and recalibration (see Initial Calibration, Part 2). Minor maintenance should necessitate only the calibration verification (Continuing Calibration, Part 2).

6.1.1 Internal Standards Evaluation - Internal standard responses and retention times in all samples must be evaluated immediately after or during data acquisition. If the retention time for

any internal standard changes by more than 30 seconds, the chromatographic system must be inspected for malfunctions, and corrections made as required. The extracted ion current profile (EICP) of the internal standards must be monitored and evaluated for each sample, blank, matrix spike, and matrix spike duplicate. The criteria are described in detail in the instructions for Form VIII, Internal Standard Area Summary (see Exhibit B, Section III). If the extracted ion current profile (EICP) area for any internal standard changes by more than a factor of two (-50% to 100%), from the latest daily (12 hour time period) calibration standard, the mass spectrometric system must be inspected for malfunction, and corrections made as appropriate. Breaking off 1 foot of the column or cleaning the injector sleeve will often improve high end sensitivity for the late eluting compounds; repositioning or repacking the front end of the column will often improve front end column performance. Poor injection technique can also lead to variable IS ratios. When corrections are made, reanalysis of samples analyzed while the system was malfunctioning is necessary.

6.1.1.1 If after reanalysis, the EICP areas for all internal standards are inside the contract limits (-50% to +100%), then the problem with the first analysis is considered to have been within the control of the laboratory. Therefore, <u>only submit</u> data from the analysis with EICPs <u>within</u> the contract limits. This is considered the <u>initial</u> analysis and must be reported as such on all data deliverables.

6.1.1.2 If the reanalysis of the sample does not solve the problem, i.e., the EICP areas are outside contract limits for both analyses, then submit the EICP data and sample data from <u>both</u> analyses. Distinguish between the initial analysis and the reanalysis on all data deliverables, using the sample suffixes specified in Exhibit B. Document in the Case Narrative all inspection and corrective actions taken.

6.1.2 Each analytical run must also be checked for saturation. The level at which an individual compound will saturate the detection system is a function of the overall system sensitivity and the mass spectral characteristics of that compound. The initial method calibration (Part 2) requires that the system should not be saturated for high response compounds at 160 nanograms for semivolatile TCL compounds.

6.1.2.1 If the on-column concentration of any compound in any sample exceeds the initial calibration range, that sample must be diluted, the internal standard concentration readjusted, and the sample reinjected, as described in specific methodologies in Exhibit D SV. Secondary ion quantitation is only allowed when

there are sample matrix interferences with the primary ion.

6.1.2.2 If the dilution of the sample causes any compound detected in the first analysis to be undetectable in the second analysis, then the results of both analyses shall be reported on separate Forms I, according to the instructions in Exhibit B.

6.1.3 Qualitative Analysis

The semivolatile compounds listed in the Target Compound List (TCL), Exhibit C, shall be identified by an analyst competent in the interpretation of mass spectra, by comparison of the suspect mass spectrum to the mass spectrum of a standard of the suspected compound. Two criteria must be satisfied to verify the identifications: (1) elution of the sample component at the same GC relative retention time as the standard component, and (2) correspondence of the sample component and standard component mass spectra (see Exhibit D SV, Section IV).

6.1.3.1 For establishing correspondence of the GC relative retention time (RRT), the sample component RRT must compare within ±0.06 RRT units of the RRT of the standard component. For reference, the standard must be run on the same shift as the sample.

6.1.3.2 For comparison of standard and sample component mass spectra, mass spectra obtained on the Contractor's GC/MS are required. The DFTPP tuning requirements listed in Part 1 must be met on the same GC/MS.

6.1.3.2.1 The requirements for qualitative verification by comparison of mass spectra are as follows:

- All ions present in the standard mass spectra at a relative intensity greater than 10% (most abundant ion in the spectrum equals 100%) <u>must</u> be present in the sample spectrum.

- The relative intensities of ions specified in the above paragraph must agree within ±20% between the standard and sample spectra.

- Ions greater than 10% in the <u>sample</u> spectrum but not present in the <u>standard</u> spectrum must be considered and accounted for by the analyst making the comparison. When GC/MS computer data processing programs are used to obtain the sample

component spectrum, both the processed and the raw spectra must be evaluated. In Task III, the verification process should favor false negatives (Exhibit D SV, Section IV).

6.1.3.2.2 If a compound cannot be verified by all of the criteria in 6.1.3.2.1, but in the technical judgement of the mass spectral interpretation specialist the identification is correct, the Contractor shall report the identification and proceed with the quantitation.

6.1.3.3 A library search shall be executed for nonsurrogate and non-TCL sample components for the purpose of tentative identification. For this purpose, the 1985 or most recent available version of the National Bureau of Standards Mass Spectral Library, containing 42,261 spectra, should be used.

6.1.4 Quantitation

6.1.4.1 Semivolatile TCL components identified shall be quantitated by the internal standard method. The internal standards used shall be the ones assigned in Table 2.2 of this Section. The EICP area of characteristic ions of TCL analytes are used (Exhibit D SV, Section IV).

6.1.4.2 An estimated concentration for non-TCL components tentatively identified shall be quantitated by the internal standard method. For quantification, the nearest internal standard free of interferences must be used.

6.1.4.3 Calculate surrogate standard recovery (see Part 4) for all surrogate compounds on all samples, blanks, matrix spikes, and matrix spike duplicates. If recovery is within contractual limits, report on Form II (see Exhibit B, Section III). If recovery is outside contractual limits, take specific steps listed in Surrogate Spike Recoveries (Part 4).

6.1.4.4 Calculate matrix spike and matrix spike duplicate percent recovery (see Part 5) for all compounds and report results on Form III (see Exhibit B, Section III). Calculate Relative Percent Differences (RPDs) for all matrix spiking compounds and report results on Form III. Ensure that the proper frequency of MS/MSD analysis is maintained.

6.1.5 Reporting and Deliverables

Refer to Exhibit B of this Statement of Work for specific details on contract deliverables and reporting formats. Exhibit B contains specific instructions for completing all required Forms, as well as a detailed itemization of reporting and deliverables requirements. Exhibit H contains the format requirements for delivery of data in computer-readable format.

SECTION III PEST

PESTICIDES/PCBs QA/QC
REQUIREMENTS

This Section outlines the minimum quality control (QC) operations necessary to satisfy the analytical requirements associated with the determination of pesticide/PCB organic TCL compounds in water and soil/sediment samples. These QC operations are as follows:

- o Method Blank Analysis
- o Surrogate Spike Response Monitoring
- o Matrix Spike and Matrix Spike Duplicate Analysis
- o Specific QA/QC for Pesticide Analysis

PART 1 - METHOD BLANK ANALYSIS

1. Summary

A method blank is a volume of deionized, distilled laboratory water for water samples, or a purified solid matrix for soil/sediment samples, carried through the entire analytical scheme (extraction, concentration, and analysis). For soil/sediment samples, a solid matrix suitable for pesticide analyses is available from EMSL-LV. The method blank volume or weight must be approximately equal to the sample volumes or sample weights being processed.

1.1 Method blank analysis must be performed at the following frequency:

1.1.1 For the analysis of pesticide/PCB TCL compounds, a method blank analysis must be performed once:

- o each Case, OR
- o each 14 calendar day period during which samples in a Case are received (said period beginning with the receipt of the first sample in that Sample Delivery Group), OR
- o each 20 samples in a Case, including matrix spike and reanalyses that are of similar matrix (water or soil) or similar concentration (soil only), OR
- o whenever samples are extracted by the same procedure (separatory funnel or continuous extraction),

whichever is most frequent, on each GC/MS or GC system used to analyze samples.

1.2 It is the Contractor's responsibility to ensure that method interferences caused by contaminants in solvents, reagents, glassware, and other sample processing hardware that lead to discrete artifacts and/or elevated baselines in gas chromatograms be minimized.

1.2.1 For the purposes of this protocol, an acceptable laboratory method blank should meet the criteria of paragraph 1.2.1.1.

1.2.1.1 The method blank must contain less than or equal to the Contract Required Quantitation Limit of any single pesticide/PCB Target Compound (Exhibit C).

1.2.2 If a laboratory method blank exceeds these criteria, the Contractor must consider the analytical system to be out of control. The source of the contamination must be investigated and appropriate corrective measures MUST be taken and documented before further sample analysis proceeds. All samples processed with a method blank that is out of control (i.e., contaminated) MUST be reextracted and reanalyzed at no additional cost to the Agency. The Laboratory Manager, or his designee, must address problems and solutions in the Case Narrative (Exhibit B).

1.3 Documentation

The Contractor shall report results of method blank analysis using the Organic Analysis Data Sheet (Form I). In addition, the samples associated with each method blank must be summarized on Form IV (Method Blank Summary). Detailed instructions for the completion of these forms can be found in Exhibit B, Section III.

1.3.1 The Contractor shall report ALL sample concentration data as UNCORRECTED for blanks.

PART 2 - SURROGATE SPIKE (SS) ANALYSIS

2. Summary

Surrogate standard determinations are performed on all samples and blanks. All samples and blanks are fortified with surrogate spiking compounds before purging or extraction in order to monitor preparation and analysis of samples.

2.1 Each sample, matrix spike, matrix spike duplicate, and blank are spiked with surrogate compounds prior to extraction. The surrogate spiking compounds shown in Table 4.1 are used to fortify each sample, matrix spike, matrix spike duplicate, and blank with the proper concentrations. Performance based criteria are generated from laboratory results. Therefore, deviations from the spiking protocol will not be permitted.

TABLE 4.1. SURROGATE SPIKING COMPOUND

Compound	Fraction	Amount in Sample Extract* (before any optional dilutions) Water	Low/Medium Soil
Dibutylchlorendate	Pest.	0.1 ug	0.1 ug

* At the time of injection.

2.2 Surrogate spike recovery must be evaluated by determining whether the concentration (measured as percent recovery) falls inside the advisory recovery limits listed in Table 4.2.

TABLE 4.2. ADVISORY SURROGATE SPIKE RECOVERY LIMITS

Fraction	Surrogate Compound	Water	Low/Medium Soil/Sediment
Pest.	Dibutylchlorendate	(24-154)*	(20-150)*

* These limits are for advisory purposes only. They are not used to determine if a sample should be reanalyzed. When sufficient data becomes available, the USEPA may set performance based contract required windows.

2.3 Documentation

The Contractor shall report surrogate recovery data for the following:

- o Method Blank Analysis
- o Sample Analysis
- o Matrix Spike/Matrix Spike Duplicate Analyses

The surrogate spike recovery data is summarized on the Surrogate Spike Percent Recovery Summary (Form II). Detailed instructions for the completion of Form II are in Exhibit B, Section III.

PART 3 - MATRIX SPIKE/MATRIX SPIKE DUPLICATE ANALYSIS (MS/MSD)

3. Summary

In order to evaluate the matrix effect of the sample upon the analytical methodology, the USEPA has developed the standard mixes listed in Table 5.1 to be used for matrix spike and matrix spike duplicate analyses. These compounds are subject to change depending upon availability and suitability for use as matrix spikes.

3.1 MS/MSD Frequency of Analysis

A matrix spike and matrix spike duplicate must be performed for each group of samples of a similar matrix, once:

- o each Case of field samples received, OR
- o each 20 field samples in a Case, OR
- o each group of field samples of a similar concentration level (soils only), OR

- each 14 calendar day period during which field samples in a Case were received (said period beginning with the receipt of the first sample in that Sample Delivery Group),

whichever is most frequent.

3.2 Use the compounds listed in Table 5.1 to prepare matrix spiking solutions according to protocols described in Exhibit D PEST. The analytical protocols in Exhibit D PEST stipulate the amount of matrix spiking solution to be added to the sample aliquots prior to extraction. Each method allows for optional dilution steps which must be accounted for when calculating percent recovery of the matrix spike and matrix spike duplicate samples.

TABLE 5.1. MATRIX SPIKING SOLUTIONS

Pesticides	
Heptachlor	Lindane
Aldrin	Endrin
Dieldrin	4,4'-DDT

3.2.1 Samples requiring optional dilutions and chosen as the matrix spike/matrix spike duplicate samples, must be analyzed at the same dilution as the original unspiked sample.

3.3 Individual component recoveries of the matrix spike are calculated using Equation 5.1.

$$\text{Matrix Spike Percent Recovery} = \frac{SSR - SR}{SA} \times 100 \qquad \text{Eq. 5.1}$$

where

SSR = Spike Sample Results

SR = Sample Result

SA = Spike Added from spiking mix

3.4 Relative Percent Difference (RPD)

The Contractor is required to calculate the relative percent difference between the matrix spike and matrix spike duplicate. The relative percent differences (RPD) for each component are calculated using Equation 5.2.

$$RPD = \frac{D_1 - D_2}{(D_1 + D_2)/2} \times 100 \qquad \text{Eq. 5.2}$$

where

RPD - Relative Percent Difference

D_1 - First Sample Value

D_2 - Second Sample Value (duplicate)

3.5 Documentation

The matrix spike (MS) results (concentrations) for nonspiked pesticide/PCB TCL compounds shall be reported on Form I (Organic Analysis Data Sheet) and the matrix spike percent recoveries shall be summarized on Form III (MS/MSD Recovery). These values will be used by EPA to periodically update existing performance based QC recovery limits (Table 5.2).

The results for nonspiked pesticide/PCB TCL compounds in the matrix spike duplicate (MSD) analysis shall be reported on Form I (Organic Analysis Data Sheet) and the percent recovery and the relative percent difference shall be summarized on Form III (MS/MSD Recovery). The RPD data will be used by EPA to evaluate the long term precision of the analytical method. Detailed instructions for the completion of Form III are in Exhibit B, Section III.

TABLE 5.2. MATRIX SPIKE RECOVERY LIMITS*

Fraction	Matrix Spike Compound	Water	Soil/Sediment
Pest.	Lindane	56-123	46-127
Pest.	Heptachlor	40-131	35-130
Pest.	Aldrin	40-120	34-132
Pest.	Dieldrin	52-126	31-134
Pest.	Endrin	56-121	42-139
Pest.	4,4'-DDT	38-127	23-134

* These limits are for advisory purposes only. They are not to be used to determine if a sample should be reanalyzed. When sufficient multi-lab data are available, standard limits will be calculated.

PART 4 - PESTICIDE QA/QC REQUIREMENTS

4. Summary

Part 4 summarizes ongoing QC activities involved with pesticide/PCB analysis that were detailed in Parts 1, 2 and 3 of this Section, and describes the additional QA/QC procedures required during the analysis of pesticide/PCBs that are not covered in Parts 1, 2, and 3.

4.1 The Contractor must perform the following:

4.1.1 Method Blank analysis as per Part 1 of this Section.

4.1.2 Spike all standards, samples, blanks, matrix spike and matrix spike duplicate samples with the surrogate spike compound (dibutylchlorendate) as per Part 2 of this Section.

4.1.3 Matrix Spike/Matrix Spike duplicate analysis as per Part 3 of this Section.

4.2 The external standard quantitation method must be used to quantitate all pesticides/PCBs. Before performing any sample analysis, the laboratory is required to determine the retention time window for each pesticide/PCB target compound listed in Exhibit C and the surrogate spike compound, dibutylchlorendate. These retention time windows are used to make tentative identification of pesticides/PCBs during sample analysis.

4.2.1 Prior to establishing retention time windows, the GC operating conditions (oven temperature and flow rate) must be adjusted such that 4,4'-DDT has a retention time of $\geq$ 12 minutes on packed GC columns, except on OV-1 or OV-101 columns. Conditions listed in Table 7, Exhibit D PEST, Section IV may be used to achieve this criteria.

4.2.2 Establish retention time windows as follows:

4.2.2.1 At the beginning of the contract and each time a new GC column is installed, make three injections of all single component pesticides mixtures, multi-response pesticides, and PCBs throughout the course of a 72-hour period. The concentration of each pesticide/PCB should be sufficient to provide a response that is approximately half scale. The three injections of each compound should be made at approximately equal intervals during the 72-hour period, (e.g., each compound should be injected near the beginning, near the middle, and near the end of the 72-hour period).

4.2.2.2 Verify the retention time shift for dibutylchlorendate in each standard. The retention time shift between the initial and subsequent standards must be less than 2.0% difference for packed columns, less than 1.5% difference for wide bore capillary columns (ID greater than 0.32 mm), and less than 0.3% difference for narrow bore capillary columns (ID less than 0.32 mm). If this criterion is not met, continue injecting replicate standards to meet this criterion.

4.2.2.3 Calculate the standard deviation of the three absolute retention times for each single component

pesticide. For multiresponse pesticides or PCBs, choose one major peak from the envelope and calculate the standard deviation of the three retention times for that peak.

4.2.2.4 The standard deviations determined in 4.2.2.3 shall be used to determine the retention time windows for a particular 72-hour sequence. Apply plus or minus three times the standard deviations in 4.2.2.3 to the retention time of each pesticide/PCB determined for the first analysis of the pesticide/PCB standard in a given 72 hour analytical sequence. This range of retention times defines the retention time window for the compound of interest for that 72-hour sequence. NOTE: By definition, the retention time of a pesticide/PCB from the first analysis of that compound in the 72 hour sequence is the center of the retention time window. Do not use the retention time measured in 4.2.2.1 as the center of the retention time window. The experience of the analyst should weigh heavily in the interpretation of chromatograms. For multiresponse pesticide/PCBs, the analyst should utilize the retention time window but should primarily rely on pattern recognition.

For example, the three injections of aldrin in 4.2.2.1 have a mean retention time of 1.40 minutes and a standard deviation of 0.01 minutes. The retention time of the aldrin standard at the beginning of the 72-hour sequence begun today is 1.51 minutes. Three times the standard deviation (0.01) is applied to the retention time of aldrin from the sequence begun today, e.g., $1.51 \pm 3(0.01) = 1.48\text{-}1.54$. If aldrin has a retention time of 1.60 minutes at the beginning of the next 72-hour sequence, then the retention time window becomes: $1.60 \pm 3(0.01) = 1.57\text{-}1.63$ for that 72-hour sequence.

4.2.2.5 In those cases where the retention time window for a particular pesticide/PCB is less than 0.01 minutes, the laboratory may substitute whichever of the following formulae apply.

- For packed columns, the retention time window of the particular pesticide/PCB shall be calculated as ± 1% of the initial retention time of the compound in the 72-hour sequence.

- For wide bore capillary columns (ID greater than 0.32 mm), the retention time window of the particular pesticide/PCB shall be calculated as ± 0.75% of the initial retention time of the compound in the 72-hour sequence.

- For narrow bore capillary columns (ID less than 0.32 mm), the retention time window of the particular pesticide/PCB shall be calculated as ± 0.15% of the initial retention time of the compound in the 72-hour sequence.

4.2.2.6 Regardless of whether the retention time windows are calculated by the method in 4.2.2.4 or 4.2.2.5, the retention time windows must be reported as a range of values, not as, for example, 1.51 minutes ± 1%.

4.2.2.7 The laboratory must calculate retention time windows for each pesticide/PCB on each GC column used at the beginning of the program and whenever a new GC column is installed. The data must be retained by the laboratory and made available during an on-site laboratory evaluation.

4.3 Primary GC Column Analysis

4.3.1 Primary Analysis establishes whether or not pesticides/PCBs are present in the sample, and establishes a tentative identification of each compound. Quantitation may be performed on the primary analysis if the analysis meets all of the QC criteria specified for quantitation. NOTE: To determine that no pesticides/PCBs are present at or above the contract required quantitation limit <u>is</u> a form of quantitation.

4.3.2 Separation should be ≥ 25 percent resolution between peaks. This criteria must be considered when determining whether to quantitate on the Primary Analysis or the Confirmation Analysis. When this criterion cannot be met, quantitation is adversely affected because of the difficulty in determining where to establish the baseline.

4.3.3 Evaluation Standard Mixtures

4.3.3.1 Prepare Evaluation Standard Mixes A, B, and C (Aldrin, Endrin, 4,4'-DDT and Dibutylchlorendate) at the 3 concentration levels described in Exhibit D PEST. Analyze the three Evaluation Standard Mixes sequentially at the beginning of each seventy-two (72) hour period (See Figure 4.1).

4.3.3.2 Calculate the Calibration Factor (ratio of the total area to the mass injected) for each compound in Evaluation Standard Mix A, B and C using Equation 4.1.

$$\text{Calibration Factor} = \frac{\text{Total Area of Peak}}{\text{Mass Injected (in nanograms)}} \qquad \text{Eq. 4.1}$$

4.3.3.3 Using the Calibration Factors from 4.3.3.2 above, calculate the percent relative standard deviation (%RSD) for each compound at the three concentration levels using Equation 4.2. The percent relative standard deviation for Aldrin, Endrin, and Dibutylchlorendate must be less than or equal to 10.0 percent. If the %RSD exceeds 10.0% for 4,4'-DDT, see Section 4.5.4.4.

<u>Note</u>: The 10.0% RSD linearity criteria pertains only to columns being used for Pesticide/PCB quantitation. If a column is used only for surrogate quantitation, the 10.0% RSD is <u>only</u> required for Dibutylchlorendate.

$$\text{\% Relative Standard Deviation} = \frac{SD}{\bar{x}} \times 100 \qquad \text{Eq. 4.2}$$

$$\text{where Standard Deviation (SD)} = \sqrt{\sum_{i=1}^{N} \frac{(x_i - \bar{x})^2}{N-1}}$$

$\bar{x}$ = mean of initial three Calibration Factors (per compound).

4.3.3.4 Evaluate the chromatogram from the analysis of the Evaluation Mix B. The appearance of peaks in addition to the four main pesticide peaks indicates a breakdown of Endrin and/or 4,4'-DDT.

4.3.3.5 Calculate the percent breakdown for Endrin and/or 4,4'-DDT on the mixed phase (1.5% OV-16/1.95% OV-210 or equivalent) GC column using Equations 4.3 and 4.4. The percent breakdown for Endrin or 4,4'-DDT must not exceed 20.0 percent. Corrective action must be taken before analysis continues.

$$\text{\% breakdown for 4,4'-DDT} = \frac{\text{Total DDT degradation peak area}^1\text{(DDE + DDD)}}{\text{Total DDT peak area}^1\text{ (DDT + DDE + DDD)}} \times 100 \qquad \text{Eq. 4.3}$$

$$\text{\% breakdown for Endrin} = \frac{\text{Total Endrin degradation peak areas}^1\text{ (Endrin Aldehyde + Endrin Ketone)}}{\text{Total Endrin Peak Area}^1\text{(Endrin + Endrin Aldehyde + Endrin Ketone)}} \times 100 \qquad \text{Eq. 4.4}$$

---

1 The term peak height may be substituted for the term peak area.

4.3.3.6 Calculate the percent breakdown for Endrin and/or 4,4'-DDT on the OV-1 or equivalent GC column using Equations 4.3 and 4.4 The percent breakdown for Endrin or 4,4'-DDT must not exceed 20.0 percent. Corrective action must be taken before analysis continues.

4.3.3.7 If there is evidence of a peak at the retention time for Endrin aldehyde/4,4'-DDD (which coelute on the OV-1 or equivalent GC column), calculate a combined percent breakdown for Endrin/4,4'-DDT using Equation 4.5. The combined Endrin/4,4'-DDT percent breakdown must not exceed 20.0 percent, else corrective action must be taken before analysis continues.

$$\text{Combined \% breakdown} = \frac{\text{Total Endrin/DDT degradation peak areas}^{2}\ \text{(DDD, DDE, Endrin Aldehyde, Endrin Ketone)}}{\text{Total Endrin/DDT degradation peak area}^{2}\ \text{(Endrin, Endrin Aldehyde, Endrin Ketone, DDD, DDE, DDT)}} \times 100 \qquad \text{Eq. 4.5}$$

4.3.3.8 Suggested Maintenance

Corrective measures may require any one or more of the following remedial actions:

4.3.3.8.1 Packed columns - For instruments with off-column injection; replace the demister trap, clean and deactivate the glass injection port insert or replace with a cleaned and deactivated insert. Inspect the injection end of the column and remove any foreign material (broken glass from the rim of the column or pieces of septa). Replace the glass wool with fresh deactivated glass wool. Also, it may be necessary to remove the first few millimeters of packing material if any discoloration is noted, also swab out the inside walls of the column if any residue is noted. If these procedures fail to eliminate the degradation problem, it may be necessary to deactivate the metal injector body (described below) and/or repack/replace the column.

4.3.3.8.2 Capillary columns - Clean and deactivate the glass injection port insert or replace with a cleaned and

---

2 The term peak height may be substituted for the term peak area.

deactivated insert. Break off the first few inches, up to one foot, of the injection port side of the column. Remove the column and solvent backflush according to the manufacturer's instructions. If these procedures fail to eliminate the degradation problem, it may be necessary to deactivate the metal injector body and/or replace the column.

4.3.3.8.3 Metal Injector Body - Turn off the oven and remove the analytical column when the oven has cooled. Remove the glass injection port insert (instruments with off-column injection or Grob). Lower the injection port temperature to room temperature. Inspect the injection port and remove any noticeable foreign material.

Place a beaker beneath the injector port inside the GC oven. Using a wash bottle, serially rinse the entire inside of the injector port with acetone and then toluene, catching the rinsate in the beaker.

Prepare a solution of deactivating agent (Sylon-CT or equivalent) following manufacturer's directions. After all metal surfaces inside the injector body have been thoroughly coated with the deactivation solution, serially rinse the injector body with toluene, methanol, acetone and hexane. Reassemble the injector and replace the GC column.

4.3.4 Individual Standard Mixtures A and B

4.3.4.1 Prepare Individual Standard Mixtures A and B containing the single component pesticides. These may be divided into the groups suggested in Exhibit D PEST, which are recommended to prevent overlap of compounds on two of the packed columns. One mixture of all of the single component pesticides is acceptable when using capillary column. Prepare separate solutions of all multi-response pesticides and PCBs. (Aroclor 1016 and Aroclor 1260 may be combined in a single mixture.)

4.3.4.2 Analyze Individual Standard Mixtures A and B and all multi-response pesticide/PCBs at the beginning of

each 72 hour period (see Figure 4.1) and analyze Individual Standard Mixtures A and B at the intervals specified in the analytical sequence in Figure 4.1, and whenever sample analysis is completed. The Calibration Factor for each standard quantitated (Individual Standard Mix A or B) (Equation 4.6), must not exceed a 15.0 percent difference for a quantitation run nor exceed a 20.0 percent difference for a confirmation run during the 72 hour period. Calculate percent difference using Equation 4.7. Deviations greater than 15.0 percent require the laboratory to repeat the samples analyzed following the quantitation standard that exceeded the criterion.

NOTE: Aroclors 1221 and 1232 must be analyzed at a minimum of once a month on each instrument and each column. Copies of these chromatograms must be submitted with each case for instruments and columns used to quantitate samples in that case, when identity of these two pesticides (Aroclor 1221 and 1232) has been confirmed.

$$\text{Calibration Factor} = \frac{\text{Total Area of Peak*}}{\text{Mass injected (in nanograms)}} \qquad \text{Eq. 4.6}$$

* For multiresponse pesticides/PCBs use the total area of all peaks used for quantitation.

$$\text{Percent Difference} = \frac{R_1 - R_2}{R_1} \times 100 \qquad \text{Eq. 4.7}$$

where

R_1 = Calibration Factor from first analysis

R_2 = Calibration Factor from second or subsequent analysis

4.4 Sample Analysis (Primary GC Column)

4.4.1 Samples are analyzed per the sequence described in Figure 4.1.

4.4.2 The retention time shift for Dibutylchlorendate must be evaluated after the analysis of each sample. The retention time shift must be less than 2.0% difference for packed GC columns between the initial standard analysis and any sample or standard analyzed during the 72 hour period. The percent difference for wide bore capillary columns (ID greater than 0.32 mm) must be less than 1.5%. The percent difference for narrow bore capillary columns (ID less than 0.32 mm) must be less than 0.3% (Equation 4.8).

$$\text{Percent Difference (\%D)} = \frac{RT_I - RT_S}{RT_I} \times 100 \qquad \text{Eq. 4.8}$$

where

RT_I = absolute retention time of Dibutylchlorendate in the initial standard (Evaluation Standard Mix A).

RT_S = absolute retention time of Dibutylchlorendate in the sample or subsequent standard.

4.4.3 Evaluate the GC column throughout the analysis of samples by injecting Evaluation Standard Mix B at the frequency outlined in Figure 4.1.

4.4.4 Calculate the percent breakdown for 4,4'-DDT and Endrin according to 4.3.3.5. Take corrective action when the breakdown for 4,4'-DDT or Endrin exceeds 20.0 percent.

FIGURE 4.1 72 HOUR SEQUENCE FOR PESTICIDE/PCB ANALYSIS

1. Evaluation Standard Mix A
2. Evaluation Standard Mix B
3. Evaluation Standard Mix C
4. Individual Standard Mix A*
5. Individual Standard Mix B*
6. Toxaphene
7. Aroclors 1016/1260
8. Aroclor 1221**
9. Aroclor 1232**
10. Aroclor 1242
11. Aroclor 1248
12. Aroclor 1254
13. 5 Samples
14. Evaluation Standard Mix B
15. 5 Samples
16. Individual Standard Mix A or B
17. 5 Samples
18. Evaluation Standard Mix B
19. 5 Samples
20. Individual Standard Mix A or B (whichever not run in step 16)
21. 5 Samples
22. Repeat the above sequence starting with Evaluation Standard Mix B (step 14 above).
23. Pesticide/PCB analysis sequence must end with the analysis of <u>both</u> Individual Standard Mix A <u>and</u> B regardless of number of samples analyzed.

* These may be one mixture.

** Aroclors 1221 and 1232 must be analyzed at a minimum of <u>once per month</u> on each instrument and each column. Copies of these chromatograms must be submitted with each Case for instruments and columns used to quantitate samples in that Case.

4.4.5 If one or more compounds have a response greater than full scale, the extract requires dilution according to the specifications in Exhibit D PEST. If the dilution of the extract causes any compounds tentatively identified in the first analysis to be undetectable in the second analysis, then the results of both analyses shall be reported on separate Forms I, according to the instructions in Exhibit B. For dilutions greater than 10-fold, also see the instructions in Exhibit D PEST.

4.5 Confirmation Analysis (GC/EC)

4.5.1 Confirmation Analysis is to confirm the presence of all compounds tentatively identified in the Primary Analysis. Therefore, the only standards that are required are the Evaluation Standard Mixes (to check linearity and degradation criteria) and standards of all compounds to be confirmed. The 72-hour sequence described in Figure 4.1 is, therefore, modified to fit each case. Quantitation may be performed on the confirmation analysis. If toxaphene or DDT is to be quantitated, the linearity requirements are specified in Section 4.5.4.

4.5.2 Separation should be > 25 percent resolution between peaks. This criteria must be considered when determining whether to quantitate on the Primary Analysis or the Confirmation Analysis. When this criterion cannot be met, quantitation is adversely affected because of the difficulty in determining where to establish the baseline.

4.5.2.1 For a fused silica capillary (FSCC) confirmation, there must be > 25 percent resolution (valley) between the following pesticide pairs:

- beta-BHC and delta-BHC
- Dieldrin and 4,4'-DDT
- 4,4'-DDD and Endrin Aldehyde
- Endosulfan Sulfate and 4,4'-DDT

4.5.3 All QC specified previously must be adhered to, i.e., the ≥ 12 minutes retention time for 4,4'-DDT, and the specified criteria for 4,4'-DDT and endrin degradation, linearity, calibration factor for standards, and retention time shift for dibutylchlorendate. The retention time requirement 4,4'-DDT does not have to be met if the confirmation column is OV-1 or OV-101.

4.5.4 Begin the Confirmation Analysis GC sequence with the three concentration levels of Evaluation Standard Mixes A, B and C. The exception to this occurs when toxaphene and/or DDT series are to be confirmed and quantitated. There are four combinations of pesticides that could occur, therefore, the

following sequences must be followed depending on the situation.

4.5.4.1 Toxaphene only - Begin the sequence with Evaluation Mix B to check degradation, followed by three concentration levels to toxaphene. Check linearity by calculating %RSD. If $\leq$ 10.0% RSD, use the appropriate equation in Exhibit D PEST for calculation. If >10.0% RSD, plot a standard curve and determine the ng for each sample in that set from the curve.

4.5.4.2 DDT, DDE, DDD only - Begin the sequence with Evaluation Mix B. Then inject three concentration levels of a standard containing DDE, DDD and DDT. Calculate linearity and follow the requirements specified in 4.5.4.1 for each compound to be quantitated.

4.5.4.3 DDT series and toxaphene - Begin the sequence with Evaluation Mix B. Then inject three concentration levels of toxaphene and another three levels of the DDT series. Calculate linearity and follow the requirements specified in 4.5.4.1 for each compound to be quantitated.

4.5.4.4 Other pesticides/PCBs plus DDT series and/or toxaphene Begin the sequence with Evaluation Standard Mixes A, B and C. Calculate linearity on the four compounds in the Evaluation Standards mixes. If DDT and/or one or more of the other compounds are >10.0% RSD and/or degradation exceeds the criterion, corrective maintenance as outlined in paragraph 4.3.3.8 should be performed before repeating the above chromatography evaluations. If DDT only exceeds the linearity criteria and one or more of the DDT series is to be quantitated, follow 4.5.4.2 (do not repeat Evaluation Mix B). If none of the DDT series is to be quantitated and DDT exceeds the 10.0% RSD, simply record the % RSD on the proper form. Anytime toxaphene is to be quantitated, follow 4.5.4.1.

4.5.5 After the linearity standards required in 4.5.4 are injected, continue the confirmation analysis injection sequence with all compounds tentatively identified during primary analysis to establish the daily retention time windows during primary analysis. Analyze all confirmation standards for a case at the beginning, at intervals specified in 4.5.6, and at the end. Any pesticide outside of its established retention time window requires immediate investigation and correction before continuing the analysis. The laboratory must reanalyze all samples between the standard that exceeds the criterion and a subsequent standard that meets the criterion.

4.5.6 Begin injection of samples at this point of the Confirmation Analysis sequence. Analyze groups of 5 samples with a standard pertaining to the samples after each group (Evaluation Mix B is required after the first 5 samples, and every 10 samples thereafter, e.g., after 5, 15, 25, etc). The alternating standard's calibration factors must be within 15.0 percent of each other if quantitation is performed. Deviations larger than 15.0 percent require the laboratory to repeat the samples analyzed between the standard that exceeds the criterion and a subsequent standard that meets the criterion. The 15.0 percent criterion only pertains to compounds being quantitated.

4.5.6.1 If more than one standard is required to confirm all compounds tentatively identified in the Primary Analysis, include an alternate standard after each 10 samples.

4.5.6.2 Samples must also be repeated if the degradation of either DDT and/or Endrin exceed 20.0 percent on the intermittent Evaluation Standard Mix B.

4.5.6.3 If the samples are split between 2 or more instruments, all standards and blanks pertaining to those samples must be analyzed on each instrument.

4.5.7 Inject the method blanks (extracted with each set of samples) on every GC and GC column on which the samples are analyzed.

4.5.8 If quantitation is performed on the confirmation analysis, follow the instructions in 4.4.5 regarding dilution of extracts and reporting results.

4.6 GC/MS Pesticide/PCB Confirmation

4.6.1 Any pesticide/PCB confirmed by two dissimilar GC columns must also be confirmed by GC/MS if the concentration in the final sample extract is sufficient for GC/MS analysis (based on laboratory GC/MS detection limits).

4.6.1.1 Pesticides/PCBs may be confirmed utilizing the extract prepared for semivolatile GC/MS analysis; however, the absence of pesticide/PCBs in the semivolatile extract would require the analysis of the pesticide/PCB (fraction) extract.

4.6.2 The tuning and mass calibration criteria for DFTPP (50 ng) <u>MUST</u> be met prior to any confirmation of pesticides/PCBs is undertaken. Refer to the tuning and mass calibration instruction for semivolatiles. The characteristic ions for GC/MC analysis of pesticides/PCBs are given in Exhibit D SV, Table 5.

4.6.3 The pesticide/PCB sample extract(s) and the associated pesticide/PCB blank(s), and reference standard(s) must be analyzed by GC/MS.

4.7 Documentation

See Exhibit B for complete instructions for the completion of all required forms and the Deliverable Index for all reporting and deliverables requirements.

SECTION IV

ANALYTICAL STANDARDS

The Environmental Protection Agency's Quality Assurance Materials Bank will supply primary standards (calibration standards, surrogate standards, matrix spiking standards, and internal standards), contingent upon their availability, only for traceability and quantitative verification of Contractor standards. It is emphasized that these primary standards are for traceability only. There are insufficient quantities to have these available to serve as working standards. The Contractor is responsible for preparing its own working standards from commercial sources.

Caution should be exercised when mixing these standards together, particularly the multicomponent standards. Chemical reactions, such as acid/base reactions, Schiff base formations (reactions of aldehydes and ketones with primary amines), hydrolysis, isotopic exchange, and others may occur.

EPA contract laboratories can call or write directly to the QAMB (address and phone number on the following request form) to obtain reference standards Standards will be provided based on the reasonableness of the request and their availability. Any request from a commercial laboratory that is not currently under contract to EPA will be denied.

Upon award of a contract, a list of available standards will be provided by the EMSL/LV upon request.

QUALITY ASSURANCE MATERIALS BANK
REQUEST FOR REFERENCE STANDARDS

MAIL TO: U.S. Environmental Protection Agency
Quality Assurance Materials Bank (MD-8)
Research Triangle Park, NC 27711 USA

_____
Date

Telephone:

Requests ONLY:	(919) 541-4019 (FTS) 629-4019
Information:	(702) 545-2690 (FTS) 545-2690
Technical Assistance:	(919) 541-3951 (FTS) 629-3951

Date Request Received _____
Date of Shipment _____
Laboratory Code Number _____
Request Number _____
Verified _____

THIS BLOCK FOR AGENCY USE ONLY

The following reference standards are required for our program:

Number Required	Standard Code Number	Compound(s)	Solvent	Purity	Concentration (µg/ml)

Please complete this form in full, PRINTING OR TYPING name and address. Use black ink if possible. Use back of sheet to complete list if necessary. No cover letter is needed.

Name and Address of laboratory: _____

_____

_____

_____

_____
Requestor's Name

IMPORTANT:

I certify that the calibrated standard(s) requested are to be used only in this laboratory by qualified personnel for the purpose of developing or checking analytical procedures and/or for the calibration of instrumentation.

_____
Date

_____
Signature

Request for Reference Standards

SECTION V

LABORATORY EVALUATION PROCEDURES

This section outlines the procedures which will be used by the Project Officer or his authorized representative during the contract period of performance to conduct laboratory audits to determine the Contractor's continuing ability to meet the terms and conditions of this contract. The evaluation process incorporates two major steps: 1) evaluation of laboratory performance, and 2) on-site inspection of the laboratory to verify continuity of personnel, instrumentation and quality control requirements of the contract. The following is a description of these two steps.

PART 1 - EVALUATION OF LABORATORY PERFORMANCE

1. Performance Evaluation Sample Analysis

1.1 The Performance Evaluation (PE) sample set will be sent to a participating laboratory on a quarterly basis to verify the laboratory's continuing ability to produce acceptable analytical results. These samples will be provided either single blind (recognizable as a PE material and of unknown composition), or double blind (not recognizable as a PE material and of unknown composition).

If received as a single blind, the Contractor is required to submit PE sample data in a separate SDG package in accordance with Delivery Schedule requirements for sample data. PE samples received as double blind would be treated as routine samples and data would be submitted in the SDG deliverables package per normal procedure.

1.2 When the PE data are received, results will be scored routinely for identification and quantitation. Results of these scorings will be provided to the Contractor. The government may adjust the scores on any given PE sample to compensate for unanticipated difficulties with a particular sample.

1.3 If a laboratory performs unacceptably, the laboratory will be immediately notified by the Project Officer. A laboratory so notified may expect, but the government is not limited to, the following actions: a site visit, a full data audit, and/or laboratory analysis of a second PE sample. Failure by the laboratory to take corrective actions and/or failure of two successive PE sample analyses will require that the laboratory discontinue analysis of samples until such time as the Project Officer has determined that the laboratory may resume analyses.

2. Organic Data Audit

2.1 Organic data audits are conducted on CLP Contractor's Reporting and Deliverables packages by EMSL/LV. The organic data audit provides the Agency with an in-depth inspection and evaluation of the Case data packages with regard to achieving QA/QC acceptability.

PART 2. ON-SITE LABORATORY EVALUATION

2. The on-site laboratory evaluation helps to ensure that all the necessary quality control is being applied by the Contractor in order to deliver a quality product.

2.1 Quality assurance evaluations allow the evaluators to determine that:

2.1.1 The organization and personnel are qualified to perform assigned tasks,

2.1.2 Adequate facilities and equipment are available,

2.1.3 Complete documentation, including chain-of-custody of samples is being implemented,

2.1.4 Proper analytical methodology is being used,

2.1.5 Adequate analytical Quality Control, including reference samples, control charts, and documented corrective action measures, is being provided, and

2.1.6 Acceptable data handling and documentation techniques are being used.

2.2 The on-site visit also serves as a mechanism for discussing weaknesses identified through the Performance Evaluation sample analysis or through Contract Compliance Screening or other review of data deliverables. Lastly, the on-site visit allows the evaluation team to determine if the laboratory has implemented the recommended and/or required corrective actions, with respect to quality assurance, made during the previous on-site visit.

EXHIBIT F

CHAIN-OF-CUSTODY, DOCUMENT CONTROL,
AND STANDARD OPERATING PROCEDURES

1. Sample Chain-of-Custody

A sample is physical evidence collected from a facility or from the environment. An essential part of hazardous waste investigations is that samples and data may be used as evidence in EPA enforcement proceedings. To satisfy enforcement uses of the data, the following chain-of-custody procedures have been established.

1.1 Sample Identification

To assure traceability of samples while in possession of the Contractor, a method for sample identification shall be developed and documented in laboratory Standard Operating Procedures (SOPs) (see Section 3). Each sample or sample preparation container shall be labeled with a unique number identifier (or the SMO number). This identifier shall be cross-referenced to the sample tag number and the SMO number. There shall be a written description of the method of assigning this identifier and attaching it to the sample container included in the laboratory SOPs.

1.2.1 A sample is under custody if:

1.2.1.1 It is in your actual possession,

1.2.1.2 It is in your view after being in your physical possession,

1.2.1.3 It was in your possession and then you locked or sealed it up to prevent tampering, or

1.2.1.4 It is in a secure area.

1.2.2 Upon receipt of the samples in custody, the Contractor shall inspect the shipping container and sample bottles and shall document receiving information as specified in Section 3.2. The sample custodian or a designated representative shall sign and date all appropriate receiving documents at the time of receipt (i.e., EPA chain-of-custody forms, traffic reports, airbills, etc.). The Contractor shall contact SMO if documents are absent, information on receiving documents does not agree, custody seals are not intact, or the sample is not in good condition. The Contractor shall document resolution of any discrepancies, and this documentation shall become a part of the permanent case file.

1.2.3 Once samples have been accepted by the laboratory, checked, and logged in, they must be maintained in accordance with custody and security requirements specified in 3.3.

2. Document Control Procedures

The goal of the laboratory document control program is to assure that all documents for a specified case will be accounted for when the project is completed. Accountable documents used by contract laboratories shall include, but not be limited to, logbooks, chain-of-custody records, sample work sheets, bench sheets, and other documents relating to the sample or sample analyses. The following document control procedures have been established to assure that all laboratory records are assembled and stored for delivery to EPA or are available upon request from EPA prior to the delivery schedule.

2.1 Preprinted Data Sheets and Logbooks

Preprinted data sheets shall contain the name of the laboratory and be dated and signed by the analyst or individual performing the work. All documents produced by the laboratory which are directly related to the preparation and analysis of EPA samples shall become the property of the EPA and shall be placed in the case file. For that reason, all observations and results recorded by the laboratory but not on preprinted data sheets are entered into permanent laboratory logbooks. The person responsible for the work shall sign and date each entry and/or page in the logbook. When all data from a case is compiled, copies of all EPA case-related logbook entries shall be included in the documentation package. Analysts' logbook entries must be in chronological order and shall include only one case per page. Instrument run logs shall be maintained so as to enable a reconstruction of the run sequences of individual instruments.

Because the laboratory must provide copies of the instrument run logs to EPA, the laboratory may exercise the option of using only laboratory or SMO sample identification numbers in the logs for sample ID rather than government agency or commercial client names.

Using laboratory or SMO sample IDs only in the run sequences will assist the laboratory in preserving the confidentiality of commercial clients.

2.2 Error Correction Procedure

All documentation in logbooks and other documents shall be in ink. If an error is made, corrections shall be made by crossing a line through the error and entering the correct information. Changes shall be dated and initialed. No information shall be obliterated or rendered unreadable.

2.3 Consistency of Documentation

Before releasing analytical results, the laboratory shall assemble and cross-check the information on sample tags, custody records, lab bench sheets, personal and instrument logs, and other relevant data to ensure that data pertaining to each particular sample or case is consistent throughout the case file.

2.4 Document Numbering and Inventory Procedure

In order to provide document accountability of the completed analysis records, each item in a case shall be inventoried and assigned a serialized number and identifier associating it to the case and Region.

Case # - Region - Serialized number (For example: 75-2-0240)

The number of pages of each item must be accounted for if each page is not individually numbered. All documents relevant to each case, including logbook pages, bench sheets, mass spectra, chromatograms, custody records, library search results, etc., shall be inventoried. The laboratory shall be responsible for ensuring that all documents generated are placed in the file for inventory and are delivered to EPA. Figure 1 is an example of a document inventory.

2.5 Shipping Data Packages and Case Files

The Contractor shall have written procedures to document shipment of deliverables packages to the recipients. Case File Purge shipments require custody seals on the container(s) placed such that it cannot be opened without damaging or breaking the seal. The Contractor shall also document what was sent, to whom, the date, and the method (carrier) used.

3. Standard Operating Procedures

The Contractor must have written standard operating procedures (SOPs) for (1) receipt of samples, (2) maintenance of custody, (3) sample storage, (4) tracking the analysis of samples, and (5) assembly of completed data.

An SOP is defined as a written narrative step-wise description of laboratory operating procedures including examples of laboratory documentation. The SOPs must accurately describe the actual procedures used in the laboratory, and copies of the written SOPs shall be available to the appropriate laboratory personnel. These procedures are necessary to ensure that analytical data produced under this contract are acceptable for use in EPA enforcement case preparation and litigation. The Contractor's SOPs shall provide mechanisms and documentation to meet each of the following specifications and shall be used by EPA as the basis for laboratory evidence audits.

3.1 The Contractor shall have a designated sample custodian responsible for receipt of samples and have written SOPs describing his/her duties and responsibilities.

3.2 The Contractor shall have written SOPs for receiving and logging in of the samples. The procedures shall include but not be limited to documenting the following information:

- Presence or absence of EPA chain-of-custody forms
- Presence or absence of airbills
- Presence or absence of EPA Traffic Reports or SAS packing lists
- Presence or absence of custody seals on shipping and/or sample containers and their condition
- Presence or absence of sample tags
- Sample tag ID numbers if not recorded on the chain-of-custody record(s) or packing list(s)
- Condition of the shipping container
- Condition of the sample bottles
- Verification of agreement or nonagreement of information on receiving documents
- Resolution of problems or discrepancies with the Sample Management Office

3.3 The Contractor shall have written SOPs for maintenance of the security of samples after log-in and shall demonstrate security of the sample storage and laboratory areas. The SOPs shall specifically include descriptions of all storage areas for EPA samples in the laboratory, and steps taken to prevent sample contamination. The SOPs shall include a list of authorized personnel who have access or keys to secure storage areas.

3.4 The Contractor shall have written SOPs for tracking the work performed on any particular sample. The tracking SOP shall include the following:

3.4.1 A description of the documentation used to record sample receipt, sample storage, sample transfers, sample preparations, and sample analyses.

3.4.2 A description of the documentation used to record instrument calibration and other QA/QC activities.

3.4.3 Examples of the document formats and laboratory documentation used in the sample receipt, sample storage, sample transfer, and sample analyses.

3.5 The Contractor shall have written SOPs for organization and assembly of all documents relating to each EPA case, including technical and managerial review. Documents shall be filed on a Case-specific basis. The procedures must ensure that all documents including logbook pages, sample tracking records, chromatographic charts, computer printouts, raw data summaries, correspondence, and any other

written documents having reference to the Case are compiled in one location for submission to EPA. The system must include a document numbering and inventory procedure.

3.6 The Contractor shall have written SOPs for laboratory safety.

3.7 The Contractor shall have written SOPs for cleaning of glassware used in preparing and analyzing samples under this contract.

3.8 The Contractor shall have SOPs for traceability of standards used in sample analysis QA/QC.

4. Handling of Confidential Information

A Contractor conducting work under this contract may receive EPA-designated confidential information from the agency. Confidential information must be handled separately from other documentation developed under this contract. To accomplish this, the following procedures for the handling of confidential information have been established.

4.1 All confidential documents shall be under the supervision of a designated document control officer (DCO).

4.2 Confidential Information

Any samples or information received with a request of confidentiality shall be handled as "confidential." A separate locked file shall be maintained to store this information and shall be segregated from other nonconfidential information. Data generated from confidential samples shall be treated as confidential. Upon receipt of confidential information, the DCO logs these documents into a Confidential Inventory Log. The information is then made available to authorized personnel but only after it has been signed out to that person by the DCO. The documents shall be returned to the locked file at the conclusion of each working day. Confidential information may not be reproduced except upon approval by the EPA Contracting Officer. The DCO will enter all copies into the document control system. In addition, this information may not be disposed of except upon approval by the EPA Contracting Officer. The DCO shall remove and retain the cover page of any confidential information disposed of for one year and shall keep a record of the disposition in the Confidential Inventory Log.

Figure 1

Example

DOCUMENT INVENTORY

Document Control #*	Document Type	# Pages
232-2-0001	Case File Document Inventory Sheet	1
232-2-0002	Chain-of-Custody Records	2
232-2-0003	Shipping Manifests	2
232-2-0004	Sample Tags	50
232-2-0005	SMO Inorganics Traffic Reports	10
232-2-0006	GC/MS spectra for sample B0310	20
232-2-0007	GC/MS spectra for sample B0311	20
232-2-0008	GC/MS spectra for sample B0319	20
232-2-0009	Analyst's logbook pages	6
232-2-0010	GC/MS library search worksheets	15
232-2-0011	GC instrument log pages	5
232-2-0012	GC/MS QC data sheets	4
etc.	etc.	etc.

*This number is to be recorded on each set of documents.

EXHIBIT G

GLOSSARY OF TERMS

GLOSSARY OF TERMS

ALIQUOT - a measured portion of a sample taken for analysis.

ANALYSIS DATE/TIME - the date and military time of the injection of the sample, standard, or blank into the GC/MS or GC system.

BAR GRAPH SPECTRUM - a plot of the mass-to-charge ratio (m/e) versus relative intensity of the ion current.

BLANK - see Method Blank

4-BROMOFLUOROBENZENE (BFB) - compound chosen to establish mass spectral tuning performance for volatile analyses.

CALIBRATION CHECK COMPOUNDS (CCC) - target compounds used to evaluate the calibration stability (precision) of the GC/MS system. Maximum percent deviations of the CCCs are defined in the protocol.

CASE - a finite, usually predetermined number of samples collected over a given time period from a particular site. Case numbers are assigned by the Sample Management Office. A case consists of one or more Sample Delivery Groups.

CHARACTERIZATION - a determination of the approximate concentration range of compounds of interest used to choose the appropriate analytical protocol.

CONCENTRATION LEVEL (low or medium) - characterization of soil samples or sample fractions as low concentration or medium concentration is made on the basis of the laboratory's preliminary screen, not on the basis of information entered on the Traffic Report by the sampler.

CONFIRMATION ANALYSIS - see Primary Analysis.

CONTINUING CALIBRATION - analytical standard run every 12 hours to verify the calibration of the GC/MS system.

CONTINUOUS LIQUID-LIQUID EXTRACTION - used herein synonymously with the terms continuous extraction, continuous liquid extraction, and liquid extraction.

DAY - unless otherwise specified, day shall mean calendar day.

DECAFLUOROTRIPHENYLPHOSPHINE (DFTPP) - compound chosen to establish mass spectral tuning performance for semivolatile analysis.

EXTRACTABLE - a compound that can be partitioned into an organic solvent from the sample matrix and is amenable to gas chromatography. Extractables include BNA and pesticide/PCB compounds.

IN-HOUSE - at the Contractor's facility.

INITIAL CALIBRATION - analysis of analytical standards for a series of different specified concentrations; used to define the linearity and dynamic range of the response of the mass spectrometer to the target compounds.

INTERNAL STANDARDS - compounds added to every standard, blank, matrix spike, matrix spike duplicate, sample (for VOAs), and sample extract (for semivolatiles) at a known concentration, prior to analysis. Internal standards are used as the basis for quantitation of the target compounds.

LABORATORY - synonymous with Contractor as used herein.

MATRIX - the predominant material of which the sample to be analyzed is composed. For the purpose of this SOW, a sample matrix is either water or soil/sediment. Matrix is <u>not</u> synonymous with phase (liquid or solid).

MATRIX SPIKE - aliquot of a matrix (water or soil) fortified (spiked) with known quantities of specific compounds and subjected to the entire analytical procedure in order to indicate the appropriateness of the method for the matrix by measuring recovery.

MATRIX SPIKE DUPLICATE - a second aliquot of the same matrix as the matrix spike (above) that is spiked in order to determine the precision of the method.

METHOD BLANK (previously termed reagent blank) - an analytical control consisting of all reagents, internal standards and surrogate standards, that is carried through the entire analytical procedure. The method blank is used to define the level of laboratory background contamination.

NARRATIVE (Case Narrative) - portion of the data package which includes laboratory, contract, Case and sample number identification, and descriptive documentation of any problems encountered in processing the samples, along with corrective action taken and problem resolution. Complete Case Narrative specifications are included in Exhibit B.

PERCENT MOISTURE - an approximation of the amount of water in a soil/sediment sample made by drying an aliquot of the sample at 105°C. The percent moisture determined in this manner also includes contributions from all compounds that may volatilize at 105°C, including water. Percent moisture is determined from decanted samples and from samples that are not decanted.

PRIMARY ANALYSIS - one of two types of pesticide/PCB analysis by GC/EC techniques, the other being the Confirmation Analysis. If the two analyses are run at separate times, the Primary Analysis is the first analysis chronologically, and is used to establish the tentative identification of any pesticides/PCBs detected. The identification is then confirmed in the confirmation analysis. If the two analyses are simultaneous, either may be considered the Primary Analysis.

PROTOCOL - describes the exact procedures to be followed with respect to sample receipt and handling, analytical methods, data reporting and deliverables, and document control. Used synonymously with Statement of Work (SOW).

PURGE AND TRAP (DEVICE) - analytical technique (device) used to isolate volatile (purgeable) organics by stripping the compounds from water or soil by a stream of inert gas, trapping the compounds on a porous polymer trap, and thermally desorbing the trapped compounds onto the gas chromatographic column.

REAGENT WATER - water in which an interferent is not observed at or above the minimum quantitation limit of the parameters of interest.

RECONSTRUCTED ION CHROMATOGRAM (RIC) - a mass spectral graphical representation of the separation achieved by a gas chromatograph; a plot of total ion current versus retention time.

RECOVERY - a determination of the accuracy of the analytical procedure made by comparing measured values for a fortified (spiked) sample against the known spike values. Recovery is determined by the following equation:

$$\%Rec = \frac{\text{measured value}}{\text{known value}} \times 100\%$$

RELATIVE RESPONSE FACTOR (RRF) - a measure of the relative mass spectral response of an analyte compared to its internal standard. Relative Response Factors are determined by analysis of standards and are used in the calculation of concentrations of analytes in samples. RRF is determined by the following equation:

$$RRF = \frac{A_x}{A_{is}} \times \frac{C_{is}}{C_x}$$

Where

A = area of the characteristic ion measured

C = concentration

is = internal standard

x = analyte of interest

RESOLUTION - also termed separation, the separation between peaks on a chromatogram, calculated by dividing the height of the valley between the peaks by the peak height of the smaller peak being resolved, multipled by 100.

SAMPLE - a portion of material to be analyzed that is contained in single or multiple containers and identified by a unique sample number.

SAMPLE DELIVERY GROUP (SDG) - a unit within a single Case that is used to identify a group of samples for delivery. An SDG is a group of 20 or fewer field samples within a Case, received over a period of up to 14 calendar days. Data from all samples in an SDG are due concurrently. A Sample Delivery Group is defined by one of the following, whichever occurs first:

- Case; or
- Each 20 field samples within a Case; or
- Each 14-day calendar period during which field samples in a Case are received, beginning with receipt of the first sample in the Case or SDG.

Samples may be assigned to Sample Delivery Groups by matrix (i.e., all soils in one SDG, all waters in another), at the discretion of the laboratory.

SAMPLE NUMBER (EPA Sample Number) - a unique identification number designated by EPA for each sample. The EPA sample number appears on the sample Traffic Report which documents information on that sample.

SEMIVOLATILE COMPOUNDS - compounds amenable to analysis by extraction of the sample with an organic solvent. Used synonymously with Base/Neutral/Acid (BNA) compounds.

SOIL - used herein synonymously with soil/sediment and sediment.

STANDARD ANALYSIS - an analytical determination made with known quantities of target compounds; used to determine response factors.

SURROGATES (Surrogate Standard) - compounds added to every blank, sample, matrix spike, matrix spike duplicate, and standard; used to evaluate analytical efficiency by measuring recovery. Surrogates are brominated, fluorinated, or isotopically labelled compounds not expected to be detected in environmental media.

SYSTEM PERFORMANCE CHECK COMPOUNDS (SPCC) - target compounds designated to monitor chromatographic performance, sensitivity and compound instability or degradation on active sites. Minimum response factor criteria for the SPCCs are defined in the protocol.

TARGET COMPOUND LIST (TCL) - a list of compounds designated by the Statement of Work (Exhibit C) for analysis.

TENTATIVELY IDENTIFIED COMPOUNDS (TIC) - compounds detected in samples that are not target compounds, internal standards or surrogate standards. Up to 30 peaks (those greater than 10% of peak areas or heights of nearest internal standards) are subjected to mass spectral library searches for tentative identification.

TIME - when required to record time on any deliverable item, time shall be expressed as Military Time, i.e., a 24-hour clock.

TRAFFIC REPORT (TR) - an EPA sample identification form filled out by the sampler, which accompanies the sample during shipment to the laboratory and which documents sample condition and receipt by the laboratory.

TWELVE-HOUR TIME PERIOD - The twelve (12) hour time period for GC/MS system tuning, standards calibration (initial or continuing calibration), and method blank analysis begins at the moment of injection of the DFTPP or BFB analysis that the laboratory submits as documentation of compliant tune. The time period ends after 12 hours has elapsed according to the system clock.

VALIDATED TIME OF SAMPLE RECEIPT (VTSR) - the date on which a sample is received at the Contractor's facility, as recorded on the shipper's delivery receipt and Sample Traffic Report.

VOLATILE COMPOUNDS - compounds amenable to analysis by the purge and trap technique. Used synonymously with purgeable compounds.

WIDE BORE CAPILLARY COLUMN - a gas chromatographic column with an internal diameter (ID) that is greater than 0.32 mm. Columns with lesser diameters are classified as narrow bore capillaries.

☆U.S. GOVERNMENT PRINTING OFFICE: 1989 - 617-003/04874

EXHIBIT H

DATA DICTIONARY AND FORMAT FOR DATA
DELIVERABLES IN COMPUTER-READABLE FORMAT

Page

SECTION I: Description of Deliverables H-2

SECTION II: Format A Specifications H-3

SECTION III: Format B Specifications H-63

SECTION I

DESCRIPTION OF DELIVERABLE

1. Introduction

1.1 Two file formats are specified for delivery of computer-readable data. Format A is oriented to the structure of the hardcopy reporting forms required by the contract. Format B is oriented to the general data required by the contract. Information sufficient to generate required hardcopy forms is contained in either format.

1.2 The file or files for a Sample Delivery Group (SDG, see Exhibit A, Section I, B) must be submitted on a diskette or diskettes (see Deliverable, 2.1). Information on a diskette or diskettes for any single SDG must be in one, and only one, of the two formats. The format used is at the option of the laboratory. The option used must be included in the File Name specification (paragraph 2.2).

1.3 Format A consists of variable length ASCII records, and Format B consists of fixed-length 80-byte ASCII records.

1.4 All information for one SDG must be in one file if format A is used. Use of Format B may require information for one SDG to be in a number of files. Format B may require more than one 360 K diskette for a valid SDG.

2. Deliverable

2.1 The file or files must be submitted on a 5-1/4 inch floppy diskette, which may be either a double-sided, double density, 360 K-byte or a high capacity 1.2 M-byte diskette. The diskette or diskettes must contain all information relevant to one and only one SDG, and must accompany the hardcopy package for the SDG submitted to the Sample Management Office (see Exhibit B). Information on the diskette or diskettes must correspond exactly with information submitted in the hardcopy data package and on the hardcopy data package forms. Blank or unused records in either format should not be included on the diskettes.

2.2 Each diskette must be identified with an external label containing (in this order) the following information:

Disk Density
File Name(s)
Laboratory Name (optional)
Laboratory Code
Case Number (where applicable)
SAS Number (where applicable)

SECTION II

FORMAT A SPECIFICATION

1. Format Characteristics

1.1 Format A is based upon the structure of the hardcopy reporting forms required by the contract. With two exceptions, Form Suffix and Record Type, all fields in the format correspond directly with entries or items on the hardcopy forms. The record structure is obtained by taking entries in sequence from the appropriate hardcopy form. For example, the Header record (page H-7) from Form 1A is a concatenation of all entries on the hardcopy form that precede the reported results and qualifiers.

1.2 All Format A fields are character. Alphanumeric values should be left justified and numeric values should be right justified in appropriate fields. Field lengths are such that all possible valid values can be written to the file. The maximum format is specified for each field. For example, "Numeric 13.3" is specified for "Result" on Detail Record D1 of Form 1A (see page H-7). Numeric values reported may take any form (e.g., integer 13, integer 3, real 13.3, real 5.1, etc.) provided they do not exceed the specifications. (Requirements for the number of significant figures to be reported on the appropriate hardcopy form are given in the Form Instruction Guide, Exhibit B, Section III.)

2. Record Types

2.1 Format A consists of variable length ASCII records. The last two bytes of each record must contain "carriage return" and "line feed", respectively. Unused bytes in partially filled fields must be blank-filled.

2.2 Format A has three types of records: Header Records, Detail Records and Comment Records.

Type	Type ID	Contents
Header	H	Nonrepeating fields which together are unique to the associated hardcopy form
Detail	D	A group of fields that are repeated on a form, and are uniquely positioned by (e.g.) CAS Number or Sequence Number
Comment	C	Nonrepeating fields containing text that comments on information reported on the form

3. Record Length

Table 3.1 summarizes the length and (in parantheses) the number of records in Format A. The maximum number of detail and comment records is shown, corresponding to a submission of hardcopy forms on which information is written on all possible lines. The Form Totals are the maximum lengths (excluding carriage return/line feed) required for a complete set of each type of form.

Table 3.1 Format A Summary

Form	Record				
	Header	Detail		Comment	
	H1	D1	D2	C1	C2
1A	153[a](1)[b]	35(34)			
1B	168 (1)	35(33)			
1C	168 (1)	35(32)			
1D	168 (1)	35(27)			
1E	155 (1)	71(30)			
1F	170 (1)	71(30)			
1(Total)	982 (6)	8670(186)			
2A	67(1)	37(30)			
2B	70(1)	37(30)			
2C	67(1)	49(30)			
2D	70(1)	49(30)			
2E	67(1)	28(30)			
2F	70(1)	28(30)			
2(Total)	411(6)	6840(180)			
3A	85(1)	70(5)	61(5)	72(1)	72(1)
3B	84(1)	70(5)	61(5)	72(1)	72(1)
3C	85(1)	70(11)	61(11)	72(1)	72(1)
3D	88(1)	70(11)	61(11)	72(1)	72(1)
3E	85(1)	70(6)	61(6)	72(1)	72(1)
3F	988(1)	70(6)	61(6)	72(1)	72(1)
3(Total)	519(6)	3080(44)	2684(44)	432(6)	432(6)
4A	123(1)	51(30)	72(1)	72(1)	
4B	135(1)	55(30)	72(1)	72(1)	
4C	177(1)	49(26)	72(1)	72(1)	
4(Total)	435(3)	4454(86)	216(3)	216(3)	
5A	115(1)	20(9)	59(24)		
5B	103(1)	21(13)	59(22)		
5(Total)	218(2)	453(22)	2714(46)		

Table 3.1 Format A Summary

Form	Record				
	Header	Detail		Comment	
	H1	D1	D2	C1	C2
6A	173(1)	69(37)			
6B	161(1)	69(37)			
6C	161(1)	69(36)			
6(Total)	495(3)	7590(110)			
7A	129(1)	49(37)			
7B	117(1)	49(37)			
7C	117(1)	49(36)			
7(Total)	363(3)	5390(110)			
8A	115(1)	106(1)	69(26)		
8B	103(1)	106(1)	69(22)		
8C	103(1)	106(1)	69(22)		
8D	101(1)	58(4)	36(14)		
8E	103(1)	51(38)			
8(Total)	525(5)	2488(45)	5334(84)		
9	135(1)	72(27)			
9(Total)	135(1)	1944(27)			
10	145(1)	43(6)	43(6)	72(1)	72(1)
10(Total)	145(1)	258(6)	258(6)	72(1)	72(1)

a - length of record in bytes (excluding carriage return/line feed)

b - maximum number of records required for a form.

4. Form Suffix

The fourth and fifth bytes of each record contain the form suffix (AA-ZZ), which must be unique (within a type of form (e.g., Form IA, Form IIC, etc.,) for each set of records that corresponds to one hardcopy form. For example, the form suffix for records for the first occurrence in the file of a Form 1C must be AA. The second occurrence must be AB, and the twenty-eighth must be BA.

5. Record Listing

The remainder of this section contains detailed specifications for every record required for a full set of hardcopy forms.

FORM I FILE DESCRIPTION
(FORM1)

VOLATILE ORGANICS ANALYSIS DATA SHEET - (FORM 1A)

HEADER RECORD 1 (H1)

COLUMN (S)	LENGTH	CONTENTS	FORMAT/CONTENTS
1- 3	3	FORM NUMBER	'1A'
4- 5	2	FORM SUFFIX	'AA'-'ZZ'
6- 7	2	RECORD TYPE	'H1'
8- 19	12	EPA SAMPLE NO.	
20- 44	25	LAB NAME	
45- 55	11	CONTRACT	
56- 61	6	LAB CODE	
62- 66	5	CASE NO.	
67- 72	6	SAS NO.	
73- 77	5	SDG NO.	
78- 82	5	MATRIX	'SOIL ' OR 'WATER'
83- 94	12	LAB SAMPLE ID	
95- 99	5	SAMPLE WT/VOL	NUMERIC 5.1
100-101	2	SAMPLE WT/VOL UNITS	'G ' OR 'ML'
102-115	14	LAB FILE ID	
116-118	3	LEVEL	'LOW' OR 'MED'
119-126	8	DATE RECEIVED	MM/DD/YY
127-128	2	%MOISTURE NOT DEC	NUMERIC 2
129-136	8	DATE ANALYZED	MM/DD/YY
137-140	4	COLUMN	'PACK' OR 'CAP '
141-148	8	DILUTION FACTOR	NUMERIC 8
149-153	5	CONCENTRATION UNITS	'UG/L ' OR 'UG/KG'

DETAIL RECORD 1 (D1)

COLUMN (S)	LENGTH	CONTENTS	FORMAT/CONTENTS
1-3	3	FORM NUMBER	'1A'
4-5	2	FORM SUFFIX	'AA'-'ZZ'
6-7	2	RECORD TYPE	'D1'
8-17	10	CAS NO.	
18-30	13	RESULT	NUMERIC 13.3
31-35	5	QUALIFIER (Q)	

SEMIVOLATILE ORGANICS ANALTSIS DATA SHEET - (FORM 1B)

HEADER RECORD 1 (H1)

COLUMN (S)	LENGTH	CONTENTS	FORMAT/CONTENTS
1- 3	3	FORM NUMBER	'1B'
4- 5	2	FORM SUFFIX	'AA'-'ZZ'
6- 7	2	RECORD TYPE	'H1'
8- 19	12	EPA SAMPLE NO.	
20- 44	25	LAB NAME	
45- 55	11	CONTRACT	
56- 61	6	LAB CODE	
62- 66	5	CASE NO.	
67- 72	6	SAS NO.	
73- 77	5	SDG NO.	
78- 82	5	MATRIX	'SOIL ' OR 'WATER'
83- 94	12	LAB SAMPLE ID	
95- 99	5	SAMPLE WT/VOL	NUMERIC 5.1
100-101	2	SAMPLE WT/VOL UNITS	'G ' OR 'ML'
102-115	14	LAB FILE ID	
116-118	3	LEVEL	'LOW' OR 'MED'
119-126	8	DATE RECEIVED	MM/DD/YY
127-128	2	% MOISTURE NOT DEC	NUMERIC 2
129-130	2	% MOISTURE DEC	NUMERIC 2
131-138	8	DATE EXTRACTED	MM/DD/YY
139-142	4	EXTRACTION	'SEPF', 'CONT' OR 'SONC'
143-150	8	DATE ANALYZED	MM/DD/YY
151	1	GPC CLEANUP	'Y' OR 'N'
152-155	4	PH	NUMERIC 4.1
156-163	8	DILUTION FACTOR	NUMERIC 8
164-168	5	CONCENTRATION UNITS	'UG/L ' OR 'UG/KG'

DETAIL RECORD 1 (D1)

COLUMN (S)	LENGTH	CONTENTS	FORMAT/CONTENTS
1- 3	3	FORM NUMBER	'1B'
4- 5	2	FORM SUFFIX	'AA'-'ZZ'
6- 7	2	RECORD TYPE	'D1'
8-17	10	CAS NO.	
18-30	13	RESULT	NUMERIC 13.3
31-35	5	QUALIFIER (Q)	

SEMIVOLATILE ORGANICS ANALYSIS DATA SHEET - (FORM 1C)

HEADER RECORD 1 (H1)

COLUMN (S)	LENGTH	CONTENTS	FORMAT/CONTENTS
1- 3	3	FORM NUMBER	'1C'
4- 5	2	FORM SUFFIX	'AA'-'ZZ'
6- 7	2	RECORD TYPE	'H1'
8- 19	12	EPA SAMPLE NO.	
20- 44	25	LAB NAME	
45- 55	11	CONTRACT	
56- 61	6	LAB CODE	
62- 66	5	CASE NO.	
67- 72	6	SAS NO.	
73- 77	5	SDG NO.	
78- 82	5	MATRIX	'SOIL ' OR 'WATER'
83- 94	12	LAB SAMPLE ID	
95- 99	5	SAMPLE WT/VOL	NUMERIC 5.1
100-101	2	SAMPLE WT/VOL UNITS	'G ' OR 'ML'
102-115	14	LAB FILE ID	
116-118	3	LEVEL	'LOW' OR 'MED'
119-126	8	DATE RECEIVED	MM/DD/YY
127-128	2	% MOISTURE NOT DEC	NUMERIC 2
129-130	2	% MOISTURE DEC	NUMERIC 2
131-138	8	DATE EXTRACTED	MM/DD/YY
139-142	4	EXTRACTION	'SEPF', 'CONT' OR 'SONC'
143-150	8	DATE ANALYZED	MM/DD/YY
151	1	GPC CLEANUP	'Y' OR 'N'
152-155	4	PH	NUMERIC 4.1
156-163	8	DILUTION FACTOR	NUMERIC 8
164-168	5	CONCENTRATION UNITS	'UG/L ' OR 'UG/KG'

DETAIL RECORD 1 (D1)

COLUMN (S)	LENGTH	CONTENTS	FORMAT/CONTENTS
1- 3	3	FORM NUMBER	'1C'
4- 5	2	FORM SUFFIX	'AA'-'ZZ'
6- 7	2	RECORD TYPE	'D1'
8-17	10	CAS NO.	
18-30	13	RESULT	NUMERIC 13.3
31-35	5	QUALIFIER (Q)	

PESTICIDE ORGANICS ANALYSIS DATA SHEET - (FORM 1D)

HEADER RECORD 1 (H1)

COLUMN (S)	LENGTH	CONTENTS	FORMAT/CONTENTS
1- 3	3	FORM NUMBER	'1D'
4- 5	2	FORM SUFFIX	'AA'-'ZZ'
6- 7	2	RECORD TYPE	'H1'
8- 19	12	EPA SAMPLE NO.	
20- 44	25	LAB NAME	
45- 55	11	CONTRACT	
56- 61	6	LAB CODE	
62- 66	5	CASE NO.	
67- 72	6	SAS NO.	
73- 77	5	SDG NO.	
78- 82	5	MATRIX	'SOIL ' OR 'WATER'
83- 94	12	LAB SAMPLE ID	
95- 99	5	SAMPLE WT/VOL	NUMERIC 5.1
100-101	2	SAMPLE WT/VOL UNITS	'G ' OR 'ML'
102-115	14	LAB FILE ID	
116-118	3	LEVEL	'LOW' OR 'MED'
119-126	8	DATE RECEIVED	MM/DD/YY
127-128	2	% MOISTURE NOT DEC	NUMERIC 2
129-130	2	% MOISTURE DEC	NUMERIC 2
131-138	8	DATE EXTRACTED	MM/DD/YY
139-142	4	EXTRACTION	'SEPF', 'CONT' OR 'SONC'
143-150	8	DATE ANALYZED	MM/DD/YY
151	1	GPC CLEANUP	'Y' OR 'N'
152-155	4	PH	NUMERIC 4.1
156-163	8	DILUTION FACTOR	NUMERIC 8
164-168	5	CONCENTRATION UNITS	'UG/L ' OR 'UG/KG'

DETAIL RECORD 1 (D1)

COLUMN (S)	LENGTH	CONTENTS	FORMAT/CONTENTS
1- 3	3	FORM NUMBER	'1D'
4- 5	2	FORM SUFFIX	'AA'-'ZZ'
6- 7	2	RECORD TYPE	'D1'
8-17	10	CAS NO.	
18-30	13	RESULT	NUMERIC 13.3
31-35	5	QUALIFIER (Q)	

VOLATILE ORGANICS ANALYSIS DATA SHEET - (FORM 1E)
TENTATIVELY IDENTIFIED COMPOUNDS

HEADER RECORD 1 (H1)

COLUMN (S)	LENGTH	CONTENTS	FORMAT/CONTENTS
1- 3	3	FORM NUMBER	'1E'
4- 5	2	FORM SUFFIX	'AA'-'ZZ'
6- 7	2	RECORD TYPE	'H1'
8- 19	12	EPA SAMPLE NO.	
20- 44	25	LAB NAME	
45- 55	11	CONTRACT	
56- 61	6	LAB CODE	
62- 66	5	CASE NO.	
67- 72	6	SAS NO.	
73- 77	5	SDG NO.	
78- 82	5	MATRIX	'SOIL ' OR 'WATER'
83- 94	12	LAB SAMPLE ID	
95- 99	5	SAMPLE WT/VOL	NUMERIC 5.1
100-101	2	SAMPLE WT/VOL UNITS	'G ' OR 'ML'
102-115	14	LAB FILE ID	
116-118	3	LEVEL	'LOW' OR 'MED'
119-126	8	DATE RECEIVED	MM/DD/YY
127-128	2	% MOISTURE NOT DEC	NUMERIC 2
129-136	8	DATE ANALYZED	MM/DD/YY
137-140	4	COLUMN	'PACK' OR 'CAP '
141-148	8	DILUTION FACTOR	NUMERIC 8
149-150	2	NUMBER TICS FOUND	NUMERIC 2
151-155	5	CONCENTRATION UNITS	'UG/L ' OR 'UG/KG'

DETAIL RECORD 1 (D1)

COLUMN (S)	LENGTH	CONTENTS	FORMAT/CONTENTS
1- 3	3	FORM NUMBER	'1E'
4- 5	2	FORM SUFFIX	'AA'-'ZZ'
6- 7	2	RECORD TYPE	'D1'
8- 9	2	SEQUENCE NUMBER	NUMERIC 2
10-19	10	CAS NO.	
20-47	28	COMPOUND	
48-53	6	RT	NUMERIC 6.2
54-66	13	ESTIMATED CONCENTRATION	NUMERIC 13.3
67-71	5	QUALIFIER (Q)	

SEMIVOLATILE ORGANICS ANALYSIS DATA SHEET - (FORM 1F)
TENTATIVELY IDENTIFIED COMPOUNDS

HEADER RECORD 1 (H1)

COLUMN (S)	LENGTH	CONTENTS	FORMAT/CONTENTS
1- 3	3	FORM NUMBER	'1F'
4- 5	2	FORM SUFFIX	'AA'-'ZZ'
6- 7	2	RECORD TYPE	'H1'
8- 19	12	EPA SAMPLE NO.	
20- 44	25	LAB NAME	
45- 55	11	CONTRACT	
56- 61	6	LAB CODE	
62- 66	5	CASE NO.	
67- 72	6	SAS NO.	
73- 77	5	SDG NO.	
78- 82	5	MATRIX	'SOIL ' OR 'WATER'
83- 94	12	LAB SAMPLE ID	
95- 99	5	SAMPLE WT/VOL	NUMERIC 5.1
100-101	2	SAMPLE WT/VOL UNITS	'G ' OR 'ML'
102-115	14	LAB FILE ID	
116-118	3	LEVEL	'LOW' OR 'MED'
119-126	8	DATE RECEIVED	MM/DD/YY
127-128	2	% MOISTURE NOT DEC	NUMERIC 2
129-130	2	% MOISTURE DEC	NUMERIC 2
131-138	8	DATE EXTRACTED	MM/DD/YY
139-142	4	EXTRACTION	'SEPF', 'CONT' OR 'SONC'
143-150	8	DATE ANALYZED	MM/DD/YY
151	1	GPC CLEANUP	'Y' OR 'N'
152-155	4	PH	NUMERIC 4.1
156-163	8	DILUTION FACTOR	NUMERIC 8
164-165	2	NUMBER TICS FOUND	NUMERIC 2
166-170	5	CONCENTRATION UNITS	'UG/L ' OR 'UG/KG'

DETAIL RECORD 1 (D1)

COLUMN (S)	LENGTH	CONTENTS	FORMAT/CONTENTS
1- 3	3	FORM NUMBER	'1F'
4- 5	2	FORM SUFFIX	'AA'-'ZZ'
6- 7	2	RECORD TYPE	'D1'
8- 9	2	SEQUENCE NUMBER	NUMERIC 2
10-19	10	CAS NO.	
20-47	28	COMPOUND	
48-53	6	RT	NUMERIC 6.2
54-66	13	ESTIMATED CONCENTRATION	NUMERIC 13.3
67-71	5	QUALIFIER (Q)	

FORM II FILE DESCRIPTION
(FORM2)

WATER VOLATILE SURROGATE RECOVERY - (FORM 2A)

HEADER RECORD 1 (H1)

COLUMN (S)	LENGTH	CONTENTS	FORMAT/CONTENTS
1- 3	3	FORM NUMBER	'2A'
4- 5	2	FORM SUFFIX	'AA'-'ZZ'
6- 7	2	RECORD TYPE	'H1'
8-32	25	LAB NAME	
33-43	11	CONTRACT	
44-49	6	LAB CODE	
50-54	5	CASE NO.	
55-60	6	SAS NO.	
61-65	5	SDG NO.	
66	1	PAGE	NUMERIC 1
67	1	OF	NUMERIC 1

DETAIL RECORD 1 (D1)

COLUMN (S)	LENGTH	CONTENTS	FORMAT/CONTENTS
1- 3	3	FORM NUMBER	'2A'
4- 5	2	FORM SUFFIX	'AA'-'ZZ'
6- 7	2	RECORD TYPE	'D1'
8- 9	2	SEQUENCE NUMBER	NUMERIC 2
10-21	12	EPA SAMPLE NO.	
22-24	3	S1 (TOL)	NUMERIC 3
25	1	S1 OUT FLAG	BLANK OR 'D' OR '*'
26-28	3	S2 (BFB)	NUMERIC 3
29	1	S2 OUT FLAG	BLANK OR 'D' OR '*'
30-32	3	S3 (DCE)	NUMERIC 3
33	1	S3 OUT FLAG	BLANK OR 'D' OR '*'
34-36	3	OTHER	NUMERIC 3
37	1	TOTAL OUT	NUMERIC 1

SOIL VOLATILE SURROGATE RECOVERY - (FORM 2B)

HEADER RECORD 1 (H1)

COLUMN (S)	LENGTH	CONTENTS	FORMAT/CONTENTS
1- 3	3	FORM NUMBER	'2B'
4- 5	2	FORM SUFFIX	'AA'-'ZZ'
6- 7	2	RECORD TYPE	'H1'
8-32	25	LAB NAME	
33-43	11	CONTRACT	
44-49	6	LAB CODE	
50-54	5	CASE NO.	
55-60	6	SAS NO.	
61-65	5	SDG NO.	
66-68	3	LEVEL	'LOW' OR 'MED'
69	1	PAGE	NUMERIC 1
70	1	OF	NUMERIC 1

DETAIL RECORD 1 (D1)

COLUMN (S)	LENGTH	CONTENTS	FORMAT/CONTENTS
1- 3	3	FORM NUMBER	'2B'
4- 5	2	FORM SUFFIX	'AA'-'ZZ'
6- 7	2	RECORD TYPE	'D1'
8- 9	2	SEQUENCE NUMBER	NUMERIC 2
10-21	12	EPA SAMPLE NO.	
22-24	3	S1 (TOL)	NUMERIC 3
25	1	S1 OUT FLAG	BLANK OR 'D' OR '*'
26-28	3	S2 (BFB)	NUMERIC 3
29	1	S2 OUT FLAG	BLANK OR 'D' OR '*'
30-32	3	S3 (DCE)	NUMERIC 3
33	1	S3 OUT FLAG	BLANK OR 'D' OR '*'
34-36	3	OTHER	NUMERIC 3
37	1	TOTAL OUT	NUMERIC 1

WATER SEMIVOLATILE SURROGATE RECOVERY - (FORM 2C)

HEADER RECORD 1 (H1)

COLUMN (S)	LENGTH	CONTENTS	FORMAT/CONTENTS
1- 3	3	FORM NUMBER	'2C'
4- 5	2	FORM SUFFIX	'AA'-'ZZ'
6- 7	2	RECORD TYPE	'H1'
8-32	25	LAB NAME	
33-43	11	CONTRACT	
44-49	6	LAB CODE	
50-54	5	CASE NO.	
55-60	6	SAS NO.	
61-65	5	SDG NO.	
66	1	PAGE	NUMERIC 1
67	1	OF	NUMERIC 1

DETAIL RECORD 1 (D1)

COLUMN (S)	LENGTH	CONTENTS	FORMAT/CONTENTS
1- 3	3	FORM NUMBER	'2C'
4- 5	2	FORM SUFFIX	'AA'-'ZZ'
6- 7	2	RECORD TYPE	'D1'
8- 9	2	SEQUENCE NUMBER	NUMERIC 2
10-21	12	EPA SAMPLE NO.	
22-24	3	S1 (NBZ)	NUMERIC 3
25	1	S1 OUT FLAG	BLANK OR 'D' OR '*'
26-28	3	S2 (FBP)	NUMERIC 3
29	1	S2 OUT FLAG	BLANK OR 'D' OR '*'
30-32	3	S3 (TPH)	NUMERIC 3
33	1	S3 OUT FLAG	BLANK OR 'D' OR '*'
34-36	3	S4 (PHL)	NUMERIC 3
37	1	S4 OUT FLAG	BLANK OR 'D' OR '*'
38-40	3	S5 (2FP)	NUMERIC 3
41	1	S5 OUT FLAG	BLANK OR 'D' OR '*'
42-44	3	S6 (TBP)	NUMERIC 3
45	1	S6 OUT FLAG	BLANK OR 'D' OR '*'
46-48	3	OTHER	NUMERIC 3
49	1	TOTAL OUT	NUMERIC 1

SOIL SEMIVOLATILE SURROGATE RECOVERY - (FORM 2D)

HEADER RECORD 1 (H1)

COLUMN (S)	LENGTH	CONTENTS	FORMAT/CONTENTS
1- 3	3	FORM NUMBER	'2D'
4- 5	2	FORM SUFFIX	'AA'-'ZZ'
6- 7	2	RECORD TYPE	'H1'
8-32	25	LAB NAME	
33-43	11	CONTRACT	
44-49	6	LAB CODE	
50-54	5	CASE NO.	
55-60	6	SAS NO.	
61-65	5	SDG NO.	
66-68	3	LEVEL	'LOW' OR 'MED'
69	1	PAGE	NUMERIC 1
70	1	OF	NUMERIC 1

DETAIL RECORD 1 (D1)

COLUMN (S)	LENGTH	CONTENTS	FORMAT/CONTENTS
1- 3	3	FORM NUMBER	'2D'
4- 5	2	FORM SUFFIX	'AA'-'ZZ'
6- 7	2	RECORD TYPE	'D1'
8- 9	2	SEQUENCE NUMBER	NUMERIC 2
10-21	12	EPA SAMPLE NO.	
22-24	3	S1 (NBZ)	NUMERIC 3
25	1	S1 OUT FLAG	BLANK OR 'D' OR '*'
26-28	3	S2 (FBP)	NUMERIC 3
29	1	S2 OUT FLAG	BLANK OR 'D' OR '*'
30-32	3	S3 (TPH)	NUMERIC 3
33	1	S3 OUT FLAG	BLANK OR 'D' OR '*'
34-36	3	S4 (PHL)	NUMERIC 3
37	1	S4 OUT FLAG	BLANK OR 'D' OR '*'
38-40	3	S5 (2FP)	NUMERIC 3
41	1	S5 OUT FLAG	BLANK OR 'D' OR '*'
42-44	3	S6 (TBP)	NUMERIC 3
45	1	S6 OUT FLAG	BLANK OR 'D' OR '*'
46-48	3	OTHER	NUMERIC 3
49	1	TOTAL OUT	NUMERIC 1

WATER PESTICIDE SURROGATE RECOVERY - (FORM 2E)

HEADER RECORD 1 (H1)

COLUMN (S)	LENGTH	CONTENTS	FORMAT/CONTENTS
1- 3	3	FORM NUMBER	'2E'
4- 5	2	FORM SUFFIX	'AA'-'ZZ'
6- 7	2	RECORD TYPE	'H1'
8-32	25	LAB NAME	
33-43	11	CONTRACT	
44-49	6	LAB CODE	
50-54	5	CASE NO.	
55-60	6	SAS NO.	
61-65	5	SDG NO.	
66	1	PAGE	NUMERIC 1
67	1	OF	NUMERIC 1

DETAIL RECORD 1 (D1)

COLUMN (S)	LENGTH	CONTENTS	FORMAT/CONTENTS
1- 3	3	FORM NUMBER	'2E'
4- 5	2	FORM SUFFIX	'AA'-'ZZ'
6- 7	2	RECORD TYPE	'D1'
8- 9	2	SEQUENCE NUMBER	NUMERIC 2
10-21	12	EPA SAMPLE NO.	
22-24	3	S1 (DBC)	NUMERIC 3
25	1	S1 OUT FLAG	BLANK OR 'D' OR '*'
26-28	3	OTHER	NUMERIC 3

SOIL PESTICIDE SURROGATE RECOVERY - (FORM 2F)

HEADER RECORD 1 (H1)

COLUMN (S)	LENGTH	CONTENTS	FORMAT/CONTENTS
1- 3	3	FORM NUMBER	'2F'
4- 5	2	FORM SUFFIX	'AA'-'ZZ'
6- 7	2	RECORD TYPE	'H1'
8-32	25	LAB NAME	
33-43	11	CONTRACT	
44-49	6	LAB CODE	
50-54	5	CASE NO.	
55-60	6	SAS NO.	
61-65	5	SDG NO.	
66-68	3	LEVEL	'LOW' OR 'MED'
69	1	PAGE	NUMERIC 1
70	1	OF	NUMERIC 1

DETAIL RECORD 1 (D1)

COLUMN (S)	LENGTH	CONTENTS	FORMAT/CONTENTS
1- 3	3	FORM NUMBER	'2F'
4- 5	2	FORM SUFFIX	'AA'-'ZZ'
6- 7	2	RECORD TYPE	'D1'
8- 9	2	SEQUENCE NUMBER	NUMERIC 2
10-21	12	EPA SAMPLE NO.	
23-24	3	S1 (DBC)	NUMERIC 3
25	1	S1 OUT FLAG	BLANK OR 'D' OR '*'
26-28	3	OTHER	NUMERIC 3

FORM III FILE DESCRIPTION
(FORM3)

WATER VOLATILE MATRIX SPIKE/MATRIX SPIKE DUPLICATE RECOVERY - (FORM3A)

HEADER RECORD 1 (H1)

COLUMN (S)	LENGTH	CONTENTS	FORMAT/CONTENTS
1- 3	3	FORM NUMBER	'3A'
4- 5	2	FORM SUFFIX	'AA'-'ZZ'
6- 7	2	RECORD TYPE	'H1'
8-32	25	LAB NAME	
33-43	11	CONTRACT	
44-49	6	LAB CODE	
50-54	5	CASE NO.	
55-60	6	SAS NO.	
61-65	5	SDG NO.	
66-77	12	MATRIX SPIKE - EPA SAMPLE NO.	
78-79	2	RPD: # OUTSIDE QC LIMITS	NUMERIC 2
80-81	2	RPD: TOTAL	NUMERIC 2
82-83	2	SPIKE RECOVERY: # OUT	NUMERIC 2
84-85	2	SPIKE RECOVERY: TOTAL	NUMERIC 2

DETAIL RECORD 1 (D1)

COLUMN (S)	LENGTH	CONTENTS	FORMAT/CONTENTS
1- 3	3	FORM NUMBER	'3A'
4- 5	2	FORM SUFFIX	'AA'-'ZZ'
6- 7	2	RECORD TYPE	'D1'
8-31	24	COMPOUND	
32-40	9	SPIKE ADDED (UG/L)	NUMERIC 9.3
41-53	13	SAMPLE CONC. (UG/L)	NUMERIC 13.3
54-66	13	MS CONC.(UG/L)	NUMERIC 13.3
67-69	3	MS% REC.	NUMERIC 3
70	1	MS% REC. FLAG	BLANK OR '*'

DETAIL RECORD 2 (D2)

COLUMN (S)	LENGTH	CONTENTS	FORMAT/CONTENTS
1- 3	3	FORM NUMBER	'3A'
4- 5	2	FORM SUFFIX	'AA'-'ZZ'
6- 7	2	RECORD TYPE	'D2'
8-31	24	COMPOUND	
32-40	9	SPIKE ADDED (UG/L)	NUMERIC 9.3
41-53	13	MSD CONC. (UG/L)	NUMERIC 13.3
54-56	3	MSD% REC.	NUMERIC 3
57	1	MSD% REC. OUT FLAG	BLANK OR '*'
58-60	3	% RPD	NUMERIC 3
61	1	% RPD OUT FLAG	BLANK OR '*'

COMMENT RECORD 1 (C1)

COLUMN (S)	LENGTH	CONTENTS	FORMAT/CONTENTS
1- 3	3	FORM NUMBER	'3A'
4- 5	2	FORM SUFFIX	'AA'-'ZZ'
6- 7	2	RECORD TYPE	'C1'
8-72	65	COMMENT LINE 1	

COMMENT RECORD 2 (C2)

COLUMN (S)	LENGTH	CONTENTS	FORMAT/CONTENTS
1- 3	3	FORM NUMBER	'3A'
4- 5	2	FORM SUFFIX	'AA'-'ZZ'
6- 7	2	RECORD TYPE	'C2'
8-72	65	COMMENT LINE 2	

SOIL VOLATILE MATRIX SPIKE/MATRIX SPIKE DUPLICATE RECOVERY - (FORM3B)

HEADER RECORD 1 (H1)

COLUMN (S)	LENGTH	CONTENTS	FORMAT/CONTENTS
1- 3	3	FORM NUMBER	'3B'
4- 5	2	FORM SUFFIX	'AA'-'ZZ'
6- 7	2	RECORD TYPE	'H1'
8-32	25	LAB NAME	
33-43	11	CONTRACT	
44-49	6	LAB CODE	
50-54	5	CASE NO.	
55-60	6	SAS NO.	
61-65	5	SDG NO.	
66-77	12	MATRIX SPIKE - EPA SAMPLE NO.	
78-80	3	LEVEL	'LOW' OR 'MED'
81-82	2	RPD: # OUTSIDE QC LIMITS	NUMERIC 2
83-84	2	RPD: TOTAL	NUMERIC 2
85-86	2	SPIKE RECOVERY: # OUT	NUMERIC 2
87-88	2	SPIKE RECOVERY: TOTAL	NUMERIC 2

DETAIL RECORD 1 (D1)

COLUMN (S)	LENGTH	CONTENTS	FORMAT/CONTENTS
1- 3	3	FORM NUMBER	'3B'
4- 5	2	FORM SUFFIX	'AA'-'ZZ'
6- 7	2	RECORD TYPE	'D1'
8-31	24	COMPOUND	
32-40	9	SPIKE ADDED (UG/L)	NUMERIC 9.3
41-53	13	SAMPLE CONC. (UG/KG)	NUMERIC 13.3
54-66	13	MS CONC. (UG/KG)	NUMERIC 13.3
67-69	3	MS% REC.	NUMERIC 3
70	1	MS% REC. FLAG	BLANK OR '*'

DETAIL RECORD 2 (D2)

COLUMN (S)	LENGTH	CONTENTS	FORMAT/CONTENTS
1- 3	3	FORM NUMBER	'3B'
4- 5	2	FORM SUFFIX	'AA'-'ZZ'
6- 7	2	RECORD TYPE	'D2'
8-31	24	COMPOUND	
32-40	9	SPIKE ADDED (UG/L)	NUMERIC 9.3
41-53	13	MSD CONC. (UG/KG)	NUMERIC 13.3
54-56	3	MSD% REC.	NUMERIC 3
57	1	MSD% REC. OUT FLAG	BLANK OR '*'
58-60	3	% RPD	NUMERIC 3
61	1	% RPD OUT FLAG	BLANK OR '*'

COMMENT RECORD 1 (C1)

COLUMN (S)	LENGTH	CONTENTS	FORMAT/CONTENTS
1- 3	3	FORM NUMBER	'3B'
4- 5	2	FORM SUFFIX	'AA'-'ZZ'
6- 7	2	RECORD TYPE	'C1'
8-72	65	COMMENT LINE 1	

COMMENT RECORD 2 (C2)

COLUMN (S)	LENGTH	CONTENTS	FORMAT/CONTENTS
1- 3	3	FORM NUMBER	'3B'
4- 5	2	FORM SUFFIX	'AA'-'ZZ'
6- 7	2	RECORD TYPE	'C2'
8-72	65	COMMENT LINE 2	

WATER SEMIVOLATILE MATRIX SPIKE/MATRIX SPIKE DUPLICATE RECOVERY-(FORM3C)

HEADER RECORD 1 (H1)

COLUMN (S)	LENGTH	CONTENTS	FORMAT/CONTENTS
1- 3	3	FORM NUMBER	'3C'
4- 5	2	FORM SUFFIX	'AA'-'ZZ'
6- 7	2	RECORD TYPE	'H1'
8-32	25	LAB NAME	
33-43	11	CONTRACT	
44-49	6	LAB CODE	
50-54	5	CASE NO.	
55-60	6	SAS NO.	
61-65	5	SDG NO.	
66-77	12	MATRIX SPIKE - EPA SAMPLE NO.	
78-79	2	RPD: # OUTSIDE QC LIMITS	NUMERIC 2
80-81	2	RPD: TOTAL	NUMERIC 2
82-83	2	SPIKE RECOVERY: # OUT	NUMERIC 2
84-85	2	SPIKE RECOVERY: TOTAL	NUMERIC 2

DETAIL RECORD 1 (D1)

COLUMN (S)	LENGTH	CONTENTS	FORMAT/CONTENTS
1- 3	3	FORM NUMBER	'3C'
4- 5	2	FORM SUFFIX	'AA'-'ZZ'
6- 7	2	RECORD TYPE	'D1'
8-31	24	COMPOUND	
32-40	9	SPIKE ADDED (UG/L)	NUMERIC 9.3
41-53	13	SAMPLE CONC. (UG/L)	NUMERIC 13.3
54-66	13	MS CONC. (UG/L)	NUMERIC 13.3
67-69	3	MS% REC.	NUMERIC 3
70	1	MS% REC. OUT FLAG	BLANK OR '*'

DETAIL RECORD 2 (D2)

COLUMN (S)	LENGTH	CONTENTS	FORMAT/CONTENTS
1- 3	3	FORM NUMBER	'3C'
4- 5	2	FORM SUFFIX	'AA'-'ZZ'
6- 7	2	RECORD TYPE	'D2'
8-31	24	COMPOUND	
32-40	9	SPIKE ADDED (UG/L)	NUMERIC 9.3
41-53	13	MSD CONC. (UG/L)	NUMERIC 13.3
54-56	3	MSD% REC.	NUMERIC 3
57	1	MSD% REC. OUT FLAG	BLANK OR '*'
58-60	3	% RPD	NUMERIC 3
61	1	% RPD OUT FLAG	BLANK OR '*'

COMMENT RECORD 1 (C1)

COLUMN (S)	LENGTH	CONTENTS	FORMAT/CONTENTS
1- 3	3	FORM NUMBER	'3C'
4- 5	2	FORM SUFFIX	'AA'-'ZZ'
6- 7	2	RECORD TYPE	'C1'
8-72	65	COMMENT LINE 1	

COMMENT RECORD 2 (C2)

COLUMN (S)	LENGTH	CONTENTS	FORMAT/CONTENTS
1- 3	3	FORM NUMBER	'3C'
4- 5	2	FORM SUFFIX	'AA'-'ZZ'
6- 7	2	RECORD TYPE	'C2'
8-72	65	COMMENT LINE 2	

SOIL SEMIVOLATILE MATRIX SPIKE/MATRIX SPIKE DUPLICATE RECOVERY - (FORM3D)

HEADER RECORD 1 (H1)

COLUMN (S)	LENGTH	CONTENTS	FORMAT/CONTENTS
1- 3	3	FORM NUMBER	'3D'
4- 5	2	FORM SUFFIX	'AA'-'ZZ'
6- 7	2	RECORD TYPE	'H1'
8-32	25	LAB NAME	
33-43	11	CONTRACT	
44-49	6	LAB CODE	
50-54	5	CASE NO.	
55-60	6	SAS NO.	
61-65	5	SDG NO.	
66-77	12	MATRIX SPIKE - EPA SAMPLE NO.	
78-80	3	LEVEL	'LOW' OR 'MED'
81-82	2	RPD: # OUTSIDE QC LIMITS	NUMERIC 2
83-84	2	RPD: TOTAL	NUMERIC 2
85-86	2	SPIKE RECOVERY: # OUT	NUMERIC 2
87-88	2	SPIKE RECOVERY: TOTAL	NUMERIC 2

DETAIL RECORD 1 (D1)

COLUMN (S)	LENGTH	CONTENTS	FORMAT/CONTENTS
1- 3	3	FORM NUMBER	'3D'
4- 5	2	FORM SUFFIX	'AA'-'ZZ'
6- 7	2	RECORD TYPE	'D1'
8-31	24	COMPOUND	
32-40	9	SPIKE ADDED (UG/KG)	NUMERIC 9.3
41-53	13	SAMPLE CONC. (UG/KG)	NUMERIC 13.3
54-66	13	MS CONC. (UG/KG)	NUMERIC 13.3
67-69	3	MS% REC.	NUMERIC 3
70	1	MS% REC. OUT FLAG	BLANK OR '*'

DETAIL RECORD 2 (D2)

COLUMN (S)	LENGTH	CONTENTS	FORMAT/CONTENTS
1- 3	3	FORM NUMBER	'3D'
4- 5	2	FORM SUFFIX	'AA'-'ZZ'
6- 7	2	RECORD TYPE	'D2'
8-31	24	COMPOUND	
32-40	9	SPIKE ADDED (UG/KG)	NUMERIC 9.3
41-53	13	MSD CONC. (UG/KG)	NUMERIC 13.3
54-56	3	MSD% REC.	NUMERIC 3
57	1	MSD% REC. OUT FLAG	BLANK OR '*'
58-60	3	% RPD	NUMERIC 3
61	1	% RPD OUT FLAG	BLANK OR '*'

COMMENT RECORD 1 (C1)

COLUMN (S)	LENGTH	CONTENTS	FORMAT/CONTENTS
1- 3	3	FORM NUMBER	'3D'
4- 5	2	FORM SUFFIX	'AA'-'ZZ'
6- 7	2	RECORD TYPE	'C1'
8-72	65	COMMENT LINE 1	

COMMENT RECORD 2 (C2)

COLUMN (S)	LENGTH	CONTENTS	FORMAT/CONTENTS
1- 3	3	FORM NUMBER	'3D'
4- 5	2	FORM SUFFIX	'AA'-'ZZ'
6- 7	2	RECORD TYPE	'C2'
8-72	65	COMMENT LINE 2	

WATER PESTICIDE MATRIX SPIKE/MATRIX SPIKE DUPLICATE RECOVERY-(FORM3E)

HEADER RECORD 1 (H1)

COLUMN (S)	LENGTH	CONTENTS	FORMAT/CONTENTS
1- 3	3	FORM NUMBER	'3E'
4- 5	2	FORM SUFFIX	'AA'-'ZZ'
6- 7	2	RECORD TYPE	'H1'
8-32	25	LAB NAME	
33-43	11	CONTRACT	
44-49	6	LAB CODE	
50-54	5	CASE NO.	
55-60	6	SAS NO.	
61-65	5	SDG NO.	
66-77	12	MATRIX SPIKE - EPA SAMPLE NO.	
78-79	2	RPD: # OUTSIDE QC LIMITS	NUMERIC 2
80-81	2	RPD: TOTAL	NUMERIC 2
82-83	2	SPIKE RECOVERY: # OUT	NUMERIC 2
84-85	2	SPIKE RECOVERY: TOTAL	NUMERIC 2

DETAIL RECORD 1 (D1)

COLUMN (S)	LENGTH	CONTENTS	FORMAT/CONTENTS
1- 3	3	FORM NUMBER	'3E'
4- 5	2	FORM SUFFIX	'AA'-'ZZ'
6- 7	2	RECORD TYPE	'D1'
8-31	24	COMPOUND	
32-40	9	SPIKE ADDED (UG/L)	NUMERIC 9.3
41-53	13	SAMPLE CONC. (UG/L)	NUMERIC 13.3
54-66	13	MS CONC. (UG/L)	NUMERIC 13.3
67-69	3	MS% REC.	NUMERIC 3
70	1	MS% REC. OUT FLAG	BLANK OR '*'

DETAIL RECORD 2 (D2)

COLUMN (S)	LENGTH	CONTENTS	FORMAT/CONTENTS
1- 3	3	FORM NUMBER	'3E'
4- 5	2	FORM SUFFIX	'AA'-'ZZ'
6- 7	2	RECORD TYPE	'D2'
8-31	24	COMPOUND	
32-40	9	SPIKE ADDED (UG/L)	NUMERIC 9.3
41-53	13	MSD CONC.(UG/L)	NUMERIC 13.3
54-56	3	MSD% REC.	NUMERIC 3
57	1	MSD% REC. OUT FLAG	BLANK OR '*'
58-60	3	% RPD	NUMERIC 3
61	1	% RPD OUT FLAG	BLANK OR '*'

COMMENT RECORD 1 (C1)

LUMN (S)	LENGTH	CONTENTS	FORMAT/CONTENTS
1- 3	3	FORM NUMBER	'3E'
4- 5	2	FORM SUFFIX	'AA'-'ZZ'
6- 7	2	RECORD TYPE	'C1'
8-72	65	COMMENT LINE 1	

COMMENT RECORD 2 (C2)

COLUMN (S)	LENGTH	CONTENTS	FORMAT/CONTENTS
1- 3	3	FORM NUMBER	'3E'
4- 5	2	FORM SUFFIX	'AA'-'ZZ'
6- 7	2	RECORD TYPE	'C2'
8-72	65	COMMENT LINE 2	

SOIL PESTICIDE MATRIX SPIKE/MATRIX SPIKE DUPLICATE RECOVERY - (FORM3F)

HEADER RECORD 1 (H1)

COLUMN (S)	LENGTH	CONTENTS	FORMAT/CONTENTS
1- 3	3	FORM NUMBER	'3F'
4- 5	2	FORM SUFFIX	'AA'-'ZZ'
6- 7	2	RECORD TYPE	'H1'
8-32	25	LAB NAME	
33-43	11	CONTRACT	
44-49	6	LAB CODE	
50-54	5	CASE NO.	
55-60	6	SAS NO.	
61-65	5	SDG NO.	
66-77	12	MATRIX SPIKE - EPA SAMPLE NO.	
78-80	3	LEVEL	'LOW' OR 'MED'
81-82	2	RPD: # OUTSIDE QC LIMITS	NUMERIC 2
83-84	2	RPD: TOTAL	NUMERIC 2
85-86	2	SPIKE RECOVERY: # OUT	NUMERIC 2
87-88	2	SPIKE RECOVERY: TOTAL	NUMERIC 2

DETAIL RECORD 1 (D1)

COLUMN (S)	LENGTH	CONTENTS	FORMAT/CONTENTS
1- 3	3	FORM NUMBER	'3F'
4- 5	2	FORM SUFFIX	'AA'-'ZZ'
6- 7	2	RECORD TYPE	'D1'
8-31	24	COMPOUND	
32-40	9	SPIKE ADDED (UG/KG)	NUMERIC 9.3
41-53	13	SAMPLE CONC. (UG/KG)	NUMERIC 13.3
54-66	13	MS CONC. (UG/KG)	NUMERIC 13.3
67-69	3	MS% REC.	NUMERIC 3
70	1	MS% REC. OUT FLAG	BLANK OR '*'

DETAIL RECORD 2 (D2)

COLUMN (S)	LENGTH	CONTENTS	FORMAT/CONTENTS
1- 3	3	FORM NUMBER	'3F'
4- 5	2	FORM SUFFIX	'AA'-'ZZ'
6- 7	2	RECORD TYPE	'D2'
8-31	24	COMPOUND	
32-40	9	SPIKE ADDED (UG/KG)	NUMERIC 9.3
41-53	13	MSD CONC. (UG/KG)	NUMERIC 13.3
54-56	3	MSD% REC.	NUMERIC 3
57	1	MSD% REC. OUT FLAG	BLANK OR '*'
58-60	3	% RPD	NUMERIC 3
61	1	% RPD OUT FLAG	BLANK OR '*'

COMMENT RECORD 1 (C1)

COLUMN (S)	LENGTH	CONTENTS	FORMAT/CONTENTS
1- 3	3	FORM NUMBER	'3F'
4- 5	2	FORM SUFFIX	'AA'-'ZZ'
6- 7	2	RECORD TYPE	'C1'
8-72	65	COMMENT LINE 1	

COMMENT RECORD 2 (C2)

COLUMN (S)	LENGTH	CONTENTS	FORMAT/CONTENTS
1- 3	3	FORM NUMBER	'3F'
4- 5	2	FORM SUFFIX	'AA'-'ZZ'
6- 7	2	RECORD TYPE	'C2'
8-72	65	COMMENT LINE 2	

FORM IV FILE DESCRIPTION
(FORM4)

VOLATILE METHOD BLANK SUMMARY - (FORM 4A)

HEADER RECORD 1 (H1)

COLUMN (S)	LENGTH	CONTENTS	FORMAT/CONTENTS
1- 3	3	FORM NUMBER	'4A'
4- 5	2	FORM SUFFIX	'AA'-'ZZ'
6- 7	2	RECORD TYPE	'H1'
8- 32	25	LAB NAME	
33- 43	11	CONTRACT	
44- 49	6	LAB CODE	
50- 54	5	CASE NO.	
55- 60	6	SAS NO.	
61- 65	5	SDG NO.	
66- 79	14	LAB FILE ID	
80- 91	12	LAB SAMPLE ID	
92- 99	8	DATE ANALYZED	MM/DD/YY
100-103	4	TIME ANALYZED	HHMM
104-108	5	MATRIX	'SOIL ' OR 'WATER'
109-111	3	LEVEL	'LOW' OR 'MED'
112-121	10	INSTRUMENT ID	
122	1	PAGE	NUMERIC 1
123	1	OF	NUMERIC 1

DETAIL RECORD 1 (D1)

COLUMN (S)	LENGTH	CONTENTS	FORMAT/CONTENTS
1- 3	3	FORM NUMBER	'4A'
4- 5	2	FORM SUFFIX	'AA'-'ZZ'
6- 7	2	RECORD TYPE	'D1'
8- 9	2	SEQUENCE NUMBER	NUMERIC 2
10-21	12	EPA SAMPLE NO.	
22-33	12	LAB SAMPLE ID	
34-47	14	LAB FILE ID	
48-51	4	TIME ANALYZED	HHMM

COMMENT RECORD 1 (C1)

COLUMN (S)	LENGTH	CONTENTS	FORMAT/CONTENTS
1- 3	3	FORM NUMBER	'4A'
4- 5	2	FORM SUFFIX	'AA'-'ZZ'
6- 7	2	RECORD TYPE	'C1'
8-72	65	COMMENT LINE 1	

COMMENT RECORD 2 (C2)

COLUMN (S)	LENGTH	CONTENTS	FORMAT/CONTENTS
1- 3	3	FORM NUMBER	'4A'
4- 5	2	FORM SUFFIX	'AA'-'ZZ'
6- 7	2	RECORD TYPE	'C2'
8-72	65	COMMENT LINE 2	

SEMIVOLATILE METHOD BLANK SUMMARY - (FORM 4B)

HEADER RECORD 1 (H1)

COLUMN (S)	LENGTH	CONTENTS	FORMAT/CONTENTS
1- 3	3	FORM NUMBER	'4B'
4- 5	2	FORM SUFFIX	'AA'-'ZZ'
6- 7	2	RECORD TYPE	'H1'
8- 32	25	LAB NAME	
33- 43	11	CONTRACT	
44- 49	6	LAB CODE	
50- 54	5	CASE NO.	
55- 60	6	SAS NO.	
61- 65	5	SDG NO.	
66- 79	14	LAB FILE ID	
80- 91	12	LAB SAMPLE ID	
92- 99	8	DATE EXTRACTED	MM/DD/YY
100-103	4	EXTRACTION	'SEPF', 'CONT' OR 'SONC'
104-111	8	DATE ANALYZED	MM/DD/YY
112-115	4	TIME ANALYZED	HHMM
116-120	5	MATRIX	'SOIL ' OR 'WATER'
121-123	3	LEVEL	'LOW' OR 'MED'
124-133	10	INSTRUMENT ID	
134	1	PAGE	NUMERIC 1
135	1	OF	NUMERIC 1

DETAIL RECORD 1 (D1)

COLUMN (S)	LENGTH	CONTENTS	FORMAT/CONTENTS
1- 3	3	FORM NUMBER	'4B'
4- 5	2	FORM SUFFIX	'AA'-'ZZ'
6- 7	2	RECORD TYPE	'D1'
8- 9	2	SEQUENCE NUMBER	NUMERIC 2
10-21	12	EPA SAMPLE NO.	
22-33	12	LAB SAMPLE ID	
34-47	14	LAB FILE ID	
48-55	8	DATE ANALYZED	MM/DD/YY

COMMENT RECORD 1 (C1)

COLUMN (S)	LENGTH	CONTENTS	FORMAT/CONTENTS
1- 3	3	FORM NUMBER	'4B'
4- 5	2	FORM SUFFIX	'AA'-'ZZ'
6- 7	2	RECORD TYPE	'C1'
8-72	65	COMMENT LINE 1	

COMMENT RECORD 2 (C2)

COLUMN (S)	LENGTH	CONTENTS	FORMAT/CONTENTS
1- 3	3	FORM NUMBER	'4B'
4- 5	2	FORM SUFFIX	'AA'-'ZZ'
6- 7	2	RECORD TYPE	'C2'
9-72	65	COMMENT LINE 2	

PESTICIDE METHOD BLANK SUMMARY - (FORM 4C)

HEADER RECORD 1 (H1)

COLUMN (S)	LENGTH	CONTENTS	FORMAT/CONTENTS
1- 3	3	FORM NUMBER	'4C'
4- 5	2	FORM SUFFIX	'AA'-'ZZ'
6- 7	2	RECORD TYPE	'H1'
8- 32	25	LAB NAME	
33- 43	11	CONTRACT	
44- 49	6	LAB CODE	
50- 54	5	CASE NO.	
55- 60	6	SAS NO.	
61- 65	5	SDG NO.	
66- 77	12	LAB SAMPLE ID	
78- 91	14	LAB FILE ID	
92- 96	5	MATRIX	'SOIL ' OR 'WATER'
97- 99	3	LEVEL	'LOW' OR 'MED'
100-107	8	DATE EXTRACTED	MM/DD/YY
108-111	4	EXTRACTION	'SEPF', 'CONT' OR 'SONC'
112-119	8	DATE ANALYZED (1)	MM/DD/YY
120-127	8	DATE ANALYZED (2)	MM/DD/YY
128-131	4	TIME ANALYZED (1)	HHMM
132-135	4	TIME ANALYZED (2)	HHMM
136-145	10	INSTRUMENT ID (1)	
146-155	10	INSTRUMENT ID (2)	
156-165	10	GC COLUMN ID (1)	
166-175	10	GC COLUMN ID (2)	
176	1	PAGE	NUMERIC 1
177	1	OF	NUMERIC 1

DETAIL RECORD 1 (D1)

COLUMN (S)	LENGTH	CONTENTS	FORMAT/CONTENTS
1- 3	3	FORM NUMBER	'4C'
4- 5	2	FORM SUFFIX	'AA'-'ZZ'
6- 7	2	RECORD TYPE	'D1'
8- 9	2	SEQUENCE NUMBER	NUMERIC 2
10-21	12	EPA SAMPLE NO.	
22-33	12	LAB SAMPLE ID	
34-41	8	DATE ANALYZED 1	MM/DD/YY
42-49	8	DATE ANALYZED 2	MM/DD/YY

COMMENT RECORD 1 (C1)

POSITION(S)	LENGTH	CONTENTS	FORMAT/CONTENTS
1-3	3	FORM NUMBER	'4C'
4-5	2	FORM SUFFIX	'AA'-'ZZ'
6-7	2	RECORD TYPE	'C1'
8-72	65	COMMENT LINE 1	

COMMENT RECORD 2 (C2)

POSITION(S)	LENGTH	CONTENTS	FORMAT/CONTENTS
1-3	3	FORM NUMBER	'4C'
4-5	2	FORM SUFFIX	'AA'-'ZZ'
6-7	2	RECORD TYPE	'C2'
8-72	65	COMMENT LINE 2	

FORM V FILE DESCRIPTION
(FORM5)

VOLATILE ORGANIC GC/MS TUNING AND MASS CALIBRATION - (FORM5A)
BROMOFLUOROBENZENE (BFB)

HEADER RECORD 1 (H1)

COLUMN (S)	LENGTH	CONTENTS	FORMAT/CONTENTS
1- 3	3	FORM NUMBER	'5A'
4- 5	2	FORM SUFFIX	'AA'-'ZZ'
6- 7	2	RECORD TYPE	'H1'
8- 32	25	LAB NAME	
33- 43	11	CONTRACT	
44- 49	6	LAB CODE	
50- 54	5	CASE NO.	
55- 60	6	SAS NO.	
61- 65	5	SDG NO.	
66- 79	14	LAB FILE ID	
80- 87	8	BFB INJECTION DATE	MM/DD/YY
88- 97	10	INSTRUMENT ID	
98-101	4	BFB INJECTION TIME	HHMM
102-106	5	MATRIX	'SOIL ' OR 'WATER'
107-109	3	LEVEL	'LOW' OR 'MED'
110-113	4	COLUMN	'PACK' OR 'CAP '
114	1	PAGE	NUMERIC 1
115	1	OF	NUMERIC 1

DETAIL RECORD 1 (D1)

COLUMN (S)	LENGTH	CONTENTS	FORMAT/CONTENTS
1- 3	3	FORM NUMBER	'5A'
4- 5	2	FORM SUFFIX	'AA'-'ZZ'
6- 7	2	RECORD TYPE	'D1'
8-10	3	M/E	NUMERIC 3
11-15	5	% RELATIVE ABUNDANCE	NUMERIC 5.1
16-20	5	% MASS (WHERE APPLICABLE)	NUMERIC 5.1

DETAIL RECORD 2 (D2)

COLUMN (S)	LENGTH	CONTENTS	FORMAT/CONTENTS
1- 3	3	FORM NUMBER	'5A'
4- 5	2	FORM SUFFIX	AA-ZZ
6- 7	2	RECORD TYPE	D2
8- 9	2	SEQUENCE NUMBER	NUMERIC 2
10-21	12	EPA SAMPLE NO.	
22-33	12	LAB SAMPLE ID	
34-47	14	LAB FILE ID	
48-55	8	DATE ANALYZED	MM/DD/YY
56-59	4	TIME ANALYZED	HHMM

SEMIVOLATILE ORGANIC GC/MS TUNING AND MASS CALIBRATION - (FORM5B)
DECAFLUOROTRIPHENYLPHOSPHINE (DFTPP)

HEADER RECORD 1 (H1)

COLUMN (S)	LENGTH	CONTENTS	FORMAT/CONTENTS
1- 3	3	FORM NUMBER	'5B'
4- 5	2	FORM SUFFIX	'AA'-'ZZ'
6- 7	2	RECORD TYPE	'H1'
8- 32	25	LAB NAME	
33- 43	11	CONTRACT	
44- 49	6	LAB CODE	
50- 54	5	CASE NO.	
55- 60	6	SAS NO.	
61- 65	5	SDG NO.	
66- 79	14	LAB FILE ID	
80- 87	8	DFTPP INJECTION DATE	MM/DD/YY
88- 97	10	INSTRUMENT ID	
98-101	4	DFTPP INJECTION TIME	HHMM
102	1	PAGE	NUMERIC 1
103	1	OF	NUMERIC 1

DETAIL RECORD 1 (D1)

COLUMN (S)	LENGTH	CONTENTS	FORMAT/CONTENTS
1- 3	3	FORM NUMBER	'5B'
4- 5	2	FORM SUFFIX	'AA'-'ZZ'
6- 7	2	RECORD TYPE	'D1'
8-10	3	M/E	NUMERIC 3
11-16	6	% RELATIVE ABUNDANCE	NUMERIC 6.2
17-21	5	% MASS (WHERE APPLICABLE)	NUMERIC 5.1

DETAIL RECORD 2 (D2)

COLUMN (S)	LENGTH	CONTENTS	FORMAT/CONTENTS
1- 3	3	FORM NUMBER	'5B'
4- 5	2	FORM SUFFIX	'AA'-'ZZ'
6- 7	2	RECORD TYPE	'D2'
8- 9	2	SEQUENCE NUMBER	NUMERIC 2
10-21	12	EPA SAMPLE NO.	
22-33	12	LAB SAMPLE ID	
34-47	14	LAB FILE ID	
48-55	8	DATE ANALYZED	MM/DD/YY
56-59	4	TIME ANALYZED	HHMM

FORM VI FILE DESCRIPTION
(FORM6)

VOLATILE ORGANICS INITIAL CALIBRATION DATA - (FORM 6A)

HEADER RECORD 1 (H1)

COLUMN (S)	LENGTH	CONTENTS	FORMAT/CONTENTS
1- 3	3	FORM NUMBER	'6A'
4- 5	2	FORM SUFFIX	'AA'-'ZZ'
6- 7	2	RECORD TYPE	'H1'
8- 32	25	LAB NAME	
33- 43	11	CONTRACT	
44- 49	6	LAB CODE	
50- 54	5	CASE NO.	
55- 60	6	SAS NO.	
61- 65	5	SDG NO.	
66- 75	10	INSTRUMENT ID	
76- 83	8	CALIBRATION DATE 1	MM/DD/YY
84- 91	8	CALIBRATION DATE 2	MM/DD/YY
92- 96	5	MATRIX	'SOIL ' OR 'WATER'
97- 99	3	LEVEL	'LOW' OR 'MED'
100-103	4	COLUMN	'PACK' OR 'CAP '
104-117	14	RRF20 LAB FILE ID	
118-131	14	RRF50 LAB FILE ID	
132-145	14	RRF100 LAB FILE ID	
146-159	14	RRF150 LAB FILE ID	
160-173	14	RRF200 LAB FILE ID	

DETAIL RECORD 1 (D1)

COLUMN (S)	LENGTH	CONTENTS	FORMAT/CONTENTS
1- 3	3	FORM NUMBER	'6A'
4- 5	2	FORM SUFFIX	'AA'-'ZZ'
6- 7	2	RECORD TYPE	'D1'
8-34	27	COMPOUND	
35-39	5	RRF20	NUMERIC 5.3
40-44	5	RRF50	NUMERIC 5.3
45-49	5	RRF100	NUMERIC 5.3
50-54	5	RRF150	NUMERIC 5.3
55-59	5	RRF200	NUMERIC 5.3
60-64	5	AVERAGE RRF	NUMERIC 5.3
65-69	5	% RSD	NUMERIC 5.1

SEMIVOLATILE ORGANICS INITIAL CALIBRATION DATA - (FORM 6B)

HEADER RECORD 1 (H1)

COLUMN (S)	LENGTH	CONTENTS	FORMAT/CONTENTS
1- 3	3	FORM NUMBER	'6B'
4- 5	2	FORM SUFFIX	'AA'-'ZZ'
6- 7	2	RECORD TYPE	'H1'
8- 32	25	LAB NAME	
33- 43	11	CONTRACT	
44- 49	6	LAB CODE	
50- 54	5	CASE NO.	
55- 60	6	SAS NO.	
61- 65	5	SDG NO.	
66- 75	10	INSTRUMENT ID	
76- 83	8	CALIBRATION DATE 1	MM/DD/YY
84- 91	8	CALIBRATION DATE 2	MM/DD/YY
92-105	14	RRF20 LAB FILE ID	
106-119	14	RRF50 LAB FILE ID	
120-133	14	RRF80 LAB FILE ID	
134-147	14	RRF120 LAB FILE ID	
148-161	14	RRF160 LAB FILE ID	

DETAIL RECORD 1 (D1)

COLUMN (S)	LENGTH	CONTENTS	FORMAT/CONTENTS
1- 3	3	FORM NUMBER	'6B'
4- 5	2	FORM SUFFIX	'AA'-'ZZ'
6- 7	2	RECORD TYPE	'D1'
8-34	27	COMPOUND	
35-39	5	RRF20	NUMERIC 5.3
40-44	5	RRF50	NUMERIC 5.3
45-49	5	RRF80	NUMERIC 5.3
50-54	5	RRF120	NUMERIC 5.3
55-59	5	RRF160	NUMERIC 5.3
60-64	5	AVERAGE RRF	NUMERIC 5.3
65-69	5	% RSD	NUMERIC 5.1

SEMIVOLATILE ORGANICS INITIAL CALIBRATION DATA - (FORM 6C)

HEADER RECORD 1 (H1)

COLUMN (S)	LENGTH	CONTENTS	FORMAT/CONTENTS
1- 3	3	FORM NUMBER	'6C'
4- 5	2	FORM SUFFIX	'AA'-'ZZ'
6- 7	2	RECORD TYPE	'H1'
8- 32	25	LAB NAME	
33- 43	11	CONTRACT	
44- 49	6	LAB CODE	
50- 54	5	CASE NO.	
55- 60	6	SAS NO.	
61- 65	5	SDG NO.	
66- 75	10	INSTRUMENT ID	
76- 83	8	CALIBRATION DATE 1	MM/DD/YY
84- 91	8	CALIBRATION DATE 2	MM/DD/YY
92-105	14	RRF20 LAB FILE ID	
106-119	14	RRF50 LAB FILE ID	
120-133	14	RRF80 LAB FILE ID	
134-147	14	RRF120 LAB FILE ID	
148-161	14	RRF160 LAB FILE ID	

DETAIL RECORD 1 (D1)

COLUMN (S)	LENGTH	CONTENTS	FORMAT/CONTENTS
1- 3	3	FORM NUMBER	'6C'
4- 5	2	FORM SUFFIX	'AA'-'ZZ'
6- 7	2	RECORD TYPE	'D1'
8- 34	27	COMPOUND	
35-39	5	RRF20	NUMERIC 5.3
40-44	5	RRF50	NUMERIC 5.3
45-49	5	RRF80	NUMERIC 5.3
50-54	5	RRF120	NUMERIC 5.3
55-59	5	RRF160	NUMERIC 5.3
60-64	5	AVERAGE RRF	NUMERIC 5.3
65-69	5	% RSD	NUMERIC 5.1

FORM VII FILE DESCRIPTION
(FORM7)

VOLATILE CONTINUING CALIBRATION CHECK - (FORM 7A)

HEADER RECORD 1 (H1)

COLUMN (S)	LENGTH	CONTENTS	FORMAT/CONTENTS
1- 3	3	FORM NUMBER	'7A'
4- 5	2	FORM SUFFIX	'AA'-'ZZ'
6- 7	2	RECORD TYPE	'H1'
8- 32	25	LAB NAME	
33- 43	11	CONTRACT	
44- 49	6	LAB CODE	
50- 54	5	CASE NO.	
55- 60	6	SAS NO.	
61- 65	5	SDG NO.	
66- 75	10	INSTRUMENT ID	
76- 83	8	CALIBRATION DATE	MM/DD/YY
84- 87	4	CALIBRATION TIME	HHMM
88-101	14	LAB FILE ID	
102-109	8	INIT. CALIB. DATE 1	MM/DD/YY
110-117	8	INIT. CALIB. DATE 2	MM/DD/YY
118-122	5	MATRIX	'SOIL ' OR 'WATER'
123-125	3	LEVEL	'LOW' OR 'MED'
126-129	4	COLUMN	'PACK' OR 'CAP '

DETAIL RECORD 1 (D1)

COLUMN (S)	LENGTH	CONTENTS	FORMAT/CONTENTS
1- 3	3	FORM NUMBER	'7A'
4- 5	2	FORM SUFFIX	'AA'-'ZZ'
6- 7	2	RECORD TYPE	'D1'
8-34	27	COMPOUND	
35-39	5	AVERAGE RRF	NUMERIC 5.3
40-44	5	RRF50	NUMERIC 5.3
45-49	5	% D	NUMERIC 5.1

SEMIVOLATILE CONTINUING CALIBRATION CHECK - (FORM 7B)

HEADER RECORD 1 (H1)

COLUMN (S)	LENGTH	CONTENTS	FORMAT/CONTENTS
1- 3	3	FORM NUMBER	'7B'
4- 5	2	FORM SUFFIX	'AA'-'ZZ'
6- 7	2	RECORD TYPE	'H1'
8- 32	25	LAB NAME	
33- 43	11	CONTRACT	
44- 49	6	LAB CODE	
50- 54	5	CASE NO.	
55- 60	6	SAS NO.	
61- 65	5	SDG NO.	
66- 75	10	INSTRUMENT ID	
76- 83	8	CALIBRATION DATE	MM/DD/YY
84- 87	4	CALIBRATION TIME	HHMM
88-101	14	LAB FILE ID	
102-109	8	INIT. CALIB. DATE 1	MM/DD/YY
110-117	8	INIT. CALIB. DATE 2	MM/DD/YY

DETAIL RECORD 1 (D1)

COLUMN (S)	LENGTH	CONTENTS	FORMAT/CONTENTS
1- 3	3	FORM NUMBER	'7B'
4- 5	2	FORM SUFFIX	'AA'-'ZZ'
6- 7	2	RECORD TYPE	'D1'
8-34	27	COMPOUND	
35-39	5	AVERAGE RRF	NUMERIC 5.3
40-44	5	RRF50	NUMERIC 5.3
45-49	5	% D	NUMERIC 5.1

SEMIVOLATILE CONTINUING CALIBRATION CHECK - (FORM 7C)

HEADER RECORD 1 (H1)

COLUMN (S)	LENGTH	CONTENTS	FORMAT/CONTENTS
1- 3	3	FORM NUMBER	'7C'
4- 5	2	FORM SUFFIX	'AA'-'ZZ'
6- 7	2	RECORD TYPE	'H1'
8- 32	25	LAB NAME	
33- 43	11	CONTRACT	
44- 49	6	LAB CODE	
50- 54	5	CASE NO.	
55- 60	6	SAS NO.	
61- 65	5	SDG NO.	
66- 75	10	INSTRUMENT ID	
76- 83	8	CALIBRATION DATE	MM/DD/YY
84- 87	4	CALIBRATION TIME	HHMM
88-101	14	LAB FILE ID	
102-109	8	INIT. CALIB. DATE 1	MM/DD/YY
110-117	8	INIT. CALIB. DATE 2	MM/DD/YY

DETAIL RECORD 1 (D1)

COLUMN (S)	LENGTH	CONTENTS	FORMAT/CONTENTS
1- 3	3	FORM NUMBER	'7C'
4- 5	2	FORM SUFFIX	'AA'-'ZZ'
6- 7	2	RECORD TYPE	'D1'
8-34	27	COMPOUND	
35-39	5	AVERAGE RRF	NUMERIC 5.3
40-44	5	RRF50	NUMERIC 5.3
45-49	5	% D	NUMERIC 5.1

FORM VIII FILE DESCRIPTION
(FORM8)

VOLATILE INTERNAL STANDARD AREA SUMMARY - (FORM 8A)

HEADER RECORD 1 (H1)

COLUMN (S)	LENGTH	CONTENTS	FORMAT/CONTENTS
1- 3	3	FORM NUMBER	'8A'
4- 5	2	FORM SUFFIX	'AA'-'ZZ'
6- 7	2	RECORD TYPE	'H1'
8- 32	25	LAB NAME	
33- 43	11	CONTRACT	
44- 49	6	LAB CODE	
50- 54	5	CASE NO.	
55- 60	6	SAS NO.	
61- 65	5	SDG NO.	
66- 79	14	LAB FILE ID (STANDARD)	
80- 87	8	DATE ANALYZED	MM/DD/YY
88- 97	10	INSTRUMENT ID	
98-101	4	TIME ANALYZED	HHMM
102-106	5	MATRIX	'SOIL ' OR 'WATER'
107-109	3	LEVEL	'LOW' OR 'MED'
110-113	4	COLUMN	'PACK' OR 'CAP '
114	1	PAGE	NUMERIC 1
115	1	OF	NUMERIC 1

DETAIL RECORD 1 (D1)

COLUMN (S)	LENGTH	CONTENTS	FORMAT/CONTENTS
1- 3	3	FORM NUMBER	'8A'
4- 5	2	FORM SUFFIX	'AA'-'ZZ'
6- 7	2	RECORD TYPE	'D1'
		12 HOUR STANDARD -	
8- 16	9	IS1 (BCM) AREA	NUMERIC 9
17- 22	6	RT	NUMERIC 6.2
23- 31	9	IS2 (DFB) AREA	NUMERIC 9
32- 37	6	RT	NUMERIC 6.2
38- 46	9	IS3 (CBZ) AREA	NUMERIC 9
47- 52	6	RT	NUMERIC 6.2
		UPPER LIMIT -	
53- 61	9	IS1 (BCM) AREA	NUMERIC 9
62- 70	9	IS2 (DFB) AREA	NUMERIC 9
71- 79	9	IS3 (CBZ) AREA	NUMERIC 9
		LOWER LIMIT -	
80- 88	9	IS1 (BCM) AREA	NUMERIC 9
89- 97	9	IS2 (DFB) AREA	NUMERIC 9
98-106	9	IS3 (CBZ) AREA	NUMERIC 9

DETAIL RECORD 2 (D2)

COLUMN (S)	LENGTH	CONTENTS	FORMAT/CONTENTS
1- 3	3	FORM NUMBER	'8A'
4- 5	2	FORM SUFFIX	'AA'-'ZZ'
6- 7	2	RECORD TYPE	'D2'
8- 9	2	SEQUENCE NUMBER	NUMERIC 2
10-21	12	EPA SAMPLE NO.	
22-30	9	IS1 (BCM) AREA	NUMERIC 9
31	1	IS1 (BCM) AREA FLAG	BLANK OR '*'
32-37	6	RT	NUMERIC 6.2
38-46	9	IS2 (DFB) AREA	NUMERIC 9
47	1	IS2 (DFB) AREA FLAG	BLANK OR '*'
48-53	6	RT	NUMERIC 6.2
54-62	9	IS3 (CBZ) AREA	NUMERIC 9
63	1	IS3 (CBZ) AREA FLAG	BLANK OR '*'
64-69	6	RT	NUMERIC 6.2

SEMIVOLATILE INTERNAL STANDARD AREA SUMMARY - (FORM 8B)

HEADER RECORD 1 (H1)

COLUMN (S)	LENGTH	CONTENTS	FORMAT/CONTENTS
1- 3	3	FORM NUMBER	'8B'
4- 5	2	FORM SUFFIX	'AA'-'ZZ'
6- 7	2	RECORD TYPE	'H1'
8- 32	25	LAB NAME	
33- 43	11	CONTRACT	
44- 49	6	LAB CODE	
50- 54	5	CASE NO.	
55- 60	6	SAS NO.	
61- 65	5	SDG NO.	
66- 79	14	LAB FILE ID (STANDARD)	
80- 87	8	DATE ANALYZED	MM/DD/YY
88- 97	10	INSTRUMENT ID	
98-101	4	TIME ANALYZED	HHMM
102	1	PAGE	NUMERIC 1
103	1	OF	NUMERIC 1

DETAIL RECORD 1 (D1)

COLUMN (S)	LENGTH	CONTENTS	FORMAT/CONTENTS
1- 3	3	FORM NUMBER	'8B'
4- 5	2	FORM SUFFIX	'AA'-'ZZ'
6- 7	2	RECORD TYPE	'D1'
		12 HOUR STANDARD -	
8- 16	9	IS1 (DCB) AREA	NUMERIC 9
17- 22	6	RT	NUMERIC 6.2
23- 31	9	IS2 (NPT) AREA	NUMERIC 9
32- 37	6	RT	NUMERIC 6.2
38- 46	9	IS3 (ANT) AREA	NUMERIC 9
47- 52	6	RT	NUMERIC 6.2
		UPPER LIMIT -	
53- 61	9	IS1 (DCB) AREA	NUMERIC 9
62- 70	9	IS2 (NPT) AREA	NUMERIC 9
71- 79	9	IS3 (ANT) AREA	NUMERIC 9
		LOWER LIMIT -	
80- 88	9	IS1 (DCB) AREA	NUMERIC 9
89- 97	9	IS2 (NPT) AREA	NUMERIC 9
98-106	9	IS3 (ANT) AREA	NUMERIC 9

DETAIL RECORD 2 (D2)

JLUMN (S)	LENGTH	CONTENTS	FORMAT/CONTENTS
1- 3	3	FORM NUMBER	8B
4- 5	2	FORM SUFFIX	AA-ZZ
6- 7	2	RECORD TYPE	D2
8- 9	2	SEQUENCE NUMBER	NUMERIC 2
10-21	12	EPA SAMPLE NO.	
22-30	9	IS1 (DCB) AREA	NUMERIC 9
31	1	IS1 (DCB) AREA FLAG	BLANK OR '*'
32-37	6	RT	NUMERIC 6.2
38-46	9	IS2 (NPT) AREA	NUMERIC 9
47	1	IS2 (NPT) AREA FLAG	BLANK OR '*'
48-53	6	RT	NUMERIC 6.2
54-62	9	IS3 (ANT) AREA	NUMERIC 9
63	1	IS3 (ANT) AREA FLAG	BLANK OR '*'
64-69	6	RT	NUMERIC 6.2

SEMIVOLATILE INTERNAL STANDARD AREA SUMMARY - (FORM 8C)

HEADER RECORD 1 (H1)

COLUMN (S)	LENGTH	CONTENTS	FORMAT/CONTENTS
1- 3	3	FORM NUMBER	'8C'
4- 5	2	FORM SUFFIX	'AA'-'ZZ'
6- 7	2	RECORD TYPE	'H1'
8- 32	25	LAB NAME	
33- 43	11	CONTRACT	
44- 49	6	LAB CODE	
50- 54	5	CASE NO.	
55- 60	6	SAS NO.	
61- 65	5	SDG NO.	
66- 79	14	LAB FILE ID (STANDARD)	
80- 87	8	DATE ANALYZED	MM/DD/YY
88- 97	10	INSTRUMENT ID	
98-101	4	TIME ANALYZED	HHMM
102	1	PAGE	NUMERIC 1
103	1	OF	NUMERIC 1

DETAIL RECORD 1 (D1)

COLUMN (S)	LENGTH	CONTENTS	FORMAT/CONTENTS
1- 3	3	FORM NUMBER	'8C'
4- 5	2	FORM SUFFIX	'AA'-'ZZ'
6- 7	2	RECORD TYPE	'D1'
		12 HOUR STANDARD -	
8- 16	9	IS4 (PHN) AREA	NUMERIC 9
17- 22	6	RT	NUMERIC 6.2
23- 31	9	IS5 (CRY) AREA	NUMERIC 9
32- 37	6	RT	NUMERIC 6.2
38- 46	9	IS6 (PRY) AREA	NUMERIC 9
47- 52	6	RT	NUMERIC 6.2
		UPPER LIMIT -	
53- 61	9	IS4 (PHN) AREA	NUMERIC 9
62- 70	9	IS5 (CRY) AREA	NUMERIC 9
71- 79	9	IS6 (PRY) AREA	NUMERIC 9
		LOWER LIMIT -	
80- 88	9	IS4 (PHN) AREA	NUMERIC 9
89- 97	9	IS5 (CRY) AREA	NUMERIC 9
98-106	9	IS6 (PRY) AREA	NUMERIC 9

DETAIL RECORD 2 (D2)

OLUMN (S)	LENGTH	CONTENTS	FORMAT/CONTENTS
1- 3	3	FORM NUMBER	8C
4- 5	2	FORM SUFFIX	AA-ZZ
6- 7	2	RECORD TYPE	D2
8- 9	2	SEQUENCE NUMBER	NUMERIC 2
10-21	12	EPA SAMPLE NO.	
22-30	9	IS4 (PHN) AREA	NUMERIC 9
31	1	IS4 (PHN) AREA FLAG	BLANK OR '*'
32-37	6	RT	NUMERIC 6.2
38-46	9	IS5 (CRY) AREA	NUMERIC 9
47	1	IS5 (CRY) AREA FLAG	BLANK OR '*'
48-53	6	RT	NUMERIC 6.2
54-62	9	IS6 (PRY) AREA	NUMERIC 9
63	1	IS6 (PRY) AREA FLAG	BLANK OR '*'
64-69	6	RT	NUMERIC 6.2

PESTICIDE EVALUATION STANDARDS SUMMARY - (FORM 8D)

HEADER RECORD 1 (H1)

COLUMN (S)	LENGTH	CONTENTS	FORMAT/CONTENTS
1- 3	3	FORM NUMBER	'8D'
4- 5	2	FORM SUFFIX	'AA'-'ZZ'
6- 7	2	RECORD TYPE	'H1'
8- 32	25	LAB NAME	
33- 43	11	CONTRACT	
44- 49	6	LAB CODE	
50- 54	5	CASE NO.	
55- 60	6	SAS NO.	
61- 65	5	SDG NO.	
66- 75	10	INSTRUMENT ID	
76- 85	10	GC COLUMN ID	
		DATES OF ANALYSES	
86- 93	8	FROM:	MM/DD/YY
94-101	8	TO:	MM/DD/YY

DETAIL RECORD 1 (D1)

COLUMN (S)	LENGTH	CONTENTS	FORMAT/CONTENTS
1- 3	3	FORM NUMBER	'8D'
4- 5	2	FORM SUFFIX	'AA'-'ZZ'
6- 7	2	RECORD TYPE	'D1'
8-20	13	PESTICIDE	
21-31	11	CALIB. FACTOR EVAL MIX A	NUMERIC 11
32-42	11	CALIB. FACTOR EVAL MIX B	NUMERIC 11
43-53	11	CALIB. FACTOR EVAL MIX C	NUMERIC 11
54-58	5	% RSD	NUMERIC 5.1

DETAIL RECORD 2 (D2)

COLUMN (S)	LENGTH	CONTENTS	FORMAT/CONTENTS
1- 3	3	FORM NUMBER	'8D'
4- 5	2	FORM SUFFIX	'AA'-'ZZ'
6- 7	2	RECORD TYPE	'D2'
8- 9	2	SEQUENCE NUMBER	NUMERIC 2
10-17	8	DATE ANALYZED	MM/DD/YY
18-21	4	TIME ANALYZED	HHMM
22-26	5	ENDRIN	NUMERIC 5.1
27-31	5	4,4'-DDT	NUMERIC 5.1
32-36	5	COMBINED	NUMERIC 5.1

PESTICIDE EVALUATION STANDARDS SUMMARY - (FORM 8E)
EVALUATION OF RETENTION TIME SHIFT FOR DIBUTYLCHLORENDATE

HEADER RECORD 1 (H1)

COLUMN (S)	LENGTH	CONTENTS	FORMAT/CONTENTS
1- 3	3	FORM NUMBER	'8E'
4- 5	2	FORM SUFFIX	'AA'-'ZZ'
6- 7	2	RECORD TYPE	'H1'
8- 32	25	LAB NAME	
33- 43	11	CONTRACT	
44- 49	6	LAB CODE	
50- 54	5	CASE NO.	
55- 60	6	SAS NO.	
61- 65	5	SDG NO.	
66- 75	10	INSTRUMENT ID	
76- 85	10	GC COLUMN ID	
		DATES OF ANALYSES	
86- 93	8	FROM:	MM/DD/YY
94-101	8	TO:	MM/DD/YY
102	1	PAGE	NUMERIC 1
103	1	OF	NUMERIC 1

DETAIL RECORD 1 (D1)

OLUMN (S)	LENGTH	CONTENTS	FORMAT/CONTENTS
1- 3	3	FORM NUMBER	'8E'
4- 5	2	FORM SUFFIX	'AA'-'ZZ'
6- 7	2	RECORD TYPE	'D1'
8- 9	2	SEQUENCE NUMBER	NUMERIC 2
10-21	12	EPA SAMPLE NO.	
22-33	12	LAB SAMPLE ID	
34-41	8	DATE ANALYZED	MM/DD/YY
42-45	4	TIME ANALYZED	HHMM
46-50	5	% D	NUMERIC 5.1
51	1	FLAG	BLANK OR '*'

FORM IX FILE DESCRIPTION
(FORM9)

PESTICIDE/PCB STANDARDS SUMMARY - (FORM 9)

HEADER RECORD 1 (H1)

COLUMN (S)	LENGTH	CONTENTS	FORMAT/CONTENTS
1- 3	3	FORM NUMBER	' 9'
4- 5	2	FORM SUFFIX	'AA'-'ZZ'
6- 7	2	RECORD TYPE	'H1'
8- 32	25	LAB NAME	
33- 43	11	CONTRACT	
44- 49	6	LAB CODE	
50- 54	5	CASE NO.	
55- 60	6	SAS NO.	
61- 65	5	SDG NO.	
66- 75	10	INSTRUMENT ID	
76- 85	10	GC COLUMN ID	
86- 93	8	DATE OF ANALYSIS FROM:	MM/DD/YY
94-101	8	DATE OF ANALYSIS	MM/DD/YY
102-109	8	DATE OF ANALYSIS TO:	MM/DD/YY
110-113	4	TIME OF ANALYSIS	HHMM
114-117	4	TIME OF ANALYSIS FROM:	HHMM
118-121	4	TIME OF ANALYSIS TO:	HHMM
122-133	12	EPA SAMPLE NO. (STANDARD)	
134	1	PAGE	NUMERIC 1
135	1	OF	NUMERIC 1

DETAIL RECORD 1 (D1)

COLUMN (S)	LENGTH	CONTENTS	FORMAT/CONTENTS
1- 3	3	FORM NUMBER	' 9'
4- 5	2	FORM SUFFIX	'AA'-'ZZ'
6- 7	2	RECORD TYPE	'D1'
8-20	13	COMPOUND	
21-26	6	RT	NUMERIC 6.2
27-32	6	RT WINDOW FROM:	NUMERIC 6.2
33-38	6	RT WINDOW TO:	NUMERIC 6.2
39-49	11	CALIBRATION FACTOR	NUMERIC 11
50-55	6	RT	NUMERIC 6.2
56-66	11	CALIBRATION FACTOR	NUMERIC 11
67	1	QUANT	'Y' OR 'N'
68-72	5	% D	NUMERIC 5.1

FORM X FILE DESCRIPTION
(FORM10)

PESTICIDE/PCB IDENTIFICATION - (FORM 10)

HEADER RECORD 1 (H1)

COLUMN (S)	LENGTH	CONTENTS	FORMAT/CONTENTS
1- 3	3	FORM NUMBER	'10'
4- 5	2	FORM SUFFIX	'AA'-'ZZ'
6- 7	2	RECORD TYPE	'H1'
8- 19	12	EPA SAMPLE NO.	
20- 44	25	LAB NAME	
45- 55	11	CONTRACT	
56- 61	6	LAB CODE	
62- 66	5	CASE NO.	
67- 72	6	SAS NO.	
73- 77	5	SDG NO.	
78- 87	10	GC COLUMN ID (1)	
88- 97	10	GC COLUMN ID (2)	
98-107	10	INSTRUMENT ID (1)	
108-117	10	INSTRUMENT ID (2)	
118-129	12	LAB SAMPLE ID	
130-143	14	LAB FILE ID (IF GC/MS)	
144	1	PAGE	NUMERIC 1
145	1	OF	NUMERIC 1

DETAIL RECORD 1 (D1)

OLUMN (S)	LENGTH	CONTENTS	FORMAT/CONTENTS
1- 3	3	FORM NUMBER	'10'
4- 5	2	FORM SUFFIX	'AA'-'ZZ'
6- 7	2	RECORD TYPE	'D1'
8- 9	2	SEQUENCE NUMBER	NUMERIC 2
10-23	14	PESTICIDE/PCB	
24-29	6	RETENTION TIME	
		COLUMN 1	NUMERIC 6.2
30-35	6	RT WINDOW OF STANDARD	
		FROM:	NUMERIC 6.2
36-41	6	TO:	NUMERIC 6.2
42	1	QUANT?	'Y' OR 'N'
43	1	GC/MS?	'Y' OR 'N'

DETAIL RECORD 2 (D2)

COLUMN (S)	LENGTH	CONTENTS	FORMAT/CONTENTS
1- 3	3	FORM NUMBER	'10'
4- 5	2	FORM SUFFIX	'AA'-'ZZ'
6- 7	2	RECORD TYPE	'D2'
8- 9	2	SEQUENCE NUMBER	NUMERIC 2
10-23	14	PESTICIDE/PCB	
24-29	6	RETENTION TIME	
		COLUMN 2	NUMERIC 6.2
30-35	6	RT WINDOW OF STANDARD	
		FROM:	NUMERIC 6.2
36-41	6	TO:	NUMERIC 6.2
42	1	QUANT?	'Y' OR 'N'
43	1	GC/MS?	'Y' OR 'N'

COMMENT RECORD 1 (C1)

COLUMN (S)	LENGTH	CONTENTS	FORMAT/CONTENTS
1- 3	3	FORM NUMBER	'10'
4- 5	2	FORM SUFFIX	'AA'-'ZZ'
6- 7	2	RECORD TYPE	'C1'
8-72	65	COMMENT LINE 1	

COMMENT RECORD 2 (C2)

COLUMN (S)	LENGTH	CONTENTS	FORMAT/CONTENTS
1- 3	3	FORM NUMBER	'10'
4- 5	2	FORM SUFFIX	'AA'-'ZZ'
6- 7	2	RECORD TYPE	'C2'
8-72	65	COMMENT LINE 2	

SECTION III

FORMAT B SPECIFICATION

1. Format Characteristics

1.1 Format B is based upon analytical results and ancillary information required by the contract. All data generated by a single analysis are grouped together, and the groups are aggregated to produce files that report data from an SDG.

1.2 Format B fields are separated by at least one blank byte. Field characteristics and required justification of values are given in the detailed listing of record types below.

2. Record Types

2.1 Format B consists of fixed-length 80-byte ASCII records. The last two bytes of each record must contain "carriage return" and "line feed", respectively. Unused bytes in partially filled fields must be blank-filled.

2.2 Format B consists of eleven record types than can be summarized in four groups:

Type	Name	Contents
10	Run Header	Contains information pertinent to the whole production run. See production run definition below.
20	Sample Header	Contains sample-identifying information, or corresponding information for calibrations, QC samples, instrument performance checks, etc.
30	Results Record	Contains any final result on a sample, calibration, or QC sample, and identifying information.
90	Comments Record	Contains free-form comments.

A type 20 record, representing a sample, contains the raw EPA Sample No. (the Sample No. as given on the Traffic Report without any of the identifying suffixes) which acts as an identifying label for the sample. A QC code indicates whether the data are from an environmental sample, calibration, or QC sample; or other calculated run-wide data such as mean response factors. A type 30 record, representing an individual compound, contains a CAS code to identify the analyte, surrogate, or internal standard. All 30 series records following that record pertain to the same compound. See page H-82 for an example of the sequence of record types.

3. Production Runs

A production run represents a "group" or "batch" of samples that are processed in a continuous sequence under relatively stable conditions. Specifically:
Calibration - All samples in a run use the same initial calibration data.
Method number - Constant. Instrument conditions - Constant throughout a run.
Results obtained on different instruments cannot be combined in one run.

Analyses from each fraction consist of a separate production run, and are reported in separate files. There will be a separate production run for each 72-hour sequence for pesticides for each GC column utilized. Thus, a full three fraction analysis will consist of a minimum of four production runs, and could consist of more.

4. Record Sequence (see page H-82)

4.1 A Run Header (type 10) record must be present once and once only (per file) as the first record in a file.

4.2 Each environmental sample, calibration, or quality control sample is represented by a group composed of type 20 and 21 records, which hold sample level identifying information, followed by one type 30 record for each method analyte or standard. The type 20 record holds a count for the number of method analytes being determined, and includes all target compounds plus any tentatively identified compounds. Type 20 records must occur in the order of sample analysis. The type 20 records for quality control items have the additional rule that the LF1 record must occur before the LF2 record, but the records need not be adjacent. In addition, a type 20 record is used as a header for any additional run-wide data that must be reported for each method analyte (such as mean response factors). Unique identifiers given on page H-77 are used in place of "QC codes" to indicate the type of data that follows. Type 30 records for each analyte must occur in the order specified on hardcopy deliverable Form 6.

4.3 Type 90 comment records may be defined to occupy any position except before the type 10 (header) record.

5. File/Record Integrity

All record types shall contain the following check fields to ensure file and record integrity:

Record Position	Field Length	Field Contents	Remarks
1-2	2	Record type or identifier	"10" or as appropriate
72-74	3	Record sequence number within file	000-999, repeated as necessary
75-78	4	Record checksum	Four hexadecimal digits(*)
79-80	2	Will contain CR and LF	

(*) The checksum is the sum of the thirty-five Integers that make up the data in columns 1 to 70, when data are represented in the format 35A2 on processors which store data bytes in left to right order. The sum is taken modulo 65536 (2^{16}) and represented as four hexadecimal digits. For processors which use an A70 character representation of data, the checksum is the sum of all the even character position values plus 256 times the sum of all the odd character position values.

6. Dates and Times

Date or time-of-day information consists of successive groups of one or two decimal digits, each separated by blanks. Dates are given in the order YY MM DD, and times as HH MM. All hours must be given as 0 to 23 using a 24 hour clock and must be local time.

7. Multiple Volume Data

Format B data from an entire SDG may not fit onto a single diskette. If a single production run is being split onto multiple diskettes, then all files must start with a type 10 record, and the multiple type 10 records for each file of the same production run must be identical. If it is necessary to split the data from a single sample onto multiple diskettes, then the type 20 (and following) type records for that sample must be repeated. In this situation, columns 7-30, which collectively identify the sample, must be identical on each diskette.

8. Record Listing

Following is a listing of every record type required to report data from a single SDG.

8.1 Format of the mandatory Production Run Header Record (Type 10)

Record Position	Field Length	Field Contents	Remarks
1-2	2	Record type	"10"
3-18	16	blank	
19-23	5	Measurement Type	"GC/MS" for Volatiles and Semivolatiles or "GC/EC" for Pesticides.
24-25	2	blank	
26-30	5	Method Number	"6241" for Volatiles; "625C" for Semivolatiles; "6081" for Pesticides
31-35	5	blank	
36-41	6	Lab ID	From EPA standard list or Project Officer
42-51	10	blank	
52-61	10	Contract Number	Agency standard number
62	1	blank	
63-68	6	Instrument ID	e.g. 59951G; provided by contract lab; left justified; must be unique and permanent within lab. First four characters are designator; fifth is sequence number; sixth is lab assigned.

8.2 Format of the Chromatography Record (Type 11)

Use: To describe chromatograph conditions.

Position: Follows type 10.

Record Position	Field Length	Field Contents	Remarks
1-2	2	Record type	"11"
3	1	blank	
4-11	8	Commercial Column name	Left justified. Column ID, e.g. SP2330
12-17	6	blank	
18-21	4	Column inside diameter (mm)	Right justified

8.3 Format of the mandatory Sample Header Data Record (Type 20)

Record Position	Field Length	Field Contents	Remarks
1-2	2	Record type	"20"
3-6	4	blank	
7-11	5	EPA Sample I.D.	Left justified. Raw Sample No. only; no suffixes.
12-15	4	blank	
16	1	Sample Medium/Matrix Code	"0" if not applicable "1" for water "H" for soil
17	1	blank	
18-20	3	QC code	Codes type of data to be reported (see page H-77)
21	1	blank	
22-24	3	Sample Qualifier	Code to qualify the results of the entire sample analysis (see page H-79)
25	1	blank	
26-30	5	Case Number	
31-39	9	blank	
40-47	8	Date of Instrumental analysis	YY MM DD
48	1	blank	
49-53	5	Hour, Min. of analysis	HH MM
54-56	3	blank	
57	1	Sample Units Code	"L" - liters for water "K" - kilograms for soil
58	1	blank	
59-66	8	Sample Size	right justified; see Note
67	1	blank	
68-70	3	Analyte count	Numeric; 1-3 decimal digits; right justified. Counts all analytes including TIC's.

NOTE: Sample Size is the volume in liters for liquids and the wet weight in kilograms for solids. The Sample Units Code indicates which units are in use for the current sample. Leave blank if not applicable.

8.4 Format of the Sample Header Data Record (Type 21)

Use: Continuation of type 20.

Position: Follows the type 20 to which it applies.

Record Position	Field Length	Field Contents	Remarks
1-2	2	Record type	"21"
3-5	3	blank	
6	1	Concentration level	"L" = low "M" = medium
7	1	blank	(See note).
8	1	Clean-up Utilized	"G" or blank
9-11	3	blank	
12	1	Extraction code	"S" - Separatory Funnel "C" - Continuous Liq-Liq
13-17	5	blank	"N" - Sonication
18-23	6	SAS Number	Leave blank if none.
24	1	blank	
25-35	11	Laboratory Data Descriptor	Lab File ID for Volatiles or Semivolatiles; Lab Sampl ID for Pesticides.
36	1	blank	
37-44	8	Date of Beginning of Sample Prep - Extraction prior to analysis	YY MM DD
45-47	3	blank	
48-55	8	Date Sample Received at Lab	YY MM DD

Note: The Concentration Level is an estimate of overall level for all analytes.

8.5 Format of the Sample Conditions Record (Type 22)

Use: Continuation of type 20. Used to describe additional sample conditions.

Position: Follows the type 20 and 21 to which it applies.

Record Position	Field Length	Field Contents	Remarks
1-2	2	Record type	"22"
3	1	blank	
4-11	8	Date of associated calibration	YY MM DD; see Note. (Date of Source of the response factors or calibration factors used)
12	1	blank	
13-17	5	Time of associated calibration	HH MM
18	1	blank	
19-29	11	Calibration File ID	Lab File ID or Lab Sample ID (pesticides) of continuing calibration, or "AVERAGE", position 21-27 and padded with blanks (if mean used)
30	1	blank	
31-34	4	Sample pH	XX or XX.X, right justified
35	1	blank	
36-37	2	Percent moisture	right justified; use zero if not applicable
38	1	blank	
39-40	2	Decanted percent moisture	right justified; use zero if not applicable
41	1	blank	
42-46	5	Extract Volume in ml	e.g. 1.0 or 0.050
47	1	blank	
48-55	8	Concentration/dilution factor	Right justified; e.g. 2000 or .001

Note: For average, use the date and time average was calculated.

8.6 Format of the Associated Injection and Counter Record (Type 23)

Use: Continuation of type 20. Used to identify associated blanks and tunes, and to count the number of surrogates and spikes outside QC limits and the number of TIC compounds.

Position: Follows the type 20, 21, and 22 to which it applies.

Record Position	Field Length	Field Contents	Remarks
1-2	2	Record type	"23"
3	1	blank	
4	1	"P" or blank	Labels data as "tune" data.
5	1	blank	(if applicable)
6-13	8	Date of associated DFTPP/BFB injection	YY MM DD. Acquisition date of tune to be linked with
14	1	blank	this sample (if applicable).
15-19	5	Time of DFTPP/BFB injection	HH MM (if applicable)
20	1	blank	
21-31	11	DFTPP/BFB Lab File ID	From instrument data system
32	1	blank	(if applicable)
33	1	"B" or blank	Labels data as "blank" data.
34	1	blank	(if applicable)
35-42	8	Date of associated blank injection	YY MM DD. Acquisition date of method blank to be linked
43	1	blank	with sample (if applicable).
44-48	5	Time of blank injection	HH MM (if applicable)
49	1	blank	
50-60	11	Blank Lab File ID or	From instrument data system
61	1	blank Lab Sample ID (pesticides)	
62	1	"P"	Identifies following counter "P" - # of % Recoveries
63	1	blank	Outside of QC limits
64-65	2	Number of Percent Recoveries Failing QC limits	Use the Counter from Form 2 or 3 for each sample.
66	1	blank	
67	1	"T" or "R"	"T" - # of TIC compounds. "R" - # of % RSD's outside
68	1	blank	limits
69-70	2	Number of TIC Compounds or # % RSD's Outside Limits	From Form 1-E or 1-F or from Form 3

8.7 Format of the Results Data Record (Type 30)

Record Position	Field Length	Field Contents	Remarks
1-2	2	Record type	"30"
3	1	blank	
4	1	"C" or "I"	Use "C" - CAS Number unless identifying combined DDT and Endrin, in which case use "I"
5	1	blank	
6-14	9	CAS Number	Right justified. Use "COMBINED" for combined DDT and Endrin.
15	1	blank	
16-24	9	CAS Number Internal Standard Utililzed	Right justified
25	1	blank	
26-30	5	Units of measure	(Left justified) "UG/KG" for Soil; "UG/L " for Water; "PERCT" for percent
31	1	blank	
32-34	3	Non-numeric result	See page H-79 also called a result qualifier
35	1	blank	
36-41	6	Numeric analytical result	Right justified; fixed point or scientific notation
42	1	blank or 'E'	
43-45	3	Exponent	Blank field will be interpreted as "+00"
46	1	blank	
47	1	Calculated Value Descriptor	Describes following value (See page H-81)
48	1	blank	
49-54	6	Related Calculated Value	Value of item described Format same as 36-46.
55	1	blank or 'E'	
56-58	3	Exponent	
59	1	blank	
60	1	Limit or QC Value Descriptor	Describes following value (See page H-81)
61	1	blank	
62-66	5	Related Limit Value	Value of item described above.
67	1	blank or 'E'	
68-70	3	Exponent	

8.8 Format of the Instrumental Data Readout Record (Type 31)

Use: To describe peak areas for internal standards and DFTPP/BFB percent abundances.

Position: Follows type 30 for internal standards and DFTPP/BFB data.

Record Position	Field Length	Field Contents	Remarks
1-2	2	Record type	"31"
3	1	blank	
4	1	"M"	Indicates mass for DFTPP/BFB data.
5	1	blank	
6	1	Type of Value	A - Area (Internal Standards). P - % Abundance of base (DFTPP/BFB); S - % Abundance of secondary ion.
7-9	3	blank	
10-17	8	First Mass	Gives the DFTPP/BFB masses (right justified) e.g. 442.
18	1	blank	
19-28	10	First Area or % Abundance	up to 10 decimal digits, right justified
29	1	blank	
30-37	8	Second Mass (DFTPP/BFB)	Leave columns 30-68 blank for Internal Standards.
38	1	blank	
39-48	10	Second Percent Abundance	Up to three masses and percent abundances may be given on each record for
49	1	blank	
50-57	8	Third Mass	DFTPP/BFB data. Those ions that require two % values must be listed twice.
58	1	blank	
59-68	10	Third Percent Abundance	

8.9 Format of the Auxillary Data Record (Type 32)

Use: Used to report scan number and retention time (in minutes) for Internal Standards and for TIC compounds. Used to report retention time data for Pesticides.

Position: Follows type 30. (Record will only be required as specified above.)

Record Position	Field Length	Field Contents	Remarks
1-2	2	Record type	"32"
3-8	6	blank	
9-10	2	"RT"	Indicates retention time.
11	1	blank	
12-21	10	Retention Time in Minutes	Fixed or Scientific notation as in Record Type 30.
22	1	blank	
23-24	2	"SC" or "RF"	Indicates scan number for GC/MS or RT "From" Value for Pesticides.
25	1	blank	
26-35	10	Scan Number or Retention Time "From" Value	In minutes.
36	1	blank	
37-38	2	"RO" or blank	Indicates RT "To" Value for Pesticides.
39	1	blank	
40-49	10	Retention Time "To" Value	In minutes.

8.10 Format of the Name Record (Type 33)

Use: To carry an analyte name for a TIC compound.

Position: Follows type 30 for TIC compounds.

Record Position	Field Length	Field Contents	Remarks
1-2	2	Record type	"33"
3	1	blank	
4-70	67	Name of compound	

8.11 Format of the Comment Record (Type 90)

First Use: To provide for multiple Result Qualifier Flags from hardcopy deliverable Form 1.

Position: Immediately follows the type 30 record to which it applies.

Record Position	Field Length	Field Contents	Remarks
1-2	2	Record Type	"90"
3	1	blank	
4-8	5	"FLAGS"	Identifies this as a Form 1
9	1	blank	Flags record.
10-12	3	Second Result Qualifier Flag	See H-79 for definitions.
13	1	blank	
14-16	3	Third Result Qualifier Flag	
17	1	blank	
18-20	3	Fourth Result Qualifier Flag	
21	1	blank	
22-24	3	Fifth Result Qualifier Flag	

Second Use: To provide for Operator-Entered Comments.

Position: May occur anywhere.

Record Position	Field Length	Field Contents	Remarks
1-2	2	Record Type	"90"
3-4	2	blank	Blank in column 4 identifies this as an operator comment
5-70	66	Any Comment	

9. Definitions of Various Codes Used in Format B Records

9.1 Quality Control and Related Codes (QCC) in Type 20 Records

Note: These QCC appear in the QC code fields of type 20 records. They are used to indicate the type of data that are being reported.

QCC	Name	Definition
LRB	LABORATORY (REAGENT) BLANK	The "Method Blank" (See Exhibit G).
LSD	LABORATORY SPIKE DUPLICATE BACKGROUND (ORIGINAL) VALUES	An environmental sample which is analyzed according to the analytical method, and subsequently used for the matrix spike and the matrix spike duplicate (See Exhibit G).
LF1	LABORATORY SPIKED SAMPLE - FINAL - FIRST MEMBER	The "Matrix Spike" (See Exhibit G)
LF2	LABORATORY SPIKED SAMPLE - FINAL - SECOND MEMBER	The "Matrix Spike Duplicate" (See Exhibit G)
LPC	LABORATORY PERFORMANCE CHECK SOLUTION (tune data)	A solution of DFTPP or BFB used to establish the mass spectral tuning performance (See Exhibit G)
CLM	INITIAL CALIBRATION - MULTI POINT	The Initial Calibration for GC/MS (See Exhibit G), or the Initial Evaluation Standard Mixes (A, B, C) for Pesticides (See Exhibit D PEST). Response factors (GC/MS) or Calibration Factors (Pesticides) rather than concentrations will be reported on the following type 30 records.
CLS	INITIAL CALIBRATION SINGLE POINT	The Initial Individual Standard/Toxaphene/Aroclor Mixes used to determine all calibration factors. (See Exhibit D PEST).
CLC	CONTINUING CHECK CALIBRATION	The Continuing Calibration for GC/MS (See Exhibit G), or the subsequent Individual/Evaluation Standard Mixes for Pesticides (See Exhibit D PEST).

QCC	Name	Definition
CLD	DUAL PURPOSE CALIBRATION	A calibration solution as above used both as an initial calibration (CLM) and a continuing check (CLC). [50 level initial calibration if needed for Form 8]
blank		Unknown sample, not associated with any quality control item.

The following QCC values are used on type 20 records which act as a header, and indicate that additional (usually calculated) analyte specific data will be present on type 30 (and following type) records. Usually these data will apply to an entire production run, in which case they will appear immediately following the type 10 record. If the data apply to only a portion of the samples in the run, they should be placed immediately preceding the samples to which they apply. Much of the rest of the information in the type 20 record may be blank, indicating that these data do not apply to these results.

MNC	MEAN VALUES FROM CALIBRATIONS	The data following represent mean values and percent RSD's from the initial calibribration (GC/MS) or the evaluation mixes (Pesticides).
SDR	MATRIX SPIKE DUPLICATE CALCULATED RESULTS	The data following represent calculated QC results for the triplicate of samples LSD, LF1, and LF2. Data will consist of the LF1 percent recovery, the LF2 percent recovery, and the percent RSD for each method analyte that was spiked according to the analytical method as is present on hardcopy deliverable Form 3.

9.2 Codes For Sample Medium (Matrix, Source)

Medium	Code
All Media, Specific Medium not Applicable. Use for Calibrations, Tunes, etc.	0
Water	1
Soil	H

9.3 List of Sample and Result Qualifiers

Definition: A sample qualifier or a result qualifier (also called a non-numeric result) consists of 3 characters which act as an indicator of the fact and the reason that the subject analysis (a) did not produce a numeric result, or (b) produced a numeric result but it is qualified in some respect relating to the type or validity of the result.

9.3.1 Sample Qualifiers

Qualifier	Full Name	Definition
RIN	RE-ANALYZED	The indicated analysis results were generated from a re-injection of the same sample extract or aliquot.
REX	RE-PREPARED	The indicated analysis results were generated from a re-extraction of the same sample.
REJ	REJECTED	The analysis results have been rejected for an unspecified reason by the laboratory. For initial calibration data, these data were not utilized in the calculation of the mean.
SPL	SPLIT RESULTS	The indicated environmental sample or calibration has been split into more than one analysis, and the analysis results are reported as more than one group of results (multiple type 20 records).
SRN	SPLIT RESULTS - RE-ANALYZED	A combination of "SPL" and "RIN"
SRX	SPLIT RESULTS - RE-PREPARED	A combination of "SPL" and "REX"

9.3.2 Result Qualifiers

BDL	BELOW DETECTABLE LIMITS	Indicates compound was analyzed for but not detected; (Form 1 "U" Flag).
NAR	NO ANALYSIS RESULT	There is no analysis result required for this subject parameter.
AVG	AVERAGE VALUE	Average value - used to report a range of values.

Qualifier	Full Name	Definition
CBC	CANNOT BE CALCULATED	The analysis result cannot be calculated because an operand value is qualified. Identifies analytes whose Internal Standard is not found.
LTL	LESS THAN LOWER CALIBRATION LIMIT	Actual value is known to be less than the lower calibration range due to dilution. (Form 1 "D" Flag)
GTL	GREATER THAN UPPER CALIBRATION LIMIT	Actual value is known to be greater than the upper calibration range. (Form 1 "E" Flag)
LLS	LESS THAN LOWER STANDARD	The analysis result is less than the sample quantitation limit. (Form 1 "J" Flag)
TIE	TENTATIVELY IDENTIFIED -ESTIMATED VALUE	The indicated analyte is a tentatively identified analyte; its concentration has been estimated. (Form 1-E or 1-F "J" Flag)
REJ	REJECTED	Same definition as above.
STD	INTERNAL STANDARD	The indicated compound is an internal standard. There is no analysis result to report.
STB	INTERNAL STANDARD BELOW DETECTION LIMITS	A combination of "STD" and "BDL".
FBK	FOUND IN BLANK	The indicated compound was found in the associated method blank (LRB) as well as the sample. (Form 1 "B" flag)
MSP	PERCENT RECOVERY	The following value represents the percent recovery for the "MS" sample. The remaining two values give the "MSD" percent recovery and the Percent RPD.
CON	CONFIRMED	Pesticide identification has been confirmed by GC/MS (Form 1 "C" Flag).
TFB	TENTATIVELY IDENTIFIED AND FOUND IN BLANK	A Combination of "TIE" and "FBK" (Form 1-E or 1-F "B" flag).
ALC	ALDOL CONDENSATION	Labels a suspected Aldol Condensation product for TIC's (Form 1-E or 1-F "A" Flag).

9.4 Calculated Value Descriptors

These codes appear in column 47 of Type 30 records to identify the value in columns 49-58.

Qualifier	Full Name	Definition
A	AMOUNT ADDED	Identifies the amount of matrix spike analyte added (for QC codes "LF1" and "LF2").
P	PERCENT RECOVERY	Identifies the Percent Recovery of the "MSD" Sample in the Matrix Spike Results Record (for QC Code "SDR")
D	PERCENT DIFFERENCE	Identifies the Percent Difference of the Dibutylchlorendate retention time for pesticides (as on Form 8-E).
B	PERCENT BREAKDOWN	Identifies the Percent Breakdown of DDT and/or Endrin (as on Form 8-D).

9.5 Limit or QC Value Descriptors

These codes appear in column 60 of Type 30 records to identify the value in columns 62-70.

Qualifier	Full Name	Definition
U	UNDETECTED	Value is the corrected sample quantitation limit (Form 1 "U" Value).
R	PERCENT RSD	Value is the Percent RSD for the Matrix Spike and Matrix Spike Duplicate (QC Code "SDR") or for the Mean Response Factors (QC Code "MNC").
S	SURROGATE RECOVERY	Value is the Percent Recovery for the indicated Surrogate.
D	PERCENT DIFFERENCE	Value is the Percent Difference of the Result of the Continuing Check from that of the Initial Calibration (as on Form 7).

10. Example of the Sequence of Record Types in a File

```
10        Contains Run Header information
     11        Contains additional run-wide information if required.

     20        Occurs once for each sample, calibration, mean response factor,
               matrix spike duplicate result, etc. - Acts as a header.
     21
     22        Contains additional information for samples.
     23
          30        Occurs once for each final analytical result.  Reports
                    the value being determined as defined by the type 20.
               31        Reports any instrumental data necessary.
               32        Reports any auxillary data necessary.
               33        Reports component names if necessary.
          30        Values for the next analyte or parameter being measured.
               31        Additional data may vary for each parameter, and records
               32        may occur in any order.  Multiple occurrences of the
               32        same record type, however, must be consecutive.
               33
          30        Continues for as many as are necessary.
               31
               32
               33
          30
               31
               32
               33
     20        Next Sample Header record - The following applies to the next
     21        sample or other group of data.
     22
          30
               31
               32
               33
          30
               31
               32
               33
                         etc.
     20
     21
          30
               31
               32
               33
                         etc.
```

11. Format of Records for Specific Uses

11.1 Format of the Sample Header Data Record (Type 20) for Mean Response Factors

Record Position	Field Length	Field Contents	Remarks
1-2	2	"20"	Record Type
3-15	13	blank	
16	1	"0"	All matrices
17	1	blank	
18-20	3	"MNC"	Identifies Mean Response Factors
21-66	46	blank	
67-69	3	Analyte count	Numeric; 1-3 decimal digits; right justified.

11.2 Format of the Results Data Record (Type 30) for Mean Response Factors

Record Position	Field Length	Field Contents	Remarks
1-2	2	"30"	Record Type
3	1	blank	
4	1	"C"	
5	1	blank	
6-14	9	CAS Number	Right justified.
15	1	blank	
16-24	9	CAS Number Internal Standard Utililzed	Right justified
25-31	7	blank	
32-34	3	"AVG"	Indicates Average Value
35	1	blank	
36-41	6	Mean Response Factor	Right justified; fixed or scientific notation
42	1	blank or 'E'	
43-45	3	Exponent	Blank field will be interpreted as "+00"
46-59	14	blank	
60	1	"R"	Indicates Percent RSD
61	1	blank	
62-66	5	Percent RSD	
67	1	blank or 'E'	
68-70	3	Exponent	

11.3 Format of the Sample Header Data Record (Type 20) for Matrix Spike Duplicates

Record Position	Field Length	Field Contents	Remarks
1-2	2	"20"	Record Type
3-6	4	blank	
7-11	5	EPA Sample I.D.	Left justified. Raw Sample I.D. only; no suffixes.
12-15	4	blank	
16	1	Sample Medium/Matrix Code	"1" for water "H" for soil
17	1	blank	
18-20	3	"SDR"	Identifies Matrix Spike Duplicate Results
21-25	5	blank	
26-30	5	Case Number	
31-66	36	blank	
67-69	3	Analyte count	Numeric; 1-3 decimal digits; right justified. Counts number of spiked analytes.

11.4 Format of the Counter Record (Type 23) for Matrix Spike Duplicates

Position: Follows the type 20 to which it applies.

Record Position	Field Length	Field Contents	Remarks
1-2	2	"23"	Record Type
3-61	59	blank	
62	1	"P"	Identifies Number of % Recoveries outside of limits. Use the counter from Form 3 for each sample.
63	1	blank	
64-65	2	Number of Percent Recoveries Failing QC limits	
66	1	blank	
67	1	"R"	# of % RSD's outside limits.
68	1	blank	
69-70	2	Number of % RSD's Outside Limits	From Form 3.

11.5 Format of the Results Data Record (Type 30) for Matrix Spike Duplicates

Record Position	Field Length	Field Contents	Remarks
1-2	2	"30"	Record type
3	1	blank	
4	1	"C"	
5	1	blank	
6-14	9	CAS Number	Right justified.
15	1	blank	
16-24	9	CAS Number Internal Standard Utililzed	Right justified
25	1	blank	
26-30	5	"PERCT"	Units are "Percent"
31	1	blank	
32-34	3	"MSP"	Indicates Matrix Spike
35	1	blank	Percent recovery
36-41	6	"MS" Percent Recovery	Right justified; fixed
42	1	blank or 'E'	or scientific notation
43-45	3	Exponent	Blank field is
46	1	blank	interpreted as "+00"
47	1	"P"	Indicates Matrix Spike
48	1	blank	Duplicate Percent Recovery
49-54	6	"MSD" Percent Recovery	Format same as 36-46.
55	1	blank or 'E'	
56-58	3	Exponent	
59	1	blank	
60	1	"R"	Indicates Percent RSD
61	1	blank	
62-66	5	Percent RSD	
67	1	blank or 'E'	
68-70	3	Exponent	

11.6 Format of the Sample Header Data Record (Type 20) for Pesticide Evaluation Mix B

Record Position	Field Length	Field Contents	Remarks
1-2	2	"20"	Record Type
3-6	4	blank	
7-11	5	"EVALB"	Sample I.D.
12-15	4	blank	
16	1	"0"	All matrices
17	1	blank	
18-20	3	"CLC"	Indicates Continuing Check
21-25	5	blank	(Pesticide Standard)
26-30	5	Case Number	
31-38	8	blank	
39-46	8	Date of Instrumental analysis	YY MM DD
47	1	blank	
48-52	5	Hour, Min. of analysis	HH MM
53-66	14	blank	
67-69	3	Analyte count	Numeric; 1-3 decimal digits; right justified. Will be "2" or "4".

11.7 The following type 30 record occurs once if reporting "Combined" breakdown only, or three times if reporting separate breakdowns for Endrin and DDT along with the Combined value.

Format of the Results Data Record (Type 30) for Pesticide Evaluation Mix B (Percent Breakdown Data From Form 8D)

Record Position	Field Length	Field Contents	Remarks
1-2	2	"30"	Record Type
3	1	blank	
4	1	"C" or "I"	Use "C" - CAS Number unless identifying combined DDT and Endrin, in which case use "I"
5	1	blank	
6-14	9	CAS Number	Right justified. Use "COMBINED" for combined DDT and Endrin.
15-25	11	blank	
26-30	5	"PERCT"	Units
31-46	16	blank	
47	1	"B"	Identifies Percent Breakdown
48	1	blank	
49-54	6	Percent Breakdown of Indicated Compound(s)	Right justified; fixed scientific notation
55	1	blank or 'E'	Blank field will be
56-58	3	Exponent	interpreted as "+00"

11.8 Format of the Results Data Record (Type 30) for Pesticide Evaluation Mix B (Evaluation Standards Summary Data From Form 8E)

Record Position	Field Length	Field Contents	Remarks
1-2	2	"30"	Record Type
3	1	blank	
4	1	"C"	
5	1	blank	
6-14	9	" 1770805"	CAS Number
15-25	11	blank	
26-30	5	"PERCT"	Units
31-46	16	blank	
47	1	"D"	Identifies Retention Time
48	1	blank	Percent Difference
49-54	6	Retention Time Shift Percent D	Right justified; fixed or scientific notation
55	1	blank or 'E'	Blank field is
56-58	3	Exponent	interpreted as "+00"

11.9 Format of the Sample Header Data Records (Type 20-23) for Continuing Checks Format

Record Position	Field Length	Field Contents	Remarks
1-2	2	"20"	
3-6	4	blank	
7-13	7	Identifier	e.g., VTD050
14	1	Daily Sequence Number	From Exhibit B
15	1	blank	
16	1	"0"	All matrices
17	1	blank	
18-20	3	"CLC"	Indicates Continuing Check
21	1	blank	
22-24	3	Sample Qualifier	See page H-79
25	1	blank	
26-30	5	Case Number	
31-38	8	blank	
39-46	8	Date of Instrumental analysis	YY MM DD
47	1	blank	
48-52	5	Hour, Min. of analysis	HH MM
53-66	14	blank	
67-69	3	Analyte count	Numeric; 1-3 decimal digits; right justified.

Record Position	Field Length	Field Contents	Remarks
1-2	2	"21"	Record Type
3-17	15	blank	
18-23	6	SAS Number	Leave blank if none.
24	1	blank	
25-35	11	Lab File I.D.	

Record Position	Field Length	Field Contents	Remarks
1-2	2	"23"	Record Type
3	1	blank	
4	1	"P"	Labels data as
5	1	blank	"tune" data.
6-13	8	Date of associated DFTPP/BFB injection	YY MM DD. Aquisition date
14	1	blank	of tune to be linked with this calibration.
15-19	5	Time of DFTPP/BFB injection	HH MM
20	1	blank	
21-31	11	DFTPP/BFB Lab File ID	From instrument data system.

Record Position	Field Length	Field Contents	Remarks
1-2	2	"30"	
3	1	blank	
4	1	"C"	
5	1	blank	
6-14	9	CAS Number	Right justified.
15	1	blank	
16-24	9	CAS Number Internal Standard Utilized	Right justified.
25-31	7	blank	
32-34	3	Non-numeric result	See page H-79;
35	1	blank	also called a result qualifier.
36-41	6	Response Factor	Right justified;
42	1	blank or 'E'	fixed or scientific
43-45	3	Exponent	notation. Blank
46-59	14	blank	field will be interpreted as "+00".
60	1	"D"	Identifies
61	1	blank	Percent Difference.
62-66	5	RF Percent Difference	From Initial
67	1	blank or 'E'	Calibration
68-70	3	Exponent	(from Form 7).

Attachment A

USEPA CONTRACT LABORATORY PROGRAM

STATEMENT OF WORK

FOR

INORGANICS ANALYSIS

Multi-Media

Multi-Concentration

SOW No. 788

STATEMENT OF WORK

TABLE OF CONTENTS

EXHIBIT A: SUMMARY OF REQUIREMENTS

EXHIBIT B: REPORTING AND DELIVERABLES REQUIREMENTS

EXHIBIT C: INORGANIC TARGET ANALYTE LIST

EXHIBIT D: ANALYTICAL METHODS

EXHIBIT E: QUALITY ASSURANCE/QUALITY CONTROL REQUIREMENTS

EXHIBIT F: CHAIN-OF-CUSTODY, DOCUMENT CONTROL AND STANDARD OPERATING PROCEDURES

EXHIBIT G: GLOSSARY OF TERMS

EXHIBIT H: DATA DICTIONARY AND FORMAT FOR DATA DELIVERABLES IN COMPUTER-READABLE FORMAT

EXHIBIT A

SUMMARY OF REQUIREMENTS

SECTION I: GENERAL REQUIREMENTS

SECTION II: SPECIFIC REQUIREMENTS

SECTION III: DETAILED TECHNICAL & MANAGEMENT REQUIREMENTS

SECTION I

GENERAL REQUIREMENTS

The Contractor shall employ procedures specified in this Statement of Work (SOW) in the preparation and analysis of aqueous (water) and solid (soil/sediment) samples for the presence and quantitation of 23 indicated elements and cyanide.

The Contractor shall use proven instruments and techniques to identify and measure the elements and inorganic species presented in the Target Analyte List (Exhibit C). The Contractor shall perform sample preparation and analysis procedures as prescribed in Exhibit D, meeting specified sample preservation and holding time requirements.

The Contractor shall adhere to the quality assurance/quality control protocol specified in Exhibit E for all samples analyzed under this contract.

Following sample analysis, the Contractor shall perform data reduction and shall report analytical activities, sample data, and quality control documentation as designated in Exhibit B. Specifications for reporting data in computer-readable format appear in Exhibit H.

Exhibit F contains chain-of-custody and document control requirements which the Contractor must follow in processing samples and specifies requirements for written laboratory standard operating procedures.

To ensure proper understanding of language utilized in this contract, Exhibit G contains a glossary of terms. When a term is used in the text without explanation, the glossary meaning shall be applicable. Glossary definitions do not replace or take precedence over specific information included in the SOW text.

The samples to be analyzed by the Contractor are from known or suspected hazardous waste sites and, potentially, may contain hazardous inorganic and/or organic materials at high concentration levels. The Contractor should be aware of the potential hazards associated with the handling and analyses of these samples. It is the Contractor's responsibility to take all necessary measures to ensure the health and safety of its employees.

SECTION II

SPECIFIC REQUIREMENTS

A. For each sample, the Contractor shall perform the following tasks:

Task I: Receive and Prepare Hazardous Waste Samples.

1. The Contractor shall receive and handle samples under the chain-of-custody and sample documentation procedures described in Exhibit F. A sample consists of all components, perhaps more than one phase, contained inside appropriate receptacles. More than one container may be used for a single sample; individual containers may contain preservatives for different analysis portions. Containers may be glass or plastic.

2. The Contractor shall provide the required analytical expertise and instrumentation for analyses of Target Analyte List (TAL) elements and cyanide equal to or lower than the detection limits specified in Exhibit C. In Exhibit D, EPA provides the Contractor with the specific sample preparation techniques for water and soil/sediment samples and the analytical procedures which must be used. A schematic flow chart depicting the complete low level-medium level inorganics analytical scheme is presented in Section I of Exhibit D.

3. The Contractor shall prepare and analyze samples within the maximum holding time specified in Section II of Exhibit D even if these times are less than the maximum data submission time allowed in this contract.

4. The Contractor is advised that the samples received under this contract are usually from known or suspected hazardous waste sites and may contain high (greater than 15%) levels of organic and inorganic materials of a potentially hazardous nature and of unknown structure and concentration, and should be handled throughout the analysis with appropriate caution. It is the Contractor's responsibility to take all necessary measures to ensure laboratory safety.

Task II: Analyze Samples for Identity and Quantitation of Specific Inorganic Constituents.

1. For each sample received, the Contractor may be required to perform the analyses described in paragraphs 2., 3. and 4., following. The documentation that accompanies the sample(s) to the Contractor facility shall indicate specific analytical requirements for that sample or set of samples.

2. Exhibit D specifies the analytical procedures that must be used. Exhibit D contains instructions and references for preparation of samples containing low-to-medium concentrations of inorganics for ICP analysis; flame, graphite furnace and cold vapor AA analysis;

and cyanide analysis. The identification and quantitation of analytes other than cyanide shall be accomplished using the ICP or AA methods specified in Exhibit D, whichever method will achieve the Contract Required Detection Limit (CRDL) in Exhibit C. Cyanide shall be analyzed by the individual procedures specified in Exhibit D.

3. All samples must initially be run undiluted (i.e., final product of sample preparation procedure). When an analyte concentration exceeds the calibrated or linear range, appropriate dilution (but not below the CRDL) and reanalysis of the prepared sample is required, as specified in Exhibit D.

4. For the purpose of this contract, a full sample analysis is defined as analysis for all of the TAL constituents identified in Exhibit C in accordance with the methods in Exhibit D and performance of related QA/QC as specified in Exhibit E. Duplicate sample, laboratory control sample, and spike sample analyses shall each be considered a separate full sample analysis. All other QA/QC requirements are considered an inherent part of this contract Statement of Work and are included in the contract sample unit price.

Task III: Perform Required Quality Assurance/Quality Control Procedures

1. All specific QA/QC procedures prescribed in Exhibit E shall be strictly adhered to by the Contractor. Records documenting the use of the protocol shall be maintained in accordance with the document control procedures prescribed in Exhibit F, and shall be reported in accordance with Exhibit B requirements.

2. The Contractor shall establish and use on a continuing basis QA/QC procedures including the daily or (as required) more frequent use of standard reference solutions from EPA, the National Bureau of Standards or secondary standards traceable thereto, where available at appropriate concentrations (i.e., standard solutions designed to ensure that operating parameters of equipment and procedures, from sample receipt through identification and quantitation, produce reliable data). Exhibit E specifies the QA/QC procedures required.

3. Additional quality assurance and quality control shall be required on a quarterly basis in the form of Performance Evaluation Samples submitted by EPA for Contractor analysis, and in the form of verification of instrument parameters, as described in Exhibit E.

B. EPA has provided to the Contractor formats for the reporting of data (Exhibits B and H). The Contractor shall be responsible for completing and returning analysis data sheets and submitting computer-readable data on floppy diskette in the format specified in this SOW and within the time specified in the Contract Performance/Delivery Schedule.

1. Use of formats other than those designated by EPA will be deemed as noncompliance. Such data are unacceptable. Resubmission in the specified format at no additional cost to the government will be required.

2. Computer generated forms may be submitted in the hardcopy data package(s) provided that the forms are in EXACT EPA FORMAT. This means that the order of data elements is the same as on each EPA required form, including form numbers and titles, page numbers and header information, columns and lines.

3. The data reported by the Contractor on the hardcopy data forms and the associated computer-readable data submitted by the Contractor must contain identical information. If during government inspection discrepancies are found, the Contractor shall be required to resubmit either or both sets of data at no additional cost to the government.

C. The Contractor shall provide analytical equipment and technical expertise for this contract as specified following:

1. Inductively coupled plasma (ICP) emission spectrometer with the capability to analyze metals sequentially or simultaneously.

2. Atomic absorption (AA) spectrometer equipped with graphite furnace, flame, and cold vapor AA (or a specific mercury analyzer) analysis capabilities.

3. Analytical equipment/apparatus for analysis of cyanide as described in Exhibit D.

D. The Contractor shall have an IBM or IBM-compatible mini-computer or PC capable of recording required sample data on 5.25 inch floppy double-sided double-density 360 K-byte or 1.2 M-byte diskettes, in ASCII text file format and in accordance with the file, record and field specifications listed in Exhibit H.

E. The minimum functional requirements necessary to meet the terms and conditions of this contract are listed in items 1-7 below. The Contractor shall designate and utilize qualified key personnel to perform these functions. The EPA reserves the right to review personnel qualifications and experience. See Section III, Detailed Technical & Management Requirements.

1. Laboratory Supervisor
2. ICP Spectroscopist
3. ICP Operator
4. Atomic Absorption (AA) Operator
5. Inorganic Sample Preparation Specialist
6. Classical Techniques (Cyanide) Analyst
7. Inorganic Chemist (Backup)

F. The Contractor shall respond in a timely manner to requests from data recipients for additional information or explanations that result from the Government's inspection activities.

G. The Contractor is required to retain unused sample volume and used sample containers for a period of 60 days after data submission. From time of receipt until analysis, the Contractor shall maintain soil/sediment samples stored at $4^{o}C$ ($\pm 2^{o}C$).

H. The Contractor shall adhere to chain-of-custody and document control procedures described in Exhibit F. Documentation, as described therein, shall be required to show that all procedures are being strictly followed. This documentation shall be reported in the Complete Case File Purge (see Exhibit B).

I. Sample shipments to the Contractor's facility will be scheduled and coordinated by the EPA CLP Sample Management Office (SMO), acting on behalf of the Project Officer. The Contractor shall communicate with SMO personnel by telephone as necessary throughout the process of sample scheduling, shipment, analysis and data reporting, to ensure that samples are properly processed.

If there are problems with the samples (e.g., mixed media, containers broken or leaking) or sample documentation/paperwork (e.g., Traffic Reports not with shipment, or sample and Traffic Report numbers do not correspond) the Contractor shall immediately contact SMO for resolution. The Contractor shall immediately notify SMO regarding any problems and laboratory conditions that affect the timeliness of analyses and data reporting. In particular, the Contractor shall notify SMO personnel in advance regarding sample data that will be delivered late and shall specify the estimated delivery date.

J. Sample analyses will be scheduled by groups of samples, each defined as a Case and identified by a unique EPA Case number assigned by SMO. A Case signifies a group of samples collected at one site or geographical area over a finite time period, and will include one or more field samples with associated blanks. Samples may be shipped to the Contractor in a single shipment or multiple shipments over a period of time, depending on the size of the Case. A Case consists of one or more Sample Delivery Group(s). A Sample Delivery Group (SDG) is defined by the following, <u>whichever is most frequent</u>:

- each Case of field samples received, OR
- each 20 field samples within a Case, OR
- each 14 calendar day period during which field samples in a Case are received (said period beginning with the receipt of the first sample in the Sample Delivery Group).

Samples may be assigned to Sample Delivery Groups by matrix (i.e., all soils in one SDG, all waters in another), at the discretion of the laboratory. Such assignment must be made at the time the samples are received, and may not be made retroactively.

Data for all samples in a Sample Delivery Group must be submitted together (in one package) in the order specified in Exhibit B. The Sample Delivery Group number is the EPA sample number of the first sample received in the SDG. When several samples are received together in the first SDG shipment, the SDG number is the lowest sample number (considering both alpha and numeric designations) in the first group of samples received under the SDG. The SDG number is reported on all data reporting forms. The SDG Receipt Date is the day that the last sample in the SDG is received.

The Contractor is responsible for identifying each Sample Delivery Group as samples are received, through proper sample documentation (see Exhibit B) and communication with SMO personnel.

K. Each sample received by the Contractor will be labeled with an EPA sample number, and accompanied by a Traffic Report form bearing the sample number and descriptive information regarding the sample. The Contractor shall complete and sign the Traffic Report, recording the date of sample receipt and sample condition on receipt for each sample container. The Contractor must also follow the instructions given on the Traffic Report in choosing the QC samples when such information is provided.

The Contractor shall submit signed copies of Traffic Reports for all samples in a Sample Delivery Group to SMO within 3 calendar days following receipt of the last sample in the Sample Delivery Group. Traffic Reports shall be submitted in Sample Delivery Group sets (i.e., all Traffic Reports for a Sample Delivery Group shall be clipped together) with an SDG Cover Sheet containing information regarding the Sample Delivery Group, as specified in Exhibit B.

L. EPA Case numbers (including SDG numbers) and EPA sample numbers shall be used by the Contractor in identifying samples received under this contract both verbally and in reports/correspondence.

M. Samples will routinely be shipped directly to the Contractor through a delivery service. The Contractor shall be available to receive sample shipments at any time the delivery service is operating, including Saturdays and holidays. As necessary, the Contractor shall be responsible for any handling or processing required for the receipt of sample shipments, including pick-up of samples at the nearest servicing airport, bus station or other carrier service within the Contractor's geographical area.

N. The Contractor shall accept all samples scheduled by SMO, provided that the total number of samples received in any calendar month does not exceed the monthly limitation expressed in the contract. Should the Contractor elect to accept additional samples, the Contractor shall remain bound by all contract requirements for analysis of those samples accepted.

SECTION III

DETAILED TECHNICAL & MANAGEMENT REQUIREMENTS

As cited in Section II, Task III, the Contractor shall have the following technical and management capabilities:

A. TECHNICAL CAPABILITY

1. Technical Functions

a. Inorganics Laboratory Supervisor

(1) Responsible for all technical efforts of the Inorganics Laboratory to meet all terms and conditions of the contract.

(2) Qualifications

(a) Education:

Minimum of Bachelor's degree in chemistry or any scientific/engineering discipline.

(b) Experience:

Minimum of three years of laboratory experience, including at least one year in a supervisory position.

b. ICP Spectroscopist Qualifications

(1) Education:

- Minimum of Bachelor's degree in chemistry or any scientific/engineering discipline.
- Specialized training in ICP Spectroscopy.

(2) Experience:

Minimum of two years of applied experience with ICP analysis of environmental samples.

c. ICP Operator Qualifications

(1) Education:

Minimum of Bachelor's degree in chemistry or any scientific/engineering discipline.

(2) Experience:

Minimum of one year of experience in operating and maintaining ICP instrumentation, in conjunction with the educational requirement; or, in lieu of educational requirement, three additional years of experience in operating and maintaining ICP instrumentation.

d. Atomic Absorption (AA) Operator Qualifications

(1) Education:

Minimum of Bachelor's degree in chemistry or any scientific/engineering discipline.

(2) Experience:

Minimum of one year of experience in operating and maintaining AA instrumentation for each of the following AA techniques: (a) flame (if flame will be used), (b) graphite furnace, and (c) cold vapor, in conjunction with the educational requirement; or, in lieu of educational requirement, three additional years of experience in operating and maintaining AA instrumentation, including flame, graphite furnace, and cold vapor techniques.

e. Inorganic Sample Preparation Specialist Qualifications

(1) Education:

Minimum of high school diploma and a college level course in general chemistry or equivalent.

(2) Experience:

Minimum of six months of experience in an analytical laboratory.

f. Classical Techniques (Cyanide) Analyst Qualifications

(1) Education:

Minimum of Bachelor's degree in chemistry or any scientific/engineering discipline.

(2) Experience:

Minimum of six months of experience with classical chemistry laboratory procedures, in conjunction with the educational qualifications; or, in lieu of educational requirement, two years of additional equivalent experience.

g. Technical Staff Redundancy

In order to ensure continuous operations to accomplish the required work as specified by EPA contract, the bidder shall have a minimum of one (1) chemist available at all times as a back-up technical person with the following qualifications.

(1) Education:

Minimum of Bachelor's degree in chemistry or any scientific/engineering discipline.

(2) Experience:

Minimum of one year of experience in each of the following areas –

- o ICP operation and maintenance
- o AA operation and maintenance
- o Classical chemistry analytical procedures
- o Sample preparation for inorganics analysis

2. <u>Facilities</u>

The adequacy of the facilities and equipment is of equal importance for the technical staff to accomplish the required work as specified by the EPA contract.

a. Sample Receipt Area

Adequate, contamination-free, well ventilated work space provided with chemical resistant bench top for receipt and safe handling of EPA samples.

b. Storage Area

Sufficient refrigerator space to maintain unused EPA sample volume for 60 days after data submission. Samples and standards must be stored separately.

c. Sample Preparation Area

Adequate, contamination-free, well-ventilated work space provided with:

(1) Benches with chemical resistant tops.

(2) Exhaust hoods. Note: Standards must be prepared in a glove box or isolated area.

(3) Source of distilled or demineralized organic-free water.

(4) Analytical balance(s) located away from draft and rapid change in temperature.

3. Instrumentation

At a minimum, the Contractor shall have the following instruments operative at the time of the Preaward Site Evaluation and committed for the full duration of the contract.

a. (1) 100 Samples/Month Capacity Requirements

Fraction	No. of Instrument(s)	Type of Instrument
ICP Metals	1	ICP Emission Spectrophotometer
GFAA Metals	1	Atomic Absorption Spectrophotometer with Graphite Furnace Atomizer
Mercury	1	Mercury Cold Vapor AA Analyzer or AA instrument modified for Cold Vapor Analysis
Cyanide	6 distillation units + 1 photometer	See Cyanide Methods, Statement of Work Exhibit D, Section IV, Part E

(2) Secondary Instrument Requirements for 100 Samples/Month Capacity

The Contractor shall have the following instruments available (operational) at all times as a back-up system:

Quantity	Instruments
one	Graphite Furnace AA
one	Mercury Cold Vapor AA System

These instruments must be included in the bidder's inventory of equipment. In addition, the Contractor shall have an in-house stock of instrument parts and circuit boards to ensure continuous operation to meet contract-specified holding and turnaround times.

b. (1) 200 Samples/Month Capacity Requirements

Fraction	No. of Instrument(s)	Type of Instrument
ICP Metals	1	ICP Emission Spectrophotometer
GFAA Metals	2	Atomic Absorption Spectrophotometer with Graphite Furnace Atomizer
Mercury	2	Mercury Cold Vapor AA Analyzer or AA instrument modified for Cold Vapor Analysis
Cyanide	12 distillation units + 1 photometer	See Cyanide Methods, Statement of Work Exhibit D, Section IV, Part E

(2) There are no Secondary Instrument Requirements for 200 Samples/Month Capacity.

c. Secondary Instrument Requirements for 300 or Greater Samples/Month Capacity

The Contractor shall have the following instruments available (operational) at all times as a back-up system:

Quantity	Instruments
one	ICP Emission Spectrophotometer
one	Graphite Furnace AA

These instruments must be included in the bidder's inventory of equipment. In addition, the Contractor shall have an in-house stock of instrument parts and circuit boards to ensure continuous operation to meet contract-specified holding and turnaround times.

d. Instrument Specifications

Further information on instrument specifications and required ancillary equipment may be found in this Exhibit and other Exhibits in this Statement of Work.

4. Data Handling and Packaging

The Contractor shall be able to submit reports and data packages as specified in the Statement of Work Exhibit B. To complete this task, the Contractor shall be required to:

a. Provide space, tables and copy machines to meet the contract requirements.

b. Designate personnel.

B. LABORATORY MANAGEMENT CAPABILITY

The Contractor must have an organization with well-defined responsibilities for each individual in the management system to ensure sufficient resources for EPA contract(s) and to maintain a successful operation. To establish this capability, the Contractor shall designate personnel to carry out the following responsibilities for the EPA contract. Functions include, but are not limited to, the following:

1. Technical Staff

Responsible for all technical efforts for the EPA contract.

2. Project Manager

Responsible for overall aspects of EPA contract(s) (from sample receipt to through data delivery) and shall be the primary contact for EPA Headquarters Project Officer and Regional Deputy Project Officers.

3. Sample Custodian

Responsible for receiving the EPA samples (logging, handling and storage).

4. Quality Assurance Officer

Responsible for overseeing the quality assurance aspects of the data and reporting directly to upper management.

5. Data Reporting and Delivery Officer

Responsible for all aspects of data deliverables: organization, packaging, copying, and delivery.

EXHIBIT B

REPORTING AND DELIVERABLES REQUIREMENTS

		Page No.
SECTION I:	Contract Reports/Deliverables Distribution	B-1
SECTION II:	Report Descriptions and Order of Data Deliverables	B-4
SECTION III:	Form Instruction Guide	B-13
SECTION IV:	Data Reporting Forms	B-38

SECTION I

CONTRACT REPORTS/DELIVERABLES DISTRIBUTION

The following table reiterates the Contract reporting and deliverables requirements specified in the Contract Schedule and specifies the distribution that is required for each deliverable. NOTE: Specific recipient names and addresses are subject to change during the term of the contract. The Project Officer will notify the Contractor in writing of such changes when they occur.

	Item	Copies	Schedule	Distribution (1)	(2)	(4)
*A.	Contract Start-Up Plan	2	7 days after contract receipt.	X	X	
B.	Updated SOPs	1	120 days after contract receipt.	X		X

Item	No. Copies	Delivery Schedule	Distribution (3)	(4)	(5)	(6)
**C. Sample Traffic Reports	1	3 days after receipt of last sample in Sample Delivery Group (SDG)****	X			
***D. Sample Data Package	3	35 days after receipt of last sample in SDG	X	X	X	
***E. Data in Computer-Readable Form	1	35 days after receipt of last sample in SDG	X			
F. Results of Inter-comparison Study/ PE Sample Analysis	2	35 days after receipt of last sample in SDG	X	X		
G. Compilation of Complete Case File Purge	1	7 days after data submission	--	N/A	--	
H. Complete Case File Purge	1	180 days after data submission or 7 days from receipt of written request by PO or SMO				X

SECTION I

CONTRACT REPORTS/DELIVERABLES DISTRIBUTION (RCRA)

The following table reiterates the Contract reporting and deliverables requirements specified in the Contract Schedule and specifies the distribution that is required for each deliverable. NOTE: Specific recipient names and addresses are subject to change during the term of the contract. The Project Officer will notify the Contractor in writing of such changes when they occur.

	Item	Copies	Schedule	Distribution (1)	(2)	(4)
*A.	Contract Start-Up Plan	2	7 days after contract receipt.	X	X	
B.	Updated SOPs	1	120 days after contract receipt.	X		X

	Item	No. Copies	Delivery Schedule	Distribution (3)	(4)	(5)	(6)
**C.	Sample Traffic Reports	1	3 days after receipt of last sample in Sample Delivery Group (SDG)****	X			
***D.	Sample Data Package	3	21 days after receipt of last sample in SDG	X	X	X	
***E.	Data in Computer-Readable Form	1	21 days after receipt of last sample in SDG	X			
F.	Results of Inter-comparison Study/ PE Sample Analysis	2	21 days after receipt of last sample in SDG	X	X		
G.	Compilation of Complete Case File Purge	1	7 days after data submission	--	N/A	--	
H.	Complete Case File Purge	1	180 days after data submission or 7 days from receipt of written request by PO or SMO				X

Item	No. Copies	Delivery Schedule	Distribution (3)	(4)	(5)	(6)
**I. Quarterly Verification of Instrument Parameters	2	Quarterly: 15th day of January, April July, October	X	X		

Distribution:
(1) Project Officer (PO)
(2) Contract Officer (CO)
(3) Sample Management Office (SMO)
(4) EMSL-LV
(5) Region-Client
(6) NEIC

* Contractor must be prepared to receive samples within 30 days of Contract award. NOTE: EPA can't guarantee exact adherence to start-up plan that is agreed upon by PO and Contractor, but will attempt to meet it as close as possible.

** Also required in each Sample Data Package.

*** Concurrent delivery of these items to all recipients is required.

**** Sample Delivery Group (SDG) is a group of samples within a Case, received over a period of 14 days or less and not exceeding 20 samples. Data for all samples in the SDG are due concurrently. (See SOW Exhibit A, paragraph J., for further description).

NOTE: As specified in the Contract Schedule (Government Furnished Supplies and Materials), unless otherwise instructed by the CLP Sample Management Office, the Contractor shall dispose of unused sample volume and used sample bottles/containers no earlier than sixty (60) days following submission of analytical data.

Distribution Addresses:

(1) USEPA Analytical Operations Branch (WH-548A)
401 M Street, SW
Washington, DC 20460
ATTN: (Project Officer's Name)

(2) USEPA Contracts Management Division (MD-33)
Alexander Drive
Research Triangle Park, NC 27711
ATTN: (Contract Officer's Name)

(3) USEPA Contract Laboratory Program (CLP)
Sample Management Office (SMO)
P. O. Box 818
Alexandria, VA 22313

For overnight delivery service, use street address:

209 N. Madison Street, 2nd Floor
Alexandria, VA 22314

(4) USEPA Environmental Monitoring
Systems Laboratory (EMSL-LV)
P. O. Box 93478
Las Vegas, NV 89193-3478
ATTN: Data Audit Staff

For overnight delivery service, use street address:

944 E. Harmon, Executive Center
Las Vegas, NV 89109
ATTN: Data Audit Staff

(5) USEPA REGIONS:

The CLP Sample Management Office, acting on behalf of the Project Officer, will provide the Contractor with the list of addressees for the ten EPA Regions. SMO will provide the Contractor with updated Regional address/name lists as necessary throughout the period of the contract and identify other client recipients on a case-by-case basis.

(6) NEIC, Contractor Evidence Audit Team
2600 West Colfax, Suite C310
Lakewood, Colorado 80215

SECTION II

REPORT DESCRIPTIONS AND ORDER OF DATA DELIVERABLES

The Contractor laboratory shall provide reports and other deliverables as specified in the Contract Performance/Delivery Schedule (see Contract Schedule, Section F). The required content and form of each deliverable is described in this Exhibit.

All reports and documentation MUST BE:

- Legible,
- Clearly labeled and completed in accordance with instructions in this Exhibit,
- Arranged in the order specified in this Section,
- Paginated, and
- Single-sided.

If submitted documentation does not conform to the above criteria, the Contractor will be required to resubmit such documentation with deficiency(ies) corrected, at no additional cost to the government.

Whenever the Contractor is required to submit or resubmit data as a result of an on-site laboratory evaluation or through a PO/DPO action, the data must be clearly marked as ADDITIONAL DATA and must be sent to all three contractual data recipients (SMO, EMSL-LV, and Region). A cover letter shall be included which describes what data is being delivered, to which EPA Case(s) the data pertains, and <u>who requested the data</u>.

Whenever the Contractor is required to submit or resubmit data as a result of Contract Compliance Screening (CCS) review by SMO, the data must be sent to all three contractual data recipients (SMO, EMSL/LV and Region), and in all three instances must be accompanied by a color-coded COVER SHEET (Laboratory Response To Results of Contract Compliance Screening) provided by SMO.

Section IV of this Exhibit contains the required Inorganic Analysis Data Reporting Forms in Agency-specified formats; Section III of this Exhibit contains instructions to the Contractor for properly completing all data reporting forms to provide the Agency with all required data. Data elements and field descriptors for reporting data in computer-readable format are contained in Exhibit H.

Descriptions of the requirements for each deliverable item cited in the Contract Performance/Delivery Schedule (see Contract Schedule, Section F) are specified in parts A-G of this Section. Items submitted concurrently must be arranged in the order listed. Additionally, the components of each item must be arranged in the order presented herein when the item is submitted.

A. Contract Start-Up Plan

The Contractor shall submit a contract start-up plan for EPA approval as specified in the Contract Performance/Delivery Schedule. The plan shall set forth the Contractor's proposed schedule for receiving samples starting with the 30th calendar day after award and ending with the date the Contractor is capable of receiving the full monthly sample allotment stipulated in the Contract. The Project Officer will review the contract start-up plan within 7 days of submission and will notify the Contractor of the plan's status.

NOTE: The Contractor shall be required to receive samples within 30 days of contract award. EPA can't guarantee exact adherence to start-up plan that is agreed upon by the PO and Contractor, but will attempt to meet it as close as possible.

B. Updated SOPs

The Contractor shall submit updated copies of all required Standard Operating Procedures (SOPs) that were submitted with the prebid Performance Evaluation sample results. The updated SOPs must address any and all issues of laboratory performance and operation identified through the review of the Performanc Evaluation sample data and the evaluation of Bidder-Supplied Documentation.

The Contractor must supply SOPs for:

1. Sample receipt and logging.
2. Sample and extract storage.
3. Preventing sample contamination.
4. Security for laboratory and samples.
5. Traceability/Equivalency of standards.
6. Maintaining instrument records and logbooks.
7. Sample analysis and data control systems.
8. Glassware cleaning.
9. Technical and managerial review of laboratory operation and data package preparation.
10. Internal review of contractually-required quality assurance and quality control data for each individual data package.
11. Sample analysis, data handling and reporting.
12. Chain-of-custody.
13. Document control, including case file preparation.

C. Sample Traffic Reports

Original Sample Traffic Report page marked "Lab Copy for Return to SMO" with lab receipt information and signed in original Contractor signature, shall be submitted for each sample in the Sample Delivery Group.

Traffic Reports (TRs) shall be submitted in Sample Delivery Group (SDG) sets (i.e., TRs for all samples in an SDG shall be clipped together), with an SDG Cover Sheet attached.

The SDG Cover Sheet shall contain the following items:

- o Lab name
- o Contract number
- o Sample Analysis Price - full sample price from contract.
- o Case Number
- o List of EPA sample numbers of all samples in the SDG, identifying the first and last samples received, and their dates of receipt.

NOTE: When more than one sample is received in the first or last SDG shipment, the "first" sample received would be the lowest sample number (considering both alpha and numeric designations); the "last" sample received would be the highest sample number (considering both alpha and numeric designations).

In addition, each Traffic Report must be clearly marked with the SDG Number, the sample number of the first sample in the SDG (as described in the following paragraph). This information should be entered below the Lab Receipt Date on the TR.

The EPA sample number of the first sample received in the SDG is the SDG number. When several samples are received together in the first SDG shipment, the SDG number shall be the lowest sample number (considering both alpha and numeric designations) in the first group of samples received under the SDG. (The SDG number is also reported on all data reporting forms. See Section III, Form Instruction Guide.)

If samples are received at the laboratory with multi-sample Traffic Reports (TRs), all the samples on one multi-sample TR may not necessarily be in the same SDG. In this instance, the laboratory must make the appropriate number of photocopies of the TR, and submit one copy with each SDG cover sheet.

D. Sample Data Package

The sample data package shall include data for analysis of all samples in one Sample Delivery Group (SDG), including analytical (field) samples, reanalyses, blanks, spikes, duplicates, and laboratory control samples.

The sample data package must be complete before submission, must be consecutively paginated (starting with page number one and ending with the number of all pages in the package), and shall include the following:

1. Cover Page for the Inorganic Analyses Data Package, (COVER PAGE -- Inorganic Analyses Data Package), including: laboratory name; laboratory code; contract number; Case No.; Sample Delivery Group (SDG) No.; Statement of Work (SOW) number (appears on cover page of SOW); EPA sample numbers in alphanumeric order, showing EPA sample numbers cross-referenced with lab ID numbers; comments, describing in detail any problems encountered in processing the samples in the data package; and, completion of the statement on use of ICP background and interelement corrections for the samples.

   The Cover Page shall contain the following statement, verbatim: "I certify that this data package is in compliance with the terms and conditions of the contract, both technically and for completeness, for other than the conditions detailed above. Release of the data contained in this hardcopy data package and in the computer-readable data submitted on floppy diskette has been authorized by the Laboratory Manager or the Manager's designee, as verified by the following signature." This statement shall be directly followed by the signature of the Laboratory Manager or his designee with a typed line below it containing the signers name and title, and the date of signature.

   In addition, on a separate piece of paper, the Contractor must also include any problems encountered; both technical and administrative, the corrective action taken and resolution.

2. Sample Data

   Sample data shall be submitted with the Inorganic Analysis Data Reporting Forms for all samples in the SDG, arranged in increasing alphanumeric EPA sample number order, followed by the QC analyses data, Quarterly Verification of Instrument Parameters forms, raw data, and copies of the digestion and distillation logs.

   a. Results -- Inorganic Analysis Data Sheet [FORM I - IN]

      Tabulated analytical results (identification and quantitation) of the specified analytes (Exhibit C). The validation and release of these results is authorized by a specific, signed statement on the Cover Page. If the Laboratory Manager cannot validate all data reported for each sample, he/she must provide a detailed description of the problems associated with the sample(s) on the Cover Page.

      Appropriate concentration units must be specified and entered on Form I. The quantitative values shall be reported in units of micrograms per liter (ug/L) for aqueous samples and milligrams per kilogram (mg/kg) for solid samples. No other units are acceptable. Results for solid samples must be reported on a dry weight basis. Analytical results must be reported to two significant figures if the result value is less than 10; to three significant figures if the value is greater than or equal to 10. Results for percent solids must be reported to one decimal place. The preceding discussion concerning significant numbers applies to Form I only. For

other Forms, follow the instructions specific to those forms as contained in this exhibit.

b. Quality Control Data

1) Initial and Continuing Calibration Verification [FORM II (PART 1) - IN]

2) CRDL Standard for AA and Linear Range Analysis for ICP [FORM II (PART 2) - IN]

3) Blanks [FORM III - IN]

4) ICP Interference Check Sample [FORM IV - IN]

5) Spike Sample Recovery [FORM V (PART 1) - IN]

6) Post Digest Spike Sample Recovery [FORM V (PART 2) - IN]

7) Duplicates [FORM VI - IN]

8) Laboratory Control Sample [FORM VII - IN]

9) Standard Addition Results [FORM VIII - IN]

10) ICP Serial Dilutions [FORM IX - IN]

11) Preparation Log [Form XIII - IN]

12) Analysis Run Log [Form XIV - IN]

c. Quarterly Verification of Instrument Parameters

1) Instrument Detection Limits (Quarterly) [FORM X - IN]

2) ICP Interelement Correction Factors (Annually) [FORM XI (PART 1) - IN]

3) ICP Interelement Correction Factors (Annually) [FORM XI (PART 2) - IN]

4) ICP Linear Ranges (Quarterly) [FORM XII - IN]

(Note that copies of Quarterly Verification of Instrument Parameters forms for the current quarter must be submitted with each data package.)

d. Raw Data

For each reported value, the Contractor shall include in the data package all raw data used to obtain that value. This applies to all required QA/QC measurements, instrument standardization, as well as all sample analysis results. This statement does not apply to the Quarterly Verification of Instrument Parameters submitted as a part of each data package.

Raw data must contain all instrument readouts used for the sample results. Each exposure or instrumental reading must be provided, including those readouts that may fall below the IDL. All AA and ICP instruments must provide a legible hard copy of the direct real-time instrument readout (i.e., stripcharts, printer tapes, etc.). A photocopy of the instruments direct sequential readout must be included. A hardcopy of the instrument's direct instrument readout for cyanide must be included if the instrumentation has the capability.

The order of raw data in the data package shall be: ICP, Flame AA, Furnace AA, Mercury, and Cyanide. All raw data shall include concentration units for ICP and absorbances with concentration units for flame AA, furnace AA, Mercury and Cyanide. All flame and furnace AA data shall be grouped by element.

Raw data must be labeled with EPA sample number and appropriate codes, shown in Table 1 following, to unequivocally identify:

1) Calibration standards, including source and prep date.

2) Initial and continuing calibration blanks and preparation blanks.

3) Initial and continuing calibration verification standards, interference check samples, ICP serial dilution samples, CRDL Standard for ICP and AA, Laboratory Control Sample and Post Digestion Spike.

4) Diluted and undiluted samples (by EPA sample number) and all weights, dilutions and volumes used to obtain the reported values. (If the volumes, weights and dilutions are consistent for all samples in a given SDG, a general statement outlining these parameters is sufficient).

5) Duplicates.

6) Spikes (indicating standard solutions used, final spike concentrations, volumes involved). If spike information (source, concentration, volume) is consistent for a given SDG, a general statement outlining these parameters is sufficient.

7) Instrument used, any instrument adjustments, data corrections or other apparent anomalies on the measurement record, including all data voided or data not used to obtain reported values and a brief written explanation.

8) All information for furnace analysis clearly and sequentially identified on the raw data, including EPA sample number, sample and analytical spike data, percent recovery, coefficient of variation, full MSA data, MSA correlation coefficient, slope and intercepts of linear fit, final sample concentration (standard addition

concentration), and type of background correction used: BS for Smith-Heiftje, BD for Deuterium Arc, or BZ for Zeeman.

9) Time and date of each analysis. Instrument run logs can be submitted if they contain this information. If the instrument does not automatically provide times of analysis, these must be manually entered on all raw data for initial and continuing calibration verification and blanks, as well as interference check samples and CRDL standard for ICP.

10) Integration times for AA analyses.

e. Digestion and Distillation Logs

Logs shall be submitted in the following order: digestion logs for ICP, flame AA, furnace AA and mercury preparations, followed by a copy of the distillation log for cyanide. These logs must include: (1) date, (2) sample weights and volumes, (3) sufficient information to unequivocally identify which QC samples (i.e., laboratory control sample, preparation blank) correspond to each batch digested, (4) comments describing any significant sample changes or reactions which occur during preparation, and (5) indication of pH <2 or >12, as applicable.

3. A legible copy of the Sample Traffic Reports submitted in Item A for all of the samples in the SDG. The Traffic Reports shall be arranged in increasing EPA Sample Number order, considering both alpha and numeric designations. A legible photocopy of the SDG cover sheet must also be submitted.

E. Data in Computer Readable Form

The Contractor shall provide a computer-readable copy of the data on data reporting Forms I-XIV for all samples in the Sample Delivery Group, as specified in the Contract Performance/Delivery Schedule. Computer-readable data deliverables shall be submitted on an IBM or IBM-compatible, 5.25 inch floppy double-sided, double density 360 K-byte or a high density 1.2 M-byte diskette or on an IBM or IBM-compatible, 3.5 inch double-sided, double density 720 K-byte or a high density 1.44 M-byte diskette. The data shall be recorded in ASCII, text file format, and shall adhere to the file, record and field specifications listed in Exhibit H, Data Dictionary and Format for Data Deliverables in Computer-Readable Format.

When submitted, floppy diskettes shall be packaged and shipped in such a manner that the diskette(s) cannot be bent or folded, and will not be exposed to extreme heat or cold or any type of electromagnetic radiation. The diskette(s) must be included in the same shipment as the hardcopy data and shall, at a minimum, be enclosed in a diskette mailer.

Table 1

Codes for Labelling Raw Data

Sample	XXXXXX
Duplicate	XXXXXXD
Matrix Spike	XXXXXXS
Serial Dilution	XXXXXXL
Analytical Spike	XXXXXXA
Post Digestion/Distillation Spike	XXXXXXA
MSA:	
Zero Addition	XXXXXX0
First Addition	XXXXXX1
Second Addition	XXXXXX2
Third Addition	XXXXXX3
Instrument Calibration Standards:	
ICP	S or S0 for blank standard
Atomic Absorption and Cyanide	S0, S10,...etc.
Initial Calibration Verification	ICV
Initial Calibration Blank	ICB
Continuing Calibration Verification	CCV
Continuing Calibration Blank	CCB
Interference Check Samples:	
Solution A	ICSA
Solution AB	ICSAB
CRDL Standard for AA	CRA
CRDL Standard for ICP	CRI
Laboratory Control Samples:	
Aqueous (Water)	LCSW
Solid (Soil/Sediment)	LCSS
Preparation Blank (Water)	PBW
Preparation Blank (Soil)	PBS
Linear Range Analysis Standard	LRS

Notes:

1. When an analytical spike or MSA is performed on samples other than field samples, the "A", "0", "1", "2" or "3" suffixes must be the last to be added to the EPA Sample Number. For instance, an analytical spike of a duplicate must be formatted "XXXXXXDA."

2. The numeric suffix that follows the "S" suffix for the standards indicates the true value of the concentration of the standard in ug/L.

3. ICP calibration standards usually consist of several analytes at different concentrations. Therefore, no numeric suffix can follow the ICP calibration standards unless all the analytes in the standard are prepared at the same concentrations. For instance, the blank for ICP must be formatted "S0."

4. The CRDL standard for AA is considered to be a calibration standard if it was a part of the calibration curve, thus it must be formatted like any other standard. The "CRA" format must be used if the CRDL standard for AA is not used to establish the calibration curve.

F. Results of Intercomparison/Performance Evaluation(PE) Sample Analyses

Tabulation of analytical results for Intercomparison/PE Sample analyses include all requirements specified in items D. and E., above.

G. Compilation of Complete Case File Purge

Within 7 days after data submission, the Contractor shall have compiled the Complete Case File Purge package described in item H., following.

H. Complete Case File Purge

The Complete Case File Purge package includes all laboratory records received or generated for a specific Case that have not been previously submitted to EPA as a deliverable. These items shall be submitted along with their Case File Document Inventory (see Exhibit F, paragraph 2.4 for description of document numbering and inventory procedure). These items include, but are not limited to: sample tags, custody records, sample tracking records, analysts logbook pages, bench sheets, instrument readout records, computer printouts, raw data summaries, instrument logbook pages (including instrument conditions), correspondence, and the document inventory.

Shipment of the Complete Case File Purge package by first class mail, overnight carrier, priority mail or equivalent is acceptable. Custody seals, which are provided by EPA, must be placed on shipping containers and a document inventory and transmittal letter included. The Contractor is not required to maintain any documents for a sample Case after submission of the Complete Case File Purge package; however, the Contractor should maintain a copy of the document inventory and transmittal letter.

I. Quarterly Verification of Instrument Parameters

The Contractor shall perform and report quarterly verification of instrument detection limits and linear range by methods specified in Exhibit E for each instrument used under this contract. For the ICP instrumentation and methods, the Contractor shall also report quarterly interelement correction factors (including method of determination), wavelengths used, and integration times. Quarterly Verification of Instrument Parameters forms for the current quarter shall be submitted in each Sample Delivery Group data package, using Forms X, XI and XII. Submission of Quarterly Verification of Instrument Parameters shall include the raw data used to determine those values reported.

SECTION III

FORM INSTRUCTION GUIDE

This section contains specific instructions for the completion of all required Inorganic Data Reporting Forms. This section is organized into the following Parts:

A. General Information and Header Information

B. Cover Page -- Inorganic Analyses Data Package [COVER PAGE - IN]

C. Inorganic Analysis Data Sheet [FORM I - IN]

D. Initial and Continuing Calibration Verification [FORM II (PART 1) - IN]

E. CRDL Standard for AA and ICP [FORM II (PART 2) - IN]

F. Blanks [FORM III - IN]

G. ICP Interference Check Sample [FORM IV - IN]

H. Spike Sample Recovery [FORM V (PART 1) - IN]

I. Post Digest Spike Sample Recovery [FORM V (PART 2) - IN]

J. Duplicates [FORM VI - IN]

K. Laboratory Control Sample [FORM VII - IN]

L. Standard Addition Results [FORM VIII - IN]

M. ICP Serial Dilutions [FORM IX - IN]

N. Instrument Detection Limits (Quarterly) [FORM X - IN]

O. ICP Interelement Correction Factors (Annually) [FORM XI (PART 1) - IN]

P. ICP Interelement Correction Factors (Annually) [FORM XI (PART 2) - IN]

Q. ICP Linear Ranges (Quarterly) [FORM XII - IN]

R. Preparation Log [Form XIII - IN]

S. Analysis Run Log [Form XIV - IN]

A. General Information and Header Information

The data reporting forms presented of Section IV in this Exhibit have been designed in conjunction with the computer-readable data format specified in Exhibit H, Data Dictionary and Format for Data Deliverables in Computer-Readable Format. The specific length of each variable for computer-readable data transmission purposes is given in the Data Dictionary (Exhibit H). Information entered on these forms must not exceed the size of the field given on the form, including such laboratory-generated items as Lab Name and Lab Sample ID.

Note that on the hardcopy forms (see Section IV), the space provided for entries is greater in some instances than the length prescribed for the variable as written to diskette (see Exhibit H). Greater space is provided on the hardcopy forms for the sake of visual clarity.

Values must be reported on the hardcopy forms according to the individual form instructions in this Section. Each form submitted must be filled out completely for all analytes before proceeding to the next form of the same type. Multiple forms cannot be submitted in place of one form if the information on those forms can be submitted on one form.

All characters which appear on the data reporting forms presented in the contract (Exhibit B, Section IV) must be reproduced by the Contractor when submitting data, and the format of the forms submitted must be identical to that shown in the contract. No information may be added, deleted, or moved from its specified position without prior written approval of the EPA Project Officer. The names of the various fields and analytes (i.e., "Lab Code", "Aluminum") must appear as they do on the forms in the contract, including the options specified in the form (i.e., "Matrix (soil/water):" must appear, not just "Matrix").

All alphabetic entries made onto the forms by the Contractor must be in ALL UPPERCASE letters (i.e., "LOW", not "Low" or "low"). If an entry does not fill the entire blank space provided on the form, null characters must be used to remove the remaining underscores that comprise the blank line. (See Exhibit H for more detailed instructions.) However, do not remove the underscores or vertical bar characters that delineate "boxes" on the forms.

Six pieces of information are common to the header sections of each data reporting form. These are: Lab Name, Contract, Lab Code, Case No., SAS No., and SDG No. This information must be entered on every form and must match on all forms.

The "Lab Name" must be the name chosen by the Contractor to identify the laboratory. It may not exceed 25 characters.

The "Contract" is the number of the EPA contract under which the analyses were performed.

The "Lab Code" is an alphabetic abbreviation of up to 6 characters, assigned by EPA, to identify the laboratory and aid in data processing. This lab code shall be assigned by EPA at the time a contract is awarded, and must not be modified by the Contractor, except at the direction of EPA.

The "Case No." is the EPA-assigned Case number (to 5 spaces) associated with the sample, and reported on the Traffic Report.

The "SAS No." is the EPA-assigned number for analyses performed under Special Analytical Services. If samples are to be analyzed under SAS only, and reported on these forms, then enter SAS No. and leave Case No. blank. If samples are analyzed according to this SOW (Routine Analytical Services protocol) and have additional SAS requirements, list both Case No. and SAS No. on all forms. If the analyses have no SAS requirements, leave "SAS No." blank. (NOTE: Some samples in an SDG may have a SAS No., while others do not.)

The "SDG No." is the Sample Delivery Group (SDG) number. The SDG number is the EPA Sample Number of the first sample received in the SDG. When several samples are received together in the first SDG shipment, the SDG number must be the lowest sample number (considering both alpha and numeric designations) in the first group of samples received under the SDG.

The other information common to several of the forms is the "EPA Sample No.". This number appears either in the upper righthand corner of the form, or as the left column of a table summarizing data from a number of samples. When "EPA Sample No." is entered into the triple-spaced box in the upper righthand corner of a form, it must be centered on the middle line of the three lines that comprise the box.

All samples, matrix spikes and duplicates must be identified with an EPA Sample Number. For samples, matrix spikes and duplicates, the EPA Sample Number is the unique identifying number given in the Traffic Report that accompanied that sample.

In order to facilitate data assessment, the sample suffixes listed in Table 1 must be used.

Other pieces of information are common to many of the Data Reporting Forms. These include: Matrix and Level.

For "Matrix", enter "SOIL" for soil/sediment samples, and enter "WATER" for water samples. NOTE: The matrix must be spelled out. Abbreviations such as "S" or "W" must not be used.

For "Level", enter the determination of concentration level. Enter as "LOW" or "MED", not "L" or "M".

Note: All results must be transcribed to Forms II-XIV from the raw data to the specified number of decimal places that are described in Exhibit B and Exhibit H. The raw data result is to be rounded only when the number of figures in the raw data result exceeds the maximum number of

figures specified for that result entry for that form. If there are not enough figures in the raw data result to enter in the specified space for that result, then zeros must be used for decimal places to the specified number of reporting decimals for that result for a specific form. The following examples are provided:

Raw Data Result	Specified Format	Corrct Entry on Form
95.99653	5.4 (to four decimal places)	95.9965
95.99653	5.3 (to three decimal places)	95.997
95.99653	5.2 (to two decimal places)	96.00
95.996	5.4 (to four decimal places)	95.9960
95.9	5.4 (to four decimal places)	95.9000

For rounding off numbers to the appropriate level of precision, observe the following common rules. If the figure following those to be retained is less than 5, drop it (round down). If the figure is greater than 5, drop it and increase the last digit to be retained by 1 (round up). If the figure following the last digit to be retained equals 5 and there are no digits to the right of the 5 or all digits to the right of the 5 equals zero, then round up if the digit to be retained is odd, or round down if that digit is even. See also Rounding Rules entry in Glossary (Exhibit G).

Before evaluating a number for being in control or out of control of a certain limit, the number evaluated must be rounded using EPA rounding rules to the significance reported for that limit. For instance, the control limit for an ICV is plus or minus 10% of the true value. A reported percent recovery value of 110.4 would be considered in control while a reported value of 110.6 would be considered out of control. In addition, a calculated value of 110.50 would be in control while a calculated value of 110.51 would be out of control.

B. Cover Page - Inorganic Analyses Data Package [COVER PAGE-IN]

This form is used to list all samples analyzed within a Sample Delivery Group, and to provide certain analytical information and general comments. It is also the document which is signed by the Laboratory Manager to authorize and release all data and deliverables associated with the SDG.

Complete the header information according to the instructions in Part A.

The "SOW No." is the EPA-designated number that indicates the Statement of Work (SOW) version under which analyses in the data package have been performed. The SOW No. appears on the cover of the contract Statement of Work. For samples analyzed using this SOW, enter "7/88" for SOW No.

Enter the EPA Sample No. (including spikes and duplicates) (to seven spaces) of every sample analyzed within the SDG. Spikes must contain an "S" suffix and duplicates a "D" suffix. These sample numbers must be listed on the form in ascending alphanumeric order. Thus, if MAB123 is the lowest (considering both alpha and numeric characters) EPA Sample No. within the SDG, it would be entered in the first EPA Sample No. field. Samples would be listed below it, in ascending sequence - MAB124, MAB125, MAC111, MA1111, MA1111D, etc.

A Lab Sample ID (to ten spaces) may be entered for each EPA Sample No. If a Lab Sample ID is entered, it must be entered identically (for each EPA Sample No.) on all associated data.

Enter "YES" or "NO" in answer to each of the two questions concerning ICP corrections. Each question must be explicitly answered with a "YES" or a "NO". The third question must be answered with a "YES" or "NO" if the answer to the second question is "YES". It should be left blank if the answer to the second question is "NO".

Under "Comments", enter any statements relevant to the analyses performed under the SDG as a whole.

Each Cover Page must be signed, in original, by the Laboratory Manager or the Manager's designee and dated, to authorize the release and verify the contents of all data and deliverables associated with an SDG.

C. Inorganic Analysis Data Sheet [FORM 1-IN]

This form is used to tabulate and report sample analysis results for target analytes (Exhibit C).

Complete the header information according to the instructions in Part A and as follows.

"Date Received" is the date (formatted MM/DD/YY) of sample receipt at the laboratory, as recorded on the Traffic Report, i.e., the Validated Time of Sample Receipt (VTSR).

"% Solids" is the percent of solids on a weight/weight basis in the sample as determined by drying the sample as specified in Exhibit D. Report percent solids to one decimal place (i.e., 5.3%). If the percent solids is not required because the sample is fully aqueous or less than 1% solids, then enter "0.0".

Enter the appropriate concentration units (UG/L for water or MG/KG dry weight for soil). Entering "MG/KG" means "mg/Kg dry weight" on this form.

Under the column labeled "Concentration", enter for each analyte either the value of the result (if the concentration is greater than or equal to the Instrument Detection Limit) or the Instrument Detection Limit for the analyte corrected for any dilutions (if the concentration is less than the Instrument Detection Limit).

Under the columns labeled "C", "Q", and "M", enter result qualifiers as identified below. If additional qualifiers are used, their explicit definitions must be included on the Cover Page in the Comments section.

FORM I-IN includes fields for three types of result qualifiers. These qualifiers must be completed as follows:

- o C (Concentration) qualifier -- Enter "B" if the reported value was obtained from a reading that was less than the Contract Required Detection Limit (CRDL) but greater than or equal to the Instrument Detection Limit (IDL). If the analyte was analyzed for but not detected, a "U" must be entered.

- o Q qualifier -- Specified entries and their meanings are as follows:

  E - The reported value is estimated because of the presence of interference. An explanatory note must be included under Comments on the Cover Page (if the problem applies to all samples) or on the specific FORM I-IN (if it is an isolated problem).

  M - Duplicate injection precision not met.

  N - Spiked sample recovery not within control limits.

  S - The reported value was determined by the Method of Standard Additions (MSA).

  W - Post-digestion spike for Furnace AA analysis is out of control limits (85-115%), while sample absorbance is less than 50% of spike absorbance. (See Exhibit E.)

  * - Duplicate analysis not within control limits.

  + - Correlation coefficient for the MSA is less than 0.995.

  Entering "S", "W", or "+" is mutually exclusive. No combination of these qualifiers can appear in the same field for an analyte.

- o M (Method) qualifier -- Enter:

  - "P" for ICP
  - "A" for Flame AA
  - "F" for Furnace AA
  - "CV" for Manual Cold Vapor AA
  - "AV" for Automated Cold Vapor AA
  - "AS" for Semi-Automated Spectrophotometric
  - "C" for Manual Spectrophotometric
  - "T" for Titrimetric
  - "NR" if the analyte is not required to be analyzed.

A brief physical description of the sample, both before and after digestion, must be reported in the fields for color (before and after), clarity (before and after), texture and artifacts. For water samples, report color and clarity. For soil samples, report color, texture and artifacts.

The following descriptive terms are recommended:

Color	-	red, blue, yellow, green, orange, violet, white, colorless, brown, grey, black
Clarity	-	clear, cloudy, opaque
Texture	-	fine (powdery), medium (sand), coarse (large crystals or rocks)

If artifacts are present, enter "YES" in the artifacts field and describe the artifacts in the Comments field. If artifacts are not present, leave this field blank.

Note any significant changes that occur during sample preparation (i.e., emulsion formation) in the Comments field. Enter any sample-specific comments concerning the analyte results in the Comments field.

D. Initial and Continuing Calibration Verification [FORM II(PART 1)-IN]

This form is used to report analyte recoveries from calibration solutions.

Complete the header information according to the instructions in Part A and as follows.

Enter the Initial Calibration Source (12 spaces maximum) and the Continuing Calibration Source (12 spaces maximum). Enter "EPA-LV" or "EPA-CI" to indicate EPA EMSL Las Vegas or Cincinnati, respectively, as the source of EPA standards. When additional EPA supplied solutions are prepared in the future, the Contractor must use the codes supplied with those solutions for identification. If other sources were used, enter sufficient information in the available 12 spaces to identify the manufacturer and the solution used.

Use additional FORMs II(PART 1)-IN if more calibration sources were used.

Under "Initial Calibration True", enter the value (in ug/L, to one decimal place) of the concentration of each analyte in the Initial Calibration Verification Solution.

Under "Initial Calibration Found", enter the most recent value (in ug/L, to two decimal places), of the concentration of each analyte measured in the Initial Calibration Verification Solution.

Under "Initial Calibration %R", enter the value (to one decimal place) of the percent recovery computed according to the following equation:

$$\%R = \frac{\text{Found(ICV)}}{\text{True(ICV)}} \times 100 \qquad (2.1)$$

Where, True(ICV) is the true concentration of the analyte in the Initial Calibration Verification Solution and Found(ICV) is the found concentration of the analyte in the Initial Calibration Verification Solution.

The values used in equation 2.1 for True(ICV) and Found(ICV) must be exactly those reported on this form.

Under "Continuing Calibration True", enter the value (in ug/L, to one decimal place) of the concentration of each analyte in the Continuing Calibration Verification Solution.

Under "Continuing Calibration Found", enter the value (in ug/L, to two decimal places) of the concentration of each analyte measured in the Continuing Calibration Verification Solution.

Note that the form contains two "Continuing Calibration Found" columns. The column to the left must contain values for the first Continuing Calibration Verification, and the column to the right must contain values for the second Continuing Calibration Verification. The column to the right should be left blank if no second Continuing Calibration Verification was performed.

If more than one FORM II(PART 1)-IN is required to report multiple Continuing Calibration Verifications, then the column to the left on the second form must contain values for the third Continuing Calibration Verification, the column to the right must contain values for the fourth Continuing Calibration Verification, and so on.

Under "Continuing Calibration %R", enter the value (to one decimal place) of the percent recovery computed according to the following equation:

$$\%R = \frac{\text{Found(CCV)}}{\text{True(CCV)}} \times 100 \qquad (2.2)$$

where, True(CCV) is the true concentration of each analyte, and Found(CCV) is the found concentration of the analyte in the Continuing Calibration Verification Solution.

The values used in equation 2.2 for True(CCV) and Found(CCV) must be exactly those reported on this form.

Note that the form contains two "Continuing Calibration %R" columns. Entries to these columns must follow the sequence detailed above for entries to the "Continuing Calibration Found" columns.

Under "M", enter the method used or "NR", as explained in Part C.

If more than one wavelength is used to analyze an analyte, submit additional FORMs II(PART 1)-IN as appropriate.

The order of reporting ICVs and CCVs for each analyte must follow the temporal order in which the standards were run starting with the first Form IIA and moving from the left to the right continuing to the following Form IIA's as appropriate. For instance, the first ICV for all analytes must be reported on the first Form IIA. In a run where three CCVs were analyzed, the first CCV must be reported in the left CCV column on the first Form IIA and the second CCV must be reported in the right column of the same form. The third CCV must be reported in the left CCV column of the second Form IIA. On the second Form IIA, the ICV column and the right CCV column must be left empty in this example. In the previous example, if a second run for an analyte was needed, the ICV of that run must be reported on a third Form IIA and the CCVs follow in the same fashion as explained before. In the case where two wavelengths are use used for an analyte, all ICV and CCV results of one wavelength from all runs must be reported before proceeding to report the results of the second wavelength used.

E. CRDL Standard for AA and ICP [FORM II(PART 2)-IN]

This form is used to report analyte recoveries from analyses of the CRDL Standards for AA (CRA) and CRDL Standards for ICP (CRI).

Complete the header information according to the instructions in Part A and as follows.

Enter the AA CRDL Standard Source (12 spaces maximum) and the ICP CRDL Standard Source (12 spaces maximum), as explained in Part D.

Under "CRDL Standard for AA True," enter the value (in ug/L, to one decimal place) of the concentration of each analyte in the CRDL Standard Source Solution that was analyzed.

Under "CRDL Standard for AA Found", enter the value (in ug/L, to two decimal places) of the concentration of each analyte measured in the CRDL Standard Solution.

Under "CRDL Standard for AA %R", enter the value (to one decimal place) of the percent recovery computed according to the following equation:

$$\%R = \frac{\text{Found CRDL Standard for AA}}{\text{True CRDL Standard for AA}} \times 100 \qquad (2.3)$$

Under "CRDL Standard for ICP Initial True", enter the value (to one decimal place) of the concentration of each analyte in the CRDL Standard Solution that was analyzed by ICP for analytical samples associated with the SDG. Concentration units are ug/L.

Under "CRDL Standard for ICP Initial Found", enter the value (to two decimal places) of the concentration of each analyte measured in the CRDL Standard Solution analyzed at the beginning of each run. Concentration units are ug/L.

Under "CRDL Standard for ICP, Initial %R" enter the value (to one decimal place) of the percent recovery computed according to the following equation:

$$\%R = \frac{\text{CRDL Standard for ICP Initial Found}}{\text{CRDL Standard for ICP True}} \times 100 \qquad (2.4)$$

Under "CRDL Standard for ICP Final Found", enter the value (in ug/L, to two decimal places) of the concentration of each analyte measured in the CRDL Standard Solution analyzed at the end of each run.

Under "CRDL Standard for ICP Final %R", enter the value (to one decimal place) of the percent recovery computed according to the following equation:

$$\%R = \frac{\text{CRDL Standard for ICP Final Found}}{\text{CRDL Standard for ICP True}} \times 100 \qquad (2.5)$$

All %R values reported in equations 2.3, 2.4, and 2.5 must be calculated using the exact true and found values reported on this form.

Note that for every initial solution reported there must be a final one. However, the opposite is not true. If a CRDL Standard for ICP (CRI) was required to be analyzed in the middle of a run (to avoid exceeding the 8-hour limit), it must be reported in the "Final Found" section of this form.

If more CRI or CRA analyses were required or analyses were performed using more than one wavelength per analyte, submit additional FORMs II(PART 2)-IN as appropriate.

The order of reporting CRAs and CRIs for each analyte must follow the temporal order in which the standards were run starting with the first Form IIB and continuing to the following Form IIB's as appropriate. The order of reporting CRA and CRI is independent. When multiple wavelengths are used for one analyte, all the results of one wavelength must be reported before prodeeding to the next wavelength.

F. Blanks [FORM III-IN]

This form is used to report analyte concentrations found in the Initial Calibration Blank (ICB), in Continuing Calibration Blanks (CCB), and in the Preparation Blank (PB).

Complete the header information according to the instructions in Part A and as follows.

Enter "SOIL" or "WATER" as appropriate as the matrix of the Preparation Blank. No abbreviations or other matrix descriptors may be used.

According to the matrix specified for the Preparation Blank, enter "UG/L" (for water) or "MG/KG" (for soil) as the Preparation Blank concentration units.

Under "Initial Calib. Blank", enter the concentration (in ug/L, to one decimal place) of each analyte in the most recent Initial Calibration Blank.

Under the "C" qualifier field, for any analyte enter "B" if the absolute value of the analyte concentration is less than the CRDL but greater than or equal to the IDL. Enter "U" if the absolute value of the analyte in the blank is less than the IDL.

Under "Continuing Calibration Blank 1", enter the concentration (in ug/L, to one decimal place) of each analyte detected in the first required Continuing Calibration Blank (CCB) analyzed after the Initial Calibration Blank. Enter any appropriate qualifier, as explained for the "Initial Calibration Blank," to the "C" qualifier column immediately following the "Continuing Calibration Blank 1" column.

If only one Continuing Calibration Blank was analyzed, then leave the columns labeled "2" and "3" blank. If up to three CCB's were analyzed, complete the columns labeled "2" and "3", in accordance with the instructions for the "Continuing Calibration Blank 1" column. If more than three Continuing Calibration Blanks were analyzed, then complete additional FORMs III-IN as appropriate.

Under "Preparation Blank", enter the concentration in ug/L (to one decimal place) for a water blank or in mg/Kg (to three decimal places) for a soil blank, of each analyte in the Preparation Blank. Enter any appropriate qualifier, as explained for the "Initial Calibration Blank," to the "C" qualifier column immediately following the "Preparation Blank" column.

For all blanks, enter the concentration of each analyte (positive or negative) measured above the IDL or below the negative value of the IDL.

Under "M", enter the method used, as explained in Part C.

If more than one wavelength is used to analyze an analyte, submit additional FORMs III-IN as appropriate.

The order of reporting ICBs and CCBs for each analyte must follow the temporal order in which the blanks were run starting with the first Form III and moving from left to right and continuing to the following Form III's as explained in Part D. When mutliple wavelengths are used for the analysis of one analyte, all the results of one wavelength must be reported before proceeding to the next wavelength.

G. <u>ICP Interference Check Sample</u> [FORM IV-IN]

This form is used to report Interference Check Sample (ICS) results for each ICP instrument used in Sample Delivery Group analyses.

Complete the header information according to the instructions in Part A and as follows:

For "ICP ID Number", enter an identifier that uniquely identifies a specific instrument within the Contractor laboratory. No two ICP instruments within a laboratory may have the same ICP ID Number.

Enter "ICS Source" (12 spaces maximum) as explained in Part D. For EPA solutions include in the source name a number identifying it (e.g., EPA-LV87).

Under "True Sol. A", enter the true concentration (in ug/L, to the nearest whole number) of each analyte present in Solution A.

Under "True Sol. AB", enter the true concentration (in ug/L, to the nearest whole number) of each analyte present in Solution AB.

Under "Initial Found Sol. A", enter the concentration (in ug/L, to the nearest whole number) of each analyte found in the initial analysis of Solution A as required in Exhibit E.

Under "Initial Found Sol. AB", enter the concentration (in ug/L, to one decimal place) of each analyte in the initial analysis of Solution AB as required in Exhibit E.

Under "Initial Found %R", enter the value (to one decimal place) of the percent recovery computed according to the following equation:

$$\%R = \frac{\text{Initial Found Solution AB}}{\text{True Solution AB}} \times 100 \qquad (2.6)$$

Under "Final Found Sol. A", enter the concentration (in ug/L, to the nearest whole number) of each analyte found in the final analysis of Solution A as required in Exhibit E.

Under "Final Found Sol. AB", enter the concentration (in ug/L, to one decimal place) of each analyte found in the final analysis of Solution AB as required in Exhibit E.

For All Found values of solutions A and AB, enter the concentration (positive, negative, or zero) of each analyte at each wavelength used for analysis by ICP.

Under "Final Found %R", enter the value (to one decimal place) of the percent recovery computed according to the following equation:

$$\%R = \frac{\text{Final Found Solution AB}}{\text{True Solution AB}} \times 100 \qquad (2.7)$$

All %R values reported must be calculated using the exact true and found values reported on this form.

Note that for every initial solution reported there must be a final one. However, the opposite is not true. If an ICS was required to be analyzed in the middle of a run (to avoid exceeding the 8-hour limit), it must be reported in the "Final Found" section of this form.

If more ICS analyses were required, submit additional FORMs IV-IN as appropriate.

The order of reporting ICSs for each analyte must follow the temporal order in which the standards were run starting with the first Form IV and continuing to the following Form IV's as appropriate. The order of reporting ICS is independent. When multiple wavelengths are used for one analyte, all the results of one wavelength must be reported before prodeeding to the next wavelength.

H. Spike Sample Recovery [FORM V(PART 1)-IN]

This form is used to report results for the pre-digest spike.

Complete the header information according to the instructions in Part A and as follows.

Indicate the appropriate matrix, level and concentration units (ug/L for water and mg/Kg dry weight for soil) as explained in Parts A and C.

For "%Solids for Sample," enter the percent solids (as explained in Part C) for the original sample of the EPA Sample Number reported on the form. Note that this number must equal the one reported on Form I for that sample.

In the "EPA Sample No." box, enter the EPA Sample Number (7 places maximum) of the sample from which the spike results on this form were obtained. The number must be centered in the box.

Under "Control Limit %R", enter "75-125" if the spike added value was greater than or equal to one-fourth of the sample result value. If not, leave the field empty.

Under "Spiked Sample Result (SSR)", enter the measured value (to four decimal places), in appropriate units, for each analyte in the matrix spike sample. Enter any appropriate qualifier, as explained in Part C, to the "C" qualifier column immediately following the "Spiked Sample Result (SSR)" column.

Under "Sample Result (SR)", enter the measured value (to four decimal places) for each required analyte in the sample (reported in the EPA Sample No. box) on which the matrix spike was performed. Enter any appropriate qualifier, as explained in Part C, to the "C" qualifier column immediately following the "Sample Result (SR)" column.

Under "Spike Added (SA)", enter the value (to two decimal places) for the concentration of each analyte added to the sample. The same concentration units must be used for spiked sample results, unspiked (original sample) results, and spike added sample results. If the "spike added" concentration is specified in the contract, the value added and reported must be that specific concentration in appropriate units.

Under "%R", enter the value (to one decimal place) of the percent recovery for all spiked analytes computed according to the following equation:

$$\%R = \frac{(SSR - SR)}{SA} \times 100 \qquad (2.8)$$

%R must be reported, whether it is negative, positive or zero.

The values for SSR, SR, and SA must be exactly those reported on this form. A value of zero must be used for SSR or SR if the analyte value is less than the IDL.

Under "Q", enter "N" if the Spike Recovery (%R) is out of the control limits (75-125) and the Spike Added (SA) is greater than or equal to one-fourth of the Sample Result (SR).

Under "M", enter the method used (as explained in Part C) or enter "NR" if the analyte is not required in the spike.

If different samples were used for spike sample analysis of different analytes, additional FORMs V(PART 1)-IN must be submitted for each sample as appropriate.

I. Post Digest Spike Sample Recovery [FORM V(PART 2)-IN]

This form is used to report results for the post-digest spike recovery which is based upon the addition of a known quantity of analyte to an aliquot of the digested sample.

Complete the header information according to the instructions in Part A and as follows.

In the "EPA Sample No." box, enter the EPA Sample Number (7 spaces maximum) of the sample from which the spike results on this form were obtained. The number must be centered in the box.

The "Control Limit %R" and "Q" fields must be left blank until limits are established by EPA. At that time, the Contractor will be informed how to complete these fields.

Under "Spiked Sample Result (SSR)", enter the measured value (in ug/L, to two decimal places) for each analyte in the post-digest spike sample. Enter any appropriate qualifier, as explained in Part C, to the "C" qualifier column immediately following the "Spiked Sample Result (SSR)" column.

Under "Sample Result (SR)", enter the measured value (in ug/L, to two decimal places) for the concentration of each analyte in the sample (reported in the EPA Sample No. box) on which the spike was performed. Enter any appropriate qualifier, as explained in Part C, to the "C" qualifier column immediately following the "Sample Result (SR)" column.

Under "Spike Added (SA)", enter the value (in ug/L, to one decimal place) for each analyte added to the sample. The same concentration units must be used for spiked sample results, unspiked (original sample) results, and spike added sample results. If the spike added concentration is specified in the contract, the value added and reported must be that specific concentration in appropriate units.

Under "%R", enter the value (to one decimal place) of the percent recovery for all spiked analytes computed according to Equation 2.8 in Part H, preceding.

%R must be reported, whether it is negative, positive or zero.

The values for SSR, SR, and SA must be exactly those reported on this form. A value of zero must be substituted for SSR or SR if the analyte value is less than the IDL.

Under "M", enter the method used as explained in Part C, or enter "NR" if the spike was not required.

If different samples were used for spike sample analysis of different analytes, additional FORMS V(PART 1)-IN must be submitted.

J. Duplicates [FORM VI-IN]

The duplicates form is used to report results of duplicate analyses. Duplicate analyses are required for % solids values and all analyte results.

Complete the header information according to the instructions in Part A and as follows.

Indicate the appropriate matrix, level and concentration units (ug/L for water and mg/Kg dry weight for soil) as explained in Parts A and C.

For "% Solids for Sample," enter to percent solids (as explained in Part C) for the original sample of the EPA Sample Number reported on the form. Note that this number must equal the one reported on Form I for that sample.

For "% Solids for Duplicate," enter the percent solids (as explained in Part C) for the duplicate sample of the EPA Sample Number reported on the form.

In the "EPA Sample No." box, enter the EPA Sample Number (7 spaces maximum) of the sample from which the duplicate sample results on this form were obtained. The number must be centered in the box.

Under "Control Limit", enter the CRDL (in appropriate units, ug/L for water or mg/kg dry weight basis compared to the original sample weight and percent solids) for the analyte if the sample or duplicate values were less than 5x CRDL. If the sample and duplicate values were less than the CRDL or greater than or equal to 5x CRDL, leave the field empty.

Under Sample (S), enter the original measured value (to four decimal places) for the concentration of each analyte in the sample (reported in the EPA Sample No. box) on which a Duplicate analysis was performed. Concentration units are those specified on the form. Enter any appropriate qualifier, as explained in Part C, to the "C" qualifier column immediately following the "Sample (S)" column.

Under Duplicate (D), enter the measured value (to four decimal places) for each analyte in the Duplicate sample. Concentration units are those specified on the form. Enter any appropriate qualifier, as explained in Part C, to the "C" qualifier column immediately following the "Duplicate (D)" column.

For solid samples, the concentration of the original sample must be computed using the weight and % solids of the original sample. The concentration of the duplicate sample must be computed using the weight and % solids of the duplicate sample.

Under RPD, enter the absolute value (to one decimal place) of the Relative Percent Difference for all analytes detected above the IDL in either the sample or the duplicate, computed according to the following equation:

$$RPD = \frac{|S - D|}{(S + D)/2} \times 100 \qquad (2.9)$$

The values for S and D must be exactly those reported on this form. A value of zero must be substituted for S or D if the analyte concentration is less than the IDL in either one. If the analyte concentration is less than the IDL in both S and D, leave the RPD field empty.

Under "Q", enter "*" if the duplicate analysis for the analyte is out of control. If both sample and duplicate values are greater than or equal to 5x CRDL, then the RPD must be less than or equal to 20% to be in control. If either sample or duplicate values are less than 5x CRDL, then the absolute difference between the two values must be less than the CRDL to be in control. If both values are below the CRDL, then no control limit is applicable.

Under "M", enter method used as explained in Part C.

K. Laboratory Control Sample [FORM VII-IN]

This form is used to report results for the solid and aqueous Laboratory Control Samples.

Complete the header information according to the instructions in Part A and as follows.

For the Solid LCS Source (12 spaces maximum), enter "EPA0387" if the EPA provided standard was used. Substitute an appropriate number provided by the EPA for LCS solutions prepared in the future. If other sources were used, complete as explained in Part D. For the Aqueous LCS Source, enter the source name (12 spaces maximum) as explained in Part D.

Under "Aqueous True", enter the value (in ug/L, to one decimal place) of the concentration of each analyte in the Aqueous LCS Standard Source.

Under "Aqueous Found", enter the measured concentration (in ug/L, to two decimal places) of each analyte found in the Aqueous LCS solution.

Under "Aqueous %R", enter the value of the percent recovery (to one decimal place) computed according to the following equation:

$$\%R = \frac{\text{Aqueous LCS Found}}{\text{Aqueous LCS True}} \times 100 \qquad (2.10)$$

Under "Solid True", enter the value (in mg/Kg, to one decimal place) of the concentration of each analyte in the Solid LCS Source.

Under "Solid Found", enter the measured value (in mg/Kg, to one decimal place) of each analyte found in the Solid LCS solution.

Under "C", enter "B" or "U" or leave empty, to describe the found value of the solid LCS as explained in Part C.

Under "Limits", enter the lower limit (in mg/Kg, to one decimal place) in the left column, and the upper limit (in mg/Kg, to one decimal place) in the right column, for each analyte in the Solid LCS Source solution.

Under "Solid %R", enter the value of the percent recovery (to one decimal place) computed according to the following equation:

$$\%R = \frac{\text{Solid LCS Found}}{\text{Solid LCS True}} \times 100 \qquad (2.11)$$

The values for true and found aqueous and solid LCS's used in equations 2.10 and 2.11 must be exactly those reported on this form. If the analyte concentration is less than the IDL, a value of zero must be substituted for the solid LCS found.

Submit additional FORMs VII-IN as appropriate, if more than one aqueous LCS or solid LCS was required.

L. Standard Addition Results [FORM VIII-IN]

This form is used to report the results of samples analyzed using the Method of Standard Additions (MSA) for Furnace AA analysis.

Complete the header information according to the instructions in Part A.

Under "EPA Sample No.", enter the EPA Sample Numbers (7 spaces maximum) of all analytical samples analyzed using the MSA. This includes reruns by MSA (if the first MSA was out of control) as explained in Exhibit E.

Note that only field samples and duplicates may be reported on this form, thus the EPA Sample Number usually has no suffix or a "D."

A maximum of 32 samples can be entered on this form. If additional samples required MSA, submit additional FORMs VIII-IN. Samples must be listed in alphanumeric order per analyte, continuing to the next FORM VIII-IN if applicable.

Under "An", enter the chemical symbol (2 spaces maximum) for each analyte for which MSA was required for each sample listed. The analytes must be in alphabetic listing of the chemical symbols.

Results for different samples for each analyte must be reported sequentially, with the analytes ordered according to the alphabetic listing of their chemical symbols. For instance, results for As (arsenic) in samples MAA110, MAA111, and MAA112 would be reported in sequence, followed by the result for Pb (lead) in MAA110 etc.

Under "0 ADD ABS", enter the measured value in absorbance units (to three decimal places) for the analyte before any addition is performed.

Under "1 ADD CON", enter the final concentration in ug/L (to two decimal places) of the analyte (excluding sample contribution) after the first addition to the sample analyzed by MSA.

Under "1 ADD ABS", enter the measured value (in the same units and decimal places as "0 ADD ABS") of the sample solution spiked with the first addition.

Under "2 ADD CON", enter the final concentration in ug/L (to two decimal places) of the analyte (excluding sample contribution) after the second addition to the sample analyzed by MSA.

Under "2 ADD ABS", enter the measured value (in the same units and decimal places as "0 ADD ABS") of the sample solution spiked with the second addition.

Under "3 ADD CON", enter the final concentration in ug/L (to two decimal places) of the analyte (excluding sample contribution) after the third addition to the sample analyzed by MSA.

Under "3 ADD ABS", enter the measured value (in the same units and decimal places as "0 ADD ABS") of the sample solution spiked with the third addition.

Note that "0 ADD ABS", "1 ADD ABS", "2 ADD ABS", and "3 ADD ABS" must have the same dilution factor.

Under "Final Conc.", enter the final analyte concentration (in ug/L, to one decimal place) in the sample as determined by MSA computed according to the following formula:

$$\text{Final Conc.} = -(\text{x-intercept}) \times \text{DIL} \qquad (2.12)$$

Note that the final concentration of an analyte does not have to equal the value for that analyte which is reported on FORM I-IN for that sample.

Under "r", enter the correlation coefficient (to four decimal places) that is obtained for the least squares regression line representing the following points (x,y):(0.0, "0 ADD ABS"), ("1 ADD CON", "1 ADD ABS"), ("2 ADD CON", "2 ADD ABS"), ("3 ADD CON", "3 ADD ABS").

Note that the correlation coefficient must be calculated using the ordinary least squares linear regression (unweighted) according to the following formula:

$$r = \frac{N \sum x_i y_i - \sum x_i \sum y_i}{[N \sum x_i^2 - (\sum x_i)^2]^{-} [N \sum y_i^2 - (\sum y_i)^2]} \qquad (2.13)$$

Under "Q", enter "+" if r is less than 0.995. If r is greater than or equal to 0.995, then leave the field empty.

M. <u>ICP Serial Dilution</u> [FORM IX-IN]

This form is used to report results for ICP serial dilution.

Complete the header information according to the instructions in Part A and as follows.

In the "EPA Sample No." box, enter the EPA Sample Number (7 places maximum) of the sample for which serial dilution analysis results on this form were obtained. The number must be centered in the box.

Under "Initial Sample Result (I)", enter the measured value (in ug/L, to two decimal places) for each ICP analyte in the undiluted sample (for the EPA sample number reported on this form). Enter any appropriate qualifier, as explained in Part C, to the "C" qualifier column immediately following the "Initial Sample Result (I)" column.

Note that the Initial Sample Concentration for an analyte does not have to equal the value for that analyte reported on FORM I-IN for that sample. It is the value of the analyte concentration (uncorrected for dilution) that is within the linear range of the instrument.

Under "Serial Dilution Result (S)", enter the measured concentration value (in ug/L, to two decimal places) for each ICP analyte in the diluted sample. The value must be adjusted for that dilution. Enter any appropriate qualifier, as explained in Part B, to the "C" qualifier column immediately following the "Serial Dilution Result (S)" column.

Note that the Serial Dilution Result (S) is obtained by multiplying by five the instrument measured value (in ug/L) of the serially diluted sample and that the "C" qualifier for the serial dilution must be established based on the serial dilution result before correcting it for the dilution regardless of the value reported on the form.

Under "% Difference", enter the absolute value (to one decimal place) of the percent difference in concentration of required analytes, between the original sample and the diluted sample (adjusted for dilution) according to the following formula:

$$\% \text{ Difference} = \frac{|I - S|}{I} \times 100 \qquad (2.14)$$

The values for I and S used to calculate % Difference in equation 2.14 must be exactly those reported on this form. A value of zero must be substituted for S if the analyte concentration is less than the IDL. If the analyte concentration in (I) is less than the IDL, concentration leave "% Difference" field empty.

Under "Q", enter "E" if the % Difference is greater than 10% and the original sample concentration (reported on FORM I-IN) is greater than 50x the IDL reported on FORM XI-IN.

Under "M", enter the method of analysis for each analyte as explained in Part C.

N. <u>Instrument Detection Limits (Quarterly)</u> [FORM X-IN]

This form documents the Instrument Detection Limits for each instrument that the laboratory used to obtain data for the Sample Delivery Group. Only the instrument and wavelengths used to generate data for the SDG must be included.

Although the Instrument Detection Limits (IDLs) are determined quarterly (every three calendar months) a copy of the quarterly instrument detection limits must be included with each SDG data package on FORM(s) X-IN.

Complete the header information according to the instructions in Part A and as follows.

Enter the date (formatted MM/DD/YY) on which the IDL values were obtained (or became effective).

Enter ICP ID Number, Flame AA ID Number, and Furnace AA ID Number (12 spaces maximum each). These ID Numbers are used to uniquely identify each instrument that the laboratory uses to do CLP work.

Under "Wavelength", enter the wavelength in nanometers (to two decimal places) for each analyte for which an Instrument Detection Limit (IDL) has been established and is listed in the IDL column. If more than one wavelength is used for an analyte, use other FORMs XI-IN as appropriate to report the Instrument Detection Limit.

Under "Background", enter the type of background correction used to obtain Furnace AA data. Enter "BS" for Smith Hieftje, "BD" for Deuterium Arc, or "BZ" for Zeeman background correction.

Contract Required Detection Limits (in ug/L) as established in Exhibit C, must appear in the column headed "CRDL".

Under "IDL", enter the Instrument Detection Limit (ug/L, to one decimal place) as determined by the laboratory for each analyte analyzed by the instrument for which the ID Number is listed on this form. Except for Mercury, the instrument detection limit must be rounded to a whole number.

Under "M", enter the method of analysis used to determine the instrument detection limit for each wavelength used. Use appropriate codes as explained in Part C.

Use additional FORMs X-IN if more instruments and wavelengths are used. Note that the date on this form must not exceed the analysis dates in the SDG data package or precede them by more than three months.

Use the Comments section to indicate alternative wavelengths and the conditions under which they are used.

O. <u>ICP Interelement Correction Factors (Annually)</u> [FORM XI(PART 1)-IN]

This form documents for each ICP instrument the interelement correction factors applied by the Contractor laboratory to obtain data for the Sample Delivery Group.

Although the correction factors are determined annually (every twelve calendar months), a copy of the results of the annual interelement correction factors must be included with each SDG data package on FORM XI(PART 1)-IN.

Complete the header information according to instructions in Part A and as follows.

Enter the ICP ID Number (12 spaces maximum), which is a unique number designated by the laboratory to identify each ICP instrument used to produce data in the SDG package. If more than one ICP instrument is used, submit additional FORMs XI(PART 1)-IN as appropriate.

Report the date (formatted as MM/DD/YY) on which these correction factors were determined for use. This date must not exceed the ICP analysis dates in the SDG data package or precede them by more than twelve calendar months.

Under "Wavelength", list the wavelength in nanometers (to two decimal places) used for each ICP analyte. If more than one wavelength is used, submit additional FORMs XI(PART 1)-IN as appropriate.

Under "Al", "Ca", "Fe", "Mg", enter the correction factor (negative, positive or zero, to seven decimal places, 10 spaces maximum) for each ICP analyte. If correction factors for another analyte are applied, use the empty column and list the analyte's chemical symbol in the blank two-space header field provided for that column.

If corrections are not applied for an analyte, a zero must be entered for that analyte to indicate that the corrections were determined to be zero. If correction factors are applied for more than one additional analyte, use FORM XI(PART 2)-IN.

P. ICP Interelement Correction Factors (Annually) [FORM XI(PART 2)-IN]

This form is used if correction factors for analytes other than Al, Ca, Fe, Mg, and one more analyte of the Contractor's choice, were applied to the analytes analyzed by ICP. Complete this form as for FORM XI(PART 1)-IN by listing the chemical symbol for additional analytes in the heading of the empty columns in the two-space fields provided.

Columns of correction factors for additional analytes must be entered left to right starting on FORM XI(PART 1)-IN and proceeding to FORM XI(PART 2)-IN, according to the alphabetic order of their chemical symbols. Note that correction factors for Al, Ca, Fe, and Mg are all required and are to be listed first (as they appear on FORM XI(PART 1)-IN).

Q. ICP Linear Ranges (Quarterly) [FORM XII-IN]

This form documents the quarterly linear range analysis for each ICP instrument that the laboratory used to obtain data for the SDG.

Complete the header information according to the instructions in Part A and as follows.

Enter the ICP ID Number (12 spaces maximum), which is a unique number designated by the Contractor to identify each ICP instrument used to produce data for the SDG. If more than one ICP instrument is used, submit additional FORMs XII-IN as appropriate.

Report the date (formatted as MM/DD/YY) on which these linear ranges were determined for use. This date must not exceed the dates of analysis by ICP in the SDG data package and must not precede the analysis dates by more than three calendar months.

Under "Integ. Time (Sec.)," enter the integration time (in seconds to two decimal places) used for each measurement taken from the ICP instrument.

Under "Concentration", enter the concentration (in ug/L) that is the upper limit of the ICP instrument linear range as determined in Exhibit E. Any measurement in the SDG data package at or below this concentration is within the linear range. Any measurement above it is out of the linear range, and thus, is an estimated value and must be diluted into the linear range.

Under "M", enter "NR" for analytes analyzed by methods other than ICP. No entries are required under "M" for analytes analyzed by ICP.

If more instruments or analyte wavelengths are used, submit additional FORMs XII-IN as appropriate.

R. Preparation Log [Form XIII-IN]

This Form is used to report the preparation run log.

All field samples and all quality control preparations (including duplicates, spikes, LCS's, PB's and repreparations) associated with the SDG must be reported on Form XIII.

Submit one Form XIII per method if no more than thirty-two preparations, including quality control preparations, were performed. If more than thirty-two preparations per method were performed, then submit additional Forms XIII as appropriate.

Complete the header information according to the instructions in Part A, and as follows:

For "Method", enter the method of analysis (two characters maximum) for which the preparations listed on the Form were made. Use appropriate method codes as specified in Part C.

Under "EPA Sample No.", enter the EPA Sample Number of each sample in the SDG, and of all other preparations such as duplicates, spikes, LCSs, PBs, and repreparations (all formatted according to Table 1). All EPA Sample Numbers must be listed in ascending alphanumeric order, continuing to the next Form XIII if applicable. If a sample was reprepared, list the same EPA Sample Number in the order of increasing preparation date.

Under "Preparation Date", enter the date (formatted MM/DD/YY) on which each sample was prepared for analysis by the method indicated in the header section of the Form.

Under "Weight", enter the wet weight (in grams, to two decimal places) of each soil sample prepared for analysis by the method indicated in the header section of the Form. If the sample matrix is water, then leave the field empty.

Under "Volume", enter the final volume (in mL, to the nearest whole number) of the preparation for each sample prepared for analysis by the method indicated in the header section of the Form. This field must have a value for each sample listed.

S. Analysis Run Log [Form XIV-IN]

This Form is used to report the sample analysis run log.

A run is defined as the totality of analyses performed by an instrument throughout the sequence initiated by, and including, the first SOW-required calibration standard and terminated by, and including, the continuing calibration verification and blank following the last SOW-required analytical sample.

All field samples and all quality control analyses (including calibration standards, ICVs, CCVs, ICBs, CCBs, CRAs, CRIs, ICSs, LRSs, LCSs, PBs, duplicates, serial dilutions, pre-digestion spikes, post-digestion spikes, analytical spikes, and each addition analyzed for the method of standard addition determination) associated with the SDG must be reported on Form XIV. The run must be continuous and inclusive of all analyses performed on the particular instrument during the run.

Submit one Form XIV per run if no more than thirty-two (32) analyses, including instrument calibration, were analyzed in the run. If more than thirty-two analyses were performed in the run, submit additional Forms XIV as appropriate.

Complete the header information according to the instructions in Part A, and as follows:

For "Instrument ID Number", enter the instrument ID number, (12 spaces maximum), which must be an identifier designated by the laboratory to uniquely identify each instrument used to produce data which are required to be reported in the SDG deliverable. If more than one instrument is used, submit additional Forms XIV as appropriate.

For "Method", enter the method code (two characters maximum) according to the specifications in Part C.

For "Start Date", enter the date (formatted MM/DD/YY) on which the analysis run was started.

For "End Date", Enter the date (formatted MM/DD/YY) on which the analysis run was ended.

Under "EPA Sample No.", enter the EPA sample number of each analysis, including all QC operations applicable to the SDG (formatted according to Table 1). All EPA Sample Numbers must be listed in increasing temporal (date and time) order of analysis, continuing to the next Form XIV for the instrument run if applicable. The analysis date and time of other analyses not associated with the SDG, but analyzed by the instrument in the reported analytical run, must be reported. Those analyses must be identified with the EPA Sample No. of "ZZZZZ".

Under "D/F", enter the dilution factor (to two decimal places) by which the final digestate or distillate needed to be diluted for each analysis be performed. The dilution factor does not include the dilution inherent in the preparation as specified by the preparation procedures in Exhibit D.

Note that for a particular sample a dilution factor of "1" must be entered if the digestate or distillate were analyzed without adding any further volume of dilutant or any other solutions to the "Volume" or an aliquot of the "Volume" listed on Form XIII for that sample.

For EPA supplied solutions such as ICVs, ICSs, and LCSs, a dilution factor must be entered if the supplied solution had to be diluted to a dilution different from that specified by the instructions provided with the solution. The dilution factor reported in such a case must be that which would make the reported true values on the appropriate form for the solution equal those that were supplied with the solution by the EPA. For instance, ICV-2(0887) has a true value of 104.0 ug/L at a 20 fold dilution. If the solution is prepared at a 40 fold dilution, a dilution factor of "2" must be entered on Form XIV and the uncorrected instrument reading is compared to a true value of 52 ug/L. In this example, Form II will have a true value of 104.0 regardless of the dilution used. The found value for the ICV must be corrected for the dilution listed on Form XIV using the following formula:

Found value on Form II = Instrument readout in ug/L x D/F

Under "Time", enter the time, (in military format - HHMM), at which each analysis was performed. If an auto sampler is used with equal analysis time and intervals between analyses, then only the start time of the run (the time of analysis of the first calibration standard) and end time of the run (the time of analysis of the final CCV or CCB, which ever is later) need to be reported.

Under "% R", enter the percent recovery (to one decimal place) for each Furnace AA analytical spike analyzed. If the analytical spike was performed on more than one analyte, use additional Forms XIV as appropriate. Leave the "% R" field empty if the analysis reported is not for an analytical spike.

Under "Analytes", enter "X" in the column of the designated analyte to indicate that the analyte value was used from the reported analysis to report data in the SDG. Leave the column empty for each analyte if the analysis was not used to report the particular analyte.

SECTION IV

DATA REPORTING FORMS

U. S. EPA - CLP

COVER PAGE - INORGANIC ANALYSES DATA PACKAGE

Lab Name: _____ Contract: _____

Lab Code: _____ Case No.: _____ SAS No.: _____ SDG No.: _____

SOW No. _____

EPA Sample No.	Lab Sample ID

Were ICP interelement corrections applied? Yes/No ___

Were ICP background corrections applied? Yes/No ___

If yes, were raw data generated before application of background corrections? Yes/No ___

Comments: _____

I certify that this data package is in compliance with the terms and conditions of the contract, both technically and for completeness, for other than the conditions detailed above. Release of the data contained in this hardcopy data package and in the computer-readable data submitted on floppy diskette has been authorized by the Laboratory Manager or the Manager's designee, as verified by the following signature.

Signature: _____ Name: _____

Date: _____ Title: _____

U.S. EPA - CLP

1

INORGANIC ANALYSIS DATA SHEET

EPA SAMPLE NO.

Lab Name: _____ Contract: _____

Lab Code: _____ Case No.: _____ SAS No.: _____ SDG No.: _____

Matrix (soil/water): _____ Lab Sample ID: _____

Level (low/med): _____ Date Received: _____

% Solids: _____

Concentration Units (ug/L or mg/kg dry weight): _____

CAS No.	Analyte	Concentration	C	Q	M
7429-90-5	Aluminum				
7440-36-0	Antimony				
7440-38-2	Arsenic				
7440-39-3	Barium				
7440-41-7	Beryllium				
7440-43-9	Cadmium				
7440-70-2	Calcium				
7440-47-3	Chromium				
7440-48-4	Cobalt				
7440-50-8	Copper				
7439-89-6	Iron				
7439-92-1	Lead				
7439-95-4	Magnesium				
7439-96-5	Manganese				
7439-97-6	Mercury				
7440-02-0	Nickel				
7440-09-7	Potassium				
7782-49-2	Selenium				
7440-22-4	Silver				
7440-23-5	Sodium				
7440-28-0	Thallium				
7440-62-2	Vanadium				
7440-66-6	Zinc				
	Cyanide				

Color Before: _____ Clarity Before: _____ Texture: _____

Color After: _____ Clarity After: _____ Artifacts: _____

Comments:

_____

_____

_____

_____

U.S. EPA - CLP

2A

INITIAL AND CONTINUING CALIBRATION VERIFICATION

Lab Name: _____ Contract: _____

Lab Code: _____ Case No.: _____ SAS No.: _____ SDG No.: _____

Initial Calibration Source: _____

Continuing Calibration Source: _____

Concentration Units: ug/L

Analyte	Initial Calibration True	Initial Calibration Found	Initial Calibration %R(1)	Continuing Calibration True	Continuing Calibration Found	Continuing Calibration %R(1)	Continuing Calibration Found	Continuing Calibration %R(1)	M
Aluminum									
Antimony									
Arsenic									
Barium									
Beryllium									
Cadmium									
Calcium									
Chromium									
Cobalt									
Copper									
Iron									
Lead									
Magnesium									
Manganese									
Mercury									
Nickel									
Potassium									
Selenium									
Silver									
Sodium									
Thallium									
Vanadium									
Zinc									
Cyanide									

(1) Control Limits: Mercury 80-120; Other Metals 90-110; Cyanide 85-115

U.S. EPA - CLP

2B
CRDL STANDARD FOR AA AND ICP

Lab Name: _____ Contract: _____

Lab Code: _____ Case No.: _____ SAS No.: _____ SDG No.: _____

AA CRDL Standard Source: _____

ICP CRDL Standard Source: _____

Concentration Units: ug/L

	CRDL Standard for AA			CRDL Standard for ICP				
					Initial		Final	
Analyte	True	Found	%R	True	Found	%R	Found	%R
Aluminum								
Antimony								
Arsenic								
Barium								
Beryllium								
Cadmium								
Calcium								
Chromium								
Cobalt								
Copper								
Iron								
Lead								
Magnesium								
Manganese								
Mercury								
Nickel								
Potassium								
Selenium								
Silver								
Sodium								
Thallium								
Vanadium								
Zinc								

U.S. EPA - CLP

3
BLANKS

Lab Name: _____ Contract: _____

Lab Code: _____ Case No.: _____ SAS No.: _____ SDG No.: _____

Preparation Blank Matrix (soil/water): _____

Preparation Blank Concentration Units (ug/L or mg/kg): _____

Analyte	Initial Calib. Blank (ug/L)	C	Continuing Calibration Blank (ug/L) 1	C	2	C	3	C	Prepa-ration Blank	C	M
Aluminum											
Antimony											
Arsenic											
Barium											
Beryllium											
Cadmium											
Calcium											
Chromium											
Cobalt											
Copper											
Iron											
Lead											
Magnesium											
Manganese											
Mercury											
Nickel											
Potassium											
Selenium											
Silver											
Sodium											
Thallium											
Vanadium											
Zinc											
Cyanide											

U.S. EPA - CLP

4

ICP INTERFERENCE CHECK SAMPLE

Lab Name: _____ Contract: _____

Lab Code: _____ Case No: _____ SAS No.: _____ SDG No.: _____

ICP ID Number: _____ ICS Source: _____

Concentration Units: ug/L

Analyte	True Sol. A	True Sol. AB	Initial Found Sol. A	Initial Found Sol. AB	%R	Final Found Sol. A	Final Found Sol. AB	%R
Aluminum								
Antimony								
Arsenic								
Barium								
Beryllium								
Cadmium								
Calcium								
Chromium								
Cobalt								
Copper								
Iron								
Lead								
Magnesium								
Manganese								
Mercury								
Nickel								
Potassium								
Selenium								
Silver								
Sodium								
Thallium								
Vanadium								
Zinc								

U. S. EPA - CLP

5A
SPIKE SAMPLE RECOVERY

EPA SAMPLE NO.

Lab Name: _____ Contract: _____

Lab Code: _____ Case No.: _____ SAS No.: _____ SDG No.: _____

Matrix: _____ Level (low/med): _____

% Solids for Sample: _____

Concentration Units (ug/L or mg/kg dry weight): _____

Analyte	Control Limit %R	Spiked Sample Result (SSR)	C	Sample Result (SR)	C	Spike Added (SA)	%R	Q	M
Aluminum									
Antimony									
Arsenic									
Barium									
Beryllium									
Cadmium									
Calcium									
Chromium									
Cobalt									
Copper									
Iron									
Lead									
Magnesium									
Manganese									
Mercury									
Nickel									
Potassium									
Selenium									
Silver									
Sodium									
Thallium									
Vanadium									
Zinc									
Cyanide									

Comments:

U. S. EPA - CLP

5B
POST DIGEST SPIKE SAMPLE RECOVERY

EPA SAMPLE NO.

Lab Name: _____ Contract: _____

Lab Code: _____ Case No.: _____ SAS No.: _____ SDG No.: _____

Matrix: _____ Level (low/med): _____

Concentration Units: ug/L

Analyte	Control Limit %R	Spiked Sample Result (SSR)	C	Sample Result (SR)	C	Added (SA)	%R	Q	M
Aluminum									
Antimony									
Arsenic									
Barium									
Beryllium									
Cadmium									
Calcium									
Chromium									
Cobalt									
Copper									
Iron									
Lead									
Magnesium									
Manganese									
Mercury									
Nickel									
Potassium									
Selenium									
Silver									
Sodium									
Thallium									
Vanadium									
Zinc									

Comments:

U.S. EPA - CLP

6
DUPLICATES

EPA SAMPLE NO.

Lab Name: _____ Contract: _____

Lab Code: _____ Case No.: _____ SAS No.: _____ SDG No.: _____

Matrix (soil/water): _____ Level (low/med): _____

% Solids for Sample: _____ % Solids for Duplicate: _____

Concentration Units (ug/L or mg/kg dry weight): _____

Analyte	Control Limit	Sample (S)	C	Duplicate (D)	C	RPD	Q	M
Aluminum								
Antimony								
Arsenic								
Barium								
Beryllium								
Cadmium								
Calcium								
Chromium								
Cobalt								
Copper								
Iron								
Lead								
Magnesium								
Manganese								
Mercury								
Nickel								
Potassium								
Selenium								
Silver								
Sodium								
Thallium								
Vanadium								
Zinc								
Cyanide								

U.S. EPA - CLP

7

LABORATORY CONTROL SAMPLE

Lab Name: _____ Contract: _____

Lab Code: _____ Case No.: _____ SAS No.: _____ SDG No.: _____

Solid LCS Source: _____

Aqueous LCS Source: _____

Analyte	Aqueous (ug/L) True	Aqueous (ug/L) Found	Aqueous (ug/L) %R	Solid (mg/kg) True	Solid (mg/kg) Found	C	Limits	Limits	%R
Aluminum									
Antimony									
Arsenic									
Barium									
Beryllium									
Cadmium									
Calcium									
Chromium									
Cobalt									
Copper									
Iron									
Lead									
Magnesium									
Manganese									
Mercury									
Nickel									
Potassium									
Selenium									
Silver									
Sodium									
Thallium									
Vanadium									
Zinc									
Cyanide									

U.S. EPA - CLP

8
STANDARD ADDITION RESULTS

Lab Name: ____________________ Contract: __________

Lab Code: ______ Case No.: ______ SAS No.: ______ SDG No.: ______

Concentration Units: ug/L

EPA Sample No.	An	0 ADD ABS	1 ADD CON	1 ADD ABS	2 ADD CON	2 ADD ABS	3 ADD CON	3 ADD ABS	Final Conc.	r	Q

U.S. EPA - CLP

9

ICP SERIAL DILUTIONS

EPA SAMPLE NO.

Lab Name: _____ Contract: _____

Lab Code: _____ Case No.: _____ SAS No.: _____ SDG No.: _____

Matrix (soil/water): _____ Level (low/med): _____

Concentration Units: ug/L

Analyte	Initial Sample Result (I)	C	Serial Dilution Result (S)	C	% Difference	Q	M
Aluminum							
Antimony							
Arsenic							
Barium							
Beryllium							
Cadmium							
Calcium							
Chromium							
Cobalt							
Copper							
Iron							
Lead							
Magnesium							
Manganese							
Mercury							
Nickel							
Potassium							
Selenium							
Silver							
Sodium							
Thallium							
Vanadium							
Zinc							

U. S. EPA - CLP

10
Instrument Detection Limits (Quarterly)

Lab Name: _____ Contract: _____

Lab Code: _____ Case No.: _____ SAS No.: _____ SDG No.: _____

ICP ID Number: _____ Date: _____

Flame AA ID Number: _____

Furnace AA ID Number: _____

Analyte	Wave-length (nm)	Back-ground	CRDL (ug/L)	IDL (ug/L)	M
Aluminum			200		
Antimony			60		
Arsenic			10		
Barium			200		
Beryllium			5		
Cadmium			5		
Calcium			5000		
Chromium			10		
Cobalt			50		
Copper			25		
Iron			100		
Lead			3		
Magnesium			5000		
Manganese			15		
Mercury			0.2		
Nickel			40		
Potassium			5000		
Selenium			5		
Silver			10		
Sodium			5000		
Thallium			10		
Vanadium			50		
Zinc			20		

Comments:

_____

_____

_____

U. S. EPA - CLP

11A
ICP Interelement Correction Factors (Annually)

Lab Name: _____ Contract: _____

Lab Code: _____ Case No.: _____ SAS No.: _____ SDG No.: _____

ICP ID Number: _____ Date: _____

Analyte	Wave-length (nm)	Interelement Correction Factors for: Al	Ca	Fe	Mg	---
Aluminum						
Antimony						
Arsenic						
Barium						
Beryllium						
Cadmium						
Calcium						
Chromium						
Cobalt						
Copper						
Iron						
Lead						
Magnesium						
Manganese						
Mercury						
Nickel						
Potassium						
Selenium						
Silver						
Sodium						
Thallium						
Vanadium						
Zinc						

Comments:

_____

_____

_____

U. S. EPA - CLP

11B
ICP Interelement Correction Factors (Annually)

Lab Name: _____ Contract: _____

Lab Code: _____ Case No.: _____ SAS No.: _____ SDG No.: _____

ICP ID Number: _____ Date: _____

Analyte	Wave-length (nm)	Interelement Correction Factors for: ---	---	---	---	---
Aluminum						
Antimony						
Arsenic						
Barium						
Beryllium						
Cadmium						
Calcium						
Chromium						
Cobalt						
Copper						
Iron						
Lead						
Magnesium						
Manganese						
Mercury						
Nickel						
Potassium						
Selenium						
Silver						
Sodium						
Thallium						
Vanadium						
Zinc						

Comments:

_____

_____

_____

U. S. EPA - CLP

12
ICP Linear Ranges (Quarterly)

Lab Name: _____ Contract: _____

Lab Code: _____ Case No.: _____ SAS No.: _____ SDG No.: _____

ICP ID Number: _____ Date: _____

Analyte	Integ. Time (sec.)	Concentration (ug/L)	M
Aluminum			
Antimony			
Arsenic			
Barium			
Beryllium			
Cadmium			
Calcium			
Chromium			
Cobalt			
Copper			
Iron			
Lead			
Magnesium			
Manganese			
Mercury			
Nickel			
Potassium			
Selenium			
Silver			
Sodium			
Thallium			
Vanadium			
Zinc			

Comments:

_____

_____

_____

_____

U.S. EPA - CLP

13
PREPARATION LOG

Lab Name: _____ Contract: _____

Lab Code: _____ Case No.: _____ SAS No.: _____ SDG No.: _____

Method: __

EPA Sample No.	Preparation Date	Weight (gram)	Volume (mL)

FORM XIII - IN

7/88

U.S. EPA - CLP

14
ANALYSIS RUN LOG

Lab Name: ____________________ Contract: __________

Lab Code: ______ Case No.: ______ SAS No.: ______ SDG No.: ______

Instrument ID Number: ____________ Method: __

Start Date: ________ End Date: ________

EPA Sample No.	D/F	Time	% R	Analytes																							
				AL	SB	AS	BA	BE	CD	CA	CR	CO	CU	FE	PB	MG	MN	HG	NI	K	SE	AG	NA	TL	V	ZN	CN

EXHIBIT C

INORGANIC TARGET ANALYTE LIST

INORGANIC TARGET ANALYTE LIST (TAL)

Analyte	Contract Required Detection Limit (1,2) (ug/L)
Aluminum	200
Antimony	60
Arsenic	10
Barium	200
Beryllium	5
Cadmium	5
Calcium	5000
Chromium	10
Cobalt	50
Copper	25
Iron	100
Lead	3
Magnesium	5000
Manganese	15
Mercury	0.2
Nickel	40
Potassium	5000
Selenium	5
Silver	10
Sodium	5000
Thallium	10
Vanadium	50
Zinc	20
Cyanide	10

(1) Subject to the restrictions specified in the first page of Part G, Section IV of Exhibit D (Alternate Methods - Catastrophic Failure) any analytical method specified in SOW Exhibit D may be utilized as long as the documented instrument or method detection limits meet the Contract Required Detection Limit (CRDL) requirements. Higher detection limits may only be used in the following circumstance:

If the sample concentration exceeds five times the detection limit of the instrument or method in use, the value may be reported even though the instrument or method detection limit may not equal the Contract Required Detection Limit. This is illustrated in the example below:

For lead:

Method in use = ICP
Instrument Detection Limit (IDL) = 40
Sample concentration = 220
Contract Required Detection Limit (CRDL) = 3

The value of 220 may be reported even though instrument detection limit is greater than CRDL. The instrument or method detection limit must be documented as described in Exhibit E.

(2) The CRDL are the instrument detection limits obtained in pure water that must be met using the procedure in Exhibit E. The detection limits for samples may be considerably higher depending on the sample matrix.

EXHIBIT D

ANALYTICAL METHODS

		Page No.
SECTION I	- INTRODUCTION	D-1
Figure 1	- Inorganic Methods Flow Chart	D-3
SECTION II	- SAMPLE PRESERVATION AND HOLDING TIMES	D-4
Part A	- Sample Preservation	D-4
Part B	- Holding Times	D-4
SECTION III	- SAMPLE PREPARATION	D-5
Part A	- Water Sample Preparation	D-5
Part B	- Soil/Sediment Sample Preparation	D-5
SECTION IV	- SAMPLE ANALYSIS	D-9
Part A	- Inductively Coupled Plasma-Atomic Emission Spectrometric Method	D-10
Part B	- Atomic Absorption Methods, Furnace Technique	D-24
Part C	- Atomic Absorption Methods, Flame Technique	D-37
Part D	- Cold Vapor Methods for Mercury Analysis	D-42
Part E	- Methods for Total Cyanide Analysis	D-61
Part F	- Percent Solids Determination Procedure	D-83
Part G	- Alternate Methods (Catastrophic ICP Failure)	D-84

SECTION I

INTRODUCTION

Inorganic Methods Flow Chart: Figure I oulines the general analytical scheme the Contractor will follow in performing analyses under this contract.

Permitted Methods: Subject to the restrictions specified in Section IV, Part G - Alternate Methods (Catastrophic ICP Failure), any analytical method specified in Exhibit D may be used as long as the documented instrument or method detection limits meet the Contract Required Detection Limits (Exhibit C). Analytical methods with higher detection limits may be used only if the sample concentration exceeds five times the documented detection limit of the instrument or method.

Initial Run Undiluted: All samples must initially be run undiluted (i.e., final product of the sample preparation procedure). When an analyte concentration exceeds the calibrated or linear range (as appropriate), re-analysis for that analyte(s) is required after appropriate dilution. The Contractor must use the least dilution necessary to bring the analyte(s) within the valid analytical range (but not below the CRDL) and report the highest valid value for each analyte as measured from the undiluted and diluted analyses. Unless the Contractor can submit proof that dilution was required to obtain valid results, both diluted and undiluted sample measurements must be contained in the raw data. All sample dilutions shall be made with deionized water appropriately acidified to maintain constant acid strength.

Quality Assurance/Quality Control Measurements: The Contractor is reminded and cautioned that Exhibit D is a compendium of required and/or permitted analytical methods to be used in the performance of analyses under this contract. The quality assurance/quality control procedures or measurements to be performed in association with these methods or analyses are specified in Exhibit E. In the event references to quality assurance measurements in any of the methods appear to be in conflict with or to be less stringent than the requirements of Exhibit E, the requirements of Exhibit E will prevail.

Raw Data Requirements: The Contractor is reminded and cautioned that the collection and provision of raw data may or may not be referred to within the individual methods of Exhibit D or the Quality Assurance Protocol of Exhibit E. The Raw Data Deliverables requirements are specified in Exhibit B, Section II.D.2.d. Raw data collected and provided in association with the performance of analyses under this contract shall conform to the appropriate provisions of Exhibit B.

Glassware Cleaning: Lab glassware to be used in metals analysis must be acid cleaned according to EPA's manual "Methods for Chemical Analysis of Water and Wastes" or an equivalent procedure.

Standard Stock Solutions: Stock solutions to be used for preparing instrument or method calibration standards may be purchased or prepared as described in the individual methods of Exhibit D. All other solutions to be used for Quality Assurance/Quality Control measurements shall conform to the specific requirements of Exhibit E.

Aqueous Sample pH Measurement: Before sample preparation is initiated on an aqueous sample received in shipment, the Contractor must check the pH of the sample and note in a preparation log if the pH is <2 for a metals sample or if the pH is >12 for a cyanide sample. The Contractor shall not take any pH adjustment action if the sample has not been properly preserved.

Sample Mixing: Unless instructed otherwise by the EPA Project Officer or Deputy Project Officer, all samples shall be mixed thoroughly prior to aliquoting for digestion. No specific procedure is provided herein for homogenization of soil/sediment samples; however, an effort should be made to obtain a representative aliquot.

Background Corrections: Background corrections are required for Flame AA measurements below 350 nm and for all Furnace AA measurements. For ICP background correction requirements, see Exhibit D Section IV, Part A, paragraph 2.1.

Replicate Injections/Exposures: Each furnace analysis requires a minimum of two injection (burns), except for full method of Standard Addition (MSA). All ICP measurements shall require a minimum of two replicate exposures. Appropriate hard copy raw data for each exposure/injection shall be included in the data package in accordance with Exhibit B, Section II, Part D, paragraph 2.d. The average of each set of exposures/injections shall be used for standardization, sample analysis, and reporting as specified in Exhibit D.

Figure 1

INORGANICS METHODS FLOW CHART

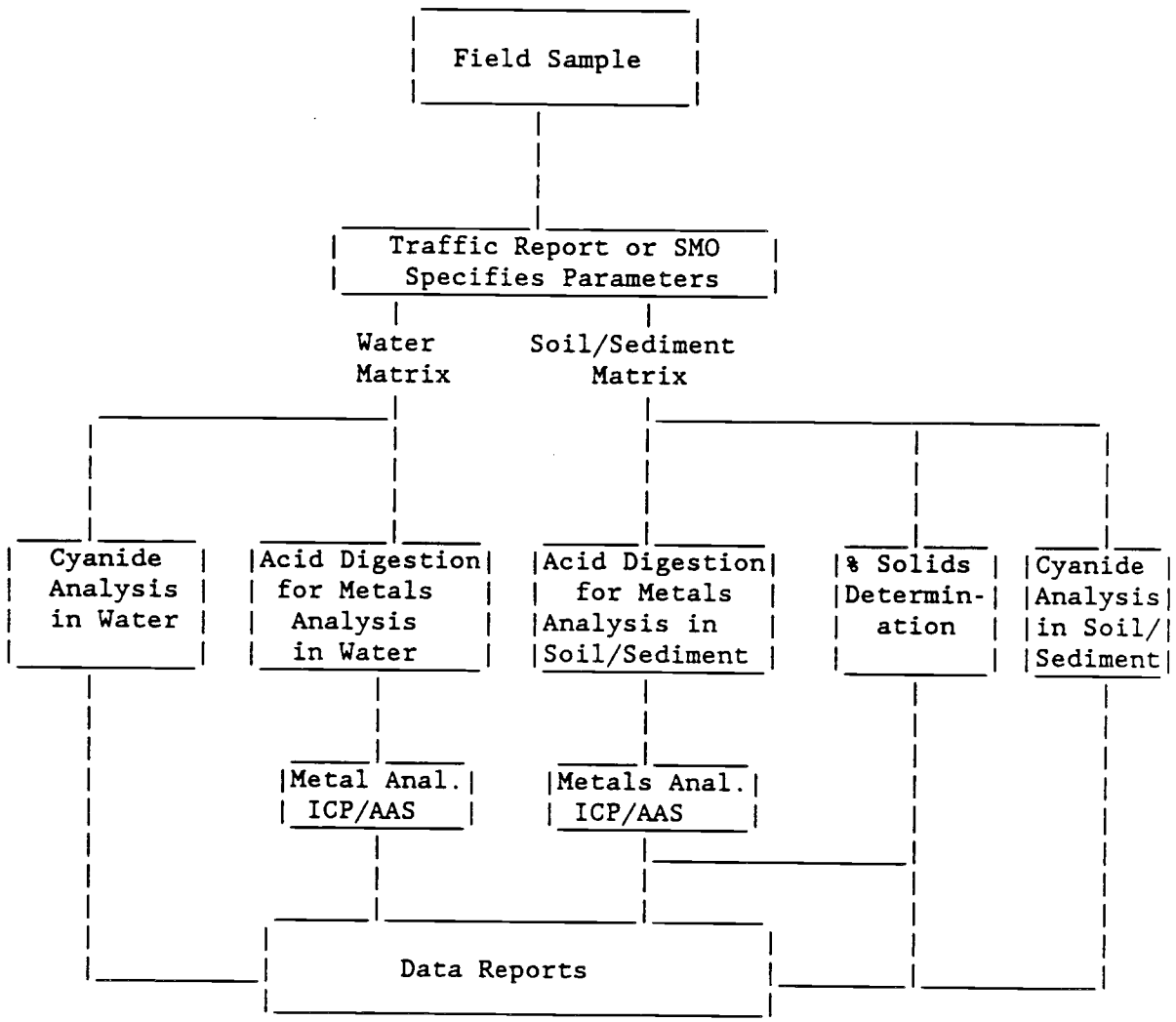

SECTION II

SAMPLE PRESERVATION AND HOLDING TIMES

A. Sample Preservation

1. Water Sample Preservation

Measurement Parameter	Container(1)	Preservative(2)
Metals(3)	P,G	HNO_3 to pH <2
Cyanide, total and amenable to chlorination	P,G	0.6g ascorbic acid(4) NaOH to pH >12 Cool, maintain at $4^oC(\pm 2^oC)$ until analysis

FOOTNOTES:

(1) Polyethylene (P) or glass (G).
(2) Sample preservation is performed by the sampler immediately upon sample collection.
(3) Samples are filtered immediately on-site by the sampler before adding preservative for dissolved metals.
(4) Only used in the presence of residual chlorine.

2. Soil/Sediment Sample Preservation

The preservation required for soil/sediment samples is maintenance at 4^oC ($\pm$ 2°) until analysis.

B. Holding Times for Water and Soil/Sediment Samples

Following are the maximum sample holding times allowable under this contract. To be compliant with this contract, the Contractor must analyze samples within these times even if these times are less than the maximum data submission times allowed in this contract.

Analyte	No. of Days Following Sample Receipt by Contractor
Mercury	26 days
Metals (other than mercury)	180 days
Cyanide	12 days

SECTION III

SAMPLE PREPARATION

A. Water Sample Preparation

1. Acid Digestion Procedure for Furnace Atomic Absorption Analysis

Shake sample and transfer 100 mL of well-mixed sample to a 250-mL beaker, add 1 mL of (1+1) HNO_3 and 2 mL 30% H_2O_2 to the sample. Cover with watch glass or similar cover and heat on a steam bath or hot plate for 2 hours at 95°C or until sample volume is reduced to between 25 and 50 mL, making certain sample does not boil. Cool sample and filter to remove insoluble material. (NOTE: In place of filtering, the sample, after dilution and mixing, may be centrifuged or allowed to settle by gravity overnight to remove insoluble material.) Adjust sample volume to 100 mL with deionized distilled water. The sample is now ready for analysis.

Concentrations so determined shall be reported as "total".

If Sb is to be determined by furnace AA, use the digestate prepared for ICP/flame AA analysis.

2. Acid Digestion Procedure for ICP and Flame AA Analyses

Shake sample and transfer 100 mL of well-mixed sample to a 250-mL beaker, add 2 mL of (1+1) HNO_3 and 10 mL of (1+1) HCl to the sample. Cover with watch glass or similar cover and heat on a steam bath or hot plate for 2 hours at 95°C or until sample volume is reduced to between 25 and 50 mL, making certain sample does not boil. Cool sample and filter to remove insoluble material. (NOTE: In place of filtering, the sample, after dilution and mixing, may be centrifuged or allowed to settle by gravity overnight to remove insoluble material.) Adjust sample volume to 100 mL with deionized distilled water. The sample is now ready for analysis.

Concentrations so determined shall be reported as "total".

B. Soil/Sediment Sample Preparation

1. Acid Digestion Procedure for ICP, Flame AA and Furnace AA Analyses

a. Scope and Application

This method is an acid digestion procedure used to prepare sediments, sludges, and soil samples for analysis by flame or furnace atomic absorption spectroscopy (AAS) or by inductively coupled plasma spectroscopy (ICP). Samples prepared by this method may be analyzed by AAS or ICP for the following metals:

Aluminum	Chromium	Potassium
Antimony	Cobalt	Selenium
Arsenic	Copper	Silver
Barium	Iron	Sodium
Beryllium	Lead	Thallium
Cadmium	Magnesium	Vanadium
Calcium	Manganese	Zinc
	Nickel	

b. Summary of Method

A representative 1 g (wet weight) sample is digested in nitric acid and hydrogen peroxide. The digestate is then refluxed with either nitric acid or hydrochloric acid. Hydrochloric acid is used as the final reflux acid for the furnace AA analysis of Sb, the flame AA or ICP analysis of Al, Sb, Ba, Be, Ca, Cd, Cr, Co, Cu, Fe, Pb, Mg, Mn, Ni, K, Ag, Na, Tl, V and Zn. Nitric acid is employed as the final reflux acid for the furnace AA analysis of As, Be, Cd, Cr, Co, Cu, Fe, Pb, Mn, Ni, Se, Ag, Tl, V, and Zn. A separate sample shall be dried for a percent solids determination (Section IV,Part F).

c. Apparatus and Materials

(1) 250 mL beaker or other appropriate vessel.

(2) Watch glasses

(3) Thermometer that covers range of 0° to $200^{o}C$

(4) Whatman No. 42 filter paper or equivalent

d. Reagents

(1) ASTM Type II water (ASTM D1193): Water must be monitored.

(2) Concentrated Nitric Acid (sp. gr. 1.41)

(3) Concentrated Hydrochloric Acid (sp. gr. 1.19)

(4) Hydrogen Peroxide (30%)

e. Sample Preservation and Handling

Soil/sediment (nonaqueous) samples must be refrigerated at $4^{o}C$ ($\pm 2^{o}$) from receipt until analysis.

f. Procedure

(1) Mix the sample thoroughly to achieve homogeneity. For each digestion procedure, weigh (to the nearest 0.01gms) a 1.0 to 1.5 gm portion of sample and transfer to a beaker.

(2) Add 10 mL of 1:1 nitric acid (HNO_3), mix the slurry, and cover with a watch glass. Heat the sample to 95°C and reflux for 10 minutes without boiling. Allow the sample to cool, add 5 mL of concentrated HNO_3, replace the watch glass, and reflux for 30 minutes. Do not allow the volume to be reduced to less than 5 mL while maintaining a covering of solution over the bottom of the beaker.

(3) After the second reflux step has been completed and the sample has cooled, add 2 mL of Type II water and 3 mL of 30% hydrogen peroxide (H_2O_2). Return the beaker to the hot plate for warming to start the peroxide reaction. Care must be taken to ensure that losses do not occur due to excessively vigorous effervescence. Heat until effervescence subsides, and cool the beaker.

(4) Continue to add 30% H_2O_2 in 1 mL aliquots with warming until the effervescence is minimal or until the general sample appearance is unchanged. (NOTE: Do not add more than a total of 10 mL 30% H_2O_2.)

(5) If the sample is being prepared for the furnace AA analysis of Sb, the flame AA or ICP analysis of Al, Sb, Ba, Be, Ca, Cd, Cr, Co, Cu, Fe, Pb, Mg, Mn, Ni, K, Ag, Na, Tl, V, and Zn, add 5 mL of 1:1 HCl and 10 mL of Type II water, return the covered beaker to the hot plate, and heat for an additional 10 minutes. After cooling, filter through Whatman No. 42 filter paper (or equivalent) and dilute to 100 mL with Type II water. NOTE: In place of filtering, the sample (after dilution and mixing) may be centrifuged or allowed to settle by gravity overnight to remove insoluble material.The diluted sample has an approximate acid concentration of 2.5% (v/v) HCl and 5% (v/v) HNO_3. Dilute the digestate 1:1 (200 mL final volume) with acidified water to maintain constant acid strength. The sample is now ready for analysis.

(6) If the sample is being prepared for the furnace analysis of As, Be, Cd, Cr, Co, Cu, Fe, Pb, Mn, Ni, Se, Ag, Tl, V, and Zn, continue heating the acid-peroxide digestate until the volume has been reduced to approximately 2 mL, add 10 mL of Type II water, and warm the mixture. After cooling, filter through Whatman No. 42 filter paper (or equivalent) and dilute to 100 mL with Type II water (or centrifuge the sample). NOTE: In place of filtering,

the sample (after dilution and mixing) may be centrifuged or allowed to settle by gravity overnight to remove insoluble material. The diluted digestate solution contains approximately 2% (v/v) HNO_3. Dilute the digestate 1:1 (200 mL final volume) with acidified water to maintain constant acid strength. For analysis, withdraw aliquots of appropriate volume, and add any required reagent or matrix modifier. The sample is now ready for analysis.

g. Calculations

(1) A separate determination of percent solids must be performed (Section IV, Part F).

(2) The concentrations determined in the digest are to be reported on the basis of the dry weight of the sample.

$$\text{Concentration (dry wt.) (mg/kg)} = \frac{C \times V}{W \times S}$$

Where,
C = Concentration (mg/L)
V = Final volume in liters after sample preparation
W = Weight in kg of wet sample
S = % Solids/100

h. Bibliography

Modification (by committee) of Method 3050, SW-846, 2nd ed., Test Methods for Evaluating Solid Waste, EPA Office of Solid Waste and Emergency Response, July 1982.

SECTION IV

SAMPLE ANALYSIS

	Page No.
PART A - INDUCTIVELY COUPLED PLASMA-ATOMIC EMISSION SPECTROMETRIC METHOD	D-10
PART B - ATOMIC ABSORPTION METHODS, FURNACE TECHNIQUE	D-24
PART C - ATOMIC ABSORPTION METHODS, FLAME TECHNIQUE	D-37
PART D - COLD VAPOR METHODS FOR MERCURY ANALYSIS	D-42
PART E - METHODS FOR CYANIDE ANALYSIS	D-61
PART F - PERCENT SOLIDS DETERMINATION PROCEDURE	D-83
PART G - ALTERNATE METHODS (CATASTROPHIC ICP FAILURE)	D-84

PART A - INDUCTIVELY COUPLED PLASMA-ATOMIC EMISSION SPECTROMETRIC METHOD[+]

Method 200.7 CLP-M[*]
INDUCTIVELY COUPLED PLASMA-ATOMIC EMISSION SPECTROMETRIC METHOD
FOR TRACE ELEMENT ANALYSIS OF WATER AND WASTES

1. Scope and Application

1.1 Dissolved elements are determined in filtered and acidified samples. Appropriate steps must be taken in all analyses to ensure that potential interferences are taken into account. This is especially true when dissolved solids exceed 1500 mg/L. (See 5.)

1.2 Total elements are determined after appropriate digestion procedures are performed. Since digestion techniques increase the dissolved solids content of the samples, appropriate steps must be taken to correct for potential interference effects. (See 5.)

1.3 Table 1 lists elements along with recommended wavelengths and typical estimated instrumental detection limits using conventional pneumatic nebulization. Actual working detected limits are sample dependent and as the sample matrix varies, these concentrations may also vary. In time, other elements may be added as more information becomes available and as required.

1.4 Because of the differences between various makes and models of satisfactory instruments, no detailed instrumental operating instructions can be provided. Instead, the analyst is referred to the instructions provided by the manufacturer of the particular instrument.

2. Summary of Method

2.1 The method describes a technique for the simultaneous or sequential multielement determination of trace elements in solution. The basis of the method is the measurement of atomic emission by an optical spectroscopic technique. Samples are nebulized and the aerosol that is produced is transported to the plasma torch where excitation occurs. Characteristic atomic-line emission spectra are produced by a radio-frequency inductively coupled plasma (ICP). The spectra are dispersed by a grating spectrometer and the intensities of the line are monitored by photomultiplier tubes. The photocurrents from the photomultiplier tubes are processed and controlled by a computer system. A background correction technique is required to compensate for variable background contribution to the determination of trace elements. Background must be measured adjacent to analyte lines on samples during analysis. The position selected for the background intensity measurement, on either or

[+]A bibliography citing method references appears in paragraph 11 of the method.

[*]CLP-M modified for the Contract Laboratory Program.

both sides of the analytical line, will be determined by the complexity of the spectrum adjacent to the analyte line. The position used must be free of spectral interference and reflect the same change in background intensity as occurs at the analyte wavelength measured. Background correction is not required in cases of line broadening where a background correction measurement would actually degrade the analytical result. The possibility of additional interferences named in 5.1 (and tests for their presence as described in 5.2) should also be recognized and appropriate corrections made.

3. Definitions

3.1 Dissolved -- Those elements which will pass through a 0.45 um membrane filter.

3.2 Suspended -- Those elements which are retained by a 0.45 um membrane filter.

3.3 Total -- The concentration determined on an unfiltered sample following vigorous digestion.

3.4 Instrumental detection limits -- See Exhibit E.

3.5 Sensitivity -- The slope of the analytical curve, i.e. functional relationship between emission intensity and concentration.

3.6 Instrument check standard -- A multi-element standard of known concentrations prepared by the analyst to monitor and verify instrument performance on a daily basis. (See 7.6.1.)

3.7 Interference check sample -- A solution containing both interfering and analyte elements of known concentration that can be used to verify background and interelement correction factors. (See 7.6.2.)

3.8 Quality control sample -- A solution obtained from an outside source having known concentration values to be used to verify the calibration standards. (See 7.6.3.)

3.9 Calibration standards -- A series of known standard solutions used by the analyst for calibration of the instrument (i.e., preparation of the analytical curve). (See 7.4.)

3.10 Linear dynamic range -- The concentration range over which the analytical curve remains linear as determined in Exhibit E.

3.11 Reagent blank -- A volume of deionized, distilled water containing the same acid matrix as the calibration standards carried through the entire analytical scheme. (See 7.5.2.)

3.12 Calibration blank -- A volume of deionized, distilled water acidified with HNO_3 and HCl. (See 7.5.1.)

3.13 Method of standard addition -- The standard addition technique involves the use of the unknown and the unknown-plus-a-known amount of standard by adding known amounts of standard to one or more aliquots of the processed sample solution.

4. Safety

4.1 The toxicity or carcinogenicity of each reagent used in this method has not been precisely defined; however, each chemical compound should be treated as a potential health hazard. The laboratory is responsible for maintaining a current awareness file of OSHA regulations regarding the safe handling of the chemicals specified in this method. A reference file of material handling data sheets should be made available to all personnel involved in the chemical analysis.

5. Interferences

5.1 Several types of interference effects may contribute to inaccuracies in the determination of trace elements. They can be summarized as follows:

5.1.1 Spectral interferences can be categorized as 1) overlap of a spectral line from another element; 2) unresolved overlap of molecular band spectra; 3) background contribution from continuous or recombination phenomena; and 4) background contribution from stray light from the line emission of high concentration elements. The first of these effects can be compensated by utilizing a computer correction of the raw data, requiring the monitoring and measurement of the interfering element. The second effect may require selection of an alternate wavelength. The third and fourth effects can usually be compensated by a background correction adjacent to the analyte line. In addition, users of simultaneous multi-element instrumentation must assume the responsibility of verifying the absence of spectral interference from an element that could occur in a sample but for which there is no channel in the instrument array.

Listed in Table 2 are some interference effects for the recommended wavelengths given in Table 1. The data in Table 2 are intended for use only as a rudimentary guide for the indication of potential spectral interferences. For this purpose, linear relations between concentration and intensity for the analytes and the interferents can be assumed. The interference information, which was collected at the Ames Laboratory**, is expressed as analyte concentration equivalents (i.e., false analyte concentrations) arising from 100 mg/L of the interferent element.

**Ames Laboratory, USDOE, Iowa State University, Ames, Iowa 50011.

The suggested use of this information is as follows: Assume that arsenic (at 193.696 nm) is to be determined in a sample containing approximately 10 mg/L of of aluminum. According to Table 2, 100 mg/L of aluminum would yield a false signal for arsenic equivalent to approximately 1.3 mg/L. Therefore, 10 mg/L of aluminum would result in a false signal for arsenic equivalent to approximately 0.13 mg/L. The reader is cautioned that other analytical systems may exhibit somewhat different levels of interference than those shown in Table 2, and that the interference effects must be evaluated for each individual system. Only those interferents listed were investigated and the blank spaces in Table 2 indicate that measurable interferences were not observed from the interferent concentrations listed in Table 3. Generally, interferences were discernible if they produced peaks or background shifts corresponding to 2-5% of the peaks generated by the analyte concentrations also listed in Table 3.

At present, information on the listed silver and potassium wavelengths are not available but it has been reported that second order energy from the magnesium 383.231 nm wavelength interferes with the listed potassium line at 766.491 nm.

5.1.2 Physical interferences are generally considered to be effects associated with the sample nebulization and transport processes. Such properties as change in viscosity and surface tension can cause significant inaccuracies especially in samples which may contain high dissolved solids and/or acid concentrations. The use of a peristaltic pump may lessen these interferences. If these types of interferences are operative, they must be reduced by dilution of the sample and/ or utilization of standard addition techniques. Another problem which can occur from high dissolved solids is salt buildup at the tip of the nebulizer. This affects aerosol flow rate causing instrumental drift.

Wetting the argon prior to nebulization, the use of a tip washer, or sample dilution have been used to control this problem. Also, it has been reported that better control of the argon flow rate improves instrument performance. This is accomplished with the use of mass flow controllers.

5.1.3 Chemical interferences are characterized by molecular compound formation, ionization effects and solute vaporization effects. Normally these effects are not pronounced with the ICP technique, however, if observed they can be minimized by careful selection of operating conditions (that is, incident power, observation position, and so forth), by buffering of the sample, by matrix matching, and by standard addition procedures. These types of interferences can be highly dependent on matrix type and the specific analyte element.

5.2 Prior to reporting concentration data for the analyte elements, the Contractor must analyze and report the results of the ICP Serial Dilution Analysis. The ICP Serial Dilution Analysis must be performed on a sample from each group of samples of a similar matrix type (i.e., water, soil) and concentration (i.e., low, medium) or for each Sample Delivery Group, whichever is more frequent. Samples identified as field blanks cannot be used for Serial Dilution Analysis.

If the analyte concentration is sufficiently high (minimally a factor of 50 above the instrumental detection limit in the original sample), the serial dilution (a five fold dilution) must then agree within 10% of the original determination after correction for dilution. If the dilution analysis for one or more analytes is not within 10%, a chemical or physical interference effect must be suspected, and the data for all affected analytes in the samples received associated with that serial dilution must be flagged with an "E" on FORM IX-IN and FORM I-IN.

6. Apparatus

6.1 Inductively Coupled Plasma-Atomic Emission Spectrometer.

6.1.1 Computer controlled atomic emission spectrometer with background correction.

6.1.2 Radio frequency generator.

6.1.3 Argon gas supply, welding grade or better.

6.2 Operating conditions -- Because of the differences between various makes and models of satisfactory instruments, no detailed operating instructions can be provided. Instead, the analyst should follow the instructions provided by the manufacturer of the particular instrument. Sensitivity, instrumental detection limit, precision, linear dynamic range, and interference effects must be investigated and established for each individual analyte line on that particular instrument. All measurements must be within the instrument linear range where correction factors are valid. It is the responsibility of the analyst to verify that the instrument configuration and operating conditions used satisfy the analytical requirements and to maintain quality control data confirming instrument performance and analytical results.

7. Reagents and Standards

7.1 Acids used in the preparation of standards and for sample processing must be ultra-high purity grade or equivalent. Redistilled acids are acceptable.

7.1.1 Acetic acid, conc. (sp gr 1.06).

7.1.2 Hydrochloric acid, conc. (sp gr 1.19).

7.1.3 Hydrochloric acid, (1+1): Add 500 mL conc. HCl (sp gr 1.19) to 400 mL deionized, distilled water and dilute to 1 liter.

7.1.4 Nitric acid, conc. (sp gr 1.41).

7.1.5 Nitric acid, (1+1): Add 500 mL conc. HNO_3 (sp gr 1.41) to 400 mL deionized, distilled water and dilute to 1 liter.

7.2 Deionized, distilled water: Prepare by passing distilled water through a mixed bed of cation and anion exchange resins. Use deionized, distilled water for the preparation of all reagents, calibration standards and as dilution water. The purity of this water must be equivalent to ASTM Type II reagent water of Specification D 1193.

7.3 Standard stock solutions may be purchased or prepared from ultra high purity grade chemicals or metals. All salts must be dried for 1 hour at 105° unless otherwise specified.

(CAUTION: Many metal salts are extremely toxic and may be fatal if swallowed. Wash hands thoroughly after handling.) Typical stock solution preparation procedures follow:

7.3.1 Aluminum solution, stock, 1 mL = 100 ug Al: Dissolved 0.100 g of aluminum metal in an acid mixture of 4 mL of (1+1) HCl and 1 mL of conc. HNO_3 in a beaker. Warm gently to effect solution. When solution is complete, transfer quantitatively to a liter flask, add an additional 10 mL of (1+1) HCl and dilute to 1000 mL with deionized, distilled water.

7.3.2 Antimony solution stock, 1 mL = 100 ug Sb: Dissolve 0.2669 g $K(SbO)C_4H_4O_6$ in deionized distilled water, add 10 mL (1+1) HCl and dilute to 1000 mL with deionized, distilled water.

7.3.3 Arsenic solution, stock, 1 mL = 100 ug As: Dissolve 0.1320 g of As_2O_3 in 100 mL of deionized, distilled water containing 0.4 g NaOH. Acidify the solution with 2 mL conc. HNO_3 and dilute to 1,000 mL with deionized, distilled water.

7.3.4 Barium solution, stock, 1 mL = 100 ug Ba: Dissolve 0.1516 g $BaCl_2$ (dried at 250°C for 2 hrs) in 10 mL deionized, distilled water with 1 mL (1+1) HCl. Add 10.0 mL (1+1) HCl and dilute to 1,000 mL with deionized, distilled water.

7.3.5 Beryllium solution, stock, 1 mL = 100 ug Be: Do not dry. Dissolve 1.966 g $BeSO_4 \cdot 4H_2O$, in deionized, distilled water, add 10.0 mL conc. HNO_3 and dilute to 1,000 mL with deionized, distilled water.

7.3.6 Boron solution, stock, 1 mL = 100 ug B: Do not dry. Dissolve 0.5716 g anhydrous H_3BO_3 in deionized, distilled water and dilute to 1,000 mL. Use a reagent meeting ACS specifications, keep the bottle tightly stoppered and store in a desiccator to prevent the entrance of atmospheric moisture.

7.3.7 Cadmium solution, stock, 1 mL = 100 ug Cd: Dissolve 0.1142 g CdO in a minimum amount of (1+1) HNO_3. Heat to increase rate of dissolution. Add 10.0 mL conc. HNO_3 and dilute to 1,000 mL with deionized, distilled water.

7.3.8 Calcium solution, stock, 1 mL = 100 ug Ca: Suspend 0.2498 g $CaCO_3$ dried at 180°C for 1 h before weighing in deionized, distilled water and dissolve cautiously with a minimum amount of (1+1) HNO_3. Add 10.0 mL conc. HNO_3 and dilute to 1,000 mL with deionized, distilled water.

7.3.9 Chromium solution, stock, 1 mL = 100 ug Cr: Dissolve 0.1923 g of CrO_3 in deionized, distilled water. When solution is complete acidify with 10 mL conc. HNO_3 and dilute to 1,000 mL with deionized, distilled water.

7.3.10 Cobalt solution stock, 1 mL = 100 ug Co: Dissolve 0.1000 g of cobalt metal in a minimum amount of (1+1) HNO_3. Add 10.0 mL (1+1) HCl and dilute to 1,000 mL with deionized, distilled water.

7.3.11 Copper solution, stock, 1 mL = 100 ug Cu: Dissolve 0.1252 g CuO in a minimum amount of (1+1) HNO_3. Add 10.0 mL conc. HNO_3 and dilute to 1,000 mL with deionized, distilled water.

7.3.12 Iron solution, stock, 1 mL = 100 ug Fe: Dissolve 0.1430 g Fe_2O_3 in a warm mixture of 20 mL (1+1) HCl and 2 mL of conc. HNO_3. Cool, add an additional 5 mL of conc. HNO_3 and dilute to 1,000 mL with deionized, distilled water.

7.3.13 Lead solution, stock, 1 mL = 100 ug Pb: Dissolve 0.1599 g $Pb(NO_3)_2$ in a minimum amount of (1+1) HNO_3. Add 10.0 mL of conc. HNO_3 and dilute to 1,000 mL with deionized, distilled water.

7.3.14 Magnesium solution, stock, 1 mL = 100 ug Mg: Dissolve 0.1658 g MgO in a minimum amount of (1+1) HNO_3. Add 10.0 mL conc. HNO_3 and dilute to 1,000 mL with deionized, distilled water.

7.3.15 Manganese solution, stock, 1 mL = 100 ug Mn: Dissolve 0.1000 g of manganese metal in the acid mixture, 10 mL conc. HCl and 1 mL conc. HNO_3, and dilute to 1,000 mL with deionized, distilled water.

7.3.16 Molybdenum solution, stock, 1 mL = 100 ug Mo: Dissolve 0.2043 g $(NH_4)2MoO_4$ in deionized, distilled water and dilute to 1,000 mL.

7.3.17 Nickel solution, stock, 1 mL = 100 ug Ni: Dissolve 0.1000 g of nickel metal in 10 mL hot conc. HNO_3, cool and dilute to 1,000 mL with deionized, distilled water.

7.3.18 Potassium solution, stock, 1 mL = 100 ug K: Dissolve 0.1907 g KCl, dried at 110°C, in deionized, distilled water. Dilute to 1,000 mL.

7.3.19 Selenium solution, stock, 1 mL = 100 ug Se: Do not dry. Dissolve 0.1727 g H_2SeO_3 (actual assay 94.6%) in deionized, distilled water and dilute to 1,000 mL.

7.3.20 Silica solution, stock, 1 mL = 100 ug SiO_2: Do not dry. Dissolve 0.4730 g $Na_2SiO_3 \cdot 9H_2O$ in deionized, distilled water. Add 10.0 mL conc. HNO_3 and dilute to 1,000 mL with deionized, distilled water.

7.3.21 Silver solution, stock, 1 mL = 100 ug Ag: Dissolve 0.1575 g $AgNO_3$ in 100 mL of deionized, distilled water and 10 mL conc. HNO_3. Dilute to 1,000 mL with deionized, distilled water.

7.3.22 Sodium solution, stock, 1 mL = 100 ug Na: Dissolve 0.2542 g NaCl in deionized, distilled water. Add 10.0 mL conc. HNO_3 and dilute to 1,000 mL with deionized, distilled water.

7.3.23 Thallium solution, stock, 1 mL = 100 ug Tl: Dissolve 0.1303 g $TlNO_3$ in deionized, distilled water. Add 10.0 mL conc. HNO_3 and dilute to 1,000 mL with deionized, distilled water.

7.3.24 Vanadium solution, stock, 1 mL = 100 ug V: Dissolve 0.2297 NH_4VO_3 in a minimum amount of conc. HNO_3. Heat to increase rate of dissolution. Add 10.0 mL conc. HNO_3 and dilute to 1,000 mL with deionized, distilled water.

7.3.25 Zinc solution, stock, 1 mL = 100 ug Zn: Dissolve 0.1245 g ZnO in a minimum amount of dilute HNO_3. Add 10.0 mL conc. HNO_3 and dilute to 1,000 mL with deionized, distilled water.

7.4 Mixed calibration standard solutions -- Prepare mixed calibration standard solutions by combining appropriate volumes of the stock solutions in volumetric flasks. (See 7.4.1 thru 7.4.5.) Add 2 mL of (1+1) HNO_3 and 10 mL of (1+1) HCl and dilute to 100 mL with deionized, distilled water. (See NOTE in 7.4.5) Prior to preparing the mixed standards, each stock solution should be analyzed separately to determine possible spectral interference or the presence of impurities. Care should be taken when preparing the mixed standards that the elements are compatible and stable. Transfer the mixed standard solutions to a FEP fluorocarbon or unused polyethylene bottle for storage. Fresh mixed standards should be prepared as needed with the realization that concentration can change on aging. Calibration standards must be initially verified using a quality control sample and monitored weekly for stability (see 7.6.3). Although not specifically required, some typical calibration standard combinations follow when using those specific wavelengths listed in Table 1.

7.4.1 Mixed standard solution I -- Manganese, beryllium, cadmium, lead, and zinc.

7.4.2 Mixed standard solution II -- Barium, copper, iron, vanadium, and cobalt.

7.4.3 Mixed standard solution III -- Molybdenum, silica, arsenic, and selenium.

7.4.4 Mixed standard solution IV -- Calcium, sodium, potassium, aluminum, chromium and nickel.

7.4.5 Mixed standard solution V -- Antimony, boron, magnesium, silver, and thallium.

NOTE: If the addition of silver to the recommended acid combination results in an initial precipitation add 15 mL of deionized distilled water and warm the flask until the solution clears. Cool and dilute to 100 mL with deionized, distilled water. For this acid combination the silver concentration should be limited to 2 mg/L. Silver under these conditions is stable in a tap water matrix for 30 days. Higher concentrations of silver require additional HCl.

7.5 Two types of blanks are required for the analysis. The calibration blank (3.13) is used in establishing the analytical curve while the reagent blank (preparation blank, 3.12) is used to correct for possible contamination resulting from varying amounts of the acids used in the sample processing.

7.5.1 The calibration blank is prepared by diluting 2 mL of (1+1) HNO_3 and 10 mL of (1+1) HCl to 100 mL with deionized, distilled water. Prepare a sufficient quantity to be used to flush the system between standards and samples.

7.5.2 The reagent blank (or preparation blank - See Exhibit E) must contain all the reagents and in the same volumes as used in the processing of the samples. The reagent blank must be carried through the complete procedure and contain the same acid concentration in the final solution as the sample solution used for analysis.

7.6 In addition the calibration standards, an instrument check standard (3.6), an interference check sample (3.7) and a quality control sample (3.8) are also required for the analyses.

7.6.1 The instrument check standard for continuing calibration verification is prepared by the analyst by combining compatible elements at a concentration equivalent to the mid-points of their respective calibration curves. (See 10.1.3.)

7.6.2 The interference check sample is prepared by the analyst, or obtained from EPA if available (Exhibit E).

7.6.3 The quality control sample for the initial calibration verification should be prepared in the same acid matrix as the calibration standards and in accordance with the instructions provided by the supplier. EPA will either supply a quality control sample or information where one of equal quality can be procured. (See 10.1.1.)

8. Procedure

8.1 Set up instrument with proper operating parameters established in Section 6.2. The instrument must be allowed to become thermally stable before beginning. This usually requires at least 30 min. of operation prior to calibration.

8.2 Initiate appropriate operating configuration of computer.

8.3 Profile and calibrate instrument according to instrument manufacturer's recommended procedures, using mixed calibration standard solutions such as those described in Section 7.4. Flush the system with the calibration blank (7.5.1) between each standard. (NOTE: For boron concentrations greater than 500 ug/L extended flush times of 1 to 2 minutes may be required.)

8.4 Begin the sample run flushing the system with the calibration blank solution (7.5.1) between each sample. (See NOTE in 8.3.) Analyze the instrument check standard (7.6.1) and the calibration blank (7.5.1) each 10 analytical samples.

8.5 A minimum of two replicate exposures are required for standardization and all QC and sample analyses. The average result of the multiple exposures for the standardization and all QC and sample analyses shall be used.

9. Calculation

9.1 Reagent blanks (preparation blanks) should be treated as specified in Exhibit E.

9.2 If dilutions were performed, the appropriate factor must be applied to sample values.

9.3 Units must be clearly specified.

10. Quality Control (Instrumental)

10.1 Quality control must be performed as specified in Exhibit E.

11. Bibliography

1. Winge, R.K., V.J. Peterson, and V.A. Fassel, "Inductively Coupled Plasma-Atomic Emission Spectroscopy Prominent Lines," EPA-600/4-79-017.

2. Winefordner, J.D., "Trace Analysis: Spectroscopic Methods for Elements," Chemical Analysis, Vol. 46, pp. 41-42.

3. Handbook for Analytical Quality Control in Water and Wastewater Laboratories, EPA-600/4-79-019.

4. Garbarino, J.R. and Taylor, H.E., "An Inductively-Coupled Plasma Atomic Emission Spectrometric Method for Routine Water Quality Testing," Applied Spectroscopy 33, No. 3(1979).

5. "Methods for Chemical Analysis of Water and Wastes," EPA-600/4-79-020.

6. Annual Book of ASTM Standards, Part 31.

7. "Carcinogens - Working With Carcinogens," Department of Health, Education, and Welfare, Public Health Service, Center for Disease Control, National Institute for Occupational Safety and Health, Publication No. 77-206, Aug. 1977.

8. "OSHA Safety and Health Standards, General Industry," (29 CFR 1910), Occupational Safety and Health Administration, OSHA 2206, (Revised, January 1976).

9. "Safety in Academic Chemistry Laboratories, American Chemical Society Publications, Committee on Chemical Safety, 3rd Edition, 1979.

10. "Inductively Coupled Plasma-Atomic Emission Spectrometric Method of Trace Elements Analysis of Water and Waste", Method 200.7 modified by CLP Inorganic Data/Protocol Review Committee; original method by Theodore D. Martin, EMSL/Cincinnati.

TABLE 1 - RECOMMENDED WAVELENGTHS(2) AND ESTIMATED INSTRUMENTAL DETECTION LIMITS

Element	Wavelength, nm(1)	Estimated Detection Limit, ug/L(2)
Aluminum	308.215	45
Antimony	206.833	32
Arsenic	193.696	53
Barium	455.403	2
Beryllium	313.042	0.3
Boron	249.773	5
Cadmium	226.502	4
Calcium	317.933	10
Chromium	267.716	7
Cobalt	228.616	7
Copper	324.754	6
Iron	259.940	7
Lead	220.353	42
Magnesium	279.079	30
Manganese	257.610	2
Molybdenum	202.030	8
Nickel	231.604	15
Potassium	766.491	See(3)
Selenium	196.026	75
Silica (SiO_2)	288.158	58
Silver	328.068	7
Sodium	588.995	29
Thallium	190.864	40
Vanadium	292.402	8
Zinc	213.856	2

(1) The wavelengths listed are recommended because of their sensitivity and overall acceptance. Other wavelengths may be substituted if they can provide the needed sensitivity and are treated with the same corrective techniques for spectral interference. (See 5.1.1). The use of alternate wavelengths must be reported (in nm) with the sample data.

(2) The estimated instrumental detection limits as shown are taken from "Inductively Coupled Plasma-Atomic Emission Spectroscopy-Prominent Lines," EPA-600/4-79-017. They are given as a guide for an instrumental limit. The actual method detection limits are sample dependent and may vary as the sample matrix varies.

(3) Highly dependent on operating conditions and plasma position.

TABLE 2. EXAMPLE OF ANALYTE CONCENTRATION EQUIVALENTS (MG/L) ARISING FROM INTERFERENTS AT THE 100 MG/L LEVEL

Analyte	Wavelength, nm	Interferent									
		Al	Ca	Cr	Cu	Fe	Mg	Mn	Ni	Ti	V
Aluminum	308.215	--	--	--	--	--	--	0.21	--	--	1.4
Antimony	206.833	0.47	--	2.9	--	0.08	--	--	--	.25	0.45
Arsenic	193.696	1.3	--	0.44	--	--	--	--	--	--	1.1
Barium	455.403	--	--	--	--	--	--	--	--	--	--
Beryllium	313.042	--	--	--	--	--	--	--	--	0.04	0.05
Boron	249.773	0.04	--	--	--	0.32	--	--	--	--	--
Cadmium	226.502	--	--	--	--	0.03	--	--	0.02	--	--
Calcium	317.933	--	--	0.08	--	0.01	0.01	0.04	--	0.03	0.03
Chromium	267.716	--	--	--	--	0.003	--	0.04	--	--	0.04
Cobalt	228.616	--	--	0.03	--	0.005	--	--	0.03	0.15	--
Copper	324.754	--	--	--	--	0.003	--	--	--	0.05	0.02
Iron	259.940	--	--	--	--	--	--	0.12	--	--	--
Lead	220.353	0.17	--	--	--	--	--	--	--	--	--
Magnesium	279.079	--	0.02	0.11	--	0.13	--	0.25	--	0.07	0.12
Manganese	257.610	0.005	--	0.01	--	0.002	0.002	--	--	--	--
Molybdenum	202.030	0.05	--	--	--	0.03	--	--	--	--	--
Nickel	231.604	--	--	--	--	--	--	--	--	--	--
Selenium	196.026	0.23	--	--	--	0.09	--	--	--	--	--
Silicon	288.158	--	--	0.07	--	--	--	--	--	--	0.01
Sodium	588.995	--	--	--	--	--	--	--	--	0.08	--
Thallium	190.864	0.30	--	--	--	--	--	--	--	--	--
Vanadium	292.402	--	--	0.05	--	0.005	--	--	--	0.02	--
Zinc	213.856	--	--	--	0.14	--	--	--	0.29	--	--

TABLE 3. INTERFERENT AND ANALYTE ELEMENTAL CONCENTRATIONS USED FOR INTERFERENCE MEASUREMENTS IN TABLE 2

Analytes	(mg/L)	Interferents	(mg/L)
Al	10	Al	1000
As	10	Ca	1000
B	10	Cr	200
Ba	1	Cu	200
Be	1	Fe	1000
Ca	1	Mg	1000
Cd	10	Mn	200
Co	1	Ni	200
Cr	1	Ti	200
Cu	1	V	200
Fe	1		
Mg	1		
Mn	1		
Mo	10		
Na	10		
Ni	10		
Pb	10		
Sb	10		
Se	10		
Si	1		
Tl	10		
V	1		
Zn	10		

PART B - ATOMIC ABSORPTION METHODS, FURNACE TECHNIQUE+

Analyte/Method	Page No.
Antimony - Method 204.2 CLP-M*	D-25
Arsenic - Method 206.2 CLP-M	D-26
Beryllium - Method 210.2 CLP-M	D-28
Cadmium - Method 213.2 CLP-M	D-29
Chromium - Method 218.2 CLP-M	D-30
Lead - Method 239.2 CLP-M	D-31
Selenium - Method 270.2 CLP-M	D-33
Silver - Method 272.2 CLP-M	D-35
Thallium - Method 279.2 CLP-M	D-36

+From "Methods for Chemical Analysis of Water and Wastes" (EPA-600/4-79-020), Metals-4, as modified for use in the Contract Laboratory Program).

*CLP-M modified for the Contract Laboratory Program.

ANTIMONY

Method 204.2 CLP-M* (Atomic Absorption, Furnace Technique)

Optimum Concentration Range: 20-300 ug/L
Approximate Detection Limit: 3 ug/L

Preparation of Standard Solution

1. Stock solution: Carefully weigh 2.7426 g of antimony potassium tartrate (analytical reagent grade) and dissolve in deionized distilled water. Dilute to 1 Liter with deionized water. 1 mL = 1 mg Sb (1000 mg/L).

2. Prepare dilutions of the stock solution to be used as calibration standards at the time of analysis. These solutions are also to be used for "standard additions".

3. The calibration standards must be prepared using the same type of acid and at the same concentration as will result in the sample to be analyzed after sample preparation.

Instrument Parameters (General)

1. Drying Time and Temp: 30 sec @ 125°C.
2. Ashing Time and Temp: 30 sec @ 800°C.
3. Atomizing Time and Temp: 10 sec @ 2700°C.
4. Purge Gas Atmosphere: Argon
5. Wavelength: 217.6 nm
6. Other operating parameters should be set as specified by the particular instrument manufacturer.

Notes

1. The above concentration values and instrument conditions are for a Perkin-Elmer HGA-2100, based on the use of a 20 uL injection, continuous flow purge gas and non-pyrolytic graphite and are to be used as guidelines only. Smaller size furnace devices or those employing faster rates of atomization can be operated using lower atomization temperatures for shorter time periods than the above recommended settings.

2. The use of background correction is required.

3. Nitrogen may also be used as the purge gas.

4. If chloride concentration presents a matrix problem or causes a loss previous to atomization, add an excess 5 mg of ammonium nitrate to the furnace and ash using a ramp accessory or with incremental steps until the recommended ashing temperature is reached.

5. For every sample analyzed, verification is necessary to determine that method of standard addition is not required (see Exhibit E).

6. If method of standard addition is required, follow the procedure given in Exhibit E.

---

*CLP-M modified for the Contract Laboratory Program.

ARSENIC

Method 206.2 CLP-M* (Atomic Absorption, Furnace Technique)

Optimum Concentration Range: 5-100 ug/L
Approximate Detection Limit: 1 ug/L

Preparation of Standard Solution

1. Stock solution: Dissolve 1.320 g of arsenic trioxide, As_2O_3 (analytical reagent grade) in 100 mL of deionized distilled water containing 4 g NaOH. Acidify the solution with 20 mL conc. HNO_3 and dilute to 1 Liter. 1 mL = 1 mg As (1000 mg/l).

2. Nickel Nitrate Solution, 5%: Dissolve 24.780 g of ACS reagent grade $Ni(NO_3)_2 \cdot 6H_2O$ in deionized distilled water and make up to 100 mL.

3. Nickel Nitrate Solution, 1%: Dilute 20 mL of the 5% nickel nitrate to 100 mL with deionized distilled water.

4. Working Arsenic Solution: Prepare dilutions of the stock solution to be used as calibration standards at the time of analysis. Withdraw appropriate aliquots of the stock solution, add 1 mL of conc. HNO_3, 2 mL of 30% H_2O_2 and 2 mL of the 5% nickel nitrate solution. Dilute to 100 mL with deionized distilled water.

Sample Preparation

1. Add 100 uL of the 5% nickel nitrate solution to 5 mL of the digested sample. The sample is now ready for injection into the furnace.

Instrument Parameters (General)

1. Drying Time and Temp: 30 sec @ 125°C.
2. Ashing Time and Temp: 30 sec @ 1100°C.
3. Atomizing Time and Temp: 10 sec @ 2700°C.
4. Purge Gas Atmosphere: Argon
5. Wavelength: 193.7 nm
6. Other operating parameters should be set as specified by the particular instrument manufacturer.

Notes

1. The above concentration values and instrument conditions are for a Perkin-Elmer HGA-2100, based on the use of a 20 uL injection, purge gas interrupt and non-pyrolytic graphite. Smaller size furnace devices or those employing faster rates of atomization can be operated using lower atomization temperatures for shorter time periods than the above recommended settings.

2. The use of background correction is required. Background correction made by the deuterium arc method does not adequately compensate for high levels of certain interferents (ie., Al, Fe). If conditions occur where significant interference is suspected, the lab must switch to an alternate wavelength or take other appropriate actions to compensate for the interference effects.

3. For every sample analyzed, verification is necessary to determine that

---

*CLP-M modified for the Contract Laboratory Program.

method of standard addition is not required (see Exhibit E).

4. If method of standard addition is required, follow the procedure given in Exhibit E).

5. The use of the Electrodeless Discharge Lamps (EDL) for the light source is recommended.

BERYLLIUM

Method 210.2 CLP-M* (Atomic Absorption, Furnace Technique)

Optimum Concentration Range: 1-30 ug/L
Approximate Detection Limit: 0.2 ug/L

Preparation of Standard Solution

1. Stock solution: Dissolve 11.6586g of beryllium sulfate, $BeSO_4$, in deionized distilled water containing 2 mL concentrated nitric acid and dilute to 1 Liter. 1 mL = 1 mg Be (1000 mg/L).

2. Prepare dilutions of the stock solution to be used as calibration standards at the time of analysis. These solutions are also to be used for "standard additions".

3. The calibration standards must be prepared using the same type of acid and at the same concentration as will result in the sample to be analyzed after sample preparation.

Instrument Parameters (General)

1. Drying Time and Temp: 30 sec @ 125°C.
2. Ashing Time and Temp: 30 sec @ 1000°C.
3. Atomizing Time and Temp: 10 sec @ 2800°C.
4. Purge Gas Atmosphere: Argon
5. Wavelength: 234.9 nm
6. The operating parameters should be set as specified by the particular instrument manufacturer.

Notes

1. The above concentration values and instrument conditions are for a Perkin-Elmer HGA-2100, based on the use of a 20 uL injection, continuous flow purge gas and non-pyrolytic graphite and are to be used as guidelines only. Smaller size furnace devices or those employing faster rates of atomization can be operated using lower atomization temperatures for shorter time periods than the above recommended settings.

2. The use of background correction is required.

3. Because of possible chemical interaction, nitrogen should not be used as a purge gas.

4. For every sample analyzed, verification is necessary to determine that method of standard addition is not required (see Exhibit E)

5. If method of standard addition is required, follow the procedure given in Exhibit E.

---

*CLP-M modified for the Contract Laboratory Program.

CADMIUM

Method 213.2 CLP-M* (Atomic Absorption, Furnace Technique)

Optimum Concentration Range: 0.5-10 ug/L
Approximate Detection Limit: 0.1 ug/L

Preparation of Standard Solution

1. Stock solution: Carefully weigh 2.282g of cadmium sulfate, 3 $CdSO_4 \cdot 8 H_2O$ (analytical reagent grade) and dissolve in deionized distilled water. Make up to 1 Liter with deionized distilled water. 1 mL = 1 mg Cd (1000 mg/L).

2. Ammonium Phosphate solution (40%): Dissolve 40 grams of ammonium phosphate, $(NH_4)2HPO_4$ (analytical reagent grade) in deionized distilled water and dilute to 100 mL.

3. Prepare dilutions of stock cadmium solution to be used as calibration standards at the time of analysis. To each 100 mL of standard and sample alike add 2.0 mL of the ammonium phosphate solution. The calibration standards must be prepared using the same type of acid and at the same concentration as will result in the sample to be analyzed after sample preparation.

Instrument Parameters (General)

1. Drying Time and Temp: 30 sec @ 125°C.
2. Ashing Time and Temp: 30 sec @ 500°C.
3. Atomizing Time and Temp: 10 sec @ 1900°C.
4. Purge Gas Atmosphere: Argon
5. Wavelength: 228.8 nm
6. The operating parameters should be set as specified by the particular instrument manufacturer.

Notes

1. The above concentration values and instrument conditions are for a Perkin-Elmer HGA-2100, based on the use of a 20 uL injection, continuous flow purge gas and non-pyrolytic graphite and are to be used as guidelines only. Smaller size furnace devices or those employing faster rates of atomization can be operated using lower atomization temperatures for shorter time periods than the above recommended settings.

2. The use of background correction is required.

3. Contamination from the work area is critical in cadmium analysis. Use pipette tips which are free of cadmium.

4. For every sample analyzed, verification is necessary to determine that method of standard addition is not required (see Exhibit E).

5. If method of standard addition is required, follow the procedure given in Exhibit E.

---

*CLP-M modified for the Contract Laboratory Program.

CHROMIUM

Method 218.2 CLP-M* (Atomic Absorption, Furnace Technique)

Optimum Concentration Range: 5-100 ug/L
Approximate Detection Limit: 1 ug/L

Preparation of Standard Solution

1. Stock solution: Prepare as described under Part C methods, AA Flame Technique.

2. Calcium Nitrate solution: Dissolve 11.8 grams of calcium nitrate, $Ca(NO_3)_2 \cdot 4H_2O$ (analytical reagent grade) in deionized distilled water and dilute to 100 mL. 1 mL = 20 mg Ca.

3. Prepare dilutions of the stock chromium solution to be used as calibration standards at the time of analysis. The calibration standards must be prepared using the same type of acid and at the same concentration as will result in the sample to be analyzed after sample preparation. To each 100 mL of standard and sample alike, add 1 mL of 30% H_2O_2 and 1 mL of the calcium nitrate solution.

Instrument Parameters (General)

1. Drying Time and Temp: 30 sec @ 125°C.
2. Ashing Time and Temp: 30 sec @ 1000°C.
3. Atomizing Time and Temp: 10 sec @ 2700°C.
4. Purge Gas Atmosphere: Argon
5. Wavelength: 357.9 nm
6. Other operating parameters should be set as specified by the particular instrument manufacturer.

Notes

1. The above concentration values and instrument conditions are for a Perkin Elmer HGA-2100, based on the use of a 20 uL injection, continuous flow purge gas and non-pyrolytic graphite and are to be used as guidelines only.

2. Hydrogen peroxide is added to the acidified solution to convert all chromium to the trivalent state. Calcium is added to a level above 200 mg/L where its suppressive effect becomes constant up to 1000 mg/L.

3. Background correction is required.

4. Nitrogen should not be used as a purge gas because of possible CN band interference.

5. Pipette tips have been reported to be a possible source of contamination.

6. For every sample analyzed, verification is necessary to determine that method of standard addition is not required (see Exhibit E).

7. If method of standard addition is required, follow the procedure given in Exhibit E.

---

*CLP-M modified for the Contract Laboratory Program.

LEAD

Method 239.2 CLP-M* (Atomic Absorption, Furnace Technique)

Optimum Concentration Range: 5-100 ug/L
Approximate Detection Limit: 1 ug/L

Preparation of Standard Solution

1. Stock solution: Carefully weigh 1.599 g of lead nitrate, $Pb(NO_3)_2$ (analytical reagent grade), and dissolve in deionized distilled water. When solution is complete, acidify with 10 mL redistilled HNO_3 and dilute to 1 Liter with deionized distilled water. 1 mL = 1 mg Pb (1000mg/L).

2. Lanthanum Nitrate solution: Dissolve 58.64 g of ACS reagent grade La_2O_3 in 100 mL conc. HNO_3 and dilute to 1000 mL with deionized distilled water. 1 mL = 50 mg La.

3. Working Lead solution: Prepare dilutions of stock lead solution to be used as calibration standards at the time of analysis. The calibration standards must be prepared using the same type of acid and at the same concentration as will result in the sample to be analyzed after sample preparation. To each 100 mL of diluted standard add 10 mL of the lanthanum nitrate solution.

Sample Preparation

1. To each 100 mL of prepared sample solution add 10 mL of the lanthanum nitrate solution.

Instrument Parameters (General)

1. Drying Time and Temp: 30 sec @ 125°C.
2. Ashing Time and Temp: 30 sec @ 500°C.
3. Atomizing Time and Temp: 10 sec @ 2700°C.
4. Purge Gas Atmosphere: Argon
5. Wavelength: 283.3 nm
6. Other operating parameters should be set as specified by the particular instrument manufacturer.

Notes

1. The above concentration values and instrument conditions are for a Perkin-Elmer HGA-2100, based on the use of a 20 uL injection, continuous flow purge gas and non-pyrolytic graphite and are to be used as guidelines only. Smaller size furnace devices or those employing faster rates of atomization can be operated using lower atomization temperatures for shorter time periods than the above recommended settings.

2. The use of background correction is required.

---

*CLP-M modified for the Contract Laboratory Program.

3. Greater sensitivity can be acheived using the 217.0 nm line, but the optimum concentration range is reduced. The use of a lead electrodeless discharge lamp at this lower wavelength has been found to be advantageous. Also a lower atomization temperature (2400°C) may be preferred.

4. To suppress sulfate interference (up to 1500 ppm) lanthanum is added as the nitrate to both samples and calibration standards. (Atomic Absorption Newsletter Vol. 15, No. 3, p. 71, May-June 1976).

5. Since glassware contamination is a severe problem in lead analysis, all glassware should be cleaned immediately prior to use, and once cleaned, should not be open to the atmosphere except when necessary.

6. For every sample analyzed, verification is necessary to determine that method of standard addition is not required (see Exhibit E).

7. If method of standard addition is required, follow the procedure given in Exhibit E.

SELENIUM

Method 270.2 CLP-M* (Atomic Absorption, Furnace Technique)

Optimum Concentration Range: 5-100 ug/L
Approximate Detection Limit: 2 ug/L

Preparation of Standard Solution

1. Stock Selenium solution: Dissolve 0.3453 g of selenous acid (actual assay 94.6% H_2SeO_3) in deionized distilled water and make up to 200 mL. 1 mL = 1 mg Se (1000 mg/L).

2. Nickel Nitrate solution, 5%: Dissolve 24.780 g of ACS reagent grade $Ni(NO_3)_2.6H_2O$ in deionized distilled water and make up to 100 mL.

3. Nickel Nitrate solution, 1%: Dilute 20 mL of the 5% nickel nitrate to 100 mL with deionized distilled water.

4. Working Selenium solution: Prepare dilutions of the stock solution to be used as calibration standards at the time of analysis. The calibration standards must be prepared using the same type of acid and at the same concentration as will result in the sample to be analyzed after sample preparation. Withdraw appropriate aliquots of the stock solution, add 1 mL of conc. HNO_3, 2 mL of 30% H_2O_2 and 2 mL of the 5% nickel nitrate solution. Dilute to 100 mL with deionized distilled water.

Sample Preparation

1. Add 100 uL of the 5% nickel nitrate solution to 5 mL of the digested sample. The sample is now ready for injection into the furnace.

Instrument Parameters

1. Drying Time and Temp: 30 sec @ 125°C.
2. Charring Time and Temp: 30 sec @ 1200°C.
3. Atomizing Time and Temp: 10 sec @ 2700°C.
4. Purge Gas Atmosphere: Argon
5. Wavelength: 196.0 nm
6. Other operating parameters should be set as specified by the particular instrument manufacturer.

Notes

1. The above concentration values and instrument conditions are for a Perkin-Elmer HGA-2100, based on the use of a 20 uL injection, purge gas interrupt and non-pyrolytic graphite and are to be used as guidelines only. Smaller size furnace devices or those employing faster rates of atomization can be operated using lower atomization tempera- tures for shorter time periods than the above recommended settings.

2. The use of background correction is required. Background correction made by the deuterium arc method does not adequately compensate for high levels of certain interferents (i.e., Al, Fe). If conditions

*CLP-M modified for the Contract Laboratory Program.

occur where significant interference is suspected, the lab must switch to an alternate wavelength or take other appropriate actions to compensate for the interference effects.

3. Selenium analysis suffers interference from chlorides (>800 mg/L) and sulfate (>200 mg/L). For the analysis of industrial effluents and samples with concentrations of sulfate from 200 to 2000 mg/L, both samples and standards should be prepared to contain 1% nickel.

4. For every sample analyzed, verification is necessary to determine that method of standard addition is not required (see Exhibit E).

5. If method of standard addition is required, follow the procedure given in Exhibit E.

6. The use of the Electrodeless Discharge Lamp (EDL) for the light source is recommended.

SILVER

Method 272.2 CLP-M* (Atomic Absorption, Furnace Technique)

Optimum Concentration Range: 1-25 ug/L
Approximate Detection Limit: 0.2 ug/L

Preparation of Standard Solution

1. Stock solution: Dissolve 1.575 g of $AgNO_3$ (analytical reagent grade) in deionized distilled water. Add 10 mL of concentrated HNO_3 and make up to 1 Liter. 1 mL = 1 mg Ag (1000 mg/L).

2. Prepare dilutions of the stock solution to be used as calibration standards at the time of analysis. These solutions are also to be used for "standard additions".

3. The calibration standards must be prepared using the same type of acid and at the same concentration as will result in the sample to be analyzed after sample preparation.

Instrument Parameters (General)

1. Drying Time and Temp: 30 sec @ 125°C.
2. Ashing Time and Temp: 30 sec @ 400°C.
3. Atomizing Time and Temp: 10 sec @ 2700°C.
4. Purge Gas Atmosphere: Argon
5. Wavelength: 328.1 nm
6. Other operating parameters should be set as specified by the particular instrument manufacturer.

Notes

1. The above concentration values and instrument conditions are for a Perkin-Elmer HGA-2100, based on the use of a 20 uL injection, continuous flow purge gas and non-pyrolytic graphite and are to be used as guidelines only. Smaller size furnace devices or those employing faster rates of atomization can be operated using lower atomization temperatures for shorter time periods than the above recommended settings.

2. The use of background correction is required.

3. The use of halide acids should be avoided.

4. If absorption to container walls or formation of AgCl is suspected, see Part G, AA methods Flame Technique.

5. For every sample analyzed, verification is necessary to determine that method of standard addition is not required (see Exhibit E).

6. If method of standard addition is required, follow the procedure given in Exhibit E.

---

*CLP-M modified for the Contract Laboratory Program.

THALLIUM

Method 279.2 CLP-M* (Atomic Absorption, Furnace Technique)

Optimum Concentration Range: 5-100 ug/L
Approximate Detection Limit: 1 ug/L

Preparation of Standard Solution

1. Stock solution: Dissolve 1.303g of thallium nitrate, $TlNO_3$ (analytical reagent grade) in deionized distilled water. Add 10 mL of concentrated nitric acid and dilute to 1 Liter with deionized distilled water. 1 mL = 1 mg Tl (1000 mg/L).

2. Prepare dilutions of the stock solution to be used as calibration standards at the time of analysis. These solutions are also to be used for "standard additions".

3. The calibration standards must be prepared using the same type of acid and at the same concentration as will result in the sample to be analyzed after sample preparation.

Instrument Parameters (General)

1. Drying Time and Temp: 30 sec @ 125°C.
2. Ashing Time and Temp: 30 sec @ 400°C.
3. Atomizing Time and Temp: 10 sec @ 2400°C.
4. Purge Gas Atmosphere: Argon
5. Wavelength: 276.8 nm
6. Other operating parameters should be set as specified by the particular instrument manufacturer.

Notes

1. The above concentration values and instrument conditions are for a Perkin-Elmer HGA-2100, based on the use of a 20 uL injection, continuous flow purge gas and non-pyrolytic graphite and are to be used as guidelines only. Smaller size furnace devices or those employing faster rates of atomization can be operated using lower atomization temperatures for shorter time periods than the above recommended settings.

2. The use of background correction is required.

3. Nitrogen may also be used as the purge gas.

4. For every sample analyzed, verification is necessary to determine that method of standard addition is not required (see Exhibit E).

5. If method of standard addition is required, follow the procedure given in Exhibit E.

---

*CLP-M modified for the Contract Laboratory Program.

PART C - ATOMIC ABSORPTION METHODS, FLAME TECHNIQUE+

Analyte/Method	Page No.
Calcium - Method 215.1 CLP-M*	D-38
Magnesium - Method 242.1 CLP-M	D-39
Potassium - Method 258.1 CLP-M	D-40
Sodium - Method 273.1 CLP-M	D-41

+From "Interim Methods for the Sampling and Analysis of Priority Pollutants in Sediments and Fish Tissue", USEPA EMSL, Cincinnati, Ohio, August 1977, Revised October 1980, as modified for use in the Contract Laboratory Program.

*CLP-M modified for the Contract Laboratory Program.

CALCIUM

Method 215.1 CLP-M* (Atomic Absorption, Flame Technique)

Optimum Concentration Range: 0.2-7 mg/L using a wavelength of 422.7 nm
Sensitivity: 0.08 mg/L
Detection Limit: 0.01 mg/L

Preparation of Standard Solution

1. Stock Solution: Suspend 1.250 g of $CaCO_3$ (analytical reagent grade), dried at 180°C for 1 hour before weighing, in deionized distilled water and dissolve cautiously with a mimimum of dilute HCl. Dilute to 1000 mL with deionized distilled water. 1 mL = 0.5 mg Ca (500 mg/L).

2. Lanthanum chloride solution: Dissolve 29 g of La_2O_3, slowly and in small portions, in 250 mL conc. HCl (Caution: Reaction is violent) and dilute to 500 mL with deionized distilled water.

3. Prepare dilutions of the stock calcium solutions to be used as calibration standards at the time of analysis. To each 10 mL of calibration standard and sample alike add 1.0 mL of the lanthanum chloride solution, i.e., 20 mL of standard or sample + 2 mL $LaCl_3$ = 22 mL.

Instrumental Parameters (General)

1. Calcium hollow cathode lamp
2. Wavelength: 422.7 nm
3. Fuel: Acetylene
4. Oxidant: Air
5. Type of flame: Reducing

Notes

1. Phosphate, sulfate and aluminum interfere but are masked by the addition of lanthanum. Because low calcium values result if the pH of the sample is above 7, both standards and samples are prepared in dilute hydrochloric acid solution. Concentrations of magnesium greater than 1000 mg/L also cause low calcium values. Concentrations of up to 500 mg/L each of sodium, potassium and nitrate cause no interference.

2. Anionic chemical interferences can be expected if lanthanum is not used in samples and standards.

3. The nitrous oxide-acetylene flame will provide two to five times greater sensitivity and freedom from chemical inteferences. Ionization interferences should be controlled by adding a large amount of alkali to the sample and standards. The analysis appears to be free from chemical suppressions in the nitrous oxide-acetylene flame. (Atomic Absorption Newsletter 14, 29 [1975]).

4. The 239.9 nm line may also be used. This line has a relative sensitivity of 120.

---

*CLP-M modified for the Contract Laboratory Program.

MAGNESIUM

Method 242.1 CLP-M* (Atomic Absorption, Flame Technique)

Optimum Concentration Range: 0.02-0.5 mg/L using a wavelength of 285.2 nm
Sensitivity: 0.007 mg/L
Detection Limit: 0.001 mg/L

Preparation of Standard Solution

1. Stock Solution: Dissolve 0.829 g of magnesium oxide, MgO (analytical reagent grade), in 10 mL of redistilled HNO_3 and dilute to 1 liter with deionized distilled water. 1 mL = 0.50 mg Mg (500 mg/L).

2. Lanthanum chloride solution: Dissolve 29 g of La_2O_3, slowly and in small portions in 250 mL concentrated HCl (Caution: Reaction is violent), and dilute to 500 mL with deionized distilled water.

3. Prepare dilutions of the stock magnesium solution to be used as calibration standards at the time of analysis. To each 10 mL volume of calibration standard and sample alike add 1.0 mL of the lanthanum chloride solution, i.e., 20 mL of standard or sample + 2 mL $LaCl_3$ = 22 mL.

Instrumental Parameters (General)

1. Magnesium hollow cathode lamp
2. Wavelength: 285.2 nm
3. Fuel: Acetylene
4. Oxidant: Air
5. Type of flame: Oxidizing

Notes

1. The interference caused by aluminum at concentrations greater than 2 mg/L is masked by addition of lanthanum. Sodium, potassium and calcium cause no interference at concentrations less than 400 mg/L.

2. The following line may also be used: 202.5 nm Relative Sensitivity 25.

3. To cover the range of magnesium values normally observed in surface waters (0.1-20 mg/L), it is suggested that either the 202.5 nm line be used or the burner head be rotated. A 90° rotation of the burner head will produce approximately one-eighth the normal sensitivity.

---

*CLP-M modified for the Contract Laboratory Program.

POTASSIUM

Method 258.1 CLP-M* (Atomic Absorption, Flame Technique)

Optimum Concentration Range: 0.1-2 mg/L using a wavelength of 766.5 nm
Sensitivity: 0.04 mg/L
Detection Limit: 0.01 mg/L

Preparation of Standard Solution

1. Stock Solution: Dissolve 0.1907 g of KCl (analytical reagent grade), dried at 110°C, in deionized distilled water and make up to 1 liter. 1 mL = 0.10 mg K (100 mg/L).

2. Prepare dilutions of the stock solution to be used as calibration standards at the time of analysis. The calibration standards should be prepared using the same type of acid and at the same concentration as will result in the sample to be analyzed either directly or after processing.

Instrumental Parameters (General)

1. Potassium hollow cathode lamp
2. Wavelength: 766.5 nm
3. Fuel: Acetylene
4. Oxidant: Air
5. Type of flame: Slightly oxidizing

Notes

1. In air-acetylene or other high temperature flames (>2800°C), potassium can experience partial ionization which indirectly affects absorption sensitivity. The presence of other alkali salts in the sample can reduce this ionization and thereby enhance analytical results. The ionization suppressive effect of sodium is small if the ratio of Na to K is under 10. Any enhancement due to sodium can be stabilized by adding excess sodium (1000 ug/mL) to both sample and standard solutions. If more stringent control of ionization is required, the addition of cesium should be considered. Reagent blanks must be analyzed to correct for potassium impurities in the buffer zone.

2. The 404.4 nm line may also be used. This line has a relative sensitivity of 500.

3. To cover the range of potassium values normally observed in surface waters (0.1-20 mg/L), it is suggested that the burner head be rotated. A 90° rotation of the burner head provides approximately one-eighth the normal sensitivity.

---

*CLP-M modified for the Contract Laboratory Program.

SODIUM

Method 273.1 CLP-M* (Atomic Absorption, Flame Technique)

Optimum Concentration Range: 0.03-1 mg/L using a wavelength of 589.6 nm
Sensitivity: 0.015 mg/L
Detection Limit: 0.002 mg/L

Preparation of Standard Solutions

1. Stock Solution: Dissolve 2.542 g of NaCl (analytical reagent grade), dried at 140°C, in deionized distilled water and make up to 1 liter. 1 mL = 1 mg Na (1000 mg/L).

2. Prepare dilutions of the stock solution to be used as calibration standards at the time of analysis. The calibration standards should be prepared using the same type of acid and at the same concentration as will result in the sample to be analyzed either directly or after processing.

Instrumental Parameters (General)

1. Sodium hollow cathode lamp
2. Wavelength: 589.6 nm
3. Fuel: Acetylene
4. Oxidant: Air
5. Type of flame: Oxidizing

Notes

1. The 330.2 nm resonance line of sodium, which has a relative sensitivity of 185, provides a convenient way to avoid the need to dilute more concentrated solutions of sodium.

2. Low-temperature flames increase sensitivity by reducing the extent of ionization of this easily ionized metal. Ionization may also be controlled by adding potassium (1000 mg/L) to both standards and samples.

---

*CLP-M modified for the Contract Laboratory Program.

PART D - COLD VAPOR METHODS FOR MERCURY ANALYSIS[+]

Method	Page No.
Mercury Analysis in Water by Manual Cold Vapor Technique Method 245.1 CLP-M[*]	D-43
Mercury Analysis in Water by Automated Cold Vapor Technique Method 245.2 CLP-M	D-49
Mercury Analysis in Soil/Sediment by Manual Cold Vapor Technique Method 245.5 CLP-M	D-56

[+]A bibliography citing method references follows each method.

[*]CLP-M modified for the Contract Laboratory Program.

MERCURY ANALYSIS IN WATER BY MANUAL COLD VAPOR TECHNIQUE

MERCURY

Method 245.1 CLP-M* (Manual Cold Vapor Technique)

1. Scope and Application

1.1 In addition to inorganic forms of mercury, organic mercurials may also be present. These organo-mercury compounds will not respond to the cold vapor atomic absorption technique unless they are first broken down and converted to mercuric ions. Potassium permanganate oxidizes many of these compounds, but recent studies have shown that a number of organic mercurials, including phenyl mercuric acetate and methyl mercuric chloride, are only partially oxidized by this reagent. Potassium persulfate has been found to give approximately 100% recovery when used as the oxidant with these compounds. Therefore, a persulfate oxidation step following the addition of the permanganate has been included to insure that organo-mercury compounds, if present, will be oxidized to the mercuric ion before measurement. A heat step is required for methyl mercuric chloride when present in or spiked to a natural system. For distilled water the heat step is not necessary.

1.2 The range of the method may be varied through instrument and/or recorder expansion. Using a 100 mL sample, a detection limit of 0.2 ug Hg/L can be achieved (See 10.2).

2. Summary of Method

2.1 The flameless AA procedure is a physical method based on the absorption of radiation at 253.7 nm by mercury vapor. Organic mercury compounds are oxidized and the mercury is reduced to the elemental state and aerated from solution in a closed system. The mercury vapor passes through a cell positioned in the light path of an atomic absorption spectrophotometer. Absorbance (peak height) is measured as a function of mercury concentration and recorded in the usual manner.

3. Sample Handling and Preservation

3.1 Until more conclusive data are obtained, samples are preserved by acidification with nitric acid to a pH of 2 or lower immediately at the time of collection (Exhibit D, Section II).

---

*CLP-M modified for the Contract Laboratory Program.

4. Interference

4.1 Possible interference from sulfide is eliminated by the addition of potassium permanganate. Concentrations as high as 20 mg/l of sulfide as sodium sulfide do not interfere with the recovery of added inorganic mercury from distilled water (Exhibit D, Section II).

4.2 Copper has also been reported to interfere; however, copper concentrations as high as 10 mg/L had no effect on recovery of mercury from spiked samples.

4.3 Sea waters, brines and industrial effluents high in chlorides require additional permanganate (as much as 25 mL). During the oxidation step, chlorides are converted to free chlorine which will also absorb radiation of 253 nm. Care must be taken to assure that free chlorine is absent before the mercury is reduced and swept into the cell. This may be accomplished by using an excess of hydroxylamine sulfate reagent (25 mL). Both inorganic and organic mercury spikes have been quantitatively recovered from the sea water using this technique.

4.4 While the possibility of absorption from certain organic substances actually being present in the sample does exist, EMSL has not encountered such samples. This is mentioned only to caution the analyst of the possibility.

5. Apparatus

5.1 Atomic Absorption Spectrophotometer: (See Note 1) Any atomic absorption unit having an open sample presentation area in which to mount the absorption cell is suitable. Instrument settings recommended by the particular manufacturer should be followed.

NOTE 1: Instruments designed specifically for the measurement of mercury using the cold vapor technique are commercially available and may be substituted for the atomic absorption spectrophotometer.

5.2 Mercury Hollow Cathode Lamp: Westinghouse WL-22847, argon filled, or equivalent.

5.3 Recorder: Any multi-range variable speed recorder that is compatible with the UV detection system is suitable.

5.4 Absorption Cell: Standard spectrophotometer cells 10 cm long, having quartz end windows may be used. Suitable cells may be constructed from plexiglass tubing, 1" O.D. X 4-1/2". The ends are ground perpendicular to the longitudinal axis and quartz windows (1" diameter X 1/16" thickness) are cemented in place.

The cell is strapped to a burner for support and aligned in the light beam by use of two 2" by 2" cards. One inch diameter holes are cut in the middle of each card; the cards are then placed over each end of the cell. The cell is then positioned and adjusted vertically and horizontally to find the maximum transmittance.

5.5 Air Pump: Any peristaltic pump capable of delivering 1 liter of air per minute may be used. A Masterflex pump with electronic speed control has been found to be satisfactory.

5.6 Flowmeter: Capable of measuring an air flow of 1 liter per minute.

5.7 Aeration Tubing: A straight glass fit having a coarse porosity. Tygon tubing is used for passage of the mercury vapor from the sample bottle to the absorption cell and return.

5.8 Drying Tube: 6" X 3/4" diameter tube containing 20 g of magnesium perchlorate (see Note 2). The apparatus is assembled as shown in Figure 1.

NOTE 2: In place of the magnesium perchlorate drying tube, a small reading lamp with 60W bulb may be used to prevent condensation of moisture inside the cell. The lamp is positioned to shine on the absorption cell maintaining the air temperature in the cell about 10°C above ambient.

6. <u>Reagents</u>

6.1 Sulfuric Acid, Conc: Reagent grade.

6.1.1 Sulfuric acid, 0.5 N: Dilute 14.0 mL of conc. sulfuric acid to 1.0 liter.

6.2 Nitric Acid, Conc: Reagent grade of low mercury content (see Note 3).

NOTE 3: If a high reagent blank is obtained, it may be necessary to distill the nitric acid.

6.3 Stannous Sulfate: Add 25 g stannous sulfate to 250 mL of 0.5 N sulfuric acid. This mixture is a suspension and should be stirred continuously during use. (Stannous chloride may be used in place of stannous sulfate.)

6.4 Sodium Chloride-Hyroxylamine Sulfate Solution: Dissolve 12 g of sodium chloride and 12 g of hydroxylamine sulfate in distilled water and dilute to 100 mL. (Hydroxylamine hydrochloride may be used in place of hydroxylamine sulfate.)

6.5 Potassium Permanganate: 5% solution, w/v. Dissolve 5 g of potassium permanganate in 100 mL of distilled water.

6.6 Potassium Persulfate: 5% solution, w/v. Dissolve 5 g of potassium persulfate in 100 mL of distilled water.

6.7 Stock Mercury Solution: Dissolve 0.1354 g of mercuric chloride in 75 mL of distilled water. Add 10 mL of conc. nitric acid and adjust the volume to 100.0 mL. 1 mL = 1 mg Hg.

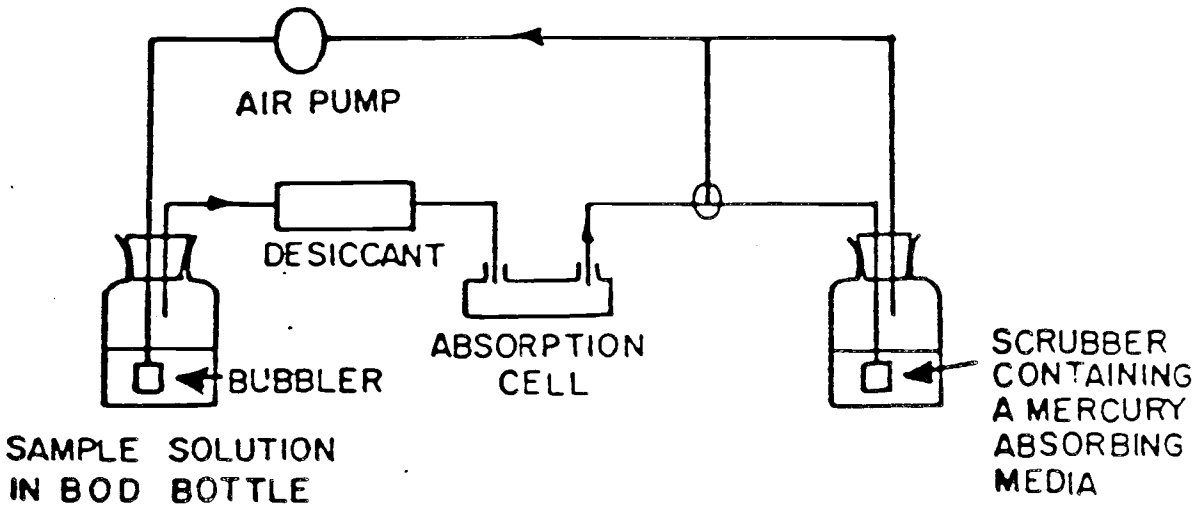

Figure 1. Apparatus for Flameless Mercury Determination

6.8 Working Mercury Solution: Make successive dilutions of the stock mercury solution to obtain a working standard containing 0.1 ug per mL. This working standard and the dilutions of the stock mercury solution should be prepared fresh daily. Acidity of the working standard should be maintained at 0.15% nitric acid. This acid should be added to the flask as needed before the addition of the aliquot.

7. Calibration

7.1 Transfer 0, 0.5, 1.0, 5.0 and 10.0 mL aliquots of the working mercury solution containing 0 to 1.0 ug of mercury to a series of 300 mL BOD bottles. Add enough distilled water to each bottle to make a total volume of 100 mL. Mix thoroughly and add 5 mL of conc. sulfuric acid (6.1) and 2.5 mL of conc. nitric acid (6.2) to each bottle. Add 15 mL of $KMnO_4$ (6.5) solution to each bottle and allow to stand at least 15 minutes. Add 8 mL of potassium persulfate (6.6) to each bottle and heat for 2 hours in a water bath maintained at 95°C. Alternatively, cover the BOD bottles with foil and heat in an autoclave for 15 minutes at 120°C and 15 lbs. Cool and add 6 mL of sodium chloride-hydroxylamine sulfate solution (6.4) to reduce the excess permanganate. When the solution has been decolorized wait 30 seconds, add 5 mL of the stannous sulfate solution (6.3) and immediately attach the bottle to the aeration apparatus forming a closed system. At this point the sample is allowed to stand quietly without manual agitation.

The circulating pump, which has previously been adjusted to a rate of 1 liter per minute, is allowed to run continuously (see Note 4). The absorbance will increase and reach maximum within 30 seconds. As soon as the recorder pen levels off, approximately 1 minute, open the bypass valve and continue the aeration until the absorbance returns to its minimum value (see Note 5). Close the bypass valve, remove the stopper and frit from the BOD bottle and continue the aeration. Proceed with the standards and construct a standard curve by plotting peak height versus micrograms of mercury.

NOTE 4: An open system where the mercury vapor is passed through the absorption cell only once may be used instead of the closed system.

NOTE 5: Because of the toxic nature of mercury vapor precaution must be taken to avoid its inhalation. Therefore, a bypass has been included in the system to either vent the mercury vapor into an exhaust hood or pass the vapor through some absorbing media, such as:
a) equal volumes of 0.1 M $KMnO_4$, and 10% H_2SO_4 or
b) 0.25% iodine in a 3% a KI solution. A specially treated charcoal that will adsorb mercury vapor is available.

8. Procedure

8.1 Transfer 100 mL, or an aliquot diluted to 100 mL, containing not more than 1.0 ug of mercury, to a 300 mL BOD bottle. Add 5 mL of sulfuric acid (6.1) and 2.5 mL of conc. nitric acid (6.2) mixing after each additon. Add 15 mL of potassium permanganate solution (6.5) to each sample bottle (see Note 6). For sewage samples additional permanganate may be required. Shake and add additional portions of potassium permanganate solution, if necessary, until the purple color persists for at least 15 minutes. Add 8 mL of potassium persulfate (6.6) to each bottle and heat for 2 hours in a water bath at 95°C.

NOTE 6: The same amount of $KMnO_4$ added to the samples should be present in standards and blanks.

Cool and add 6 mL of sodium chloride-hydroxylamine sulfate (6.4) to reduce the excess permanganate (see Note 7). Purge the head space in the BOD bottle for at least 1 minute and add 5 mL of Stannous Sulfate (6.3) and immediately attach the bottle to the aeration apparatus. Continue as described under Calibration.

NOTE 7: Add reductant in 6 mL increments until $KMnO_4$ is completely reduced.

9. Calculation

9.1 Determine the peak height of the unknown from the chart and read the mercury value from the standard curve.

9.2 Calculate the mercury concentration in the sample by the formula:

$$\text{ug Hg/L} = \text{ug Hg in aliquot} \times \frac{1{,}000}{\text{volume of aliquot in mL}}$$

9.3 Report mercury concentrations as follows: Below 0.20 ug/L, 0.20 u; between 0.20 and 10.0 ug/L, two significant figures; equal to or above 10.0 ug/L, three significant figures.

10. Appendix

10.1 If additional sensitivity is required, a 200 mL sample with recorder expansion may be used provided the instrument does not produce undue noise. Using a Coleman MAS-50 with a drying tube of magnesium perchlorate and a variable recorder, 2 mv was set to read full scale. With these conditions, and distilled water solutions of mercuric chloride at concentrations of 0.15, 0.10, 0.05 and 0.025 ug/L the standard deviations were ±0.027, ±0.0006, ±0.01 and ±0.004. Percent recoveries at these levels were 107, 83, 84 and 96%, respectively.

10.2 Directions for the disposal of mercury-containing wastes are given in ASTM Standards, Part 31, "Water", p. 349, Method D3223 (1976).

Bibliography

1. Kopp, J.F., Longbottom, M.C. and Lobring, L.B. "Cold Vapor Method for Determining Mercury", AWWA, vol. 64, p. 20, Jan. 1972.

2. Annual Book of ASTM Standards, Part 31, "Water", Standard D3223-73, p. 343 (1976).

3. Standard Methods for the Examination of Water and Wastewater 14th Edition, p. 156 (1975).

MERCURY ANALYSIS IN WATER BY AUTOMATED COLD VAPOR TECHNIQUE

MERCURY
Method 245.2 CLP-M* (Automated Cold Vapor Technique)

1. Scope and Application

1.1 The working range is 0.2 to 20.0 ug Hg/L.

2. Summary of Method

2.1 The flameless AA procedure is a physical method based on the absorption of radiation at 253.7 nm by mercury vapor. The mercury is reduced to the elemental state and aerated from solution. The mercury vapor passes through a cell positioned in the light path of an atomic absorption spectrophotometer. Absorbance (peak height) is measured as a function of mercury concentration and recorded in the usual manner.

2.2 In addition to inorganic forms of mercury, organic mercurials may also be present. These organo-mercury compounds will not respond to the flameless atomic absorption technique unless they are first broken down and converted to mercuric ions. Potassium permanganate oxidizes many of these compounds, but recent studies have shown that a number of organic mercurials, including phenyl mercuric acetate and methyl mercuric chloride, are only partially oxidized by this reagent. Potassium persulfate has been found to give approximately 100% recovery when used as the oxidant with these compounds. Therefore, an automated persulfate oxidation step following the automated addition of the permanganate has been included to insure that organo-mercury compounds, if present, will be oxidized to the mercuric ion before measurement.

3. Sample Handling and Preservation

3.1 Until more conclusive data are obtained, samples are preserved by acidification with nitric acid to a pH of 2 or lower immediately at the time of collection (Exhibit D, Section II).

4. Interferences (see NOTE 1)

4.1 Some sea waters and waste-waters high in chlorides have shown a positive interference, probably due to the formation of free chlorine.

---

*CLP-M modified for the Contract Laboratory Program.

4.2 Formation of a heavy precipitate, in some wastewaters and effluents, has been reported upon addition of concentrated sulfuric acid. If this is encountered, the problem sample cannot be analyzed by this method.

4.3 Samples containing solids must be blended and then mixed while being sampled if total mercury values are to be reported.

NOTE 1: All of the above interferences can be overcome by use of the Manual Mercury method.

5. Apparatus

5.1 Technicon Auto Analyzer or equivalent instrumentation consisting of:

5.1.1 Sampler II with provision for sample mixing.

5.1.2 Manifold.

5.1.3 Proportioning Pump II or III.

5.1.4 High temperature heating bath with two distillation coils (Technicon Part #116-0163) in series.

5.2 Vapor-liquid separator (Figure 1).

5.3 Absorption cell, 100 mm long, 10 mm diameter with quartz windows.

5.4 Atomic Absorption Spectrophotometer (see Note 2): Any atomic absorption unit having an open sample presentation area in which to mount the absorption cell is suitable. Instrument settings recommended by the particular manufacturer should be followed.

NOTE 2: Instruments designed specifically for the measurement of mercury using the cold vapor technique are commercially available and may be substituted for the atomic absorption spectrophotometer.

5.5 Mercury Hollow Cathode Lamp: Westinghouse WL-22847, argon filled, or equivalent.

5.6 Recorder: Any multi-range variable speed recorder that is compatible with the UV detection system is suitable.

6. Reagents

6.1 Sulfuric Acid, Conc: Reagent grade

6.1.1 Sulfuric acid, 2 N: Dilute 56 mL of conc. sulfuric acid to 1 liter with distilled water.

6.1.2 Sulfuric acid, 10%: Dilute 100 mL conc. sulfuric acid to 1 liter with distilled water.

6.2 Nitric acid, Conc: Reagent grade of low mercury content.

6.2.1. Nitric Acid, 0.5% Wash Solution: Dilute 5 mL of concentrated nitric acid to 1 liter with distilled water.

6.3 Stannous Sulfate (See Note 3): Add 50 g stannous sulfate to 500 mL of 2 N sulfuric acid (6.1.1). This mixture is a suspension and should be stirred continuously during use.

NOTE 3: Stannous chloride may be used in place of stannous sulfate.

6.4 Sodium Chloride-Hydroxylamine Sulfate (See Note 4) Solution: Dissolve 30 g of sodium chloride and 30 g of hydroxylamine sulfate in distilled water to 1 liter.

NOTE 4: Hydroxylamine hydrochloride may be used in place of hydroxylamine sulfate.

6.5 Potassium Permanganate: 0.5% solution, w/v. Dissolve 5 g of potassium permanganate in 1 liter of distilled water.

6.6 Potassium Permanganate, 0.1 N: Dissolve 3.16 g of potassium permanganate in distilled water and dilute to 1 liter.

6.7 Potassium Persulfate: 0.5% solution, w/v. Dissolve 5 g potassium persulfate in 1 liter of distilled water.

6.8 Stock Mercury Solution: Dissolve 0.1354 g of mercuric chloride in 75 mL of distilled water. Add 10 mL of conc. nitric acid and adjust the volume to 100.0 mL. 1.0 mL = 1.0 mg Hg.

6.9 Working Mercury Solution: Make successive dilutions of the stock mercury solution (6.8) to obtain a working standard containing 0.1 ug per mL. This working standard and the dilutions of the stock mercury solution should be prepared fresh daily. Acidity of the working standard should be maintained at 0.15% nitric acid. This acid should be added to the flask as needed before the addition of the aliquot. From this solution prepare standards containing 0.2, 0.5, 1.0, 2.0, 5.0, 10.0, 15.0 and 20.0 ug Hg/L.

6.10 Air Scrubber Solution: Mix equal volumes of 0.1 N potassium permanganate (6.6) and 10% sulfuric acid (6.1.2).

7. Procedure (See Note 5)

7.1 Set up manifold as shown in Figure 2.

7.2 Feeding all the reagents through the system with acid wash solution (6.2.1) through the sample line, adjust heating bath to 105°C.

7.3 Turn on atomic absorption spectrophotometer, adjust instrument settings as recommended by the manufacturer, align absorption cell in light path for maximum transmittance and place heat lamp directly over absorption cell.

7.4 Arrange working mercury standards from 0.2 to 20.0 ug Hg/L in sampler and start sampling. Complete loading of sample tray with unknown samples.

7.5 Prepare standard curve by plotting peak height of processed standards against concentration values. Determine concentration of samples by comparing sample peak height with standard curve.

7.6 After the analysis is complete put all lines except the H_2SO_4 line in distilled water to wash out system. After flushing, wash out the H_2SO_4 line. Also flush the coils in the high temperature heating bath by pumping stannous sulfate (6.3) through the sample lines followed by distilled water. This will prevent build-up of oxides of manganese.

NOTE 5: Because of the toxic nature of mercury vapor, precaution must be taken to avoid its inhalation. Venting the mercury vapor into an exhaust hood or passing the vapor through some absorbing media such as: a) equal volumes of 0.1 N $KMnO_4$(6.6) and 10% H_2SO_4 (6.1.2), or b) 0.25% iodine in a 3% KI solution, is recommended. A specially treated charcoal that will absorb mercury vapor is also available.

Bibliography

1. Wallace R.A., Fulkerson, W., Shults, W.D., and Lyon, W.S., "Mercury in the Environment-The Human Element", Oak Ridge National Laboratory, ORNL/NSF-EP-1 p. 31, (January, 1971).

2. Hatch, W.R. and Ott, W.L., "Determination of Sub-Microgram Quantities of Mercury by Atomic Absorption Specrophotometry". Anal. Chem. 40, 2085 (1968).

3. Brandenberger, H. and Bader, H., "The Determination of Nanogram Levels of Mercury in Solution by a Flameless Atomic Absorption Technique", Atomic Absorption Newsletter 6, 101 (1967).

4. Brandenberger, H. and Bader, H., "The Determination of Mercury by Flameless Atomic Absorption II, A Static Vapor Method", Atomic Absorption Newsletter 7,53 (1968).

5. Goulden, P.D. and Afghan, B.K. "An Automated Method for Determining Mercury in Water", Technicon, Adv. in Auto. Analy. 2, p. 317 (1970).

6. "Interim Methods for the Sampling and Analysis of Priority Pollutants in Sediments and Fish Tissue," USEPA, Environmental Monitoring and Support Laboratory, Cincinnati, Ohio, August 1977, revised October 1980.

7. Op. cit. (#1), Methods 245.1 or 245.2.

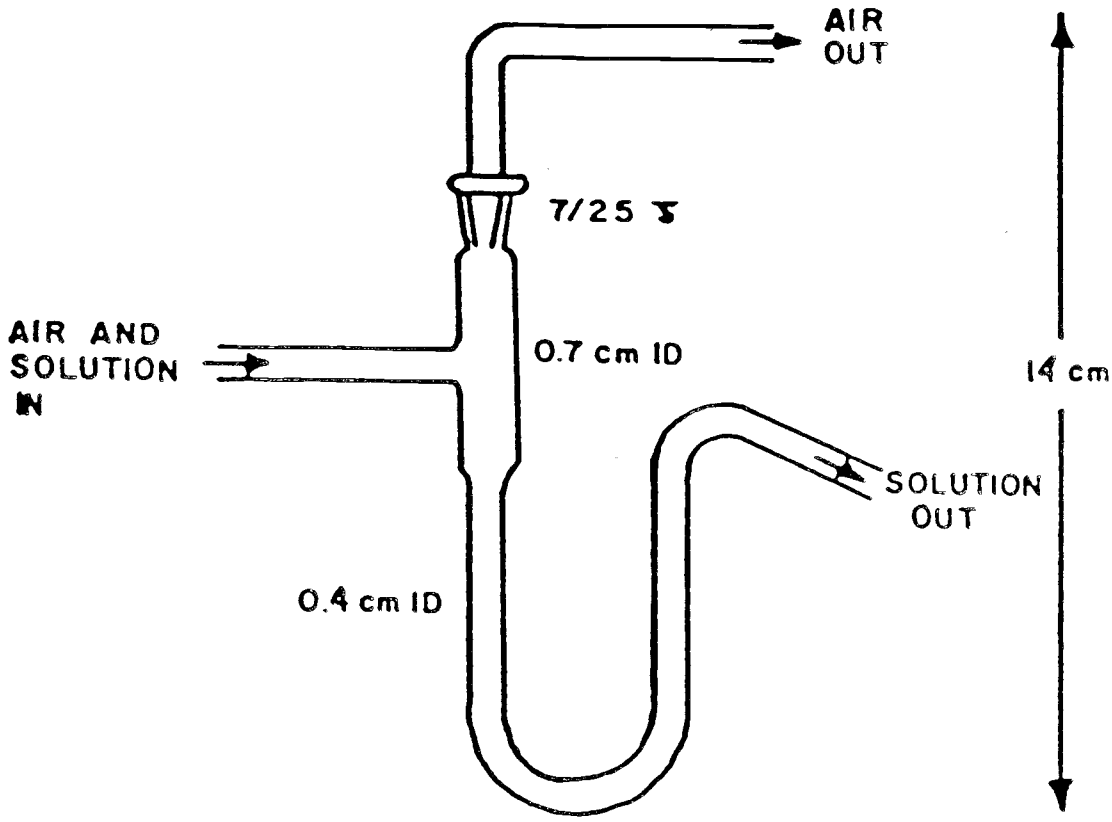

Figure 1. Vapor liquid separator

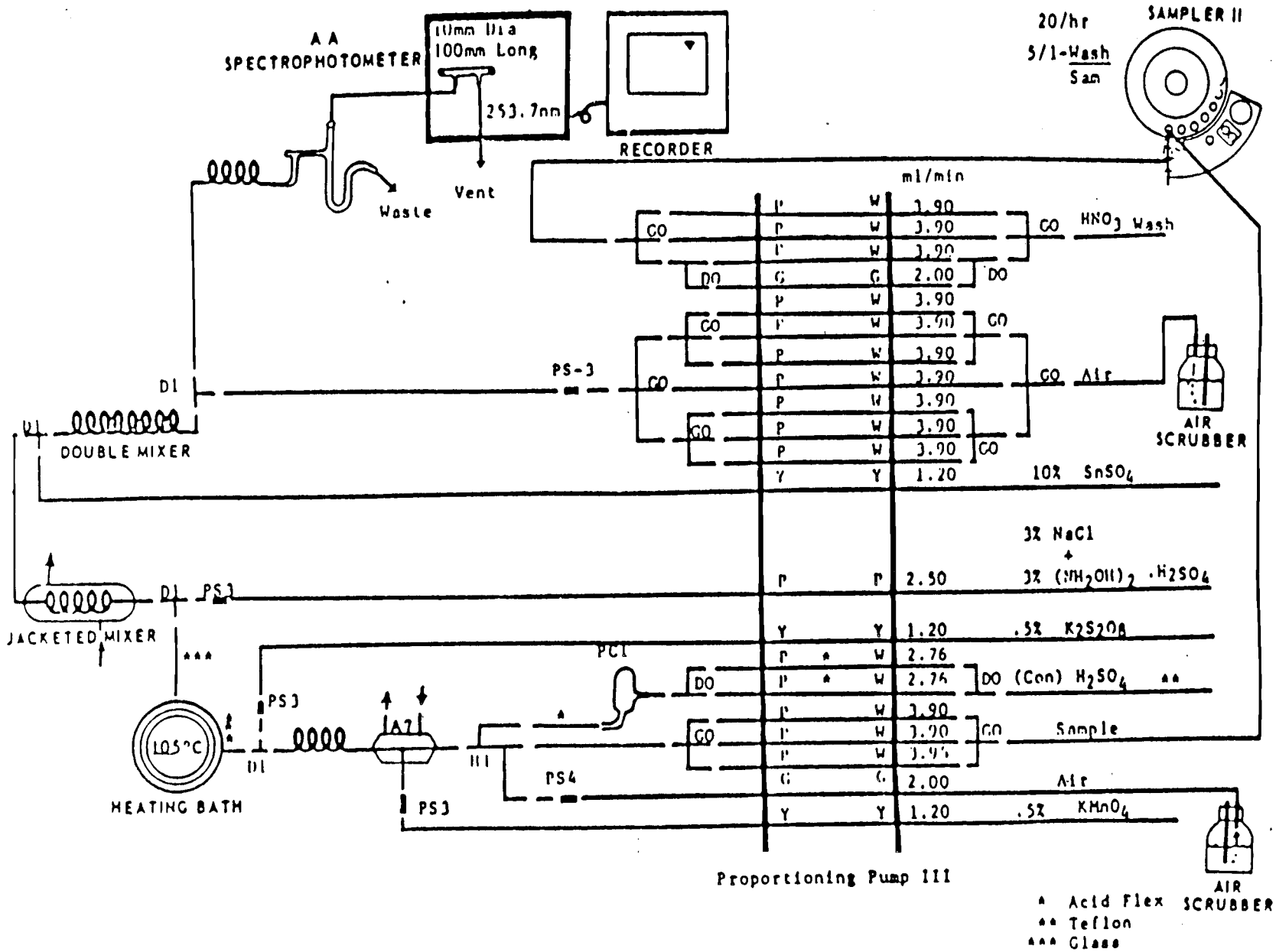

Figure 2. Mercury Manifold AA-1

MERCURY ANALYSIS IN SOIL/SEDIMENT BY MANUAL COLD VAPOR TECHNIQUE

MERCURY (in Sediments)
Method 245.5 CLP-M* (Manual Cold Vapor Technique)

1. Scope and Application

1.1 This procedure measures total mercury (organic and inorganic) in soils, sediments, bottom deposits and sludge type materials

1.2 The range of the method is 0.2 to 5 ug/g. The range may be extended above or below the normal range by increasing or decreasing sample size or through instrument and recorder control

2. Summary of Method

2.1 A weighed portion of the sample is acid digested for 2 minutes at 95°C, followed by oxidation with potassium permanganate and potassium persulfate. Mercury in the digested sample is then measured by the conventional cold vapor technique

2.2 An alternate digestion involving the use of an autoclave is described in (8.2)

3. Sample Handling and Preservation

3.1 Because of the extreme sensitivity of the analytical procedure and the omnipresence of mercury, care must be taken to avoid extraneous contamination. Sampling devices and sample containers should be ascertained to be free of mercury; the sample should not be exposed to any condition in the laboratory that may result in contact or air-borne mercury contamination

3.2 Refrigerate solid samples at 4°C (±2°) upon receipt until analysis (see Exhibit D, Section II).

3.3 The sample should be analyzed without drying. A separate percent solids determination is required, (Part F).

4. Interferences

4.1 The same types of interferences that may occur in water samples are also possible with sediments, i.e., sulfides, high copper, high chlorides, etc.

4.2 Samples containing high concentrations of oxidizable organic materials, as evidenced by high chemical oxygen demand values, may not be completely oxidized by this procedure. When this

---

*CLP-M modified for the Contract Laboratory Program.

occurs, the recovery of organic mercury will be low. The problem can be eliminated by reducing the weight of the original sample or by increasing the amount of potassium persulfate (and consequently stannous chloride) used in the digestion.

5. Apparatus

5.1 Atomic Absorption Spectrophotometer (see Note 1): Any atomic absorption unit having an open sample presentation area in which to mount the absorption cell is suitable. Instrument settings recommended by the particular manufacturer should be followed

NOTE 1: Instruments designed specifically for the measurement of mercury using the cold vapor technique are commercially available and may be substituted for the atomic absorption spectrophotometer

5.2 Mercury Hollow Cathode Lamp: Westinghouse WL-22847, argon filled, or equivalent

5.3 Recorder: Any multi-range variable speed recorder that is compatible with the UV detection system is suitable.

5.4 Absorption Cell: Standard spectrophotometer cells 10 cm long, having quartz end windows may be used. Suitable cells many be constructed from pexiglass tubing, 1" O.D. X 4-1/2". The ends are ground perpendicular to the longitudinal axis and quartz windows (1" diameter X 1/16" thickness) are cemented in place. Gas inlet and outlet ports (also of plexiglass but 1/4" O.D.) are attached approximately 1/2" from each end. The cell is strapped to a burner for support and aligned in the light beam to give the maximum transmittance. Two 2" X 2" cards with one inch diameter holes may be placed over each end of the cell to assist in positioning the cell for maximum transmittance.

5.5 Air Pump: Any peristaltic pump capable of delivering 1 liter of air per minute may be used. A Masterflex pump with electronic speed control has been found to be satisfatory. (Regulated compressed air can be used in an open one-pass system.)

5.6 Flowmeter: Capable of measuring an air flow of 1 liter per minute

5.7 Aeration Tubing: Tygon tubing is used for passage of the mercury vapor from the sample bottle to the absorption cell and return. Straight glass tubing terminating in a coarse porous frit is used for sparging air into the sample

5.8 Drying Tube: 6" X 3/4" diameter tube containing 20 g of magnesium perchlorate (see Note 2).

NOTE 2: In place of the magnesium perchlorate drying tube, a small reading lamp with 60W bulb may be used to prevent condensation of moisture inside the cell. The lamp is positioned to shine on the absorption cell maintaining the air temperature in the cell about 10°C above ambient.

6. Reagents

6.1 Sulfuric acid, conc.: Reagent grade of low mercury content

6.2 Nitric acid, conc.: Reagent grade of low mercury content

6.3 Stannous Sulfate: Add 25 g stannous sulfate to 250 mL of 0.5 N sulfuric acid (6.2). This mixture is a suspension and should be stirred continuously during use

6.4 Sodium Chloride-Hydroxylamine Sulfate (See Note 3) Solution: Dissolve 12 g of sodium chloride and 12 g of hydroxylamine sulfate in distilled water and dilute to 100 mL

NOTE 3: A 10% solution of stannous chloride may be substituted for (6.3) and hydroxylamine hydrochloride may be used in place of hydroxylamine sulfate in (6.4)

6.5 Potassium Permanganate: 5% solution, w/v. Dissolve 5 g of potassium permanganate in 100 mL of distilled water

6.6 Potassium Persulfate: 5% solution, w/v. Dissolve 5 g of potassium persulfate in 100 mL of distilled water

6.7 Stock Mercury Solution: Dissolve 0.1354 g of mercuric chloride in 75 mL of distilled water. Add mL of conc. nitric acid and adjust the volume to 100.0 mL. 1.0 = 1.0 mg Hg

6.8 Working Mercury Solution: Make successive dilutions of the stock mercury solution (6.7) to obtain a working standard containing 0.1 ug/mL. This working standard and the dilution of the stock mercury solutions should be prepared fresh daily. Acidity of the working standard should be maintained at 0.15% nitric acid. This acid should be added to the flask as needed before the addition of the aliquot

7. Calibration

7.1 Transfer 0, 0.5, 1.0, 5.0 and 10 mL aliquots of the working mercury solutions (6.8) containing 0 to 1.0 ug of mercury to a series of 300 mL BOD bottles. Add enough distilled water to each bottle to make a total volume of 10 mL. Add 5 mL of conc. H_2SO_4 (6.1) and 2.5 mL of conc. HNO_3 (6.2) and heat 2 minutes in a water bath at 95°C. Allow the sample to cool and add 50 mL distilled water, 15 mL of $KMnO_4$ solution (6.5) and 8 mL of potassium persulfate solution (6.6) to each bottle and return to the water bath for 30 minutes. Cool and add 6 mL of sodium chloride-hydroxylamine sulfate solution (6.4) to reduce the excess permanganate. Add 50 mL of distilled water. Treating each bottle individually, add 5 mL of stannous sulfate

solution (6.3) and immediately attach the bottle to the aeration apparatus. At this point the sample is allowed to stand quietly without manual agitation. The circulating pump, which has previously been adjusted to a rate of 1 liter per minute, is allowed to run continuously. The absorbance, as exhibited either on the spectrophotometer or the recorder, will increase and reach maximum within 30 seconds. As soon as the recorder pen levels off, approximately 1 minute, open the bypass valve and continue the aeration until the absorbance returns to its minimum value (see Note 4). Close the bypass valve, remove the fritted tubing from the BOD bottle and continue the aeration. Proceed with the standards and construct a standard curve by plotting peak height versus micrograms of mercury

NOTE 4: Because of the toxic nature of mercury vapor, precaution must be taken to avoid its inhalation. Therefore, a bypass has been included in the system to either vent the mercury vapor into an exhaust hood or pass the vapor through some absorbing media, such as: a) equal volumes of 0.1 N $KMnO_4$ and 10% H_2SO_4, or b) 0.25% iodine in a 3% KI solution. A specially treated charcoal that will absorb mercury vapor is also available.

8. Procedure

8.1 Weigh a representative 0.2 g portion of wet sample and place in the bottom of a BOD bottle. Add 5 mL of sulfuric acid (6.1) and 2.5 mL of concentrated nitric acid (6.2) mixing after each addition. Heat two minutes in a water bath at 95°C. Cool, add 50 mL distilled water, 15 mL potassium permanganate solution (6.5) and 8 mL of potassium persulfate solution (6.6) to each sample bottle. Mix thoroughly and place in the water bath for 30 minutes at 95°C. Cool and add 6 mL of sodium chloride-hydroxylamine sulfate (6.4) to reduce the excess permanganate. Add 55 mL of distilled water. Treating each bottle individually, purge the head space of the sample bottle for at least one minute and add 5 mL of stannous sulfate (6.3) and immediately attach the bottle to the aeration apparatus. Continue as described under (7.1)

8.2 An alternate digestion procedure employing an autoclave may also be used. In this method 5 mL of conc. H_2SO_4 and 2 mL of conc. HNO_3 are added to the 0.2 g of sample. 5 mL of saturated $KMnO_4$ solution and 8 mL of potassium persulfate solution are added and the bottle is covered with a piece of aluminum foil. The sample is autoclaved at 121°C and 15 lbs. for 15 minutes. Cool, make up to a volume of 100 mL with distilled water and add 6 mL of sodium chloride-hydroxylamine sulfate solution (6.4) to reduce the excess permanganate. Purge the head space of the sample bottle for at least one minute and continue as described under (7.1)

9. Calculations

9.1 Measure the peak height of the unknown from the chart and read the mercury value from the standard curve

9.2 Calculate the mercury concentration in the sample by the formula:

$$\text{ug Hg/g} = \frac{\text{ug Hg in the aliquot}}{\text{wt of the aliquot in gms}}$$

(based upon dry wt of the sample)

9.3 Report mercury concentrations as described for aqueous mercury samples converted to units of mg/kg. The sample result or the detection limit for each sample must be corrected for sample weight and % solids before reporting.

Note that the minimum reportable number that can be substituted in the formula in section 9.2 is 0.02 ug Hg in the aliquot. Therefore a sample with a weight of 0.2 grams and 100 % solids that has a reading from the curve of less than 0.02 ug would be reported as 0.10U mg/kg.

Bibliography

1. Bishop, J. N., "Mercury in Sediments", Ontario Water Resources Comm., Toronto, Ontario, Canada, 1971

2. Salma, M., private communication, EPA Cal/Nev. Basin Office, Almeda, California

3. "Interim Methods for the Sampling and Analysis of Priority Pollutants in Sediments and Fish Tissue," USEPA Environmental Monitoring and Support Laboratory, Cincinnati, Ohio, August 1977, Revised October 1980

4. Op. cit. (#3), Methods 245.1 or 245.2

PART E - METHODS FOR CYANIDE ANALYSIS+

Method	Page No.
Method for Total Cyanide Analysis in Water Method 335.2 CLP-M*	D-62
Method for Total Cyanide Analysis in Soil/Sediment Method 335.2 CLP-M	D-71

+A bibliography citing method references follows each method.

*CLP-M Modified for the Contract Laboratory Program.

METHOD FOR TOTAL CYANIDE ANALYSIS IN WATER

CYANIDE, TOTAL (in Water)

Method 335.2 CLP-M* (Titrimetric; Manual Spectrophotometric; Semi-Automated Spectrophotometric)

1. Scope and Application

1.1 This method is applicable to the determination of cyanide in drinking, surface and saline waters, domestic and industrial wastes.

1.2 The titration procedure using silver nitrate with p-dimethylaminobenzalrhodanine indicator is used for measuring concentrations of cyanide exceeding 1 mg/L (0.25 mg/250 mL of absorbing liquid). (Option A, 8.2).

1.3 The manual colorometric procedure is used for concentrations below 1 mg/L of cyanide and is sensitive to about 0.02 mg/L. (Option B, 8.3).

1.4 The working range of the semi-automated spectrophotometric method is 0.005 to 0.200 mg/L. Higher level samples must be diluted to fall within the working range. (Option C, 8.4).

2. Summary of Method

2.1 The cyanide as (HRN) hydrocyanic acid (HCN) is released from cyanide complexes by means of a reflux-distillation operation and absorbed in a scrubber containing sodium hydroxide solution. The cyanide ion in the absorbing solution is then determined by volumetric titration or colorimetrically.

2.2 In the colorimetric measurement the cyanide is converted to cyanogen chloride, CNCl, by reaction with chloramine-T at a pH less than 8 without hydrolyzing to the cyanate. After the reaction is complete, color is formed on the addition of pyridine-pyrazolone or pyridinebarbituric acid reagent. The absorbance is read at 620 nm when using pyridine-pyrazolone or 578 nm for pyridine-barbituric acid. To obtain colors of comparable intensity, it is essential to have the same salt content in both the sample and the standards.

2.3 The titimetric measurement uses a standard solution of silver nitrate to titrate cyanide in the presence of a silver sensitive indicator.

3. Definitions

3.1 Cyanide is defined as cyanide ion and complex cyanides converted to hydrocyanic acid (HCN) by reaction in a reflux system of a mineral acid in the presence of magnesium ion.

---

*CLP-M Modified for the Contract Laboratory Program.

4. Sample Handling and Preservation

4.1 All bottles must be thoroughly cleansed and rinsed to remove soluble material from containers.

4.2 Oxidizing agents such as chlorine decompose most of the cyanides. Test a drop of the sample with potassium iodide-starch test paper (KI-starch paper); a blue color indicates the need for treatment. Add ascorbic acid, a few crystals at a time, until a drop of sample produces no color on the indicator paper. Then add an additional 0.6 g of ascorbic acid for each liter of sample volume.

4.3 Samples are preserved with 2 mL of 10 N sodium hydroxide per liter of sample (pH> 12) at the time of collection (Exhibit D, Section II).

4.4 Samples must be stored at $4^{o}C(\pm 2^{o}C)$ and must be analyzed within the holding time specified in Exhibit D, Section II.

5. Interferences

5.1 Interferences are eliminated or reduced by using the distillation procedure described in Procedure 8.1.

5.2 Sulfides adversely affect the colorimetric and titration procedures. If a drop of the distillate on lead acetate test paper indicates the presence of sulfides, treat 25 mL more of the sample than that required for the cyanide determination with powdered cadmium carbonate. Yellow cadmium sulfide precipitates if the sample contains sulfide. Repeat this operation until a drop of the treated sample solution does not darken the lead acetate test paper. Filter the solution through a dry filter paper into a dry beaker, and from the filtrate measure the sample to be used for analysis. Avoid a large excess of cadmium carbonate and a long contact time in order to minimize a loss by complexation or occlusion of cyanide on the precipitated material. Sulfides should be removed prior to preservation with sodium hydroxide as described in 4.3.

5.3 The presence of surfactants may cause the sample to foam during refluxing. If this occurs, the addition of an agent such as Dow Corning 544 antifoam agent will prevent the foam from collecting in the condenser. Fatty acids will distill and form soaps under alkaline titration conditions, making the end point almost impossible to detect. When this occurs, one of the spectrophotometric methods should be used.

6. Apparatus

6.1 Reflux distillation apparatus such as shown in Figure 1 or Figure 2. The boiling flask should be of 1 liter size with inlet tube and provision for condenser. The gas absorber may be a Fisher-Milligan scrubber.

6.2 Microburet, 5.0 mL (for titration)

6.3 Spectrophotometer suitable for measurements at 578 nm or 620 nm with a 1.0 cm cell or larger (for manual spectrophotometric method).

6.4 Technicon AA II System or equivalent instrumentation, (for automated spectrophotometric method) including:

6.4.1 Sampler

6.4.2 Pump III

6.4.3 Cyanide Manifold (Figure 3)

6.4.4 SCIC Colorimeter with 15 mm flowcells and 570 nm filters

6.4.5 Recorder

6.4.6 Data System (optional)

6.4.7 Glass or plastic tubes for the sampler

7. Reagents

7.1 Distillation and Preparation Reagents

7.1.1 Sodium hydroxide solution, 1.25N: Dissolve 50 g of NaOH in distilled water, and dilute to 1 liter with distilled water.

7.1.2 Cadmium carbonate: powdered

7.1.3 Ascorbic acid: crystals

7.1.4 Sulfuric acid: concentrated

7.1.5 Magnesium chloride solution: Weight 510 g of $MgCl_2 \cdot 6H_2O$ into a 1000 mL flask, dissolved and dilute to 1 liter with distilled water.

7.2 Stock Standards and Titration Reagents

7.2.1 Stock cyanide solution: Dissolve 2.51 g of KCN and 2 g KOH in 1 liter of distilled water. Standardize with 0.0192 N $AgNO_3$.

7.2.2 Standard cyanide solution, intermediate: Dilute 50.0 mL of stock (1 mL = 1 mg CN) to 1000 mL with distilled water.

7.2.3 Standard cyanide solution: Prepare fresh daily by diluting 100.0 mL of intermediate cyanide solution to 1000 mL with distilled water and store in a glass stoppered bottle. 1 mL = 5.0 ug CN (5.0 mg/L).

7.2.4 Standard silver nitrate solution, 0.0192 N: Prepare by crushing approximately 5 g $AgNO_3$ crystals and drying to constant weight at 40°C. Weight out 3.2647 g of dried $AgNO_3$, dissolve in distilled water, and dilute to 1000 mL (1 mL = 1 mg CN).

7.2.5 Rhodanine indicator: Dissolve 20 mg of p-dimethyl-aminobenzalrhodanine in 100 mL of acetone.

7.2.6 Sodium hydroxide solution, 0.25 N: Dissolve 10 g or NaOH in distilled water and dilute to 1 liter.

7.3 Manual Spectrophotometric Reagents

7.3.1 Sodium dihydrogenphosphate, 1 M: Dissolve 138 g of $NaH_2PO_4 \cdot H_2O$ in a liter of distilled water. Refrigerate this solution.

7.3.2 Chloramine-T solution: Dissolve 1.0 g of white, water soluble chloramine-T in 100 mL of distilled water and refrigerate until ready to use. Prepare fresh weekly.

7.3.3 Color Reagent-One of the following may be used:

7.3.3.1 Pyridine-barbituric acid reagent: Place 15 g of barbituric acid in a 250 mL volumetric flask and add just enough distilled water to wash the sides of the flask and wet the barbituric acid. Add 75 mL of pyridine and mix. Add 15 mL of HCl (sp gr 1.19), mix, and cool to room temperature. Dilute to 250 mL with distilled water and mix. This reagent is stable for approximately six months if stored in a cool, dark place.

7.3.3.2 Pyridine-pyrazolone solution:7.3.3.2.1 3-Methyl-1-phenyl-2-pyrazolin-5-one reagent, saturated solution: Add 0.25 g of 3-methyl-1-phenyl-2-pyrazolin-5-one to 50 mL of distilled water, heat to 60°C with stirring. Cool to room temperature.

7.3.3.2.1 3-Methyl-1phenyl-2-pyrazolin-5-one reagent, saturated solution: Add 0.25 g of 3-methyl-1-phenyl-2-pyrazolin-5-one to 50 mL of distilled water, heat to 60°C with stirring. Cool to room temperature.

7.3.3.2.2 3,3'Dimethyl-1,1'-diphenyl [4,4'-bi-2 pyrazolin]-5,5'dione (bispyrazolone): Dissolve 0.01 g of bispyrazolone in 10 mL of pyridine.

7.3.3.2.3 Pour solution (7.3.3.2.1) through nonacid-washed filter paper. Collect the filtrate. Through the same filter paper pour solution (7.3.3.2.2) collecting the filtrate in the same container as filtrate from (7.3.3.2.1). Mix until the filtrates are homogeneous. The mixed reagent develops a pink color but this does not affect the color production with cyanide if used within 24 hours of preparation.

7.4 Semi-Automated Spectrophotometric Reagents

7.4.1 Chloramine-T solution: Dissolve 0.40 g of chloramine-T in distilled water and dilute to 100 mL. Prepare fresh daily.

7.4.2 Phosphate buffer: Dissolve 138 g of $NaH_2PO_4 \cdot H_2O$ in distilled water and dilute to 1 liter. Add 0.5 mL of Brij-35 (available from Technicon). Store at $4^oC(\pm 2^oC)$.

7.4.3 Pyridine-barbituric acid solution: Transfer 15 g of barbituric acid into a 1 liter volumetric flask. Add about 100 mL of distilled water and swirl the flask. Add 74 mL of pyridine and mix. Add 15 mL of concentrated HCl and mix. Dilute to about 900 mL with distilled water and mix until the barbituric acid is dissolved. Dilute to 1 liter with distilled water. Store at $4^oC(\pm 2^oC)$.

7.4.4 Sampler wash: Dissolve 10 g of NaOH in distilled water and dilute to 1 liter.

8. <u>Procedure</u>

8.1 Distillation

8.1.1 Place 500 mL of sample, or an aliquot diluted to 500 mL, in the 1 liter boiling flask. Add 50 mL, of sodium hydroxide (7.1.1) to the absorbing tube and dilute if necessary with distilled water to obtain an adequate depth of liquid in the absorber. Connect the boiling flask, condenser, absorber and trap in the train.

8.1.2 Start a slow stream of air entering the boiling flask by adjusting the vacuum source. Adjust the vacuum so that approximately one bubble of air per second enters the boiling flask through the air inlet tube.

NOTE: The bubble rate will not remain constant after the reagents have been added and while heat is being applied to the flask. It will be necessary to readjust the air rate occasionally to prevent the solution in the boiling flask from backing up into the air inlet tube.

8.1.3 Slowly add 25 mL concentrated sulfuric acid (7.1.4) through the air inlet tube. Rinse the tube with distilled water and allow the airflow to mix the flask contents for 3 minutes. Pour 20 mL of magnesium chloride solution (7.1.5) into the air inlet and wash down with a stream of water.

8.1.4 Heat the solution to boiling, taking care to prevent the solution from backing up into and overflowing from the air inlet tube. Reflux for one hour. Turn off heat and continue the airflow for at least 15 minutes. After cooling the boiling flask, disconnect absorber and close off the vacuum source.

8.1.5 Drain the solution from the absorber into a 250 mL volumetric flask and bring up to volume with distilled water washings from the absorber tube.

8.2 Titrimetric Determination (Option A)

8.2.1 If the sample contains more than 1 mg of CN, transfer the distillate, or a suitable aliquot diluted to 250 mL, to a 500 mL Erlenmeyer flask. Add 10-12 drops of the benzalrhodanine indicator.

8.2.2 Titrate with standard silver nitrate to the first change in color from yellow to brownish-pink. Titrate a distilled water blank using the same amount of sodium hydroxide and indicator as in the sample.

8.2.3 The analyst should familiarize himself with the end point of the titration and the amount of indicator to be used before actually titrating the samples. A 5 or 10 mL microburet may be conveniently used to obtain a more precise titration.

8.3 Manual Spectrophotometric Determination (Option B)

8.3.1 Withdraw 50 mL or less of the solution from the flask and transfer to a 100 mL volumetric flask. If less than 50 mL is taken, dilute to 50 mL with 0.25 N sodium hydroxide solution (7.2.6). Add 15.0 mL of sodium phosphate solution (7.3.1) and mix.

8.3.1.1 Pyridine-barbituric acid method: Add 2 mL of chloramine-T (7.3.2) and mix. After 1 to 2 minutes, add 5 mL of pyridine-barbituric acid solution (7.3.3.1) and mix. Dilute to mark with distilled water and mix again. Allow 8 minutes for color development then read absorbance at 578 nm in a 1 cm cell within 15 minutes.

8.3.1.2 Pyridine-pyrazolone method: Add 0.5 mL of chloramine-T (7.3.2) and mix. After 1 to 2 minutes, add 5 mL of pyridine-pyrazolone solution (7.3.3.2) and mix. Dilute to mark with distilled water and mix again. After 40 minutes, read absorbance at 620 nm in a 1 cm cell. NOTE: More than 0.5 mL of chloramine-T will prevent the color from developing with pyridine-pyrazolone.

8.3.2 Prepare a minimum of 3 standards and a blank by pipetting suitable volumes of standard solution into 250 mL volumetric flasks. NOTE: One calibration standard must be at the Contract Required Detection Limit (CRDL). To each standard, add 50 mL of 1.25 N sodium hydroxide and dilute to 250 mL with distilled water. Standards must bracket the concentration of the samples. If dilution is required, use the blank solution.

As an example, standard solutions could be prepared as follows:

mL of Standard Solution (1.0 = 5 ug CN)	Conc. ug CN per 250 mL
0	Blank
1.0	5
2.0	10
5.0	25
10.0	50
15.0	75
20.0	100

8.3.2.1 It is not imperative that all standards be distilled in the same manner as the samples. At least one standard (mid-range) must be distilled and compared to similar values on the curve to ensure that the distillation technique is reliable. If the distilled standard does not agree within ±15% of the undistilled standards, the operator should find and correct the cause of the apparent error before proceeding.

8.3.2.2 Prepare a standard curve by plotting absorbance of standard vs. cyanide concentrations (per 250 mL).

8.4 Semi-Automated Spectrophotometric Determination (Option C)

8.4.1 Set up the manifold as shown in Figure 3. Pump the reagents through the system until a steady baseline is obtained.

8.4.2 Calibration standards: Prepare a blank and at least three calibration standards over the range of the analysis. One calibration standard must be at the CRDL. For a working range of 0-200 ug/L, the following standards may be used:

mL Standard Solution (7.2.3) diluted to 1 liter	Concentration ug CN/L
0	0
4.0	20
10.0	50
20.0	100
30.0	150
40.0	200

Add 10 g of NaOH to each standard. Store at $4^{o}C(\pm 2^{o}C)$

8.4.3 Place calibration standards, blanks, and control standards in the sampler tray, followed by distilled samples, distilled duplicates, distilled standards, distilled spikes, and distilled blanks.

8.4.4 When a steady reagent baseline is obtained and before starting the sampler, adjust the baseline using the appropriate knob on the colorimeter. Aspirate a calibration standard and adjust the STD CAL dial on the colorimeter until the desired signal is obtained. Record the STD CAL value. Re-establish the baseline and proceed to analyze calibration standards, blanks, control standards, distilled samples, and distilled QC audits.

9. Calculations

9.1 Using the titrimetric procedure, calculate concentration of CN as follows:

$$\text{CN, mg/L} = \frac{(A-B)\ 1{,}000\ \text{mL/L}}{\text{mL orig. sample}} \times \frac{250\ \text{mL}}{\text{mL of aliquot titrated}}$$

WHERE: A = volume of $AgNO_3$ for titration of sample (1 mL = 1 mg Ag)

B = volume of $AgNO_3$ for titration of blank (1 mL = 1 mg Ag)

AND: 250 mL = distillate volume (See 8.1.5)
1000 mL = conversion mL to L
mL original sample (See 8.1.1)
mL of aliquot titrated (See 8.2.1)

9.2 If the semi-automated method is used, measure the peak heights of the calibration standards (visually or using a data system) and calculate a linear regression equation. Apply the equation to the samples and QC audits to determine the cyanide concentration in the distillates. To determine the concentration of cyanide in the original sample, MULTIPLY THE RESULTS BY ONE-HALF (since the original volume was 500 mL and the distillate volume was 250 mL). Also, correct for any dilutions which were made before or after distillation.

9.3 If the colorimetric procedure is used, calculate the cyanide, in ug/L, in the original sample as follows:

$$\text{CN, ug/L} = \frac{A \times 1{,}000 \text{ mL/L}}{B} \times \frac{50 \text{ mL}}{C}$$

WHERE: A = ug CN read from standard curve (per 250 mL)
B = mL of original sample for distillation (See 8.1.1)
C = mL taken for colorimetric analysis (See 8.3.1)

AND: 50 mL = volume of original sample aliquot (See 8.3.1)
1000 mL/L = conversion mL to L

Bibliography

1. Methods for "Chemical Analysis of Water and Wastes", March 1979, EPA publication #600/4-79-02.

2. "Operation RN Manual for Technicon Auto Analyzer IIC System", 1980. Technical publication #TA9-0460-00. Technicon Industrial Systems, Tarrytown, NY, 10591.

3. "Users Guide for the Continuous Flow Analyzer Automation System", EMSL U.S. EPA, Cincinnati, OH (1981).

4. Interim Methods for the Sampling and Analysis of Priority Pollutants in Sediments and Fish Tissue," USEPA Environmental Monitoring and Support Laboratory, Cincinnati, Ohio, August 1977, Revised October 1980.

5. Op. cit. (#4), Methods 335.2.

METHOD FOR TOTAL CYANIDE ANALYSIS IN SOIL/SEDIMENT

CYANIDE, TOTAL (in Sediments)

Method 335.2 CLP-M* (Titrimetric; Manual Spectrophotometric; Semi-Automated Spectrophotometric)

1. Scope and Application

1.1 This method is applicable to the determination of cyanide in sediments and other solids.

1.2 The detection limit is dependent upon the weight of sample taken for analysis.

2. Summary of Method

2.1 The cyanide as hydrocyanic acid (HCN) is released from cyanide complexes by means of a reflux-distillation operation and absorbed in a scrubber containing sodium hydroxide solution. The cyanide ion in the absorbing solution is then determined by volumetric titration or colorimetrically.

2.2 In the colorimetric measurement the cyanide is converted to cyanogen chloride, CNCl, by reaction with chloramine-T at a pH less than 8 without hydrolyzing to the cyanate. After the reaction is complete, color is formed on the addition of pyridine-pyrazolone or pyridine-barbituric acid reagent. The absorbance is read at 620 nm when using pyridine-pyrazolone for 578 nm for pyridine-barbituric acid. To obtain colors of comparable intensity, it is essential to have the same salt content in both the sample and the standards.

2.3 The titrimetric measurement uses a standard solution of silver nitrate to titrate cyanide in the presence of a silver sensitive indicator.

3. Definitions

3.1 Cyanide is defined as cyanide ion and complex cyanides converted to hydrocyanic acid (HCN) by reaction in a reflux system of a mineral acid in the presence of magnesium ion.

4. Sample Handling and Preservation

4.1 Samples must be stored at $4^{o}C(\pm 2^{o}C)$ and must be analyzed within the holding time specified in Exhibit D, Section II.

4.2 Samples are not dried prior to analysis. A separate percent solids determination must be made in accordance with the procedure in Part F.

---

*CLP-M Modified for the Contract Laboratory Program.

5. Interferences

5.1 Interferences are eliminated or reduced by using the distillation procedure described in Procedure 8.1.

5.2 Sulfides adversely affect the colorimetric and titration procedures.

5.3 The presence of surfactants may cause the sample to foam during refluxing. If this occurs, the addition of an agent such as DOW Corning 544 antifoam agent will prevent the foam from collecting in the condenser. Fatty acids will distill and form soaps under the alkaline titration conditions, making the end point almost impossible to detect. When this occurs, one of the spectrophotometric methods should be used.

6. Apparatus

6.1 Reflux distillation apparatus such as shown in Figure 1 or Figure 2. The boiling flask should be of 1 liter size with inlet tube and provision for condenser. The gas absorber may be a Fisher-Milligan scrubber.

6.2 Microburet, 5.0 mL (for titration)

6.3 Spectrophotometer suitable for measurements at 578 nm or 620 nm with a 1.0 cm cell or larger.

6.4 Technicon AA II System or equivalent instrumentation (for automated spectrophotometric method) including:

6.4.1 Sampler

6.4.2 Pump III

6.4.3 Cyanide Manifold (Figure 3)

6.4.4 SCIC Colorimeter with 15 mm flowcells and 570 nm filters

6.4.5 Recorder

6.4.6 Data System (optional)

6.4.7 Glass or plastic tubes for the sampler

7. Reagents

7.1 Distillation and Preparation Reagents

7.1.1 Sodium hydroxide solution, 1.25N: Dissolve 50 g of NaOH in distilled water, and dilute to 1 liter with distilled water.

7.1.2 Cadmium carbonate: powdered

7.1.3 Ascorbic acid: crystals

7.1.4 Sulfuric acid: concentrated

7.1.5 Magnesium chloride solution: Weigh 510 g of $MgCl2.6H_2O$ into a 1000 mL flask, dissolve and dilute to 1 liter with distilled water.

7.2 Stock Standards and Titration Reagents

7.2.1 Stock cyanide solution: Dissolve 2.51 g of KCN and 2 g KOH in 1 liter of distilled water. Standardize with 0.0192 N $AgNO_3$.

7.2.2 Standard cyanide solution, intermediate: Dilute 50.0 mL of stock (1 mL = 1 mg CN) to 1000 mL with distilled water (1 mL = 50.0 ug).

7.2.3 Standard cyanide solution: Prepare fresh daily by diluting 100.0 mL of intermediate cyanide solution to 1000 mL with distilled water and store in a glass stoppered bottle. 1 mL = 5.0 ug CN (5.0 mg/L).

7.2.4 Standard silver nitrate solution, 0.0192 N: Prepare by crushing approximately 5 g $AgNO_3$ crystals and drying to constant weight at 40°C. Weigh out 3.2647 g of dried $AgNO_3$, dissolve in distilled water, and dilute to 1000 mL (1 mL = 1 mg CN).

7.2.5 Rhodanine indicator: Dissolve 20 mg of p-dimethyl-amino-benzalrhodanine in 100 mL acetone.

7.3 Manual Spectrophotometric Reagents

7.3.1 Sodium dihydrogenphosphate, 1 M: Dissolve 138 g of $NaH_2PO_4 \cdot H_2O$ in 1 liter of distilled water. Refrigerate this solution.

7.3.2 Chloramine-T solution: Dissolve 1.0 g of white, water soluble Chloramine-T in 100 mL of distilled water and refrigerate until ready to use. Prepare fresh weekly.

7.3.3 Color reagent - One of the following may be used:

7.3.3.1 Pyridine-barbituric acid reagent: Place 15 g of barbituric acid in a 250 mL volumetric flask and add just enough distilled water to wash the sides of the flask and wet the barbituric acid. Add 75 mL of pyridine and mix. Add 15 mL of HCl (sp gr 1.19), mix, and cool to room temperature. Dilute to 250 mL with distilled water and mix. This reagent is stable for approximately six months if stored in a cool, dark place.

7.3.3.2 Pyridine-pyrazolone solution:

7.3.3.2.1 3-Methyl-1-phenyl-2-pyrazolin-5-one reagent, saturated solution: Add 0.25 g of 3-methyl-1-phenyl-2-pyrazolin-5-one to 50 mL of distilled water, heat to 60°C with stirring. Cool to room temperature.

7.3.3.2.2 3,3'Dimethyl-1,1'-diphenyl-[4,4'-bi-2-pyrazolin]-5,5'dione (bispyrazolone): Dissolve 0.01 g of bispyrazolone in 10 mL of pyridine.

7.3.3.2.3 Pour solution (7.3.3.2.1) through non-acid-washed filter paper. Collect the filtrate. Through the same filter paper pour solution (7.3.3.2.2) collecting the filtrate in the same container as filtrate from (7.3.3.2.1). Mix until the filtrates are homogeneous. The mixed reagent develops a pink color but this does not affect the color production with cyanide if used within 24 hours of preparation.

7.4 Semi-Automated Spectrophotometric Reagents

7.4.1 Chloramine-T solution: Dissolve 0.40 g of chloramine-T in distilled water and dilute to 100 mL. Prepare fresh daily.

7.4.2 Phosphate Buffer: Dissolve 138 g of $NaH_2PO_4 \cdot H_2O$ in distilled water and dilute to 1 liter. Add 0.5 mL of Brij-35 (available from Technicon). Store at 4°C.

7.4.3 Pyridine-barbituric acid solution: Transfer 15 g of barbituric acid into a 1 liter volumetric flask. Add about 100 mL of distilled water and swirl the flask. Add 74 mL of pyridine and mix. Add 15 mL of conc. HCl mix until the barbituric acid is dissolved. Dilute to 1 liter with distilled water. Store at 4°C.

7.4.4 Sampler Wash: Dissolve 10 g of NaOH in distilled water and dilute to 1 liter.

8. <u>Procedure</u>

8.1 Distillation

8.1.1 Accurately weigh a representative 1-5 g portion of wet sample and transfer it to a boiling flask. Add 500 mL of distilled water. Shake or stir the sample so that it is dispersed.

8.1.2 Add 50 mL of sodium hydroxide (7.1.1) to the absorbing tube and dilute if necessary with distilled water to obtain an adequate depth of liquid in the absorber. Connect the boiling flask, condenser, absorber, and trap in the train.

8.1.3 Start a slow stream of air entering the boiling flask by adjusting the vacuum source. Adjust the vacuum so that approximately one bubble of air per second enters the boiling flask through the air inlet tube.

NOTE: The bubble rate will not remain constant after the reagents have been added and while heat is being applied to the flask. It will be necessary to readjust the air rate occasionally to prevent the solution in the boiling flask from backing up into the air inlet tube.

8.1.4 Slowly add 25 mL of conc. sulfuric acid (7.1.4) through the air inlet tube. Rinse the tube with distilled water and allow the airflow to mix the flask contents for 3 minutes. Pour 20 mL of magnesium chloride solution (7.1.5) into the air inlet and wash down with a stream of water.

8.1.5 Heat the solution to boiling, taking care to prevent the solution from backing up and overflowing into the air inlet tube. Reflux for one hour. Turn off heat and continue the airflow for at least 15 minutes. After cooling the boiling flask, disconnect absorber and close off the vacuum source.

8.1.6 Drain the solution from the absorber into a 250 mL volumetric flask and bring up to volume with distilled water washings from the absorber tube.

8.2 Titrimetric Determination (Option A)

8.2.1 If the sample contains more than 1 mg of CN, transfer the distillate, or a suitable aliquot diluted to 250 mL, to a 500 mL Erlenmeyer flask. Add 10-12 drops of the benzalrhodanine indicator.

8.2.2 Titrate with standard silver nitrate to the first change in color from yellow to brownish-pink. Titrate a distilled water blank using the same amount of sodium hydroxide and indicator as in the sample.

8.2.3 The analyst should familiarize himself with the end point of the titration and the amount of indicator to be used before actually titrating the samples. A 5 or 10 mL microburet may be conveniently used to obtain a more precise titration.

8.3 Manual Spectrophotometric Determination (Option B)

8.3.1 Withdraw 50 mL or less of the solution from the flask and transfer to a 100 mL volumetric flask. If less than 50 mL is taken, dilute to 50 mL with 0.25 N sodium hydroxide solution (7.2.6). Add 15.0 mL of sodium phosphate solution (7.3.2) and mix.

8.3.1.1 Pyridine-barbituric acid method: Add 2 mL of Chloramine-T (7.3.2) and mix. After 1 to 2 minutes, add 5 mL of pyridine-barbituric acid solution (7.3.3.1) and mix. Dilute to mark with distilled water and mix again. Allow 8 minutes for color development then read absorbance at 578 nm in a 1 cm cell within 15 minutes.

8.3.1.2 Pyridine-pyrazolone method: Add 0.5 mL of chloramine-T (7.3.2) and mix. After 1 to 2 minutes add 5 mL of pyridine-pyrazolone solution (7.3.3.2) and mix. Dilute to mark with distilled water and mix again. After 40 minutes read absorbance at 620 nm in a 1 cm cell.

NOTE: More than 0.5 mL of chloramine-T will prevent the color from developing with pyridine-pyrazolone.

8.3.2 Prepare a minimum of three standards and a blank by pipetting suitable volumes of standard solution into 250 mL volumetric flasks.

NOTE: One calibration standard, must be made at the CRDL. To each standard add 50 mL of 1.25 N sodium hydroxide and dilute to 250 mL with distilled water. Standards must bracket the concentrations of the sample. If dilution is required, use the blank solution.

As an example, standard solutions could be prepared as follows:

mL of Standard Solution (1.0 = 5 ug CN)	Conc. ug CN per 250 mL
0	Blank
1.0	5
2.0	10
5.0	25
10.0	50
15.0	75
20.0	100

8.3.2.1 It is not imperative that all standards be distilled in the same manner as the samples. At least one standard (mid-range) must be distilled and compared to similar values on the curve to insure that the distillation technique is reliable. If the distilled standard does not

agree within +15% of the undistilled standards the operator should find and correct the cause of the apparent error before proceeding.

8.3.2.2 Prepare a standard curve by plotting absorbance of standard vs. cyanide concentrations (per 250 mL)

8.4 Semi-Automated Spectrophotometric Determination (Option C)

8.4.1 Set up the manifold as shown in Figure 3. Pump the reagents through the system until a steady baseline is obtained.

8.4.2 Calibration standards: Prepare a blank and at least three calibration standards over the range of the analysis. One calibration standard must be at the CRDL. For a working range of 0-200 ug/L, the following standards may be used:

mL Standard Solution (7.2.3) diluted to 1 liter	Concentration ug CN/L
0	0
4.0	20
10.0	50
20.0	100
30.0	150
40.0	200

Add 10 g of NaOH to each standard. Store at $4^{o}C(\pm 2^{o}C)$.

8.4.3 Place calibration standards, blanks, and control standards in the sampler tray, followed by distilled samples, distilled duplicates, distilled standards, distilled spikes, and distilled blanks.

8.4.4 When a steady reagent baseline is obtained and before starting the sampler, adjust the baseline using the appropriate knob on the colorimeter. Aspirate a calibration standard and adjust the STD CAL dial on the colorimeter until the desired signal is obtained. Record the STD CAL value. Reestablish the baseline and proceed to analyze calibration standards, blanks, control standards, distilled samples, and distilled QC audits.

9. Calculations

9.1 A separate determination of percent solids must be performed (see Part F).

9.2 The concentration of cyanide in the sample is determined as follows.

9.2.1 (Titration)

$$\text{CN, mg/kg} = \frac{(A - B) \times \dfrac{250\ \text{mL}}{\text{mL aliquot titrated}} \times 1000\ \text{g/kg}}{C \times \dfrac{\%\text{solids}}{100}}$$

WHERE: A = mL of $AgNO_3$ for titration of sample (1 mL = 1 mg Ag)
B = mL of $AgNO_3$ for titration of blank (1 mL = 1 mg Ag)
C = wet weight of original sample in g (See 8.1.1)

AND: 250 mL = volume of distillate (See 8.1.6)
1000 g/kg = conversion factor g to kg
mL aliquot titrated (See 8.2.1)
% solids (see Part F)

9.2.2 (Manual Spectrophotometric)

$$\text{CN, mg/kg} = \frac{A \times \dfrac{50\ \text{mL}}{B}}{C \times \dfrac{\%\ \text{solids}}{100}}$$

WHERE: A = ug CN read from standard curve (per 250 mL)
B = mL of distillate taken for colorimetric determination (8.3.1)
C = wet weight of original sample in g (See 8.1.1)

AND: 50 mL = volume of standard taken for colorimetric determination (See 8.3.1)
% solids (see Part F)

9.2.3 (Semi-Automated Spectrophotometric)

If the semi-automated method is used, measure the peak heights of the calibration standards (visually or using a data system) and calculate a linear regression equation. Apply the equation to the samples and QC audits to determine the cyanide concentration in the distillates.

$$\text{CN, mg/kg} = \frac{A \times .25}{C \times \dfrac{\%\ \text{solids}}{100}}$$

WHERE: A = ug/L determined from standard curve
C = wet weight of original sample in g (See 8.1.1)

AND: .25 = conversion factor for distillate final volume (See 8.1.6)
% solids (see Part F)

Bibliography

1. Modification of Method 335.2: Cyanide, Total

2. Methods for "Chemical Analysis of Water and Wastes", March 1979. EPA Publication #600/4-79-02.

3. "Operation Manual for Technicon Auto Analyzer IIC System", 1980. Technical publication #TA9-0460-00. Technicon Industrial Systems, Tarrytown, NY, 10591.

4. "Users Guide for the Continuous Flow Analyzer Automation System", ESL, U.S. EPA, Cincinnati, Ohio (1981).

5. "Interim Methods for the Sampling and Analysis of Priority Pollutants in Sediments and Fish Tissue," USEPA Environmental Monitoring and Support Laboratory, Cincinnati, Ohio, August 1977, Revised October 1980.

6. Op. cit. (#5), Methods 335.2, modified (by committee).

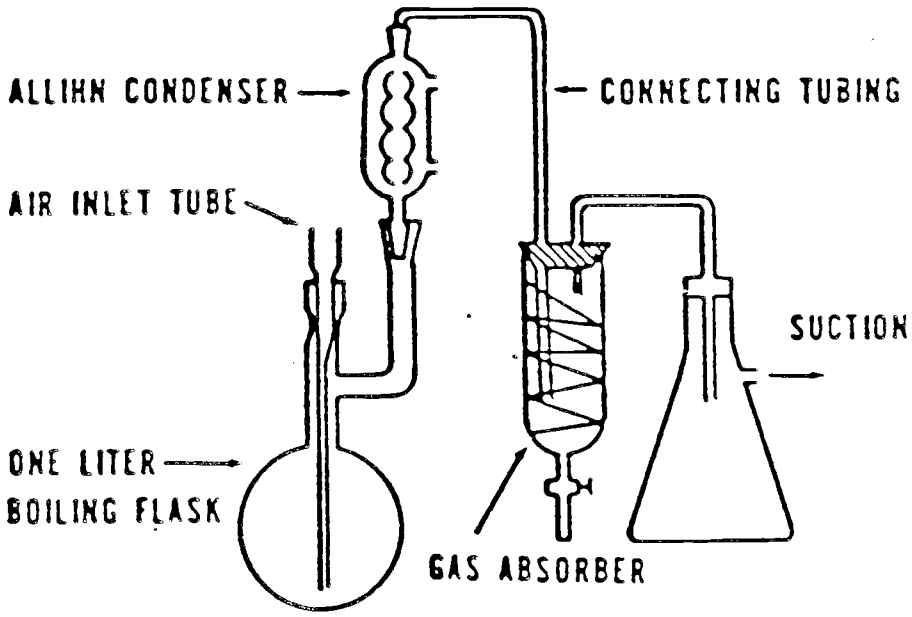

Figure 1. Cyanide distillation apparatus

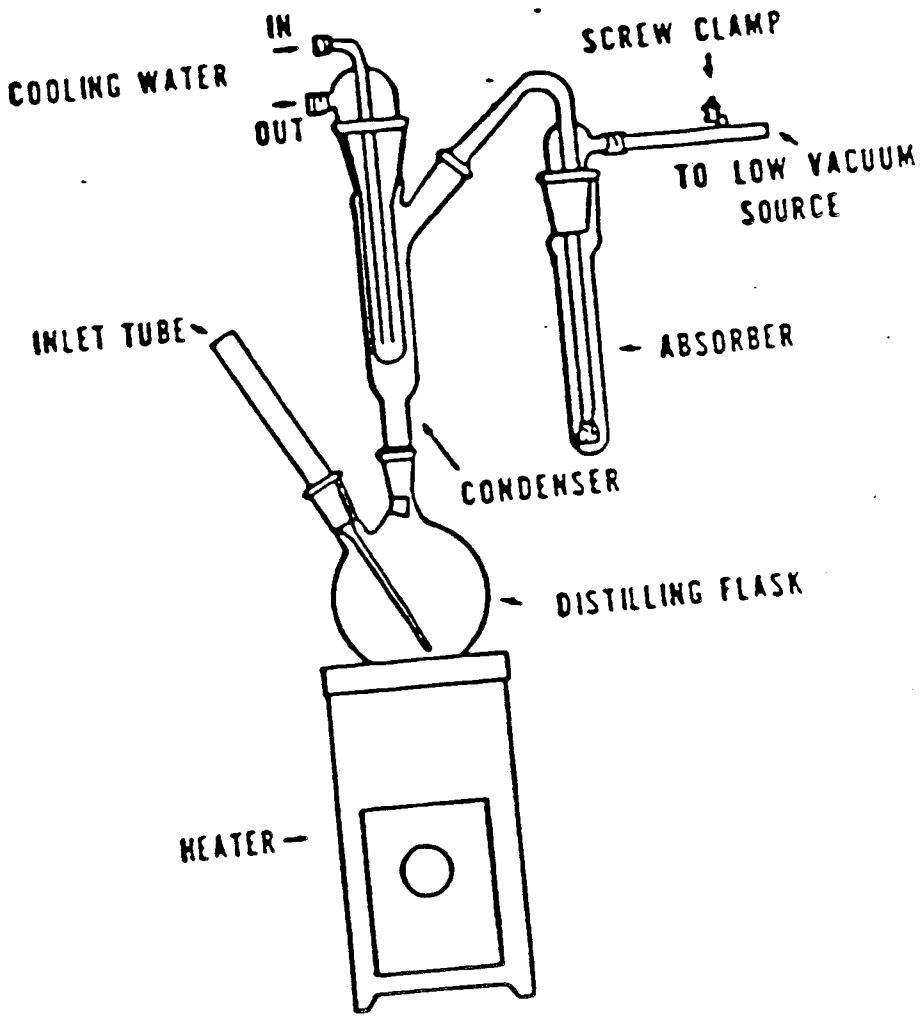

Figure 2. Cyanide distillation apparatus

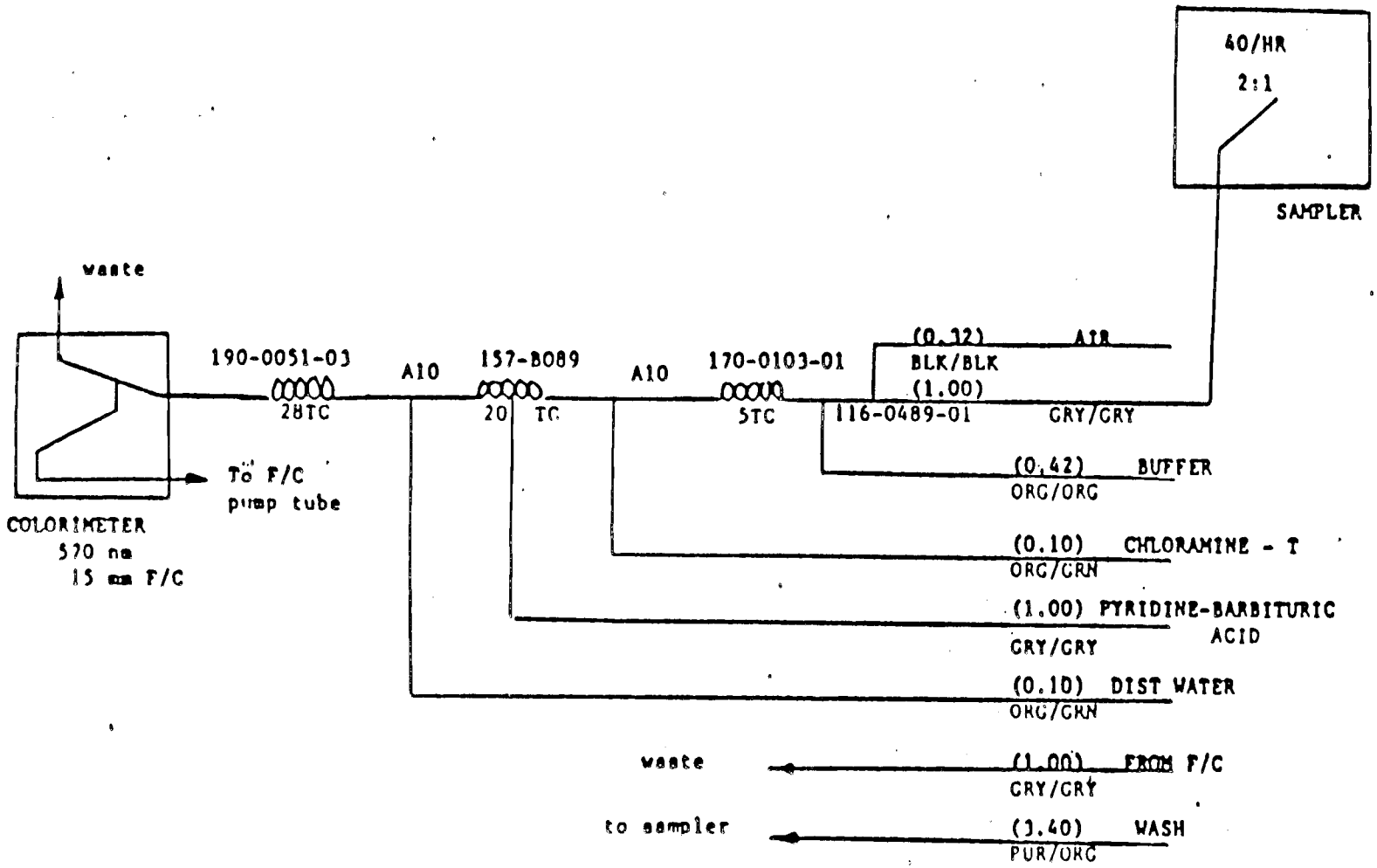

Figure 3. Cyanide Manifold

PART F - PERCENT SOLIDS DETERMINATION PROCEDURE

1. Immediately following the weighing of the sample to be processed for analysis (see Section III, Part B- Soil/Sediment Sample Preparation), add 5-10 g of sample to a tared weighing dish. Weigh and record the weight to the nearest 0.01 g.

2. Place weighing dish plus sample, with the cover tipped to allow for moisture escape, in a drying oven maintained at 103-105°C. Sample handling and drying should be conducted in a well-ventilated area.

3. Dry the sample overnight (12-24 hours) but no longer than 24 hours. If dried less than 12 hours, it must be documented that constant weight was attained.* Remove the sample from the oven and cool in a dessicator with the weighing dish cover in place before weighing. Weigh and record weight to nearest 0.01 g. Do not analyze the dried sample.

4. Duplicate percent solids determinations are required at the same frequency as are other analytical determinations. Duplicate results are to be recorded on FORM VI-IN.

5. For the duplicate percent solids determination, designate one sample aliquot as the "original" sample and the other aliquot as the "duplicate" sample. Calculate dry weight using the results of the "original" sample aliquot.

6. Calculate percent solids by the formula below. The value thus obtained will be reported on the appropriate FORM I-IN and, where applicable, FORM VI-IN . This value will be used for calculating analytical concentration on a dry weight basis.

$$\% \text{ Solids} = \frac{\text{Sample Dry Weight}}{\text{Sample Wet Weight}} \times 100$$

---

*For the purpose of paragraph 3, drying time is defined as the elapsed time in the oven; thus raw data must record time in and out of the oven to document the 12 hour drying time minimum. In the event it is necessary to demonstrate the attainment of constant weight, data must be recorded for a minimum of two repetitive weigh/dry/dessicate/weigh cycles with a minimum of 1 hour drying time in each cycle. Constant weight would be defined as a loss in weight of no greater than 0.01 g between the start weight and final weight of the last cycle.

PART G - ALTERNATE METHODS (CATASTROPHIC ICP FAILURE)+

Analyte	Page No.
Aluminum - Method 202.2 CLP-M*, Furnace AA	D-86
Barium - Method 208.2 CLP-M, Furnace AA	D-87
Cobalt - Method 219.2 CLP-M, Furnace AA	D-88
Copper - Method 220.2 CLP-M, Furnace AA	D-89
Iron - Method 236.2 CLP-M, Furnace AA	D-90
Manganese - Method 243.2 CLP-M, Furnace AA	D-91
Nickel - Method 249.2 CLP-M, Furnace AA	D-92
Vanadium - Method 286.2 CLP-M, Furnace AA	D-93
Zinc - Method 289.2 CLP-M, Furnace AA	D-94
Aluminum - Method 202.1 CLP-M, Flame AA	D-96
Antimony - Method 204.1 CLP-M, Flame AA	D-98
Barium - Method 208.1 CLP-M, Flame AA	D-99
Beryllium - Method 210.1 CLP-M, Flame AA	D-100
Cadmium - Method 213.1 CLP-M, Flame AA	D-101
Chromium - Method 218.1 CLP-M, Flame AA	D-102
Cobalt - Method 219.1 CLP-M, Flame AA	D-103
Copper - Method 220.1 CLP-M, Flame AA	D-104
Iron - Method 236.1 CLP-M, Flame AA	D-105
Lead - Method 239.1 CLP-M, Flame AA	D-106
Manganese - Method 243.1 CLP-M, Flame AA	D-107
Nickel - Method 249.1 CLP-M, Flame AA	D-108
Silver - Method 272.1 CLP-M, Flame AA	D-110
Thallium - Method 279.1 CLP-M, Flame AA	D-111
Vanadium - Method 286.1 CLP-M, Flame AA	D-112
Zinc - Method 289.1 CLP-M, Flame AA	D-113

+Furnace AA Methods are from "Methods for Chemical Analysis of Water and Wastes", (EPA-600/4-79-02), March 1979, as modified for use in the Contract Laboratory Program (CLP). Flame AA (Flame Technique) Methods are from "Interim Methods for the Sampling and Analysis of Priority Pollutants in Sediments and Fish Tissue," USEPA Environmental Monitoring and Support Laboratory, Cincinnati, Ohio, August 1977, Revised October 1980, as modified for use in the CLP.

*CLP-M Modified for the Contract Laboratory Program.

CONDITIONS FOR USE OF ALTERNATE METHODS

The methods contained in Part G may be used only if all of the following conditions are met:

1) Catastrophic failure of ICP occurs,

2) Project Officer authorization for use of alternate methods is granted, and

3) The IDLs for the instrumentation have been determined, as per Exhibit E, within the current calendar quarter.

ALUMINUM*

Method 202.2 CLP-M** (Atomic Absorption, Furnace Technique)

Optimum Concentration Range: 20-200 ug/L
Approximate Detection Limit: 3 ug/L

Preparation of Standard Solution

1. Stock solution: Prepare as described under AA Flame Technique (Method 202.1 CLP-M).

2. Prepare dilutions of the stock solution to be used as calibration standards at the time of analysis. These solutions are also to be used for "standard additions".

3. The calibration standards must be prepared using the same type of acid and at the same concentration as will result in the sample to be analyzed after sample preparation.

Instrument Parameters (General)

1. Drying Time and Temp: 30 sec @ 125°C.
2. Ashing Time and Temp: 30 sec @ 1300°C.
3. Atomizing Time and Temp: 10 sec @ 2700°C.
4. Purge Gas Atmosphere: Argon
5. Wavelength: 309.3 nm
6. Other operating parameters should be set as specified by the particular instrument manufacturer.

Notes

1. The above concentration values and instrument conditions are for a Perkin-Elmer HGA-2100, based on the use of a 20 uL injection, continuous flow purge gas and non-pyrolytic graphite and are to be used as guidelines only.

2. Background correction is required.

3. It has been reported that chloride ion and that nitrogen used as a purge gas suppress the aluminum signal. Therefore the use of halide acids and nitrogen as a purge gas should be avoided.

4. For every sample analyzed, verification is necessary to determine that method of standard addition is not required (Exhibit E).

5. If method of standard addition is required, follow the procedure given in Exhibit E.

---

*This method may only be used under specified conditions.

**CLP-M Modified for the Contract Laboratory Program.

BARIUM*

Method 208.2 CLP-M** (Atomic Absorption, Furnace Technique)

Optimum Concentration Range: 10-200 ug/L
Approximate Detection Limit: 2 ug/L

Preparation of Standard Solution

1. Stock solution: Prepare as described under AA Flame Technique (Method 208.1 CLP-M).

2. Prepare dilutions of the stock solution to be used as calibration standards at the time of analysis. These solutions are also to be used for "standard additions".

3. The calibration standards must be prepared using the same type of acid and at the same concentration as will result in the sample to be analyzed after sample preparation.

Instrument Parameters (General)

1. Drying Time and Temp: 30 sec @ 125°.
2. Ashing Time and Temp: 30 sec @ 1200°C.
3. Atomizing Time and Temp: 10 sec @ 2800°C.
4. Purge Gas Atmosphere: Argon
5. Wavelength: 553.6 nm
6. Other operating parameters should be set as specified by the particular instrument manufacturer.

Notes

1. The above concentration values and instrument conditions are for a Perkin-Elmer HGA-2100, based on the use of a 20 uL injection, continuous flow purge gas and pyrolytic graphite and are to be used as guidelines only.

2. The use of halide acid should be avoided.

3. Because of possible chemical interaction, nitrogen should not be used as a purge gas.

4. For every sample analyzed, verification is necessary to determine that method of standard addition is not required (see Exhibit E).

5. If method of standard addition is required, follow the procedure given in Exhibit E.

---

*This method may only be used under specified conditions.

**CLP-M Modified for the Contract Laboratory Program.

COBALT*

Method 219.2 CLP-M** (Atomic Absorption, Furnace Technique)

Optimum Concentration Range: 5-100 ug/L
Approximate Detection Limit: 1 ug/L

Preparation of Standard Solution

1. Stock solution: Prepare as described under AA Flame Technique (Method 219.1 CLP-M).

2. Prepare dilutions of the stock solution to be used as calibration standards at the time of analysis. These solutions are also to be used for "standard additions".

3. The calibration standards must be prepared using the same type of acid and at the same concentration as will result in the sample to be analyzed after sample preparation.

Instrument Parameters (General)

1. Drying Time and Temp: 30 sec @ 125°C.
2. Ashing Time and Temp: 30 sec @ 900°C.
3. Atomizing Time and Temp: 10 sec @ 2700°C.
4. Purge Gas Atmosphere: Argon
5. Wavelength: 240.7 nm
6. Other operating parameters should be set as specified by the particular instrument manufacturer.

Notes

1. The above concentration values and instrument conditions are for a Perkin-Elmer HGA-2100, based on the use of a 20 uL injection, continuous flow purge gas and non-pyrolytic graphite and are to be used as guidelines only. Smaller size furnace devices or those employing faster rates of atomization can be operated using lower atomization temperatures for shorter time periods than the above recommended settings.

2. The use of background correction is required.

3. Nitrogen may also be used as the purge gas but with reported low sensitivity.

4. For every sample analyzed, verification is necessary to determine that method of standard addition is not required (see Exhibit E).

5. If method of standard addition is required, follow the procedure given in Exhibit E.

---

*This method may only be used under specified conditions.

**CLP-M Modified for the Contract Laboratory Program.

COPPER*

Method 220.2 CLP-M** (Atomic Absorption, Furnace Technique)

Optimum Concentration Range: 5-100 ug/L
Approximate Detection Limit: 1 ug/L

Preparation of Standard Solution

1. Stock solution: Prepare as described under AA Flame Technique (Method 220.1 CLP-M).

2. Prepare dilutions of the stock solution to be used as calibration standards at the time of analysis. These solutions are also to be used for "standard additions".

3. The calibration standards must be prepared using the same type of acid and at the same concentration as will result in the sample to be analyzed after sample preparation.

Instrument Parameters (General)

1. Drying Time and Temp: 30 sec @ 125°C.
2. Ashing Time and Temp: 30 sec @ 900°C.
3. Atomizing Time and Temp: 10 sec @ 2700°C.
4. Purge Gas Atmosphere: Argon
5. Wavelength: 324.7 nm
6. Other operating parameters should be set as specified by the particular instrument manufacturer.

Notes

1. The above concentration values and instrument conditions are for a Perkin-Elmer HGA-2100, based on the use of a 20 uL injection, continuous flow purge gas and non-pyrolytic graphite and are to be used as guidelines only. Smaller size furnace devices or those employing faster rates of atomization can be operated using lower atomization temperatures for shorter time periods than the above recommended settings.

2. Background correction is required.

3. Nitrogen may also be used as the purge gas.

4. For every sample analyzed, verification is necessary to determine that method of standard addition is not required (see Exhibit E).

5. If method of standard addition is required, follow the procedure given in Exhibit E.

---

*This method may only be used under specified conditions.

**CLP-M Modified for the Contract Laboratory Program.

IRON*

Method 236.2 CLP-M** (Atomic Absorption, Furnace Technique)

Optimum Concentration Range: 5-100 ug/L
Approximate Detection Limit: 1 ug/L

Preparation of Standard Solution

1. Stock solution: Prepare as described under AA Flame Technique (Method 236.1 CLP-M).

2. Prepare dilutions of the stock solution to be used as calibration standards at the time of analysis. These solutions are also to be used for "standard additions".

3. The calibration standards must be prepared using the same type of acid and at the same concentration as will result in the sample to be analyzed after sample preparation.

Instrument Parameters (General)

1. Drying Time and Temp: 30 sec @ 125°C.
2. Ashing Time and Temp: 30 sec @ 1000°C.
3. Atomizing Time and Temp: 10 sec @ 2700°C.
4. Purge Gas Atmosphere: Argon
5. Wavelength: 248.3 nm
6. Other operating parameters should be set as specified by the particular instrument manufacturer.

Notes

1. The above concentration values and instrument conditions are for a Perkin-Elmer HGA-2100, based on the use of a 20 uL injection, continuous flow purge gas and non-pyrolytic graphite and are to be used as guidelines only. Smaller size furnace devices or those employing faster rates of atomization can be operated using lower atomization temperatures for shorter time periods than the above recommended settings.

2. The use of background correction is required.

3. Nitrogen may also be used as the purge gas.

4. For every sample analyzed, verification is necessary to determine that method of standard addition is not required (see Exhibit E).

5. If method of standard addition is required, follow the procedure given in Exhibit E.

---

*This method may only be used under specified conditions.

**CLP-M Modified for the Contract Laboratory Program.

MANGANESE*

Method 243.2 CLP-M** (Atomic Absorption, Furnace Technique)

Optimum Concentration Range: 1-30 ug/L
Approximate Detection Limit: 0.2 ug/L

Preparation of Standard Solution

1. Stock solution: Prepare as described under AA Flame Technique (Method 243.1 CLP-M).

2. Prepare dilutions of the stock solution to be used as calibration standards at the time of analysis. These solutions are also to be used for "standard additions".

3. The calibration standards must be prepared using the same type of acid and at the same concentration as will result in the sample to be analyzed after sample preparation.

Instrument Parameters (General)

1. Drying Time and Temp: 30 sec @ 125°C.
2. Ashing Time and Temp: 30 sec @ 1000°C.
3. Atomizing Time and Temp: 10 sec @ 2700°C.
4. Purge Gas Atmosphere: Argon
5. Wavelength: 279.5 nm
6. Other operating parameters should be set as specified by the particular instrument manufacturer.

Notes

1. The above concentration values and instrument conditions are for a Perkin-Elmer HGA-2100, based on the use of a 20 uL injection, continuous flow purge gas and non-pyrolytic graphite and are to be used as guidelines only. Smaller size furnace devices or those employing faster rates of atomization can be operated using lower atomization temperatures for shorter time periods than the above recommended settings.

2. The use of background correction is required.

3. Nitrogen may also be used as the purge gas.

4. For every sample analyzed, verification is necessary to determine that method of standard addition is not required (see Exhibit E).

5. If method of standard addition is required, follow the procedure given in Exhibit E.

---

*This method may only be used under specified conditions.

**CLP-M Modified for the Contract Laboratory Program.

NICKEL*

Method 249.2 CLP-M** (Atomic Absorption, Furnace Technique)

Optimum Concentration Range: 5-100 ug/L
Approximate Detection Limit: 1 ug/L

Preparation of Standard Solution

1. Stock solution: Prepare as described under AA Flame Technique (Method 249.1 CLP-M).

2. Prepare dilutions of the stock solution to be used as calibration standards at the time of analysis. These solutions are also to be used for "standard additions".

3. The calibration standards must be prepared using the same type of acid and at the same concentration as will result in the sample to be analyzed after sample preparation.

Instrument Parameters (General)

1. Drying Time and Temp: 30 sec @ 125°C.
2. Ashing Time and Temp: 30 sec @ 900°C.
3. Atomizing Time and Temp: 10 sec @ 2700°C.
4. Purge Gas Atmosphere: Argon
5. Wavelength: 232.0 nm
6. Other operating parameters should be set as specified by the particular instrument manufacturer.

Notes

1. The above concentration values and instrument conditions are for a Perkin-Elmer HGA-2100, based on the use of a 20 uL injection, continuous flow purge gas and non-pyrolytic graphite and are to be used as guidelines only. Smaller size furnace devices or those employing faster rates of atomization can be operated using lower atomization temperatures for shorter time periods than the above recommended settings.

2. The use of background correction is required.

3. Nitrogen may also be used as the purge gas.

4. For every sample analyzed, verification is necessary to determine that method of standard addition is not required (see Exhibit E).

5. If method of standard addition is required, follow the procedure given in Exhibit E.

---

*This method may only be used under specified conditions.

**CLP-M Modified for the Contract Laboratory Program.

VANADIUM*

Method 286.2 CLP-M** (Atomic Absorption, Furnace Technique)

Optimum Concentration Range: 10-200 ug/L
Approximate Detection Limit: 4 ug/L

Preparation of Standard Solution

1. Stock solution: Prepare as described under AA Flame Technique (Method 286.1 CLP-M).

2. Prepare dilutions of the stock solution to be used as calibration standards at the time of analysis. These solutions are also to be used for "standard additions."

3. The calibration standards must be prepared using the same type of acid and at the same concentration as will result in the sample to be analyzed after sample preparation.

Instrument Parameters (General)

1. Drying Time and Temp: 30 sec @ 125°C.
2. Ashing Time and Temp: 30 sec @ 1400°C.
3. Atomizing Time and Temp: 15 sec @ 2800°C.
4. Purge Gas Atmosphere: Argon
5. Wavelength: 318.4 nm
6. Other operating parameters should be set as specified by the particular instrument manufacturer.

Notes

1. The above concentration values and instrument conditions are for a Perkin-Elmer HGA-2100, based on the use of a 20 uL injection, continuous flow purge gas and pyrolytic graphite and are to be used as guidelines only. Smaller size furnace devices or those employing faster rates of atomization can be operated using lower atomization temperatures for shorter time periods than the above recommended settings.

2. The use of background correction is required.

3. Because of possible chemical interaction, nitrogen should not be used as the purge gas.

4. For every sample analyzed, verification is necessary to determine that method of standard addition is not required (see Exhibit E).

5. If method of standard addition is required, follow the procedure given in Exhibit E.

---

*This method may only be used under specified conditions.

**CLP-M Modified for the Contract Laboratory Program.

ZINC*

Method 289.2 CLP-M** (Atomic Absorption, Furnace Technique)

Optimum Concentration Range: 0.2-4 ug/L
Approximate Detection Limit: 0.05 ug/L

Preparation of Standard Solution

1. Stock solution: Prepare as described under AA Flame Technique (Method 289.1 CLP-M).

2. Prepare dilutions of the stock solution to be used as calibration standards at the time of analysis. These solutions are also to be used for "standard additions".

3. The calibration standards must be prepared using the same type of acid and at the same concentration as will result in the sample to be analyzed after sample preparation.

Instrument Parameters (General)

1. Drying Time and Temp: 30 sec @ 125°C.
2. Ashing Time and Temp: 30 sec @ 400°C.
3. Atomizing Time and Temp: 10 sec @ 2500°C.
4. Purge Gas Atmosphere: Argon
5. Wavelength: 213.9 nm
6. Other operating parameters should be set as specified by the particular instrument manufacturer.

Notes

1. The above concentration values and instrument conditions are for a Perkin-Elmer HGA-2100, based on the use of a 20 uL injection, continuous flow purge gas and non-pyrolytic graphite and are to be used as guidelines only. Smaller size furnace devices or those employing faster rates of atomization can be operated using lower atomization temperatures for shorter time periods then the above recommended settings.

2. The use of background correction is required.

3. Nitrogen may also be used as the purge gas.

4. The analysis of zinc by the graphite furnace is extremely sensitive and very subject to contamination from the work area, reagents, and pipette tips. Since all these factors affect the precision and accuracy, zinc should be analyzed by the direct aspiration procedure whenever possible.

5. For every sample analyzed, verification is necessary to determine that

---

*This method may only be used under specified conditions.

**CLP-M Modified for the Contract Laboratory Program.

method of standard addition is not required (see Exhibit E).

6. If method of standard addition is required, follow the procedure given in Exhibit E.

ALUMINUM*

Method 202.1 CLP-M** (Atomic Absorption, Flame Technique)

Optimum Concentration Range: 5-50 mg/L using a wavelength of 309.3 nm
Sensitivity: 1 mg/L
Approximate Detection Limit: 0.1 mg/L

Preparation of Standard Solution

1. Stock Solution: Carefully weigh 1,000 g of aluminum metal analytical reagent grade). Add 15 mL of conc. HCl and 5 mL conc. HNO_3 to the metal, cover the beaker and warm gently. When solution is complete, transfer quantitatively to a liter volumetric flask and make up to volume with deionized distilled water. 1 mL = 1 mg Al (1000 mg/L).

2. Potassium Chloride Solution: Dissolve 95 g potassium chloride (KCl) in deionized distilled water and make up to 1 liter.

3. Prepare dilutions of the stock solution to be used as calibration standards at the time of analysis. The calibration standards must be prepared using the same type of acid and at the same concentration as will result in the sample to be analyzed after sample preparation. To each 100 mL of standard and sample alike add 2.0 mL potassium chloride solution.

Instrument Parameters (General)

1. Aluminum hollow cathode lamp
2. Wavelength: 309.3 nm
3. Fuel: Acetylene
4. Oxidant: Nitrous oxide
5. Type of flame: Fuel rich

Interferences

1. Aluminum is partially ionized in the nitrous oxide-acetylene flame. This problem may be controlled by the addition of an alkali metal (potassium, 1000 ug/mL) to both sample and standard solutions.

---

*This method may only be used under specified conditions.

**CLP-M Modified for the Contract Laboratory Program.

Notes

1. The following may also be used:

   308.2 nm Relative Sensitivity 1
   396.2 nm Relative Sensitivity 2
   394.4 nm Relative Sensitivity 2.5

2. For concentrations of aluminum below 0.3 mg/L, use of Furnace Technique (Method 202.2 CLP-M) is recommended.

ANTIMONY*

Method 204.1 CLP-M** (Atomic Absorption, Flame Technique)

Optimum Concentration Range: 1-40 mg/L using a wavelength of 217.6 nm
Sensitivity: 0.5 mg/L
Approximate Detection Limit: 0.2 mg/L

Preparation of Standard Solution

1. Stock Solution: Carefully weigh 2.7426 g of antimony potassium tartrate (analytical reagent grade) and dissolve in deionized distilled water. Dilute to 1 liter with deionized distilled water. 1 mL = 1 mg Sb (1000 mg/L).

2. Prepare dilutions of the stock solution to be used as calibration standards at the time of analysis. The calibration standards must be prepared using the same type of acid and at the same concentration as will result in the sample to be analyzed after sample preparation.

Instrumental Parameters (General)

1. Antimony hollow cathode lamp
2. Wavelength: 217.6 nm
3. Fuel: Acetylene
4. Oxidant: Air
5. Type of flame: Fuel lean

Interferences

1. In the presence of lead (1000 mg/L), a special interference may occur at the 217.6 nm resonance line. In this case the 231.1 nm antimony line should be used.

2. Increasing acid concentrations decrease antimony absorption. To avoid this effect, the acid concentration in the samples and in the standards must be matched.

Notes

1. For concentrations of antimony below 0.35 mg/L, use of the Furnace Technique (Method 204.2 CLP-M) is recommended.

---

*This method may only be used under specified conditions.

**CLP-M Modified for the Contract Laboratory Program.

BARIUM*

Method 208.1 CLP-M** (Atomic Absorption, Flame Technique)

Optimum Concentration Range: 1-20 mg/L using a wavelength of 553.6 nm
Sensitivity: 0.4 mg/L
Approximate Detection Limit: 0.1 mg/L

Preparation of Standard Solution

1. Stock Solution: Dissolve 1.7787 g of barium chloride ($BaCl_2 \cdot 2H_2O$, analytical reagent grade) in deionized distilled water and dilute to liter. 1 mL = 1 mg Ba (1000 mg/L).

2. Potassium chloride solution: Dissolve 95 g potassium chloride, KCl, in deionized distilled water and make up to 1 liter.

3. Prepare dilutions of the stock solution to be used as calibration standards at the time of analysis. To each 100 mL of standard and sample alike add 2.0 mL potassium chloride solution. The calibration standards must be prepared using the same type of acid and at the same concentration as will result in the sample to be analyzed after sample preparation.

Instrumental Parameters (General)

1. Barium hollow cathode lamp
2. Wavelength: 553.6 nm
3. Fuel: Acetylene
4. Oxidant: Nitrous oxide
5. Type of flame: Fuel rich

Interferences

1. The use of a nitrous oxide-acetylene flame virtually eliminates chemical interference; however, barium is easily ionized in this flame and potassium must be added (1000 mg/L) to standards and samples alike to control this effect.

2. If the nitrous oxide flame is not available and acetylene-air is used, phosphate, silicon and aluminum will severely depress the barium absorbance. This may be overcome by the addition of 2000 mg/L lanthanum.

Notes

1. For concentrations of barium below 0.2 mg/L, use of the Furnace Technique (Method 208.2 CLP-M) is recommended.

---

*This method may only be used under specified conditions.

**CLP-M Modified for the Contract Laboratory Program.

BERYLLIUM*

Method 210.1 CLP-M** (Atomic Absorption, Flame Technique)

Optimum Concentration Range: 0.052 mg/L using a wavelength of 234.9 nm
Sensitivity: 0.025 mg/L
Approximate Detection Limit: 0.005 mg/L

Preparation of Standard Solution

1. Stock Solution: Dissolve 11.6586 g of beryllium sulfate, $BeSO_4$, in deionized distilled water containing 2 mL conc. nitric acid and dilute to 1 liter. 1 mL = 1 mg Be (1000 mg/L).

2. Prepare dilutions of the stock solution to be used as calibration standards at the time of analysis. The calibration standards should be prepared using the same type of acid and at the same concentration as will result in the sample to be analyzed after sample preparation.

Instrumental Parameters (General)

1. Beryllium hollow cathode lamp
2. Wavelength: 234.9 nm
3. Fuel: Acetylene
4. Oxidant: Nitrous oxide
5. Type of flame: Fuel rich

Interferences

1. Sodium and silicon at concentrations in excess of 1000 mg/L have been found to severely depress the beryllium absorbance.

2. Bicarbonate ion is reported to interfere; however, its effect is eliminated when samples are acidified to a pH of 1.5.

3. Aluminum at concentrations of 500 ug/L is reported to depress the sensitivity of beryllium [Spectrochim Acta 22, 1325 (1966)].

Notes

1. For concentrations of beryllium below 0.02 mg/L, use of the Furnace Technique (Method 210.2 CLP-M) is recommended.

---

*This method may only be used under specified conditions.

**CLP-M Modified for the Contract Laboratory Program.

CADMIUM*

Method 213.1 CLP-M** (Atomic Absorption, Flame Technique)

Optimum Concentration Range: 0.052 mg/L using a wavelength of 228.8 nm
Sensitivity: 0.025 mg/L
Approximate Detection Limit: 0.005 mg/L

Preparation of Standard Solution

1. Stock Solution: Carefully weigh 2.282 g of cadmium sulfate ($3CdSO_4 \cdot 8H_2O$, analytical reagent grade) and dissolve in deionized distilled water. Make up to 1 liter with dionized distilled water. 1 mL = 1 mg Cd (1000 mg/L).

2. Prepare dilutions of the stock solution to be used as calibration standards at the time of analysis. The calibration standards must be prepared using the same type of acid and at the same concentration as will result in the sample to be analyzed after sample preparation.

Instrumental Parameters (General)

1. Cadmium hollow cathode lamp
2. Wavelength: 228.8 nm
3. Fuel: Acetylene
4. Oxidant: Air
5. Type of flame: Oxidizing

Notes

1. For concentrations of cadmium below 20 ug/L, use of the Furnace Technique, Method 213.2 CLP-M is recommended.

---

*This method may only be used under specified conditions.

**CLP-M Modified for the Contract Laboratory Program.

CHROMIUM*

Method 218.1 CLP-M** (Atomic Absorption, Flame Technique)

Optimum Concentration Range: 0.5-10 mg/L using a wavelength of 357.9 nm
Sensitivity: 0.25 mg/L
Approximate Detection Limit: 0.05 mg/L

Preparation of Standard Solution

1. Stock Solution: Dissolve 1.923 g of chromium trioxide (CrO_3, reagent grade) in deionized distilled water. When solution is complete, acidify with redistilled HNO_3 and dilute to 1 liter with deionized distilled water. 1 mL = 1 mg Cr (1000 mg/L).

2. Prepare dilutions of the stock solution to be used as calibration standards at the time of analysis. The calibration standards must be prepared using the same type of acid and at the same concentration as will result in the sample to be analyzed after sample preparation.

Instrument Parameters (General)

1. Chromium hollow cathode lamp
2. Wavelength: 357.9 nm
3. Fuel: Acetylene
4. Oxidant: Nitrous oxide
5. Type of flame: Fuel rich

Notes

1. The following wavelengths may also be used:

   359.3 nm Relative Sensitivity 1.4
   425.4 nm Relative Sensitivity 2
   427.5 nm Relative Sensitivity 3
   428.9 nm Relative Sensitivity 4

2. The fuel rich air-acetylene flame provides greater sensitivity but is subject to chemical and matrix interference from iron, nickel, and other metals. If the analysis is performed in a lean flame the interference can be lessened but the sensitivity will also be reduced.

3. The suppression of both Cr (III) and Cr (VI) absorption by most interfering ions in fuel rich air-acetylene flames is reportedly controlled by the addition of 1% ammonium bifluoride in 0.2% sodium sulfate [Talanta 20, 631 (1973)]. A 1% oxine solution is also reported to be useful.

4. For concentrations of chromium between 50 and 200 ug/L where the air-acetylene flame cannot be used or for concentrations below 50 ug/L, use of the Furnace Technique (Method 218.2 CLP-M) is recommended.

---

*This method may only be used under specified conditions.

**CLP-M Modified for the Contract Laboratory Program.

COBALT*

Method 219.1** CLP-M (Atomic Absorption, Flame Technique)

Optimum Concentration Range: 0.5-5 mg/L using a wavelength of 240.7 nm
Sensitivity: 0.2 mg/L
Approximate Detection Limit: 0.05 mg/L

Preparation of Standard Solution

1. Stock Solution: Dissolve 4.307 g of cobaltous chloride ($CoCl_2 \cdot 6H_2O$ analytical reagent grade), in deionized distilled water. Add 10 mL of concentrated nitric acid and dilute to 1 liter with deionized distilled water. 1 mL = 1 mg Co (1000 mg/L).

2. Prepare dilutions of the stock cobalt solution to be used as calibration standards at the time of analysis. The calibration standards must be prepared using the same type of acid and at the same concentration as will result in the sample to be analyzed after sample preparation.

Instrument Parameters (General)

1. Cobalt hollow cathode lamp
2. Wavelength: 240.7 nm
3. Fuel: Acetylene
4. Oxidant: Air
5. Type of flame: Oxidizing

Notes

1. For concentrations of cobalt below 100 ug/L use of the Furnace Technique (Method 219.2 CLP-M) is recommended.

---

*This method may only be used under specified conditions.

**CLP-M Modified for the Contract Laboratory Program.

COPPER*

Method 220.1 CLP-M** (Atomic Absorption, Flame Technique)

Optimum Concentration Range: 0.2-5 mg/L using a wavelength of 324.7 nm
Sensitivity: 0.1 mg/L
Approximate Detection Limit: 0.02 mg/L

Preparation of Standard Solution

1. Stock Solution: Carefully weigh 100 g of electrolyte copper (analytical reagent grade). Dissolve in 5 mL redistilled HNO_3 and make up to 1 liter with deionized distilled water. Final concentration is 1 mg Cu per mL (1000 mg/L).

2. Prepare dilutions of the stock solution to be used as calibration standards at the time of analysis. The calibration standards must be prepared using the same type of acid and at the same concentration as will result in the sample to be analyzed after sample preparation.

Instrumental Parameters (General)

1. Copper hollow cathode lamp
2. Wavelength: 324.7 nm
3. Fuel: Acetylene
4. Oxidant: Air
5. Type of flame: Oxidizing

Notes

1. For concentrations of copper below 50 ug/L use of the Furnace Technique (Method 220.2 CLP-M) is recommended.

2. Numerous absorption lines are available for the determination of copper. By selecting a suitable absorption wavelength, copper samples may be analyzed over a very wide range of concentrations. The following lines may be used:

   327.4 nm Relative Sensitivity 2
   216.5 nm Relative Sensitivity 7
   222.5 nm Relative Sensitivity 20

---

*This method may only be used under specified conditions.

**CLP-M Modified for the Contract Laboratory Program.

IRON*

Method 236.1 CLP-M** (Atomic Absorption, Flame Technique)

Optimum Concentration Range: 0.3-5 mg/L using a wavelength of 248.3 nm
Sensitivity: 0.12 mg/L
Approximate Detection Limit: 0.03 mg/L

Preparation of Standard Solution

1. Stock Solution: Carefully weigh 1.000 g of pure iron wire (analytical reagent grade) and dissolve in 5 mL redistilled HNO_3, warming if necessary. When solution is complete, make up to 1 liter with deionized distilled water. 1 mL = 1 mg Fe (1000 mg/L).

2. Prepare dilutions of the stock solution to be used as calibration standards at the time of analysis. The calibration standards must be prepared using the same type of acid and at the same concentration as will result in the sample to be analyzed after sample preparation.

Instrumental Parameters (General)

1. Iron hollow cathode lamp
2. Wavelength: 248.3 nm
3. Fuel: Acetylene
4. Oxidant: Air
5. Type of flame: Oxidizing

Notes

1. The following wavelengths may also be used:

   248.8 nm Relative Sensitivity 2
   271.9 nm Relative Sensitivity 4
   302.1 nm Relative Sensitivity 5
   252.7 nm Relative Sensitivity 6
   372.0 nm Relative Sensitivity 10

2. For concentrations of iron below 0.05 mg/L use of the Furnace Technique (Method 236.2 CLP-M) is recommended.

---

*This method may only be used under specified conditions.

**CLP-M Modified for the Contract Laboratory Program.

LEAD*

Method 239.1 CLP-M** (Atomic Absorption, Flame Technique)

Optimum Concentration Range: 1-20 mg/L using a wavelength of 283.3 nm
Sensitivity: 0.5 mg/L
Approximate Detection Limit: 0.1 mg/L

Preparation of Standard Solution

1. Stock Solution: Carefully weigh 1.599 g of lead nitrate, $Pb(NO_3)_2$ (analytical reagent grade), and dissolve deionized distilled water. When solution is complete acidify with 10 mL redistilled HNO_3 and dilute to 1 liter with deionized distilled water. 1 mL = 1 mg Pb (1000 mg/L).

2. Prepare dilutions of the stock solution to be used as calibration standards at the time of analysis. The calibration standards must be prepared using the same type of acid and at the same concentration as will result in the sample to be analyzed after sample preparation.

Instrumental Parameters (General)

1. Lead hollow cathode lamp
2. Wavelength: 283.3 nm
3. Fuel: Acetylene
4. Oxidant: Air
5. Type of flame: Oxidizing

Notes

1. The analysis of this metal is exceptionally sensitive to turbulence and absorption bands in the flame. Therefore, some care should be taken to position the light beam in the most stable, center portion of the flame. To do this, first adjust the burner to maximize the absorbance reading with a lead standard. Then, aspirate a water blank and make minute adjustments in the burner alignment to minimize the signal.

2. The concentrations of lead below 200 ug/L use of the Furnace Technique (Method 239.2 CLP-M) is recommended.

3. The following wavelengths may also be used:

   217.0 nm Relative Sensitivity 0.4
   261.4 nm Relative Sensitivity 10

---

*This method may only be used under specified conditions.

**CLP-M Modified for the Contract Laboratory Program.

MANGANESE*

Method 243.1 CLP-M** (Atomic Absorption, Flame Technique)

Optimum Concentration Range: 0.1-3 mg/L using a wavelength of 279.5 nm
Sensitivity: 0.05 mg/L
Approximate Detection Limit: 0.01 mg/L

Preparation of Standard Solution

1. Stock Solution: Carefully weigh 1.000 g of manganese metal (analytical reagent grade), and dissolve in 10 mL redistilled HNO_3. When solution is complete, dilute to 1 liter with 1% (v/v) HCl. 1 mL = 1 mg Mn (1000 mg/L).

2. Prepare dilutions of the stock solution to be used as calibration standards at the time of analysis. The calibration standards must be prepared using the same type of acid and at the same concentration as will result in the sample to be analyzed after sample preparation.

Instrumental Parameters (General)

1. Manganese hollow cathode lamp
2. Wavelength: 279.5 nm
3. Fuel: Acetylene
4. Oxidant: Air
5. Type of flame: Oxidizing

Notes

1. For concentrations of manganese below 25 ug/L, use of the Furnace Technique (Method 243.2 CLP-M) is recommended.

2. The following line may also be used: 403.1 nm Relative Sensitivity 10.

---

*This method may only be used under specified conditions.

**CLP-M Modified for the Contract Laboratory Program.

NICKEL*

Method 249.1 CLP-M** (Atomic Absorption, Flame Technique)

Optimum Concentration Range: 0.3-5 mg/L using a wavelength of 232.0 nm
Sensitivity: 0.15 mg/L
Approximate Detection Limit: 0.04 mg/L

Preparation of Standard Solution

1. Stock Solution: Dissolve 4.953 g of nickel nitrate, $Ni(NO_3)_2 \cdot 6H_2O$ (analytical reagent grade) in deionizing distilled water. Add 10 mL of conc. nitric acid and dilute to 1 liter deionized distilled water. 1 mL = 1 mg Ni (1000 mg/L).

2. Prepare dilutions of the stock solution to be used as calibration standards at the time of analysis. The calibration standards should be prepared using the same type of acid and at the same concentration as will result in the sample to be analyzed after sample preparation.

Instrumental Parameters (General)

1. Nickel hollow cathode lamp
2. Wavelength: 232.0 nm
3. Fuel: Acetylene
4. Oxidant: Air
5. Type of flame: Oxidizing

Interferences

1. The 352.4 nm wavelength is less susceptible to spectral interference and may be used. The calibration curve is more linear at this wavelength; however, there is some loss of sensitivity.

Notes

1. For concentrations of nickel below 100 ug/L, use of the Furnace Technique (Method 249.2 CLP-M) is recommended.

---

*This method may only be used under specified conditions.

**CLP-M Modified for the Contract Laboratory Program.

SILVER*

Method 272.1 CLP-M** (Atomic Absorption, Flame Technique)

Optimum Concentration Range: 0.1-4 mg/L using a wavelength of 328.1 nm
Sensitivity: 0.06 mg/L
Approximate Detection Limit: 0.01 mg/L

Preparation of Standard Solution

1. Stock Solution: Dissolve 1.575 g of $AgNO_3$, (analytical reagent grade) in deionized distilled water, add 10 mL conc. HNO_3 and make up to 1 liter. 1 mL = 1 mg Ag (1000 mg/L).

2. Prepare dilutions of the stock solution to be used as calibration standards at the time of analysis. The calibration standards must be prepared using the same type of acid and at the same concentration as will result in the sample to be analyzed after sample preparation.

3. Iodine Solution, 1 N: Dissolve 20 grams of potassium iodide, KI (analytical reagent grade) in 50 mL of deionized distilled water, add 12.7 grams of iodine, I_2, (analytical reagent grade) and dilute to 100 mL. Store in a brown bottle.

4. Cyanogen Iodide (CNI) Solution: To 50 mL of deionized distilled water add 4.0 mL conc. NH_4OH, 6.5 grams KCN, and 5.0 mL of 1.0 N I_2 solution. Mix and dilute to 100 mL with deionized distilled water. Fresh solution should be prepared every two weeks.(1)

Instrumental Parameters (General)

1. Silver hollow cathode lamp
2. Wavelength: 328.1 nm
3. Fuel: Acetylene
4. Oxidant: Air
5. Type of flame: Oxidizing

Notes

1. For concentrations of silver below 30 ug/L, use of the Furnace Technique (Method 272.2 CLP-M) is recommended.

2. Silver nitrate standards are light sensitive. Dilutions of the stock should be discarded after use as concentrations below 10 mg/L are not stable over long periods of time.

---

*This method may only be used under specified conditions.

**CLP-M Modified for the Contract Laboratory Program.

3. If absorption to container walls or the formation of AgCl is suspected, make the sample basic using conc. NH_4OH and add 1 mL of (CNI) solution per 100 mL of sample. Mix the sample and allow to stand for 1 hour before proceeding with the analysis.(1)

4. The 338.2 nm wavelength may also be used. This has a relative sensitivity of 2.

References

1. "The Use of Cyanogen Iodide (CNI) as a Stabilizing Agent for Silver in Photographic Processing Effluent Sample", Owerbach, Daniel, Photographic Technology Division, Eastman Kodak Company, Rochester, N.Y. 14650.

THALLIUM*

Method 279.1 CLP-M** (Atomic Absorption, Flame Technique)

Optimum Concentration Range: 1-20 mg/L using a wavelength of 276.8 nm
Sensitivity: 0.5 mg/L
Approximate Detection Limit: 0.1 mg/L

Preparation of Standard Solution

1. Stock Solution: Dissolve 1.303 g of thallium nitrate, $TlNO_3$ (analytical reagent grade) in deionized distilled water. Add 10 mL of conc. nitric acid and dilute to 1 liter with deionized distilled water. 1 mL = 1 mg Tl (1000 mg/L).

2. Prepare dilutions of the stock solution to be used as calibration standards at the time of analysis. The calibration standards must be prepared using nitric acid and at the same concentration as will result in the sample to be analyzed after sample preparation.

Instrumental Parameters (General)

1. Thallium hollow cathode lamp
2. Wavelength: 276.8 nm
3. Fuel: Acetylene
4. Oxidant: Air
5. Type of flame: Oxidizing

Notes

1. For concentrations of thallium below 0.2 mg/L, use of the Furnace Technique (Method 279.2 CLP-M) is recommended.

---

*This method may only be used under specified conditions.

**CLP-M Modified for the Contract Laboratory Program.

VANADIUM*

Method 286.1 CLP-M** (Atomic Absorption, Flame Technique)

Optimum Concentration Range: 2-100 mg/L using a wavelength of 318.4 nm
Sensitivity: 0.8 mg/L
Approximate Detection Limit: 0.2 mg/L

Preparation of Standard Solution

1. Stock Solution: Dissolve 1.7854 g of vanadium pentoxide, V_2O_5 (analytical reagent grade) in 10 mL of conc. nitric acid and dilute to 1 liter with deionized distilled water. 1 mL = 1 mg V (1000 mg/L).

2. Aluminum nitrate solution: Dissolve 139 g aluminum nitrate, $Al(NO_3)_3 \cdot 9H_2O$, in 150 mL of deionized distilled water; heat to effect solution. Allow to cool and make up to 200 mL.

3. Prepare dilutions of the stock vandium solution to be used as calibration standards at the time of analysis. The calibration standards must be prepared using the same type of acid and at the same concentration as will result in the sample to be analyzed after sample preparation. To each 100 mL of standard and sample alike, add 2 mL of the aluminum nitrate solution.

Instrumental Parameters (General)

1. Vanadium hollow cathode lamp
2. Wavelength: 318.4 nm
3. Fuel: Acetylene
4. Oxidant: Nitrous Oxide
5. Type of flame: Fuel rich

Interferences

1. It has been reported that high concentrations of aluminum and titanium increase the sensitivity of vanadium. This interference can be controlled by adding excess aluminum (1000 ppm) to both samples and standards. [Talanta 15, 871 (1968)].

Notes

1. For concentrations of vanadium below 0.5 mg/L, use of the Furnace Technique (Method 282.6 CLP-M) is recommended.

---

*This method may only be used under specified conditions.

**CLP-M Modified for the Contract Laboratory Program.

ZINC*

Method 289.1 CLP-M** (Atomic Absorption, Flame Technique)

Optimum Concentration Range: 0.05-1 mg/L using a wavelength of 213.9 nm
Sensitivity: 0.02 mg/L
Approximate Detection Limit: 0.005 mg/L

Preparation of Standard Solution

1. Stock Solution: Carefully weigh 1.00 g of zinc metal (analytical reagent grade) and dissolve cautiously in 10 mL HNO_3. When solution is complete make up to 1 liter with deionized distilled water. 1 mL = 1 mg Zn (1000 mg/L).

2. Prepare dilutions of the stock solution to be used as calibration standards at the time of analysis. The calibration standards must be prepared using the same type of acid and at the same concentration as will result in the sample to be analyzed after sample preparation.

Instrumental Parameters (General)

1. Zinc hollow cathode lamp
2. Wavelength: 213.9 nm
3. Fuel: Acetylene
4. Oxidant: Air
5. Type of flame: Oxidizing

Notes

1. High levels of silicon may interfere.

2. The air-acetylene flame absorbs about 25% of the energy at the 213.9 nm line.

3. The sensitivity may be increased by the use of low-temperature flames.

4. Some container cap liners can be a source of zinc contamination. To circumvent or avoid this problem, the use of the polypropylene caps is recommended.

5. For concentrations of zinc below 0.01 mg/L, use of the Furnace Technique (Method 289.2 CLP-M) is recommended.

---

*This method may only be used under specified conditions.

**CLP-M Modified for the Contract Laboratory Program.

EXHIBIT E

QUALITY ASSURANCE/QUALITY CONTROL REQUIREMENTS

		Page No.
SECTION I	- GENERAL QA/QC PRACTICES	E-1
SECTION II	- SPECIFIC QA/QC PROCEDURES	E-2
SECTION III	- LABORATORY EVALUATION PROCESS	E-19

SECTION I

GENERAL QA/QC PRACTICES

Standard laboratory practices for laboratory cleanliness as applied to glassware and apparatus must be adhered to. Laboratory practices with regard to reagents, solvents, and gases must also be adhered to. For additional guidelines regarding these general laboratory procedures, see Sections 4 and 5 of the Handbook for Analytical Quality Control in Water and Wastewater Laboratories EPA-600/4-79-019, USEPA Environmental Monitoring and Support Laboratory, Cincinnati, Ohio, March 1979.

SECTION II

SPECIFIC QA/QC PROCEDURES

The quality assurance/quality control (QA/QC) procedures defined herein must be used by the Contractor when performing the methods specified in Exhibit D. When additional QA/QC procedures are specified in the methods in Exhibit D, the Contractor must also follow these procedures. NOTE: The cost of performing all QA/QC procedures specified in this Statement of Work is included in the price of performing the bid lot, except for duplicate, spike, and laboratory control sample analyses, which shall be considered separate sample analyses.

The purpose of this document is to provide a uniform set of procedures for the analysis of inorganic constituents of samples, documentation of methods and their performance, and verification of the sample data generated. The program will also assist laboratory personnel in recalling and defending their actions under cross examination if required to present court testimony in enforcement case litigation.

The primary function of the QA/QC program is the definition of procedures for the evaluation and documentation of sampling and analytical methodologies and the reduction and reporting of data. The objective is to provide a uniform basis for sample collection and handling, instrument and methods maintenance, performance evaluation, and analytical data gathering and reporting. Although it is impossible to address all analytical situations in one document, the approach taken here is to define minimum requirements for all major steps relevant to any inorganic analysis. In many instances where methodologies are available, specific quality control procedures are incorporated into the method documentation (Exhibit D). Ideally, samples involved in enforcement actions are analyzed only after the methods have met the minimum performance and documentation requirements described in this document.

The Contractor is required to participate in the Laboratory Audit and Intercomparison Study Program run by EPA EMSL-Las Vegas. The Contractor can expect to analyze two samples per calendar quarter during the contract period.

The Contractor must perform and report to SMO and EMSL/LV as specified in Exhibit B quarterly verification of instrument detection limits (IDL) by the method specified in Exhibit E, by type and model for each instrument used on this contract. All the IDLs must meet the CRDLs specified in Exhibit C. For ICP methods, the Contractor must also report, as specified in Exhibit B, linearity range verification, all interelement correction factors, wavelengths used, and integration times.

In this Exhibit, as well as other places within this Statement of Work, the term "analytical sample" is used in discussing the required frequency or placement of certain QA/QC measurements. The term "analytical sample" is defined in the glossary, Exhibit G. As the term is used, analytical sample includes all field samples, including Performance Evaluation samples, received from an external source, but it also includes all required QA/QC samples (matrix spikes, analytical/post-digestion

spikes, duplicates, serial dilutions, LCS, ICS, CRDL standards, preparation blanks and linear range analyses) except those directly related to instrument calibration or calibration verification (calibration standards, ICV/ICB, CCV/CCB). A "frequency of 10%" means once every 10 analytical samples. Note: Calibration verification samples (ICV/CCV) and calibration verification blanks (ICB/CCB) are not counted as analytical samples when determining 10% frequency.

In order for the QA/QC information to reflect the status of the samples analyzed, all samples and their QA/QC analysis must be analyzed under the same operating and procedural conditions.

If any QC measurement fails to meet contract criteria, the analytical measurement may not be repeated prior to taking the appropriate corrective action as specified in Exhibit E.

The Contractor must report all QC data in the exact format specified in Exhibits B and H.

This section outlines the minimum QA/QC operations necessary to satisfy the analytical requirements of the contract. The following QA/QC operations must be performed as described in this Exhibit:

1. Instrument Calibration
2. Initial Calibration Verification (ICV) and Continuing Calibration Verification (CCV)
3. CRDL Standards for AA (CRA) and ICP (CRI)
4. Initial Calibration Blank (ICB), Continuing Calibration Blank (CCB), and Preparation Blank (PB) Analyses
5. ICP Interference Check Sample (ICS) Analyses
6. Spike Sample Analysis (S)
7. Duplicate Sample Analysis (D)
8. Laboratory Control Sample (LCS) Analysis
9. ICP Serial Dilution Analysis (L)
10. Instrument Detection Limit (IDL) Determination
11. Interelement Corrections for ICP (ICP)
12. Linear Range Analysis (LRA)
13. Furnace AA QC Analyses

1. <u>Instrument Calibration</u>

Guidelines for instrumental calibration are given in EPA 600/4-79-020 and/or Exhibit D. Instruments must be calibrated daily or once every 24 hours and each time the instrument is set up. The instrument standardization date and time must be included in the raw data.

For atomic absorption systems, calibration standards are prepared by diluting the stock metal solutions at the time of analysis. Date and time of preparation and analysis must be given in the raw data.

Calibration standards must be prepared fresh each time an analysis is to be made and discarded after use. Prepare a blank and at least three calibration standards in graduated amounts in the appropriate range. One atomic absorption calibration standard must be at the CRDL except for mercury. The calibration standards must be prepared using the same type of acid or combination of acids and at the same concentration as will result in the samples following sample preparation.

Beginning with the blank, aspirate or inject the standards and record the readings. If the AA instrument configuration prevents the required 4-point calibration, calibrate according to instrument manufacturer's recommendations, and analyze the remaining required standards immediately after calibration. Results for these standards must be within ± 5% of the true value. Each standards concentration and the calculations to show that the ±5% criterion has been met, must be given in the raw data. If the values do not fall within this range, recalibration is necessary.

The ± 5% criteria does not apply to the atomic absorption calibration standard at the CRDL.

Calibration standards for AA procedures must be prepared as described in Exhibit D.

Baseline correction is acceptable as long as it is performed after every sample or after the continuing calibration verification and blank check; resloping is acceptable as long as it is immediately preceded and immediately followed by CCV and CCB. For cyanide and mercury, follow the calibration procedures outlined in Exhibit D. One cyanide calibration standard must be at the CRDL. For ICP systems, calibrate the instrument according to instrument manufacturer's recommended procedures. At least two standards must be used for ICP calibration. One of the standards must be a blank.

2. <u>Initial Calibration Verification (ICV) and Continuing Calibration Verification (CCV)</u>

a. Initial Calibration Verification (ICV)

Immediately after each of the ICP, AA and cyanide systems have been calibrated, the accuracy of the initial calibration shall be verified and documented for every analyte by the analysis of EPA Initial Calibration Verification Solution(s) at each wavelength used for analysis. When measurements exceed the control limits of Table 1-Initial and Continuing Calibration Verification Control Limits for Inorganic Analyses (in Exhibit E), the analysis must be terminated, the problem corrected, the instrument recalibrated, and the calibration reverified.

If the Initial Calibration Verification Solution(s) are not available from EPA, or where a certified solution of an analyte is not available from any source, analyses shall be conducted on an independent standard at a concentration other than that used for instrument calibration, but within the calibration range. An independent standard is defined as a standard composed of the analytes from a different source than those used in the standards for the instrument calibration.

For ICP, the Initial Calibration Verification Solution(s) must be run at each wavelength used for analysis. For CN, the initial calibration verification standard must be distilled. The Initial Calibration Verification for CN serves as a Laboratory Control Sample; thus it must be distilled with the batch of samples analyzed in association with that ICV. This means that an ICV must be distilled with each batch of samples analyzed and that the samples distilled with an ICV must be analyzed with that particular ICV. The values for the initial and subsequent continuing calibration verifications shall be recorded on FORM II-IN for ICP, AA, and cyanide analyses, as indicated.

b. Continuing Calibration Verification (CCV)

To ensure calibration accuracy during each analysis run, one of the following standards is to be used for continuing calibration verification and must be be analyzed and reported for every wavelength used for the analysis of each analyte, at a frequency of 10% or every 2 hours during an analysis run, whichever is more frequent. The standard must also be analyzed and reported for every wavelength used for analysis at the beginning of the run and after the last analytical sample. The analyte concentrations in the continuing calibration standard must be one of the following solutions at or near the mid-range levels of the calibration curve:

1. EPA Solutions
2. NBS SRM 1643a
3. A Contractor-prepared standard solution

TABLE 1. INITIAL AND CONTINUING CALIBRATION VERIFICATION CONTROL LIMITS FOR INORGANIC ANALYSES

Analytical Method	Inorganic Species	% of True Value (EPA Set) Low Limit	High Limit
ICP/AA	Metals	90	110
Cold Vapor AA	Mercury	80	120
Other	Cyanide	85	115

The same continuing calibration standard must be used throughout the analysis runs for a Case of samples received.

Each CCV analyzed must reflect the conditions of analysis of all associated analytical samples (the preceding 10 analytical samples or the preceding analytical samples up to the previous CCV). The duration of analysis, rinses and other related operations that may affect the CCV measured result may not be applied to the CCV to a greater extent than the extent applied to the associated analytical samples. For instance, the difference in time between a CCV analysis and the blank immediately following it as well as the difference in time between the CCV and the analytical sample immediately preceding it may not exceed the lowest difference in time between any two consecutive analytical samples associated with the CCV.

If the deviation of the continuing calibration verification is greater than the control limits specified in Table 1-Initial and Continuing Calibration Verification Control Limits for Inorganic Analyses, the analysis must be stopped, the problem corrected, the instrument must be recalibrated, the calibration verified and the reanalysis of preceding 10 analytical samples or all analytical samples analyzed since the last good calibration verification must be performed for the analytes affected. Information regarding the continuing verification of calibration shall be recorded on FORM II-IN for ICP, AA and cyanide as indicated.

3. CRDL Standards for ICP (CRI) and AA (CRA)

To verify linearity near the CRDL for ICP analysis, the Contractor must analyze an ICP standard (CRI) at two times the CRDL or two times the IDL, whichever is greater, at the beginning and end of each sample analysis run, or a minimum of twice per 8 hour working shift, whichever is more frequent, but not before Initial Calibration Verification. This standard must be run by ICP for every wavelength used for analysis, except those for Al, Ba, Ca, Fe, Mg, Na and K.

To verify linearity near the CRDL for AA analysis, the Contractor must analyze an AA standard (CRA) at the CRDL or the IDL, whichever is greater, at the beginning of each sample analysis run, but not before the Initial Calibration Verification.

Specific acceptance criteria for the two standards will be set by EPA in the future. In the interim, the Contractor must analyze and report these Standards on FORM II(PART 2)-IN.

4. Initial Calibration Blank (ICB), Continuing Calibration Blank (CCB), and Preparation Blank (PB) Analyses

a. Initial Calibration Blank (ICB) and Continuing Calibration Blank (CCB) Analyses

A calibration blank must be analyzed at each wavelength used for analysis immediately after every initial and continuing calibration verification, at a frequency of 10% or every 2 hours

during the run, whichever is more frequent. The blank must be analyzed at the beginning of the run and after the last analytical sample. Note: A CCB must be run after the last CCV that was run after the last analytical sample of the run. The results for the calibration blanks shall be recorded on FORM III-IN for ICP, AA and cyanide analyses, as indicated. If the magnitude (absolute value) of the calibration blank result exceeds the IDL, the result must be so reported in ug/L on FORM III-IN, otherwise report as IDL-U. If the absolute value blank result exceeds the CRDL (Exhibit C), terminate analysis, correct the problem, recalibrate, verify the calibration and reanalyze the preceding 10 analytical samples or all analytical samples analyzed since the last good calibration blank.

b. Preparation Blank (PB) Analysis

At least one preparation blank (or reagent blank), consisting of deionized distilled water processed through each sample preparation and analysis procedure (See Exhibit D, Section III), must be prepared and analyzed with every Sample Delivery Group, or with each batch[1] of samples digested, whichever is more frequent.

The first batch of samples in an SDG is to be assigned to preparation blank one, the second batch of samples to preparation blank two, etc. (see FORM III-IN). Each data package must contain the results of all the preparation blank analyses associated with the samples in that SDG.

This blank is to be reported for each SDG and used in all analyses to ascertain whether sample concentrations reflect contamination in the following manner:

1) If the absolute value of the concentration of the blank is less than or equal to the Contract Required Detection Limit (Exhibit C), no correction of sample results is performed.

2) If any analyte concentration in the blank is above the CRDL, the lowest concentration of that analyte in the associated samples must be 10x the blank concentration. Otherwise, all samples associated with the blank with the analyte's concentration less than 10x the blank concentration and above the CRDL, must be redigested and reanalyzed for that analyte (except for an identified aqueous soil field blank). The sample concentration is not to be corrected for the blank value.

3) If the concentration of the blank is below the negative CRDL, then all samples reported below 10x CRDL associated with the blank must be redigested and reanalyzed.

---

[1]A group of samples prepared at the same time.

The values for the preparation blank must be recorded in ug/L for aqueous samples and in mg/Kg for solid samples on FORM III-IN for ICP, AA, and cyanide analyses.

5. ICP Interference Check Sample (ICS) Analysis

To verify interelement and background correction factors, the Contractor must analyze and report the results for the ICP Interference Check Samples at the beginning and end of each analysis run or a minimum of twice per 8 hour working shift, whichever is more frequent, but not before Initial Calibration Verification. The ICP Interference Check Samples must be obtained from EPA (EMSL/LV) if available and analyzed according to the instructions supplied with the ICS.

The Interference Check Samples consist of two solutions: Solution A and Solution AB. Solution A consists of the interferents, and Solution AB consists of the analytes mixed with the interferents. An ICS analysis consists of analyzing both solutions consecutively (starting with Solution A) for all wavelengths used for each analyte reported by ICP.

Results for the ICP analyses of Solution AB during the analytical runs must fall within the control limit of ±20% of the true value for the analytes included in the Interference Check Samples. If not, terminate the analysis, correct the problem, recalibrate the instrument, and reanalyze the analytical samples analyzed since the last good ICS. If true values for analytes contained in the ICS and analyzed by ICP are not supplied with the ICS, the mean must be determined by initially analyzing the ICS at least five times repetitively for the particular analytes. This mean determination must be made during an analytical run where the results for the previously supplied EPA ICS met all contract specifications. Additionally, the result of this initial mean determination is to be used as the true value for the lifetime of that solution (i.e., until the solution is exhausted).

If the ICP Interference Check Sample is not available from EPA, independent ICP Check Samples must be prepared with interferent and analyte concentrations at the levels specified in Table 2-Interferent and Analyte Elemental Concentrations Used for ICP Interference Check Sample. The mean value and standard deviation must be established by initially analyzing the Check Samples at least five times repetitively for each parameter on FORM IV-IN. Results must fall within the control limit of ±20% of the established mean value. The mean and standard deviation must be reported in the raw data. Results from the Interference Check Sample analyses must be recorded on FORM IV-IN for all ICP parameters.

TABLE 2. INTERFERENT AND ANALYTE ELEMENTAL CONCENTRATIONS USED FOR ICP INTERFERENCE CHECK SAMPLE

Analytes	(mg/L)	Interferents	(mg/L)
Ag	1.0	Al	500
Ba	0.5	Ca	500
Be	0.5	Fe	200
Cd	1.0	Mg	500
Co	0.5		
Cr	0.5		
Cu	0.5		
Mn	0.5		
Ni	1.0		
Pb	1.0		
V	0.5		
Zn	1.0		

6. Spike Sample Analysis (S)

The spike sample analysis is designed to provide information about the effect of the sample matrix on the digestion and measurement methodology. The spike is added before the digestion (i.e., prior to the addition of other reagents) and prior to any distillation steps (i.e., CN-). At least one spike sample analysis must be performed on each group of samples of a similar matrix type (i.e., water, soil) and concentration (i.e., low, medium) or for each Sample Delivery Group.[2]

If the spike analysis is performed on the same sample that is chosen for the duplicate sample analysis, spike calculations must be performed using the results of the sample designated as the "original sample" (see section 7, Duplicate Sample Analysis). The average of the duplicate results cannot be used for the purpose of determining percent recovery. Samples identified as field blanks cannot be used for spiked sample analysis. EPA may require that a specific sample be used for the spike sample analysis.

The analyte spike must be added in the amount given in Table 3-Spiking Levels for Spike Sample Analysis, for each element analyzed. If two analytical methods are used to obtain the reported values for the same element within a Sample Delivery Group (i.e. ICP, GFAA), spike samples must be run by each method used.

[2]EPA may require additional spike sample analysis, upon Project Officer request, for which the Contractor will be paid.

If the spike recovery is not at or within the limits of 75-125%, the data of all samples received associated with that spike sample and determined by the same analytical method must be flagged with the letter "N" on FORMs I-IN and V-IN. An exception to this rule is granted in situations where the sample concentration exceeds the spike concentration by a factor of four or more. In such an event, the data shall be reported unflagged even if the percent recovery does not meet the 75-125% recovery criteria.

For flame AA, ICP, and CN analyses, when the pre-digestion/pre-distillation spike recovery falls outside the control limits and the sample result does not exceed 4x the spike added, a post-digestion/post-distillation spike must be performed for those elements that do not meet the specified criteria (exception: Ag). Spike the unspiked aliquot of the sample at 2x the indigenous level or 2x CRDL, whichever is greater. Results of the post-digestion/post-distillation spike must be reported on FORM V(PART 2)-IN. Note: No post digest spike is required for Hg.

In the instance where there is more than one spike sample per matrix and concentration per method per SDG, if one spike sample recovery is not within contract criteria, flag all the samples of the same matrix, level, and method in the SDG. Individual component percent recoveries (%R) are calculated as follows:

$$\%\text{Recovery} = \frac{(SSR-SR)}{SA} \times 100$$

Where, SSR = Spiked Sample Result
SR = Sample Result
SA = Spike Added

When sample concentration is less than the instrument detection limit, use SR = 0 only for purposes of calculating % Recovery. The spike sample results, sample results and % Recovery (positive or negative) must be reported on FORM V-IN for ICP, AA and cyanide analyses, as indicated.

The units for reporting spike sample results will be identical to those used for reporting sample results in FORM I-IN (i.e., ug/L for aqueous and mg/Kg dry weight basis for solid).

TABLE 3. SPIKING LEVELS FOR SPIKE SAMPLE ANALYSIS

	For ICP/AA (ug/L)		For Furnace AA (ug/L)		Other[1] (ug/L)
Element	Water	Soil[2]	Water	Soil	
Aluminum	2,000	*			
Antimony	500	500	100	100	
Arsenic	2,000	2,000	40	40	
Barium	2,000	2,000			
Beryllium	50	50			
Cadmium	50	50	5	5	
Calcium	*	*			
Chromium	200	200			
Cobalt	500	500			
Copper	250	250			
Iron	1,000	*			
Lead	500	500	20	20	
Magnesium	*	*			
Manganese	500	500			
Mercury					1
Nickel	500	500			
Potassium	*	*			
Selenium	2,000	2,000	10	10	
Silver	50	50			
Sodium	*	*			
Thallium	2,000	2,000	50	50	
Vanadium	500	500			
Zinc	500	500			
Cyanide					100

NOTE: Elements without spike levels and not designated with an asterisk, must be spiked at appropriate levels.

[1]Spiking level reported is for both water and soil/sediment matrices.

[2]The levels shown indicate concentrations in the final digestate of the spiked sample (200 mL final volume).

*No spike required.

7. Duplicate Sample Analysis (D)

One duplicate sample must be analyzed from each group of samples of a similar matrix type (i.e., water, soil) and concentration (i.e., low, medium) or for each Sample Delivery Group.[3] Duplicates cannot be averaged for reporting on FORM I-IN.

Duplicate sample analyses are required for percent solids. Samples identified as field blanks cannot be used for duplicate sample analysis. EPA may require that a specific sample be used for duplicate sample analysis. If two analytical methods are used to obtain the reported values for the same element for a Sample Delivery Group (i.e., ICP, GFAA), duplicate samples must be run by each method used.

The relative percent differences (RPD) for each component are calculated as follows:

$$RPD = \frac{|S - D|}{(S+D)/2} \times 100$$

Where, RPD = Relative Percent Difference
S = First Sample Value (original)
D = Second Sample Value (duplicate)

The results of the duplicate sample analyses must be reported on FORM VI-IN in ug/L for aqueous samples and mg/Kg dry weight basis for solid original and duplicate samples. A control limit of 20% for RPD shall be used for original and duplicate sample values greater than or equal to 5x CRDL (Exhibit C). A control limit of (±) the CRDL must be used for sample values less than 5x CRDL, and the absolute value of the control limit (CRDL) must be entered in the "Control Limit" column on FORM VI-IN.

If one result is above the 5x CRDL level and the other is below, use the ± CRDL criteria. If both sample values are less than the IDL, the RPD is not calculated on FORM VI-IN. For solid sample or duplicate results < 5x CRDL, enter the absolute value of the CRDL, corrected for sample weight and percent solids, in the "Control Limit" column.

If the duplicate sample results are outside the control limits, flag all the data for samples received associated with that duplicate sample with an "*" on FORMs I-IN and VI-IN. In the instance where there is more than one duplicate sample per SDG, if one duplicate result is not within contract criteria, flag all samples of the same matrix, concentration, and method in the SDG. The percent difference data will be used by EPA to evaluate the long-term precision of the methods for each parameter. Specific control limits for each element will be added to FORM VI-IN at a later date based on these precision results.

---

[3] EPA may require additional duplicate sample analyses, upon Project Officer request, for which the Contractor will be paid.

8. Laboratory Control Sample (LCS) Analysis

Aqueous and solid Laboratory Control Samples (LCS) must be analyzed for each analyte using the same sample preparations, analytical methods and QA/QC procedures employed for the EPA samples received. The aqueous LCS solution must be obtained from EPA (if unavailable, the Initial Calibration Verification Solutions may be used). One aqueous LCS must be prepared and analyzed for every group of aqueous samples in a Sample Delivery Group, or for each batch of aqueous samples digested, whichever is more frequent. An aqueous LCS is not required for mercury and cyanide analysis.

The EPA-provided solid LCS must be prepared and analyzed using each of the procedures applied to the solid samples received (exception: percent solids determination not required). If the EPA solid LCS is unavailable, other EPA Quality Assurance Check samples or other certified materials may be used. One solid LCS must be prepared and analyzed for every group of solid samples in a Sample Delivery Group, or for each batch of samples digested, whichever is more frequent.

All LCS results and percent recovery (%R) will be reported on FORM VII-IN. If the percent recovery for the aqueous LCS falls outside the control limits of 80-120% (exception: Ag and Sb), the analyses must be terminated, the problem corrected, and the samples associated with that LCS redigested and reanalyzed.

If the results for the solid LCS fall outside the control limits established by EPA, the analyses must be terminated, the problem corrected, and the samples associated with that LCS redigested and reanalyzed.

9. ICP Serial Dilution Analysis (L)

Prior to reporting concentration data for the analyte elements, the Contractor must analyze and report the results of the ICP Serial Dilution Analysis. The ICP Serial Dilution Analysis must be performed on a sample from each group of samples of a similar matrix type (i.e., water, soil) and concentration (i.e., low, medium) or for each Sample Delivery Group, whichever is more frequent. Samples identified as field blanks cannot be used for Serial Dilution Analysis.

If the analyte concentration is sufficiently high (minimally a factor of 50 above the instrumental detection limit in the original sample), the serial dilution (a five fold dilution) must then agree within 10% of the original determination after correction for dilution. If the dilution analysis for one or more analytes is not at or within 10%, a chemical or physical interference effect must be suspected, and the data for all affected analytes in the samples received associated with that serial dilution must be flagged with an "E" on FORM IX-IN and FORM I-IN.

The percent differences for each component are calculated as follows:

$$\% \text{ Difference} = \frac{|I - S|}{I} \times 100$$

where, I = Initial Sample Result
S = Serial Dilution Result (Instrument Reading x 5)

In the instance where there is more than one serial dilution per SDG, if one serial dilution result is not within contract criteria, flag all the samples of the same matrix and concentration in the Sample Delivery Group. Serial dilution results and "E" flags must be reported on FORM IX-IN.

10. Instrument Detection Limit (IDL) Determination

Before any field samples are analyzed under this contract, the instrument detection limits (in ug/L) must be determined for each instrument used, within 30 days of the start of contract analyses and at least quarterly (every 3 calendar months), and must meet the levels specified in Exhibit C.

The Instrument Detection Limits (in ug/L) shall be determined by multiplying by 3, the average of the standard deviations obtained on three nonconsecutive days from the analysis of a standard solution (each analyte in reagent water) at a concentration 3x-5x the instrument manufacturer's suggested IDL, with seven consecutive measurements per day. Each measurement must be performed as though it were a separate analytical sample (i.e., each measurement must be followed by a rinse and/or any other procedure normally performed between the analysis of separate samples). IDL's must be determined and reported for each wavelength used in the analysis of the samples.

The quarterly determined IDL for an instrument must always be used as the IDL for that instrument during that quarter. If the instrument is adjusted in anyway that may affect the IDL, the IDL for that instrument must be redetermined and the results submitted for use as the established IDL for that instrument for the remainder of the quarter.

IDLs must be reported for each instrument used on FORM X-IN submitted with each data package. If multiple AA instruments are used for the analysis of an element within a Sample Delivery Group, the highest IDL for the AAs must be used for reporting concentration values for that Sample Delivery Group. The same reporting procedure must be used formultiple ICPs.

Figure 1
FURNACE ATOMIC ABSORPTION ANALYSIS SCHEME

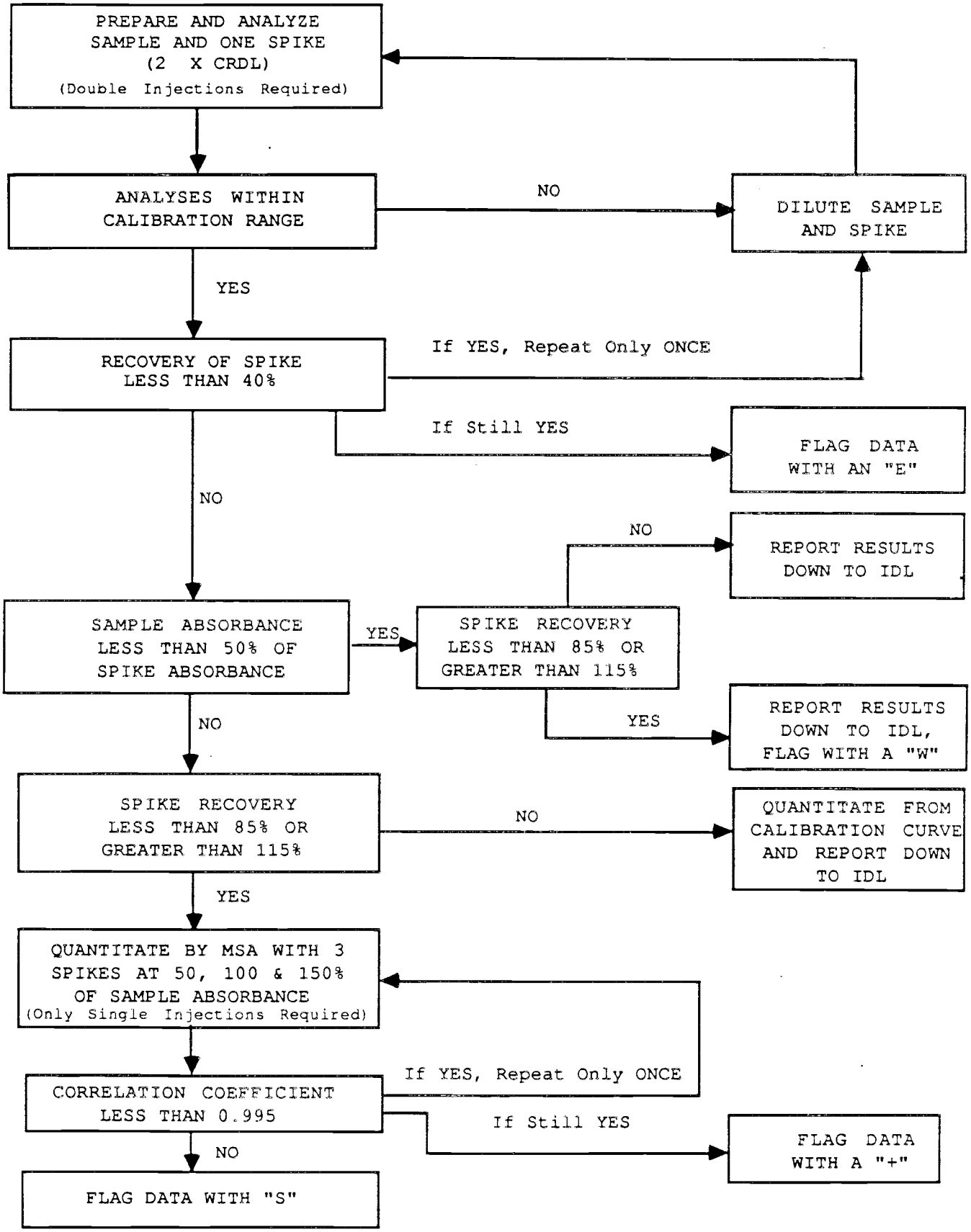

11. Interelement Corrections for ICP

Before any field samples are analyzed under this contract, the ICP interelement correction factors must be determined prior to the start of contract analyses and at least annually thereafter. Correction factors for spectral interference due to Al, Ca, Fe, and Mg must be determined for all ICP instruments at all wavelengths used for each analyte reported by ICP. Correction factors for spectral interference due to analytes other than Al, Ca, Fe, and Mg must be reported if they were applied.

If the instrument was adjusted in anyway that may affect the ICP interelement correction factors, the factors must be redetermined and the results submitted for use. Results from interelement correction factors determination must be reported on FORM XI(PART 1)-IN and FORM XI(PART 2)-IN for all ICP parameters.

12. Linear Range Analysis (LRA)

For all ICP analyses, a linear range verification check standard must be analyzed and reported quarterly (every 3 calendar months) for each element on FORM XII-IN. The standard must be analyzed during a routine analytical run performed under this contract. The analytically determined concentration of this standard must be within ± 5% of the true value. This concentration is the upper limit of the ICP linear range beyond which results cannot be reported under this contract without dilution of the analytical sample.

13. Furnace Atomic Absorption (AA) QC Analyses

Because of the nature of the Furnace AA technique, the special procedures summarized in Figure 1-Furnace AA Analysis Scheme ("MSA Tree") will be required for quantitation. (These procedures do not replace those in Exhibit D of this SOW, but supplement the guidance provided therein.)

a. All furnace analyses must fall within the calibration range. In addition, all analyses, except during full methods of Standard Addition (MSA), will require duplicate injections. The absorbance and concentration of each injection must be reported in the raw data as well as the average absorbance and concentration values. Average concentration values are used for reporting purposes. A maximum of 10 full sample analyses to a maximum 20 injections may be performed between each consecutive calibration verifications and blanks. The raw data package must contain absorbance and concentration values for both injections, the average value and the relative standard deviation (RSD) or coefficient of variation (CV). For concentrations greater than CRDL, the duplicate injection readings must agree within 20% RSD or CV, or the analytical sample must be rerun once (i.e., two additional burns). If the readings are still out, flag the value reported on FORM I-IN with an "M". The "M" flag is required for the analytical spike as well as the sample. If the analytical spike for a sample requires an "M" flag, the flag must be reported on FORM I- IN for that sample.

b. All furnace analyses for each analytical sample, including those requiring an "M" flag, will require at least an analytical spike to determine if the MSA will be required for quantitation. The analytical spike[4] will be required to be at a concentration (in the sample) 2x CRDL. This requirement for an analytical spike will include the LCS and the preparation blank. (The LCS must be quantitated from the calibration curve and corrective action, if needed, taken accordingly. MSA is not to be performed on the LCS or preparation blank, regardless of spike recovery results.) If the preparation blank analytical spike recovery is out of control (85-115%), the spiking solution must be verified by respiking and rerunning the preparation blank once. If the preparation blank analytical spike recovery is still out of control, correct the problem and reanalyze all analytical samples associated with that blank. An analytical spike is not required on the pre-digestion spike sample.

The analytical spike of a sample must be run immediately after that sample. The percent recovery (%R) of the spike, calculated by the same formula as Spike Sample Analyses (see item 6, this section), will then determine how the sample will be quantitated, as follows:

1) If the spike recovery is less than 40%, the sample must be diluted and rerun with another spike. Dilute the sample by a factor of 5 to 10 and rerun. This step must only be performed once. If after the dilution the spike recovery is still <40%, report data and flag with an "E" to indicate interference problems.

2) If the spike recovery is greater than or equal to 40% and the sample absorbance is less than 50% of the "spike"[5], report the sample results to the IDL. If the spike recovery is less than 85% or greater than 115%, flag the result with a "W".

3) If the sample absorbance is greater than or equal to 50% of the spike and the spike recovery is at or between 85% and 115%, the sample must be quantitated directly from the calibration curve and reported down to the IDL.

4) If the sample absorbance is greater than or equal to 50% of the spike and the spike recovery is less than 85% or greater than 115%, the sample must be quantitated by MSA.

---

[4]Analytical Spikes are post-digestion spikes to be prepared prior to analysis by adding a known quantity of the analyte to an aliquot of the digested sample. The unspiked sample aliquot must be compensated for any volume change in the spike samples by addition of deionized water to the unspiked sample aliquot. The volume of the spiking solution added must not exceed 10% of the analytical sample volume; this requirement also applies to MSA spikes.

[5]"Spike" is defined as [absorbance of spike sample] minus [absorbance of the sample].

c. The following procedures will be incorporated into MSA analyses.

1) Data from MSA calculations must be within the linear range as determined by the calibration curve generated at the beginning of the analytical run.

2) The sample and three spikes must be analyzed consecutively for MSA quantitation (the "initial" spike run data is specifically excluded from use in the MSA quantitation). Only single injections are required for MSA quantitation.

   Each full MSA counts as two analytical samples towards determining 10% QC frequency (i.e., five full MSAs can be performed between calibration verifications).

3) For analytical runs containing only MSAs, single injections can be used for QC samples during that run. For instruments that operate in an MSA mode only, MSA can be used to determine QC samples during that run.

4) Spikes must be prepared such that:

   a) Spike 1 is approximately 50% of the sample absorbance.

   b) Spike 2 is approximately 100% of the sample absorbance.

   c) Spike 3 is approximately 150% of the sample absorbance.

5) The data for each MSA analysis must be clearly identified in the raw data documentation (using added concentration as the x-variable and absorbance as the y-variable) along with the slope, x-intercept, y-intercept and correlation coefficient (r) for the least squares fit of the data. The results must be reported on FORM VIII-IN. Reported values obtained by MSA must be flagged on the data sheet (FORM I-IN) with the letter "S" if the correlation coefficient is greater than or equal to 0.995.

6) If the correlation coefficient (r) for a particular analysis is less than 0.995, the MSA analysis must be repeated once. If the correlation coefficient is still less than 0.995, report the results on FORM I-IN from the run with the best "r" and flag the result with a "+" on FORM VIII-IN and FORM I-IN.

SECTION III

LABORATORY EVALUATION PROCESS

This document outlines the procedures which will be used by the Project Officer or his/her authorized representative to conduct laboratory audits to determine the Contractor's ability to meet the terms and conditions of this contract. The evaluation process incorporates two major steps: 1) evaluation of laboratory performance, and 2) on-site inspection of the laboratory to verify continuity of personnel, instrumentation and quality control requirements of the contract.

1. Evaluation of Laboratory Performance

   a. Performance Evaluation Sample Analysis

      1) The Performance Evaluation (PE) sample set will be sent to a participating laboratory on a quarterly basis to verify the laboratory's continuing ability to produce acceptable analytical results. These samples will be provided either single blind (recognizable as a PE material and of unknown composition), or double blind (not recognizable as PE material and of unknown composition). If received as a single blind, the Contractor is required to submit PE sample data in a separate SDG package in accordance with Delivery Schedule requirements for PE Sample data. PE samples received as double blind would be treated as routine samples and data would be submitted in the SDG deliverables package per normal procedure.

      2) When the PE data are received by EPA, results will be scored routinely for identification and quantitation. Results of these scorings will be provided for the Contractor via coded evaluation spreadsheets by analyte. The Government may adjust the scores on any given PE sample to compensate for unanticipated difficulties with a particular sample.

      3) If the Contractor laboratory performs unacceptably, the Contractor will be notified by the Project Officer. A laboratory so notified may expect, but the Government is not limited to, the following actions: a site visit, a full data audit, cessation of sample shipments, and/or laboratory analysis of a second PE sample. Failure by the laboratory to take corrective actions and/or failure of two successive PE sample analyses is indicative of Contractor failure to maintain technical competence and will require that the laboratory discontinue analysis of samples until such time as the Project Officer has determined that the laboratory has corrected the problem and may resume analyses.

   b. Inorganic Data Audit

      Inorganic data audits are conducted by EMSL-LV on the Contractor's sample data packages. The inorganic data audit provides the Agency with an in-depth inspection and evaluation of the data packages with regard to achieving QA/QC acceptability.

2. On-Site Laboratory Evaluation

The on-site laboratory evaluation helps to ensure that technical competence is maintained and that all the necessary quality control is being applied by the Contractor in order to deliver a quality product.

a. On-site laboratory evaluations allow the evaluators to determine that:

1) The organization and personnel are qualified to perform assigned tasks;

2) Adequate facilities and equipment are available;

3) Complete documentation, including chain-of-custody of samples is being implemented;

4) Proper analytical methodology is being used;

5) Adequate analytical quality control, including reference samples, control charts, and documented corrective action measures, is being provided; and

6) Acceptable data handling and documentation techniques are being used.

b. The on-site visit also serves as a mechanism for discussing weaknesses identified through Performance Evaluation sample analysis or through Contract Compliance Screening or other review of data deliverables. Lastly, the on-site visit allows the evaluation team to determine if the laboratory has implemented the recommended and/or required corrective actions, with respect to quality assurance, that were made during the previous on-site visit.

EXHIBIT F

CHAIN-OF-CUSTODY, DOCUMENT CONTROL,
AND STANDARD OPERATING PROCEDURES

1. Sample Chain-of-Custody

A sample is physical evidence collected from a facility or from the environment. An essential part of hazardous waste investigations is that samples and data may be used as evidence in EPA enforcement proceedings. To satisfy enforcement uses of the data, the following chain-of-custody procedures have been established.

1.1 Sample Identification

To ensure traceability of samples while in possession of the laboratory, a method for sample identification shall be developed and documented in laboratory Standard Operating Procedures (SOPs) (see Section 3). Each sample or sample preparation container shall be labeled with a unique number identifier (or the EPA Sample Number). This identifier shall be cross-referenced to the sample tag EPA Sample Number and the SMO number. There shall be a written description of the method of assigning this identifier and attaching it to the sample container included in the laboratory SOPs.

1.2.1 A sample is under custody if:

1.2.1.1 It is in your actual possession,

1.2.1.2 It is in your view after being in your physical possession,

1.2.1.3 It was in your possession and then you locked or sealed it up to prevent tampering, or

1.2.1.4 It is in a secure area.

1.2.2 Upon receipt of the samples in custody, the Contractor shall inspect the shipping container and sample bottles and shall document receiving information as specified in section 3.2. The sample custodian or a designated representative shall sign and date all appropriate receiving documents at the time of receipt (i.e., EPA chain-of-custody forms, Traffic Reports, airbills, etc.). The Contractor shall contact SMO if documents are absent, if information on receiving documents does not agree, if custody seals are not intact, or if the sample is not in good condition. The Contractor shall document resolution of any discrepancies, and this documentation shall become a part of the permanent Case file.

1.2.3 Once samples have been accepted by the laboratory, checked, and logged in, they must be maintained in accordance with custody and security requirements specified in 3.3.

2. Document Control Procedures

The goal of the laboratory document control program is to ensure that all documents for a specified Case will be accounted for when the project is completed. Accountable documents used by Contractor laboratories shall include, but not be limited to, logbooks, chain-of-custody records, sample work sheets, bench sheets, and other documents relating to the sample or sample analyses. The following document control procedures have been established to ensure that all laboratory records are assembled and stored for delivery to EPA or are available upon request from EPA prior to the delivery schedule.

2.1 Preprinted Data Sheets and Logbooks

Preprinted data sheets shall contain the name of the laboratory and be dated and signed by the analyst or individual performing the work. All documents produced by the laboratory which are directly related to the preparation and analysis of EPA samples shall become the property of the EPA and shall be placed in the Case file. For that reason, all observations and results recorded by the laboratory but not on preprinted data sheets shall be entered into permanent laboratory logbooks. The person responsible for the work shall sign and date each entry and/or page in the logbook. When all data from a case is compiled, copies of all EPA Case-related logbook entries shall be included in the documentation package. Analysts' logbook entries must be in chronological order and shall include only one Case per page. Instrument run logs shall be maintained so as to enable a reconstruction of the run sequences of individual instruments.

Because the laboratory must provide copies of the instrument run logs to EPA, the laboratory may exercise the option of using only laboratory or EPA sample identification numbers in the logs for sample ID rather than government agency or commercial client names.

Using laboratory or EPA Sample Number IDs only in the run sequences will assist the laboratory in preserving the confidentiality of commercial clients.

2.2 Error Correction Procedure

All documentation in logbooks and other documents shall be in ink. If an error is made, corrections shall be made by crossing a line through the error and entering the correct information. Changes shall be dated and initialed. No information shall be obliterated or rendered unreadable.

2.3 Consistency of Documentation

Before releasing analytical results, the laboratory shall assemble and cross-check the information on sample tags, custody records, lab bench sheets, personal and instrument logs, and other relevant data to ensure that data pertaining to each particular sample or Case is consistent throughout the Case file.

2.4 Document Numbering and Inventory Procedure

In order to provide document accountability of the completed analysis records, each item in a Case shall be inventoried and assigned a serialized number and identifier associating it to the Case and Region.

Case # - Region - Serialized number (For example: 75-2-0240)

The number of pages of each item must be accounted for if each page is not individually numbered. All documents relevant to each Case, including logbook pages, bench sheets, mass spectra, chromatograms, custody records, library search results, etc., shall be inventoried. The laboratory shall be responsible for ensuring that all documents generated are placed in the file for inventory and are delivered to EPA in the Case File Purge package (Exhibit B, Paragraph F). Figure 1 is an example of a document inventory.

2.5 Shipping Data Packages and Case Files

The Contractor shall have written procedures to document shipment of deliverables packages to the recipients. These shipments require custody seals on the containers placed such that it cannot be opened without damaging or breaking the seal. The Contractor shall also document what was sent, to whom, the date, and the method (carrier) used.

Figure 1

Example

232-2-0001
Case No. ___
Region ___

DOCUMENT INVENTORY

Document Control #*	Document Type	# Pages
232-2-0001	Case File Document Inventory Sheet	1
232-2-0002	Chain-of-Custody Records	2
232-2-0003	Shipping Manifests	2
232-2-0004	Sample Tags	50
232-2-0005	SMO Inorganics Traffic Reports	10
232-2-0006	Inorganics Analysis Data Summary Sheets	10
232-2-0007	Analysts' Notebook Pages	14
232-2-0008	ICP and AA Instrument Logbook Pages	12
etc.	etc.	etc.

*This number is to be recorded on each set of documents.

3. Standard Operating Procedures

The Contractor must have written standard operating procedures (SOPs) for:

a. Sample receipt and logging.

b. Sample storage.

c. Preventing sample contamination.

d. Security for laboratory and samples.

e. Traceability of standards.

f. Maintaining instrument records and logbooks.

g. Sample analysis and data control systems.

h. Glassware cleaning.

i. Technical and managerial review of laboratory operation and data package preparation.

j. Internal review of contractually-required quality assurance and quality control data for each individual data package.

k. Sample analysis, data handling and reporting.

l. Chain-of-custody.

m. Document control, including Case file preparation.

An SOP is defined as a written narrative step-by-step description of laboratory operating procedures including examples of laboratory documentation. The SOPs must accurately describe the actual procedures used in the laboratory, and copies of the written SOPs shall be available to the appropriate laboratory personnel. These procedures are necessary to ensure that analytical data produced under this contract are acceptable for use in EPA enforcement case preparation and litigation. The Contractor's SOPs shall provide mechanisms and documentation to meet each of the following specifications and shall be used by EPA as the basis for laboratory evidence audits.

3.1 The Contractor shall have a designated sample custodian responsible for receipt of samples and have written SOPs describing his/her duties and responsibilities.

3.2 The Contractor shall have written SOPs for receiving and logging in of the samples. The procedures shall include but not be limited to, documenting the following information:

- o Presence or absence of EPA chain-of-custody forms
- o Presence or absence of airbills
- o Presence or absence of EPA Traffic Reports or SAS packing lists
- o Presence or absence of custody seals on shipping and/or sample containers and their condition
- o Presence or absence of sample tags
- o Sample tag ID numbers if not recorded on the chain-of-custody record(s) or packing list(s)
- o Condition of the shipping container
- o Condition of the sample bottles
- o Verification of agreement or nonagreement of information on receiving documents
- o Resolution of problems or discrepancies with the Sample Management Office

3.3 The Contractor shall have written SOPs for maintenance of the security of samples after log-in and shall demonstrate security of the sample storage and laboratory areas. The SOPs shall specifically include descriptions of all storage areas for EPA samples in the laboratory, and steps taken to prevent sample contamination. The SOPs shall include a list of authorized personnel who have access or keys to secure storage areas.

3.4 The Contractor shall have written SOPs for tracking the work performed on any particular sample. The tracking SOP shall include the following:

3.4.1 A description of the documentation used to record sample receipt, sample storage, sample transfers, sample preparations, and sample analyses.

3.4.2 A description of the documentation used to record instrument calibration and other QA/QC activities.

3.4.3 Examples of the document formats and laboratory documentation used in the sample receipt, sample storage, sample transfer, and sample analyses.

3.5 The Contractor shall have written SOPs for organization and assembly of all documents relating to each EPA Case, including technical and managerial review. Documents shall be filed on a Case-specific basis. The procedures must ensure that all documents including logbook pages, sample tracking records, chromatographic charts, computer printouts, raw data summaries, correspondence, and any other written documents having reference to the Case are compiled in one location for submission to EPA. The system must include a document numbering and inventory procedure.

3.6 The Contractor shall have written SOPs for laboratory safety.

3.7 The Contractor shall have written SOPs for cleaning of glassware used in preparing and analyzing samples under this contract.

3.8 The Contractor shall have SOPs for traceability of standards used in sample analysis QA/QC.

4. Handling of Confidential Information

A Contractor conducting work under this contract may receive EPA-designated confidential information from the Agency. Confidential information must be handled separately from other documentation developed under this contract. To accomplish this, the following procedures for the handling of confidential information have been established.

4.1 All confidential documents shall be under the supervision of a designated Document Control Officer (DCO).

4.2 Confidential Information

Any samples or information received with a request of confidentiality shall be handled as "confidential." A separate locked file shall be maintained to store this information and shall be segregated from other nonconfidential information. Data generated from confidential samples shall be treated as confidential. Upon receipt of confidential information, the DCO logs these documents into a Confidential Inventory Log. The information is then made available to authorized personnel but only after it has been signed out to that person by the DCO. The documents shall be returned to the locked file at the conclusion of each working day. Confidential information may not be reproduced except upon approval by the EPA Contracting Officer. The DCO will enter all copies into the document control system. In addition, this information may not be disposed of except upon approval by the EPA Contracting Officer. The DCO shall remove and retain the cover page of any confidential information disposed of for one year and shall keep a record of the disposition in the Confidential Inventory Log.

EXHIBIT G

GLOSSARY OF TERMS

GLOSSARY OF TERMS

ABSORBANCE - a measure of the decrease in incident light passing through a sample into the detector. It is defined mathematically as:

$$A = \frac{I(\text{solvent})}{I(\text{solution})} = \log \frac{Io}{I}$$

Where, I = radiation intensity

ALIQUOT - a measured portion of a field sample taken for analysis.

ANALYSIS DATE/TIME - the date and military time (24-hour clock) of the introduction of the sample, standard, or blank into the analysis system.

ANALYTE - the element or ion an analysis seeks to determine; the element of interest.

ANALYTICAL SAMPLE - Any solution or media introduced into an instrument on which an analysis is performed excluding instrument calibration, initial calibration verification, initial calibration blank, continuing calibration verification and continuing calibration blank. Note the following are all defined as analytical samples: undiluted and diluted samples (EPA and non-EPA), predigestion spike samples, duplicate samples, serial dilution samples, analytical spike samples, post-digestion spike samples, interference check samples (ICS), CRDL standard for AA (CRA), CRDL standard for ICP (CRI), laboratory control sample (LCS), preparation blank (PB) and linear range analysis sample (LRS).

ANALYTICAL SPIKE - The furnace post-digestion spike. The addition of a known amount of standard after digestion.

AUTOZERO - zeroing the instrument at the proper wavelength. It is equivalent to running a standard blank with the absorbance set at zero.

AVERAGE INTENSITY - The average of two different injections (exposures).

BACKGROUND CORRECTION - a technique to compensate for variable background contribution to the instrument signal in the determination of trace elements.

CALIBRATION - the establishment of an analytical curve based on the absorbance, emission intensity, or other measured characteristic of known standards. The calibration standards must be prepared using the same type of acid or concentration of acids as used in the sample preparation.

CALIBRATION BLANK - a volume of acidified deionized/distilled water.

CASE - a finite, usually predetermined number of samples collected over a given time period from a particular site. Case numbers are assigned by the Sample Management Office. A Case consists of one or more Sample Delivery Groups.

COEFFICIENT OF VARIATION (CV) - the standard deviation as a percent of the arithmetic mean.

CONCENTRATION LEVEL (low or medium) - for inorganics analysis, low or medium level is defined by the appropriate designation checked by the sampler on the Traffic Report.

CONTINUING CALIBRATION - analytical standard run every 10 analytical samples or every 2 hours, whichever is more frequent, to verify the calibration of the analytical system.

CONTRACT REQUIRED DETECTION LIMIT (CRDL) - minimum level of detection acceptable under the contract Statement of Work.

CONTROL LIMITS - a range within which specified measurement results must fall to be compliant. Control limits may be mandatory, requiring corrective action if exceeded, or advisory, requiring that noncompliant data be flagged.

CORRELATION COEFFICIENT - a number (r) which indicates the degree of dependence between two variables (concentration - absorbance). The more dependent they are the closer the value to one. Determined on the basis of the least squares line.

DAY - unless otherwise specified, day shall mean calendar day.

DIGESTION LOG - an official record of the sample preparation (digestion).

DISSOLVED METALS - analyte elements which have <u>not</u> been digested prior to analysis and which will pass through a 0.45 um filter.

DRY WEIGHT - the weight of a sample based on percent solids. The weight after drying in an oven.

DUPLICATE - a second aliquot of a sample that is treated the same as the original sample in order to determine the precision of the method.

FIELD BLANK - any sample submitted from the field identified as a blank.

FIELD SAMPLE - a portion of material received to be analyzed that is contained in single or multiple containers and identified by a unique EPA Sample Number.

FLAME ATOMIC ABSORPTION (AA) - atomic absorption which utilizes flame for excitation.

GRAPHITE FURNACE ATOMIC ABSORPTION (GFAA) - atomic absorption which utilizes a graphite cell for excitation.

HOLDING TIME - the elapsed time expressed in days from the date of receipt of the sample by the Contractor until the date of its analysis.

Holding time = (sample analysis date - sample receipt date)

INDEPENDENT STANDARD - a Contractor-prepared standard solution that is composed of analytes from a different source than those used in the standards for the initial calibration.

INDUCTIVELY COUPLED PLASMA (ICP) - a technique for the simultaneous or sequential multi-element determination of elements in solution. The basis of the method is the measurement of atomic emission by an optical spectroscopic technique. Characteristic atomic line emission spectra are produced by excitation of the sample in a radio frequency inductively coupled plasma.

IN-HOUSE - at the Contractor's facility.

INJECTION - introduction of the analytical sample into the instrument excitation system for the purpose of measuring absorbance, emission or concentration of an analyte. May also be referred to as exposure.

INSTRUMENT CALIBRATION - analysis of analytical standards for a series of different specified concentrations; used to define the quantitative response, linearity, and dynamic range of the instrument to target analytes.

INSTRUMENT DETECTION LIMIT (IDL) - determined by multiplying by three the standard deviation obtained for the analysis of a standard solution (each analyte in reagent water) at a concentration of 3x-5x IDL on three nonconsecutive days with seven consecutive measurements per day.

INTERFERENTS - substances which affect the analysis for the element of interest.

INTERNAL STANDARDS - in-house compounds added at a known concentration.

LABORATORY - synonymous with Contractor as used herein.

LABORATORY CONTROL SAMPLE (LCS) - a control sample of known composition. Aqueous and solid laboratory control samples are analyzed using the same sample preparation, reagents, and analytical methods employed for the EPA samples received.

LABORATORY RECEIPT DATE - the date on which a sample is received at the Contractor's facility, as recorded on the shipper's delivery receipt and sample Traffic Report. Also referred to as VTSR (validated time of sample receipt).

LINEAR RANGE, LINEAR DYNAMIC RANGE - the concentration range over which the ICP analytical curve remains linear.

MATRIX - the predominant material of which the sample to be analyzed is composed. For the purpose of this SOW, a sample matrix is either water or soil/sediment. Matrix is not synonymous with phase (liquid or solid).

MATRIX MODIFIER - salts used in AA to lessen the effects of chemical interferents, viscosity, and surface tension.

MATRIX SPIKE - aliquot of a sample (water or soil) fortified (spiked) with known quantities of specific compounds and subjected to the entire analytical procedure in order to indicate the appropriateness of the method for the matrix by measuring recovery.

METHOD OF STANDARD ADDITIONS (MSA) - the addition of 3 increments of a standard solution (spikes) to sample aliquots of the same size. Measurements are made on the original and after each addition. The slope, x-intercept and y-intercept are determined by least-square analysis. The analyte concentration is determined by the absolute value of the x-intercept. Ideally, the spike volume is low relative to the sample volume (approximately 10% of the volume). Standard addition may counteract matrix effects; it will not counteract spectral effects. Also referred to as Standard Addition.

PERCENT SOLIDS - the proportion of solid in a soil sample determined by drying an aliquot of the sample.

PERFORMANCE EVALUATION (PE) SAMPLE - a sample of known composition provided by EPA for Contractor analysis. Used by EPA to evaluate Contractor performance.

PREPARATION BLANK (reagent blank, method blank) - an analytical control that contains distilled, deionized water and reagents, which is carried through the entire analytical procedure (digested and analyzed). An aqueous method blank is treated with the same reagents as a sample with a water matrix; A solid method blank is treated with the same reagents as a soil sample.

PROTOCOL - a compilation of the procedures to be followed with respect to sample receipt and handling, analytical methods, data reporting and deliverables, and document control. Used synonymously with Statement of Work (SOW).

ROUNDING RULES - If the figure following those to be retained is less than 5, the figure is dropped, and the retained figures are kept unchanged. As an example, 11.443 is rounded off to 11.44.

If the figure following those to be retained is greater than 5, the figure is dropped, and the last retained figure is raised by 1. As an example, 11.446 is rounded off to 11.45.

If the figure following those to be retained is 5, and if there are no figures other than zeros beyond the five, the figure 5 is dropped, and the last-place figure retained is increased by one if it is an odd number or it is kept unchanged if an even number. As an example, 11.435 is rounded off to 11.44, while 11.425 is rounded off to 11.42.

If a series of multiple operations is to be performed (add, subtract, divide, multiply), all figures are carried through the calculations. Then the final answer is rounded to the proper number of significant figures.

See forms instructions (Exhibit B) for exceptions.

RUN - a continuous analytical sequence consisting of prepared samples and all associated quality assurance measurements as required by the contract Statement of Work.

SAMPLE DELIVERY GROUP (SDG) - a unit within a sample Case that is used to identify a group of samples for delivery. An SDG is a group of 20 or fewer samples within a Case, received over a period of up to 14 calendar days. Data from all samples in an SDG are due concurrently. A Sample Delivery Group is defined by one of the following, whichever occurs first:

- Case; or
- Each 20 samples within a Case; or
- Each 14-day calendar period during which samples in a Case are received, beginning with receipt of the first sample in the Case or SDG.

Samples may be assigned to Sample Delivery Groups by matrix (i.e., all soils in one SDG, all waters in another), at the discretion of the laboratory.

SAMPLE NUMBER (EPA SAMPLE NUMBER) - a unique identification number designated by EPA for each sample. The EPA Sample Number appears on the sample Traffic Report which documents information on that sample.

SERIAL DILUTION - the dilution of a sample by a factor of five. When corrected by the dilution factor, the diluted sample must agree with the original undiluted sample within specified limits. Serial dilution may reflect the influence of interferents.

SOIL - synonymous with soil/sediment or sediment as used herein.

STOCK SOLUTION - a standard solution which can be diluted to derive other standards.

TOTAL METALS - analyte elements which have been digested prior to analysis.

TRAFFIC REPORT (TR) - an EPA sample identification form filled out by the sampler, which accompanies the sample during shipment to the laboratory and which is used for documenting sample condition and receipt by the laboratory.

WET WEIGHT - the weight of a sample aliquot including moisture (undried).

10% FREQUENCY - a frequency specification during an analytical sequence allowing for no more than 10 analytical samples between required calibration verification measurements, as specified by the contract Statement of Work.

EXHIBIT H

DATA DICTIONARY AND FORMAT FOR DATA DELIVERABLES IN COMPUTER-READABLE FORMAT

		Page No.
SECTION I:	Description of Deliverables	H-1
SECTION II:	Format A Specification	H-3
SECTION III:	Format B Specification	H-26

SECTION I

DESCRIPTION OF DELIVERABLES

1. Introduction

1.1 Two file formats are specified for delivery of computer-readable data. Format A is oriented to the structure of the hardcopy reporting forms required by the contract. Format B is oriented to the general data required by the contract. Information sufficient to generate required hardcopy forms is contained in either format.

1.2 The file or files for a Sample Delivery Group (SDG, see Exhibit A, Section I, B) must be submitted on a diskette or diskettes (see paragraph, 2.1). Information on a diskette or diskettes for any single SDG must be in one, and only one, of the two formats. The format used is at the option of the laboratory. The option used must be included in the File Name specification (paragraph 2.2).

1.3 Format A consists of variable length ASCII records, and Format B consists of fixed-length 80-byte ASCII records.

1.4 All information for one SDG must be in one file if format A is used. Use of Format B may require information for one SDG to be in a number of files. Format B may require more than one 360 K diskette for a valid SDG.

2. Deliverable

2.1 The file or files must be submitted on a 5-1/4 inch floppy diskette, which may be either a double-sided, double density, 360 K-byte or a high capacity 1.2 M-byte diskette. The diskette must be formatted and recorded using the MS-DOS Operating System. The diskette or diskettes must contain all information relevant to one and only one SDG, and must accompany the hardcopy package for the SDG submitted to the Sample Management Office (see Exhibit B). Information on the diskette or diskettes must correspond exactly with information submitted in the hardcopy data package and on the hardcopy data package forms. Blank or unused records in either format should not be included on the diskettes.

2.2 Each diskette must be identified with an external label containing (in this order) the following information:

Disk Density
File Name(s)
Laboratory Name (optional)
Laboratory Code
Case Number (where applicable)
SAS Number (where applicable)

The format for the File Name(s) must be XXXXXX.INY

where XXXXXX is the SDG identifier

I indicates Inorganics analysis

N is a continuation number used to identify multiple files corresponding to the same SDG. For Format A, "N" must be "1". For Format B, "N" must be "1" for the only, or first file of the SDG, and must be incremented to "2", "3", etc., for subsequent files of the SDG. "N" cannot be greater than 9

Y is "A" for Format A
or "B" for Format B

Dimensions of the label must be in the range 4-3/4" to 5" long by 1-1/4 to 1-1/2" wide.

SECTION II

FORMAT A SPECIFICATION

1. Format Characteristics

1.1 Format A is based upon the structure of the hardcopy reporting forms required by the contract. With two exceptions, Form Suffix and Record Type, all fields in the format correspond directly with entries or items on the hardcopy forms.

1.2 Format A includes detailed specifications for the required format of each Inorganic Reporting Form's HEADER and DETAIL records. The exact columns in which each field is to be contained are shown, as well as the length of the field. Each field's required contents are specified either as a literal (contained in single quotes) which must appear exactly as shown (without the quotes), or as a variable for which a format is listed in the format column. Each field's required format is specified either as an option of two or more choices (divided by slashes), as MM/DD/YY for a date, as a CHARACTER field, or as a NUMERIC field.

1.3 Format fields listed as CHARACTER may contain any standard ASCII characters, and must be left-justified and padded with blanks. Formats listed as NUMERIC may contain numeric digits, a decimal point, and a leading plus or minus sign, and must be right-justified and padded with blanks. The numbers following the word NUMERIC specify the maximum number of digits which are allowed on either side of the decimal. The decimal point is not assumed and must be contained in the field in its correct position. For example, the format "NUMERIC 3.2" allows 3 digits preceding the decimal point and 2 following it (a total length of 6 characters). The format "NUMERIC S3.2" allows a leading plus or minus sign (a total length of 7). If a field's format description does not contain a decimal point, then a decimal point is not allowed in the field. If a field's format description does not contain an "S", then a sign is not allowed in the field.

Explanation of NUMERIC fields in Format A.

In the examples below the format NUMERIC 3.2 is described.

(Quotation marks indicate limits of the field described and are not included in the format.)

If the value of the field is 10.1:
The columns in the format will appear as: "10.10" (six columns).

The table below demonstrates several examples:

Value	Appears on Format
10.1	"10.10"
10.11	"10.11"
100.11	"100.11"
100	"100.00"
.29	"0.29"
-100.129	Invalid
-10.1	Invalid

The following table presents examples of NUMERIC S3.2:

Value	Appears on Format
10.1	" 10.10" (seven columns)
-10.11	" -10.11"
-100.11	"-100.11"
-1000.1	Invalid
100	" 100.00"
-.22	" -0.22"
-.239	" -0.24"

2. Record Types

2.1 Format A consists of variable length ASCII records. The last two bytes of each record must contain "carriage return" and "line feed", respectively. Unused bytes in partially filled fields must be blank-filled.

2.2 Format A has three types of records: Header Records, Detail Records and Comment Records.

Type	Type ID	Contents
Header	H	Nonrepeating fields which together are unique to the associated hardcopy form
Detail	D	A group of fields that are repeated on a form, and are uniquely positioned by (e.g., Analyte Chemical Symbol)
Comment	C	Nonrepeating fields containing text that comments on information reported on the form

The format for Comment Records is the same for all forms, and is described after all other formats.

2.3 The first 5 bytes of each record contain the FORM ID, identifying the Inorganic Analysis Reporting Form for which the record contains data. The ID must be left-justified in the field.

FORM ID	FORM NAME
COVER	COVER PAGE - INORGANIC ANALYSES DATA PACKAGE
I	INORGANIC ANALYSIS DATA SHEET
II(1)	INITIAL AND CONTINUING CALIBRATION VERIFICATION
II(2)	CRDL STANDARD FOR AA AND ICP
III	BLANKS
IV	ICP INTERFERENCE CHECK SAMPLE
V(1)	SPIKE SAMPLE RECOVERY
V(2)	POST DIGEST SPIKE SAMPLE RECOVERY
VI	DUPLICATES
VII	LABORATORY CONTROL SAMPLE
VIII	STANDARD ADDITION RESULTS
IX	ICP SERIAL DILUTIONS
X	INSTRUMENT DETECTION LIMITS (QUARTERLY)
XI	ICP INTERELEMENT CORRECTION FACTORS (ANNUALLY)
XII	ICP LINEAR RANGES (QUARTERLY)
XIII	PREPARATION LOG
XIV	ANALYSIS RUN LOG

Following the FORM ID is a two-byte, left-justified, FORM SUFFIX, which must be unique for each set of records that correspond to one hardcopy form. For example, records for the first occurrence of a form must contain the suffix AA. Records for the second occurrence must contain AB, and the twenty-seventh occurrence would contain BA.

The 8th byte of each record contains the TYPE ID, which specifies what kind of data the record contains (see paragraph 2.2).

Records with the same FORM ID and FORM SUFFIX must be grouped together in the file. Within each FORM ID/FORM SUFFIX group, there may be only one HEADER record, and it must come first. DETAIL records must follow the HEADER record. The COMMENT records, which are optional, must come last in the group, and be in sequence corresponding to the form.

The FORM ID/FORM SUFFIX group(s) for the COVER PAGE(S) must come first in the file. After the COVER PAGE(S), the FORM ID/FORM SUFFIX groups do not have to be in any specific order. For example, a set of HEADER/DETAIL/COMMENT records for FORM V could come before records for FORM I, as long as the records within the group are in the correct order.

3. Record Length

Table 3.1 summarizes the length (excluding carriage return/line feed) and (in parentheses) the number of records in Format A. The maximum number of detail and comment records is shown, corresponding to a submission of hardcopy forms on which information is written on all possible lines.

Table 3.1 Format A Summary

Form	Record		
	Header	Detail	Comment
Cover	80[a](1)[b]	25(24)	78(4)
I	90(1)	31(24)	78(4)
II(1)	32(1)	65(24)	
II(2)	32(1)	66(23)	
III	18(1)	59(24)	
IV	32(1)	64(23)	
V(1)	33(1)	66(24)	78(4)
V(2)	23(1)	62(24)	78(4)
VI	38(1)	56(24)	
VII	32(1)	68(24)	
VIII	8(1)	67(32)	
IX	23(1)	44(23)	
X	52(1)	29(23)	78(4)
XI	28(1)	77(23)	78(4)
XII	28(1)	29(23)	78(4)
XIII	10(1)	32(32)	
XIV	38(1)	59(32)	

[a] Length of record in bytes (excluding carriage return/line feed).

[b] Maximum number of records required for a form.

4. Record Listing

The remainder of this section contains detailed specifications for every record required for a full set of hardcopy forms.

COVER PAGE

INORGANIC ANALYSES DATA PACKAGE COVER PAGE HEADER RECORD:

COLUMN(S)	LENGTH	CONTENTS	FORMAT
1-5	5	'COVER'	
6-7	2	FORM SUFFIX	
8	1	'H'	
9-33	25	LAB NAME	CHARACTER
34-43	10	CONTRACT	CHARACTER
44-49	6	LAB CODE	CHARACTER
50-54	5	CASE NUMBER	CHARACTER
55-60	6	SAS NUMBER	CHARACTER
61-66	6	SDG NUMBER	CHARACTER
67-71	5	SOW NUMBER	CHARACTER
72-74	3	ICP INT CORRECTIONS	'YES'/'NO'
75-77	3	ICP BG CORRECTIONS	'YES'/'NO'
78-80	3	RAW DATA BEFORE	'YES'/'NO'/BLANK

NOTE: The LAB NAME, CONTRACT, LAB CODE, CASE NUMBER, SAS NUMBER, AND SDG NUMBER, which are contained in the COVER PAGE HEADER record, are not repeated in the HEADER records of the other forms. Each form's HEADER record contains only data which are unique to the DETAIL records which follow it.

INORGANIC ANALYSES DATA PACKAGE COVER PAGE DETAIL RECORDS:

COLUMN(S)	LENGTH	CONTENTS	FORMAT
1-5	5	'COVER'	
6-7	2	FORM SUFFIX	
8	1	'D'	
9-15	7	EPA SAMPLE NO.	CHARACTER
16-25	10	LAB SAMPLE ID NO.	CHARACTER

FORM I

INORGANIC ANALYSIS DATA SHEET HEADER RECORD:

COLUMN(S)	LENGTH	CONTENTS	FORMAT
1-5	5	'I '	
6-7	2	FORM SUFFIX	
8	1	'H'	
9-15	7	EPA SAMPLE NO.	CHARACTER
16-20	5	MATRIX	'WATER'/'SOIL'
21-30	10	LAB SAMPLE ID	CHARACTER
31-33	3	LEVEL	'LOW'/'MED'
34-41	8	DATE RECEIVED	MM/DD/YY
42-46	5	PERCENT SOLIDS	NUMERIC 3.1
47-51	5	CONCENTRATION UNITS	'UG/L '/ 'MG/KG'
52-60	9	COLOR BEFORE	CHARACTER
61-69	9	COLOR AFTER	CHARACTER
70-75	6	CLARITY BEFORE	CHARACTER
76-81	6	CLARITY AFTER	CHARACTER
82-87	6	TEXTURE	CHARACTER
88-90	3	ARTIFACTS	'YES'/BLANK

INORGANIC ANALYSIS DATA SHEET DETAIL RECORDS:

COLUMN(S)	LENGTH	CONTENTS	FORMAT
1-5	5	'I '	
6-7	2	FORM SUFFIX	
8	1	'D'	
9-10	2	ANALYTE SYMBOL	CHARACTER
11-22	12	CONCENTRATION	NUMERIC 9.2
23	1	CONC FLAG (C)	'B'/'U'/BLANK
24-29	6	QUALIFIER (Q)	UP TO 6 ONE-CHARACTER FLAGS (OTHER THAN 'B' OR 'U')
30-31	2	METHOD (M)	METHOD CODE/'NR'

FORM II (PART 1)

INITIAL AND CONTINUING CALIBRATION VERIFICATION HEADER RECORD:

COLUMN(S)	LENGTH	CONTENTS	FORMAT
1-5	5	'II(1)'	
6-7	2	FORM SUFFIX	
8	1	'H'	
9-20	12	INIT CAL SOURCE	CHARACTER
21-32	12	CONT CAL SOURCE	CHARACTER

INITIAL AND CONTINUING CALIBRATION VERIFICATION DETAIL RECORDS:

COLUMN(S)	LENGTH	CONTENTS	FORMAT
1-5	5	'II(1)'	
6-7	2	FORM SUFFIX	
8	1	'D'	
9-10	2	ANALYTE SYMBOL	CHARACTER
11-17	7	INITIAL CAL TRUE	NUMERIC 5.1
18-25	8	INITIAL CAL FOUND	NUMERIC 5.2
26-30	5	INITIAL CAL %R	NUMERIC 3.1
31-37	7	CONT CAL TRUE	NUMERIC 5.1
38-45	8	CONT CAL FOUND 1	NUMERIC 5.2
46-50	5	CONT CAL %R 1	NUMERIC 3.1
51-58	8	CONT CAL FOUND 2	NUMERIC 5.2
59-63	5	CONT CAL %R 2	NUMERIC 3.1
64-65	2	METHOD (M)	METHOD CODE/'NR'

FORM II (PART 2)

CRDL STANDARD FOR AA AND ICP HEADER RECORD:

COLUMN(S)	LENGTH	CONTENTS	FORMAT
1-5	5	'II(2)'	
6-7	2	FORM SUFFIX	
8	1	'H'	
9-20	12	AA STANDARD SOURCE	CHARACTER
21-32	12	ICP STANDARD SOURCE	CHARACTER

CRDL STANDARD FOR AA AND ICP DETAIL RECORDS:

COLUMN(S)	LENGTH	CONTENTS	FORMAT
1-5	5	'II(2)'	
6-7	2	FORM SUFFIX	
8	1	'D'	
9-10	2	ANALYTE SYMBOL	CHARACTER
11-17	7	AA TRUE	NUMERIC 5.1
18-26	9	AA FOUND	NUMERIC 6.2
27-31	5	AA %R	NUMERIC 3.1
32-38	7	ICP INIT TRUE	NUMERIC 5.1
39-47	9	ICP INIT FOUND	NUMERIC 6.2
48-52	5	ICP INIT %R	NUMERIC 3.1
53-61	9	ICP FINAL FOUND	NUMERIC 6.2
62-66	5	ICP FINAL %R	NUMERIC 3.1

FORM III

BLANKS HEADER RECORD:

COLUMN(S)	LENGTH	CONTENTS	FORMAT
1-5	5	'III '	
6-7	2	FORM SUFFIX	
8	1	'H'	
9-13	5	PREP BLANK MATRIX	'WATER'/'SOIL '
14-18	5	PREP BLANK UNITS	'UG/L '/'MG/KG'

BLANKS DETAIL RECORDS:

COLUMN(S)	LENGTH	CONTENTS	FORMAT
1-5	5	'III '	
6-7	2	FORM SUFFIX	
8	1	'D'	
9-10	2	ANALYTE SYMBOL	CHARACTER
11-18	8	INITIAL CAL BLANK	NUMERIC S5.1
19	1	INITIAL CAL FLAG (C)	'B'/'U'/BLANK
20-27	8	CONT CAL BLANK 1	NUMERIC S5.1
28	1	CC BLANK 1 FLAG (C)	'B'/'U'/BLANK
29-36	8	CONT CAL BLANK 2	NUMERIC S5.1
37	1	CC BLANK 2 FLAG (C)	'B'/'U'/BLANK
38-45	8	CONT CAL BLANK 3	NUMERIC S5.1
46	1	CC BLANK 3 FLAG (C)	'B'/'U'/BLANK
47-56	10	PREPARATION BLANK	NUMERIC S5.3
57	1	PREP BLANK FLAG (C)	'B'/'U'/BLANK
58-59	2	METHOD (M)	METHOD CODE/'NR'

FORM IV

ICP INTERFERENCE CHECK SAMPLE HEADER RECORD:

COLUMN(S)	LENGTH	CONTENTS	FORMAT
1-5	5	'IV '	
6-7	2	FORM SUFFIX	
8	1	'H'	
9-20	12	ICP ID NUMBER	CHARACTER
19-32	12	ICS SOURCE	CHARACTER

ICP INTERFERENCE CHECK SAMPLE DETAIL RECORDS:

COLUMN(S)	LENGTH	CONTENTS	FORMAT
1-5	5	'IV '	
6-7	2	FORM SUFFIX	
8	1	'D'	
9-10	2	ANALYTE SYMBOL	CHARACTER
11-16	6	TRUE A	NUMERIC 6
17-22	6	TRUE AB	NUMERIC 6
23-29	7	INITIAL A	NUMERIC S6
30-38	9	INITIAL AB	NUMERIC S6.1
39-43	5	INITIAL %R	NUMERIC 3.1
44-50	7	FINAL A	NUMERIC S6
51-59	9	FINAL AB	NUMERIC S6.1
60-64	5	FINAL %R	NUMERIC 3.1

FORM V (PART 1)

SPIKE SAMPLE RECOVERY HEADER RECORD:

COLUMN(S)	LENGTH	CONTENTS	FORMAT
1-5	5	'V(1) '	
6-7	2	FORM SUFFIX	
8	1	'H'	
9-15	7	EPA SAMPLE NO.	CHARACTER
16-20	5	MATRIX	'WATER'/'SOIL '
21-23	3	LEVEL	'LOW'/'MED'
24-28	5	CONCENTRATION UNITS	'UG/L '/ 'MG/KG'
29-33	5	SAMPLE % SOLIDS	NUMERIC 3.1

SPIKE SAMPLE RECOVERY DETAIL RECORDS:

COLUMN(S)	LENGTH	CONTENTS	FORMAT
1-5	5	'V(1) '	
6-7	2	FORM SUFFIX	
8	1	'D'	
9-10	2	ANALYTE SYMBOL	CHARACTER
11-16	6	CONTROL LIMIT %R	'75-125'/BLANK
17-30	14	SPIKED SAMPLE RESULT	NUMERIC 9.4
31	1	SSR FLAG (C)	'B'/'U'/BLANK
32-44	13	SAMPLE RESULT	NUMERIC 8.4
45	1	SR FLAG (C)	'B'/'U'/BLANK
46-56	11	SPIKE ADDED	NUMERIC 8.2
57-63	7	PERCENT RECOVERED	NUMERIC S4.1
64	1	QUALIFIER (Q)	'N'/BLANK
65-66	2	METHOD (M)	METHOD CODE/'NR'

FORM V (PART 2)

POST DIGEST SPIKE SAMPLE RECOVERY HEADER RECORD:

COLUMN(S)	LENGTH	CONTENTS	FORMAT
1-5	5	'V(2) '	
6-7	2	FORM SUFFIX	
8	1	'H'	
9-15	7	EPA SAMPLE NO.	CHARACTER
16-20	5	MATRIX	'WATER'/'SOIL '
21-23	3	LEVEL	'LOW'/'MED'

POST DIGEST SPIKE SAMPLE RECOVERY DETAIL RECORDS:

COLUMN(S)	LENGTH	CONTENTS	FORMAT
1-5	5	'V(2) '	
6-7	2	FORM SUFFIX	
8	1	'D'	
9-10	2	ANALYTE SYMBOL	CHARACTER
11-16	6	CONTROL LIMIT %R	BLANK
17-28	12	SPIKED SAMPLE RESULT	NUMERIC 9.2
29	1	SSR FLAG (C)	'B'/'U'/BLANK
30-41	12	SAMPLE RESULT	NUMERIC 9.2
42	1	SR FLAG (C)	'B'/'U'/BLANK
43-52	10	SPIKE ADDED	NUMERIC 8.1
53-59	7	PERCENT RECOVERED	NUMERIC S4.1
60	1	QUALIFIER (Q)	BLANK
61-62	2	METHOD (M)	METHOD CODE/'NR'

FORM VI

DUPLICATES HEADER RECORD:

COLUMN(S)	LENGTH	CONTENTS	FORMAT
1-5	5	'VI '	
6-7	2	FORM SUFFIX	
8	1	'H'	
9-15	7	EPA SAMPLE NO.	CHARACTER
16-20	5	MATRIX	'WATER'/'SOIL '
21-23	3	LEVEL	'LOW'/'MED'
24-28	5	CONCENTRATION UNITS	'UG/L '/'MG/KG'
29-33	5	SAMPLE % SOLIDS	NUMERIC 3.1
34-38	5	DUPLICATE % SOLIDS	NUMERIC 3.1

DUPLICATES DETAIL RECORDS:

COLUMN(S)	LENGTH	CONTENTS	FORMAT
1-5	5	'VI '	
6-7	2	FORM SUFFIX	
8	1	'D'	
9-10	2	ANALYTE SYMBOL	CHARACTER
11-17	7	CONTROL LIMIT	NUMERIC 5.1
18-31	14	SAMPLE	NUMERIC 9.4
32	1	SAMPLE FLAG (C)	'B'/'U'/BLANK
33-46	14	DUPLICATE	NUMERIC 9.4
47	1	DUPLICATE FLAG (C)	'B'/'U'/BLANK
48-53	6	RPD	NUMERIC 4.1
54	1	QUALIFIER (Q)	'*'/BLANK
55-56	2	METHOD (M)	METHOD CODE/'NR'

FORM VII

LABORATORY CONTROL SAMPLE HEADER RECORD:

COLUMN(S)	LENGTH	CONTENTS	FORMAT
1-5	5	'VII '	
6-7	2	FORM SUFFIX	
8	1	'H'	
9-20	12	SOLID LCS SOURCE	CHARACTER
21-32	12	AQUEOUS LCS SOURCE	CHARACTER

LABORATORY CONTROL SAMPLE DETAIL RECORDS:

COLUMN(S)	LENGTH	CONTENTS	FORMAT
1-5	5	'VII '	
6-7	2	FORM SUFFIX	
8	1	'D'	
9-10	2	ANALYTE SYMBOL	CHARACTER
11-17	7	AQUEOUS TRUE	NUMERIC 5.1
18-25	8	AQUEOUS FOUND	NUMERIC 5.2
26-30	5	AQUEOUS % RECOVERED	NUMERIC 3.1
31-38	8	SOLID TRUE	NUMERIC 6.1
39-46	8	SOLID FOUND	NUMERIC 6.1
47	1	SOLID FOUND FLAG (C)	'B'/'U'/BLANK
48-55	8	SOLID LOWER LIMIT	NUMERIC 6.1
56-63	8	SOLID UPPER LIMIT	NUMERIC 6.1
64-68	5	SOLID % RECOVERED	NUMERIC 3.1

FORM VIII

STANDARD ADDITION RESULTS HEADER RECORD:

COLUMN(S)	LENGTH	CONTENTS	FORMAT
1-5	5	'VIII '	
6-7	2	FORM SUFFIX	
8	1	'H'	

NOTE: Although there are no fields which occur only once per FORM VIII, the HEADER record must be included as a place holder, indicating that DETAIL records follow.

STANDARD ADDITION RESULTS DETAIL RECORDS:

COLUMN(S)	LENGTH	CONTENTS	FORMAT
1-5	5	'VIII '	
6-7	2	FORM SUFFIX	
8	1	'D'	
9-15	7	EPA SAMPLE NO.	CHARACTER
16-17	2	ANALYTE SYMBOL	CHARACTER
18-24	7	0 ADD ABSORBANCE	NUMERIC 3.3
25-26	2	1 ADD CONCENTRATION	NUMERIC 2
27-33	7	1 ADD ABSORBANCE	NUMERIC 3.3
34-36	3	2 ADD CONCENTRATION	NUMERIC 3
37-43	7	2 ADD ABSORBANCE	NUMERIC 3.3
44-46	3	3 ADD CONCENTRATION	NUMERIC 3
47-53	7	3 ADD ABSORBANCE	NUMERIC 3.3
54-60	7	FINAL CONCENTRATION	NUMERIC 5.1
61-66	6	CORRELATION COEF (R)	NUMERIC 1.4
67	1	QUALIFIER (Q)	'+'/BLANK

FORM IX

ICP SERIAL DILUTIONS HEADER RECORD:

COLUMN(S)	LENGTH	CONTENTS	FORMAT
1-5	5	'IX '	
6-7	2	FORM SUFFIX	
8	1	'H'	
9-15	7	EPA SAMPLE NO.	CHARACTER
16-20	5	MATRIX	'WATER'/'SOIL '
21-23	3	LEVEL	'LOW'/'MED'

ICP SERIAL DILUTIONS DETAIL RECORDS:

COLUMN(S)	LENGTH	CONTENTS	FORMAT
1-5	5	'IX '	
6-7	2	FORM SUFFIX	
8	1	'D'	
9-10	2	ANALYTE SYMBOL	CHARACTER
11-22	12	INIT SAMPLE (I)	NUMERIC 9.2
23	1	INIT SAMPLE FLAG (C)	'B'/'U'/BLANK
24-35	12	SERIAL DILUTION (S)	NUMERIC 9.2
36	1	DILUTION FLAG (C)	'B'/'U'/BLANK
37-41	5	PERCENT DIFFERENCE	NUMERIC 3.1
42	1	QUALIFIER (Q)	'E'/BLANK
43-44	2	METHOD (M)	METHOD CODE/'NR'

FORM X

INSTRUMENT DETECTION LIMITS (QUARTERLY) HEADER RECORD:

COLUMN(S)	LENGTH	CONTENTS	FORMAT
1-5	5	'X '	
6-7	2	FORM SUFFIX	
8	1	'H'	
9-16	8	DATE	MM/DD/YY
17-28	12	ICP ID NUMBER	CHARACTER
29-40	12	FLAME AA ID NUMBER	CHARACTER
41-52	12	FURNACE AA ID NUMBER	CHARACTER

INSTRUMENT DETECTION LIMITS (QUARTERLY) DETAIL RECORDS:

COLUMN(S)	LENGTH	CONTENTS	FORMAT
1-5	5	'X '	
6-7	2	FORM SUFFIX	
8	1	'D'	
9-10	2	ANALYTE SYMBOL	CHARACTER
11-17	7	WAVELENGTH	NUMERIC 4.2
18-19	2	BACKGROUND	'BS'/'BD'/'BZ'/BLANK
20-27	8	IDL	NUMERIC 6.1
28-29	2	METHOD (M)	METHOD CODE/'NR'

FORM XI (PART 1)

ICP INTERELEMENT CORRECTION FACTORS (ANNUALLY) HEADER RECORD:

COLUMN(S)	LENGTH	CONTENTS	FORMAT
1-5	5	'XI '	
6-7	2	FORM SUFFIX	AA
8	1	'H'	
9-20	12	ICP ID NUMBER	CHARACTER
21-28	8	DATE	MM/DD/YY

ICP INTERELEMENT CORRECTION FACTORS (ANNUALLY) DETAIL RECORDS:

COLUMN(S)	LENGTH	CONTENTS	FORMAT
1-5	5	'XI '	
6-7	2	FORM SUFFIX	
8	1	'D'	
9-10	2	ANALYTE SYMBOL	CHARACTER
11-17	7	WAVELENGTH	NUMERIC 4.2
18-19	2	ELEMENT 1 SYMBOL	AL
20-29	10	ELEMENT 1 FACTOR	NUMERIC S1.7
30-31	2	ELEMENT 2 SYMBOL	CA
32-41	10	ELEMENT 2 FACTOR	NUMERIC S1.7
42-43	2	ELEMENT 3 SYMBOL	FE
44-53	10	ELEMENT 3 FACTOR	NUMERIC S1.7
54-55	2	ELEMENT 4 SYMBOL	MG
56-65	10	ELEMENT 4 FACTOR	NUMERIC S1.7
66-67	2	ELEMENT 5 SYMBOL	CHARACTER
68-77	10	ELEMENT 5 FACTOR	NUMERIC S1.7

NOTE: FORM XII (Part 1) can only have a FORM SUFFIX of AA. In addition, ELEMENTs 1, 2, 3 and 4 SYMBOL can only be AL, CA, FE and MG respectively. ELEMENT 5 Symbol can be any other analyte symbol.

FORM XI (PART 2)

ICP INTERELEMENT CORRECTION FACTORS (ANNUALLY) HEADER RECORD:

COLUMN(S)	LENGTH	CONTENTS	FORMAT
1-5	5	'XI '	
6-7	2	FORM SUFFIX	AB, AC, etc
8	1	'H'	
9-20	12	ICP ID NUMBER	CHARACTER
21-28	8	DATE	MM/DD/YY

ICP INTERELEMENT CORRECTION FACTORS (ANNUALLY) DETAIL RECORDS:

COLUMN(S)	LENGTH	CONTENTS	FORMAT
1-5	5	'XI '	
6-7	2	FORM SUFFIX	
8	1	'D'	
9-10	2	ANALYTE SYMBOL	CHARACTER
11-17	7	WAVELENGTH	NUMERIC 4.2
18-19	2	ELEMENT 1 SYMBOL	CHARACTER
20-29	10	ELEMENT 1 FACTOR	NUMERIC S1.7
30-31	2	ELEMENT 2 SYMBOL	CHARACTER
32-41	10	ELEMENT 2 FACTOR	NUMERIC S1.7
42-43	2	ELEMENT 3 SYMBOL	CHARACTER
44-53	10	ELEMENT 3 FACTOR	NUMERIC S1.7
54-55	2	ELEMENT 4 SYMBOL	CHARACTER
56-65	10	ELEMENT 4 FACTOR	NUMERIC S1.7
66-67	2	ELEMENT 5 SYMBOL	CHARACTER
68-77	10	ELEMENT 5 FACTOR	NUMERIC S1.7

NOTE: The first FORM XII (Part 2) must have a FORM SUFFIX of AB, the second must have a FORM SUFFIX of AC and so on.

FORM XII

ICP LINEAR RANGES (QUARTERLY) HEADER RECORD:

COLUMN(S)	LENGTH	CONTENTS	FORMAT
1-5	5	'XII '	
6-7	2	FORM SUFFIX	
8	1	'H'	
9-20	12	ICP ID NUMBER	CHARACTER
21-28	8	DATE	MM/DD/YY

ICP LINEAR RANGES (QUARTERLY) DETAIL RECORDS:

COLUMN(S)	LENGTH	CONTENTS	FORMAT
1-5	5	'XII '	
6-7	2	FORM SUFFIX	
8	1	'D'	
9-10	2	ANALYTE SYMBOL	CHARACTER
11-16	6	INTEGRATION TIME	NUMERIC 3.2 (SECONDS)
17-27	11	CONCENTRATION	NUMERIC 9.1
28-29	2	METHOD (M) (ICP IS ASSUMED IF BLANK)	'NR'/BLANK

FORM XIII

PREPARATION LOG HEADER RECORD:

COLUMN(S)	LENGTH	CONTENTS	FORMAT
1-5	5	'XIII '	
6-7	2	FORM SUFFIX	
8	1	'H'	
9-10	2	METHOD	METHOD CODE

PREPARATION LOG DETAIL RECORDS:

COLUMN(S)	LENGTH	CONTENTS	FORMAT
1-5	5	'XIII '	
6-7	2	FORM SUFFIX	
8	1	'D'	
9-15	7	EPA SAMPLE NUMBER	CHARACTER
16-23	8	PREP DATE	MM/DD/YY
24-28	5	WEIGHT	NUMERIC 2.2
29-32	4	VOLUME	NUMERIC 4

FORM XIV

ANALYSIS RUN LOG HEADER RECORD:

COLUMN(S)	LENGTH	CONTENTS	FORMAT
1-5	5	'XIV '	
6-7	2	FORM SUFFIX	
8	1	'H'	
9-20	12	INSTRUMENT ID NUMBER	CHARACTER
21-22	2	METHOD	METHOD CODE
23-30	8	START DATE	MM/DD/YY
31-38	8	END DATE	MM/DD/YY

ANALYSIS RUN LOG DETAIL RECORDS:

COLUMN(S)	LENGTH	CONTENTS	FORMAT
1-5	5	'XIV '	
6-7	2	FORM SUFFIX	
8	1	'D'	
9-16	8	EPA SAMPLE NUMBER	CHARACTER
17-24	8	DILUTION FACTOR	NUMERIC 5.2
25-28	4	TIME	HHMM
29-35	7	PERCENT RECOVERED	NUMERIC S4.1
36	1	ANALYTE (AL)	"X"/BLANK
37	1	ANALYTE (SB)	"X"/BLANK
38	1	ANALYTE (AS)	"X"/BLANK
39	1	ANALYTE (BA)	"X"/BLANK
40	1	ANALYTE (BE)	"X"/BLANK
41	1	ANALYTE (CD)	"X"/BLANK
42	1	ANALYTE (CA)	"X"/BLANK
43	1	ANALYTE (CR)	"X"/BLANK
44	1	ANALYTE (CO)	"X"/BLANK
45	1	ANALYTE (CU)	"X"/BLANK
46	1	ANALYTE (FE)	"X"/BLANK
47	1	ANALYTE (PB)	"X"/BLANK
48	1	ANALYTE (MG)	"X"/BLANK
49	1	ANALYTE (MN)	"X"/BLANK
50	1	ANALYTE (HG)	"X"/BLANK
51	1	ANALYTE (NI)	"X"/BLANK
52	1	ANALYTE (K)	"X"/BLANK
53	1	ANALYTE (SE)	"X"/BLANK
54	1	ANALYTE (AG)	"X"/BLANK
55	1	ANALYTE (NA)	"X"/BLANK
56	1	ANALYTE (TL)	"X"/BLANK
57	1	ANALYTE (V)	"X"/BLANK
58	1	ANALYTE (ZN)	"X"/BLANK
59	1	ANALYTE (CN)	"X"/BLANK

COMMENT RECORDS

COMMENT records are optional for any FORM ID/FORM SUFFIX group. There may be up to 4 COMMENT records per group. They must come after the DETAIL records and be formatted as follows:

COLUMN(S)	LENGTH	CONTENTS	FORMAT
1-5	5	FORM ID	
6-7	2	FORM SUFFIX	
8	1	'C'	
9-78	70	COMMENTS	FREE FORM TEXT

The text may be in paragraph form if desired, but must be contained in columns 9 through 78 only. The key fields must be repeated in columns 1 through 8 of each line.

SECTION III

FORMAT B SPECIFICATION

1. Introduction

1.1 This constitutes the implementation of the EPA standard for media and record formats to be used in transmission of analytical results for the CLP inorganics program. The following points should be noted:

1.1.1 Spaces between fields permit these records to be prepared by programs written for laboratory automation systems in versions of BASIC which require this feature, as well as to be compatible with Agency standard statistical and database management systems (e.g. SAS, S2K, ADABAS, etc.).

1.1.2 Record formats contain sequence numbers and checksums to be consistent with requirements for a future error-free telecommunications format.

2. Record Types

2.1 There are four groups of record types in the reporting format, as shown below. Detailed record formats follow.

Type	Name	Contents
10	Run Header	Contains information pertinent to the whole production run. See production run definition below.
20	Sample Header	Contains sample-identifying information, or corresponding information for calibrations, QC samples, instrument performance checks, etc.
30	Results Record	Contains any final result on a sample, calibration or QC sample and identifying information.
90	Comments Record	Contains free-form comments and/or other miscellaneous information.

2.2 All record types given are mandatory. Type 20, representing the sample, contains the EPA Sample ID which acts as an identifying label for the sample. The QC code indicates whether the data is from an environmental sample, calibration, or QC sample; or other calculated run-wide data such as instrument detection limits or interelement correction factors (if determined using a separate injection). Type 30, representing an individual analyte, contains an indentifier to identify the analyte. All 30 series records following that record pertain to the same analyte. See section 11 for an example of the sequence of record types.

3. Production Runs

A production run represents a "group" or "batch" of samples that are processed in a continuous sequence under relatively stable conditions. Specifically:

Calibration - All samples in a run use the same initial calibration data.

Method number - Constant.

Instrument conditions - Constant throughout a run. Results obtained on different instruments cannot be combined in one run.

Thus, each separate group of analyses on each instrument will consist of a separate production run, and be reported in a separate file.

4. Record Sequence (See section 11)

4.1 A Run Header (type 10) record must be present as the first record in the file. Further occurrences of the type 10 record in the file are not allowed.

4.2 Each environmental sample, calibration, or quality control sample is represented by a group composed of a type 20 and 21 records, which holds sample level identifying information, followed by one type 30 record for each analyte. The type 20 record holds a count for the number of analytes being determined. Type 20 records should occur in the order of sample analysis. The type 20 records for quality control items have the additional rule that the LD1 record must occur before the corresponding LD2 record, but the records need not be adjacent. In addition, a type 20 record is used as a header for any additional run-wide data that must be reported for each analyte (such as instrument detection limits). Unique identifiers given in section 9.4 are used in place of "QC codes" to indicate the type of data that follows. Type 30 records for each compound must occur in the order specified on Form 5.

4.3 Type 90 comment records may be defined to occupy any position except before the type 10 (header) record.

5. File/Record Integrity

All record types must contain the following check fields to ensure file and record integrity:

Record Position	Field Length	Field Contents	Remarks
1-2	2	Record type or identifier	"10" or as appropriate
72-74	3	Record sequence number within file	000-999, repeated as necessary
75-78	4	Record checksum	Four hexadecimal digits*; Calculation algorithm to be supplied
79-80	2	Contains CR and LF	

6. Dates and Times

Wherever a date or time-of-day is required, the information consists of successive groups of two decimal digits each, separated by blanks. Dates are given in the order YY MM DD, and times as HH MM. All hours will be given as 0 to 23 using a 24 hour clock and will be local time. Since some computers generating the date and time sequence may have difficulty producing leading zeros, these will not be required.

7. Multiple Volume Data

There is no requirement under this format that all the data from an entire sample delivery group fit onto a single diskette. If a single production run is being split onto multiple diskettes, then it is necessary that all files start with a type 10 record, and that the multiple type 10 records for each file of the same production run be identical. If it is necessary to split the data from a single sample onto multiple diskettes, then the type 20 and following type records for that sample must be repeated. In this situation, it is mandatory that columns 7-33, which collectively identify the sample, be identical in each diskette.

* The checksum is defined to be the sum of the thirty-five (35) INTEGERS that make up the data in columns 1 to 70 when the data is represented in the format 35A2 on processors which store the data bytes in left to right order. The sum is taken modulo 65536 (2^{16}) and represented as four (4) hexadecimal digits. For processors which use an A70 character representation of the data, the checksum is the sum of all the even character position values plus 256 times the sum of all odd character position values.

8. Record Listing

8.1 Format of the mandatory Production Run Header Record (Type 10)

Record Position	Field Length	Field Contents	Remarks
1-2	2	Record type	"10"
3-18	16	blank	
19-21	3	Measurement Type	"ICP", "AA ", or "CN "
22-26	5	blank	
27-30	4	Method Number	Standard method number. See sections 9 and 10 for examples
31	1	blank	
32-34	3	Person responsible for run	3 initials of Manager.
35	1	blank	
36-41	6	Lab ID	From EPA standard list or Project Officer
42	1	blank	
43-50	8	Date Report Prepared	YY MM DD
51	1	blank	
52-61	10	Contract Number	Agency standard number
62	1	blank	
63-68	6	Instrument ID	e.g. AA8312; provided by contract lab; left justified; must be unique and permanent within lab

8.2 Format of the mandatory Sample Header Data Record (Type 20)

Record Position	Field Length	Field Contents	Remarks
1-2	2	Record type	"20"
3-6	4	blank	
7-12	6	EPA Sample No.	Left justified. See below for calibrations and blanks.
13-15	3	blank	
16	1	Sample Medium/Matrix Code	See paragraph 9.3
17	1	blank	
18-20	3	QC code	Codes type of data to be reported; (see section 9)
21	1	blank	
22-24	3	Sample Qualifier	Code to qualify the results of the entire sample analysis (see paragraph 9.4.1)
25	1	blank	
26-30	5	Case number	
31-39	9	blank	
40-47	8	Date of Instrumental Anal.	YY MM DD
48	1	blank	
49-53	5	Hour, Minute of Analysis	HH MM
54-67	14	blank	
68-70	3	Analyte Count	Numeric; 1-3 decimal digits; right justified - gives the number of analytes determined by this method for this sample.

For unknown samples, use the assigned EPA Sample No. Label standards and blanks as follows:

INITIAL CALIBRATION (Form 2A)	ICV
CONTINUING CALIBRATION (Form 2A)	CCV1, CCV2, etc.
AA CRDL STANDARD (Form 2B)	CRA
ICP INITIAL LRA STANDARD (Form 2B)	CRII
ICP FINAL LRA STANDARD (Form 2B)	CRIF
INITIAL CALIBRATION BLANK (Form 3)	ICB
CONTINUING CALIBRATION BLANK (Form 3)	CCB1, CCB2, etc.
PREPARATION BLANK (Form 3)	PB1, PB2
LABORATORY CONTROL SAMPLE (Form 7)	LCS
ICP INITIAL INTERFERENCE CHECK SOLUTION A (Form 4)	ICSAI
ICP INITIAL INTERFERENCE CHECK SOLUTION AB (Form 4)	ICSABI
ICP FINAL INTERFERENCE CHECK SOLUTION A (Form 4)	ICSAF
ICP FINAL INTERFERENCE CHECK SOLUTION AB (Form 4)	ICSABF

8.3 Format of the Sample Header Data Record (Type 21)

Use: Continuation of type 20.
Position: Follows the type 20 to which it applies.

Record Position	Field Length	Field Contents	Remarks
1-2	2	Record type	"21"
3	1	blank	
4	1	Method Variation Code (N)	Codes Flame, Furnace, ICP. See section 10
5	1	blank	
6	1	Concentration level	"L" = low "M" = medium (See note)
7-17	11	blank	
18-23	6	SAS Number	Alphanumeric; left justified
24	1	blank	
25-35	11	Laboratory Sample I.D.	Left justified
36	1	blank	
37-44	8	Date of Beginning of Sample Prep or Preparation of Calibration Solution	YY MM DD
45-47	3	blank	
48-55	8	Date Sample Received at Lab	YY MM DD
56	1	blank	
57-63	7	Source of Analyte (if not unknown sample)	Left justified; company or EPA, that analyte was obtained from (Abbreviated if necessary).

NOTE: The concentration level is an estimate of overall level for all analytes.

8.4 Format of the Sample Conditions Record (Type 22)

Use: Continuation of type 20. Used to describe additional sample conditions.
Position: Follows the type 20 and 21 to which it applies.

Record Position	Field Length	Field Contents	Remarks
1-2	2	Record type	"22"
3-41	39	blank	
42-46	5	Volume in ml	e.g. 1.0 or 0.050
47	1	blank	
48-54	7	Dilution Factor	Right justified; e.g. .001
55-64	10	blank	
65-70	6	Percent Solids	Right justified

8.5 Format of the Associated Injection and Counter Record (Type 23)

Use: Continuation of type 20. Used to describe holding time.
Position: Follows the type 20 and 21 to which it applies.

Record Position	Field Length	Field Contents	Remarks
1-2	2	Record type	"23"
3-61	59	blank	
62	1	"H"	Identifies holding time in days (as on Form 10).
63	1	blank	
64-65	2	Holding Time	In days - only necessary for Hg and CN.

8.6 Format of the Results Data Record (Type 30)

Record Position	Field Length	Field Contents	Remarks
1-2	2	Record type	"30"
3	1	blank	
4	1	"I"	
5-10	6	blank	
11-14	4	Identifier Code	The Method Code (see section 10) for the specific analyte.
15-25	11	blank	
26-30	5	Units of measure	(Left justified) "MG/KG" for solids; "UG/L " for water; "PERCT" for percent
31	1	blank	
32-34	3	Non-numeric result	See paragraph 9.4.2 also called a result qualifier
35	1	blank	
36-41	6	Numeric analytical result	Right justified; fixed point or scientific notation
42	1	blank or 'E'	Blank field will be interpreted as "+00"
43-45	3	Exponent	
46	1	blank	
47	1	Calculated Value Descriptor	Describes following value (See paragraph 9.5)
48	1	blank	
49-54	6	Related Calculated Value	Value represents amount added or other calculated or theoretical value. Format same as 36-46.
55	1	blank or 'E'	
56-58	3	Exponent	
59	1	blank	
60	1	Limit or QC Value Descriptor	Describes following value (See paragraph 9.6)
61	1	blank	
62-66	5	Related or QC Limit Value	Value of item described above.
67	1	blank or 'E'	
68-70	3	Exponent	

8.7 Format of the Instrumental Data Readout Record (Type 31)

Use: To describe an added concentration and a measured absorbance or concentration value. Used to report data for Method of Standard Additions (Form 8).
Position: Follows type 30.

Record Position	Field Length	Field Contents	Remarks
1-2	2	Record type	"31"
3	1	blank	
4	1	"C"	Indicates Concentration in ug/L
5	1	blank	
6	1	"B" or "C"	Indicates Absorbance (B) or Concentration (C).
7	1	blank	
8	1	Sequence Number	"0" to "3"
9	1	blank	
10-17	8	Concentration Added	(right justified)
18	1	blank	
19-28	10	Absorbance/Concentration Value	up to 10 decimal digits, right justified

8.8 Format of the Auxiliary Data Record (Type 32)

Use: To report wavelength values used for instrument detection limit determinations and integration times for linear range data.
Position: Follows type 30. (Record will only be required for IDLs and LVMs)

Record Position	Field Length	Field Contents	Remarks
1-2	2	Record type	"32"
3-8	6	blank	
9-10	2	"IT" or "IW"	Indicates Integration time (IT) or IDL wavelength (IW)
11	1	blank	
12-21	10	Wavelength or Time Value	Fixed or Scientific notation as in Record Type 30.

8.9 Format of the Correction Data Record (Type 35)

Use: To record ICP interelement correction factor data.
Position: Follows type 30.

Record Position	Field Length	Field Contents	Remarks
1-2	2	Record Type	"35"
3	1	blank	
4-6	3	"ICP"	Indicates ICP interelement correction factors
7-13	7	blank	
14-21	8	Date factor was determined	YY MM DD
22-27	6	blank	
28-31	4	Identifier of interfering element	from Section 10
32	1	blank	
33-40	8	Wavelength value	
41	1	blank	
42-51	10	Correction factor	Use space as in result field on type 30; fixed or scientific notation

8.10 Format of the Comment Record (Type 90)

Use: To provide for Operator Entered Comments
Position: May occur anywhere.

Record Position	Field Length	Field Contents	Remarks
1-2	2	Record Type	"90"
3	1	blank	
4-70	67	Any Comment	

8.11 Format of the Flags Record (Type 91)

Use: To provide for multiple Form 1 Result Qualifier Flags
Position: Immediately follows the type 30 record to which it applies.

Record Position	Field Length	Field Contents	Remarks
1-2	2	Record Type	"91"
3	1	blank	
4-6	3	Second Result Qualifier Flag	See paragraph 9.4.2 for definitions
7	1	blank	
8-10	3	Third Result Qualifier Flag	
11	1	blank	
12-14	3	Fourth Result Qualifier Flag	
15	1	blank	
16-18	3	Fifth Result Qualifier Flag	
19	1	blank	
20-22	3	Sixth Result Qualifier Flag	
23	1	blank	
24-26	3	Seventh Result Qualifier Flag	
27	1	blank	
28-30	3	Eighth Result Qualifier Flag	

8.12 Format of the Auxiliary Sample Record (Type 92)

Second Use: To provide additional Sample Descriptive Information.
Position: Follows the type 20(-23) record(s) to which it applies.

Record Position	Field Length	Field Contents	Remarks
1-2	2	Record Type	"92"
3	1	blank	
4-17	14	Lab Sample ID	
18	1	blank	
19-28	10	Color Before	Use entries from Form 1 for each sample.
29	1	blank	
30-39	10	Color After	
40	1	blank	
41-46	6	Clarity Before	
47	1	blank	
48-53	6	Clarity After	
54	1	blank	
55-60	6	Texture	
61	1	blank	
62-67	6	Artifacts	

9. Definition of Various Codes Used in Format B Records

9.1 Structure of the Method Number and Identifier Code

The method number and identifier code is a four character alphanumeric code which has the form: XXXY

Where: XXX defines one or more target analytes plus the analytical method. This part of the code is identical with the method numbers defined in EPA methods manuals and the code of Federal Regulations. See section 10.

Y is an alphanumeric modifier which specifies that an allowed option in the method has been implemented, or specifies fractions of analytes in the method. For example, Y may distinguish total and dissolved phosphorous measured by the same method, but with or without the optional method filtration. Another use of Y is to label results which have been determined by the Method of Standard Additions.

If Y is not defined in a method, the default value is one.

The method number is validated as ahphanumeric for XXX and Y. It is stored in the four (4) digit number field. Identifier codes are used to identify each metal in a run consisting of more than one metal analysis. It is the same as the method code for a single specific metal.

See section 10 for examples.

9.2 Definition of Various Codes Used

9.2.1 Quality Control and Related Codes (QCC) in Type 20 Records

NOTE: These QCC appear in the QC code fields of type 20 records. They are used to indicate the type of data that are being reported. See section 8.2.

QCC	Name	Definition
LD1	LABORATORY DUPLICATE FIRST MEMBER	The "Sample (S)" from Form 6.
LD2	LABORATORY DUPLICATE SECOND MEMBER	The "Duplicate (D)" from Form 6.
LCB	LABORATORY CALIBRATION BLANK	The Calibration Blank from Form 3.
LRB	LABORATORY (REAGENT) BLANK	The Preparation Blank from Form 3.

QCC	Name	Definition
LCM	LABORATORY CONTROL SOLUTION	The Laboratory Control Sample from Form 7.
LVM	LABORATORY CALIBRATION CRDL VERIFICATION SOLUTION	The samples used for calibration verification, standards, and LRA determinations on Form 2.
LIM	LABORATORY INTERFERENCE CHECK SOLUTION	The ICP interference check sample from Form 4.
LSO	LABORATORY SPIKED SAMPLE BACKGROUND (ORIGINAL) VALUES	The original sample [reported as Sample Result (SR)] from Form 5.
LSF	LABORATORY SPIKED SAMPLE - FINAL VALUES	The spiked sample [reported as Spiked Sample Result (SSR)] from Form 5.
LDO	LABORATORY DILUTED SAMPLE BACKGROUND (ORIGINAL) VALUES	The original sample [reported as Initial Sample Concentration (I)] from Form 9.
LDF	LABORATORY DILUTED SAMPLE - FINAL VALUES	The diluted sample [reported as Serial Dilution Result (S)] from Form 9.
LDX	LABORATORY DOUBLE PURPOSE PRECISION AND ACCURACY SAMPLE	An environmental sample which is used for both the LSO (background level before spike) and LD1 (first member of a duplicate).
IDL	INSTRUMENT DETECTION LIMIT SOLUTION	The solutions used for instrument detection limits as reported on Form 11.
blank		Unknown sample, not associated with any quality control item.

The following QCC values do not refer to actual samples or calibrations for which laboratory results are obtained. Instead they are used on type 20 records which act as a header, and indicate that additional (usually calculated) analyte specific data will be present on type 30 (and following type) records. Usually this data will apply to an entire production run, in which case it will appear immediately following the type 10 record. If the data applies to only a portion of the samples in the run, it should be placed immediately preceding the samples to which it applies. Much of the rest of the information in the type 20 record may be blank, indicating that this data does not apply to these results.

QCC	Name	Definition
SID	SAMPLE INDEPENDENT (i.e. INSTRUMENT) DETECTION LIMITS	The data following represents sample independent detection limits for each compound as reported on Form 11.
ICF	INTER-ELEMENT CORRECTION FACTORS	The data following represents ICP interelement correction factor measurements for each compound as reported on Form 12.
SDR	SPIKE/DUPLICATE CALCULATED RESULTS	The data following represents calculated QC results for the QC samples LD1 and LD2 (percent RSDs), LSO and LSF (percent recoveries), and LDO and LDF (percent D's); or for all AA post digestion spikes. Data consist of percent RSDs,percent recoveries, or percent D's for each analyte as reported on Forms 5, 6, 9 and 14.

9.3 Codes For Sample Medium (Matrix, Source)

Medium	Code
All Media, Don't Know or Don't Care.	0
Water	1
Soil	H
Sludge	I

9.4 List of Samples and Result Qualifiers

Definition: A sample qualifier or a result qualifier (also called a non-numeric result) consists of 3 characters which acts as an indicator of the fact and the reason that the subject analysis (a) did not produce a numeric result or (b) produced a numeric result but it is qualified in some respect relating to the type or validity of the result.

9.4.1 Sample Qualifiers (See paragraph 8.2)

Qualifier	Full Name	Definition
BAC	BACKGROUND CORRECTION	Background correction has been applied to this group of values.
BEF	BEFORE	Labels ICP corrections that were applied before generating raw data; or spiked samples (LSF) that were spiked prior to method-defined digestion (Form 5A).
AFT	AFTER	Labels ICP corrections that were applied after generating raw data; or spiked samples (LSF) that were spiked after method-defined digestion (Form 5B).
POS	POST DIGESTION SPIKE	Labels furnace AA post digestion spike percent recovery data (from Form 14), and also indicates that measured results from the spiked analysis will not be present and the sample results will be reported using QC codes appropriate to non-spiked samples.

9.4.2 Result Qualifiers (See paragraph 8.6)

Qualifier	Full Name	Definition
BDL	BELOW DETECTABLE LIMITS	Indicates analyte was analyzed for but not detected; ignore value (Form 1 "U" Flag).
NAR	NO ANALYSIS RESULT	There is no analysis result required for this subject parameter (Form 1 "NR" Flag).
FQC	FAILED QUALITY CONTROL	The analysis result is not reliable because control limits were exceeded when the analysis was conducted. Value is estimated. (Form 1 "M", "W", "N", "*", or "+" Flags).
LLS	LESS THAN LOWER STANDARD	The analysis value is less than the contract required detection limit (Form 1 [ ] value).
EST	ESTIMATED VALUE	Indicates a value estimated or not reported due to presence of interference (Form 1 "E" Flag).
MSP	PERCENT RECOVERY	The following value represents the percent recovery for the spiked sample.
DPD	PERCENT DIFFERENCE	The following value represents the percent difference of the dilution result from the original.
DPR	PERCENT RSD	The following value represents the percent RSD of the duplicate results.

9.5 Calculated Value Descriptors (See paragraph 8.6)

These codes appear in column 47 to identify the value in columns 49-58.

Qualifier	Full Name	Definition
F	AMOUNT ADDED	Identifies the amount of matrix spike analyte added (for QC code "LSF").
T	TRUE VALUE	Indicates the true value for each analyte (for QC codes "LCM", "LVM", and "LIM").

9.6 Limit or QC Value Descriptors (See paragraph 8.6)

These codes appear in column 60 to identify the value in columns 62-70.

Qualifier	Full Name	Definition
U	UNDETECTED	Value is the corrected sample quantitation limit (Form 1 "U" Value).
P	PERCENT RECOVERY	Value is the Percent Recovery for each compound (for QC codes "LCM", "LVM", and "LIM").
C	CORRELATION COEFFICIENT	Value is the correlation coefficient (r) for any result obtained by the Method of Standard Additions (last digit of identifier is "2").
L	CONTROL LIMIT	Value is CRDL value from Form 6 if present (for QC code "SDR").

10. Example Method and Matrix Codes for Inorganic Methods

The codes given below are examples of method number designations for inorganic analyses. In all of these, the Z position refers to the matrix code and should be interpreted with the aid of paragraph 9.3. The generic value of 1, which represents water, type unknown or not specified", is used for water analysis.

Solid samples are represented by two specific codes, with Z values of H (soil) and I (sludge).

Each method code shown occurs in a type 10 record and acts as the header for the appropriate list of compounds.

XXX	Y	N	Z	Definition
200	4	1	1	Generic code for analysis of total metals in water, after method-defined digestion, by atomic absorption, flame.
200	4	2	1	Generic code for analysis of total metals in water, after method-defined digestion, by atomic absorption, furnace.
200	4	7	1	Generic code for analysis of total metals in water, after method-defined digestion, by ICP

For specific matrix codes, replace Z with the specific value for the type of sample (from paragraph 9.3). For Method Identifiers (see section 8.6), replace XXX with value for the analyte. Change Y to 2 if the value was determined by the Method of Standard Additions (Form 1 "S" Flag). Each identifier shown occurs in a type 30 record and identifies the specific compound.

202	Aluminum	242	Magnesium
204	Antimony	243	Manganese
206	Arsenic	249	Nickel
208	Barium	258	Potassium
210	Beryllium	270	Selenium
213	Cadmium	272	Silver
215	Calcium	273	Sodium
218	Chromium	279	Thallium
219	Cobalt	282	Tin
220	Copper	286	Vanadium
236	Iron	289	Zinc
239	Lead		

NOTE: Exception to above:

XXX	Y	N	Z	Definition
245	1	1	1	Analysis of mercury in water by the manual cold vapor technique
245	1	2	1	Analysis of mercury in water by the automated cold vapor technique

XXX	Y	N	Z	Definition
245	4	5	H	Analysis of mercury in soil, after method-defined digestion, by the manual cold vapor technique
245	4	5	I	Analysis of mercury in sludge, after method-defined digestion, by the manual cold vapor technique
335	1	2	1	Analysis of total cyanide in water by titrimetric, manual spectrophotometric, or semi-automated spectrophotometric means

NOTES:

1. See paragraph 9.1 for the structure of "XXX" and "Y"

2. If multiple metals are analyzed as part of a single production run, the method code (paragraph 8.1) is "2004". If only a single metal is analyzed, then use the value for that metal (i.e. "2064" for arsenic). In all cases the identifier in paragraph 8.6 is a specific code given in Section 10.

3. The values of "N" and "Z" are sample dependent and may vary within a production run. They are reported on type 20 and 21 records (paragraphs 8.2 and 8.3)

11. <u>Example of the Sequence of Record Types in a Production Run</u>

10		Contains Run Header information
20		Occurs once for each sample, calibration, calculated QC results, instrument detection limits, etc. - Acts as a header.
	21	Will usually be present
	22	Contains additional information for samples
30		Occurs once for each final analytical result. Will give whatever value is being determined as defined by the type 20.
	31	Reports any instrumental data necessary
	32	Reports any auxiliary data necessary
	35	Reports corrections to results if necessary
30		Values for the next analyte or parameter being measured.
	31	Additional data may vary for each parameter, and records
	32	may occur in any order. Multiple occurrences of the
	32	same record type, however, must be consecutive.
	35	
30		Continues for as many as are necessary
	31	
	32	
	35	
30		
	31	
	32	
	35	
20		Next Sample Header record - The following applies to the next
	21	sample or other group of data.
	22	
30		
	31	
	32	
30		
	31	
	32	etc.
20		
	21	
30		
	31	
	32	
		etc.

12. Format of Records for Specific Purposes

12.1 Format of the Sample Header Data Record (Type 20) for Linear Range Analysis

Record Position	Field Length	Field Contents	Remarks
1-2	2	Record type	"20"
3-6	4	blank	
7-10	4	"LRAI" or "LRAF"	To indicate initial or final
11-15	5	blank	
16	1	"0"	No matrix code
17	1	blank	
18-20	3	"LVM"	See paragraph 9.2
21-25	5	blank	
26-30	5	Case number	
31-66	36	blank	
67-69	3	Analyte Count	Numeric; 1-3 decimal digits; right justified - gives the number of analytes determined by this method for this sample.

12.2 Format of the Sample Header Data Record (Type 21) for Linear Range Analysis

Record Position	Field Length	Field Contents	Remarks
1-2	2	Record type	"21"
3	1	blank	
4	1	"7"	Codes ICP. See Section 10
5-17	13	blank	
18-23	6	S A S Number	Alphanumeric; left justified
24-36	13	blank	
37-44	8	Date of Preparation of Calibration Solution	YY MM DD
45-56	12	blank	
57-63	7	Source of Analyte	Left justified; company or EPA, that compound was obtained from (abbreviated if necessary).

12.3 Format of the Results Data Record (Type 30) for Linear Range Analysis

Record Position	Field Length	Field Contents	Remarks
1-2	2	Record type	"30"
3	1	blank	
4	1	"I"	
5-10	6	blank	
11-14	4	Identifier Code	The Method Code (section 10) for the specific compound.
15-25	11	blank	
26-30	5	"UG/L "	Units
31-35	5	blank	
36-41	6	Found Value	Right justified; fixed point or scientific notation.
42	1	blank or 'E'	
43-45	3	Exponent	
46	1	blank	
47	1	"T"	Indicates true value See paragraph 9.5
48	1	blank	
49-54	6	True Value	Format same as 36-46.
55	1	blank or 'E'	
56-58	3	Exponent	
59	1	blank	
60	1	"P"	Indicates percent recovery See paragraph 9.6
61	1	blank	
62-66	5	Percent Recovery	
67	1	blank or 'E'	
68-70	3	Exponent	

12.4 Format of the Auxiliary Data Record (Type 32) for Linear Range Analysis (only for quarterly submissions)

Record Position	Field Length	Field Contents	Remarks
1-2	2	Record type	"32"
3-8	6	blank	
9-10	2	"IT"	Indicates Integration time
11	1	blank	
12-21	10	Integration Time Value	Fixed or Scientific notation

12.5 Format of the Sample Header Data Record (Type 20) for Duplicate Data

Record Position	Field Length	Field Contents	Remarks
1-2	2	Record type	"20"
3-6	4	blank	
7-12	6	EPA Sample ID	Left justified
13-15	3	blank	
16	1	Sample Medium/Matrix Code	See paragraph 9.3
17	1	blank	
18-20	3	"SDR"	Identifies calculated QC results
21-25	5	blank	
26-30	5	Case number	
31-67	37	blank	
68-70	3	Analyte Count	Numeric; 1-3 decimal digits; right justified - gives the number of analyte determined by this method for this sample.

12.6 Format of the Sample Header Data Record (Type 21) for Duplicate Data

Record Position	Field Length	Field Contents	Remarks
1-2	2	Record type	"21"
3	1	blank	
4	1	Method Variation Code (N)	Codes flame, furnace, ICP. See section 10
5	1	blank	
6	1	Concentration level	"L" - low "M" - medium
7-17	11	blank	
18-23	6	SAS Number	Alphanumeric; left justified
24	1	blank	
25-35	11	Laboratory Sample ID	Left justified

12.7 Format of the Results Data Record (Type 30) for Duplicate Data

Record Position	Field Length	Field Contents	Remarks
1-2	2	Record type	"30"
3	1	blank	
4	1	"I"	
5-10	6	blank	
11-14	4	Identifier Code	The Identifier Code (section 10) for the specific compound.
15-25	11	blank	
26-30	5	"PERCT"	Units are percent
31	1	blank	
32-34	3	"DPR"	Indicates Duplicate %RSD
35	1	blank	
36-41	6	Duplicate Percent RSD	Right justified; fixed point or scientific notation.
42	1	blank or 'E'	
43-45	3	Exponent	

12.8 Format of the Sample Header Data Record (Type 20) for Continuing Checks

Record Position	Field Length	Field Contents	Remarks
1-2	2	Record type	"20"
3-6	4	blank	
7-10	4	"CCV1" "CCV2" etc	To indicate which check
11-15	5	blank	
16	1	"0"	All matrices
17	1	blank	
18-20	3	"LVM"	See paragraph 9.4.1
21-25	5	blank	
26-30	5	Case number	
31-66	36	blank	
67-69	3	Analyte Count	Numeric; 1-3 decimal digits; right justified - gives the number of analytes determined by this method.

12.9 Format of the Sample Header Data Record (Type 21) for Continuing Checks

Record Position	Field Length	Field Contents	Remarks
1-2	2	Record type	"21"
3	1	blank	
4	1	Method Variation Code (N)	Codes Flame, Furnace, ICP. See Section 10
5-17	13	blank	
18-23	6	S A S Number	Alphanumeric; left justified
24-36	13	blank	
37-44	8	Date of Preparation of Calibration Solution	YY MM DD
45-56	12	blank	
57-63	7	Source of Analyte	Left justified; company or EPA, that analyte was obtained from.

NOTE: The Results Data Record (Type 30) for Continuing Checks is identical to that for Linear Range Data. See paragraph 12.3. Record type 32 is not present.

12.10 Format of the Results Data Record (Type 30) for an Unknown Sample when the Method of Standard Additions was used.

Record Position	Field Length	Field Contents	Remarks
1-2	2	Record type	"30"
3	1	blank	
4	1	"I"	
5-10	6	blank	
11-14	4	"2XX2"	See Section 10 "XX" values. Last character is a "2".
15-25	11	blank	
26-30	5	Units of measure	"MG/KG" for solids; "UG/L" for water.
31	1	blank	
32-34	3	Non-numeric result	See paragraph 9.4.2; also called a result qualifier
35	1	blank	
36-41	6	Numeric analytical result	Right justified; fixed point or scientific notation
42	1	blank or 'E'	
43-45	3	Exponent	
46	1	blank	
47	1	Calculated Value Descriptor	Describes following value See paragraph 9.5
48	1	blank	
49-54	6	Related Calculated Value	Format same as 36-46. (Only present if spiked sample)
55	1	blank or 'E'	
56-58	3	Exponent	
59	1	blank	
60	1	"C"	Indicates correlation coefficient.
61	1	blank	
62-66	5	r* value	Give value from Form 8 for each analyte determined.
67	1	blank or 'E'	
68-70	3	Exponent	

NOTE: Following each type 30 record where the Method of Standard Additions was used will be four type 31 records (see paragraph 8.7). Each contains data for one of the four additions.

12.11 Format of the Sample Header Data Record (Type 20) for Post Digestion Spike Data

Record Position	Field Length	Field Contents	Remarks
1-2	2	Record type	"20"
3-6	4	blank	
7-12	6	EPA Sample ID	Left justified
13-15	3	blank	
16	1	Sample Medium/Matrix Code	See section 9.3
17	1	blank	
18-20	3	"SDR"	Identifies calculated QC results
21	1	blank	
22-24	3	"PDS"	Label this as post digestion spike data.
25	1	blank	
26-30	5	Case Number	
31-67	37	blank	
68-70	3	Compound Count	Numeric; 1-3 decimal digits; right justified - gives the number of compounds determined for this sample.

12.10 Format of the Results Data Record (Type 30) for Post Digestion Spike Data

Record Position	Field Length	Field Contents	Remarks
1-2	2	Record type	"30"
3	1	blank	
4	1	"I"	
5-10	6	blank	
11-14	4	Identifier Code	The Identifier Code (see section 10) for the specific compound
15-25	11	blank	
26-30	5	"PERCT"	Units are percent
31	1	blank	
32-34	3	"MSP"	Indicates Percent Recovery
35	1	blank	
36-41	6	Percent Recovery	Right justified; fixed point or scientific notation
42	1	blank or "E"	
43-45	3	Exponent	