0019097

DOE/EA-0538

ENVIRONMENTAL ASSESSMENT FOR THE STORAGE OF FAST FLUX TEST FACILITY UNIRRADIATED FUEL IN THE PLUTONIUM FINISHING PLANT COMPLEX, HANFORD SITE, RICHLAND, WASHINGTON

January 1992

FEB 1992
RECEIVED
EDMC

U.S. DEPARTMENT OF ENERGY
OFFICE OF NUCLEAR ENERGY
WASHINGTON, D.C.

SUMMARY

This Environmental Assessment evaluates the proposed action to relocate and store unirradiated Fast Flux Test Facility fuel in the Plutonium Finishing Plant Complex on the Hanford Site, Richland, Washington.

The U.S. Department of Energy has decided to cease fuel fabrication activities in the 308 Building in the 300 Area. This decision was based on a safety concern over the ability of the fuel fabrication portion of the 308 Building to withstand a seismic event. The proposed action to relocate and store the fuel is based on the savings that could be realized by consolidating security costs associated with storage of the fuel. While the 308 Building belowgrade fuel storage areas are not at jeopardy by a seismic event, the U.S. Department of Energy is proposing to cease storage operations along with the related fabrication operations.

The U.S. Department of Energy proposes to remove the unirradiated fuel pins and fuel assemblies from the 308 Building and store them in Room 192A, within the 234-5Z Building, a part of the Plutonium Finishing Plant Complex, located in the 200 West Area. Minor modifications to Room 192A would be required to accommodate placement of the fuel. Twenty-five additional shipping containers would be fabricated onsite to support the fuel relocation. The fuel would be stored in the shipping containers used for transporting the fuel to the 234-5Z Building. The fuel assemblies would be routinely removed and shipped to the Fast Flux Test Facility to support operation of the reactor. The U.S. Department of Energy estimates that removing all of the fuel from the 308 Building would save $6.5 million annually in security expenditures for the Fast Flux Test Facility.

Environmental impacts of construction, relocation, and operation of the proposed action and alternatives were evaluated. This evaluation concluded that the proposed action would have no significant impacts on the human environment.

CONTENTS

SUMMARY iii

ACRONYMS AND ABBREVIATIONS vi

1.0 INTRODUCTION 1

2.0 NEED FOR THE PROPOSED ACTION 1

3.0 PROPOSED ACTION 3

4.0 ALTERNATIVES TO THE PROPOSED ACTION 10
- 4.1 NO ACTION ALTERNATIVE 10
- 4.2 FAST FLUX TEST FACILITY 10
- 4.3 FUELS AND MATERIALS EXAMINATION FACILITY 10
- 4.4 ALTERNATE STORAGE ROOMS WITHIN THE PLUTONIUM FINISHING PLANT COMPLEX 11
- 4.5 OFFSITE STORAGE 11

5.0 DESCRIPTION OF THE AFFECTED FACILITY AND ENVIRONMENT 11
- 5.1 AFFECTED ENVIRONMENT 11
  - 5.1.1 Location and Regional Population 11
  - 5.1.2 Regional and Site Activities 12
  - 5.1.3 Physical Environment 12
    - 5.1.3.1 Geology-Topography 12
    - 5.1.3.2 Hydrology 12
    - 5.1.3.3 Seismicity 13
    - 5.1.3.4 Climatology 13
  - 5.1.4 Ecology 13
  - 5.1.5 Archaeology 14
- 5.2 BUILDING AND STRUCTURES 14
- 5.3 MODE OF OPERATION 14

6.0 ENVIRONMENTAL IMPACTS OF THE PROPOSED ACTION 15
- 6.1 CONSTRUCTION AND FABRICATION IMPACTS ASSOCIATED WITH THE PROPOSED ACTION 15
- 6.2 RELOCATION IMPACTS ASSOCIATED WITH THE PROPOSED ACTION 16
  - 6.2.1 Fuel Pins Relocation--Model 60 Shipping Container . . . 16
  - 6.2.2 Fuel Assemblies Relocation--Radial Reflector Shipping Container 17
- 6.3 ROUTINE OPERATION (STORAGE) IMPACTS ASSOCIATED WITH THE PROPOSED ACTION 18
- 6.4 IMPACTS FROM ACCIDENT SCENARIOS 19
  - 6.4.1 Transportation Accident Analysis 20
  - 6.4.2 Storage Accident Analysis 20
- 6.5 CUMULATIVE AND COLOCATION IMPACTS 21

CONTENTS (cont)

7.0 EVALUATION OF ALTERNATIVES 21
- 7.1 NO ACTION ALTERNATIVE 21
- 7.2 FAST FLUX TEST FACILITY 21
- 7.3 FUELS AND MATERIALS EXAMINATION FACILITY 22
- 7.4 ALTERNATE STORAGE ROOMS WITHIN THE PLUTONIUM FINISHING PLANT COMPLEX 23
- 7.5 OFFSITE STORAGE 23

8.0 REGULATORY PROVISIONS CONSIDERED 23
- 8.1 SOLID WASTE REGULATIONS 23
- 8.2 AIR EMISSION REGULATIONS 23
- 8.3 TRANSPORTATION REGULATIONS 24
- 8.4 SEPARATE BUT RELATED ACTIONS 24

9.0 CONSULTATION AND COORDINATION 24

10.0 REFERENCES 25
- 10.1 DOCUMENTS 25
- 10.2 CODE OF FEDERAL REGULATIONS 26
- 10.4 WASHINGTON ADMINISTRATIVE CODE 27
- 10.5 THE U.S. DEPARTMENT OF ENERGY ORDERS 27

FIGURES

1. Hanford Site. 2
2. 200 West Area. 4
3. Plutonium Finishing Plant Complex. 5
4. Room 192A 6
5. Model 60 Shipping Container. 8
6. Radial Reflector Shipping Container 9

TABLES

1. Estimated Personnel Radiation Exposure (In Person-rem) for Packaging, Loading, Transporting, Unloading, and Placing Fuel Containers in Storage 18
2. Estimated Annual Personnel Radiation Exposure During Storage (In Person-rem) 19

ACRONYMS AND ABBREVIATIONS

ALARA	as low as reasonably achievable
AEC	U.S. Atomic Energy Commission
CFR	Code of Federal Regulations
DOE	U.S. Department of Energy
EPA	U.S. Environmental Protection Agency
FAA	Fuel Assembly Area
FFTF	Fast Flux Test Facility
FMEF	Fuels and Materials Examination Facility
HEPA	high-efficiency particulate air filtration
IDS	Interim Decay Storage vessel
NEPA	*National Environmental Policy Act of 1969*
PFP	Plutonium Finishing Plant Complex
PNL	Pacific Northwest Laboratory
PSD	Prevention of Significant Deterioration
PUREX	Plutonium-Uranium Extraction Plant
RRSC	Radial Reflector Shipping Containers
WAC	Washington Administrative Code
WHC	Westinghouse Hanford Company

ENVIRONMENTAL ASSESSMENT FOR THE STORAGE OF FAST FLUX TEST FACILITY UNIRRADIATED FUEL IN THE PLUTONIUM FINISHING PLANT COMPLEX, HANFORD SITE, RICHLAND, WASHINGTON

1.0 INTRODUCTION

This Environmental Assessment evaluates the potential environmental impacts of a U.S. Department of Energy (DOE) proposal to remove Fast Flux Test Facility (FFTF) unirradiated fuel from 308 Building and store it at the Plutonium Finishing Plant (PFP) Complex. This Environmental Assessment evaluates the proposed action and several alternatives, including a no action alternative, in keeping with requirements of the *National Environmental Policy Act* (NEPA) *of 1969* and regulations of the Council of Environmental Quality, Title 40, Code of Federal Regulations (CFR), Parts 1500 through 1508.

2.0 NEED FOR THE PROPOSED ACTION

The DOE has decided to cease fuel fabrication activities in the 308 Building in the 300 Area. This decision was based on a safety concern over the ability of the fuel fabrication portion of the 308 Building to withstand a seismic event. The proposed action to relocate and store the fuel is based on the savings that could be realized by consolidating security costs associated with storage of the fuel. While the 308 Building belowgrade fuel storage areas are not at jeopardy by a seismic event, the DOE is proposing to cease storage operations along with the related fabrication operations.

In the past, fuel assemblies have been routinely shipped to the FFTF and stored for insertion into the reactor. However, the FFTF has the capacity to store only a portion of the fuel assemblies that currently are located in the 308 Building. The remaining fuel assemblies and all the fuel pins, totalling slightly more than one half of an FFTF core load, must be stored in another location on the Hanford Site. The fuel assemblies need to be readily accessible so that the assemblies can be routinely retrieved and shipped to the FFTF as required for continued operation of the reactor.

The importance of the cost savings realized by consolidating security costs is magnified by the current uncertainty for the future funding of FFTF operations. A significant portion of the FFTF operational budget is the $6.5 million annual cost of the protected area that encompasses the 308 Building. This protected area would not be required if the fuel is removed from storage in the 308 Building. Relocation of fuel storage to a facility that has an active protected area would consolidate security costs. Security of the fuel would be maintained as required by DOE Order 5632.2A.

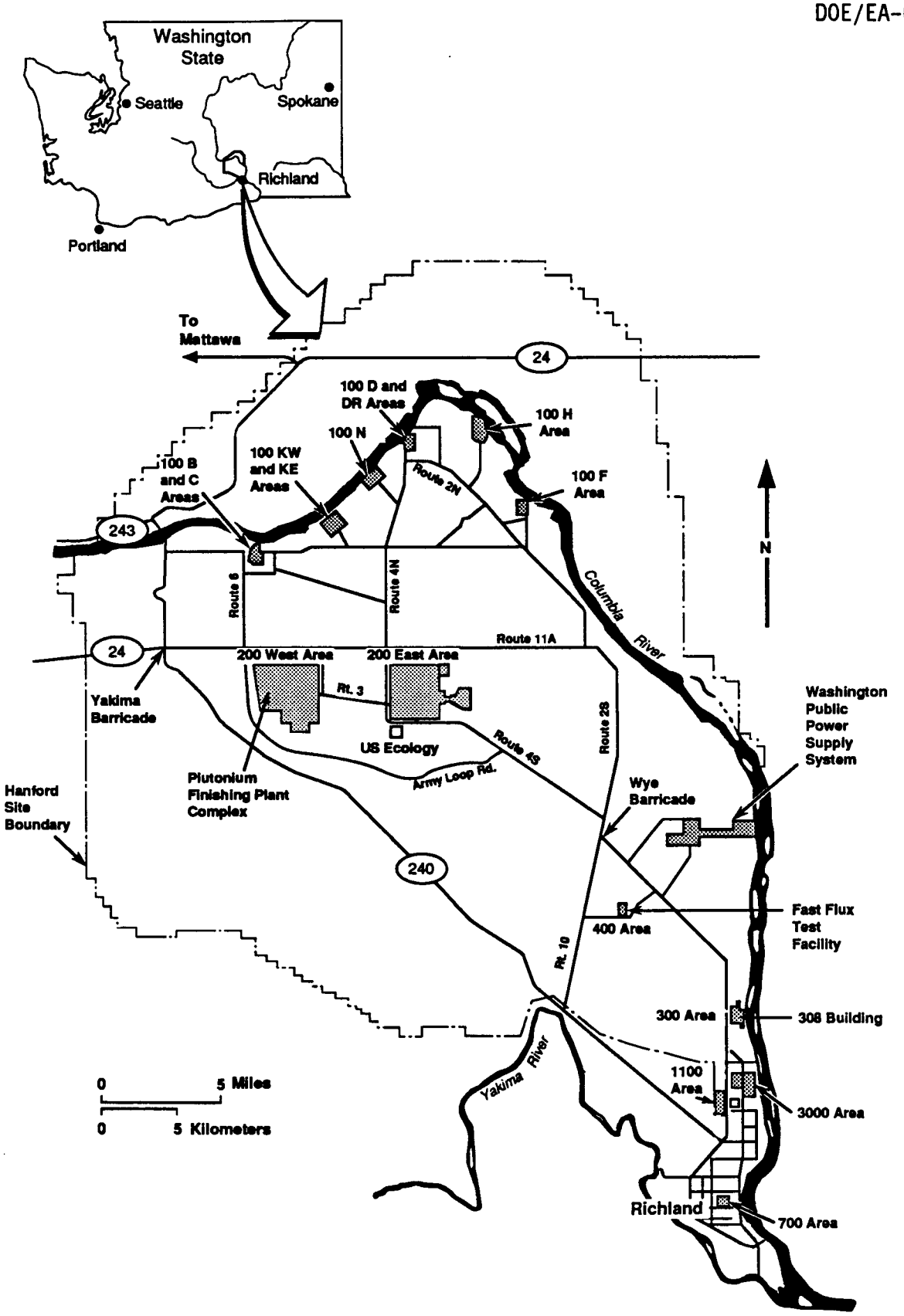

Figure 1. Hanford Site.

3.0 PROPOSED ACTION

The DOE proposes to remove unirradiated FFTF fuel from the 308 Building to Room 192A and store it in the 234-5Z Building, a part of the PFP Complex, located in the 200 West Area (Figures 2 and 3). This would require modification of Room 192A to accommodate placement and routine retrieval of the fuel.

Current operations in the 234-5Z Building include the processing and storage of special nuclear material. Room 192A, currently empty, is a shielded, vault-type room that previously has been used for special nuclear material storage. Room 192A is within an existing controlled radiation area of the 234-5Z Building and has environmental controls such as negative-pressure ventilation with High-Efficiency Particulate Air (HEPA) filtration, radiation monitoring and detection equipment, security systems, and administrative controls to safely store special nuclear materials. The 234-5Z Building is within an existing security protected area.

Room 192A would be modified (Figure 4) to allow access for the shipping containers. Modifications would include relocation of the vault entry door, removal of a steel partition, and removal of a portion of another steel partition. The 12-inch (0.31-meter) thick steel partition would be cut into sections for removal. A 4-foot (1.2 meter) by 7-foot (2.1 meter) opening would be cut into a 5-inch (0.13 meter) steel partition. The total volume of material to be removed would be approximately 4 cubic yards (3 cubic meters). This would be disposed of in the Hanford 200 Area Low-Level Burial Grounds. If actual radiological measurements indicate additional shielding is needed after the fuel is in place, new shielding partitions would be installed. Calculations indicate no additional shielding would be required (WHC 1991a). A gantry crane would be assembled in the room to assist in placement of the shipping containers. Existing criticality detectors, security monitoring devices, and a 120-volt electrical service would be relocated to accommodate placement of the shipping containers. A temporary 440-volt electrical service would be installed, if necessary to operate the crane. All construction activities would occur within the 234-5Z Building.

Individual fuel pins are sealed steel tubes that contain reactor fuel. Two-hundred seventeen individual fuel pins are assembled within a 6-inch diameter (0.15 meter) hexagonal duct. Handling hardware is welded on each end of the duct containing the pins; the resulting fuel assembly is then ready for insertion into the FFTF reactor core. The fuel stored in the 308 Building is composed of fuel pins and fuel assemblies. Up to 120 fuel pins can be placed in each Model 60 shipping container depending on criticality limits, while the fuel assemblies would be placed in Radial Reflector Shipping Containers (RRSC's). Both container types would be loaded onto trucks and transported approximately 27 miles (43.5 kilometers) to the 234-5Z Building. Appropriate precautions would be taken to maintain the security of the fuel during transport in compliance with DOE Order 5632.2A.

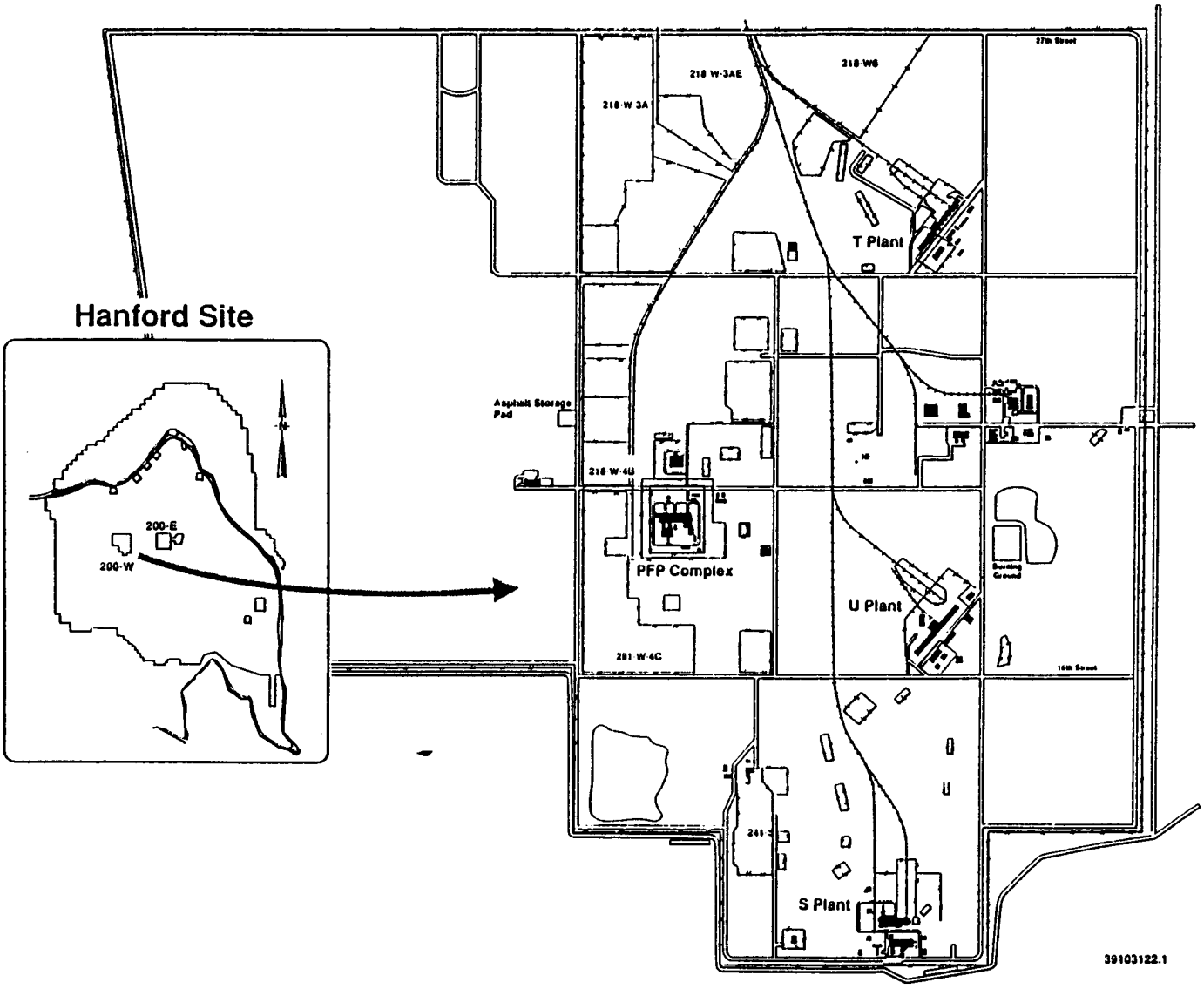

Figure 2. 200 West Area.

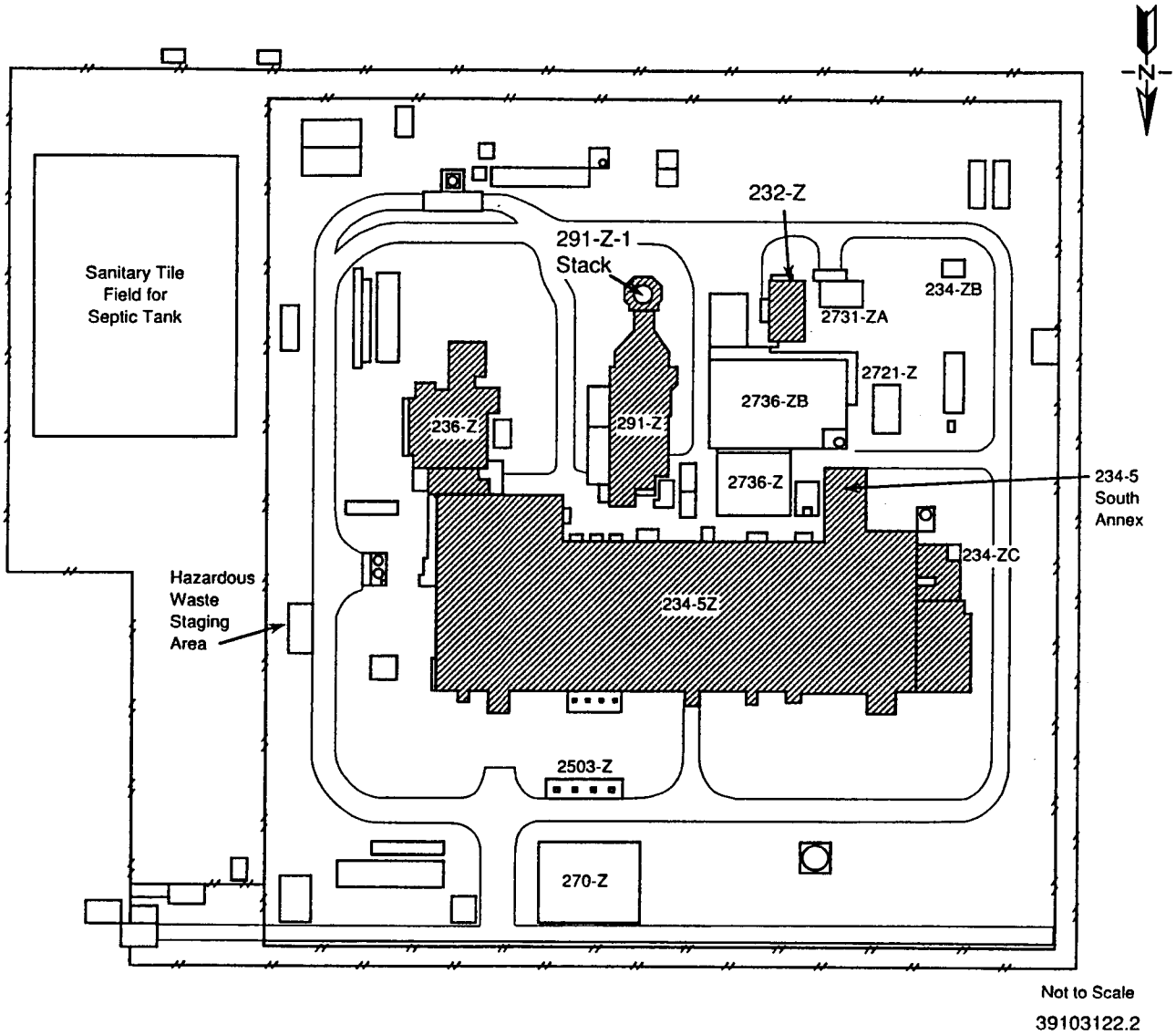

Figure 3. Plutonium Finishing Plant Complex.

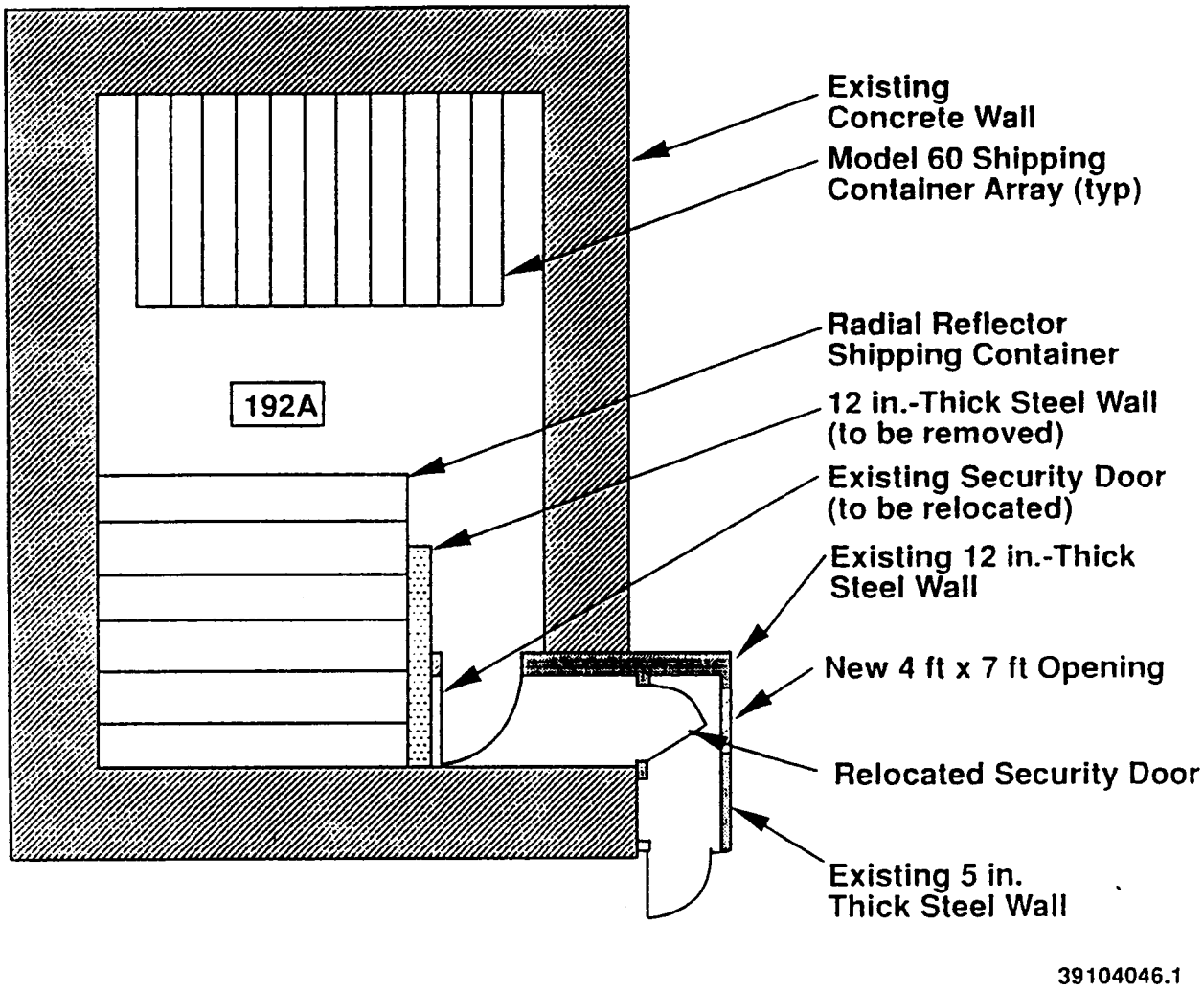

Figure 4. Room 192A.

The fuel pins would be transported to the PFP Complex and stored in up to 65 shipping containers (Model 60 and 60A). The Model 60 is a U.S. Department of Transportation-approved sealed shipping container 18 inches (0.46 meter) by 18 inches (0.46 meter) by 112.5 inches (2.86 meters) that weighs approximately 1,000 pounds (450 kilograms) when loaded (Figure 5). Twenty-five Model 60As would be fabricated in the Hanford 200 Area fabrication shops to the same specifications as the Model 60 shipping container but only would be certified for onsite shipment. Both models of shipping containers will be referred to as Model 60 in this document.

The fuel pins would be removed from storage and placed in the Model 60 shipping container. Each Model 60 would be placed on a wheeled dolly and rolled out of the 308 Building, rigged, and lifted onto the truck. This process would be repeated for each of the Model 60's. Transporting the containers would require approximately six shipments to the PFP Complex, which would take approximately 1 hour per shipment. During unloading and placement in Room 192A for storage, the containers would be lifted from the truck by crane, placed on the wheeled dollies, rolled into Room 192A, lifted by the vault crane, and stacked in a horizontal array.

The fuel assemblies would be transported to the PFP Complex and stored in RRSC's. The RRSC are sealed and have been approved for onsite shipment by the DOE. Each RRSC is 167 inches (4.24 meters) long by 27 inches (0.69 meter) outside diameter and would weigh approximately 4,000 pounds (1,800 kilograms) when loaded (Figure 6). Four fuel assemblies would be removed from storage and placed in each RRSC. Each RRSC (Figure 6) would be placed on two transfer carts and rolled directly out of the 308 Building onto the truck. The RRSC would be lifted from the transfer carts a few inches by crane, the transfer carts would be removed, and each RRSC would be lowered and anchored to the bed of the truck. Two RRSC's would be loaded on each shipment. During unloading and placement for storage, the containers would be lifted from the truck by a crane, placed on the wheeled transfer carts, rolled into Room 192A, and stored horizontally (not stacked).

During storage, weekly and bimonthly monitoring and surveillance activities would be conducted. The RRSC would be accessed routinely and removed as required to support the FFTF operations.

The PFP Complex is within an existing security protected area. Storing the FFTF fuel is not expected to affect the security costs of the PFP Complex.

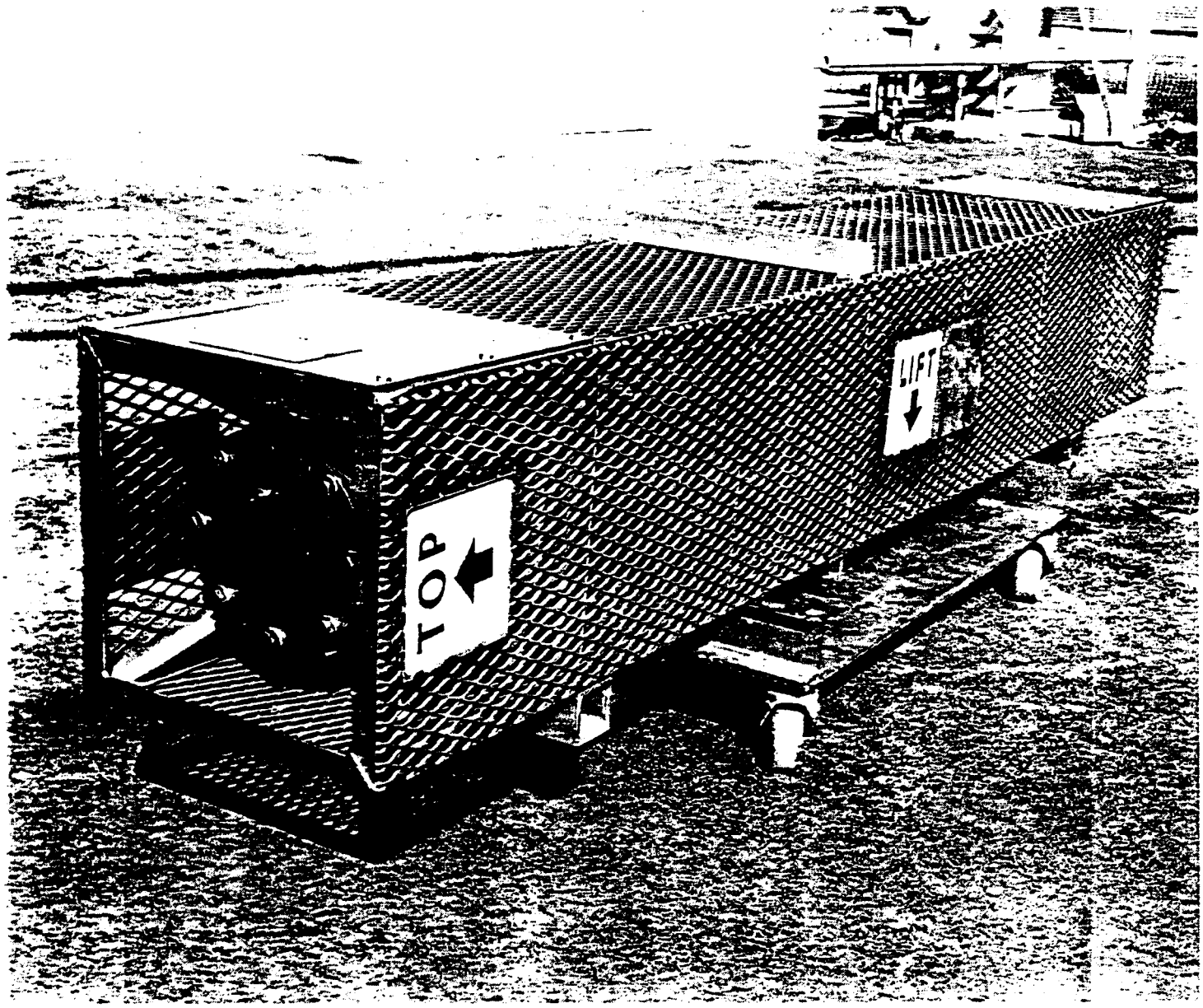

Figure 5. Model 60 Shipping Container.

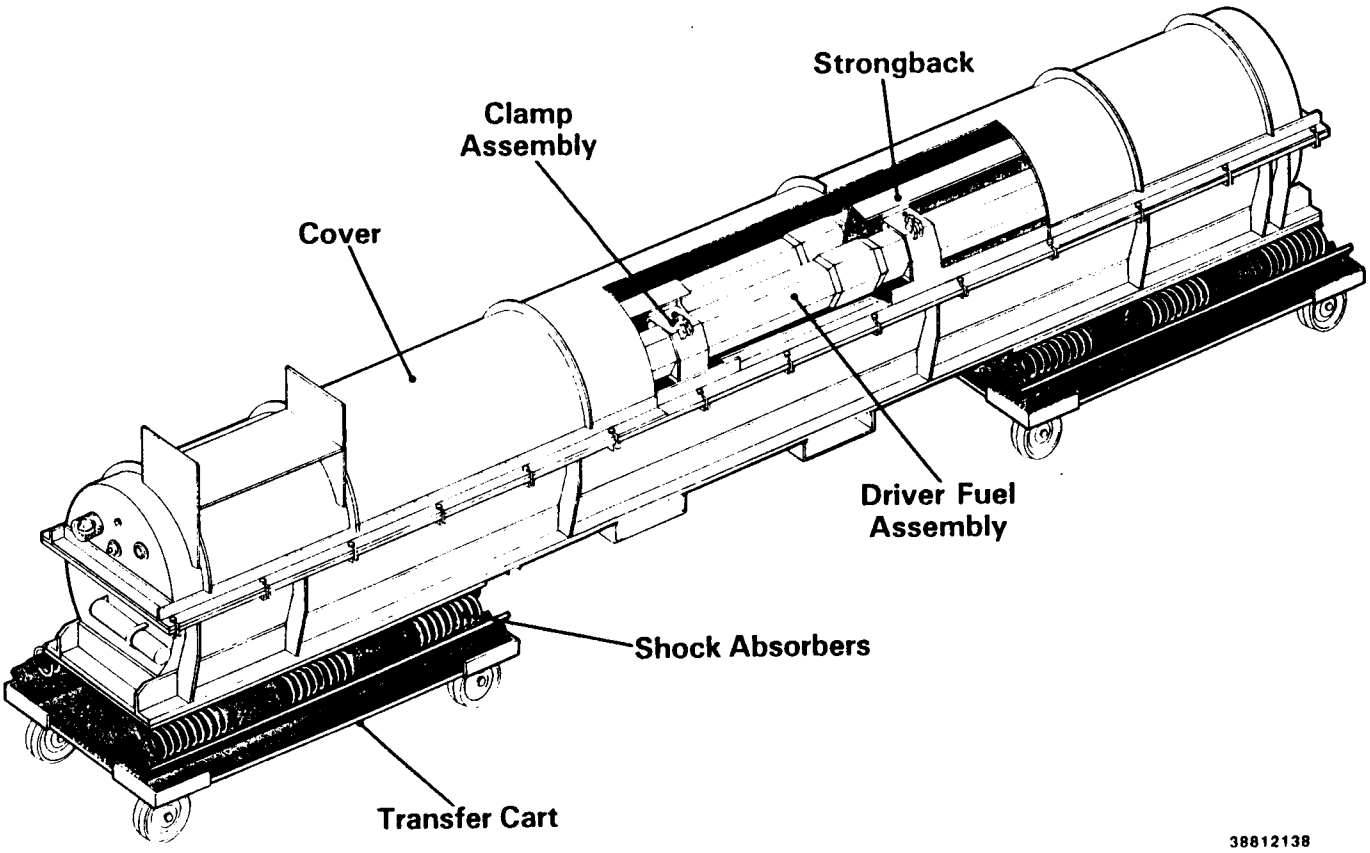

Figure 6. Radial Reflector Shipping Container.

4.0 ALTERNATIVES TO THE PROPOSED ACTION

Several alternate locations for the storage of FFTF fuel have been identified and are presented in the following subsections (Metcalf 1990). The evaluation of the alternate locations is discussed in Section 7.0.

4.1 NO ACTION ALTERNATIVE

The no action alternative would require that the fuel pins and assemblies continue to be stored in the 308 Building.

4.2 FAST FLUX TEST FACILITY

The FFTF, located in the 400 Area (Figure 1), is a 400 megawatt, sodium cooled, fast neutron flux reactor designed, constructed, and operated for irradiation testing of reactor fuels, core components and target assemblies. The FFTF also provides long-term testing and evaluation of reactor components and systems.

Planned operating schedules require routine fuel shipments from the 308 Building to support reactor refueling cycles. Temporary FFTF storage for the assemblies before insertion in the reactor is maintained in the Interim Decay Storage (IDS) vessel, located within the Reactor Containment Building. However, the IDS vessel does not contain sufficient capacity to accommodate all assemblies to be removed from the 308 Building. Current operating schedules and the lack of available storage space would require that 20 to 25 assemblies be stored in other locations. Therefore, other FFTF storage locations were considered.

In addition to the Reactor Containment Building, which houses the reactor and its immediate support service systems, the FFTF complex includes a Reactor Service Building and a Fuel Storage Facility. These three buildings contain the fuel handling systems and components to receive, condition, store, and transfer reactor core components. The evaluation conducted by the Fuel Storage Task Force (Metcalf 1990) concluded that the most suitable FFTF location for the storage of fuel is the unused Closed Loop Cell 526 in the Reactor Containment Building. This cell is a 10-foot (3-meter) by 12-foot (4-meter) by 34-foot (10-meter) deep in-containment cell with access provided by removal of a concrete closure plug. In order to store the fuel, cell modifications would require the fabrication and installation of an internal framework.

4.3 FUELS AND MATERIALS EXAMINATION FACILITY

The Fuels and Materials Examination Facility (FMEF) including the Fuel Assembly Area (FAA), is a versatile complex, located in the 400 Area

(Figure 1), designed for the processing and storage of special nuclear material. The FAA was designed as a Safety Class 1 structure.

4.4 ALTERNATE STORAGE ROOMS WITHIN THE PLUTONIUM FINISHING PLANT COMPLEX

There are several alternate rooms in the PFP that could be modified to store the FFTF fuel. These rooms are 641, 642, 185, 235, and 236.

4.5 OFFSITE STORAGE

Other DOE Sites were considered as alternative storage locations. None of these sites would support the stated need of readily accessible storage for routine shipment of the fuel assemblies to the FFTF.

5.0 DESCRIPTION OF THE AFFECTED FACILITY AND ENVIRONMENT

This section provides a description of the affected environment and structures for the proposed action.

5.1 AFFECTED ENVIRONMENT

This section provides an overview of environmental characteristics of the Hanford Site and site-specific characteristics of the 200 West Area where the proposed action would occur. Detailed environmental information concerning the Hanford Site is provided in various documents (DOE 1983; DOE 1987; PNL 1990b).

5.1.1 Location and Regional Population

All activities would take place on the Hanford Site, approximately 560 square miles (1,450 square kilometers) located in south-central Washington State (Figure 1). The 234-5Z Building is located in the PFP Complex of the 200 West Area (Figures 2 and 3). The 308 Building is located in the 300 Area. The climate of the area is semiarid. The 234-5Z Building is approximately 6 miles (9.7 kilometers) from the Columbia River, the nearest natural watercourse. The 308 Building is approximately 1 mile (1.6 kilometer) from the Columbia River. The 200 West Area and 308 Building are outside the projected 100-year floodplain. The city of Richland (population 33,500) adjoins the southernmost portion of the Hanford Site boundary, is the nearest population center, and is approximately 25 air miles (40 kilometers) from the PFP Complex, 1 mile (1.6 kilometer) from the 308 Building. The 1990 population within a 50 mile (81 kilometer) radius was estimated to be 420,000.

5.1.2 Regional and Site Activities

Major industrial facilities within a 50-mile (81-kilometer) radius include a meat packing plant, food processing facilities, fertilizer plant, a pulp and paper mill, a chemical plant, hydroelectric dams, and small manufacturing firms. Within a 50-mile (81-kilometer) radius of the Hanford Site, agriculture is the main land use.

Commercial use of the Hanford Site includes a nuclear power plant (WNP-2) operated by the Washington Public Power Supply System and a low-level radioactive waste burial area administered by the state of Washington and operated by U.S. Ecology.

The Advanced Nuclear Fuels Corporation fabrication plant is located adjacent to the southern boundary of the Hanford Site.

Government facilities located on the Hanford Site include N Reactor (currently in cold standby), the Plutonium-Uranium Extraction (PUREX) Plant (currently in transition to standby), waste management facilities, nuclear materials storage facilities, research laboratories, and the FFTF. Eight retired production reactors and three retired irradiated materials processing plants also are on the Hanford Site.

5.1.3 Physical Environment

The physical environment of the Hanford Site is summarized in the following sections.

5.1.3.1 Geology-Topography. The Hanford Site is located in the Pasco Basin, one of the structural and topographic basins of the Columbia Plateau. Thick basalt flows [greater than 12,000 feet (3,650 meters) thick] underlie sedimentary material consisting of silts, sands, and gravels (Hanford and Ringold Formations). The sedimentary deposits are moisture deficient (DOE 1983).

5.1.3.2 Hydrology. The Columbia River, the dominant river in the region, flows through the northern part of the Hanford Site and along the eastern boundary. The entire 200 West Area and 308 Building lie outside the boundary of the Hanford Reach Study, authorized by Public Law 100-605. This is a study of the future use of the only remaining free flowing section of the Columbia River in the United States. Grade level at the PFP Complex is 676 feet (206 meters) above mean sea level, which is more than 200 feet (60 meters) above the maximum probable flood; and therefore above the 100- or 500-year flood. Grade level at the 308 Building is 404 feet (123.1 meters) above mean sea level, which is 8 feet (2.4 meters) above the projected 100-year flood.

Ephemeral streams only cross the southwestern part of the Hanford Site. The only surface waters present in the 200 West Area are temporary waste water ponds and ditches. This water either enters the groundwater or evaporates.

Groundwater under the Hanford Site is present under both unconfined and confined conditions. The unconfined aquifer is contained within the glaciofluvial sands and gravel and the Ringold Formation. The unconfined aquifer is dominated by the middle member of the Ringold Formation, consisting of sorted sands and gravels of varying hardness. The bottom of the unconfined aquifer is the basalt surface or, in some areas, the clay zones of the lower member of the Ringold Formation. The confined aquifers consist of sedimentary interbeds and interflow zones that occur between dense basalt flows in the Columbia River Basalt Group. Sources of natural recharge to the unconfined aquifer are rainfall and run-off from the higher bordering elevations, water infiltrating from small ephemeral streams, and influent river water. Groundwater at the 200 West Area is approximately 180 feet (55 meters) to 310 feet (95 meters) belowgrade. Groundwater is monitored routinely by Pacific Northwest Laboratory and the results are published annually (PNL 1990a).

5.1.3.3 Seismicity. The Hanford Site is located in a Zone 2 seismic area. This implies the potential for moderate damage during an earthquake. The largest earthquake of record to occur within the Columbia Basin, the 1936 Milton-Freewater earthquake, had a magnitude of 5.75 on the Richter Scale and has been designated the Hanford Regional Historical Earthquake. This Hanford Regional Historical Earthquake is assumed to have a peak horizontal ground acceleration of 0.10 times earth's gravity (DOE 1983).

5.1.3.4 Climatology. Climate at the Hanford Site is characterized by relatively cool, mild winters and warm summers. Average maximum and minimum temperatures for January, the coldest month, are 37 and 22 °F (3 and -6 °C); for July, the warmest month, average maximum and minimum temperatures are 91 and 61 °F (33 and 16 °C) (DOE 1983). The average annual rainfall at the Hanford Site is 6 inches (16 centimeters). The estimated average annual evaporation rate is 53 inches (134 centimeters).

The prevailing winds are from a northwesterly direction. Tornadoes rarely occur in the Hanford Site region and the few that have been sighted were small and did not cause any damage. Existing data indicate that the probability of a tornado hitting a particular structure at the Hanford Site is about 10 times in 1 million years (DOE 1987).

Airborne particulate concentrations can reach relatively high levels in eastern Washington State because of exceptional natural events (i.e., dust storms, volcanic eruptions, and large brush fires) that occur in the region (PNL 1990b).

5.1.4 Ecology

The Hanford Site is located in a semiarid region consisting of large areas of undeveloped land, including abandoned agricultural areas, and widely separated clusters of industrial buildings. The plant and animal species on the Hanford Site are representative of those inhabiting the shrub-steppe (sagebrush-grass) region of the northwestern United States (PNL 1990b).

An ecological resources review would not be necessary because all activities would take place within the 234-5Z Building, the 308 Building, Hanford Site waste handling facilities, and on existing roads.

5.1.5 Archaeology

A cultural resources review would not be necessary before initiation of any activities because the proposed activities would occur solely within the 234-5Z Building, the 308 Building, Hanford Site waste handling facilities, and on existing roads.

5.2 BUILDING AND STRUCTURES

The 308 Building, located in the 300 Area of the Hanford Site, is a two-story structure constructed of both reinforced and unreinforced concrete block and steel siding, with a total area of 71,100 square feet (6,605 square meters). The fuel storage areas of the 308 Building are separated from the environment by two testable stages of HEPA filtration.

The PFP Complex operations include plutonium processing, scrap recovery, waste treatment, pilot plant activities, laboratory operation, and nuclear material management. The 234-5Z Building, a part of the PFP Complex, is an existing structure that was designed specifically for handling substantial quantities of special nuclear material.

The approximate dimensions of the 234-5Z Building are 180 feet (54.9 meters) wide by 500 feet (152.5 meters) long. The 234-5Z Building extends from 9.5 feet (2.9 meters) belowgrade to 46.8 feet (14.3 meters) abovegrade. Seismic evaluations performed on the 234-5Z Building indicate that the building can withstand design-base earthquake motions (URS 1987).

Room 192A is a 740 square foot (69 square meter) ground level room. The room has 4-foot (1.2-meter) thick reinforced concrete walls, which provide significant radiation shielding.

Two testable stages of HEPA filters, each of which removes particulates with 99.95 percent efficiency, are provided by the Safety Class 1 exhaust system between Room 192A and the environment.

5.3 MODE OF OPERATION

Routine operation for Room 192A within the 234-5Z Building would include storage and periodic inventories of FFTF fuel (Figure 4). The Model 60 containers would be stacked in a critically safe array and would not be routinely retrieved. The RRSC would not be stacked and would be removed and transported to the FFTF as determined by operating cycle requirements. Access to the room would be administratively limited to minimize radiation exposure.

6.0 ENVIRONMENTAL IMPACTS OF THE PROPOSED ACTION

Impacts of construction, relocation, and routine operations (storage) aspects of the proposed action are discussed in the following sections.

6.1 CONSTRUCTION AND FABRICATION IMPACTS ASSOCIATED WITH THE PROPOSED ACTION

Approximately 10 cubic yards (8 cubic meters) of nonhazardous, nonradioactive waste would be generated during construction activities in Room 192A and during the fabrication of the additional shipping containers. The waste would be disposed of at the Hanford Site Solid Waste Landfill. This volume of waste would not add significantly to the landfill volume.

Nonhazardous solid waste that is contaminated with low levels of radioactivity and that cannot be decontaminated would be packaged and shipped in accordance with established DOE policies to the Hanford 200 Area Low-Level Waste Burial Grounds. The construction activity would generate approximately 12 cubic yards (9 cubic meters) of low-level solid radioactive waste consisting of construction scrap, room partitions, and radiation zone entry and egress waste (tape, plastic, and damaged protective clothing). The waste is expected to contain less than 0.07 curies. The waste quantity would not add significantly to the volume in the Low-Level Burial Grounds.

During these construction activities, personnel would be exposed to occupational health risks. To ensure that the risks are kept to a minimum, personnel involved in these activities would wear protective clothing and appropriate respiratory protection. Special work permits that have been reviewed and approved by Health Physics technicians, operations, and other appropriate organizations, would be required to ensure that all personnel hazards have been identified and that all necessary precautions have been taken to protect personnel. All work areas would be decontaminated before work begins to As Low As Reasonably Achievable (ALARA) levels. The work areas would be surveyed by Health Physics technicians to identify any contamination or radiation level, and to define any resulting work restrictions before work is started.

Personnel would be trained in the importance and use of protective clothing, respiratory protection equipment, ALARA considerations, and job specific requirements. Industrial Safety personnel and Health Physics technicians would monitor closely the work to ensure that the required protection devices are being used correctly and that personnel are appropriately protected.

It is estimated that 720 manhours would be required to complete the construction activities. Based on the current background dose rate of 0.0002 rem per hour in the Room 192A work area, it is estimated the work force would receive a whole body collective dose equivalent of approximately 0.14 person rem. This exposure was estimated by multiplying the specific area's background dose rate by the length of time required to perform the

activity. Each worker's exposure is administratively controlled to be well below the DOE limits defined in DOE Orders 5480.11 and 5484.1.

The quantity of material involved in the fabrication of the 25 additional shipping containers is not significant. The fabrication and assembly would take place in an existing 200 Area fabrication shop where similar work is continually performed without adverse environmental consequences.

Other occupational hazards would be possible during construction and fabrication (e.g., falls, sprains, cuts, or heat exhaustion) that could lead to injury or death. These risks would be mitigated by established safety programs that are based on DOE requirements and DOE contractor controls.

Construction and fabrication related emissions from equipment would meet all applicable air emission limits. Fugitive emissions from construction would be controlled with normal practices, as per Benton-Franklin-Walla Walla Tri-County Air Pollution Control Authority regulations (1980). Existing ventilation with HEPA filtration would mitigate release of construction dust from within 234-5Z Building to the environment.

6.2 RELOCATION IMPACTS ASSOCIATED WITH THE PROPOSED ACTION

Actual worker dose results for representative operations were used to estimate the worker dose assessment for packaging of all fuel for shipment. The calculated radiological exposure estimated for the workers during the loading, transportation, unloading, and placement of the unirradiated fuel (pins and assemblies) is based on actual exposure measurements of representative shipping containers (WHC 1991b). The estimated exposures for all relocation activities are presented in Table 1.

6.2.1 Fuel Pins Relocation--Model 60 Shipping Container

The collective dose equivalent calculated for the sixty five (65) Model 60 Shipping Containers was extrapolated from actual dose rate measurements taken from three Model 60 Shipping Containers each loaded with 120 driver fuel pins (WHC1991b). Contact dose rate measurements of the three stacked and fully loaded Model 60 shipping containers (Figure 5) show the maximum dose at the bottom end to be 0.0011 rem/hour and the maximum rate at the top to be 0.0002 rem/hour. The dose rate at 3 feet (1 meter) or greater distance would be substantially less.

Packaging--The fuel is stored in stainless steel liners and each liner contains up to 120 fuel pins depending on enrichment and size. The liners would be removed from the storage pit by overhead crane and placed into the shipping containers and sealed. Based on the exposure of the 3 workers who packaged the referenced shipping containers and extrapolated to a total of 65, the collective dose equivalent for the packaging operation is estimated to be 0.217 person-rem total.

Loading--During the Model 60 shipping container loading process, the containers (Figure 5) would be placed on wheeled dollies and rolled out of the 308 Building, rigged, and lifted onto the shipping truck. The collective dose equivalent for the performance of the loading activities of all Model 60 containers is based on 2.15 person-hours for each worker (top and bottom) and estimated to be 0.0028 person-rem.

Transporting--Transporting the 65 containers would require six shipments to the PFP Complex, which would take approximately 1 hour per shipment. The collective dose equivalent for the transportation of the Model 60s is based on 12 person-hours and is estimated to be 0.0012 person-rem.

Unloading and placing--During unloading and placement in Room 192A for storage, the containers would be lifted from the truck by crane, placed on the wheeled dollies, rolled into Room 192A, lifted by crane, and stacked in the storage array. The collective dose equivalent for performance of unloading and placing the containers in storage is based on 5.4 person-hours for each worker (top and bottom) and is estimated to be 0.0070 person-rem.

Total--The anticipated accumulated dose for packaging, loading, transporting, and unloading 65 Model 60 shipping containers is 0.228 person-rem.

6.2.2 Fuel Assemblies Relocation--Radial Reflector Shipping Container

The collective dose equivalent calculated for the six (6) Radial Reflector Shipping Containers was extrapolated from actual dose rate measurements taken from two Radial Reflector Shipping Containers loaded with 4 driver fuel assemblies in each container (WHC1991b). Actual dose rate measurements of the two fully loaded RRSC placed side by side show that the dose rate at the ends of the containers to be 0.0003 rem/hour at contact.

Packaging--The fuel assemblies would be removed from pit storage by overhead crane and are clamped into position in the RRSC. Four assemblies would be loaded into each container and the container cover would be secured and sealed. Based on the exposure of the 3 workers who packaged the referenced RRSCs and extrapolated to 6 RRSCs the collective dose equivalent for the packaging operation is estimated to be 0.030 person-rem total.

Loading--During the RRSC loading process, a container (Figure 6) would be placed on two transfer carts and rolled directly out of the 308 Building onto the truck. The container would be lifted from the carts a few inches, the transfer carts removed, and the containers lowered and anchored to the bed of the truck. Two containers would be loaded on each shipment. The collective dose equivalent for the performance of the loading activities is based on 1.5 person-hours and is estimated to be 0.00045 person-rem.

Transporting--Transportation time from the 308 Building to the PFP Complex would take approximately 1 hour. Three shipments would be required. The collective dose equivalent for transportation of the RRSC is based on 6 person-hours and is estimated to be 0.0018 person-rem.

Unloading and placing--During unloading and placement in Room 192A for storage, the containers would be lifted from the truck by crane, placed on the wheeled transfer carts, rolled into Room 192A, and placed in storage. The collective dose equivalent for performance of unloading and placing the containers in storage is based on 1.5 person-hours and is estimated to be 0.00045 person-rem.

Total--The anticipated accumulated dose for packaging, loading, transporting, and unloading six fully loaded RRSC is 0.0327 person-rem.

Table 1. Estimated Personnel Radiation Exposure (In Person-rem) for Packaging, Loading, Transporting, Unloading, and Placing Fuel Containers in Storage.

Activity	Exposure (person-rem)	Total
Packaging Model 60s	0.217	
Loading Model 60s	0.0028	
Transporting Model 60s	0.0012	
Unloading and placing Model 60s	0.0070	
Total Model 60		0.228
Packaging RRSC	0.030	
Loading RRSC	0.00045	
Transporting RRSC	0.0018	
Unloading and placing RRSC	0.00045	
Total RRSC		0.0327
Total		0.2607

6.3 ROUTINE OPERATION (STORAGE) IMPACTS ASSOCIATED WITH THE PROPOSED ACTION

No airborne radionuclide emissions are anticipated because the special nuclear material is encapsulated within the steel cladding of each individual fuel pin.

The calculated dose rates from the proposed storage array of unirradiated fuel pins and assemblies are identified and discussed in WHC (1991a). These calculations are based on a homogeneous model that is very conservative. Actual radiation level measurements of smaller arrays indicate actual dose rates may be less than half the calculated measurements. Based on the conservative calculations and application of the 1.2 uncertainty factor of the

model, the background radiation level in the center of Room 192A is estimated to be 0.069 rem/hour. The dose rate outside of the Room 192A door is estimated to be 0.0036 rem/hour.

Surveillance activities of the stored fuel would be performed in accordance with DOE Order 5633.3. During performance of the surveillance activities, trained workers would use protective clothing and equipment to minimize radioactive contamination and personnel exposure in accordance with established practices and procedures.

Detailed written procedures, based on ALARA policy (PNL 1988), would be prepared specifically for this activity and would be followed by personnel assigned material balance area responsibility; cumulative radiation exposure for each individual would be tracked monthly.

A weekly surveillance activity would involve four workers and would consist of entry into the room for 1 to 2 minutes to check the door alarm. The collective dose equivalent for the performance of this activity would be 0.025 person-rem per year. A bimonthly inventory would involve four workers and would take approximately 2 hours to complete. The four workers would be exposed to room background levels of radiation while the inventory is being conducted. The maximum collective dose equivalent for the performance of this activity is estimated to be 3.3 person-rem per year. The total occupational radiation exposure for all workers combined for routine operations would be approximately 3.3 person-rem per year and is summarized in Table 2.

Table 2. Estimated Annual Personnel Radiation Exposure During Storage (In Person-rem).

Activity	Exposure (person-rem)
Weekly alarm check (4 workers - 52 weeks)	0.025
Bimonthly inventory (4 workers - 6 inventories)	3.3
Total	3.325

Appropriate measures, including use of proper procedures, training, redundant safety and ventilation systems, and administrative controls would ensure that personnel exposure during routine surveillance of this material would be well below DOE guidelines of 5 rem per person per year (DOE Order 5480.11).

6.4 IMPACTS FROM ACCIDENT SCENARIOS

Accidents that could occur during transportation and storage of unirradiated FFTF fuel were reviewed to determine if the accidents were bound by similar accidents previously analyzed and documented (AEC 1972). The findings are

summarized in the following subsections for the different types of accidents postulated.

6.4.1 Transportation Accident Analysis

The proposed action would transport the unirradiated fuel in DOE-approved shipping containers. The DOE Order 5480.3 specifies that the shipping containers are to be designed to withstand the impact from truck or rail accidents and fires that may result from such accidents. To ensure this capability, several accident damage test conditions are specified. The Model 60 and RRSC used for transporting the unirradiated fuel have been shown to withstand the following accident conditions by a combination of physical testing and analysis (WHC 1990a, WHC 1990c). The shipping containers would withstand a hypothetical 30 foot (9.1 meter) drop accident followed sequentially by a puncture accident. The shipping containers were analyzed and physically tested for hypothetical fire accident conditions. Both shipping containers adequately resist the effects associated with a fire transient event of a uniform temperature of 1,475 °F (800 °C). Criticality analysis of the shipping containers show that the most reactive payloads remain subcritical under the accident condition of water infiltration. The structural stresses of the accident condition of immersion of the shipping containers in 50 feet (15.2 meters) of water have been analyzed to be well within accident condition allowable limits and therefore is of negligible consequence.

No credible accident with significant consequence during these activities were identified.

6.4.2 Storage Accident Analysis

Analysis of the environmental impacts of a postulated accident of the rupture of either a single Model 60 or RRSC container was not specifically used in preparation of the EA. The assumptions used in calculating the offsite dose were taken from the approved *Z Plant Plutonium Handling Operations Safety Analysis Report* (Vogt 1982) analyzed a spill of plutonium oxide. The accident scenario evaluated was the dropping of a single container and subsequent spill of 1,000 grams of plutonium oxide. The resultant release of plutonium to the environment was estimated to be 0.0013 grams with the result of an acceptable offsite 70 year committed dose of 0.0000052 rem. This release was based on spillage of fine oxide in powder form (Vogt 1982). The fuel materials to be stored are sintered ceramic pellets, encapsulated in stainless steel cladding material. The physical properties of this material and the pin design preclude dispersal of the material into the air under normal conditions. Even the impingement of falling or flying objects onto the fuel material would not result in creation and dispersal of significant quantities of fine powders that could be released to the environment. Thus, the loss of containment or confinement accidents for the stored fuel are less probable than predicted by existing analyses.

6.5 CUMULATIVE AND COLOCATION IMPACTS

Potential impacts from the construction and operation of special nuclear material storage in Room 192A are not expected to contribute to the overall impacts of present or proposed activities at the PFP Complex, the 200 West Area, or the Hanford Site. The maximum hypothetical offsite individual dose rate during 1989 was 0.05 mrem from all Hanford Site operations. This is well below the DOE standards of 100 mrem (PNL 1990a). The storage of this special nuclear material in Room 192A would not significantly affect operations of other facilities at the PFP Complex. Room 192A was designed to provide significant radiation shielding, Section 5.2. Therefore, storing the fuel there would not affect other PFP facilities.

7.0 EVALUATION OF ALTERNATIVES

This section evaluates the impacts of alternatives to the proposed action for the storage of special nuclear material discussed in Section 4.0. As discussed in the *Fast Flux Test Facility Fuel Storage Assessment* (Metcalf 1990), the security cost associated with maintaining a protected area was the major budget item associated with operating a storage unit. The report concluded that storage of the fuel within any existing Hanford Site facility containing a protected area would significantly reduce the storage costs.

7.1 NO ACTION ALTERNATIVE

This no action alternative would result in the continued storage of special nuclear material in the 308 Building and the continued security cost associated with maintaining the security protected area. The building has the necessary ventilation, HEPA filtration, monitoring equipment, administrative procedures, and staff to safely fabricate and store fuel. However, as previously described, the fuel fabrication portion of the building and the supporting environmental control systems may not withstand a projected seismic event and fabrication has been discontinued. Although the storage array should survive a seismic event, the surrounding structure could be damaged sufficiently to require prompt removal and relocation of the fuel. Therefore, this alternative was not preferred due to the potential of adverse environmental impacts.

7.2 FAST FLUX TEST FACILITY

The FFTF is an operating reactor with an established protected area. Closed Loop Cell 526, within the Reactor Containment Building, could be modified for special nuclear material storage. However, the DOE conducted an evaluation of long-term missions for the FFTF and concluded that the expense of FFTF operation is not justified. The termination of the FFTF program would eliminate the need for a protected area forcing the burden of protected area

costs to be applied solely to the fuel storage activities. Although it has been designated for shutdown, the reactor is still operating in support of current DOE missions while alternative funding sources are being pursued to maintain the operation of the FFTF. Therefore two alternatives were considered based on future operating scenarios:

- If sufficient funding and operating support are developed to maintain the FFTF operational beyond FY-91, the cost savings associated with storage of the fuel in the FFTF could be significant because the storage costs would be enveloped by reactor operations security costs. However, a proposal is being evaluated to eliminate the protected area requirement for continued FFTF operation. Removal of this protected area would shift the burden of security costs to fuel storage alone.

- Storage of the fuel at a shutdown FFTF would require a protected area dedicated to the storage of fuel. Costs for this protected area would remain until the fuel is relocated to an existing protected area. Continuance of the protected area would also require the FFTF shutdown and decommissioning activities to be performed in a protected area with the associated cost and schedule impacts.

Construction activities associated with cell modifications would generate similar environmental impacts as the proposed action and would interfere with continuous reactor operations.

Cell 526 is basically a vertical shaft [10 feet x 12 feet x 34 feet deep (3.1 meters x 3.7 meters x 10.4 meters deep)]. The operational aspects of loading fuel into and out of the shaft, in addition to the safeguards inventory requirements, are more complex than a more standard flat array and may be contributory to potential safety and environmental hazards.

The FFTF storage alternative is not preferred because of the environmental impacts of a less desirable physical configuration and the protected area costs that would be incurred.

7.3 FUELS AND MATERIALS EXAMINATION FACILITY

The FAA within the FMEF was originally planned as a replacement for the 308 Building and associated process operations and is currently configured for fuel assembly and storage. The FMEF currently does not have a mission due to the uncertainty of continued FFTF operations and no security protected area is in place. The FMEF would also require modification and upgrading of HVAC and radiological/environmental monitoring equipment. Procedural and administrative systems would have to be developed, and staffing levels increased. These activities would require at least 12 months to complete, which would delay the removal of the fuel from 308 Building. Additionally, the FMEF currently is a radiologically clean facility. Use of the FMEF solely to store unirradiated fuel would result in excessive administrative costs and controls and the potential for radiological cleanup where none would otherwise be required.

The FMEF alternative is not preferred because of the potential for contamination of a clean facility as well as timeliness and cost of the modifications and security support.

7.4 ALTERNATE STORAGE ROOMS WITHIN THE PLUTONIUM FINISHING PLANT COMPLEX

Rooms 185 and 235 are near occupied work areas and would require a significant amount of radiation shielding. Therefore, these rooms were not proposed for storage of the fuel. Rooms 641, 642, and 236 are currently in use and are not available for fuel storage.

7.5 OFFSITE STORAGE

The RRSC and the Model 60A (see Section 3.0) shipping containers to be fabricated are not U.S. Department of Transportation-approved for offsite shipment. The fuel would be stored in 308 Building until the shipping containers are approved. This would result in significant security cost while awaiting approval. Also, a greater potential for impacts to the human environment would exist because of greater transportation distances and additional handling required. No offsite storage locations would support the stated need of readily accessible storage for routine shipment of the fuel assemblies to the FFTF.

8.0 REGULATORY PROVISIONS CONSIDERED

It is the policy of the DOE to carry out its operations in compliance with all applicable federal, state, and local laws and regulations. This section provides a discussion of the major regulatory permit programs that could be applicable to the proposed action.

8.1 SOLID WASTE REGULATIONS

All solid waste generated would be handled in a manner that complies with all applicable federal and state regulations and DOE Orders, Washington Administrative Code, Chapter 173-304; and DOE Order 5820.2A, "Radioactive Waste Management".

8.2 AIR EMISSION REGULATIONS

The U.S. Environmental Protection Agency (EPA) has established National Ambient Air Quality Standards under the authority of the *Clean Air Act of 1977*. Washington State has established emission criteria and ambient air quality standards that are at least as stringent as national criteria. The Hanford Site is a Class II area and operates under a Prevention of Significant

Deterioration (PSD) permit issued by the EPA in 1980. Background levels of total suspended particulate concentrations and emissions of radionuclides and nitrogen oxide are monitored routinely (PNL 1990a). Hanford Site radioactive stacks, including those at the PFP Complex, have been registered with the Washington State Department of Health, Office of Radiation Protection. The Washington State Department of Health has issued a radioactive air emissions permit to the U.S. Department of Energy, DOE Richland Field Office (DOE-RL) for the Hanford Site. The fuel is encapsulated within the steel cladding so no emissions are possible. No air emission permits would be required for the proposed action. Storage air emissions would be regulated under 40 CFR Part 61, "National Emissions Standards for Hazardous Air Pollutants". Requirements of 40 CFR Part 52 (as administered through WAC 173-403-80), WAC 402-80, WAC 173-403, and WAC 173-480 would be addressed if applicable.

8.3 TRANSPORTATION REGULATIONS

Fuel transportation would be in accordance with applicable regulations, including DOE Order 5480.3 and DOE RL 5480.1. In addition, applicable requirements of 10 CFR Part 71 and 49 CFR Parts 171 through 178 would be followed.

8.4 SEPARATE BUT RELATED ACTIONS

The FFTF unirradiated fuel eventually could be stored in the FAA in the 400 Area. The selection of a fuel storage location would depend on the future of FFTF operations. Storage of the fuel in the FAA would be addressed in separate NEPA documentation. Fuel fabrication activities also would be transferred to the FAA; this would be addressed in separate NEPA documentation.

9.0 CONSULTATION AND COORDINATION

No other agencies were consulted and no coordination was conducted.

10.0 REFERENCES

10.1 DOCUMENTS

AEC, 1972, *Environmental Statement for the Fast Flux Test Facility*, Wash-1510, U.S. Atomic Energy Commission, Washington, D.C.

Benton-Franklin-Walla Walla Counties Air Pollution Control Authority, 1980, General Regulation 80-7.

DOE, 1983, *Operation of PUREX and Uranium Oxide Plant Facilities*, DOE/EIS-0089, Addendum to Environmental Impact Statement, U.S. Department of Energy, Washington, D.C.

DOE, 1987, *Disposal of Hanford Defense High-Level, Transuranic and Tank Wastes*, DOE/EIS-0113, Final Environmental Impact Statement, U.S. Department of Energy, Washington, D.C.

DOE, 1990, *National Environmental Policy Act (NEPA) Compliance Memorandum-to-File: Deactivation of the 308 Building, Hanford Site, Richland, Washington*, Memorandum, U.S. Department of Energy, Washington, D.C., W.H. Young, September 25, 1990.

Metcalf, I.L. 1990, *Fast Flux Test Facility Fuel Storage Assessment*, WHC-SD-FM-TA-002, Westinghouse Hanford Company, September, 1990.

PNL, 1988, *Health Physics Manual of Good Practices for Reducing Radiation Exposure Levels that are As Low As Reasonably Achievable (ALARA)*, DOE/PNL-6577, U.S. Department of Energy, Washington, D.C., June 1988.

PNL, 1990a, *Hanford Environmental Report for Calendar Year 1989*, PNL-7346, R.E. Jaquish and R.W. Bryce, Pacific Northwest Laboratory, Richland, Washington.

PNL, 1990b, *Hanford Site National Environmental Policy Act (NEPA) Characterization*, Rev. 3, PNL-6415, C.E. Cushing (Ed.), Pacific Northwest Laboratory, Richland, Washington.

URS, 1987, *Seismic (DBE) Evaluation for the 234-5Z Building at the Hanford Site*, Vol. 1, URS/John A. Blume and Associates, Engineers, San Francisco, California.

Vogt, E.C., 1982, *Z Plant Plutonium Handling Operations Safety Analysis Report*, RHO-CD-1244, Rockwell Hanford Operations, Richland, Washington.

WHC, 1990a, *Model 60 Shipping Container Safety Analysis Report for Packaging*, WHC-SD-FF-SARP-005, Westinghouse Hanford Company, Richland, Washington.

WHC, 1990b, *Plutonium Finishing Plant Final Safety Analysis Report*, WHC-SD-CP-SAR-021, Draft, Westinghouse Hanford Company, Richland, Washington.

WHC, 1990c, *Safety Analysis Report for Packaging, Radial Reflector Shipping Container*, WHC-SD-FF-SARP-001, Westinghouse Hanford Company, Richland, Washington.

WHC, 1991a, *Dose Rates In Room 192A In The PFP From FFTF Fuel*, WHC-SD-FF-ER-069, Rev. 0, Westinghouse Hanford Company, Richland, Washington.

WHC, 1991b, *Source Document for the FFTF Unirradiated Fuel Storage at PFP Environmental Assessment*, WHC-MR-0254, Westinghouse Hanford Company, Richland, Washington.

10.2 CODE OF FEDERAL REGULATIONS

10 CFR 71, *Packing & Transportation of Radioactive Material*

40 CFR 52, *Approval and Promulgation of Implementation Plans*

40 CFR 61, *National Emission Standards for Hazardous Air Pollutants*

40 CFR 1500, *Purpose, Policy & Mandate*

49 CFR 171, *General Information, Regulations, and Definitions*

49 CFR 172, *Hazardous Materials Tables and Hazardous Materials Communications Regulations*

49 CFR 173, *Shippers-General Requirements for Shipments and Packagings*

49 CFR 174, *Carriage by Rail*

49 CFR 175, *Carriage by Aircraft*

49 CFR 176, *Carriage by Vessel*

49 CFR 177, *Carriage by Public Highway*

49 CFR 178, *Shipping Container Specification*

50 CFR 17.11, *Endangered and Threatened Wildlife*

50 CFR 17.12, *Endangered and Threatened Plants*

10.3 FEDERAL AND STATE ACTS AND PUBLIC LAWS

Clean Air Act of 1977, as amended, 42 USC 7401.

National Environmental Policy Act of 1969, 422 USC 4321 et seq.

Public Law 100-605, Study: Hanford Reach Washington.

10.4 WASHINGTON ADMINISTRATIVE CODE

WAC 173-304, *Minimum Functional Standards for Solid Waste Handling*, 1988, Washington State Department of Ecology, Olympia, Washington.

WAC 173-400 through 495, *General Regulations for Air Pollution Sources*, 1987, Washington State Department of Ecology, Olympia, Washington.

WAC 402-80, *Monitoring and Enforcement of Air Quality and Emission Standards for Radionuclides*, 1986, Revised Code of Washington, Washington State Department of Health, Olympia, Washington.

10.5 THE U.S. DEPARTMENT OF ENERGY ORDERS

5440.1D, *National Environmental Policy Act Compliance Program*, U.S. Department of Energy, Washington, D.C., February 1991.

5480.1, *Environmental Protection, Safety, and Health Protection Program for RL*, U.S. Department of Energy, Washington, D.C., May 1982.

5480.3, *Safety Requirements for the Packaging and Transportation of Hazardous Materials, Hazardous Substances, and Hazardous Wastes*, U.S. Department of Energy, Washington, D.C., July 1985.

5480.11, *Radiation Protection for Occupational Workers*, U.S. Department of Energy, Washington, D.C., December 1988.

5483.1A, *Occupational Safety and Health Program for Government-Owned Contractor Operated Facilities*, U.S. Department of Energy, Washington, D.C., June 1983.

5484.1, *Environmental Protection, Safety and Health Protection Information Reporting Requirements*, U.S. Department of Energy, Washington, D.C., February 1981.

5632.2A, *Physical Protection of Special Nuclear Material and Vital Equipment*, U.S. Department of Energy, Washington, D.C., February 1988.

5633.3, *Control and Accountability of Nuclear Materials*, U.S. Department of Energy, Washington, D.C., February 1988.

5820.2A, *Radioactive Waste Management*, U.S. Department of Energy, Washington, D.C., April 1989.

6430.1A, *General Design Criteria for Compliance*, U.S. Department of Energy, Washington, D.C., April 1989

DISTRIBUTION LIST

Number of Copies

ONSITE

30	U.S. Department of Energy-Field Office Richland	MSIN
	S.S. Clark	A6-55
	P.F. Dunigan Jr.	A5-15
	O.A. Farabee	A6-55
	J.E. Mecca	A6-55
	K.L. Morgan (10)	A7-75
	C.R. Richins (15)	A6-55
	A.E. Teimouri	A5-15
1	Pacific Northwest Laboratories	
	D.J. Guzzetta	P7-68
28	Westinghouse Hanford Company	
	E.P. Bonadie	T5-54
	S.A. Dawson	N1-40
	R.H. Engelmann	H4-57
	L.A. Garner	T5-54
	C.J. Geier	B2-19
	M. Haas	T5-50
	M.T. Jansky	N2-53
	S.E. Knaus (4)	H4-57
	J.G. Kristofzski	T5-54
	R.E. Lerch	B2-35
	P.J. Mackey	B3-15
	R.B. McCord (4)	L4-30
	H.E. McGuire	B3-63
	J.M. Steffen	N1-47
	J.F. Williams Sr.	L4-34
	B.D. Williamson	B3-15
	Central Files	L8-04
	EDC	H4-55
	EDMC (2)	H4-22
	Information Release Administration Office (3)	H4-17

DISTRIBUTION LIST

Number of Copies		
ONSITE		
30	U.S. Department of Energy-Field Office Richland	MSIN
	S.S. Clark	A6-55
	P.F. Dunigan Jr.	A5-15
	O.A. Farabee	A6-55
	J.E. Mecca	A6-55
	K.L. Morgan (10)	A7-75
	C.R. Richins (15)	A6-55
	A.E. Teimouri	A5-15
1	Pacific Northwest Laboratories	
	D.J. Guzzetta	P7-68
28	Westinghouse Hanford Company	
	E.P. Bonadie	T5-54
	S.A. Dawson	N1-40
	R.H. Engelmann	H4-57
	L.A. Garner	T5-54
	C.J. Geier	B2-19
	M. Haas	T5-50
	M.T. Jansky	N2-53
	S.E. Knaus (4)	H4-57
	J.G. Kristofzski	T5-54
	R.E. Lerch	B2-35
	P.J. Mackey	B3-15
	R.B. McCord (4)	L4-30
	H.E. McGuire	B3-63
	J.M. Steffen	N1-47
	J.F. Williams Sr.	L4-34
	B.D. Williamson	B3-15
	Central Files	L8-04
	EDC	H4-55
	EDMC (2)	H4-22
	Information Release Administration Office (3)	H4-17