0028996

WHC-EP-0661
UC-600

Summary Report on Parametric Pressure Propagation Test TO127-1

H. K. Fauske
Fauske and Associates, Inc.
Burr Ridge, Illinois 60521

Date Published
June 1993

JUL 1993
RECEIVED
EDMC

Prepared for the U.S. Department of Energy
Office of Environmental Restoration
and Waste Management

Westinghouse Hanford Company P.O. Box 1970 Richland, Washington 99352

Hanford Operations and Engineering Contractor for the
U.S. Department of Energy under Contract DE-AC06-87RL10930

Approved for Public Release

UNIVERSITY OF ILLINOIS LIBRARY

LEGAL DISCLAIMER

This report was prepared as an account of work sponsored by an agency of the United States Government. Neither the United States Government nor any agency thereof, nor any of their employees, nor any of their contractors, subcontractors or their employees, makes any warranty, express or implied, or assumes any legal liability or responsibility for the accuracy, completeness, or any third party's use or the results of such use of any information, apparatus, product, or process disclosed, or represents that its use would not infringe privately owned rights. Reference herein to any specific commercial product, process, or service by trade name, trademark, manufacturer, or otherwise, does not necessarily constitute or imply its endorsement, recommendation, or favoring by the United States Government or any agency thereof or its contractors or subcontractors. The views and opinions of authors expressed herein do not necessarily state or reflect those of the United States Government or any agency thereof.

This report has been reproduced from the best available copy.
Available in paper copy and microfiche.

Available to the U.S. Department of Energy
and its contractors from
Office of Scientific and Technical Information
P.O. Box 62
Oak Ridge, TN 37831
(615) 576-8401

Available to the public from the U.S. Department of Commerce
National Technical Information Service
5285 Port Royal Road
Springfield, VA 22161
(703) 487-4650

Printed in the United States of America

DISCLM-1.CHP (1-91)

Date Received: 5/3/93 JO

INFORMATION RELEASE REQUEST

Reference: WHC-CM-3-4

Complete for all Types of Release

Purpose

[] Speech or Presentation
- [] Full Paper
- [] Summary
- [] Abstract
- [] Visual Aid

(Check only one suffix)

[] Speakers Bureau
[] Poster Session
[] Videotape

[] Reference
[X] Technical Report
[] Thesis or Dissertation
[] Manual
[] Brochure/Flier
[] Software/Database
[] Controlled Document
[] Other

ID Number (include revision, volume, etc.) ~~WHC-SD-WM-TRP-133, REV. 0~~

List attachments. WHC-EP-0661

Date Release Required: April 30, 1993

Title: Summary Report on Parametric Pressure Propagation Tests T0127-1 and T0128-1 (FAI 93/12 and 93/13)

Unclassified Category: UC-

Impact Level: 3SQ

New or novel (patentable) subject matter? [X] No [] Yes
If "Yes", has disclosure been submitted by WHC or other company?
[] No [] Yes Disclosure No(s).

Information received from others in confidence, such as proprietary data, trade secrets, and/or inventions?
[X] No [] Yes (Identify)

Copyrights? [X] No [] Yes
If "Yes", has written permission been granted?
[] No [] Yes (Attach Permission)

Trademarks?
[X] No [] Yes (Identify)

Complete for Speech or Presentation

Title of Conference or Meeting

Group or Society Sponsoring

Date(s) of Conference or Meeting

City/State

Will proceedings be published? [] Yes [] No
Will material be handed out? [] Yes [] No

Title of Journal

CHECKLIST FOR SIGNATORIES

Review Required per WHC-CM-3-4	Yes	No	Reviewer - Signature Indicates Approval: Name (printed)	Signature	Date
Classification/Unclassified Controlled Nuclear Information	[]	[X]			
Patent - General Counsel	[X]	[]	S. W. Berglin		4/30/93
Legal - General Counsel	[X]	[]	S. W. Berglin		
Applied Technology/Export Controlled Information or International Program	[]	[X]			
WHC Program/Project	[X]	[]	R. J. Cash		4-29-93
Communications	[X]	[]	W. P. Whiting		4-30-93
RL Program/Project	[X]	[]	R. F. Christensen		4/30/93
Publication Services	[X]	[]	C. J. Forbes		6/28/93
Other Program/Project	[]	[X]			

Information conforms to all applicable requirements. The above information is certified to be correct.

	Yes	No
References Available to Intended Audience	[X]	[]
Transmit to DOE-HQ/Office of Scientific and Technical Information	[X]	[]

Author/Requestor (Printed/Signature) Date
R. J. Cash 4/29/93

Intended Audience
[] Internal [] Sponsor [X] External

Responsible Manager (Printed/Signature) Date
J. C. Fulton 4/30/93

INFORMATION RELEASE ADMINISTRATION APPROVAL STAMP

Stamp is required before release. Release is contingent upon resolution of mandatory comments.

APPROVED FOR RELEASE
VB
6/28/93

Date Cancelled

Date Disapproved

TABLE OF CONTENTS

		Page
1.0	INTRODUCTION AND SUMMARY	1-1
2.0	TEST EQUIPMENT	2-1
	2.1 Test Equipment	2-1
3.0	TEST MATERIALS	3-1
	3.1 Ferrocyanide Sample	3-1
	3.2 Oxidation Reaction	3-1
	3.3 Reaction Ignition Source	3-2
4.0	TEST PROCEDURES	4-1
	4.1 Test Protocol	4-1
	4.2 Gravimetric Analysis	4-1
	4.3 Filtered Venting	4-2
	4.4 Test Execution	4-2
5.0	TEST RESULTS	5-1
	5.1 Propagation Rate Data	5-1
	5.2 Overall Containment Environment Response	5-1
	5.3 Aerosol Sample Collection	5-10
	5.4 Overall Material Balance	5-10
6.0	REFERENCES	6-1
APPENDIX A:	Letter from R. J. Cash to H. K. Fauske (Ref. [1])	A-1
APPENDIX B:	Microbalance Calibration	B-1
APPENDIX C:	Test Data Sheets for Tests T0208-1 and T0209-1	C-1

LIST OF TABLES

Table No.		Page
1-1	Summary of Aerosol Test Data	1-1
5-1	Reaction Speed Data for Test T0208-1 (60°C)	5-4
5-2	Reaction Speed Data for Test T0209-1 (120°C)	5-4
5-3	Comparison of Related Propagation Rate Tests	5-5
5-4	Overall Mass Balance	5-11

LIST OF FIGURES

Figure No.		Page
2-1	Overall test equipment configuration with 49 L containment vessel and 25 mm dia. sample holder with aerosol filter and orifice unit	2-2
2-2	40 liter containment vessel	2-3
2-3	25 mm diameter sample holder used in burn velocity tests. Sample inventory ≈ 45 to 50 gm	2-4
2-4	Schematic illustration of aerosol filter holder	2-6
5-1	Thermocouple response to reaction propagation for test T0208-1, 3 atm abs., 60°C, 25 mm sample holder diameter, 1 wgt.% H_2O InFarm-1 bottom sample. Average propagation velocity 12.6 cm/min	5-2
5-2	Thermocouple response to reaction propagation for test T0209-1, 3 atm abs., 120°C, 25 mm holder diameter, 1 wgt.% H_2O InFarm-1 bottom sample. Average propagation velocity 20.4 cm/min	5-3
5-3	Containment response to test T0209-1 (short time)	5-6
5-4	Containment response to test T0208-1 (long time scale)	5-7
5-5	Containment response to test T0209-1 (short time)	5-8
5-6	Containment response to test T0209-1 (long time scale)	5-9

1.0 INTRODUCTION AND SUMMARY

This report presents the results of two ferrocyanide propagating reaction generated aerosol tests, conducted as a part of a series of tests directed by Westinghouse Hanford Company (WHC) in Ref. [1]. For the record, Ref. [1] is included as Appendix A. The tests discussed in this document are designated as T0208-1 and T0209-1. The tests were carried out in a 49 L containment volume equipped with an aerosol filter housing. The test setup is described in Section 2.0. Each test used an ≈ 50 gm. sample of InFarm-1 bottom flow sheet material which was vacuum dried, screened through a 140 mesh sieve, and rehydrated to 1 wgt. % water content prior to testing. The test sample and reaction ignition method are described in Section 3.0. A special test protocol was defined and followed for the tests as described in Section 4.0 and Appendix B.

Test results discussed in Section 5.0 are summarized in Table 1-1. Both tests yielded a significant aerosol sample on the filter element. These filter elements and aerosol deposits have been sent to WHC for analysis, and any information as to the content or chemical composition of the trapped particulate material awaits the results of WHC efforts in this regard. The reaction propagation tests were conducted at 60°C and 120°C respectively. The average propagation velocities noted in Table 1-1 are consistent with other related observations.

Table 1-1
Summary of Aerosol Test Data

Test	T0208-1	T0209-1
Nominal Temperature	60°C	120°C
Reaction Propagation Velocity	12.6 cm/min	20.4 cm/min
Aerosol Particulate Collected	366.15 mg	595.7 mg

2.0 TEST EQUIPMENT

2.1 Test Equipment

The overall test equipment configuration is shown in Fig. 2-1. This configuration is similar to that illustrated in Ref. [1], but features a 49 L containment vessel. The containment vessel and environment thermocouple locations are shown in Fig. 2-2. The flow limiting orifice attached to the downstream exit from the aerosol filter unit is sized to limit the maximum flow through the filter unit to 0.5 scfm at 30 psig test pressure.

Pre-test calculations and calibrations with argon gas indicated that a downstream flow restriction consisting of a 6.4 inch long small bare tube (id = 0.425 inch) would give the required flow rate at 30 psig. This would nominally lead to a post-test depressurization and aerosol collection time of approximately 20 min.

The aerosol source will be derived from a standard burn of (1 wt.% water) InFarm-1 bottom sample in a 25 mm diameter sample holder.

Fig. 2-3 shows details of the 25 mm diameter sample holder which will be used for the aerosol test activities. A 0.002 inch thick, 316 stainless steel sheet is rolled onto a 25 mm diameter mold, spot welded to hold a round tube configuration and trimmed to 4 inches length. This tube (considered to be disposable) is slipped over the base stand. A sample tube heater and base stand heater are installed as shown in the figure. Type K thermocouples, 0.020 inch diameter sheath are located at axial elevations shown in Fig. 2-3. Note the bottom thermocouple, No. 4, is inserted through the base plate. All other thermocouples make side penetrations through the sample holder between the heater coil wraps and all are positioned at the center of the tube. Also note that TC #4 will be used to indicate the completion of a test burn and signal the time for opening the aerosol filter vent. A split signal from TC #4 will be directed to a chart recorder so as to provide a visual indication of the event (see Fig. 2-1).

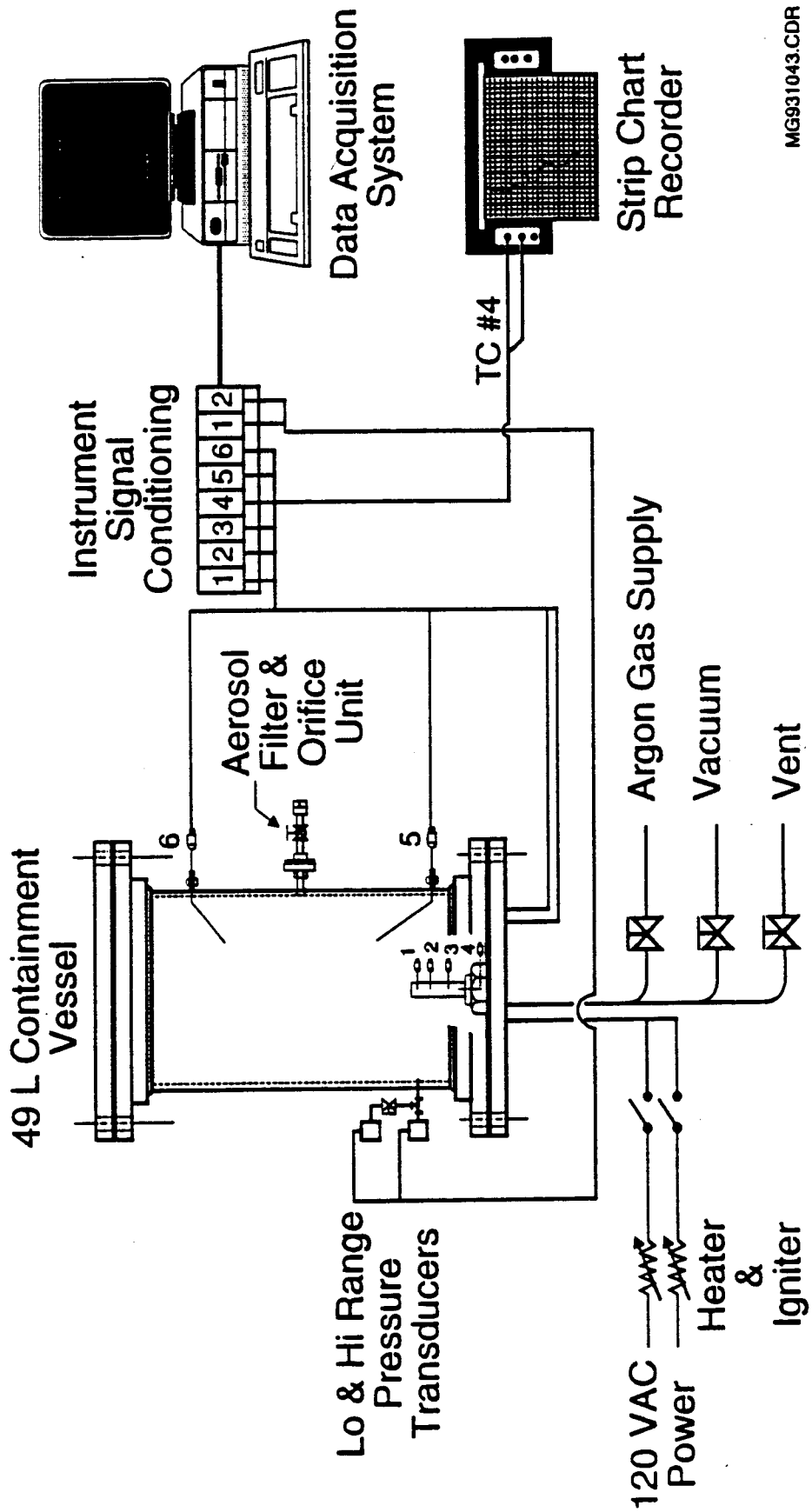

Fig. 2-1 Overall test equipment configuration with 49L containment vessel and 25 mm dia. sample holder with aerosol filter and orifice unit.

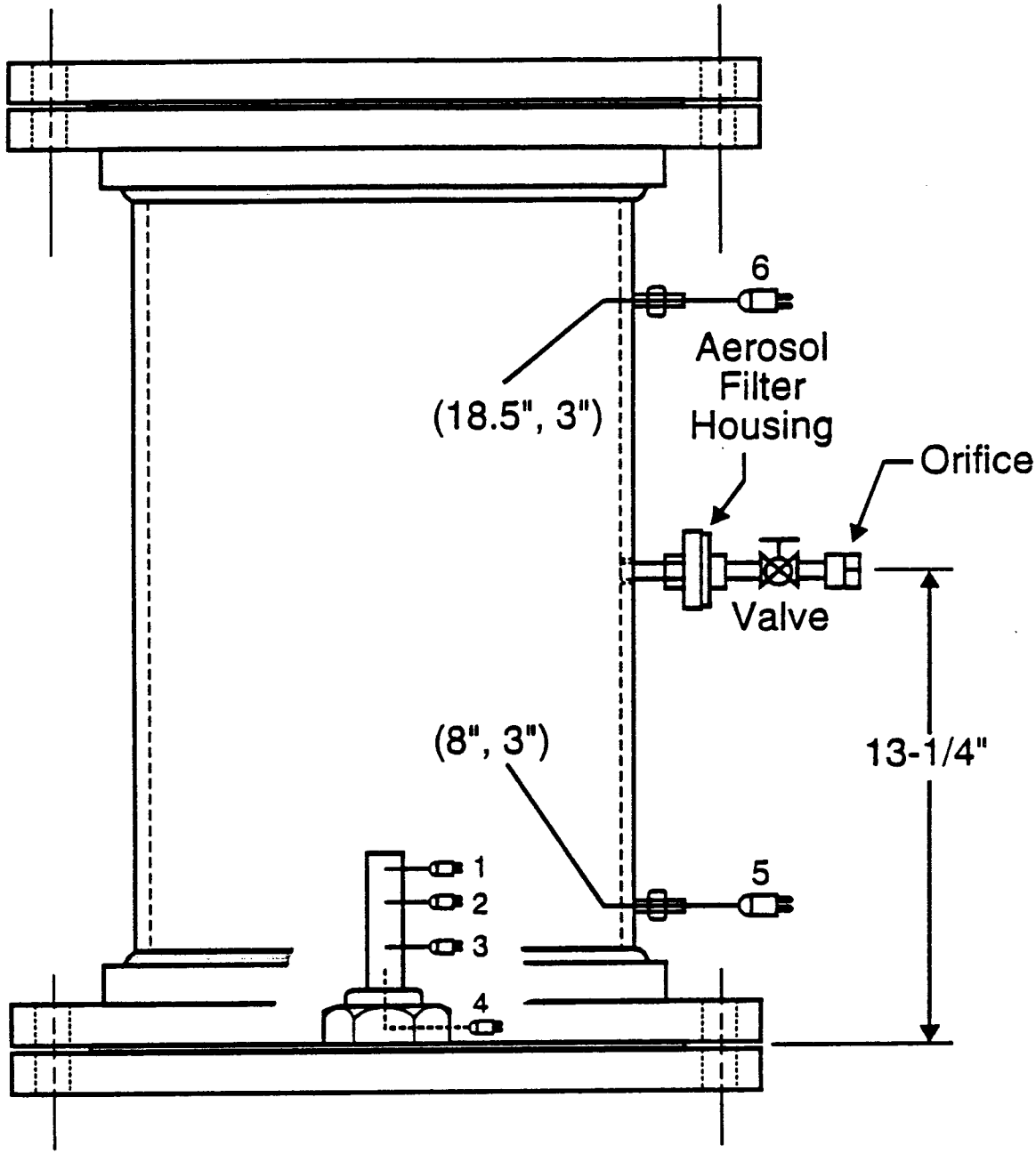

MG931041.CDR

Fig. 2-2 40 liter containment vessel.

12" ID x 0.375" wall x 26½" long with 150 lb. flanged ends as shown with 1" dia. x 4" long sample holder shown to scale. (y,r) indicates TC location relative to bottom (y) and away from wall (r).

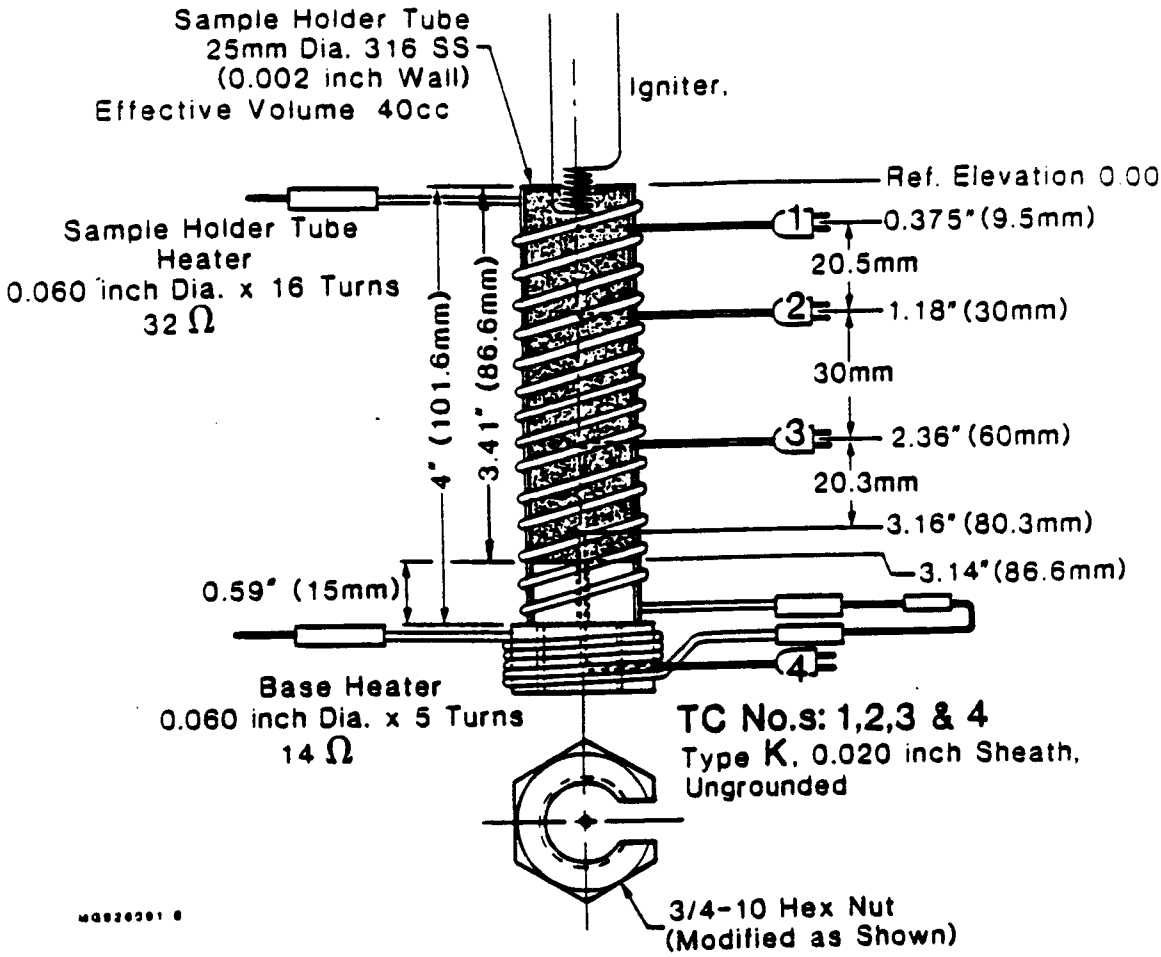

Fig. 2-3 25 mm diameter sample holder used in burn velocity tests. Sample inventory ≈ 45 to 50 gm.

Since material balance considerations will be emphasized in the aerosol test, the following dry weights of the sample holder elements are noted:

25 mm Sample Holder Base	152.6 gm
25 mm Sample Holder Tube	3.5 gm
Heater Elements (Two)	52.1 gm
Thermocouples (Four)	23.7 gm
TOTAL	231.9 gm

Finally, a schematic of the aerosol filter housing is shown in Fig. 2-4. Filter elements were handled by tweezers only so as to avoid contact with human hands.

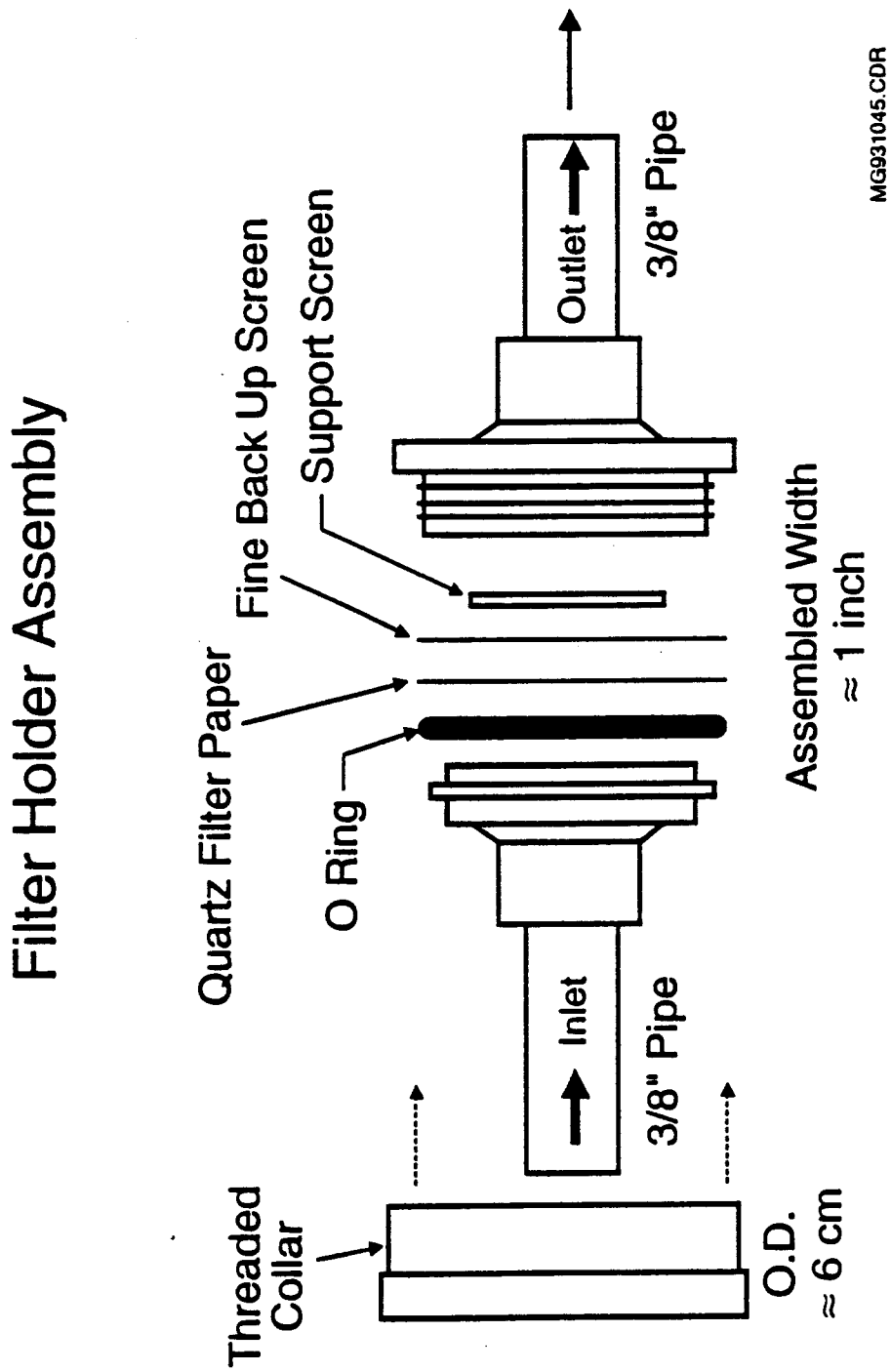

Fig. 2-4 Schematic illustration of aerosol filter holder.

3.0 TEST MATERIALS

3.1 Ferrocyanide Sample

The test materials will be the WHC prepared samples of InFarm-1 bottom disodium mononickel ferrocyanide ($Na_2NiFe(CN)_6$). These samples contain a trace amount of $C_sNiFe(CN)_6$ ($\approx$ .1 gm C_s in a 50 gm sample per WHC estimate). The sample was vacuum dried and sieved at 140 mesh. The sample was re-hydrated to 1 wt.% water prior to testing.

3.2 Oxidation Reaction

The fuel/oxidizer assay for the samples is as yet not known, but will be supplied by Westinghouse Hanford Company. One estimate of a balanced stoichiometric reaction is given below.

$$Na_2NiFe(CN)_6 + 6NaNO_3 \rightarrow 4Na_2O + NiO + FeO + 6CO_2 + 6N_2$$

Assuming CO_2 and N_2 are the only permanent gaseous species produced, the above stoichiometric balance indicates 12 moles of gas to be liberated per mole of $Na_2NiFe(CN)_6$. The formula weight of $Na_2NiFe(CN)_6$ is 316.66 gm/gm mole. Therefore, a 25 mm sample holder containing 50 gm of dried sample at 0.26 wgt. fraction ferrocyanide will contain (.26 x 50)/316.66 = 0.041 mole of $Na_2NiFe(CN)_6$ and can theoretically produce .041 x 12 = 0.492 mole gas.

Other test estimates indicate the gas production to lie in the range of 12 to 13 moles of gas per mole of ferrocyanide burned. Assuming an average molecular wgt. of the gas produced as 36 gm/gmol one can further estimate that a 50 gm test sample will yield between 17.7 gm and 19.2 gm of gas or that the solid reaction product residue should be between 30.8 gm and 32.3 gm.

3.3 Reaction Ignition Source

The use of a barium peroxide and aluminum mixture has proven to be an effective starter for the ferrocyanide reaction. This starter mixture can be ignited with a hot wire. The stoichiometric reaction is written as

$$\underset{(169.34)}{3BaO_2} + \underset{(26.98)}{2A\ell} \rightarrow \underset{(153.34)}{3BaO} + \underset{(101.96)}{A\ell_2O_3}$$

Numbers in ( ) under the above reaction represent the formula weights of the reactants and products. Thermochemical evaluation of this stoichiometric relation indicate the liberation of heat of reaction estimated to be -338 kcal/g-mole BaO_2 or $\approx$ 9.5 mJ/kg BaO_2. The estimated reaction temperature increase is of the order of 2000°C. This reaction is used to initiate the thermite reactions ($Fe_2O_3 + 2A\ell \rightarrow A\ell_2O_3 + 2Fe$). The barium peroxide-aluminum reaction as written does not appear to be gassy. Barium oxide, mp 2000°C, bp 3100°C, appears to be quite stable ($A\ell_2O_3$ has a boiling point of 2900°C). However, BaO_2 is reported to decompose to Ba and O_2 at 800°C. This could be a source of gas, albeit small, for this ignition method. The barium peroxide/$A\ell$ starting mixture will be separated from the ferrocyanide column by a thin aluminum foil. The ignition method has been shown to be effective in previous propagation rate studies, Ref. [2].

4.0 TEST PROCEDURES

4.1 Test Protocol

The objective of the designated aerosol tests is to provide WHC with a quantitative measure of the possible release of aerosolized cesium following an open burn of cesium-nickel ferrocyanide. WHC estimates that a 50 gm test sample will contain ≈ 0.1 gm of cesium in the form of $CsNiFe(CN)_6$.

Two aerosol tests have been defined by WHC. The base test parameters are:

(a) Sample holder	-- 25 mm dia.
(b) Sample charge	-- ≈ 50 gm @ 1.2 sg.
(c) Particle size	-- Screened through 140 mesh sieve
(d) Moisture content	-- 1 w% (≈ .5 gm)
(e) Sample temperature prior to ignition	-- 60°C for Test No. 1 (T0208-1) 120°C for Test No. 2 (T0209-1)
(f) Containment volume atmosphere	-- Argon
(g) Containment volume pressure	-- 3 atm abs. (28 to 30 psig)

4.2 Gravimetric Analysis

WHC has requested a complete material balance on the test reactants and products. In order to facilitate this, the inside walls of the 49 L vessel was lined with aluminum foil all foil elements in addition to the reaction sample holder will be weighed before and after testing so as to account for the disposition of the unreacted sample charge.

In addition to the overall mass balance, a special scale has been procured so as to record the pre- and post-test weight of the filter paper and O-ring to four significant figures. A calibration record for the scale is included as Appendix B.

4.3 Filtered Venting

The post reaction venting of the containment atmosphere was initiated on completion of the reaction. This was signaled by the response of the lowest level thermocouple which was made visible by a recording on a strip chart recorder, (see Fig. 2-1). The flow control orifice was tested so as to achieve a venting rate of ≈ 0.5 cfm at 30 psig.

4.4 Test Execution

The following procedure steps were followed in the execution of the aerosol tests. Completed test data sheets are included as Appendix C.

Sample Preparation

Preliminary: **Test ID #**_____ **Date**_____

Step	Activity	Record or Check	
1.	Measure 50 gm of vacuum dried and sieved In-Farm-1 bottom sample into clean glass beaker.	_____	☐
	Glass beaker tare weight	_____	
2.	Add .5 gm distilled and demineralized water. Mix thoroughly.	_____	☐
3.	Record total weight of container and sample.	_____	☐
4a.	Record weight of empty sample holder.	_____	
4b.	Add sample to sample holder packing with clean glass rod.		☐

Step	Activity	Record or Check
5.	After loading is complete (Step 4) record:	
	Weight of source beaker and residue.	_____
	Weight of loaded test sample holder.	_____
	Depth of charge in sample holder.	_____
6.	Finish sample holder assembly and dressing -	
	• heaters • thermocouples • insulation	
	Record assembled weight.	_____
7.	Prepare a two to four gram charge of barium peroxide/aluminum starter mix in an 25 mm dia. aluminum foil cup and record total weight.	_____
	Hold for adding to test sample later (step 11).	☐
	Filter Preparation	
8a.	Weigh clean unused filter element.	_____
8b.	Install in filter housing per Fig. 2-4 taking care to use only tweezers.	☐
	Containment Vessel Preparation	
9.	Containment vessel fittings and seals have been previously checked for leak-tightness.	☐
10.	Containment vessel is open and cleaned of all prior test residue.	☐

Step	Activity	Record or Check
11.	Line all inside surfaces of containment vessel with aluminum foil and record weight of foil used.	_____
12a.	Install assembled test sample holder on bottom flange of containment vessel and secure all internal connections.	☐
12b.	Install igniter mix and igniter.	☐
12c.	Take photograph of sample holder.	☐

	Pre-Test (mg)	Post-Test (mg)
Filter element	_____	_____
O-Ring	_____	_____
Filter Element + O-Ring	_____	_____

13. Seal containment vessel and purge five times between full vacuum and 0 psig with Argon gas.

Cycle	Vacuum	Fill
1	_____	_____
2	_____	_____
3	_____	_____
4	_____	_____
		Test Pressure
5	_____	_____

At end of 5th cycle Argon pressure should be set to test pressure.

Record pressure. _____

14. Hold test pressure during instrument checkout. ☐

Step	Activity	Record or Check
15.	Set up instruments and check proper allignment.	☐
	Check proper calibration setup.	☐
	Notes _____	
	_____	
	_____	
	_____	
16.	Verify containment is holding pressure.	☐
	Test Sequence	
17.	Verify heater circuit continuity.	☐
18.	Verify igniter circuit continuity.	☐
19.	Begin heating sample up to test temperature. When TC #3 is at test temperature, record temperatures.	
	TC #1 _____°C _____°C	
	TC #2 _____°C _____°C	
	TC #3 _____°C _____°C	
	TC #4 _____°C _____°C	
20.	Verify TC #4 is being recorded on strip chart recorder.	☐
21.	Verify data acquisition system is ready.	☐
22.	Verify igniter system is ready.	☐
23.	Start data acquisition system and on operator signal close igniter circuit.	☐
24.	On response of TC #4 to burn open filter vent.	☐

Step	Activity	Record or Check	
25.	When containment pressure has fallen to 0 psig close filter vent.		☐
26.	Stop data taking.		☐
	Post-Test Activities		
27a.	Weigh filter paper and O-Ring and quickly....	_____	
27b.	Insert in filter paper holder for shipment and label with test ID #.	_____	☐
28.	Open containment vessel and take photographs.	_____	
29a.	Weigh test sample holder.	_____	
29b.	Weigh loose solid metal.	_____	
29c.	Weigh all foil material.	_____	
29d.	Total weight of material in containment vessel.	_____	
30.	Reduce test data.		☐
31.	Clean test apparatus and prepare for follow-on test.		☐

5.0 TEST RESULTS

5.1 Propagation Rate Data

The thermocouple data which indicate the linear reaction velocity are shown in Figs. 5-1 and 5-2 for tests T0208-1 and T0209-1 respectively. Tables 5-1 and 5-2 indicate the respective reduced speed measurements which can be obtained from these data.

The representative average velocity for these tests can be summarized as

Test	Temperature	Reaction Velocity
T0208-1	60°C nom.	2.1 mm/sec (12.6 cm/min)
T0209-1	120°C nom.	3.4 mm/sec (20.4 cm/min)

For comparison, the average reaction velocity observed in comparible dry InFarm bottom ferrocyanide tests is shown in Table 5-3. All observed reaction velocities appear to be consistent for the test material. Note that the response of TC1 in both tests was somewhat erratic and was discounted in T0209-1 as a reliable reaction speed indicator. This behavior is often caused by the igniter but the severe difficulty in T0209-1 appears to be a random fault.

5.2 Overall Containment Environment Response

Figs. 5-3, 5-4, 5-5, and 5-6 show the containment environment response on short and long time scales. The start of the filtered venting process is indicated for each test to occur at peak pressure. This was concurrent with the completion of the reaction as indicated by the lowest thermocouple TC4. The containment environment pressure response appears to be derived from two sources. An initial rapid pressure increase of ≈ 10 psig is due to the igniter and because of the corresponding concurrent rapid response of the

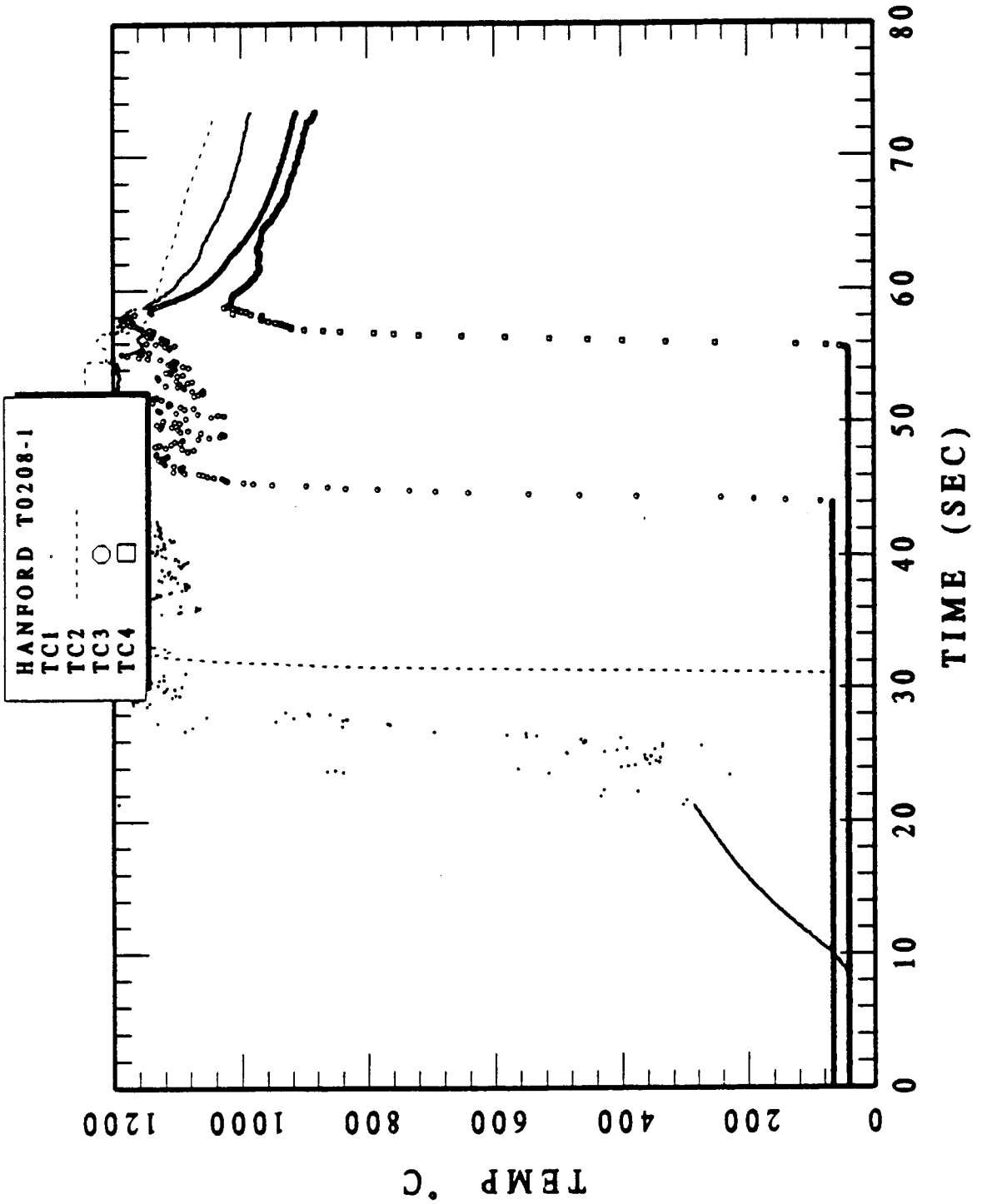

TIME VS TC1, TC2, TC3, TC4

Fig. 5-1 Thermocouple response to reaction propagation for test T0208-1, 3 atm abs., 60°C, 25 mm sample holder diameter, 1 wgt.% H_2O InFarm-1 bottom sample. Average propagation velocity 12.6 cm/min.

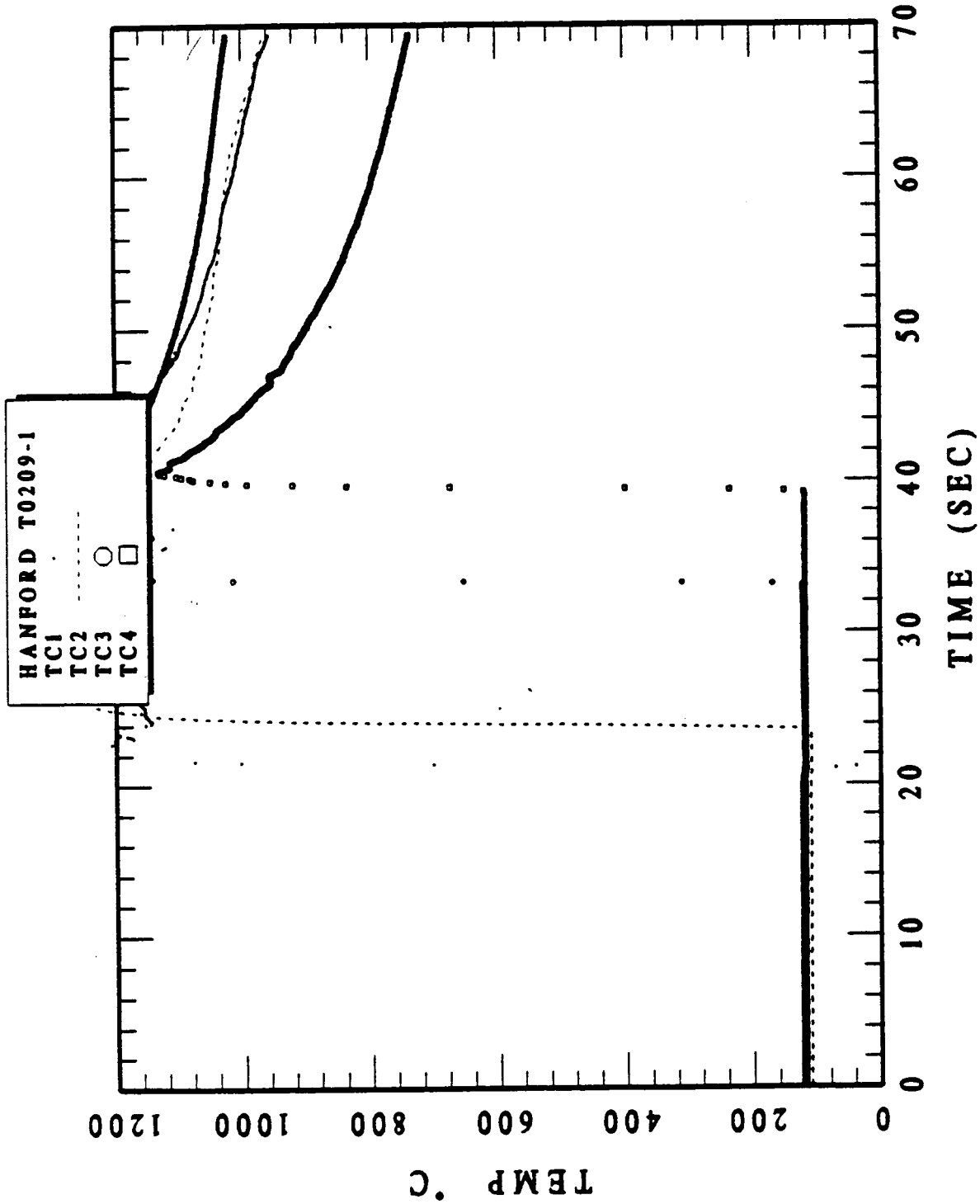

TIME VS TC1, TC2, TC3, TC4

Fig. 5-2 Thermocouple response to reaction propagation for test T0209-1, 3 atm abs., 120°C, 25 mm sample holder diameter, 1 wgt.% H_2O InFarm-1 bottom sample. Average propagation velocity 20.4 cm/min.

Table 5-1
Reaction Speed Data for Test T0208-1 (60°C)

TC#	Location* mm	Time sec	Reaction Propagation Rate			
TC1	9.53	21.25	TC1 → TC2 2.10 mm/sec			
TC2	30.16	31.09		TC2 → TC3 2.26 mm/sec		
TC3	59.53	44.09			TC3 → TC4 1.84 mm/sec	
TC4	81.06	55.78				TC1 → TC4 2.07 mm/sec

*From top of sample holder.

Table 5-2
Reaction Speed Data for Test T0209-1 (120°C)

TC#	Location* mm	Time sec	Reaction Propagation Rate			
TC1	9.53	20.98	TC1 → TC2 7.58 mm/sec			
TC2	30.16	23.70		TC2 → TC3 3.16 mm/sec		
TC3	59.93	33.11			TC3 → TC4 3.82 mm/sec	
TC4	83.44	39.27				TC1 → TC4 3.42 mm/sec

*Result discounted due to faulty TC1.

Table 5-3
Comparison of Related Propagation Rate Tests

Test	Material	Pressure atm	Initial Temperature °C	Specific Gravity	Reaction Propagation Rate cm/min
T0727-1	IF1B	1	26	1.23	10
*T0127-1	IF1B	10	60	1.26	16
T0819-1	VWW	50	60	1.25	132
**T0128-1	IF1B	53	60	1.33	32

*Ref. [4]
**Subject of this report.
IF1B - In-Farm 1 bottom flow sheet material.
VWW - Vendor supplied material.

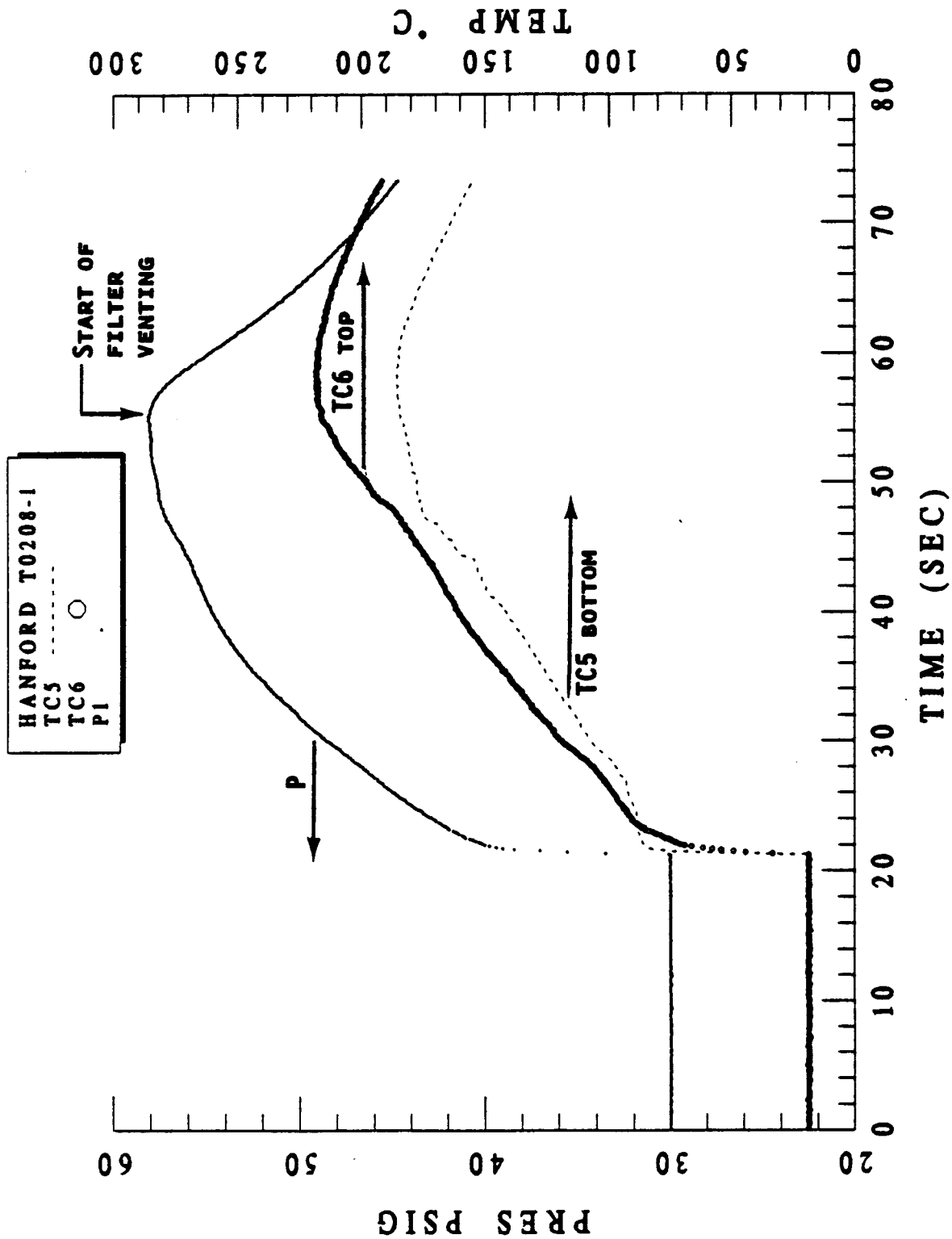

TIME VS. P, TC5, TC6

Fig. 5-3 Containment response to test T0209-1 (short time).

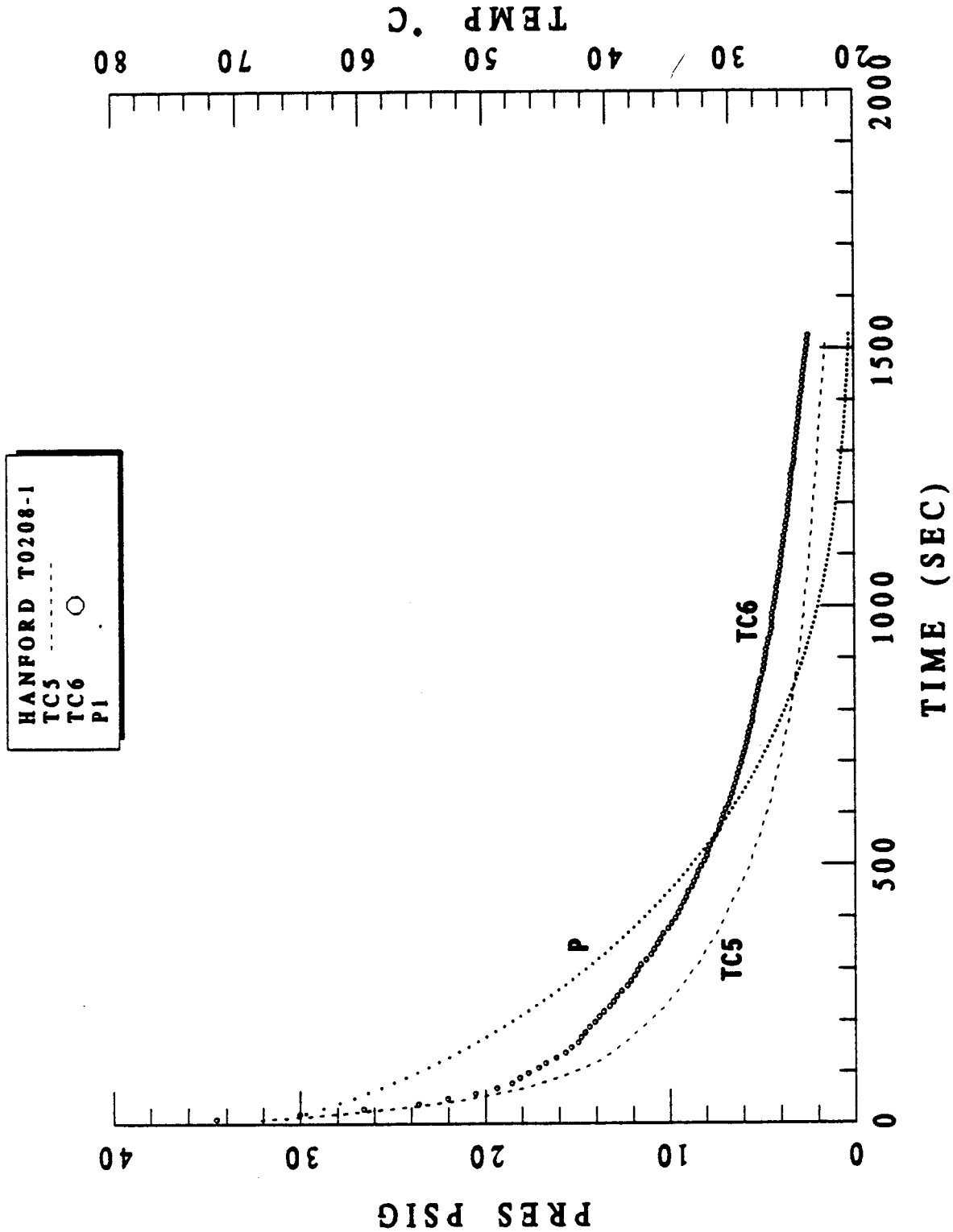

TIME VS. P, TC5, TC6

Fig. 5-4 Containment response to test T0208-1 (long time scale). Note 0 time on this figure corresponds to 118.8 sec. on short time scale of Fig. 5-3.

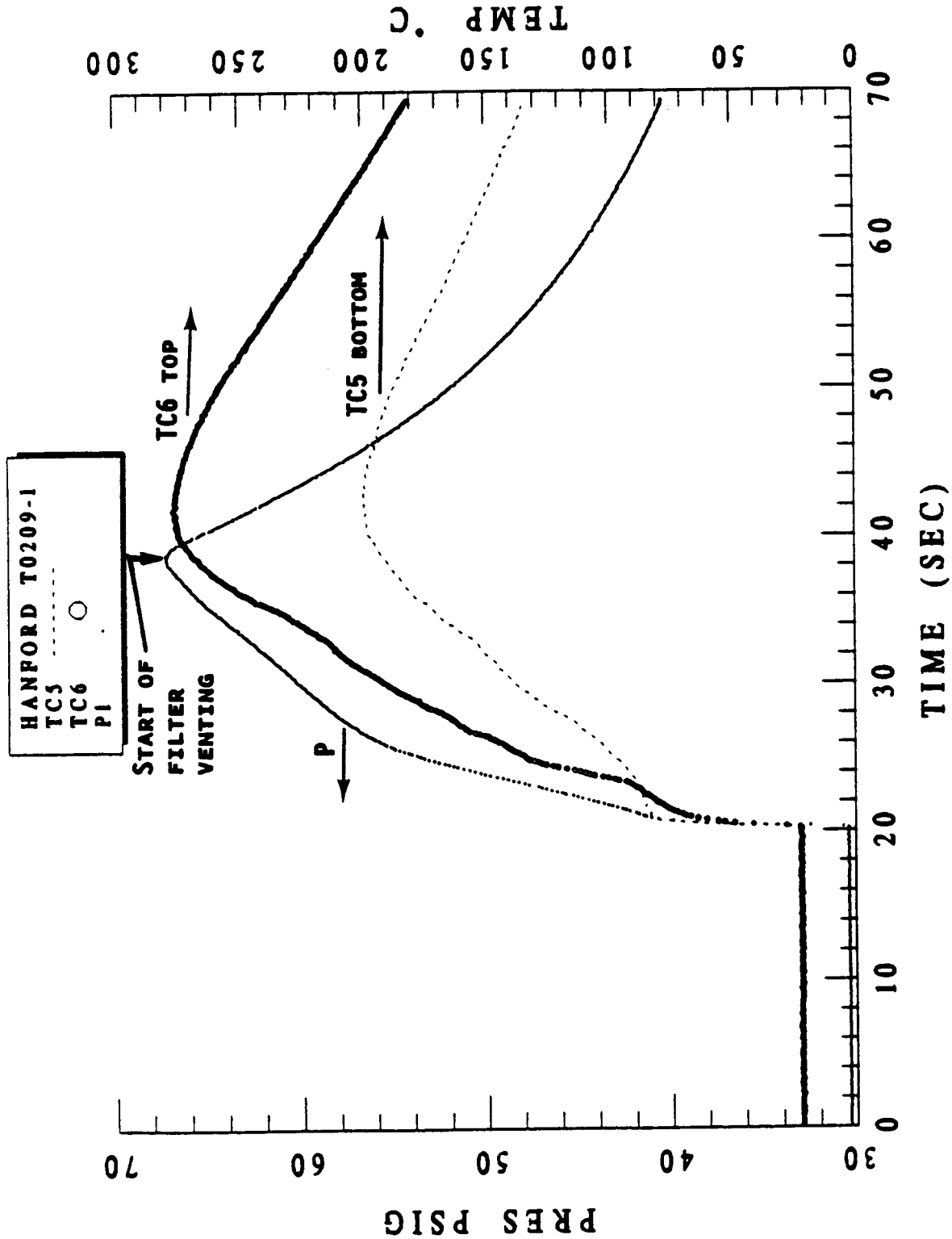

TIME VS. P, TC5, TC6

Fig. 5-5 Containment response to test T0209-1 (short time).

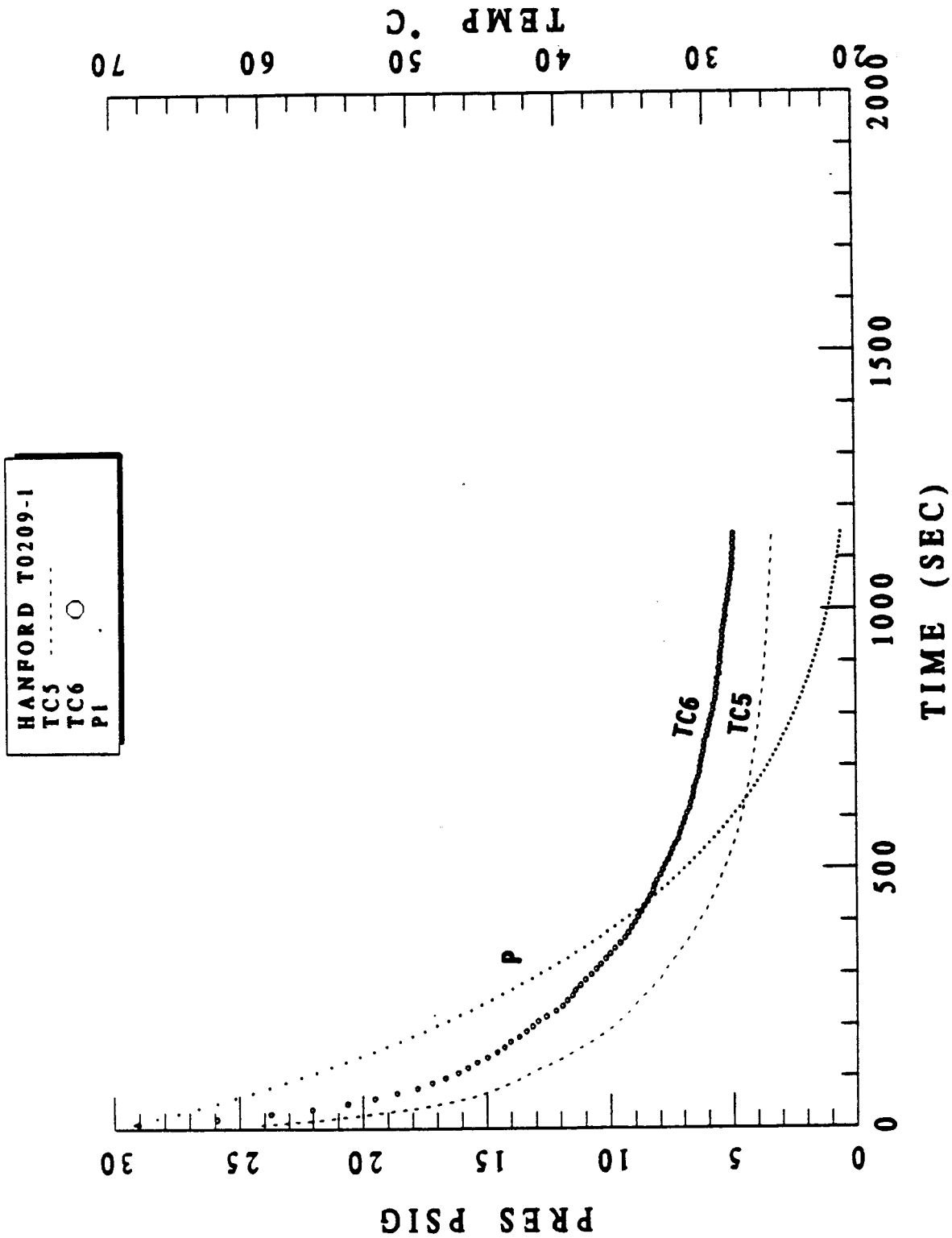

TIME VS. P, TC5, TC6

Fig. 5-6 Containment response to test T0209-1 (long time scale). Note 0 time on this figure corresponds to 122.8 sec on short time scale of Fig. 5-5.

two environment thermocouples, it is concluded that this is predominantly a thermal effect. The second stage pressure increase of ≈ 15 psig in test T0208-1 and ≈ 25 psig in test T0209-1 is a result of the reaction itself and is a combined thermal and gas production effect.

Note that due to the above mentioned pressure increase the initial flow rate through the filter is estimated to be ≈ 0.8 cfm for test T0208-1 and ≈ 0.9 cfm for test T0209-1. In both tests the containment pressure and filter flow rate decay with time over a depressurization period of ≈ 20 min.

5.3 Aerosol Sample Collection

The collected aerosol sample is represented in Table 5-3 below. The sample was weighed and sealed in the shipping containers within 15 min. after completion of the test. As can be seen from the table, abundant particulate material was collected. Other than the sample mass, the only other noteworthy aspect of the sample collection procedure was the observation that the post-test sample weight could not be represented as a fixed value. Upon placing the filter element on the scale, a weight loss of ≈ 1 mg/min was observed to continue. No effort was made to see how long this weight loss would persist since the other concern for moisture uptake was in mind.

5.4 Overall Material Balance

The overall material balance as inferred from the pre- and post-test sample weighings are summarized in Table 5-4 below.

Table 5-4
Overall Mass Balance

Test	T0208-1	T0209-1
1. Initial Sample	50.5 gm	50.5 gm
2. Recovered Solid Residue	30.7 g	31.3 g
3. Estimated Gas Products (1 - 3)	19.8 g	19.2 g
Expected solid residue per Section 3.2	30.8 to 32.3 g	30.8 to 32.3 g

As can be seen, the accounted for solid residue is within 6% of the estimate given in Section 3.2. This also indirectly confirms the gas production of 12 to 13 mole of gas per mole of ferrocyanide. This is significant in that it is impossible to recover 100% of all solid residue. Minor amounts of un-recoverable residue are lost in the sample insulation and scale on the heater element. Nevertheless, the mass inventory accounting appears satisfactory and consistent with the expected gas generation rate.

6.0 REFERENCES

1. Letter; R. J. Cash to H. K. Fauske, "Subject: Aerosol Propagation Tests and Parametric Pressure Propagation Test", January 12, 1993.

2. FAI/92-66 (Revised), "Test Plans and Procedures for Determination of Reaction Propagation Velocity in Sodium Nickel Ferrocyanide Compounds", July, 1992.

3. FAI/92-81, "Adiabatic Calorimetry and Reaction Propagation Rate Tests with Synthetic Ferrocyanide Materials Including UPlant-1, UPlant-2, In-Farm 1, In-Farm 2, and Vendor-Procured Sodium Nickel Ferrocyanide", July, 1992.

4. FAI/93-12, "Summary Report on Parametric Pressure Propagation Test T0127-1", Jan., 1993.

5. Letter; H. K. Fauske to R. J. Cash, Subject: "Status Report on Reaction Propagation Rate Tests with Synthetic Sodium Nickel Ferrocyanide Material", September 21, 1993.

APPENDIX A

Letter from R. J. Cash to H. K. Fauske (Ref. [1])

Westinghouse
Hanford Company

P.O. Box 1970 Richland, WA 99352

January 12, 1993 9350199

Dr. H. K. Fauske, President
Fauske and Associates, Inc.
16W070 West 83rd Street
Burr Ridge, Illinois 60521

Dear Dr. Fauske:

AEROSOL PROPAGATION TESTS AND PARAMETRIC PRESSURE PROPAGATION TEST

Please conduct two aerosol tests and one parametric propagation test for the Ferrocyanide Safety Program at Hanford. The aerosol tests are expected to give a reasonable release fraction of aerosol particles from reaction of the most concentrated ferrocyanide waste simulant, In-Farm-1. The parametric pressure propagation test will give a propagation rate measurement for an intermediate pressure.

Perform the first aerosol release test using In-Farm-1 bottom fraction test material in a similar configuration as the propagation tests, except the aerosol tests shall be conducted in the 49 liter chamber. Use vacuum dried In-Farm-1 simulant to which 1 wt% water is added and well mixed in order to permit possible conversion of the cesium to cesium hydroxide during the reaction. Include thermocouples in the test material and within the chamber atmosphere to measure the propagation rate and containment gas/temperature responses. Perform the first test at three (3) atmospheres initial absolute pressure under argon with delayed exhaust gas venting through a filter to collect aerosol as shown in Figure 1. Other parameters should be as follows: a 25 mm diameter test material cylinder about 100 mm long, a 60 °C initial temperature, dried material (reconstituted to 1 wt% water) screened through a 140 mesh screen, and a specific gravity of about 1.2 (actual density measured).

Venting of the chamber gas should begin when the reaction is completed as determined by the temperature of the lowest thermocouple and first decrease in chamber pressure after the reaction is started (estimated to be about 30 seconds after start of the reaction). Controlled venting down to atmospheric pressure, through an orifice upstream of the filter housing, will protect the filter system and provide favorable conditions for obtaining a good aerosol sample. The orifice should be sized to control a maximum flow through the filter of 0.5 cfm. It is important that Westinghouse Hanford Company (WHC) simulant be used instead of vendor-produced material because the WHC simulant has traceable cesium in it and the vendor material does not.

Photographs are requested of the deposits inside of the chamber after the test. The filter papers and O rings from the aerosol filter should be weighed (to four significant figures) before and after aerosol loading to determine the mass of aerosol collected. (Rental of a balance, as necessary, to make these measurements is approved.) Quartz filter papers will be used and should be handled with tweezers only, since sodium can be picked up from human hands. Filter paper holders have been provided to you for handling and shipping purposes.

It is desirable to make a material balance on the cesium and other metallic elements during this test. The inside of the chamber should be lined with aluminum foil to collect any cesium plate-out on exposed surfaces. The aerosol should be removed from the vent gas by filtering, and all of the remaining solid reaction products should be weighed. The gas samples, loaded filter paper, solid reaction products, and foil liner should be returned to WHC for analysis as soon as possible after completion of each test.

Perform the second aerosol test at an initial temperature of 120 °C but with all other conditions kept the same as the first test; the same data measurements should be made. It is expected that the 1 wt % water added to the test material will be retained within the sample at 120 °C up to the point of ignition of the second test reaction.

Please submit the aerosol propagation test procedure for WHC approval prior to conducting these tests.

It is requested that you perform one additional propagation test at an initial pressure of 10 atmospheres absolute using an argon environment. Use dry (0 wt% water) In-Farm-1 bottom fraction material for this test, the 25 mm diameter test bed, an initial temperature of 60 °C, a specific gravity of about 1.2 (actual density measured), and a particle size as screened through a 140 mesh screen. This test can be conducted in the 49 liter chamber, if you choose. Obtain a gas sample of the containment atmosphere before and after the reaction. Please provide a detailed gas sampling procedure for approval prior to conducting this test. Use of the WHC-provided samplers (NUPRO) with end caps to provide a second seal and to protect threaded connections is requested. Please report the results of these tests, including the temperatures of the chamber gas as a function of time, in a summary report, available for public release.

Please provide measured gas temperatures within the containment atmosphere (and provide the location of the thermocouples) as a function of time for each propagation test conducted to date with the disodium mononickel ferrocyanide mixtures. The gas temperatures and pressure measurements during the reaction time and during cooling time are desired. Temperature and pressure measurements of the containment gas atmosphere are also needed at the time that the gas samples were/are obtained. Your prompt response to this request for tests completed to date would be appreciated.

9350199

About 1.4 kg of additional In-Farm-1 bottom fraction simulant material was shipped to you on January 5, 1993. The composition of the In-Farm-1 bottom fraction simulant is still being determined by laboratory analysis and will be provided to you in the near future so that the final six screening propagation tests can be conducted. About one Kg of U-Plant-1 sludge will be prepared and shipped to you for the bake out tests discussed at the December 9 and 10, 1992 meeting at Hanford. Additional gas sampler (NUPRO) containers are also being shipped to you.

For your information the gas analysis of the containment atmosphere gases for four propagation tests conducted previously are listed in Table 1. It should be noted that analytical results of two of the pretest samples indicate that there is a concern about the initial condition of the test chamber atmosphere. Either the gas sampling was not conducted properly or the containment atmosphere was not adequately purged. See footnotes of Table 1.

Please address questions to D. W. Jeppson at (509) 376-6058 or to me at (509) 373-3132.

~~Very truly~~ yours,

R. J. Cash, Manager
Ferrocyanide Safety Technology
Tank Waste Remediation System

fm

TABLE 1

Gas Analysis of Containment Gases for Propagation Tests

Sample	Mole %											
	CO_2	Ar	O_2	N_2	CO	He	H_2	CH_4	N_2O	NO	NO_2	SO_2
T0820-1-Pre	<0.01	99.99	<0.01	0.003	<0.10	<0.01	<0.01	<0.01	<0.01	<0.01	<0.01	<0.01
T0820-1-After	1.08	95.4	0.26	3.26	<0.10	<0.01	<0.01	<0.01	<0.01	0.02	<0.01	<0.01
T0821-1-Pre	0.02	92.1	1.62	6.27	<0.10	<0.01	<0.01	<0.01	<0.01	<0.01	<0.01	<0.01
T0821-1-After	14.8	24.2	0.04	45.7	<0.10	<0.01	0.03	<0.01	<0.01	15.3	<0.01	<0.01
T0825-1-Pre*	0.10	54.6	9.21	36.1	<0.10	<0.01	<0.01	<0.01	<0.01	<0.01	<0.01	<0.01
T0825-1-After	3.90	84.8	0.09	11.2	<0.10	<0.01	0.01	<0.01	<0.01	0.01	<0.01	<0.01
T0826-1-Pre	<0.01	99.98	<0.01	0.02	<0.02	<0.01	<0.01	<0.01	<0.01	<0.01	<0.01	<0.01
T0826-1-After	0.61	97.5	0.03	1.75	<0.10	<0.01	0.02	<0.01	<0.01	0.01	<0.01	<0.01

* This sample bottle (FAI supplied) was at low pressure and the valve was reported by the analytical laboratory to be leaking.

Note: Sample T0821-1-Pre results may imply that adequate purging of the chamber was not done prior to performance of the test.

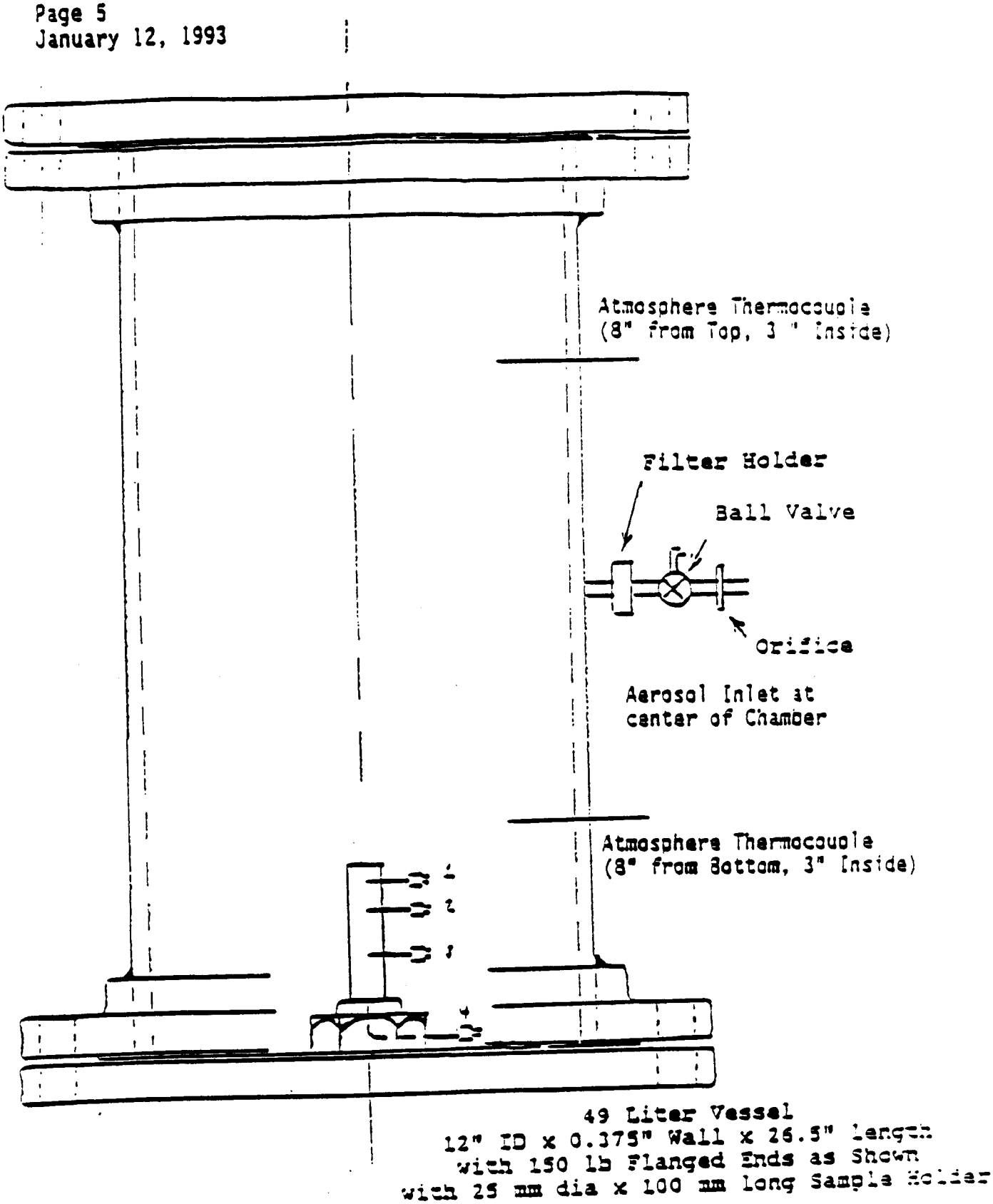

Figure 1
Aerosol Test Containment Vessel

APPENDIX B

Microbalance Calibration

Calibration Data Sheet for SARTORIUOS Microbalance Scale

1st Trial

Test Wgt.	Scale Reading
1 mg	0.00101 gm
10 mg	0.01000 gm
100 mg	0.10007 gm

2nd Trial

Test Wgt.	Scale Reading
1 mg	0.00102 gm
10 mg	0.01001 gm
100 gm	0.10004 gm

Date: 2-5-93

Calibration Standards

1 mg Class 1 wgt.	H138023191TIU
10 mg Class 1 wgt.	H138023191PP
100 mg Class 1 wgt.	H318023191KIL

*** All wgts. are ASTM Tolerance Class 1 ***

APPENDIX C

Test Data Sheets for Tests T0208-1 and T0209-1

T0208-1

Sample Preparation

Preliminary: **Test ID #** T0208-1 **Date** 8 Feb 93

Step	Activity	Record or Check	
1.	Measure 50 gm of vacuum dried and sieved In-Farm-1 bottom sample into clean glass beaker.	199.0 g	☑
	Glass beaker tare weight	149.0 g	
2.	Add .5 gm distilled and demineralized water. mix thoroughly	0.50 g	☑
3.	Record total weight of container and sample.	199.5 g	☑
4a.	Record weight of empty sample holder.	161.79 g	
4b.	Add sample to sample holder packing with clean glass rod.		☑
5.	After loading is complete (Step 4) record:		
	Weight of source beaker and residue.	149.03 g	
	Weight of loaded test sample holder. net change 50.47 g	212.26 g	
	Depth of charge in sample holder.	11/32" from top	
6.	Finish sample holder assembly and dressing -		
	• heaters (2) • thermocouples (4) • insulation with foil and 2 igniter leads + igniter Record assembled weight.	336.8 g	

T0208-1

Step	Activity	Record or Check
7.	Prepare a two gram charge of barium peroxide/aluminum starter mix in an 25 mm dia. aluminum foil cup and record total weight. (two to four)	2.23 g igniter 4.23 g total
	Hold for adding to test sample later (step 11).	☑
	Filter Preparation	
8a.	Weigh clean unused filter element.	See below
8b.	Install in filter housing per Fig. 2-4 taking care to use only tweezers.	☑
	Containment Vessel Preparation	
9.	Containment vessel fittings and seals have been previously checked for leak-tightness.	☑
10.	Containment vessel is open and cleaned of all prior test residue.	☑
11.	Line all inside surfaces of containment vessel with aluminum foil and record weight of foil used.	See Data Sheet
12a.	Install assembled test sample holder on bottom flange of containment vessel and secure all internal connections.	☑
12b.	Install igniter mix and igniter.	☑
12c.	Take photograph of sample holder.	☑

	Pre test (mg)	Post Test (mg)
filter element	154.71	520 +
O-Ring	2445.15	
filter element + O-Ring	2599.86	2966.01

→ started at 530 + mg lost wgt at rate of ≈1 mg/min note & proceed

T0208-1

Step	Activity	Record or Check
13.	Seal containment vessel and purge five times between full vacuum and 0 psig with Argon gas.	☑

Cycle	Vacuum	Fill
1	28"	10 psig
2	28"	10 psig
3	28"	10 psig
4	28"	10 psig
5	28"	Test Pressure 30 psig

At end of 5th cycle Argon pressure should be set to test pressure.

Record pressure. 31 psig

14. Hold test pressure during instrument checkout. ☑

15. Set up instruments and check proper allignment. ☑

Check proper calibration setup. ☑

Notes P cal 16 psi/volt
TC all ok

16. Verify containment is holding pressure. ☑

Test Sequence

17. Verify heater circuit continuity. ☑

18. Verify igniter circuit continuity. ☑

T0208-1

Step	Activity	Record or Check
19.	Begin heating sample up to test temperature. When TC #3 is at test temperature, record temperatures.	Start fast data 0.00 sec Stop fast data ~~67~~ 73.13 sec Start slow data 118.8 sec
	TC #1 _____ °C 44 °C TC #2 _____ °C 69 °C TC #3 _____ °C 69 °C TC #4 _____ °C 43 °C TC #5 20 °C TC #6 19 °C	
20.	Verify TC #4 is being recorded on strip chart recorder.	☑
21.	Verify data acquisition system is ready.	☑
22.	Verify igniter system is ready.	at start of test P = 29.8 - 30 psig ☑
23.	Start data acquisition system and on operator signal close igniter circuit.	☑
24.	On response of TC #4 to burn open filter vent.	☑
25.	When containment pressure has fallen to 0 psig close filter vent.	☑
26.	Stop data taking.	☑

Post-Test Activities

27a.	Weigh filter paper. and O-Ring and quickly - - - -	See data on prev page
27b.	Insert in filter paper holder for shipment and label with test ID #.	_____ ☑
28.	Open containment vessel and take photographs.	_____ ✓
29a.	Weigh test sample holder. Ref item 6	314.2 g

T0208-1

Step	Activity	Record or Check
29b.	Weight of undressed sample holder ~~Weigh loose solid metal~~. comparable to item 5	197.6 g
29c.	Weigh all foil material.	see data sheet
29d.	Total weight of material in containment vessel.	30.36 g
30.	Reduce test data.	☑
31.	Clean test apparatus and prepare for follow-on test.	☑

4.4 Data Reporting

As customary, FAI will advise WHC of individual test results by phone and advise or discuss any variations from the expected operating procedure.

After the second aerosol test, a detailed report of the test data including all temperatures and pressures will be provided. Special sections will detail the gravimetric analysis and note the filter paper weight gain. Test photographs will be submitted to WHC under separate transmittal.

Post-test debris and filters will be sent to WHC for further evaluations of the test data.

336.8 g
314.2 g
22.6 g

Sample	50 g
mass lost	22.6 g
residue	27.4 g
residue on foil	2.96
Total residue accounted for	30.36
initial mass deficit	19.64 g
Estimated gas production	17 to 11 g

T0208-1

Test T0208-1

Pre & Post Test Liner foil wgt

Element	Pre Test wgt	Post Test wgt
Bottom	8.87 g	
head wraps	8.65 g	
cover	1.50 g	
sub total bottom	19.02 g	21.3 g
Side	56.52 g	57.1 g
Top	8.6 g	8.7 g
Total	84.14 g	87.1
Net gain in wgt		2.96 g

DATE: 8 Feb 93

WHC AEROSOL TEST — T0208-1

TEST PRESSURE — 30 psig nom

SAMPLE TEMPERATURE — 60°C nom

Sample Holder 25 mm dia x 101 mm lg

Verify Dimensions

Overall Height

TC 1 3/8 No. 72

TC 2 1 3/16 No. 69

TC 3 2 11/32 No. 27

TC 4 7/32" No. 50

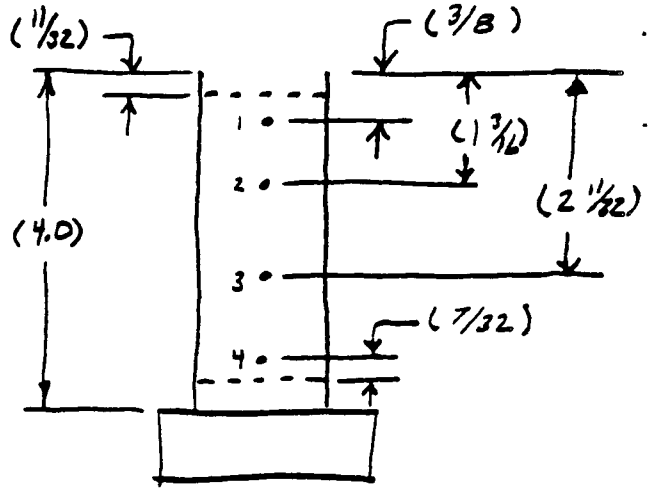

Containment 49 L

TC 5 8" bottom 3" wall No. 104 bottom

TC 6 18.5" bottom 3" wall No. 105 top

Pressure Transducer

Range 80 psi (fs) Cal Fac 16 psi/vol

Sample: IN-FARM 1 Bottom w 1w% H_2O

Source Ref INFARM 1B Rev 6A Bottom 60% 12-21-92

Vac dried & screened through 140 mesh

Sample Wgt 50.47 gm SG. 1.32

Sample Hgt. 11/32" from top

Igniter Charge 2.23 gm

Date 8 Feb 93
Test T0208-1

Calculation of Sample Packed Density

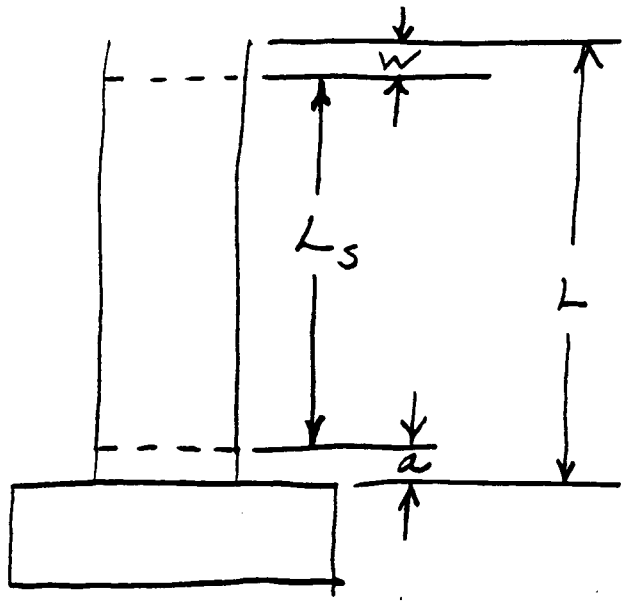

Sample Wgt

M_s = 50.47 gm

D	25	mm		
L	4.0	inch	101.6	mm
a	0.59	inch	15	mm
w	11/32	inch	8.7	mm

$L_s = L - (a + w)$ = 77.9 mm

USE DIMENSIONS IN (mm)

$V_s = \frac{\pi D^2}{4} L_s \times 10^{-3}$ = 38.24 cm^3

Packing Density = $\frac{M_s}{V_s} = \frac{50.47}{38.24}$ = 1.32 $\frac{gm}{cm^3}$

T0209-1

Sample Preparation

Preliminary: **Test ID #** T0209-1 **Date** 9 Feb 93

Step	Activity	Record or Check	
1.	Measure 50 gm of vacuum dried and sieved In-Farm-1 bottom sample into clean glass beaker. (Used stainless steel cup)	199.0 g	☑
	Glass beaker tare weight	149.0 g	
2.	Add .5 gm distilled and demineralized water. mix thoroughly	.50 g added	☑
3.	Record total weight of container and sample.	199.5 g	☑
4a.	Record weight of empty sample holder. with TC4 and no heaters	161.83 g	
4b.	Add sample to sample holder packing with clean glass rod.		☑
5.	After loading is complete (Step 4) record:		
	Weight of source beaker and residue.	149.0 g	
	Weight of loaded test sample holder. net charge 50.46 g	212.29 g	
	Depth of charge in sample holder.	5/16" from top	
6.	Finish sample holder assembly and dressing - • heaters (2) • thermocouples (4) • insulation with foil and 2 leads and igniter		
	Record assembled weight.	345.6 g	

T0209-1

Step	Activity	Record or Check
7.	Prepare a ~~two~~ two to four gram charge of barium peroxide/aluminum starter mix in an 25 mm dia. aluminum foil cup and record total weight. Hold for adding to test sample later (step 11).	(.14g pan wgt) (4.15g ign wgt) 4.29g ☑
	Filter Preparation	
8a.	Weigh clean unused filter element.	See below
8b.	Install in filter housing per Fig. 2-4 taking care to use only tweezers.	☑
	Containment Vessel Preparation	
9.	Containment vessel fittings and seals have been previously checked for leak-tightness.	☑
10.	Containment vessel is open and cleaned of all prior test residue.	☑
11.	Line all inside surfaces of containment vessel with aluminum foil and record weight of foil used.	See data Sheet
12a.	Install assembled test sample holder on bottom flange of containment vessel and secure all internal connections.	☑
12b.	Install igniter mix and igniter.	☑
12c.	Take photograph of sample holder.	☑

	Pre test (mg)	Post Test (mg)
filter element	155.46	749.30
O-Ring	2445.12	2446.06
filter element + O-Ring	2600.69	3196.40

T0209-1

Step	Activity	Record or Check

13. Seal containment vessel and purge five times between full vacuum and 0 psig with Argon gas.

Cycle	Vacuum	Fill
1	28"	10 psig
2	28"	10 psig
3	28"	10 psig
4	28"	17 psig
5	28"	Test Pressure 30 psig

At end of 5th cycle Argon pressure should be set to test pressure.

Record pressure. 30 psig

14. Hold test pressure during instrument checkout. ☑

15. Set up instruments and check proper allignment. ☑

Check proper calibration setup. ☑

Notes Pcal 16 psi/volt
TC all ok

16. Verify containment is holding pressure. ☑

Test Sequence

17. Verify heater circuit continuity. ☑

18. Verify igniter circuit continuity. ☑

T0209-1

Step	Activity	Record or Check
19.	Begin heating sample up to test temperature. When TC #3 is at test temperature, record temperatures.	Start fast data 0.00 sec Stop fast data 68.82 sec Start slow data 122.8 sec
	TC #1 -1227* °C _____ °C TC #2 113 °C _____ °C TC #3 127 °C _____ °C TC #4 123 °C _____ °C TC #5 23 TC #6 23	* TC #1 shows erratic behavior just at test temperature proceed
20.	Verify TC #4 is being recorded on strip chart recorder.	☑
21.	Verify data acquisition system is ready.	☑
22.	Verify igniter system is ready.	☑
23.	Start data acquisition system and on operator signal close igniter circuit.	☑
24.	On response of TC #4 to burn open filter vent.	☑
25.	When containment pressure has fallen to 0 psig close filter vent.	☑
26.	Stop data taking. at ≈ ½ psig in containment	☑

Post-Test Activities

27a.	Weigh filter paper. and O-Ring and quickly - - - -	see previous page
27b.	Insert in filter paper holder for shipment and label with test ID #.	_____ ☑
28.	Open containment vessel and take photographs.	_____ ✓
29a.	Weigh test sample holder. Ref item 6	322.0 g

T0209-1

Step	Activity	Record or Check
29b.	Wgt of undressed sample holder ~~Weigh loose solid metal~~. comparable to item 5	193.6 g ± 1.7g − 0g
29c.	Weigh all foil material.	see data sheet
29d.	Total weight of material in containment vessel sample residue accounted for in mass balance see below	31.34 g
30.	Reduce test data.	☑
31.	Clean test apparatus and prepare for follow-on test.	☑

4.4 Data Reporting

As customary, FAI will advise WHC of individual test results by phone and advise or discuss any variations from the expected operating procedure.

After the second aerosol test, a detailed report of the test data including all temperatures and pressures will be provided. Special sections will detail the gravimetric analysis and note the filter paper weight gain. Test photographs will be submitted to WHC under separate transmittal.

Post-test debris and filters will be sent to WHC for further evaluations of the test data.

345.6	212.29
− 322.0	− 193.6
23.6 g	18.69

For 29d use

sample	50 g
mass lost	23.6 g
residue	26.4 g
residue on foil	4.94
Total residue accounted for	31.37

Initial mass detect 18.66 g

C-14 Estimated gas production 17 to 19 g

T0201-1

Test T0201-1

Pre & Post Test Liner foil wgt

Element	Pretest wgt	Post Test wgt
Bottom	7.88 g	
Lead wraps	11.18	
cover	1.50 g	
sub total bottom	20.56 g	23.96 g
Side	56.05 g	57.26 g
Top	8.17 g	8.50 g
Total	84.78 g	89.72 g
Net gain in weight		4.94 g

T0209-

DATE: 9 Feb 93

WHC AEROSOL TEST T0209-1

TEST PRESSURE 30 psig nom

SAMPLE TEMPERATURE 120°C nom

Sample Holder 25 mm dia x 101 mm lg

Verify Dimensions

Overall Height

TC 1 3/8 No. 58

TC 2 1 3/16 No. 51

TC 3 2 23/64 No. 46

TC 4 1/8 No. 49

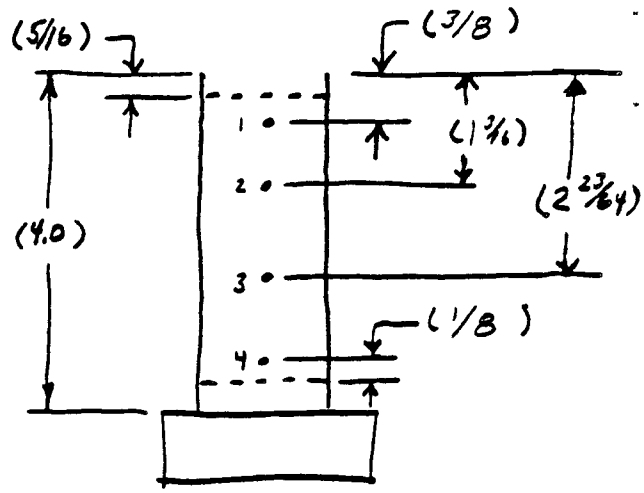

Containment 49 L

TC 5 8" bottom 3" wall No. 104 bottom

TC 6 1 1/2" bottom 3" wall No. 105 top

Pressure Transducer

Range 80 psi (fs) Cal Fac 16 psi/vol

Sample: IN-FARM 1 BOTTOM w 1w% H_2O

Source Ref INFARM 1B Rev 6A Bottom 60% 12-21-92

Vac dried & screened through 140 mesh

Sample Wgt 50.46 SG. 1.31

Sample Hgt. 5/16 from top

Igniter Charge 4.15 gm

Date 9 Feb 93
Test T0209-1

Calculation of Sample Packed Density

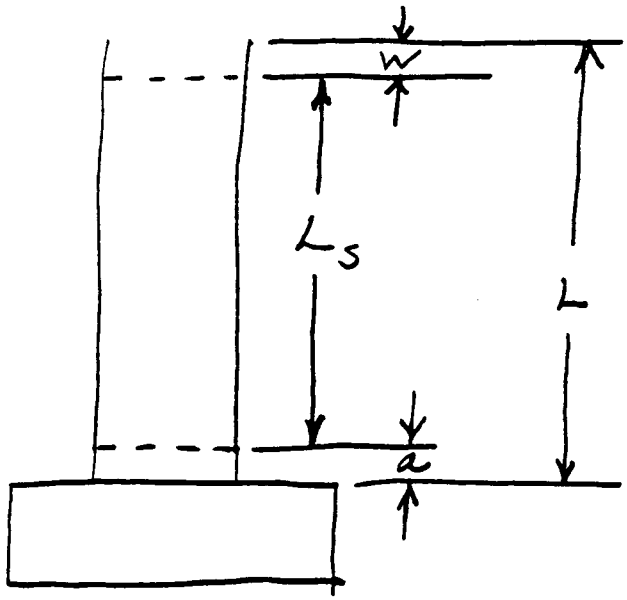

Sample Wgt

M_s = 50.46 gm

D	25	mm		
L	4.0	inch	101.6	mm
a	0.59	inch	15	mm
w	5/16	inch	7.9	mm

$L_s = L - (a+w)$ = 78.7 mm

USE DIMENSIONS IN (mm)

$V_s = \frac{\pi D^2}{4} L_s \times 10^{-3}$ = 38.63 cm^3

Packing Density = $\frac{M_s}{V_s} = \frac{50.46}{38.63}$ = 1.31 $\frac{gm}{cm^3}$

TABLE OF CONTENTS

		Page
1.0	INTRODUCTION AND SUMMARY	1-1
2.0	TEST EQUIPMENT	2-1
	2.1 Reaction Ignition Source	2-1
3.0	TEST MATERIALS	3-1
4.0	TEST PROCEDURES	4-1
5.0	TEST RESULTS	5-1
	5.1 Propagation Rate Data	5-1
	5.2 Overall Containment Environment Response	5-3
	5.3 Post-Test Observations	5-3
	5.4 Gas Evolution Assessment	5-3
6.0	COMPARISON WITH OTHER RELATED RESULTS	6-1
7.0	REFERENCES	7-1
APPENDIX A:	Letter from R. J. Cash to H. K. Fauske, (Ref. [1])	A-1
APPENDIX B:	Test Procedures	B-1
APPENDIX C:	Miscellaneous Test Data Records	C-1

LIST OF TABLES

Table No.		Page
3-1	Material Assay of In-Farm-1 Bottom Flow Sheet Sample . . .	3-1
3-2	Final As-Tested Sample Parameter	3-2
5-1	Reaction Speed Data for Test T0128-1	5-1
6-1	Comparison of Related Propagation Rate Tests	6-1

LIST OF FIGURES

Figure No.		Page
2-1	Overall test equipment configuration	2-2
2-2	High pressure containment vessel used for burn velocity tests	2-3
2-3	25 mm diameter sample holder used in burn velocity tests	2-4
5-1	Thermocouple response to reaction propagation for Test T0128-1, 52 atm. 60°C, 25 mm diameter sample holder, dry InFarm-1 bottom sample	5-2
5-2	Containment response to reaction from Test T0128-1	5-4
5-3	Expanded scale of containment thermocouple response	5-5

1.0 INTRODUCTION AND SUMMARY

This report presents the results of the second test conducted in a series of tests directed by Westinghouse Hanford Company (WHC) in Ref. [1]. For the record, Ref.[1] is included as Appendix A. The test discussed in this document, designated as T0128-1, is a ferrocyanide reaction propagation rate determination test conducted under an inert argon atmosphere of 52 atm. abs. (745 psig). The test was conducted in a 4 L containment volume described in Section 2.0. The test sample was dry In-Farm 1 bottom flow sheet material described in Section 3.0. The test protocol was similar to that described in Refs. [2 and 3]. However, as requested in Ref.[1] supplemental gas sample taking procedures were prepared and followed as described in Section 4.0 and Appendix B.

Test results showed an inverse reaction propagation velocity of ≈ 2 sec/cm. This is about two times faster than observed with the same material under a pressure of 10 atm. abs. and about four times slower than observed in a prior test at 50 atm. pressure using VWW sample. Pre- and post-test gas samples were taken and have been forwarded to WHC for further analyses. Details of these results are presented in Section 5.0 and comparisons with other similar reaction propagation rate tests are discussed in Section 6.0.

2.0 TEST EQUIPMENT

The overall test equipment configuration is shown in Fig. 2-1. This configuration is similar to the configuration used in earlier tests, Ref. [2]. The 4 L containment vessel and environment thermocouple locations are shown in Fig. 2-2. Fig. 2-3 shows details of the 25 mm diameter sample holder. The sample holder is a 0.002 inch thick, type 316 stainless steel sheet rolled onto a 25 mm diameter mold, spot welded to hold a round tube configuration and trimmed to 4 inches in overall length. This tube (considered to be disposable) is slipped over the base stand as shown in Fig. 2-3. After the sample tube is filled with the test sample material, a spiral heater coil is positioned on the outside of the tube wall and type K thermocouples of 0.020 inch diameter are located at the indicated axial elevations.

2.1 Reaction Ignition Source

The use of a barium peroxide and aluminum mixture has proven to be an effective starter for the ferrocyanide reaction. This starter mixture can be ignited with a hot wire. The stoichiometric reaction is written as

$$\underset{(169.34)}{3BaO_2} + \underset{(26.98)}{2A\ell} \rightarrow \underset{(153.34)}{3BaO} + \underset{(101.96)}{A\ell_2O_3}$$

Numbers in ( ) under the above reaction represent the formula weights of the reactants and products. Thermochemical evaluation of this stoichiometric relation indicates the heat of reaction is estimated to be -338 kcal/g-mole BaO_2 or ≈ 9.5 mJ/kg BaO_2. The estimated reaction temperature increase is of the order of 2000°C. This reaction is used to initiate the thermite reactions ($Fe_2O_3 + 2A\ell \rightarrow 2Fe$). The barium peroxide-aluminum reaction as written does not appear to be gassy. Barium oxide, mp 2000°C, bp 3100°C, appears to be quite stable ($A\ell_2O_3$ has a boiling point of 2900°C). However, BaO_2 is reported to decompose to Ba and O_2 at 800°C. This could be a source of gas, albeit small, for this ignition method. The barium peroxide/$A\ell$ starting

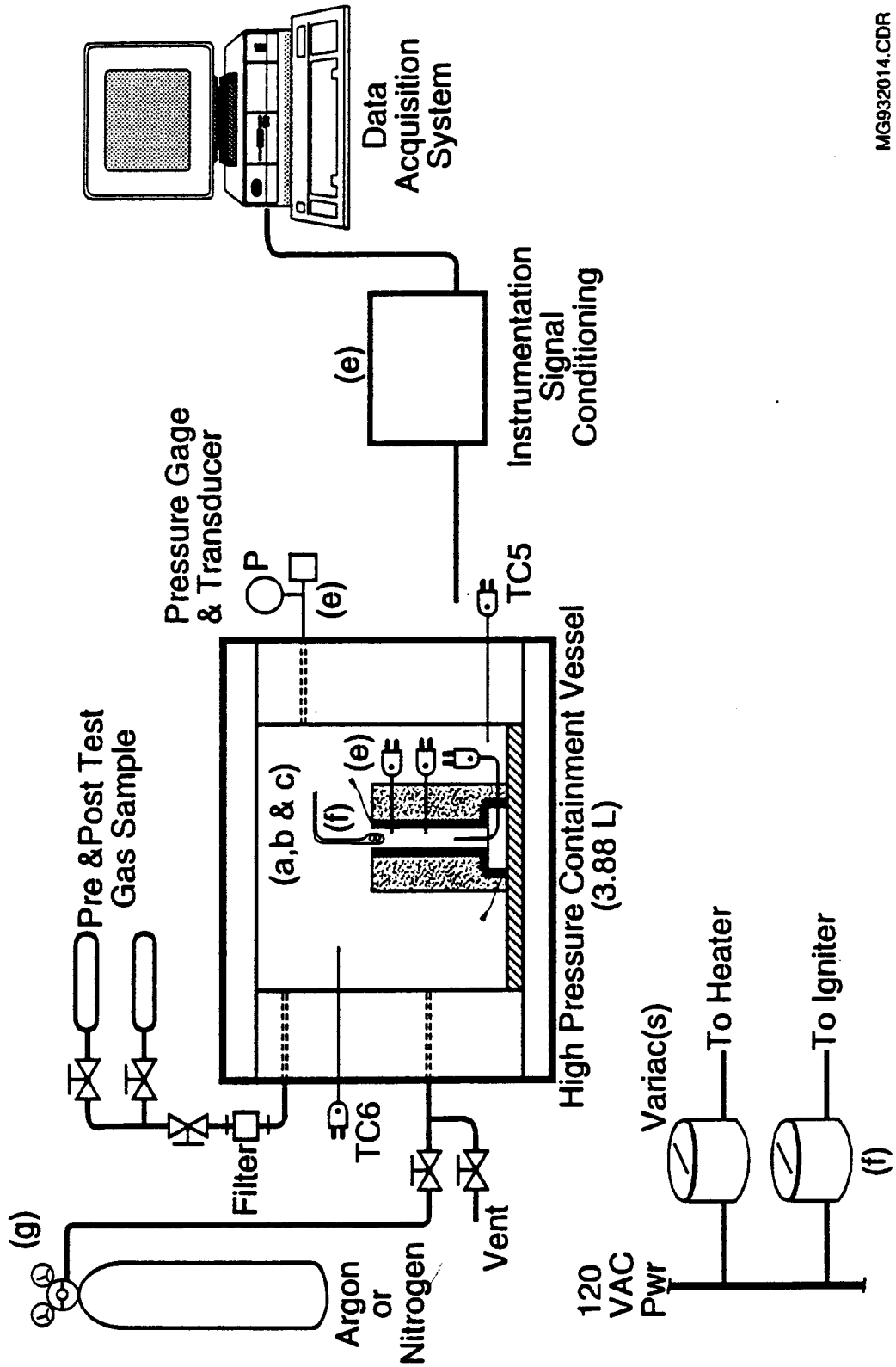

Fig. 2-1 Overall test equipment configuration.

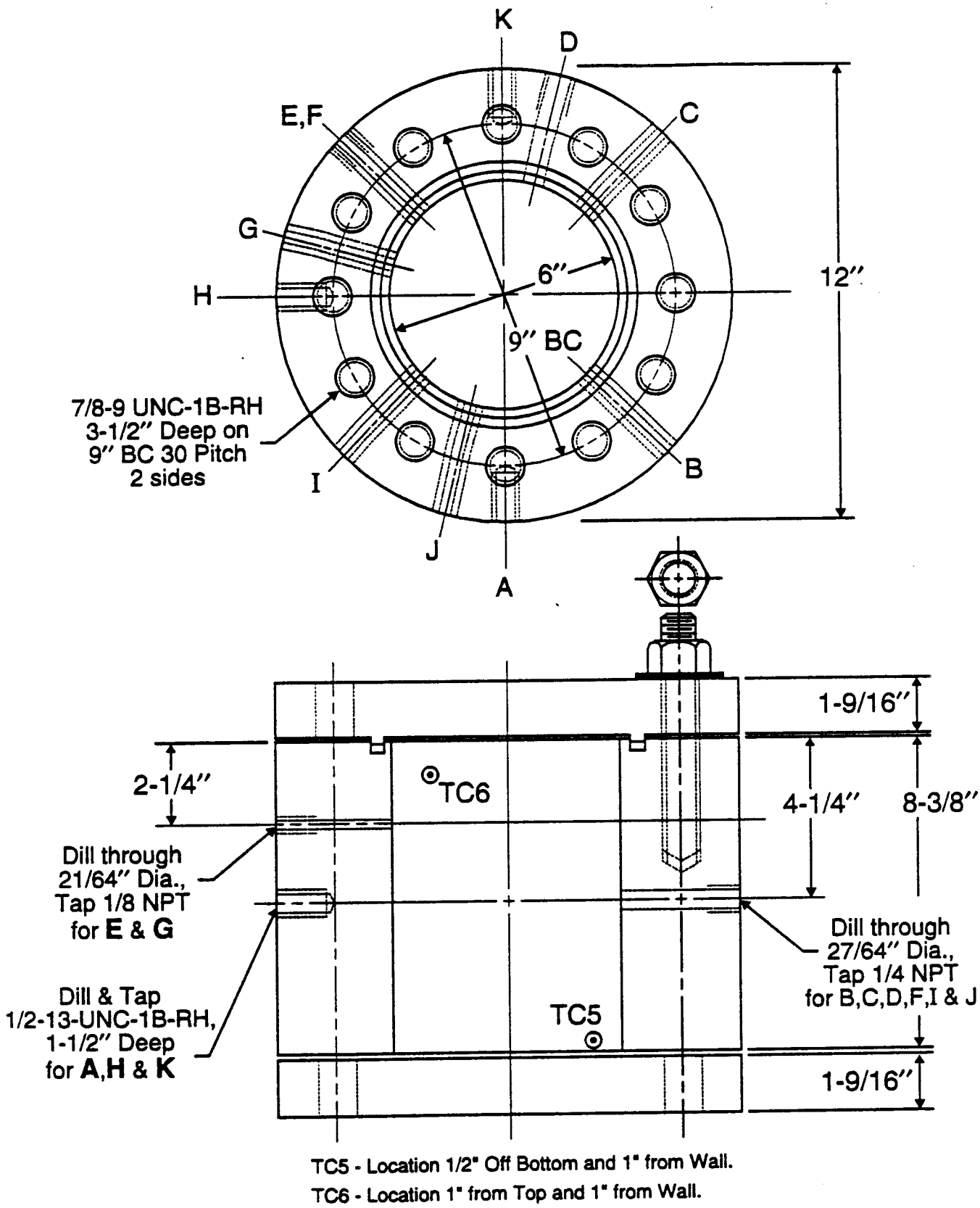

MG932027.CDR

Fig. 2-2 High pressure containment vessel used for burn velocity tests.

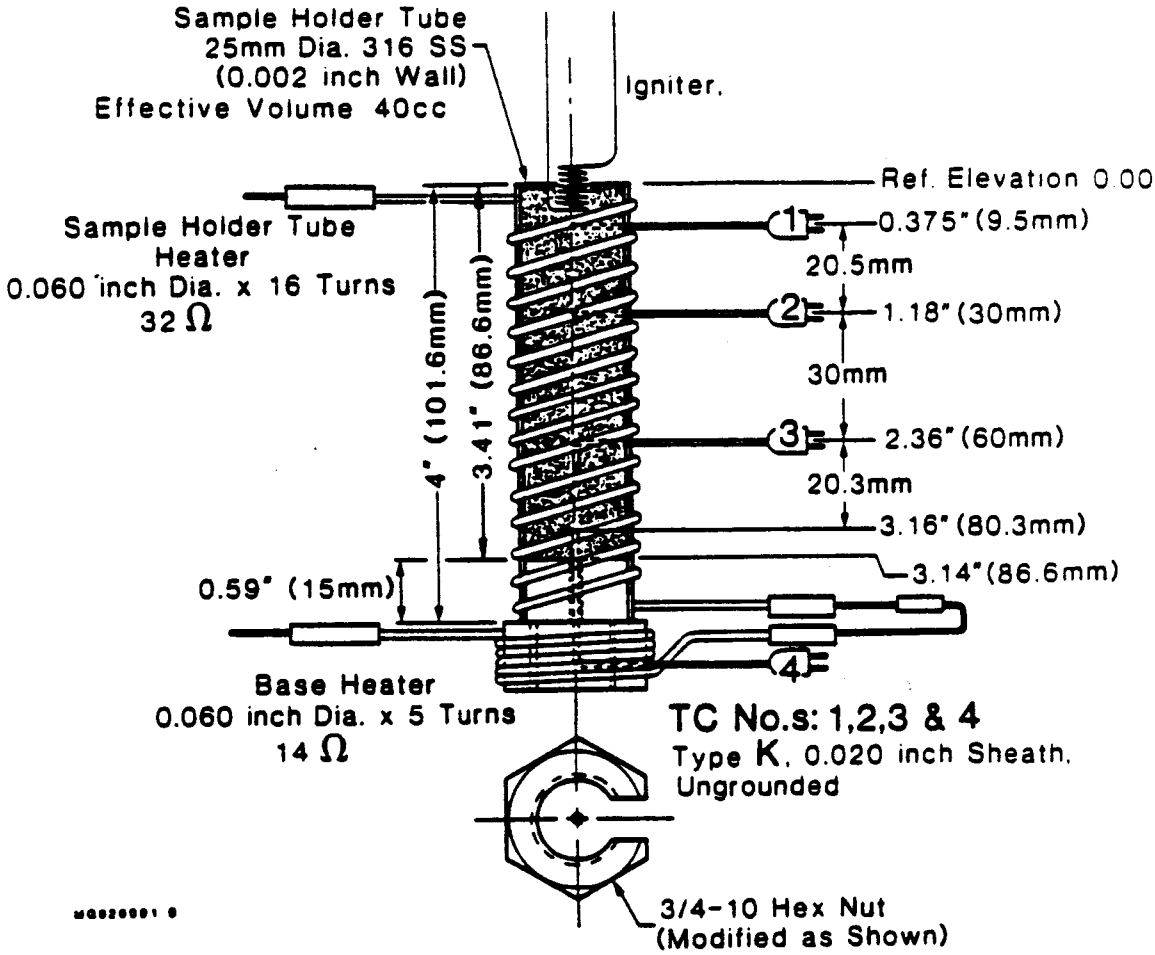

Fig. 2-3 25 mm diameter sample holder used in burn velocity tests.

mixture will be separated from the ferrocyanide column by a thin aluminum foil. The ignition method has been used as described in previous propagation rate studies, Ref. [2].

3.0 TEST MATERIALS

The test sample used in this test, T0127-1, was In-Farm 1 bottom flow sheet material received from WHC. The material was vacuum dried and then sieved through a 140 mesh U.S. standard screen having a 106 μ mean particle size. The test sample assay is estimated to be as stated in Table 3-1 based on information provided by WHC.

Table 3-1
Material Assay of
In-Farm-1 Bottom Flow Sheet Sample

Material	Wt. %
--$Fe(CN)_6$	26.0
$NaNO_3$	50.0
$NaNO_2$	12.2
Na_3PO_4	5.2
Na_2SO_4	3.8
NiS	2.8
TOTAL	100.0
Fuel/Oxidizer Ratio	.418

--$Fe(CN)_6$ is estimated to be 93.8% $Na_2NiFe(CN)_6$ and 6.1% $NaCsNiFe(CN)_6$.

The test sample charge was 49.8 gm packed in the sample holder to a packing density of 1.33 gm/cm^3. After the ferrocyanide sample was loaded and packed, 4.4 gm of barium peroxide/aluminum igniter mixture were placed in the top 13/32 inch of the sample holder in a thin aluminum foil pan.

The final as-tested sample parameters are summarized in Table 3-2 below.

Table 3-2
Final As-Tested Sample Parameters

Test Sample	InFarm-1 Bottom per Table 3-1
Water Content	Dry
Particle Size	106 μ
Sample Packing Density	1.33 gm/cm^3
Containment Pressure	52 atm abs
Sample Holder Diameter	25 mm

Pre-Test Sample Temperature:

TC1	TC2	TC3	TC4
46°C	68°C	69°C	50°C

Pre-Test Containment Volume Temperature and Pressure:

TC5	TC6	P
22°C	29°C	745 psig

In addition to the physical test sample parameters, Table 3-2 lists the actual pre-ignition test conditions as recorded just prior to the sample burn.

4.0 TEST PROCEDURES

Procedures identified in Ref. [3] and Appendix B were followed in the conduct of the test. Pre- and post-test containment volume gas samples were taken, identified and forwarded to WHC for further analysis.

5.0 TEST RESULTS

5.1 Propagation Rate Data

The thermocouple data which indicate the linear reaction velocity are shown in Fig. 5-1. Table 5-1 indicates the various speed measurements which can be obtained from these data.

Table 5-1
Reaction Speed Data for Test T0128-1

TC#	Location* mm	Time sec	Reaction Propagation Rate			
TC1	9.53	16.6	TC1 → TC2 6.88 mm/sec			
TC2	30.16	19.6		TC2 → TC3 4.59 mm/sec		
TC3	59.53	26.0			TC3 → TC4 5.19 mm/sec	
TC4	81.85	30.3				TC1 → TC4 5.28 mm/sec

*From top of sample holder.

An overall average reaction velocity in the 25 mm diameter sample holder at 53 atm. abs. is ≈ 0.53 cm/sec. (31.8 cm/min).

Thermocouple TC3 showed a response coincident with TC1. Similar erratic behavior has been noticed in prior tests due to melting sample or initiator eruptions. However, a second response of TC3 at 26 sec. (see Fig. 5-1) is taken as the best indication of the reaction front passing. As can be seen from Table 5-1, this judgement leads to a fairly consistent estimate of speed between TC locations 2 and 4 (good response locations). The average reaction speed between TC2 and TC4 is 4.83 mm/sec. The overall

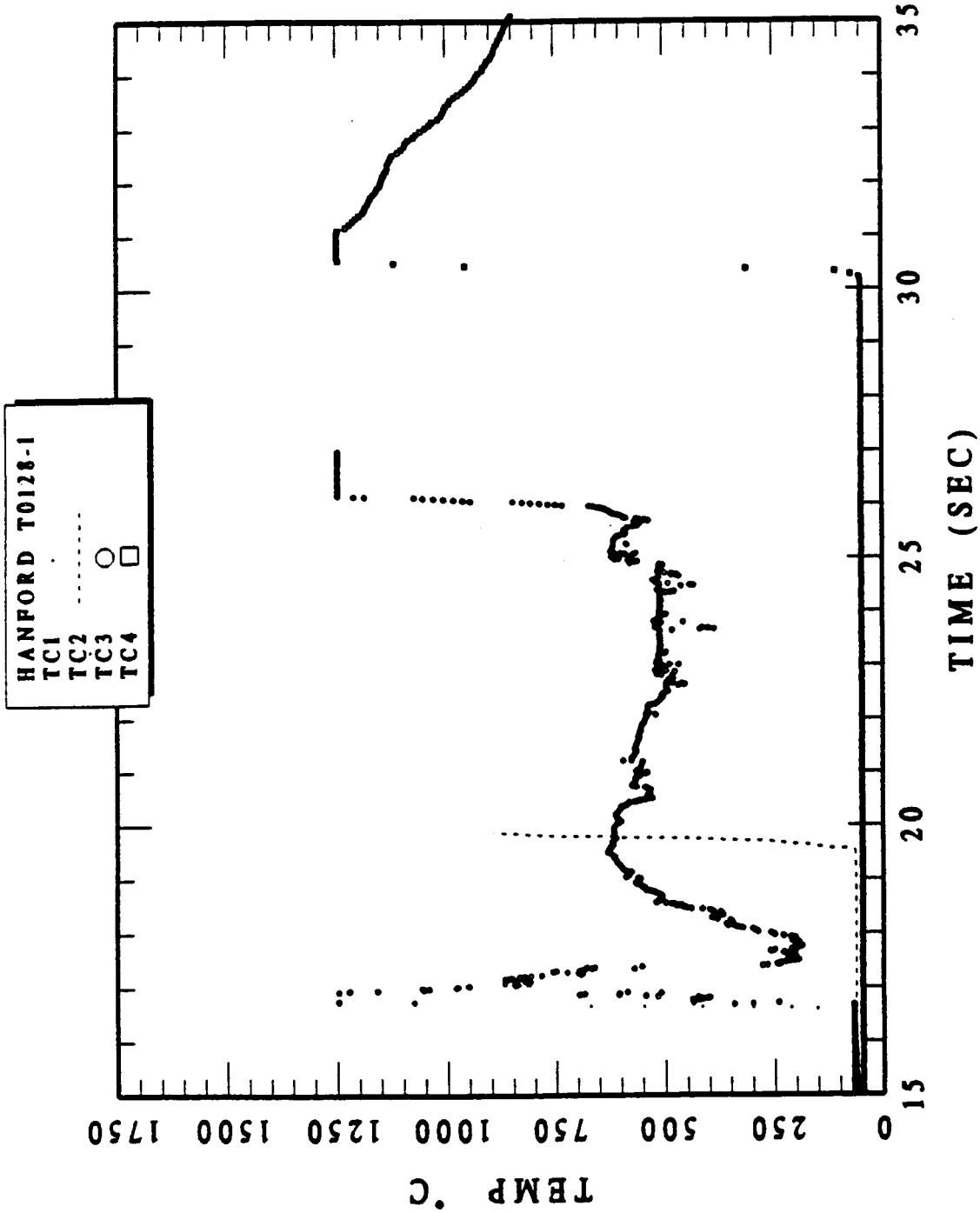

TIME VS TC1, TC2, TC3, TC4

Fig. 5-1 Thermocouple response to reaction propagation for Test T0128-1, 52 atm. 60°C 25 mm diameter sample holder, dry InFarm-1 bottom sample. Average propagation velocity .53 cm/sec.

average of 5.28 mm/sec is a result of the faster reaction velocity between locations TC1 and TC2. This may be a result of an initial "kick" provided by the hot initiator.

5.2 Overall Containment Environment Response

Fig. 5-2 provides the overall containment pressure and temperature response. The location in time for the post-test gas sample is shown in Fig. 5-2. Fig. 5-3 shows an expanded scale for the containment thermocouples.

5.3 Post-Test Observations

This sample did not burn as hot as noted in Ref. [4]. The long term cooldown containment pressure was 779 psig ± 2 psig at a temperature of 25°C ± 3°C. This represents an isothermal containment pressure increase of ≈ 779 psig - 745 psig = 34 psig. Note that a post-test gas sample was also collected representing 50 cc volume at ≈ 937 psig.

5.4 Gas Evolution Assessment

In this test, T0128-1, the containment volume was not vented (except for the gas sample) until after the temperature cooled down to 25°C. At this time the containment pressure was recorded as 779 psig. The isothermal containment volume pressure change was

Post-Test pressure	779 psig
Pre-test pressure	795 psig
$\Delta P =$	34 psig

One can estimate the gas evolution from the reaction according to an ideal gas relation such as

$$\frac{dn}{n} = \frac{dP}{P} + \frac{dV}{V} \qquad (5\text{-}1)$$

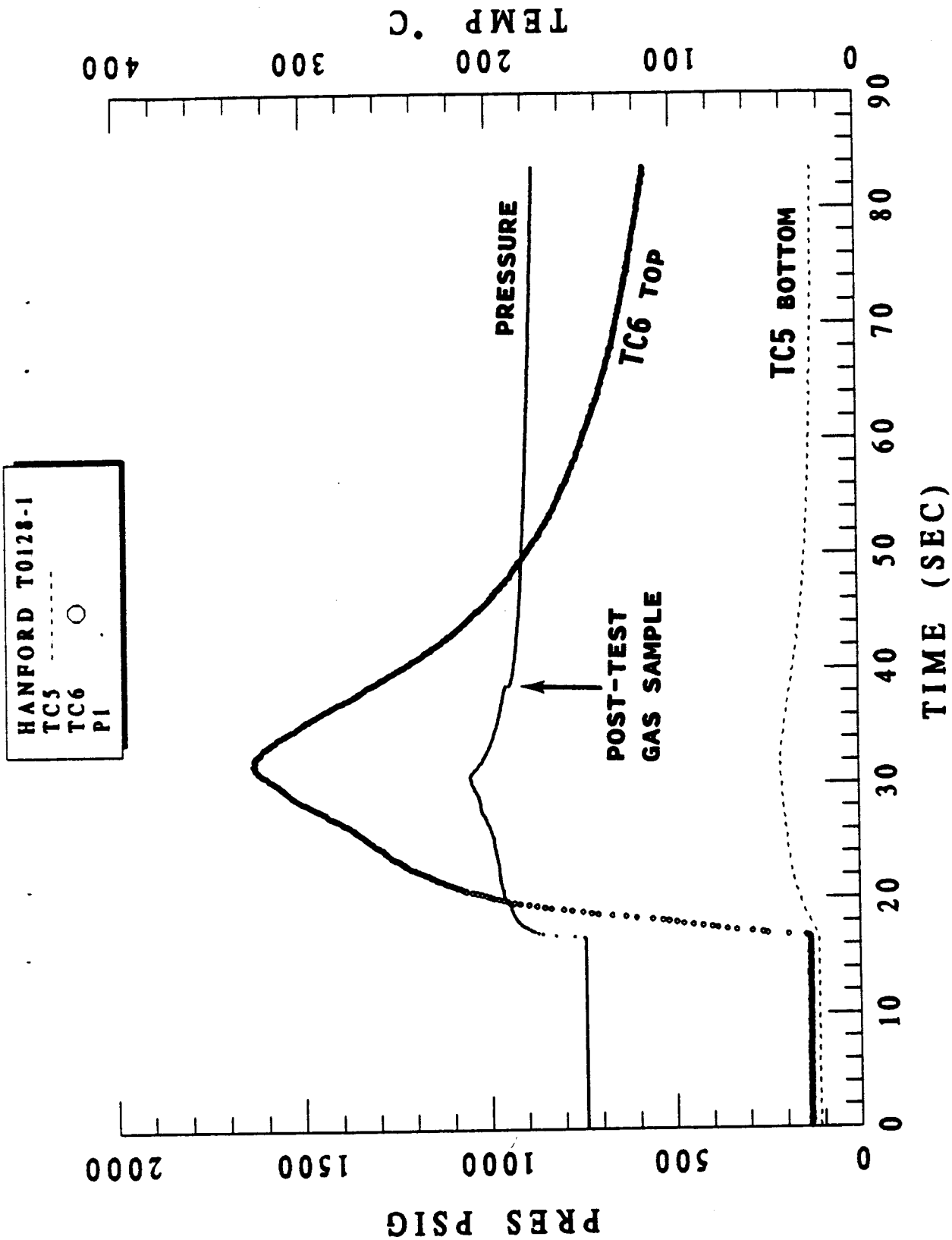

TIME VS. P, TC5, TC6

Fig. 5-2 Containment response to reaction from Test T0128-1.

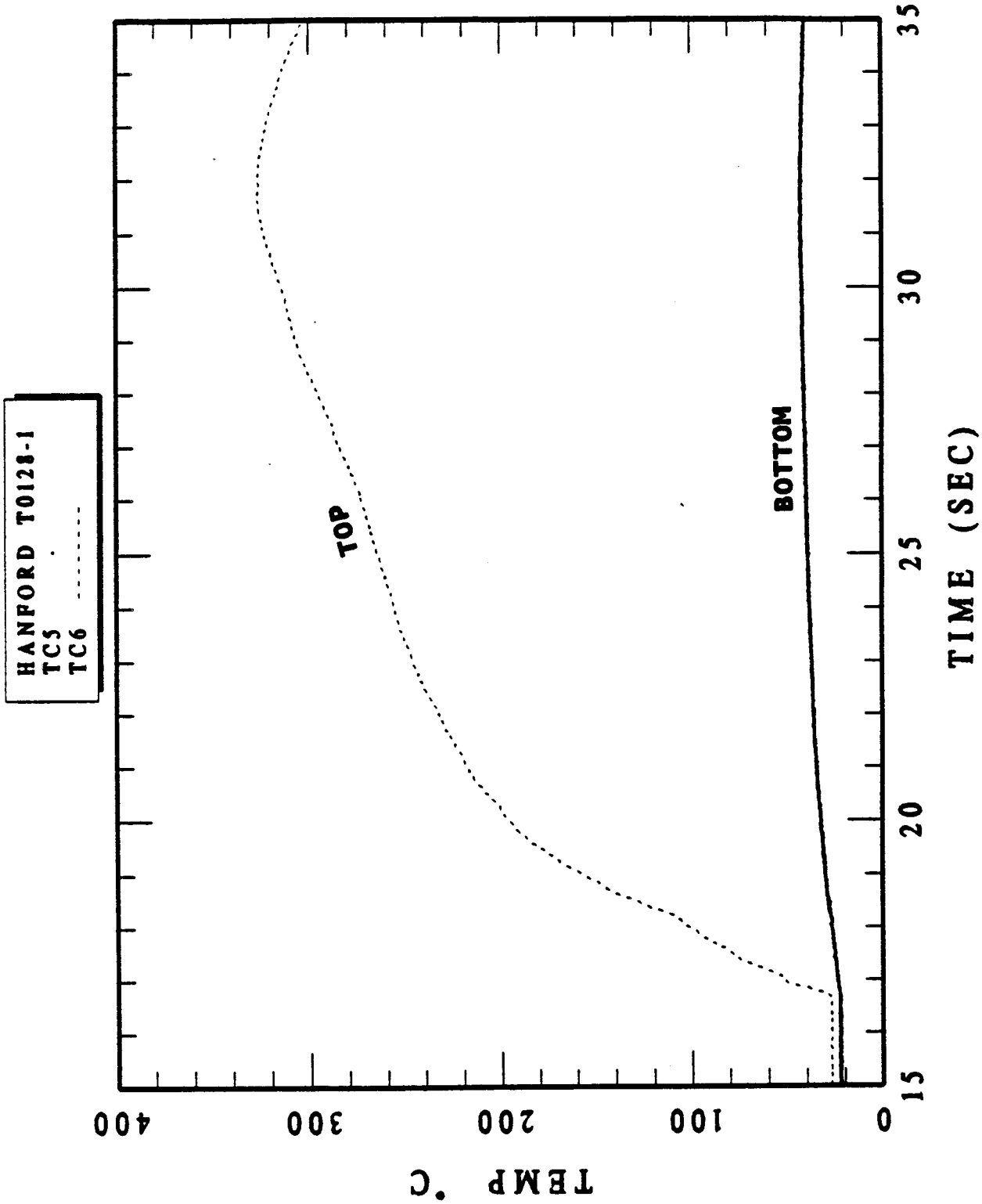

TIME VS TC5, TC6

Fig. 5-3 Expanded scale of containment thermocouple response.

assuming constant temperature where

n is the number of moles of gas
P is the pressure
V is the containment volume

The first term on the right-hand side of Eq. (5-1) is evaluated using test pressure data as

$$\frac{dP}{P} = \frac{34}{(745 + 14.7)} = 0.0448$$

The second term can be estimated from the 4 L containment volume and the .05 L gas sample volume as;

$$\frac{dV}{V} = \frac{.05}{4} = 0.0125$$

Therefore, the net relative change in moles of gas is estimated to be

$$\frac{dn}{n} = .0448 + .0125 = 0.0573$$

The initial reference moles of gas

$$n = \frac{4}{22.4} \times 52 = 9.286 \text{ mole}$$

so that the new gas evolved is

$$\Delta n = 9.286 \times .0573 = 0.532 \text{ mole}$$

One can compare this to the initial inventory of ferrocyanide.

The InFarm-1 bottom sample is 26 w% ferrocyanide of which ≈ 94 w% is $Na_2NiFe(CN)_6$, (Mw = 316) and ≈ 6 w% $NaCsNiFe(CN)_6$, (Mw = 426). The total sample charge for test T0128-1 is 49.8 gm. These considerations lead to a total of 0.0403 mole of ferrocyanide.

The ratio of the estimated moles of new gas (0.532) to moles of ferrocyanide (0.0403) is given below as

$$\frac{\text{moles of gas evolved}}{\text{moles of ferrocyanide}} = \frac{0.532}{.0403} = 13.2$$

This measured ratio compares favorably with theoretical estimates of between 12 and 14 moles of gas for ferrocyanide oxidation reactions.

6.0 COMPARISON WITH OTHER RELATED RESULTS

Table 6-1 shows a comparison of results from the present test T0127-1 with other In-Farm 1 bottom reaction rate results previously reported in Refs. [4] and [5].

Table 6-1
Comparison of Related Propagation Rate Tests

Test	Material	Pressure atm	Initial Temperature °C	Specific Gravity	Reaction Propagation Rate cm/min
T0727-1	IF1B	1	26	1.23	10
*T0127-1	IF1B	10	60	1.26	16
T0819-1	VWW	50	60	1.25	132
**T0128-1	IF1B	53	60	1.33	32

*Ref. [4]
**Subject of this report.
IF1B - In-Farm 1 bottom flow sheet material.
VWW - Vendor supplied material.

7.0 REFERENCES

1. Letter; R. J. Cash to H. K. Fauske, "Subject: Aerosol Propagation Tests and Parametric Pressure Propagation Test", January 12, 1993.

2. FAI/92-66 (Revised), "Test Plans and Procedures for Determination of Reaction Propagation Velocity in Sodium Nickel Ferrocyanide Compounds", July, 1992.

3. FAI/92-81, "Adiabatic Calorimetry and Reaction Propagation Rate Tests with Synthetic Ferrocyanide Materials Including UPlant-1, UPlant-2, In-Farm 1, In-Farm 2, and Vendor-Procured Sodium Nickel Ferrocyanide", July, 1992.

4. FAI/93-12, "Summary Report on Parametric Pressure Propagation Test T0127-1", Jan., 1993.

5. Letter; H. K. Fauske to R. J. Cash, Subject: "Status Report on Reaction Propagation Rate Tests with Synthetic Sodium Nickel Ferrocyanide Material", September 21, 1993.

APPENDIX A

Letter from R. J. Cash to H. K. Fauske (Ref. [1])

Photographs are requested of the deposits inside of the chamber after the test. The filter papers and O rings from the aerosol filter should be weighed (to four significant figures) before and after aerosol loading to determine the mass of aerosol collected. (Rental of a balance, as necessary, to make these measurements is approved.) Quartz filter papers will be used and should be handled with tweezers only, since sodium can be picked up from human hands. Filter paper holders have been provided to you for handling and shipping purposes.

It is desirable to make a material balance on the cesium and other metallic elements during this test. The inside of the chamber should be lined with aluminum foil to collect any cesium plate-out on exposed surfaces. The aerosol should be removed from the vent gas by filtering, and all of the remaining solid reaction products should be weighed. The gas samples, loaded filter paper, solid reaction products, and foil liner should be returned to WHC for analysis as soon as possible after completion of each test.

Perform the second aerosol test at an initial temperature of 120 °C but with all other conditions kept the same as the first test; the same data measurements should be made. It is expected that the 1 wt % water added to the test material will be retained within the sample at 120 °C up to the point of ignition of the second test reaction.

Please submit the aerosol propagation test procedure for WHC approval prior to conducting these tests.

It is requested that you perform one additional propagation test at an initial pressure of 10 atmospheres absolute using an argon environment. Use dry (0 wt% water) In-Farm-1 bottom fraction material for this test, the 25 mm diameter test bed, an initial temperature of 60 °C, a specific gravity of about 1.2 (actual density measured), and a particle size as screened through a 140 mesh screen. This test can be conducted in the 49 liter chamber, if you choose. Obtain a gas sample of the containment atmosphere before and after the reaction. Please provide a detailed gas sampling procedure for approval prior to conducting this test. Use of the WHC-provided samplers (NUPRO) with end caps to provide a second seal and to protect threaded connections is requested. Please report the results of these tests, including the temperatures of the chamber gas as a function of time, in a summary report, available for public release.

Please provide measured gas temperatures within the containment atmosphere (and provide the location of the thermocouples) as a function of time for each propagation test conducted to date with the disodium mononickel ferrocyanide mixtures. The gas temperatures and pressure measurements during the reaction time and during cooling time are desired. Temperature and pressure measurements of the containment gas atmosphere are also needed at the time that the gas samples were/are obtained. Your prompt response to this request for tests completed to date would be appreciated.

About 1.4 kg of additional In-Farm-1 bottom fraction simulant material was shipped to you on January 5, 1993. The composition of the In-Farm-1 bottom fraction simulant is still being determined by laboratory analysis and will be provided to you in the near future so that the final six screening propagation tests can be conducted. About one Kg of U-Plant-1 sludge will be prepared and shipped to you for the bake out tests discussed at the December 9 and 10, 1992 meeting at Hanford. Additional gas sampler (NUPRO) containers are also being shipped to you.

For your information the gas analysis of the containment atmosphere gases for four propagation tests conducted previously are listed in Table 1. It should be noted that analytical results of two of the pretest samples indicate that there is a concern about the initial condition of the test chamber atmosphere. Either the gas sampling was not conducted properly or the containment atmosphere was not adequately purged. See footnotes of Table 1.

Please address questions to D. W. Jeppson at (509) 376-6058 or to me at (509) 373-3132.

~~Very truly~~ yours,

R. J. Cash, Manager
Ferrocyanide Safety Technology
Tank Waste Remediation System

fm

TABLE 1

Gas Analysis of Containment Gases for Propagation Tests

Sample	Mole %											
	CO_2	Ar	O_2	N_2	CO	He	H_2	CH_4	N_2O	NO	NO_2	SO_2
T0820-1-Pre	<0.01	99.99	<0.01	0.003	<0.10	<0.01	<0.01	<0.01	<0.01	<0.01	<0.01	<0.01
T0820-1-After	1.08	95.4	0.26	3.26	<0.10	<0.01	<0.01	<0.01	<0.01	0.02	<0.01	<0.01
T0821-1-Pre	0.02	92.1	1.62	6.27	<0.10	<0.01	<0.01	<0.01	<0.01	<0.01	<0.01	<0.01
T0821-1-After	14.8	24.2	0.04	45.7	<0.10	<0.01	0.03	<0.01	<0.01	15.3	<0.01	<0.01
T0825-1-Pre*	0.10	54.6	9.21	36.1	<0.10	<0.01	<0.01	<0.01	<0.01	<0.01	<0.01	<0.01
T0825-1-After	3.90	84.8	0.09	11.2	<0.10	<0.01	0.01	<0.01	<0.01	0.01	<0.01	<0.01
T0826-1-Pre	<0.01	99.98	<0.01	0.02	<0.02	<0.01	<0.01	<0.01	<0.01	<0.01	<0.01	<0.01
T0826-1-After	0.61	97.5	0.03	1.75	<0.10	<0.01	0.02	<0.01	<0.01	0.01	<0.01	<0.01

* This sample bottle (FAI supplied) was at low pressure and the valve was reported by the analytical laboratory to be leaking.

Note: Sample T0821-1-Pre results may imply that adequate purging of the chamber was not done prior to performance of the test.

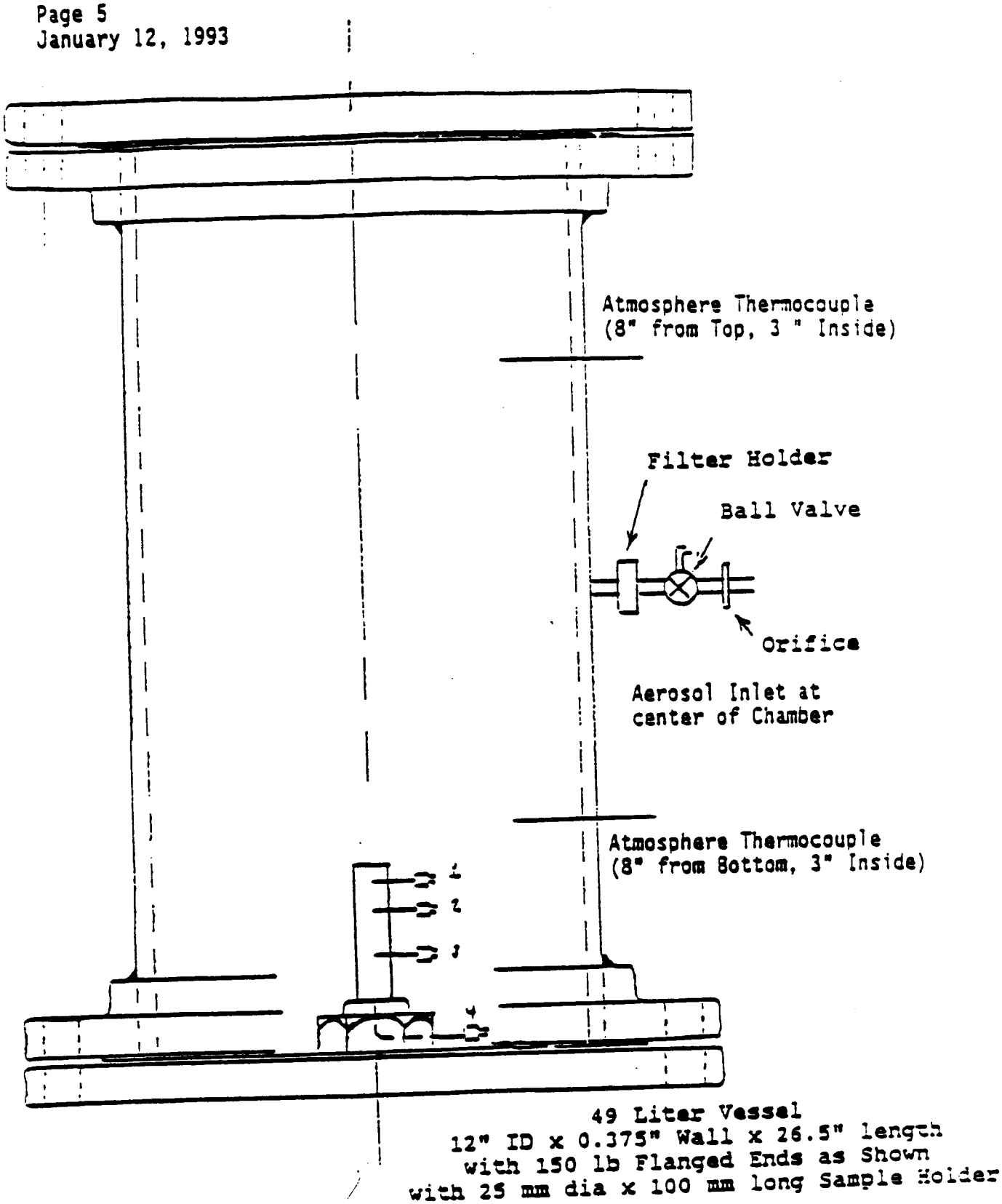

Figure 1
Aerosol Test Containment Vessel

APPENDIX B

Test Procedures

SUPPLEMENTAL PROCEDURE FOR TAKING PRE- AND POST-TEST TEST CELL CONTAINMENT GAS SAMPLE

(REVISED: 26 Jan 93)

1.0 INTRODUCTION

This operating procedure covers the taking of test cell containment gas samples for ferrocyanide reaction rate propagation tests conducted for Westinghouse Hanford Company and supplements the general test procedures as defined in Ref. [1]*. The procedure is designed to provide consistency and uniformity in the gas sample taking operations and minimize the potential for unwanted leakage or other sources of loss of data.

2.0 PROCEDURE

This procedure is subdivided into four parts. Part 1 defines the pre-test sample cylinder preparations and test cell containment purge. Part 2 define the pre-test gas sample taking activity. Part 3 defines the post-test sample taking activity. Part 4 covers the gas sample identification procedures.

2.1 PRE-TEST PREPARATIONS

Use only gas sample container provided by Westinghouse Hanford Company (NUPRO style with special end caps) for this purpose. The test cell and gas sample installation will be configured as shown in Fig. 2.1-1. However, prior to achieving this configuration both the containment volume and the gas sample cylinder connection lines must be prepared and checked for leak tightness.

---

*. FAI/92-66 (Revised), "Test Plans and Procedures for Determination of Reaction Propagation Velocity in Sodium Nickel Ferrocyanide Compounds", (July, 1992).

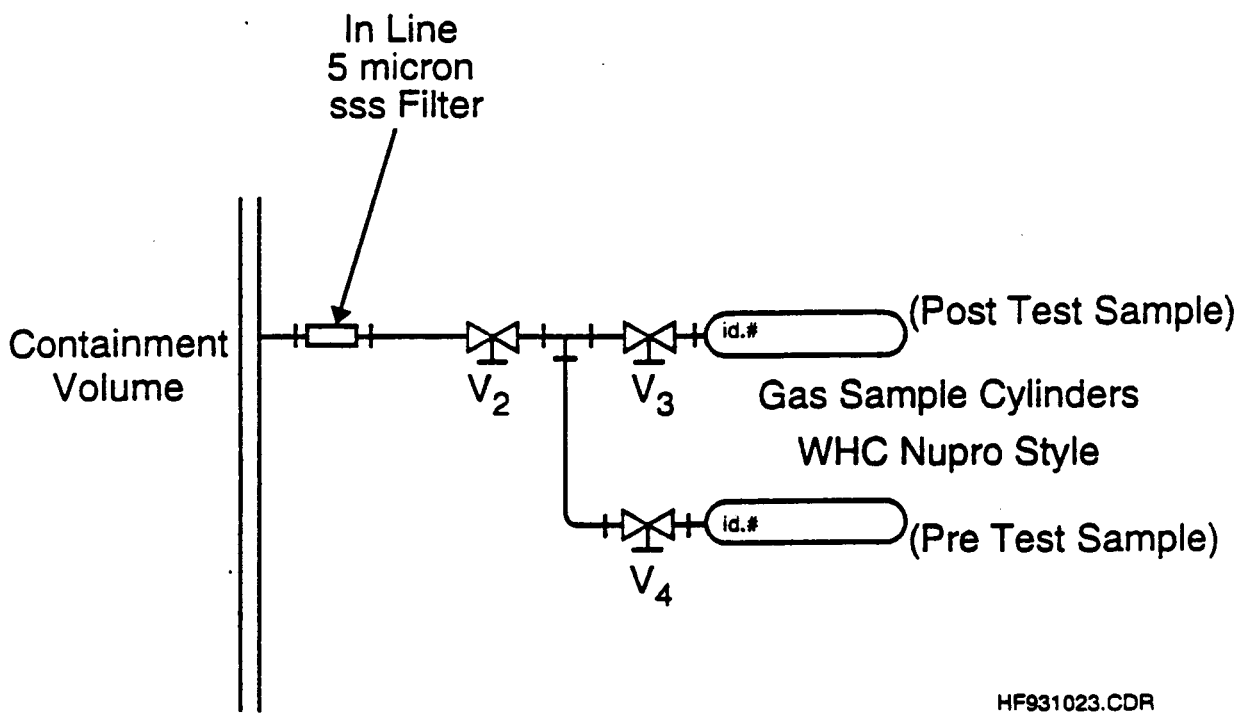

Figure 2.1-1 Installed gas sample cylinders.

2.1.1 GAS SAMPLE CYLINDER

(1) Label gas sample cylinder and valve.
Label ID Pre Test FAI-3 // Post Test FAI-6
Date of this verification 28 Jan 93 ☑

(2) Prior to test purge two cylinders for each test for five cycles and for each cylinder end the last cycle with a 30 min evacuation:

(2.1) Label each gas sample cylinder with test ID number and designated pre- and post-test sample. ☑

(2.2) Purge and evacuate with gas sample cylinder configured according to Fig. 2.1-2. ☑

MIN	VACUUM HOLD TIME			CYCLE	VACUUM	FILL
10	06:30	to	06:50	1	28"	10 psig
10	06:52	to	07:10	2	28"	10 psig
10	07:12	to	07:45	3	28"	10 psig
10	07:47	to	07:20	4	28"	10 psig
30	08:23	to	09:35	5	28"	X

(2.3) At end of purge, cap gas sample cylinder until ready for use.

2.1.2 CONTAINMENT VOLUME

The containment volume fittings and flanges should be checked for leak tightness at some time prior to testing. This section of the procedure assures a proper argon test atmosphere and verifies the leak tight status.

Prior to the test (propagation reaction rate test) the containment volume should be 99.9% argon or better and be set at the prescribed test pressure. Since on-site analysis of the containment environment is not

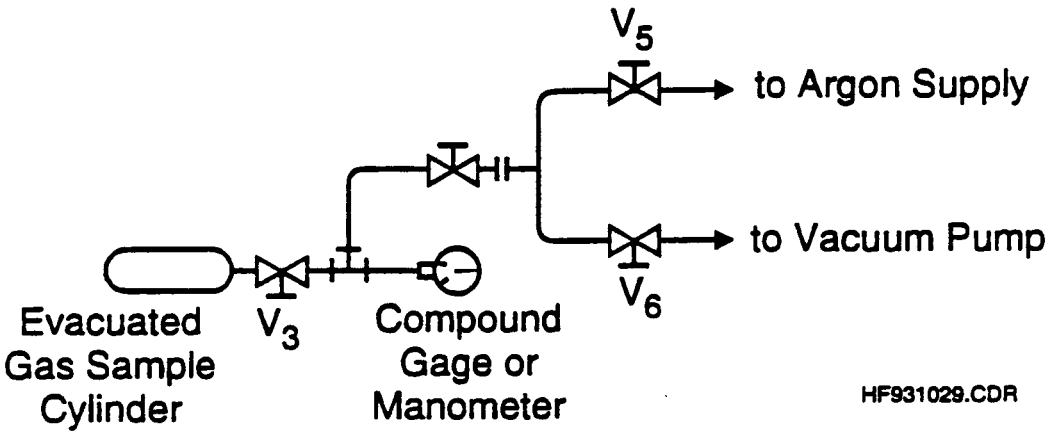

Figure 2.1-2 Configuration of gas sample cylinder for purging and final evacuation.

possible, the desired argon atmosphere will be established by a five cycle evacuation and argon fill procedure.

Purging of the containment volume should be completed just prior to the test activities. The purge configuration is shown in Fig. 2.1-3. The purge procedure is as follows:

(1) Attach prepared gas sample cylinders to valve V2 per Fig. 2.1-3.

(2) Set up for purge per Fig. 2.1-3. ☑

Valve Configuration -

V1	Open
V2	Open
V3 & V4	Closed
V5 & V6	Used for purge cycles
V7 & V8	Open

(3) Purge cycle - record pressure readings. ☑

CYCLE	VACUUM	FILL
1	28"	10 PSIG
2	28"	10 PSIG
3	28"	10 PSIG
4	28"	10 PSIG
5	28"	— ← 750 psig

(4) At end of purge cycle: Close V2 and V7 remove manometer or low range pressure transducer and cap valve, V7. ☑

(5) Pressure containment to test pressure and check for leaks - must hold pressure within 2% for 1 hr (Note: if leaks are discovered and cannot be fixed at pressure, reduce pressure, fix leak and repeat purge procedure). ☑

hold

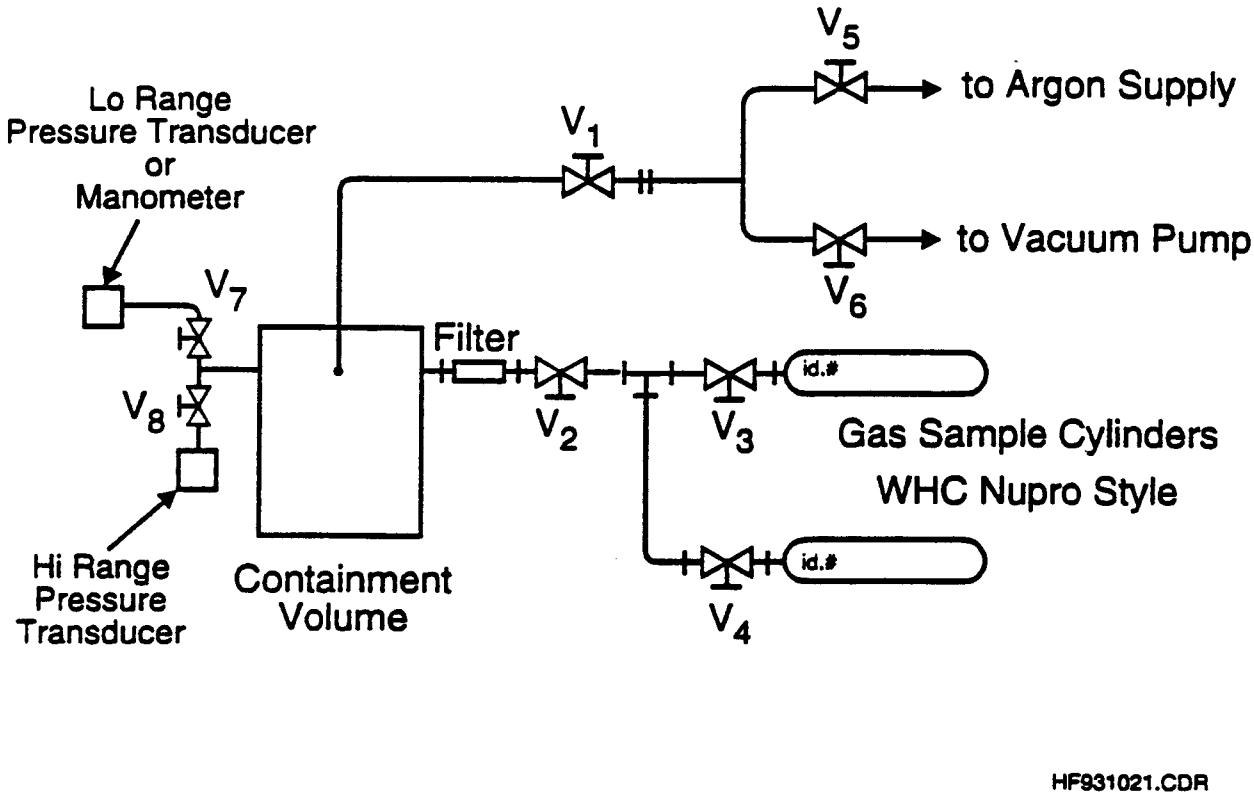

Figure 2.1-3 Configuration of test apparatus for purging.

2.2 PRE-TEST GAS SAMPLE TAKING ACTIVITY

772 drum psig
768 psig computed

(1) Containment vessel is leak tight and at pressure. ☑

Record: Pressure 770 ±2 psig

Temperature TC5 20°C TC6 20°C

(2) Open V2 and V3 - hold open for 30 sec. ☑

756 psig computed
760 drum

(3) Record containment vessel. ☑

Record: Pressure 758 ±2 psig

Temperature TC5 19°C TC6 19°C

(4) Close V2 and V3. Adjust containment vessel pressure if required. ☑

~~(5) Remove and cap gas sample cylinder.~~ ☑

(6) Attach properly labeled post-test gas sample cylinder to test apparatus per Fig. 2.1-1. ☑

(7) Run test per established test plan. ☑

2.3 POST-TEST GAS SAMPLE ACTIVITY

(1) After test burn is verified as soon as practical - ☐

Record: Time After Start of Test _____

see chart

Pressure _____ ☐

Temperature _____ ☐

(2) Open V2 and V3 - hold open for 30 sec. ☐

(3) Record containment vessel -

Pressure _____ ☐

Temperature _____ ☐

(4) Close V2 and V3.

(5) Remove and cap gas sample cylinder.

2.4 IDENTIFICATION VERIFICATION

Verify pre- and post-test gas sample identification and transfer data to following summary table. ☐

GAS SAMPLE SUMMARY DATA SHEET

TEST ID T0128-1 DATE 28 Jan 93

PRE-TEST GAS SAMPLE:

(a) Gas Sample Cylinder Identification: FAI 3

(b) Cylinder Volume: 50 cc

(c) Test Label as Shipped: T0128-1 PRETEST GAS SAMPLE
Container Pressure ≈ 750 psig
FAI 74213

(d) Pre-Sample Pressure: Vac 1" Hg abs ± ½ inch

(e) Containment Volume:

	Pressure	Temperature
Before Sample:	770 psig	20 °C
After Sample:	758 psig	19 °C

POST-TEST GAS SAMPLE:

(a) Gas Sample Cylinder Identification: FAI 6

(b) Cylinder Volume: 50 cc

(c) Test Label as Shipped: T0128-1 POST TEST GAS SAMPLE
Container Pressure ≈ 770 psig
FAI 29316

(d) Pre-Sample Pressure: Vac 1" Hg abs ± ½ inch

(e) Containment Volume:

	Pressure	Temperature
Before Sample:	796 psig	TC 6 250°C TC 540°C
After Sample:	937 psig	" "

APPENDIX C

Miscellaneous Test Data Records

Data Sheet Form L-001
Reaction Propagation Test

Date	28 Jan 93
Test ID	T 0 128-1
Material	In Form 1 Bottom
Fill Height	See data sheet
Mass	49.8 g
Initial Pressure	745 psig
Initial Temperature	60°C nominal
Final Pressure	779 psig
Final Gas Temperature/Time	25°C /
Test Configuration	nexting

			Time, if yes
Gas Sample	Yes ☒	No ☐	
Residue Sample	Yes ☐	No ☐	

Test Notes Test conducted in 4 L containment vessel, operation satisfactory

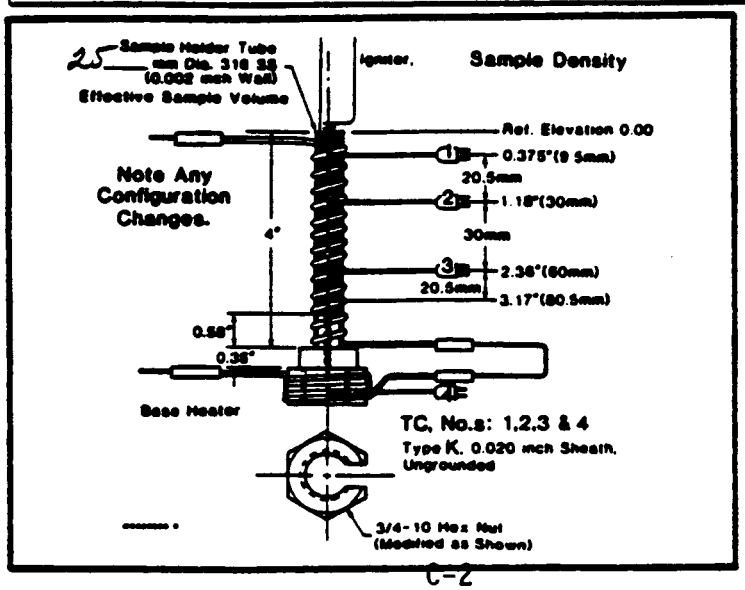

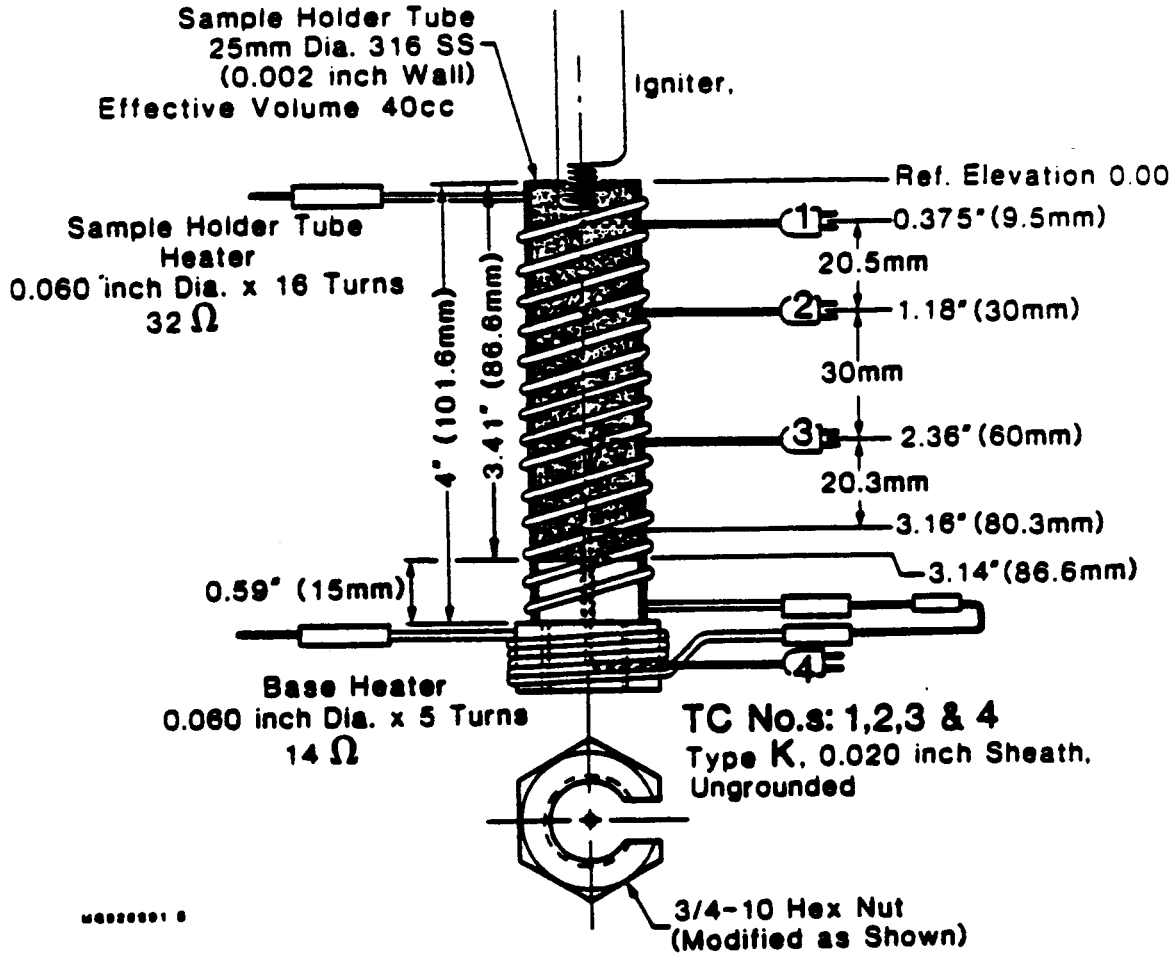

Fig. 2-3 25 mm diameter sample holder used in burn velocity tests.

28 Jan 1993

WHC PROPAGATION TEST B T0128-1

TEST PRESSURE _ _ _ _ _ _ _ _ _ _ 750 psig

SAMPLE TEMPERATURE _ _ _ _ _ _ _ _ 60°C

Sample Holder 25 mm dia x 101 mm lg

Verify dimensions:

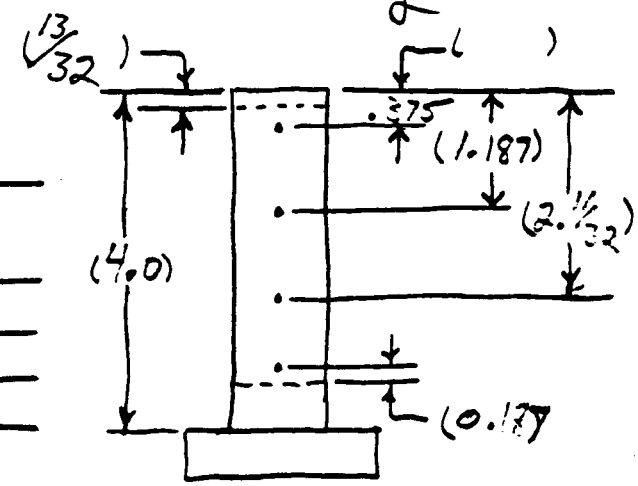

Overall height _____

TC1	3/16" FROM TOP	No.	38
TC2	1 7/16 FROM TOP	No.	39
TC3	2 11/32 FROM TOP	No.	10
TC4	3/16 FROM BOTTOM BASE	No.	50

Containment: 4L.

TC5	1/2 FROM BOTTOM 1" IN FROM WALL	No.	104	bottom
TC6	1" FROM TOP AND WALL	No.	105	top

Pressure Transducer

High Range 1250.0 psi fs Cal Fac 250.0 psi/volt

Sample: INFARM-1 Bottom 0% water
Source Ref: INFARM-1B-REV-6A BOTTOM 60% 12-21-92

Sample Wgt 49.8 gm S.G. 1.33
Sample height 13/32 from top

Igniter wgt 4.4 gm

Date 28 Jan 93

Test T0128-1

Calculation of Sample Packed Density

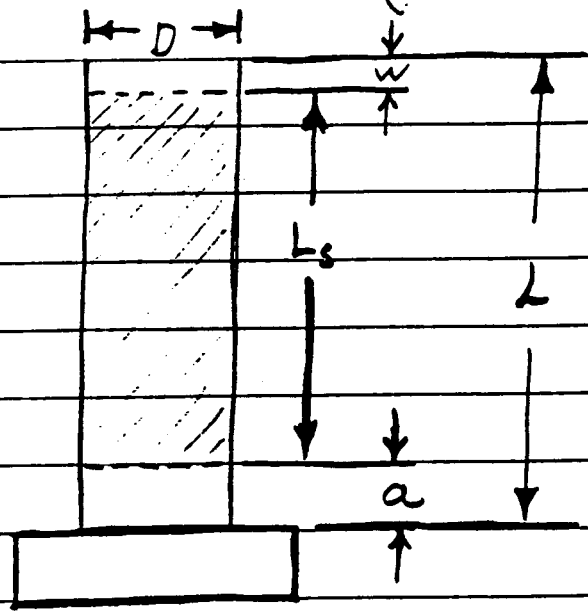

Sample wgt.

M_s 49.8 gm

D 25 mm

L 4.0 inch 101.6 mm

a 0.59 inch 15.0 mm

w 13/32 inch 10.3 mm

$L_s = L - (a + w) = 76.3$ mm

use dimensions in (mm)

$V_s = \frac{\pi D^2}{4} L_s \times 10^{-3}$ 37.45 cm^3

Packing Density $= \frac{M_s}{V_s}$ $\frac{49.8}{37.45} = 1.33$

DISTRIBUTION

Number of copies

OFFSITE

12	U.S. Department of Energy EM-35, Trevion II Washington, D.C. 20585 John C. Tseng
1	U.S. Department of Energy Savannah River Operations Office P.O. Box A Aiken, South Carolina 29808 Thomas C. Temple
1	Charles S. Abrams 1987 Virginia Idaho Falls, ID 83404
1	David O. Campbell 102 Windham Road Oak Ridge, TN 37830
1	Fred N. Carlson 6965 North 5th West Idaho Falls, ID 83401
1	Donald T. Oakley 409 12th Street SW, Suite 310 Washington, DC 20024-2188
1	Arlin K. Postma 3640 Ballard Road Dallis, Oregon 97338
1	William R. Prindle 1556 Crestline Drive Santa Barbara, CA 93105
1	Alfred Schneider 5005 Hidden Branches Drive Dunwoody, GA 30338
1	Air Products & Chemicals, Inc. 7201 Hamilton Blvd Allentown, PA 18195-1501 George E. Schmauch

DISTRIBUTION (cont)

Number of copies

OFFSITE

1	Battelle Columbus Laboratories 505 King Avenue Columbus, OH 43201-2693 James A. Gieseke
2	Brookhaven National Laboratory Upton, NY 11973 Kamal K. Bandyopadhyay Morris Reich
1	Design Science, Inc. 163 Witherow Road Sewickley, PA 15143 Gary Powers
1	Fauske and Associates, Inc. 16W070 W. 83rd St. Burr Ridge, IL 60521 Hans K. Fauske
1	Florida State University Department of Chemistry B-164 Tallahassee, FL 32306 Greg R. Choppin
1	Harvard University 295 Upland Avenue Newton Highlands, MA 02161 Melvin W. First
1	Hazards Research Corporation 200 Valley Road, Suite 301 Mt. Arlington, NJ 07856 Chester Grelecki
1	Lawrence Livermore National Laboratory P.O. Box 808, L-221 Livermore, CA 94550 Billy C. Hudson

DISTRIBUTION (cont)

Number of copies

OFFSITE

4	Los Alamos National Laboratory P.O. Box 1663 Los Alamos, NM 87545 Steve F. Agnew Steve W. Eisenhawer Thomas E. Larson L. Harold Sullivan
1	MIT/Department of Nuclear Engineering 77 Massachusetts Ave. Room 24-102 Cambridge, MA 02139 Mujid S. Kazimi
1	Nuclear Consulting Services, Inc. P.O. Box 29151 Columbus, OH 43229 J. Louis Kovach
	Oak Ridge National Laboratory
1	Emory D. Collins P.O. Box 2008 7930, MS-6385 Oak Ridge, TN 37831-6385
1	Charles W. Forsberg P.O. Box 2008 MS-6495 Oak Ridge, TN 37831-6495
1	Thomas S. Kress P.O. Box 2009 9108, MS-8088 Oak Ridge, TN 37831-8088
1	Rice University 5211 Paisley Houston, TX 77096 Andrew S. Veletsos

DISTRIBUTION (cont)

Number of copies

OFFSITE

1	Sandia National Laboratory P.O. Box 5800 Albuquerque, NM 87185 Scott E. Slezak	
4	Science Applications International Corporation 12850 Middlebrook Road Trevion I, Suite 300 Germantown, MD 20874 Ray S. Daniels (3) John M. Saveland	
1	University of South Carolina Department of Electrical and Computer Engineering Swearingen Engineering Center Columbia, SC 29208 Joseph S. Byrd	
1	University of Washington Center for Process Analytical Chemistry Chemistry Department BG-10 Seattle, WA 98195 Bruce R. Kowalski	
1	Vanderbilt University P.O. Box 1596, Station B Nashville, TN 37235 Frank L. Parker	

ONSITE

11	U.S. Department of Energy, Richland Field Office	
	R. F. Christensen (6)	A4-02
	R. E. Gerton	A4-02
	A. G. Krasopoulos	A5-55
	Public Reading Room	A1-65
	RL Docket File (2)	A3-11

DISTRIBUTION (cont)

Number of copies		
ONSITE		
9	Pacific Northwest Laboratory	
	R. T. Allemann	K7-15
	S. A. Bryan	P7-25
	B. M. Johnson	K1-78
	M. A. Lilga	P8-38
	R. D. Scheele	P7-25
	G. F. Schiefelbein	P8-38
	D. M. Strachan	K2-38
	PNL Technical Files	K1-11
	Hanford Technical Library	P8-55
63	Westinghouse Hanford Company	
	H. Babad	R2-08
	D. B. Bechtold	T6-50
	J. R. Bell	R3-09
	D. C. Board	S1-57
	G. L. Borsheim	R2-11
	V. C. Boyles	R1-49
	S. L. Bradley	B3-06
	R. J. Cash (5)	R2-32
	M. D. Crippen	L5-31
	G. M. Christensen	H4-21
	R. D. Crowe	H4-62
	S. J. Dechter	R2-50
	C. DeFigh-Price	R2-31
	J. L. Deichman	B1-59
	D. R. Dickinson	L5-31
	G. T. Dukelow (2)	R2-32
	G. L. Fox	L5-01
	G. T. Frater	R1-51
	J. C. Fulton	R2-31
	K. A. Gasper	R2-08
	J. M. Grigsby	H4-62
	H. D. Harmon	R2-52
	J. M. Held	R3-12
	M. N. Islam	R3-08
	J. R. Jewett	T6-50
	N. W. Kirch	R2-11
	C. A. Kuhlman	B3-30
	M. Kummerer	H4-62
	J. D. McCormack	L5-31
	J. M. McLaren	H0-34
	J. E. Meacham	R2-32
	N. J. Milliken	H4-62
	A. F. Noonan	R2-12
	J. W. Neskas	R2-11
	P. C. Ohl	H5-09

DISTRIBUTION (cont)

Number of copies

ONSITE

Westinghouse Hanford Company (cont)

P. M. Phelps	B3-30
D. N. Price	R2-14
J. G. Propson	R2-18
R. E. Raymond	R1-80
F. R. Reich	L5-63
D. A. Reynolds	R2-11
B. C. Simpson	R2-12
S. R. Tifft	H6-16
H. Toffer	H0-38
R. K. Welty	R1-80
W. P. Whiting	B3-25
J. C. Wiborg	H4-60
W. D. Winkelman	L5-55
D. D. Wodrich	B1-59
W. F. Zuroff	R2-14
Central Files	L8-04
Document Processing and Distribution (2)	L8-15
EDMC	H6-08
Information Release Administration (3)	R1-08
TFIC	R1-20