0032263

WHC-EP-0558

Test and Evaluation Document for DOT Specification 7A Type A Packaging

Prepared for the U.S. Department of Energy
Assistant Secretary for Environment, Safety and Health

Westinghouse
Hanford Company Richland, Washington

Hanford Operations and Engineering Contractor for the
U.S. Department of Energy under Contract DE-AC06-87RL10930

RECORD COPY

NOV 1993
RECEIVED
EPIC

Approved for Public Release

DTIC
ELECTE
JUL 1 3 1988
S D
D

WHC-EP-0558

UC-600

Test and Evaluation Document for DOT Specification 7A Type A Packaging

J. M. Cruse

Date Published
June 1992

Prepared for the U.S. Department of Energy
Assistant Secretary for Environment, Safety and Health

Westinghouse Hanford Company
P.O. Box 1970
Richland, Washington 99352

Hanford Operations and Engineering Contractor for the
U.S. Department of Energy under Contract DE-AC06-87RL10930

Approved for Public Release

LEGAL DISCLAIMER

This report was prepared as an account of work sponsored by an agency of the United States Government. Neither the United States Government nor any agency thereof, nor any of their employees, nor any of their contractors, subcontractors or their employees, makes any warranty, express or implied, or assumes any legal liability or responsibility for the accuracy, completeness, or any third party's use or the results of such use of any information, apparatus, product, or process disclosed, or represents that its use would not infringe privately owned rights. Reference herein to any specific commercial product, process, or service by trade name, trademark, manufacturer, or otherwise, does not necessarily constitute or imply its endorsement, recommendation, or favoring by the United States Government or any agency thereof or its contractors or subcontractors. The views and opinions of authors expressed herein do not necessarily state or reflect those of the United States Government or any agency thereof.

This report has been reproduced from the best available copy. Available in paper copy and microfiche.

Available to the U.S. Department of Energy
and its contractors from
Office of Scientific and Technical Information
P.O. Box 62
Oak Ridge, TN 37831
(615) 576-8401

Available to the public from the U.S. Department of Commerce
National Technical Information Service
5285 Port Royal Road
Springfield, VA 22161
(703) 487-4650

Printed in the United States of America

DISCLM-1 CHP (1-91)

WHC-EP-0558
Impact Level 3SQ

Document Title: Test and Evaluation Document for DOT Specification 7A Type A Packagings

Prepared by: J. M. Cruse, Project Engineer — Date: 5/28/92

Approved by: FOR J. H. Hummer, Manager, Packaging Programs — Date: 6-2-92

Approved by: W. F. Irvine, Manager, Transportation and Packaging — Date: 6/2/92

Approved by: DWS 7/21/91 J. N. Nansen, Manager, Engineering Applications, Quality Assurance — Date: 7/21/92

Approved by: R. L. Martin, Manager, Packaging, Shipping, and Waste Safety Assurance — Date: 7/20/92

ORIGINAL

INFORMATION RELEASE REQUEST

References: WHC-CM-3-4

COMPLETE FOR ALL TYPES OF RELEASE

Purpose

[] Speech or Presentation
- [] Full Paper
- [] Summary
- [] Abstract
- [] Visual Aid

(Check only one suffix)

[] Speakers Bureau
[] Poster Session
[] Videotape

[] Reference
[x] Technical Report
[] Thesis or Dissertation
[] Manual
[] Brochure/Flier
[] Software/Database
[] Controlled Database
[] Other

New ID Number: WHC-EP-0558

Existing ID Number (include revision, volume, etc.)

If previously cleared, list ID number

Date Release Required: 7/31/92

Title: Test and Evaluation Document for DOT Specification 7A Type A Packagings

Unclassified Category: UC-600

Impact Level: 3S Q

COMPLETE FOR SPEECH OR PRESENTATION

Title of Journal

Group or Society Sponsoring

Date(s) of Conference or Meeting

City/State

Will proceedings be published? [] Yes [] No

Will material be handed out? [] Yes [] No

Title of Conference or Meeting

CHECKLIST FOR SIGNATORIES

Review Required per WHC-CM-3-4	Yes	No	Reviewer Name (printed)	Signature	Date
Classification/Unclassified Controlled Nuclear Information	[]	[x]			
Patent - General Counsel	[x]	[]	S.W. Berglin	S.W. Berglin	7/22/92
Legal - General Counsel	[x]	[]			
Applied Technology/Export Controlled Information or International Program	[]	[x]			
WHC Program	[x]	[]	W. F. Irvine	W. F. Irvine	6/2/92
Communications	[]	[x]			
DOE-RL Program	[x]	[]	R. F. Jarrell	R. F. Jarrell	7/28/92
Publication Services	[x]	[]	K. A. Christensen	Kathy Christensen	8/4/92
References Available to Intended Audience	[x]	[]	J. M. Cruse	J. M. Cruse	5/28/91
Transmit to DOE-HQ/Office of Scientific and Technical Information	[x]	[]	MB.		

Information conforms to all applicable requirements. The above information is certified to be correct.

Author/Requestor (Printed/Signature) Date

J. M. Cruse J. M. Cruse 5/28/91

Responsible Manager (Printed/Signature) Date

For W. F. Irvine 6/2/92

J. H. Hummer J. H. Hummer FOR 6/2/92

Intended Audience

[ ] Internal [ ] Sponsor [X] External

INFORMATION RELEASE ADMINISTRATION APPROVAL STAMP

Stamp is required before release. Release is contingent upon resolution of mandatory comments.

APPROVED FOR RELEASE OFFICIAL DOCUMENT MB Date 8/4/92

Date Received 7/21/92 MB

TEST AND EVALUATION DOCUMENT FOR DOT SPECIFICATION 7A TYPE A PACKAGINGS

J. M. Cruse

ABSTRACT

The U.S. Department of Energy (DOE) has been conducting, through several of its operating contractors, an evaluation and testing program to qualify Type A radioactive material packagings per U.S. Department of Transportation Specification 7A (DOT-7A) of the Code of Federal Regulations, Title 49, Part 178, Section 178.350 (49 CFR 178.350). This program is called the DOT-7A Program. The DOT-7A Program is currently administered by the DOE, Division of Quality Verification and Transportation Safety, DOE/EH-33.3, at DOE-Headquarters in Germantown, Maryland.*

This document presents approximately 200 different packagings that have been determined to meet the requirements for a DOT Specification 7A Type A packaging per 49 CFR 178.350. It was originally prepared in 1987 by Monsanto Research Corporation - Mound Laboratory for the DOE's Security Evaluation Program to facilitate the regulation changes implemented by HM-169 for all DOE contractors. In September 1989, the program was transferred to Westinghouse Hanford Company, which is located in Richland, Washington.

**DOT, 1991, "Shipping Container Specification," Title 49, Code of Federal Regulations, Part 178, U.S. Department of Transportation, Washington, D.C.*

The specific packaging data contained in this document will serve to meet the requirements of 49 CFR 173.415(a) for ". . . documentation of tests . . ." when the packagings are used as prescribed herein. However, shippers are cautioned that additional documentation will be needed to fulfill all of the requirements for a particular shipment. Most important is the evaluation of the contents to be shipped for compatibility with the packaging and that their characteristics are bounded by the simulated contents used in qualification testing.

CONTENTS

1.0 INTRODUCTION 1-1
- 1.1 PURPOSE AND SCOPE 1-2
- 1.2 RESPONSIBILITIES 1-3
- 1.3 APPLICABLE U.S. DEPARTMENT OF TRANSPORTATION REGULATIONS . 1-4
- 1.4 USE OF TYPE B PACKAGINGS 1-11
- 1.5 PROCUREMENT 1-12
- 1.6 PACKAGING OPERATIONS 1-14
- 1.7 QUALITY ASSURANCE 1-15

2.0 STEEL DRUMS 2-1
- 2.1 DOT-6C 5- AND 10-GALLON STEEL DRUMS 2-4
- 2.2 DOT-17C 5-GALLON STEEL DRUM 2-10
- 2.3 DOT-17C 30-GALLON STEEL DRUM 2-16
- 2.4 DOT-17C 35-GALLON STEEL DRUM 2-22
- 2.5 DOT-17C 55-GALLON STEEL DRUM, OPTIONAL PRESSURE RELIEF DEVICE AND/OR HIGH-DENSITY POLYETHYLENE LINER 2-29
- 2.6 DOT-17H 30-GALLON STEEL DRUM, OPTIONAL PRESSURE RELIEF DEVICE 2-37
- 2.7 DOT 17H 55-GALLON STEEL DRUM 2-44
- 2.8 MILITARY SPECIFICATION DRUMS--VARIOUS SIZES 2-50
- 2.9 SQUARE 71-GALLON STEEL DRUM, PACKAGING SPECIALTIES 2-59

3.0 STEEL BOXES 3-1
- 3.1 CAPITAL INDUSTRIES--FAMILY OF STEEL BOXES 3-4
- 3.2 CONTAINER PRODUCTS CORPORATION--FAMILY OF STEEL BOXES . . 3-11
- 3.3 ROGAR FAMILY OF STEEL BOXES 3-17
- 3.4 ROCKY FLATS SAND BOX--STEEL BOX 3-23
- 3.5 ANL M-4 STEEL BIN 3-29
- 3.6 ANL-WEST STEEL BOX 3-35
- 3.7 TRUPACT-II STANDARD WASTE BOX 3-41
- 3.8 ORNL LOW-LEVEL WASTE CONTAINER 3-47

4.0 WOODEN BOXES 4-1
- 4.1 ANL-WEST FAMILY OF WOODEN BOXES 4-9
- 4.2 LLNL FLUSH PANEL WOODEN BOX 4-14
- 4.3 MOUND WOODEN BOX - CONFIGURATION A 4-19
- 4.4 MOUND WOODEN BOX - CONFIGURATION B 4-25
- 4.5 MOUND WOODEN BOX - CONFIGURATION C 4-31
- 4.6 MOUND WOODEN BOX - CONFIGURATION D 4-37
- 4.7 MOUND WOODEN BOX - CONFIGURATION E 4-43
- 4.8 NLO FAMILY OF BANDED, WOODEN BOXES 4-53
- 4.9 Y-12 SERIES B WOODEN BOXES 4-59
- 4.10 Y-12 PICTURE FRAME WOODEN BOXES 4-65
- 4.11 ROCKY FLATS RA SERIES OF WOODEN BOXES 4-71
- 4.12 WMCO FAMILY OF BANDED, WOODEN BOXES 4-81
- 4.13 ORNL Y-12 SERIES C WOODEN BOXES 4-88

5.0 FIBERBOARD CONTAINERS 5-1
- 5.1 12B-65 FIBERBOARD BOXES 5-4
- 5.2 LLNL 12B-10 FIBERBOARD BOX 5-11
- 5.3 TRI-WALL FIBERBOARD BOX 5-17
- 5.4 DOT-21C FIBERBOARD DRUM 5-23

CONTENTS (cont.)

6.0 UF_6 CYLINDERS 6-1
- 6.1 UF_6 FAMILY OF CYLINDERS 6-15
- 6.2 UF_6 CYLINDERS, ORNL MODIFIED 5A AND 5B 6-21

7.0 LIQUIDS AND GASES 7-1
- 7.1 LOVELACE MS-24347-7 STEEL DRUM 7-4
- 7.2 LANL 12B-62 FIBERBOARD BOX WITH LEAD SHIELDED INNER PACKAGING 7-10
- 7.3 LLNL GAS CYLINDERS IN A STEEL DRUM 7-16
- 7.4 ORNL FIBERBOARD BOX--LIQUIDS AND SOLIDS 7-22
- 7.5 ORNL FIBERBOARD BOX--LIQUIDS, SOLIDS, OR GASES 7-29
- 7.6 ORNL RETURNABLE (ALUMINUM-CLAD PLYWOOD BOX) SHIELDED SHIPPING CONTAINER 7-35
- 7.7 ORNL RETURNABLE (ALUMINUM REINFORCED PLASTIC BOX) GAS CYLINDER--SHIELDED AND NONSHIELDED SHIPPING CONTAINERS 7-43
- 7.8 ORNL J. L. SHEPHARD GAS CYLINDERS 7-48
- 7.9 LANL SHIELDED CONTAINER FOR LIQUIDS 7-54
- 7.10 WHC LIQUID SAMPLE PACKAGING 7-60
- 7.11 PROCESS-WATER SAMPLE PACKAGING 7-66
- 7.12 RF CONTAINER MODEL LWS-1 7-72

8.0 MISCELLANEOUS 8-1
- 8.1 LLNL SHIELDED (PREVIOUS SPEC 55) CONTAINER 8-4
- 8.2 ORNL TRANSURANIC SHIPPING CONTAINER 8-9
- 8.3 FEMA CDV-792 SHIELDED OVERPACK 8-14
- 8.4 SNL TRITIUM WASTE PACKAGE STEEL DRUM 8-19
- 8.5 LANL ALUMINUM PACKAGING 8-25
- 8.6 REMOTE-HANDLED TRANSURANIC WASTE CONTAINER 8-31

9.0 REFERENCES 9-1

APPENDIXES

A COMPLIANCE WITH STANDARD REQUIREMENTS FOR ALL PACKAGES A-1

B COMPLIANCE WITH GENERAL DESIGN REQUIREMENTS B-1

C COMPLIANCE WITH ADDITIONAL DESIGN REQUIREMENTS FOR TYPE A PACKAGES C-1

D SUMMARY OF TYPE A PACKAGING TESTS D-1

E U.S. DEPARTMENT OF TRANSPORTATION LETTER OF CONCURRENCE E-1

LIST OF FIGURES

2-1 DOT-6C 5- and 10-Gallon Steel Drums, 49 CFR 178.99 2-3

2-2 DOT-17C 5-Gallon Steel Drum, 49 CFR 178.115 2-9

2-3 DOT-17C 30-Gallon Steel Drum, 49 CFR 178.115 2-15

2-4 DOT-17C 35-Gallon Steel Drum, 49 CFR 178.115 2-21

2-5 DOT-17C 55-Gallon Steel Drum, 49 CFR 178.115 2-27

2-6 High-Density Polyethylene Liners for Use with DOT-17C 55-Gallon Steel Drums 2-28

2-7 DOT-17H 30-Gallon Steel Drum, 49 CFR 178.118 2-36

2-8 High-Density Polyethylene Liners for Use with DOT-17H 30-Gallon Steel Drums 2-38

2-9 DOT-17H 55-Gallon Steel Drum 2-43

2-10 Steel Drums, Military Specification Containers of Varying Sizes 2-49

2-11 71-Gallon Square Steel Drum, 6½-Inch Crimped Cover 2-55

2-12 71-Gallon Square Steel Drum, 6½-Inch Crimped Cover 2-56

2-13 71-Gallon Square Steel Drum, 18¼-Inch Removable Head 2-57

2-14 71-Gallon Square Steel Drum, Fully Removable Head 2-58

3-1 Capital Industries, Incorporated, Family of Filtered and Nonfiltered Steel Boxes 3-3

3-2 Container Products Corporation, Family of Filtered and Nonfiltered Steel Boxes 3-10

3-3 RoGar Chemical and Nuclear Services, Family of Steel Boxes . . . 3-16

3-4 Rocky Flats SAND Box Steel Box 3-22

3-5 ANL M-4 Bin Steel Box 3-28

3-6 ANL-West 7A-960 Steel Box 3-34

3-7 TRUPACT-II Standard Waste Box, Style 1, Bolted Closure 3-40

3-8 ORNL Low-Level Waste Container 3-46

LIST OF FIGURES (cont.)

4-1 ANL-West 7A-217 Wooden Box 4-3

4-2 ANL-West 7A-375 Wooden Box 4-4

4-3 ANL-West 7A-670 Wooden Box 4-5

4-4 ANL-West 7A-880 Wooden Box 4-6

4-5 ANL-West 7A-995 Wooden Box 4-7

4-6 ANL-West 7A-1315 Wooden Box 4-8

4-7 LLNL Flush Panel Wooden Box 4-13

4-8 Configuration A Light Duty Wooden Box 4-18

4-9 Configuration B Medium Duty Wooden Box 4-24

4-10 Configuration C Medium Duty Wooden Box 4-30

4-11 Configuration D Heavy Duty Wooden Box 4-36

4-12 Configuration E-150 Wooden Box 4-42

4-13 NLO Family of Banded, Wooden Boxes 4-48

4-14 NLO Family of Banded, Wooden Boxes 4-49

4-15 NLO Family of Banded, Wooden Boxes 4-50

4-16 NLO Family of Banded, Wooden Boxes 4-51

4-17 NLO Family of Banded, Wooden Boxes 4-52

4-18 Y-12 Series B Wooden Boxes 4-58

4-19 Y-12 Picture Frame Wooden Box 4-64

4-20 Rocky Flats RA Series Wooden Boxes 4-70

4-21 WMCO Family of Banded, Wooden Boxes 4-76

4-22 WMCO Family of Banded, Wooden Boxes 4-77

4-23 WMCO Family of Banded, Wooden Boxes 4-78

4-24 WMCO Family of Banded, Wooden Boxes 4-79

4-25 WMCO Family of Banded, Wooden Boxes 4-80

LIST OF FIGURES (cont.)

4-26 ORNL Y-12 Series C Wooden Boxes 4-86

4-27 ORNL Y-12 Series C Wooden Boxes 4-87

5-1 DOT Specification 12B Fiberboard Box 5-3

5-2 LLNL Fiberboard Box 5-10

5-3 Tri-Wall Package Fiberboard Box 5-16

5-4 DOT Specification 21C Fiberboard Drum 5-22

6-1 UF_6 Cylinder, Model 1S 6-3

6-2 UF_6 Cylinder, Model 2S 6-4

6-3 UF_6 Cylinder, Modified Model 5A or Model 5B 6-5

6-4 UF_6 Cylinder, Model 8A 6-6

6-5 UF_6 Cylinder, Model 12A 6-7

6-6 UF_6 Cylinder, Model 12B 6-8

6-7 UF_6 Cylinder, Model 30A 6-9

6-8 UF_6 Cylinder, Model 30B 6-10

6-9 UF_6 Cylinder, Model 48G 6-11

6-10 UF_6 Cylinder, Model 48H and 48Hx 6-12

6-11 UF_6 Cylinder, Model 48X 6-13

6-12 UF_6 Cylinder, Model 48Y 6-14

6-13 UF_6 Cylinder, Modified Model 5A and Model 5B 6-20

7-1 MS-24347-7 Steel Drum 7-3

7-2 LANL Shielded Container Fiberboard Box 7-9

7-3 LLNL Steel Drum/Gas Cylinder Packagings 7-15

7-4 ORNL Fiberboard Box Disposable Container for Radioactive Liquid and Solid Shipments 7-21

7-5 ORNL Fiberboard Box Disposable Container for Radioactive Gas Shipments 7-27

LIST OF FIGURES (cont.)

7-6 ORNL Fiberboard Box Disposable Container for Radioactive Liquid and Solid Shipments 7-28

7-7 ORNL Wooden Box (Aluminum Clad) Returnable Shielded Shipping Container 7-34

7-8 ORNL Gas Cylinder Returnable Plastic Box 7-40

7-9 ORNL Gas Cylinder Returnable 10-mL Isotope Container 7-41

7-10 ORNL Gas Cylinder 7-42

7-11 ORNL Gas Cylinder 7-47

7-12 LANL Shielded Container Steel Drum 7-52

7-13 Fenton Hill Pig 7-53

7-14 WHC Liquid Sample Packaging 7-59

7-15 SRP Process-Water Sample Package 7-65

7-16 RF Container Model LWS-1 7-71

8-1 LLNL Shielded (Previously Spec. 55) Container 8-3

8-2 ORNL Transuranic Shipping Container 8-8

8-3 FEMA Source Overpack 8-13

8-4 SNL Tritium Waste Package Steel Drum 8-18

8-5 LANL Aluminum Packaging 8-24

8-6 Remote-Handled Transuranic Waste Container 8-30

LIST OF TERMS

AE	Argonne National Laboratory - East
ANL-E	Argonne National Laboratory - East
ANL-W	Argonne National Laboratory - West
ASTM	American Society for Testing and Materials
AW	Argonne National Laboratory - West
Battelle	Battelle Columbus Laboratory
Btu	British thermal unit
C	Celsius
CFR	Code of Federal Regulations
DOE	U.S. Department of Energy
DOE-HQ	U.S. Department of Energy-Headquarters
DOT	U.S. Department of Transportation
DOT-7A	DOT Specification 7A
F	Fahrenheit
FEMA	Federal Emergency Management Agency
FM	Feed Materials Production Center
FMPC	Feed Materials Production Center
gal	gallon
HDPE	high-density polyethylene
HF	Hanford, Richland, Washington
kg	kilogram
kPa	kilopascal (1 atmosphere=14.7 psig=1 bar=100kPa)
L	liter
LANL	Los Alamos National Laboratory
LL	Lawrence Livermore National Laboratory
LLNL	Lawrence Livermore National Laboratory
MD	Mound Laboratory
mil	0.001 inches
mL	milliliter
MLM	Mound Laboratory
MS	military specification
NFTI	Nuclear Filter Technology, Inc.
NLO	National Lead Corporation
NRC	U.S. Nuclear Regulatory Commission
OR	Oak Ridge National Laboratory
ORNL	Oak Ridge National Laboratory
Pa	pascal
psi	pounds per square inch
psia	pounds per square inch absolute
psig	pounds per square inch gauge
PVC	polyvinylchloride
RF	Rocky Flats Plant
RFP	request for proposal
RH	Hanford, Richland, Washington
RTV	room temperature vulcanizing
SNR	Schenectady Naval Reactors Office
Spec	specification
SR	Savannah River Plant and Laboratory
SRP	Savannah River Plant and Laboratory
SWB	standard waste box
UN	United Nations

LIST OF TERMS (cont.)

UV	ultraviolet
Westinghouse Hanford	Westinghouse Hanford Company
WHC	Westinghouse Hanford Company
WMCO	Westinghouse Materials Company of Ohio
WVNS	West Valley Nuclear Services

TEST AND EVALUATION DOCUMENT FOR THE U.S. DEPARTMENT OF TRANSPORTATION SPECIFICATION 7A TYPE A PACKAGINGS

1.0 INTRODUCTION

The U.S. Department of Energy (DOE) has been conducting, through several of its operating contractors, an evaluation and testing program to qualify Type A radioactive material packagings per U.S. Department of Transportation (DOT) Specification 7A (DOT-7A) of the Code of Federal Regulations (CFR), Title 49, Part 178 (49 CFR 178). The program is currently administered by the DOE, Division of Transportation and Packaging Safety, DOE/EH-33.3, at DOE-Headquarters (DOE-HQ) in Germantown, Maryland.

This document summarizes the evaluation and testing performed for all of the packagings successfully qualified in this program. This document supersedes *DOE Evaluation Document for DOT-7A Type A Packaging* (Edling 1987), originally issued in 1987 by Monsanto Research Corporation - Mound Laboratory (MLM), Miamisburg, Ohio, for the Department of Energy, Security Evaluation Program (DP-4). Mound Laboratory issued four revisions to the document between November 1988 and December 1989. In September 1989, the program was transferred to Westinghouse Hanford Company (Westinghouse Hanford) in Richland, Washington. One additional revision was issued in March 1990 by Westinghouse Hanford.

This document reflects the earlier material and incorporates a number of changes. Evaluation and testing activities on 12 DOT-7A Program Dockets resulted in the qualification of 29 new packaging configurations, which are incorporated herein and summarized below.

New Packaging Configurations.

Docket(s)	Configurations	Description
89-01	3	ORNL Y-12 series boxes
89-03	1	WIPP RH-TRU canister
89-04	2	ORNL low-level waste containers
89-08	2	ORNL modified 5A and 5B cylinders
89-09	6	WMCO banded, wooden boxes
89-12	1	OR Y-12 picture frame box
90-13/-18	5	RFP DOT-17C, 55-gallon drums
90-14	1	WHC liquid sample packaging
90-17/-20	2	ANL-E/FMPC DOT-17H, 30-gallon drums
90-19	4	OR Y-12 C-series wooden boxes
90-22	1	SRP process-water sample packaging
91-25	1	RF Model LWS-1 (liquids)

This document was prepared initially in July 1991 as a draft and submitted to DOE-HQ for review. The DOE-HQ forwarded a copy of the draft to the DOT for review. The DOT provided concurrence to the draft in April 1992 via a letter (included herein as Appendix E) which was forwarded to Westinghouse Hanford with DOE's direction to distribute this document. A number of miscellaneous changes have been made for completeness and to reflect the programmatic changes that have occurred since 1987.

1.1 PURPOSE AND SCOPE

The purpose of this document is to provide technical documentation of the evaluation and testing activities successfully completed to qualify a number of packagings to the requirements of DOT-7A (49 CFR 178.350). The packagings described herein are considered acceptable for transport of Type A quantities of radioactive material subject to the applicable restrictions and specifications.

The specific packaging data contained in this document will serve to meet the requirements of 49 CFR 173.415(a) for ". . . documentation of tests . . ." when the packagings are used as prescribed. In addition to the documentation of tests, the shipper must maintain on file other appropriate data applicable to the shipment, such as the following:

- Evaluation of the properties of the actual contents to be shipped for compatibility with the packaging

- The Quality Control Program and its implementation.

Therefore, it is apparent that this document does not "stand alone" for all the documentation needed when offering a package for transportation. The shipper is responsible in many areas for ensuring that the loaded package is acceptable.

Changes in technology and in the mission of the various DOE facilities and contractors will generate the need for new packaging designs on a continuing basis. If a new design is needed (i.e., not currently covered in this document), contact one of the DOT-7A Program administrative or technical contacts listed in Sections 1.1.1 and 1.1.2, respectively, for assistance on qualifying a new packaging.

1.1.1 Administrative Contacts

The DOT-7A Program is currently administered by the DOE, Division of Quality Verification and Transportation Safety, DOE/EH-33.3, at DOE-HQ in Germantown, Maryland. The responsible persons are as follows:

M. E. Wangler, Director
Division of Transportation and
Packaging Safety
U.S. Department of Energy, EH-33.3
19901 Germantown Road
Germantown, MD 20874
COMM/FTS 301-903-5078

F. G. Punch
Division of Transportation and
Packaging Safety
U.S. Department of Energy, EH-33.3
19901 Germantown Road
Germantown, MD 20874
COMM/FTS 301-903-6020

Any organization wishing to have a packaging qualified in this program should contact one of the persons listed above.

1.1.2 Technical Contacts

Westinghouse Hanford, Transportation and Packaging, is currently conducting the evaluation and testing activities. The persons responsible for these activities are as follows:

J. H. Hummer, Manager
Packaging Programs and Testing,
MSIN G2-02
Westinghouse Hanford Company
P.O. Box 1970
2355 Stevens Drive
Richland, WA 99352
COMM/FTS 509-376-9361

J. H. O'Brien, Project Engineer
Packaging Programs and Testing,
MSIN G2-02
Westinghouse Hanford Company
P.O. Box 1970
2355 Stevens Drive
Richland, WA 99352
COMM/FTS 509-376-2808

Please contact one of the persons listed above with any technical questions or any questions regarding dockets that have been established in the program.

The program has a great deal of experience with designs and materials that adequately perform to the requirements.

The normal approach to qualification of a new packaging design is to develop the design and operational documentation, review this documentation, and expose several test units to the Type A packaging tests (49 CFR 173.465 and 173.466). If the packaging performs adequately, it will be approved for use and included in this document at the next revision.

1.2 RESPONSIBILITIES

There are a number of specific functions that must be performed to ensure that a DOT-7A package is properly prepared for safe transport and in full compliance with the applicable regulations. The affiliation or the specific arrangements between the designer, manufacturer, and user should be adequately described and understood.

The following paragraphs discuss specific responsibilities.

1.2.1 The U.S. Department of Energy

The Packaging Certification Staff of DOE/EH-33.3 is responsible for the administration of the DOT-7A Program. This includes approval authority for all of the various program documents, requests for evaluation and testing of new packagings, and approval of their qualification. General programmatic direction is also under the control of DOE/EH-33.3.

1.2.2 Shipper

Shippers of Type A quantities of radioactive material are generally responsible for all aspects of the shipment. It is DOE policy to fully comply with the regulations for such shipments as established in 49 CFR 173. Normally the shipper will be able to locate an acceptable packaging, which places primary emphasis on ensuring compatibility with contents and correctness in operations.

1.2.3 Manufacturer

The manufacturer of a DOT-7A Type A packaging, which is covered in this document or otherwise authorized for use within the DOE system, is responsible for using materials, fabrication methods, manufacturing, and quality controls to ensure that the packaging is equivalent to the specified design. No design changes, substitutions, or changes in fabrication methods or controls are authorized without the approval of DOE/EH-33.3.

1.2.4 Testing Laboratory

The testing laboratory is responsible for evaluation and testing of new DOT-7A packaging designs based on the direction of DOE/EH-33.3. This process involves review of the applicants design data, inspection of the test unit packages, performance of the Type A packaging tests, and documentation of the results. Westinghouse Hanford is currently performing this function for DOE/EH-33.3; Westinghouse Hanford is also maintaining and distributing the various DOT-7A Program documents.

1.3 APPLICABLE U.S. DEPARTMENT OF TRANSPORTATION REGULATIONS

The DOT regulations for shipping hazardous materials are located in 49 CFR, Parts 100-500. Copies of these regulations can be obtained from the Government Printing Office or other sources. The packagings described herein have been qualified to meet DOT-7A (49 CFR 178.350) for Type A packagings. Specification 7A is a general specification and invokes the applicable requirements of 49 CFR 173, Subparts A, B, and I.

Some of the important regulations affecting shipments of Type A quantities of radioactive material are summarized in the following paragraphs. The primary sections of the regulations applicable to Type A packaging requirements are as follows:

178.350	Specification 7A; general packaging, Type A
173.21	Forbidden materials and packages
173.22	Shipper's responsibility
173.24	Standard requirements for all packages
173.411	General design requirements
173.412	Additional design requirements for Type A packages
173.415(a)	Authorized Type A packages
173.461	Demonstration of compliance with tests
173.462	Preparations of specimens for testing
173.463	Packaging and shielding--testing for integrity
173.465	Type A packaging tests
173.466	Additional tests for Type A packagings designed for liquids and gases
173.474	Quality control for construction of packaging
173.475	Quality control requirements prior to each shipment of radioactive material.

1.3.1 Contents Characterization

Specification 7A packagings are qualified for transporting Type A quantities of radioactive material. Characterization of contents for compatibility with the selected packaging is an important aspect of any shipment and is primarily the responsibility of the shipper. The regulations address this area with a number of items, which are summarized in the following paragraphs.

1.3.1.1 Radiological. The following items in 49 CFR 173, Subpart I address the radiological characteristics of the material to be shipped:

173.431	Activity limits for Type A and Type B packages
173.433	Requirements for determination of A_1 and A_2 values for radionuclides

173.441 Radiation level limitations

173.455 Classification of fissile materials packages.

The shipper must characterize the payload as needed to determine compliance with these requirements.

1.3.1.2 Physical Form. The physical form of the material has an indirect affect on the applicability of a number of requirements. For example, the density of the material will affect the gross weight, which affects the requirements invoked for package handling features. In the DOT-7A Program, solid materials are classed into one of three Material Forms (Forms) as follows:

- Form No. 1: Solids--any particle size
  - A packaging qualified for these contents is expected to contain radioactive contents of any representative particulate form.
- Form No. 2: Solids--large particle size only (cement grade sand or larger)
  - Contents of a corresponding particulate size such as soil or construction debris. (Glass or plastic labware having fine particulate available for dispersion would not fit this category and would require a packaging qualified for fine particulate, Form No. 1.)
- Form No. 3: Solid material with no removable or dispersible contamination (for definition, see 49 CFR 173.443, "Contamination control").
  - Metals with activation products
  - Forms of metals/alloys/compounds of uranium, thorium
  - Solid materials with the radioactive material firmly fixed in place, possibly by the application of a fixing media (paint etc.)
  - Solidified material

NOTE: These are examples only and each form must be analyzed for compliance with the "no removable or dispersible contamination" criterion found in 49 CFR 173.443.

Packagings intended to transport liquids and gases must be designed to withstand more severe test conditions than those designed for solids.

1.3.1.3 Thermal. Thermal limitations and requirements applicable to packagings are addressed in the following sections:

173.412(d)	Containment and shielding--temperature range
173.442	Thermal limitations
173.448(b)	Heat output.

The thermal heat generation of the contents for whatever reason must not degrade the packaging. Normally, Type A quantities of radionuclides do not generate enough decay heat to be of concern. If there is any doubt, the decay heat should be calculated and the package design analyzed to ensure no problems.

1.3.1.4 Chemical. The chemical characteristics of the contents are addressed by the following requirements:

173.21	Forbidden materials and packages
173.24(a)(3)	Mixture, reaction
173.24(c)(5)	Reaction
173.24(c)(6)	Closures, gaskets
173.24(d)	Plastic compatibility/permeability
173.412(g)	Compatibility, behavior under irradiation
173.412(h)	Gas generation, radiolysis.

Generally, the contents must not react with the packaging so as to degrade it and must not develop chemical conditions which could lead to an explosion. The basic chemical makeup of the nonradioactive constituents of the contents to be shipped must be understood in order to adequately design a packaging.

1.3.2 Packaging Design

The regulatory requirements primarily applicable to the design of a Type A packaging are listed as follows:

173.24(a)	Design and construction
173.24(c)	Design and construction criteria
173.24(d)	Polyethylene packagings and receptacles
173.411(a)-(f)	General design requirements
173.412	Additional design requirements for Type A packages

173.462(c) Containment system . . . specified

173.462(d) External features . . . clearly identified.

The packagings identified in this document have been designed and qualified to meet these requirements for transporting contents as shown in the subsequent sections. The following paragraphs are intended to summarize the design-related requirements.

1.3.2.1 General Arrangement. The packaging design will generally fall into one of three basic configurations: (1) single packaging, (2) composite packaging, or (3) combination packaging (see definitions 49 CFR 171.8 as revised by HM-181 dated December 21, 1990). Single packagings are generally recommended for solids meeting the definition of Form 2 or Form 3, or gases. For packaging of solids classed as Form 1 and liquids, composite or combination packagings are recommended.

1.3.2.2 Containment. The requirements that pertain directly to containment of contents are as follows:

173.24(a) Design and construction

173.24(c)(5) Reaction

173.24(c)(6) Closures and gaskets

173.24(d) Polyethylene packagings and receptacles

173.462(c) Containment system . . . specified.

Basically, there can be, "no significant release of the hazardous materials to the environment," and the packaging must remain effective when subjected to normal conditions of transport, with account being taken for any reactions between the contents and the packaging materials. In practice, "no significant release," implies no measurable leakage based on visual evaluation.

Containment is formed by those materials or components that are or may be in direct contact with the contents during shipment. The design process will involve choices of basic material, use of filters or other pressure relief devices, gaskets or other seal materials, closure mechanisms, and other features. Typical containment materials are high-density polyethylene (HDPE), polypropylene, glass, and steel.

1.3.2.3 Shielding. The following requirements directly address shielding design of Type A packagings:

173.412(d) Temperature (-40°F to +158°F), brittle fracture

173.412(k) Shielding/containment interface

173.441 Radiation level limitations.

Shielding may be required for Type A quantities of radionuclides. Lead or steel are commonly used materials for shielding. The regulations require that the shielding and containment system remain intact and effective when subjected to normal conditions of transport.

1.3.2.4 Lifting and Handling. The following requirements directly address the design of lifting and handling features of Type A packagings:

173.411(a) Handling, securing

173.411(b) Manual handling (gross weight 22 to 110 lb)

173.411(c) Mechanical handling (gross weight above 110 lb)

173.411(d) Lifting attachments.

The exterior design of the packaging must address these items.

1.3.2.5 Tiedown. The following requirements directly address the design of tiedown features of Type A packagings:

173.411(a) Handling, securing

173.412(l) Tiedown, failure.

Package tiedown features and equipment must be designed to comply with these requirements.

1.3.3 Package Qualification and Testing

Type A packagings must be designed to withstand the tests delineated in 49 CFR 173, Sections 173.465 and/or 173.466 as applicable. Section 173.461 addresses the methods by which compliance with these requirements may be addressed. The DOT-7A Program typically demonstrates acceptable performance by exposing several prototype test units to the test conditions. The tests that are performed are described briefly below.

1.3.3.1 Reduced Pressure Test [49 CFR 173.412(i)]. The reduced pressure test is intended to simulate the reduction of ambient (external) pressure to the package to 3.5 psia. This may be achieved by pressurizing the internal cavity of the packaging to 11.2 psig or by placing a closed packaging into a chamber that can be evacuated to 3.5 psia. In both cases, leak detection by visual, soap bubble, pressure change or other method is used.

1.3.3.2 Water Spray Test [49 CFR 173.465(b)]. The water spray test simulates exposure to rainfall of approximately 2 in./hour for at least one hour. This test must precede each of the other tests or test sequences described in 49 CFR 173.465. The time interval between the end of the water spray test and the beginning of the next test shall be such that the water has soaked in to the maximum extent without appreciable drying of the exterior of the package. The time interval is two hours if the spray is applied from four different directions simultaneously. Other tests will follow immediately if the spray is applied from each of the four directions consecutively.

1.3.3.3 Compression Test [49 CFR 173.465(d)]. The compression test lasts for a period of at least twenty-four hours. The compressive load is equivalent to either five times the weight of the actual package or 1,300 kg/m^2 (265 lb/ft^2) multiplied by the vertically projected area of the package, whichever is greater. The load is applied uniformly to two opposite sides of the package, one of which must be the base on which the package would normally stand.

1.3.3.4 Penetration Test [49 CFR 173.465(e) and 173.466(a)(2)]. The package is placed on a rigid, flat, horizontal surface. A bar (penetration bar) 3.2 cm (1.25 in.) in diameter with a hemispherical end, weighing 6 kg (13.2 lb), with its longitudinal axis vertical, is dropped onto the center of the weakest part of the package, so that, if it penetrates far enough, it will hit the containment system. The bar must not be deformed by the test.

The distance of the fall of the bar is measured from its lower end to the upper surface of the package. The determination of this distance depends on the basic physical form of the contents for which the packaging is designed. The penetration drop height for packagings designed to contain only solids is 1 m (3.3 ft). This distance is 1.7 m (5.5 ft) for packagings designed to contain liquids and/or gases.

1.3.3.5 Free Drop Test [49 CFR 173.465(c) and 173.466(a)(1)]. The free drop test consists of a fall onto a flat, horizontal, rigid surface. The orientation of the test package is such that the fall will cause maximum damage to the package and its safety features. The distance of the fall will be measured from the lowest part of the packaging to the upper surface of the target.

1.3.3.6 Demonstration of Compliance With Tests. Following the test sequences, which expose the prototypes to the applicable tests, the performance of the packaging is evaluated. If determined acceptable, the packaging is approved for use by DOE/EH-33.3 and included in this document.

1.3.4 The HM-181 Regulation Changes

The HM-181 implemented regulations that will effect requirements for packaging and transportation of hazardous materials in the United States, similar to the United Nations (UN) recommendations for packaging of dangerous goods.

The final ruling of HM-181 was issued on December 21, 1990. Under the HM-181 regulation changes, most nonbulk hazardous material packagings must be tested against performance criteria that simulate stresses encountered during shipment. The results of these tests must be documented and the packagings marked or certified with a UN certification. Packagings not marked with the certification will be refused entry into international destinations and may be refused by domestic air carriers. The transition period in which all domestic shipments must attain compliance is five years or sooner, depending on the material to be shipped.

The packaging test requirements vary depending on the density, vapor pressure and packing group for a particular material. Packing Group I

packagings are subjected to the most stringent performance tests. Packing Groups II and III invoke progressively less stringent performance requirements.

The HM-181 regulation changes have no direct affect on this document or the use of Specification 7A. However, there is an indirect affect since HM-181 resulted in the deletion of many of the specification packagings covered in 49 CFR 178. For example, the DOT Specification 17-C drum (49 CFR 178.115) was deleted from the regulations. This document refers in many places to this and similar specifications. Accordingly, when referring to these specifications in procedures, specifications, and purchasing documents, reference the specification followed by the words, "in effect in December 1990 (i.e., prior to DOT rulemaking HM-181)." Another indirect affect may be encountered when shipping liquids via an air carrier. The HM-181 requirements regarding qualification of the packaging to the reduced external pressure conditions may be invoked, requiring review and/or additional testing of the packagings described herein.

1.4 USE OF TYPE B PACKAGINGS

The U.S. Nuclear Regulatory Commission (NRC)-approved Type B packagings may be used to transport Type A quantities of radioactive materials provided applicable requirements are met. The NRC provided some clarification regarding such use of NRC-approved Type B packagings in Information Notice 90-82 dated December 31, 1990 (NRC 1990). This information is summarized in the following paragraphs.

The NRC and DOT share primary responsibility for approving package designs for transportation of radioactive materials within the United States. The NRC regulations for the transportation of radioactive materials are codified in 10 CFR Part 71, "Packaging and Transportation of Radioactive Material." The DOT's hazardous materials regulations, which include radioactive material, are codified in 49 CFR Parts 100-199. Requirements for shippers of radioactive materials are given in 49 CFR 173.400 through 173.478. In addition, a provision in the NRC regulations, 10 CFR 71.5, requires that NRC licensees comply with DOT's hazardous materials regulations.

In general, pursuant to 10 CFR Part 71, NRC approves package designs for shipment of fissile and greater-than-Type A quantities of radioactive material. The design for packages up to Type A quantities is subject to the requirements of DOT in 49 CFR Part 173.

In authorizing the use of NRC-approved packages for transportation of Type A quantities of radioactive material, DOT regulations specify, in 49 CFR 173.415, that certain conditions be met. One condition (49 CFR 173.471) is that the shipment of the package be made in compliance with the terms of the NRC certificate of compliance (certificate). For example, a radiographic source changer authorized for a Type B quantity of a specific radionuclide in special form is also authorized for a Type A quantity of the same specific radionuclide in special form, provided that all the terms and conditions of the certificate are met. Note that NRC approvals include the type and form of material, the maximum quantity of material per package, and the operating instructions and maintenance procedures for the package.

Alternately, an NRC-approved package may be shipped under the provisions of 49 CFR 173.415(a) as a DOT-7A package. In this instance, the shipper (if requested) must provide DOT with a complete documentation of tests and an engineering evaluation or comparative data showing that the construction methods, packaging design, and materials of construction comply with DOT-7A. The shipper is required to maintain this documentation on file for at least one year after the latest shipment. Thus, a radiographic source changer approved by NRC for shipment of a specific radionuclide in special form could be used to ship a Type A quantity of a different nuclide, provided that the package is re-evaluated under the provisions of 49 CFR 173.415(a).

When an NRC-approved package is used as a DOT-7A package, the NRC package identification marking should be covered and new markings ("USA DOT-7A TYPE A" and "radioactive material") affixed to the package, pursuant to 49 CFR 173.415(a).

Users of the NRC-approved packages should be aware of the requirements for using NRC-approved packages for low-level radioactive materials exempted under 10 CFR 71.10. In particular, users of NRC-approved packages should:

- Determine what provision of 49 CFR 173.415 applies
- Comply with all requirements in 49 CFR 173.415(a) and 49 CFR 178.350 when the shipment is made pursuant to 49 CFR 173.415(a). Note that the use of an NRC-approved package pursuant to 49 CFR 173.415(a) requires that the package be re-evaluated as a DOT-7A Type A package, and that the shipper maintain the evaluation on file for one year after the last shipment
- Comply with all terms and conditions in the NRC certificate when the shipment is made pursuant to 49 CFR 173.415(c).

1.5 PROCUREMENT

Normally DOE shippers will procure complete packagings or components of packagings from commercial suppliers to satisfy shipment needs. The DOE/EH-33.3 recommends that any packaging procurement be conducted in two basic steps:

1. Obtain from the packaging supplier the documentation that will demonstrate compliance with the requirements (i.e., drawings, specifications, etc.) and perform a technical review.
2. Upon acceptance of the documentation (i.e., all comments satisfactorily resolved), release the supplier to manufacture the packagings or components.

Procurement of the packagings identified herein or their components will involve preparation of a technical specification followed by execution of the normal process used for procuring equipment or components. The following paragraphs summarize this process.

1.5.1 Specification Development

The shipper should prepare a technical specification for the packaging or component to be supplied that includes, as a minimum, any technical requirements specified in this document. The specification should also identify any other deliverables desired and the requirements applicable to each. When the specification is complete, the shipper normally will prepare a purchase requisition, which will accompany the specification, to initiate the formal procurement process.

1.5.2 Request for Proposals

The first formal step in the procurement process is preparation of a purchase requisition and the subsequent issuance of a request for proposal (RFP). The procurement package will include the completed specification, schedule requirements, and other pertinent technical information such as technical evaluation criteria, technical proposal instructions to bidders, etc. Upon completion and management approval of the purchase requisition and the specification, the shipper should contact the purchasing organization at the site or facility to coordinate the RFP process. The buyer who is the cognizant purchasing representative will become the focal point in the process of negotiating with potential suppliers.

1.5.3 Order Placement

Normally several or more suppliers will respond to the RFP. This will initiate a selection process for determining the candidate who will supply acceptable deliverables for the lowest cost. The selection process will normally involve the shipper's technical review of each of the proposals and procurement department review including cost and price analysis. Upon completion of the reviews, a supplier (the seller) will be selected and the order placed.

1.5.4 Documentation Review and Approval

The next major action for the shipper will be to review any seller-provided documentation such as drawings, specifications, analyses, manufacturing processing instructions, and quality control processes. Upon acceptance of this data, the supplier will be released to manufacture the components or packagings per the purchase order.

1.5.5 Packaging Manufacturing and Delivery

The seller will manufacture the fleet packagings as specified in the purchase order when released by the buyer. When complete, the packagings will be delivered to the shipper's facility for receiving inspection and use.

1.6 PACKAGING OPERATIONS

Packaging operations involve assembling the packaging, loading the contents, closing the package, and preparing for shipment. The operating instructions for a packaging are the primary vehicle for the shipper to maintain control on the assembly, loading, and closure processes for a packaging and its preparation for shipment and other items. Accordingly, shippers are requested to ensure that the operating instructions for the packaging system to be used implement the operational requirements discussed in the following paragraphs.

The operating instructions should consist of the following primary elements:

- Packaging description
- Authorized contents
- Preloading inspections
- Loading procedure
- Preparation for shipment
- Preshipment inspections
- Shipment requirements
- Unloading procedure
- Reuse/reconditioning (if applicable).

The packaging description and authorized contents sections should be similar to the material for a packaging included herein.

The shipper should determine, per the following requirements, the preloading inspections to be performed and the acceptance criteria considered necessary to ensure that the packaging complies and that adequate quality control is implemented.

173.474 Quality control for construction of packaging

173.475 Quality control requirements prior to each shipment of radioactive materials.

The loading procedure should address all operations necessary to correctly assemble the packaging components, load the contents, and close the packaging.

The section addressing preparation for shipment should address labeling and placarding requirements (49 CFR 173.444 and 173.446) and any other applicable requirements. If the package must be secured to the conveyance in a particular fashion, this should also be specified in a subsection to be entitled, "Tiedown."

The section(s) addressing preshipment inspections should address verifications for compliance with the following requirements:

173.441 Radiation level limitations

173.442 Thermal limitations

173.443 Contamination control.

The section addressing shipment requirements should address requirements and procedures applicable when the package is en route to its destination. For example, the requirements of 49 CFR 173.447, "Storage incident to transportation," should be addressed in this section.

The unloading procedure should detail all steps necessary to safely unload the package from the conveyance and for unloading the contents from the packaging.

If the packaging may be reused, the operating instructions should include procedures for reconditioning the packaging to a state that will meet the design requirements established in the drawing and specification.

1.7 QUALITY ASSURANCE

The quality assurance program implemented by the shipper's organization must implement actions to provide adequate confidence that the shipments will comply with the regulations. The DOE Order 5700.6C includes general quality elements to be considered in development of the shippers quality program. Shippers are cautioned to invoke only the quality requirements applicable to Type A packaging and transportation.

The following regulatory requirements address quality control applicable to Type A packagings:

173.474 Quality control for construction of packaging

173.475 Quality control requirements prior to each shipment of radioactive materials.

The shipper is responsible for ensuring that the packaging materials, components, and arrangement are in accordance with the qualified design as documented herein. The shipper is also responsible for ensuring that the packaging is assembled, loaded (with compatible contents), closed, and prepared for shipment properly.

The DOE/EH-33.3 recommends that quality control be implemented as needed for the shipper to ensure compliance with the regulations. This is considered best achieved at three possible points in the packaging operation process:

1. Receiving inspections for procured packagings or components. The inspections should be of adequate scope and detail to ensure that the supplied hardware complies with the qualified design.

2. Preloading inspections to be performed prior to assembly and loading of the packaging. These inspections should verify that no packaging components have been damaged or altered and the arrangement is in accordance with the qualified design.

3. Preshipment inspections to be performed prior to shipment. This final inspection should verify that the assembled package, its marking and labeling, and its tiedown arrangement (if applicable) are correct. Further, preshipment inspections should address verifications for compliance with the following requirements:

173.441 Radiation level limitations

173.442 Thermal limitations

173.443 Contamination control.

The data presented for specific packagings in this document includes applicable quality control elements. This data should be used for guidance in implementing the inspections mentioned above.

2.0 STEEL DRUMS

This page intentionally left blank.

Figure 2-1. DOT-6C 5- and 10-Gallon Steel Drums, 49 CFR 178.99.

DOT 7A Type A
49 CFR 178.350

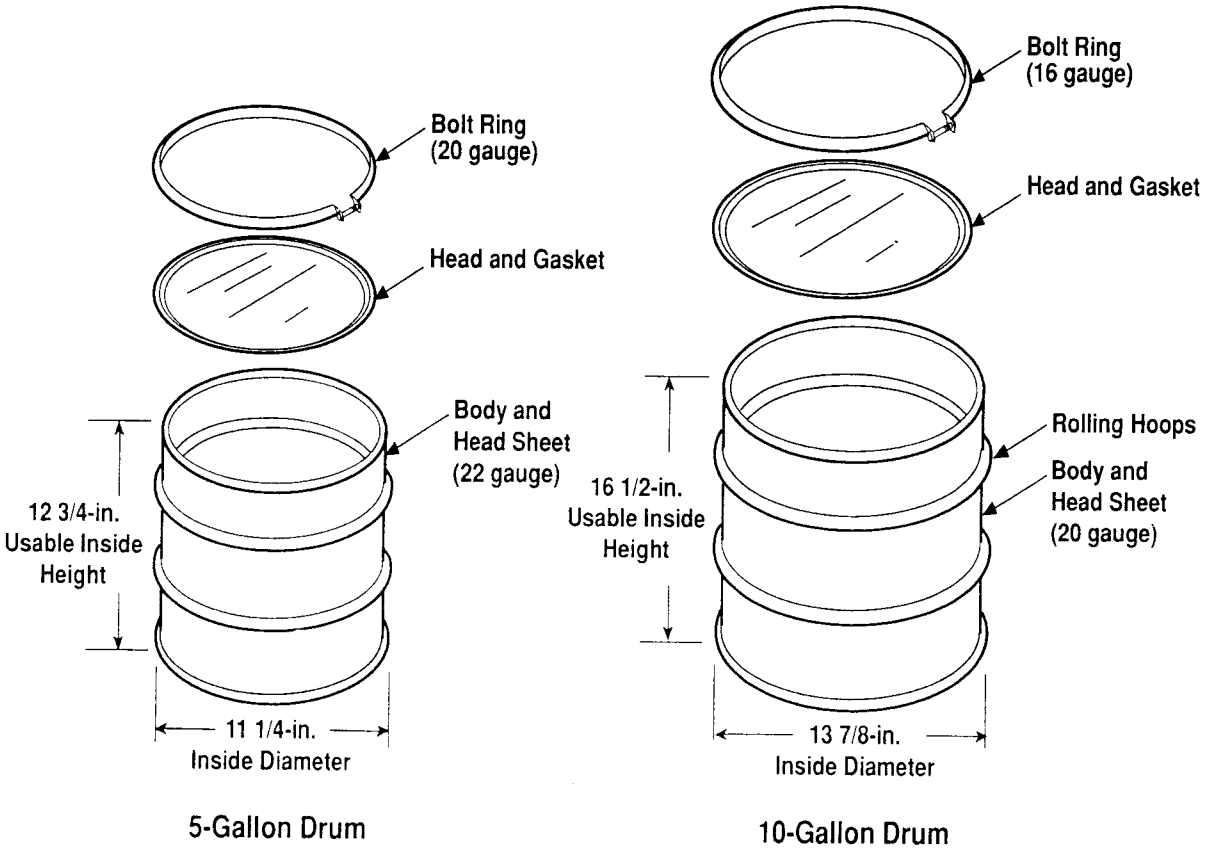

39106089.1

2.1 DOT-6C 5- AND 10-GALLON STEEL DRUMS (DOCKETS: MLM)

2.1.1 Package Description

Dimensions

Drum	Height (in.)	Diameter (in.)
5-gallon interior	12.50	11.25
5-gallon exterior	13.50	12.25
10-gallon interior	15.75	14.00
10-gallon exterior	17.25	15.00

Materials/Method of Construction

5 gallon		10 gallon	
Body and head sheet	22 gauge	Body and head sheet	20 gauge
Ring	20 gauge	Ring	16 gauge
Bolt	0.218 in.	Bolt	0.312 in.
Gasket required		Gasket required	

2.1.2 Authorized Contents

The shipper must determine that the actual contents are closely simulated by the test contents. If they are not, testing or analysis must be conducted and documented to demonstrate DOT-7A compliance with the actual contents.

2.1.2.1 Physical Form

2.1.2.1.1 **Solids only**. Three forms are authorized. Each shipper must determine the most appropriate form for his particular contents and comply with any special requirements (e.g., room temperature vulcanizing [RTV], etc.).

- Material Form No. 1: Solids--any particle size.
- Material Form No. 2: Solids--large particle size only (e.g., sand, concrete, debris, soil, etc.)
- Material Form No. 3: Solids--objects with no significant dispersible or removable contamination. (For definition, see 49 CFR 173.443, Contamination controls.)

2.1.2.1.2 Maximum Gross Weight. Form No. 1, No. 2, and No. 3:

- 5-gal = 80 lb
- 10-gal = 160 lb.

2.1.2.2 Chemical Form. The shipper must evaluate and ensure chemical compatibility of the material to be shipped with the materials of the packaging in contact with the payload.

2.1.2.3 Radiological. Dents approximately 1.1 in. and 1.5 in. appeared in the 5-gal and 10-gal drums, respectively, following the 4-ft drop test on the bottom edge. The shipper must ensure that the radiation level at the surface of the package would not increase by more than 20% if such deformations occurred.

2.1.3 Restrictions/Specifications

For Form No. 1 Contents--RTV sealant (or equivalent) must be applied to the surface of the gasket in contact with the drum body.

For Form No. 2 and No. 3 Contents--No packaging component requirements other than specified in Section 2.1.1.

Bolt closure tightened, with tapping, until the lugs begin to bend inward or come together--typically less than 40 ft-lb. A jam nut shall also be used to prevent unintentional loosening during transport.

The gasket material must have an operating range of -40 °F to +158 °F.

For heavy bulky materials (e.g., concrete chunks, motors, pumps, etc.), equipment or materials with sharp corners or protrusions, or material/containment geometries that could result in highly localized forces, the shipper must ensure that the contents are securely fastened/positioned within the package.

2.1.4 49 CFR 178.350 REGULATORY REQUIREMENTS

Regulatory Compliance Assessment

Regulatory requirements	Testing/analysis results
49 CFR 173.24, Standard requirements for all packages	Meets applicable requirements. See Appendix A, Table A-1.
49 CFR 173.411, General design requirements	Meets applicable requirements. See Appendix B, Table B-1.
49 CFR 173.412, Additional requirements for Type A packages	Meets applicable requirements. See Appendix C, Table C-1.
49 CFR 173.465, Type A packaging tests	Meets applicable requirements.
Water spray	Pass. This test was conducted on nine different types of steel drums and a total of 26 packages. In all cases, there was no detectable effect on the ability of the packaging to meet the subsequent Type A tests. Also, in all cases, there was no inleakage of water as a result of this test. See Appendix D, Table D-1.
Free drop	Pass. 4-ft drop test conducted on: Top - approximately 45° on bolt Bottom - approximately 45° Side - flat on bolt. See Appendix D, Table D-10.
Corner drop	Not required.
Compression	Pass. This test was conducted at greater than five times the gross weight for 24 hr. No detectable effect on the packaging was observed. See Appendix D, Table D-23.
Penetration	Pass. This test was conducted on the center of the lid, on the center of side body, and on the lid close to the closure ring. See Appendix D, Table D-30.

2.1.5 Quality Control

Packaging/Acceptance/Use Criteria

Critical	Major	Acceptance/pre-use/ inspection criteria*
Lid/body interface sealing surface	Vendor qualifications and experience	Functional: • Ease of lid/closure ring application • Bolt closure ring--bolt size • Gasket, adhesive, as specified • Geometry, as specified Acceptable Conditions: • Lack of dents, no deformation of sealing surfaces
Gasket		• Dimensions, as specified
Weld areas		• Continuous welds, no sharp edges
Body and chime	Metal thickness	Lot tests by shipper, as appropriate.
Air leak tests	Bolt size	Vendor Data and/or Certification: • Marking • Test data • Type A document provided as appropriate • Air leak tests
	Protective coating application	Visual: • Surface/coating as specified • Lack of imperfections in application • Lack of rust, dents, nicks

*These criteria apply to first-time use and to reuse as a DOT-7A Type A packaging.

2.1.6 Additional Information

Evaluation and testing of this packaging were performed at MLM and were documented in Edling 1987. Complete evaluation reports are available upon request from one of the DOT-7A Program technical contacts listed in Section 1.1.2.

2.1.6.1 Primary Users

Site/Contact/Phone	Address
Rocky Flats Plant D. M. Krieg COMM/FTS 303-966-2377	Rocky Flats Plant P. O. Box 464 Golden, CO 80402-0464

Figure 2-2. DOT-17C 5-Gallon Steel Drum, 49 CFR 178.115.

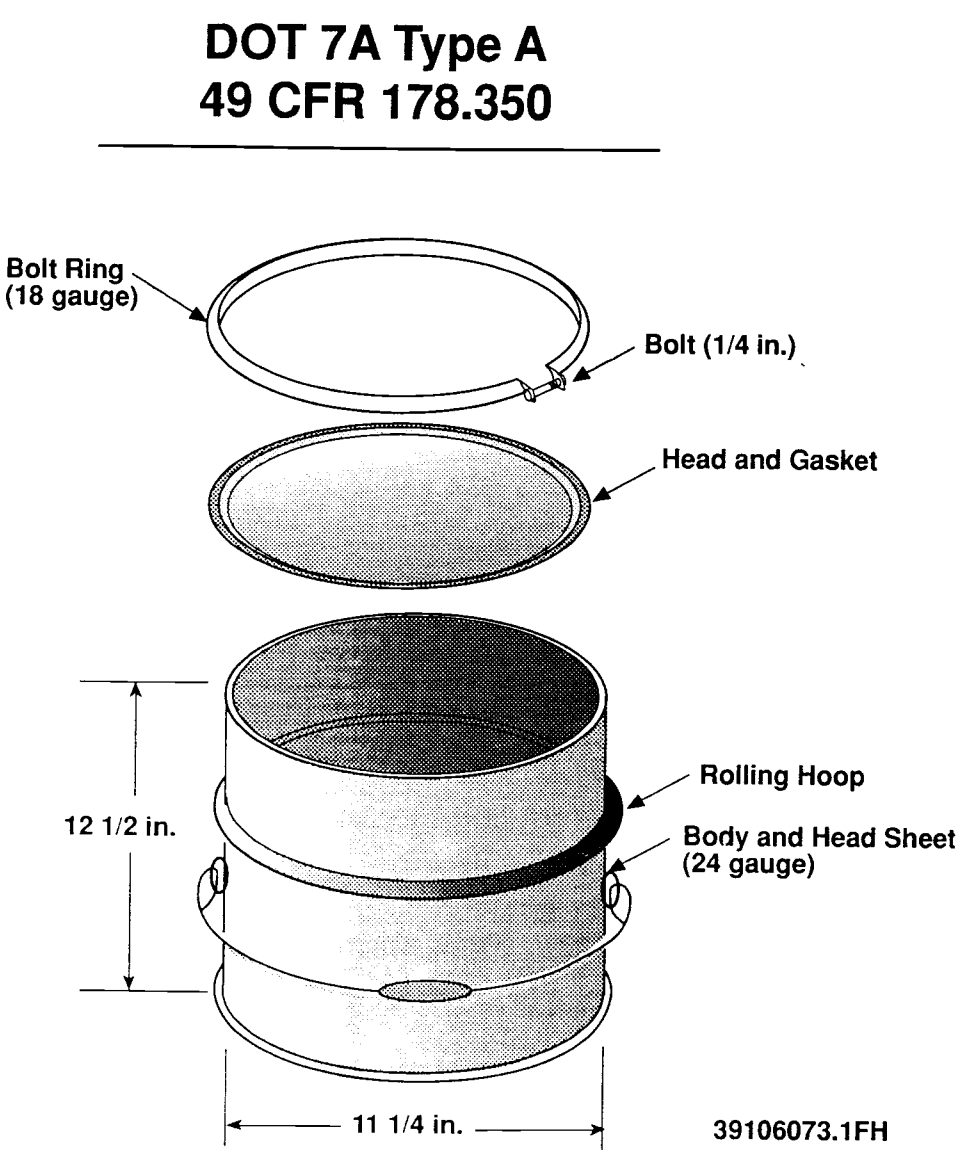

2.2 DOT-17C 5-GALLON STEEL DRUM (DOCKETS: MLM)

2.2.1 Package Description

Dimensions

5-gallon drum	Height (in.)	Diameter (in.)
Interior	12.5	11.25
Exterior (with ring)	13.0	12.00

Materials/Method of Construction

5 gallon	
Body and head sheet	24 gauge
Ring	18 gauge
Bolt	0.25 in.
Gasket required	

2.2.2 Authorized Contents

The shipper must determine that the actual contents are closely simulated by the test contents. If they are not, testing or analysis must be conducted and documented to demonstrate DOT-7A compliance with the actual contents.

2.2.2.1 Physical Form

2.2.2.1.1 Solids Only. Three forms are authorized. Each shipper must determine the most appropriate form for his particular contents and comply with any special requirements (e.g., RTV, etc.).

- Material Form No. 1: Solids--any particle size.
- Material Form No. 2: Solids--large particle size only (e.g., sand, concrete, debris, soil, etc.)
- Material Form No. 3: Solids--objects with no significant dispersible or removable contamination. (For definition, see 49 CFR 173.443, Contamination control.)

2.2.2.1.2 Maximum Gross Weight. Form No. 1, No. 2 and No. 3:

- 100 lb.

2.2.2.2 Chemical Form. The shipper must evaluate and ensure chemical compatibility of the material to be shipped with the materials of the packaging in contact with the payload.

2.2.2.3 Radiological. The 4-ft drop test caused deformation of the package resulting in a decrease in the distance from the exterior to the center of the package at the bottom edge of 0.5 in. (approximate). The shipper must ensure that the radiation level at any surface would not increase by more than 20% (relative to the radiation level of the undamaged configuration) if such a deformation would occur.

2.2.3 Restrictions/Specifications

For Form No. 1 Contents--RTV sealant (or equivalent) must be applied to the surface of the gasket in contact with the drum body.

For Form No. 2 and No. 3 Contents--No packaging component requirements other than as specified in Section 2.2.1.

Bolt closure tightened, with tapping, until the lugs begin to bend inward or come together--typically less than 40 ft-lb. A jam nut shall also be used to prevent unintentional loosening during transport.

The gasket material must have an operating range of -40 °F to +158 °F.

For heavy, bulky materials (e.g., concrete chunks, motors, pumps, etc.), equipment or materials with sharp corners or protrusions, or material/containment geometries that could result in highly localized forces, the shipper must ensure that the contents are securely fastened/positioned within the package.

2.2.4 49 CFR 178.350 Regulatory Requirements

Regulatory Compliance Assessment

Regulatory requirements	Testing/analysis results
49 CFR 173.24, Standard requirements for all packages	Meets applicable requirements. See Appendix A, Table A-1.
49 CFR 173.411, General design requirements	Meets applicable requirements. See Appendix B, Table B-1.
49 CFR 173.412, Additional requirements for Type A packages	Meets applicable requirements. See Appendix C, Table C-1.
49 CFR 173.465, Type A packaging tests	Meets applicable requirements.
Water spray	Pass. Tests were conducted on all three styles of drums and demonstrated no inleakage of water. Further, the water spray test preceded each of the remaining Type A tests. In no case was there any effect on the ability of the packagings to meet the required tests. See Appendix D, Table D-1.
Free drop	Pass. Sixty-nine separate drop tests were conducted (22 on Styles 1A and B, 26 on Style 2, and 21 on Style 3). Drops were conducted on edges, top corners, bottom corners, and the ends. In all cases, there was no loss of contents or major distortion of the packagings. See Appendix D, Table D-10.
Corner drop	Not required.
Compression	Pass. The test was conducted on all three styles at greater than five times the gross weight for greater than 24 hr. There was no visible distortion of the packagings or loss of contents. See Appendix D, Table D-23.
Penetration	Pass. The test was conducted at several points on all three styles of the packagings with no significant effect. The tests on the bungs left no discernable mark. The impact on the centers of the covers resulted in a maximum dent of 0.25 in. The tests on the closure rings left no visible effect. See Appendix D, Table D-30.

2.2.5 Quality Control

Packaging/Acceptance/Use Criteria

Critical	Major	Acceptance/pre-use/ inspection criteria*
Lid/body interface sealing surface	Vendor qualifications and experience	Functional: • Ease of lid/closure ring application • Bolt closure ring--bolt size • Gasket, adhesive, as specified • Geometry, as specified Acceptable Conditions: • Lack of dents, no deformation of sealing surfaces
Gasket		• Dimensions, as specified
Weld areas		• Continuous welds, no sharp edges
Body and chime	Metal thickness	Lot tests by shipper, as appropriate.
Air leak tests	Bolt size	Vendor Data and/or Certification: • Marking • Test data • Type A document provided as appropriate • Air leak tests
	Protective coating application	Visual: • Surface/coating as specified • Lack of imperfections in application • Lack of rust, dents, nicks

*These criteria apply to first-time use and to reuse as a DOT-7A Type A packaging.

2.2.6 ADDITIONAL INFORMATION

Evaluation and testing of this packaging were performed at MLM and were documented in Edling 1987. Complete evaluation reports are available upon request from one of the DOT-7A Program technical contacts listed in Section 1.1.2.

2.2.6.1 Primary Users

Site/Contact/Phone	Address
Los Alamos National Laboratory N. King COMM/FTS 505-667-4125	Los Alamos National Laboratory P.O. Box 1663 Los Alamos, NM 87545
Battelle Columbus Laboratories T. R. Emsweiler 614-879-5165	Battelle Columbus Laboratories 505 King Avenue Columbus, OH 43201

Figure 2-3. DOT-17C 30-Gallon Steel Drum, 49 CFR 178.115.

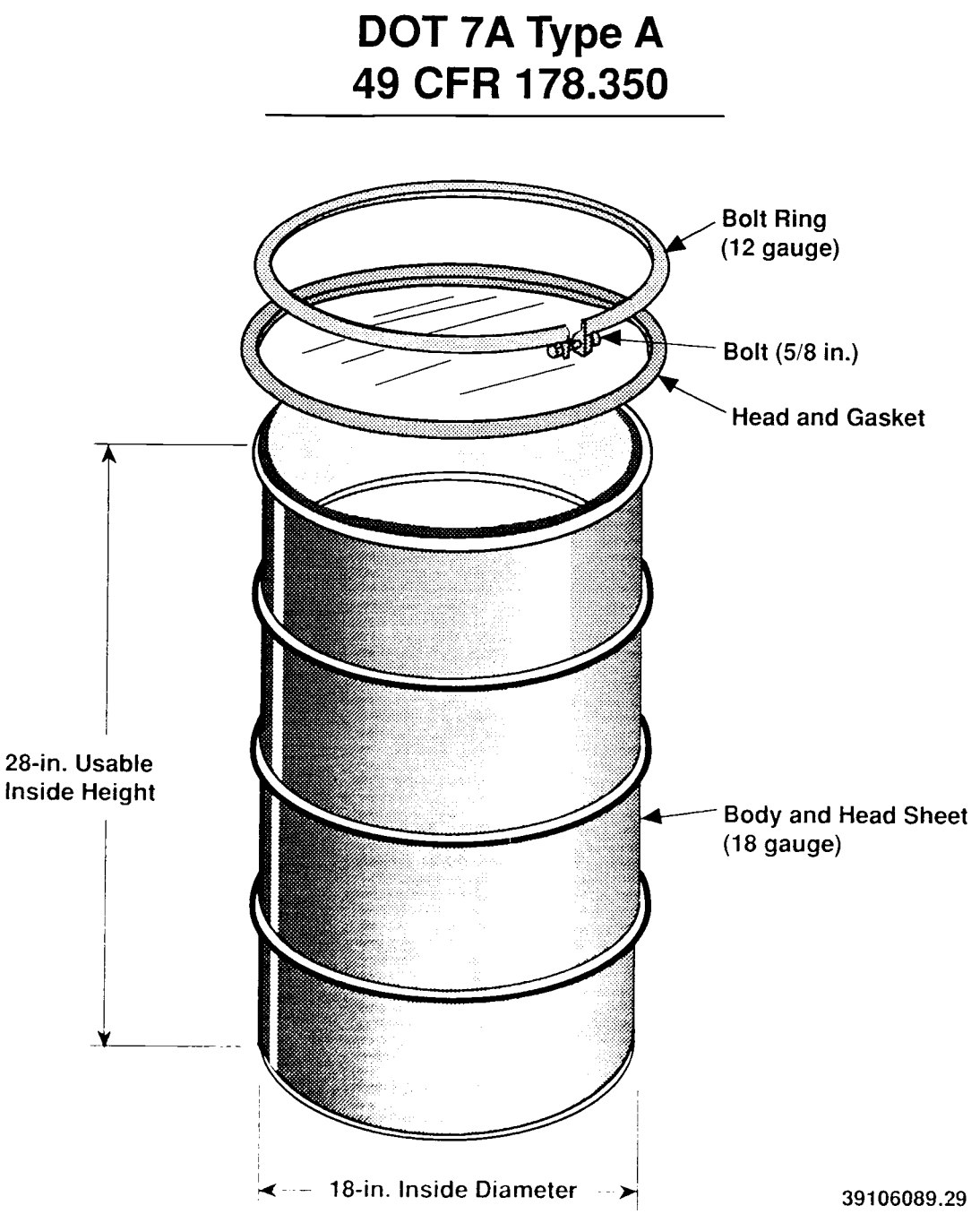

2.3 DOT-17C 30-GALLON STEEL DRUM (DOCKETS: MLM)

2.3.1 Package Description

Dimensions

30-gallon drum	Height (in.)	Diameter (in.)
Interior	28.0	18.0
Exterior	29.5	20.0

Materials/Method of Construction

30 gallon	
Body and head sheet	18 gauge
Ring	12 gauge
Bolt	0.625 in.
Gasket required	

2.3.2 Authorized Contents

The shipper must determine that the actual contents are closely simulated by the test contents. If they are not, testing or analysis must be conducted and documented to demonstrate DOT-7A compliance with the actual contents.

2.3.2.1 Physical Form

2.3.2.1.1 Solids Only. Three forms are authorized. Each shipper must determine the most appropriate form for his particular contents and comply with any special requirements (e.g., RTV, etc.).

- Material Form No. 1: Solids--any particle size.
- Material Form No. 2: Solids--large particle size only (e.g., sand, concrete, debris, soil, etc.)
- Material Form No. 3: Solids--objects with no significant dispersible or removable contamination. (For definition, see 49 CFR 173.443, Contamination control.)

2.3.2.1.2 Maximum Gross Weight

- Form No. 1 = 400 lb
- Form No. 2 = 500 lb
- Form No. 3 = 500 lb.

2.3.2.2 Chemical Form. The shipper must evaluate and ensure chemical compatibility of the material to be shipped with the materials of the packaging in contact with the payload.

2.3.2.3 Radiological. The 4-ft drop test caused deformation of the package resulting in a decrease in the distance from the exterior to the center of the package at the bottom edge of 2.75 in. (approximate). The shipper must ensure that the radiation level at any surface would not increase by more than 20% (relative to the radiation level of the undamaged configuration) if such a deformation would occur.

2.3.3 Restrictions/Specifications

For Form No. 1 Contents--RTV sealant (or equivalent) must be applied to the surface of the gasket in contact with the drum body.

For Form No. 2 and No. 3 Contents--No packaging component requirements other than specified in Section 2.3.1.

The lid closure ring bolt shall be tightened to 40 ± 4 ft-lb with tapping of ring during tightening. A jam nut shall also be used to prevent unintentional loosening during transport.

The gasket material must have an operating range of -40 °F to +158 °F.

For heavy bulky materials (e.g., concrete chunks, motors, pumps, etc.), equipment or materials with sharp corners or protrusions, or material/containment geometries that could result in highly localized forces, the shipper must ensure that the contents are securely fastened/positioned within the package.

2.3.4 49 CFR 178.350 Regulatory Requirements

Regulatory Compliance Assessment

Regulatory requirements	Testing/analysis results
49 CFR 173.24, Standard requirements for all packages	Meets applicable requirements. See Appendix A, Table A-1.
49 CFR 173.411, General design requirements	Meets applicable requirements. See Appendix B, Table B-1.
49 CFR 173.412, Additional requirements for Type A packages	Meets applicable requirements. See Appendix C, Table C-1.
49 CFR 173.465, Type A packaging tests	Meets applicable requirements.
Water spray	Pass. This test was conducted on nine different types of steel drums and a total of 26 packages. In all cases, there was no detectable effect on the ability of the packaging to meet the subsequent Type A tests. Also, in all cases, there was no inleakage of water as a result of this test. See Addendum 1, Table D-1.
Free drop	Pass. 4-ft drop test conducted on: Top - approximately 45° on bolt Bottom - approximately 45° Side - flat on bolt. See Appendix D, Table D-10.
Corner drop	Not required.
Compression	Pass. This test was conducted at greater than five times the gross weight for 24 hr. No detectable effect on the packaging was observed. See Appendix D, Table D-23.
Penetration	Pass. This test was conducted on the center of the lid, on the center of the side body, and on the lid close to the closure ring. See Appendix D, Table D-30.

2.3.5 Quality Control

Packaging/Acceptance/Use Criteria

Critical	Major	Acceptance/pre-use/ inspection criteria*
Lid/body interface sealing surface	Vendor qualifications and experience	Functional: • Ease of lid/closure ring application • Bolt closure ring--bolt size • Gasket, adhesive, as specified • Geometry, as specified Acceptable Conditions: • Lack of dents, no deformation of sealing surfaces
Gasket		• Dimensions, as specified
Weld areas		• Continuous welds, no sharp edges
Body and chime	Metal thickness	Lot tests by shipper, as appropriate.
Air leak tests	Bolt size	Vendor Data and/or Certification: • Marking • Test data • Type A document provided as appropriate • Air leak tests
	Protective coating application	Visual: • Surface/coating as specified • Lack of imperfections in application • Lack of rust, dents, nicks

*These criteria apply to first-time use and to reuse as a DOT-7A Type A packaging.

2.3.6 Additional Information

Evaluation and testing of the subject packaging took place at MLM. A complete test report is available upon request from one of the DOT-7A Program technical contacts listed in Section 1.1.2.

2.3.6.1 Primary Users

Site/Contact/Phone	Address
Battelle Columbus Laboratories T. R. Emsweiler 614-879-5165	Battelle Columbus Laboratories 505 King Avenue Columbus, OH 43201

Figure 2-4. DOT-17C 35-Gallon Steel Drum, 49 CFR 178.115.

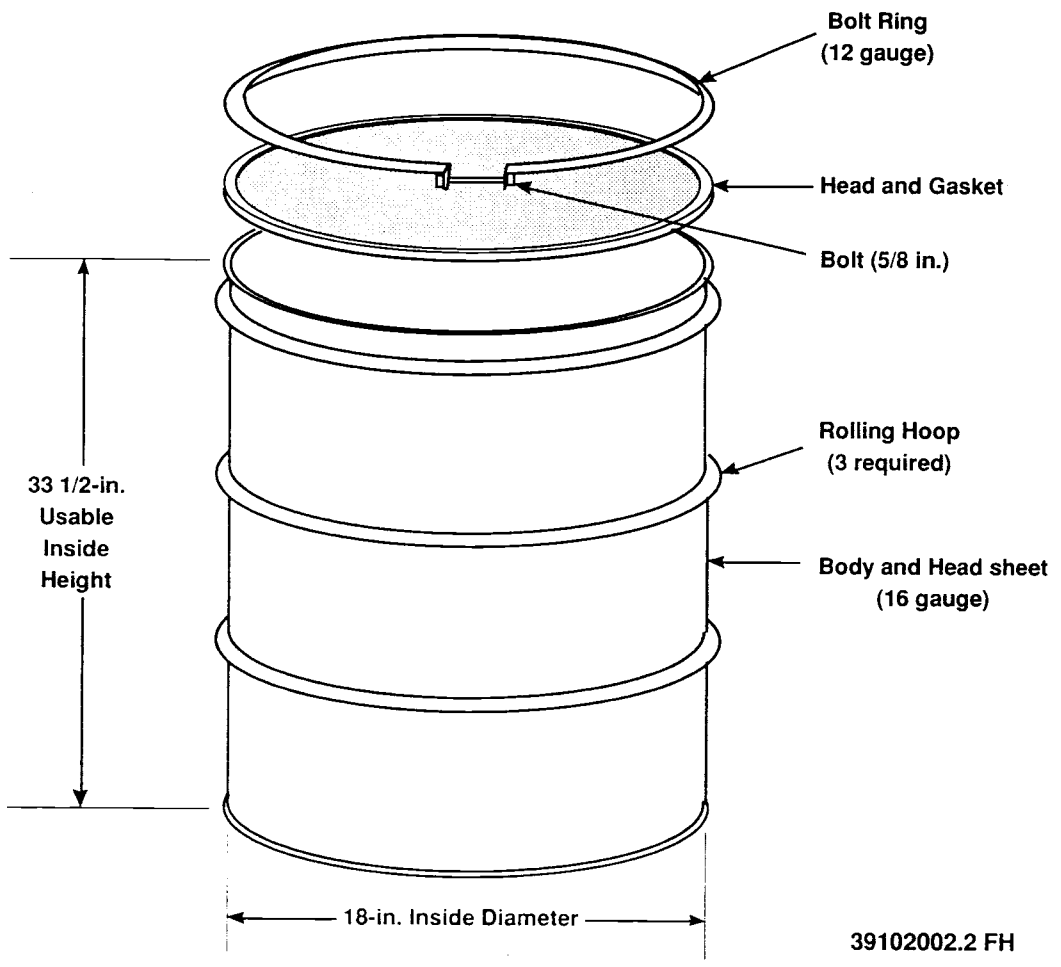

2.4 DOT-17C 35-GALLON STEEL DRUM (DOCKETS: MLM)

2.4.1 Package Description

Dimensions

35-gallon drum	Height (in.)	Diameter (in.)
Interior	33.50	18.00
Exterior	34.75	20.50

Materials/Method of Construction

35 gallon	
Body and head sheet	16 gauge
Ring	12 gauge
Bolt	0.625 in.
Gasket required	

2.4.2 Authorized Contents

The shipper must determine that the actual contents are closely simulated by the test contents. If they are not, testing or analysis must be conducted and documented to demonstrate DOT-7A compliance with the actual contents.

2.4.2.1 Physical Form

2.4.2.1.1 Solids Only. Three forms are authorized. Each shipper must determine the most appropriate form for his particular contents and comply with any special requirements (e.g., RTV, etc.).

- Material Form No. 1: Solids--any particle size.
- Material Form No. 2: Solids--large particle size only (e.g., sand, concrete, debris, soil, etc.).
- Material Form No. 3: Solids--objects with no significant dispersible or removable contamination. (For definition, see CFR 173.443, Contamination control.)

2.4.2.1.2 Maximum Gross Weight. Form No. 1, No. 2 and No. 3:

- 400 lb.

2.4.2.2 Chemical Form. The shipper must evaluate and ensure chemical compatibility of the material to be shipped with the materials of the packaging in contact with the payload.

2.4.2.3 Radiological. The 4-ft drop test caused deformation of the package resulting in a decrease in the distance from the exterior to the center of the package at the top edge of 1.125 in. (approximate). The shipper must ensure that the radiation level at any surface would not increase by more than 20% (relative to the radiation level of the undamaged configuration) if such a deformation would occur.

2.4.3 Restrictions/Specifications

For Form No. 1 and No. 2 Contents--RTV sealant (or equivalent) must be applied to the surface of the gasket in contact with the drum body.

For Form No. 3 Contents--No packaging component requirements other than as specified in Section 2.4.1.

The locking ring bolt shall be tightened to 40 ± 4 ft-lb with tapping of the ring during tightening per the following procedure:

1. Tighten the bolt to 40 ft-lb torque.
2. Hit the closure ring vigorously with a metal hammer, eight to nine times, equally spaced around the ring.
3. Repeat this cycle three additional times.
4. Torque bolt one last time to 40 ft-lb.

A jam nut shall also be used to prevent unintentional loosening during transport.

The cover seal gasket material must have operating range of -40 °F to +158 °F.

For heavy, bulky materials (e.g., concrete chunks, motors, pumps, etc.), equipment or materials with sharp corners or protrusions, or material/containment geometries that could result in highly localized forces, the shipper must ensure that the contents are securely fastened/positioned within the package.

2.4.4 49 CFR 178.350 Regulatory Requirements

Regulatory Compliance Assessment

Regulatory requirements	Testing/analysis results
49 CFR 173.24, Standard requirements for all packages	Meets applicable requirements. See Appendix A, Table A-1.
49 CFR 173.411, General design requirements	Meets applicable requirements. See Appendix B, Table B-1.
49 CFR 173.412, Additional requirements for Type A packages	Meets applicable requirements. See Appendix C, Table C-1.
49 CFR 173.465, Type A packaging tests	Meets applicable requirements.
Water spray	Pass. This test was conducted on a total of six packagings. In all cases, there was no detectable effect on the ability of the packaging to meet the subsequent Type A test. Also, there was no inleakage of water as a result of this test. See Appendix D, Table D-1.
Free drop	Pass. 4-ft drop test conducted on: Top - approximately 45° on bolt Bottom - approximately 45° Side - flat on bolt. See Appendix D, Table D-10.
Corner drop	Not required.
Compression	Pass. This test was conducted at greater than five times the gross weight for 24 hr. No detectable effect on the packaging was observed. See Appendix D, Table D-23.
Penetration	Pass. This test was conducted on the center of the lid, on the center of side body, and on the lid close to the closure ring. Only minor dents occurred. See Appendix D, Table D-30.

2.4.5 Quality Control

Packaging/Acceptance/Use Criteria

Critical	Major	Acceptance/pre-use/ inspection criteria*
Lid/body interface sealing surface	Vendor qualifications and experience	Functional: • Ease of lid/closure ring application • Bolt closure ring--bolt size • Gasket, adhesive, as specified • Geometry, as specified Acceptable Conditions: • Lack of dents, no deformation of sealing surfaces
Gasket		• Dimensions, as specified
Weld areas		• Continuous welds, no sharp edges
Body and chime	Metal thickness	Lot tests by shipper, as appropriate.
Air leak tests	Bolt size	Vendor Data and/or Certification: • Marking • Test data • Type A document provided as appropriate • Air leak tests
	Protective coating application	Visual: • Surface/coating as specified • Lack of imperfections in application • Lack of rust, dents, nicks

*These criteria apply to first-time use and to reuse as a DOT-7A Type A packaging.

2.4.6 Additional Information

Evaluation and testing of the subject packaging took place at MLM in 1989. A complete test report is available upon request from one of the DOT-7A Program technical contacts listed in Section 1.1.2.

2.4.6.1 Primary User(s):

Site/Contact/Phone	Address
Rocky Flats Plant Doyle Mitchell COMM/FTS 303-966-4421	Rocky Flats Plant P.O. Box 464 Golden, CO 80402-0464

Figure 2-5. DOT-17C 55-Gallon Steel Drum.

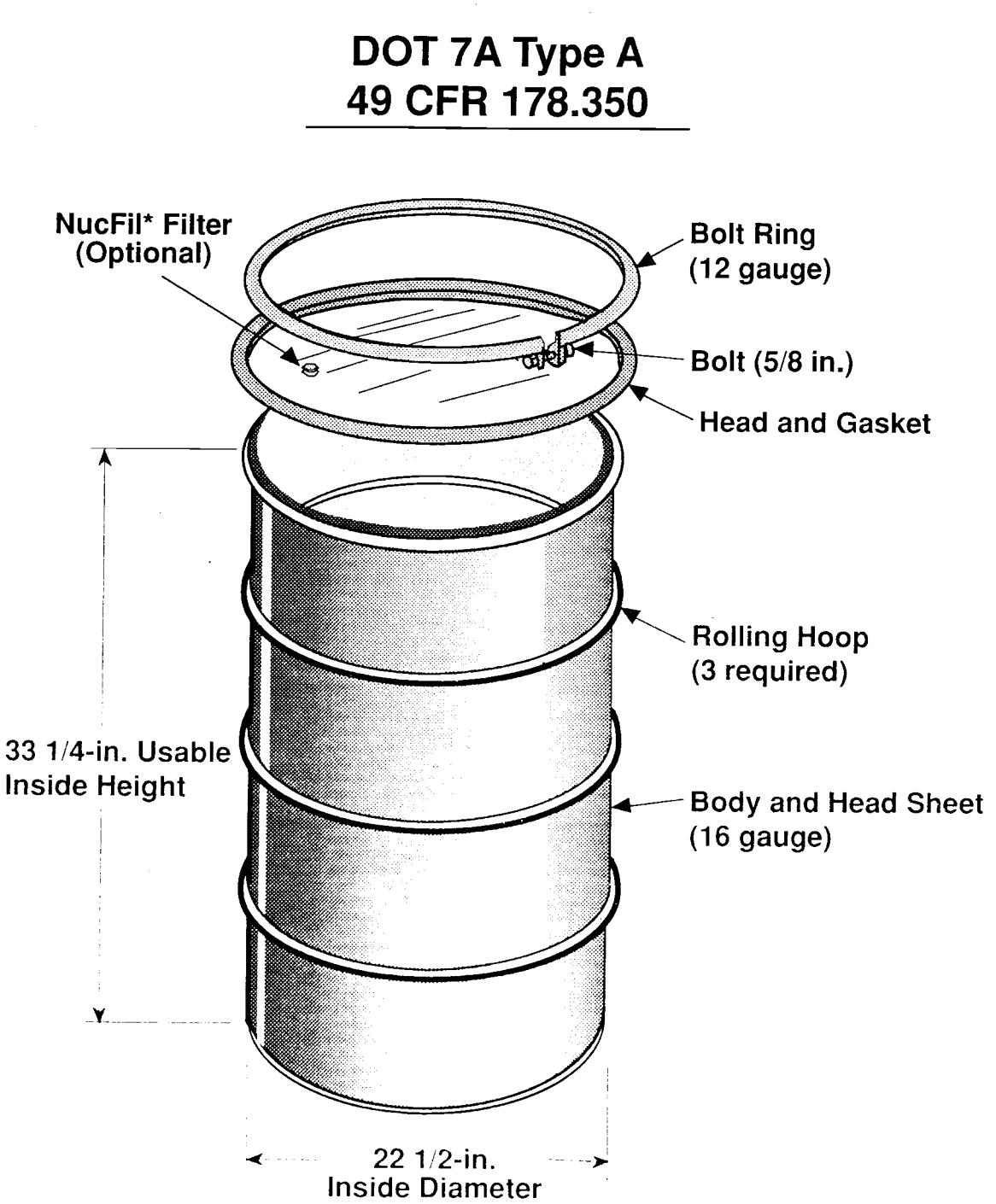

*NucFil is a trademark of Nuclear Filter Technology, Incorporated.

39102077.13FH

Figure 2-6. High-Density Polyethylene Liners for Use with DOT-17C 55-Gallon Steel Drums.

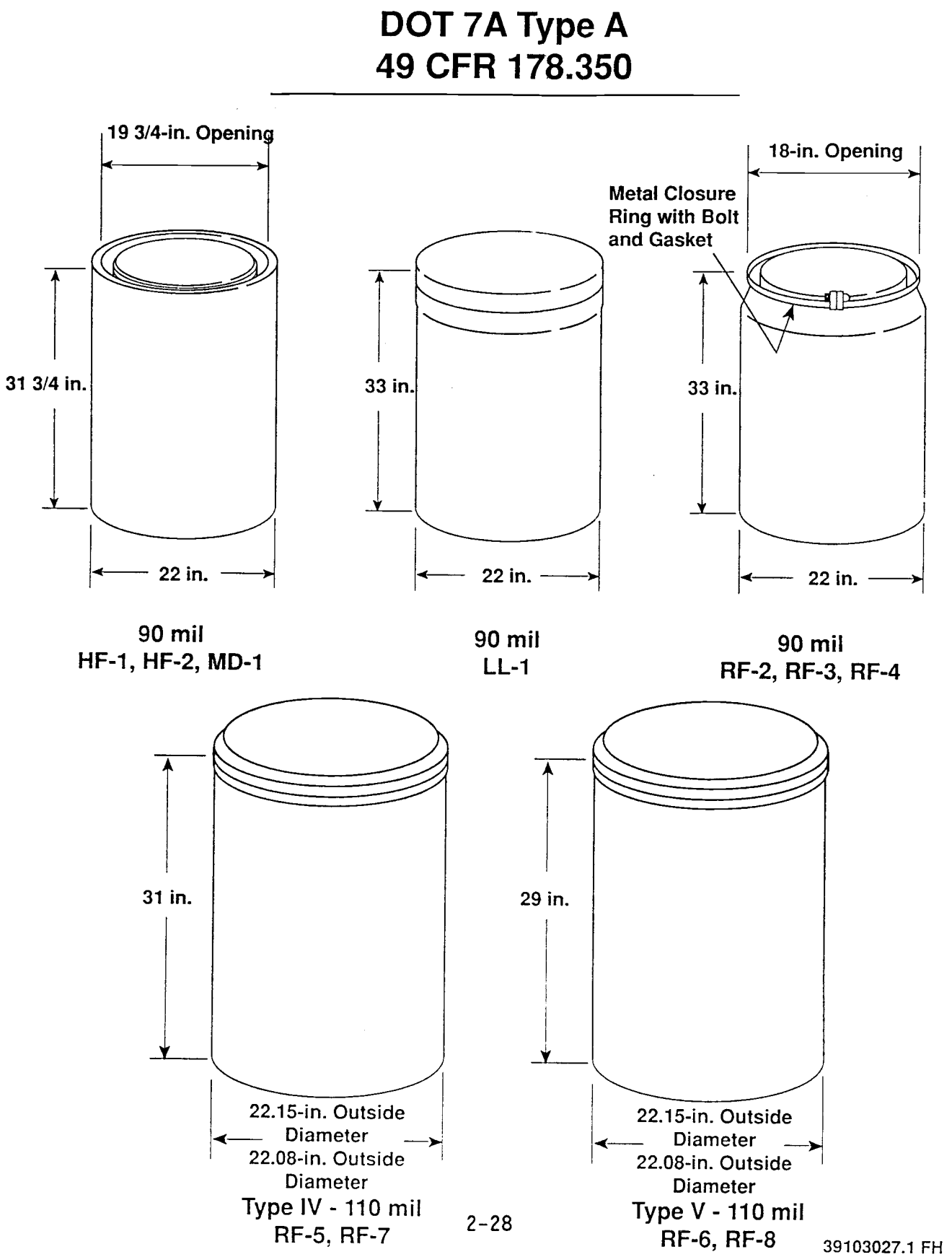

2.5 DOT-17C 55-GALLON STEEL DRUM, OPTIONAL PRESSURE RELIEF DEVICE AND/OR HIGH-DENSITY POLYETHYLENE LINER (DOCKETS: MLM; 89-13-7A, 01/90; 90-18-7A, 01/91)

2.5.1 Package Description

Authorized Configurations (sheet 1 of 2)

HF-1	Drum with vent clip, liner, bag and catalyst: a DOT-17C drum with a vent clip, with a 90-mil HDPE liner (vented or nonvented), which encloses a 4-mil polyethylene bag, which encloses the contents.
HF-2	Drum with liner: a DOT-17C (filtered or nonfiltered) drum with an HDPE liner (90-mil body, 110-mil head, vented or nonvented), which encloses the contents.
LL-1	Drum with liner: a DOT-17C (filtered or nonfiltered) drum with an HDPE liner (90-mil body, 110-mil head, vented or nonvented), which encloses the contents.
MD-1	Drum with liner: a DOT-17C (filtered or nonfiltered) drum with an HDPE liner (90-mil body, 110-mil head, vented or nonvented), which encloses the contents.
RF-1	Drum with polyethylene bag: a DOT-17C nonfiltered drum with an optional 4-mil polyethylene bag, which encloses the contents. For Form No. 1 materials, either the bag or sealing the lid gasket to the body seal interface with RTV adhesive is required.
RF-2	Filtered drum, liner with bag: a DOT-17C filtered (NucFil-014*) drum with a 90-mil HDPE liner, which encloses a 4-mil polyethylene bag, which encloses the contents.
RF-3	Drum with liner: a DOT-17C nonfiltered drum with an HDPE liner (90-mil body, 110-mil head, vented or nonvented), which encloses the contents.
RF-4	Filtered drum with vented liner and bag: a DOT-17C filtered (NucFil-014) drum with a vented HDPE 90-mil liner, which encloses a 10-mil plastic bag, which encloses the contents.
RF-5	Filtered drum, closed Type IV liner: a DOT-17C filtered (NucFil-014) drum with a Type IV HDPE 110-mil liner, which encloses a 10-mil plastic bag, which encloses the contents.
RF-6	Filtered drum, PVC bag with Type V liner: a DOT-17C filtered (NucFil-014) drum with a 10-mil plastic drum liner (polyethylene bag), which encloses a PVC glovebox bag, which encloses a Type V HDPE 110-mil liner, which encloses the contents.

Authorized Configurations (sheet 2 of 2)

RF-7	Filtered drum, vented liner with bag: a DOT-17C filtered (NucFil-014) drum with a vented Type IV HDPE 110-mil liner, which encloses a 10-mil plastic bag, which encloses the contents.
RF-8	Filtered drum, PVC bag with Type V liner: a DOT-17C filtered (NucFil-014) drum with a 10-mil plastic drum liner (polyethelene bag), which encloses a PVC glovebox bag, which encloses a vented Type V HDPE 110-mil liner, which encloses the contents.
G-1	Filtered drum: a DOT-17C drum with catalyst packet and NucFil filter or vent clip--single packaging. Authorized only for use with Form No. 2 and 3 contents, see Section 2.5.2.1.
G-2	Drum (nonfiltered): a DOT-17C drum (nonfiltered)--single packaging. Authorized only for use with Form No. 2 and 3 contents, see Section 2.5.2.1.

*NucFil is a trademark of Nuclear Filter Technology, Incorportated.
HDPE = high-density polyethylene.
PVC = polyvinyl chloride.
RTV = room temperature vulcanizing.

Dimensions

55-gallon drum	Height (in.)	Diameter (in.)
Interior	33.25	22.25
Exterior	35.00	241.00

Materials/Method of Construction (sheet 1 of 2)

Drums	Standard 17C (steel or galvanized steel)
Drum lid	Steel with .750-in. Rieke Bung fitting welded on (required on filtered configurations only)
Drum gasket	Closed cell Neoprene[a] meeting ASTM D1056 grade SCE-45, 30-40 durometer, shore-A Tubular styrene-butadiene Butadiene foam
Pressure relief devices	
Vent Clip	Stainless steel, 304, per Rockwell Hanford drawing H-2-28798
Filter	Nuclear Filter Technology, Incorporated Model NucFil-014[b]

Materials/Method of Construction (sheet 2 of 2)

Liners	
HF-1, HF-2, MD-1	Per RHO-MA-222, Rev. 4 (RHO 1987) Open-head molded polyethylene liner with carbon black Snap-lock closure; use of adhesive bonding optional, but not required Vent hole (if used) is at the center of the head with approximately .750-in. diameter
LL-1	Open-head molded polyethylene liner without carbon black Vent hole (if used) is at the center of the head with approximately .750-in. diameter
RF-2, RF-3, RF-4	Open-head molded polyethylene liner with carbon black Bolted closure ring with gasket Vent hole (if used) is at the center of the head with approximately .750-in. diameter
F-5, RF-6, RF-7, RF-8	Open-head, molded, polyethylene (density is 0.946 to 0.953 per ASTM-D-792 [ASTM 1986]) liner with 2.5% black (Type IV) or brown color (Type V) added, minimum 110-mil thick Lid bolted closure ring, 16 gauge mild steel, .500-in. square back, with .375-in. bolt Head is gasketed and the vent hole (if used) is at the center with approximately 1-in. diameter

[a]Neoprene is a trademark of E. I. duPont de Nemours & Company.
[b]NucFil is a trademark of Nuclear Filter Technology, Incorporated.
ASTM = American Society for Testing and Materials.

2.5.2 Authorized Contents

The shipper must determine that the actual contents are closely simulated by the test contents. If they are not, testing/analysis must be conducted and documented to demonstrate DOT-7A compliance with the actual contents.

2.5.2.1 Physical Form

2.5.2.1.1 Solids Only. Three forms are authorized. Each shipper must determine the most appropriate form for his particular contents and comply with any special requirements.

- Material Form No. 1: Solids--any particle size.
- Material Form No. 2: Solids--large particle size only (e.g., sand, concrete, debris, soil, etc.).
- Material Form No. 3: Solids--objects with no significant dispersible or removable contamination. (For definition, see 49 CFR 173.443, Contamination control.)

2.5.2.1.2 Maximum Gross Weight

- Form No. 1 = 900 lb
- Form No. 2 = 1,000 lb
- Form No. 3 = 1,000 lb.

2.5.2.2 Chemical Form. The shipper must evaluate and ensure chemical compatibility of the material to be shipped with the materials of the packaging in contact with the payload.

2.5.2.3 Radiological. The 4-ft drop test caused deformation of the package resulting in a decrease in the distance from the exterior to the center of the package at the bottom chime of 2.5 in. (approximate). The shipper must ensure that the radiation level at any surface would not increase by more than 20% (relative to the radiation level of the undamaged configuration) if such a deformation would occur.

2.5.3 Restrictions/Specifications

The lid-locking ring bolt shall be tightened to 40 ± 4 ft-lb torque with tapping of ring during tightening. A jam nut shall also be used to prevent unintentional loosening during transport.

The NucFil filter (if used) shall be installed using Loctite* No. 262 (Red) and torqued to 5 ft-lb or tack-welded to prevent unintentional loosening.

The drum gasket material must have an operating range of -40 °F to +158 °F.

If a vented liner is used, a 10-mil (minimum thickness) polyethylene bag must be placed inside the liner to enclose the contents.

---

*Loctite is a trademark of Loctite Corporation.

For heavy, bulky materials (e.g., concrete chunks, motors, pumps, etc.), equipment or materials with sharp corners or protrusions, or material/containment geometries that could result in highly localized forces, the shipper must ensure that the contents are securely fastened/positioned within the package.

2.5.4 49 CFR 178.350 Regulatory Requirements

Regulatory Compliance Assessment

Regulatory requirements	Testing/analysis results
49 CFR 173.24, Standard requirements for all packages	Meets applicable requirements. See Appendix A, Table A-1.
49 CFR 173.411, General design requirements	Meets applicable requirements. See Appendix B, Table B-1.
49 CFR 173.412, Additional requirements for Type A packages	Meets applicable requirements. See Appendix C, Table C-1.
49 CFR 173.465, Type A packaging tests	Meets applicable requirements.
Water spray	Pass. This test was conducted and there was no inleakage of water. See Appendix D, Table D-1.
Free drop	Pass. Multiple 4-ft drop tests have been conducted on a number of test units with successful results. The impact orientations included: Top - CG over corner on bolt Top - flat on top Bottom - CG over corner Bottom - flat on bottom Side - flat on bolt. See Appendix D, Table D-10.
Corner drop	Not required.
Compression	Pass. This test was conducted on a number of test units with successful results. See Appendix D, Table D-23.
Penetration	Pass. Penetration bar was dropped on a number of test units impacting all potentially vulnerable features with no adverse affects on the packaging. The features impacted included the lid, the filter, the side, and the bottom center. See Appendix D, Table D-30.

2.5.5 Quality Control

Packaging/Acceptance/Use Criteria

Critical	Major	Acceptance/pre-use/inspection criteria*
Lid/body interface sealing surface	Vendor qualifications and experience	Functional: • Ease of lid/closure ring application • Bolt closure ring--bolt size • Gasket, adhesive, as specified • Geometry, as specified Acceptable Conditions: • Lack of dents, no deformation of sealing surfaces
Gasket		• Dimensions, as specified
Weld areas		• Continuous welds, no sharp edges
Body and chime	Metal thickness	Lot tests by shipper, as appropriate.
Air leak tests	Bolt size	Vendor Data and/or Certification: • Marking • Test data • Type A document provided as appropriate • Air leak tests
	Protective coating application	Visual: • Surface/coating as specified • Lack of imperfections in application • Lack of rust, dents, nicks

*These criteria apply to first-time use and to reuse as a DOT-7A Type A packaging.

2.5.6 Additional Information

Evaluation and testing of configurations HF-1, HF-2, LL-1, MD-1, RF-1, RF-2, and RF-3 took place at MLM and were documented in Edling 1987. Westinghouse Hanford performed testing and evaluation to qualify the vented liner versions of HF-2, LL-1, MD-1 and RF-3 and configuration RF-4 in January 1990 as part of Docket 89-13-7A. Configurations RF-5, RF-6, RF-7 and RF-8 were qualified based on evaluation and extension of test results in January 1991 as part of Docket 90-18-7A. Complete evaluation reports are available upon request from one of the DOT-7A Program technical contacts listed in Section 1.1.2.

2.5.6.1 Primary Users

Site/Contact/Phone	Address
Rocky Flats Plant D. M. Krieg COMM/FTS 303-966-2377	Rocky Flats Plant P.O. Box 464 Golden, CO 80402-0464
Hanford T. Romano COMM/FTS 509-376-0610	Westinghouse Hanford Company P.O. Box 1970 Richland, WA 99352
Lawrence-Livermore National Laboratory I. Meisel COMM/FTS 510-422-7406	Lawrence-Livermore National Laboratory P.O. Box 808 Livermore, CA 94550
MLM Don Wikstrom COMM/FTS 513-865-3919	EG&G/Mound Mound Road Miamisburg, OH 45342

2.5.6.2 Suppliers

Liners: HF, MD - Orbitron Products
901 S. Main St.
Delphos, OH 45833
419-692-9060

RF - K&M Plastic
1601 Pratt Blvd.
Elkgrove, IL 60007
312-439-3311

Plasti-Drum
1225 Davies
Lockport, IL 60441
815-838-7210

Russell Stanley Co.
8 Ritter Ave.
Woodbridge, NJ 07095
201-634-6000

Figure 2-7. DOT-17H 30-Gallon Steel Drum.

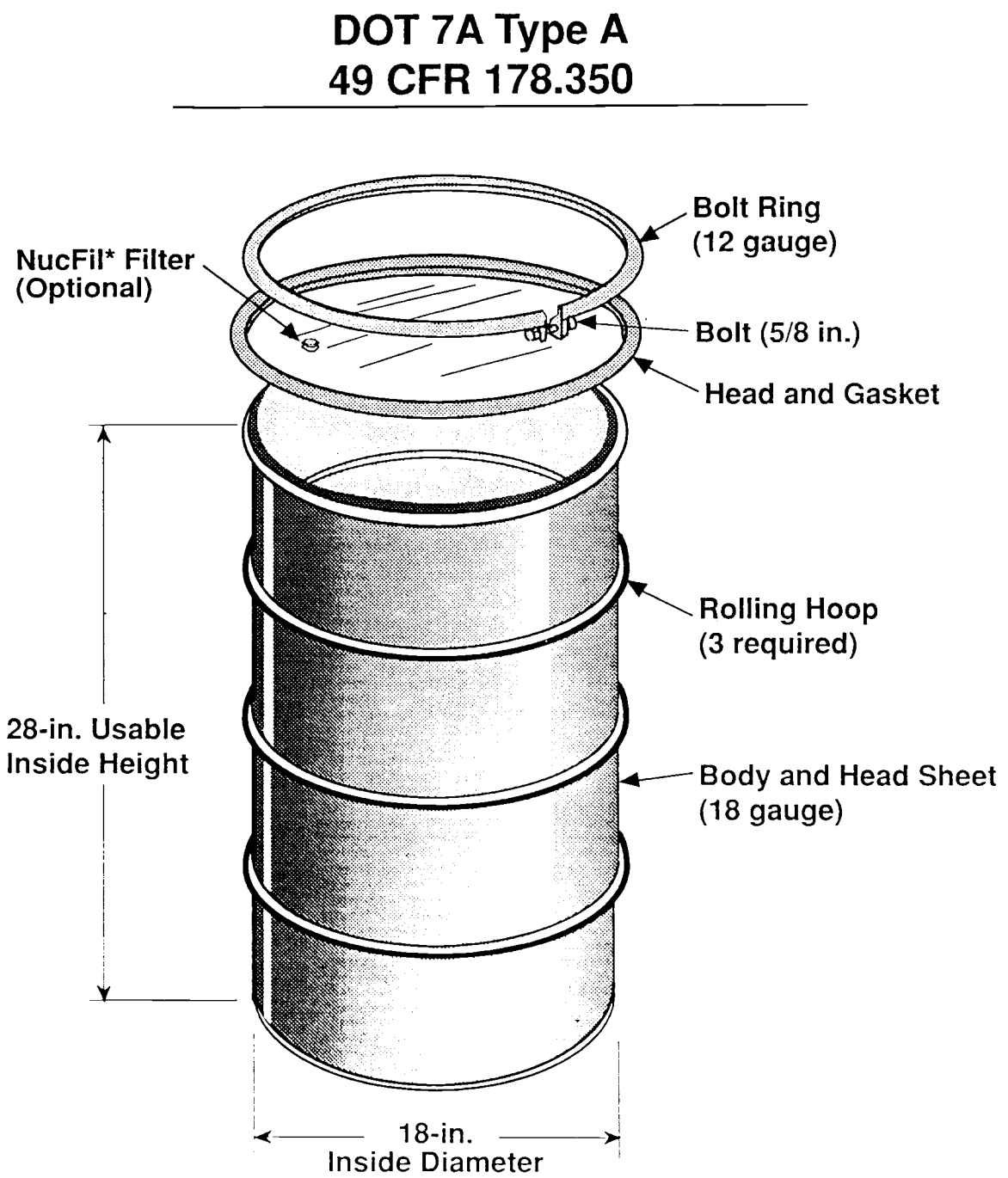

*NucFil is a trademark of Nuclear Filter Technology, Incorporated.

39102077.14FH

2.6 DOT-17H 30-GALLON STEEL DRUM, OPTIONAL PRESSURE RELIEF DEVICE (DOCKETS: MLM 90-17-7A, 07/90--90-20-7A, 07/90)

2.6.1 Package Description

Authorized Configurations

AW-1	Filtered drum with bag: a DOT-17H filtered (NucFil-031*) drum with a 20-mil polyethylene filtered (NucFil-030) bag, which encloses an HDPE 100-mil vented liner, which encloses the contents.
FM-1	Filtered drum with bag: a DOT-17H filtered (NucFil-031) drum with a 20-mil polyethylene filtered (NucFil-030) bag, which encloses the contents.
OR-1	Drum (nonfiltered): a DOT-17H drum (nonfiltered)--single packaging. An RTV sealant must be applied to the seal for Material Form No. 1 contents, see Section 2.6.2.

*NucFil is a trademark of Nuclear Filter Technology, Inc. (NFTI).
HDPE = high-density polyethylene.

Dimensions

17H 30-gallon drum	Height (in.)	Diameter (in.)
Interior	28.0	18.0
Exterior	29.5	20.0

Materials/Method of Construction

Drum	Steel, DOT-17H, 49 CFR 178.118
Body and lid	18 gauge
Ring	12 gauge
Ring bolt	.625 in.
Gasket	Tubular, styrene--butadiene
Plastic bag	Polyethylene, 20-mil
Filter - drum	NFTI Model NucFil-031*
- bag	NFTI Model NucFil-030
Rigid liner	Polyethylene (high density), 100-mil
Liner lid	Polyethylene (high density), .062 in.
Fiberboard liner	90-mil, single wall, 26 gal

*NucFil is a trademark of Nuclear Filter Technology, Inc.

Figure 2-8. High-Density Polyethylene Liners for Use with DOT-17H 30-Gallon Steel Drums.

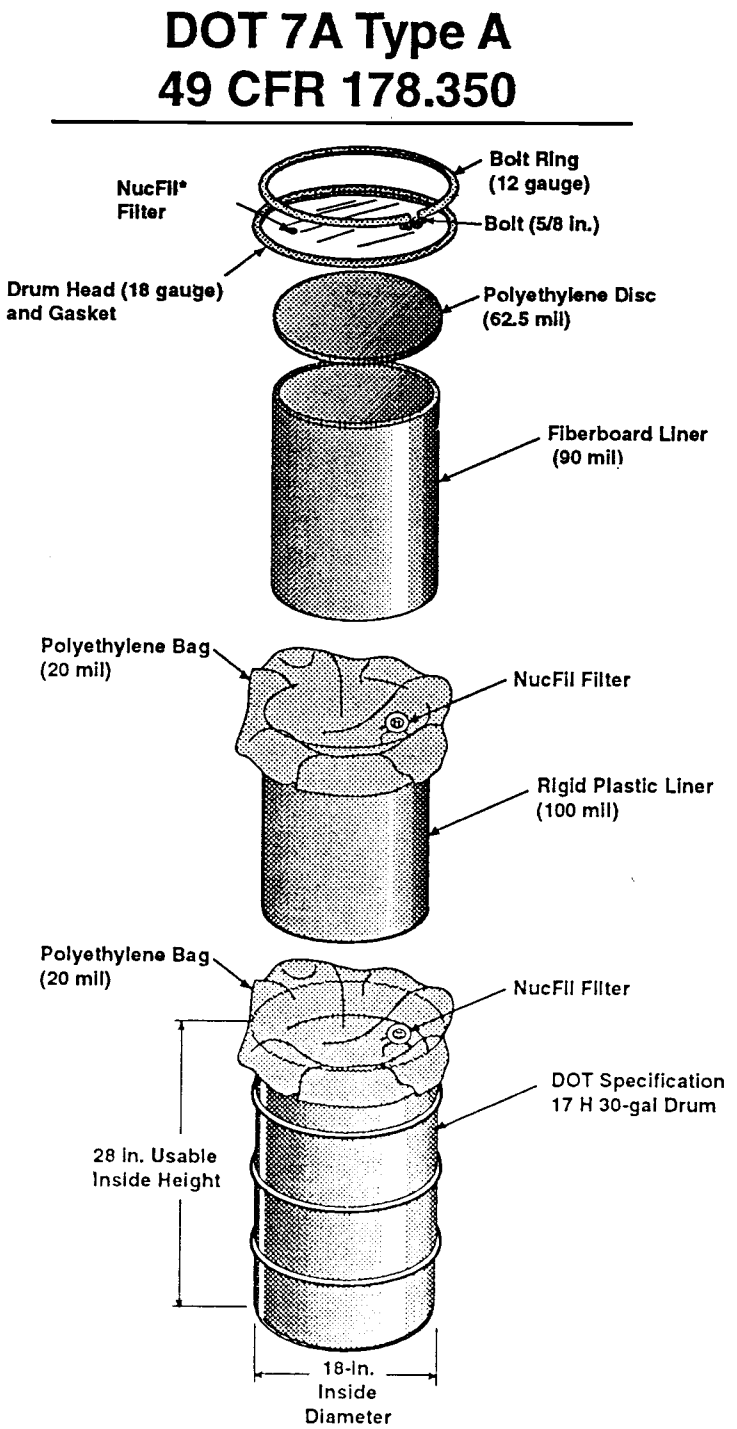

*NucFil is a trademark of Nuclear Filter Technology, Incorporated.

39102100.1aFH

2.6.2 Authorized Contents

The shipper must determine that the actual contents are closely simulated by the test contents. If they are not, testing or analysis must be conducted and documented to demonstrate DOT-7A compliance with the actual contents.

2.6.2.1 Physical Form

2.6.2.1.1 Solids Only. Three forms are authorized. Each shipper must determine the most appropriate form for his particular contents and comply with any special requirements (e.g., RTV, etc.).

- Material Form No. 1: Solids--any particle size.
- Material Form No. 2: Solids--large particle size only (e.g., sand, concrete, debris, soil, etc.).
- Material Form No. 3: Solids--objects with no significant dispersible or removable contamination. (For definition, see 49 CFR 173.443, Contamination control.)

2.6.2.1.2 Maximum Gross Weight. Material Forms No. 1, No. 2, and No. 3:

- 400 lb.

2.6.2.2 Chemical Form. The shipper must evaluate and ensure chemical compatibility of the material to be shipped with the materials of the packaging in contact with the payload.

2.6.2.3 Radiological. The 4-ft drop test caused deformation of the package resulting in a decrease in the distance from the exterior to the center of the package at the bottom chime of 2.75 in. (approximate). The shipper must ensure that the radiation level at any surface would not increase by more than 20% (relative to the radiation level of the undamaged configuration) if such a deformation would occur.

2.6.3 Restrictions/Specifications

Material Form No. 1 contents--RTV must be applied to the seal gasket to body interface when the packaging is used to ship Form No. 1 contents.

The lid locking ring bolt shall be tightened to 40 ± 4 ft-lb torque with tapping of the ring during tightening. A jam nut shall also be used to prevent unintentional loosening during transport.

The NucFil filter (if used) shall be installed using Loctite No. 262 (Red) and torqued to 5 ft-lb or tack-welded to prevent unintentional loosening.

The drum gasket material must have an operating range of -40 °F to +158 °F.

For heavy, bulky materials (e.g., concrete chunks, motors, pumps, etc.), equipment or materials with sharp corners or protrusions, or material/containment geometries that could result in highly localized forces, the shipper must ensure that the contents are securely fastened/positioned within the package.

2.6.4 49 CFR 178.350 Regulatory Requirements

Regulatory Compliance Assessment

Regulatory requirements	Testing/analysis results
49 CFR 173.24, Standard requirements for all packages	Meets applicable requirements. See Appendix A, Table A-1.
49 CFR 173.411, General design requirements	Meets applicable requirements. See Appendix B, Table B-1.
49 CFR 173.412, Additional requirements for Type A packages	Meets applicable requirements. See Appendix C, Table C-1.
49 CFR 173.465, Type A packaging tests	Meets applicable requirements.
Water spray	Pass. This test was conducted on a number of test units with no inleakage of water. See Appendix D, Table D-1.
Free drop	Pass. Multiple drop tests at varying impact angles on a number of test units with successful results. The orientations included: Top - CG over corner on bolt Top - flat on top Bottom - CG over corner Bottom - flat on bottom. See Appendix D, Table D-10.
Corner drop	Not required.
Compression	Pass. This test was conducted on several test units at more than five times the maximum gross weight with successful results. See Appendix D, Table D-23.
Penetration	Pass. All potentially vulnerable package features were subjected to the penetration impact with no adverse affects. See Appendix D, Table D-30.

2.6.5 Quality Control

Packaging/Acceptance/Use Criteria

Critical	Major	Acceptance/pre-use/ inspection criteria*
Lid/body interface sealing surface	Vendor qualifications and experience	Functional: • Ease of lid/closure ring application • Bolt closure ring--bolt size • Gasket, adhesive, as specified • Geometry, as specified Acceptable Conditions: • Lack of dents, no deformation of sealing surfaces
Gasket		• Dimensions, as specified
Weld areas		• Continuous welds, no sharp edges
Body and chime	Metal thickness	Lot tests by shipper, as appropriate.
Air leak tests	Bolt size	Vendor Data and/or Certification: • Marking • Test data • Type A document provided as appropriate • Air leak tests
	Protective coating application	Visual: • Surface/coating as specified • Lack of imperfections in application • Lack of rust, dents, nicks

*These criteria apply to first-time use and to reuse as a DOT-7A Type A packaging.

2.6.6 Additional Information

Evaluation and testing of configuration OR-1 took place at MLM and was documented in Edling 1987. Westinghouse Hanford qualified configurations AW-1 and FM-1 which utilize filtered drums and inner filtered bags. The testing and evaluation for these packagings was performed in July 1990 as part of Dockets 90-17-7A and 90-20-7A. Complete reports are available upon request from one of the DOT-7A Program technical contacts listed in Section 1.1.2.

2.6.6.1 Primary Users

Site/Contact/Phone	Address
Fernald C. E. Block COMM/FTS 513-738-6469	Westinghouse Materials Company of Ohio P.O. Box 398704 Cincinnati, OH 45239
Argonne National Laboratory-East (ANL-E) R. Ditch COMM/FTS 708-972-5865	Argonne National Laboratories 9700 South Cass Ave. Argonne, IL 60439
Oak Ridge National Laboratory H. E. Crowder COMM/FTS 615-576-5454	Martin Marietta Energy Systems Y-12 Plant Oak Ridge, TN 37830

Figure 2-9. DOT-17H 55-Gallon Steel Drum.

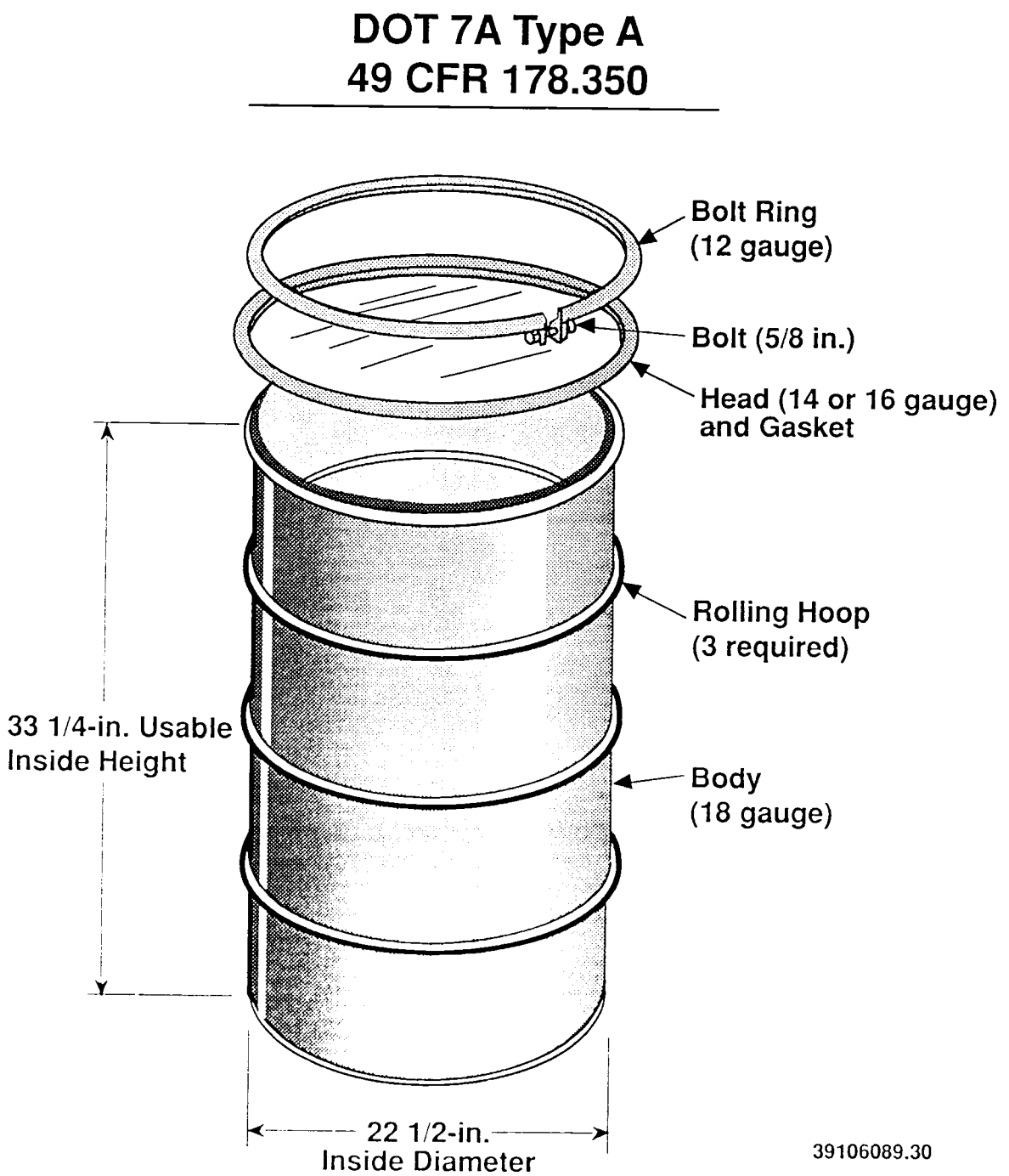

2.7 DOT 17H 55-GALLON STEEL DRUM (DOCKETS: MLM)

2.7.1 Package Description

Dimensions

55-gallon drum	Height (in.)	Diameter (in.)
Interior	33.25	22.25
Exterior	35.00	24.00

Materials/Method of Construction

55 gallon	
Body	18 gauge
Head	14 or 16 gauge
Ring	12 gauge
Bolt	0.625 in.
Gasket required	

2.7.2 Authorized Contents

The shipper must determine that the actual contents are closely simulated by the test contents. If they are not, testing or analysis must be conducted and documented to demonstrate DOT-7A compliance with the actual contents.

2.7.2.1 Physical Form

2.7.2.1.1 Solids Only. Three forms are authorized. Each shipper must determine the most appropriate form for his particular contents and comply with any special requirements (e.g., RTV, etc.).

- Material Form No. 1: Solids--any particle size.
- Material Form No. 2: Solids--large particle size only (e.g., sand, concrete, debris, soil, etc.).
- Material Form No. 3: Solids--objects with no significant dispersible or removable contamination. (For definition, see 49 CFR 173.443, Contamination control.)

2.7.2.1.2 Maximum Gross Weight.

- Form No. 1 = 900 lb
- Form No. 2 = 1,000 lb
- Form No. 3 = 1,000 lb.

2.7.2.2 Chemical Form. The shipper must evaluate and ensure chemical compatibility of the material to be shipped with the materials of the packaging in contact with the payload.

2.7.2.3 Radiological. The 4-ft drop test caused deformation of the package resulting in a decrease in the distance from the exterior to the center of the package at the top edge of 3.75 in. (approximate). The shipper must ensure that the radiation level at any surface would not increase by more than 20% (relative to the radiation level of the undamaged configuration) if such a deformation would occur.

2.7.3 Restrictions/Specifications

For Form No. 1 Contents--RTV sealant (or equivalent) must be applied to the surface of the gasket in contact with the drum body.

For Form No. 2 and No. 3 Contents--No packaging component requirements other than specified in Section 2.7.1.

The lid closure ring bolt shall be tightened to 40 ± 4 ft-lb with tapping of ring during tightening. A jam nut shall also be used to prevent unintentional loosening during transport.

The gasket material must have an operating range of -40 °F to +158 °F.

For heavy, bulky materials (e.g., concrete chunks, motors, pumps, etc.), equipment or materials with sharp corners or protrusions, or material/containment geometries that could result in highly localized forces, the shipper must ensure that the contents are securely fastened/positioned within the package.

2.7.4 CFR 173.350 Regulatory Requirements

Regulatory Compliance Assessment

Regulatory requirements	Testing/analysis results
49 CFR 173.24, Standard requirements for all packages	Meets applicable requirements. See Appendix A, Table A-1.
49 CFR 173.411, General design requirements	Meets applicable requirements. See Appendix B, Table B-1.
49 CFR 173.412, Additional requirements for Type A packages	Meets applicable requirements. See Appendix C, Table C-1.
49 CFR 173.465, Type A packaging tests	Meets applicable requirements.
Water spray	Pass. Tests were conducted on a total of 26 test units of 9 different types of steel drums. In all cases, there was no detectable effect on the ability of the packaging to meet the subsequent Type A tests. In all cases, there was no inleakage of water. See Appendix D, Table D-1.
Free drop	Pass. 4-ft drop test conducted on: Top - approximately 45° on bolt Bottom - approximately 45° Side - flat on bolt. See Appendix D, Table D-10.
Corner drop	Not required.
Compression	Pass. The test was conducted at five times the gross weight for 24 hr. No detectable effect on the packaging was observed. See Appendix D, Table D-23.
Penetration	Pass. The test was not conducted. Conclusion based on successful testing of comparable DOT-17H drum. See Appendix D, Table D-30.

2.7.5 Quality Control

Packaging/Acceptance/Use Criteria

Critical	Major	Acceptance/pre-use/ inspection criteria*
Lid/body interface sealing surface	Vendor qualifications and experience	Functional: • Ease of lid/closure ring application • Bolt closure ring--bolt size • Gasket, adhesive, as specified • Geometry, as specified Acceptable Conditions: • Lack of dents, no deformation of sealing surfaces
Gasket		• Dimensions, as specified
Weld areas		• Continuous welds, no sharp edges
Body and chime	Metal thickness	Lot tests by shipper, as appropriate.
Air leak tests	Bolt size	Vendor Data and/or Certification: • Marking • Test data • Type A document provided as appropriate • Air leak tests
	Protective coating application	Visual: • Surface/coating as specified • Lack of imperfections in application • Lack of rust, dents, nicks

*These criteria apply to first-time use and to reuse as a DOT-7A Type A packaging.

2.7.6 Additional Information

Evaluation and testing of this packaging were performed at MLM and were documented in Edling 1987. Complete evaluation reports are available upon request from one of the DOT-7A Program technical contacts listed in Section 1.1.2.

2.7.6.1 Primary Users

Site/Contact/Phone	Address
MLM Don Wikstrom COMM/FTS 513-865-3919	Mound Laboratories Mound Road Miamisburg, OH 45342
Battelle T. R. Emsweiler 614-879-5165	Battelle Columbus Laboratories 505 King Avenue Columbus, OH 43201
ORNL H. E. Crowder COMM/FTS 615-574-2689	Martin-Marietta Energy Systems, Inc. P.O. Box Y Oak Ridge Y-12 Plant Oak Ridge, TN 37830

Figure 2-10. Steel Drums, Military Specification Containers of Varying Sizes.

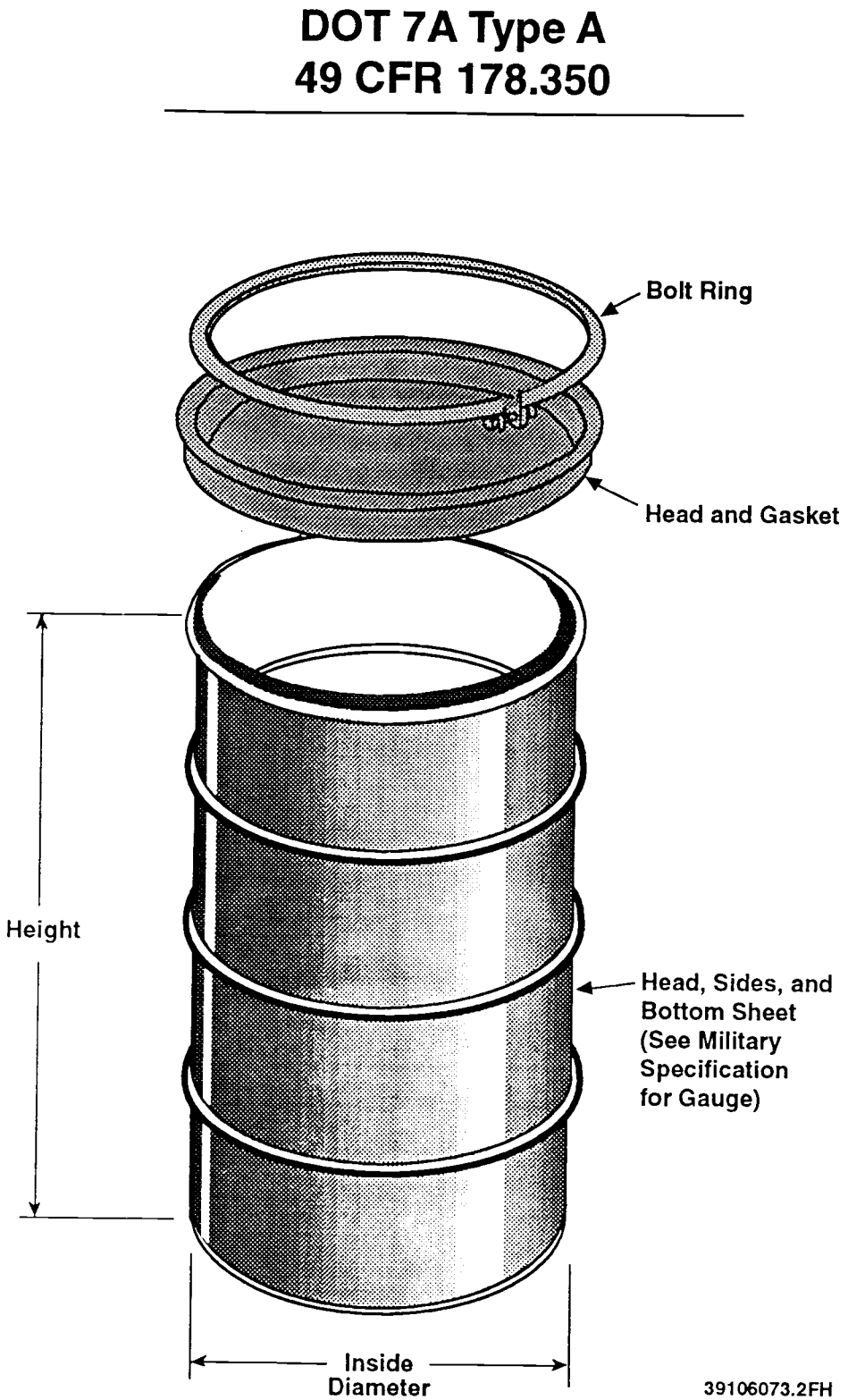

2.8 MILITARY SPECIFICATION (MS) DRUMS--VARIOUS SIZES (DOCKETS: MLM)

2.8.1 Package Description

Dimensions and Weights

Drum number	Volume (gal)	Inside height (in.)	Inside diameter (in.)	Gross weight (lb)
MS-24347-21[a]	0.25	4.25	5.00	10
MS-24347-27	1.25	7.25	8.50	35
MS-27684-11	3.00	8.08	10.50	60
MS-27684-12	4.00	12.86	10.50	110
MS-27684-13	6.00	16.74	10.50	80
MS-27684-16	8.00	21.48	10.50	80
MS-27684-18	12.00	19.68	13.81	200
MS-27683-36	30.00	26.99	18.25	400
MS-27683-42	45.00	26.11	22.50	500
MS-27683-50	85.00	36.00[b]	26.00	800

[a]This number refers to the body number of the drum on the drawing.
[b]Normal height for this drum is 34.43 in. Be sure to specify the additional height when ordering.

2.8.2 Authorized Contents

The shipper must determine that the actual contents are closely simulated by the test contents. If they are not, testing or analysis must be conducted and documented to demonstrate DOT-7A compliance with the actual contents.

2.8.2.1 Physical Form

2.8.2.1.1 **Solids Only**. Three forms are authorized. Each shipper must determine the most appropriate form for his particular contents and comply with any special requirements (e.g., RTV, etc.).

- Material Form No. 1: Solids--any particle size.
- Material Form No. 2: Solids--large particle size only (e.g., sand, concrete, debris, soil, etc.).
- Material Form No. 3: Solids--objects with no significant dispersible or removable contamination. (For definition, see 49 CFR 173.443, Contamination control.)

2.8.2.1.2 **Maximum Gross Weight**. See table in Section 2.8.1.

2.8.2.2 Chemical Form. The shipper must evaluate and ensure chemical compatibility of the material to be shipped with the materials of the packaging in contact with the payload.

2.8.2.3 Radiological. The 4-ft drop test caused deformations of the package resulting in decreases in the distance from the exterior to the center of the package (see table below). The shipper must ensure that the radiation level at any surface would not increase by more than 20% (relative to the radiation level of the undamaged configuration) if such deformations would occur.

2.8.3 Restrictions/Specifications

Drum number	Volume (gal)	RTV required		Liner required[b]		Maximum distance reduction to package center (in.)
		Form No. 1	Form No. 2	Form No. 1	Form No. 2	
MS-24347-21[a]	0.25	No	No	Yes	No	1.625 side
MS-24347-27	1.25	No	No	Yes	No	1.250 side
MS-27684-11	3.00	No	No	Yes	No	1.0 side
MS-27684-12	4.00	No	No	Yes	No	1.0 lid
MS-27684-13	6.00	No	No	Yes	No	1.0 lid
MS-27684-16	8.00	No	No	Yes	No	1.0 lid
MS-27684-18	12.00	No	No	Yes	No	1.0 lid
MS-27683-36	30.00	No	No	Yes	No	1.0 lid
MS-27683-42	45.00	No	No	Yes	No	0.375 side
MS-27683-50	85.00	Yes	No	No	No	0.375 side

[a]This number refers to the body number of the drum on the drawing.
[b]The liner shall be high density polyethylene, 4-mil thickness minimum.

The lid locking ring bolt shall be tightened to 40 ± 4 ft-lb torque with tapping of ring during tightening. A jam nut shall also be used to prevent unintentional loosening during transport.

The drum gasket material must have an operating range of -40 °F to +158 °F.

For heavy, bulky materials (e.g., concrete chunks, motors, pumps, etc.), equipment or materials with sharp corners or protrusions, or material/containment geometries that could result in highly localized forces, the shipper must ensure that the contents are securely fastened/positioned within the package.

2.8.4 CFR 173.350 Regulatory Requirements

Regulatory Compliance Assessment

Regulatory requirements	Testing/analysis results
49 CFR 173.24, Standard requirements for all packages	Meets applicable requirements. See Appendix A, Table A-1.
49 CFR 173.411, General design requirements	Meets applicable requirements. See Appendix B, Table B-1.
49 CFR 173.412, Additional requirements for Type A packages	Meets applicable requirements. See Appendix C, Table C-1.
49 CFR 173.465, Type A packaging tests	Meets applicable requirements.
Water spray	Pass. Tests were conducted on a total of 26 test units of nine different types of steel drums. In all cases, there was no detectable effect on the ability of the packaging to meet the subsequent Type A tests. In all cases, there was no inleakage of water. See Appendix D, Table D-1.
Free drop	Pass. 4-ft drop test conducted on: Top - approximately 45° on bolt Bottom - approximately 45° Side - flat on bolt. See Appendix D, Table D-10.
Corner drop	Not required
Compression	Pass. The test was conducted at five times the gross weight for 24 hr. No detectable effect on the packaging was observed. See Appendix D, Table D-23.
Penetration	Pass. Significant dents occurred in the smaller packages. The reduction in distance to the package center is shown in the table in Section 2.8.3. Each shipper must ensure that the radiation level at the surface of the package will not increase more than 20% as a result of such a deformation. See Appendix D, Table D-30.

2.8.5 Quality Control

Packaging/Acceptance/Use Criteria

Critical	Major	Acceptance/pre-use/ inspection criteria*
Lid/body interface sealing surface	Vendor qualifications and experience	Functional: • Ease of lid/closure ring application • Bolt closure ring--bolt size • Gasket, adhesive, as specified • Geometry, as specified Acceptable Conditions: • Lack of dents, no deformation of sealing surfaces
Gasket		• Dimensions, as specified
Weld areas		• Continuous welds, no sharp edges
Body and chime	Metal thickness	Lot tests by shipper, as appropriate.
Air leak tests	Bolt size	Vendor Data and/or Certification: • Marking • Test data • Type A document provided as appropriate • Air leak tests
	Protective coating application	Visual: • Surface/coating as specified • Lack of imperfections in application • Lack of rust, dents, nicks

*These criteria apply to first-time use and to reuse as a DOT-7A Type A packaging.

2.8.6 Additional Information

Evaluation and testing of this packaging were performed at MLM and were documented in Edling 1987. Complete evaluation reports are available upon request from one of the DOT-7A Program technical contacts listed in Section 1.1.2.

2.8.6.1 Primary Users

Site/Contact/Phone	Address
MLM Don Wikstrom COMM/FTS 513-865-3919	EG&G/Mound Mound Road Miamisburg, OH 45342

Figure 2-11. 71-Gallon Square Steel Drum, 6½-Inch Crimped Cover.

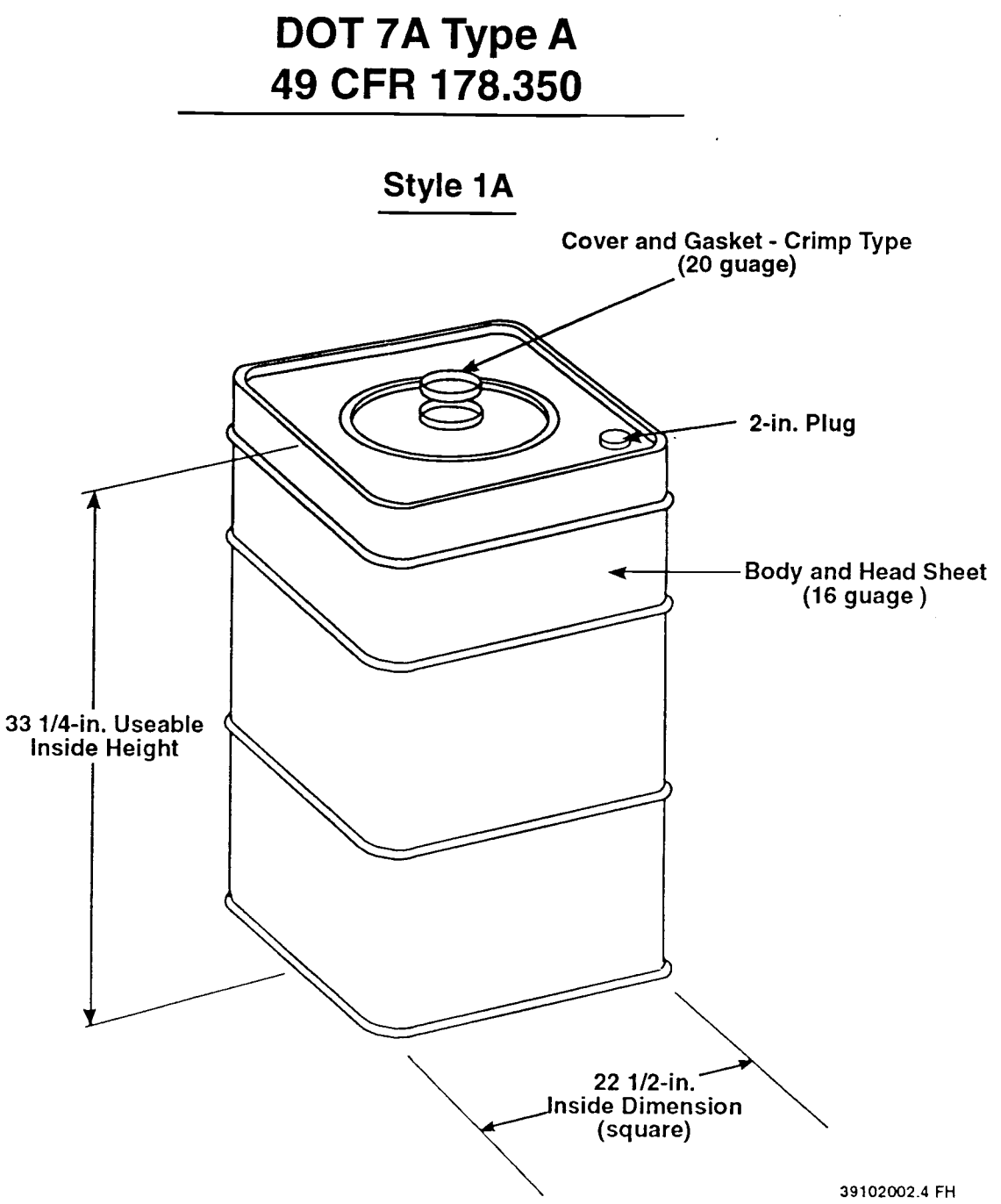

Figure 2-12. 71-Gallon Square Steel Drum, 6½-Inch Crimped Cover.

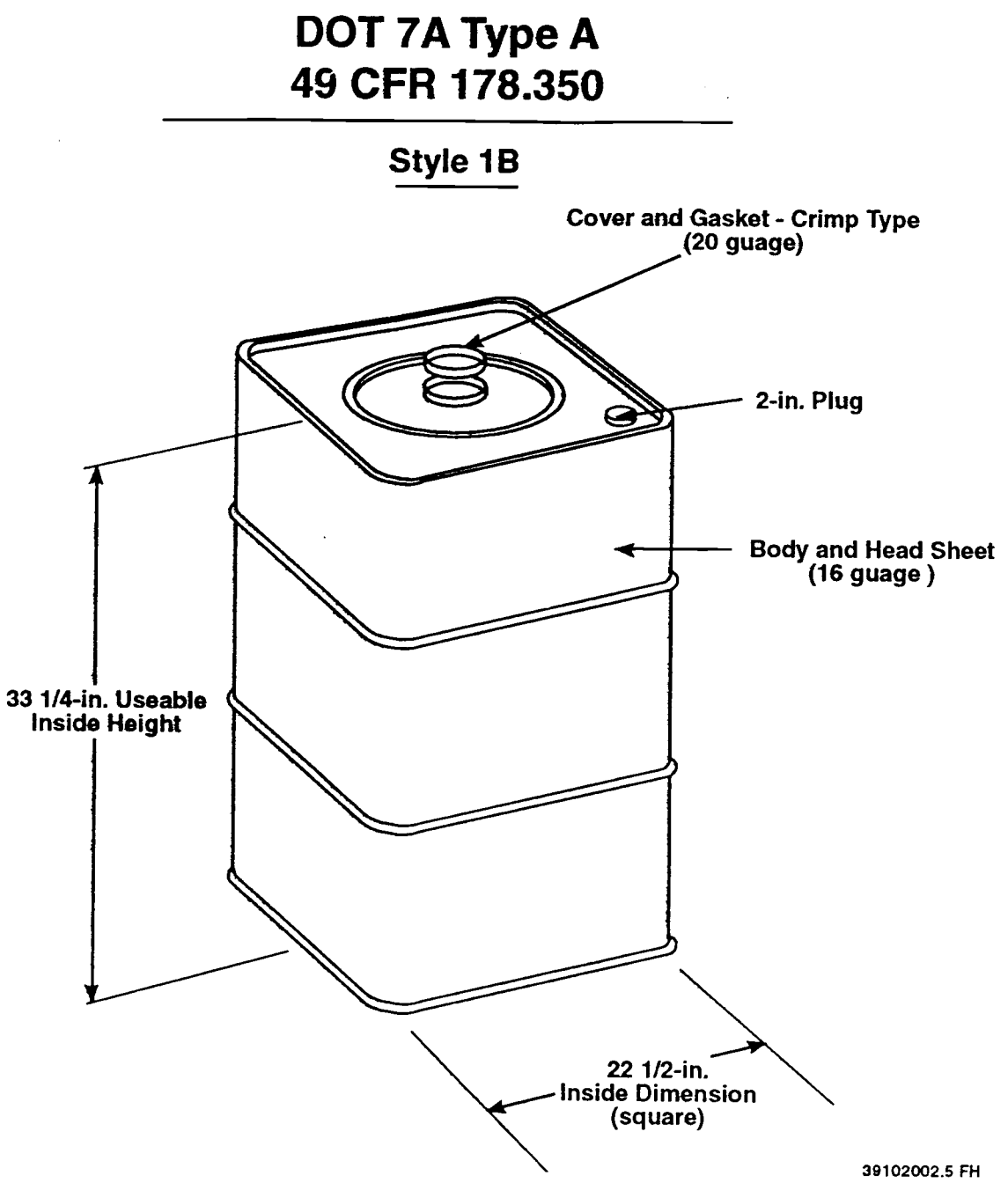

Figure 2-13. 71-Gallon Square Steel Drum, 18¼-Inch Removable Head.

DOT 7A Type A
49 CFR 178.350

Style 2

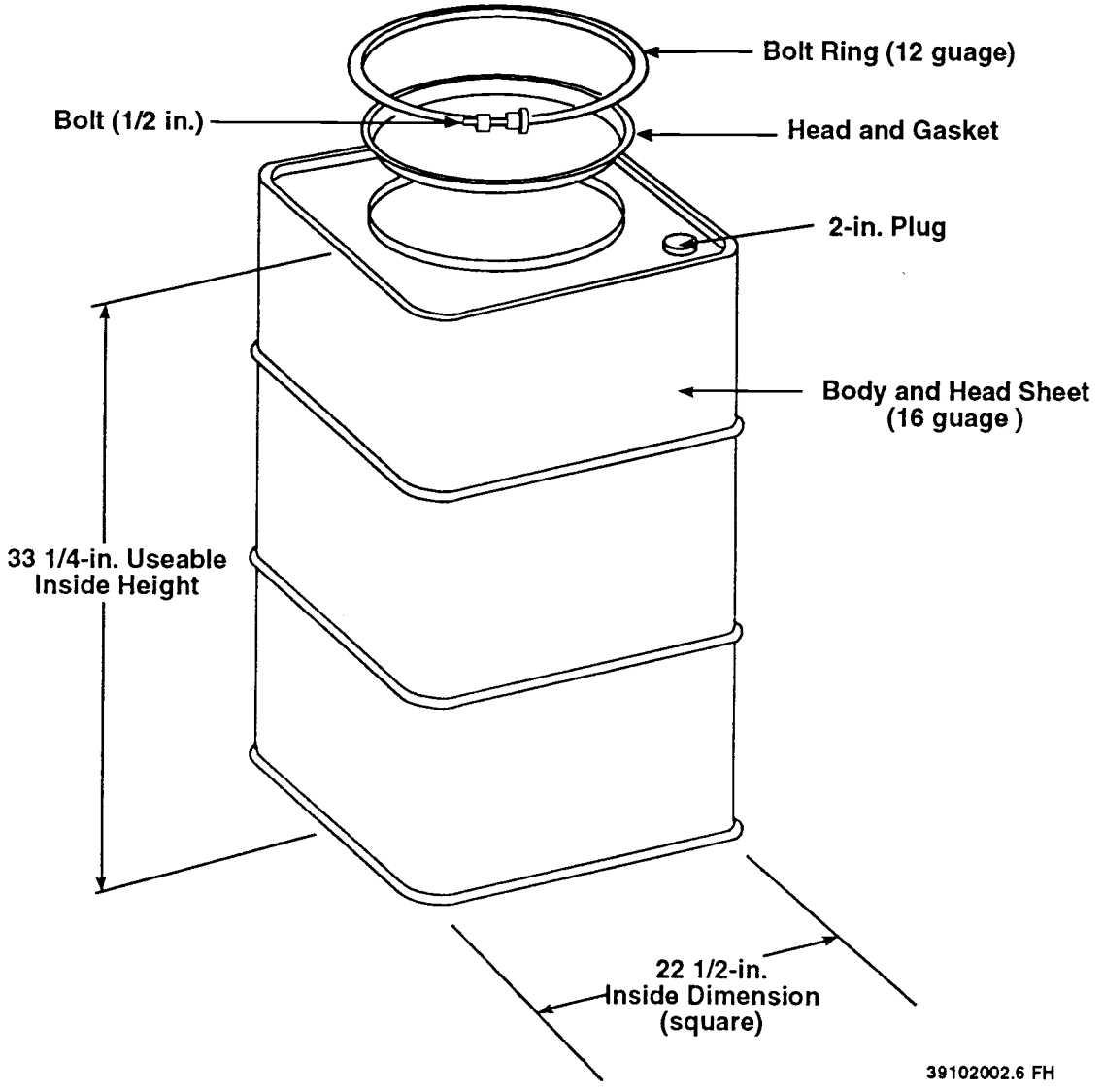

Figure 2-14. 71-Gallon Square Steel Drum, Fully Removable Head.

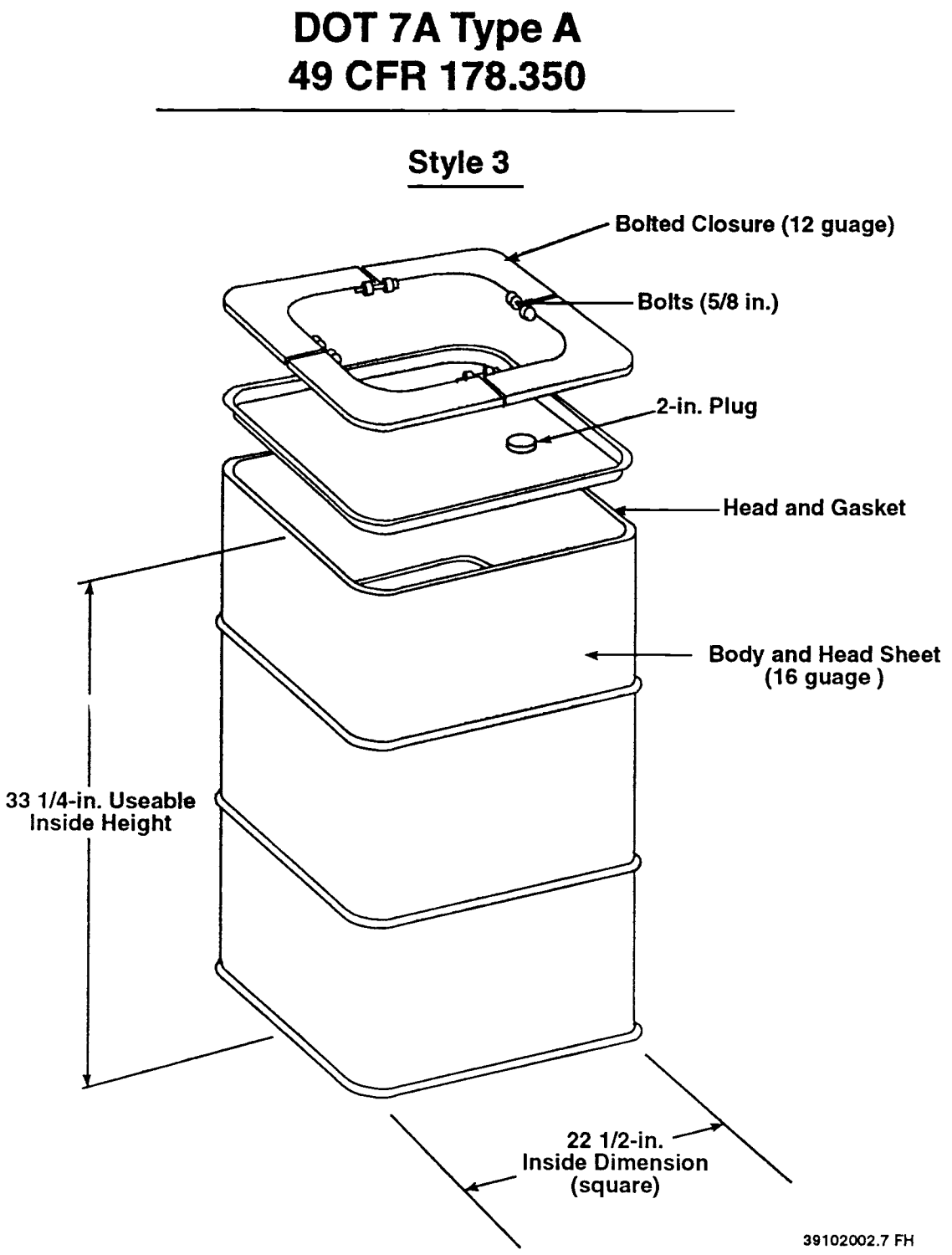

2.9 SQUARE 71-GALLON STEEL DRUM, PACKAGING SPECIALTIES (DOCKETS: MLM)

Style 1A, 6½-in. Crimped Cover; Style 1B, 6½-in. Crimped Cover; Style 2, 18¼-in. Removable Head; Style 3, Fully Removable Head.

2.9.1 Package Description

Dimensions

71-gallon drum	Height (in.)			Width (in.)[a]		
	Style 1A & 1B	Style 2	Style 3	Style 1A & 1B	Style 2	Style 3
External	34.75	34.75	34.88	23.50	23.50	23.50
Internal	33.25	33.25	33.25	22.25	22.25	22.25

[a]Each equal side, including rolling hoop.

Materials/Methods of Construction (sheet 1 of 2)

Style 1A & 1B[a]	
Body, head sheet	16 gauge steel
Cover (6½ in.)	20 gauge steel
Gasket	Neoprene[b] foam, ASTM-D-1056-85
Threaded plug	2-in. MTP[c] Tri-sure,[d] 2-in. pressed steel plug Neoprene gasket
Style 2	
Body, head sheet, and cover (18.250-in. diameter)	16 gauge steel
Bolted closure ring	12 gauge steel with 0.500-in. matched steel lugs and 0.500-in. bolt
Cover gasket	Neoprene, half-round tubular Mil-R-6855, Class 2, Grade 60 MS-27683-81
Threaded plug	Same as Style 1

Materials/Methods of Construction (sheet 2 of 2)

Style 3	
Body and head (removable)	16 gauge steel
Cover gasket	Neoprene, half-round tubular
Bolted closure	12 gauge steel with 0.625-in. bolts (4)
Threaded plug	Same as Styles 1 and 2

NOTE: Drawings; Packaging Specialties: Style 1A--PN.225035WV71GC, Style 1B-PN.225035WVTST1, Style 2-PN.225035EGTST1 and Style 3-PN.2250350HTST1.

[a]Style 1A has a welded collar and Style 1B has a rolled (one piece) collar against which the cover is crimped.
[b]Neoprene is a trademark of E. I. duPont de Nemours.
[c]MTP is a trademark of Moll Plasticrafters Limited Partnership.
[d]Tri-Sure is a trademark of American Flange & Manufacturing Company, Inc.

2.9.2 Authorized Contents

The shipper must determine that the actual contents are closely simulated by the test contents. If they are not, testing or analysis must be conducted and documented to demonstrate DOT-7A compliance with the actual contents.

2.9.2.1 Physical Form

2.9.2.1.1 Solids Only. Three forms are authorized. Each shipper must determine the most appropriate form for his particular contents and comply with any special requirements.

- Material Form No. 1: Solids--any particle size.
- Material Form No. 2: Solids--large particle size only (e.g., sand, concrete, debris, soil, etc.).
- Material Form No. 3: Solids--objects with no significant dispersible or removable contamination. (For definition, see 49 CFR 173.443, Contamination Control.)

2.9.2.1.2 Maximum Gross Weight. Form No. 1, No. 2, and No. 3:

- 1,350 lb.

2.9.2.2 Chemical Form. The shipper must evaluate and ensure chemical compatibility of the material to be shipped with the materials of the packaging in contact with the payload.

2.9.2.3 Radiological. Maximum dent of 4 in. (Style 1), 3.75 in. (Style 2), or 4.5 in. (Style 3) resulted from the 4-ft drop test on the bottom edge of the packaging. Each shipper must ensure that the radiation level at the surface of the packaging will not increase by more than 20% if such deformations would occur.

2.9.3 Restrictions/Specifications

The bung closure shall be tightened to 15 ft-lb on all styles.

The bolt closure shall be tightened to 30 ft-lb for Style 2 and 15 ft-lb for Style 3.

Tighten the bolt per the following procedure:

1. Tighten the bolt to the designated ft-lb torque.
2. Hit the closure ring vigorously with a metal hammer, 8 to 9 times,equally spaced around the closure ring.
3. Repeat this cycle three additional times.
4. Torque bolt one last time to the designated ft-lb.

A jam nut shall also be used to prevent unintentional loosening during transport.

The seal gasket material must have an operating range of -40 °F to +158 °F.

For heavy, bulky materials (e.g., concrete chunks, motors, pumps), equipment or materials with sharp corners or protrusions, or material/equipment geometries that could result in highly localized forces, the shipper must ensure that the contents are securely fastened/positioned within the package.

2.9.4 CFR 173.350 Regulatory Requirements

Regulatory Compliance Assessment

Regulatory requirements	Testing/analysis results
49 CFR 173.24, Standard requirements for all packages	Meets applicable requirements. See Appendix A, Table A-1.
49 CFR 173.411, General design requirements	Meets applicable requirements. See Appendix B, Table B-1.
49 CFR 173.412, Additional requirements for Type A packages	Meets applicable requirements. See Appendix C, Table C-1.
49 CFR 173.465, Type A packaging tests	Meets applicable requirements.
Water spray	Pass. Tests were conducted on all 3 styles of drums and demonstrated no inleakage of water. Further, the water spray test preceded each of the remaining Type A tests. In no case was there any effect on the ability of the packagings to meet the required tests. See Appendix D, Table D-1.
Free drop	Pass. Sixty-nine separate drop tests were conducted (22 on Styles 1A and 1B, 26 on Style 2, and 21 on Style 3). Drops were conducted on edges, top corners, bottom corners, and the ends. In all cases there was no loss of contents or major distortion of the packagings. See Appendix D, Table D-10.
Corner drop	Not Required.
Compression	Pass. The test was conducted on all three styles with greater than five times the gross weight for greater than 24 hr. There was no visible distortion of the packagings or loss of contents. See Appendix D, Table D-23.
Penetration	Pass. The test was conducted at several points on all three styles of the packagings with no significant effect. The tests on the bungs left no discernable mark. The impact on the centers of the covers resulted in a maximum dent of 0.25 in. The tests on the closure rings left no visible effect. See Appendix D, Table D-30.

2.9.5 Quality Control

Packaging/Acceptance/Use Criteria

Critical	Major	Acceptance/pre-use/inspection criteria*
Lid/body interface sealing surface	Vendor qualifications and experience	Functional: • Ease of lid/closure ring application • Bolt closure ring--bolt size
Gasket		• Geometry, as specified • Size, material, geometry as specified Acceptable Conditions: • Lack of dents, no deformation of sealing surfaces • Dimensions, as specified • Gasket size, materials, geometry
Welds		• Continuous, no sharp edges
Body and chime	Metal thickness	Lot tests by shipper, as appropriate. • Metal type, thickness, and quality as specified • Bolt number, locations, and materials as specified with appropriate vendor/shipper data/certification: - Marking - Test data - Type A document provided as appropriate • Air leak as appropriate
	Protective coating application	Visual: • Surface/coating as specified • Lack of imperfections • Lack of rust, dents, nicks

*These criteria apply to first-time use and to reuse as a DOT-7A Type A packaging.

2.9.6 Additional Information

Evaluation and testing of the subject packaging took place at MLM in 1989. A complete test report is available upon request from one of the DOT-7A Program technical contacts listed in Section 1.1.2.

2.9.6.1 Primary Users

Site/Contact/Phone	Address
West Valley Nuclear Services (WVNS) Steve Ketola COMM/FTS 716-942-4314	Department of Energy West Valley Project West Valley, New York

3.0 STEEL BOXES

This page intentionally left blank.

Figure 3-1. Capital Industries, Incorporated, Family of Filtered and Nonfiltered Steel Boxes.

DOT 7A Type A
49 CFR 178.350

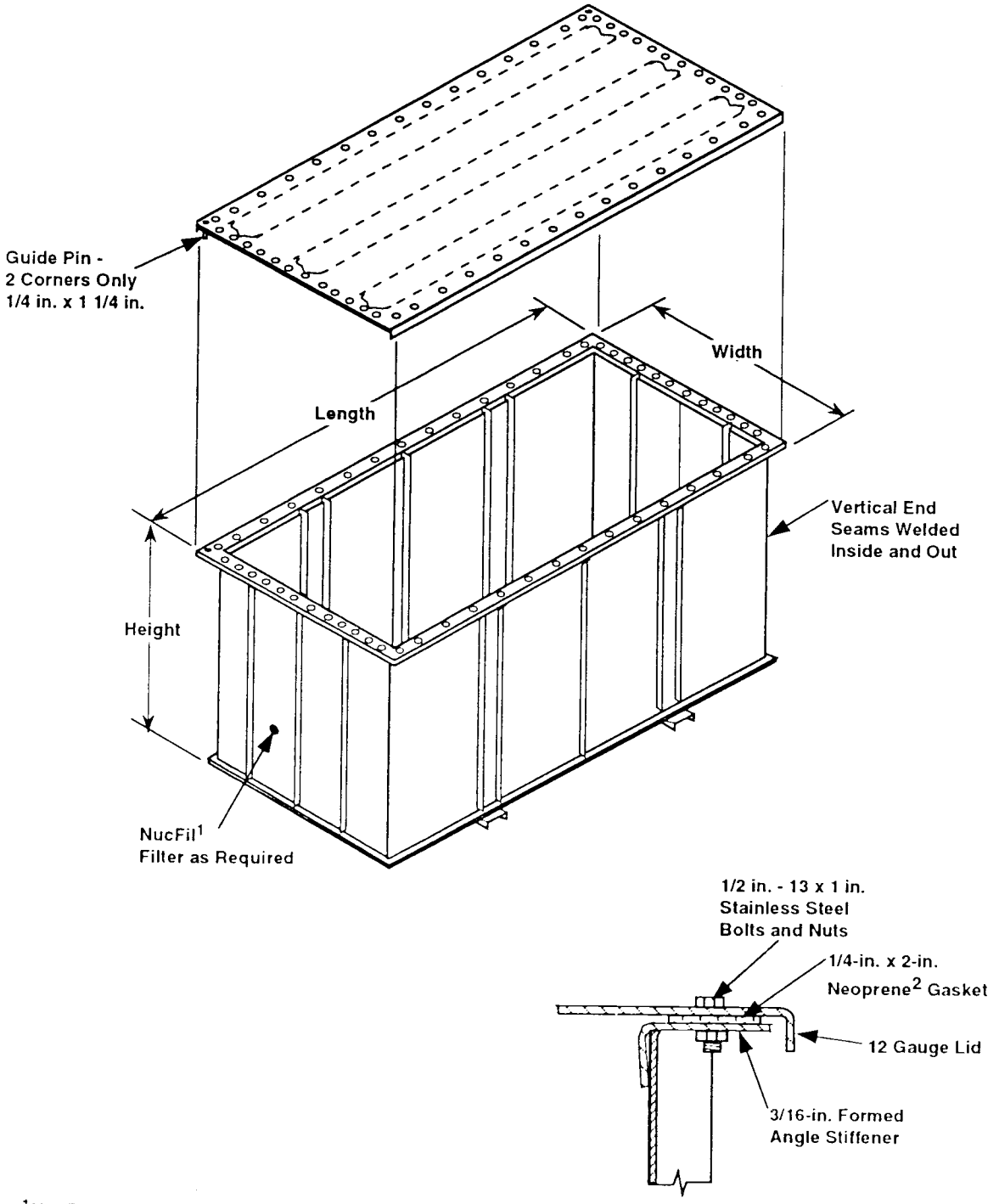

[1]NucFil is a trademark of Nuclear Filter Technology, Incorporated.

[2]Neoprene is a trademark of E.I. duPont de Nemours and Company.

39106089.2

3.1 CAPITAL INDUSTRIES--FAMILY OF STEEL BOXES (DOCKETS: MLM)

3.1.1 Package Description

Dimensions and Weights

Model		Height (in.)	Width (in.)	Length (in.)	Authorized gross weight (lb)	Engineering drawing number
S-0510-0823	Interior	51.00	48.375	82.375	7,000	S-0483-0510-0823-0104, sheets 1 and 2
	Exterior	54.00	54.000	88.000		
V-0510-0823	Interior	51.00	42.375	82.375	7,000	S-0483-0510-0823-0104, sheets 1 and 2
	Exterior	54.00	54.000	88.000		
S-0450-0846	Interior	45.00	39.625	84.625	5,240	S-0396-0450-0846-0104, sheets 1 and 6
	Exterior	48.00	45.000	90.000		
S-0730-0846	Interior	73.00	48.625	84.625	8,700	S-0486-0730-0846-0134, sheets 1 and 6
	Exterior	76.00	54.000	90.000		
S-0240-0906	Interior	24.00	48.375	90.625	3,672	S-0486-0240-0906-0104, sheets 1 and 6
	Exterior	27.00	54.000	96.000		
S-0480-0906	Interior	48.00	48.000	90.625	6,120	S-0486-0480-0906-0104, sheets 1 and 6
	Exterior	51.00	54.000	96.000		
S-0730-1006	Interior	73.00	48.625	100.625	10,400	S-0486-0730-1006-0134, sheets 1 and 6
	Exterior	76.00	54.000	106.000		
S-0480-1376	Interior	48.00	48.625	137.625	9,295	S-0486-0480-1376-0134, sheets 1 and 6
	Exterior	51.00	54.000	143.000		
S-0840-1440	Interior	84.00	72.000	144.000	22,700	S-0720-0840-1440-0187, sheets 1 and 6
	Exterior	86.75	77.375	149.375		

Materials/Method of Construction

Model	Part	Description
V-0510-0823	Sides, top, ends, and bottom	12 gauge steel
S-0510-0823	Sides, top, and ends	12 gauge steel
S-0480-0906	Bottom	10 gauge steel
S-0240-0906		
S-0450-0844		
S-0730-1006	Sides, top, ends, and bottom	10 gauge steel
S-0730-0846		
S-0480-1376		
S-0840-1440	Sides, top, ends, and bottom	0.187-in. steel plate
		0.187-in. structural members
	Continuous welds	
	Bolt closure depends on box size	0.5 - 13 x 1.5 in.
		0.5 - 13 x 1.25 in.
		0.5 - 13 x 1 in.
	Gasket	2 in. x 0.25 in. Neoprene[a]
		30 durometer or high-density closed cell
	Filter	NucFil[b]
	Skids	

[a]Neoprene is a trademark of E. I. duPont de Nemours and Company.
[b]NucFil is a trademark of Nuclear Filter Technology, Inc.

3.1.2 Authorized Contents

The shipper must determine that the actual contents are closely simulated by test contents. If they are not, testing or analysis must be conducted and documented to demonstrate DOT-7A compliance with the actual contents.

3.1.2.1 Physical Form

3.1.2.1.1 Solids Only. Three forms are authorized. Each shipper must determine the most appropriate form for his particular contents and comply with any special requirements.

- Material Form No. 1: Solids--any particle size
- Material Form No. 2: Solids--large particle size only (e.g., sand, concrete, debris, soil, etc.)
- Material Form No. 3: Solids--objects with no significant dispersible or removable contamination. (For definition, see 49 CFR 173.443, Contamination control.)

3.1.2.1.2 Maximum Gross Weight. See Dimensions and Weights table in Section 3.1.1.

3.1.2.2 Chemical Form. The shipper must evaluate and ensure chemical compatibility of the material to be shipped with the materials of the packaging in contact with the payload.

3.1.2.3 Radiological. The 4-ft drop test caused deformations of the package resulting in small decreases in the distance from the exterior to the center of the package. The shipper must ensure that the radiation level at any surface would not increase by more than 20% (relative to the radiation level of the undamaged configuration) if such deformations would occur.

3.1.3 Restrictions/Specifications

For heavy, bulky materials (e.g., concrete chunks, motors, pumps, etc.), equipment or materials with sharp corners or protrusions, or material/containment geometries that could result in highly localized forces, the shipper must ensure that the contents are securely fastened/positioned within the package.

3.1.4 49 CFR 178.350 Regulatory Requirements

Regulatory Compliance Assessment

Regulatory requirements	Testing/analysis results
49 CFR 173.24, Standard requirements for all packages	Meets applicable requirements. See Appendix A, Table A-2.
49 CFR 173.411, General design requirements	Meets applicable requirements. See Appendix B, Table B-2.
49 CFR 173.412, Additional requirements for Type A packages	Meets applicable requirements. See Appendix C, Table C-3.
49 CFR 173.465, Type A packaging tests	Meets applicable requirements.
Water spray	Pass. Test not conducted; however, this test would not adversely affect the ability of this packaging to meet the Type A test requirements and there would not be an inleakage of water. See Appendix D, Table D-2.
Free drop	Pass. This test was conducted on a top, lid corner (S-0518-0823, V-0510-0823, S-0840-1440 and S-0730-1006). There was no loss of contents or significant distortion of package geometry. The remaining packagings were evaluated by analysis based on the tested packages. See Appendix D, Table D-11.
Corner drop	Not required.
Compression	Pass. Tests were conducted with greater than five times the gross weight for 24 hr. There was no loss of contents or significant package distortion. These data were then used for analysis of similar packages. See Appendix D, Table D-24.
Penetration	Pass. Steel box--This test was successfully conducted on the top (middle) with only a minor dent. Filter--Tests were conducted with impacts directly on the filter top. Only a minor dent resulted, and there was no loss of contents or containment in either the filter or the filter housing. See Appendix D, Table D-31.

3.1.5 Quality Control

Packaging/Acceptance/Use Criteria

Critical	Major	Acceptance/pre-use/ inspection criteria*
Lid/body interface Sealing surface	Vendor qualifications and experience	Functional: • Ease of lid application • Flange--flat surface; no foreign matter • Geometry, as specified Acceptable Conditions: • Lack of dents, no deformation of sealing surfaces • Dimensions, as specified
Gasket		• Gasket size, materials, geometry
Weld areas		• Continuous welds, no sharp edges
Body	Metal thickness Bolt size and spacing	Lot tests by shipper, as appropriate, and/or vendor certification.
Air leak tests	Protective coating	Visual: • Surface/coating as specified • Lack of imperfections in application • Lack of rust, dents, nicks
Filter Type Efficiency, flow characteristics	Filter location and installation	Acceptable Conditions: • Filter free-flowing • Filter securely installed

*These criteria apply to first-time use and to reuse as a DOT-7A Type A packaging.

3.1.6 Additional Information

Evaluation and testing of this packaging were performed at MLM and were documented in Edling 1987. Complete evaluation reports are available upon request from one of the DOT-7A Program technical contacts listed in Section 1.1.2.

3.1.6.1 Primary User(s)

Site/Contact/Phone	Address
MLM Don Wikstrom COMM/FTS 513-865-3919	EG&G/Mound Mound Road Miamisburg, OH 45342

3.1.6.2 Suppliers

Capital Industries, Inc.
5801 3rd Avenue, S.
P. O. Box 80983
Seattle, WA 98108
206-762-8585

Figure 3-2. Container Products Corporation, Family of Filtered and Nonfiltered Steel Boxes.

DOT 7A Type A
49 CFR 178.350

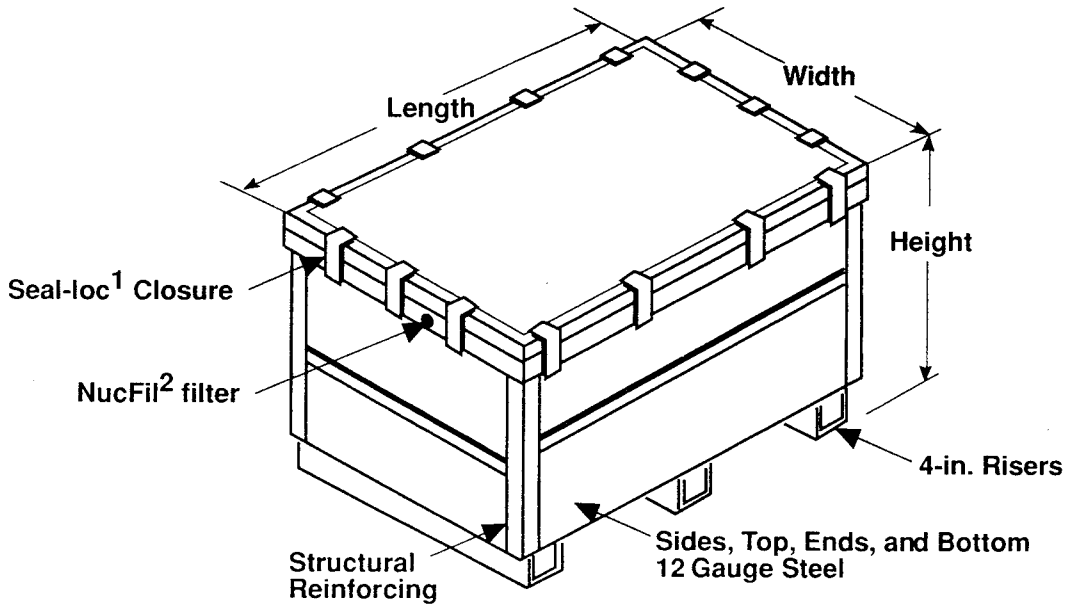

Note: This configuration shows a filtered steel box. Container No. 3 (B-96-5-RA-B) is an unfiltered box with reinforcing structure to allow compliance with the reduced pressure test.

[1]Seal-loc is a trademark of Container Products Corporation.

[2]NucFil is a trademark of Nuclear Filter Technology, Incorporated.

39106089.3FH

3.2 CONTAINER PRODUCTS CORPORATION--FAMILY OF STEEL BOXES (DOCKETS: MLM)

3.2.1 Package Description

Dimensions and Weights

Model		Height (in.)	Width (in.)	Length (in.)	Authorized gross weight (lb)	Engineering drawing number
B-96-5-S/L-FD	Exterior	52.000	48.625	93.375	6,050	01-2101-1-00, Revision 0
	Interior	44.000	43.000	88.000		
B-96-5-S/L-RA	Exterior	52.000	48.625	93.625	6,800	01-1901-1-00, Revision 0
	Interior	44.000	43.000	88.000		
B-96-5-RA-B	Exterior	51.254	47.250	92.250	6,500	01-2201-1-01, Revision 0
	Interior	44.000	43.000	88.000		
B-96-5-FD-B	Exterior	51.250	47.250	92.250	6,500	01-2301-1-01, Revision 0
	Interior	44.000	43.000	88.000		
467-C-S/L FD TRU waste container	Exterior	38.500	54.000	68.000	4,000	01-3700-1-00, Revision C
	Interior	33.500	52.000	66.000		
B-12-44-4-S/L FD	Exterior	28.250	51.625	77.625	4,625	01-3100-1-00, Revision B
	Interior	23.000	46.000	72.000		
B-25-4-S/L FD	Exterior	52.187	48.625	75.625	4,820	01-2800-1-00, Revision C
	Interior	47.000	43.000	70.000		
B-52-4-S/L FD	Exterior	43.187	54.625	54.625	4,775	04-1000-1-00, Revision F
	Interior	38.000	49.000	49.000		
B-82-6-S/L FD	Exterior	52.187	47.187	74.187	6,775	01-2300-1-00, Revision 0
	Interior	47.000	43.000	70.000		
B-87-6-S/L FD	Exterior	43.187	57.625	81.625	6,970	04-1300-1-00, Revision B
	Interior	38.000	52.000	76.000		
B-96-6-S/L FD	Exterior	48.1876	48.567	93.567	7,000	04-1200-1-00, Revision 0
	Interior	44.000	43.000	88.000		
B-96-8-S/L FD	Exterior	48.187	48.567	93.567	9,100	04-1200-2-0, Revision 0
	Interior	44.000	43.000	88.000		

Materials/Method of Construction

Sides, top, ends, and bottom	12 gauge steel, ASTM A569 low-carbon hot rolled steel
Closure	Seal-loc[a] or bolt depending on box style
Gasket	Closed cell Neoprene[b] (Mil R-6130-B)
Sealant	Scotch No. 776 (Mil D-17951-B)
Filter	NucFil[c]

[a]Seal-loc is a trademark of Container Products Corporation.
[b]Neoprene is a trademark of E. I. duPont de Nemours and Company.
[c]NucFil is a trademark of Nuclear Filter Technology, Inc.
ASTM = American Society for Testing and Materials.

3.2.2 Authorized Contents

The shipper must determine that the actual contents are closely simulated by test contents. If they are not, testing or analysis must be conducted and documented to demonstrate DOT-7A compliance with the actual contents.

3.2.2.1 Physical Form

3.2.2.1.1 Solids Only. Three forms are authorized. Each shipper must determine the most appropriate form for his particular contents and comply with any special requirements.

- Material Form No. 1: Solids--any particle size
- Material Form No. 2: Solids--large particle size only (e.g., sand, concrete, debris, soil, etc.)
- Material Form No. 3: Solids--objects with no significant dispersible or removable contamination. (For definition, see 49 CFR 173.443, Contamination control.)

3.2.2.1.2 Maximum Gross Weight. See Dimensions and Weights table in Section 3.2.1.

3.2.2.2 Chemical Form. The shipper must evaluate and ensure chemical compatibility of the material to be shipped with the materials of the packaging in contact with the payload.

3.2.2.3 Radiological. The 4-ft drop test caused deformations of the package resulting in small decreases in the distance from the exterior to the center of the package. The shipper must ensure that the radiation level at any surface would not increase by more than 20% (relative to the radiation level of the undamaged configuration) if such deformations would occur.

3.2.3 Restrictions/Specifications

For heavy, bulky materials (e.g., concrete chunks, motors, pumps, etc.), equipment or materials with sharp corners or protrusions, or material/containment geometries that could result in highly localized forces, the shipper must ensure that the contents are securely fastened/positioned within the package.

3.2.4 49 CFR 178.350 Regulatory Requirements

Regulatory Compliance Assessment

Regulatory requirements	Testing/analysis results
49 CFR 173.24, Standard requirements for all packages	Meets applicable requirements. See Appendix A, Table A-2.
49 CFR 173.411, General design requirements	Meets applicable requirements. See Appendix B, Table B-2.
49 CFR 173.412, Additional requirements for Type A packages	Meets applicable requirements. See Appendix C, Table C-3.
49 CFR 173.465, Type A packaging tests	Meets applicable requirements.
Water spray	Pass. Test not conducted; however, this test would not adversely affect the ability of this packaging to meet the Type A test requirements and there would be no inleakage of water. See Appendix D, Table D-2.
Free drop	Pass. This test was conducted on a top, lid corner (four individual boxes). There was no loss of contents or significant distortion of package geometry. The remaining packages were evaluated by analysis based on the tested packages. See Appendix D, Table D-11.
Corner drop	Not required.
Compression	Pass. Tests were conducted with greater than five times the gross weight for 24 hr. There was no significant effect. There was no loss of contents or significant package distortion. These data were then used for analysis of similar packages. See Appendix D, Table D-24.
Penetration	Pass. Steel box--Tests were successfully conducted on the box itself with only minor dents resulting. Filter--Tests were conducted with impacts on the filter top. Only a minor dent resulted, and there was no loss of contents or containment in either the filter or the filter housing. See Appendix D, Table D-31.

3.2.5 Quality Control

Packaging/Acceptance/Use Criteria

Critical	Major	Acceptance/pre-use/ inspection criteria*
Lid/body interface Sealing surface	Vendor qualifications and experience	Functional: • Ease of lid application • Flange--flat surface; no foreign matter • Geometry, as specified Acceptable Conditions: • Lack of dents, no deformation of sealing surfaces • Dimensions, as specified
Gasket		• Gasket size, materials, geometry
Weld areas		• Continuous welds, no sharp edges
Body	Metal thickness Bolt size and spacing	Lot tests by shipper, as appropriate, and/or vendor data/verification: • Marking • Test data • Type A Certification Document as appropriate
Air leak tests	Protective coating	Visual: • Surface/coating as specified • Lack of imperfections in application • Lack of rust, dents, nicks
Filter Type Efficiency, flow characteristics	Filter location and installation	Acceptable Conditions: • Filter free-flowing • Filter securely installed

*These criteria apply to first-time use and to reuse as a DOT-7A Type A packaging.

3.2.6 Additional Information

Evaluation and testing of this packaging were performed at MLM and were documented in Edling 1987. Complete evaluation reports are available upon request from one of the DOT-7A Program technical contacts listed in Section 1.1.2.

3.2.6.1 Primary User(s)

Site/Contact/Phone	Address
DOE T. G. Adams 716-942-3235	U.S. Department of Energy Idaho Operations Office West Valley Project Office P. O. Box 191 West Valley, NY 14171

3.2.6.2 Suppliers

Container Products Corp.
P. O. Box 3767
Wilmington, NC 28406
COMM 919-392-6100

Figure 3-3. RoGar Chemical and Nuclear Services, Family of Steel Boxes.

DOT 7A Type A
49 CFR 178.350

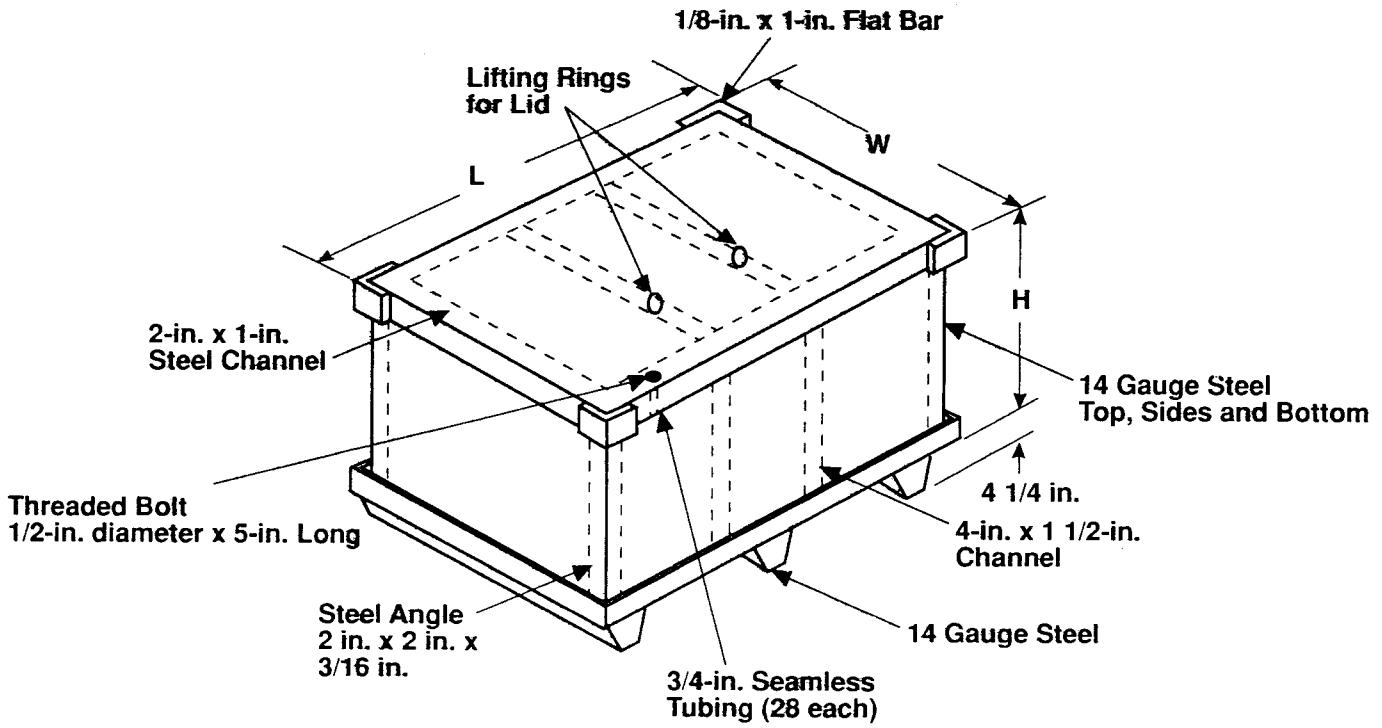

39106089.4FH

3.3 ROGAR FAMILY OF STEEL BOXES (DOCKETS: MLM)

3.3.1 Package Description

Dimensions and Weights

Model		Height (in.)	Width (in.)	Length (in.)	Authorized gross weight (lb)	Engineering drawing number
R-1	Interior	38.5	38.5	68.0	7,750	RENS - 031, Revision 0
	Exterior	42.5	41.5	71.0		
R-2	Interior	38.5	54.0	68.0	7,820	RENS - 032, Revision 0
	Exterior	52.5	57.0	71.0		
R-3	Interior	54.0	54.0	88.0	7,920	RENS - 034, Revision 2
	Exterior	58.0	57.0	91.0		
R-4	Interior	48.0	48.0	84.0	7,920	RENS - 036, Revision 0
	Exterior	52.0	51.0	87.0		

Materials/Method of Construction

Sides, top, ends, and bottom	14 gauge steel
Skids	14 gauge steel
Bolt closure	0.5-in. diameter x 5 in. long - 28 required
Gasket	0.25 in. x 1.75 in. Neoprene[a]
All seams welded except closure	
Filter	NucFil[b]

[a]Neoprene is a trademark of E. I. duPont de Nemours and Company.
[b]NucFil is a trademark of Nuclear Filter Technology, Inc.

3.3.2 Authorized Contents

The shipper must determine that the actual contents are closely simulated by test contents. If they are not, testing or analysis must be conducted and documented to demonstrate DOT-7A compliance with the actual contents.

3.3.2.1 Physical Form

3.3.2.1.1 Solids Only. Three forms are authorized. Each shipper must determine the most appropriate form for his particular contents and comply with any special requirements.

- Material Form No. 1: Solids--any particle size
- Material Form No. 2: Solids--large particle size only (e.g., sand, concrete, debris, soil, etc.)
- Material Form No. 3: Solids--objects with no significant dispersible or removable contamination. (For definition, see 49 CFR 173.443, Contamination control.)

3.3.2.1.2 Maximum Gross Weight. See Dimensions and Weights table in Section 3.3.1.

3.3.2.2 Chemical Form. The shipper must evaluate and ensure chemical compatibility of the material to be shipped with the materials of the packaging in contact with the payload.

3.3.2.3 Radiological. The 4-ft drop test caused deformations of the package resulting in small decreases in the distance from the exterior to the center of the package. The shipper must ensure that the radiation level at any surface would not increase by more than 20% (relative to the radiation level of the undamaged configuration) if such deformations would occur.

3.3.3 Restrictions/Specifications

Lifting rings are for placement of the lid only. Procedures and training must ensure that these are rendered inoperable prior to shipment (i.e., welded in place, cut off, etc.).

For heavy, bulky materials (e.g., concrete chunks, motors, pumps, etc.), equipment or materials with sharp corners or protrusions, or material/containment geometries that could result in highly localized forces, the shipper must ensure that the contents are securely fastened/positioned within the package.

3.3.4 49 CFR 178.350 Regulatory Requirements

Regulatory Compliance Assessment

Regulatory requirements	Testing/analysis results
49 CFR 173.24, Standard requirements for all packages	Meets applicable requirements. See Appendix A, Table A-2.
49 CFR 173.411, General design requirements	Meets applicable requirements. See Appendix B, Table B-2.
49 CFR 173.412, Additional requirements for Type A packages	Meets applicable requirements. See Appendix C, Table C-3.
49 CFR 173.465, Type A packaging tests	Meets applicable requirements.
Water spray	Pass. Test not conducted; however, this test would not adversely affect the ability of this packaging to meet the Type A test requirements, and there would be no inleakage of water. See Appendix D, Table D-2.
Free drop	Pass. This test was conducted on a top, lid corner. There was no loss of contents or significant deformation of package geometry. See Appendix D, Table D-11.
Corner drop	Not required.
Compression	Pass. Tests were conducted with greater than five times the gross weight for 24 hr with no distortion of the package geometry. See Appendix D, Table D-24.
Penetration	Pass. Steel box--This test was successfully conducted on the top (middle) with only a minor dent. Filter--Tests were conducted with impacts on the filter top. Only a minor dent resulted, and there was no loss of contents or containment in either the filter or the filter housing. See Appendix D, Table D-31.

3.3.5 Quality Control

Packaging/Acceptance/Use Criteria

Critical	Major	Acceptance/pre-use/ inspection criteria*
Lid/body interface Sealing surface	Vendor qualifications and experience	Functional: • Ease of lid application • Flange--flat surface; no foreign matter • Geometry, as specified Acceptable Conditions: • Lack of dents, no deformation of sealing surfaces
Gasket		• Dimensions, as specified • Gasket size, materials, geometry
Weld areas		• Continuous welds, no sharp edges
Body	Metal thickness Bolt size and spacing	Lot tests by shipper, as appropriate, and/or vendor data/verification: • Marking • Test data • Type A Certification Document provided as appropriate
Air leak tests	Protective coating application	Visual: • Surface/coating as specified • Lack of imperfections in application • Lack of rust, dents, nicks
Filter Type Efficiency, flow characteristics	Filter location and installation	Acceptable Conditions: • Filter free-flowing • Filter securely installed

*These criteria apply to first-time use and to reuse as a DOT-7A Type A packaging.

3.3.6 Additional Information

Evaluation and testing of this packaging were performed at MLM and were documented in Edling 1987. Complete evaluation reports are available upon request from one of the DOT-7A Program technical contacts listed in Section 1.1.2.

3.3.6.1 Primary User(s)

Site/Contact/Phone	Address
MLM Don Wikstrom COMM/FTS 513-865-3919	EG&G/Mound Mound Road Miamisburg, OH 45342

3.3.6.2 Suppliers

RoGar Chemical & Nuclear Services, Inc.
582 Mayten Drive
Livermore, CA 94550
415-443-6101

Figure 3-4. Rocky Flats SAND Box Steel Box.

DOT 7A Type A
49 CFR 178.350

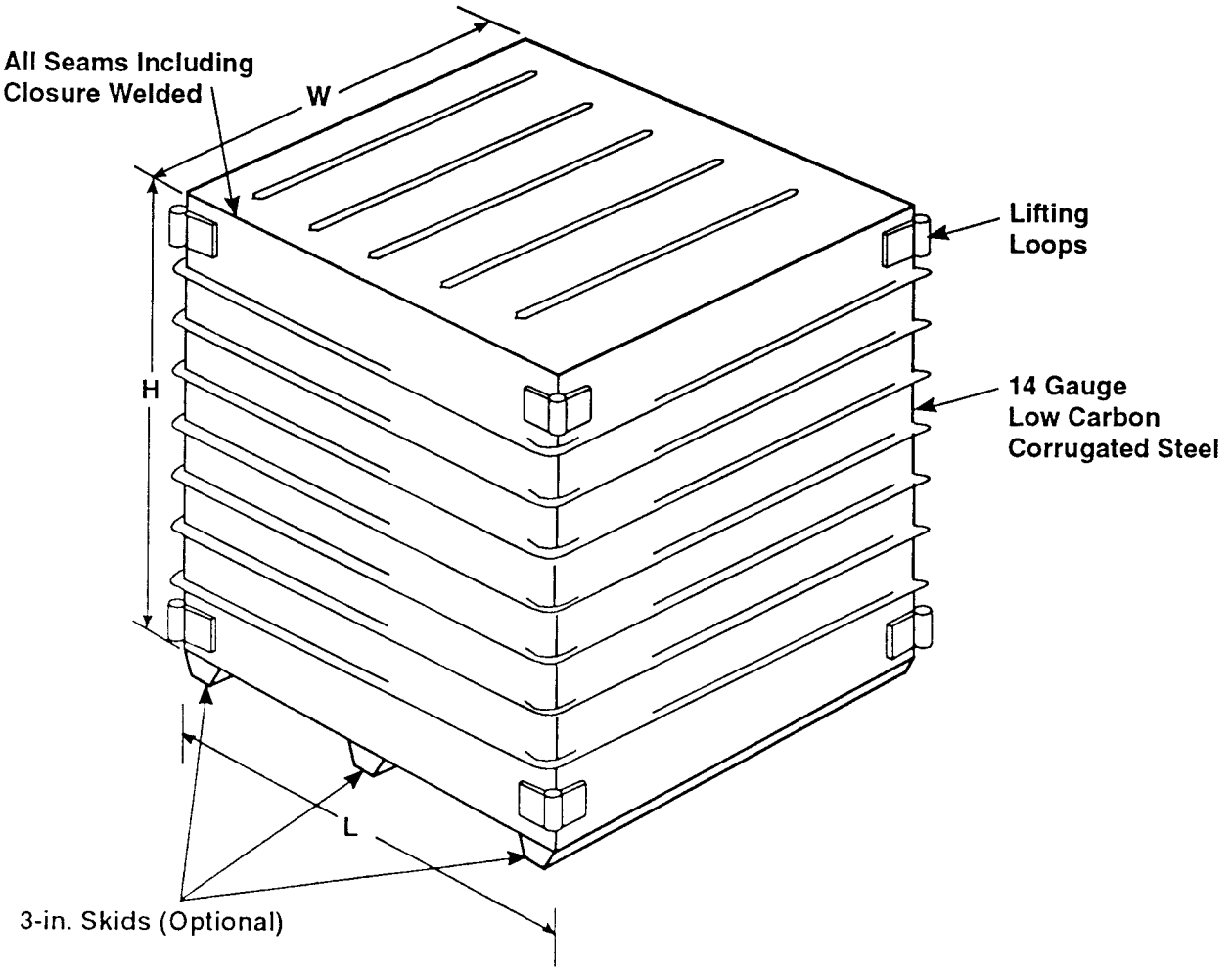

3.4 ROCKY FLATS SAND BOX--STEEL BOX (DOCKETS: MLM)

3.4.1 Package Description

Dimensions and Weights

Model	Height (in.)	Width (in.)	Length (in.)	Authorized gross weight (lb)
Style 1	54.00	54.00	88.00	7,000
Style 2	48.00	48.00	84.00	6,000
Style 3	38.50	50.50	74.50	6,000
Style 4	38.50	54.00	68.00	6,000

Materials/Method of Construction

Sides, top, ends, and bottom	14 gauge mild steel
Lifting loops	0.25-in. low-carbon steel
Pipe coupling and plugs	Carbon steel
All seams continuous welds	--
Closure is welded	--
Filter (if used, not required)	NucFil*

*NucFil is a trademark of Nuclear Filter Technology, Inc.

3.4.2 Authorized Contents

The shipper must determine that the actual contents are closely simulated by test contents. If they are not, testing or analysis must be conducted and documented to demonstrate DOT-7A compliance with the actual contents.

3.4.2.1 Physical Form

3.4.2.1.1 Solids Only. Three forms are authorized. Each shipper must determine the most appropriate form for his particular contents and comply with any special requirements.

- Material Form No. 1: Solids--any particle size
- Material Form No. 2: Solids--large particle size only (e.g., sand, concrete, debris, soil, etc.)

- Material Form No. 3: Solids--objects with no significant dispersible or removable contamination. (For definition, see 49 CFR 173.443, Contamination control.)

3.4.2.1.2 Maximum Gross Weight. See Dimensions and Weights table in Section 3.4.1.

3.4.2.2 Chemical Form. The shipper must evaluate and ensure chemical compatibility of the material to be shipped with the materials of the packaging in contact with the payload.

3.4.2.3 Radiological. The 4-ft drop test caused deformations of the package resulting in small decreases in the distance from the exterior to the center of the package. The shipper must ensure that the radiation level at any surface would not increase by more than 20% (relative to the radiation level of the undamaged configuration) if such deformations would occur.

3.4.3 Restrictions/Specifications

For heavy, bulky materials (e.g., concrete chunks, motors, pumps, etc.), equipment or materials with sharp corners or protrusions, or material/containment geometries that could result in highly localized forces, the shipper must ensure that the contents are securely fastened/positioned within the package.

3.4.4 49 CFR 178.350 Regulatory Requirements

Regulatory Compliance Assessment

Regulatory requirements	Testing/analysis results
49 CFR 173.24, Standard requirements for all packages	Meets applicable requirements. See Appendix A, Table A-2.
49 CFR 173.411, General design requirements	Meets applicable requirements. See Appendix B, Table B-2.
49 CFR 173.412, Additional requirements for Type A packages	Meets applicable requirements. See Appendix C, Table C-3.
49 CFR 173.465, Type A packaging tests	Meets applicable requirements.
Water spray	Pass. Test not conducted; however, this test would not adversely affect the ability of this packaging to meet the Type A test requirements, and there would be no inleakage of water. See Appendix D, Table D-2.
Free drop	Pass. Tests on each box size were performed with varying drop angles and impact points. There was no loss of contents or significant deformation of package geometry. See Appendix D, Table D-11.
Corner drop	Not required.
Compression	Pass. Both static and dynamic compression tests were conducted at up to 36,700 lb for 24 hr. See Appendix D, Table D-24.
Penetration	Pass. The test was performed on the center of the top of each container with a resulting dent of 0.125 in., which had no effect on container integrity. NOTE: For Nuclear Filter Technology filters, if used, the penetration test has routinely been done. See Appendix D, Table D-31.

3.4.5 Quality Control

Packaging/Acceptance/Use Criteria

Critical	Major	Acceptance/pre-use/ inspection criteria*
Lid/body interface Sealing surface	Vendor qualifications and experience	Functional: • Ease of lid application • Flange--flat surface; no foreign matter • Geometry, as specified Acceptable Conditions: • Lack of dents, no deformation of sealing surfaces
Gasket		• Dimensions, as specified • Gasket size, materials, geometry
Weld areas		• Continuous welds, no sharp edges
Body	Metal thickness Bolt size and spacing	Lot tests by shipper, as appropriate, and/or vendor data/verification: • Marking • Test data • Type A certification document provided as appropriate
Air leak tests	Protective coating	Visual: • Surface/coating as specified • Lack of imperfections in application • Lack of rust, dents, nicks
Filter Type Efficiency, flow characteristics	Filter location and installation	Acceptable Conditions: • Filter free-flowing • Filter securely installed

*These criteria apply to first-time use and to reuse as a DOT-7A Type A packaging.

3.4.6 Additional Information

Evaluation and testing of this packaging were performed at MLM and were documented in Edling 1987. Complete evaluation reports are available upon request from one of the DOT-7A Program technical contacts listed in Section 1.1.2.

3.4.6.1 Primary User(s)

Site/Contact/Phone	Address
Rocky Flats R. R. Riddle COMM/FTS 303-966-2377	Rocky Flats Plant P. O. Box 464 Golden, Colorado 80402-0464

Figure 3-5. ANL M-4 Bin Steel Box.

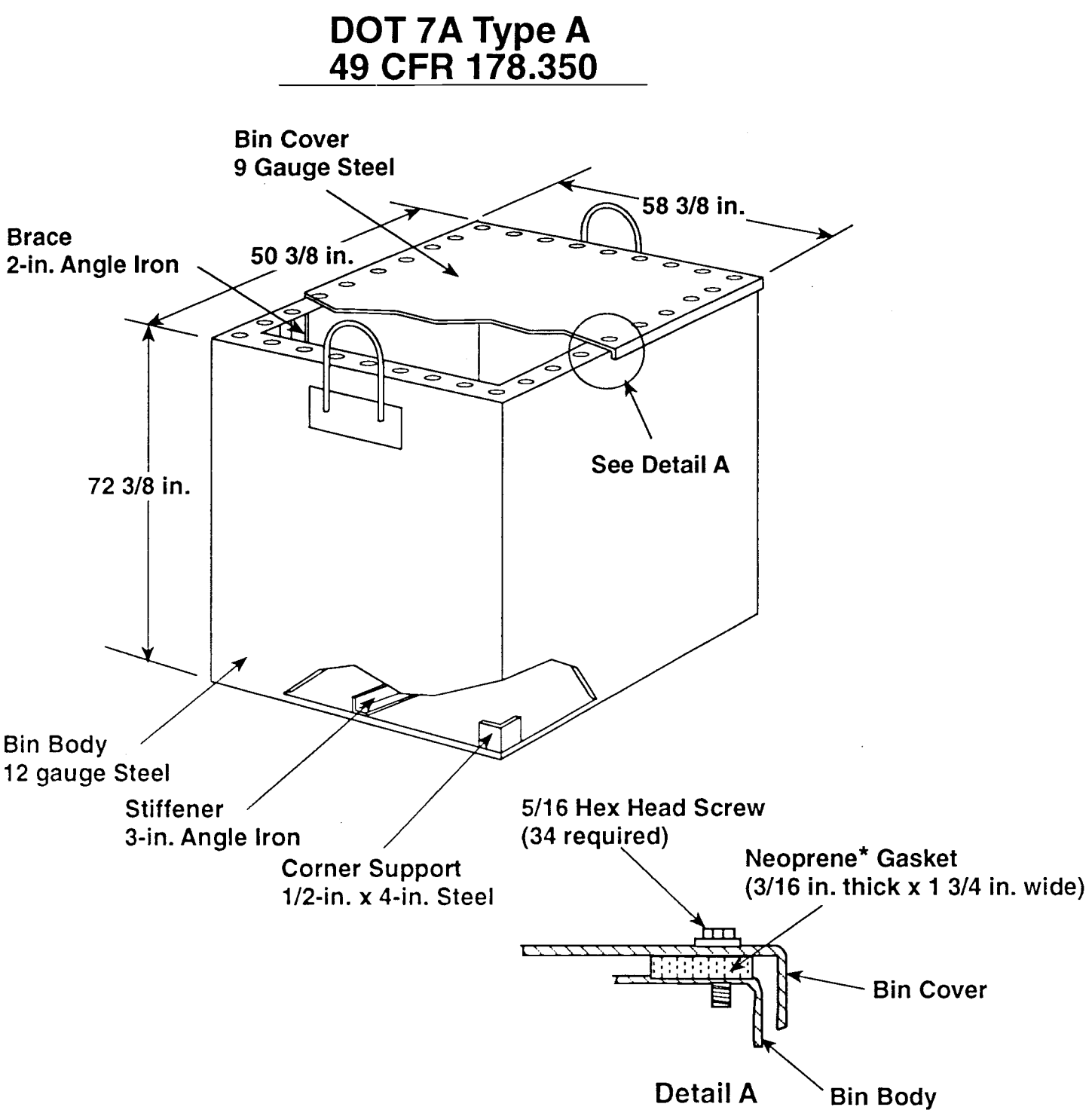

*Neoprene is a trademark of E.I. duPont de Nemours and Company.

39106089.5 FH

3.5 ANL M-4 STEEL BIN (DOCKETS: MLM)

3.5.1 Package Description

Dimensions

Model	Height (in.)	Width (in.)	Length (in.)
ANL M-4	72.375	58.375	50.375

Materials/Method of Construction

Body	18 gauge
Cover	9 gauge
Bolts	0.312-in. hex head screws (34 required)
Neoprene* gasket	0.187 in. x 1.75 in.
Welded seams (except cover)	--

*Neoprene is a trademark of E. I. duPont de Nemours and Company.

3.5.2 Authorized Contents

The shipper must determine that the actual contents are closely simulated by test contents. If they are not, testing or analysis must be conducted and documented to demonstrate DOT-7A compliance with the actual contents.

3.5.2.1 Physical Form

3.5.2.1.1 Solids Only. Three forms are authorized. Each shipper must determine the most appropriate form for his particular contents and comply with any special requirements.

- Material Form No. 1: Solids--any particle size
- Material Form No. 2: Solids--large particle size only (e.g., sand, concrete, debris, soil, etc.)
- Material Form No. 3: Solids--objects with no significant dispersible or removable contamination. (For definition, see 49 CFR 173.443, Contamination control.)

3.5.2.1.2 Maximum Gross Weight. 3,000 lb. (Based on limitation of overpack used. It is expected that the bin would pass with a much higher gross weight.)

3.5.2.2 Chemical Form. The shipper must evaluate and ensure chemical compatibility of the material to be shipped with the materials of the packaging in contact with the payload.

3.5.2.3 Radiological. The 4-ft drop test caused deformations of the package resulting in small decreases in the distance from the exterior to the center of the package. The shipper must ensure that the radiation level at any surface would not increase by more than 20% (relative to the radiation level of the undamaged configuration) if such deformations would occur.

3.5.3 Restrictions/Specifications

For heavy, bulky materials (e.g., concrete chunks, motors, pumps, etc.), equipment or materials with sharp corners or protrusions, or material/containment geometries that could result in highly localized forces, the shipper must ensure that the contents are securely fastened/positioned within the package.

3.5.4 49 CFR 178.350 Regulatory Requirements

Regulatory Compliance Assessment

Regulatory requirements	Testing/analysis results
49 CFR 173.24, Standard requirements for all packages	Meets applicable requirements. See Appendix A, Table A-2.
49 CFR 173.411, General design requirements	Meets applicable requirements. See Appendix B, Table B-2.
49 CFR 173.412, Additional requirements for Type A packages	Meets applicable requirements. See Appendix C, Table C-3. NOTE: This packaging failed the reduced pressure test without the RTV or equivalent.
49 CFR 173.465, Type A packaging tests	Meets applicable requirements.
Water spray	Pass. This test was not conducted; however, this test would not adversely affect the ability of this packaging to meet the Type A test requirements and there would be no inleakage of water. See Appendix D, Table D-2.
Free drop	Pass. Tests conducted. There was no loss of contents or significant deformation of package geometry. See Appendix D, Table D-11.
Corner drop	Not required.
Compression	Pass. By reference to tests conducted on M-3 steel bin. See Appendix D, Table D-24.
Penetration	Pass. Test conducted with only minor dents resulting. See Appendix D, Table D-31.

RTV = room temperature vulcanizing.

3.5.5 Quality Control

Packaging/Acceptance/Use Criteria

Critical	Major	Acceptance/pre-use/ inspection criteria*
Lid/body interface Sealing surface	Vendor qualifications and experience	Functional: • Ease of lid application • Flange--flat surface; no foreign matter • Geometry, as specified Acceptable Conditions: • Lack of dents, no deformation of sealing surfaces • Dimensions, as specified
Gasket		• Gasket size, materials, geometry
Weld areas		• Continuous welds, no sharp edges
Body	Metal thickness Bolt size and spacing	Lot tests by shipper, as appropriate, and/or vendor certification: • Marking • Test data • Type A Certification Document provided as appropriate • Air leak test
Air leak tests	Protective coating application	Visual: • Surface/coating as specified • Lack of imperfections in application • Lack of rust, dents, nicks

*These criteria apply to first-time use and to reuse as a DOT-7A Type A packaging.

3.5.6 Additional Information

Evaluation and testing of this packaging were performed at MLM and were documented in Edling 1987. Complete evaluation reports are available upon request from one of the DOT-7A Program technical contacts listed in Section 1.1.2.

3.5.6.1 Primary User(s)

Site/Contact/Phone	Address
ANL C. L. Cheever COMM/FTS 708-252-3311	Argonne National Laboratory 9700 South Cass Avenue Argonne, IL 60439

Figure 3-6. ANL-West 7A-860 Steel Box.

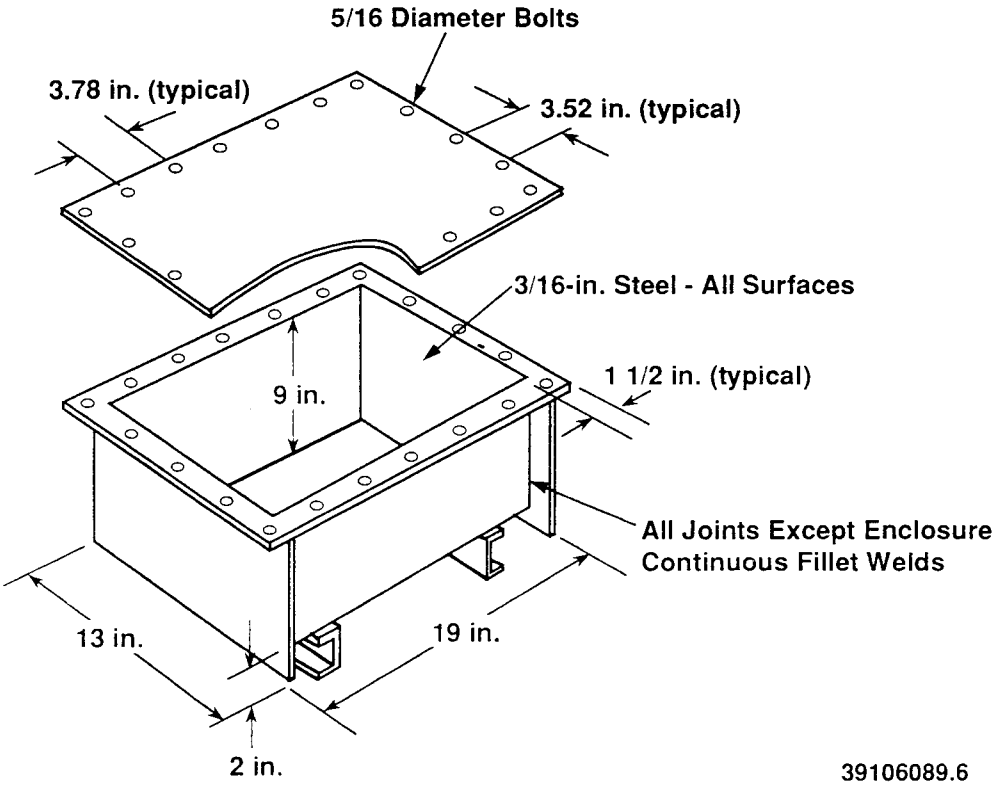

3.6 ANL-WEST STEEL BOX (DOCKETS: MLM)

3.6.1 Package Description

Dimensions

Model		Height (in.)	Width (in.)	Length (in.)
ANL-W steel box	Interior	9.000	13	19
	Exterior	11.375	16	22

Materials/Method of Construction

Body and lid	0.187-in. steel
All joints (except closure)	Continuous fillet welds
Bolts	0.312-in. diameter on approximately 3.5-in. spacings
Gaskets	Not required

NOTE: Drawing No. A 1000-0037-DD-00.

3.6.2 Authorized Contents

The shipper must determine that the actual contents are closely simulated by test contents. If they are not, testing or analysis must be conducted and documented to demonstrate DOT-7A compliance with the actual contents.

3.6.2.1 Physical Form

3.6.2.1.1 Solids Only. Only one form is authorized:

- Material Form No. 3: Solids--objects with no significant dispersible or removable contamination. (For definition, see 49 CFR 173.443, Contamination control.)

3.6.2.1.2 Maximum Gross Weight. 960 lb. (Empty packaging weight--885 lb, net contents--75 lb.)

3.6.2.2 Chemical Form. The shipper must evaluate and ensure chemical compatibility of the material to be shipped with the materials of the packaging in contact with the payload.

3.6.2.3 Radiological. The 4-ft drop test caused deformations of the package resulting in small decreases in the distance from the exterior to the center of the package. The shipper must ensure that the radiation level at any surface would not increase by more than 20% (relative to the radiation level of the undamaged configuration) if such deformations would occur.

3.6.3 Restrictions/Specifications

The following two possible approaches are acceptable with respect to addressing inleakage and ensuring that there is no transport of radioactive materials out of the packaging.

- Securely enclose the radioactive contents within the box (i.e., wrapped and sealed in plastic, etc.) so that any inleaking water cannot come in contact with the radioactive material.

- Ensure that there is no loose or removable contamination that could be entrained in any liquid and that the radioactive material is not soluble in the liquid. Thus, even if the liquids come in contact with the radioactive material, there could be no transport from the package.

NOTE: There are obviously other possible approaches; however, if an alternative approach is chosen, the basis for the choice must be supported and documented. Using one of these alternatives or an equivalent method allows these boxes to meet this requirement.

For heavy, bulky materials (e.g., concrete chunks, motors, pumps, etc.), equipment or materials with sharp corners or protrusions, or material/containment geometries that could result in highly localized forces, the shipper must ensure that the contents are securely fastened/positioned within the package.

3.6.4 49 CFR 173.850 Regulatory Requirements

Regulatory Compliance Assessment

Regulatory requirements	Testing/analysis results
49 CFR 173.24, Standard requirements for all packages	Meets applicable requirements. See Appendix A, Table A-2.
49 CFR 173.411, General design requirements	Meets applicable requirements. See Appendix B, Table B-2.
49 CFR 173.412, Additional requirements for Type A packages	Meets applicable requirements. See Appendix C, Table C-3.
49 CFR 173.465, Type A packaging tests	Meets applicable requirements.
Water spray	Pass. This test was not conducted; however, this test would not adversely affect the ability of this packaging to meet the Type A test requirements. See Section 3.6.3, Restrictions/Specifications, and Appendix D, Table D-2.
Free drop	Pass. This test was conducted and there was no loss of contents and no detectable change in package geometry. The contents were pieces of lead. See Appendix D, Table D-11.
Corner drop	Not required.
Compression	Pass. This test was conducted with 4,800 lb for 24 hr with no detectable effect on the packaging. See Appendix D, Table D-24.
Penetration	Pass. This test was conducted and had no significant effect. See Appendix D, Table D-31.

3.6.5 Quality Control

Packaging/Acceptance/Use Criteria

Critical	Major	Acceptance/pre-use/ inspection criteria*
Lid/body interface Sealing surface	Vendor qualifications and experience	Functional: • Ease of lid application • Flange--flat surface; no foreign matter • Geometry, as specified Acceptable Conditions: • Lack of dents, no deformation of sealing surfaces • Dimensions, as specified
Weld areas		• Continuous welds, no sharp edges
Body	Metal thickness Bolt size and spacing	Lot tests by shipper, as appropriate, and/or vendor certification: • Marking • Test data • Type A Certification Document provided as appropriate • Air leak test
	Protective coating	Visual: • Surface/coating as specified • Lack of imperfections in application • Lack of rust, dents, nicks

*These criteria apply to first-time use and to reuse as a DOT-7A Type A packaging.

3.6.6 Additional Information

Evaluation and testing of this packaging were performed at MLM and were documented in Edling 1987. Complete evaluation reports are available upon request from one of the DOT-7A Program technical contacts listed in Section 1.1.2.

3.6.6.1 Primary User(s)

Site/Contact/Phone	Address
ANL Max Geisler COMM/FTS 208-526-7727	Argonne National Laboratory--West P. O. Box 2528 Idaho Falls, ID 83403-2528

Figure 3-7. TRUPACT-II Standard Waste Box, Style 1, Bolted Closure.

DOT 7A Type A
49 CFR 178.350

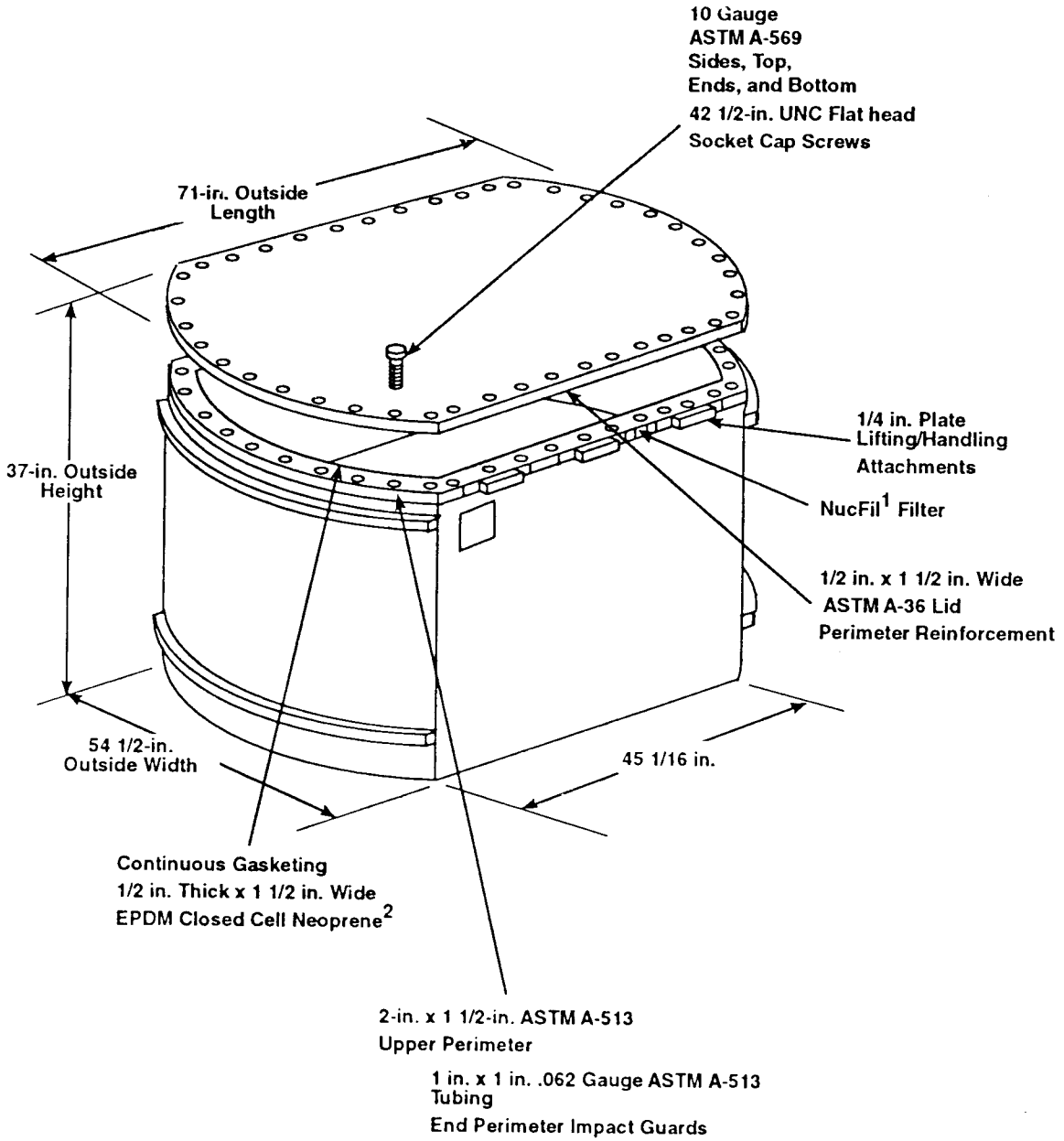

ASTM = American Society for Testing and Materials
EPDM = Ethylenepropylenediene-monomer

[1]NucFil is a trademark of Nuclear Filter Technology, Incorporated.

[2]Neoprene is a trademark of E.I. duPont de Nemours and Company.

39102002.1 FH

3.7 TRUPACT-II STANDARD WASTE BOX (DOCKETS: MLM; 89-07-7A, 09/89)

3.7.1 Package Description

Dimensions and Weights

Model		Height (in.)	Width (in.)	Length (in.)	Empty package weight (lb)
TRUPACT-II standard waste box	External	37.0	54.5	71.0	640
	Internal	36.7	52.0	68.7	640

Materials/Method of Construction

Sides, top, ends and bottom	10-gauge, ASTM A569 low carbon hot rolled steel
Steel flat bar	ASTM A-36 commercial quality structural grade
Rectangular tubing	ASTM A-500 or ASTM A-513 commercial quality structural grade carbon steel
Closure	Bolted, 1/2-in. flat head cap screws MS 24667
Gasket	EPDM material, 1/2 in. thick, 1 1/2 in. wide, ASTM-D-1056-67
Filter	NFTI Model NucFil*-013

NOTE: Westinghouse Electric Drawing No. 165-F-001-W, latest revision.

*NucFil is a trademark of Nuclear Filter Technology, Inc. (NFTI)

ASTM = American Society for Testing and Materials.

EPDM = ethylenepropylenediene-monomer.

3.7.2 Authorized Contents

The shipper must determine that the actual contents are closely simulated by the test contents. If they are not, testing or analysis must be conducted and documented to demonstrate DOT-7A compliance with the actual contents.

3.7.2.1 Physical Form

3.7.2.1.1 Solids Only. Five forms are authorized. Each shipper must determine the most appropriate form for his particular contents.

- Material Form No. 1: Solids--any particle size
- Material Form No. 2: Solids--large particle size only (e.g., sand, concrete, debris, soil, etc.)
- Material Form No. 3: Solids--objects with no significant or removable contamination. (For definition see 49 CFR 173.443, Contamination control.)
- Material Form No. 4: Solids as described in Form No. 3 above, including large, bulky, dense objects with sharp and obtrusive members or components, but having Form No. 1 and/or No. 2 as dispersible contaminates associated with the material. (e.g., steel plates, motors, valves, steel pipes, concrete blocks, etc.)
- Material Form No. 5: Four 55-gal drums (in any arrangement not exceeding 1,000 lb per drum) and overpacked within the standard waste box (SWB).

3.7.2.1.2 **Maximum Gross Weight.**

- 4,000 lb.

3.7.2.2 **Chemical Form.** The shipper must evaluate and ensure chemical compatibility of the material to be shipped with the materials of the packaging in contact with the payload.

3.7.2.3 **Radiological.** A dent (approximately 4 in.) resulted from the 4-ft drop test on the bottom edge. The shipper must ensure that the radiation level at the surface of the package will not increase by more than 20% if such a deformation would occur.

3.7.3 Restrictions/Specifications

The SWB shall be operated in accordance with the Westinghouse/Waste Isolation Division instruction entitled, *Acceptance/Use Instruction Sheet for the TRUPACT-II Standard Waste Box - Bolted Lid Style* (WID 1989).

The lid closure bolts must be torqued to a minimum of 50 ft-lb.

The NucFil filter (if used) shall be installed using Loctite No. 262 (Red) and torqued to 5 ft-lb or tack-welded to prevent unintentional loosening.

The cover seal gasket material must have an operating range of -40 °F to 158 °F.

For heavy, bulky materials (e.g., concrete chunks, motors, and pumps), equipment or materials with sharp corners or protrusions, or material/equipment geometries that could result in highly localized forces, the shipper must ensure that the contents are securely fastened/positioned within the package.

3.7.4 49 CFR 173.350 Regulatory Requirements

Regulatory Compliance Assessment

Regulatory requirements	Testing/analysis results
49 CFR 173.24, Standard requirements for all packages	Meets applicable requirements. See Appendix A, Table A-2.
49 CFR 173.411, General design requirements	Meets applicable requirements. See Appendix B, Table B-2.
49 CFR 173.412, Additional requirements for Type A packages	Meets applicable requirements. See Appendix C, Table C-3.
49 CFR 173.465, Type A packaging tests	Meets applicable requirements.
Water spray	Pass. Tests were conducted which demonstrated no inleakage of water. The water spray test preceded each of the remaining tests. In no case was there any effect on the ability of the packaging to meet the remaining tests. See Appendix D, Table D-2.
Free drop	Pass. Four separate drop tests were conducted on top and bottom corners and on the ends. In all cases there was no loss of contents or significant distortion of the packagings. See Appendix D, Table D-11.
Corner drop	Not required.
Compression	Pass. The test was conducted with greater than five times the gross weight for more than 24 hr. There was no significant distortion of the packaging or loss of contents. See Appendix D, Table D-24.
Penetration	Pass. The test was conducted on the top center of the packaging with no significant effect. The test was also done with the bar hitting the filter housing. Again there was no significant effect. The test on the top of the cover left no discernable mark and the impact on the filter housing left only a scuff mark. An ultraviolet inspection indicated no leakage of contents. See Appendix D, Table D-31.

3.7.5 Quality Control

Packaging/Acceptance/Use Criteria

Critical	Major	Acceptance/pre-use/ inspection criteria*
Lid/body interface Sealing surface	Vendor qualification and experience	Functional • Ease of lid application • Flange--flat surface; no foreign matter
Gasket		• Geometry as specified • Size, material, geometry as specified
Welds Body		Acceptable conditions • Lack of dents, no deformation of sealing surfaces • Dimensions as specified • Continuous, no sharp edges • Metal type, thickness, and quality as specified • Bolt number, locations, and materials as specified Lot test by shipper as appropriate and/or vendor data/certification: • Marking • Test data • Type A certification document provided as appropriate
	Protective coating	Visual • Surface coating as specified • Lack of imperfections • Lack of rust, dents, nicks
Filter		Acceptable • Type, location, and installation as specified

*These criteria apply to first-time and to reuse as a DOT-7A Type A packaging.

3.7.6 Additional Information

Evaluation and testing of the subject packaging took place at MLM in 1989. A complete test report is available upon request from one of the DOT-7A Program technical contacts listed in Section 1.1.2.

3.7.6.1 Primary User(s)

Site/Contact/Phone	Address
Waste Isolation Pilot Plant M. L. Caviness 505-885-8883	Westinghouse/Waste Isolation Division P.O. Box 2078 Carlsbad, NM 88221

Figure 3-8. ORNL Low-Level Waste Container.

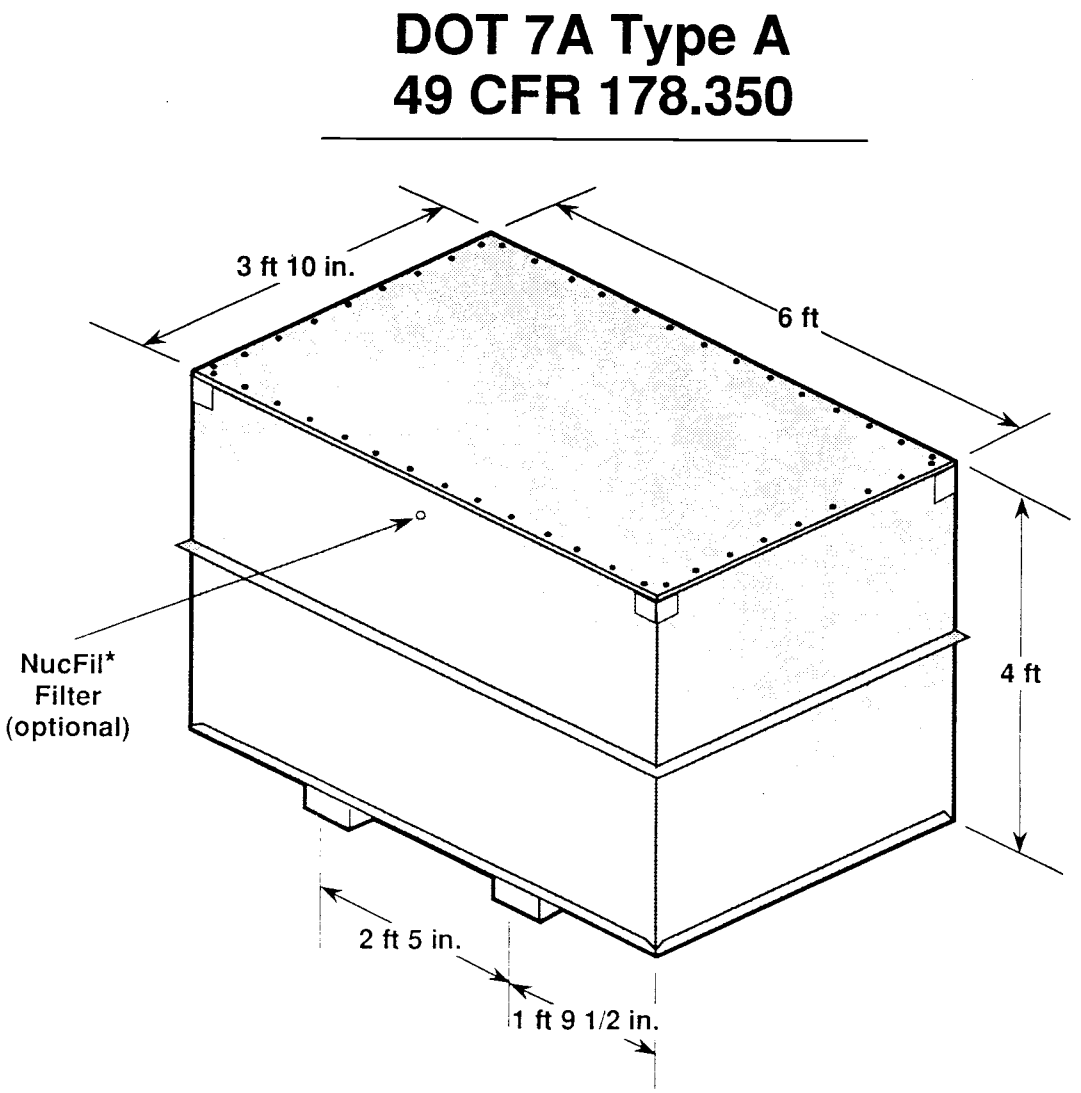

*NucFil is a trademark of Nuclear Filter Technology, Incorporated.

39102077.4

3.8 ORNL LOW-LEVEL WASTE CONTAINER (DOCKETS: 89-04-7A, 10/90)

3.8.1 Package Description

Dimensions and Weights

Model	Height (in.)	Width (in.)	Length (in.)	Packaging empty weight (lb)	
External	50.25	46.00	72.00	Vented	1,150
Internal	47.00	45.75	71.75	Nonvented	1,230

Materials/Method of Construction

Major components	Material	Thickness
Sides, ends, bottom	ASTM A569 Steel	11 gauge
Top	ASTM A36 Steel	0.250 in.
Bracing	ASTM A36 Steel	Varies
Square tubing	ASTM A501 or A500B	0.500 in. x 0.500 in. x 0.250 in.
Gasket	Nitrile BUNA-N MIL R-3065	0.500 in. x 0.500 in. x 19.333 ft.
Lid bolts	Grade 5 Steel A449	0.375-16 UNC x 1 in. 0.500-13 UNC x 1 in.

NOTES: Container is continuously welded construction with a bolted lid. Filter: NFTI NucFil-013 carbon composite filter (vented container only). Drawings: Martin Marietta Energy Systems, Inc., DPME-13053-B755, Rev. A, Vented Container and DPME-13053-B756, Rev. A, Nonvented Container.
ASTM = American Society for Testing and Materials.

3.8.2 Authorized Contents

The shipper must determine that the actual contents are closely simulated by the test contents. If they are not, testing or analysis must be conducted and documented to demonstrate DOT-7A compliance with the actual contents.

3.8.2.1 Physical Form

3.8.2.1.1 Solids Only. Three forms are authorized. Each shipper must determine the most appropriate form for his particular contents and comply with any special requirements.

- Material Form No. 1: Solids--any particle size
- Material Form No. 2: Solids--large particle size only (e.g., sand, concrete, debris, soil, etc.)

- Material Form No. 3: Solids--objects with no significant dispersible or removable contamination. (For definition, see 49 CFR 173.443, Contamination control.)

3.8.2.1.2 Weights

	Vented	Nonvented
Payload weight	7,000 lb	9,000 lb
Maximum gross weight	8,150 lb	10,230 lb

3.8.2.2 Chemical Form. The shipper must evaluate and ensure chemical compatibility of the material to be shipped with the materials of the packaging in contact with the payload.

3.8.2.3 Radiological. The shipper shall ensure that the radiation level at any surface would not increase by more than 20% (relative to the radiation level prior to the test) as a result of the decrease in distance to the center of the package resulting from the 4-ft drop test. The decrease in distance to the center of the package as a result of testing was 4 3/4 in. for the vented container and 1 1/2 in. for the nonvented container.

3.8.3 Restrictions/Specifications

Operation of the subject packagings shall be in accordance with one of the following procedures (as applicable):

Operations, Maintenance and Inspection Procedure for DOT-7A Type A K1401-7V Low Level Waste Container (Vented) (Holbrook 1991a)

Operations, Maintenance and Inspection Procedure for DOT-7A Type A K1401-9NV Low Level Waste Container," (Non-vented) (Holbrook 1991b)

The lid closure gasket material shall have an operating range of -40 °F to 158 °F.

Torquing requirements shall be 30 ± 3 ft-lb for the 3/8-in. bolts and 40 ± 4 ft-lb for the 1/2-in. bolts.

The NucFil filter (if used) shall be installed using Loctite No. 262 (Red) and torqued to 5 ft-lb or tack-welded to prevent unintentional loosening.

For heavy, bulky materials (e.g., concrete chunks, motors, and pumps), equipment or materials with sharp corners or protrusions, or material/equipment geometries that could result in highly localized forces, the shipper must ensure that the contents are securely fastened/positioned within the package.

3.8.4 49 CFR 178.350 Regulatory Requirements

Regulatory Compliance Assessment

Regulatory requirements	Testing/analysis results
49 CFR 173.24, Standard requirements for all packages	Meets applicable requirements. See Appendix A, Table A-2.
49 CFR 173.411, General design requirements	Meets applicable requirements. See Appendix B, Table B-2.
49 CFR 173.412, Additional requirements for Type A packages	Meets applicable requirements. See Appendix C, Table C-3.
49 CFR 173.465, Type A packaging tests	Meets applicable requirements.
Water spray	Pass. Drop test was conducted and there was no inleakage of water and no features on the package that would retain free-standing water. See Appendix D, Table D-2.
Free drop	Pass. Drop tests from a height of 4 ft were conducted as follows: • Flat on top lid • Flat on end containing filter • Center of gravity over struck corner with top end facing down • Center of gravity over struck corner with bottom end facing down. See Appendix D, Table D-11.
Corner drop	Not required.
Compression	Pass. A compressive load of 42,475 lb was applied to the package for 24 hr. See Appendix D, Table D-24.
Penetration	Pass. The 1.25-in.-diameter, 13.2-lb penetration bar was dropped from a height of 40 in. on the top of the container. See Appendix D, Table D-31.

3.8.5 Quality Control

Packaging/Acceptance/Use Criteria

Critical	Major	Acceptance/pre-use/ inspection criteria*
Lid/body interface Sealing surface	Vendor qualification and experience	Functional • Ease of lid application • Flange--flat surface; no foreign matter
Gasket		• Geometry as specified • Size, material, geometry as specified Acceptable conditions • Lack of dents, no deformation of sealing surfaces • Dimensions as specified
Welds		• Continuous, no sharp edges
Body		• Metal type, thickness, and quality as specified • Bolt number, locations, and materials as specified • Lot test by shipper as appropriate and/or vendor data/certification: - Marking - Test data - Type A certification document provided as appropriate
	Protective coating	Visual • Surface coating as specified • Lack of imperfections • Lack of rust, dents, nicks.
Filter		Acceptable • Type, location, and installation as specified.

*These criteria apply to first-time and to reuse as a DOT-7A Type A packaging.

3.8.6 Additional Information

The packagings were evaluated and tested by Westinghouse Hanford as part of Docket 89-04-7A. Testing was completed on Model K1401-7V (vented) in June 1990 and in October 1990 for Model K1401-9NV (nonvented). A complete test report is available upon request from one of the DOT-7A Program technical contacts listed in Section 1.1.2.

3.8.6.1 Primary User(s)

Site/Contact/Phone	Address
ORNL R. H. Holbrook COMM/FTS 615-576-9182	Oak Ridge National Laboratory Martin Marietta Energy Systems, Inc. P.O. Box 2003 Oak Ridge, Tennessee 37831-7365

This page intentionally left blank.

4.0 WOODEN BOXES

This page intentionally left blank.

Figure 4-1. ANL-West 7A-217 Wooden Box
(contents restricted, see Section 4.1.3).

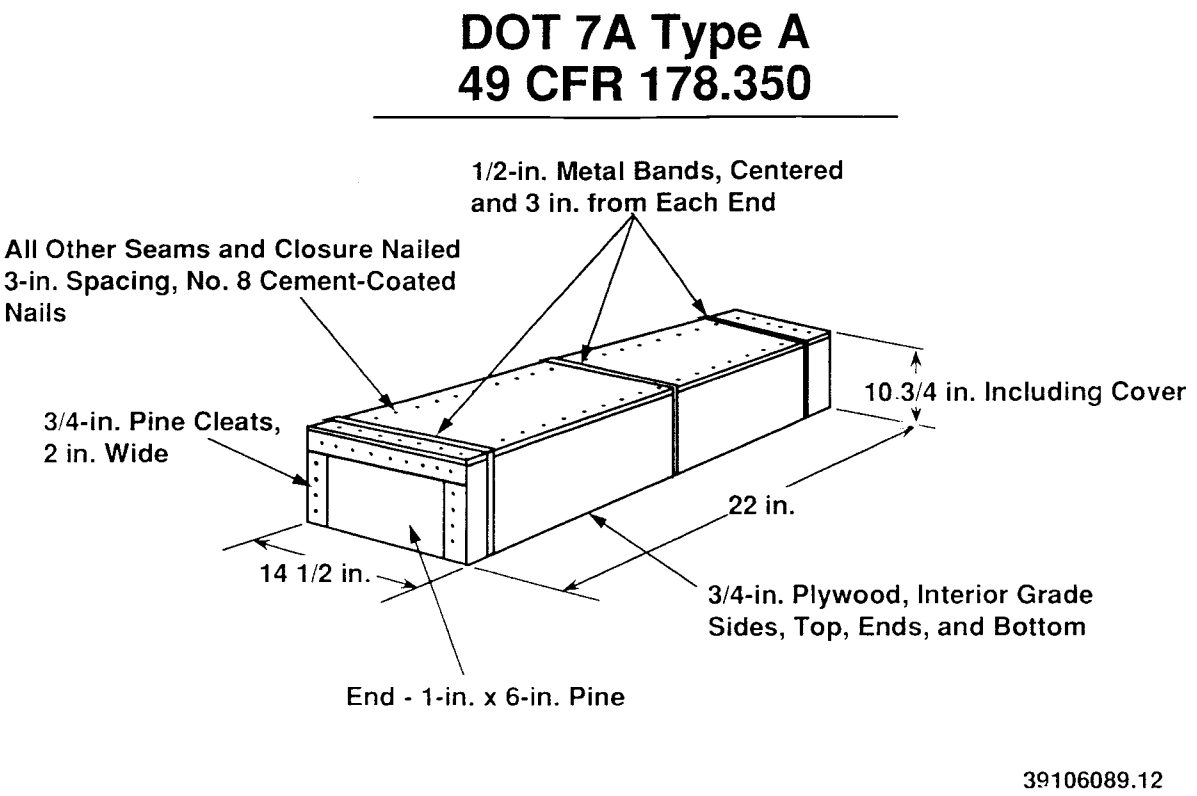

Figure 4-2. ANL-West 7A-375 Wooden Box
(contents restricted, see Section 4.1.3).

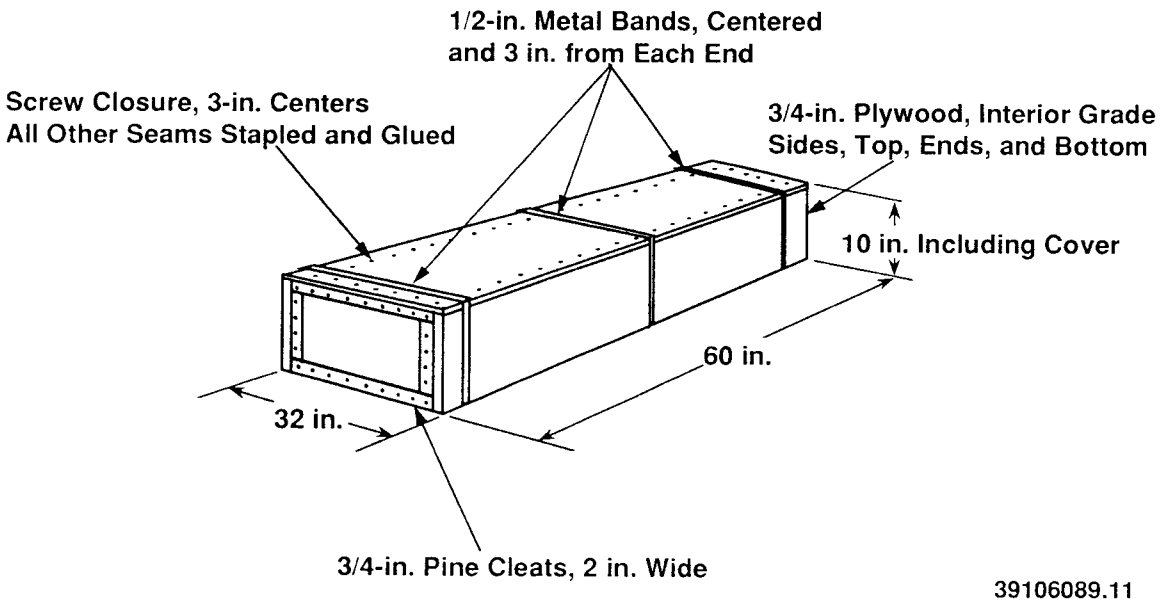

Figure 4-3. ANL-West 7A-670 Wooden Box
(contents restricted, see Section 4.1.3).

DOT 7A Type A
49 CFR 178.350

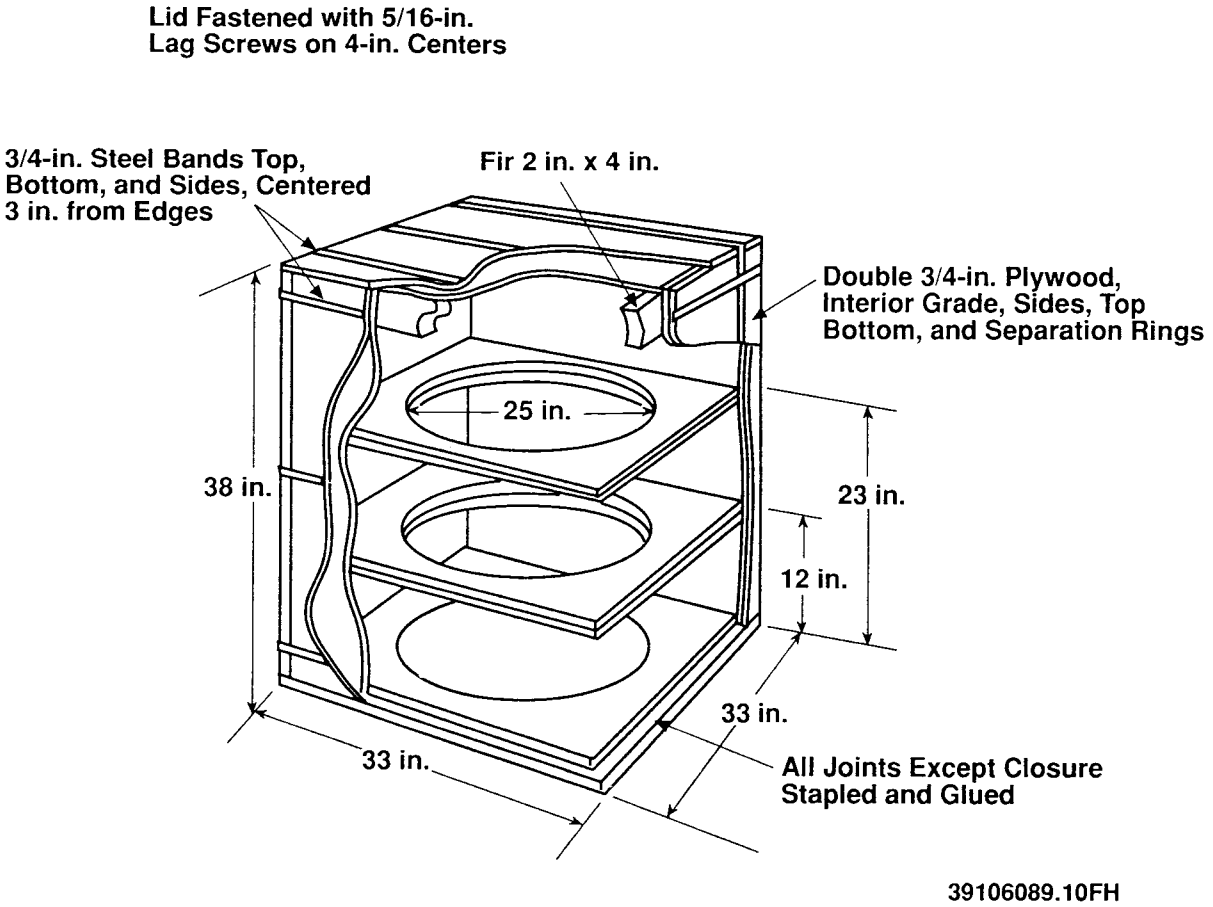

Figure 4-4. ANL-West 7A-880 Wooden Box
(contents restricted, see Section 4.1.3).

DOT 7A Type A
49 CFR 178.350

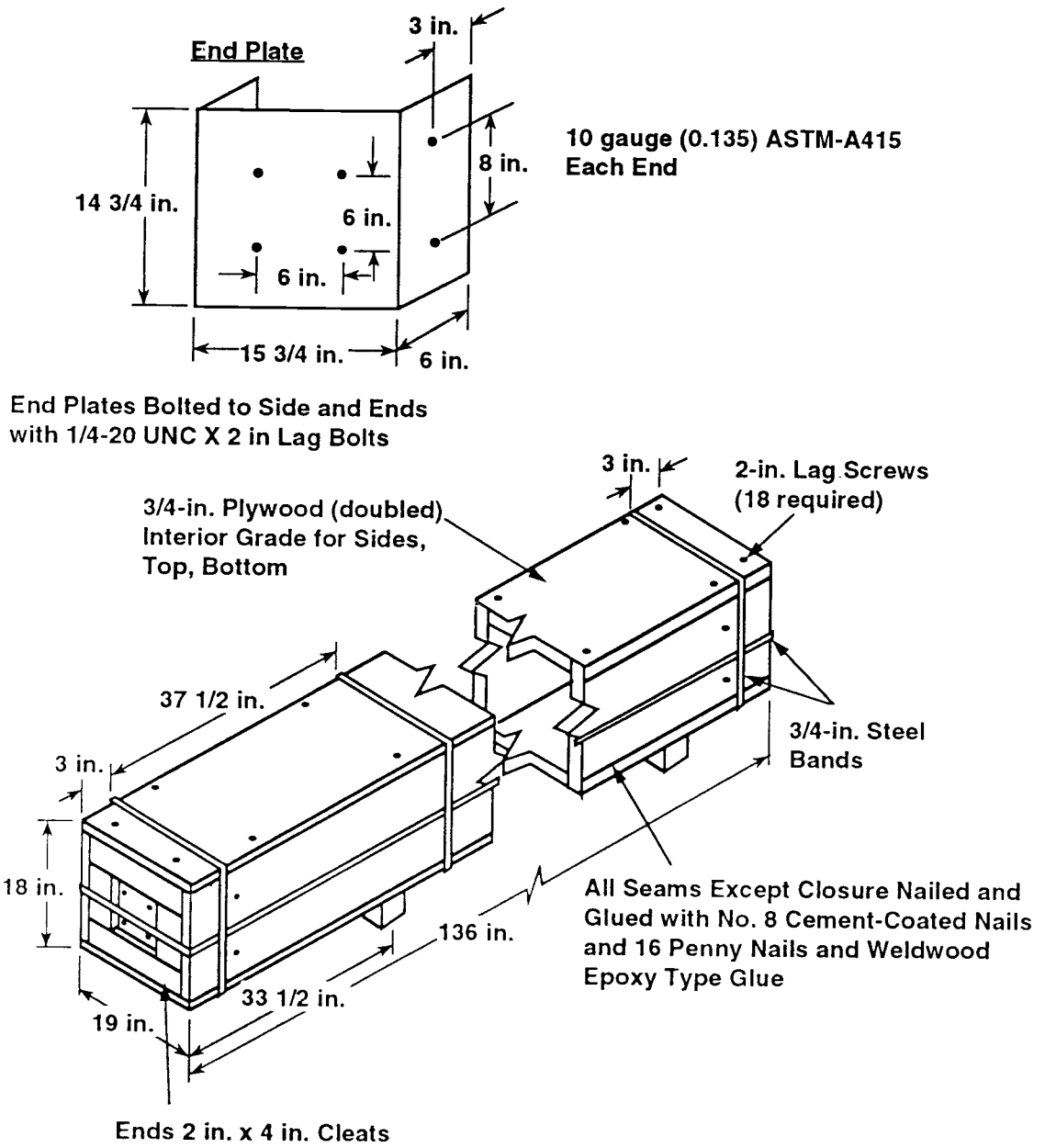

ASTM = American Society for Testing and Materials

39106089.9

Figure 4-5. ANL-West 7A-995 Wooden Box.

DOT 7A Type A
49 CFR 178.350

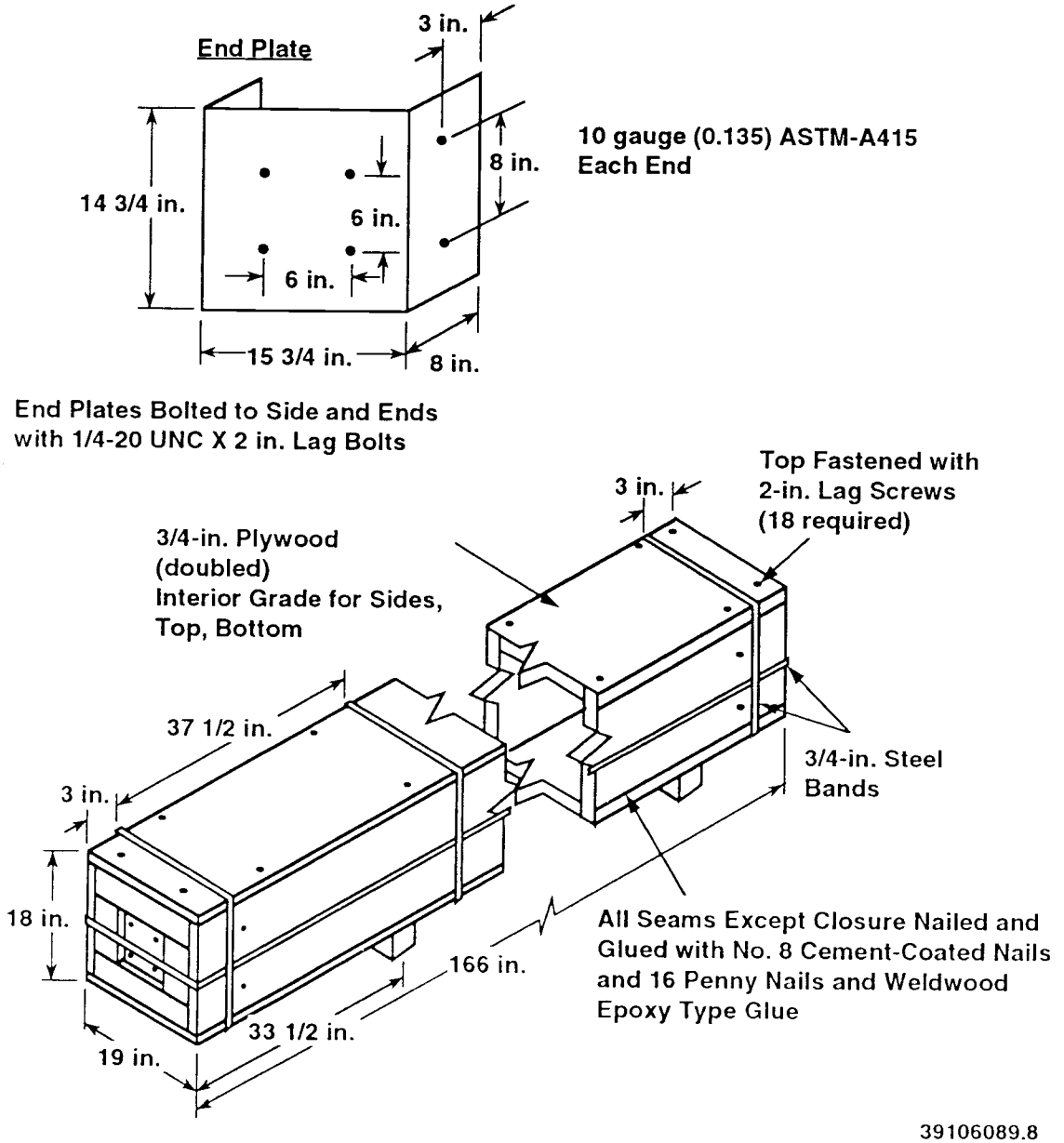

Figure 4-6. ANL-West 7A-1315 Wooden Box (contents restricted, see Section 4.1.3).

DOT 7A Type A
49 CFR 178.350

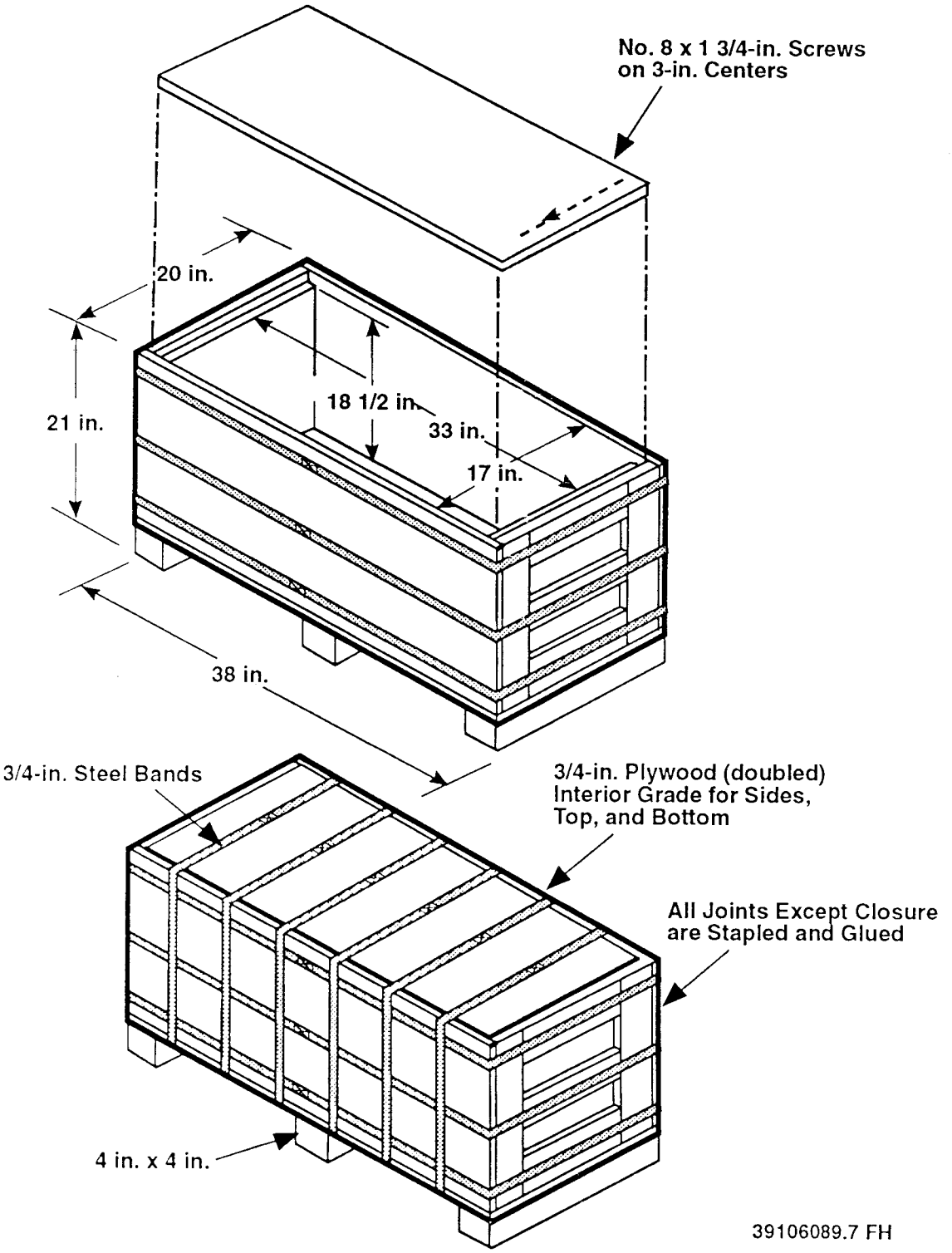

4.1 ANL-WEST FAMILY OF WOODEN BOXES (DOCKETS: MLM)

4.1.1 Package Description

Dimensions and Weights

Model	Height (in.)	Width (in.)	Length (in.)	Authorized gross weight (lb)
ANL-7A-217[a]	10.75	14.5	22	217
ANL-7A-375[b]	10.00	32.0	60	375
ANL-7A-670[c]	38.00	33.0	33	670
ANL-7A-880[d]	18.00[g]	19.0	136	880
ANL-7A-995[e]	18.00[g]	19.0	166	995
ANL-7A-1315[f]	21.00[h]	20.0	38	1,315

[a]See ANL-W container design SPM-AP-1.
[b]See ANL-W container design SPM-PS-5.
[c]See ANL-W container design SPM-PS-8.
[d]See ANL-W container design SPM-HFEF-1.
[e]See ANL-W W0093-0812-EE-01.
[f]See ANL-W container design SPM-PS-9.
[g]Height does not include skids.
[h]Height includes skids.

4.1.1.1 **Materials/Method of Construction.** All appropriate information is given in Figures 4-1 through 4-6.

4.1.2 Authorized Contents

The shipper must determine that the actual contents are closely simulated by the test contents. If they are not, testing or analysis must be conducted and documented to demonstrate DOT-7A compliance with the actual contents.

4.1.2.1 **Physical Form**

4.1.2.1.1 **Solids Only.** One material form is authorized:

- Material Form No. 3: Solids--objects with no significant dispersible or removable contamination. (For definition, see 49 CFR 173.433, Contamination control.)

4.1.2.1.2 **Maximum Gross Weight.** See the Dimensions and Weights table in Section 4.1.1.

4.1.2.2 Chemical Form. The shipper must evaluate and ensure chemical compatibility of the material to be shipped with the materials of the packaging in contact with the payload.

4.1.2.3 Radiological. The 4-ft drop test caused deformations of the package resulting in small decreases in the distance from the exterior to the center of the package. The shipper must ensure that the radiation level at any surface would not increase by more than 20% (relative to the radiation level of the undamaged configuration) if such deformations would occur.

4.1.3 Restrictions/Specifications

The following three possible approaches are acceptable with respect to addressing inleakage and ensuring that there is no transport of radioactive materials out of the packaging.

- Securely enclose the radioactive contents within the box (e.g., wrap and seal in plastic, etc.) so that any inleaking water cannot come in contact with the radioactive material.

- Seal the box using GEOCEL* or its equivalent. If the box is reused, it must be re-coated with at least one coat to cover the seal areas before each shipment.

- The third approach is to ensure that there is no loose or removable contamination that could be entrained in any liquid and that the radioactive material is not soluble in the liquid. Thus, even if the liquids come in contact with the radioactive material, there could be no transport from the package.

NOTE: There are obviously other possible approaches; however, if an alternative approach is chosen, the basis for the choice must be supported and documented. Using one of these alternatives or an equivalent method allows these wooden boxes to meet this requirement.

For heavy, bulky materials (e.g., concrete chunks, motors, pumps, etc.), equipment or materials with sharp corners or protrusions, or material/containment geometries that could result in highly localized forces, the shipper must ensure that the contents are securely fastened/positioned within the package.

*GEOCEL is a trademark of GEOCEL Corporation.

4.1.4 49 CFR 178.350 Regulatory Requirements

Regulatory Compliance Assessment

Regulatory requirements	Testing/analysis results
49 CFR 173.24, Standard requirements for all packages	Meets applicable requirements. See Appendix A, Table A-3.
49 CFR 173.411, General design requirements	Meets applicable requirements. See Appendix B, Table B-3.
49 CFR 173.412, Additional requirements for Type A packages	Meets applicable requirements. See Appendix C, Table C-5.
49 CFR 173.465, Type A packaging tests	Meets applicable requirements.
Water spray	Pass. Tests conducted on representative packagings demonstrated that this test did not affect the ability of the packaging to meet other Type A test requirements. With the actions required in Section 4.1.3, Restrictions/Specifications, these packagings also satisfy this test requirement with respect to potential inleakage of water. See Appendix D, Table D-3.
Free drop	Pass. This drop was made on the top corner with the boxes inverted. There was no loss of contents and no significant change in packaging geometry. See Appendix D, Table D-12.
Corner drop	Not required.
Compression	Pass. The tests were conducted with greater than five times the gross weight shown in the Dimensions and Weights table in Section 4.1.1 for 24 hr. There was no detectable effect. See Appendix D, Table D-25.
Penetration	Pass. This test was conducted on each package with no significant effect. See Appendix D, Table D-32.

4.1.5 Quality Control

Packaging/Acceptance/Use Criteria

Critical	Major	Acceptance/pre-use/inspection criteria*
Lid/body interface Sealing surface	Vendor qualifications and experience	Functional: • Ease of lid application • Mating surfaces flat and smooth, no foreign matter • Geometry, as specified Acceptable conditions:
	Joints/seams	• Dimensions, as specified • Glued
	Closure	• As specified, nail or screw • Caulking on lid • Steel banding of proper size and location
	Vendor qualification and experience	Vendor data as appropriate. Lot tests/inspections as appropriate by shipper.

*These criteria apply to first-time use and to reuse as a DOT-7A Type A packaging.

4.1.6 Additional Information

Evaluation and testing of this packaging were performed at MLM and were documented in Edling 1987. Complete evaluation reports are available upon request from one of the DOT-7A Program technical contacts listed in Section 1.1.2.

4.1.6.1 Primary Users

Site/Contact/Phone	Address
Argonne National Laboratory-West (ANL-W) M. C. Geisler COMM/FTS 208-526-0111 COMM/FTS 208-533-7666	Argonne National Laboratory-West P.O. Box 2528 Idaho Falls, ID 83401

4.1.6.2 Supplier. Manufactured by Argonne National Laboratory-West.

Figure 4-7. LLNL Flush Panel Wooden Box (contents restricted, see Section 4.2.3).

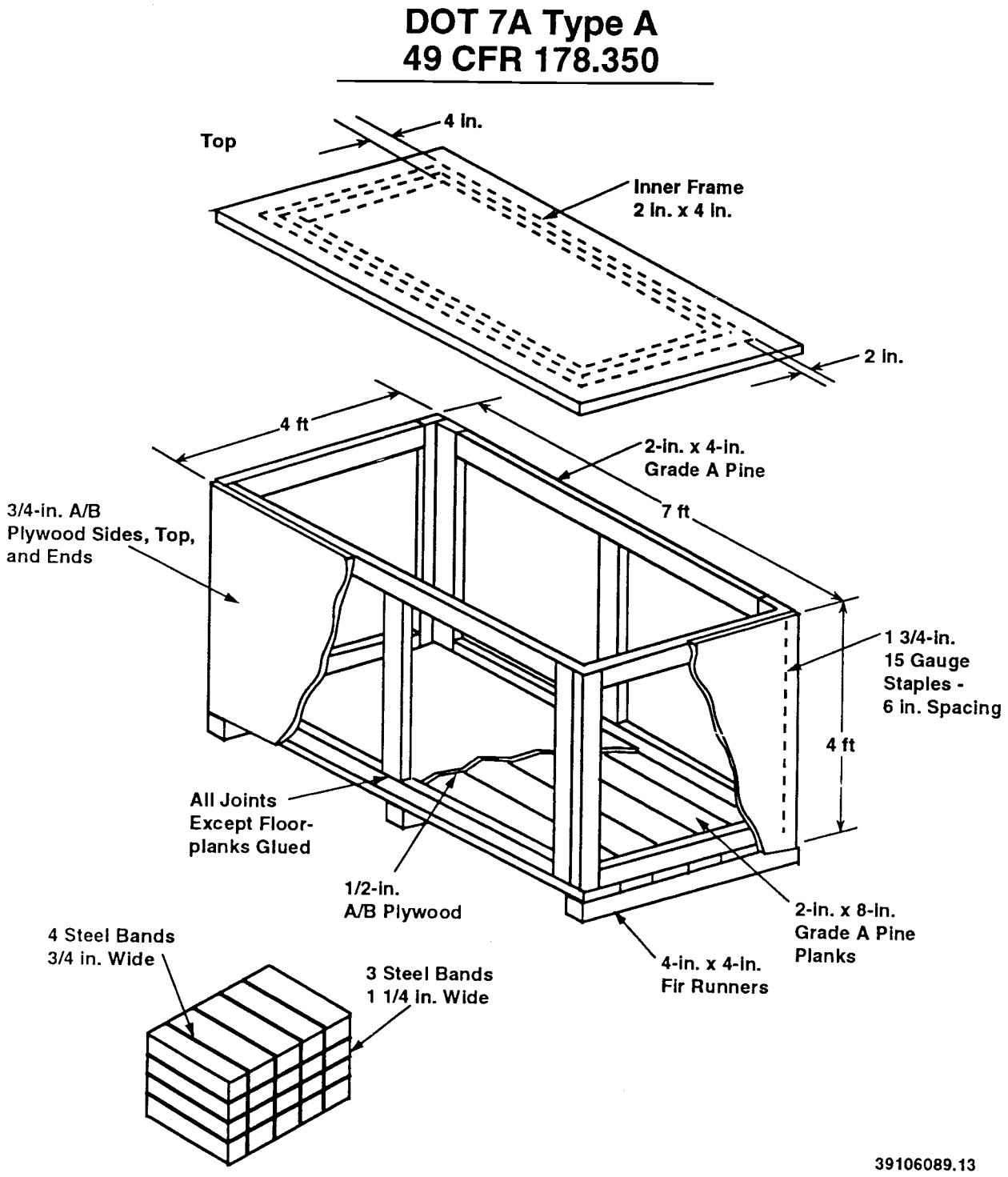

4.2 LLNL FLUSH PANEL WOODEN BOX (DOCKETS: MLM)

4.2.1 Package Description

Dimensions

Height (in.)	Width (in.)	Length (in.)
48*	48	84

*Does not include lid or skids.

Materials/Method of Construction

Interior frame	2-in. x 4-in. pine
Sub-flooring	2-in. x 8-in. pine planks (Grade A)
Sides, top, lid	0.75-in. A/B plywood
Inner flooring	0.5-in. A/B plywood
Staples	1.75-in. 15-gauge with 6-in. spacing
Joints/seams	All except floor planks glued
Steel band	3 steel bands (1.25 in. wide) around sides and ends
	4 steel bands (0.75 in. wide) around top, sides, and bottom

4.2.2 Authorized Contents

The shipper must determine that the actual contents are closely simulated by the test contents. If they are not, testing or analysis must be conducted and documented to demonstrate DOT-7A compliance with the actual contents.

4.2.2.1 Physical Form

4.2.2.1.1 Solids Only. Two material forms are authorized. Each shipper must determine the most appropriate form for his particular contents and comply with any special requirements.

- Material Form No. 2: Solids--large particle size only (e.g., sand, concrete, debris, soil, etc.)
- Material Form No. 3: Solids--objects with no significant dispersible or removable contamination. (For definition, see 49 CFR 173.433, Contamination control.)

4.2.2.1.2 Maximum Gross Weight

- 2,500 lb.

4.2.2.2 Chemical Form. The shipper must evaluate and ensure chemical compatibility of the material to be shipped with the materials of the packaging in contact with the payload.

4.2.2.3 Radiological. The 4-ft drop test caused deformations of the package resulting in small decreases in the distance from the exterior to the center of the package. The shipper must ensure that the radiation level at any surface would not increase by more than 20% (relative to the radiation level of the undamaged configuration) if such deformations would occur.

4.2.3 Restrictions/Specifications

The following three possible approaches are acceptable with respect to addressing inleakage and ensuring that there is no transport of radioactive materials out of the packaging.

- Securely enclose the radioactive contents within the box (e.g., wrap and seal in plastic, etc.) so that any inleaking water cannot come in contact with the radioactive material.

- Seal the box using GEOCEL or its equivalent. If the box is reused, it must be re-coated with at least one coat to cover the seal areas before each shipment.

- Ensure that there is no loose or removable contamination that could be entrained in any liquid and that the radioactive material is not soluble in the liquid. Thus, even if the liquids come in contact with the radioactive material, there could be no transport from the package.

NOTE: There are obviously other possible approaches; however, if an alternative approach is chosen, the basis for the choice must be supported and documented. Using one of these alternatives or an equivalent method allows these wooden boxes to meet this requirement.

For heavy, bulky materials (e.g., concrete chunks, motors, pumps, etc.), equipment or materials with sharp corners or protrusions, or material/containment geometries that could result in highly localized forces, the shipper must ensure that the contents are securely fastened/positioned within the package.

4.2.4 49 CFR 178.350 Regulatory Requirements

Regulatory Compliance Assessment

Regulatory Requirements	Testing/analysis results
49 CFR 173.24, Standard requirements for all packages	Meets applicable requirements. See Appendix A, Table A-3.
49 CFR 173.411, General design requirements	Meets applicable requirements. See Appendix B, Table B-3.
49 CFR 173.412, Additional requirements for Type A packages	Meets applicable requirements. See Appendix C, Table C-5.
49 CFR 173.465, Type A packaging tests	Meets applicable requirements.
Water spray	Pass. Tests conducted on representative packagings demonstrated that this test did not affect the ability of the packaging to meet other Type A test requirements. With the actions required in Section 4.2.3, Restrictions/Specifications, these packagings also satisfy this test requirement with respect to potential inleakage of water. See Appendix D, Table D-3.
Free drop	Pass. This drop was made on the top corner with the box inverted and held at a 45° angle. There was no loss of contents and no significant change in packaging geometry. See Appendix D, Table D-12.
Corner drop	Not required.
Compression	Pass. This test was conducted with greater than five times the gross weight shown in Section 4.2.2.1.2 for 24 hr. There was no detectable effect. See Appendix D, Table D-25.
Penetration	Pass. This test was conducted on each package with no significant effect. See Appendix D, Table D-32.

4.2.5 Quality Control

Packaging/Acceptance/Use Criteria

Critical	Major	Acceptance/pre-use/inspection criteria*
Lid/body interface Sealing surface	Vendor qualifications and experience	Functional: • Ease of lid application • Mating surfaces flat and smooth, no foreign matter • Geometry, as specified Acceptable Conditions:
	Joints/seams	• Dimensions, as specified • Glued
	Closure	• As specified, nail or screw • Caulking on lid • Steel banding of proper size and location • Nail-type and spacing
	Vendor qualifications and experience	Vendor data as appropriate. Lot tests/inspections as appropriate by shipper.

*These criteria apply to first-time use and to reuse as a DOT-7A Type A packaging.

4.2.6 Additional Information

Evaluation and testing of this packaging were performed at MLM and were documented in Edling 1987. Complete evaluation reports are available upon request from one of the DOT-7A Program technical contacts listed in Section 1.1.2.

4.2.6.1 Primary Users

Site/Contact/Phone	Address
LLNL Irene Meisel COMM/FTS 510-422-5448	University of California Lawrence Livermore National Laboratory P.O. Box 808 Livermore, CA 94550

Figure 4-8. Configuration A Light Duty Wooden Box (contents restricted, see Section 4.3.3).

DOT 7A Type A
49 CFR 178.350

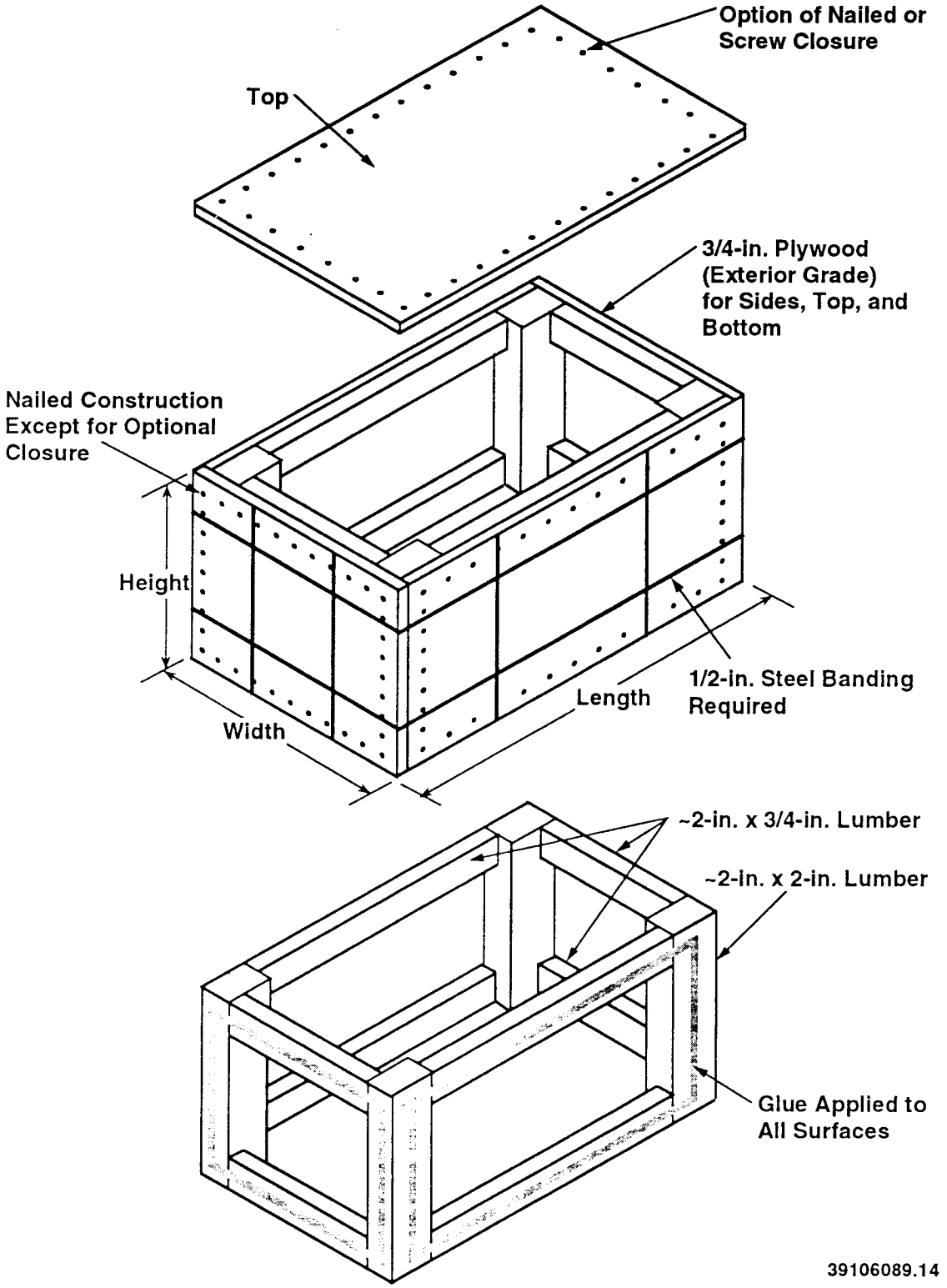

4.3 MOUND WOODEN BOX - CONFIGURATION A (DOCKETS: MLM)

4.3.1 Package Description

Dimensions and Weights

Model	Height (in.)	Width (in.)	Length (in.)	Authorized gross weight (lb)
MA-1	8	8	8	40
MA-2	8	8	36	100
MA-3	12	12	12	100
MA-4	12	12	36	100

Materials/Method of Construction

Sides, ends, top, and bottom	0.75-in. exterior grade plywood
Interior frame	Corner posts, 2-in. x 2-in. pine
	Braces, 2-in. x 0.75-in. pine
Nailed construction	Nails, 1.5, 2, and 3 in., depending on thickness of material
	Nail spacing approximately 2 in.
All seams/joints glued	
Steel banding (0.5 in.)	2 bands around sides and ends
	2 bands around top, ends, and bottom
	x band, as appropriate, to provide bands (top to bottom) at least every 18 in. around package
Closure (optional)	May be nail or screw closure
	Nails (see above)
	Screws, 2-in. and 3-in. No. 10 screws depending on thickness of material

4.3.2 Authorized Contents

The shipper must determine that the actual contents are closely simulated by the test contents. If they are not, testing or analysis must be conducted and documented to demonstrate DOT-7A compliance with the actual contents.

4.3.2.1 Physical Form

4.3.2.1.1 Solids Only. Two material forms are authorized. Each shipper must determine the most appropriate form for his particular contents and comply with any special requirements.

- Material Form No. 2: Solids--large particle size (e.g., sand, concrete, debris, soil, etc.)
- Material Form No. 3: Solids--objects with no significant dispersible or removable contamination. (For definition, see 49 CFR 173.433, Contamination control.)

4.3.2.1.2 Maximum Gross Weight. See the Dimensions and Weights table in Section 4.3.1.

4.3.2.2 Chemical Form. The shipper must evaluate and ensure chemical compatibility of the material to be shipped with the materials of the packaging in contact with the payload.

4.3.2.3 Radiological. The 4-ft drop test caused deformations of the package resulting in small decreases in the distance from the exterior to the center of the package. The shipper must ensure that the radiation level at any surface would not increase by more than 20% (relative to the radiation level of the undamaged configuration) if such deformations would occur.

4.3.3 Restrictions/Specifications

The following three possible approaches are acceptable with respect to addressing inleakage and ensuring that there is no transport of radioactive materials out of the packaging.

- Securely enclose the radioactive contents within the box (e.g., wrap and seal in plastic, etc.) so that any inleaking water cannot come in contact with the radioactive material.
- Seal the box using GEOCEL or its equivalent. If the box is reused, it must be re-coated with at least one coat to cover the seal areas before each shipment.
- Ensure that there is no loose or removable contamination that could be entrained in any liquid and that the radioactive material is not soluble in the liquid. Thus, even if the liquids come in contact with the radioactive material, there could be no transport from the package.

NOTE: There are obviously other possible approaches; however, if an alternative approach is chosen, the basis for the choice must be supported and documented. Using one of these alternatives or an equivalent method allows these wooden boxes to meet this requirement.

For heavy, bulky materials (e.g., concrete chunks, motors, pumps, etc.), equipment or materials with sharp corners or protrusions, or material/containment geometries that could result in highly localized forces, the shipper must ensure that the contents are securely fastened/positioned within the package.

4.3.4 49 CFR 178.350 Regulatory Requirements

Regulatory Compliance Assessment

Regulatory requirements	Testing/analysis results
49 CFR 173.24, Standard requirements for all packages	Meets applicable requirements. See Appendix A, Table A-3.
49 CFR 173.411, General design requirements	Meets applicable requirements. See Appendix B, Table B-3.
49 CFR 173.412, Additional requirements for Type A packages	Meets applicable requirements. See Appendix C, Table C-5.
49 CFR 173.465, Type A packaging tests	Meets applicable requirements.
Water spray	Pass. Tests conducted on representative packagings demonstrated that this test did not affect the ability of the packaging to meet other Type A test requirements. With the actions required in Section 4.4.3, Restrictions/Specifications, these packagings also satisfy this test requirement with respect to potential inleakage of water. See Appendix D, Table D-4.
Free drop	Pass. This drop was made on the top corner with the boxes inverted and held at a 45° angle. There was no loss of contents and no significant change in packaging geometry. See Appendix D, Table D-13.
Corner drop	The corner drop was conducted on all four packagings. This allows their potential use at less than 110 lb. See Appendix D, Table D-20.
Compression	Pass. The tests were conducted with greater than five times the gross weight shown in the Dimensions and Weights table in Section 4.3.1 for 24 hr. There was no detectable effect. See Appendix D, Table D-25.
Penetration	Pass. This test was conducted on each package with no significant effect. See Appendix D, Table D-32.

4.3.5 Quality Control

Packaging/Acceptance/Use Criteria

Critical	Major	Acceptance/pre-use/inspection criteria*
Lid/body interface Sealing surface	Vendor qualifications and experience	Functional: • Ease of lid application • Mating surfaces flat and smooth, no foreign matter • Geometry, as specified Acceptable conditions:
	Joints/seams	• Dimensions, as specified • Glued
	Closure	• As specified, nail or screw • Caulking on lid • Steel banding of proper size and location • Nail-type and spacing
	Vendor qualifications and experience	Vendor data as appropriate. Lot tests/inspections as appropriate by shipper.

*These criteria apply to first-time use and to reuse as a DOT-7A Type A packaging.

4.3.6 Additional Information

Evaluation and testing of this packaging performed at MLM were documented in Edling 1987. Complete evaluation reports are available upon request from one of the DOT-7A Program technical contacts listed in Section 1.1.2.

4.3.6.1 Primary Users

Site/Contact/Phone	Address
MLM Don Wikstrom COMM/FTS 513-865-3919	Mound-MRC P.O. Box 32 Mound Road Miamisburg, OH 45342

4.3.6.2 Supplier. Manufactured onsite.

Figure 4-9. Configuration B Medium Duty Wooden Box (contents restricted, see Section 4.4.3).

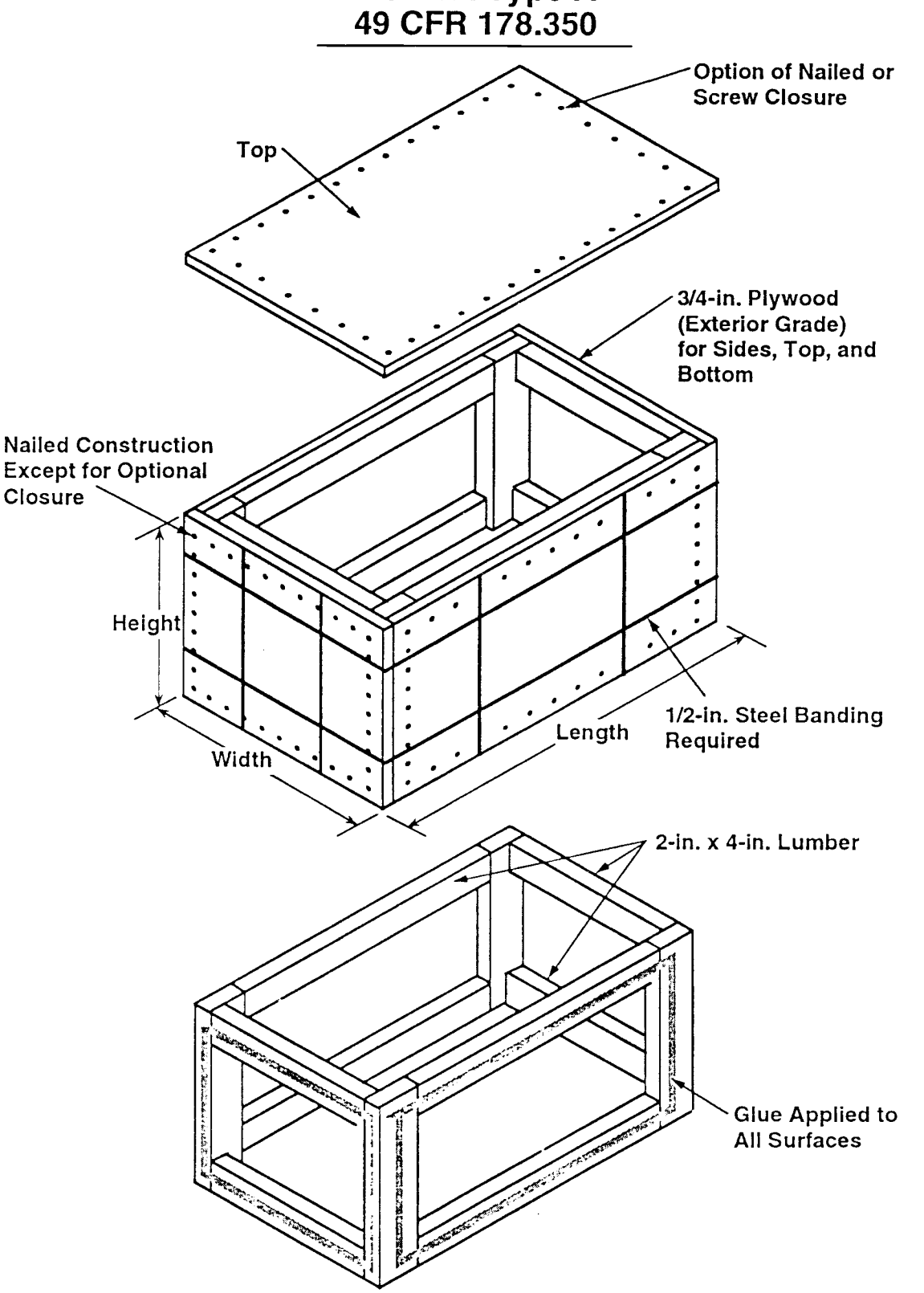

Note: Height includes width at top.

39106089.15

4.4 MOUND WOODEN BOX - CONFIGURATION B (DOCKETS: MLM)

4.4.1 Package Description

Dimensions and Weights

Model	Height (in.)	Width (in.)	Length (in.)	Authorized gross weight (lb)
MA-1	12	12	12	150
MA-2	16	16	16	150
MA-3	24	24	24	200
MA-4	12	12	36	150
MA-5	16	16	36	150
MA-6	24	24	36	200

Materials/Method of Construction

Sides, ends, top, and bottom	0.75-in. exterior grade plywood
Interior frame	2-in. x 4-in. pine
Nailed construction	Nails, 1.5, 2, and 3 in., depending on thickness of material
	Nail spacing approximately 2 in.
All seams/joints glued	
Steel banding (0.5 in.)	2 bands around sides and ends
	2 bands around top, ends, and bottom
	x band, as appropriate, to provide bands (top to bottom) at least every 18 in. around package
Closure (optional)	May be nail or screw closure
	Nails (see above)
	Screws, 2-in and 3-in. No. 10 screws, depending on thickness of material

4.4.2 Authorized Contents

The shipper must determine that the actual contents are closely simulated by the test contents. If they are not, testing or analysis must be conducted and documented to demonstrate DOT-7A compliance with the actual contents.

4.4.2.1 Physical Form

4.4.2.1.1 Solids Only. Two material forms are authorized. Each shipper must determine the most appropriate form for his particular contents and comply with any special requirements.

- Material Form No. 2: Solids--large particle size only (e.g., sand, concrete, debris, soil, etc.)
- Material Form No. 3: Solids--objects with no significant dispersible or removable contamination. (For definition, see 49 CFR 173.433, Contamination control.)

4.4.2.1.2 Maximum Gross Weight. See the Dimensions and Weights table in Section 4.4.1.

4.4.2.2 Chemical Form. The shipper must evaluate and ensure chemical compatibility of the material to be shipped with the materials of the packaging in contact with the payload.

4.4.2.3 Radiological. The 4-ft drop test caused deformations of the package resulting in small decreases in the distance from the exterior to the center of the package. The shipper must ensure that the radiation level at any surface would not increase by more than 20% (relative to the radiation level of the undamaged configuration) if such deformations would occur.

4.4.3 Restrictions/Specifications

The following three possible approaches are acceptable with respect to addressing inleakage and ensuring that there is no transport of radioactive materials out of the packaging.

- Securely enclose the radioactive contents within the box (e.g., wrap and seal in plastic, etc.) so that any inleaking water cannot come in contact with the radioactive material.
- Seal the box using GEOCEL or its equivalent. If the box is reused, it must be re-coated with at least one coat to cover the seal areas before each shipment.
- Ensure that there is no loose or removable contamination that could be entrained in any liquid and that the radioactive material is not soluble in the liquid. Thus, even if the liquids come in contact with the radioactive material, there could be no transport from the package.

NOTE: There are obviously other possible approaches; however, if an alternative approach is chosen, the basis for the choice must be supported and documented. Using one of these alternatives or an equivalent method allows these wooden boxes to meet this requirement.

For heavy, bulky materials (e.g., concrete chunks, motors, pumps, etc.), equipment or materials with sharp corners or protrusions, or material/containment geometries that could result in highly localized forces, the shipper must ensure that the contents are securely fastened/positioned within the package.

4.4.4 49 CFR 178.350 Regulatory Requirements

Regulatory Compliance Assessment

Regulatory requirements	Testing/analysis results
49 CFR 173.24, Standard requirements for all packages	Meets applicable requirements. See Appendix A, Table A-3.
49 CFR 173.411, General design requirements	Meets applicable requirements. See Appendix B, Table B-3.
49 CFR 173.412, Additional requirements for Type A packages	Meets applicable requirements. See Appendix C, Table C-5.
49 CFR 173.465, Type A packaging tests	Meets applicable requirements.
Water spray	Pass. Tests conducted on representative packagings demonstrated that this test did not affect the ability of the packaging to meet other Type A test requirements. With the actions required in Section 4.4.3, Restrictions/Specifications, these packagings also satisfy this test requirement with respect to potential inleakage of water. See Appendix D, Table D-4.
Free drop	Pass. This drop was made on the top corner with the box inverted and held at a 45° angle. There was no loss of contents and no significant change in packaging geometry. See Appendix D, Table D-13.
Corner drop	Corner drop was conducted on all six packagings. This allows their potential use at less than 110 lb. See Appendix D, Table D-20.
Compression	Pass. The tests were conducted with greater than five times the gross weight shown in the Dimensions and Weights table in Section 4.4.1 for 24 hr. There was no detectable effect. See Appendix D, Table D-25.
Penetration	Pass. This test was conducted on each package with no significant effect. See Appendix D, Table D-32.

4.4.5 Quality Control

Packaging/Acceptance/Use Criteria

Critical	Major	Acceptance/pre-use/inspection criteria*
Lid/body interface Sealing surface	Vendor qualifications and experience	Functional: • Ease of lid application • Mating surfaces flat and smooth, no foreign matter • Geometry, as specified Acceptable conditions:
	Joints/seams	• Dimensions, as specified • Glued
	Closure	• As specified, nail or screw • Caulking on lid • Steel banding of proper size and location • Nail-type and spacing
	Vendor qualifications and experience	Vendor data as appropriate. Lot tests/inspections as appropriate by shipper.

*These criteria apply to first-time use and to reuse as a DOT-7A Type A packaging.

4.4.6 Additional Information

Evaluation and testing of this packaging were performed at MLM and were documented in Edling in 1987. Complete evaluation reports are available upon request from one of the DOT-7A Program technical contacts listed in Section 1.1.2.

4.4.6.1 Primary Users

Site/Contact/Phone	Address
MLM Don Wikstrom COMM/FTS 513-865-3919	Mound-MRC P.O. Box 32 Mound Road Miamisburg, OH 45342

4.4.6.2 Supplier. Manufactured onsite.

Figure 4-10. Configuration C Medium Duty Wooden Box (contents restricted, see Section 4.5.3).

DOT 7A Type A
49 CFR 178.350

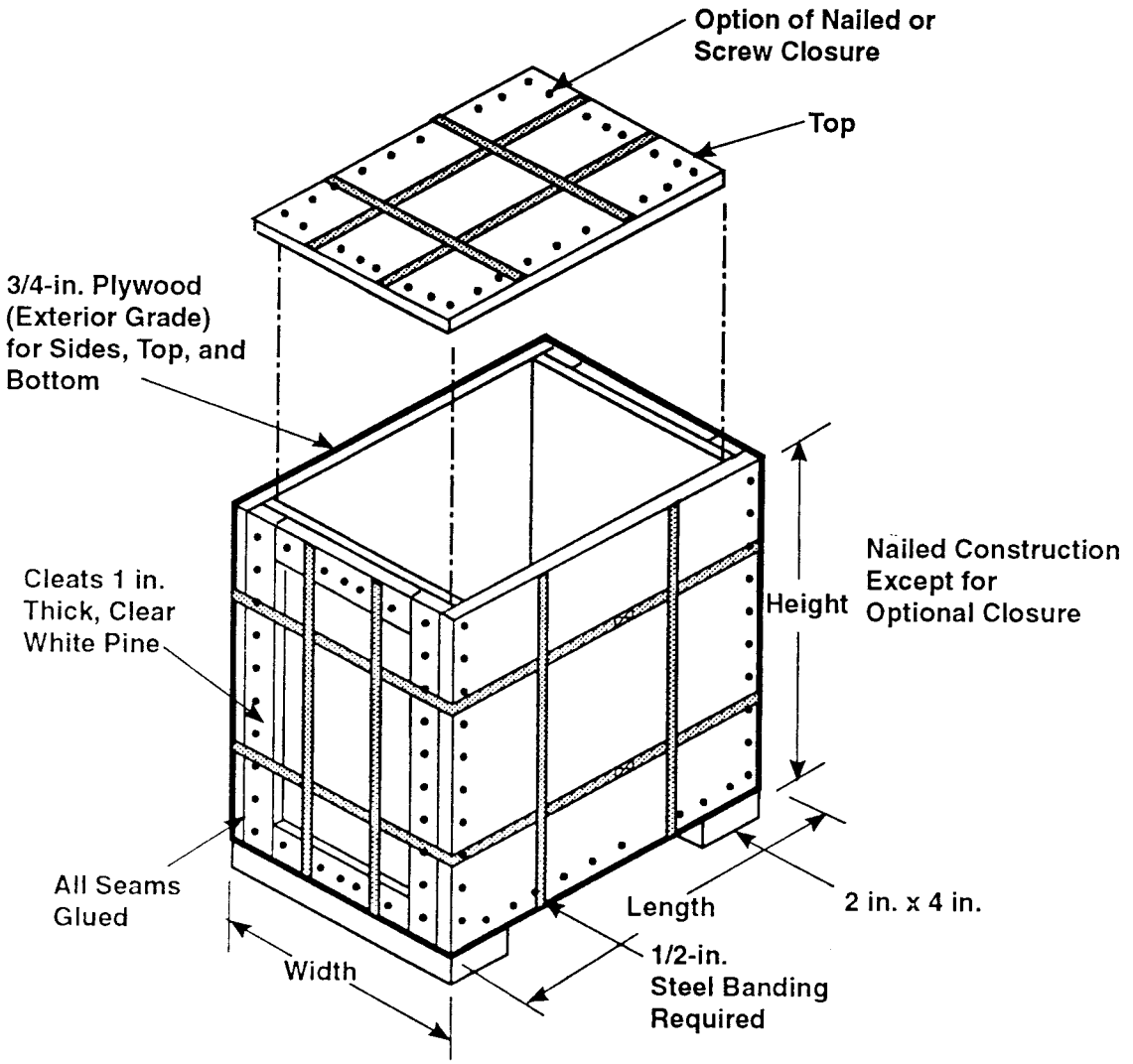

Note: 2-in. x 4-in. interior frame not shown.

39106073.4FH

4.5 MOUND WOODEN BOX - CONFIGURATION C (DOCKETS: MLM)

4.5.1 Package Description

Dimensions and Weights

Model	Height (in.)	Width (in.)	Length (in.)	Authorized gross weight (lb)
MC-1	12	12	12	150
MC-2	24	24	24	300
MC-3	14	14	22	250
MC-4	6	6	24	100
MC-5	12	12	36	150

Materials/Method of Construction

Sides, ends, top, and bottom	0.75-in. exterior grade plywood
Interior frame	2-in. x 4-in. pine
Nailed construction	Nails, 1.5, 2, and 3 in., depending on thickness of material
	Nail spacing approximately 2 in.
All seams/joints glued	
Steel banding (0.5 in.)	2 bands around sides and ends
	2 bands around top, ends, and bottom
	x band, as appropriate, to provide bands (top to bottom) at least every 18 in. around package
Closure (optional)	May be nail or screw closure
	Nails (see above)
	Screws, 2-in and 3-in. No. 10 screws, depending on thickness of material

4.5.2 Authorized Contents

The shipper must determine that the actual contents are closely simulated by the test contents. If they are not, testing or analysis must be conducted and documented to demonstrate DOT-7A compliance with the actual contents.

4.5.2.1 Physical Form

4.5.2.1.1 Solids Only. Two material forms are authorized. Each shipper must determine the most appropriate form for his particular contents and comply with any special requirements.

- Material Form No. 2: Solids--large particle size only (e.g., sand, concrete, debris, soil, etc.)
- Material Form No. 3: Solids--objects with no significant dispersible or removable contamination. (For definition, see 49 CFR 173.433, Contamination control.)

4.5.2.1.2 Maximum Gross Weight. See the Dimensions and Weights table in Section 4.5.1.

4.5.2.2 Chemical Form. The shipper must evaluate and ensure chemical compatibility of the material to be shipped with the materials of the packaging in contact with the payload.

4.5.2.3 Radiological. The 4-ft drop test caused deformations of the package resulting in small decreases in the distance from the exterior to the center of the package. The shipper must ensure that the radiation level at any surface would not increase by more than 20% (relative to the radiation level of the undamaged configuration) if such deformations would occur.

4.5.3 Restrictions/Specifications

The following three possible approaches are acceptable with respect to addressing inleakage and ensuring that there is no transport of radioactive materials out of the packaging.

- Securely enclose the radioactive contents within the box (e.g., wrap and seal in plastic, etc.) so that any inleaking water cannot come in contact with the radioactive material.
- Seal the box using GEOCEL or its equivalent. If the box is reused, it must be re-coated with at least one coat to cover the seal areas before each shipment.
- Ensure that there is no loose or removable contamination that could be entrained in any liquid and that the radioactive material is not soluble in the liquid. Thus, even if the liquids come in contact with the radioactive material, there could be no transport from the package.

NOTE: There are obviously other possible approaches; however, if an alternative approach is chosen, the basis for the choice must be supported and documented. Using one of these alternatives or an equivalent method allows these wooden boxes to meet this requirement.

For heavy, bulky materials (e.g., concrete chunks, motors, pumps, etc.), equipment or materials with sharp corners or protrusions, or material/containment geometries that could result in highly localized forces, the shipper must ensure that the contents are securely fastened/positioned within the package.

4.5.4 49 CFR 178.350 Regulatory Requirements

Regulatory Compliance Assessment

Regulatory requirements	Testing/analysis results
49 CFR 173.24, Standard requirements for all packages	Meets applicable requirements. See Appendix A, Table A-3.
49 CFR 173.411, General design requirements	Meets applicable requirements. See Appendix B, Table B-3.
49 CFR 173.412, Additional requirements for Type A packages	Meets applicable requirements. See Appendix C, Table C-5.
49 CFR 173.465, Type A packaging tests	Meets applicable requirements.
Water spray	Pass. Tests conducted on representative packagings demonstrated that this test did not affect the ability of the packaging to meet other Type A test requirements. With the actions required in Section 4.5.3, Restrictions/Specifications, these packagings also satisfy this test requirement with respect to potential inleakage of water. See Appendix D, Table D-4.
Free drop	Pass. This drop was made on the top corner with the boxes inverted and held at a 45° angle. There was no loss of contents and no significant change in packaging geometry. See Appendix D, Table D-13.
Corner drop	The corner drop was conducted on all five packagings. This allows their potential use at less than 110 lb. See Appendix D, Table D-20.
Compression	Pass. The tests were conducted with greater than five times the gross weight shown in the Dimensions and Weights table in Section 4.5.1 for 24 hr. There was no detectable effect. See Appendix D, Table D-25.
Penetration	Pass. This test was conducted on each package with no significant effect. See Appendix D, Table D-32.

4.5.5 Quality Control

Packaging/Acceptance/Use Criteria

Critical	Major	Acceptance/pre-use/inspection criteria*
Lid/body interface Sealing surface	Vendor qualifications and experience	Functional: • Ease of lid application • Mating surfaces flat and smooth, no foreign matter • Geometry, as specified Acceptable conditions:
	Joints/seams	• Dimensions, as specified • Glued
	Closure	• As specified, nail or screw • Caulking on lid • Steel banding of proper size and location • Nail-type and spacing
	Vendor qualification and experience	Vendor data as appropriate. Lot tests/inspections as appropriate by shipper.

*These criteria apply to first-time use and to reuse as a DOT-7A Type A packaging.

4.5.6 Additional Information

Evaluation and testing of this packaging were performed at MLM and were documented in Edling 1987. Complete evaluation reports are available upon request from one of the DOT-7A Program technical contacts listed in Section 1.1.2.

4.5.6.1 Primary Users

Site/Contact/Phone	Address
MLM Don Wikstrom COMM/FTS 513-865-3919	Mound-MRC P.O. Box 32 Mound Road Miamisburg, OH 45342

4.5.6.2 Supplier. Manufactured onsite.

Figure 4-11. Configuration D Heavy Duty Wooden Box (contents restricted, see Section 4.6.3).

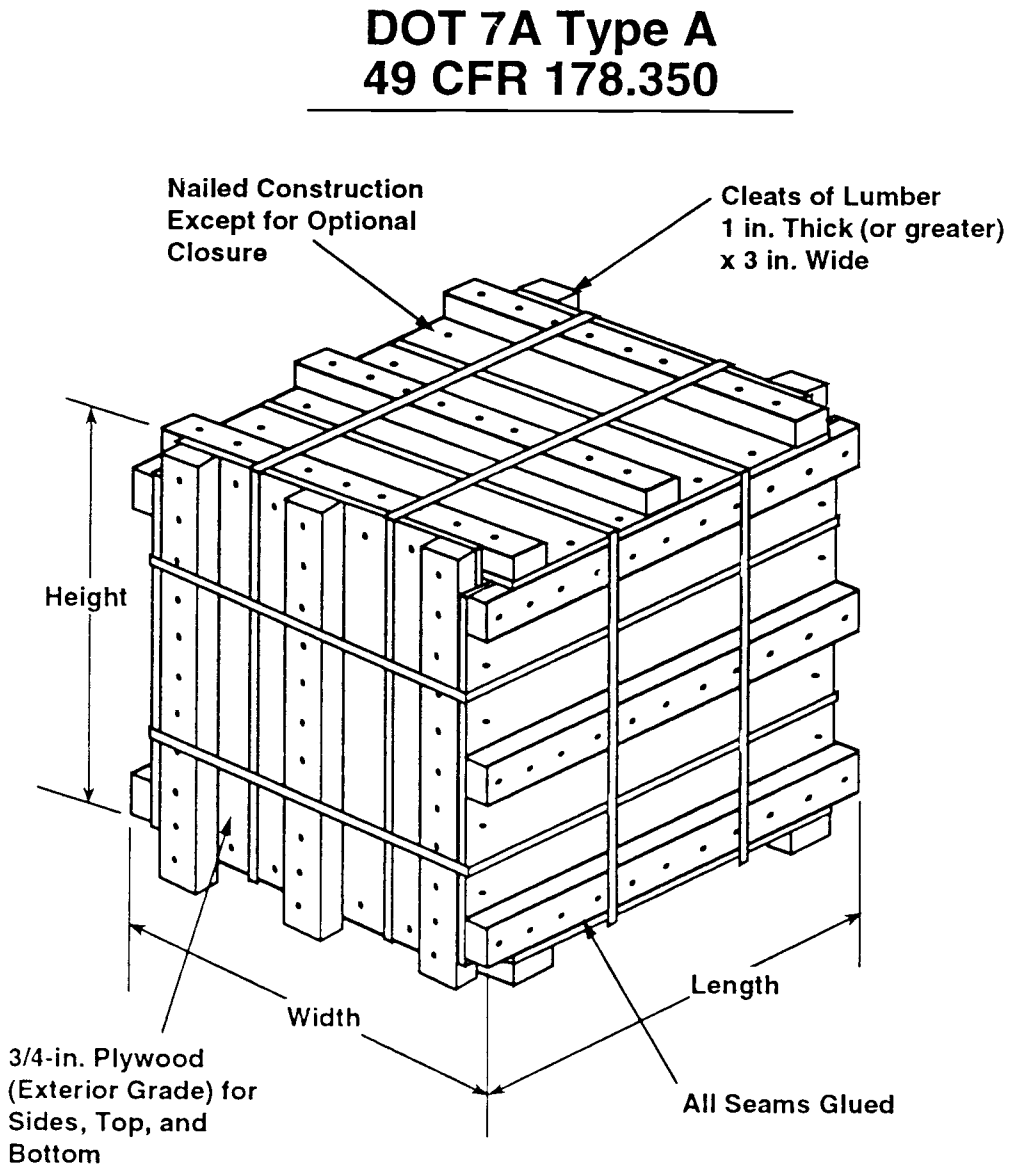

4.6 MOUND WOODEN BOX - CONFIGURATION D (DOCKETS: MLM)

4.6.1 Package Description

Dimensions and Weights

Model	Height (in.)	Width (in.)	Length (in.)	Authorized gross weight (lb)
MD-1	14	17.5	14	200
MD-2	24	27.5	24	300
MD-3	12	15.5	48	250
MD-4	12	15.5	60	250
MD-5	8	11.5	32	200
MD-6	12	15.5	28	200

Materials/Method of Construction

Sides, ends, top, and bottom	0.75-in. exterior grade plywood
Interior frame	2-in. x 4-in. pine
Nailed construction	Nails, 1.5, 2, and 3 in., depending on thickness of material
	Nail spacing approximately 2 in.
All seams/joints glued	
Steel banding (0.5 in.)	2 bands around sides and ends
	2 bands around top, ends, and bottom
	x band, as appropriate, to provide bands (top to bottom) at least every 18 in. around package
Closure (optional)	May be nail or screw closure
	Nails (see above)
	Screws, 2-in. and 3-in. No. 10 screws, depending on thickness of material

4.6.2 Authorized Contents

The shipper must determine that the actual contents are closely simulated by the test contents. If they are not, testing or analysis must be conducted and documented to demonstrate DOT-7A compliance with the actual contents.

4.6.2.1 Physical Form

4.6.2.1.1 Solids Only. Two material forms are authorized. Each shipper must determine the most appropriate form for his particular contents and comply with any special requirements.

- Material Form No. 2: Solids--large particle size only (e.g., sand, concrete, debris, soil, etc.)
- Material Form No. 3: Solids--objects with no significant dispersible or removable contamination. (For definition, see 49 CFR 173.433, Contamination control.)

4.6.2.1.2 Maximum Gross Weight. See the Dimensions and Weights table in Section 4.6.1.

4.6.2.2 Chemical Form. The shipper must evaluate and ensure chemical compatibility of the material to be shipped with the materials of the packaging in contact with the payload.

4.6.2.3 Radiological. The 4-ft drop test caused deformations of the package resulting in small decreases in the distance from the exterior to the center of the package. The shipper must ensure that the radiation level at any surface would not increase by more than 20% (relative to the radiation level of the undamaged configuration) if such deformations would occur.

4.6.3 Restrictions/Specifications

The following three possible approaches are acceptable with respect to addressing inleakage and ensuring that there is no transport of radioactive materials out of the packaging.

- Securely enclose the radioactive contents within the box (e.g., wrap and seal in plastic, etc.) so that any inleaking water cannot come in contact with the radioactive material.
- Seal the box using GEOCEL or its equivalent. If the box is reused, it must be re-coated with at least one coat to cover the seal areas before each shipment.
- Ensure that there is no loose or removable contamination that could be entrained in any liquid and that the radioactive material is not soluble in the liquid. Thus, even if the liquids come in contact with the radioactive material, there could be no transport from the package.

NOTE: There are obviously other possible approaches; however, if an alternative approach is chosen, the basis for the choice must be supported and documented. Using one of these alternatives or an equivalent method allows these wooden boxes to meet this requirement.

For heavy, bulky materials (e.g., concrete chunks, motors, pumps, etc.), equipment or materials with sharp corners or protrusions, or material/containment geometries that could result in highly localized forces, the shipper must ensure that the contents are securely fastened/positioned within the package.

4.6.4 49 CFR 178.350 Regulatory Requirements

Regulatory Compliance Assessment

Regulatory requirements	Testing/analysis results
49 CFR 173.24, Standard requirements for all packages	Meets applicable requirements. See Appendix A, Table A-3.
49 CFR 173.411, General design requirements	Meets applicable requirements. See Appendix B, Table B-3.
49 CFR 173.412, Additional requirements for Type A packages	Meets applicable requirements. See Appendix C, Table C-5.
49 CFR 173.465, Type A packaging tests	Meets applicable requirements.
Water spray	Pass. Tests conducted on representative packagings demonstrated that this test did not affect the ability of the packaging to meet other Type A test requirements. With the actions required in Section 4.6.3, Restrictions/Specifications, these packagings also satisfy this test requirement with respect to potential inleakage of water. See Appendix D, Table D-4.
Free drop	Pass. This drop was made on the top corner with the boxes inverted and held at a 45° angle. There was no loss of contents and no significant change in packaging geometry. See Appendix D, Table D-13.
Corner drop	The corner drop was conducted on all six packagings. This allows their potential use at less than 110 lb. See Appendix D, Table D-20.
Compression	Pass. The tests were conducted with greater than five times the gross weight shown in the Dimensions and Weights table in Section 4.6.1 for 24 hr. There was no detectable effect. See Appendix D, Table D-25.
Penetration	Pass. This test was conducted on each package with no significant effect. See Appendix D, Table D-32.

4.6.5 Quality Control

Packaging/Acceptance/Use Criteria

Critical	Major	Acceptance/pre-use/inspection criteria*
Lid/body interface Sealing surface	Vendor qualifications and experience	Functional: • Ease of lid application • Mating surfaces flat and smooth, no foreign matter • Geometry, as specified Acceptable conditions:
	Joints/seams	• Dimensions, as specified • Glued
	Closure	• As specified, nail or screw • Caulking on lid • Steel banding of proper size and location • Nail-type and spacing
	Vendor qualification and experience	Vendor data as appropriate. Lot tests/inspections as appropriate by shipper.

*These criteria apply to first-time use and to reuse as a DOT-7A Type A packaging.

4.6.6 Additional Information

Evaluation and testing of this packaging were performed at MLM and were documented in Edling 1987. Complete evaluation reports are available upon request from one of the DOT-7A Program technical contacts listed in Section 1.1.2.

4.6.6.1 Primary Users

Site/Contact/Phone	Address
MLM Don Wikstrom COMM/FTS 513-865-3919	Mound-MRC P.O. Box 32 Mound Road Miamisburg, OH 45342

4.6.6.2 Supplier. Manufactured onsite.

Figure 4-12. Configuration E-150 Wooden Box (contents restricted, see Section 4.7.3).

DOT 7A Type A
49 CFR 178.350

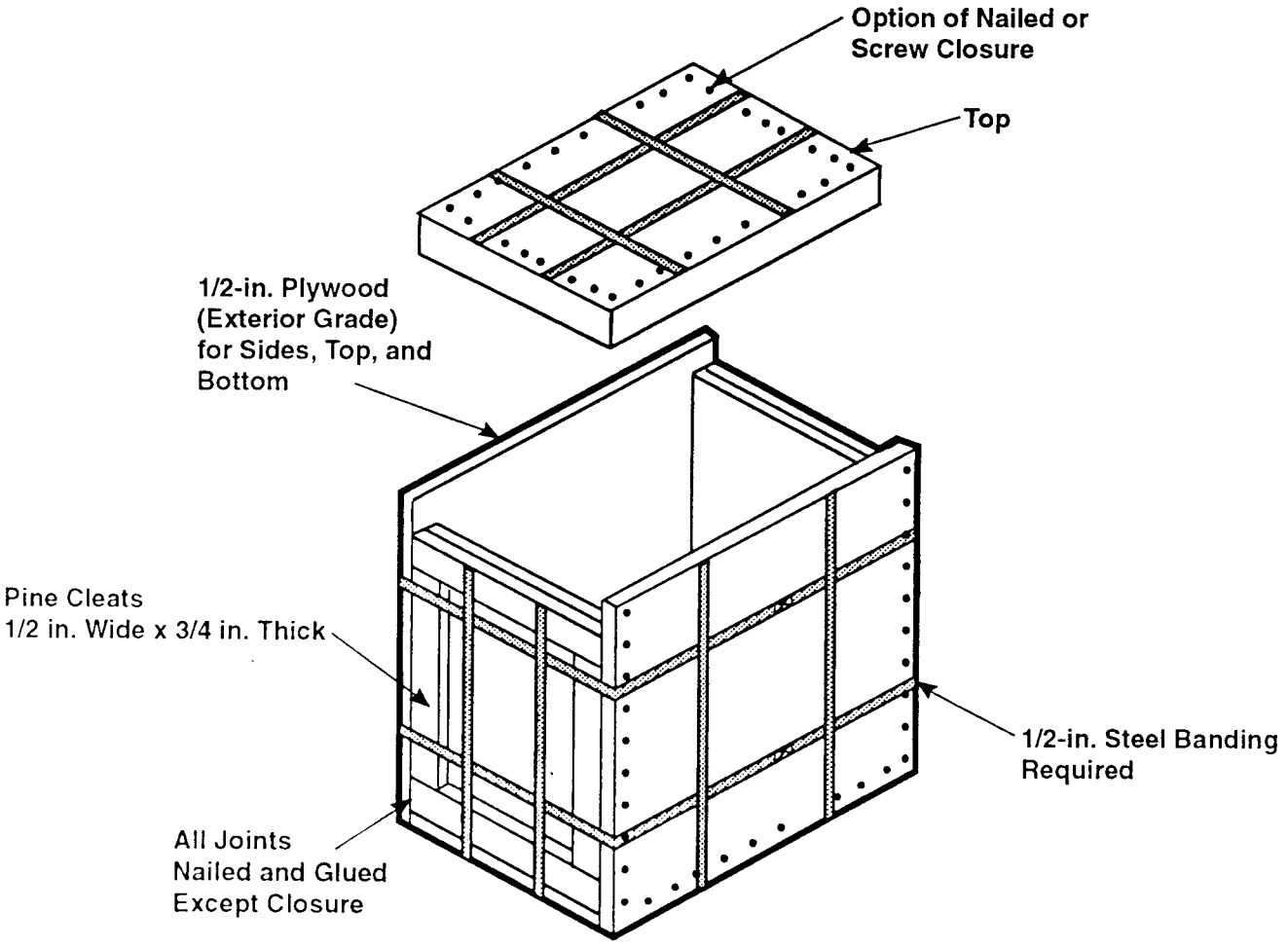

Note: 2-in. x 4-in. interior frame not shown.

39106073.5FH

4.7 MOUND WOODEN BOX - CONFIGURATION E (DOCKETS: MLM)

4.7.1 Package Description

Dimensions

Model	Height (in.)	Width (in.)	Length (in.)
ME-1	17	15	18.5
ME-2	13	17	20.5
ME-3	21	21	22.5

Materials/Method of Construction

Sides, ends, top, and bottom	0.75-in. exterior grade plywood
Cleats	0.75-in. x 0.5-in. pine
Interior frame	2-in. x 4-in. pine
Nailed construction	Nails, 1.5, 2, and 3 in. depending on thickness of material
	Nail spacing approximately 2 in.
All seams/joints glued	
Steel banding (0.5 in.)	2 bands around sides and ends
	2 bands around top, ends, and bottom
	x band, as appropriate, to provide bands (top to bottom) at least every 18 in. around package
Closure (optional)	May be nail or screw closure
	Nails (see above)
	Screws, 2-in. and 3-in. No. 10 screws depending on thickness of material

4.7.2 Authorized Contents

The shipper must determine that the actual contents are closely simulated by the test contents. If they are not, testing or analysis must be conducted and documented to demonstrate DOT-7A compliance with the actual contents.

4.7.2.1 Physical Form

4.7.2.1.1 Solids Only. Two material forms are authorized. Each shipper must determine the most appropriate form for his particular contents and comply with any special requirements.

- Material Form No. 2: Solids--large particle size only (e.g., sand, concrete, debris, soil, etc.)
- Material Form No. 3: Solids--objects with no significant dispersible or removable contamination. (For definition, see 49 CFR 173.433, Contamination control.)

4.7.2.1.2 Maximum Gross Weight

- 150 lb.

4.7.2.2 Chemical Form. The shipper must evaluate and ensure chemical compatibility of the material to be shipped with the materials of the packaging in contact with the payload.

4.7.2.3 Radiological. The 4-ft drop test caused deformations of the package resulting in small decreases in the distance from the exterior to the center of the package. The shipper must ensure that the radiation level at any surface would not increase by more than 20% (relative to the radiation level of the undamaged configuration) if such deformations would occur.

4.7.3 Restrictions/Specifications

The following three possible approaches are acceptable with respect to addressing inleakage and ensuring that there is no transport of radioactive materials out of the packaging.

- Securely enclose the radioactive contents within the box (e.g., wrap and seal in plastic, etc.) so that any inleaking water cannot come in contact with the radioactive material.
- Seal the box using GEOCEL or its equivalent. If the box is reused, it must be re-coated with at least one coat to cover the seal areas before each shipment.
- Ensure that there is no loose or removable contamination that could be entrained in any liquid and that the radioactive material is not soluble in the liquid. Thus, even if the liquids come in contact with the radioactive material, there could be no transport from the package.

NOTE: There are obviously other possible approaches; however, if an alternative approach is chosen, the basis for the choice must be supported and documented. Using one of these alternatives or an equivalent method allows these wooden boxes to meet this requirement.

For heavy, bulky materials (e.g., concrete chunks, motors, pumps, etc.), equipment or materials with sharp corners or protrusions, or material/containment geometries that could result in highly localized forces, the shipper must ensure that the contents are securely fastened/positioned within the package.

4.7.4 49 CFR 178.350 Regulatory Requirements

Regulatory Compliance Assessment

Regulatory requirements	Testing/analysis results
49 CFR 173.24, Standard requirements for all packages	Meets applicable requirements. See Appendix A, Table A-3.
49 CFR 173.411, General design requirements	Meets applicable requirements. See Appendix B, Table B-3.
49 CFR 173.412, Additional requirements for Type A packages	Meets applicable requirements. See Appendix C, Table C-5.
49 CFR 173.465, Type A packaging tests	Meets applicable requirements.
Water spray	Pass. Tests conducted on representative packagings demonstrated that this test did not affect the ability of the packaging to meet other Type A test requirements. With the actions required in Section 4.7.3, Restrictions/Specifications, these packagings also satisfy this test requirement with respect to potential inleakage of water. See Appendix D, Table D-4.
Free drop	Pass. This drop was made on the top corner with the boxes inverted and held at a 45° angle. There was no loss of contents and no significant change in packaging geometry. See Appendix D, Table D-13.
Corner drop	The corner drop was conducted on two of the packagings. This allows their potential use at less than 110 lb. See Appendix D, Table D-20.
Compression	Pass. The tests were conducted with greater than five times the gross weight given in Section 4.7.2.1.2 for 24 hr. There was no detectable effect. See Appendix D, Table D-25.
Penetration	Pass. This test was conducted on each package with no significant effect. See Appendix D, Table D-32.

4.7.5 Quality Control

Packaging/Acceptance/Use Criteria

Critical	Major	Acceptance/pre-use/inspection criteria*
Lid/body interface Sealing surface	Vendor qualifications and experience	Functional: • Ease of lid application • Mating surfaces flat and smooth, no foreign matter • Geometry, as specified Acceptable conditions:
	Joints/seams	• Dimensions, as specified • Glued
	Closure	• As specified, nail or screw • Caulking on lid • Steel banding of proper size and location • Nail-type and spacing
	Vendor qualification and experience	Vendor data as appropriate. Lot tests/inspections as appropriate by shipper.

*These criteria apply to first-time use and to reuse as a DOT-7A Type A packaging.

4.7.6 Additional Information

Evaluation and testing of this packaging were performed at MLM and were documented in Edling 1987. Complete evaluation reports are available upon request from one of the DOT-7A Program technical contacts listed in Section 1.1.2.

4.7.6.1 Primary Users

Site/Contact/Phone	Address
MLM Don Wikstrom COMM/FTS 513-865-3919	Mound-MRC P.O. Box 32 Mound Road Miamisburg, OH 45342

4.7.6.2 Suppliers. Manufactured onsite.

Figure 4-13. NLO Family of Banded, Wooden Boxes (contents restricted, see Section 4.8.3).

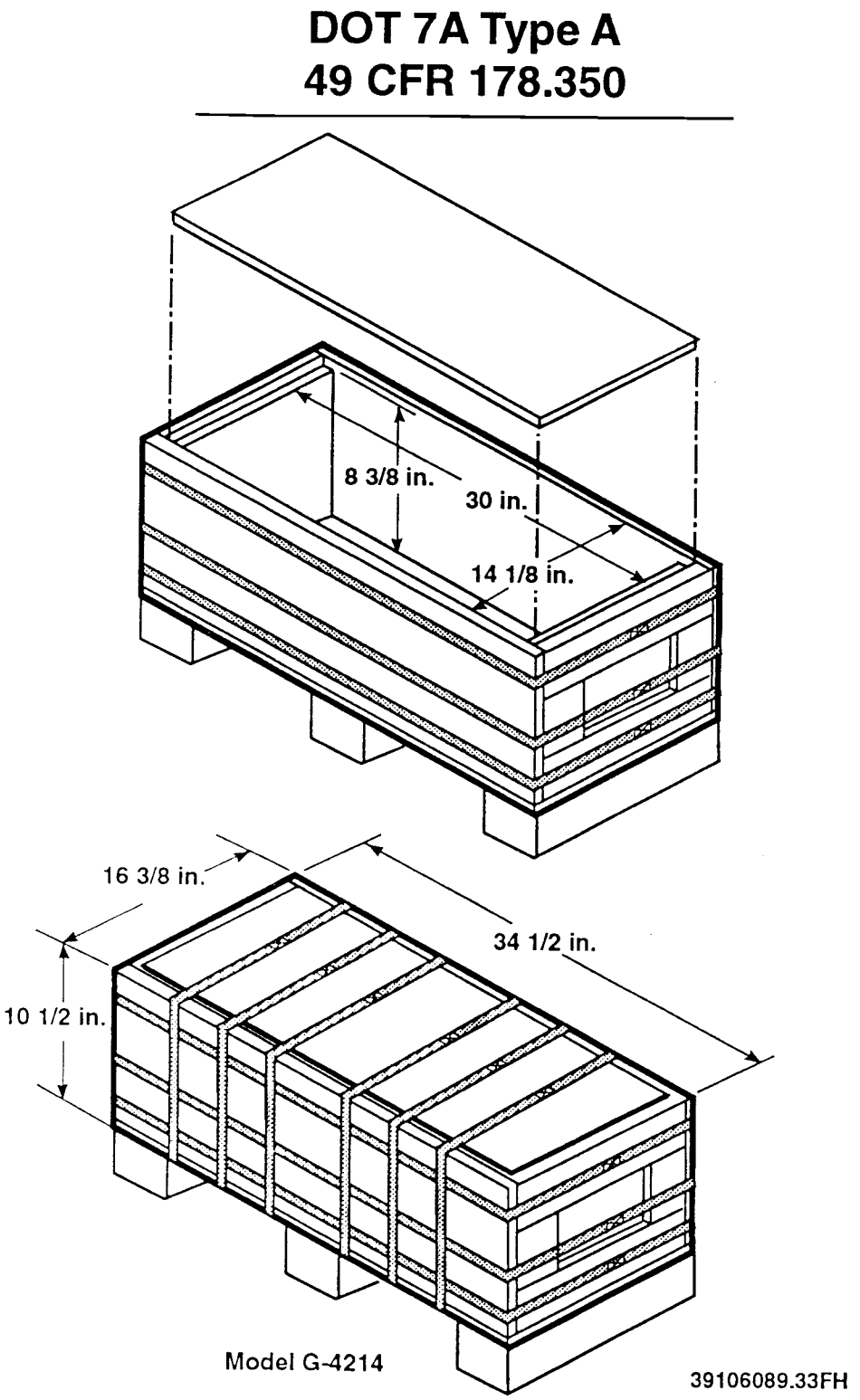

Figure 4-14. NLO Family of Banded, Wooden Boxes (contents restricted, see Section 4.8.3).

DOT 7A Type A
49 CFR 178.350

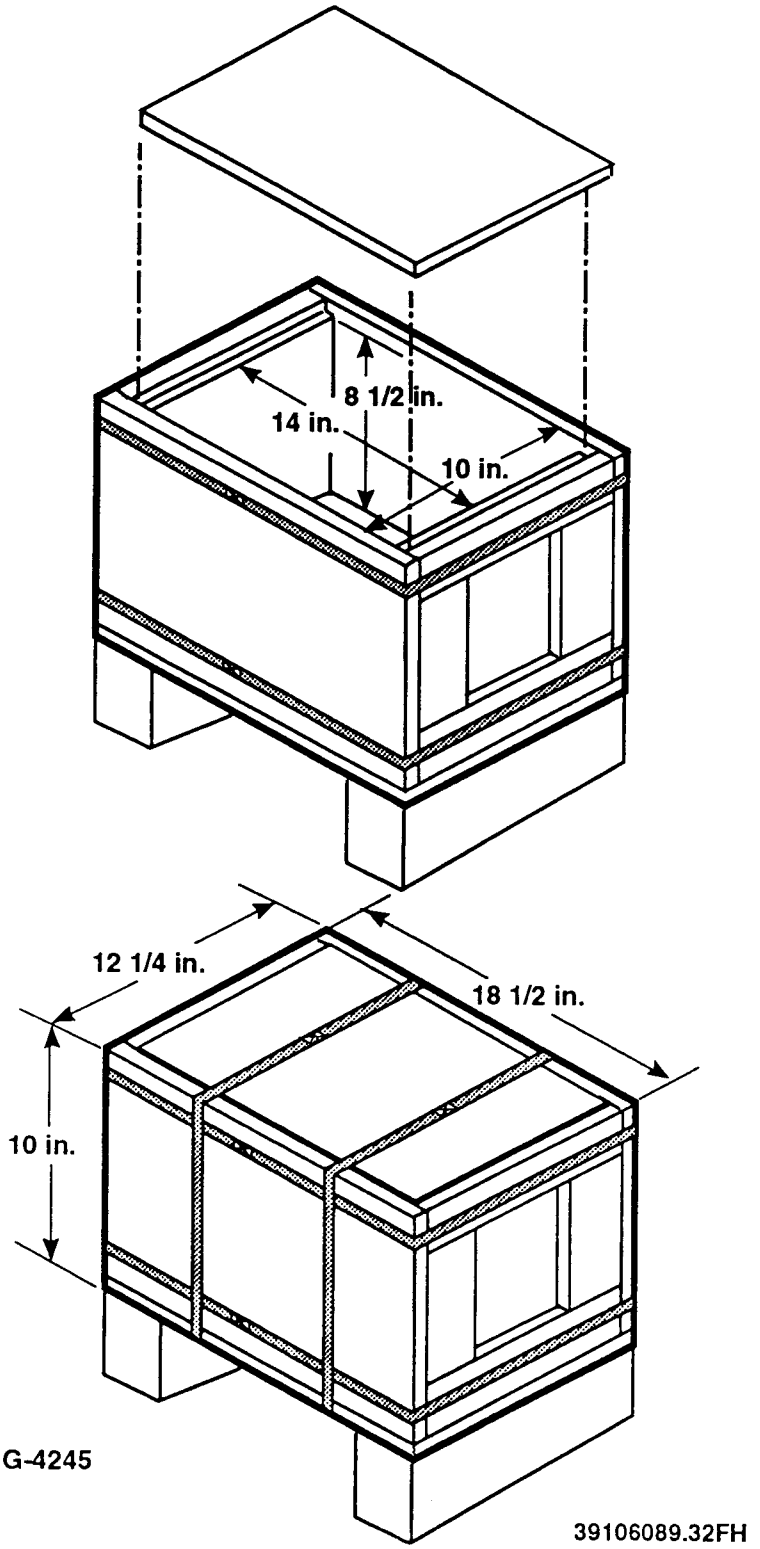

Figure 4-15. NLO Family of Banded, Wooden Boxes (contents restricted, see Section 4.8.3).

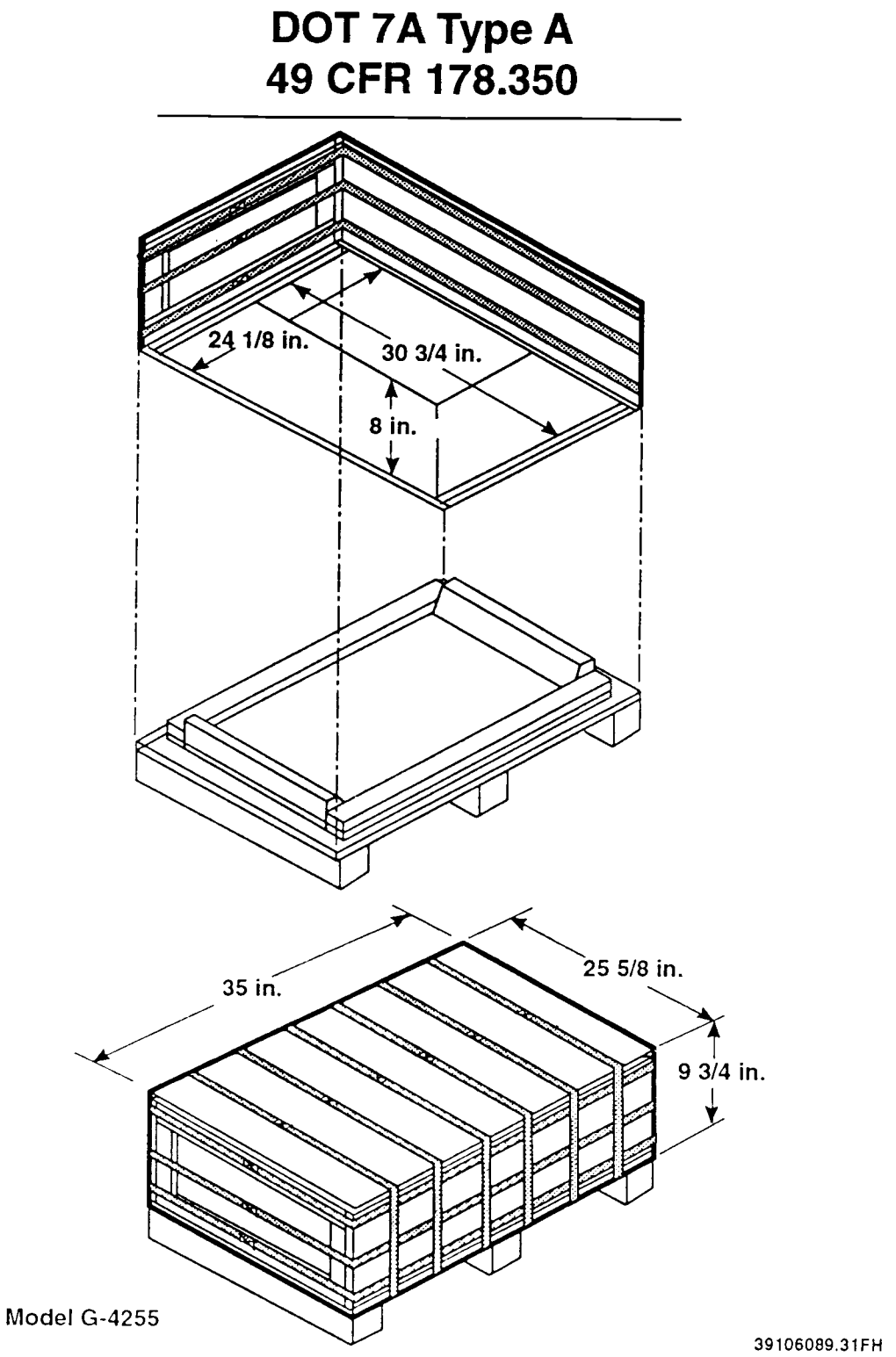

Figure 4-16. NLO Family of Banded, Wooden Boxes (contents restricted, see Section 4.8.3).

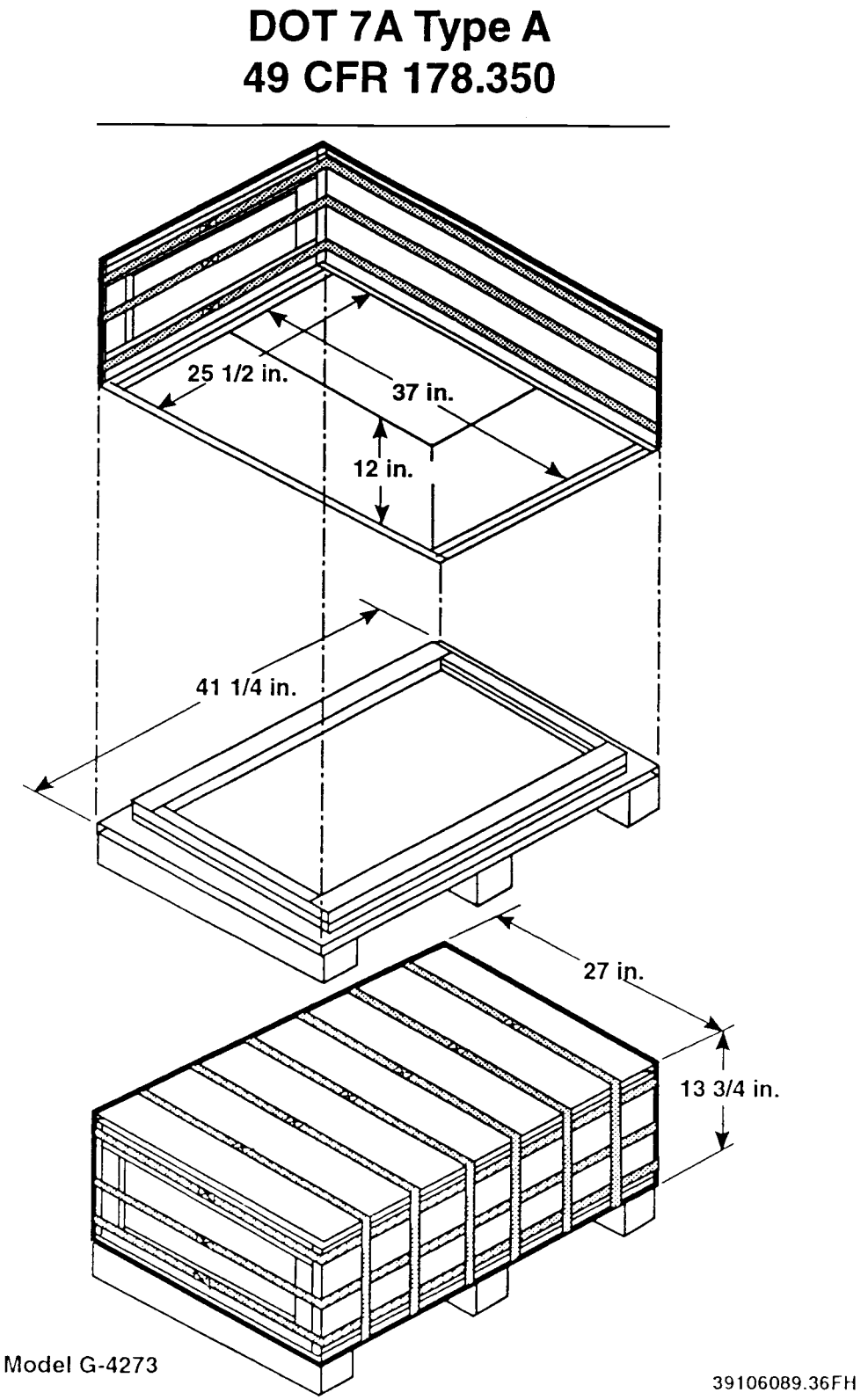

Figure 4-17. NLO Family of Banded, Wooden Boxes (contents restricted, see Section 4.8.3).

DOT 7A Type A
49 CFR 178.350

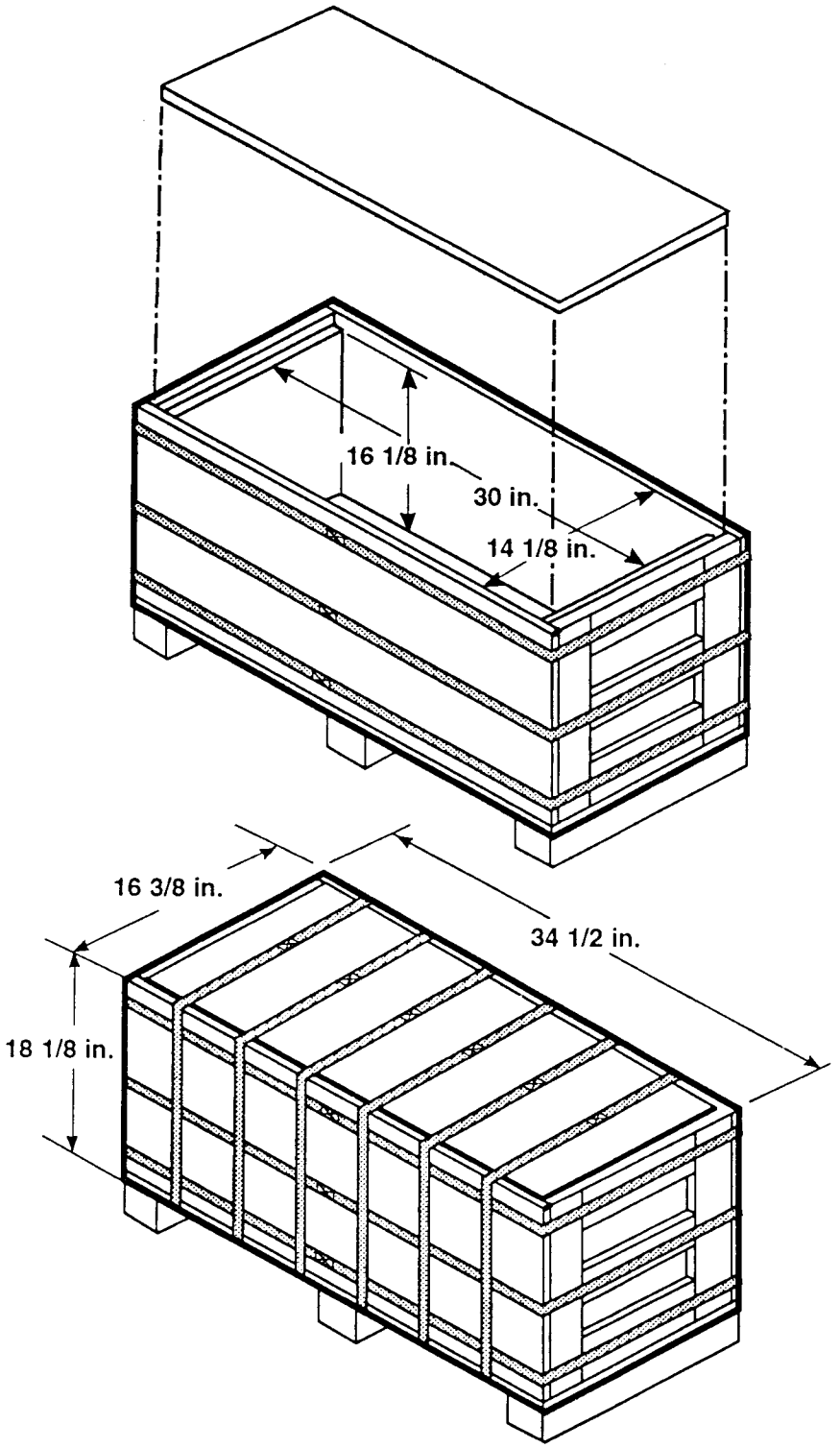

39106089.7a FH

4.8 NLO FAMILY OF BANDED, WOODEN BOXES (DOCKETS: MLM)

4.8.1 Package Description

Dimensions and Weights

Model	External dimension				Internal dimension			Empty weight (lb)	Authorized gross weight (lb)
	Width (in.)	Length (in.)	Height (in.)	Skid (in.)	Width (in.)	Length (in.)	Height (in.)		
G-4214	16.375	34.50	10.500	4.000	14.125	30.00	8.372	55	1,805
G-4245	12.250	18.50	10.000	3.250	10.000	14.00	8.500	25	250
G-4255	25.625	35.00	9.750	3.250	24.125	30.75	8.000	120	1,500
G-4273	27.000	41.25	13.750	3.250	25.500	37.00	12.000	140	3,250
G-4292	16.375	34.50	18.125	3.625	14.125	30.00	16.125	80	852

Materials/Method of Construction

Drawing No. NLO-G-4214 and G-4292	
Sides and ends	1.125-in. thick white pine
Bottom	1-in. hardwood
Lids	2, 0.5-in. plywood
Banding	See drawing, 1.25-in. steel
Skids	3 wooden, 3.625 in. or 4 in.
Drawing No. NLO-G-4245	
Lid	1, 0.5-in. plywood
Banding	2 vertical and 2 horizontal
Skids	3.25 in.
Drawing No. NLO-G-4255 and G-4273	
All construction	0.75-in. exterior grade plywood
Skids	3 wooden, 3.625 in. or 4 in.

4.8.2 Authorized Contents

The shipper must determine that the actual contents are closely simulated by the test contents. If they are not, testing or analysis must be conducted and documented to demonstrate DOT-7A compliance with the actual contents.

4.8.2.1 Physical Form

4.8.2.1.1 Solids Only. One material form is authorized. Each shipper must determine the most appropriate form for his particular contents and comply with any special requirements.

- Material Form No. 3: Solids--objects with no significant dispersible or removable contamination. (For definition, see 49 CFR 173.433, Contamination control.)

4.8.2.1.2 Maximum Gross Weight. See Dimensions and Weights table, Section 4.8.1.

4.8.2.2 Chemical Form. The shipper must evaluate and ensure chemical compatibility of the material to be shipped with the materials of the packaging in contact with the payload.

4.8.2.3 Radiological. The 4-ft drop test caused deformations of the package resulting in small decreases in the distance from the exterior to the center of the package. The shipper must ensure that the radiation level at any surface would not increase by more than 20% (relative to the radiation level of the undamaged configuration) if such deformations would occur.

4.8.3 Restrictions/Specifications

The following three possible approaches are acceptable with respect to addressing inleakage and ensuring that there is no transport of radioactive materials out of the packaging.

- Securely enclose the radioactive contents within the box (e.g., wrap and seal in plastic, etc.) so that any inleaking water cannot come in contact with the radioactive material.

- Seal the box using GEOCEL or its equivalent. If the box is reused, it must be re-coated with at least one coat to cover the seal areas before each shipment.

- Ensure that there is no loose or removable contamination that could be entrained in any liquid and that the radioactive material is not soluble in the liquid. Thus, even if the liquids come in contact with the radioactive material, there could be no transport from the package.

NOTE: There are obviously other possible approaches; however, if an alternative approach is chosen, the basis for the choice must be supported and documented. Using one of these alternatives or an equivalent method allows these wooden boxes to meet this requirement.

For heavy, bulky materials (e.g., concrete chunks, motors, pumps, etc.), equipment or materials with sharp corners or protrusions, or material/containment geometries that could result in highly localized forces, the shipper must ensure that the contents are securely fastened/positioned within the package.

4.8.4 49 CFR 178.350 Regulatory Requirements

Regulatory Compliance Requirements

Regulatory requirements	Testing/analysis results
49 CFR 173.24, Standard requirements for all packages	Meets applicable requirements. See Appendix A, Table A-3.
49 CFR 173.411, General design requirements	Meets applicable requirements. See Appendix B, Table B-3.
49 CFR 173.412, Additional requirements for Type A packages	Meets applicable requirements. See Appendix C, Table C-5.
49 CFR 173.465, Type A packaging tests	Meets applicable requirements.
Water spray	Pass. Tests conducted on representative packagings demonstrated that this test did not affect the ability of the packaging to meet other Type A test requirements. With the actions required in Section 4.8.3, Restrictions/Specifications, these packagings also satisfy this test requirement with respect to potential inleakage of water. See Appendix D, Table D-5.
Free drop	Pass. By analysis and comparison to tests conducted on G-4214 loaded with 1,750 lb and dropped 30 ft. No significant distortion of package geometry or loss of contents would result. See Appendix D, Table D-14.
Corner drop	Not required.
Compression	Pass. By analysis and comparison to test conducted at 9,050 lb. No distortion or loss of contents would result. See Appendix D, Table D-25.
Penetration	Pass. This test was conducted on each package with no significant effect. See Appendix D, Table D-32.

4.8.5 Quality Control

Packaging/Acceptance/Use Criteria

Critical	Major	Acceptance/pre-use/inspection criteria*
Lid/body interface Sealing surface	Vendor qualifications and experience	Functional: • Ease of lid application • Mating surfaces flat and smooth, no foreign matter • Geometry, as specified
	Joints/seams	Acceptable conditions: • Dimensions, as specified • Glued
	Closure	• As specified, nail or screw • Caulking on lid • Steel banding of proper size and location • Nail-type and spacing
	Vendor qualifications and experience	Vendor data as appropriate. Lot tests/inspections as appropriate by shipper.

*These criteria apply to first-time use and to reuse as a DOT-7A Type A packaging.

4.8.6 Additional Information

Evaluation and testing of this packaging were performed at MLM and were documented in Edling 1987. Complete evaluation reports are available upon request from one of the DOT-7A Program technical contacts listed in Section 1.1.2.

4.8.6.1 Primary Users

Site/Contact/Phone	Address
Fernald L. C. Dolan COMM/FTS 513-738-6208 C. E. Block COMM/FTS 513-763-1151	Westinghouse Materials Company of Ohio P.O. Box 398704 Cincinnati, OH 45239

Figure 4-18. Y-12 Series B Wooden Boxes (contents restricted, see Section 4.9.3).

DOT 7A Type A
49 CFR 178.350

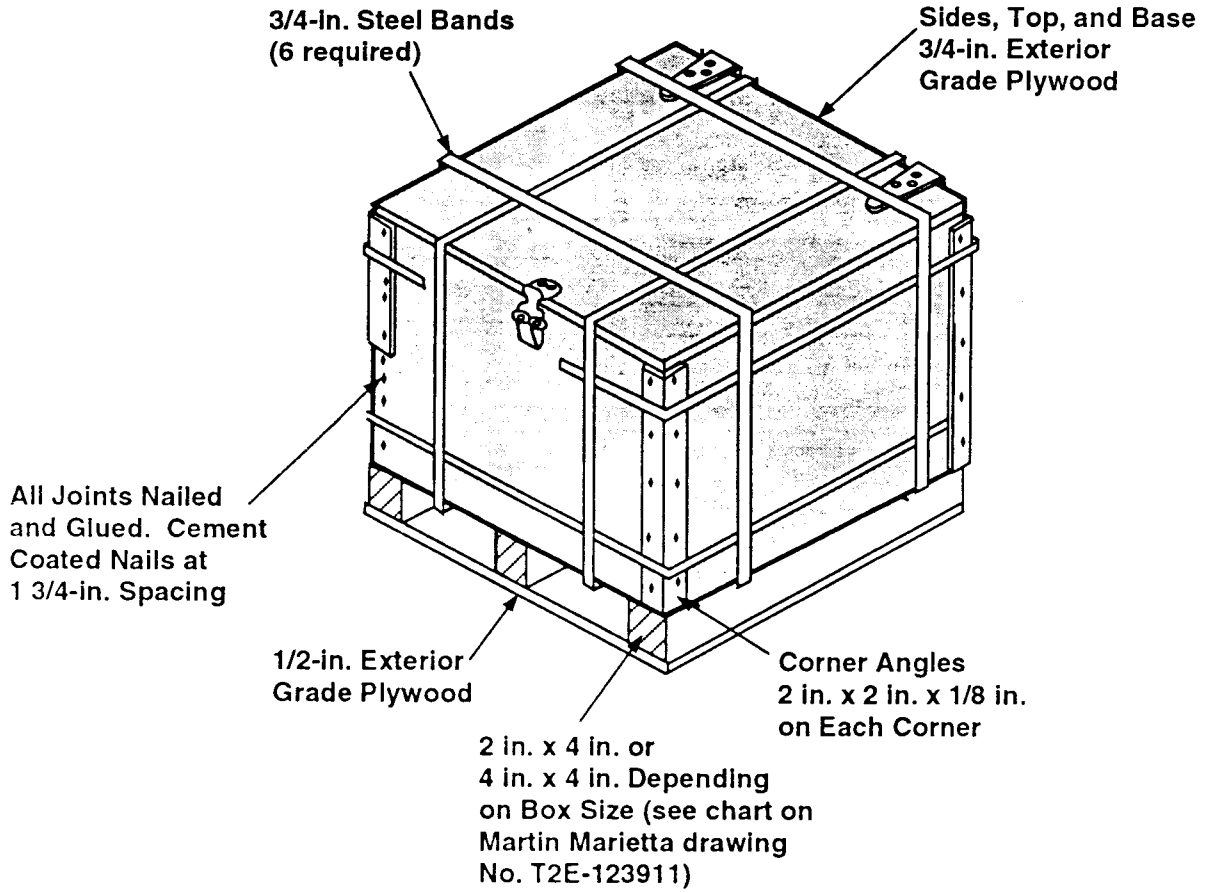

Note: Inside lined with 1/4-in.-thick Ethafoam* (not shown on drawing)

*Ethafoam is a trademark of Dow Chemical Company.

39106089.17a

4.9 Y-12 SERIES B WOODEN BOXES (DOCKETS: MLM)

4.9.1 Package Description

Dimensions

Model		Height (in.)	Width (in.)	Length (in.)
B-1	Interior	26.000	18.0	18.0
	Exterior	27.875	19.5	19.5
B-2	Interior	26.000	20.0	20.0
	Exterior	27.875	21.5	21.5
B-3	Interior	18.000	24.0	24.0
	Exterior	19.875	25.5	25.5
B-4	Interior	30.000	26.0	26.0
	Exterior	31.750	27.5	27.5
B-5	Interior	36.000	30.0	30.0
	Exterior	37.750	31.5	31.5
B-6	Interior	12.000	20.0	20.0
	Exterior	13.750	21.5	21.5
B-7	Interior	36.000	24.0	24.0
	Exterior	37.875	25.5	25.5
B-8	Interior	26.000	24.0	24.0
	Exterior	27.750	25.5	25.5

Materials/Methods of Construction

Sides, ends, top, and bottom	0.75-in. exterior grade plywood
All joints nailed and glued	
Nails	Cement coated
Steel banding	0.75 in., 6 required
Corner angles	2 in. x 2 in. x 0.125 in.
Ethafoam*	0.25 in.
Corner braces (inside and triangular)	1 in each corner, 4 in. x 4 in.

NOTE: See Martin Marietta Energy Systems (MMES) Drawing No. T2E-123911.

*Ethafoam is a trademark of the Dow Chemical Company.

4.9.2 Authorized Contents

The shipper must determine that the actual contents are closely simulated by the test contents. If they are not, testing or analysis must be conducted and documented to demonstrate DOT-7A compliance with the actual contents.

4.9.2.1 Physical Form

4.9.2.1.1 Solids Only. One material form is authorized. Each shipper must determine the most appropriate form for his particular contents and comply with any special requirements.

- Material Form No. 3: Solids--objects with no significant dispersible or removable contamination. (For definition, see 49 CFR 173.433, Contamination control.)

4.9.2.1.2 Maximum Gross Weight

- 400 lb.

4.9.2.2 Chemical Form. The shipper must evaluate and ensure chemical compatibility of the material to be shipped with the materials of the packaging in contact with the payload.

4.9.2.3 Radiological. The 4-ft drop test caused deformations of the package resulting in small decreases in the distance from the exterior to the center of the package. The shipper must ensure that the radiation level at any surface would not increase by more than 20% (relative to the radiation level of the undamaged configuration) if such deformations would occur.

4.9.3 Restrictions/Specifications

The following three possible approaches are acceptable with respect to addressing inleakage and ensuring that there is no transport of radioactive materials out of the packaging.

- Securely enclose the radioactive contents within the box (e.g., wrap and seal in plastic, etc.) so that any inleaking water cannot come in contact with the radioactive material.

- Seal the box using GEOCEL or its equivalent. If the box is reused, it must be re-coated with at least one coat to cover the seal areas before each shipment.

- Ensure that there is no loose or removable contamination that could be entrained in any liquid and that the radioactive material is not soluble in the liquid. Thus, even if the liquids come in contact with the radioactive material, there could be no transport from the package.

NOTE: There are obviously other possible approaches; however, if an alternative approach is chosen, the basis for the choice must be supported and documented. Using one of these alternatives or an equivalent method allows these wooden boxes to meet this requirement.

For heavy, bulky materials (e.g., concrete chunks, motors, pumps, etc.), equipment or materials with sharp corners or protrusions, or material/containment geometries that could result in highly localized forces, the shipper must ensure that the contents are securely fastened/positioned within the package.

4.9.4 49 CFR 178.350 Regulatory Requirements

Regulatory Compliance Assessment

Regulatory requirements	Testing/analysis results
49 CFR 173.24, Standard requirements for all packages	Meets applicable requirements. See Appendix A, Table A-3.
49 CFR 173.411, General design requirements	Meets applicable requirements. See Appendix B, Table B-3.
49 CFR 173.412, Additional requirements for Type A packages	Meets applicable requirements. See Appendix C, Table C-5.
49 CFR 173.465, Type A packaging tests	Meets applicable requirements.
Water spray	Pass. This test was conducted on eight boxes prior to the 4-ft drop test and the penetration test. As expected, it did not affect the packages or the test results. With the actions required in Section 4.9.3, Restrictions/ Specifications, these packagings also satisfy this test requirement with respect to potential inleakage of water. See Appendix D, Table D-5.
Free drop	Pass. These packages were dropped on a lid corner with the box inverted at approximately at 45° angle. There was no loss of contents or significant change in packaging geometry. See Appendix D, Table D-13.
Corner drop	The corner drop was conducted on packagings B-1, B-2, and B-6. This allows their potential use at less than 110 lb. See Appendix D, Table D-20.
Compression	Pass. This test was conducted at five times the gross weight for 24 hr with no loss of contents or significant change in package geometry. See Appendix D, Table D-25.
Penetration	Pass. This test was conducted on the top (middle), with only minor dents resulting. See Appendix D, Table D-32.

4.9.5 Quality Control

Packaging/Acceptance/Use Criteria

Critical	Major	Acceptance/pre-use/inspection criteria*
Lid/body interface Sealing surface	Vendor qualifications and experience	Functional: • Ease of lid application • Mating surfaces flat and smooth, no foreign matter • Geometry, as specified Acceptable conditions:
	Joints/seams	• Dimensions, as specified • Glued
	Closure	• Nail-type and spacing • As specified, nail or screw • Caulking on lid • Steel banding of proper size and location
	Vendor qualifications and experience	Vendor data as appropriate. Lot tests/inspections as appropriate by shipper.

*These criteria apply to first-time use and to reuse as a DOT-7A Type A packaging.

4.9.6 Additional Information

Evaluation and testing of this packaging were performed at MLM and were documented in Edling 1987. Complete evaluation reports are available upon request from one of the DOT-7A Program technical contacts listed in Section 1.1.2.

4.9.6.1 Primary Users

Site/Contact/Phone	Address
ORNL H. E. Crowder COMM/FTS 615-574-2689	Martin Marietta Energy Systems, Inc. P.O. Box Y Oak Ridge Y-12 Plant Oak Ridge, TN 37830

Figure 4-19. Y-12 Picture Frame Wooden Box (contents restricted, see Section 4.10.3).

DOT 7A Type A
49 CFR 178.350

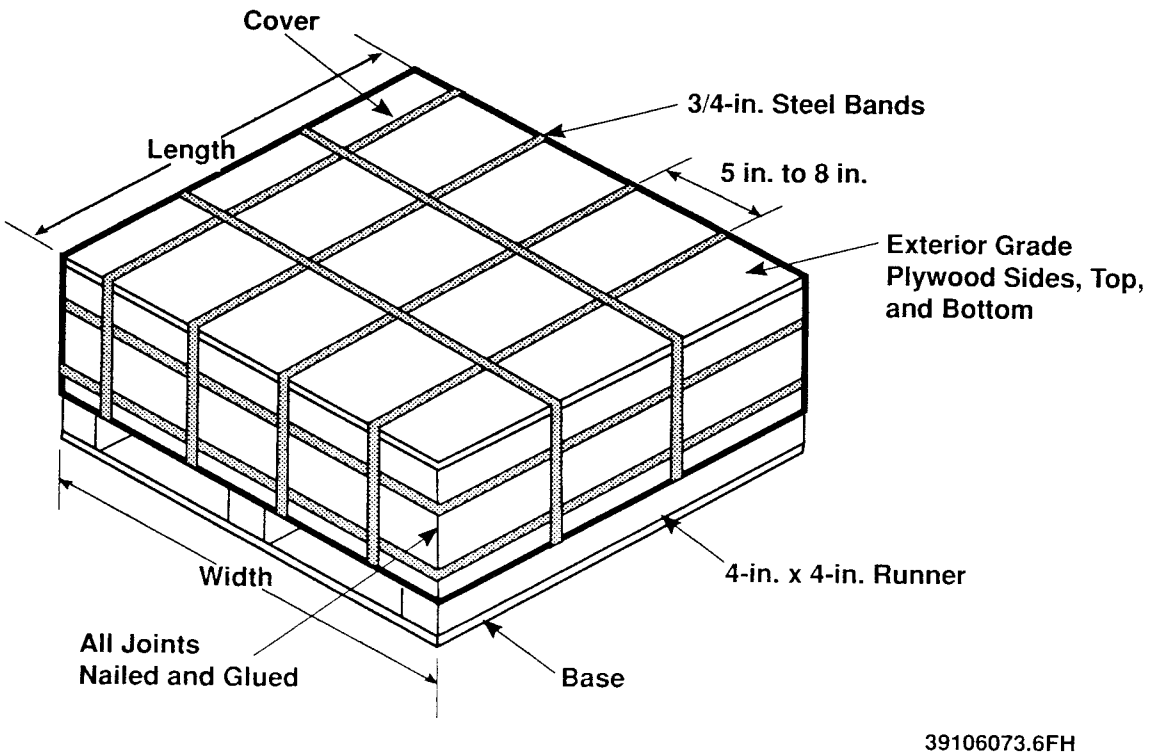

4.10 Y-12 PICTURE FRAME WOODEN BOXES (DOCKETS: MLM, 89-12-7A, 06/91)

4.10.1 Package Description

Dimensions and Weights

Model	Height (in.)	Width (in.)	Length (in.)	Authorized gross weight (lb)
PF-1	6.0	25.00	25.00	500
PF-2	6.0	31.50	31.50	750
PF-3	6.0	37.50	37.50	1,000
PF-4	10.0	13.50	25.00	500
PF-5	10.0	13.50	31.50	750
PF-6	12.0	15.00	37.50	1,000
PF-7	5.0	22.50	59.50	750
PF-8	12.0	20.00	70.25	1,000
PF-10	14.5	48.00	48.00	2,500

Materials/Method of Construction

Sides and top	0.75-in. exterior grade plywood
Base sheet	1-in. exterior grade plywood
Bottom sheet	0.5-in. exterior grade plywood
Steel bands	0.75-in. per spacing in reference document
Joints/seams	Nailed and glued
Nails	See drawings

4.10.1.1 Drawings. MMES Drawing No. T2E-125268 (PF-1 through PF-8) and No. T2E-800530A014 (PF-10).

4.10.2 Authorized Contents

The shipper must determine that the actual contents are closely simulated by the test contents. If they are not, testing or analysis must be conducted and documented to demonstrate DOT-7A compliance with the actual contents.

4.10.2.1 Physical Form

4.10.2.1.1 Solids Only. One material form is authorized. Each shipper must determine the most appropriate form for his particular contents and comply with any special requirements.

- Material Form No. 3: Solids--objects with no significant dispersible or removable contamination. (For definition, see 49 CFR 173.433, Contamination control.)

4.10.2.1.2 Maximum Gross Weight. See the Dimensions and Weights table in Section 4.10.1.

4.10.2.2 Chemical Form. The shipper must evaluate and ensure chemical compatibility of the material to be shipped with the materials of the packaging in contact with the payload.

4.10.2.3 Radiological. The 4-ft drop test caused deformations of the package resulting in small decreases in the distance from the exterior to the center of the package. The shipper must ensure that the radiation level at any surface would not increase by more than 20% (relative to the radiation level of the undamaged configuration) if such deformations would occur.

4.10.3 Restrictions/Specifications

The following two possible approaches are acceptable with respect to addressing inleakage and ensuring that there is no transport of radioactive materials out of the packaging.

- Securely enclose the radioactive contents within the box (e.g., wrap and seal in plastic, etc.) so that any inleaking water cannot come in contact with the radioactive material.

- Seal the box using GEOCEL or its equivalent. If the box is reused, it must be re-coated with at least one coat to cover the seal areas before each shipment.

NOTE: There are obviously other possible approaches; however, if an alternative approach is chosen, the basis for the choice must be supported and documented. Using one of these alternatives or an equivalent method allows these wooden boxes to meet this requirement.

For heavy, bulky materials (e.g., concrete chunks, motors, pumps, etc.), equipment or materials with sharp corners or protrusions, or material/containment geometries that could result in highly localized forces, the shipper must ensure that the contents are securely fastened/positioned within the package.

4.10.4 49 CFR 178.350 Regulatory Requirements

Regulatory Compliance Assessment

Regulatory requirements	Testing/analysis results
49 CFR 173.24, Standard requirements for all packages	Meets applicable requirements. See Appendix A, Table A-3.
49 CFR 173.411, General design requirements	Meets applicable requirements. See Appendix B, Table B-3.
49 CFR 173.412, Additional requirements for Type A packages	Meets applicable requirements. See Appendix C, Table C-5.
49 CFR 173.465, Type A packaging tests	Meets applicable requirements.
Water spray	Pass. Tests conducted on representative packagings demonstrated that this test did not affect the ability of the packaging to meet other Type A test requirements. With the actions required in Section 4.10.3, Restrictions/Specifications, these packagings also satisfy this test requirement with respect to potential inleakage of water. See Appendix D, Table D-5.
Free drop	Pass. These tests were conducted on the corner edge. There was no loss of contents and no significant change in packaging geometry. See Appendix D, Table D-13.
Corner drop	Not required.
Compression	Pass. The tests were conducted with greater than five times the gross weight shown in the Dimensions and Weights table in Section 4.10.1 for 24 hr. There was no detectable effect. See Appendix D, Table D-25.
Penetration	Pass. This test was conducted on each package with no significant effect. See Appendix D, Table D-32.

4.10.5 Quality Control

Packaging/Acceptance/Use Criteria

Critical	Major	Acceptance/pre-use/inspection criteria*
None	Lid/body interface	Functional: • Ease of lid application • Mating surfaces flat and smooth, no foreign matter • Geometry, as specified Acceptable conditions:
	Joints/seams	• Dimensions, as specified • Glued
	Closure	• As specified, nail or screw • Caulking on lid • Steel banding of proper size and location • Nail-type and spacing
	Vendor qualification and experience	Vendor data as appropriate. Lot tests/inspections as appropriate by shipper.

*These criteria apply to first-time use and to reuse as a DOT-7A Type A packaging.

4.10.6 Additional Information

Evaluation and testing of packaging Model Nos. PF-1 through PF-8 were performed at MLM and were documented in Edling 1987. Evaluation and testing of Model PF-10 took place at Westinghouse Hanford as part of Docket 89-12-7A with testing completed in June 1991. Complete evaluation reports are available upon request from one of the DOT-7A Program technical contacts listed in Section 1.1.2.

4.10.6.1 Primary Users

Site/Contact/Phone	Address
ORNL J. C. Copeland COMM/FTS 615-574-2689	Martin Marietta Energy Systems, Inc. P.O. Box Y Oak Ridge Y-12 Plant Oak Ridge, TN 37830
H. E. Turner COMM/FTS 615-574-2688	

Figure 4-20. Rocky Flats RA Series Wooden Boxes (contents restricted, see Section 4.11.3).

DOT 7A Type A
49 CFR 178.350

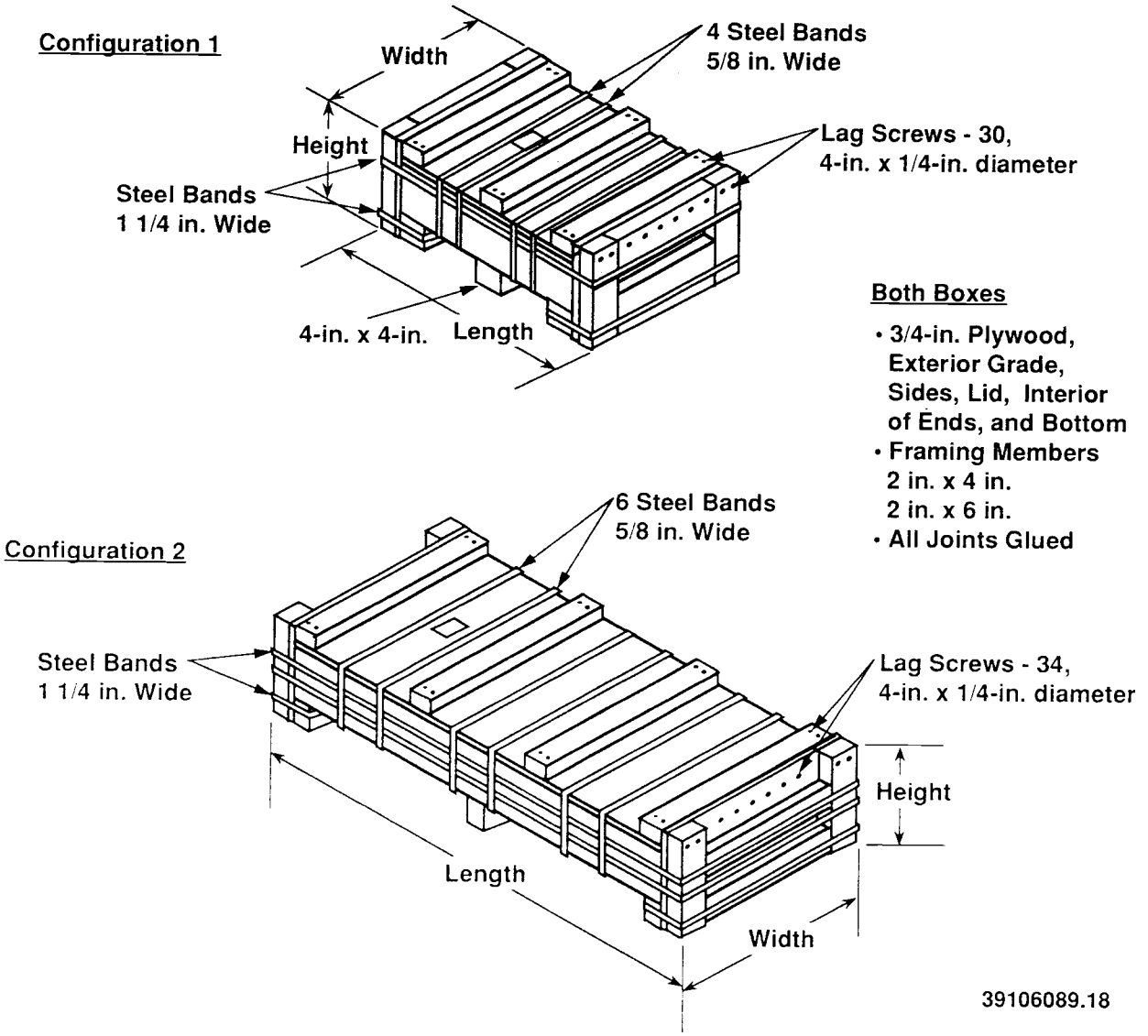

Both Boxes

- 3/4-in. Plywood, Exterior Grade, Sides, Lid, Interior of Ends, and Bottom
- Framing Members
  2 in. x 4 in.
  2 in. x 6 in.
- All Joints Glued

4.11 ROCKY FLATS RA SERIES OF WOODEN BOXES (DOCKETS: MLM)

4.11.1 Package Description

Dimensions

Model		Height (in.)	Width (in.)	Length (in.)
Configuration 1	Interior	6.0	16.625	21.125
	Exterior	14.0	21.125	25.625
Configuration 2	Interior	2.5	26.750	59.125
	Exterior	10.5	31.250	63.625

Materials/Method of Construction

Sides, lid, interior of ends, and bottom	0.75-in. exterior grade plywood
Framing members All joints nailed and glued	2-in. x 4-in. lumber
Closure	Lag screws, 4 in. x 0.25-in. diameter
Steel banding	0.625-in. steel bands around top, sides, and bottom 1.25-in. steel band around sides and ends See diagrams for proper spacing

NOTE: For details of construction, see Rockwell RF-PE Drawings D14062-P14974, sheets 1 through 3, and D14061-P14926, sheets 1 through 3.

4.11.2 Authorized Contents

The shipper must determine that the actual contents are closely simulated by the test contents. If they are not, testing or analysis must be conducted and documented to demonstrate DOT-7A compliance with the actual contents.

4.11.2.1 Physical Form

4.11.2.1.1 Solids Only. One material form is authorized. Each shipper must determine the most appropriate form for his particular contents and comply with any special requirements.

- Material Form No. 3: Solids--objects with no significant dispersible or removable contamination. (For definition, see 49 CFR 173.433, Contamination control.)

4.11.2.1.2 Maximum Gross Weight

- Configuration 1--900 lb
- Configuration 2--1,250 lb.

4.11.2.2 Chemical Form. The shipper must evaluate and ensure chemical compatibility of the material to be shipped with the materials of the packaging in contact with the payload.

4.11.2.3 Radiological. The 4-ft drop test caused deformations of the package resulting in small decreases in the distance from the exterior to the center of the package. The shipper must ensure that the radiation level at any surface would not increase by more than 20% (relative to the radiation level of the undamaged configuration) if such deformations would occur.

4.11.3 Restrictions/Specifications

The following three possible approaches are acceptable with respect to addressing inleakage and ensuring that there is no transport of radioactive materials out of the packaging.

- Securely enclose the radioactive contents within the box (e.g., wrap and seal in plastic, etc.) so that any inleaking water cannot come in contact with the radioactive material.
- Seal the box using GEOCEL or its equivalent. If the box is reused, it must be re-coated with at least one coat to cover the seal areas before each shipment.
- Ensure that there is no loose or removable contamination that could be entrained in any liquid and that the radioactive material is not soluble in the liquid. Thus, even if the liquids come in contact with the radioactive material, there could be no transport from the package.

NOTE: There are obviously other possible approaches; however, if an alternative approach is chosen, the basis for the choice must be supported and documented. Using one of these alternatives or an equivalent method allows these wooden boxes to meet this requirement.

For heavy, bulky materials (e.g., concrete chunks, motors, pumps, etc.), equipment or materials with sharp corners or protrusions, or material/containment geometries that could result in highly localized forces, the shipper must ensure that the contents are securely fastened/positioned within the package.

4.11.4 49 CFR 178.350 Regulatory Requirements

Regulatory Compliance Assessment

Regulatory requirements	Testing/analysis results
49 CFR 173.24, Standard requirements for all packages	Meets applicable requirements. See Appendix A, Table A-3.
49 CFR 173.411, General design requirements	Meets applicable requirements. See Appendix B, Table B-3.
49 CFR 173.412, Additional requirements for Type A packages	Meets applicable requirements. See Appendix C, Table C-5.
49 CFR 173.465, Type A packaging tests	Meets applicable requirements.
Water spray	Pass. This test was conducted prior to the compression test with no loss of contents or significant distortion of packaging geometry. This same package was dropped 4 ft approximately 28 hr later. Tests conducted on similar packagings demonstrate that this test did not affect the ability of the packaging to meet other Type A test requirements. With the actions required in Section 4.11.3, Restrictions/Specifications, these packagings also satisfy this test requirement with respect to potential inleakage of water. See Appendix D, Table D-5.
Free drop	Pass. This drop was made on the top corner with the boxes inverted at approximately a 45° angle. There was no loss of contents and no significant change in packaging geometry. See Appendix D, Table D-13.
Corner drop	Not required.
Compression	Pass. This test was conducted at five times the gross weight for 24 hr with no loss of contents or significant change in package geometry. see Appendix D, Table D-25.
Penetration	Pass. By analysis and comparison to previous tests on 0.75-in. plywood, which resulted in only minor dents. See Appendix D, Table D-32.

4.11.5 Quality Control

Packaging/Acceptance/Use Criteria

Critical	Major	Acceptance/pre-use/inspection criteria*
Lid/body interface Sealing surface	Vendor qualifications and experience	Functional: • Ease of lid application • Mating surfaces flat and smooth, no foreign matter • Geometry, as specified Acceptable conditions:
	Joints/seams	• Dimensions, as specified • Glued
	Closure	• As specified, nail or screw • Caulking on lid • Steel banding of proper size and location • Nail-type and spacing
	Vendor qualifications and experience	Vendor data as appropriate. Lot tests/inspections as appropriate by shipper.

*These criteria apply to first-time use and to reuse as a DOT-7A Type A packaging.

4.11.6 Additional Information

Evaluation and testing of this packaging were performed at MLM and were documented in Edling 1987. Complete evaluation reports are available upon request from one of the DOT-7A Program technical contacts listed in Section 1.1.2.

4.11.6.1 Primary Users

Site/Contact/Phone	Address
Rocky Flats R. R. Riddle COMM/FTS 303-966-4596	Rocky Flats Plant P.O. Box 464 Golden, CO 80402-0464

Figure 4-21. WMCO Family of Banded, Wooden Boxes (contents restricted, see Section 4.12.3).

DOT 7A Type A
49 CFR 178.350

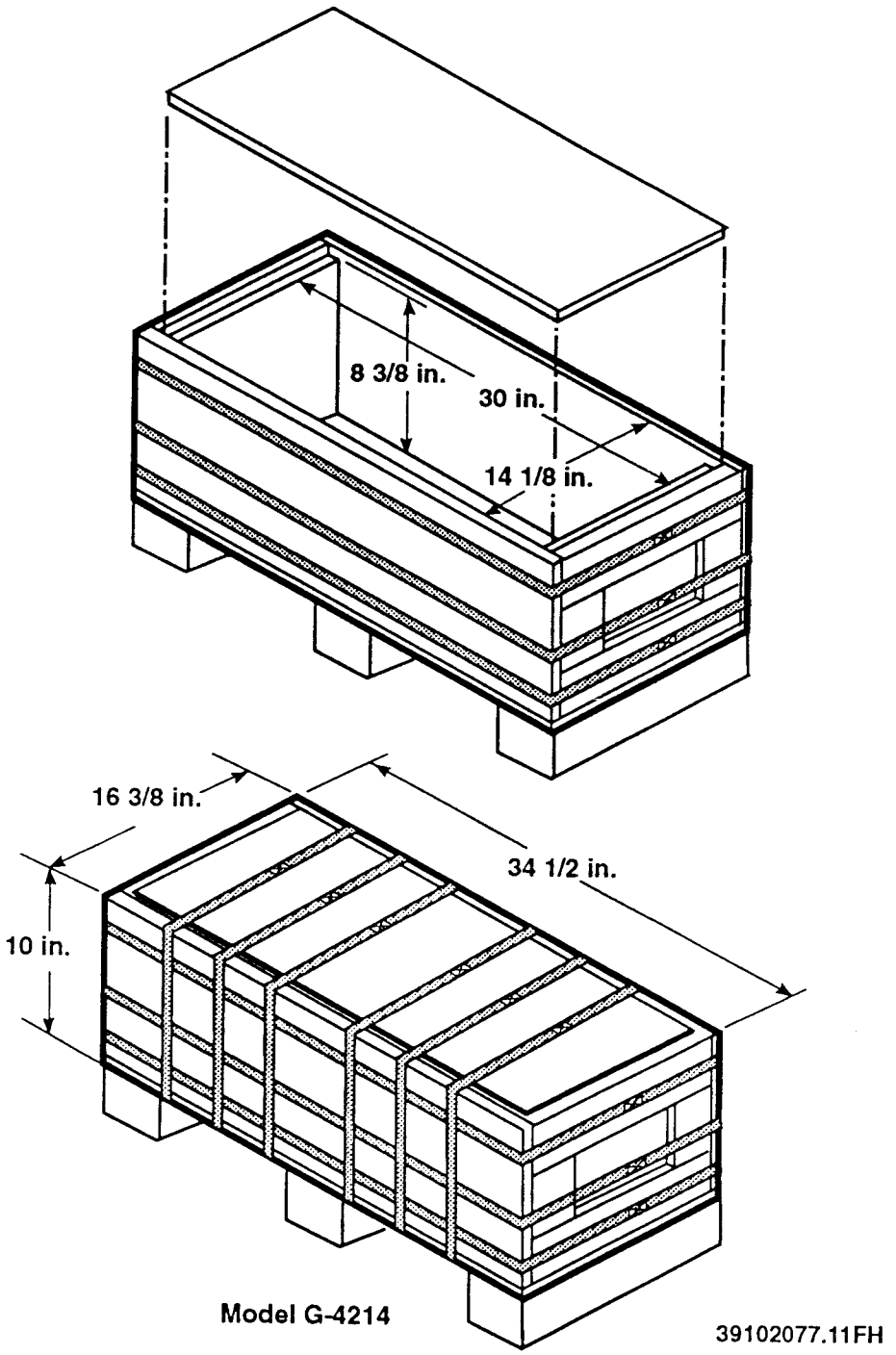

Figure 4-22. WMCO Family of Banded, Wooden Boxes (contents restricted, see Section 4.12.3).

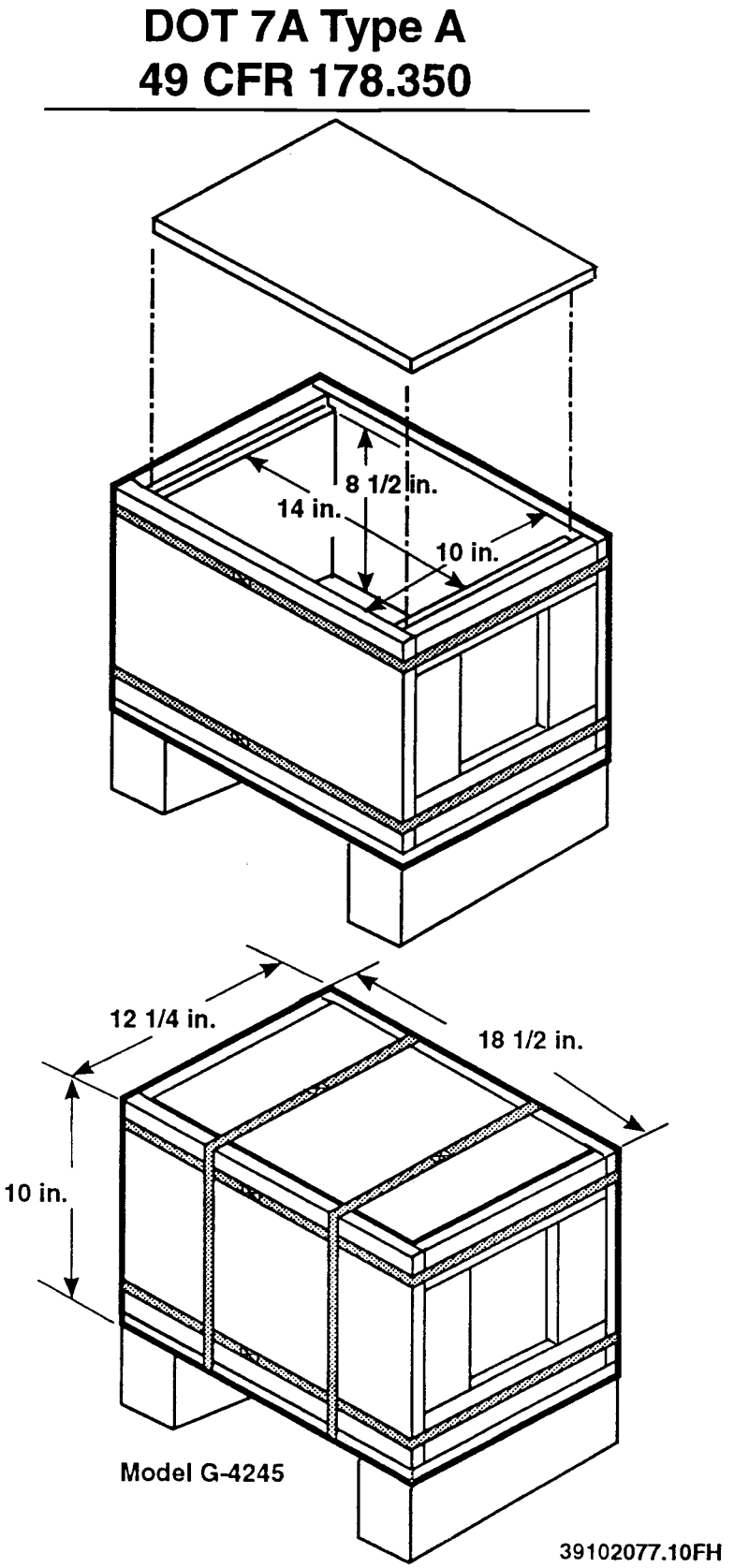

Figure 4-23. WMCO Family of Banded, Wooden Boxes (contents restricted, see Section 4.12.3).

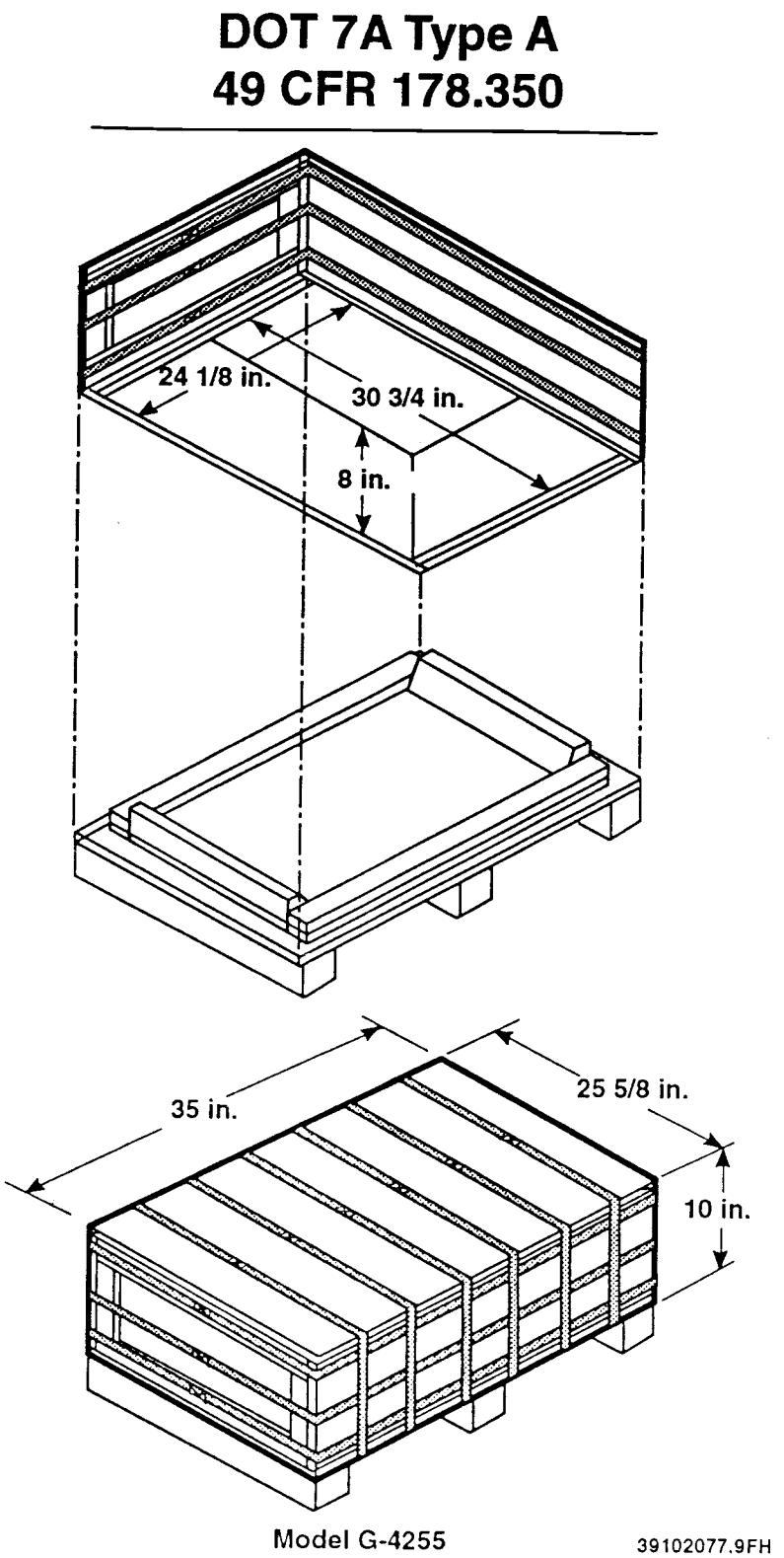

Figure 4-24. WMCO Family of Banded, Wooden Boxes (contents restricted, see Section 4.12.3).

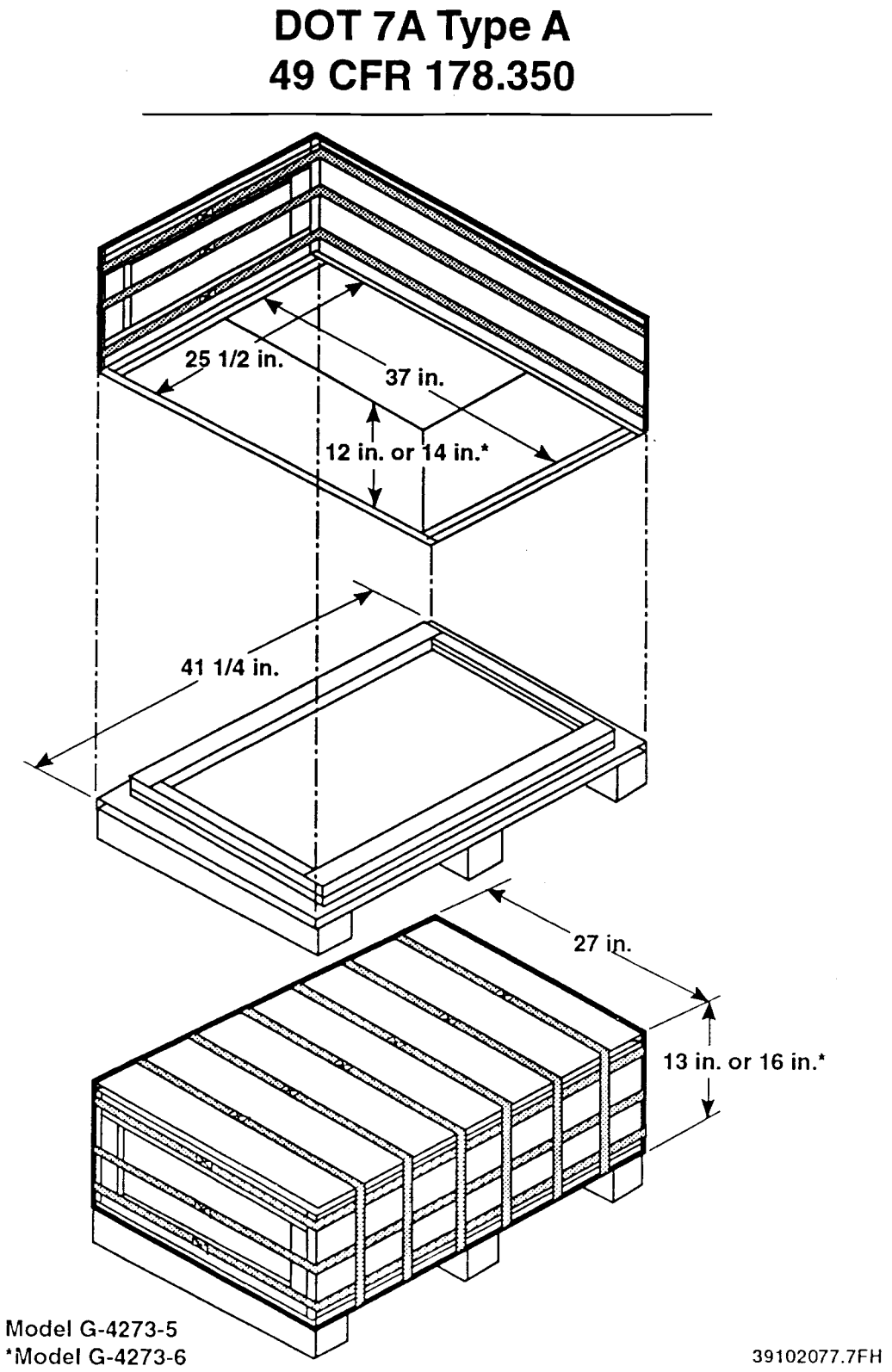

Figure 4-25. WMCO Family of Banded, Wooden Boxes (contents restricted, see Section 4.12.3).

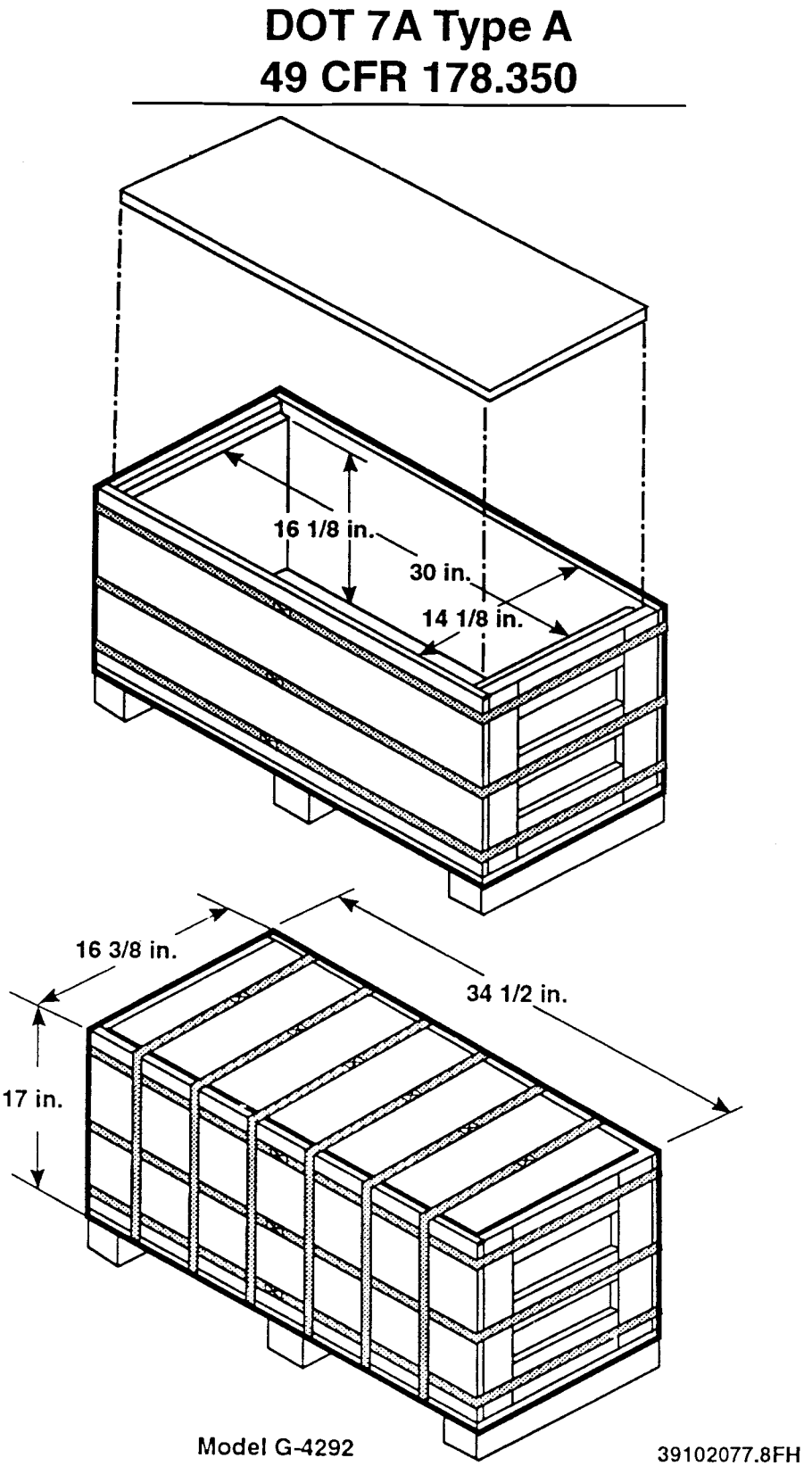

4.12 WMCO FAMILY OF BANDED, WOODEN BOXES (DOCKETS: MLM, 89-09-7A, 09/90)

4.12.1 Package Description

Dimensions and Weights

Model	External dimension				Internal dimension			Empty weight (lb)	Authorized gross weight (lb)
	Width (in.)	Length (in.)	Height (in.)	Skid (in.)	Width (in.)	Length (in.)	Height (in.)		
G-4214	16.38	34.50	10.0	4.00	14.13	30.00	8.38	70.0	1,260
G-4245	12.25	18.50	10.0	3.13	10.00	14.00	8.50	25.0	225
G-4255	25.63	35.00	10.0	3.50	24.13	30.75	8.00	107.0	1,470
G-4273-5	27.00	41.25	13.0	3.38	25.50	37.00	12.00	132.0	3,035
G-4273-6	27.00	41.25	16.0	3.38	25.50	37.00	14.00	146.0	3,540
G-4292	16.38	34.50	17.0	3.38	14.13	30.00	16.13	85.0	1,330

Materials/Method of Construction

Drawing No. G-4292 00F-5500-X-00491, Rev. 9	
Drawing No. G-4214 00F-5500-X-00431, Rev. 19 00F-5500-X-01490, Rev. 3	
Sides and ends	1.125-in. thick white pine
Bottom	1-in. hardwood
Lids	2, 0.5-in. plywood
Banding	See drawing - 1.25-in. steel
Skids	3 wooden, 3.625 in. or 4 in.
Drawing No. G-4245 00F-5500-X-00460, Rev. 3	
Lid	1, 0.5-in. plywood
Banding	2 vertical and 2 horizontal
Skids	3.25 in.
Drawing No. G-4255 00F-5500-X-00468, Rev. 5 00F-5500-X-00470, Rev. 0	
Drawing No. G-4273 00F-5500-X-00471, Rev. 14 00F-5500-X-00472, Rev. 7 00F-5500-X-00473, Rev. 4	
All construction	0.75-in. exterior grade plywood
Skids	3 wooden, 3.625 in. or 4 in.

4.12.2 Authorized Contents

The shipper must determine that the actual contents are closely simulated by the test contents. If they are not, testing or analysis must be conducted and documented to demonstrate DOT-7A compliance with the actual contents.

4.12.2.1 Physical Form

4.12.2.1.1 Solids Only. Restricted to Material Form No. 3 only. Each shipper must determine the most appropriate form for his particular contents and comply with any special requirements.

- Material Form No. 3: Solids--objects with no significant dispersible or removable contamination. (For definition, see 49 CFR 173.443, Contamination control.)

4.12.2.1.2 Maximum Gross Weight. See the Dimensions and Weights table in Section 4.12.1.

4.12.2.2 Chemical Form. The shipper must evaluate and ensure chemical compatibility of the material to be shipped with the materials of the packaging in contact with the payload.

4.12.2.3 Radiological. The decrease in distance to the center of the package as a result of exposure to a 4-ft drop was estimated for each model as follows:

Four-Foot Drop Test Estimates

Model	Decrease in distance to center (in.)
G-4214	6
G-4245	3
G-4255	6
G-4273-5	12
G-4273-6	13
G-4292	6

These estimates were based on comparison with damage that occurred during testing of similar packages. The shipper shall ensure that the radiation level at any surface of the packaging would not increase by more than 20% (relative to the radiation level of the undamaged configuration) if such deformations would occur.

4.12.3 Restrictions/Specifications

The loaded package must be banded as shown in Figures 4-21 through 4-25.

The following three possible approaches are acceptable with respect to addressing inleakage and ensuring that there is no transport of radioactive materials out of the packaging.

- Securely enclose the radioactive contents within the box (e.g., wrap and seal in plastic, etc.) so that any inleaking water cannot come in contact with the radioactive material.

- Seal the box using GEOCEL or its equivalent. If the box is reused, it must be re-coated with at least one coat to cover the seal areas before each shipment.

- Ensure that there is no loose or removable contamination that could be entrained in any liquid and that the radioactive material is not soluble in the liquid. Thus, even if the liquids come in contact with the radioactive material, there could be no transport from the package.

NOTE: There are other possible approaches; however, if an alternative approach is chosen, the basis for the choice must be supported and documented. Using one of these alternatives or an equivalent method allows these wooden boxes to meet this requirement.

For heavy, bulky materials (e.g., concrete chunks, motors, and pumps), equipment or materials with sharp corners or protrusions, or material/containment geometries that could result in highly localized forces, the shipper must ensure that the contents are securely fastened/positioned within the package.

4.12.4 49 CFR 178.350 Regulatory Requirements

Regulatory Compliance Assessment

Regulatory requirements	Testing/analysis results
49 CFR 173.24, Standard requirements for all packages	Meets applicable requirements. See Appendix A, Table A-3.
49 CFR 173.411, General design requirements	Meets applicable requirements. See Appendix B, Table B-3.
49 CFR 173.412, Additional requirements for Type A packages	Meets applicable requirements. See Appendix C, Table C-5.
49 CFR 173.465, Type A packaging tests	Meets applicable requirements.
Water spray	Pass. Water spray tests conducted on all packagings demonstrated that this test did not affect the ability of the packaging to meet other Type A test requirements. With the actions required in Section 4.12.3, Restrictions/Specifications, these packagings also satisfy this test requirement with respect to potential inleakage of water. See Appendix D, Table D-5.
Free drop	Pass. All packages were subjected to 4-ft free drop tests with no loss of contents. See Appendix D, Table D-13.
Corner drop	Not required.
Compression	Pass. One package of each type was subjected to the compression test. There was no distortion or loss of contents. See Appendix D, Table D-25.
Penetration	Pass. One package of each type was subjected to the penetration test. Minor indentations and some cracking of the wooden lids were noted, but there was no loss or dispersal of contents. See Appendix D, Table D-32.

4.12.5 Quality Control

Packaging/Acceptance/Use Criteria

Critical	Major	Acceptance/pre-use/inspection criteria*
Lid/body interface Sealing surface	Vendor qualifications and experience	Functional: • Ease of lid application • Mating surfaces flat and smooth, no foreign matter • Geometry, as specified Acceptable conditions:
	Joints/seams	• Dimensions, as specified • Glued
	Closure	• Nail-type and spacing • As specified, nail or screw • Caulking on lid • Steel banding of proper size and location
	Vendor qualifications and experience	Vendor data as appropriate. Lot tests/inspections as appropriate by shipper.

*These criteria apply to first-time use and to reuse as a DOT-7A Type A packaging.

4.12.6 Additional Information

Evaluation and testing of the subject packaging took place at MLM in 1989. Westinghouse Hanford developed the final report and other documentation as part of Docket 89-09-7A. A complete test report is available upon request from one of the DOT-7A Program technical contacts listed in Section 1.1.2.

4.12.6.1 Primary Users

Site/Contact/Phone	Address
Feed Materials Production Center (FMPC) C. E. Block COMM/FTS 513-738-6469	Westinghouse Materials Company of Ohio (WMCO) P.O. Box 398704 Cincinnati, OH 45239-8704

Figure 4-26. ORNL Y-12 Series C Wooden Boxes (contents restricted, see Section 4.13.3).

DOT 7A Type A
49 CFR 178.350

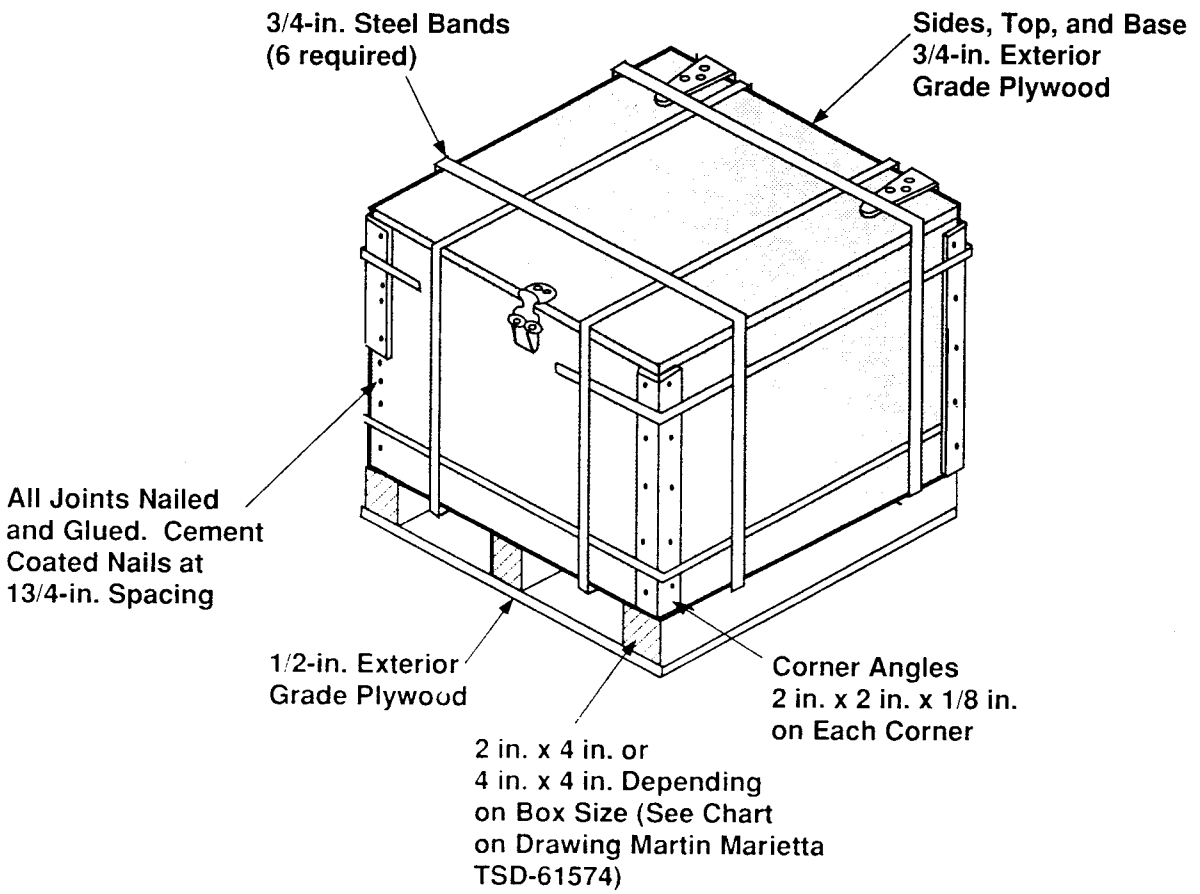

Note: Inside lined with 1/4-in.-thick Ethafoam* (not shown on drawing)

*Ethafoam is a trademark of Dow Chemical Company.

39106089.17b

Figure 4-27. ORNL Y-12 Series C Wooden Boxes.

DOT 7A Type A
49 CFR 178.350

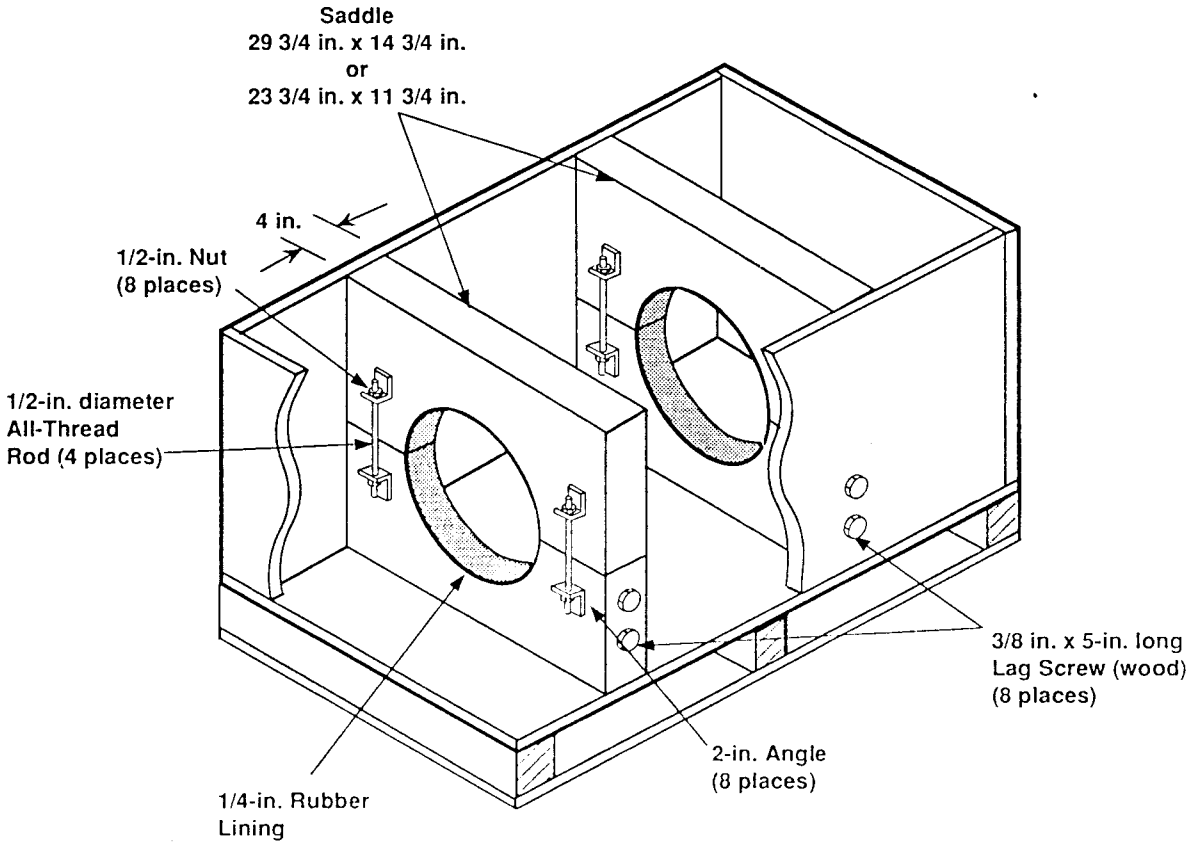

Note: 1. Brace contents front and back to keep from shifting.

2. Saddles made of 4 pieces of 1-in.-thick plywood glued together.

39104048.2

4.13 ORNL Y-12 SERIES C WOODEN BOXES (DOCKETS: 89-01-7A, 10/90; 90-19-7A, 08/91)

4.13.1 Package Description

Dimensions and Weights

Model		Length (in.)	Width (in.)	Height (in.)	Weight (lb)
C-1	Exterior	49.500	25.500	29.500	130
	Interior	48.000	24.000	24.000	
C-2	Exterior	67.500	31.500	35.500	200
	Interior	66.000	30.000	30.000	
C-3	Exterior	79.500	31.500	35.500	230
	Interior	78.000	30.000	30.000	
C-280	Exterior	50.375	18.875	18.875	130
	Interior	48.875	17.375	14.000	
C-400	Exterior	49.500	25.500	30.000	142
	Interior	48.000	24.000	25.500	
C-600	Exterior	35.500	31.500	35.500	212
	Interior	34.000	30.000	30.000	
C-1000	Exterior	79.500	31.500	35.500	236
	Interior	78.000	30.000	30.000	

Materials/Method of Construction

Major components	Material
Sides, walls, ends, top, and bottom	.75-in. exterior grade plywood
Base sheet (bottom of skid)	.50-in. exterior grade plywood
Joint/seams	Nailed and glued
Top	Hinged and closed with Link-Lock Latch #2
Skids - total of 3	4-in. x 4-in. lumber
Corner angle	Aluminum angle, 2 in. x .13 in.
Foam	.50-in. Ethafoam*
Banding	Steel, .75 in. x .03 in.

NOTE: See MMES Drawings No. T2E-146358 (C-1, -2, and -3) and No. T2E-123911 (C-230, -400, -600, and -1000).

*Ethafoam is a trademark of Dow Chemical Company.

4.13.2 Authorized Contents

The shipper must determine that the actual contents are closely simulated by the test contents. If they are not, testing or analysis must be conducted and documented to demonstrate DOT-7A compliance with the actual contents.

4.13.2.1 Physical Form

4.13.2.1.1 Solids Only. Restricted to Material Form No. 3 only. Each shipper must determine the most appropriate form for his particular contents and comply with any special requirements.

- Material Form No. 3: Solids--objects with no significant dispersible or removable contamination. (For definition, see 49 CFR 173.443, Contamination control.)

4.13.2.1.2 Maximum Gross Weight

Weights

Model	Weight (lb)
C-1	1,130
C-2	1,700
C-3	2,230
C-280	280
C-400	400
C-600	600
C-1000	1,000

4.13.2.2 Chemical Form. The shipper must evaluate and ensure chemical compatibility of the material to be shipped with the materials of the packaging in contact with the payload.

4.13.2.3 Radiological. The decrease in distance to the center of the package as a result of the 4-ft drop testing was as follows:

Four-Foot Drop Test Results

Model	Decrease in distance to center (in.)
C-1	2.125
C-2	5.500
C-3	5.000
C-280	0.750
C-400	0.750
C-600	0.750
C-1000	0.750

The shipper shall ensure that the radiation level at any surface of the packaging would not increase by more than 20% (relative to the radiation level of the undamaged configuration) if such deformations would occur.

4.13.3 Restrictions/Specifications

The boxes shall have at least two coats of a standard exterior grade paint.

Note that the banding requirements change for various boxes. Band the boxes per drawing requirements.

Separations of 3/8 in., 3/4 in., and 3/4 in. occurred in boxes C-400, C-600, and C-1000, respectively, as a result of the drop test. Each shipper must ensure that the contents are of a size and form that could not escape through separations of this size.

The following three possible approaches are acceptable with respect to addressing inleakage and ensuring that there is no transport of radioactive materials out of the packaging.

- Securely enclose the radioactive contents within the packaging (e.g., wrap and seal in plastic, etc.) so that any inleaking water cannot come in contact with the radioactive material.
- Seal the box using GEOCEL or its equivalent. If the box is reused, it must be re-coated with at least one coat to cover the seal areas before each shipment.
- Ensure that there is no loose or removable contamination that could be entrained in any liquid and that the radioactive material is not soluble in the liquid. Thus, even if the liquids come in contact with the radioactive material, there could be no transport from the package.

NOTE: There are other possible approaches; however, if an alternative approach is chosen, the basis for the choice must be supported and documented. Using one of these alternatives or an equivalent method allows these wooden boxes to meet this requirement.

For heavy, bulky materials (e.g., concrete chunks, motors, pumps, etc.), equipment or materials with sharp corners or protrusions, or material/containment geometries that could result in highly localized forces, the shipper must ensure that the contents are securely fastened/positioned within the package.

4.13.4 49 CFR 178.350 Regulatory Requirements

Regulatory Compliance Assessment

Regulatory requirements	Testing/analysis results
49 CFR 173.24, Standard requirements for all packages	Meets applicable requirements. See Appendix A, Table A-3.
49 CFR 173.411, General design requirements	Meets applicable requirements. See Appendix B, Table B-3.
49 CFR 173.412, Additional requirements for Type A packages	Meets applicable requirements. See Appendix C, Table C-5.
49 CFR 173.465, Type A packaging tests	Meets applicable requirements.
Water spray	Pass. This test was conducted on multiple test units and there was no inleakage of water. See Appendix D, Table D-5.
Free drop	Pass. Multiple test units were subjected to the 4-ft drop in varying orientations with successful results. See Appendix D, Table D-13.
Corner drop	Not required.
Compression	Pass. This test was conducted using a test unit for each model with successful results. See Appendix D, Table D-25.
Penetration	Pass. Penetration bar was dropped on the top center and on the latches with successful results. See Appendix D, Table D-32.

4.13.5 Quality Control

Packaging/Acceptance/Use Criteria

Critical	Major	Acceptance/pre-use/inspection criteria*
		Functional:
Body		• Materials of construction - Thickness - Type - Quality
Nailing		• Nail spacing and type as specified
Banding		• Width of banding
		• Banding materials
		• Number of bands
		• Location
	Joints/seams (cover-body interface)	• Fasteners as specified
		• Mating surfaces flat and smooth and free of foreign materials
	Surface preparation	• Appropriate paint/or equal
	Closure (hinges and latches)	• Size, material, number screws and location similar
	Cushioning and gaskets	• Thickness
		• Material as specified
		• Division of materials per drawing (C-280)
		Acceptable conditions:
		• Dimensions and materials
		• Lack of dents, no deformation of sealing surface
		• Geometry as specified
		• Gasket provides seal
		• Bands as specified

*These criteria apply to first time use and to reuse as a DOT-7A Type A packaging.

4.13.6 Additional Information

Evaluation and testing of the subject packagings took place at Westinghouse Hanford in 1990 and 1991 as part of DOT-7A Program Dockets No. 89-01-7A and No. 90-19-7A. Mound Laboratory conducted testing of the C-280, -400, -600 and -1000 models. Westinghouse Hanford completed testing of the C-1, -2, and -3 models in October 1990. Complete test reports are available upon request from one of the DOT-7A Program technical contacts listed in Section 1.1.2.

4.13.6.1 Primary Users

Site/Contact/Phone	Address
ORNL E. N. Turner COMM/FTS 615-576-2688	Martin Marietta Energy Systems, Inc. P.O. Box Y Oak Ridge Y-12 Plant Oak Ridge, TN 37830

This page intentionally left blank.

5.0 FIBERBOARD CONTAINERS

This page intentionally left blank.

Figure 5-1. DOT Specification 12B Fiberboard Box
(contents restricted, see Section 5.1.3).

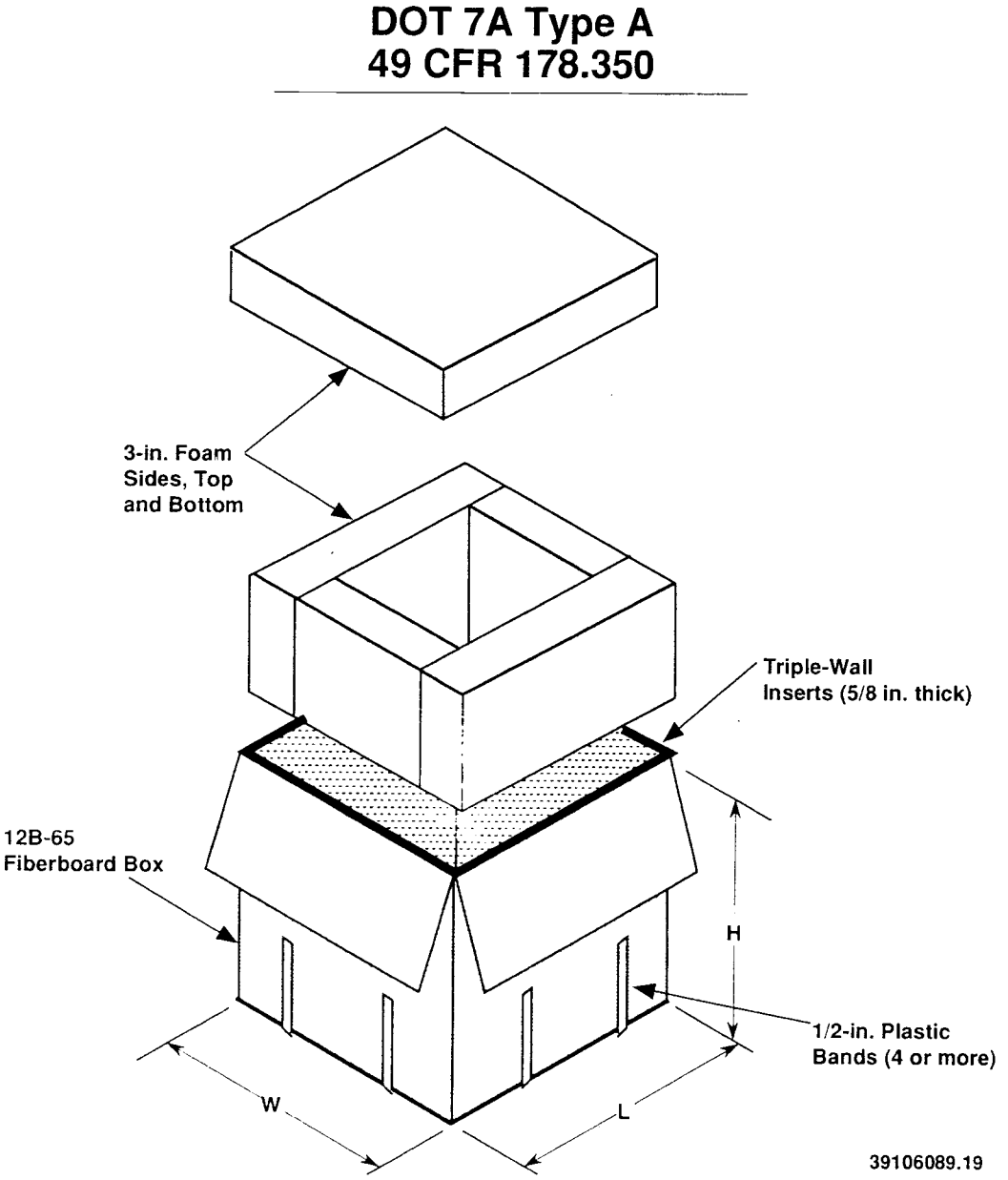

5.1 12B-65 FIBERBOARD BOXES

5.1.1 Package Description

Dimensions and 4-ft Drop Test Results

Dimensions	Height (in.)	Width (in.)	Length (in.)	Decrease in distance from corner to center of package(in.)
1	8	12	12	0.250
2	12	12	12	0.500
3	12	12	28	0.500
4	16	16	16	0.750
5	8	18	18	0.500
6	12	18	18	0.500
7	27	18	18	0.500
8	8	20	20	0.750
9	12	20	20	0.500
10	12	24	24	0.375
11	24	24	24	0.500
12	8	16	16	0.500
13	12	16	16	0.750

Materials/Method of Construction

Fiberboard Box	12B-65 (49 CFR 178.205)
Banding	0.5-in. plastic strapping was used for test purposes; however, any better (or equivalent) banding may be used
Tape (see Section 5.1.6.2)	3-in. plastic tape (or equivalent) or stapled seams and closure
Foam	3-in. thick
Triple-Wall supports (see Section 5.1.6.2)	An inner tri-walled fiberboard liner to provide support during the compression test (0.567 in. thick)

5.1.2 Authorized Contents

The shipper must determine that the actual contents are closely simulated by the test contents. If they are not, testing or analysis must be conducted and documented to demonstrate DOT-7A compliance with the actual contents.

5.1.2.1 Physical Form

5.1.2.1.1 Solids Only. One material form is authorized. Each shipper must determine the most appropriate form for his particular contents and comply with any special requirements (e.g., RTV, etc.)

- Material Form No. 3: Solids--objects with no significant dispersible or removable contamination. (For definition, see 49 CFR 173.433, Contamination control.)

5.1.2.1.2 Maximum Gross Weight

- 65 lb.

5.1.2.2 Chemical Form. The shipper must evaluate and ensure chemical compatibility of the material to be shipped with the materials of the packaging in contact with the payload.

5.1.2.3 Radiological. The shipper must ensure that the radiation level at any surface would not increase by more than 20% (relative to the radiation level prior to the test) as a result of the decrease in distance to the center of the package resulting from the 4-ft drop test. This decrease in distance for each package is given in the Dimensions and 4-ft Drop Test Results table in Section 5.1.1.

5.1.3 Restrictions/Specifications

Contents must be of a size that would not move through the 1.25-in.-diameter hole resulting from the penetration test bar.

Water-resistant tape is required.

Triple-Wall support or equivalent on all sides and ends is required.

Banding with 0.5-in. plastic or equivalent is required.

The following two possible approaches are acceptable with respect to addressing inleakage and ensuring that there is no transport of radioactive materials out of the packaging.

- Securely enclose the radioactive contents within the box (e.g., wrap and seal in plastic, etc.) so that any inleaking water cannot come in contact with the radioactive material.

- Ensure that there is no loose or removable contamination that would be entrained in any liquid and that the radioactive material is not soluble in the liquid. Thus, even if the liquids come in contact with the radioactive material, there could be no transport from the package.

NOTE: There are obviously other possible approaches; however, if an alternative approach is chosen, the basis for the choice must be supported and documented. The use of one of these alternatives or an equivalent method allows these wooden boxes to meet this requirement.

For heavy, bulky materials (e.g., concrete chunks, motors, pumps, etc.), equipment or materials with sharp corners or protrusions, or material/containment geometries that could result in highly localized forces, the shipper must ensure that the contents are securely fastened/positioned within the package.

5.1.4 49 CFR 178.350 Regulatory Requirements

Regulatory Compliance Assessment

Regulatory requirements	Testing/analysis results
49 CFR 173.24, Standard requirements for all packages	Meets applicable requirements. See Appendix A, Table A-4.
49 CFR 173.411, General design requirements	Meets applicable requirements. See Appendix B, Table B-4.
49 CFR 173.412, Additional requirements for Type A packages	Meets applicable requirements. See Appendix C, Table C-7.
49 CFR 173.465, Type A packaging tests	Meets applicable requirements.
Water spray	Pass. Packaging passes only when specified plastic tape is used. This test was conducted prior to each test. See Appendix D, Table D-6.
Free drop	Pass. Packaging passes only when specified plastic tape is used. Note: Each package must be analyzed with respect to the 20% radiation level increase criterion. See Appendix D, Table D-15.
Corner drop	Each size packaging was subjected to this test with no loss of contents. See Appendix D, Table D-21.
Compression	Pass. This test was conducted for 24 hr with five times the gross weight and, when the Triple-Wall supports were used, this test had no significant effect on the packaging. See Appendix D, Table D-26.
Penetration	Pass. The bar routinely penetrated the outer fiberboard surface but, considering the restricted contents, this is not significant. See Section 5.1.3, Restrictions/Specifications, and Appendix D, Table D-33.

5.1.5 Quality Control

Packaging/Acceptance/Use Criteria

Critical	Major	Acceptance/pre-use/ inspection criteria*
	Lid or cover/body interface	Functional: • Ease of lid application • Mating surfaces flat and smooth, no foreign matter • Geometry, as specified
Sealing methods/ materials	Materials, as specified	Acceptable Conditions: • Tape, water resistant • Staples, type and spacing • Thickness • Composition • Corrugations • Surface treatment, etc. • Dimensions, as specified
	Vendor experience and qualification	Vendor Data/Certification: • Marking • Test data • Type A certification document as appropriate Lot test/ inspections as appropriate by shipper.

*These criteria apply to first time use and reuse as a DOT-7A Type A packaging.

5.1.6 Additional Information

Evaluation and testing of this packaging were performed at MLM and were documented in Edling 1987. Complete evaluation reports are available upon request from one of the DOT-7A Program technical contacts listed in Section 1.1.2.

5.1.6.1 Primary Users

Site/Contact/Phone	Address
MMES H. E. Crowder COMM/FTS 615-574-2689	Martin Marietta Energy Systems, Inc. P. O. Box Y Oak Ridge Y-12 Plant Oak Ridge, TN 37830

5.1.6.2 Suppliers

- Tape--Polyken Industrial Tape, #837 Clear, 3 in.
  Kendall, Ployken Division
  Boston, MA 02101

- Triple-Wall
  Lewisburg Container Corporation
  Lewisburg, OH

Figure 5-2. LLNL Fiberboard Box.

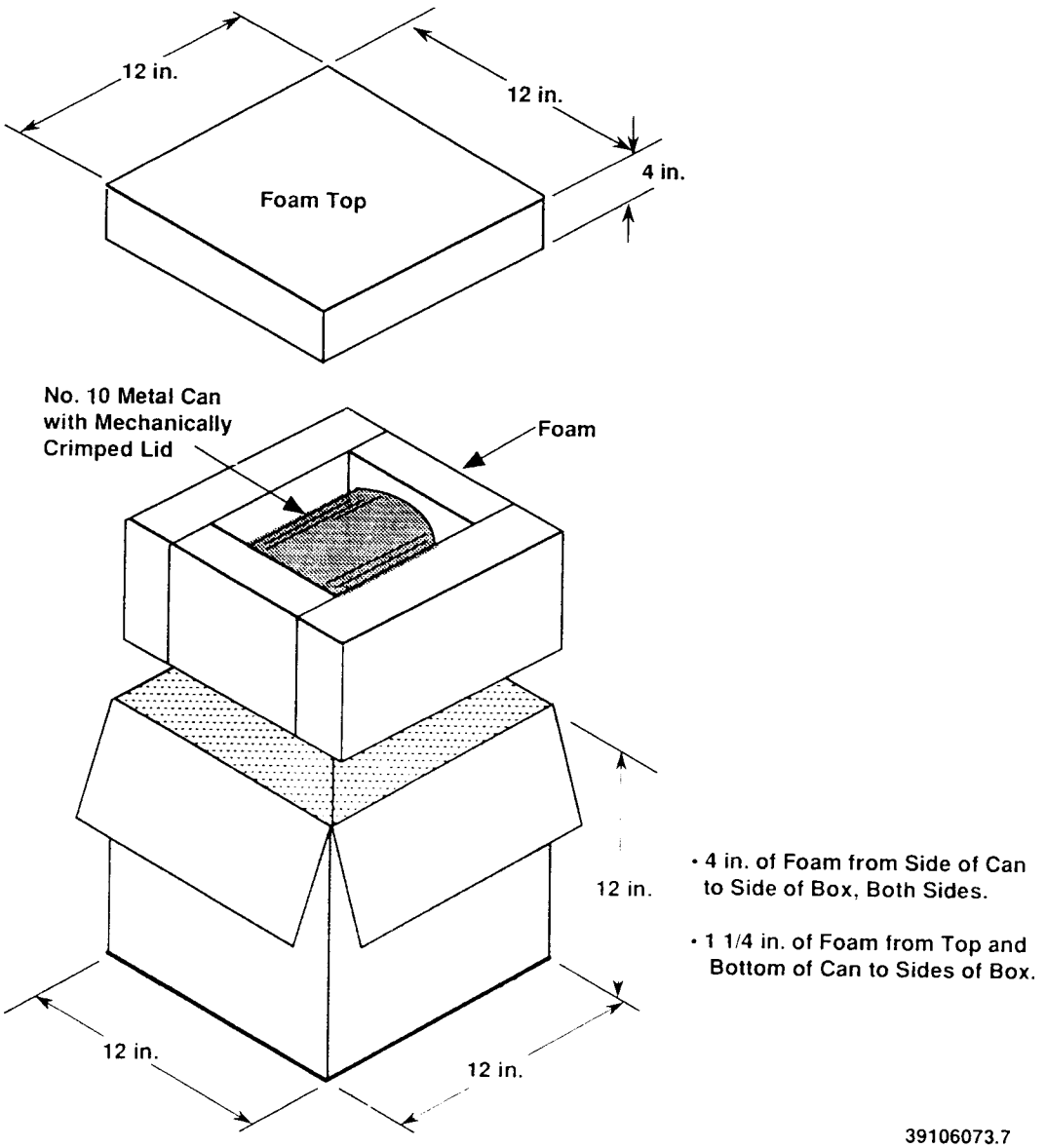

5.2 LLNL 12B-10 FIBERBOARD BOX

5.2.1 Package Description

Dimensions

Height (in.)	Width (in.)	Length (in.)
12	12	12

Materials/Method of Construction

Fiberboard box	12B-65 (49 CFR 178.205)
Foam cushioning	4-in. minimum--sides, top, and bottom
No. 10 metal can	Mechanically sealed
Tape	2-in. fiber reinforced paper tape*

*This particular tape withstood the 1-hr water spray test with no significant effects.

5.2.2 Authorized Contents

The shipper must determine that the actual contents are closely simulated by the test contents. If they are not, testing or analysis must be conducted and documented to demonstrate DOT-7A compliance with the actual contents.

5.2.2.1 Physical Form

5.2.2.1.1 Solids Only. Three material forms are authorized. Each shipper must determine the most appropriate form for his particular contents and comply with any special requirements (e.g., RTV, inner bag, etc.).

- Material Form No. 1: Solids--any particle size.
- Material Form No. 2: Solids--large particle size only (e.g., sand, concrete, debris, soil, etc.).
- Material Form No. 3: Solids--objects with no significant dispersible or removable contamination. (For definition, see 49 CFR 173.433, Contamination control.)

5.2.2.1.2 Maximum Gross Weight

- 10 lb.

5.2.2.2 Chemical Form. The shipper must evaluate and ensure chemical compatibility of the material to be shipped with the materials of the packaging in contact with the payload.

5.2.2.3 Radiological. The 4-ft drop test caused deformations of the package resulting in small decreases in the distance from the exterior to the center of the package. The shipper must ensure that the radiation level at any surface would not increase by more than 20% (relative to the radiation level of the undamaged configuration) if such deformations would occur.

5.2.3 Restrictions/Specifications

Contents must be of a size that would not move through the 1.25-in.-diameter hole resulting from the penetration test bar.

Water-resistant tape is required.

5.2.4 49 CFR 178.350 Regulatory Requirements

Regulatory Compliance Assessment

Regulatory requirements	Testing/analysis results
49 CFR 173.24, Standard requirements for all packages	Meets applicable requirements. See Appendix A, Table A-4.
49 CFR 173.411, General design requirements	Meets applicable requirements. See Appendix B, Table B-4.
49 CFR 173.412, Additional requirements for Type A package	Meets applicable requirements. See Appendix C, Table C-7.
49 CFR 173.465, Type A packaging tests	Meets applicable requirements.
Water spray	Pass. This test was conducted prior to the tests shown below. This test by itself had no significant effect. Because of the sealed metal inner container, the potential inleakage of water will not adversely affect the performance. See Appendix D, Table D-6.
Free drop	Pass. This test was conducted on a top corner with only a minor crumbling of the impacted corner. After each test the metal can was inverted in water in a vacuum chamber and subjected to a reduced pressure. No bubbles were detected, indicating positive containment. See Appendix D, Table D-15.
Corner drop	Pass. The packaging would pass by analysis and comparison to tests on similar packagings. See Appendix D, Table D-21.
Compression	Pass. This test was conducted at 100 lb for 24 hr with no detectable effect. See Appendix D, Table D-26.
Penetration	Pass. This test was conducted on the side (impacted sealed end of can) and on the top of the box (impacted side of can). In each case the bar penetrated the box, but the foam prevented major damage to the can. In each case there was a dent approximately 0.5 in. in the can. After each test the metal can was inverted in water in a vacuum chamber and subjected to a reduced pressure. No bubbles were detected, indicating positive containment. See Appendix D, Table D-33.

5.2.5 Quality Control

Packaging/Acceptance/Use Criteria

Critical	Major	Acceptance/pre-use/ inspection criteria*
	Lid or cover/body interface	Functional: • Ease of lid application • Mating surfaces flat and smooth, no foreign matter • Geometry, as specified • Closure "secure"
Sealing methods/materials	Materials, as specified	Acceptable Conditions: • Tape, water resistant • Staples, type and spacing • Thickness • Composition • Corrugations • Surface treatment, etc. • Dimensions, as specified • Test seals conducted for can sealer • Testing of metal can seal as appropriate Vendor Test/Certification: • Marking • Test data • Type A evaluation documentation as appropriate Lot tests/inspections as appropriate by shipper

*These criteria apply to first-time use and to reuse as a DOT-7A Type A packaging.

5.2.6 Additional Information

Evaluation and testing of this packaging were performed at MLM and were documented in Edling 1987. Complete evaluation reports are available upon request from one of the DOT-7A Program technical contacts listed in Section 1.1.2

5.2.6.1 Primary Users

Site/Contact/Phone	Address
LLNL Steve Chin COMM/FTS 510-422-0470	University of California Lawrence Livermore National Laboratory P.O. Box 808 Livermore, CA 94550

Figure 5-3. Tri-Wall Package Fiberboard Box.

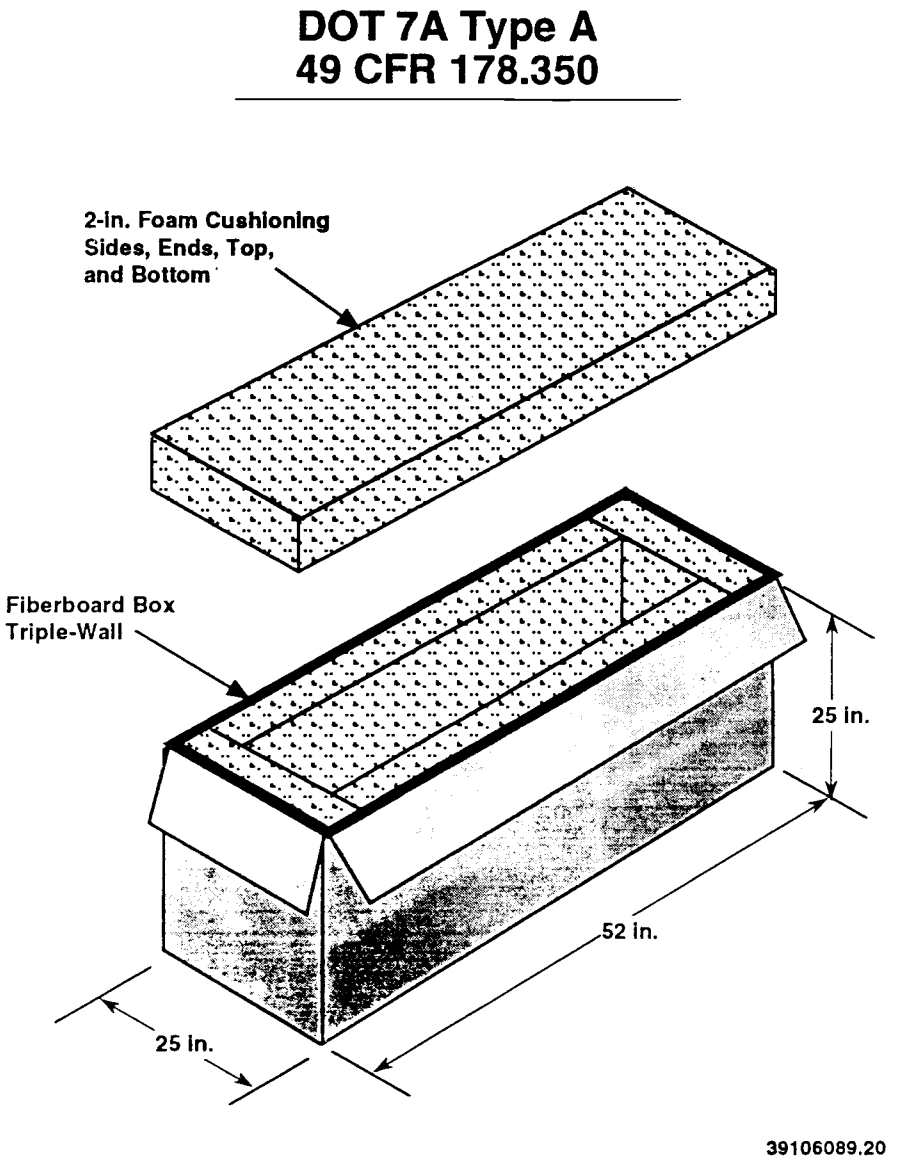

5.3 TRI-WALL FIBERBOARD BOX

5.3.1 Package Description

Dimensions

Height (in.)	Width (in.)	Length (in.)
25	25	52

Materials/Method of Construction

Tri-Wall fiberboard box	0.5 in. thick (see Section 5.3.6.2)
Urethane foam inserts	2 in. thick
Banding	Tested with 0.5-in. plastic bands 2 around sides and ends 2 around top and ends 2 around top, sides, and bottom Any equivalent or better banding is authorized
Taped closure	3-in. plastic tapes (or equivalent, see Section 5.3.6.2)

5.3.2 Authorized Contents

The shipper must determine that the actual contents are closely simulated by the test contents. If they are not, testing or analysis must be conducted and documented to demonstrate DOT-7A compliance with the actual contents.

5.3.2.1 Physical Form

5.3.2.1.1 Solids Only. One material form is authorized. Each shipper must determine the most appropriate form for his particular contents and comply with any special requirements (e.g., RTV, etc.).

- Material Form No. 3: Solids--objects with no significant dispersible or removable contamination. (For definition, see 49 CFR 173.433, Contamination control.)

5.3.2.1.2 Maximum Gross Weight

- 350 lb
  - Packaging = 75 lb
  - Net contents = 275 lb.

5.3.2.2 Chemical Form. The shipper must evaluate and ensure chemical compatibility of the material to be shipped with the materials of the packaging in contact with the payload.

5.2.2.3 Radiological. The 4-ft. drop test caused deformations of the package resulting in small decreases in the distance from the exterior to the center of the package. The shipper must ensure that the radiation level at any surface would not increase by more than 20% (relative to the radiation level of the undamaged configuration) if such deformations would occur.

5.3.3 Restrictions/Specifications

Contents restricted to solid objects with no significant dispersible or removable contamination.

Contents must be of a size that would not move through the 1.25-in.-diameter hole resulting from the penetration test bar.

Water resistant tape is required.

The following two possible approaches are acceptable with respect to addressing inleakage and ensuring that there is no transport of radioactive materials out of the packaging.

- Securely enclose the radioactive contents within the box (e.g., wrap and seal in plastic, etc.) so that any inleaking water cannot come in contact with the radioactive material.

- Ensure that there is no loose or removable contamination that would be entrained in any liquid and that the radioactive material is not soluble in the liquid. Thus, even if the liquids come in contact with the radioactive material, there could be no transport from the package.

NOTE: There are obviously other possible approaches; however, if an alternative approach is chosen, the basis for the choice must be supported and documented. The use of one of these alternatives or an equivalent method allows these boxes to meet this requirement.

For heavy, bulky materials (i.e., concrete chunks, motors, pumps, etc.), equipment or materials with sharp corners or protrusions, or material/containment geometries that could result in highly localized forces, the shipper must ensure that the contents are securely fastened/positioned within the package.

5.3.4 49 CFR 178.350 Regulatory Requirements

Testing/Analysis Results

49 CFR 173.24, Standard requirements for All packages	Meets applicable requirements. See Appendix A, Table A-4.
49 CFR 173.411, General design requirements	Meets applicable requirements. See Appendix B, Table B-4.
49 CFR 173.412, Additional requirements for Type A packages	Meets applicable requirements. See Appendix C, Table C-7.
49 CFR 173.465, Type A packaging tests	Meets applicable requirements.
Water spray	Pass. Packaging passes only when specified plastic tape is used. This test was conducted prior to each test. See Appendix D, Table D-6.
Free drop	Pass. The tests were conducted with the box impacting on the top corner. The only effect was a crumbling of the impacted corner. The maximum decrease in distance was 1.75 in. This is not expected to be significant; however, each shipper must make this determination. See Appendix D, Table D-15.
Corner drop	Not required.
Compression	Pass. This test was conducted at greater than 2,500 lb for 24 hr with no significant effect on the package geometry or loss of contents. See Appendix D, Table D-26.
Penetration	Pass. This test was conducted on the top (middle) and on one side (middle). In each case the bar penetrated the top and side wall, hence the Restriction in Section 5.3.3. See Appendix D, Table D-33.

5.3.5 Quality Control

Packaging/Acceptance/Use Criteria

Critical	Major	Acceptance/pre-use/ inspection criteria*
	Lid or cover/body interface	Functional: • Ease of lid application • Mating surfaces flat and smooth, no foreign matter • Geometry, as specified
Sealing methods/materials	Materials, as specified	Acceptable Conditions: • Tape, water resistant • Staples, type and spacing • Thickness • Composition • Corrugations • Surface treatment, etc. • Dimensions, as specified
	Vendor experience and qualification	Vendor Test/Certification: • Marking • Test data • Type A certification document, as appropriate Lot tests/inspections as appropriate by shipper.

*These criteria apply to first time use and to reuse as a DOT-7A Type A packaging.

5.3.6 Additional Information

Evaluation and testing of this packaging were performed at MLM and were documented in Edling 1987. Complete evaluation reports are available upon request from one of the DOT-7A Program technical contacts listed in Section 1.1.2.

5.3.6.1 Primary Users

Site/Contact/Phone	Address
MMES H. E. Crowder COMM/FTS 615-576-9100	Martin Marietta Energy Systems, Inc. P. O. Box Y Oak Ridge Y-12 Plant Oak Ridge, TN 37830

5.3.6.2 Suppliers

- Tape--Polyken Industrial Tape, #837 Clear, 3 in.
  Kendall, Polyken Division
  Boston, MA 02101

- Tri-Wall
  Gould Southern

Figure 5-4. DOT Specification 21C Fiberboard Drum.

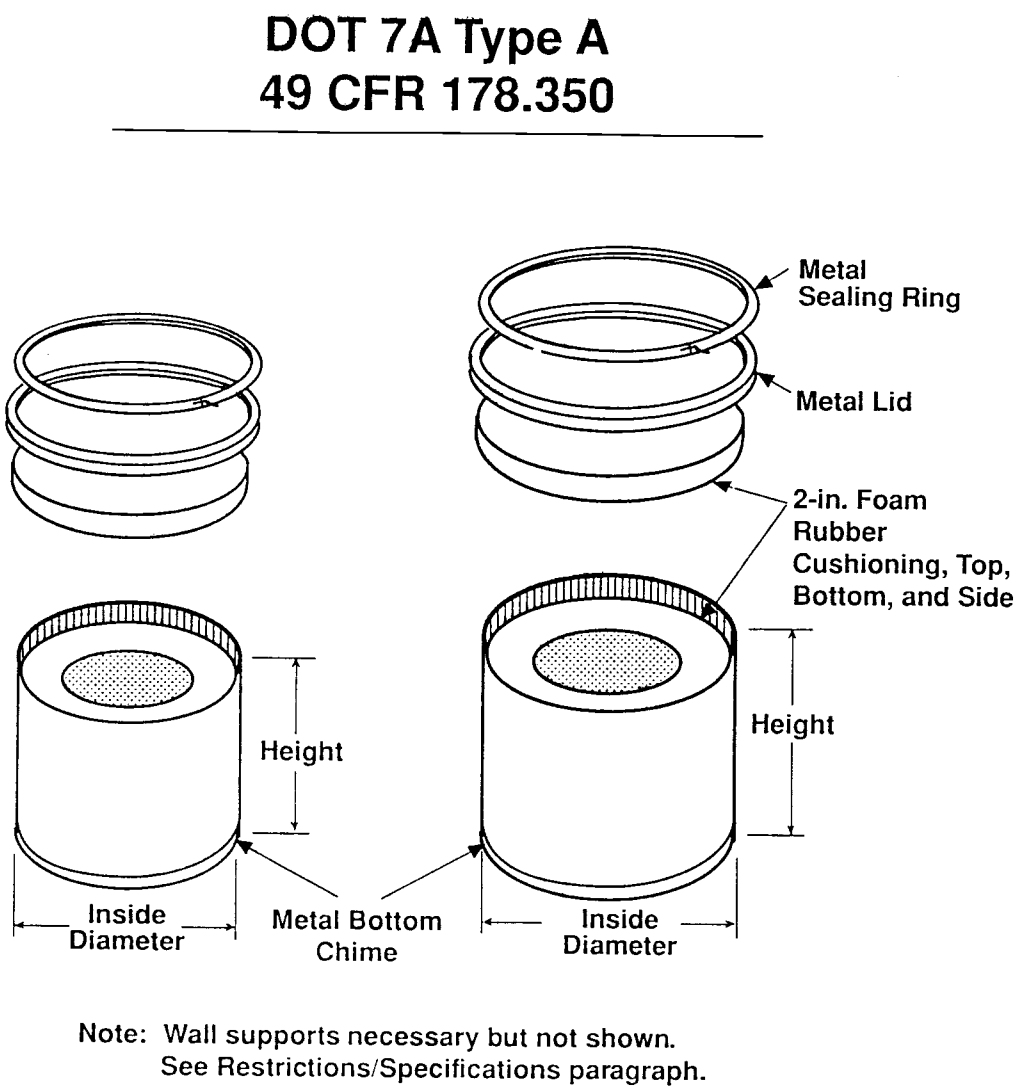

5.4 DOT-21C FIBERBOARD DRUM

5.4.1 Package Description

Dimensions and 4-ft Drop Test Results

Dimensions	Height (in.)	Diameter (in.)	Decrease in distance from corner to center of package (in.)
1	10.00	16.0	Bottom 0.75
2	15.50	16.0	Bottom 0.50
3	21.25	16.0	Top 1.00
4	9.75	20.5	Bottom 1.00
5	13.25	20.5	Bottom-chime 1.50
6	27.25	22.0	Bottom-chime 0.50

Materials/Method of Construction

Sides, walls, and bottom	Fiberboard (49 CAR 178.224)
Supports	Fiberboard Triple-Wall (See Section 5.4.6.2)
Top	Metal
Closure	Metal ring with lever style closure with gasket
Metal chime at bottom edge	
Gasket required	

5.4.2 Authorized Contents

The shipper must determine that the actual contents are closely simulated by the test contents. If they are not, testing or analysis must be conducted and documented to demonstrate DOT-7A compliance with the actual contents.

5.4.2.1 Physical Form

5.4.2.1.1 Solids Only. One material form is authorized. Each shipper must determine the most appropriate form for his particular contents and comply with any special requirements (e.g., RTV, etc.).

- Material Form No. 3: Solids--objects with no significant dispersible or removable contamination. (For definition, see 49 CFR 173.433, Contamination control.)

5.4.2.1.2 Maximum Gross Weight

- 115 lb.

5.4.2.2 Chemical Form. The shipper must evaluate and ensure chemical compatibility of the material to be shipped with the materials of the packaging in contact with the payload.

5.4.2.3 Radiological. The shipper must ensure that the radiation level at any surface would not increase by more than 20% (relative to the radiation level prior to the test) as a result of the decrease in distance to the center of the package resulting from the 4-ft drop test. This decrease in distance for each package is given in the Dimensions and 4-ft Drop Test Results table in Section 5.4.1.

5.4.3 Restrictions/Specifications

Contents must be of a size that would not move through the 1.25-in.-diameter hole resulting from the penetration test bar.

Triple-Wall supports (minimum of five 1-in. pieces on opposite sides of the package).

For heavy, bulky materials (e.g., concrete chunks, motors, pumps, etc.), equipment or materials with sharp corners or protrusions, or material/containment geometries that could result in highly localized forces, the shipper must ensure that the contents are securely fastened/positioned within the package.

5.4.4 49 CFR 178.350 Regulatory Requirements

Regulatory Compliance Assessment

Regulatory requirement	Testing/analysis results
49 CFR 173.24, Standard requirements for all packages	Meets applicable requirements. See Appendix A, Table A-4.
49 CFR 173.411, General design requirements	Meets applicable requirements. See Appendix B, Table B-4.
49 CFR 173.412, Additional requirements for Type A packages	Meets applicable requirements. See Appendix C, Table C-7.
49 CFR 173.465, Type A packaging tests	Meets applicable requirements.
Water spray	Pass. This test was conducted prior to all the tests shown below. This test by itself had no significant effect on the packagings and there was no evidence of inleakage of water. See Appendix D, Table D-5.
Free drop	Pass. This test was conducted on the top closure ring and bottom chime with no loss of contents and only a crumpling of the edge. The side drop had little detectable effect. Note the 20% radiation level analysis required in Section 5.4.3, Restrictions/ Specifications. See Appendix D, Table D-16.
Corner drop	Pass. This test was conducted on each package with no effect. Thus, these packages are authorized at all weights $\leq$ 115 lb. See Appendix D, Table D-22.
Compression	Pass. This test was conducted with five times the gross weight for 24 hr, and when the Triple-Wall supports (required) were used, this test had no significant effect on the packaging. See Section 5.4.3, Restriction/ Specifications. See Appendix D, Table D-26.
Penetration	Pass. The bar penetrated the side walls about 50% of the time, but, considering the restricted contents, this should not be of significance. See Section 5.4.3, Restrictions/Specifications. See Appendix D, Table D-33.

5.4.5 Quality Control

Packaging/Acceptance/Use Criteria

Critical	Major	Acceptance/pre-use/ inspection criteria*
Lid/body interface Sealing surface	Vendor qualifications and experience	Fiberboard containers are not reusable Functional: • Ease of lid application • Closure ring size • Geometry, as specified Acceptable Conditions: • Lack of dents, no deformation of sealing surfaces • Dimensions, as specified • No sharp edges
Gasket		• Gasket size, material, geometry, adhesives, as specified
Body and chime	Material thickness Composition	Lot tests by shipper as appropriate and/or vendor data/certification: • Marking • Test data • Type A certification document as appropriate
	Protective coating application	Visual: • Surface/coating as specified

*These criteria apply to first-time use and to reuse as a DOT-7A Type A packaging.

5.4.6 Additional Information

Evaluation and testing of this packaging were performed at MLM and were documented in Edling 1987. Complete evaluation reports are available upon request from one of the DOT-7A Program technical contacts listed in Section 1.1.2.

5.4.6.1 Primary Users

Site/Contact/Phone	Address
MMES H. E. Crowder COMM/FTS 615-574-2689	Martin Marietta Energy Systems, Inc. P. O. Box Y Oak Ridge Y-12 Plant Oak Ridge, TN 37830

5.4.6.2 Suppliers

Triple-Wall
Lewisburg Container Corporation
Lewisburg, OH

This page intentionally left blank.

6.0 UF_6 CYLINDERS

This page intentionally left blank.

Figure 6-1. UF_6 Cylinder, Model 1S.

DOT 7A Type A
49 CFR 178.350

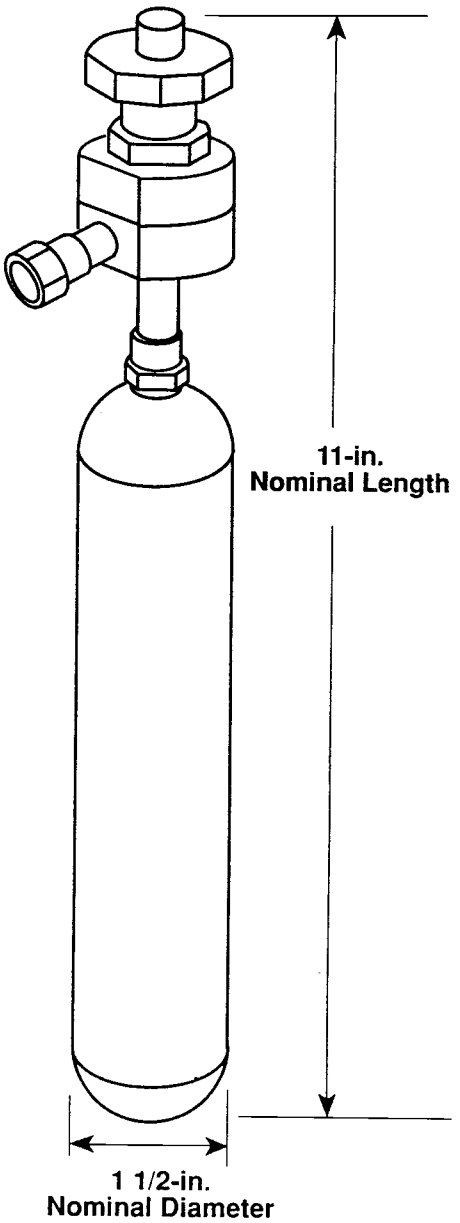

*Note:

For proper use, refer to ANSI N14.1 "Uranium Hexafluoride - Packaging for Transport", and ORO-651, "Uranium Hexafluoride - Handling Procedures and Container Descriptions."

39106089.37FH

Figure 6-2. UF_6 Cylinder, Model 2S.

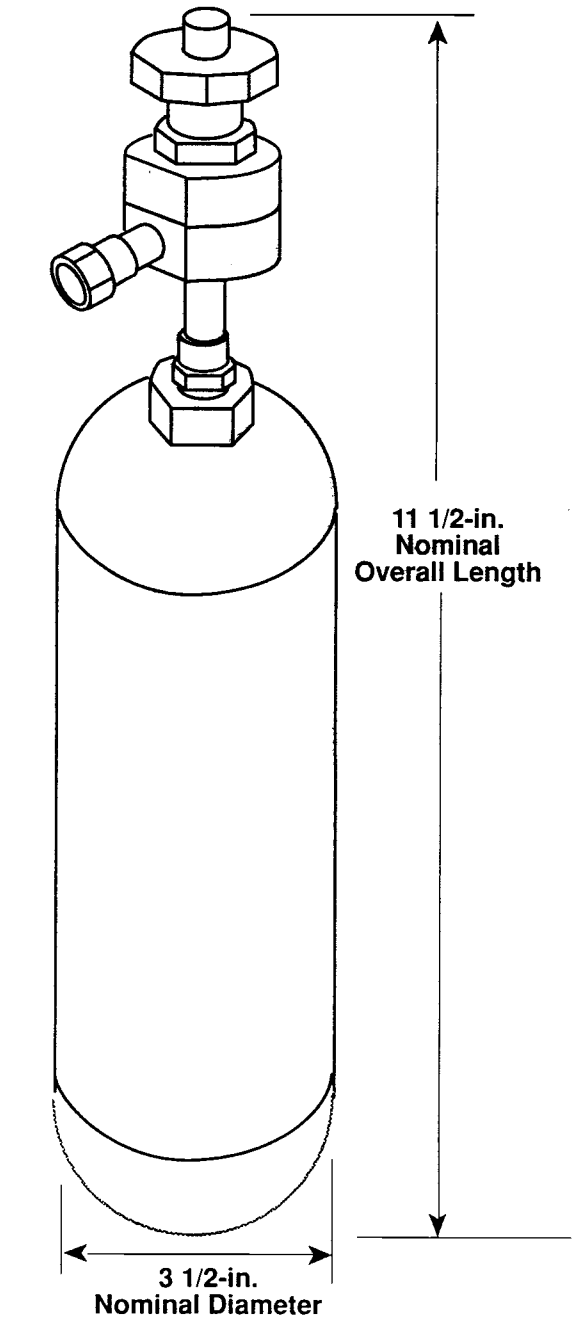

*Note:

For proper use, refer to ANSI N14.1 "Uranium Hexafluoride - Packaging for Transport", and ORO-651, "Uranium Hexafluoride - Handling Procedures and Container Descriptions."

39106089.38FH

Figure 6-3. UF_6 Cylinder, Modified Model 5A or Model 5B.

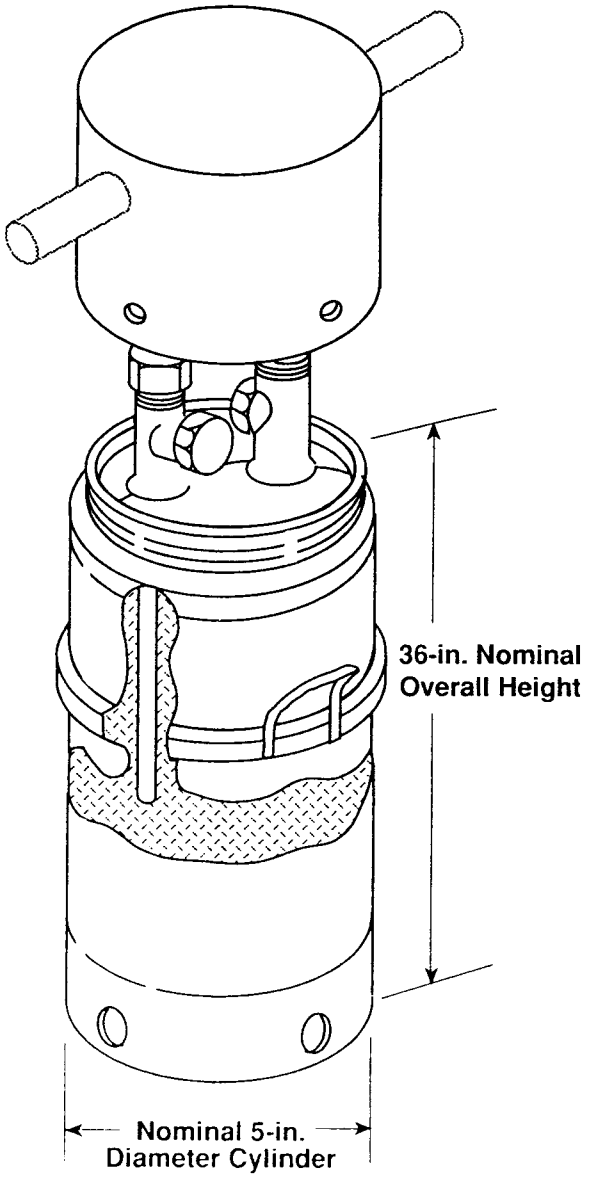

*Note:
For proper use, refer to ANSI N14.1 "Uranium Hexafluoride - Packaging for Transport", and ORO-651, "Uranium Hexafluoride - Handling Procedures and Container Descriptions."

39106089.47

Figure 6-4. UF_6 Cylinder, Model 8A.

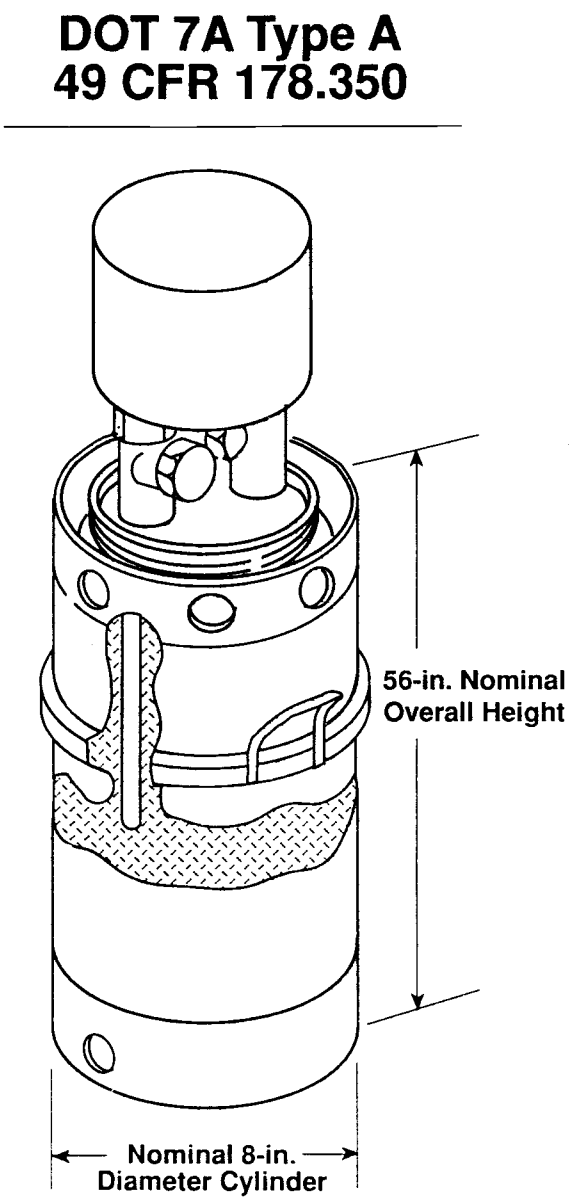

*Note:
For proper use, refer to ANSI N14.1 "Uranium Hexafluoride - Packaging for Transport", and ORO-651, "Uranium Hexafluoride - Handling Procedures and Container Descriptions."

39106089.48

Figure 6-5. UF_6 Cylinder, Model 12A.

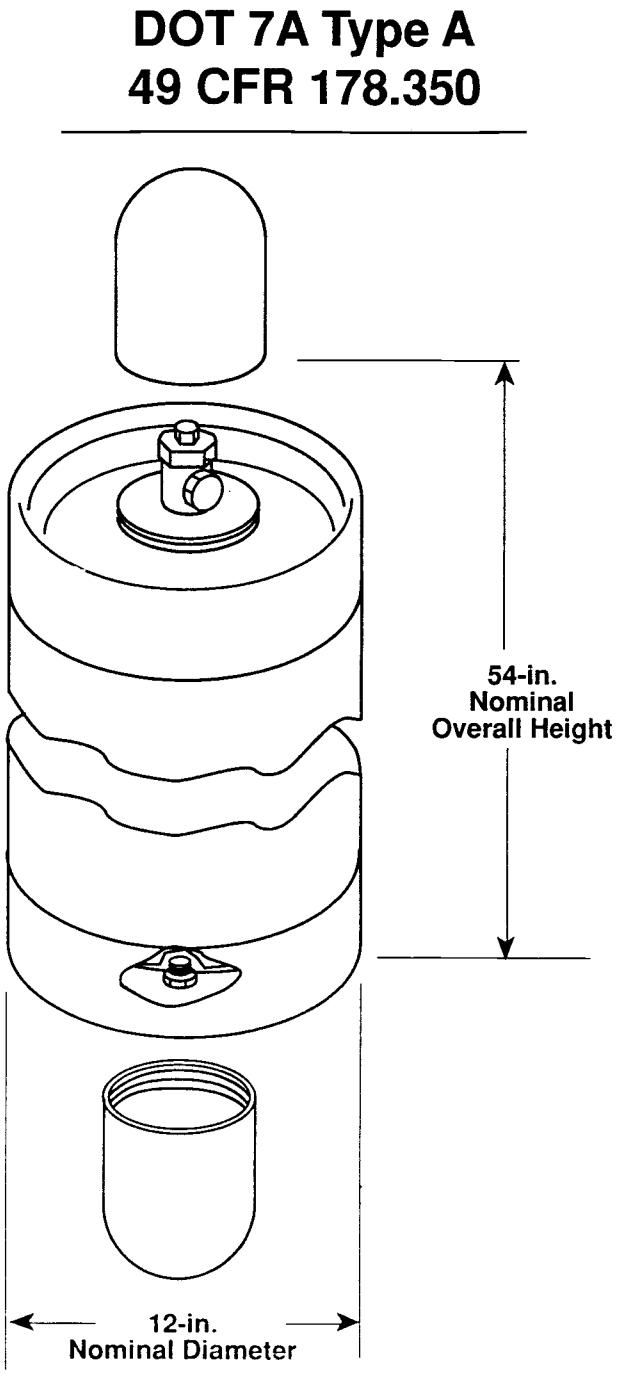

*Note:

For proper use, refer to ANSI N14.1 "Uranium Hexafluoride - Packaging for Transport", and ORO-651, "Uranium Hexafluoride - Handling Procedures and Container Descriptions."

39106089.39FH

Figure 6-6. UF_6 Cylinder, Model 12B*.

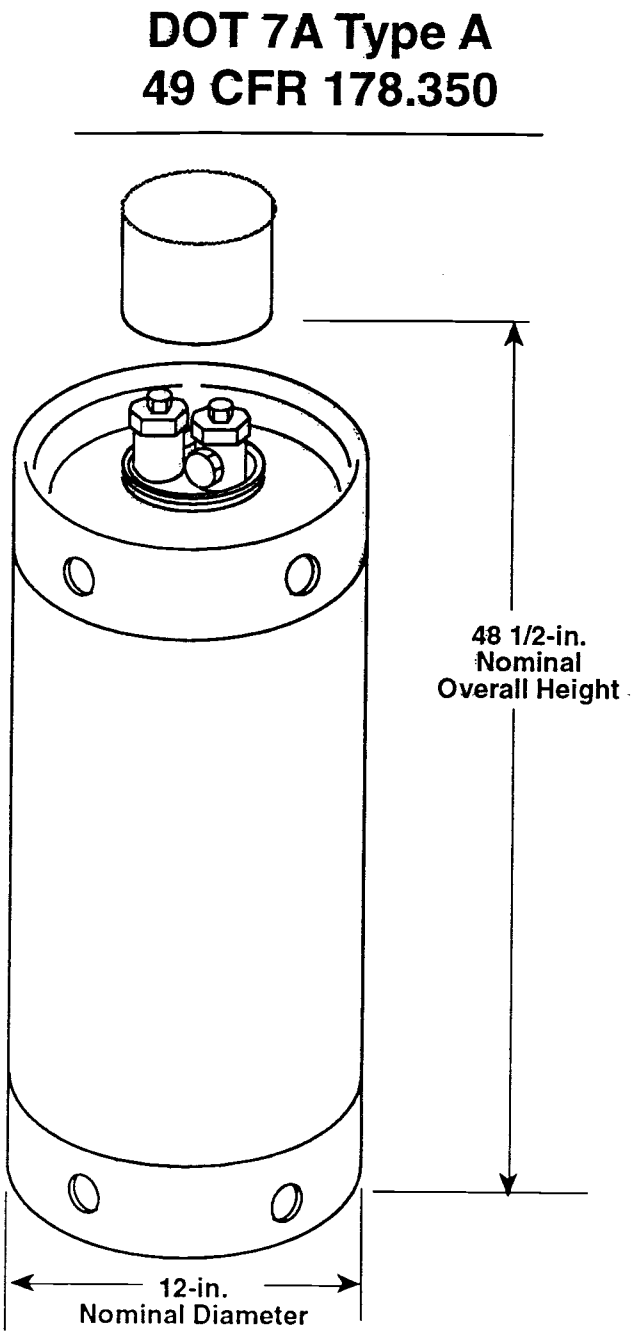

*Note:

For proper use, refer to ANSI N14.1 "Uranium Hexafluoride - Packaging for Transport", and ORO-651, "Uranium Hexafluoride - Handling Procedures and Container Descriptions."

39106089.41FH

Figure 6-7. UF_6 Cylinder, Model 30A*.

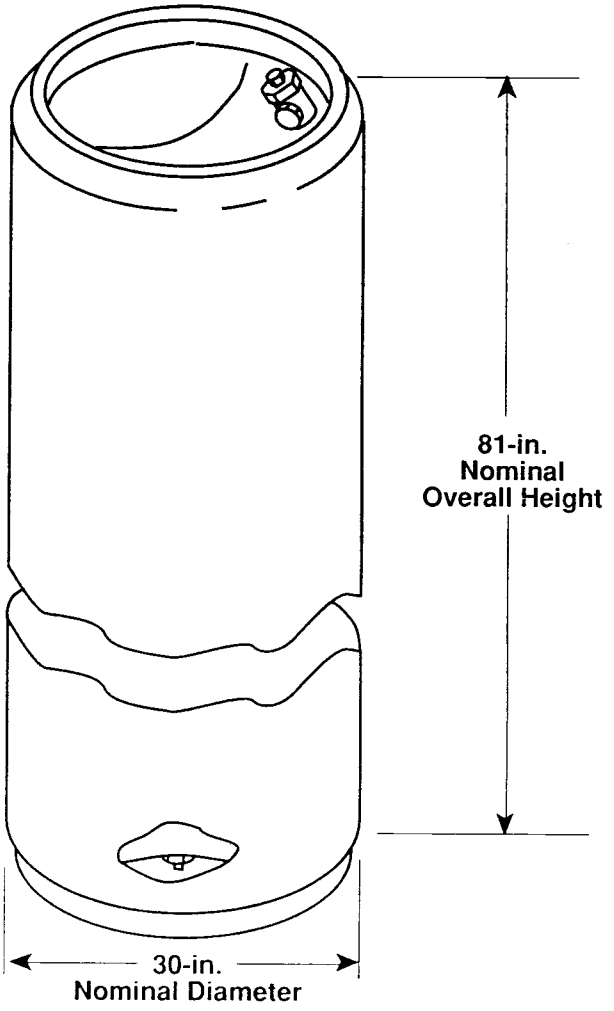

*Note:

For proper use, refer to ANSI N14.1 "Uranium Hexafluoride - Packaging for Transport", and ORO-651, "Uranium Hexafluoride - Handling Procedures and Container Descriptions."

39106089.40FH

Figure 6-8. UF_6 Cylinder, Model 30B*.

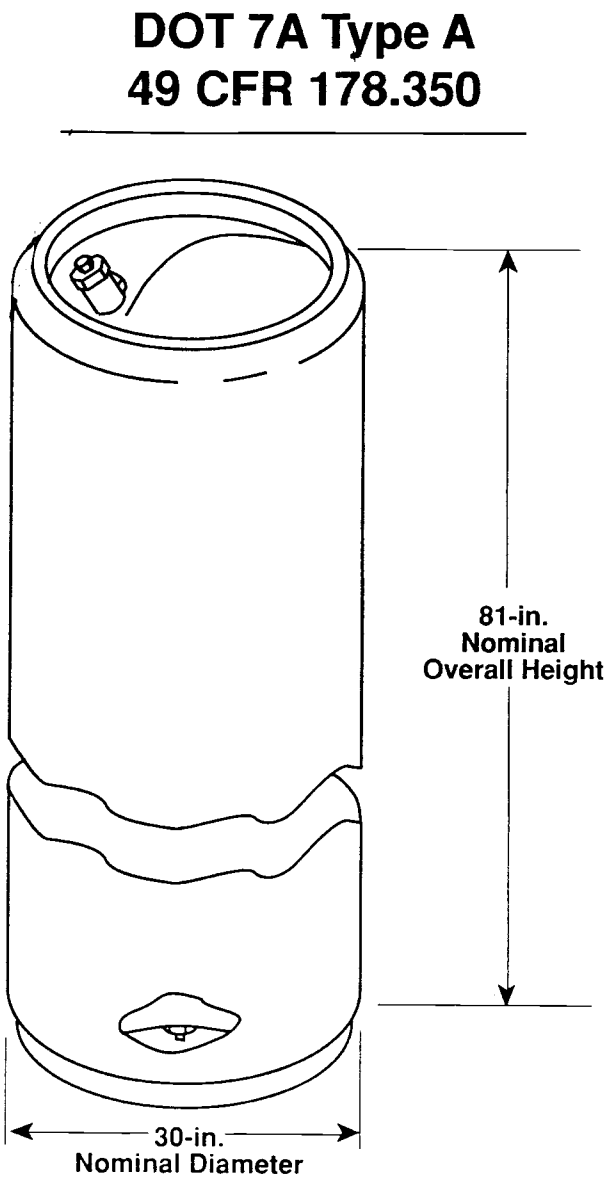

*Note:

For proper use, refer to ANSI N14.1 "Uranium Hexafluoride - Packaging for Transport", and ORO-651, "Uranium Hexafluoride - Handling Procedures and Container Descriptions."

39106089.42FH

Figure 6-9. UF_6 Cylinder, Model 48G*.

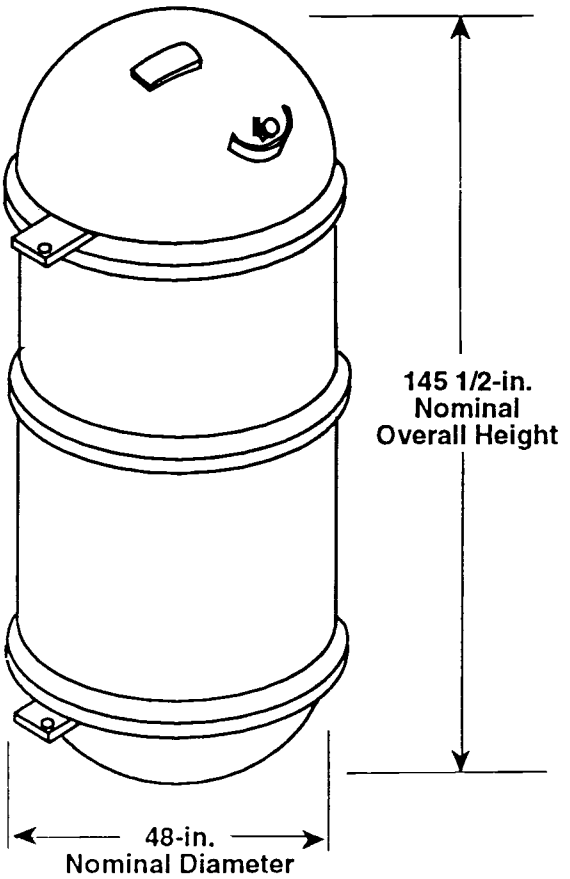

*Note:

For proper use, refer to ANSI N14.1 "Uranium Hexafluoride - Packaging for Transport", and ORO-651, "Uranium Hexafluoride - Handling Procedures and Container Descriptions."

39106089.43FH

Figure 6-10. UF_6 Cylinder, Model 48H and Model 48Hx*.

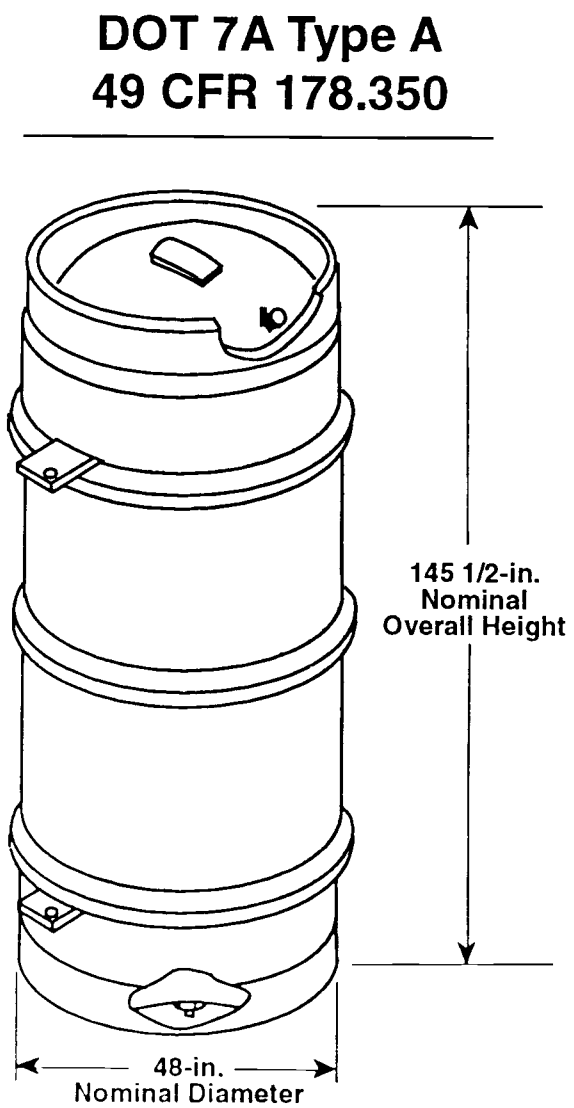

*Note:

For proper use, refer to ANSI N14.1 "Uranium Hexafluoride - Packaging for Transport", and ORO-651, "Uranium Hexafluoride - Handling Procedures and Container Descriptions."

39106089.44FH

Figure 6-11. UF_6 Cylinder, Model 48X.*

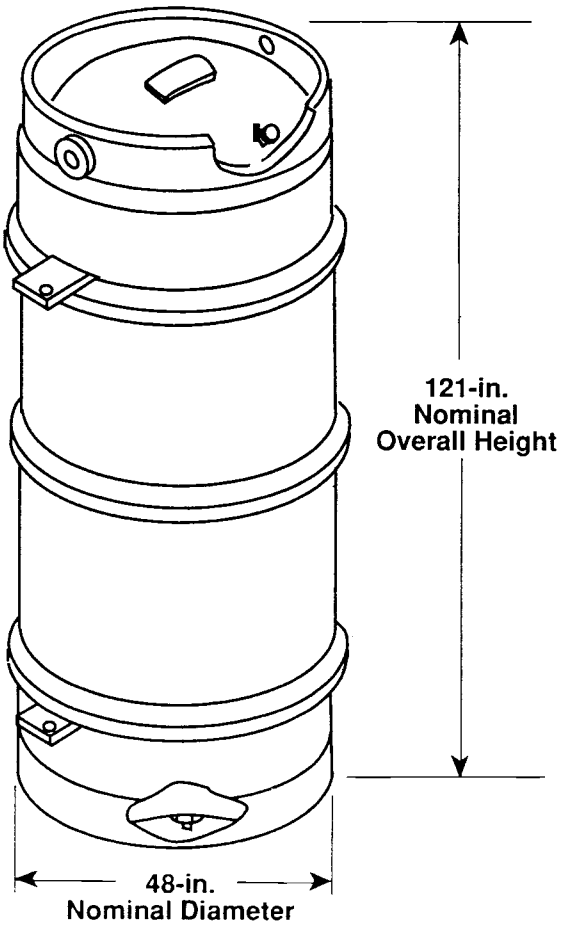

*Note:

For proper use, refer to ANSI N14.1 "Uranium Hexafluoride - Packaging for Transport", and ORO-651, "Uranium Hexafluoride - Handling Procedures and Container Descriptions."

39106089.45FH

Figure 6-12. UF_6 Cylinder, Model 48Y*.

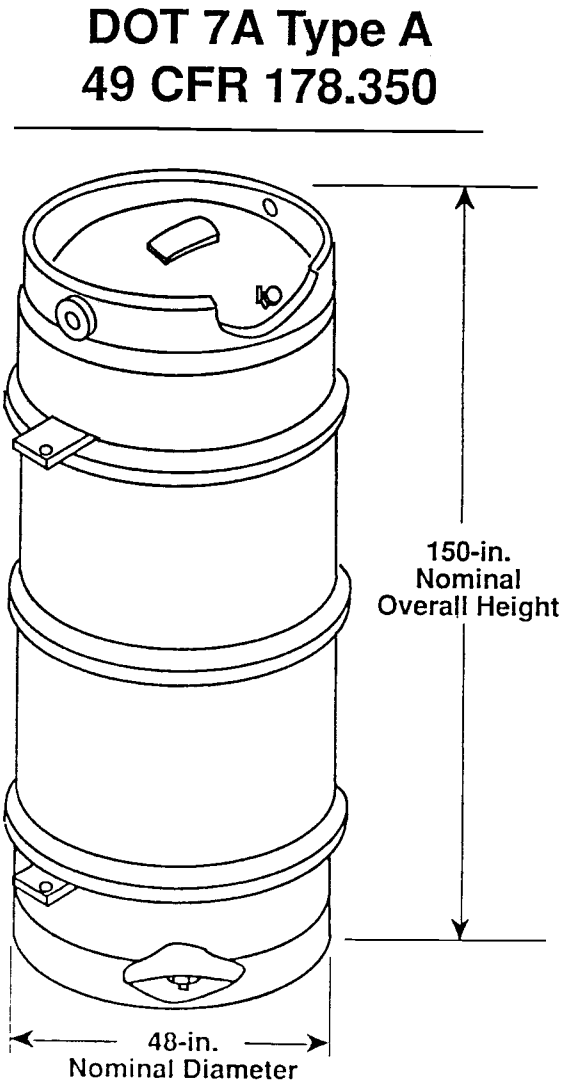

*Note:

For proper use, refer to ANSI N14.1 "Uranium Hexafluoride - Packaging for Transport", and ORO-651, "Uranium Hexafluoride - Handling Procedures and Container Descriptions."

39106089.46FH

6.1 UF_6 FAMILY OF CYLINDERS (DOCKETS: MLM)

6.1.1 Package Description

Dimensions and Weights

Model	Nominal length (in.)	Nominal diameter (in.)	Tare weight (lb)	Gross weight (lb)
1S	11.0	1.5	1.75	2.0
2S	11.5	3.5	4.20	9.5
5A	36.0	5.0	55.00	110.0
5B	36.0	5.0	55.00	110.0
8A	56.0	8.0	120.00	375.0
12A	54.0	12.0	185.00	645.0
12B	48.5	12.0	190.00	650.0
30A	81.0	30.0	1,400.00	6,350.0
30B	81.0	30.0	1,400.00	6,420.0
48G	145.5	48.0	2,600.00	30,600.0
48H	145.5	48.0	3,120.00	30,150.0
48Hx	145.5	48.0	3,120.00	30,150.0
48X	121.0	48.0	4,500.00	25,530.0
48Y	150.0	48.0	5,200.00	32,760.0

Materials/Method of Construction (sheet 1 of 2)

Model	Material	Minimum wall thickness (in.)	Valve[a]	Service pressure (psig)
1S	Nickel	0.0625	Monel	200
2S	Nickel or Monel	0.0625	Monel	200
5A	Monel	0.1250	Bronze/Monel	200
5B	Nickel	0.1250	Bronze/Monel	200
8A	Monel	0.1250	Bronze/Monel	200
12A	Nickel	0.1875	Bronze/Monel	200

Materials/Method of Construction (sheet 2 of 2)

Model	Material	Minimum wall thickness (in.)	Valve[a]	Service pressure (psig)
12B	Monel	0.1875	Bronze/Monel	200
30A	A-285 or A-516 Steel	0.3125	Bronze/Monel	192
30B	A-285[b] or A-516 Steel	0.3125	Bronze/Monel	200
48G	A-516 Steel	0.0313	Bronze/Monel	100
48H	A-516 Steel	0.2500	Bronze/Monel	100
48Hx	A-285 Steel	0.2500	Bronze/Monel	100
48X	A-285 or A-516 Steel	0.5000	Bronze/Monel	200
48Y	A-516 Steel	0.5000	Bronze/Monel	200

[a]Shall be in accordance with ANSI N14.1.
[b]Shall be in accordance with 49 CFR 173.420.

6.1.2 Authorized Contents

The shipper must determine that the actual contents are closely simulated by the test contents. If they are not, testing or analysis must be conducted and documented to demonstrate DOT-7A compliance with the actual contents.

6.1.2.1 Physical Form

6.1.2.1.1 **Solids.** One material form is authorized. Each shipper must determine the most appropriate form for his particular contents and comply with any special requirements.

- UF_6 solid.

6.1.2.1.2 **Maximum Gross Weight.** See the Dimensions and Weights table in Section 6.1.1.

6.1.2.2 **Chemical Form.** The shipper must evaluate and ensure chemical compatibility of the material to be shipped with the materials of the packaging in contact with the payload.

6.1.2.3 **Radiological.** The 4-ft drop test caused deformations of the package resulting in small decreases in the distance from the exterior to the center of the package. The shipper must ensure that the radiation level at any surface would not increase by more than 20% (relative to the radiation level of the undamaged configuration) if such deformations would occur.

6.1.3 Restrictions/Specifications

The packaging shall be operated in accordance with *Uranium Hexafluoride: Handling Procedures and Container Description* (Keller 1966).

6.1.4 49 CFR 178.350 Regulatory Requirements

Regulatory Compliance Assessment

Regulatory requirements	Testing/analysis results
49 CFR 173.24, Standard requirements for all packages	Meets applicable requirements. See Appendix A, Table A-5.
49 CFR 173.411, General design requirements	Meets applicable requirements. See Appendix B, Table B-5.
49 CFR 173.412, Additional requirements for Type A packages	Meets applicable requirements. See Appendix C, Table C-8.
49 CFR 173.465, Type A packaging tests	Meets applicable requirements.
Water spray	Pass. Test not conducted; however by analysis of the materials and methods of construction it is easily determined that this test would not adversely affect the ability of this packaging to meet this Type A test requirement. See Appendix D, Table D-7.
Free drop	Pass. By analysis and comparison to 30-ft drop tests on the edges of the 5A, 8A, 12B, 30B, and 48X cylinders, it can be determined that the deformation in a 4-ft drop test would not be significant with respect to radiation levels. See Appendix D, Table D-17.
Corner drop	Not required.
Compression	Pass. Computer analysis demonstrated that all cylinders would pass this test. See Appendix D, Table D-27.
Penetration	Pass. By analysis and comparison to tests on thinner metals, this test would result in only minor dents. The valves are protected by covers. See Appendix D, Table D-34.

6.1.5 Quality Control

Packaging/Acceptance/Use Criteria

Critical	Major	Acceptance/pre-use/ inspection criteria*
Body	Metal thickness	Functional:
• Support rings		• Seal--body and valves
• Materials		• Fit--transport cradle
• Valves		• Geometry, as specified
Weld/seams		Acceptable conditions:
		• Welds radiographed
		• No sharp edges
		• Absence of dents or deformations on surfaces
		• Dimensions, as specified
Leak tests	Vendor qualifications and experience	Vendor data/certification:
		• Marking
		• Test data
		• ASME Boiler and Pressure Vessel Code Certification
		Lot tests by shipper, as appropriate
	Protective coating	Visual:
		• Surface/coating, as specified
		• Absence of imperfections in application
		• Absence of dents, nicks

*These criteria apply to first-time use and reuse as a DOT-7A Type A packaging.

ASME = American Society of Mechanical Engineers.

6.1.6 Additional Information

Evaluation and testing of this packaging were performed at MLM and were documented in Edling 1987. Complete evaluation reports are available upon request from one of the DOT 7A Program technical contacts listed in Section 1.1.2

6.1.6.1 Primary Users

Site/Contact/Phone	Address
MMES	Paducah Gaseous Diffusion Plant
B. K. Hook	Martin Marietta Energy Systems, Inc.
COMM/FTS 502-444-6311 x-363	P. O. Box 1410
COMM/FTS 614-289-2331	Paducah, KY 42001

Figure 6-13. UF_6 Cylinder, Modified Model 5A and Model 5B.

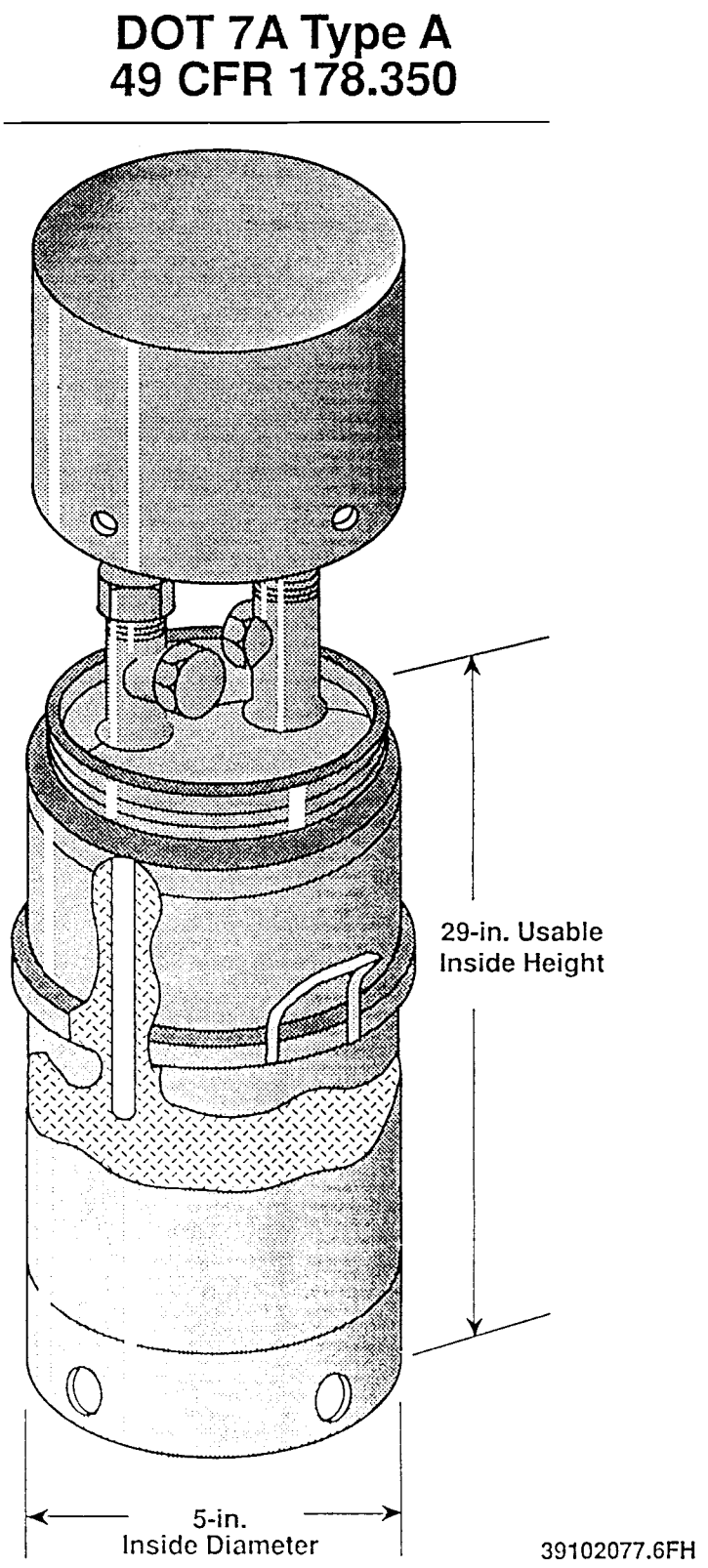

6.2 UF_6 CYLINDERS, ORNL MODIFIED 5A AND 5B (DOCKETS: 89-08-7A, 02/90)

6.2.1 Package Description

Dimensions and Weights

Model	Overall length (in.)	Outer diameter (in.)	Empty weight (lb)	Gross weight (lb)
Modified 5A	35.625	5.563	55	110
Modified 5B	35.625	5.563	55	110

Materials/Method of Construction

Model	Shell body material	Wall thickness (in.)	Cylinder heads	Valve coupling	Service pressure (psig)
Modified 5A	Nickel-copper ASTM B-165	0.258	Ellipsoidal nickel	Nickel-copper	200
Modified 5B	Nickel ASTM B-161	0.258	Ellipsoidal nickel	Nickel	200

ASTM = American Society for Testing and Materials.

6.2.1.1 Drawings

- Modified 5A: CX-761-M2011, CX-761-M2111, and CX-761-M2123
- Modified 5B: DX-761-2208ME.

6.2.2 Authorized Contents

The shipper must determine that the actual contents are closely simulated by the test contents. If they are not, testing or analysis must be conducted and documented to demonstrate DOT-7A compliance with the actual contents.

6.2.2.1 Physical Form

6.2.2.1.1 Solid

- UF_6.

6.2.2.1.2 Maximum Gross Weight. See the Dimension and Weights table in Section 6.2.1.

6.2.2.2 Chemical Form. The shipper must evaluate and ensure chemical compatibility of the material to be shipped with the materials of the packaging in contact with the payload.

6.2.2.3 Radiological. The 4-ft drop test caused deformations of the package resulting in small decreases in the distance from the exterior to the center of the package. The shipper must ensure that the radiation level at any surface would not increase by more than 20% (relative to the radiation level of the undamaged configuration) if such deformations would occur.

6.2.3 Restrictions/Specifications

The packaging shall be operated in accordance with Keller 1966.

6.2.4 49 CFR 178.350 Regulatory Requirements

Regulatory Compliance Assessment

Regulatory requirements	Testing/analysis results
49 CFR 173.24, Standard requirements for all packages	Meets applicable requirements. See Appendix A, Table A-5.
49 CFR 173.411, General design requirements	Meets applicable requirements. See Appendix B, Table B-5.
49 CFR 173.412, Additional requirements for Type A packages	Meets applicable requirements. See Appendix C, Table C-8.
49 CFR 173.465, Type A packaging tests	Meets applicable requirements.
Water spray	Pass. This test was conducted and there was no inleakage of water and no features on the package that retained free standing water. See Appendix D, Table D-7.
Free drop, Fissile Class II	Pass. A series of 1-ft free packaging drops onto each of the quarters of each rim for each package were performed prior to the 4-ft free drop. See Appendix D, Table D-17.
Free drop	Pass. 4-ft drop test conducted on: Side--flat, on handles Side--flat, opposite handles Top--flat on top Top--CG over corner Bottom--flat on bottom Bottom--CG over corner. These tests were conducted using two 5A and two 5B cylinders. See Appendix D, Table D-17.
Corner drop	Not required.
Compression	Pass. This test was satisfied by performing a stress analysis using a compressive load of 625 lb. See Appendix D, Table D-27.
Penetration	Pass. Penetration bar was dropped on top and side of a 5A and 5B cylinder. See Appendix D, Table D-34.

6.2.5 Quality Control

Packaging/Acceptance/Use Criteria

Critical	Major	Acceptance/pre-use/ inspection criteria*
Lid/body interface Sealing surface	Vendor qualifications and experience	Functional: • Ease of lid/closure ring application • Bolt closure ring--bolt size • Gasket, adhesive, as specified • Geometry, as specified Acceptable conditions: • Lack of dents, no deformation of sealing surfaces • Dimensions, as specified • Continuous welds, no sharp edges
Gasket Weld areas Body and chime		
Air leak tests	Metal thickness	Lot tests by shipper, as appropriate.
	Bolt size	Vendor data and/or certification: • Marking • Test data • Type A certification document provided, as appropriate • Air leak tests
	Protective coating application	Visual: • Surface/coating, as specified • Lack of imperfections in application • Lack of rust, dents, nicks

*These criteria apply to first-time use and to reuse as a DOT-7A Type A packaging.

6.2.6 Additional Information

Evaluation and testing of the subject packaging took place at Westinghouse Hanford in 1990 as part of Docket 89-08-7A. Testing was completed in February 1990. A complete evaluation report is available upon request from one of the DOT 7A Program technical contacts listed in Section 1.1.2.

6.2.6.1 Primary Users

Site/Contact/Phone	Address
MMES R. A. Boelens COMM/FTS 614-897-2331	Martin Marietta Energy Systems, Inc. P.O. Box 628 Piketon, OH 45661

This page intentionally left blank.

7.0 LIQUIDS AND GASES

This page intentionally left blank.

Figure 7-1. MS-24347-7 Steel Drum (Liquids).

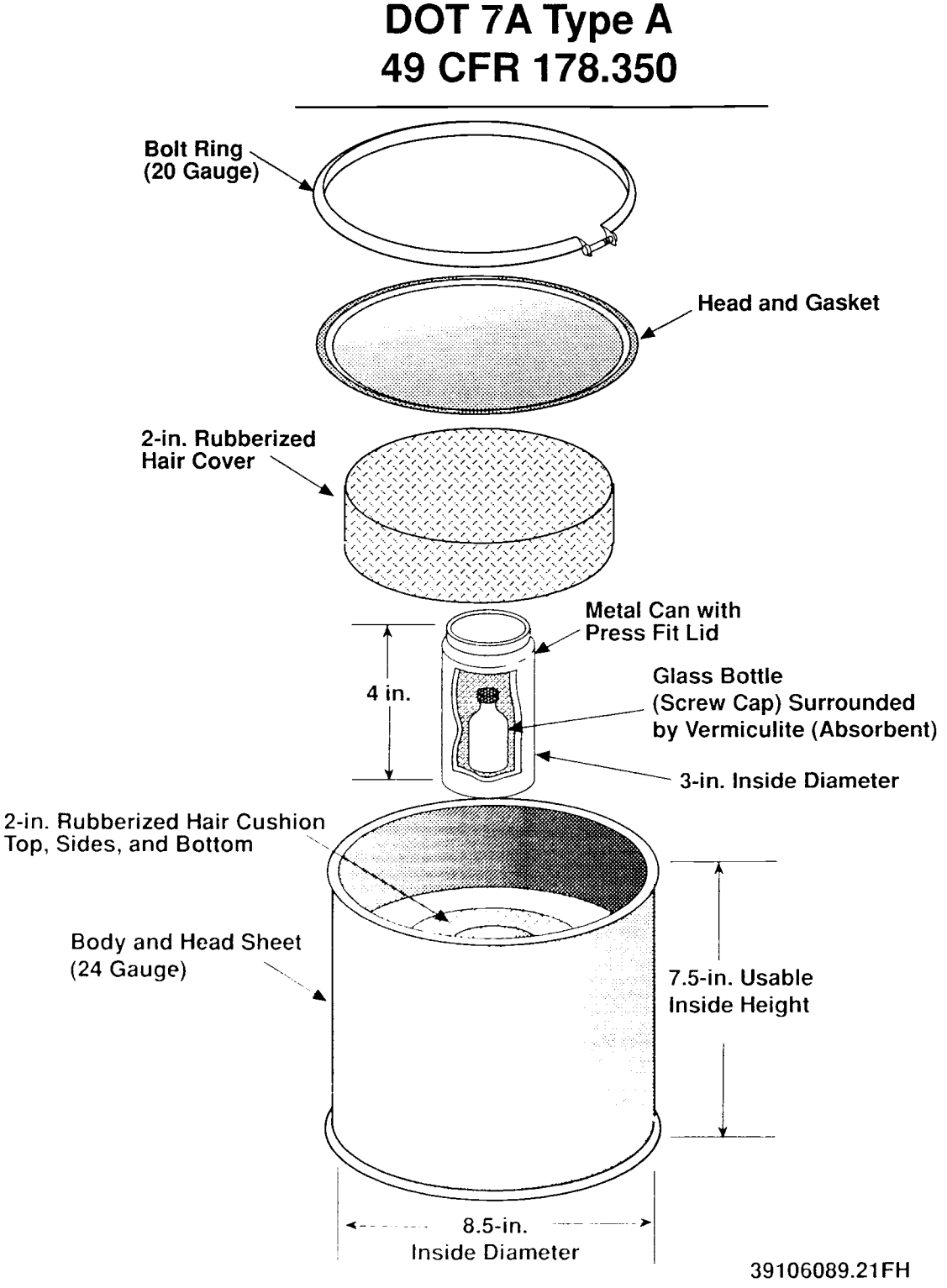

7.1 LOVELACE MS-24347-7 STEEL DRUM (LIQUIDS) (DOCKETS: MLM)

7.1.1 Package Description

Dimensions and Weights

Model	Inside height (in.)	Inside diameter (in.)	Volume (mL)
MS-24347-27	See p. 2-49	--	--
Paint can	4	3	--
Glass bottle with screw cap	--	--	50

Materials/Method of Construction

MS-24347-27	See p. 2-50
Paint can with press fit (friction) seal	3-in. inside diameter x 5-in. height
Cushioning	Rubberized hair--2 in. thick on top, sides, and bottom
Absorbent	Vermiculite
Glass bottle with plastic screw cap	NOTE: The bottle is designated as the primary containment vessel.

7.1.2 Authorized Contents

The shipper must determine that the actual contents are closely simulated by the test contents. If they are not, testing or analysis must be conducted and documented to demonstrate DOT-7A compliance with the actual contents.

7.1.2.1 **Physical Form.** Liquid radioactive materials.

7.1.2.1.1 **Maximum Gross Weight**

- 6 lb.

7.1.2.2 **Chemical Form.** The shipper must evaluate and ensure chemical compatibility of the material to be shipped with the materials of the packaging in contact with the payload.

7.1.2.3 Radiological

The shipper must ensure that the radiation level at any surface will not increase by more than 20% (relative to the radiation level prior to the test) as a result of the decrease in distance to the center of the package resulting from the side penetration test. This decrease in distance was 1.25 in.

7.1.3 Restrictions/Specifications

The drum lid closure ring bolt shall be tightened with tapping of ring until lugs begin to bend or to come together, typically less than 40 ft-lb.

Twice the absorbent shall be used because a volume of 50 cm^3 cannot be achieved in this bottle.

Shipper must demonstrate at least twice the absorbent capacity for the liquid contents.

For airborne shipments, HM-181 requirements pertinent to reduced external pressure conditions may be invoked, see discussion in Section 1.3.4

7.1.4 49 CFR 178.350 Regulatory Requirements

Regulatory Compliance Assessment

Regulatory requirements	Testing/analysis results
49 CFR 173.24, Standard requirements for all packages	Meets applicable requirements. See Appendix A, Table A-6.
49 CFR 173.411, General design requirements	Meets applicable requirements. See Appendix B, Table B-6.
49 CFR 173.412, Additional requirements for Type A packages	Meets applicable requirements. See Appendix C, Table C-10.
49 CFR 173.465, Type A packaging tests	Meets applicable requirements.
Water spray	Pass. Tests conducted on representative drums demonstrated compliance with this test. See Appendix D, Table D-8.
Free drop (30 ft)	Pass. Several tests were conducted with the drum impacting on the bolt, bottom, and side. In one case, the same package was dropped three times before opening for analysis. The only effects were minor dents, and the bolt lugs broke off once. There was no distortion of the package geometry or significant movement of the inner packaging. See Appendix D, Table D-18.
Corner drop	Not required.
Compression	Pass. This test was conducted with 100 lb for 24 hr with no significant effect or change in package geometry. See Appendix D, Table D-28.
Penetration	Pass. This test was conducted on the top (middle and near an edge) and on the side from 5.5 ft. A minor dent occurred in the top (middle), and a major dent resulted in the side. See Appendix D, Table D-35.

7.1.5 Quality Control

Packaging/Acceptance/Use Criteria

Critical	Major	Acceptance/pre-use/ inspection criteria*
Lid/body interface Sealing surface	Vendor qualifications and experience	Functional: • Ease of lid/closure ring application • Bolt closure ring--bolt size • Geometry, as specified • Bottle closure secure Acceptable Conditions: • Lack of dents, no deformation of sealing surfaces • Dimensions, as specified
Gasket		• Gasket size, materials, geometry
Weld areas		• Continuous welds, no sharp edges
Body and chime	Metal thickness	Lot tests by shipper, as appropriate and/or vendor data certification:
Air leak tests	Bolt size	• Marking • Test data • Type A certification document provided as appropriate
Absorbent		Material: • Twice that required • Appropriate for contents • Within shield (good practice, not mandatory)
	Protective coating application	Visual: • Surface/coating, as specified • Lack of imperfections in application • Lack of rust, dents, nicks

*These criteria apply to first-time use and to reuse as a DOT-7A Type A packaging.

7.1.6 Additional Information

Evaluation and testing of this packaging were performed at MLM and were documented in Edling 1987. Complete evaluation reports are available upon request from one of the DOT-7A Program technical contacts listed in Section 1.1.2.

7.1.6.1 Primary Users

Site/Contact/Phone	Address
Dr. J. J. Thompson COMM/FTS 505-844-2601	Lovelace Biomedical and Environmental Research Institute, Inc. P. O. Box 5890 Albuquerque, NM 87185

Figure 7-2. LANL Shielded Container Fiberboard Box.

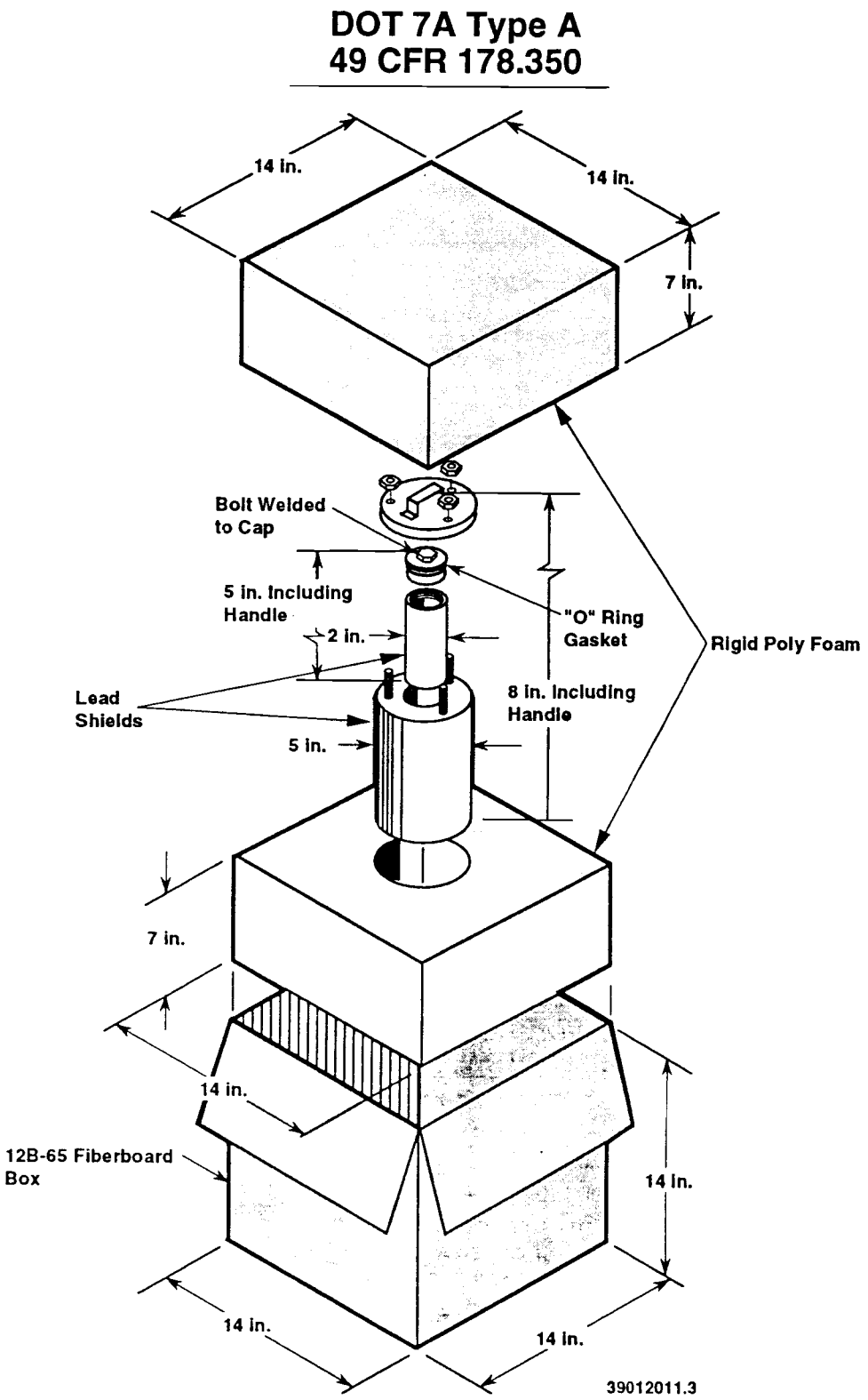

7.2 LANL 12B-62 FIBERBOARD BOX WITH LEAD SHIELDED INNER PACKAGING (LIQUIDS) (DOCKETS: MLM)

7.2.1 Package Description

Dimensions

Model	Inside height (in.)	Inside width (in.)	Length (in.)	Diameter (in.)	Depth (in.)
12B-65 box	14	14	14	--	--
Shielded lead container	8	5 (diameter)	--	2.875	4.625
Inner lead shielded container	5	2 (diameter)	--	0.625	4

Materials/Method of Construction

Fiberboard box	Spec 12B-65 (49 CFR 178.205) Side seams stapled Top and bottom seams taped NOTE: Plastic tape withstood water spray tests with no detectable effects.
Cushioning	Rigid polyfoam
Lead shielded containers (2)	Outer--Bolt closure Inner--O-ring sealed, screw-top lid NOTE: This packaging is considered the primary containment vessel.
Inner container	Glass ampoule with crimped metal top

7.2.2 Authorized Contents

The shipper must determine that the actual contents are closely simulated by the test contents. If they are not, testing or analysis must be conducted and documented to demonstrate DOT-7A compliance with the actual contents.

7.2.2.1 **Physical Form.** Liquid radioactive materials.

7.2.2.1.1 Maximum Gross Weight

- 62 lb.

7.2.2.2 Chemical Form. The shipper must evaluate and ensure chemical compatibility of the material to be shipped with the materials of the packaging in contact with the payload.

7.2.2.3 Radiological. The shipper must ensure that the radiation level at any surface will not increase by more than 20% relative to the radiation level prior to the test as a result of the decrease in distance to the center of the package resulting from the 30-ft drop test. The shielded inner container was displaced approximately 4 in. toward the point of impact (top corner), and the corner itself was compressed.

7.2.3 Restrictions/Specifications

Twice the absorbent shall be used because a volume of 50 cm^3 cannot be achieved.

Shipper must demonstrate at least twice the absorbent capacity for the liquid contents.

For airborne shipments, HM-181 requirements pertinent to reduced external pressure conditions may be invoked, see discussion in Section 1.3.4

7.2.4 49 CFR 178.350 Regulatory Requirements

Regulatory Compliance Assessment

Regulatory requirements	Testing/analysis results
49 CFR 173.24, Standard requirements for all packages	Meets applicable requirements. See Appendix A, Table A-6.
49 CFR 173.411, General design requirements	Meets applicable requirements. See Appendix B, Table B-6.
49 CFR 173.412, Additional requirements for Type A packages	Meets applicable requirements. See Appendix C, Table C-10.
49 CFR 173.465, Type A packaging tests	Meets applicable requirements.
Water spray	Pass. This test was conducted prior to each of the following tests with no detectable effect. See Appendix D, Table D-8.
Free drop (30 ft)	Pass. The tests were conducted with the box impacting on a top corner, and the shielded container thus impacted on the top bolted lid. Except for the crumpling of the corner and the movement of the shielded container (see Section 7.2.2.3, Radiological), there was no significant effect. See Appendix D, Table D-18.
Corner drop	The corner drop was conducted with no loss of contents or significant change in package geometry. See Appendix D, Table D-21.
Compression	Pass. This test was conducted with more than 325 lb for 24 hr with no significant change in package geometry. See Appendix D, Table D-28.
Penetration	Pass. This test was conducted with the bar impacting the middle of the top (1st test) and side (2nd test). In both cases, the fiberboard was penetrated; however, the bar did not contact the lead container. See Appendix D, Table D-35.

7.2.5 Quality Control

Packaging/Acceptance/Use Criteria

Critical	Major	Acceptance/pre-use/ inspection criteria*
Lid/body interface Sealing surface	Vendor qualifications and experience	Functional: • Ease of lid application • Geometry, as specified • Bottle closure secure Acceptable Conditions: • Lack of dents, no deformation of sealing surfaces • Dimensions, as specified
Gasket		• Gasket size, materials, geometry
Body	Metal thickness	Lot tests by shipper, as appropriate and/or vendor data certification:
Air leak tests	Bolt size	• Marking • Test data • Type A certification document provided as appropriate
Absorbent		Material: • Twice that required • Appropriate for contents • Within shield (good practice, not mandatory)
	Protective coating application	Visual: • Surface/coating, as specified • Lack of imperfections in application • Lack of rust, dents, nicks

*These criteria apply to first-time use and to reuse as a DOT-7A Type A packaging.

7.2.6 Additional Information

Evaluation and testing of this packaging were performed at MLM and were documented in Edling 1987. Complete evaluation reports are available upon request from one of the DOT-7A Program technical contacts listed in Section 1.1.2.

7.2.6.1 Primary Users

Site/Contact/Phone	Address
LANL N. King COMM/FTS 505-667-4127	Los Alamos National Laboratory P.O. Box 1663 Los Alamos, NM 87545

7.2.6.2 Tape. Scotch 3M Plastic Tape (2 in.), Product No. 3750-G.

Figure 7-3. LLNL Steel Drum/Gas Cylinder Packagings.

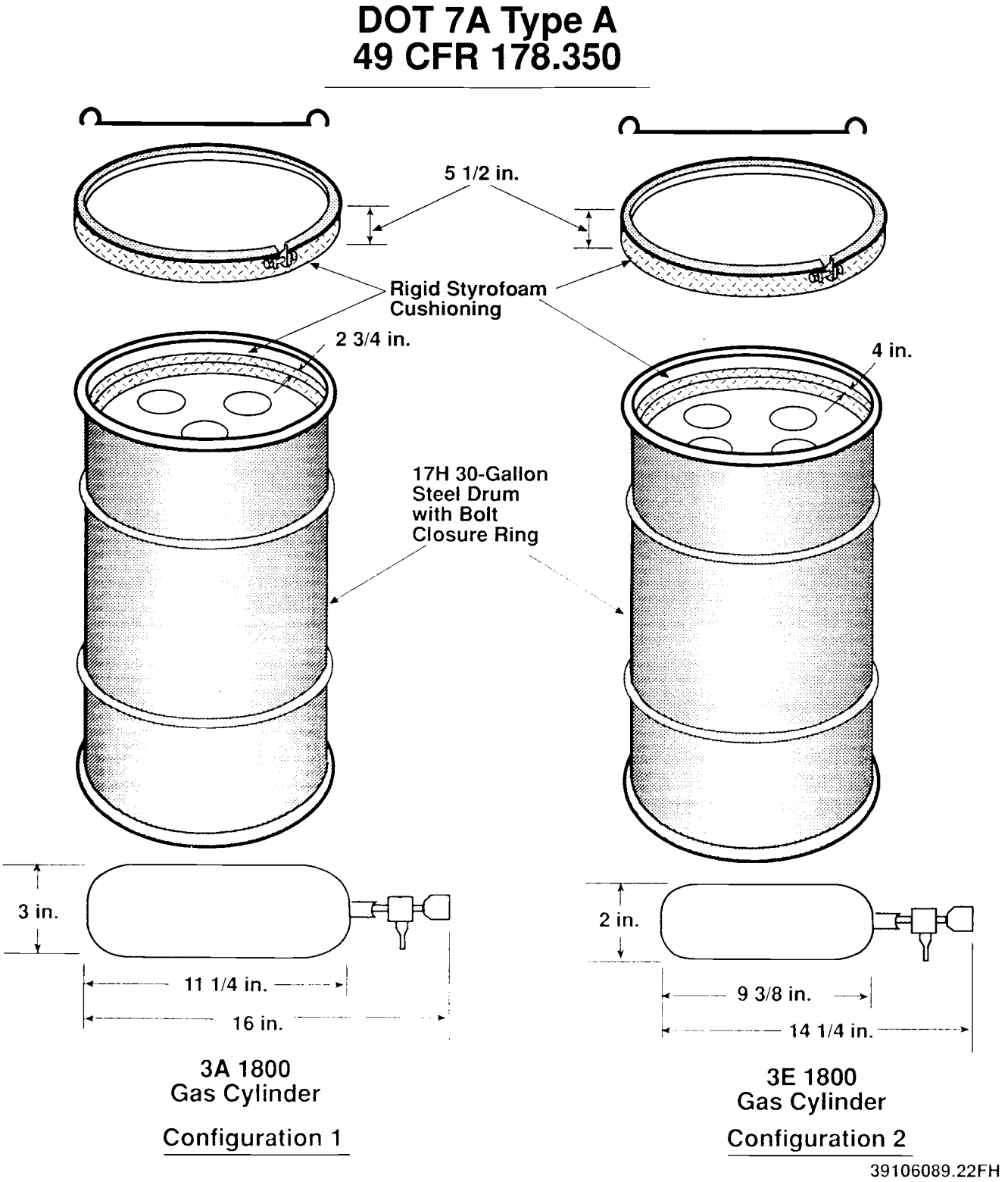

7.3 LLNL GAS CYLINDERS IN A STEEL DRUM (DOCKETS: MLM)

7.3.1 Package Description

Dimensions

Model	Diameter (in.)	Length (in.)	Volume (cm^3)
Spec 17H steel drum (30 gal)	See p. 2-37	--	--
3A 1800 cylinder	3	16.00	300
3E 1800 cylinder	2	14.25	1,000

Materials/Method of Construction

Spec 17H steel drum (30 gal)	See p. 2-37
3A 1800 cylinder	Seamless steel cylinder (see 49 CFR 178.36)
3E 1800 cylinder	Seamless steel cylinder (see 49 CFR 178.42)
Polystyrene foam liner with cover	
Configuration 1	Three 3A 1800 cylinders in polystyrene foam in 17H steel drum
Configuration 2	Four 3E 1800 cylinders in polystyrene foam in 17H steel drum

7.3.2 Authorized Contents

The shipper must determine that the actual contents are closely simulated by the test contents. If they are not, testing or analysis must be conducted and documented to demonstrate DOT-7A compliance with the actual contents.

7.3.2.1 Physical Form. Gaseous radioactive materials.

7.3.2.1.1 Maximum Gross Weight

- Configuration No. 1 = 68 lb
- Configuration No. 2 = 60 lb.

7.3.2.2 Chemical Form. The shipper must evaluate and ensure chemical compatibility of the material to be shipped with the materials of the packaging in contact with the payload.

7.3.2.3 Radiological. The 4-ft drop test caused deformations of the package resulting in small decreases in the distance from the exterior to the center of the package. The shipper must ensure that the radiation level at any surface would not increase by more than 20% (relative to the radiation level of the undamaged configuration) if such deformations would occur.

7.3.3 Restrictions/Specifications

Compliance with 49 CFR 178.36 and 49 CFR 178.42 is required.

No RTV (or equivalent) is required on 17H drums.

7.3.4 49 CFR 178.350 Regulatory Requirements

Regulatory Compliance Assessment

Regulatory requirements	Testing/analysis results
49 CFR 173.24, Standard requirements for all packages	Meets applicable requirements. See Appendix A, Table A-6.
49 CFR 173.411, General design requirements	Meets applicable requirements. See Appendix B, Table B-6.
49 CFR 173.412, Additional requirements for Type A packages	Meets applicable requirements. See Appendix C, Table C-10.
49 CFR 173.465, Type A packaging tests	Meets applicable requirements.
Water spray	Pass. Tests conducted on representative drums demonstrated compliance with this test. See Appendix D, Table D-8.
Free drop (30 ft)	Pass. This test was conducted on 17H steel drums (30 gal) with both types of cylinders. The impact point was the top (bolt) of the drum, and the cylinders thus were impacting on the valve (upper) portion. There was no loss of containment as determined by measuring internal pressure before and after the tests. There was no significant change in package geometry or orientation of the cylinders that would affect surface radiation levels. See Appendix D, Table D-18.
Corner drop	Not required.
Compression	Pass. Based on successful testing of 17H 30-gal drum. See Appendix D, Table D-28.
Penetration	Pass. This test was conducted on the top (middle) and side of the drum with only slight dents resulting. See Appendix D, Table D-35.

7.3.5 Quality Control

Packaging/Acceptance/Use Criteria

Critical	Major	Acceptance/pre-use/ inspection criteria*
Lid/body interface	Vendor qualifications and experience	Functional: • Ease of assembly, protective cap and body
Body materials, as specified	Metal thickness	• Seal, body and valves • Geometry, as specified • Fit within shipping case
Weld/seams		Acceptable conditions: • Welds radiographed or suitably monitored • No sharp edges • Absence of dents and deformations on surfaces • Dimensions, as specified
Leak tests	Vendor qualifications and experience	Vendor data/certification: • Marking • Test data • Type A certification document, as appropriate Lot tests by shipper, as appropriate.
	Protective coating	Visual: • Surface/coating, as specified • Absence of application imperfections • Absence of rust, dents, nicks

NOTE: See Figure 7-9 for criteria to be applied to cylinders.
*These criteria apply to first-time use and to reuse as a DOT-7A Type A packaging.

7.3.6 Additional Information

Evaluation and testing of this packaging were performed at MLM and were documented in Edling 1987. Complete evaluation reports are available upon request from one of the DOT-7A Program technical contacts listed in Section 1.1.2.

7.3.6.1 Primary Users

Site/Contact/Phone	Address
LLNL Steve Chin COMM/FTS 510-422-0470	University of California Lawrence Livermore National Laboratory P. O. Box 808 Livermore, CA 94550

Figure 7-4. ORNL Fiberboard Box Disposable Container for Radioactive Liquid and Solid Shipments.

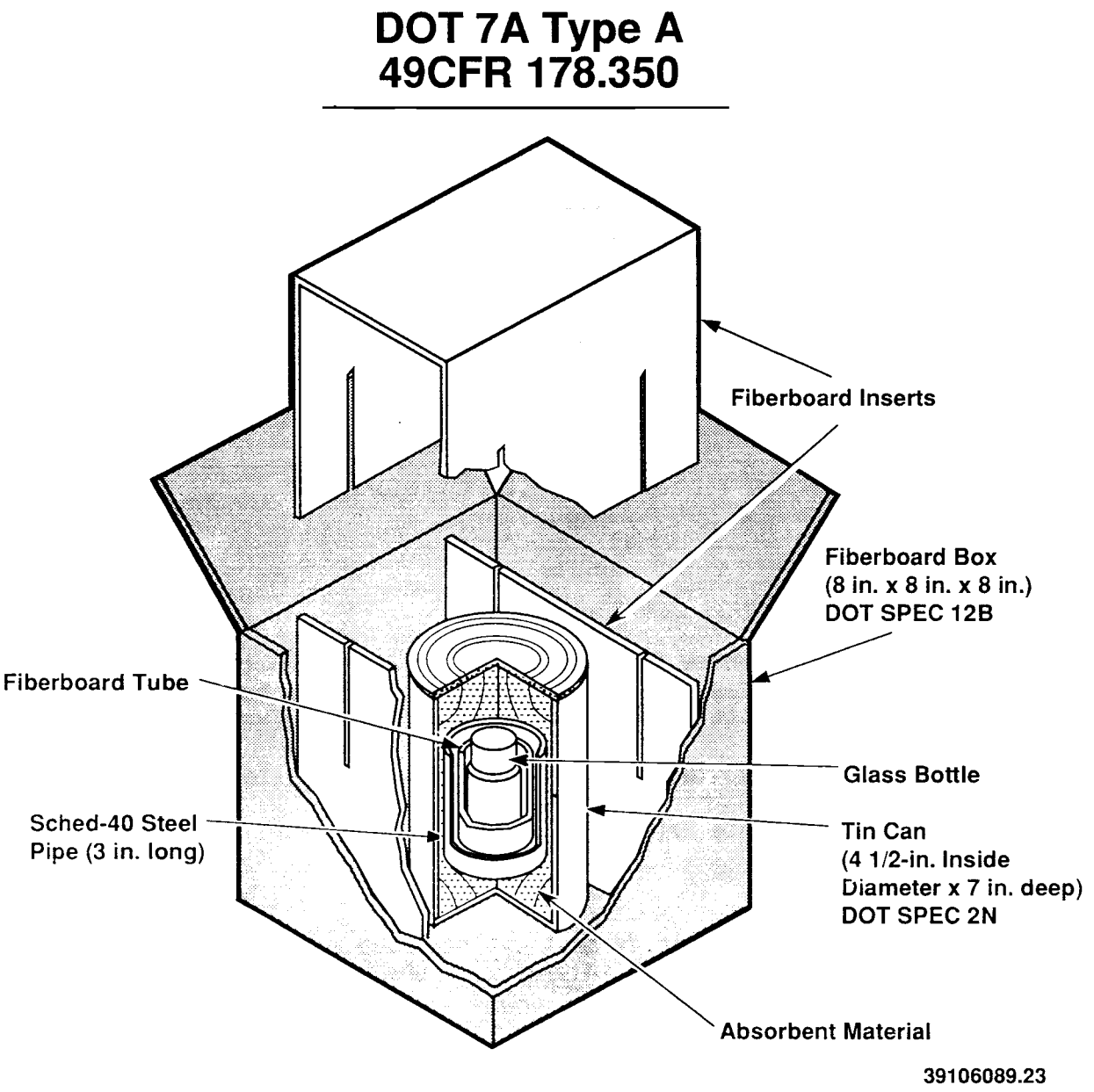

7.4 ORNL FIBERBOARD BOX--LIQUIDS AND SOLIDS (DOCKETS: MLM)

7.4.1 Package Description

Dimensions

Fiberboard box	8 in. high x 8 in. wide x 8 in. long
Metal can	4.5-in. inside diameter x 7 in. high
Sch. 40 steel pipe	3 in. long

Materials/Method of Construction

Fiberboard box	Spec 12B-120 (40 CFR 178.205) Stapled closure (10.625-in. steel staples)
Metal can	Spec 2N (49 CFR 178.32) Mechanically sealed
Glass bottles	15, 25, 50, and 100 mL
Absorbent	Kimpack*

*Kimpack is a trademark of Kimberly-Clark Corporation.

7.4.2 Authorized Contents

The shipper must determine that the actual contents are closely simulated by the test contents. If they are not, testing or analysis must be conducted and documented to demonstrate DOT-7A compliance with the actual contents.

7.4.2.1 **Physical Form.** Liquid or solid radioactive materials.

7.4.2.1.1 **Maximum Gross Weight**

- 33 lb.

7.4.2.2 **Chemical Form.** The shipper must evaluate and ensure chemical compatibility of the material to be shipped with the materials of the packaging in contact with the payload.

7.4.2.3 **Radiological.** The shipper must ensure that the radiation level at any surface will not increase by more than 20% (relative to the radiation level prior to the test) as a result of the decrease in distance to the center of the package resulting from the 30-ft drop test. This decrease in distance was 1 in.

7.4.3 Restrictions/Specifications

Twice the absorbent is required if the volume is less than 50 cm^3.

Shipper must demonstrate at least twice the absorbent capacity for the liquid (where used).

For heavy, bulky materials (e.g., concrete chunks, motors, and pumps), equipment or materials with sharp corners or protrusions, or material/containment geometries that could result in highly localized forces, the shipper must ensure that the contents are securely fastened/positioned within the package.

For airborne shipments, HM-181 requirements pertinent to reduced external pressure conditions may be invoked, see discussion in Section 1.3.4

7.4.4 49 CFR 178.350 Regulatory Requirements

Regulatory Compliance Assessment

Regulatory requirements	Testing/analysis results
49 CFR 173.24, Standard requirements for all packages	Meets applicable requirements. See Appendix A, Table A-6.
49 CFR 173.411, General design requirements	Meets applicable requirements. See Appendix B, Table B-6.
49 CFR 173.412, Additional requirements for Type A packages	Meets applicable requirements. See Appendix C, Table C-10.
49 CFR 173.465, Type A packaging tests	Meets applicable requirements.
Water spray	Pass. Water spray test was conducted prior to each of the following tests. See Appendix D, Table D-8.
Free drop (30 ft)	Pass. Test conducted with a maximum of 1-in. deformation of surface and no loss of contents. See Appendix D, Table D-18.
Corner drop	Pass. Test conducted with a maximum of 0.5-in. deformation of the impacted corner, and there was no loss of contents.
Compression	Pass. Test was conducted with more than five times the gross weight for 24 hr. There was only minor distortion of package geometry (less than in 30-ft drop) and no loss of contents. See Appendix D, Table D-28.
Penetration	Pass. This test resulted in a non-penetrating deformation of the box and a 0.055-in. dent in the metal can. There was no loss of contents. See Appendix D, Table 35.

7.4.5 Quality Control

Packaging/Acceptance/Use Criteria

Critical	Major	Acceptance/pre-use/ inspection criteria*
	Lid or cover/body interface	Functional: • Ease of lid, cover, and flap closure • Mating surfaces flat and smooth, no foreign matter • Geometry, as specified • Closure "secure"
Sealing methods/ materials	Materials, as specified	Acceptable Conditions: • Tape • Staples, type and spacing • Thickness • Composition • Corrugations • Surface treatment, etc. • Dimensions, as specified • Test seals conducted for can sealer • Testing of metal can seal as appropriate
Absorbent		• Twice that required • Appropriate for contents • Within shield (good practice, not mandatory)
	Vendor qualifications and experience	Vendor data/certification: • Marking • Test data • Type A certification document, as appropriate Lot tests by shipper, as appropriate.

*These criteria apply to first-time use and to reuse as a DOT-7A Type A packaging.

7.4.6 Additional Information

Evaluation and testing of this packaging were performed at MLM and were documented in Edling 1987. Complete evaluation reports are available upon request from one of the DOT-7A Program technical contacts listed in Section 1.1.2.

7.4.6.1 Primary Users

Site/Contact/Phone	Address
ORNL 2R. W. Schaich COMM/FTS 615-574-6991	Oak Ridge National Laboratory P. O. Box X Oak Ridge, TN 37830

7.4.6.2 Suppliers

• Fiberboard box	Peachtree Packaging Atlanta, GA
• Metal can	Ellisco-Philadelphia Can Co. Philadelphia, PA
• Duraglass* bottles	All-Pac, Inc. 1064 Country Club Road Columbus, OH 43227 0.5-4.0 oz.
• Special form capsule Lead shields Glass ampules	ORNL Shops P. O. Box X Oak Ridge, TN
• Purchasing contact	J. W. Hudson P. O. Box X Oak Ridge, TN 615-576-1423

*Duraglass is a trademark of Owens-Illinois Glass Container, Inc.

Figure 7-5. ORNL Fiberboard Box Disposable Container for Radioactive Gas Shipments.

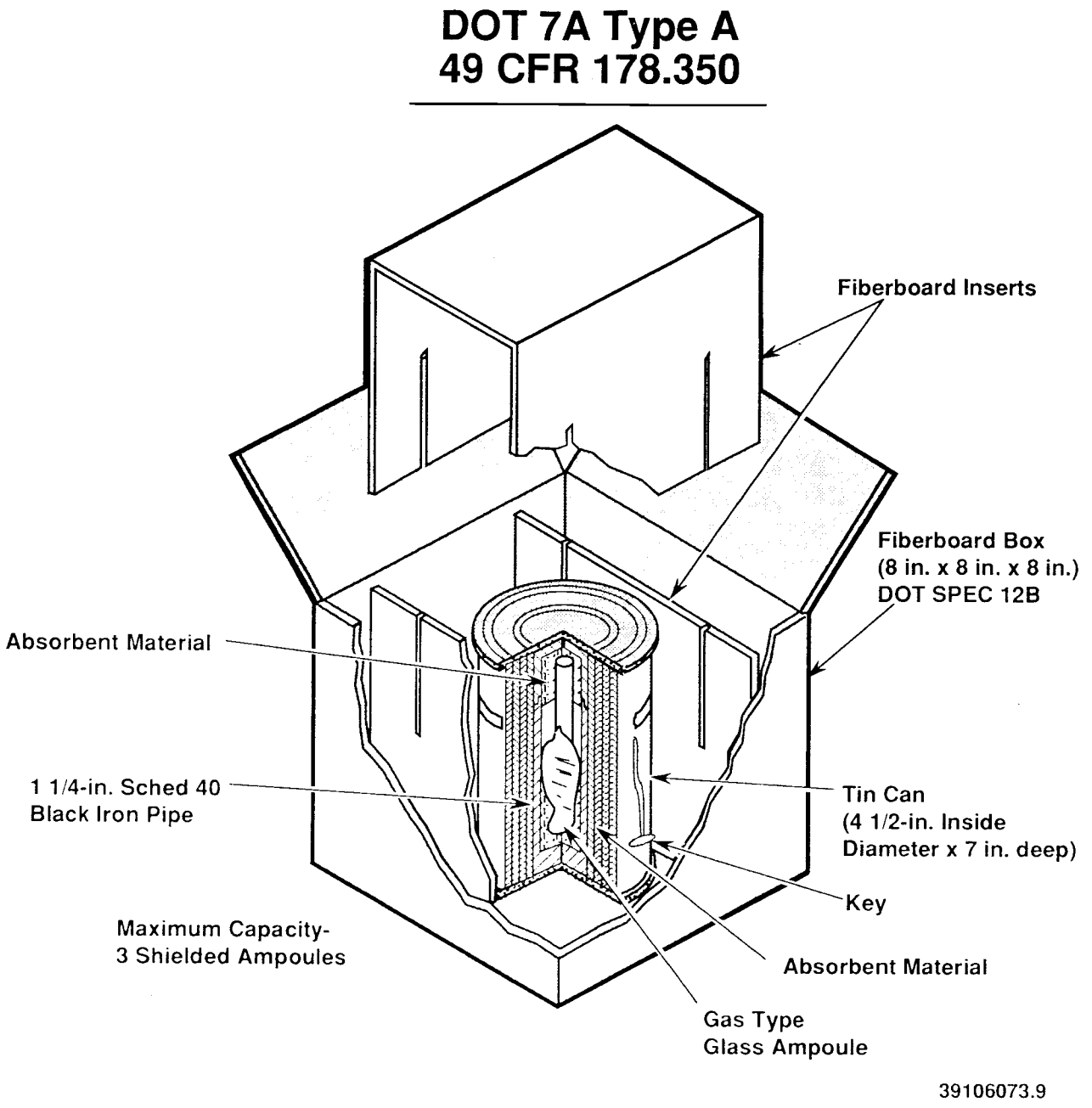

Figure 7-6. ORNL Fiberboard Box Disposable Container for Radioactive Liquid and Solid Shipments.

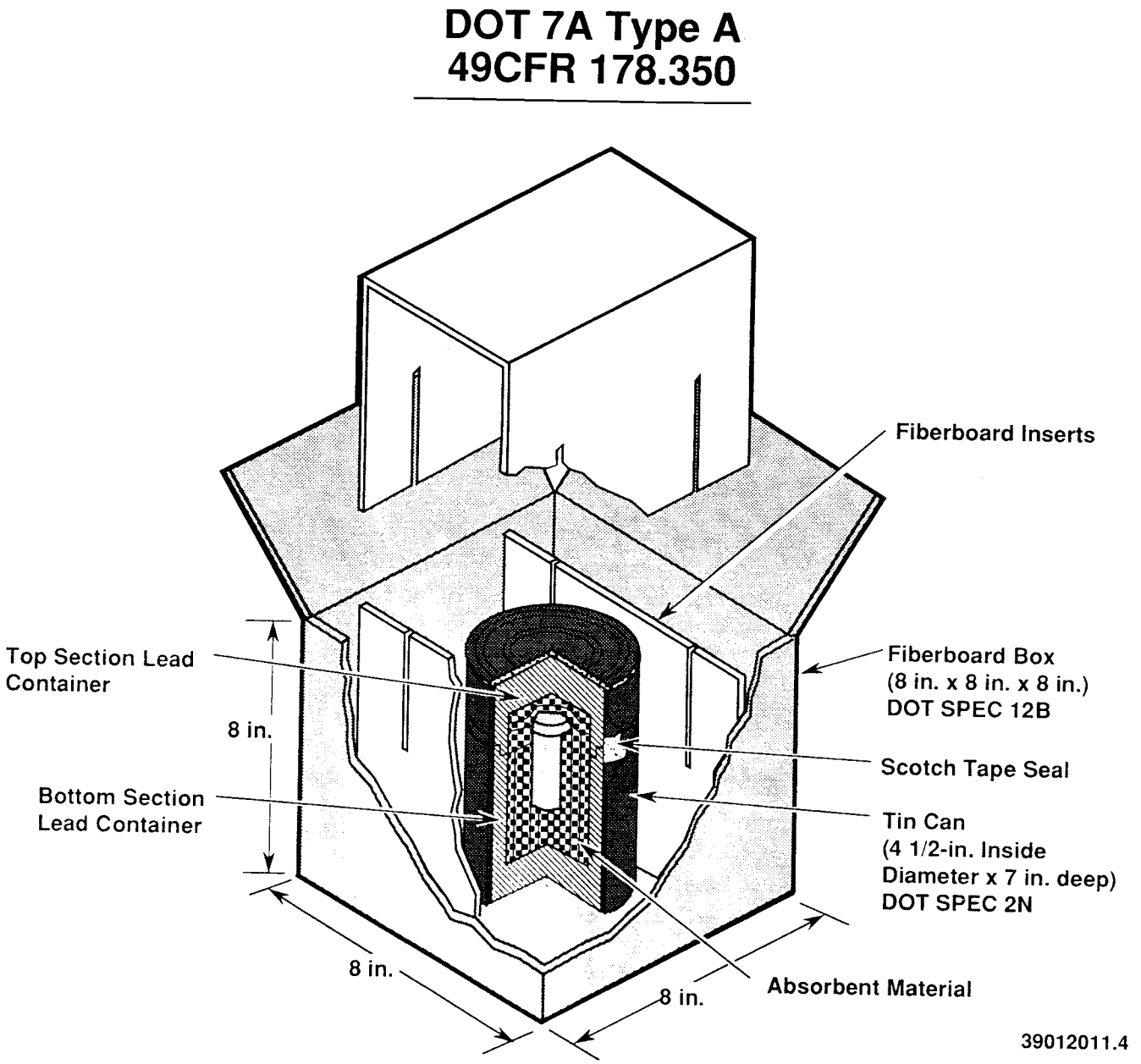

7.5 ORNL FIBERBOARD BOX--LIQUIDS, SOLIDS, OR GASES (DOCKETS: MLM)

7.5.1 Package Description

Dimensions

Fiberboard box	8 in. high x 8 in. wide x 8 in. long
Metal can	4.5-in. inside diameter x 7 in. high

Materials/Method of Construction

Fiberboard box	Spec 12B-120 (40 CFR 178.205) Stapled closure (10.625-in. steel staples)
Metal can	Spec 2N (49 CFR 178.32) Mechanically sealed
Glass bottles	15, 25, 50, and 100 mL
Glass ampules	2, 5, 10, and 20 cm^3
Absorbent	Kimpack*

*Kimpack is a trademark of Kimberly-Clark Corporation.

7.5.2 Authorized Contents

The shipper must determine that the actual contents are closely simulated by the test contents. If they are not, testing or analysis must be conducted and documented to demonstrate DOT-7A compliance with the actual contents.

7.5.2.1 Physical Form. Liquid, gaseous, or solid radioactive materials.

7.5.2.1.1 Maximum Gross Weight

- 33 lb.

7.5.2.2 Chemical Form. The shipper must evaluate and ensure chemical compatibility of the material to be shipped with the materials of the packaging in contact with the payload.

7.5.2.3 Radiological. The shipper must ensure that the radiation level at any surface will not increase by more than 20% (relative to the radiation level prior to the test) as a result of the decrease in distance to the center of the package resulting from the 30-ft drop test. This decrease in distance was 1 in.

7.5.3 Restrictions/Specifications

Twice the absorbent is required if the volume is less than 50 cm^3.

Shipper must demonstrate at least twice the absorbent capacity for the liquid (where used).

For heavy, bulky materials (e.g., concrete chunks, motors, and pumps), equipment or materials with sharp corners or protrusions, or material/containment geometries that could result in highly localized forces, the shipper must ensure that the contents are securely fastened/positioned within the package.

For airborne shipments, HM-181 requirements pertinent to reduced external pressure conditions may be invoked, see discussion in Section 1.3.4

7.5.4 49 CFR 178.350 Regulatory Requirements

Regulatory Compliance Assessment

Regulatory requirements	Testing/analysis results
49 CFR 173.24, Standard requirements for all packages	Meets applicable requirements. See Appendix A, Table A-6.
49 CFR 173.411, General design requirements	Meets applicable requirements. See Appendix B, Table B-6.
49 CFR 173.412, Additional requirements for Type A packages	Meets applicable requirements. See Appendix C, Table C-10.
49 CFR 173.465, Type A packaging tests	Meets applicable requirements.
Water spray	Pass. This test was conducted prior to each of the following tests with no detectable effect. See Appendix D, Table D-8.
Free drop (30 ft)	Pass. Test conducted with a maximum of 1-in. deformation of surface and no loss of contents. See Appendix D, Table D-18.
Corner drop	Pass. Test conducted with a maximum of 0.5-in. deformation of the impacted corner, and there was no loss of contents.
Compression	Pass. Test was conducted with more than five times the gross weight for 24 hr. There was only minor distortion of package geometry (less than in 30-ft drop) and no loss of contents. See Appendix D, Table D-28.
Penetration	Pass. This test resulted in a non-penetrating deformation of the box and a 0.055-in. dent in the metal can. There was no loss of contents. See Appendix D, Table D-35.

7.5.5 Quality Control

Packaging/Acceptance/Use Criteria

Critical	Major	Acceptance/pre-use/inspection criteria
	Lid or cover/body interface	Functional: • Ease of lid, cover, and flap closure • Mating surfaces flat and smooth, no foreign matter • Geometry, as specified • Closure "secure"
Sealing methods/ materials	Materials, as specified	Acceptable Conditions: • Tape • Staples, type and spacing • Thickness • Composition • Corrugations • Surface treatment, etc. • Dimensions, as specified • Test seals conducted for can sealer • Testing of metal can seal as appropriate
Absorbent		• Twice that required • Appropriate for contents • Within shield (good practice, not mandatory)
	Vendor qualifications and experience	Vendor data/certification: • Marking • Test data • Type A certification document, as appropriate Lot tests by shipper, as appropriate.

*These criteria apply to first-time use and to reuse as a DOT-7A Type A packaging.

7.5.6 Additional Information

Evaluation and testing of this packaging were performed at MLM and were documented in Edling 1987. Complete evaluation reports are available upon request from one of the DOT-7A Program technical contacts listed in Section 1.1.2.

7.5.6.1 Primary Users

Site/Contact/Phone	Address
ORNL R. W. Schaich COMM/FTS 615-574-6991	Oak Ridge National Laboratory P. O. Box X Oak Ridge, TN 37830

7.5.6.2 Suppliers

• Special form capsule Lead shields Glass ampules	ORNL Shops P. O. Box X Oak Ridge, TN
• Purchasing contact	J. W. Hudson P. O. Box X Oak Ridge, TN COMM/FTS 615-576-1423

Figure 7-7. ORNL Wooden Box (Aluminum Clad) Returnable Shielded Shipping Container.

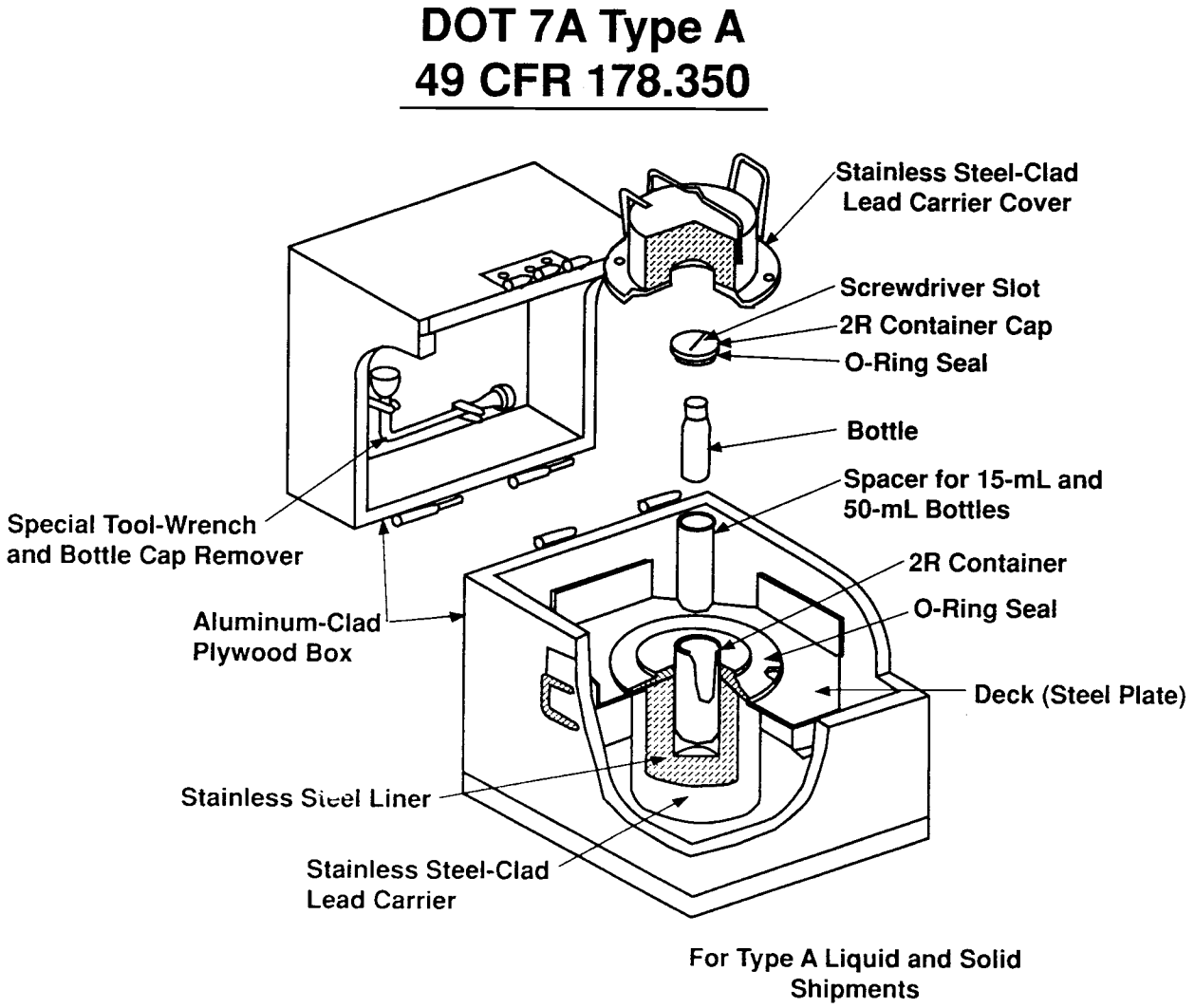

7.6 ORNL RETURNABLE (ALUMINUM-CLAD PLYWOOD BOX) SHIELDED SHIPPING CONTAINER (DOCKETS: MLM)

7.6.1 Package Description

Dimensions

Description	Height (in.)	Width (in.)	Length (in.)	Volume (mL)
Box 1	17.50	17.50	16.50	--
Box 2	21.50	21.50	16.50	--
Duraglass* bottle	--	--	--	15 - 200
Lead	--	1.5-3	--	--

*Duraglass is a trademark of Owens-Illinois Glass Container, Inc.

Materials/Method of Construction

Box	Aluminum clad--0.75-in marine plywood Closure, hinged lid with fastener
Stainless steel clad lead shield	--
Stainless steel 2R container	--
Duraglass[a] bottle	15 - 200 mL
Absorbent	Kimpack[b]

[a]Duraglass is a trademark of Owens-Illinois Glass Container, Inc.
[b]Kimpack is a trademark of Kimberly-Clark Corporation.

7.6.2 Authorized Contents

The shipper must determine that the actual contents are closely simulated by the test contents. If they are not, testing or analysis must be conducted and documented to demonstrate DOT-7A compliance with the actual contents.

7.6.2.1 Physical Form. Liquid and solid radioactive materials.

7.6.2.1.1 Maximum Gross Weight

- 212 lb.

7.6.2.2 Chemical Form. The shipper must evaluate and ensure chemical compatibility of the material to be shipped with the materials of the packaging in contact with the payload.

7.6.2.3 Radiological. The 4-ft. drop test caused deformations of the package resulting in small decreases in the distance from the exterior to the center of the package. The shipper must ensure that the radiation level at any surface would not increase by more than 20% (relative to the radiation level of the undamaged configuration) if such deformations would occur.

7.6.3 Restrictions/Specifications:

For volumes less than 50 cm^3, twice the absorbent is required.

Shipper must demonstrate at least twice the absorbent capacity for the liquid contents.

For heavy, bulky materials (e.g., concrete chunks, motors, and pumps), equipment or materials with sharp corners or protrusions, or material/ containment geometries that could result in highly localized forces, the shipper must ensure that the contents are securely fastened/ positioned within the package.

For airborne shipments, HM-181 requirements pertinent to reduced external pressure conditions may be invoked, see discussion in Section 1.3.4

7.6.4 49 CFR 178.350 Regulatory Requirements

Regulatory Compliance Assessment

Regulatory requirements	Testing/analysis results
49 CFR 173.24, Standard requirements for all packages	Meets applicable requirements. See Appendix A, Table A-6.
49 CFR 173.411, General design requirements	Meets applicable requirements. See Appendix B, Table B-6.
49 CFR 173.412, Additional requirements for Type A packages	Meets applicable requirements. See Appendix C, Table C-10
49 CFR 173.465, Type A packaging tests	Meets applicable requirements.
Water spray	Pass. This test was conducted prior to each of the following tests with no detectable effect. See Appendix D, Table D-8.
Free drop (30 ft)	Pass. The test was conducted with the box impacting on the top corner. The top and bottom plywood sheets were loosened and the aluminum cladding was torn; however, the package geometry was not significantly changed. There was no release of contents from the glass bottle. For volumes greater than 50 cm^3, the 2R container with O-ring seal meets the requirement of "secondary outer containment components designed to assure retention of the liquid contents within the secondary outer components in the event the primary inner components leak." See Appendix D, Table D-18.
Corner drop	The corner drop was successfully conducted on the package weighing 110 lb. The only effects were minor dents, and there was no loss of contents.
Compression	Pass. This test was conducted at 1,040 lb for 24 hr with no significant distortion of the package. See Appendix 1, Table D-28.
Penetration	Pass. This test was conducted with the bar impacting the center of the top of the box. Only a minor dent (non-penetrating) resulted. See Appendix D, Table D-35.

7.6.5 Quality Control

Packaging/Acceptance/Use Criteria

Critical	Major	Acceptance/pre-use/ inspection criteria*
Lid or cover/body interface	Vendor qualifications and experience	Functional: • Ease of lid, cover, and flap closure • Geometry, as specified • Closure "secure" Acceptable Conditions: • Dimensions, as specified • No sharp edges
Gasket		• Gasket size, material, geometry
Absorbent		• Twice that required • Appropriate for contents • Within shield (good practice, not mandatory)
Body materials, as specified		Vendor data/certification: • Marking • Test data • Type A certification document as appropriate

* These criteria apply to first-time use and to reuse as a DOT-7A Type A packaging.

7.6.6 Additional Information

Evaluation and testing of this packaging were performed at MLM and were documented in Edling 1987. Complete evaluation reports are available upon request from one of the DOT-7A Program technical contacts listed in Section 1.1.2.

7.6.6.1 Primary Users

Site/Contact/Phone	Address
ORNL R. W. Schaich COMM/FTS 615-574-6991	Oak Ridge National Laboratory P. O. Box X Oak Ridge, TN 37830

Figure 7-8. ORNL Gas Cylinder Returnable Plastic Box.

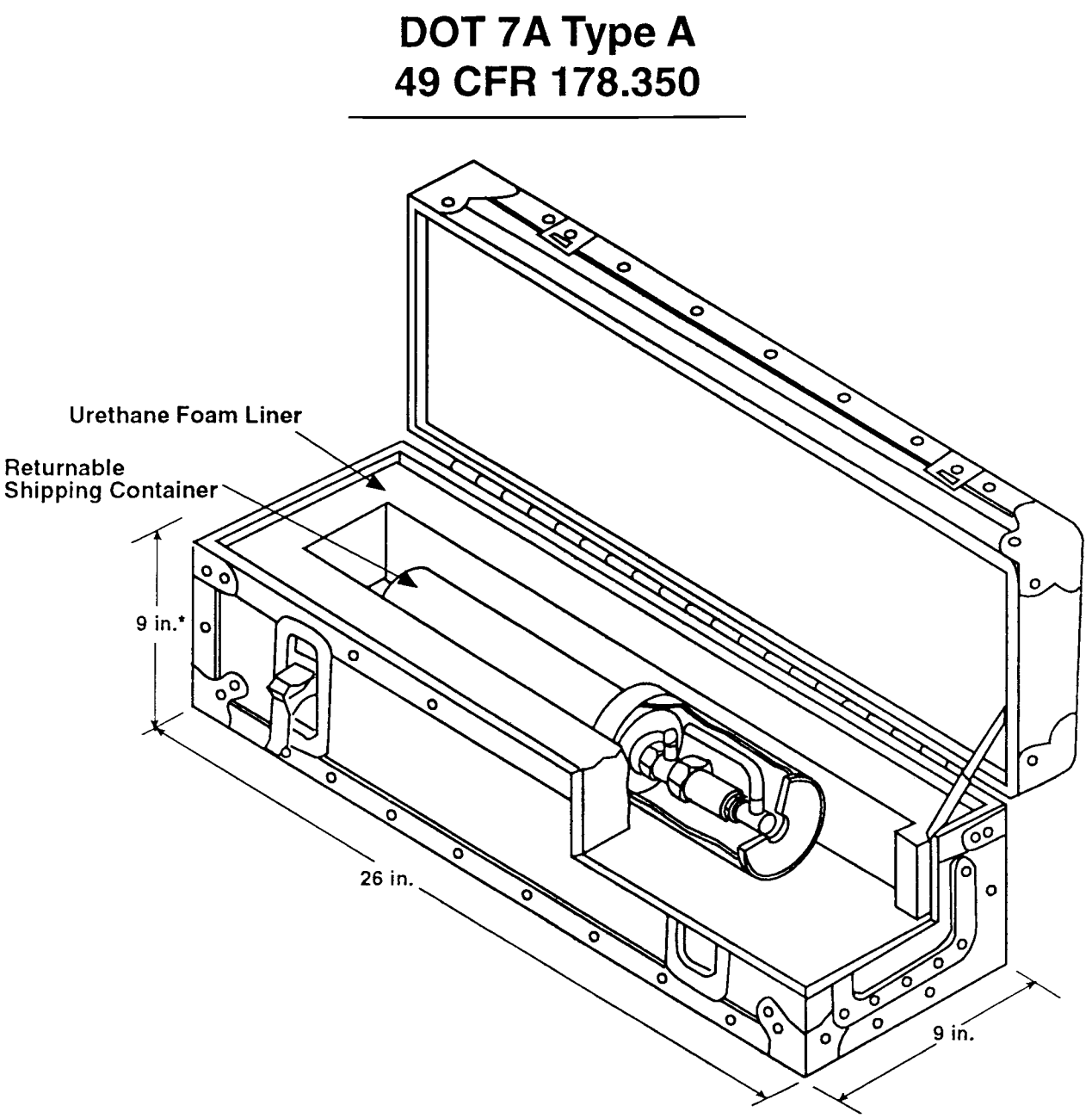

Figure 7-9. ORNL Gas Cylinder Returnable 10-mL Isotope Container.

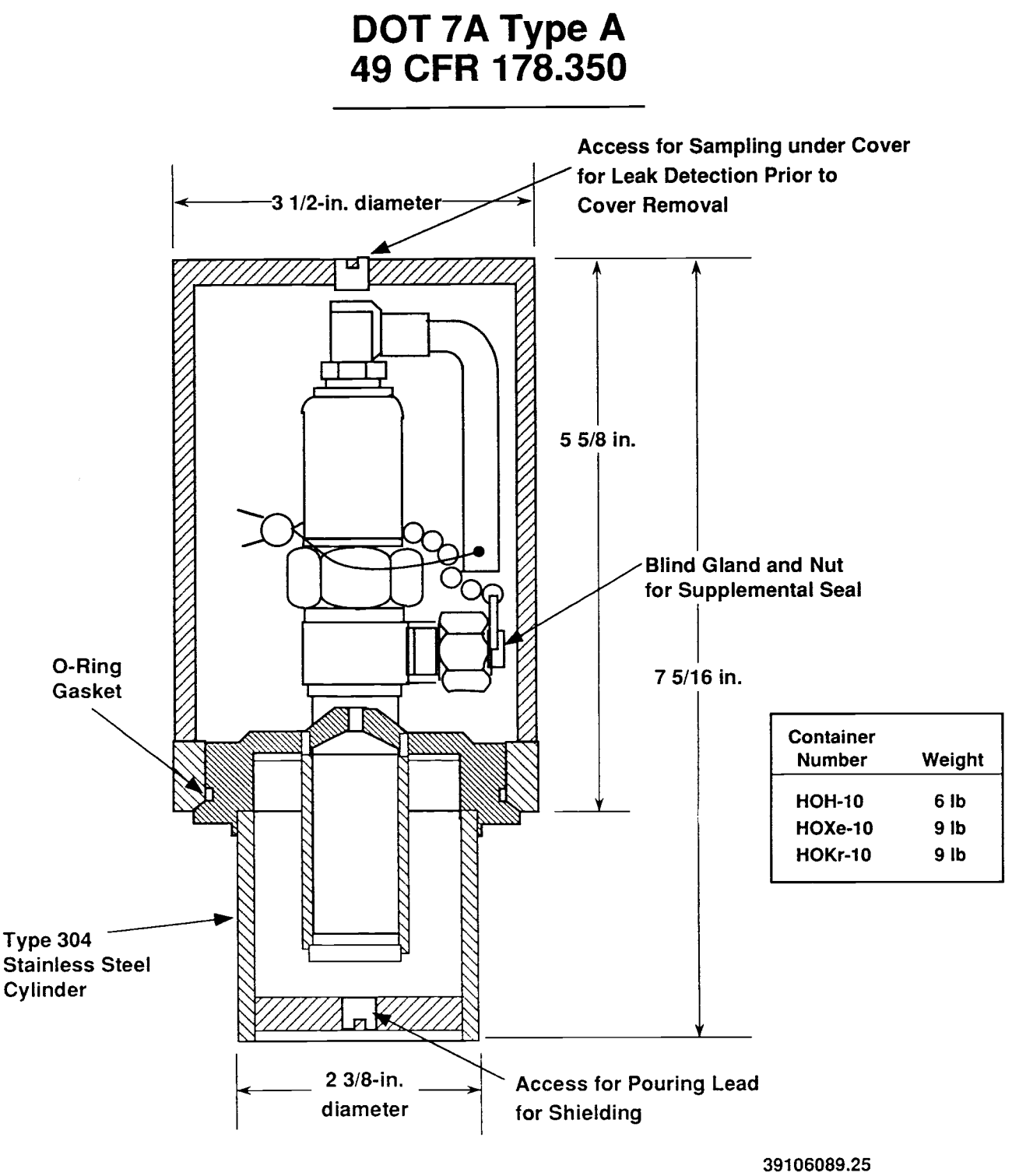

Container Number	Weight
HOH-10	6 lb
HOXe-10	9 lb
HOKr-10	9 lb

Figure 7-10. ORNL Gas Cylinder (Returnable).

DOT 7A Type A
49 CFR 178.350

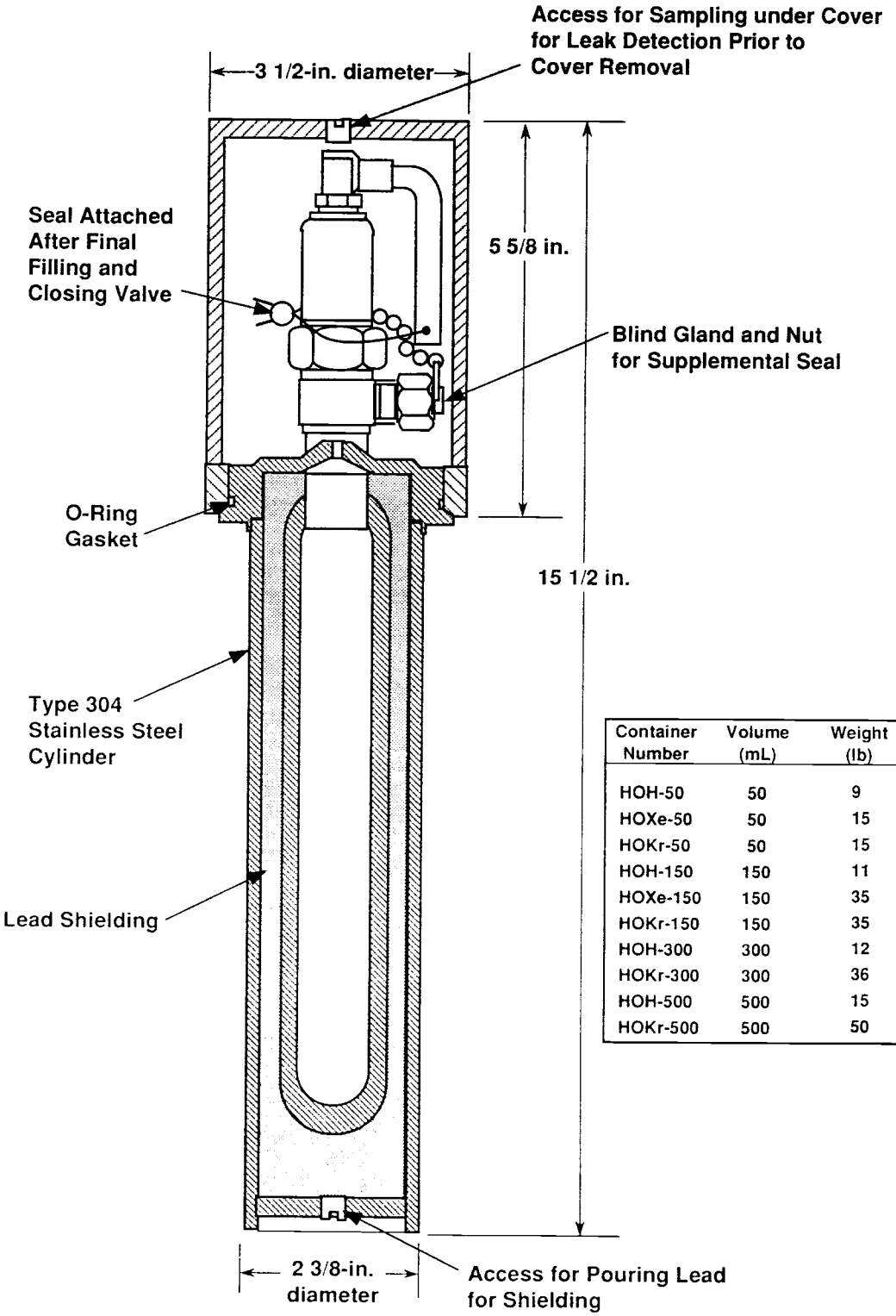

Container Number	Volume (mL)	Weight (lb)	Length (in.)	Diameter (in.)
HOH-50	50	9	12 5/16	3 1/2
HOXe-50	50	15	12 5/16	3 1/2
HOKr-50	50	15	12 5/16	3 1/2
HOH-150	150	11	15 13/16	3 1/2
HOXe-150	150	35	15 13/16	3 1/2
HOKr-150	150	35	15 13/16	3 1/2
HOH-300	300	12	16 11/16	3 1/2
HOKr-300	300	36	16 11/16	3 1/2
HOH-500	500	15	21 7/16	3 1/2
HOKr-500	500	50	21 7/16	3 1/2

39106089.24

7.7 ORNL RETURNABLE (ALUMINUM REINFORCED PLASTIC BOX) GAS CYLINDER--SHIELDED AND NONSHIELDED SHIPPING CONTAINERS (DOCKETS: MLM)

7.7.1 Package Description

Dimensions

Description	Height (in.)	Width (in.)	Length (in.)
Plastic box	9	9	26
Hoke gas cylinders	See Figure 7-10.	--	--

Materials/Method of Construction

Plastic box	See Figure 7-8.
Hoke gas cylinder	See Figure 7-9 and 7-10.

7.7.2 Authorized Contents

The shipper must determine that the actual contents are closely simulated by the test contents. If they are not, testing or analysis must be conducted and documented to demonstrate DOT-7A compliance with the actual contents.

7.7.2.1 Physical Form. Gaseous radioactive materials.

7.7.2.1.1 Maximum Gross Weight

- 60 lb.

7.7.2.2 Chemical Form. The shipper must evaluate and ensure chemical compatibility of the material to be shipped with the materials of the packaging in contact with the payload.

7.7.2.3 Radiological. The 4-ft. drop test caused deformations of the package resulting in small decreases in the distance from the exterior to the center of the package. The shipper must ensure that the radiation level at any surface would not increase by more than 20% (relative to the radiation level of the undamaged configuration) if such deformations would occur.

7.7.3 Restrictions/Specifications

NOTE: The Type A tests were conducted on the gas cylinders. The outer box is only for convenience in handling and shipping.

7.7.4 49 CFR 178.350 Regulatory Requirements

Regulatory Compliance Assessment

Regulatory requirements	Testing/analysis results
49 CFR 173.24, Standard requirements for all packages	Meets applicable requirements. See Appendix A, Table A-6.
49 CFR 173.411, General design requirements	Meets applicable requirements. See Appendix B, Table B-6.
49 CFR 173.412, Additional requirements for Type A packages	Meets applicable requirements. See Appendix C, Table C-10.
49 CFR 173.465, Type A packaging tests	Meets applicable requirements.
Water spray	Pass. This test was conducted (on the cylinder itself) prior to each of the following tests with no detectable effect. See Appendix D, Table D-8.
Free drop	Pass. The test was conducted with the valve cover facing down. In each case there was no loss of contents and the package geometry was not significantly changed. See Appendix D, Table D-18.
Corner drop	This test was successfully conducted with no loss of contents or significant distortion of package geometry.
Compression	Pass. This test was conducted at 580 lb with no change in geometry of the package or loss of contents. See Appendix D, Table D-28.
Penetration	Pass. This test was conducted with the bar impacting the center of the top of the protective cap. There was no damage or loss of contents. See Appendix D, Table D-35.

7.7.5 Quality Control

Packaging/Acceptance/Use Criteria

Critical	Major	Acceptance/pre-use/inspection criteria*
Lid/body interface	Vendor qualifications and experience	Functional: • Ease of assembly, protective cap and body
Body materials, as specified	Metal thickness	• Seal, body and valves • Geometry, as specified • Fit within shipping case (where used)
Welds/seams		Acceptable conditions: • Welds radiographed or suitably monitored • No sharp edges • Absence of dents or deformation on surface • Dimensions, as specified
Leak tests	Vendor qualifications and experience	Vendor data/certification: • Marking • Test data • Type A certification document, as appropriate Lot tests by shipper, as appropriate.
	Protective coating	Visual: • Surface/coating, as specified • Absence of application imperfections • Absence of rust, dents, nicks

* These criteria apply to first-time use and to reuse as a DOT-7A Type A packaging.

7.7.6 Additional Information

Evaluation and testing of this packaging were performed at MLM and were documented in Edling 1987. Complete evaluation reports are available upon request from one of the DOT-7A Program technical contacts listed in Section 1.1.2.

7.7.6.1 Primary Users

Site/Contact/Phone	Address
ORNL R. W. Schaich COMM/FTS 615-574-6991	Oak Ridge National Laboratory P. O. Box X Oak Ridge, TN 37830

Figure 7-11. ORNL Gas Cylinder (Returnable).

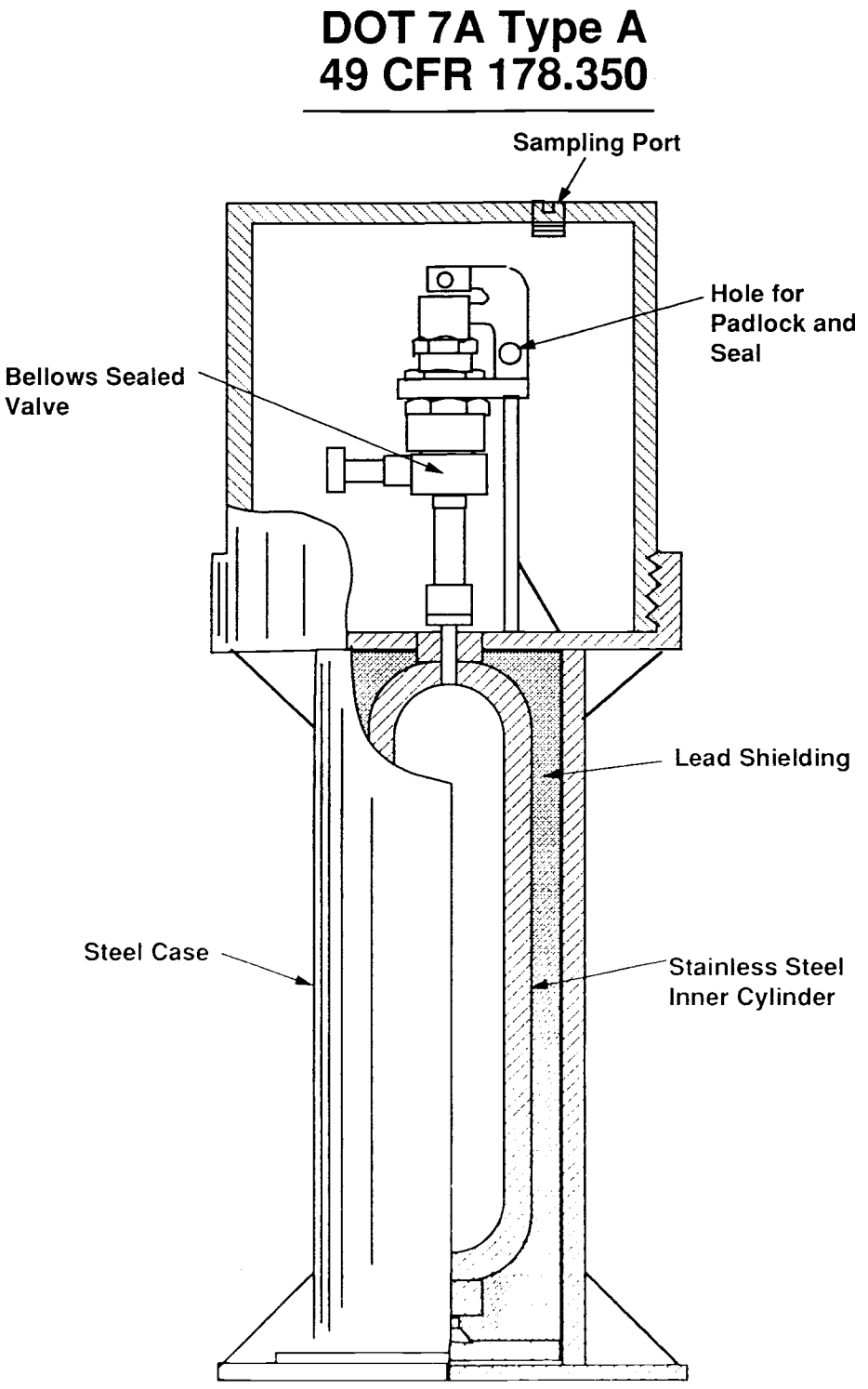

All Welded Construction

39106073.12

7.8 ORNL J. L. SHEPHARD GAS CYLINDERS (DOCKETS: MLM)

7.8.1 Package Description

Dimensions and Weights

Cylinder	Outside diameter (in.)	Length (in.)	Volume (cm^3)	Authorized gross weight (lb)
1	6.5	12.5	150	24
2	6.5	16.5	300	40
3	6.5	21.5	500	60

Materials/Method of Construction

Inner cylinder	Stainless steel
Lead shielding	0.5 in. to 0.75 in. thick
Outer case	Steel
Bellows valve	--

NOTE: These packages are shipped with the overpack shown in Figure 7-7 or its equivalent.

7.8.2 Authorized Contents

The shipper must determine that the actual contents are closely simulated by the test contents. If they are not, testing or analysis must be conducted and documented to demonstrate DOT-7A compliance with the actual contents.

7.8.2.1 Physical Form. Gaseous radioactive materials.

7.8.2.1.1 Maximum Gross Weight. See the Dimensions and Weights table in Section 7.8.1.

7.8.2.2 Chemical Form. The shipper must evaluate and ensure chemical compatibility of the material to be shipped with the materials of the packaging in contact with the payload.

7.8.2.3 Radiological. The 4-ft. drop test caused deformations of the package resulting in small decreases in the distance from the exterior to the center of the package. The shipper must ensure that the radiation level at any surface would not increase by more than 20% (relative to the radiation level of the undamaged configuration) if such deformations would occur.

7.8.3 49 CFR 178.350 Regulatory Requirements

Regulatory Compliance Assessment

Regulatory requirements	Testing/analysis results
49 CFR 173.24, Standard requirements for all packages	Meets applicable requirements. See Appendix A, Table A-6.
49 CFR 173.411, General design requirements	Meets applicable requirements. See Appendix B, Table B-6.
49 CFR 173.412, Additional requirements for Type A packages	Meets applicable requirements. See Appendix C, Table C-10.
49 CFR 173.465, Type A packaging tests	Meets applicable requirements.
Water spray	Pass. Tests on similar cylinders demonstrated no effect and, since they are gas-leak tight, there will be no inleakage of water. See Appendix D, Table D-8.
Free drop	Pass. A J. L. Shephard Model 394-500L was dropped with the valve cover facing down. There was no loss of contents and the package geometry was not significantly changed. Other cylinders were certified based on these test data. See Appendix D, Table D-18.
Corner drop	Not required.
Compression	Pass. Authorized based on tests of similar packagings. See Appendix D, Table D-28.
Penetration	Pass. Authorized based on tests of similar packagings. See Appendix D, Table D-35.

7.8.4 Quality Control

Packaging/Acceptance/Use Criteria

Critical	Major	Acceptance/pre-use/inspection criteria*
Lid/body interface	Vendor qualifications and experience	Functional: • Ease of assembly, protective cap and body
Body materials, as specified	Metal thickness	• Seal, body and valves • Geometry, as specified • Fit within shipping case (where used) Acceptable conditions:
Welds/seams		• Welds radiographed or suitably monitored • No sharp edges • Absence of dents or deformation on surface • Dimensions, as specified
Leak tests	Vendor qualifications and experience	Vendor data/certification: • Marking • Test data • Type A certification document, as appropriate Lot tests by shipper, as appropriate.
	Protective coating	Visual: • Surface/coating, as specified • Absence of application imperfections • Absence of rust, dents, nicks

* These criteria apply to first-time use and to reuse as a DOT-7A Type A packaging.

7.8.5 Additional Information

Evaluation and testing of this packaging were performed at MLM and were documented in Edling 1987. Complete evaluation reports are available upon request from one of the DOT-7A Program technical contacts listed in Section 1.1.2.

7.8.5.1 Primary Users

Site/Contact/Phone	Address
ORNL R. W. Schaich COMM/FTS 615-574-6991	Oak Ridge National Laboratory P. O. Box X Oak Ridge, TN 37830

7.8.5.2 Supplier

J. L. Shephard and Associates
740 Salem Street
Glendale, CA 91203

Figure 7-12. LANL Shielded Container Steel Drum (Liquids) (LANL-2).

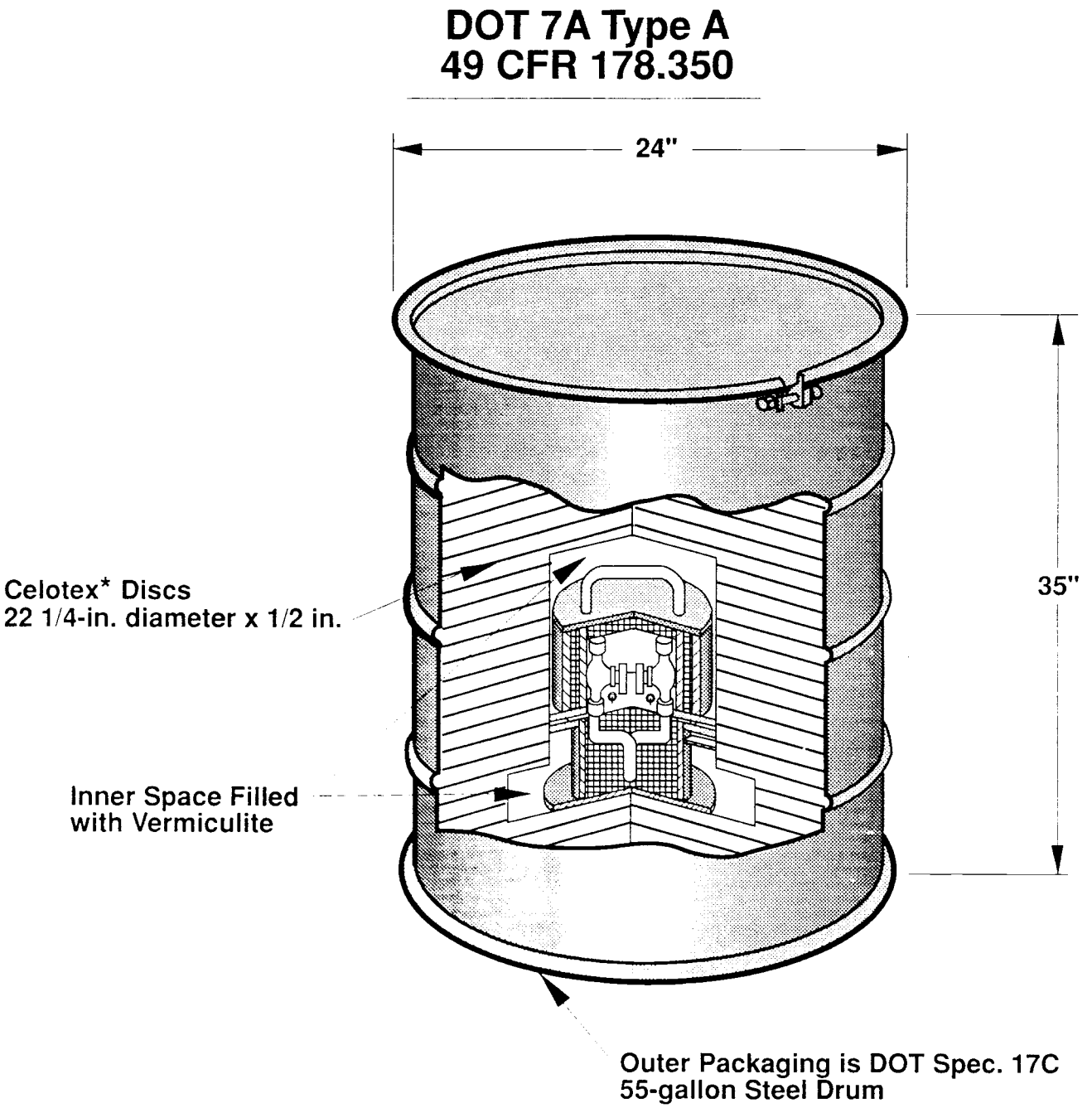

Figure 7-13. Fenton Hill Pig (Details of Inner Packaging).

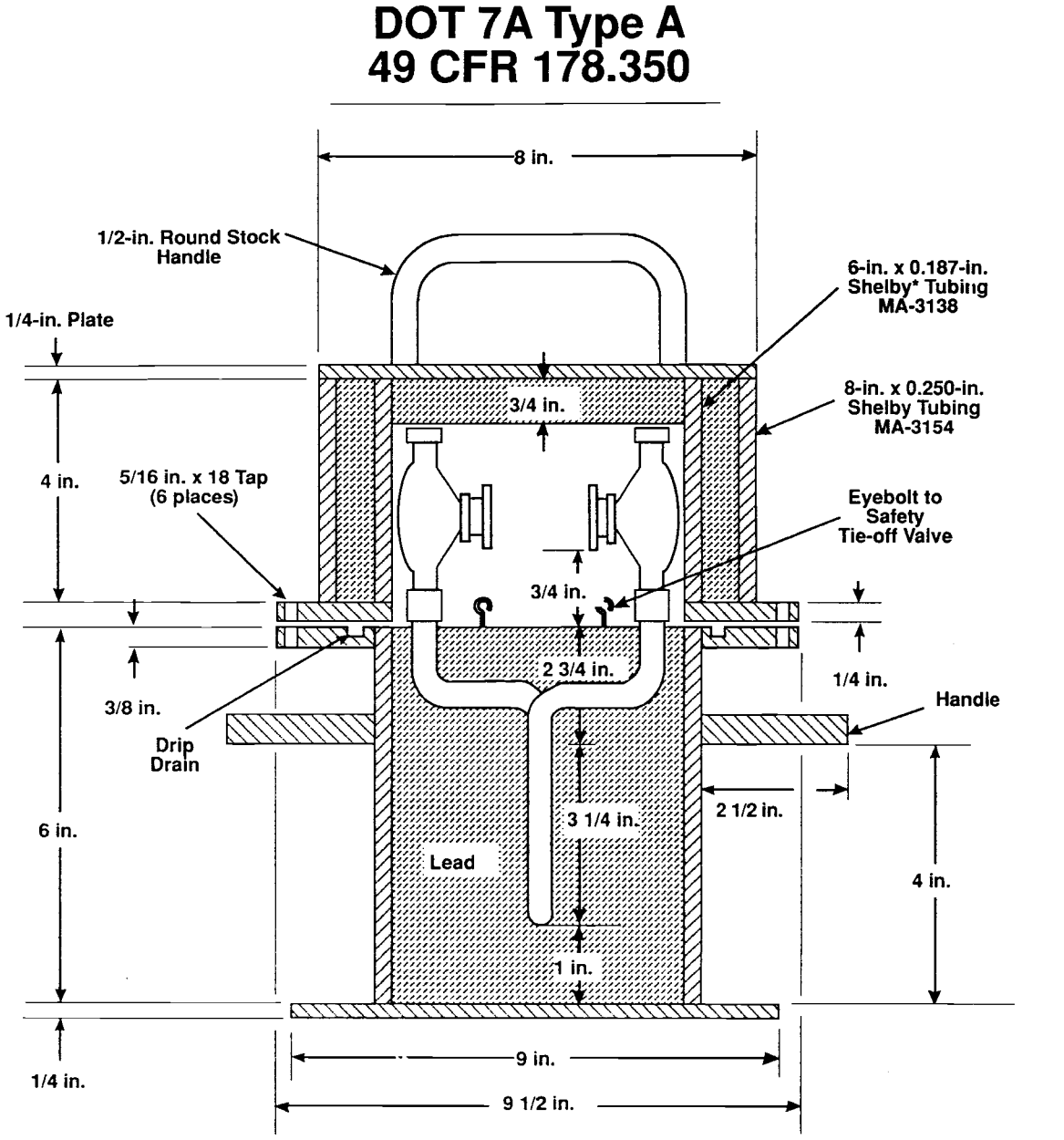

7.9 LANL SHIELDED CONTAINER FOR LIQUIDS (LANL-2) (DOCKETS: MLM)

7.9.1 Package Description

Dimensions

DOT-17C 55-gal steel drum	See Figure 7-12.
Fenton Hill Pig (inner container)	See Figure 7-13.

Materials/Method of Construction

DOT-17C steel drum	Steel
Cushioning/spacing	Celotex[a]--22.5-in. diameter x 0.5 in. thick (some sheets with holes to accommodate inner container). Total of 66 sheets.
	6-in. x 0.187-in. Shelby[b] tubing MA-3138
Fenton Hill Pig	Base plate, 9-in. diameter x 0.25 in.
• Bottom	Steel flange, 9-in. diameter x 0.375 in.
- Handles (sides)	2.5 in. high, 0.5-in. round stock
• Cover (lead lining, top and sides)	8-in. x 0.250-in. Shelby tubing MA-3154
- Handle (cover)	3.5 in. high, 0.5-in. round stock
- Steel flange	9.5-in. diameter x 0.25 in.
• Bolt closure for cover	6 steel bolts, 0.313 in. x 2.5 in.
• Valves	2 Hoke Swagelock[c] ball valves, 0.375 in.
• Lead shielding	As shown in Figures 7-12 and 7-13.

[a]Celotex is a trademark of the Celotex Corporation.
[b]Shelby is a trademark of USX Corporation.
[c]Swagelock is a trademark of Crawford Fitting Company.

7.9.2 Authorized Contents

The shipper shall demonstrate that the actual contents are closely simulated by the test contents. If they are not, testing or analysis must be conducted and documented to demonstrate DOT-7A compliance with the actual contents.

7.9.2.1 Physical Form. Radioactive liquids.

7.9.2.1.1 Maximum Gross Weight

- 495 lb.

7.9.2.2 Chemical Form. The shipper must evaluate and ensure chemical compatibility of the material to be shipped with the materials of the packaging in contact with the payload.

7.9.2.3 Radiological. A dent of approximately 4.75 in. resulted from the 30-ft drop test on the top edge. Each shipper must ensure that the radiation level at the surface of the package will not increase by more than 20% (relative to the radiation level of the undamaged configuration) as a result of such a deformation.

7.9.3 Restrictions/Specifications

Bolt closure shall be tightened to a minimum of 40 ft-lb with tapping of ring during tightening per the following procedure:

1. Tighten the bolt to 40 ft-lb torque.
2. Hit the closure ring vigorously with a metal hammer approximately 8 to 9 times, equally spaced around the ring.
3. Repeat the cycle three additional times.
4. Torque the bolt one last time to 40 ft-lb.

The gasket material must have an operating range of -40 °F to +158 °F.

Shipper must demonstrate more than twice the absorbent capacity for the liquid contents because the volume is less than 50 cm^3.

For airborne shipments, HM-181 requirements pertinent to reduced external pressure conditions may be invoked, see discussion in Section 1.3.4

7.9.4 49 CFR 178.350 Regulatory Requirements

Regulatory Compliance Assessment

Regulatory requirements	Testing/analysis results
49 CFR 173.24, Standard requirements for all packages	Meets applicable requirements. See Appendix A, Table A-6.
49 CFR 173.411, General design requirements	Meets applicable requirements. See Appendix B, Table B-6.
49 CFR 173.412, Additional requirements for Type A packages	Meets applicable requirements. See Appendix C, Table C-10.
49 CFR 173.465, Type A packaging tests, and 49 CFR 173.466, Additional test for Type A packagings designed for liquids and gases	Meets applicable requirements.
Water spray	Pass. This test was conducted on nine different types of steel drums and a total of 26 packagings. Three 17C 55-gal steel drums were involved in these tests. In all cases there was no detectable effect on the ability of the packaging to meet the subsequent Type A tests. Also there was no evidence of inleakage of water. See Appendix D, Table D-8.
Free drop (4 ft)	Pass. Many tests were conducted on 17C 55-gal drums at weights far exceeding the weight of these drums. See Appendix D, Table D-18.
Free drop (30 ft)	Pass. Three 30-ft drops were conducted using the same inner packaging materials. A different 55-gal drum was used for each test. The impact angle was about 45° with the lid locking bolt facing downward. The packaging remained intact with no release of contents from the inner container in each case. See Appendix D, Table D-18.
Corner drop	Not required.
Compression	Pass. This test was conducted with more than five times the gross weight for 24 hr and no detectable effect on the packaging was observed. See Appendix D, Table D-28.
Penetration	Pass. This test was performed on the top and side of the 17C 55-gal drum with minimal effects. See Appendix D, Table D-35.

7.9.5 Quality Control

Packaging/Acceptance/Use Criteria

Critical	Major	Acceptance/pre-use/ inspection criteria*
Lid/body interface Sealing surface Valves	Vendor qualification	Functional: • Ease of lid/closure application • Bolt closure and size • Gasket, as specified • Material, as specified • Geometry, as specified • Seal • Type, as specified • Leak check, as appropriate Acceptable Conditions: • Lack of dents, no deformation of sealing surface • Dimensions, as specified • Continuous welds, no sharp edges
Body and chime Air leak check	Metal thickness Bolt size	Lot tests by shipper as appropriate and/or vendor data certification: • Marking • Test data • Type A document provided, as appropriate
Absorbent		Materials • Quality and quantity, as specified • Appropriate for contents
	Protective coating Shielding	Visual: • Surface coatings, as specified • Lack of imperfections • Lack of rust, dents, nicks • Bolt closure, as specified • Position within drum
Cushioning		• Material, as specified • Geometry, as specified • Intact, without cracks, crumbling, holes, excessive wear

* These criteria apply to first-time use and to reuse as a DOT-7A Type A packaging.

7.9.6 Additional Information

Evaluation and testing of this packaging were performed at MLM and were documented in Edling 1987. Complete evaluation reports are available upon request from one of the DOT 7A Program technical contacts listed in Section 1.1.2.

7.9.6.1 Primary Users

Site/Contact/Phone	Address
LANL N. King COMM/FTS 505-667-4127	Los Alamos National Laboratory P.O. Box 1663 Los Alamos, NM 87545

Figure 7-14. WHC Liquid Sample Packaging.

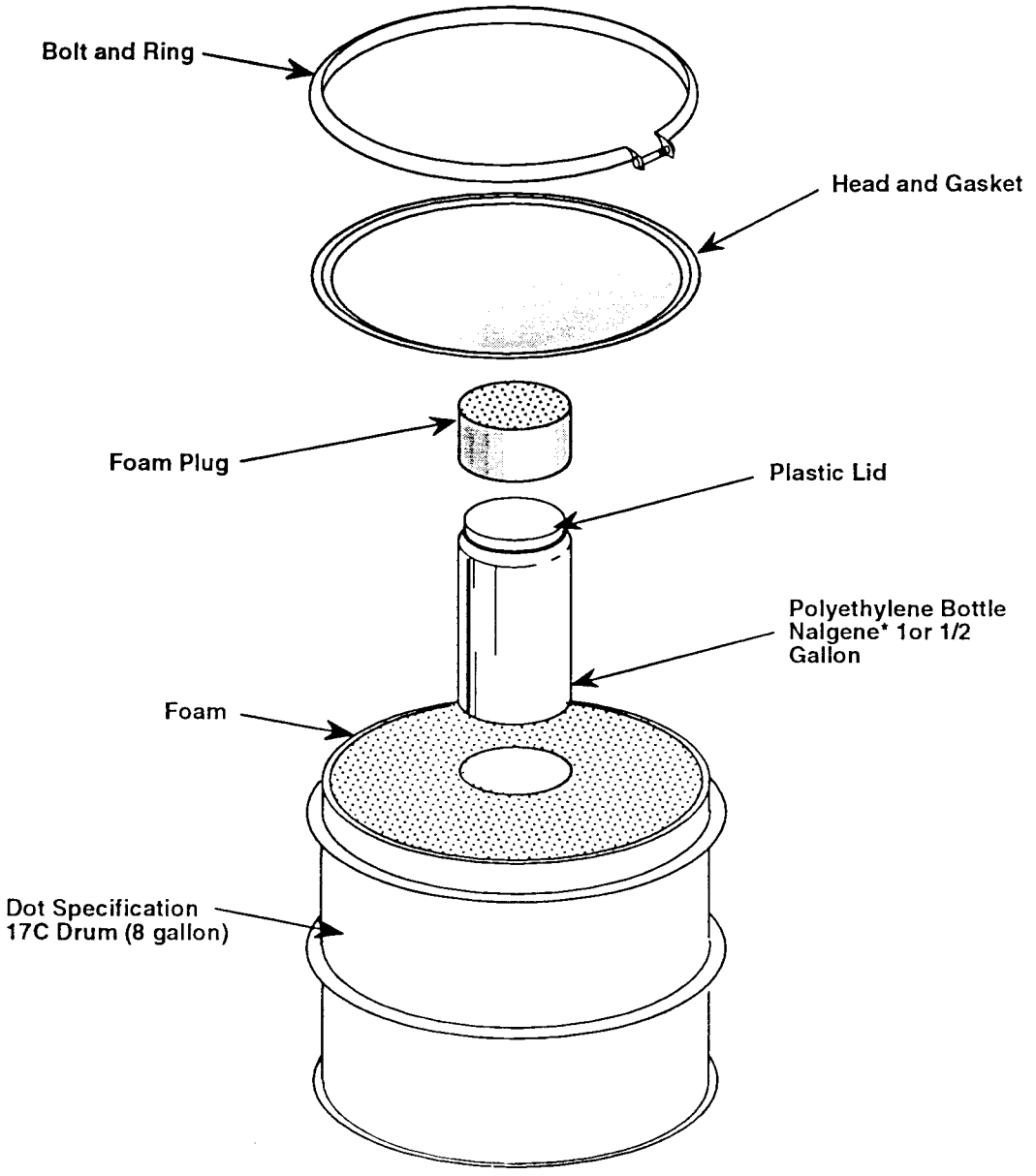

Liquid Sample Packaging

* Nalgene is a trademark of Nalge Company, Incorporated.

39102050.1 FH

7.10 WHC LIQUID SAMPLE PACKAGING (DOCKETS: 90-14-7A, 01/91)

7.10.1 Package Description

Dimensions

DOT-17C drum (8 gal)	Height (in.)	Diameter (in.)
Exterior	13.50	14.75
Interior	12.75	14.00

Materials/Method of Construction

Drum	
• Body and head sheet	• 20 gauge
• Rolling hoops	• One 4 in. from top edge, one 4 in. from inside bottom
• Ring	• 12 gauge
• Bolt	• 0.625 in.
• Gasket	• Darex[a] Cover Compound 740 or Styrene/butadiene copolymer
Foam	• Silicone RTV foam
Bottle	• HDPE wide mouth (3.5-in. diameter), 1 gal Nalgene[b] catalog number 2120-0010 or 0.5 gallon Nalgene catalog number 2120-0005 and 0.5 gal size
Bottle lid	• Polypropylene, screw closure
Sealant	• General Electric, RTV silicone rubber adhesive sealant, RTV 102 White

[a]Darex is a trademark of W.R. Grace and Company.
[b]Nalgene is a trademark of Nalge Company, Incorporated.
HDPE = high-density polyethylene.
RTV = room temperature vulcanizing.

7.10.2 Authorized Contents

The shipper must determine that the actual contents are closely simulated by the test contents. If they are not, testing/analysis must be conducted and documented to demonstrate DOT-7A compliance with the actual contents.

7.10.2.1 Physical Form. Contents restricted to liquid radioactive materials.

7.10.2.1.1 Maximum Gross Weight

- 46.75 lb for 1-gal package
- 43.75 lb for 0.5-gal package.

7.10.2.2 Chemical Form. The shipper must evaluate and ensure chemical compatibility of the material to be shipped with the materials of the packaging in contact with the payload.

7.10.2.3 Radiological. The decrease in distance to the center of the package was 1.25 in. (maximum) as a result of the 30-ft drop test. The load did not shift within the packaging. The shipper must ensure that the radiation level at any surface would not increase by more than 20% (relative to the radiation level of the undamaged package configuration) if such a deformation would occur.

7.10.3 Restrictions/Specifications

The closure ring bolt shall be tightened with tapping of the ring to a torque of 30 to 33 ft-lb.

The RTV sealant (RTV 102, White, or equivalent) must be applied to the surface of the gasket in contact with the drum body. The sealant must be allowed to cure twenty four hours before transporting. Sealant is not required for smaller volumes of liquid when there is sufficient room in the inner cavity to install suitable absorbent material to absorb twice the volume of the liquid contents.

For airborne shipments, HM-181 requirements pertinent to reduced external pressure conditions may be invoked, see discussion in Section 1.3.4.

7.10.4 49 CFR 178.350 Regulatory Requirements

Regulatory Compliance Assessment

Regulatory requirements	Testing/analysis results
49 CFR 173.24, Standard requirements for all packages	Meets applicable requirements. See Appendix A, Table A-6.
49 CFR 173.411, General design requirements	Meets applicable requirements. See Appendix B, Table B-6.
49 CFR 173.412, Additional requirements for Type A packages	Meets applicable requirements. See Appendix C, Table C-10.
49 CFR 173.465, Type A packaging tests	Meets applicable requirements.
Water spray	Pass. This test was conducted and there was no inleakage of water. See Appendix D, Table D-8.
Free drop	Pass. Each of the packages were subjected to a 4-ft and 30-ft drop with the package being oriented with the CG over top rim hitting the lock ring bolt. There was no distortion of the package geometry or significant movement of the inner packaging. See Appendix D, Table D-18.
Corner drop	Not required.
Compression	Pass. This test was conducted with 331 lb for 24 hr with no adverse effect on the package. See Appendix D, Table D-28.
Penetration	Pass. Penetration bar was dropped on the top center and on the side from 5.5 ft. See Appendix D, Table D-35.

7.10.5 Quality Control

Packaging/Acceptance/Use Criteria

Critical	Major	Acceptance/pre-use/ inspection criteria*
Lid/body interface Sealing surface	Vendor qualifications and experience	Functional: • Ease of lid/closure ring application • Bolt closure ring, bolt size • Gasket, adhesive, as specified • Geometry, as specified Acceptable Conditions: • Lack of dents, no deformation of sealing surfaces
Gasket		• Dimensions, as specified
Weld areas		• Continuous welds, no sharp edges
Body and chime	Metal thickness	Lot tests by shipper, as appropriate.
Air leak tests	Bolt size	Vendor data and/or certification: • Marking • Test data • Type A document provided, as appropriate • Air leak tests
	Protective coating application	Visual: • Surface/coating, as specified • Lack of imperfections in application • Lack of rust, dents, nicks

* These criteria apply to first-time use and to reuse as a DOT-7A Type A packaging.

7.10.6 Additional Information

Evaluation and testing of the subject packaging took place at Westinghouse Hanford in 1990 as part of Docket 90-14-7A. Testing was completed in January 1991. A complete evaluation report is available upon request from one of the DOT-7A Program technical contacts listed in Section 1.1.2.

7.10.6.1 Primary Users

Site/Contact/Phone	Address
Hanford T. Romano COMM/FTS 509-376-0610	Westinghouse Hanford Company P.O. Box 1970 Richland, WA 99352

7.10.6.2 Suppliers

RTV Silicone Foam

Insta-Foam Products, Inc.
1500 Cedarwood Drive
Joliet, Illinois 60435
800-435-9359

Figure 7-15. SRP Process-Water Sample.

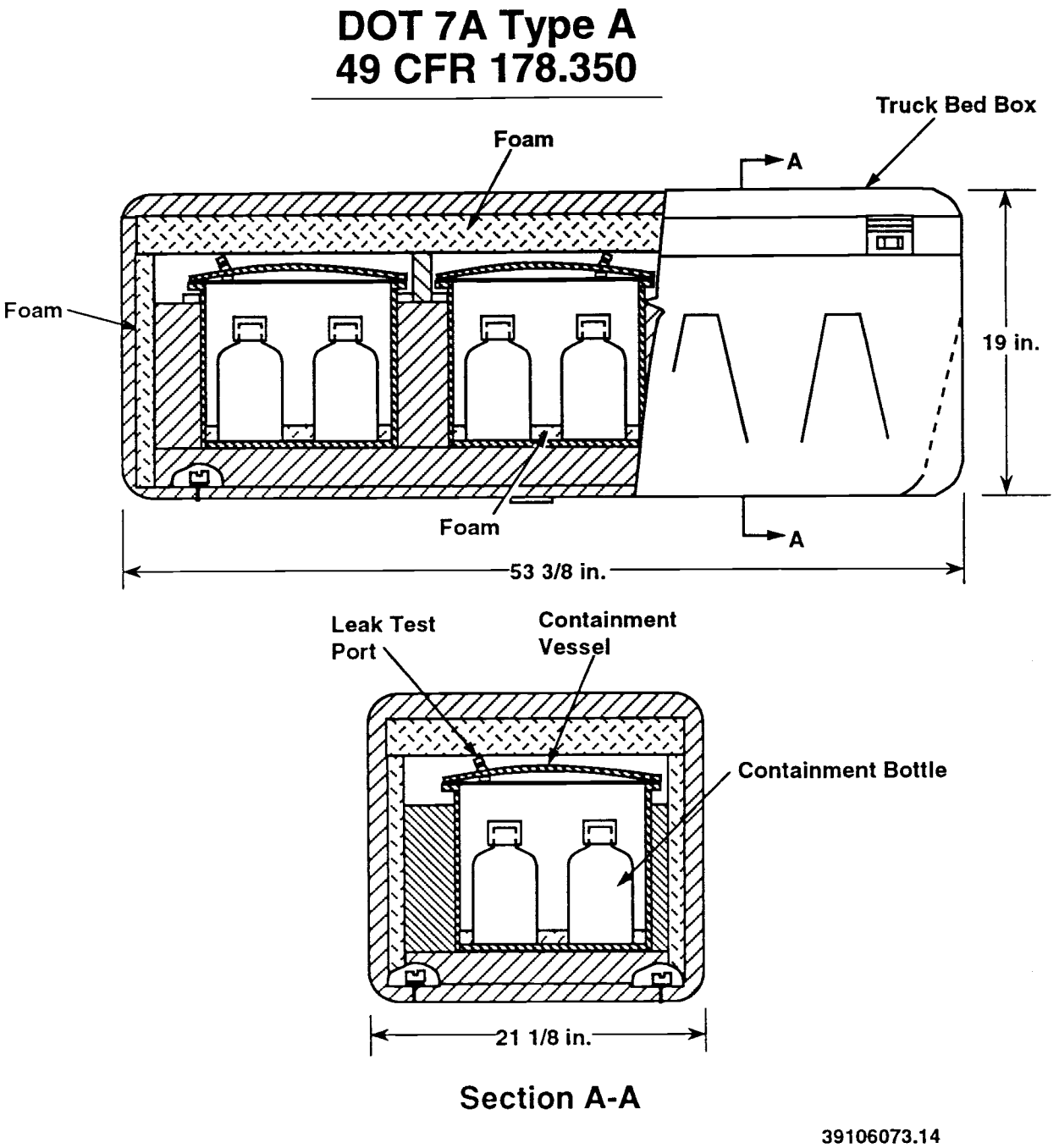

7.11 PROCESS-WATER SAMPLE PACKAGING (DOCKETS: 90-22-7A, 06/91)

7.11.1 Package Description

Dimensions

Description	Length (in.)	Height (in.)	Width (in.)
Polymer box	53.375	19	21.125

	Height (in.)	Diameter (in.)	Volume
Secondary containment vessel	12	12	5.500 gal
Primary containment bottles	2.4 - 8.5	1.3 - 3.6	30 - 1,000 mL

Materials/Method of Construction

Polymer box	High impact resistant polymer
Secondary containment vessel	Aluminum
Primary containment bottles	High density polyethylene (0.959 g/cc), DOT-2E
Secondary containment vessel gasket	Rubber, 63 durometer, shore-A
Foam spacers	Closed-cell polyethylene foam, density 2.2 lb/ft^3

7.11.1.1 Manufacturer/Drawing:

Westinghouse Savannah River,
Dwg. H-HO-G-0100, Rev. 0

7.11.2 Authorized Contents

The shipper must determine that the actual contents are closely simulated by the test contents. If they are not, testing/analysis must be conducted and documented to demonstrate DOT-7A compliance with the actual contents.

7.11.2.1 Physical Form

7.11.2.1.1 Liquids. Radioactive process-water samples--15 L maximum per package. Liquid pH shall be in the range of 2.5 to 11.0.

7.11.2.1.2 Maximum Gross Weight

- 118 lb.

7.11.2.1.3 Maximum Contents Weight

- 36 lb.

7.11.2.2 Chemical Form. The shipper must evaluate and ensure chemical compatibility of the material to be shipped with the materials of the packaging in contact with the payload.

7.11.2.3 Radiological. The contents must be such that the assembled package is contact-handled (i.e. with a surface dose rate of 200 mrem/hr or less). See operating instructions for dose and isotopic inventory limits on individual bottles.

The 30-ft drop test caused a deformation of the package resulting in a decrease in the distance from the exterior to the center of the package of 4.0 in. (maximum). The shipper must ensure that the radiation level at any surface would not increase by more than 20% (relative to the radiation level of the undamaged configuration) if such a deformation would occur.

7.11.3 Restrictions/Specifications

Operation, maintenance, and reuse of the packaging shall be in accordance with *Process-Water Sample Packaging - Operating Instructions*, Westinghouse Savannah River Company (Horn 1990).

For airborne shipments, HM-181 requirements pertinent to reduced external pressure conditions may be invoked, see discussion in Section 1.3.4

7.11.4 Pre-use Inspections

The packaging components shall be visually inspected prior to use for any signs of damage (e.g., loose attachment bolts, damaged containment vessel, broken hinges, split seams, etc.). Upon discovery of any such defects, the applicable packaging component shall be repaired or replaced so that it complies with the drawing requirements.

7.11.5 Loading Procedure

1. Remove closure strap by pressing release button.

2. Open truck box lid.

3. Open the aluminum containment vessel by rotating the lid.

NOTE: The vessel may be removed from the packaging assembly prior to opening.

4. Place the HDPE bottles (primary containment) containing the samples into the aluminum containment vessels (secondary containment).

5. Close the aluminum containment vessel by rotating the lid and holding the body stationary.

6. Close the truck box lid.

7. Pull the closure strap tight to secure.

8. Install "tamper-proof" wire seal around buckle on closure strap by inserting through handle.

9. The loaded package is now ready for placement onto a conveyance for transport.

7.11.6 49 CFR 178.350 Regulatory Requirements

Regulatory Compliance Assessment

Regulatory requirements	Testing/analysis results
49 CFR 173.24, Standard requirements for all packages	Meets applicable requirements. See Appendix A, Table A-6.
49 CFR 173.411, General design requirements	Meets applicable requirements. See Appendix B, Table B-6.
49 CFR 173.412, Additional requirements for Type A packages	Meets applicable requirements. See Appendix C, Table C-10.
49 CFR 173.465, Type A packaging tests	Meets applicable requirements.
Water spray	Pass. This test was conducted twice during the test sequence with no adverse effects. See Appendix D, Table D-8.
Free drop	Pass. Two 4-ft drop tests were conducted with successful results. The impact orientations included: Top--CG over corner Top--Flat on top Two 30-ft drop tests were conducted with successful results. The impact orientations included: Top--CG over corner Top--Flat on top. See Appendix D, Table D-18.
Corner drop	Not required.
Compression	Pass. This test was conducted with an applied load of 2,006 lb with no adverse effects. See Appendix D, Table D-28.
Penetration	Pass. The penetration test was conducted with a drop height of 5.5 ft, targeting the weakest external feature, with no adverse affects on the packaging. See Appendix D, Table D-35.

7.11.7 Quality Control

Packaging/Acceptance/Use Criteria

Critical	Major	Acceptance/pre-use/ inspection criteria*
Truck bed box and outer assembly		• General arrangement per drawing
Foam spacers		• Undamaged and clean • Geometry, as specified
Containment vessels: Metal parts		• General arrangement per drawing • Undamaged and clean • Dimensions, as specified
Gaskets		• Undamaged and clean • Dimensions, as specified
Foam spacers		• Undamaged and clean • Geometry, as specified
Containment bottles		• Undamaged and clean • Dimensions, as specified

* These criteria apply to first-time use and to reuse as a DOT-7A Type A packaging.

7.11.8 Additional Information

Westinghouse Hanford performed testing and evaluation to qualify the subject packaging system in June 1991 as part of Docket 90-22-7A. Complete evaluation reports are available upon request from one of the DOT-7A Program technical contacts listed in Section 1.1.2.

7.11.8.1 Primary Users

Site/Contact/Phone	Address
SRP R. Horn COMM/FTS 803-725-1744	Westinghouse Savannah River Building 723-A P.O. Box 616 Aiken, SC 29808

Figure 7-16. RF Container Model LWS-1.

DOT 7A Type A
49 CFR 178.350

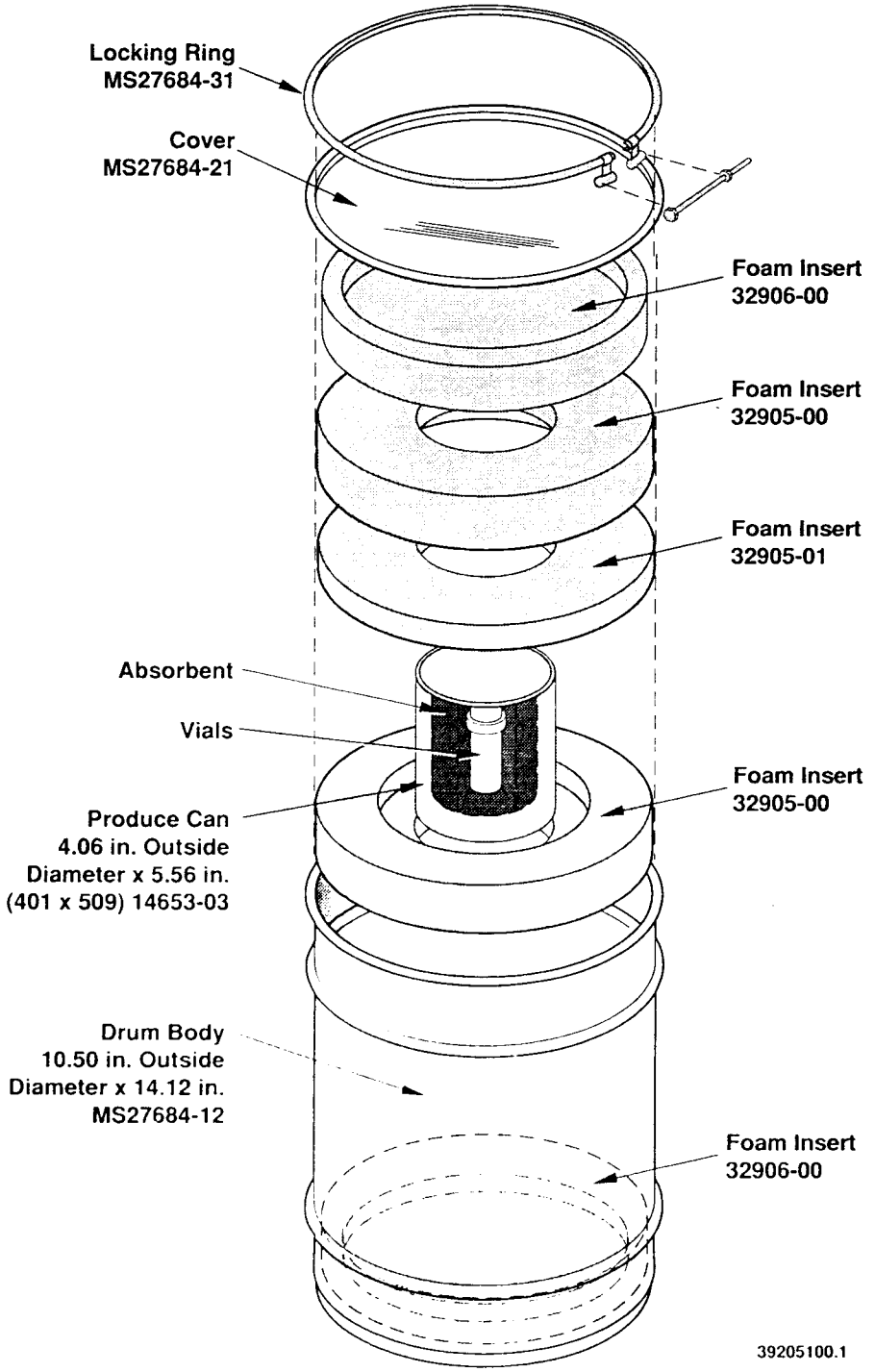

7.12 RF CONTAINER MODEL LWS-1 (DOCKETS: 91-25-7A, 12/91)

7.12.1 Package Description

Dimensions

Model	Height (in.)	Diameter (in.)	Volume (gal)
Exterior	14.12	10.50	4

Materials/Method of Construction

Material	Description
Drum - Assembly - Body - Cover - Gasket - Locking ring	 MS27684-2 MS27684-12 MS27684-21 MS27684-25 MS27684-31
Foam	Polyethylene foam, density 1.6 lb/ft^3 minimum. Ethafoam[a] #220 or equivalent. Per Rocky Flats Plant drawing numbers P32905 and P32906.
Produce can	Per Federal Spec. PPP-C-96D, Type 1 Class 3, round open-top style, welded side seam with compound lined, double seamed ends. All cans 0.25 electrolytic tinplate. Part number 14653-03, can industry size - 401 x 509, and nominal dimensions 4 1/16 in. outside diameter x 5 9/16 in.
Absorbent	Kimpack[b] absorbent, as required by contents to absorb twice the liquid present.
Vials	Savillex Corp. 6 ml - 1.5 oz capacity CAT number 026R or equivalent. Material: Teflon[c] - perfluoralkoxy. Color: semi-clear

[a]Ethafoam is a trademark of Dow Chemical Company.
[b]Kimpack is a trademark of Kimberly-Clark Corporation.
[c]Teflon is a trademark of E.I. DuPont de Nemours and Company.
NOTE: The vials are designated as the primary containment vessel.

7.12.2 Authorized Contents

The shipper must determine that the actual contents are closely simulated by the test contents. If they are not, testing/analysis must be conducted and documented to demonstrate DOT-7A compliance with the actual contents.

7.12.2.1 Physical Form. Contents are liquid radioactive materials authorized when packaged as described.

Package is considered to provide containment plus twice the absorbent required.

7.12.2.1.1 Maximum Gross Weight

- 12 lbs.

7.12.2.2 Chemical Form. The shipper must evaluate and ensure chemical compatibility of the material to be shipped with the materials of the packaging in contact with the payload.

7.12.2.3 Radiological. The shipper must ensure that the radiation level at any surface would not increase by more than 20% (relative to the radiation level prior to the test) as a result of the decrease in distance to the center of the package load resulting from the 30-ft drop test. This decrease in distance to the center of the package was approximately 1 in. The user must also account for the movement of the produce can within the foam inserts, which permit top to bottom motion. No change in position of the produce can resulted in damage to foam inserts. No damage to the foam inserts was observed.

7.12.2.4 Simulated Payload. Ten vials containing 5 ml of RC-77 Fluorescent Penetrant each.

7.12.3 Restrictions/Specifications

Bolt closure ring tightened until lugs begin to bend inward or come together (typically less than 40 ft-lb). During tightening of bolt, tap locking ring.

Sealant is not required.

For vial closure, screw lid on vial to hand-tight torque. Tighten lid on vial using wrench set, Rocky Flats Part Number 33097-02, or equivalent. Using wrench set, retighten vials after approximately 5 min. have elapsed from initial tightening.

7.12.4 49 CFR 178.350 Regulatory Requirements

Regulatory Compliance Assessment

Regulatory requirements	Testing/analysis results
49 CFR 173.24, Standard requirements for all packages	Meets applicable requirements. See Appendix A, Table A-6.
49 CFR 173.411, General design requirements	Meets applicable requirements. See Appendix B, Table B-6.
49 CFR 173.412, Additional requirements for Type A packages	Meets applicable requirements. See Appendix C, Table C-10.
49 CFR 173.465, Type A packaging tests	Meets applicable requirements.
Water spray	Pass. This test was conducted and there was no inleakage of water. See Appendix D, Table D-8
Free drop	Pass. The package was subjected to 4-ft and 30-ft drops. Three drop orientations were used: (1) the package oriented with the center of gravity over top rim position to strike on the closure bolt area, (2) the package oriented to drop directly onto the bottom, and (3) the package oriented to drop flat on the side. There was no distortion of the package geometry. The inner packaging moves within the space provided in the foam. The movement could influence the radiation readings. See Appendix D, Table D-18.
Corner drop	Not required.
Compression	Pass. This test was conducted with 200 lb for 24 hr with no adverse effect on the package. See Appendix D, Table D-28.
Penetration	Pass. Penetration bar was dropped on the top center and on the side from 3.3 ft and 5.5 ft. The movement of the surface inward was less than 1 in. See Appendix D, Table D-35.

7.12.5 Quality Control

Packaging/Acceptance/Use Criteria

Critical	Major	Acceptance/pre-use/ inspection criteria*
Vial	Vendor qualifications and experience	Functional:
		• Ease of lid, cover/closure ring application
Absorbent		• Bolt closure ring, bolt size
Produce can		• Gasket, adhesive, as specified
Foam		• Geometry, as specified
Drum assembly		Acceptable conditions:
		• Lack of dents, no deformation of sealing surfaces
Gasket		• Dimensions, as specified
Weld areas		• Continuous welds, no sharp edges
Body and chime	Metal thickness	Lot tests by shipper, as appropriate
	Bolt size	Vendor Data and/or certification:
		• Marking
		• Test data
		• Type A document provided, as appropriate
		• Air leak tests
	Protective coating application	Visual:
		• Surface/coating, as specified
		• Lack of imperfections in applications
		• Lack of rust, dents, nicks

*These criteria apply to first-time use and to reuse as a DOT-7A Type A packaging

7.12.6 Additional Information

Evaluation and testing of the subject packaging took place at Westinghouse Hanford in 1991 as part of Docket 91-25-7A. Testing was completed in December 1991. A complete evaluation report is available upon request from one of the DOT-7A Program technical contacts listed in Section 1.1.2.

7.12.6.1 Primary Users

Site/Contact/Phone	Address
Rocky Flats Wayne Rayman COMM/FTS 303-966-2511	Rocky Flats Plant P. O. Box 464 Golden, CO 80402

7.12.6.2 Manufacturers

Vial, Savillex Corp. Teflon* - Perfluoralkoxy 6 ml (1/5 oz) capacity	Savillex Corp 6133 Baker Road Minnetonka, MN 55345

*Teflon is a trademark of E.I. duPont de Nemours and Company.

8.0 MISCELLANEOUS

This page intentionally left blank.

Figure 8-1. LLNL Shielded (Previously Spec. 55) Container.

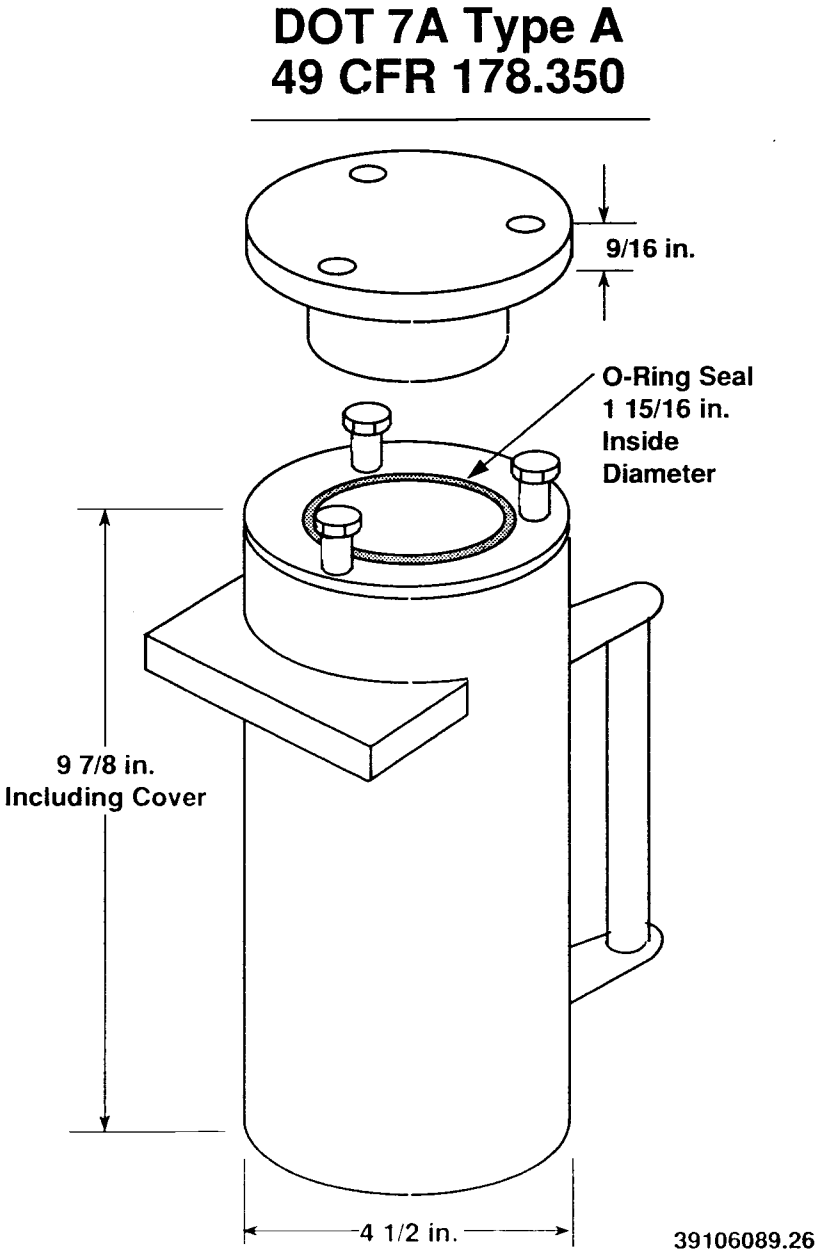

8.1 LLNL SHIELDED (PREVIOUS SPEC 55) CONTAINER (DOCKETS: MLM)

8.1.1 Package Description

Dimensions

Description	Height (in.)	Diameter (in.)
Spec 7A	9.875	--
Outside	--	4.5
Inner cavity	--	2.0

Materials/Method of Construction

Body	Mild steel tubing, 0.12 in. thick
Bottom	Mild steel sheet, 11 gauge
Top	304 SST plate, 0.625 in. thick
Lead	Minimum 95% density in all directions
Bolts	Stainless steel aircraft, 1/4-28NC, 3 required
O-Ring	Round, 0.525-in. diameter x 1 15/16-in. inside diameter

8.1.2 Authorized Contents

The shipper must determine that the actual contents are closely simulated by the test contents. If they are not, testing or analysis must be conducted and documented to demonstrate DOT-7A compliance with the actual contents.

8.1.2.1 Physical Form

8.1.2.1.1 Solids Only. Three forms are authorized. Each shipper must determine the most appropriate material form for his particular contents and comply with any special requirements.

- Material Form No. 1: Solids--any particle size.
- Material Form No. 2: Solids--large particle size only (e.g., sand, concrete, debris, soil, etc.).
- Material Form No. 3: Solids--objects with no significant dispersible or removable contamination. (For definition, see 49 CFR 173.443, Contamination control.)

8.1.2.1.2 Maximum Gross Weight. Form No. 1, No. 2 and No. 3:

- 50 lb.

8.1.2.2 Chemical Form. The shipper must evaluate and ensure chemical compatibility of the material to be shipped with the materials of the packaging in contact with the payload.

8.1.2.3 Radiological. The 4-ft drop test caused deformations of the package resulting in small decreases in the distance from the exterior to the center of the package. The shipper must ensure that the radiation level at any surface would not increase by more than 20% (relative to the radiation level of the undamaged configuration) if such deformations would occur.

8.1.3 49 CFR 178.350 Regulatory Requirements

Regulatory Compliance Requirements

Regulatory requirements	Testing/analysis results
49 CFR 173.24, Standard requirements for all packages	Meets applicable requirements. See Appendix A, Table A-7.
49 CFR 173.411, General design requirements	Meets applicable requirements. See Appendix B, Table B-7.
49 CFR 173.412, Additional requirements for Type A packages	Meets applicable requirements. See Appendix C, Table C-13.
49 CFR 173.465, Type A packaging tests	Meets applicable requirements.
Water spray	Pass. Tests on similar materials demonstrate that this test would have no effect and, since the package was water leak tight after the 4-ft drop, there will be no inleakage of water. See Appendix D, Table D-9.
Free drop	Pass. This package was dropped 4 ft on the top edge with water as contents. There was no loss of contents or change in package geometry. See Appendix D, Table D-19.
Corner drop	Not required.
Compression	Pass. This test was conducted with more than five times the gross weight for 24 hr with no effect on the packaging. See Appendix D, Table D-29.
Penetration	Pass. This test was performed on one bolt of the bolt closure cover. There was no significant effect. See Appendix D, Table D-36.

8.1.4 Quality Control

Packaging/Acceptance/Use Criteria

Critical	Major	Acceptance/pre-use/inspection criteria*
Lid/body interface Sealing surface	Vendor qualifications and experience	Functional: • Ease of lid/closure application • Bolt closure, bolt size • Gasket, as specified • Geometry, as specified Acceptable conditions: • Lack of dents, no deformation of sealing surfaces • Dimensions, as specified
Gasket		• Gasket size, materials, geometry
Weld seams		• Continuous welds, no sharp edges
Body	Metal thickness Bolt size	Lot tests by shipper, as appropriate and/or vendor data certification: • Marking • Test data • Type A certification document provided, as appropriate
	Protective coating	Visual: • Surface/coating, as specified • Absence of application imperfections • Absence of rust, dents, nicks

*These criteria apply to first-time use and to reuse as a DOT-7A Type A packaging.

8.1.5 Additional Information

Evaluation and testing of this packaging were performed at MLM and were documented in Edling 1987. Complete evaluation reports are available upon request from one of the DOT-7A Program technical contacts listed in Section 1.1.2.

8.1.5.1 Primary Users

Site/Contact/Phone	Address
Nevada Test Site W. Hyatt COMM/FTS 702-295-6883	Lawrence Livermore National Laboratory Bldg. 128 Mercury, NV 89023

Figure 8-2. ORNL Transuranic Shipping Container (contents restricted, see Section 8.2.2).

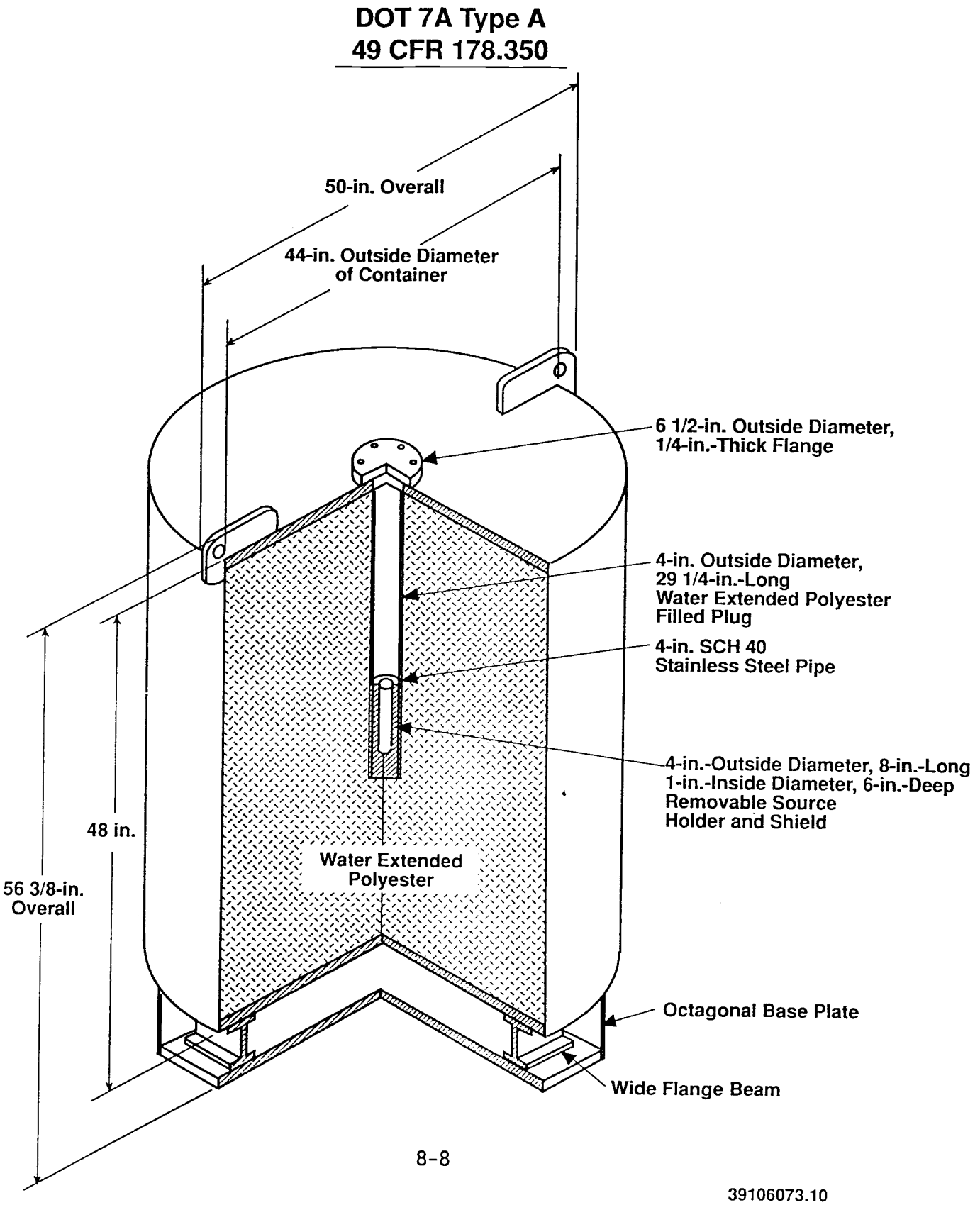

39106073.10

8.2 ORNL TRANSURANIC SHIPPING CONTAINER (DOCKETS: MLM)

8.2.1 Package Description

Dimensions

Description	Height (in.)	Diameter (in.)
Container (w/o base plate and tie-downs)	48	44

Materials/Method of Construction

Container	10-gauge steel sheet Welded seams
Shielding	Water extended polyester

8.2.2 Authorized Contents

The shipper must determine that the actual contents are closely simulated by the test contents. If they are not, testing or analysis must be conducted and documented to demonstrate DOT-7A compliance with the actual contents.

8.2.2.1 **Physical Form.** Authorized only for the following:

- Special form radioactive materials (49 CFR 173.403)
- Inner container that meets the Type A requirements by itself.

8.2.2.1.1 **Maximum Gross Weight**

- 3,700 lb.

8.2.3 Restrictions/Specifications

Note restrictions on contents in Section 8.2.2.1.

8.2.4 49 CFR 178.350 Regulatory Requirements

Regulatory Compliance Assessment

Regulatory requirements	Testing/analysis results
49 CFR 173.24, Standard requirements for all packages	Meets applicable requirements. See Appendix A, Table A-7.
49 CFR 173.411, General design requirements	Meets applicable requirements. See Appendix B, Table B-7.
49 CFR 173.412, Additional requirements for Type A packages	Meets applicable requirements. See Appendix C, Table C-13.
49 CFR 173.465, Type A packaging tests	Meets applicable requirements.
Water spray	Pass. Tests on similar materials demonstrate that this test would have no effect and, since only special form contents are authorized, any inleakage of water will not have a significant effect. See Appendix D, Table D-9.
Free drop	Pass. The drop was conducted on the top rim with no significant effect on the packaging and no change in the package geometry. See Appendix D, Table D-19.
Corner drop	Not required.
Compression	Pass. An analysis demonstrated that a compression load of 18,500 lb will not adversely affect this packaging and will not result in significant change in the package geometry or loss of contents. See Appendix D, Table D-29.
Penetration	Pass. An analysis demonstrated and tests on comparable steel sheet confirmed that this test would result in only minor dents. See Appendix D, Table D-36.

8.2.5 Quality Control

Packaging/Acceptance/Use Criteria

Critical	Major	Criteria*
Lid/body interface	Vendor qualifications and experience	Functional: • Ease of lid/closure application • Closure size • Geometry, as specified Acceptable conditions: • Lack of dents, no deformation of sealing surfaces • Dimensions, as specified
Weld seams		• Continuous welds, no sharp edges
Body and chime	Metal thickness Bolt size	Lot tests by shipper, as appropriate and/or vendor data certification: • Marking • Test data • Type A certification document provided as appropriate
	Protective coating	Visual: • Surface/coating, as specified • Lack of imperfections in application • Lack of rust, dents, nicks

*These criteria apply to first-time use and to reuse as a DOT-7A Type A packaging.

8.2.6 Additional Information

Evaluation and testing of this packaging were performed at MLM and were documented in Edling 1987. Complete evaluation reports are available upon request from one of the DOT-7A Program technical contacts listed in Section 1.1.2.

8.2.6.1 Primary Users

Site/Contact/Phone	Address
ORNL R. W. Schaich COMM/FTS 615-574-6991	Oak Ridge National Laboratory P.O. Box X Oak Ridge, TN 37830

Figure 8-3. FEMA Source Overpack (contents restricted, see Section 8.3.2).

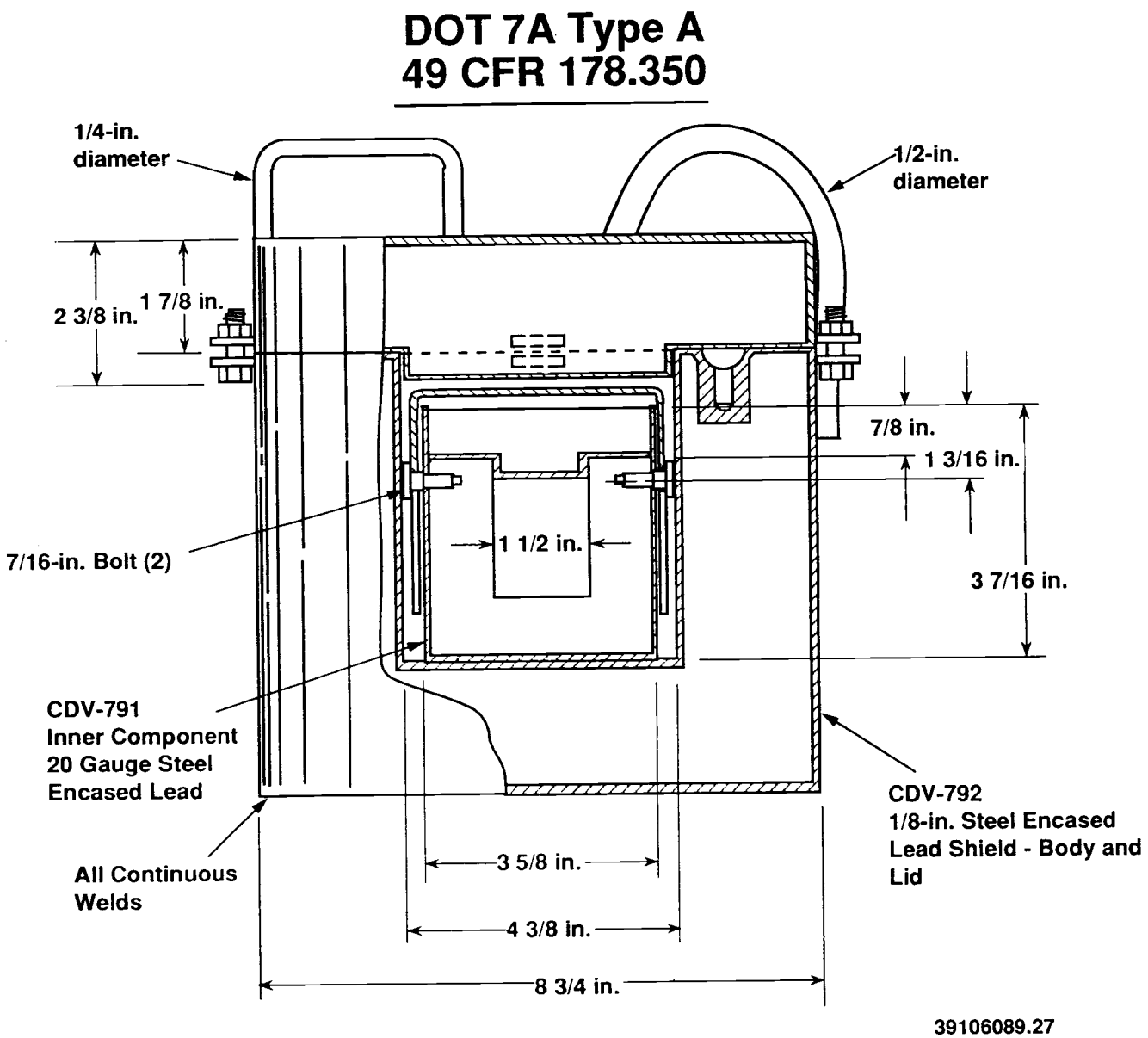

8.3 FEMA CDV-792 SHIELDED OVERPACK (DOCKETS: MLM)

8.3.1 Package Description

Dimensions

Description	Height (in.)	Diameter (in.)
CDV-792 (excluding handles)	8.6250	8.750 outside diameter
Internal cavity	3.4375	4.375 inside diameter

Materials/Method of Construction

Body and lid	Steel clad lead
Lid	Secured with four bolts
CDV-791	Inner assembly which may be used to provide additional shielding

8.3.2 Authorized Contents

The shipper must determine that the actual contents are closely simulated by the test contents. If they are not, testing or analysis must be conducted and documented to demonstrate DOT-7A compliance with the actual contents.

8.3.2.1 **Physical Form.** Authorized only for the following:

- Special form radioactive materials (49 CFR 173.403)
- Inner container that meets the Type A requirements by itself.

8.3.2.1.1 **Maximum Gross Weight**

- 200 lb

  - CDV-792 (w/o 791) = 185 lb
  - CDV-791 = 15 lb

  200 lb.

8.3.3 Restrictions/Specifications

Note restrictions on contents in Section 8.3.2.1

8.3.4 49 CFR 178.350 Regulatory Requirements

Regulatory compliance Assessment

Regulatory requirements	Testing/analysis results
49 CFR 173.24, Standard requirements for all packages	Meets applicable requirements. See Appendix A, Table A-7.
49 CFR 173.411, General design requirements	Meets applicable requirements. See Appendix B, Table B-7.
49 CFR 173.412, Additional requirements for Type A packages	Meets applicable requirements. See Appendix C, Table C-13.
49 CFR 173.465, Type A packaging tests	Meets applicable requirements.
Water spray	Pass. Tests on similar materials demonstrate that this test would have no effect and, since the package was water leak tight after the 4-ft drop, there will be no inleakage of water. See Appendix D, Table D-9.
Free drop	Pass. This test was conducted on the upper lid with the package at a 45° angle. There was little effect other than wrinkling of the lid and bending of a handle. See Appendix D, Table D-19.
Corner drop	Not required.
Compression	Pass. This test was conducted at 1,070 lb with no detectable effect on the packaging. See Appendix D, Table D-29.
Penetration	Pass. This test was conducted on the side of the package with only slight paint chipping. See Appendix D, Table D-36.

8.3.5 Quality Control

Packaging/Acceptance/Use Criteria

Critical	Major	Acceptance/pre-use/inspection criteria*
Lid/body interface	Vendor qualifications and experience	Functional: • Ease of lid/closure application • Closure size • Geometry, as specified Acceptable conditions: • Lack of dents, no deformation of sealing surfaces • Dimensions, as specified
Weld seams		• Continuous welds, no sharp edges
Body and chime	Metal thickness Bolt size	Lot tests by shipper, as appropriate and/or vendor data certification: • Marking • Test data • Type A certification document provided as appropriate
	Protective coating application	Visual: • Surface/coating, as specified • Lack of imperfections in application • Lack of rust, dents, nicks

*These criteria apply to first-time use and to reuse as a DOT-7A Type A packaging.

8.3.6 Additional Information

Evaluation and testing of this packaging were performed at MLM and were documented in Edling 1987. Complete evaluation reports are available upon request from one of the DOT-7A Program technical contacts listed in Section 1.1.2.

8.3.6.1 Primary Users

Site/Contact/Phone	Address
ORNL R. W. Schaich COMM/FTS 615-574-6991	Oak Ridge National Laboratory P.O. Box X Oak Ridge, TN 37830

Figure 8-4. SNL Tritium Waste Package Steel Drum.

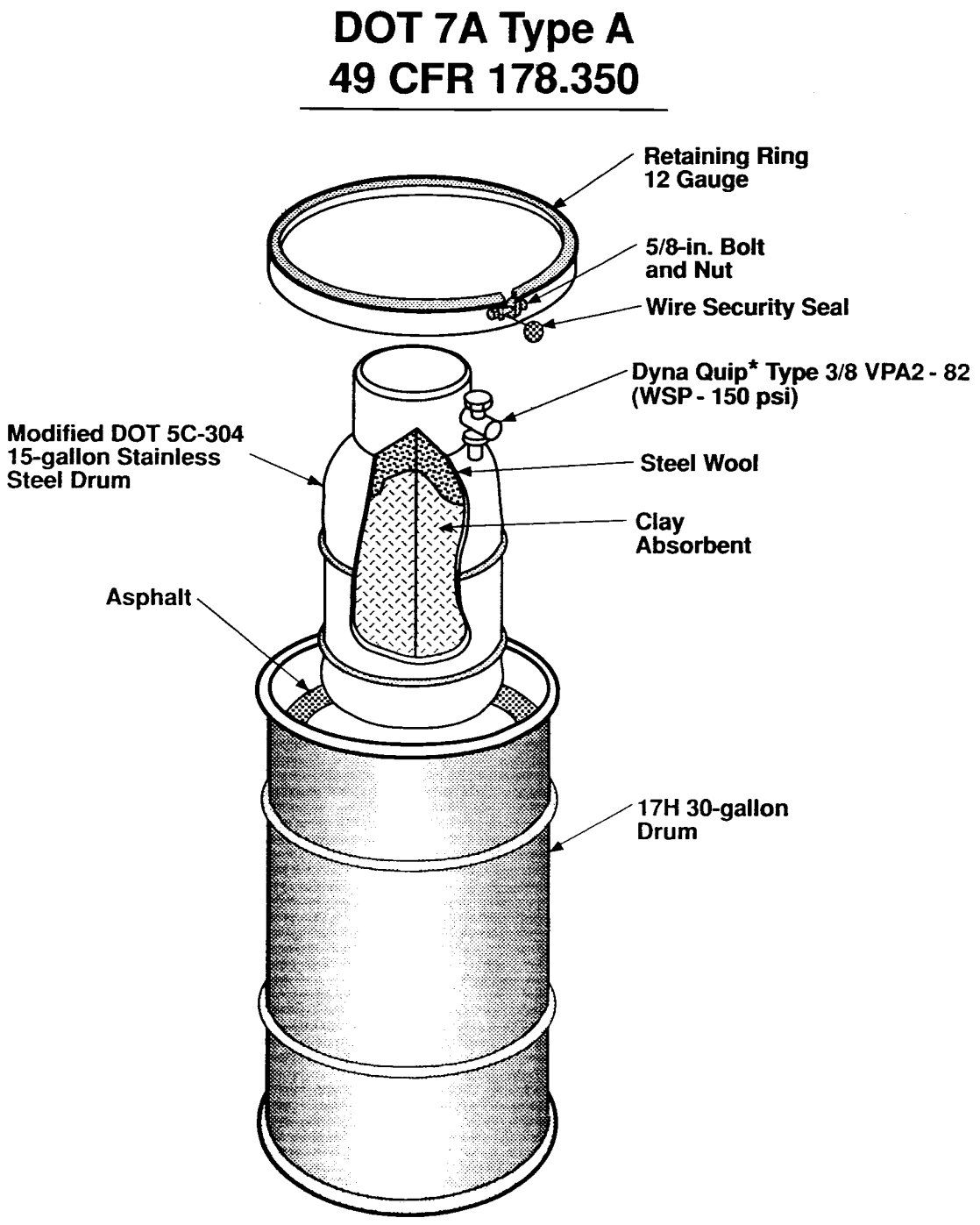

*Dyna Quip is a trademark of Chemetron Corporation.

39106089.28FH

8.4 SNL TRITIUM WASTE PACKAGE STEEL DRUM (DOCKETS: MLM)

8.4.1 Package Description

Dimensions

Drum number	Volume (gal)
DOT-17H	30
5C-304	15

Materials/Method of Construction

DOT-17H 30-gal steel drum	See 49 CFR 178.118, Specification 17H, Steel Drums
DOT 5C-304 stainless steel drum (15 gal) (modified)	See 49 CFR 178.83, Specification 5C, Steel Drum
Valve	Dyna Quip* Type 3/8 VPA2-82 (WSP-150 psi) welded in place
Absorbent Steel wool Asphalt	See Section 8.4.6.2

*Dyna Quip is a trademark of Chemetron Corporation.

8.4.2 Authorized Contents

The shipper must determine that the actual contents are closely simulated by the test contents. If they are not, testing or analysis must be conducted and documented to demonstrate DOT-7A compliance with the actual contents.

8.4.2.1 Physical Form. Two forms are authorized. Each shipper must determine the most appropriate form for his particular contents.

- Material Form No. 1: Solids--any particle size.
- Material Form No. 2: Solids--large particle size only (e.g., sand, concrete, debris, soil, etc.).

NOTE: The packaging is specifically designed for disposal of radioactive (tritium) waste.

8.4.2.1.1 Maximum Gross Weight

- 200 lb.

8.4.2.2 Chemical Form. The shipper must evaluate and ensure chemical compatibility of the material to be shipped with the materials of the packaging in contact with the payload.

8.4.2.3 Radiological. The 4-ft drop test caused deformations of the package resulting in small decreases in the distance from the exterior to the center of the package. The shipper must ensure that the radiation level at any surface would not increase by more than 20% (relative to the radiation level of the undamaged configuration) if such deformations would occur.

8.4.3 Restrictions/Specifications

Maximum of 12 L of liquid immobilized on the clay absorbent.

8.4.4 49 CFR 178.350 Regulatory Requirements

Regulatory Compliance Assessment

Regulatory requirements	Testing/analysis results
49 CFR 173.24, Standard requirements for all packages	Meets applicable requirements. See Appendix A, Table A-7.
49 CFR 173.411, General design requirements	Meets applicable requirements. See Appendix B, Table B-7.
49 CFR 173.412, Additional requirements for Type A packages	Meets applicable requirements. See Appendix C, Table C-13.
49 CFR 173.465, Type A packaging tests	Meets applicable requirements.
Water spray	Pass. Tests on representative drums demonstrate that this test would have no effect on the package and there would be no inleakage of water. See Appendix D, Table D-9.
Free drop	Pass. The inner container was dropped 6 ft on a chime and 4 ft on the protected valve with no loss of containment integrity. The entire package was then dropped 4 ft on the bolt closure ring with no loss of containment integrity. See Appendix D, Table D-19.
Corner drop	Not required.
Compression	Pass. This test was conducted with more than five times the gross weight for 24 hr and no detectable effect on packaging was observed. See Appendix D, Table D-29.
Penetration	Pass. This test was performed on the cylindrical and flat surface of the 17H drum. Only minor dents resulted. See Appendix D, Table D-36.

8.4.5 Quality Control

Packaging/Acceptance/Use Criteria

Critical	Major	Acceptance/pre-use/ inspection criteria*
Lid/body interface Sealing surface	Vendor qualifications and experience	Functional: • Ease of lid/closure application • Bolt closure, bolt size • Gasket, as specified • Geometry, as specified • Seal, body and valve
Valves		Acceptable conditions: • Lack of dents, no deformation of sealing surfaces
Gasket		• Dimensions, as specified • Gasket size, materials, geometry
Weld seams		• Continuous welds, no sharp edges
Body and chime Air leak tests Helium leak tests of new 5Cs	Metal thickness Bolt size	Lot tests by shipper, as appropriate and/or vendor data certification: • Marking • Test data • Type A certification document provided, as appropriate • Air leak tests
Absorbent		Materials: • Quality • Appropriate for contents
	Protective coating application	Visual: • Surface/coating, as specified • Lack of imperfections in application • Lack of rust, dents, nicks

*These criteria apply to first-time use and to reuse as a DOT-7A Type A packaging.

8.4.6 Additional Information

Evaluation and testing of this packaging were performed at MLM and were documented in Revision 1 of this document in 1987. Complete evaluation reports are available upon request from one of the DOT-7A Program technical contacts listed in Section 1.1.2.

8.4.6.1 Primary Users

Site/Contact/Phone	Address
D. Crooks COMM/FTS 510-294-2233	Sandia Livermore P.O. Box 969 Livermore, CA 94550

8.4.6.2 Vendor Data

- Absorbent--Florco, Floridin Company, Pittsburgh, Pennsylvania
- Steel Wool and Asphalt--For details on use and packaging procedures, see *Safety Analysis Report for Packaging a DOT-7A Specification Container for Tritiated Liquid Wastes* (Alford 1980).

Figure 8-5. LANL Aluminum Packaging
(contents restricted, see Section 8.5.3).

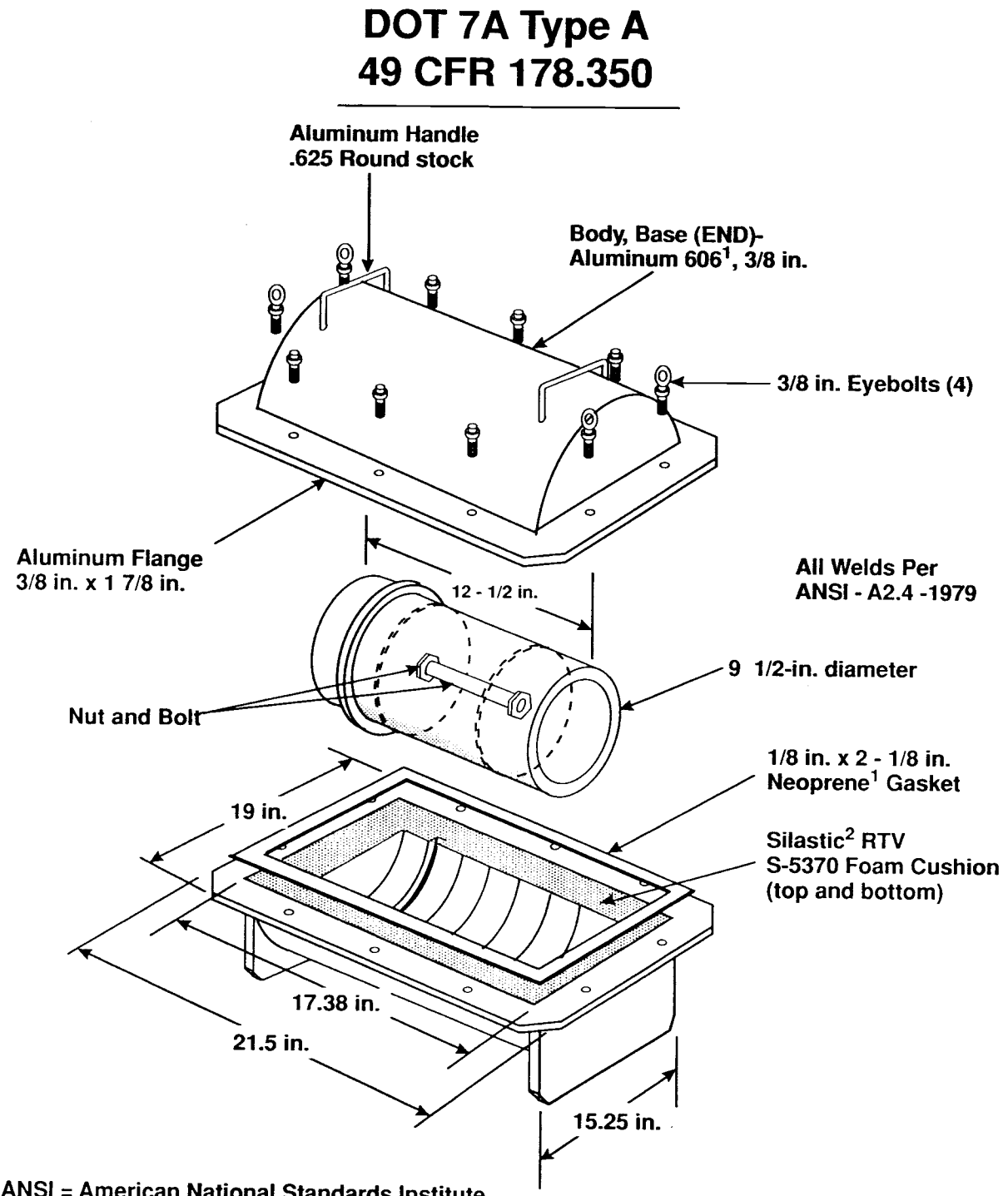

ANSI = American National Standards Institute
[1]Neoprene is a trademark of E.I. duPont de Nemours and Company.
[2]Silastic is a trademark of Dow Corning Company.

39102002.8 FH

8.5 LANL ALUMINUM PACKAGING (LANL-1) (DOCKETS: MLM)

8.5.1 Package Description

Dimensions

Description	Length (in.)	Diameter (in.)	Height (in.)
Interior	17.375	17.000	--
Exterior	--	--	--
Including flange	21.500	19.000	--
W/O flange	17.750	15.250	--
Handles	5.625	0.625	2.250

Materials/Methods of Construction

Body, flanges, ends	Aluminum 6061 - .375 in.
10 threaded bolt holes in flanges	Stainless steel threaded inserts 10 x 0.375-16 UNC-2B x .38LG
Welding	ANSI A2.4 - 1979
Gasket	.125-in. Neoprene[a], 60 durometer
Bolts, eyebolts, and washers	Bolts 0.375-16 UNC - 6 required Eyebolts 0.375-16 UNC - 4 required Washers 0.375 flat -10 required
Aluminum inner container	See Figure 8-5
Cushioning foam	Silastic[b] RTV S-5370 foam

[a]Neoprene is a trademark of E. I. duPont de Nemours and Company.
[b]Silastic is a trademark of Dow Corning Corporation.
RTV = room temperature vulcanizing.

8.5.1.1 Drawing

Los Alamos National Laboratory, No. 18Y-308060, Sheets 1-4.

8.5.2 Authorized Contents

The shipper must determine that the actual contents are closely simulated by the test contents. If they are not, testing or analysis must be conducted and documented to demonstrate DOT-7A compliance with the actual contents.

8.5.2.1 Physical Form

8.5.2.1.1 Solids Only. Restricted to Material Form No. 3 only. Each shipper must determine the most appropriate form for his particular contents and comply with any special requirements.

- Material Form No. 3: Solids--objects with no significant dispersible or removable contamination. (For definition, see 49 CFR 173.443, Contamination control.)

8.5.2.1.2 Maximum Gross Weight

- 170 lb.

8.5.2.2 Chemical Form. The shipper must evaluate and ensure chemical compatibility of the material to be shipped with the materials of the packaging in contact with the payload.

8.5.2.3 Radiological. The 4-ft drop test caused deformations of the package resulting in small decreases in the distance from the exterior to the center of the package. The shipper must ensure that the radiation level at any surface would not increase by more than 20% (relative to the radiation level of the undamaged configuration) if such deformations would occur.

8.5.3 Restrictions/Specifications

The closure bolts shall be torqued to 40 ft-lb.

Gaskets and cushioning materials must have an operating range of -40 °F to 158 °F.

For heavy, bulky materials (e.g., concrete chunks, motors, pumps, etc.), equipment or materials with sharp corners or protrusions, or material/containment geometries that could result in highly localized forces, the shipper must ensure that the contents are securely fastened/positioned within the package.

8.5.4 49 CFR 178.350 Regulatory Requirements

Regulatory Compliance Assessment

Regulatory requirements	Testing/analysis results
49 CFR 173.24, Standard requirements for all packages	Meets applicable requirements. See Appendix A, Table A-7.
49 CFR 173.411, General design requirements	Meets applicable requirements. See Appendix B, Table B-7.
49 CFR 173.412, Additional requirements for Type A packages	Meets applicable requirements. See Appendix C, Table C-13.
49 CFR 173.465, Type A packaging tests	Meets applicable requirements.
Water spray	Pass. This test was not conducted; however, as has been demonstrated in actual tests on similar materials and configurations, this test would not have any effect on the ability of the packaging to meet the Type A tests. Also there would not be any inleakage of water expected. See Appendix D, Table D-9.
Free drop	Pass. Three 4-ft drop tests were conducted on this packaging: (1) an angle drop on the top corner, (2) a drop flat on the side flange, and (3) a drop flat on the end flange. In all cases there was no loss of contents, no distortion of the packaging and no significant dents. See Appendix D, Table D-19.
Corner drop	Not required.
Compression	Pass. This test was not conducted, since the geometry of the packaging does not allow stacking. However, considering the materials and methods of construction, there is no question that it would pass this test/evaluation. See Appendix D, Table D-29.
Penetration	Pass. This test was conducted on the center of the cover, on the side flange, and on one of the bolts. Only minor dents occurred. See Appendix D, Table D-36.

8.5.5 Quality Control

Packaging/Acceptance Criteria

Critical	Major	Acceptance/pre-use/ inspection criteria*
Lid/body interface	Vendor qualifications	Functional: • Ease of lid/closure ring application • Bolt closure, bolt size • Gasket, as specified Acceptable conditions: • Lack of dents, no deformation of sealing surfaces • Dimensions, as specified
Gasket		• Gasket size, materials and geometry
Weld areas		• Continuous welds, no sharp edges
Body and chime	Metal thickness Bolt thickness	Lot tests by shipper, as appropriate • Vendor data and/or certification - Marking - Test data

*These criteria apply to first-time use and to reuse as a DOT Type A packaging.

8.5.6 Additional Information

Evaluation and testing of the subject packaging took place at MLM in 1989. A complete test report is available upon request from one of the DOT-7A Program technical contacts listed in Section 1.1.2.

8.5.6.1 Primary Users

Site/Contact/Phone	Address
LANL N. King COMM/FTS 505-667-4127	Los Alamos National Laboratory P.O. Box 1663 Los Alamos, NM 87545

Figure 8-6. Remote-Handled Transuranic Waste Container.

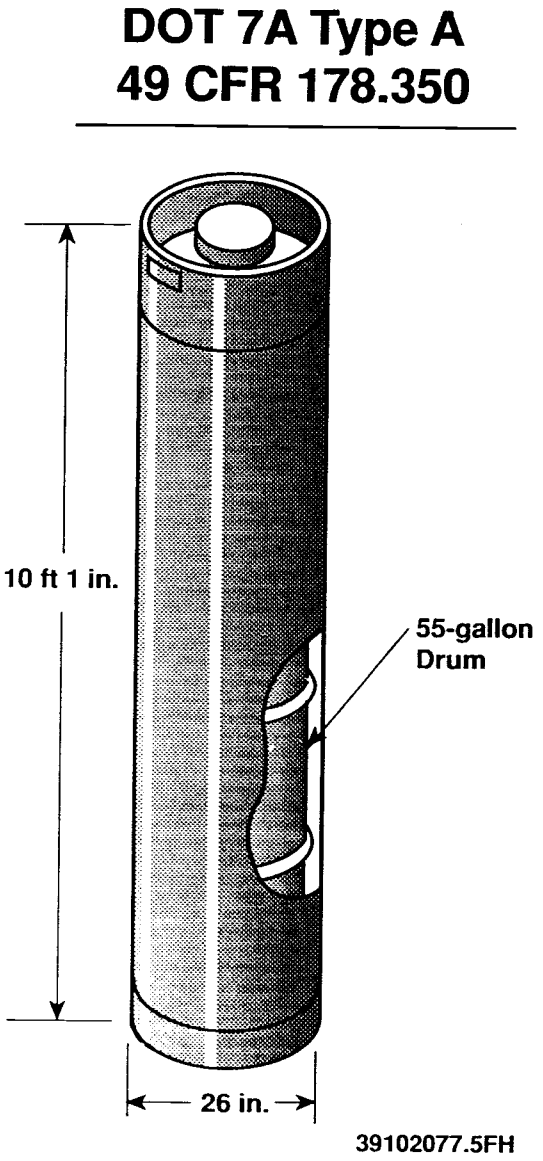

8.6 REMOTE-HANDLED TRANSURANIC WASTE CONTAINER (DOCKETS: 89-03-7A, 05/90)

8.6.1 Package Description

Dimensions and Weight

Description	Height (in.)	Diameter (in.)	Packaging empty weight (lb)
Exterior	121	26.0	1,700
Interior	108	25.5	

Materials/Method of Construction.

Major Components	Material	Thickness (in.)
Pintle protector	ASTM A516-78 GR 55 or	0.375
Cylinder wall	GR 60 for all major	0.250
Bottom protector	components	0.375
Pintle bar		--
Dished head		0.375

NOTE: Container is all-welded construction, including welded-on lid. Filter is a Nuclear Filter Technology, Inc. (NFTI) Model NucFil-018. NucFil is a trademark of NFTI.
ASTM = American Society for Testing and Materials.

8.6.1.1 Drawings

- Westinghouse WID Operations Drawing Number H-2-91273
  - Sheet No. 1, Rev. C
  - Sheet No. 2, Rev. A
  - Sheet No. 3, Rev. A.

8.6.2 Authorized Contents

The shipper must determine that the actual contents are closely simulated by the test contents. If they are not, testing or analysis must be conducted and documented to demonstrate DOT-7A compliance with the actual contents.

8.6.2.1 Physical Form

8.6.2.1.1 Solids Only. Five forms are authorized. Each shipper must determine the most appropriate material form for his particular contents.

- Material Form No. 1: Solids--any particle size.
- Material Form No. 2: Solids--large particle size only (e.g., sand, concrete, debris, soil, etc.).
- Material Form No. 3: Solids--objects with no significant or removable contamination. (For definition see 49 CFR 173.443, Contamination control.)
- Material Form No. 4: Solids--as described in Form No. 3 above, including large bulky dense objects with sharp and obtrusive members or components, but having Form No. 1 and/or No. 2 as dispersible contaminates associated with the material (e.g., steel plates, motors, valves, steel pipes, concrete blocks, etc.).
- Material Form No. 5: Three 55-gal drums (in any arrangement not exceeding 1,000 lb per drum).

8.6.2.1.2 Maximum Gross Weight

- 5,980 lb--Material Form No. 5
- 5,250 lb--Other material forms.

8.6.2.2 Chemical Form

The shipper must evaluate and ensure chemical compatibility of the material to be shipped with the materials of the packaging in contact with the payload.

8.6.3 Restrictions/Specifications

Operation of the packaging shall be in accordance with the *User's Manual for the RH Transuranic Waste Container* (Hertelendy 1985).

For heavy, bulky materials (e.g., concrete chunks, motors, and pumps), equipment or materials with sharp corners or protrusions, or material/equipment geometries that could result in highly localized forces, the shipper must ensure that the contents are securely fastened/positioned within the package.

8.6.4 49 CFR 178.350 Regulatory Requirements

Regulatory Compliance Assessment

Regulatory requirements	Testing/analysis results
49 CFR 173.24, Standard requirements for all packages	Meets applicable requirements. See Appendix A, Table A-7.
49 CFR 173.411, General design requirements	Meets applicable requirements. See Appendix B, Table B-7.
49 CFR 173.412, Additional requirements for Type A packages	Meets applicable requirements. See Appendix C, Table C-13.
49 CFR 173.465, Type A packaging tests	Meets applicable requirements.
Water spray	Pass. This test was conducted and there was no inleakage of water and no features on the package that would retain free standing water. See Appendix D, Table D-9.
Free drop	Pass. Drop tests from a height of 4-ft were conducted as follows: • Flat on top end • Flat on side • Center of gravity over struck corner with top end facing down • Oblique angle drop on bottom end, container at 30° from horizontal • Oblique angle drop on top end, container at 30° from horizontal See Appendix D, Table D-19.
Compression	Pass. A compressive load of 30,040 lb was horizontally applied to the package for 24 hr. See Appendix D, Table D-29.
Penetration	Pass. The 1.25-in diameter, 13.2-lb penetration bar was dropped from a height of 40 in. on the filter and on the side of the container. See Appendix D, Table D-36.

8.6.5 Quality Control

Critical	Major	Acceptance/pre-use/ inspection criteria*
		Functional:
Lid/body interface	Vendor qualifications	• Ease of lid/closure ring application
		• Bolt closure, bolt size
		• Gasket, as specified
		Acceptable conditions:
		• Lack of dents, no deformation of sealing surfaces
		• Dimensions, as specified
Gasket		• Gasket size, materials and geometry
Weld areas		• Continuous welds, as appropriate
Body and chime	Metal thickness	• Lot tests by shipper, as appropriate
	Bolt thickness	• Vendor data and/or certification
		- Marking
		- Test data

*These criteria apply to first-time use and to reuse as a DOT Type A packaging.

8.6.6 Additional Information

Evaluation and testing of the subject packaging took place at Westinghouse Hanford in 1990 as part of Docket 89-03-7A. Testing was completed in May 1990. A complete test report is available upon request from one of the DOT-7A Program technical contacts listed in Section 1.1.2.

8.6.6.1 Primary Users

Site/Contact/Phone	Address
WIPP Sheila A. Lott 505-885-7438	Westinghouse/Waste Isolation Division P.O. Box 2078 Carlsbad, NM 88221-2078

This page intentionally left blank.

9.0 REFERENCES

DOCUMENTS

Alford, E., 1980, *Safety Analysis Report for Packaging a DOT-7A Specification Container for Tritiated Liquid Wastes*, SAND80-8021, Sandia National Laboratories, Livermore, California.

ANSI, 1990, *Uranium Hexaflouride--Packaging for Transport*, ANSI N14.1, American National Standards Institute, New York, New York.

ASTM, 1986, *Test Method for Specific Gravity (Relative Density) and Density of Plastics in Displacement*, ASTM-D-792, American Society for Testing and Materials, Philadelphia, Pennsylvania.

Edling, D. A., 1987, *DOE Evaluation Document for DOT-7A Type A Packaging*, DOE/DP/00053-H1, Monsanto Research Corporation - Mound Laboratory, Miamisburg, Ohio.

Hertelendy, N. A., 1985, *Users' Manual for the RH Transuranic Waste Container*, RHO-RE-MA-7, Rockwell Hanford Operations, Richland, Washington.

Holbrook, R. H., 1991a, *Operations, Maintenance and Inspection Procedure for DOT-7A Type A K1401-7V Low Level Waste Container (Vented)*, Martin Marietta Energy Systems, Inc., Oak Ridge, Tennessee.

Holbrook, R. H., 1991b, *Operations, Maintenance and Inspection Procedure for DOT-7A Type A K1401-9NV Low Level Waste Container (Nonvented)*, Martin Marietta Energy Systems, Inc., Oak Ridge, Tennessee.

Horn, R, 1990, *Process-Water Sample Packaging - Operating Instructions*, Westinghouse Savannah River Company, Aiken, South Carolina.

Keller, E. L., 1966, *Uranium Hexaflouride - Handling Procedures and Container Descriptions*, ORO-651, Oak Ridge Operations Office (AEC), Oak Ridge, Tennessee.

NRC, 1990, *Information Notice 90-82*, IN-90-82, U.S. Nuclear Regulatory Commission, Washington, D.C.

RHO, 1987, *Hanford Solid Waste Packaging, Shipping, and Storage Requirements*, RHO-MA-222, Rev. 4, Rockwell Hanford Operations, Richland, Washington.

WID, 1989, *Acceptance/Use Instruction Sheet for the TRUPACT-II Standard Waste Box - Bolted Lid Style*, Westinghouse-Waste Isolation Division, Carlsbad, New Mexico.

CODE OF FEDERAL REGULATIONS AND FEDERAL REGISTER

10 CFR 71, "Packaging and Transportation of Radioactive Materials," Title 10, *Code of Federal Regulations*, Part 71, as amended, U.S. Nuclear Regulatory Commission, Washington, D.C.

49 CFR 100-500, "Other Regulations Relating to Transportation," Title 49, Subtitle B, *Code of Federal Regulations*, Parts 100 through 500, as amended, U.S. Department of Transportation, Washington, D.C.

49 CFR 171, "Hazardous Materials Regulations, General Information and Definitions," Title 49, *Code of Federal Regulations*, Part 171, as amended, U.S. Department of Transportation, Washington, D.C.

49 CFR 173, "Shippers-General Requirements for Shipments and Packaging," Title 49, *Code of Federal Regulations*, Part 173, as amended, U.S. Department of Transportation, Washington, D.C.

49 CFR 178, "Shipping Container Specification," Title 49, *Code of Federal Regulations*, Part 178, as amended, U.S. Department of Transportation, Washington, D.C.

U.S. DEPARTMENT OF ENERGY ORDERS

DOE, 1991, *Quality Assurance*, DOE Order 5700.6C, U.S. Department of Energy, Washington, D.C.

APPENDIX A

COMPLIANCE WITH STANDARD REQUIREMENTS FOR ALL PACKAGES (49 CFR 173.24)

This page intentionally left blank.

LIST OF TABLES

A-1 Steel Drums--Compliance with Standard Requirements for All Packages A-5

A-2 Steel Boxes--Compliance with Standard Requirements for All Packages A-13

A-3 Wooden Boxes--Compliance with Standard Requirements for All Packages A-21

A-4 Fiberboard Containers--Compliance with Standard Requirements for All Packages A-29

A-5 UF_6 Cylinders--Compliance with Standard Requirements for All Packages A-38

A-6 Liquid and Gas Packagings--Compliance with Standard Requirements for All Packages A-46

A-7 Miscellaneous Packagings--Compliance with Standard Requirements for All Packages A-55

This page intentionally left blank.

Table A-1. Steel Drums--Compliance with Standard Requirements for All Packages (49 CFR 173.24). (8 pages total)

Regulatory requirement: 49 CFR 173.24	Action required/by whom	Packaging category--steel drums
(a) Each package used for shipping hazardous materials under this subchapter shall be so designed and constructed, and its contents so limited, that under conditions normally incident to transportation:		
(1) There will be no significant release of the hazardous materials to the environment;	To be considered during package design evaluation. Shipper responsibility to ensure.	All packagings met the intent of this requirement as demonstrated by meeting the more severe Type A packaging requirements of 49 CFR 173.411, .412, .465, and/or .466 as demonstrated in Section 2.0 and Appendixes B, C, and D.
(2) The effectiveness of the packaging will not be substantially reduced; and	To be considered during package design evaluation. Shipper responsibility to ensure. One aspect for strong consideration is effect of contents on packaging effectiveness.	All packagings met the intent of this requirement as demonstrated by meeting the more severe Type A packaging requirements of 49 CFR 173.411, .412, .465, and/or .466 as demonstrated in Section 2.0 and Appendixes B, C, and D. NOTE: Shipper responsibility to consider and evaluate, if necessary, the effect of the contents.

Table A-1. Steel Drums--Compliance with Standard Requirements for All Packages (49 CFR 173.24). (8 pages total)

Regulatory requirement: 49 CFR 173.24	Action required/by whom	Packaging category--steel drums
(3) There will be no mixture of gases or vapors in the package which could, through any credible spontaneous increase of heat or pressure, or through an explosion, significantly reduce the effectiveness of the packaging.	Shipper responsibility to ensure.	Shipper responsibility to ensure.
(b) Materials for which detailed specifications for packaging are not set forth in this part must be securely packaged in strong, tight packages meeting the requirements of this section.	Does not apply.	Does not apply.
(c) Packaging used for the shipment of hazardous materials under this subchapter shall, unless otherwise specified or exempted therein, meet all of the following design and construction criteria:		
(1) Each specification container must be marked as follows:		
(i) In an unobstructed area with letters and numerals identifying the container specification (e.g., DOT-1A, DOT-17E-304HT, DOT-23G40). See §178.0-2 of this subchapter.	Package must be marked "DOT 7A Type A." Shipper responsibility to ensure.	Shipper responsibility to ensure.

Table A-1. Steel Drums--Compliance with Standard Requirements for All Packages (49 CFR 173.24). (8 pages total)

Regulatory requirement: 49 CFR 173.24	Action required/by whom	Packaging category--steel drums
(ii) The name and address or symbol of person making the mark specified in paragraph (c)(1)(i) of this section. Symbol letters, if used, must be registered with the Director, OHMT. Duplicate symbols are not authorized.	Shipper responsibility to ensure.	Shipper responsibility to ensure.
(iii) The markings must be stamped, embossed, burned, printed, or otherwise marked on the packaging to provide adequate accessibility, permanency, and contrast so as to be readily apparent and understood.	Shipper responsibility to ensure.	Shipper responsibility to ensure.
(iv) Unless otherwise specified, letters and numerals must be at least 1/2 inch high.	Shipper responsibility to ensure.	Shipper responsibility to ensure.
(v) Packaging which does not comply with the applicable specification listed in Parts 178 and 179 of this subchapter must not be marked to indicate such compliance (see §178.0-2 and §179.1 of this subchapter).	Shipper responsibility to ensure.	Shipper responsibility to ensure.
(2) Steel used shall be low-carbon, commercial quality steel. Stainless, open hearth, electric, basic oxygen, or other similar quality steels are acceptable. Steel sheets of specified gauges shall comply with the following:	Designer and fabricator to do and shipper responsibility to ensure.	Shipper responsibility to ensure.

Table A-1. Steel Drums--Compliance with Standard Requirements for All Packages (49 CFR 173.24). (8 pages total)

Regulatory requirement: 49 CFR 173.24			Action required/by whom	Packaging category--steel drums
Gauge No.	Normal thickness (inch)	Minimum thickness (inch)		
12	0.1046	0.0946		
13	0.0897	0.0817		
14	0.0747	0.0677		
15	0.0673	0.0603		
16	0.0598	0.0533		
17	0.0538	0.0478		
18	0.0478	0.0428		
19	0.0418	0.0378		
20	0.0359	0.0324		
22	0.0299	0.0269		
23	0.0269	0.0239		
24	0.0239	0.0209		
26	0.0179	0.0159		
28	0.0149	0.0129		
30	0.0120	0.0110		
(3) Lumber used shall be well seasoned, commercially dry, and free from decay, loose knots, knots that would interfere wi nailing, and other defects that would materially lessen the strength.			Designer and fabricator to do and shipper responsibility to ensure.	Shipper responsibility to ensure.
(4) Welding and brazing shall be performed in a workmanlike manner using suitable and appropriate techniques, materials, and equipment.			Fabricator to do and shipper responsibility to ensure.	Shipper responsibility to ensure.

Table A-1. Steel Drums--Compliance with Standard Requirements for All Packages (49 CFR 173.24). (8 pages total)

Regulatory requirement: 49 CFR 173.24	Action required/by whom	Packaging category--steel drums
(5) Packaging materials and contents shall be such that there will be no significant chemical or galvanic reaction among any of the materials in the package.	Designer to do and shipper responsibility to ensure.	Shipper responsibility to ensure.
(6) Closure shall be adequate to prevent inadvertent leakage of the contents under normal conditions incident to transportation. Gasketed closures shall be fitted with gaskets of efficient materials which will not be deteriorated by the contents of the container.	Designer to do and shipper responsibility to ensure.	Shipper responsibility to ensure.
(7) Nails, staples, and other metallic devices shall not protrude into the interior of the outer packaging in such a manner as to be likely to cause failures.	Fabricator to do and shipper responsibility to ensure.	Shipper responsibility to ensure.
(8) The nature and thickness of the packaging shall be such that friction during transport does not generate any heating likely to decrease the chemical stability of the contents.	Fabricator to do and shipper responsibility to ensure.	Shipper responsibility to ensure.
(d) Polyethylene packagings and receptacles.		

Table A-1. Steel Drums--Compliance with Standard Requirements for All Packages (49 CFR 173.24). (8 pages total)

Regulatory requirement: 49 CFR 173.24	Action required/by whom	Packaging category--steel drums
(1) Polyethylene used in packagings and receptacles must be of a type compatible with the lading and may not be permeable to an extent that a hazardous condition occurs during transportation, handling, or refilling.	Designer to do and shipper responsibility to ensure.	Shipper responsibility to ensure.
(2) Each polyethylene packaging or receptacle which is used for liquid hazardous materials must be capable of withstanding without failure the procedure specified in Appendix B of this part ("Procedure for Testing Chemical Compatibility and Rate of Permeation in Polyethylene Packagings and Receptacles") and the maximum rate of permeation of hazardous lading through or into the polyethylene packaging or receptacles may not exceed the following rates:	Designer, tester, and evaluator to do and shipper responsibility to ensure.	Shipper responsibility to ensure.

Table A-1. Steel Drums--Compliance with Standard Requirements for All Packages (49 CFR 173.24). (8 pages total)

Regulatory requirement: 49 CFR 173.24	Action required/by whom	Packaging category--steel drums
(i) 0.5 percent for materials meeting the definition of a poison according to this subchapter and 2.0 percent for other hazardous materials, when subjected to a temperature no lower than 18°C (64°F) for 180 days in accordance with Test Method 1;		
(ii) 0.5 percent for materials meeting the definition of a poison according to this subchapter and 2.0 percent for other hazardous materials, when subjected to a temperature no lower than 50°C (122°F) for 28 days in accordance with Test Method 2; or		
(iii) 0.5 percent for materials meeting the definition of a poison according to this subchapter and 2.0 percent for other hazardous materials, when subjected to a temperature no lower than 60°C (140°F) for 14 days in accordance with Test Method 3.		
(3) Alternative procedures or rates of permeation are permitted if they yield a level of safety equivalent to or greater than that provided by paragraph (d)(2) of this section and are approved by the Director, OHMT.	Shipper responsibility to ensure.	Shipper responsibility to ensure.

Table A-1. Steel Drums--Compliance with Standard Requirements for All Packages (49 CFR 173.24). (8 pages total)

Regulatory requirement: 49 CFR 173.24	Action required/by whom	Packaging category--steel drums
(4) Each polyethylene packaging used as an outside packaging for materials meeting the definition of a poison according to this subchapter shall be permanently marked, by embossment or other durable means, with the word "POISON" in letters of at least 1/4 inch in height. Additional text or symbols may be included in the marking. The marking shall be located within six inches of the packaging's closure. The requirements of this subparagraph do not apply prior to September 1, 1985.	Shipper responsibility to ensure.	Shipper responsibility to ensure.
(e) For specification containers, compliance with the applicable specifications in Parts 178 and 179 of this subchapter shall be required in all details, except as otherwise provided in this subchapter.	Shipper responsibility to ensure.	Shipper responsibility to ensure.

Table A-2. Steel Boxes--Compliance with Standard Requirements for All Packages (49 CFR 173.24). (8 pages total)

Regulatory requirement: 49 CFR 173.24	Action required/by whom	Packaging category--steel boxes
(a) Each package used for shipping hazardous materials under this subchapter shall be so designed and constructed, and its contents so limited, that under conditions normally incident to transportation:		
(1) There will be no significant release of the hazardous materials to the environment;	To be considered during package design evaluation. Shipper responsibility to ensure.	All packagings met the intent of this requirement as demonstrated by meeting the more severe Type A packaging requirements of 49 CFR 173.411, .412, .465, and/or .466 as demonstrated in Section 3.0 and Appendixes B, C, and D.
(2) The effectiveness of the packaging will not be substantially reduced; and	To be considered during package design evaluation. Shipper responsibility to ensure. One aspect for strong consideration is effect of contents on packaging effectiveness.	All packagings met the intent of this requirement as demonstrated by meeting the more severe Type A packaging requirements of 49 CFR 173.411, .412, .465, and/or .466 as demonstrated in Section 3.0 and Appendixes B, C, and D. NOTE: Shipper responsibility to consider and evaluate, if necessary, the effect of the contents.

Table A-2. Steel Boxes--Compliance with Standard Requirements for All Packages (49 CFR 173.24). (8 pages total)

Regulatory requirement: 49 CFR 173.24	Action required/by whom	Packaging category--steel boxes
(3) There will be no mixture of gases or vapors in the package which could, through any credible spontaneous increase of heat or pressure, or through an explosion, significantly reduce the effectiveness of the packaging.	Shipper responsibility to ensure.	Shipper responsibility to ensure.
(b) Materials for which detailed specifications for packaging are not set forth in this part must be securely packaged in strong, tight packages meeting the requirements of this section.	Does not apply.	Does not apply.
(c) Packaging used for the shipment of hazardous materials under this subchapter shall, unless otherwise specified or exempted therein, meet all of the following design and construction criteria:		
(1) Each specification container must be marked as follows:		
(i) In an unobstructed area with letters and numerals identifying the container specification (e.g., DOT-1A, DOT-17E-304HT, DOT-23G40). See §178.0-2 of this subchapter.	Package must be marked "DOT 7A Type A." Shipper responsibility to ensure.	Shipper responsibility to ensure.

Table A-2. Steel Boxes--Compliance with Standard Requirements for All Packages (49 CFR 173.24). (8 pages total)

Regulatory requirement: 49 CFR 173.24	Action required/by whom	Packaging category--steel boxes
(ii) The name and address or symbol of person making the mark specified in paragraph (c)(1)(i) of this section. Symbol letters, if used, must be registered with the Director, OHMT. Duplicate symbols are not authorized.	Shipper responsibility to ensure.	Shipper responsibility to ensure.
(iii) The markings must be stamped, embossed, burned, printed, or otherwise marked on the packaging to provide adequate accessibility, permanency, and contrast so as to be readily apparent and understood.	Shipper responsibility to ensure.	Shipper responsibility to ensure.
(iv) Unless otherwise specified, letters and numerals must be at least 1/2 inch high.	Shipper responsibility to ensure.	Shipper responsibility to ensure.
(v) Packaging which does not comply with the applicable specification listed in Parts 178 and 179 of this subchapter must not be marked to indicate such compliance (see §178.0-2 and §179.1 of this subchapter).	Shipper responsibility to ensure.	Shipper responsibility to ensure.
(2) Steel used shall be low-carbon, commercial quality steel. Stainless, open hearth, electric, basic oxygen, or other similar quality steels are acceptable. Steel sheets of specified gauges shall comply with the following:	Designer and fabricator to do and shipper responsibility to ensure.	Shipper responsibility to ensure.

Table A-2. Steel Boxes--Compliance with Standard Requirements for All Packages (49 CFR 173.24). (8 pages total)

Regulatory requirement: 49 CFR 173.24			Action required/by whom	Packaging category--steel boxes
Gauge No.	Normal thickness (inch)	Minimum thickness (inch)		
12	0.1046	0.0946		
13	0.0897	0.0817		
14	0.0747	0.0677		
15	0.0673	0.0603		
16	0.0598	0.0533		
17	0.0538	0.0478		
18	0.0478	0.0428		
19	0.0418	0.0378		
20	0.0359	0.0324		
22	0.0299	0.0269		
23	0.0269	0.0239		
24	0.0239	0.0209		
26	0.0179	0.0159		
28	0.0149	0.0129		
30	0.0120	0.0110		
(3) Lumber used shall be well seasoned, commercially dry, and free from decay, loose knots, knots that would interfere with nailing, and other defects that would materially lessen the strength.			Designer and fabricator to do and shipper responsibility to ensure.	Shipper responsibility to ensure.
(4) Welding and brazing shall be performed in a workmanlike manner using suitable and appropriate techniques, materials, and equipment.			Fabricator to do and shipper responsibility to ensure.	Shipper responsibility to ensure.

Table A-2. Steel Boxes--Compliance with Standard Requirements for All Packages (49 CFR 173.24). (8 pages total)

Regulatory requirement: 49 CFR 173.24	Action required/by whom	Packaging category--steel boxes
(5) Packaging materials and contents shall be such that there will be no significant chemical or galvanic reaction among any of the materials in the package.	Designer to do and shipper responsibility to ensure.	Shipper responsibility to ensure.
(6) Closure shall be adequate to prevent inadvertent leakage of the contents under normal conditions incident to transportation. Gasketed closures shall be fitted with gaskets of efficient materials which will not be deteriorated by the contents of the container.	Designer to do and shipper responsibility to ensure.	Shipper responsibility to ensure.
(7) Nails, staples, and other packaging shall not protrude into the interior of the outer packaging in such a manner as to be likely to cause failures.	Fabricator to do and shipper responsibility to ensure.	Shipper responsibility to ensure.
(8) The nature and thickness of the packaging shall be such that friction during transport does not generate any heating likely to decrease the chemical stability of the contents.	Fabricator to do and shipper responsibility to ensure.	Shipper responsibility to ensure.
(d) Polyethylene packagings and receptacles.		

Table A-2. Steel Boxes--Compliance with Standard Requirements for All Packages (49 CFR 173.24). (8 pages total)

Regulatory requirement: 49 CFR 173.24	Action required/by whom	Packaging category--steel boxes
(1) Polyethylene used in packagings and receptacles must be of a type compatible with the lading and may not be permeable to an extent that a hazardous condition occurs during transportation, handling, or refilling.	Designer to do and shipper responsibility to ensure.	Shipper responsibility to ensure.
(2) Each polyethylene packaging or receptacle which is used for liquid hazardous materials must be capable of withstanding without failure the procedure specified in Appendix B of this part ("Procedure for Testing Chemical Compatibility and Rate of Permeation in Polyethylene Packagings and Receptacles") and the maximum rate of permeation of hazardous lading through or into the polyethylene packaging or receptacles may not exceed the following rates:	Designer, tester, and evaluator to do and shipper responsibility to ensure.	Shipper responsibility to ensure.
(i) 0.5 percent for materials meeting the definition of a poison according to this subchapter and 2.0 percent for other hazardous materials, when subjected to a temperature no lower than 18°C (64°F) for 180 days in accordance with Test Method 1;		

Table A-2. Steel Boxes--Compliance with Standard Requirements for All Packages (49 CFR 173.24). (8 pages total)

Regulatory requirement: 49 CFR 173.24	Action required/by whom	Packaging category--steel boxes
(ii) 0.5 percent for materials meeting the definition of a poison according to this subchapter and 2.0 percent for other hazardous materials, when subjected to a temperature no lower than 50°C (122°F) for 28 days in accordance with Test Method 2; or		
(iii) 0.5 percent for materials meeting the definition of a poison according to this subchapter and 2.0 percent for other hazardous materials, when subjected to a temperature no lower than 60°C (140°F) for 14 days in accordance with Test Method 3.		
(3) Alternative procedures or rates of permeation are permitted if they yield a level of safety equivalent to or greater than that provided by paragraph (d)(2) of this section and are approved by the Director, OHMT.	Shipper responsibility to ensure.	Shipper responsibility to ensure.

Table A-2. Steel Boxes--Compliance with Standard Requirements for All Packages (49 CFR 173.24). (8 pages total)

Regulatory requirement: 49 CFR 173.24	Action required/by whom	Packaging category--steel boxes
(4) Each polyethylene packaging used as an outside packaging for materials meeting the definition of a poison according to this subchapter shall be permanently marked, by embossment or other durable means, with the word "POISON" in letters of at least 1/4 inch in height. Additional text or symbols may be included in the marking. The marking shall be located within six inches of the packaging's closure. The requirements of this subparagraph do not apply prior to September 1, 1985.	Shipper responsibility to ensure.	Shipper responsibility to ensure.
(e) For specification containers, compliance with the applicable specifications in Parts 178 and 179 of this subchapter shall be required in all details, except as otherwise provided in this subchapter.	Shipper responsibility to ensure.	Shipper responsibility to ensure.

Table A-3. Wooden Boxes--Compliance with Standard Requirements for All Packages (49 CFR 173.24). (8 pages total)

Regulatory requirement: 49 CFR 173.24	Action required/by whom	Packaging category--wooden boxes
(a) Each package used for shipping hazardous materials under this subchapter shall be so designed and constructed, and its contents so limited, that under conditions normally incident to transportation:		
(1) There will be no significant release of the hazardous materials to the environment;	To be considered during package design evaluation. Shipper responsibility to ensure.	All packagings met the intent of this requirement as demonstrated by meeting the more severe Type A packaging requirements of 49 CFR 173.411, .412, .465, and/or .466 as demonstrated in Section 4.0 and Appendixes B, C, and D.
(2) The effectiveness of the packaging will not be substantially reduced; and	To be considered during package design evaluation. Shipper responsibility to ensure. One aspect for strong consideration is effect of contents on packaging effectiveness.	All packagings met the intent of this requirement as demonstrated by meeting the more severe Type A packaging requirements of 49 CFR 173.411, .412, .465, and/or .466 as demonstrated in Section 4.0 and Appendixes B, C, and D. NOTE: Shipper responsibility to consider and evaluate, if necessary, the effect of the contents.

Table A-3. Wooden Boxes--Compliance with Standard Requirements for All Packages (49 CFR 173.24). (8 pages total)

Regulatory requirement: 49 CFR 173.24	Action required/by whom	Packaging category--wooden boxes
(3) There will be no mixture of gases or vapors in the package which could, through any credible spontaneous increase of heat or pressure, or through an explosion, significantly reduce the effectiveness of the packaging.	Shipper responsibility to ensure.	Shipper responsibility to ensure.
(b) Materials for which detailed specifications for packaging are not set forth in this part must be securely packaged in strong, tight packages meeting the requirements of this section.	Does not apply.	Does not apply.
(c) Packaging used for the shipment of hazardous materials under this subchapter shall, unless otherwise specified or exempted therein, meet all of the following design and construction criteria:		
(1) Each specification container must be marked as follows:		
(i) In an unobstructed area with letters and numerals identifying the container specification (e.g., DOT-1A, DOT-17E-304HT, DOT-23G40). See §178.0-2 of this subchapter.	Package must be marked "DOT 7A Type A." Shipper responsibility to ensure.	Shipper responsibility to ensure.

Table A-3. Wooden Boxes--Compliance with Standard Requirements for All Packages (49 CFR 173.24). (8 pages total)

Regulatory requirement: 49 CFR 173.24	Action required/by whom	Packaging category--wooden boxes
(ii) The name and address or symbol of person making the mark specified in paragraph (c)(1)(i) of this section. Symbol letters, if used, must be registered with the Director, OHMT. Duplicate symbols are not authorized.	Shipper responsibility to ensure.	Shipper responsibility to ensure.
(iii) The markings must be stamped, embossed, burned, printed, or otherwise marked on the packaging to provide adequate accessibility, permanency, and contrast so as to be readily apparent and	Shipper responsibility to ensure.	Shipper responsibility to ensure.
(iv) Unless otherwise specified, letters and numerals must be at least 1/2 inch high.	Shipper responsibility to ensure.	Shipper responsibility to ensure.
(v) Packaging which does not comply with the applicable specification listed in Parts 178 and 179 of this subchapter must not be marked to indicate such compliance (see §178.0-2 and §179.1 of this subchapter).	Shipper responsibility to ensure.	Shipper responsibility to ensure.
(2) Steel used shall be low-carbon, commercial quality steel. Stainless, open hearth, electric, basic oxygen, or other similar quality steels are acceptable. Steel sheets of specified gauges shall comply with the following:	Designer and fabricator to do and shipper responsibility to ensure.	Shipper responsibility to ensure.

Table A-3. Wooden Boxes--Compliance with Standard Requirements for All Packages (49 CFR 173.24). (8 pages total)

Regulatory requirement: 49 CFR 173.24			Action required/by whom	Packaging category--wooden boxes
Gauge No.	Normal thickness (inch)	Minimum thickness (inch)		
12	0.1046	0.0946		
13	0.0897	0.0817		
14	0.0747	0.0677		
15	0.0673	0.0603		
16	0.0598	0.0533		
17	0.0538	0.0478		
18	0.0478	0.0428		
19	0.0418	0.0378		
20	0.0359	0.0324		
22	0.0299	0.0269		
23	0.0269	0.0239		
24	0.0239	0.0209		
26	0.0179	0.0159		
28	0.0149	0.0129		
30	0.0120	0.0110		
(3) Lumber used shall be well seasoned, commercially dry, and free from decay, loose knots, knots that would interfere with nailing, and other defects that would materially lessen the strength.			Designer and fabricator to do and shipper responsibility to ensure.	Shipper responsibility to ensure.
(4) Welding and brazing shall be performed in a workmanlike manner using suitable and appropriate techniques, materials, and equipment.			Fabricator to do and shipper responsibility to ensure.	Shipper responsibility to ensure.

Table A-3. Wooden Boxes--Compliance with Standard Requirements for All Packages (49 CFR 173.24). (8 pages total)

Regulatory requirement: 49 CFR 173.24	Action required/by whom	Packaging category--wooden boxes
(5) Packaging materials and contents shall be such that there will be no significant chemical or galvanic reaction among any of the materials in the package.	Designer to do and shipper responsibility to ensure.	Shipper responsibility to ensure.
(6) Closure shall be adequate to prevent inadvertent leakage of the contents under normal conditions incident to transportation. Gasketed closures shall be fitted with gaskets of efficient materials which will not be deteriorated by the contents of the container.	Designer to do and shipper responsibility to ensure.	Shipper responsibility to ensure.
(7) Nails, staples, and other metallic devices shall not protrude into the interior of the outer packaging in such a manner as to be likely to cause failures.	Fabricator to do and shipper responsibility to ensure.	Shipper responsibility to ensure.
(8) The nature and thickness of the packaging shall be such that friction during transport does not generate any heating likely to decrease the chemical stability of the contents.	Fabricator to do and shipper responsibility to ensure.	Shipper responsibility to ensure.
(d) Polyethylene packagings and receptacles.		

Table A-3. Wooden Boxes--Compliance with Standard Requirements for All Packages (49 CFR 173.24). (8 pages total)

Regulatory requirement: 49 CFR 173.24	Action required/by whom	Packaging category--wooden boxes
(1) Polyethylene used in packagings and receptacles must be of a type compatible with the lading and may not be permeable to an extent that a hazardous condition occurs during transportation, handling, or refilling.	Designer to do and shipper responsibility to ensure.	Shipper responsibility to ensure.
(2) Each polyethylene packaging or receptacle which is used for liquid hazardous materials must be capable of withstanding without failure the procedure specified in Appendix B of this part ("Procedure for Testing Chemical Compatibility and Rate of Permeation in Polyethylene Packagings and Receptacles") and the maximum rate of permeation of hazardous lading through or into the polyethylene packaging or receptacles may not exceed the following rates:	Designer, tester, and evaluator to do and shipper responsibility to ensure.	Shipper responsibility to ensure.
(i) 0.5 percent for materials meeting the definition of a poison according to this subchapter and 2.0 percent for other hazardous materials, when subjected to a temperature no lower than 18°C (64°F) for 180 days in accordance with Test Method 1;		

Table A-3. Wooden Boxes--Compliance with Standard Requirements for All Packages (49 CFR 173.24). (8 pages total)

Regulatory requirement: 49 CFR 173.24	Action required/by whom	Packaging category--wooden boxes
(ii) 0.5 percent for materials meeting the definition of a poison according to this subchapter and 2.0 percent for other hazardous materials, when subjected to a temperature no lower than 50°C (122°F) for 28 days in accordance with Test Method 2; or		
(iii) 0.5 percent for materials meeting the definition of a poison according to this subchapter and 2.0 percent for other hazardous materials, when subjected to a temperature no lower than 60°C (140°F) for 14 days in accordance with Test Method 3.		
(3) Alternative procedures or rates of permeation are permitted if they yield a level of safety equivalent to or greater than that provided by paragraph (d)(2) of this section and are approved by the Director, OHMT.	Shipper responsibility to ensure.	Shipper responsibility to ensure.

Table A-3. Wooden Boxes--Compliance with Standard Requirements for All Packages (49 CFR 173.24). (8 pages total)

Regulatory requirement: 49 CFR 173.24	Action required/by whom	Packaging category--wooden boxes
(4) Each polyethylene packaging used as an outside packaging for materials meeting the definition of a poison according to this subchapter shall be permanently marked, by embossment or other durable means, with the word "POISON" in letters of at least 1/4 inch in height. Additional text or symbols may be included in the marking. The marking shall be located within six inches of the packaging's closure. The requirements of this subparagraph do not apply prior to September 1, 1985.	Shipper responsibility to ensure.	Shipper responsibility to ensure.
(e) For specification containers, compliance with the applicable specifications in Parts 178 and 179 of this subchapter shall be required in all details, except as otherwise provided in this subchapter.	Shipper responsibility to ensure.	Shipper responsibility to ensure.

Table A-4. Fiberboard Containers--Compliance with Standard Requirements for All Packages (49 CFR 173.24). (9 pages total)

Regulatory requirement: 49 CFR 173.24	Action required/by whom	Packaging category--fiberboard containers
(a) Each package used for shipping hazardous materials under this subchapter shall be so designed and constructed, and its contents so limited, that under conditions normally incident to transportation:		
(1) There will be no significant release of the hazardous materials to the environment;	To be considered during package design evaluation. Shipper responsibility to ensure.	All packagings met the intent of this requirement as demonstrated by meeting the more severe Type A packaging requirements of 49 CFR 173.411, .412, .465, and/or .466 as demonstrated in Section 5.0 and Appendixes B, C, and D.
(2) The effectiveness of the packaging will not be substantially reduced; and	To be considered during package design evaluation. Shipper responsibility to ensure. One aspect for strong consideration is effect of contents on packaging effectiveness.	All packagings met the intent of this requirement as demonstrated by meeting the more severe Type A packaging requirements of 49 CFR 173.411, .412, .465, and/or .466 as demonstrated in Section 5.0 and Appendixes B, C, and D. NOTE: Shipper responsibility to consider and evaluate, if necessary, the effect of the contents.

Table A-4. Fiberboard Containers--Compliance with Standard Requirements for All Packages (49 CFR 173.24). (9 pages total)

Regulatory requirement: 49 CFR 173.24	Action required/by whom	Packaging category--fiberboard containers
(3) There will be no mixture of gases or vapors in the package which could, through any credible spontaneous increase of heat or pressure, or through an explosion, significantly reduce the effectiveness of the packaging.	Shipper responsibility to ensure.	Shipper responsibility to ensure.
(b) Materials for which detailed specifications for packaging are not set forth in this part must be securely packaged in strong, tight packages meeting the requirements of this section.	Does not apply.	Does not apply.
(c) Packaging used for the shipment of hazardous materials under this subchapter shall, unless otherwise specified or exempted therein, meet all of the following design and construction criteria:		
(1) Each specification container must be marked as follows:		
(i) In an unobstructed area with letters and numerals identifying the container specification (e.g., DOT-1A, DOT-17E-304HT, DOT-23G40). See §178.0-2 of this subchapter.	Package must be marked "DOT 7A Type A." Shipper responsibility to ensure.	Shipper responsibility to ensure.

Table A-4. Fiberboard Containers--Compliance with Standard Requirements for All Packages (49 CFR 173.24). (9 pages total)

Regulatory requirement: 49 CFR 173.24	Action required/by whom	Packaging category--fiberboard containers
(ii) The name and address or symbol of person making the mark specified in paragraph (c)(1)(i) of this section. Symbol letters, if used, must be registered with the Director, OHMT. Duplicate symbols are not authorized.	Shipper responsibility to ensure.	Shipper responsibility to ensure.
(iii) The markings must be stamped, embossed, burned, printed, or otherwise marked on the packaging to provide adequate accessibility, permanency, and contrast so as to be readily apparent and understood.	Shipper responsibility to ensure.	Shipper responsibility to ensure.
(iv) Unless otherwise specified, letters and numerals must be at least 1/2 inch high.	Shipper responsibility to ensure.	Shipper responsibility to ensure.
(v) Packaging which does not comply with the applicable specification listed in Parts 178 and 179 of this subchapter must not be marked to indicate such compliance (see §178.0-2 and §179.1 of this subchapter).	Shipper responsibility to ensure.	Shipper responsibility to ensure.

Table A-4. Fiberboard Containers--Compliance with Standard Requirements for All Packages (49 CFR 173.24). (9 pages total)

Regulatory requirement: 49 CFR 173.24	Action required/by whom	Packaging category--fiberboard containers
(2) Steel used shall be low-carbon, commercial quality steel. Stainless, open hearth, electric, basic oxygen, or other similar quality steels are acceptable. Steel sheets of specified gauges shall comply with the following:	Designer and fabricator to do and shipper responsibility to ensure.	Shipper responsibility to ensure.

Gauge No.	Normal thickness (inch)	Minimum thickness (inch)
12	0.1046	0.0946
13	0.0897	0.0817
14	0.0747	0.0677
15	0.0673	0.0603
16	0.0598	0.0533
17	0.0538	0.0478
18	0.0478	0.0428
19	0.0418	0.0378
20	0.0359	0.0324
22	0.0299	0.0269
23	0.0269	0.0239
24	0.0239	0.0209
26	0.0179	0.0159
28	0.0149	0.0129
30	0.0120	0.0110

Table A-4. Fiberboard Containers--Compliance with Standard Requirements for All Packages (49 CFR 173.24). (9 pages total)

Regulatory requirement: 49 CFR 173.24	Action required/by whom	Packaging category--fiberboard containers
(3) Lumber used shall be well seasoned, commercially dry, and free from decay, loose knots, knots that would interfere with nailing, and other defects that would materially lessen the strength.	Designer and fabricator to do and shipper responsibility to ensure.	Shipper responsibility to ensure.
(4) Welding and brazing shall be performed in a workmanlike manner using suitable and appropriate techniques, materials, and equipment.	Fabricator to do and shipper responsibility to ensure.	Shipper responsibility to ensure.
(5) Packaging materials and contents shall be such that there will be no significant chemical or galvanic reaction among any of the materials in the package.	Designer to do and shipper responsibility to ensure.	Shipper responsibility to ensure.
(6) Closure shall be adequate to prevent inadvertent leakage of the contents under normal conditions incident to transportation. Gasketed closures shall be fitted with gaskets of efficient materials which will not be deteriorated by the contents of the container.	Designer to do and shipper responsibility to ensure.	Shipper responsibility to ensure.

Table A-4. Fiberboard Containers--Compliance with Standard Requirements for All Packages (49 CFR 173.24). (9 pages total)

Regulatory requirement: 49 CFR 173.24	Action required/by whom	Packaging category--fiberboard containers
(7) Nails, staples, and other packaging shall not protrude into the interior of the outer packaging in such a manner as to be likely to cause failures.	Fabricator to do and shipper responsibility to ensure.	Shipper responsibility to ensure.
(8) The nature and thickness of the packaging shall be such that friction during transport does not generate any heating likely to decrease the chemical stability of the contents.	Fabricator to do and shipper responsibility to ensure.	Shipper responsibility to ensure.
(d) Polyethylene packagings and receptacles.		
(1) Polyethylene used in packagings and receptacles must be of a type compatible with the lading and may not be permeable to an extent that a hazardous condition occurs during transportation, handling, or refilling.	Designer to do and shipper responsibility to ensure.	Shipper responsibility to ensure.

Table A-4. Fiberboard Containers--Compliance with Standard Requirements for All Packages (49 CFR 173.24). (9 pages total)

Regulatory requirement: 49 CFR 173.24	Action required/by whom	Packaging category--fiberboard containers
(2) Each polyethylene packaging or receptacle which is used for liquid hazardous materials must be capable of withstanding without failure the procedure specified in Appendix B of this part ("Procedure for Testing Chemical Compatibility and Rate of Permeation in Polyethylene Packagings and Receptacles") and the maximum rate of permeation of hazardous lading through or into the polyethylene packaging or receptacles may not exceed the following rates: (i) 0.5 percent for materials meeting the definition of a poison according to this subchapter and 2.0 percent for other hazardous materials, when subjected to a temperature no lower than 18°C (64°F) for 180 days in accordance with Test Method 1; (ii) 0.5 percent for materials meeting the definition of a poison according to this subchapter and 2.0 percent for other hazardous materials, when subjected to a temperature no lower than 50°C (122°F) for 28 days in accordance with Test Method 2; or	Designer, tester, and evaluator to do and shipper responsibility to ensure.	Shipper responsibility to ensure.

Table A-4. Fiberboard Containers--Compliance with Standard Requirements for All Packages (49 CFR 173.24). (9 pages total)

Regulatory requirement: 49 CFR 173.24	Action required/by whom	Packaging category--fiberboard containers
(iii) 0.5 percent for materials meeting the definition of a poison according to this subchapter and 2.0 percent for other hazardous materials, when subjected to a temperature no lower than 60°C (140°F) for 14 days in accordance with Test Method 3.		
(3) Alternative procedures or rates of permeation are permitted if they yield a level of safety equivalent to or greater than that provided by paragraph (d)(2) of this section and are approved by the Director, OHMT.	Shipper responsibility to ensure.	Shipper responsibility to ensure.
(4) Each polyethylene packaging used as an outside packaging for materials meeting the definition of a poison according to this subchapter shall be permanently marked, by embossment or other durable means, with the word "POISON" in letters of at least 1/4 inch in height. Additional text or symbols may be included in the marking. The marking shall be located within six inches of the packaging's closure. The requirements of this subparagraph do not apply prior to September 1, 1985.	Shipper responsibility to ensure.	Shipper responsibility to ensure.

Table A-4. Fiberboard Containers--Compliance with Standard Requirements for All Packages (49 CFR 173.24). (9 pages total)

Regulatory requirement: 49 CFR 173.24	Action required/by whom	Packaging category--fiberboard containers
(e) For specification containers, compliance with the applicable specifications in Parts 178 and 179 of this subchapter shall be required in all details, except as otherwise provided in this subchapter.	Shipper responsibility to ensure.	Shipper responsibility to ensure.

Table A-5. UF_6 Cylinders--Compliance with Standard Requirements for All Packages (49 CFR 173.24). (8 pages total)

Regulatory requirement: 49 CFR 173.24	Action required/by whom	Packaging category--UF_6 cylinders
(a) Each package used for shipping hazardous materials under this subchapter shall be so designed and constructed, and its contents so limited, that under conditions normally incident to transportation:		
(1) There will be no significant release of the hazardous materials to the environment;	To be considered during package design evaluation. Shipper responsibility to ensure.	All packagings met the intent of this requirement as demonstrated by meeting the more severe Type A packaging requirements of 49 CFR 173.411, .412, .465, and/or .466 as demonstrated in Section 6.0 and Appendixes B, C, and D.
(2) The effectiveness of the packaging will not be substantially reduced; and	To be considered during package design evaluation. Shipper responsibility to ensure. One aspect for strong consideration is effect of contents on packaging effectiveness.	All packagings met the intent of this requirement as demonstrated by meeting the more severe Type A packaging requirements of 49 CFR 173.411, .412, .465, and/or .466 as demonstrated in Section 6.0 and Appendixes B, C, and D. NOTE: Shipper responsibility to consider and evaluate, if necessary, the effect of the contents.

Table A-5. UF_6 Cylinders--Compliance with Standard Requirements for All Packages (49 CFR 173.24). (8 pages total)

Regulatory requirement: 49 CFR 173.24	Action required/by whom	Packaging category--UF_6 cylinders
(3) There will be no mixture of gases or vapors in the package which could, through any credible spontaneous increase of heat or pressure, or through an explosion, significantly reduce the effectiveness of the packaging.	Shipper responsibility to ensure.	Shipper responsibility to ensure.
(b) Materials for which detailed specifications for packaging are not set forth in this part must be securely packaged in strong, tight packages meeting the requirements of this section.	Does not apply.	Does not apply.
(c) Packaging used for the shipment of hazardous materials under this subchapter shall, unless otherwise specified or exempted therein, meet all of the following design and construction criteria:		
(1) Each specification container must be marked as follows:		
(i) In an unobstructed area with letters and numerals identifying the container specification (e.g., DOT-1A, DOT-17E-304HT, DOT-23G40). See §178.0-2 of this subchapter.	Package must be marked "DOT 7A Type A." Shipper responsibility to ensure.	Shipper responsibility to ensure.

Table A-5. UF_6 Cylinders--Compliance with Standard Requirements for All Packages (49 CFR 173.24). (8 pages total)

Regulatory requirement: 49 CFR 173.24	Action required/by whom	Packaging category--UF_6 cylinders
(ii) The name and address or symbol of person making the mark specified in paragraph (c)(1)(i) of this section. Symbol letters, if used, must be registered with the Director, OHMT. Duplicate symbols are not authorized.	Shipper responsibility to ensure.	Shipper responsibility to ensure.
(iii) The markings must be stamped, embossed, burned, printed, or otherwise marked on the packaging to provide adequate accessibility, permanency, and contrast so as to be readily apparent and understood.	Shipper responsibility to ensure.	Shipper responsibility to ensure.
(iv) Unless otherwise specified, letters and numerals must be at least 1/2 inch high.	Shipper responsibility to ensure.	Shipper responsibility to ensure.
(v) Packaging which does not comply with the applicable specification listed in Parts 178 and 179 of this subchapter must not be marked to indicate such compliance (see §178.0-2 and §179.1 of this subchapter).	Shipper responsibility to ensure.	Shipper responsibility to ensure.
(2) Steel used shall be low-carbon, commercial quality steel. Stainless, open hearth, electric, basic oxygen, or other similar quality steels are acceptable. Steel sheets of specified gauges shall comply with the following:	Designer and fabricator to do and shipper responsibility to ensure.	Shipper responsibility to ensure.

Table A-5. UF_6 Cylinders--Compliance with Standard Requirements for All Packages (49 CFR 173.24). (8 pages total)

Regulatory requirement: 49 CFR 173.24			Action required/by whom	Packaging category--UF_6 cylinders
Gauge No.	Normal thickness (inch)	Minimum thickness (inch)		
12	0.1046	0.0946		
13	0.0897	0.0817		
14	0.0747	0.0677		
15	0.0673	0.0603		
16	0.0598	0.0533		
17	0.0538	0.0478		
18	0.0478	0.0428		
19	0.0418	0.0378		
20	0.0359	0.0324		
22	0.0299	0.0269		
23	0.0269	0.0239		
24	0.0239	0.0209		
26	0.0179	0.0159		
28	0.0149	0.0129		
30	0.0120	0.0110		
(3) Lumber used shall be well seasoned, commercially dry, and free from decay, loose knots, knots that would interfere with nailing, and other defects that would materially lessen the strength.			Designer and fabricator to do and shipper responsibility to ensure.	Shipper responsibility to ensure.
(4) Welding and brazing shall be performed in a workmanlike manner using suitable and appropriate techniques, materials, and equipment.			Fabricator to do and shipper responsibility to ensure.	Shipper responsibility to ensure.

Table A-5. UF_6 Cylinders--Compliance with Standard Requirements for All Packages (49 CFR 173.24). (8 pages total)

Regulatory requirement: 49 CFR 173.24	Action required/by whom	Packaging category--UF_6 cylinders
(5) Packaging materials and contents shall be such that there will be no significant chemical or galvanic reaction among any of the materials in the package.	Designer to do and shipper responsibility to ensure.	Shipper responsibility to ensure.
(6) Closure shall be adequate to prevent inadvertent leakage of the contents under normal conditions incident to transportation. Gasketed closures shall be fitted with gaskets of efficient materials which will not be deteriorated by the contents of the container.	Designer to do and shipper responsibility to ensure.	Shipper responsibility to ensure.
(7) Nails, staples, and other metallic devices shall not protrude into the interior of the outer packaging in such a manner as to be likely to cause failures.	Fabricator to do and shipper responsibility to ensure.	Shipper responsibility to ensure.
(8) The nature and thickness of the packaging shall be such that friction during transport does not generate any heating likely to decrease the chemical stability of the contents.	Fabricator to do and shipper responsibility to ensure.	Shipper responsibility to ensure.
(d) Polyethylene packagings and receptacles.		

Table A-5. UF_6 Cylinders--Compliance with Standard Requirements for All Packages (49 CFR 173.24). (8 pages total)

Regulatory requirement: 49 CFR 173.24	Action required/by whom	Packaging category--UF_6 cylinders
(1) Polyethylene used in packagings and receptacles must be of a type compatible with the lading and may not be permeable to an extent that a hazardous condition occurs during transportation, handling, or refilling.	Designer to do and shipper responsibility to ensure.	Shipper responsibility to ensure.
(2) Each polyethylene packaging or receptacle which is used for liquid hazardous materials must be capable of withstanding without failure the procedure specified in Appendix B of this part ("Procedure for Testing Chemical Compatibility and Rate of Permeation in Polyethylene Packagings and Receptacles") and the maximum rate of permeation of hazardous lading through or into the polyethylene packaging or receptacles may not exceed the following rates:	Designer, tester, and evaluator to do and shipper responsibility to ensure.	Shipper responsibility to ensure.
(i) 0.5 percent for materials meeting the definition of a poison according to this subchapter and 2.0 percent for other hazardous materials, when subjected to a temperature no lower than 18°C (64°F) for 180 days in accordance with Test Method 1;		

Table A-5. UF_6 Cylinders--Compliance with Standard Requirements for All Packages (49 CFR 173.24). (8 pages total)

Regulatory requirement: 49 CFR 173.24	Action required/by whom	Packaging category--UF_6 cylinders
(ii) 0.5 percent for materials meeting the definition of a poison according to this subchapter and 2.0 percent for other hazardous materials, when subjected to a temperature no lower than 50°C (122°F) for 28 days in accordance with Test Method 2; or		
(iii) 0.5 percent for materials meeting the definition of a poison according to this subchapter and 2.0 percent for other hazardous materials, when subjected to a temperature no lower than 60°C (140°F) for 14 days in accordance with Test Method 3.		
(3) Alternative procedures or rates of permeation are permitted if they yield a level of safety equivalent to or greater than that provided by paragraph (d)(2) of this section and are approved by the Director, OHMT.	Shipper responsibility to ensure.	Shipper responsibility to ensure.

Table A-5. UF_6 Cylinders--Compliance with Standard Requirements for All Packages (49 CFR 173.24). (8 pages total)

Regulatory requirement: 49 CFR 173.24	Action required/by whom	Packaging category--UF_6 cylinders
(4) Each polyethylene packaging used as an outside packaging for materials meeting the definition of a poison according to this subchapter shall be permanently marked, by embossment or other durable means, with the word "POISON" in letters of at least 1/4 inch in height. Additional text or symbols may be included in the marking. The marking shall be located within six inches of the packaging's closure The requirements of this subparagraph do not apply prior to September 1, 1985.	Shipper responsibility to ensure.	Shipper responsibility to ensure.
(e) For specification containers, compliance with the applicable specifications in Parts 178 and 179 of this subchapter shall be required in all details, except as otherwise provided in this subchapter.	Shipper responsibility to ensure.	Shipper responsibility to ensure.

Table A-6. Liquid and Gas Packagings--Compliance with Standard Requirements for All Packages (49 CFR 173.24). (9 pages total)

Regulatory requirement: 49 CFR 173.24	Action required/by whom	Packaging category--liquid and gas packagings
(a) Each package used for shipping hazardous materials under this subchapter shall be so designed and constructed, and its contents so limited, that under conditions normally incident to transportation:		
(1) There will be no significant release of the hazardous materials to the environment;	To be considered during package design evaluation. Shipper responsibility to ensure.	All packagings met the intent of this requirement as demonstrated by meeting the more severe Type A packaging requirements of 49 CFR 173.411, .412, .465, and/or .466 as demonstrated in Section 7.0 and Appendixes B, C, and D.
(2) The effectiveness of the packaging will not be substantially reduced; and	To be considered during package design evaluation. Shipper responsibility to ensure. One aspect for strong consideration is effect of contents on packaging effectiveness.	All packagings met the intent of this requirement as demonstrated by meeting the more severe Type A packaging requirements of 49 CFR 173.411, .412, .465, and/or .466 as demonstrated in Section 7.0 and Appendixes B, C, and D. NOTE: Shipper responsibility to consider and evaluate, if necessary, the effect of the contents.

Table A-6. Liquid and Gas Packagings--Compliance with Standard Requirements for All Packages (49 CFR 173.24). (9 pages total)

Regulatory requirement: 49 CFR 173.24	Action required/by whom	Packaging category--liquid and gas packagings
(3) There will be no mixture of gases or vapors in the package which could, through any credible spontaneous increase of heat or pressure, or through an explosion, significantly reduce the effectiveness of the packaging.	Shipper responsibility to ensure.	Shipper responsibility to ensure.
(b) Materials for which detailed specifications for packaging are not set forth in this part must be securely packaged in strong, tight packages meeting the requirements of this section.	Does not apply.	Does not apply.
(c) Packaging used for the shipment of hazardous materials under this subchapter shall, unless otherwise specified or exempted therein, meet all of the following design and construction criteria:		
(1) Each specification container must be marked as follows:		
(i) In an unobstructed area with letters and numerals identifying the container specification (e.g., DOT-1A, DOT-17E-304HT, DOT-23G40). See §178.0-2 of this subchapter.	Package must be marked "DOT 7A Type A." Shipper responsibility to ensure.	Shipper responsibility to ensure.

Table A-6. Liquid and Gas Packagings--Compliance with Standard Requirements for All Packages (49 CFR 173.24). (9 pages total)

Regulatory requirement: 49 CFR 173.24	Action required/by whom	Packaging category--liquid and gas packagings
(ii) The name and address or symbol of person making the mark specified in paragraph (c)(1)(i) of this section. Symbol letters, if used, must be registered with the Director, OHMT. Duplicate symbols are not authorized.	Shipper responsibility to ensure.	Shipper responsibility to ensure.
(iii) The markings must be stamped, embossed, burned, printed, or otherwise marked on the packaging to provide adequate accessibility, permanency, and contrast so as to be readily apparent and understood.	Shipper responsibility to ensure.	Shipper responsibility to ensure.
(iv) Unless otherwise specified, letters and numerals must be at least 1/2 inch high.	Shipper responsibility to ensure.	Shipper responsibility to ensure.
(v) Packaging which does not comply with the applicable specification listed in Parts 178 and 179 of this subchapter must not be marked to indicate such compliance (see §178.0-2 and §179.1 of this subchapter).	Shipper responsibility to ensure.	Shipper responsibility to ensure.

Table A-6. Liquid and Gas Packagings--Compliance with Standard Requirements for All Packages (49 CFR 173.24). (9 pages total)

Regulatory requirement: 49 CFR 173.24	Action required/by whom	Packaging category--liquid and gas packagings
(2) Steel used shall be low-carbon, commercial quality steel. Stainless, open hearth, electric, basic oxygen, or other similar quality steels are acceptable. Steel sheets of specified gauges shall comply with the following:	Designer and fabricator to do and shipper responsibility to ensure.	Shipper responsibility to ensure.

Gauge No.	Normal thickness (inch)	Minimum thickness (inch)
12	0.1046	0.0946
13	0.0897	0.0817
14	0.0747	0.0677
15	0.0673	0.0603
16	0.0598	0.0533
17	0.0538	0.0478
18	0.0478	0.0428
19	0.0418	0.0378
20	0.0359	0.0324
22	0.0299	0.0269
23	0.0269	0.0239
24	0.0239	0.0209
26	0.0179	0.0159
28	0.0149	0.0129
30	0.0120	0.0110

Table A-6. Liquid and Gas Packagings--Compliance with Standard Requirements for All Packages (49 CFR 173.24). (9 pages total)

Regulatory requirement: 49 CFR 173.24	Action required/by whom	Packaging category--liquid and gas packagings
(3) Lumber used shall be well seasoned, commercially dry, and free from decay, loose knots, knots that would interfere with nailing, and other defects that would materially lessen the strength.	Designer and fabricator to do and shipper responsibility to ensure.	Shipper responsibility to ensure.
(4) Welding and brazing shall be performed in a workmanlike manner using suitable and appropriate techniques, materials, and equipment.	Fabricator to do and shipper responsibility to ensure.	Shipper responsibility to ensure.
(5) Packaging materials and contents shall be such that there will be no significant chemical or galvanic reaction among any of the materials in the package.	Designer to do and shipper responsibility to ensure.	Shipper responsibility to ensure.
(6) Closure shall be adequate to prevent inadvertent leakage of the contents under normal conditions incident to transportation. Gasketed closures shall be fitted with gaskets of efficient materials which will not be deteriorated by the contents of the container.	Designer to do and shipper responsibility to ensure.	Shipper responsibility to ensure.

Table A-6. Liquid and Gas Packagings--Compliance with Standard Requirements for All Packages (49 CFR 173.24). (9 pages total)

Regulatory requirement: 49 CFR 173.24	Action required/by whom	Packaging category--liquid and gas packagings
(7) Nails, staples, and other metallic devices shall not protrude into the interior of the outer packaging in such a manner as to be likely to cause failures.	Fabricator to do and shipper responsibility to ensure.	Shipper responsibility to ensure.
(8) The nature and thickness of the packaging shall be such that friction during transport does not generate any heating likely to decrease the chemical stability of the contents.	Fabricator to do and shipper responsibility to ensure.	Shipper responsibility to ensure.
(d) Polyethylene packagings and receptacles.		
(1) Polyethylene used in packagings and receptacles must be of a type compatible with the lading and may not be permeable to an extent that a hazardous condition occurs during transportation, handling, or refilling.	Designer to do and shipper responsibility to ensure.	Shipper responsibility to ensure.

Table A-6. Liquid and Gas Packagings--Compliance with Standard Requirements for All Packages (49 CFR 173.24). (9 pages total)

Regulatory requirement: 49 CFR 173.24	Action required/by whom	Packaging category--liquid and gas packagings
(2) Each polyethylene packaging or receptacle which is used for liquid hazardous materials must be capable of withstanding without failure the procedure specified in Appendix B of this part ("Procedure for Testing Chemical Compatibility and Rate of Permeation in Polyethylene Packagings and Receptacles") and the maximum rate of permeation of hazardous lading through or into the polyethylene packaging or receptacles may not exceed the following rates: (i) 0.5 percent for materials meeting the definition of a poison according to this subchapter and 2.0 percent for other hazardous materials, when subjected to a temperature no lower than 18°C (64°F) for 180 days in accordance with Test Method 1; (ii) 0.5 percent for materials meeting the definition of a poison according to this subchapter and 2.0 percent for other hazardous materials, when subjected to a temperature no lower than 50°C (122°F) for 28 days in accordance with Test Method 2; or	Designer, tester, and evaluator to do and shipper responsibility to ensure.	Shipper responsibility to ensure.

Table A-6. Liquid and Gas Packagings--Compliance with Standard Requirements for All Packages (49 CFR 173.24). (9 pages total)

Regulatory requirement: 49 CFR 173.24	Action required/by whom	Packaging category--liquid and gas packagings
(iii) 0.5 percent for materials meeting the definition of a poison according to this subchapter and 2.0 percent for other hazardous materials, when subjected to a temperature no lower than 60°C (140°F) for 14 days in accordance with Test Method 3.		
(3) Alternative procedures or rates of permeation are permitted if they yield a level of safety equivalent to or greater than that provided by paragraph (d)(2) of this section and are approved by the Director, OHMT.	Shipper responsibility to ensure.	Shipper responsibility to ensure.
(4) Each polyethylene packaging used as an outside packaging for materials meeting the definition of a poison according to this subchapter shall be permanently marked, by embossment or other durable means, with the word "POISON" in letters of at least 1/4 inch in height. Additional text or symbols may be included in the marking. The marking shall be located within six inches of the packaging's closure. The requirements of this subparagraph do not apply prior to September 1, 1985.	Shipper responsibility to ensure.	Shipper responsibility to ensure.

Table A-6. Liquid and Gas Packagings--Compliance with Standard Requirements for All Packages (49 CFR 173.24). (9 pages total)

Regulatory requirement: 49 CFR 173.24	Action required/by whom	Packaging category--liquid and gas packagings
(e) For specification containers, compliance with the applicable specifications in Parts 178 and 179 of this subchapter shall be required in all details, except as otherwise provided in this subchapter.	Shipper responsibility to ensure.	Shipper responsibility to ensure.

Table A-7. Miscellaneous Packagings--Compliance with Standard Requirements for All Packages (49 CFR 173.24). (8 pages total)

Regulatory requirement: 49 CFR 173.24	Action required/by whom	Packaging category--miscellaneous packagings
(a) Each package used for shipping hazardous materials under this subchapter shall be so designed and constructed, and its contents so limited, that under conditions normally incident to transportation:		
(1) There will be no significant release of the hazardous materials to the environment;	To be considered during package design evaluation. Shipper responsibility to ensure.	All packagings met the intent of this requirement as demonstrated by meeting the more severe Type A packaging requirements of 49 CFR 173.411, .412, .465, and/or .466 as demonstrated in Section 8.0 and Appendixes B, C, and D.
(2) The effectiveness of the packaging will not be substantially reduced; and	To be considered during package design evaluation. Shipper responsibility to ensure. One aspect for strong consideration is effect of contents on packaging effectiveness.	All packagings met the intent of this requirement as demonstrated by meeting the more severe Type A packaging requirements of 49 CFR 173.411, .412, .465, and/or .466 as demonstrated in Section 8.0 and Appendixes B, C, and D. NOTE: Shipper responsibility to consider and evaluate, if necessary, the effect of the contents.

Table A-7. Miscellaneous Packagings--Compliance with Standard Requirements for All Packages (49 CFR 173.24). (8 pages total)

Regulatory requirement: 49 CFR 173.24	Action required/by whom	Packaging category--miscellaneous packagings
(3) There will be no mixture of gases or vapors in the package which could, through any credible spontaneous increase of heat or pressure, or through an explosion, significantly reduce the effectiveness of the packaging.	Shipper responsibility to ensure.	Shipper responsibility to ensure.
(b) Materials for which detailed specifications for packaging are not set forth in this part must be securely packaged in strong, tight packages meeting the requirements of this section.	Does not apply.	Does not apply.
(c) Packaging used for the shipment of hazardous materials under this subchapter shall, unless otherwise specified or exempted therein, meet all of the following design and construction criteria:		
(1) Each specification container must be marked as follows:		
(i) In an unobstructed area with letters and numerals identifying the container specification (e.g., DOT-1A, DOT-17E-304HT, DOT-23G40). See §178.0-2 of this subchapter.	Package must be marked "DOT 7A Type A." Shipper responsibility to ensure.	Shipper responsibility to ensure.

Table A-7. Miscellaneous Packagings--Compliance with Standard Requirements for All Packages (49 CFR 173.24). (8 pages total)

Regulatory requirement: 49 CFR 173.24	Action required/by whom	Packaging category--miscellaneous packagings
(ii) The name and address or symbol of person making the mark specified in paragraph (c)(1)(i) of this section. Symbol letters, if used, must be registered with the Director, OHMT. Duplicate symbols are not authorized.	Shipper responsibility to ensure.	Shipper responsibility to ensure.
(iii) The markings must be stamped, embossed, burned, printed, or otherwise marked on the packaging to provide adequate accessibility, permanency, and contrast so as to be readily apparent and	Shipper responsibility to ensure.	Shipper responsibility to ensure.
(iv) Unless otherwise specified, letters and numerals must be at least 1/2 inch high.	Shipper responsibility to ensure.	Shipper responsibility to ensure.
(v) Packaging which does not comply with the applicable specification listed in Parts 178 and 179 of this subchapter must not be marked to indicate such compliance (see §178.0-2 and §179.1 of this subchapter).	Shipper responsibility to ensure.	Shipper responsibility to ensure.
(2) Steel used shall be low-carbon, commercial quality steel. Stainless, open hearth, electric, basic oxygen, or other similar quality steels are acceptable. Steel sheets of specified gauges shall comply with the following:	Designer and fabricator to do and shipper responsibility to ensure.	Shipper responsibility to ensure.

Table A-7. Miscellaneous Packagings--Compliance with Standard Requirements for All Packages (49 CFR 173.24). (8 pages total)

Regulatory requirement: 49 CFR 173.24			Action required/by whom	Packaging category--miscellaneous packagings
Gauge No.	Normal thickness (inch)	Minimum thickness (inch)		
12	0.1046	0.0946		
13	0.0897	0.0817		
14	0.0747	0.0677		
15	0.0673	0.0603		
16	0.0598	0.0533		
17	0.0538	0.0478		
18	0.0478	0.0428		
19	0.0418	0.0378		
20	0.0359	0.0324		
22	0.0299	0.0269		
23	0.0269	0.0239		
24	0.0239	0.0209		
26	0.0179	0.0159		
28	0.0149	0.0129		
30	0.0120	0.0110		
(3) Lumber used shall be well seasoned, commercially dry, and free from decay, loose knots, knots that would interfere with nailing, and other defects that would materially lessen the strength.			Designer and fabricator to do and shipper responsibility to ensure.	Shipper responsibility to ensure.
(4) Welding and brazing shall be performed in a workmanlike manner using suitable and appropriate techniques, materials, and equipment.			Fabricator to do and shipper responsibility to ensure.	Shipper responsibility to ensure.

Table A-7. Miscellaneous Packagings--Compliance with Standard Requirements for All Packages (49 CFR 173.24). (8 pages total)

Regulatory requirement: 49 CFR 173.24	Action required/by whom	Packaging category--miscellaneous packagings
(5) Packaging materials and contents shall be such that there will be no significant chemical or galvanic reaction among any of the materials in the package.	Designer to do and shipper responsibility to ensure.	Shipper responsibility to ensure.
(6) Closure shall be adequate to prevent inadvertent leakage of the contents under normal conditions incident to transportation. Gasketed closures shall be fitted with gaskets of efficient materials which will not be deteriorated by the contents of the container.	Designer to do and shipper responsibility to ensure.	Shipper responsibility to ensure.
(7) Nails, staples, and other metallic devices shall not protrude into the interior of the outer packaging in such a manner as to be likely to cause failures.	Fabricator to do and shipper responsibility to ensure.	Shipper responsibility to ensure.
(8) The nature and thickness of the packaging shall be such that friction during transport does not generate any heating likely to decrease the chemical stability of the contents.	Fabricator to do and shipper responsibility to ensure.	Shipper responsibility to ensure.
(d) Polyethylene packagings and receptacles.		

Table A-7. Miscellaneous Packagings--Compliance with Standard Requirements for All Packages (49 CFR 173.24). (8 pages total)

Regulatory requirement: 49 CFR 173.24	Action required/by whom	Packaging category--miscellaneous packagings
(1) Polyethylene used in packagings and receptacles must be of a type compatible with the lading and may not be permeable to an extent that a hazardous condition occurs during transportation, handling, or refilling.	Designer to do and shipper responsibility to ensure.	Shipper responsibility to ensure.
(2) Each polyethylene packaging or receptacle which is used for liquid hazardous materials must be capable of withstanding without failure the procedure specified in Appendix B of this part ("Procedure for Testing Chemical Compatibility and Rate of Permeation in Polyethylene Packagings and Receptacles") and the maximum rate of permeation of hazardous lading through or into the polyethylene packaging or receptacles may not exceed the following rates:	Designer, tester, and evaluator to do and shipper responsibility to ensure.	Shipper responsibility to ensure.
(i) 0.5 percent for materials meeting the definition of a poison according to this subchapter and 2.0 percent for other hazardous materials, when subjected to a temperature no lower than 18°C (64°F) for 180 days in accordance with Test Method 1;		

Table A-7. Miscellaneous Packagings--Compliance with Standard Requirements for All Packages (49 CFR 173.24). (8 pages total)

Regulatory requirement: 49 CFR 173.24	Action required/by whom	Packaging category--miscellaneous packagings
(ii) 0.5 percent for materials meeting the definition of a poison according to this subchapter and 2.0 percent for other hazardous materials, when subjected to a temperature no lower than 50°C (122°F) for 28 days in accordance with Test Method 2; or		
(iii) 0.5 percent for materials meeting the definition of a poison according to this subchapter and 2.0 percent for other hazardous materials, when subjected to a temperature no lower than 60°C (140°F) for 14 days in accordance with Test Method 3.		
(3) Alternative procedures or rates of permeation are permitted if they yield a level of safety equivalent to or greater than that provided by paragraph (d)(2) of this section and are approved by the Director, OHMT.	Shipper responsibility to ensure.	Shipper responsibility to ensure.

Table A-7. Miscellaneous Packagings--Compliance with Standard Requirements for All Packages (49 CFR 173.24). (8 pages total)

Regulatory requirement: 49 CFR 173.24	Action required/by whom	Packaging category--miscellaneous packagings
(4) Each polyethylene packaging used as an outside packaging for materials meeting the definition of a poison according to this subchapter shall be permanently marked, by embossment or other durable means, with the word "POISON" in letters of at least 1/4 inch in height. Additional text or symbols may be included in the marking. The marking shall be located within six inches of the packaging's closure. The requirements of this subparagraph do not apply prior to September 1, 1985.	Shipper responsibility to ensure.	Shipper responsibility to ensure.
(e) For specification containers, compliance with the applicable specifications in Parts 178 and 179 of this subchapter shall be required in all details, except as otherwise provided in this subchapter.	Shipper responsibility to ensure.	Shipper responsibility to ensure.

APPENDIX B

COMPLIANCE WITH GENERAL DESIGN REQUIREMENTS (49 CFR 173.411)

This page intentionally left blank.

LIST OF TABLES

B-1 Steel Drums--Compliance with General Design Requirements B-5

B-2 Steel Boxes--Compliance with General Design Requirements B-9

B-3 Wooden Boxes--Compliance with General Design Requirements B-13

B-4 Fiberboard Containers--Compliance With General Design Requirements B-17

B-5 UF_6 Cylinders--Compliance With General Design Requirements . . . B-21

B-6 Liquid and Gas Packagings--Compliance With General Design Requirements B-25

B-7 Miscellaneous Packagings--Compliance With General Design Requirements B-29

This page intentionally left blank.

Table B-1. Steel Drums--Compliance with General Design Requirements (49 CFR 173.411). (4 pages total)

Regulatory requirement	Guidance for application	Packaging category--steel drums
Except for a package that contains a limited quantity or excepted instrument or article under §§173.421 through 173.424, each package used for shipment of radioactive materials shall be designed so that:		
(a) The package can be easily handled and properly secured in or on a conveyance during transport;	This does not necessarily mean handles are required. The intent is to maintain a package size and geometry that allow conformance to paragraph (a). For example, a package 4 ft × 6 ft × 4 ft cannot be easily handled by hand. For such a package, other handling methods would be designed. A package with sharp edges or components may not be easily handled manually. Also, package stability is required during transport. A round-shaped package, a top-heavy package, or any similar package that would not maintain its initial orientation and load position under conditions incidental to routine transportation would not meet these requirements. Tie-downs are required for the packagings mentioned in this paragraph, and exclusive use shipments or documented special provisions with the carrier are required. Designer to do and shipper responsibility to ensure.	All the drums evaluated meet the intent of this requirement. In all cases, the shipper should avoid loading a top-heavy package and should be aware of the need for tie-downs for any such packages.

Table B-1. Steel Drums--Compliance with General Design Requirements (49 CFR 173.411). (4 pages total)

Regulatory requirement	Guidance for application	Packaging category--steel drums
(b) A package with a gross weight exceeding 10 kilograms (22 pounds) and up to 50 kilograms (110 pounds) has a means for manual handling;	This does not necessarily mean that handles are required. As in the previous comment on paragraph (a), physical size, geometry, and exterior surface design should be conducive to manual handling. Excluded are: - Large, awkward packages or odd-shaped packages with no reasonable way to lift, hold, or move by hand; - Surfaces with sharp edges or points which make handling difficult. Designer to do and shipper responsibility to ensure.	All the drums evaluated meet the intent of this requirement when in the 10-kg (22-lb) to 50-kg (110-lb) range.
(c) A package with a gross weight of 50 kilograms (110 pounds) or more can safely be handled by mechanical means;	Thought should be given to how the packages will be handled; and they should be designed accordingly. If skids are used, the balance stability of the package on the forklift must be considered. One must also ensure that, when lifted by a forklift, the bottom structure can support the weight without significant distortion or loss of containment integrity. If hooks/lifting devices are used, they must meet 49 CFR 173.411(d). In most cases, this is for the shipper to evaluate, particularly the requirements that failure "would not impair the ability of the package to meet all other requirements." Designer to do and shipper responsibility to ensure.	All the drums evaluated meet the intent of this requirement. There are many drum/barrel handling devices that have proven effective and safe for drums weighing more than 50 kg (110 lb).

Table B-1. Steel Drums--Compliance with General Design Requirements (49 CFR 173.411). (4 pages total)

Regulatory requirement	Guidance for application	Packaging category--steel drums
(d) Each lifting attachment on the package, when used in the intended manner, with a minimum safety factor of three, does not impose an unsafe stress on the structure of the package. In addition, the lifting attachment shall be so designed that failure under excessive load would not impair the ability of the package to meet all other requirements of this subpart. Each attachment or other feature on the outer surface of the packaging that could be used to lift the package must be removable or otherwise capable of being made inoperable for transport, or shall be designed with strength equivalent to that required for lifting attachments;	A sign saying "Do Not Use As A Lifting Device," "Not A Lifting Device," etc. is not adequate to prevent the use of the unauthorized lifting devices. The procedures for use of the packaging should also state the intended use of any attachment points for other purposes (e.g., "For lifting the lid only--not entire packaging"). Designer, and perhaps tester and evaluator, to do and shipper responsibility to ensure.	All the drums evaluated meet the intent of this requirement. The only drum with a handle is the 17C (49 CFR 178.115) 5-gal drum. This packaging was tested (1) at greater than 300 lb with no failure of handle, and (2) at 400 lb where the handle did fail, but only pulled free from the side coupling. Thus, the failure was in an acceptable mode. There were no other lifting devices or attachments.
(e) The external surfaces, as far as practicable, may be easily decontaminated;	Plywood, although not normally thought of as easily decontaminated, is acceptable. The intent is to promote surfaces that are relatively smooth and that minimize cracks and crevices in which surface contamination could reside. Consideration should be given to actions such as sanding or painting surfaces. Designer to do and shipper responsibility to ensure.	All the drums evaluated meet the intent of this requirement.

Table B-1. Steel Drums--Compliance with General Design Requirements (49 CFR 173.411). (4 pages total)

Regulatory requirement	Guidance for application	Packaging category--steel drums
(f) The outer layer of packaging will avoid, as far as practicable, pockets or crevices where water might collect; and	This is not intended to eliminate 55-gal drums as Specification 7A packaging. The intent is for packaging design personnel to consider this aspect. Avoid designing a packaging that provides cavities to collect water, which could spill during transport or handling or could promote rusting and general deterioration of the packaging, possibly in locations difficult to detect. Designer to do and shipper responsibility to ensure.	All the drums evaluated meet the intent of the regulation. A newly designed package should consider this requirement.
(g) Each feature that is added to the package at the time of transport, and that is not part of the package, will not reduce the safety of the package.	For example, a canvas cover placed over a package for protection against the rain must not adversely affect heat transfer requirements. Shipper responsibility to ensure.	This is a shipper responsibility because the regulation addresses items added to the packaging that was already evaluated.

Table B-2. Steel Boxes--Compliance with General Design Requirements (49 CFR 173.411). (4 pages total)

Regulatory requirements	Guidance for application	Packaging category--steel boxes
Except for a package that contains a limited quantity or excepted instrument or article under §§173.421 through 173.424, each package used for shipment of radioactive materials shall be designed so that:		
(a) The package can be easily handled and properly secured in or on a conveyance during transport;	This does not necessarily mean handles are required. The intent is to maintain a package size and geometry that allow conformance to paragraph (a). For example, a package 4 ft × 6 ft × 4 ft cannot be easily handled by hand. For such a package, other handling methods would be designed. A package with sharp edges or components may not be easily handled manually. Also, package stability is required during transport. A round-shaped package, a top-heavy package, or any similar package that would not maintain its initial orientation and load position under conditions incidental to routine transportation would not meet these requirements. Tie-downs are required for the packagings mentioned in this paragraph, and exclusive use shipments or documented special provisions with the carrier are required. Designer to do and shipper responsibility to ensure.	All the steel boxes evaluated meet the intent of this requirement. None are intended for manual handling and all have a large, stable base.

Table B-2. Steel Boxes--Compliance with General Design Requirements (49 CFR 173.411). (4 pages total)

Regulatory requirements	Guidance for application	Packaging category--steel boxes
(b) A package with a gross weight exceeding 10 kilograms (22 pounds) and up to 50 kilograms (110 pounds) has a means for manual handling;	This does not necessarily mean that handles are required. As in the previous comment on paragraph (a), physical size, geometry, and exterior surface design should be conducive to manual handling. Excluded are: - Large, awkward packages or odd-shaped packages with no reasonable way to lift, hold, or move by hand; - Surfaces with sharp edges or points which make handling difficult. Designer to do and shipper responsibility to ensure.	This does not apply because all the steel boxes will weigh more than 50 kg (110 lb).
(c) A package with a gross weight of 50 kilograms (110 pounds) or more can safely be handled by mechanical means;	Thought should be given to how the packages will be handled; and they should be designed accordingly. If skids are used, the balance stability of the package on the forklift must be considered. One must also ensure that, when lifted by a forklift, the bottom structure can support the weight without significant distortion or loss of containment integrity. If hooks/lifting devices are used, they must meet 49 CFR 173.411(d). In most cases, this is for the shipper to evaluate, particularly the requirements that failure "would not impair the ability of the package to meet all other requirements." Designer to do and shipper responsibility to ensure.	These boxes are typically designed for handling with a truck or forklift. In all the steel box packagings, experience, testing, and/or design analysis have demonstrated compliance.

Table B-2. Steel Boxes--Compliance with General Design Requirements (49 CFR 173.411). (4 pages total)

Regulatory requirements	Guidance for application	Packaging category--steel boxes
(d) Each lifting attachment on the package, when used in the intended manner, with a minimum safety factor of three, does not impose an unsafe stress on the structure of the package. In addition, the lifting attachment shall be so designed that failure under excessive load would not impair the ability of the package to meet all other requirements of this subpart. Each attachment or other feature on the outer surface of the packaging that could be used to lift the package must be removable or otherwise capable of being made inoperable for transport, or shall be designed with strength equivalent to that required for lifting attachments;	A sign saying "Do Not Use As A Lifting Device," "Not A Lifting Device," etc. is not adequate to prevent the use of the unauthorized lifting devices. The procedures for use of the packaging should also state the intended use of any attachment points for other purposes (e.g., "For lifting the lid only--not entire packaging"). Designer, and perhaps tester and evaluator, to do and shipper responsibility to ensure.	The M-4 bin and the SAND box have lifting devices that far exceed the required safety factor of 3; however, because of the strength of the lifting device, in each case the box will fail before the lifting device. This will not negatively affect the evaluation of these boxes because both are used within overpacks and the lifting devices are not used during transportation. RoGar boxes have lifting devices on the lid. These are intended only for lifting the lid and must be removed or rendered inoperable before transport. This is the shipper's responsibility.
(e) The external surfaces, as far as practicable, may easily decontaminated;	Plywood, although not normally thought of as easily decontaminated, is acceptable. The intent is to promote surfaces that are relatively smooth and that minimize cracks and crevices in which surface contamination could reside. Consideration should be given to actions such as sanding or painting surfaces. Designer to do and shipper responsibility to ensure.	All the boxes evaluated meet the intent of this requirement.

Table B-2. Steel Boxes--Compliance with General Design Requirements (49 CFR 173.411). (4 pages total)

Regulatory requirements	Guidance for application	Packaging category--steel boxes
(f) The outer layer of packaging will avoid, as far as practicable, pockets or crevices where water might collect; and	This is not intended to eliminate 55-gal drums as Specification 7A packaging. The intent is for packaging design personnel to consider this aspect. Avoid designing a packaging that provides cavities to collect water, which could spill during transport or handling or could promote rusting and general deterioration of the packaging, possibly in locations difficult to detect. Designer to do and shipper responsibility to ensure.	All the boxes evaluated meet the intent of the requirement.
(g) Each feature that is added to the package at the time of transport, and that is not part of the package, will not reduce the safety of the package.	For example, a canvas cover placed over a package for protection against the rain must not adversely affect heat transfer requirements. Shipper responsibility to ensure.	This is a shipper responsibility because the regulation addresses items added to the packaging that was already evaluated.

Table B-3. Wooden Boxes--Compliance with General Design Requirements (49 CFR 173.411). (4 pages total)

Regulatory requirement	Guidance for application	Packaging category--wooden boxes
Except for a package that contains a limited quantity or excepted instrument or article under §§173.421 through 173.424, each package used for shipment of radioactive materials shall be designed so that:		
(a) The package can be easily handled and properly secured in or on a conveyance during transport;	This does not necessarily mean handles are required. The intent is to maintain a package size and geometry that allow conformance to paragraph (a). For example, a package 4 ft × 6 ft × 4 ft cannot be easily handled by hand. For such a package, other handling methods would be designed. A package with sharp edges or components may not be easily handled manually. Also, package stability is required during transport. A round-shaped package, a top-heavy package, or any similar package that would not maintain its initial orientation and load position under conditions incidental to routine transportation would not meet these requirements. Tie-downs are required for the packagings mentioned in this paragraph, and exclusive use shipments or documented special provisions with the carrier are required. Designer to do and shipper responsibility to ensure.	All the wooden boxes evaluated meet the intent of this requirement. In all cases the shipper should avoid loading a top-heavy package and should be aware of the need for tie-downs for any such packages.

Table B-3. Wooden Boxes--Compliance with General Design Requirements (49 CFR 173.411). (4 pages total)

Regulatory requirement	Guidance for application	Packaging category--wooden boxes
(b) A package with a gross weight exceeding 10 kilograms (22 pounds) and up to 50 kilograms (110 pounds) has a means for manual handling;	This does not necessarily mean that handles are required. As in the previous comment on paragraph (a), physical size, geometry, and exterior surface design should be conducive to manual handling. Excluded are: - Large, awkward packages or odd-shaped packages with no reasonable way to lift, hold, or move by hand; - Surfaces with sharp edges or points which make handling difficult. <u>Designer</u> to do and <u>shipper</u> responsibility to ensure.	All the wooden boxes evaluated meet the intent of this requirement when used in the 10-kg (22-lb) to 50-kg (110-lb) range.
(c) A package with a gross weight of 50 kilograms (110 pounds) or more can safely be handled by mechanical means;	Thought should be given to how the packages will be handled; and they should be designed accordingly. If skids are used, the balance stability of the package on the forklift must be considered. One must also ensure that, when lifted by a forklift, the bottom structure can support the weight without significant distortion or loss of containment integrity. If hooks/lifting devices are used, they must meet 49 CFR 173.411(d). In most cases, this is for the shipper to evaluate, particularly the requirements that failure "would not impair the ability of the package to meet all other requirements." <u>Designer</u> to do and <u>shipper</u> responsibility to ensure.	These boxes are typically designed for handling with a truck or forklift. For all of these packagings, experience, testing, and/or design analysis have demonstrated compliance.

Table B-3. Wooden Boxes--Compliance with General Design Requirements (49 CFR 173.411). (4 pages total)

Regulatory requirement	Guidance for application	Packaging category--wooden boxes
(d) Each lifting attachment on the package, when used in the intended manner, with a minimum safety factor of three, does not impose an unsafe stress on the structure of the package. In addition, the lifting attachment shall be so designed that failure under excessive load would not impair the ability of the package to meet all other requirements of this subpart. Each attachment or other feature on the outer surface of the packaging that could be used to lift the package must be removable or otherwise capable of being made inoperable for transport, or shall be designed with strength equivalent to that required for lifting attachments;	A sign saying "Do Not Use As A Lifting Device," "Not A Lifting Device," etc. is not adequate to prevent the use of the unauthorized lifting devices. The procedures for use of the packaging should also state the intended use of any attachment points for other purposes (e.g., "For lifting the lid only--not entire packaging"). Designer, and perhaps tester and evaluator, to do and shipper responsibility to ensure.	None of the wooden boxes have lifting attachments; this requirement does not apply.
(e) The external surfaces, as far as practicable, may easily decontaminated;	Plywood, although not normally thought of as easily decontaminated, is acceptable. The intent is to promote surfaces that are relatively smooth and that minimize cracks and crevices in which surface contamination could reside. Consideration should be given to actions such as sanding or painting surfaces. Designer to do and shipper responsibility to ensure.	All the boxes evaluated meet the intent of this requirement. If contamination is a significant potential problem, then sanding, painting, or similar surface preparation should be completed.

Table B-3. Wooden Boxes--Compliance with General Design Requirements (49 CFR 173.411). (4 pages total)

Regulatory requirement	Guidance for application	Packaging category--wooden boxes
(f) The outer layer of packaging will avoid, as far as practicable, pockets or crevices where water might collect; and	This is not intended to eliminate 55-gal drums as Specification 7A packaging. The intent is for packaging design personnel to consider this aspect. Avoid designing a packaging that provides cavities to collect water, which could spill during transport or handling or could promote rusting and general deterioration of the packaging, possibly in locations difficult to detect. Designer to do and shipper responsibility to ensure.	All the boxes evaluated meet the intent of the requirement.
(g) Each feature that is added to the package at the time of transport, and that is not part of the package, will not reduce the safety of the package.	For example, a canvas cover placed over a package for protection against the rain must not adversely affect heat transfer requirements. Shipper responsibility to ensure.	This is a shipper responsibility because the regulation addresses items added to the packaging that was already evaluated.

Table B-4. Fiberboard Containers--Compliance With General Design Requirements (49 CFR 173.411). (4 pages total)

Regulatory requirement	Guidance for application	Packaging category--fiberboard containers
Except for a package that contains a limited quantity or excepted instrument or article under §§173.421 through 173.424, each package used for shipment of radioactive materials shall be designed so that:		
(a) The package can be easily handled and properly secured in or on a conveyance during transport;	This does not necessarily mean handles are required. The intent is to maintain a package size and geometry that allow conformance to paragraph (a). For example, a package 4 ft × 6 ft × 4 ft cannot be easily handled by hand. For such a package, other handling methods would be designed. A package with sharp edges or components may not be easily handled manually. Also, package stability is required during transport. A round-shaped package, a top-heavy package, or any similar package that would not maintain its initial orientation and load position under conditions incidental to routine transportation would not meet these requirements. Tie-downs are required for the packagings mentioned in this paragraph, and exclusive use shipments or documented special provisions with the carrier are required. Designer to do and shipper responsibility to ensure.	All the fiberboard boxes and drums meet the intent of this requirement. In all cases the shipper should avoid loading a top-heavy package and should be aware of the need for tie-downs for any such packages.

Table B-4. Fiberboard Containers--Compliance With General Design Requirements (49 CFR 173.411). (4 pages total)

Regulatory requirement	Guidance for application	Packaging category--fiberboard containers
(b) A package with a gross weight exceeding 10 kilograms (22 pounds) and up to 50 kilograms (110 pounds) has a means for manual handling;	This does not necessarily mean that handles are required. As in the previous comment on paragraph (a), physical size, geometry, and exterior surface design should be conducive to manual handling. Excluded are: - Large, awkward packages or odd-shaped packages with no reasonable way to lift, hold, or move by hand; - Surfaces with sharp edges or points which make handling difficult. Designer to do and shipper responsibility to ensure.	All fiberboard boxes and drums meet the intent of this requirement when used in the 10-kg (22-lb) to 50-kg (110-lb) range. Obviously, the Tri-wall packaging (Appendix D) is intended for weights exceeding 50 kg and will require mechanical handling equipment.
(c) A package with a gross weight of 50 kilograms (110 pounds) or more can safely be handled by mechanical means;	Thought should be given to how the packages will be handled; and they should be designed accordingly. If skids are used, the balance stability of the package on the forklift must be considered. One must also ensure that, when lifted by a forklift, the bottom structure can support the weight without significant distortion or loss of containment integrity. If hooks/lifting devices are used, they must meet 49 CFR 173.411(d). In most cases, this is for the shipper to evaluate, particularly the requirements that failure "would not impair the ability of the package to meet all other requirements." Designer to do and shipper responsibility to ensure.	These boxes and drums evaluated are typically designed for handling with hand-trucks and/or forklifts when weighing in excess of 50 kg. For all of these packagings, experience, testing, and/or design analysis have demonstrated compliance. As in all packages, but particularly important in Tri-wall packaging, the shipper shall ensure that the content load is in the center of the box or evenly distributed along the bottom.

Table B-4. Fiberboard Containers--Compliance With General Design Requirements (49 CFR 173.411). (4 pages total)

Regulatory requirement	Guidance for application	Packaging category--fiberboard containers
(d) Each lifting attachment on the package, when used in the intended manner, with a minimum safety factor of three, does not impose an unsafe stress on the structure of the package. In addition, the lifting attachment shall be so designed that failure under excessive load would not impair the ability of the package to meet all other requirements of this subpart. Each attachment or other feature on the outer surface of the packaging that could be used to lift the package must be removable or otherwise capable of being made inoperable for transport, or shall be designed with strength equivalent to that required for lifting attachments;	A sign saying "Do Not Use As A Lifting Device," "Not A Lifting Device," etc. is not adequate to prevent the use of the unauthorized lifting devices. The procedures for use of the packaging should also state the intended use of any attachment points for other purposes (e.g., "For lifting the lid only--not entire packaging"). Designer, and perhaps tester and evaluator, to do and shipper responsibility to ensure.	None of the fiberboard packagings have lifting attachments; this requirement does not apply.
(e) The external surfaces, as far as practicable, may easily decontaminated;	Plywood, although not normally thought of as easily decontaminated, is acceptable. The intent is to promote surfaces that are relatively smooth and that minimize cracks and crevices in which surface contamination could reside. Consideration should be given to actions such as sanding or painting surfaces. Designer to do and shipper responsibility to ensure.	All the packagings evaluated meet the intent of this requirement. If contamination is a significant potential problem, covering, painting, or similar surface preparation should be completed.

Table B-4. Fiberboard Containers--Compliance With General Design Requirements (49 CFR 173.411). (4 pages total)

Regulatory requirement	Guidance for application	Packaging category--fiberboard containers
(f) The outer layer of packaging will avoid, as far as practicable, pockets or crevices where water might collect; and	This is not intended to eliminate 55-gal drums as Specification 7A packaging. The intent is for packaging design personnel to consider this aspect. Avoid designing a packaging that provides cavities to collect water, which could spill during transport or handling or could promote rusting and general deterioration of the packaging, possibly in locations difficult to detect. Designer to do and shipper responsibility to ensure.	All the packagings evaluated meet the intent of the requirement.
(g) Each feature that is added to the package at the time of transport, and that is not part of the package, will not reduce the safety of the package.	For example, a canvas cover placed over a package for protection against the rain must not adversely affect heat transfer requirements. Shipper responsibility to ensure.	This is a shipper responsibility because the regulation addresses items added to the packaging that was already evaluated.

Table B-5. UF_6 Cylinders--Compliance With General Design Requirements (49 CFR 173.411). (4 pages total)

Regulatory requirement	Guidance for application	Packaging category--UF_6 cylinders
Except for a package that contains a limited quantity or excepted instrument or article under §§173.421 through 173.424, each package used for shipment of radioactive materials shall be designed so that:		
(a) The package can be easily handled and properly secured in or on a conveyance during transport;	This does not necessarily mean handles are required. The intent is to maintain a package size and geometry that allow conformance to paragraph (a). For example, a package 4 ft × 6 ft × 4 ft cannot be easily handled by hand. For such a package, other handling methods would be designed. A package with sharp edges or components may not be easily handled manually. Also, package stability is required during transport. A round-shaped package, a top-heavy package, or any similar package that would not maintain its initial orientation and load position under conditions incidental to routine transportation would not meet these requirements. Tie-downs are required for the packagings mentioned in this paragraph, and exclusive use shipments or documented special provisions with the carrier are required. Designer to do and shipper responsibility to ensure.	All cylinders evaluated meet the intent of this requirement. The experience data base demonstrates the stability of these packages in transport and their ease of handling.

Table B-5. UF_6 Cylinders--Compliance With General Design Requirements (49 CFR 173.411). (4 pages total)

Regulatory requirement	Guidance for application	Packaging category--UF_6 cylinders
(b) A package with a gross weight exceeding 10 kilograms (22 pounds) and up to 50 kilograms (110 pounds) has a means for manual handling;	This does not necessarily mean that handles are required. As in the previous comment on paragraph (a), physical size, geometry, and exterior surface design should be conducive to manual handling. Excluded are: - Large, awkward packages or odd-shaped packages with no reasonable way to lift, hold, or move by hand; - Surfaces with sharp edges or points which make handling difficult. Designer to do and shipper responsibility to ensure.	This applies only to the 1S, 2S, and 5A cylinders. As stated above, a vast experience base demonstrates compliance.
(c) A package with a gross weight of 50 kilograms (110 pounds) or more can safely be handled by mechanical means;	Thought should be given to how the packages will be handled; and they should be designed accordingly. If skids are used, the balance stability of the package on the forklift must be considered. One must also ensure that, when lifted by a forklift, the bottom structure can support the weight without significant distortion or loss of containment integrity. If hooks/lifting devices are used, they must meet 49 CFR 173.411(d). In most cases, this is for the shipper to evaluate, particularly the requirements that failure "would not impair the ability of the package to meet all other requirements." Designer to do and shipper responsibility to ensure.	For the cylinders other than 1S, 2S, and 5A, a variety of mechanical systems are provided and have been used effectively and reliably for years. See Appendix C, Table C-9.

Table B-5. UF_6 Cylinders--Compliance With General Design Requirements (49 CFR 173.411). (4 pages total)

Regulatory requirement	Guidance for application	Packaging category--UF_6 cylinders
(d) Each lifting attachment on the package, when used in the intended manner, with a minimum safety factor of three, does not impose an unsafe stress on the structure of the package. In addition, the lifting attachment shall be so designed that failure under excessive load would not impair the ability of the package to meet all other requirements of this subpart. Each attachment or other feature on the outer surface of the packaging that could be used to lift the package must be removable or otherwise capable of being made inoperable for transport, or shall be designed with strength equivalent to that required for lifting attachments;	A sign saying "Do Not Use As A Lifting Device," "Not A Lifting Device," etc. is not adequate to prevent the use of the unauthorized lifting devices. The procedures for use of the packaging should also state the intended use of any attachment points for other purposes (e.g., "For lifting the lid only--not entire packaging"). Designer, and perhaps tester and evaluator, to do and shipper responsibility to ensure.	All cylinders meet this requirement, as demonstrated in Appendix C, Table C-9.
(e) The external surfaces, as far as practicable, may easily decontaminated;	Plywood, although not normally thought of as easily decontaminated, is acceptable. The intent is to promote surfaces that are relatively smooth and that minimize cracks and crevices in which surface contamination could reside. Consideration should be given to actions such as sanding or painting surfaces. Designer to do and shipper responsibility to ensure.	The metal and painted metal surfaces have demonstrated, through experience, compliance with this requirement.

Table B-5. UF_6 Cylinders--Compliance With General Design Requirements (49 CFR 173.411). (4 pages total)

Regulatory requirement	Guidance for application	Packaging category--UF_6 cylinders
(f) The outer layer of packaging will avoid, as far as practicable, pockets or crevices where water might collect; and	This is not intended to eliminate 55-gal drums as Specification 7A packaging. The intent is for packaging design personnel to consider this aspect. Avoid designing a packaging that provides cavities to collect water, which could spill during transport or handling or could promote rusting and general deterioration of the packaging, possibly in locations difficult to detect. Designer to do and shipper responsibility to ensure.	These packages meet the intent of the requirement as shown in Section 6.0 in Figures 6-1 through 6-13.
(g) Each feature that is added to the package at the time of transport, and that is not part of the package, will not reduce the safety of the package.	For example, a canvas cover placed over a package for protection against the rain must not adversely affect heat transfer requirements. Shipper responsibility to ensure.	No features are added other than those described in operating procedures, and these are evaluated by the shipper.

Table B-6. Liquid and Gas Packagings--Compliance With General Design Requirements (49 CFR 173.411). (4 pages total)

Regulatory requirements	Guidance for application	Packaging category--liquid and gas packagings
Except for a package that contains a limited quantity or excepted instrument or article under §§173.421 through 173.424, each package used for shipment of radioactive materials shall be designed so that:		
(a) The package can be easily handled and properly secured in or on a conveyance during transport;	This does not necessarily mean handles are required. The intent is to maintain a package size and geometry that allow conformance to paragraph (a). For example, a package 4 ft × 6 ft × 4 ft cannot be easily handled by hand. For such a package, other handling methods would be designed. A package with sharp edges or components may not be easily handled manually. Also, package stability is required during transport. A round-shaped package, a top-heavy package, or any similar package that would not maintain its initial orientation and load position under conditions incidental to routine transportation would not meet these requirements. Tie-downs are required for the packagings mentioned in this paragraph, and exclusive use shipments or documented special provisions with the carrier are required. Designer to do and shipper responsibility to ensure.	All packagings meet the intent of this requirement per analysis of the figures and as demonstrated by actual experience. In all cases, the shipper should avoid loading a top-heavy package and should be aware of the need for tie-downs for any such packages.

Table B-6. Liquid and Gas Packagings--Compliance With General Design Requirements (49 CFR 173.411). (4 pages total)

Regulatory requirements	Guidance for application	Packaging category--liquid and gas packagings
(b) A package with a gross weight exceeding 10 kilograms (22 pounds) and up to 50 kilograms (110 pounds) has a means for manual handling;	This does not necessarily mean that handles are required. As in the previous comment on paragraph (a), physical size, geometry, and exterior surface design should be conducive to manual handling. Excluded are: - Large, awkward packages or odd-shaped packages with no reasonable way to lift, hold, or move by hand; - Surfaces with sharp edges or points which make handling difficult. Designer to do and shipper responsibility to ensure.	All the packagings evaluated meet the intent of this requirement when used in the 10-kg (22-lb) to 50-kg (110-lb) range.
(c) A package with a gross weight of 50 kilograms (110 pounds) or more can safely be handled by mechanical means;	Thought should be given to how the packages will be handled; and they should be designed accordingly. If skids are used, the balance stability of the package on the forklift must be considered. One must also ensure that, when lifted by a forklift, the bottom structure can support the weight without significant distortion or loss of containment integrity. If hooks/lifting devices are used, they must meet 49 CFR 173.411(d). In most cases, this is for the shipper to evaluate, particularly the requirements that failure "would not impair the ability of the package to meet all other requirements." Designer to do and shipper responsibility to ensure.	The only two packagings that fit these criteria are the Oak Ridge National Laboratory (ORNL) returnable shielded shipping container and the J. L. Sheppard Gas Cylinder No. 4. Both of these packages have outer boxes designed for routine handling with hand/mechanical devices. Experience has demonstrated packaging compliance with this requirement.

Table B-6. Liquid and Gas Packagings--Compliance With General Design Requirements (49 CFR 173.411). (4 pages total)

Regulatory requirements	Guidance for application	Packaging category--liquid and gas packagings
(d) Each lifting attachment on the package, when used in the intended manner, with a minimum safety factor of three, does not impose an unsafe stress on the structure of the package. In addition, the lifting attachment shall be so designed that failure under excessive load would not impair the ability of the package to meet all other requirements of this subpart. Each attachment or other feature on the outer surface of the packaging that could be used to lift the package must be removable or otherwise capable of being made inoperable for transport, or shall be designed with strength equivalent to that required for lifting attachments;	A sign saying "Do Not Use As A Lifting Device," "Not A Lifting Device," etc. is not adequate to prevent the use of the unauthorized lifting devices. The procedures for use of the packaging should also state the intended use of any attachment points for other purposes (e.g., "For lifting the lid only--not entire packaging"). Designer, and perhaps tester and evaluator, to do and shipper responsibility to ensure.	The only package with a lifting attachment is ORNL's returnable plastic box. Tests at ORNL demonstrated compliance with this requirement, and failure of the handle would not impair the ability of the packaging to meet the containment integrity requirements.
(e) The external surfaces, as far as practicable, may be easily decontaminated;	Plywood, although not normally thought of as easily decontaminated, is acceptable. The intent is to promote surfaces that are relatively smooth and that minimize cracks and crevices in which surface contamination could reside. Consideration should be given to actions such as sanding or painting surfaces. Designer to do and shipper responsibility to ensure.	The variety of surfaces meet the intent of this requirement.

Table B-6. Liquid and Gas Packagings--Compliance With General Design Requirements (49 CFR 173.411). (4 pages total)

Regulatory requirements	Guidance for application	Packaging category--liquid and gas packagings
(f) The outer layer of packaging will avoid, as far as practicable, pockets or crevices where water might collect; and	This is not intended to eliminate 55-gal drums as Specification 7A packaging. The intent is for packaging design personnel to consider this aspect. Avoid designing a packaging that provides cavities to collect water, which could spill during transport or handling or could promote rusting and general deterioration of the packaging, possibly in locations difficult to detect. Designer to do and shipper responsibility to ensure.	These packages meet the intent of this requirement by analysis of the figures in Section 7.0.
(g) Each feature that is added to the package at the time of transport, and that is not part of the package, will not reduce the safety of the package.	For example, a canvas cover placed over a package for protection against the rain must not adversely affect heat transfer requirements. Shipper responsibility to ensure.	This is a shipper responsibility because the regulation addresses items added to the packaging that was already evaluated.

Table B-7. Miscellaneous Packagings--Compliance With General Design Requirements (49 CFR 173.411). (4 pages total)

Regulatory requirement	Guidance for application	Packaging category--miscellaneous packagings
Except for a package that contains a limited quantity or excepted instrument or article under §§173.421 through 173.424, each package used for shipment of radioactive materials shall be designed so that:		
(a) The package can be easily handled and properly secured in or on a conveyance during transport;	This does not necessarily mean handles are required. The intent is to maintain a package size and geometry that allow conformance to paragraph (a). For example, a package 4 ft × 6 ft × 4 ft cannot be easily handled by hand. For such a package, other handling methods would be designed. A package with sharp edges or components may not be easily handled manually. Also, package stability is required during transport. A round-shaped package, a top-heavy package, or any similar package that would not maintain its initial orientation and load position under conditions incidental to routine transportation would not meet these requirements. Tie-downs are required for the packagings mentioned in this paragraph, and exclusive use shipments or documented special provisions with the carrier are required. Designer to do and shipper responsibility to ensure.	All the packagings meet the intent of this requirement per analysis of the figures and as demonstrated by actual experience. In all cases, the shipper should avoid loading a top-heavy package and should be aware of the need for tie-downs for any such packages.

Table B-7. Miscellaneous Packagings--Compliance With General Design Requirements (49 CFR 173.411). (4 pages total)

Regulatory requirement	Guidance for application	Packaging category--miscellaneous packagings
(b) A package with a gross weight exceeding 10 kilograms (22 pounds) and up to 50 kilograms (110 pounds) has a means for manual handling;	This does not necessarily mean that handles are required. As in the previous comment on paragraph (a), physical size, geometry, and exterior surface design should be conducive to manual handling. Excluded are: - Large, awkward packages or odd-shaped packages with no reasonable way to lift, hold, or move by hand; - Surfaces with sharp edges or points which make handling difficult. Designer to do and shipper responsibility to ensure.	Only the Lawrence Livermore National Laboratory (LLNL) shielded container fits this criterion because it has a handle.
(c) A package with a gross weight of 50 kilograms (110 pounds) or more can safely be handled by mechanical means;	Thought should be given to how the packages will be handled; and they should be designed accordingly. If skids are used, the balance stability of the package on the forklift must be considered. One must also ensure that, when lifted by a forklift, the bottom structure can support the weight without significant distortion or loss of containment integrity. If hooks/lifting devices are used, they must meet 49 CFR 173.411(d). In most cases, this is for the shipper to evaluate, particularly the requirements that failure "would not impair the ability of the package to meet all other requirements." Designer to do and shipper responsibility to ensure.	The three packages exceeding 110 lb all have means for mechanical handling, and experience has demonstrated compliance.

Table B-7. Miscellaneous Packagings--Compliance With General Design Requirements (49 CFR 173.411). (4 pages total)

Regulatory requirement	Guidance for application	Packaging category--miscellaneous packagings
(d) Each lifting attachment on the package, when used in the intended manner, with a minimum safety factor of three, does not impose an unsafe stress on the structure of the package. In addition, the lifting attachment shall be so designed that failure under excessive load would not impair the ability of the package to meet all other requirements of this subpart. Each attachment or other feature on the outer surface of the packaging that could be used to lift the package must be removable or otherwise capable of being made inoperable for transport, or shall be designed with strength equivalent to that required for lifting attachments;	A sign saying "Do Not Use As A Lifting Device," "Not A Lifting Device," etc. is not adequate to prevent the use of the unauthorized lifting devices. The procedures for use of the packaging should also state the intended use of any attachment points for other purposes (e.g., "For lifting the lid only--not entire packaging"). Designer, and perhaps tester and evaluator, to do and shipper responsibility to ensure.	The ORNL Transuranic (TRU) Package and the Federal Emergency Management Agency (FEMA) Source Overpack are the only two packagings with lifting devices. A structural analysis by Mound Laboratory has demonstrated compliance with three-times-the-gross-weight requirement for both packages. With the ORNL TRU package, the outer metal skin will fail prior to the handle, but this would not compromise the overall ability to comply with this requirement. A similar analysis demonstrated that the handles of the FEMA package also comply with the three-times-the-gross-weight requirement, and failure of the lid handles or side handles would not reduce the ability of the packaging to comply with this requirement.

Table B-7. Miscellaneous Packagings--Compliance With General Design Requirements (49 CFR 173.411). (4 pages total)

Regulatory requirement	Guidance for application	Packaging category--miscellaneous packagings
(e) The external surfaces, as far as practicable, may easily decontaminated;	Plywood, although not normally thought of as easily decontaminated, is acceptable. The intent is to promote surfaces that are relatively smooth and that minimize cracks and crevices in which surface contamination could reside. Consideration should be given to actions such as sanding or painting surfaces. Designer to do and shipper responsibility to ensure.	The external surfaces are all metal and comply with this requirement.
(f) The outer layer of packaging will avoid, as far as practicable, pockets or crevices where water might collect; and	This is not intended to eliminate 55-gal drums as Specification 7A packaging. The intent is for packaging design personnel to consider this aspect. Avoid designing a packaging that provides cavities to collect water, which could spill during transport or handling or could promote rusting and general deterioration of the packaging, possibly in locations difficult to detect. Designer to do and shipper responsibility to ensure.	Compliance is obvious by analysis of the figures. The only exception is the Sandia National Laboratory (SNL) drum, which complies with the intent per the column on the left.
(g) Each feature that is added to the package at the time of transport, and that is not part of the package, will not reduce the safety of the package.	For example, a canvas cover placed over a package for protection against the rain must not adversely affect heat transfer requirements. Shipper responsibility to ensure.	This is a shipper responsibility because the regulation addresses items added to the packaging that was already evaluated.

APPENDIX C

COMPLIANCE WITH ADDITIONAL DESIGN REQUIREMENTS FOR TYPE A PACKAGES (49 CFR 173.412)

This page intentionally left blank.

TABLE OF CONTENTS

C1.0 SUMMARY OF PRESSURE TESTS ON EVALUATED STEEL DRUMS C-14
C2.0 SUMMARY OF PRESSURE TESTS ON EVALUATED STEEL BOXES C-29
C3.0 SUMMARY OF PRESSURE TESTS ON EVALUATED WOODEN BOXES C-42

LIST OF TABLES

C-1 Steel Drums--Compliance with Additional Design Requirements for Type A Packages C-5

C-2 Steel Drums--"Reduced Pressure" Tests Summary C-15

C-3 Steel Boxes--Compliance With Additional Design Requirements for Type A Packages C-20

C-4 Steel Boxes--"Reduced Pressure" Tests Summary C-30

C-5 Wooden Boxes--Compliance With Additional Design Requirements for Type A Packages C-33

C-6 Wooden Boxes--"Reduced Pressure" Tests Summary C-43

C-7 Fiberboard Containers--Compliance With Additional Design Requirements for Type A Packages C-47

C-8 UF_6 Cylinders--Compliance With Additional Design Requirements for Type A Packages C-56

C-9 Calculated Safety Factor for UF_6 Cylinders C-65

C-10 Liquid and Gas Packagings--Compliance With Additional Design Requirements for Type A Packages C-66

C-11 Liquid and Gas Packagings--"Reduced Pressure" Tests Summary . . . C-75

C-12 Packages Meeting 49 CFR 173.412(k) Criterion C-77

C-13 Miscellaneous Packagings--Compliance With Additional Design Requirements for Type A Packages C-78

C-14 Liquid and Gas Packagings Containment System Analysis C-87

This page intentionally left blank.

Table C-1. Steel Drums--Compliance with Additional Design Requirements for Type A Packages (49 CFR 173.412). (9 pages total)

Regulatory requirement	Action required/by whom	Packaging category--steel drums
In addition to meeting the general design requirements prescribed in §173.411, each Type A packaging shall be designed so that:		
(a) The smallest overall external dimension of the package is not less than 10 centimeters (4 inches);	Designer to do and shipper responsibility to ensure.	As shown in the figures and as given in the packaging descriptions in Section 2.0, all packagings meet this requirement.
(b) The outside of the packaging incorporates a feature, such as a seal, that is not readily breakable, and that, while intact, is evidence that the package has not been opened. In the case of packages shipped in exclusive use closed transport vehicles, the cargo compartment may be sealed instead of the individual packages;	For this requirement, the package designer may need to be skilled and creative. This is especially true for packages such as fiberboard cartons and wooden boxes. A padlock is not effective as a security seal. It is not possible with most types of padlocks to ascertain if they have been illicitly opened. One acceptable approach toward meeting this requirement is serially numbered lead-wire seals, or, in the case of fiberboard packages, a tape of sufficient adhesive strength to damage the fiberboard upon removal. Designer to do and shipper responsibility to ensure.	There are acceptable approaches to compliance for all evaluated packagings. It is the shipper's responsibility to ensure compliance with this requirement.
(c) As far as practicable, the external surfaces are free from protrusions and are designed so that they can be easily decontaminated;	The intent is to minimize the number of protrusions by consideration during design and/or as a result of any modifications to the packaging. Designer to do and shipper responsibility to ensure.	All evaluated packagings meet this requirement.

Table C-1. Steel Drums--Compliance with Additional Design Requirements for Type A Packages (49 CFR 173.412). (9 pages total)

Regulatory requirement	Action required/by whom	Packaging category--steel drums
(d) Containment and shielding would be maintained during transportation and storage in a temperature range of -40°C (-40°F) to 70°C (158°F) with account being taken of the possibility of brittle fracture;	This <u>does not mean</u> any of the tests must necessarily be performed at the temperature extremes. [Note: 49 CFR 173.461(b)] the regulations allow the assumption that the packaging is in equilibrium at 38 °C prior to testing. One must evaluate the packaging components with respect to behavior at the temperature extremes under conditions incidental to transportation (i.e., the jiggles, bounces, and bumps normally encountered in transportation). Gaskets and packaging components need to be evaluated to determine if they will become excessively brittle at -40°F. This may be accomplished by actual testing, referring to property of material tables, obtaining data from manufacturers, etc. The shipper must consider such things as freezing of liquid contents and evaluate the effect to ensure continued containment integrity. The shipper must also consider the buildup of pressure at elevated temperatures and ensure continued containment. <u>Designer</u>, <u>tester</u>, and <u>evaluator</u> to do and <u>shipper</u> responsibility to ensure.	Metals used in these drums will not become excessively brittle at -40 °C and all gaskets used also meet this requirement. None of these packagings are authorized for liquids, so freezing of contents is not a concern. Temperatures of +70 °C will not result in any significant decrease in containment integrity.

Table C-1. Steel Drums--Compliance with Additional Design Requirements for Type A Packages (49 CFR 173.412). (9 pages total)

Regulatory requirement	Action required/by whom	Packaging category--steel drums
(e) It is able to withstand the effects of any acceleration, vibration, or vibration resonance that may arise during normal transportation, without any deterioration of the effectiveness of closing devices or of the integrity of the package as a whole and without loosening or unintentional release of nuts, bolts, or other securing devices even after repeated use;	Typically, one uses actual experience as a guide. If experience is not available, one normally uses a comparison to a similar packaging with an experience profile. If this isn't possible, vibration testing can be performed. The purpose of this section is to prevent the loosening of nuts, bolts, and containment devices under conditions incident to routine transportation. Designer, tester, and evaluator to do and shipper responsibility to ensure.	Experience has consistently demonstrated that these packagings or similar designs comply with this requirement. The shipper must ensure the application of quality assurance necessary to achieve this requirement.
(f) It includes a containment system securely closed by a positive fastening device that cannot be opened unintentionally or by pressure that may arise within the package during normal transport. Special form, as demonstrated in accordance with §173.469, may be considered as a component of the containment system;	Screw-type closures can qualify. Friction fit normally does not qualify. Security clips on cans could be acceptable. However, one cannot depend on friction alone. Designer, tester, and evaluator to do and shipper responsibility to ensure.	All packagings evaluated meet this requirement, as shown on the figures or in the packaging descriptions in Section 2.0.

Table C-1. Steel Drums--Compliance with Additional Design Requirements for Type A Packages (49 CFR 173.412). (9 pages total)

Regulatory requirement	Action required/by whom	Packaging category--steel drums
(g) The materials of the packaging and any components or structures are physically and chemically compatible with each other and with the contents, taking into account the behavior of each under irradiation;	Designer to do and shipper responsibility to ensure.	Shipper responsibility to ensure.
(h) For each component of the containment system account is taken, where applicable, of radiolytic decomposition of materials and the generation of gas by chemical reaction and radiolysis;	Designer to do and shipper responsibility to ensure.	Shipper responsibility to ensure.

Table C-1. Steel Drums--Compliance with Additional Design Requirements for Type A Packages (49 CFR 173.412). (9 pages total)

Regulatory requirement	Action required/by whom	Packaging category--steel drums
(i) The containment system will retain its radioactive contents under the reduction of ambient pressure to .25 kilograms per square centimeter (3.5 pounds per square inch);	The containment system is defined as the components intended to retain the radioactive contents during transportation. Thus, one starts by identifying the containment system. The radioactive contents must be completely retained in the containment system if the package is subjected to reduced pressure. A filtered packaging is possible as long as it can be demonstrated that the filtered package will retain the contents and that the filter is not susceptible to damage from any other tests. Caution should be exercised to ensure that the contents and internal packaging components (e.g., plastic boxes, etc.) will not effectively seal the filter during normal use. In cases where a pressure differential will not build up because of the free-flow through a filter, the requirement of demonstrating the retention of contents must still be met. For a package that breathes (does not hold 11.2 psi), such as a wooden box, one must demonstrate that, even with breathing, the contents will be retained. Otherwise, a separate inner containment capable of meeting the reduced pressure requirement is required. Designer, tester, and evaluator to do and shipper responsibility to ensure.	This analysis requires a more detailed description to provide adequate information. See Table C-2.

Table C-1. Steel Drums--Compliance with Additional Design Requirements for Type A Packages (49 CFR 173.412). (9 pages total)

Regulatory requirement	Action required/by whom	Packaging category--steel drums
(j) Each valve through which the radioactive contents could otherwise escape is protected against damage and unauthorized operation and, except for a pressure relief device, has an enclosure to retain any leakage;	Designer to do and shipper responsibility to ensure.	None of these packagings have valves.
(k) Any radiation shield that encloses a component of the packaging specified as part of the containment system will prevent the unintentional escape of that component from the shield;	The shield shall be securely closed or, by way of packaging design, ensure against escape of a containment component. One example is a package with Celotex* on top of a lead shield with a press-fit lid in which closure of the Celotex holds the lid in place. The shipper must make sure that under the tests prescribed in 49 CFR 173.465, there will be no rearrangement of the original containment/shield orientation. Designer, tester, and evaluator to do and shipper responsibility to ensure.	None of these packagings have shielding as described.
(l) Failure of any tiedown attachment on the packaging under excessive load will not impair the ability of the package to meet other requirements of this subpart;	Designer, tester, and evaluator to do and shipper responsibility to ensure.	None of these packagings have tie-down attachments as described.

Table C-1. Steel Drums--Compliance with Additional Design Requirements for Type A Packages (49 CFR 173.412). (9 pages total)

Regulatory requirement	Action required/by whom	Packaging category--steel drums
(m) When subjected to the tests specified in §173.465 or evaluated against these tests by any of the methods authorized by §173.461(a), the packaging will prevent: (1) Loss or dispersal of the radioactive contents; and (2) Any significant increase in the radiation levels recorded or calculated at the external surfaces for the condition before the test; (n) Each packaging designed for liquids will: (1) Meet the conditions prescribed in paragraph (m) of this section when subjected to the tests specified in §173.466 or evaluated against these tests by any of the methods authorized by §173.461(a);		

Table C-1. Steel Drums--Compliance with Additional Design Requirements for Type A Packages (49 CFR 173.412). (9 pages total)

Regulatory requirement	Action required/by whom	Packaging category--steel drums
(2) For any package with a liquid volume not exceeding 50 cubic centimeters (1.7 fluid ounces), have sufficient suitable absorbent material to absorb twice the volume of the liquid contents. The absorbent material shall be compatible with the package contents and suitably positioned to contact the liquid in the event of leakage; and		
(3) For any package with a liquid volume exceeding 50 cubic centimeters (1.7 fluid ounces), either:		
(i) Have sufficient absorbent material as prescribed in paragraph (n)(2) of this section; or		
(ii) Have a containment system composed of primary inner and secondary outer containment components designed to assure retention of the liquid contents within the secondary outer components in the event that the primary inner components leak; and		

Table C-1. Steel Drums--Compliance with Additional Design Requirements for Type A Packages (49 CFR 173.412). (9 pages total)

Regulatory requirement	Action required/by whom	Packaging category--steel drums
(o) Each package designed for compressed or uncompressed gases other than tritium or argon-37 not exceeding 200 curies will be able to prevent loss of contents when the package is subjected to the tests prescribed in §173.466 or evaluated against these tests by any of the methods authorized by §173.461(a).		

*Celotex is a trademark of the Celotex Corporation.

C1.0 SUMMARY OF PRESSURE TESTS ON EVALUATED STEEL DRUMS

Paragraph 173.412(i) in effect requires a pressure differential of 0.75 atm (11.2 psig) across the surfaces of the containment system acting from the inside to the outside. In all of the steel drum packagings, the containment system is defined as the drum itself. To achieve the pressure differential, the inside of the packaging was pressurized to 11.2 psig using compressed air and held for approximately 5 min. The pass/fail criteria were as follows:

1. No release of contents as determined by the absence of any detectable air flow or fluorescein after the test.

2. The retention of pressure, 11.2 ± 0.3 psig. This was held for approximately 5 min.

3. No structural distortion which would cause an increase exceeding 20% in the dose rate at the surface of the package as compared to the dose rate prior to beginning the test.

The 17C 55-gal drums with vent clips and with high-efficiency filters installed in the lids were tested. In this case the criteria became just containment (no release of contents) since the packaging will not hold pressure. This last statement is technically correct; however, in the instance above (vent clips and filters in lid), the pressure was raised to 11.2 psig and held for 5 min. by adjusting the inward flow to equal the loss through the vent clip and/or filter. This was over-testing because there are no realistic conditions of normal transport in which a pressure differential of this magnitude could arise in a matter of seconds. In the unlikely event of such a pressure change over longer periods of time, the vent clip or filter would allow the pressures to equilibrate before differentials approaching 11.2 psig could be reached. The table below provides detailed information concerning the testing of the steel drums and the results.

Table C-2. Steel Drums--"Reduced Pressure" Tests Summary. (5 pages total)

Steel drums in order of presentation in Section 2.0	Test results on standard production packagings without RTV		Test results with RTV adhesive sealant (requires 24-h cure before testing)		Contents	Comments
	No. Tested	Result	No. Tested	Result		
DOT-6C 5-gal	0		2	2 pass	Vermiculite with flour and fluorescein on top	Containers without RTV were not tested because they were not expected to pass based on previous test results.
DOT-6C 10-gal	0		2	2 pass	Vermiculite with flour and fluorescein on top	Containers without RTV were not tested because they were not expected to pass based on previous test results.
DOT-17C 5-gal	1	1 fail	2	2 pass	Vermiculite with flour and fluorescein on top	After one failed without RTV, the next two were tested with RTV.
DOT-17C 30-gal	None tested due to limited DOE contractor use. Evaluation based on testing/analysis of DOT-17H 30-gal packaging, a drum of less expected structural strength (i.e., 18-gauge sheet steel vs. 16-gauge steel sheet, etc.)					
DOT-17C 35-gal	1	1 fail	5	5 pass	Vermiculite with flour and fluorescein on top	RTV required.
DOT-17C 55-gal[a]	5	5 pass	0	NA	Empty	
	1	1 fail (see comments)		NA	Flour and fluorescein	Upon inspection, a manufacturing defect in the gasket was noted. Drums from same supplier tested again and all passed.
	5	5 pass	0	NA	Vermiculite with flour and fluorescein	

Table C-2. Steel Drums--"Reduced Pressure" Tests Summary. (5 pages total)

Steel drums in order of presentation in Section 2.0	Test results on standard production packagings without RTV		Test results with RTV adhesive sealant (requires 24-h cure before testing)		Contents	Comments
	No. Tested	Result	No. Tested	Result		
	3 LLNL galvanized drums	3 pass	0	NA	Vermiculite with flour and fluorescein	
DOT-17C 55-gal with pressure relief devices	5 HF	5 pass	0	NA	Flour and fluorescein	This test with no vent clips was to demonstrate the integrity of a standard production drum without RTV.
- Vent clip	5 HF	5 pass	0	NA	Vermiculite with flour and fluorescein	At 11.2 psig, air readily escaped, but no fluorescein was detected during or after these tests.
- Filter	3 RFP	3 pass	0	NA	Vermiculite with flour and fluorescein	The opening on the filter filter was covered on the inside and 11.2 psi pressure was applied to test the drums and the filter housing. As previously stated, all passed.
- Filter (same drums as above)	3 RFP	3 pass	0	NA	Vermiculite with flour and fluorescein	At 11.2 psig, air readily escaped, but no fluorescein was detected during or after these tests.

Table C-2. Steel Drums--"Reduced Pressure" Tests Summary. (5 pages total)

Steel drums in order of presentation in Section 2.0	Test results on standard production packagings without RTV		Test results with RTV adhesive sealant (requires 24-h cure before testing)		Contents	Comments
	No. Tested	Result	No. Tested	Result		
DOT-17C 55-gal with 90-mil HDPE liner	No tests were required because the 17C 55-gal drums had already been tested and had met this requirement.					
DOT-17H 30-gal	5 LANL	5 fail	0	NA	Empty	
	3 LANL	3 fail	0	NA	Flour and fluorescein	
	3 LANL	3 pass	0	NA	Flour and fluorescein	
	3 RFP	3 fail	0	NA	Empty	
	1 RFP	1 pass	0	NA	Empty	
	3 RFP	3 fail	0	NA	Vermiculite with flour and fluorescein	
DOT-17H 55-gal[b]	7 Mound	7 fail	0	NA	Empty	Both empty and full tests were performed to demonstrate that not only were the drums leaking, but they were leaking particles detectable with UV light.
	2 Mound	2 pass	0	NA	Empty	
	5 Mound	5 fail	0	NA	Vermiculite with flour	
	0	NA	10 Mound	10 pass		
	2 RFP	2 fail	0	NA	Empty	
	0	NA	2 RFP	2 pass	Vermiculite with flour and fluorescein	
	2 LLNL	2 fail	0	NA	Empty	
	3 LLNL	3 fail	0	NA	Vermiculite with flour and fluorescein	
	0	NA	2 LLNL	2 pass	Empty	

Table C-2. Steel Drums--"Reduced Pressure" Tests Summary. (5 pages total)

Steel drums in order of presentation in Section 2.0	Test results on standard production packagings without RTV		Test results with RTV adhesive sealant (requires 24-h cure before testing)		Contents	Comments
	No. Tested	Result	No. Tested	Result		
Military Specification Containers						
MS-24347-1[c], 0.25-gal	3	3 pass			Flour, flourescein, sand, and lead	
MS-24347-7, 1.25-gal	3	3 pass			Same as above	
MS-24684-1, 0.25-gal	3	3 pass			Same as above	
MS-27684-2, 4-gal	2	3 pass			Same as above	
MS-27684-3, 6-gal	3	3 pass			Same as above	
MS-27684-6, 8-gal	3	3 pass			Same as above	
MS-27684-8, 12-gal	3	3 pass			Same as above	
MS-27683-7, 30-gal	3	3 pass			Same as above	
MS-27683-13, 45-gal	3	3 pass			Same as above	
MS-27683-21, 85-gal	1	1 pass	3	3 pass		The 85-gal packaging was the only one requiring RTV.
	2	2 fail	0	NA		

Table C-2. Steel Drums--"Reduced Pressure" Tests Summary. (5 pages total)

Steel drums in order of presentation in Section 2.0	Test results on standard production packagings without RTV		Test results with RTV adhesive sealant (requires 24-h cure before testing)		Contents	Comments
	No. Tested	Result	No. Tested	Result		
Packaging Specialties Square Steel Drums						
Style 1A	6	5 pass 1 fail			Water - to within 2 to 3 in. of full	The single failure was a result of a manufacturing process defect, which was corrected.
Style 1B	5	5 pass			Same as above	
Style 2	5	5 pass			Same as above	
Style 3	5	5 pass			Same as above	

[a]Twenty-one DOT-17C 55-gal drums from three different DOE contractors were tested and demonstrated compliance with this requirement. Of the 14 tested with RTV, 14 passed.

[b]Thirty-five DOT-17H 55-gal drums were tested. Of the 21 tested (from three different DOE contractors) without RTV, 19 failed and 2 passed.

[c]Drum assembly number.

DOE = U.S. Department of Energy
DOT = U.S. Department of Transportation
HDPE = High-density polyethylene
HF = Hanford, Richland, Washington
LLNL = Lawrence Livermore National Laboratory
Mound = Mound Laboratory
NA = Not applicable
RFP = Rocky Flats Plant
RTV = Room temperature vulcanizing
UV = Ultraviolet.

Table C-3. Steel Boxes--Compliance With Additional Design Requirements for Type A Packages (49 CFR 173.412). (9 pages total)

Regulatory requirement	Action required/by whom	Packaging category--steel boxes
In addition to meeting the general design requirements prescribed in §173.411, each Type A packaging shall be designed so that:		
(a) The smallest overall external dimension of the package is not less than 10 centimeters (4 inches);	Designer to do and shipper responsibility to ensure.	As shown in the figures and as given in the packaging descriptions in Section 3.0, all packagings meet this requirement.
(b) The outside of the packaging incorporates a feature, such as a seal, that is not readily breakable, and that, while intact, is evidence that the package has not been opened. In the case of packages shipped in exclusive use closed transport vehicles, the cargo compartment may be sealed instead of the individual packages;	For this requirement, the package designer may need to be skilled and creative. This is especially true for packages such as fiberboard cartons and wooden boxes. A padlock is not effective as a security seal. It is not possible with most types of padlocks to ascertain if they have been illicitly opened. One acceptable approach toward meeting this requirement is serially numbered lead-wire seals, or, in the case of fiberboard packages, a tape of sufficient adhesive strength to damage the fiberboard upon removal. Designer to do and shipper responsibility to ensure.	There are acceptable approaches to compliance for all evaluated packagings. It is the shipper's responsibility to ensure compliance with this requirement.
(c) As far as practicable, the external surfaces are free from protrusions and are designed so that they can be easily decontaminated;	The intent is to minimize the number and nature of protrusions by consideration during design and/or as a result of any modifications to the packaging. Designer to do and shipper responsibility to ensure.	All evaluated packagings meet this requirement.

Table C-3. Steel Boxes--Compliance With Additional Design Requirements for Type A Packages (49 CFR 173.412). (9 pages total)

Regulatory requirement	Action required/by whom	Packaging category--steel boxes
(d) Containment and shielding would be maintained during transportation and storage in a temperature range of -40°C (-40°F) to 70°C (158°F) with account being taken of the possibility of brittle fracture;	This does not mean any of the tests must necessarily be performed at the temperature extremes. [Note: 49 CFR 173.461(b)] the regulations allow the assumption that the packaging is in equilibrium at 38 °C prior to testing. One must evaluate the packaging components with respect to behavior at the temperature extremes under conditions incidental to transportation (i.e., the jiggles, bounces, and bumps normally encountered in transportation). Gaskets and packaging components need to be evaluated to determine if they will become excessively brittle at -40 °C. This may be accomplished by actual testing, referring to property of material tables, obtaining data from manufacturers, etc. The shipper must consider such things as freezing of liquid contents and evaluate the effect to ensure continued containment integrity. The shipper must also consider the buildup of pressure at elevated temperatures and ensure continued containment. Designer, tester, and evaluator to do and shipper responsibility to ensure.	Metals used in these boxes will not become excessively brittle at -40 °C and all gaskets used also meet this requirement. None of these packagings are authorized for liquids, so freezing of contents is not a concern. Temperatures of +70 °C will not result in any significant decrease in containment integrity.

Table C-3. Steel Boxes--Compliance With Additional Design Requirements for Type A Packages (49 CFR 173.412). (9 pages total)

Regulatory requirement	Action required/by whom	Packaging category--steel boxes
(e) It is able to withstand the effects of any acceleration, vibration, or vibration resonance that may arise during normal transportation, without any deterioration of the effectiveness of closing devices or of the integrity of the package as a whole and without loosening or unintentional release of nuts, bolts, or other securing devices even after repeated use;	Typically, one uses actual experience as a guide. If experience is not available, one normally uses a comparison to a similar packaging with an experience profile. If this isn't possible, vibration testing can be performed. The purpose of this section is to prevent the loosening of nuts, bolts, and containment devices under conditions incident to routine transportation. Designer, tester, and evaluator to do and shipper responsibility to ensure.	Experience has consistently demonstrated that these packagings or similar designs comply with this requirement. The shipper must ensure the application of quality assurance necessary to achieve this requirement.
(f) It includes a containment system securely closed by a positive fastening device that cannot be opened unintentionally or by pressure that may arise within the package during normal transport. Special form, as demonstrated in accordance with §173.469, may be considered as a component of the containment system;	Screw-type closures can qualify. Friction fit normally does not qualify. Security clips on cans could be acceptable. However, one cannot depend on friction alone. Designer, tester, and evaluator to do and shipper responsibility to ensure.	All packagings evaluated meet this requirement, as shown in the figures or in the packaging descriptions in Section 3.0.

Table C-3. Steel Boxes--Compliance With Additional Design Requirements for Type A Packages (49 CFR 173.412). (9 pages total)

Regulatory requirement	Action required/by whom	Packaging category--steel boxes
(g) The materials of the packaging and any components or structures are physically and chemically compatible with each other and with the contents, taking into account the behavior of each under irradiation;	Designer to do and shipper responsibility to ensure.	Shipper responsibility to ensure.
(h) For each component of the containment system account is taken, where applicable, of radiolytic decomposition of materials and the generation of gas by chemical reaction and radiolysis;	Designer to do and shipper responsibility to ensure.	Shipper responsibility to ensure.

Table C-3. Steel Boxes--Compliance With Additional Design Requirements for Type A Packages (49 CFR 173.412). (9 pages total)

Regulatory requirement	Action required/by whom	Packaging category--steel boxes
(i) The containment system will retain its radioactive contents under the reduction of ambient pressure to .25 kilograms per square centimeter (3.5 pounds per square inch);	The containment system is defined as the components intended to retain the radioactive contents during transportation. Thus, one starts by identifying the containment system. The radioactive contents must be completely retained in the containment system if the package is subjected to reduced pressure. A filtered packaging is possible as long as it can be demonstrated that the filtered package will retain the contents and that the filter is not susceptible to damage from any other tests. Caution should be exercised to ensure that the contents and internal packaging components (e.g., plastic boxes, etc.) will not effectively seal the filter during normal use. In cases where a pressure differential will not build up because of the free-flow through a filter, the requirement of demonstrating the retention of contents must still be met. For a package that breathes (does not hold 11.2 psi), such as a wooden box, one must demonstrate that, even with breathing, the contents will be retained. Otherwise, a separate inner containment capable of meeting the reduced pressure requirement is required. Designer, tester, and evaluator to do and shipper responsibility to ensure.	This analysis requires a more detailed description to provide adequate information. See Table C-4.

Table C-3. Steel Boxes--Compliance With Additional Design Requirements for Type A Packages (49 CFR 173.412). (9 pages total)

Regulatory requirement	Action required/by whom	Packaging category--steel boxes
(j) Each valve through which the radioactive contents could otherwise escape is protected against damage and unauthorized operation and, except for a pressure relief device, has an enclosure to retain any leakage;	Designer to do and shipper responsibility to ensure. None of these packagings have valves.	None of these packagings have valves.
(k) Any radiation shield that encloses a component of the packaging specified as part of the containment system will prevent the unintentional escape of that component from the shield;	The shield shall be securely closed or, by way of packaging design, ensure against escape of a containment component. One example is a package with cellotex on top of a lead shield with a press-fit lid in which closure of the cellotex holds the lid in place. the shipper must make sure that under the tests prescribed in 49 CFR 173.465, there will be no rearrangement of the original containment/shield orientation. Designer, tester, and evaluator to do and shipper responsibility to ensure.	None of these packagings have shielding as described.
(l) Failure of any tie-down attachment on the packaging under excessive load will not impair the ability of the package to meet other requirements of this subpart.	Designer, tester, and evaluator to do and shipper responsibility to ensure.	None of these packagings have tie-down attachments as described.

Table C-3. Steel Boxes--Compliance With Additional Design Requirements for Type A Packages (49 CFR 173.412). (9 pages total)

Regulatory requirement	Action required/by whom	Packaging category--steel boxes
(m) When subjected to the tests specified in §173.465 or evaluated against these tests by any of the methods authorized by §173.461(a), the packaging will prevent: (1) Loss or dispersal of the radioactive contents; and (2) Any significant increase in the radiation levels recorded or calculated at the external surfaces for the condition before the test; (n) Each packaging designed for liquids will: (1) Meet the conditions prescribed in paragraph (m) of this section when subjected to the tests specified in §173.466 or evaluated against these tests by any of the methods authorized by §173.461(a);		

Table C-3. Steel Boxes--Compliance With Additional Design Requirements for Type A Packages (49 CFR 173.412). (9 pages total)

Regulatory requirement	Action required/by whom	Packaging category--steel boxes
(2) For any package with a liquid volume not exceeding 50 cubic centimeters (1.7 fluid ounces), have sufficient suitable absorbent material to absorb twice the volume of the liquid contents. The absorbent material shall be compatible with the package contents and suitably positioned to contact the liquid in the event of leakage; and		
(3) For any package with a liquid volume exceeding 50 cubic centimeters (1.7 fluid ounces), either:		
(i) Have sufficient absorbent material as prescribed in paragraph (n)(2) of this section; or		
(ii) Have a containment system composed of primary inner and secondary outer containment components designed to assure retention of the liquid contents within the secondary outer components in the event that the primary inner components leak; and		

Table C-3. Steel Boxes--Compliance With Additional Design Requirements for Type A Packages (49 CFR 173.412). (9 pages total)

Regulatory requirement	Action required/by whom	Packaging category--steel boxes
(o) Each package designed for compressed or uncompressed gases other than tritium or argon-37 not exceeding 200 curies will be able to prevent loss of contents when the package is subjected to the tests prescribed in §173.466 or evaluated against these tests by any of the methods authorized by §173.461(a).		

C2.0 SUMMARY OF PRESSURE TESTS ON EVALUATED STEEL BOXES

The containment system is defined as the box itself. To achieve the pressure differential, the inside of the packaging (steel box) was pressurized to 11.2 psig using compressed air, compressed nitrogen, or water, as described in Table C-4. In all cases, the pressure was held for approximately 5 min. The pass/fail criteria were essentially the same as given in Table C-2, with the exception of the Capital Industry test, which used water. In this case, obviously no flour or fluorescein was used; however, the absence of a visible water leak (and retention of water pressure) was really a more sensitive test than detection of fluorescein. Note that this test applies only to the nonfiltered packagings because reasonably this differential could not be expected to be encountered in transportation with a filtered packaging.

Table C-4. Steel Boxes--"Reduced Pressure" Tests Summary. (3 pages total)

Steel boxes in order of presentation in Section 3.0	Size/model no.	Test methodology	Test results	Comments
Capital Industries	S-0510-0823	Pressurized with water to 11.2 psi	Pass	No leakage of water and pressure held for 5 min.
	V-0510-0823	N/A	N/A	Vented/filtered, so this test is not applicable.
	S-0450-0846	N/A	Pass	Engineering analysis by comparison to S-0510-0823 above.
	S-0730-0846	N/A	Pass	Engineering analysis comparison to S-0730-1006 below.
	S-0240-0906	N/A	Pass	Engineering analysis by comparison to S-0510-0823 above.
	S-0480-0906	N/A	Pass	Engineering analysis by comparison to S-0510-0823 above.
	S-0730-1006	Pressurized with water to 11.2 psi	Pass	No leakage of water and pressure held for 5 min.
	S-0480-1376	N/A	Pass	Engineering analysis by comparison to S-0730-1006 above.
	S-0840-1440	Pressurized with water to 11.2 psi	Pass	No leakage of water and pressure held for 5 min.

Table C-4. Steel Boxes--"Reduced Pressure" Tests Summary. (3 pages total)

Steel boxes in order of presentation in Section 3.0	Size/model no.	Test methodology	Test results	Comments
Container Products Corp.	B-96-5 S/L FD	N/A	N/A	Vented/filtered, so test is not applicable.
	B-96-5 S/L RA	Pressurized with air to 11.2 psi	Pass	No leakage of air and pressure held for 2 min.
	B-96-5-RA-B	Pressurized with air to 11.2 psi	Pass	No leakage of air and pressure held for 2 min.
NOTE: All the remaining Container Products Corp. models are vented/filtered; therefore, this test is not applicable.				
RoGar Chemical & Nuclear Services Inc.	R-1	N/A	Pass	Engineering analysis by comparison to R-3 below.
	R-2	N/A	Pass	Engineering analysis by comparison to R-3 below.
	R-3	Pressurized with nitrogen to 11.2 psi	Pass	No leakage of nitrogen and pressure held for 5 min.
	R-4	N/A	Pass	Engineering analysis by comparison to R-3 above.
RFP	Style 1	Each style (1-4) pressurized with nitrogen to slightly above 12 psi	Pass	No leakage of nitrogen and pressure held for 5 min.
	Style 2		Pass	
	Style 3		Pass	
	Style 4		Pass	
ANL-E	M-4 Bin	Pressurized with water to 11.5 psig	Pass	No leakage of water and pressure held for more than 5 min.

Table C-4. Steel Boxes--"Reduced Pressure" Tests Summary. (3 pages total)

Steel boxes in order of presentation in Section 3.0	Size/model no.	Test methodology	Test results	Comments
ANL-W	Steel box	N/A	N/A	Certified only for Form No. 3 material; thus, test not meaningful. Box is not designed with a gasket seal intended to retain Form No. 1 or Form No. 2 contents.
ORNL	Low-level box	Pressure elevation to 11.5 psig - 10 min.	Pass	Test conducted on nonvented version only. (Docket 89-04-7A)

ANL-E = Argonne National Laboratory - East
ANL-W = Argonne National Laboratory - West
ORNL = Oak Ridge National Laboratory
RFP = Rocky Flats Plant.

Table C-5. Wooden Boxes--Compliance With Additional Design Requirements for Type A Packages (49 CFR 173.412). (9 pages total)

Regulatory requirement	Action required/by whom	Packaging category--wooden boxes
In addition to meeting the general design requirements prescribed in §173.411, each Type A packaging shall be designed so that:		
(a) The smallest overall external dimension of the package is not less than 10 centimeters (4 inches);	Designer to do and shipper responsibility to ensure.	As shown in the figures and as given in the packaging descriptions in Section 4.0, all packagings meet this requirement.
(b) The outside of the packaging incorporates a feature, such as a seal, that is not readily breakable, and that, while intact, is evidence that the package has not been opened. In the case of packages shipped in exclusive use closed transport vehicles, the cargo compartment may be sealed instead of the individual packages;	For this requirement, the package designer may need to be skilled and creative. This is especially true for packages such as fiberboard cartons and wooden boxes. A padlock is not effective as a security seal. It is not possible with most types of padlocks to ascertain if they have been illicitly opened. One acceptable approach toward meeting this requirement is serially numbered lead-wire seals, or, in the case of fiberboard packages, a tape of sufficient adhesive strength to damage the fiberboard upon removal. Designer to do and shipper responsibility to ensure.	There are acceptable approaches to compliance for all evaluated packagings. It is the shipper's responsibility to ensure compliance with this requirement.
(c) As far as practicable, the external surfaces are free from protrusions and are designed so that they can be easily decontaminated;	The intent is to minimize the number of protrusions by consideration during design and/or as a result of any modifications to the packaging. Designer to do and shipper responsibility to ensure.	All evaluated packagings meet this requirement.

Table C-5. Wooden Boxes--Compliance With Additional Design Requirements for Type A Packages (49 CFR 173.412). (9 pages total)

Regulatory requirement	Action required/by whom	Packaging category--wooden boxes
(d) Containment and shielding would be maintained during transportation and storage in a temperature range of -40°C (-40°F) to 70°C (158°F) with account being taken of the possibility of brittle fracture;	This <u>does not mean</u> any of the tests must necessarily be performed at the temperature extremes. [Note: 49 CFR 173.461(b)] the regulations allow the assumption that the packaging is in equilibrium at 38 °C prior to testing. One must evaluate the packaging components with respect to behavior at the temperature extremes under conditions incidental to transportation (i.e., the jiggles, bounces, and bumps normally encountered in transportation). Gaskets and packaging components need to be evaluated to determine if they will become excessively brittle at -40 °C. This may be accomplished by actual testing, referring to property of material tables, obtaining data from manufacturers, etc. The shipper must also consider the buildup of pressure at elevated temperatures and ensure continued containment. <u>Designer</u>, <u>tester</u>, and <u>evaluator</u> to do and <u>shipper</u> responsibility to ensure.	The materials, (wood, caulking, metal strips, nails, gaskets, etc.) would not become excessively brittle at -40 °C and all gaskets used met this requirement. None of these packagings are authorized for liquids, so freezing of contents is not a concern. Temperatures of +70 °C would not result in any significant decrease in integrity either, as shown in property of materials tables.

Table C-5. Wooden Boxes--Compliance With Additional Design Requirements for Type A Packages (49 CFR 173.412). (9 pages total)

Regulatory requirement	Action required/by whom	Packaging category--wooden boxes
(e) It is able to withstand the effects of any acceleration, vibration, or vibration resonance that may arise during normal transportation, without any deterioration of the effectiveness of closing devices or of the integrity of the package as a whole and without loosening or unintentional release of nuts, bolts, or other securing devices even after repeated use;	Typically, one uses actual experience as a guide. If experience is not available, one normally uses a comparison to a similar packaging with an experience profile. If this isn't possible, vibration testing can be performed. The purpose of this section is to prevent the loosening of nuts, bolts, and containment devices under conditions incident to routine transportation. Designer, tester, and evaluator to do and shipper responsibility to ensure.	Experience has consistently demonstrated that these packagings or similar designs comply with this requirement. The shipper must ensure the application of quality assurance necessary to achieve this requirement.
(f) It includes a containment system securely closed by a positive fastening device that cannot be opened unintentionally or by pressure that may arise within the package during normal transport. Special form, as demonstrated in accordance with §173.469, may be considered as a component of the containment system;	Screw-type closures can qualify. Friction fit normally does not qualify. Security clips on cans could be acceptable. However, one cannot depend on friction alone. Designer, tester, and evaluator to do and shipper responsibility to ensure.	All packagings evaluated meet this requirement, as shown in the figures or in the packaging descriptions in Section 3.0.

Table C-5. Wooden Boxes--Compliance With Additional Design Requirements for Type A Packages (49 CFR 173.412). (9 pages total)

Regulatory requirement	Action required/by whom	Packaging category--wooden boxes
(g) The materials of the packaging and any components or structures are physically and chemically compatible with each other and with the contents, taking into account the behavior of each under irradiation;	Designer to do and shipper responsibility to ensure.	Shipper responsibility to ensure.
(h) For each component of the containment system account is taken, where applicable, of radiolytic decomposition of materials and the generation of gas by chemical reaction and radiolysis;	Designer to do and shipper responsibility to ensure.	Shipper responsibility to ensure.

Table C-5. Wooden Boxes--Compliance With Additional Design Requirements for Type A Packages (49 CFR 173.412). (9 pages total)

Regulatory requirement	Action required/by whom	Packaging category--wooden boxes
(i) The containment system will retain its radioactive contents under the reduction of ambient pressure to .25 kilograms per square centimeter (3.5 pounds per square inch);	The containment system is defined as the components intended to retain the radioactive contents during transportation. Thus, one starts by identifying the containment system. The radioactive contents must be completely retained in the containment system if the package is subjected to reduced pressure. A filtered packaging is possible as long as it can be demonstrated that the filtered package will retain the contents and that the filter is not susceptible to damage from any other tests. Caution should be exercised to ensure that the contents and internal package will retain the contents and that the filter is not susceptible to damage from any other tests. Caution should be exercised to ensure that the contents and packaging components (e.g., plastic boxes, etc.) will not effectively seal the filter during normal use. In cases where a pressure differential will not build up because of the free-flow through a filter, the requirement of demonstrating the retention of contents must still be met. For a package that breathes (does not hold 11.2 psi), such as a wooden box, one must demonstrate that, even with breathing, the contents will be retained. Otherwise, a separate inner containment capable of meeting the reduced pressure requirement is required. Designer, tester, and evaluator to do and shipper responsibility to ensure.	Based on the testing discussed in Table C-6, these packagings all meet this requirement for Form No. 2 and No. 3 materials. The containment system in each case is the wooden box itself. Obviously, the box is not expected to be air-leak tight with a significant pressure differential applied. Thirteen separate boxes were subjected to this test. The contents in all cases were flour, fluorescein, and sand. In each case, the box did not hold pressure, as expected. Typically, boxes started leaking air at less than 1 psi. As the pressure increased, leak-paths increased until they began leaking all over (at the seams, around nails, etc.) at 9 psi. In each case, no sand was released, so these packagings passed for Form No. 2 and No. 3 materials (which is what they were evaluated for). In all cases, fluorescein was detected, but again, this simply means the packaging cannot be authorized for Form No. 1 materials. This does not present a problem since the boxes were never intended for use with Form No. 1 materials, and each evaluation states that Form No. 1 materials are "Not Authorized without separate containment tested to Type A requirements with appropriate documentation."

Table C-5. Wooden Boxes--Compliance With Additional Design Requirements for Type A Packages (49 CFR 173.412). (9 pages total)

Regulatory requirement	Action required/by whom	Packaging category--wooden boxes
(j) Each valve through which the radioactive contents could otherwise escape is protected against damage and unauthorized operation and, except for a pressure relief device, has an enclosure to retain any leakage;	Designer to do and shipper responsibility to ensure.	None of these packagings have valves.
(k) Any radiation shield that encloses a component of the packaging specified as part of the containment system will prevent the unintentional escape of that component from the shield;	The shield shall be securely closed or, by way of packaging design, ensure against escape of a containment component. One example is a package with cellotex on top of a lead shield with a press-fit lid in which closure of the cellotex holds the lid in place. The shipper must make sure that under the tests prescribed in 49 CFR 173.465, there will be no rearrangement of the original containment/shield orientation. Designer, tester, and evaluator to do and shipper responsibility to ensure.	None of these packagings have shielding as described.
(l) Failure of any tie-down attachment on the packaging under excessive load will not impair the ability of the package to meet other requirements of this subpart;	Designer, tester, and evaluator to do and shipper responsibility to ensure.	None of these packagings have tie-down attachments as described.

Table C-5. Wooden Boxes--Compliance With Additional Design Requirements for Type A Packages (49 CFR 173.412). (9 pages total)

Regulatory requirement	Action required/by whom	Packaging category--wooden boxes
(m) When subjected to the tests specified in §173.465 or evaluated against these tests by any of the methods authorized by §173.461(a), the packaging will prevent: (1) Loss or dispersal of the radioactive contents; and (2) Any significant increase in the radiation levels recorded or calculated at the external surfaces for the condition before the test; (n) Each packaging designed for liquids will: (1) Meet the conditions prescribed in paragraph (m) of this section when subjected to the tests specified in §173.466 or evaluated against these tests by any of the methods authorized by §173.461(a);		

Table C-5. Wooden Boxes--Compliance With Additional Design Requirements for Type A Packages (49 CFR 173.412). (9 pages total)

Regulatory requirement	Action required/by whom	Packaging category--wooden boxes
(2) For any package with a liquid volume not exceeding 50 cubic centimeters (1.7 fluid ounces), have sufficient suitable absorbent material to absorb twice the volume of the liquid contents. The absorbent material shall be compatible with the package contents and suitably positioned to contact the liquid in the event of leakage; and		
(3) For any package with a liquid volume exceeding 50 cubic centimeters (1.7 fluid ounces), either:		
(i) Have sufficient absorbent material as prescribed in paragraph (n)(2) of this section; or		
(ii) Have a containment system composed of primary inner and secondary outer containment components designed to assure retention of the liquid contents within the secondary outer components in the event that the primary inner components leak; and		

Table C-5. Wooden Boxes--Compliance With Additional Design Requirements for Type A Packages (49 CFR 173.412). (9 pages total)

Regulatory requirement	Action required/by whom	Packaging category--wooden boxes
(o) Each package designed for compressed or uncompressed gases other than tritium or argon-37 not exceeding 200 curies will be able to prevent loss of contents when the package is subjected to the tests prescribed in §173.466 or evaluated against these tests by any of the methods authorized by §173.461(a).		

C3.0 SUMMARY OF PRESSURE TESTS ON EVALUATED WOODEN BOXES

This test method, raising the internal pressure to 9 to 11 psi and maintaining it for several minutes, is very conservative. This is because, in transport, any pressure differential encountered would be equilibrated very slowly, and the strong driving force encountered in this test would not exist.

Table C-6. Wooden Boxes--"Reduced Pressure" Tests Summary. (4 pages total)

Type of wooden box/principal user	Model/size	Test analysis	Results	Comments
ANL-W	7A-217 7A-375 7A-670 7A-880 7A-995 7A-1315	These packagings are authorized only for Form No. 3 materials. Test results discussed in this section demonstrate that Form No. 3 materials would not be released.	Pass	Authorized only for Form No. 3 materials.
LLNL	Flush panel 4 ft × 4 ft × 7 ft	Test data on similar packagings as discussed below demonstrate that Form No. 2 and No. 3 materials would not be released as a result of this test.	Pass	Authorized only for Form No. 2 and No. 3 materials.
Mound Configuration A	MA-1 MA-2 MA-3	Test data on similar packagings as discussed in this table demonstrate that Form No. 2 and No. 3 materials would not be released as a result of this test.	Pass	Authorized only for Form No. 2 and No. 3 materials.
Mound Configuration B	MB-1 MB-2 MB-3 MB-4 MB-5 MB-6	Tests were conducted on MB-1, 2, 3, 4, and 5 with flour, fluorescein, and sand as contents. The package was pressurized to between 9 and 11.2 psi, and an equilibrium (escape vs. input) was achieved and held for 1-2 min. Air leaked out almost immediately. Fluorescein was detected in all cases, but in no instance was sand detected.	Pass	There was no release of Form No. 2 (or No. 3 by extrapolation) contents. Thus, these packagings are authorized for Form No. 2 and No. 3 materials.

Table C-6. Wooden Boxes--"Reduced Pressure" Tests Summary. (4 pages total)

Type of wooden box/principal user	Model/size	Test analysis	Results	Comments
Mound Configuration C	MC-1 MC-2 MC-3 MC-4 MC-5	Tests data on similar packagings as discussed in this table demonstrate that Form No. 2 and No. 3 materials would not be released as a result of this test.	Pass	Authorized only for Form No. 2 and No. 3 materials.
Mound Configuration D	MD-1 MD-2 MD-3 MD-4 MD-5 MD-6	Tests were conducted on MD-1, 2, 3, 4, 5, and 6 with flour, fluorescein, and sand as contents. The package was pressurized to between 9 and 11.2 psi, and an equilibrium (escape vs. input) was achieved and held for 1-2 min. Air leaked out almost immediately. Fluorescein was detected in all cases, but in no instance was sand detected.	Pass	There was no release of Form No. 2 (or No. 3 by extrapolation) contents. Thus, these packagings are authorized for Form No. 2 and No. 3 materials.

Table C-6. Wooden Boxes--"Reduced Pressure" Tests Summary. (4 pages total)

Type of wooden box/principal user	Model/size	Test analysis	Results	Comments
Mound Configuration E	ME-1 ME-2 ME-3	Tests were conducted on all three models with flour, fluorescein, and sand as contents. The package was pressurized to between 9 and 11.2 psi, and an equilibrium (escape vs. input) was achieved and held for 1-2 min. Air leaked out almost immediately. Fluorescein was detected in all cases, but in no instance was sand detected.	Pass	There was no release of Form No. 2 (or No. 3 by extrapolation) contents. Thus, these packagings are authorized for Form No. 2 and No. 3 materials. In summary, 13 of the Mound series boxes were tested and passed for Form No. 2 and No. 3 materials. These tests demonstrate that all the boxes in this section would meet this requirement for Form No. 2 and No. 3 materials.
NLO Family of Boxes	G-4214 G-4245 G-4255 G-4273 G-4292	These packagings are authorized only for Form No. 3 materials. The test results discussed in this section demonstrate that Form No. 3 materials would not be released.	Pass	Authorized only for Form No. 3 materials.
Y-12 Series B	B-1 through B-8	These packagings are authorized only for Form No. 3 materials. Test results discussed in this section demonstrate that Form No. 3 materials would not be released.	Pass	Authorized only for Form No. 3 materials.

Table C-6. Wooden Boxes--"Reduced Pressure" Tests Summary. (4 pages total)

Type of wooden box/principal user	Model/size	Test analysis	Results	Comments
Y-12 Picture Frames	PF-1 through PF-8, PF-10	These packagings are authorized only for Form No. 3 materials. Test results discussed in this section demonstrate that Form No. 3 materials would not be released. (Docket 89-12-7A)	Pass	Authorized only for Form No. 3 materials.
RFP RA Series	Configuration 1 Configuration 2	These packagings are authorized only for Form No. 3 materials. Test results discussed in this section demonstrate that Form No. 3 materials would not be released.	Pass	Authorized only for Form No. 3 materials.
WMCO Banded Wooden Boxes	G-4214 G-4245 G-4255 G-4273-5 G-4273-6	These packagings are authorized only for Form No. 3 materials. The test results discussed in this section demonstrate that Form No. 3 materials would not be released.	Pass	Authorized only for Form 3 materials. (Docket 89-09-7A)
ORNL Y-12 C-Series	C-1 C-2 C-3	These packagings are authorized only for Form 3 materials. The test results discussed in this section demonstrate that Form 3 materials not be released.	Pass	Authorized only for Form 3 materials. (Docket 89-01-7A)

ANL-W = Argonne National Laboratory - West
LLNL = Lawrence Livermore National Laboratory
Mound = Mound Laboratory
NLO = National Lead Corporation
ORNL = Oak Ridge National Laboratory
RFP = Rocky Flats Plant
WMCO = Westinghouse Materials Company of Ohio.

Table C-7. Fiberboard Containers--Compliance With Additional Design Requirements for Type A Packages (49 CFR 173.412). (9 pages total)

Regulatory requirement	Action required/by whom	Packaging category--fiberboard containers
In addition to meeting the general design requirements prescribed in §173.411, each Type A packaging shall be designed so that:		
(a) The smallest overall external dimension of the package is not less than 10 centimeters (4 inches);	Designer to do and shipper responsibility to ensure.	As shown in the figures and as given in the packaging descriptions in Section 5.0, all packagings meet this requirement.
(b) The outside of the packaging incorporates a feature, such as a seal, that is not readily breakable, and that, while intact, is evidence that the package has not been opened. In the case of packages shipped in exclusive use closed transport vehicles, the cargo compartment may be sealed instead of the individual packages;	For this requirement, the package designer may need to be skilled and creative. This is especially true for packages such as fiberboard cartons and wooden boxes. A padlock is not effective as a security seal. It is not possible with most types of padlocks to ascertain if they have been illicitly opened. One acceptable approach toward meeting this requirement is serially numbered lead-wire seals, or, in the case of fiberboard packages, a tape of sufficient adhesive strength to damage the fiberboard upon removal. Designer to do and shipper responsibility to ensure.	There are acceptable approaches to compliance for all evaluated packagings. It is the shipper's responsibility to ensure compliance with this requirement.
(c) As far as practicable, the external surfaces are free from protrusions and are designed so that they can be easily decontaminated;	The intent is to minimize the number of protrusions by consideration during design and/or as a result of any modifications to the packaging. Designer to do and shipper responsibility to ensure.	All evaluated packagings meet this requirement.

Table C-7. Fiberboard Containers--Compliance With Additional Design Requirements for Type A Packages (49 CFR 173.412). (9 pages total)

Regulatory requirement	Action required/by whom	Packaging category--fiberboard containers
(d) Containment and shielding would be maintained during transportation and storage in a temperature range of -40°C (-40°F) to 70°C (158°F) with account being taken of the possibility of brittle fracture;	This <u>does not mean</u> any of the tests must necessarily be performed at the temperature extremes. [Note: 49 CFR 173.461(b)] the regulations allow the assumption that the packaging is in equilibrium at 38 °C prior to testing. One must evaluate the packaging components with respect to behavior at the temperature extremes under conditions incidental to transportation (i.e., the jiggles, bounces, and bumps normally encountered in transportation). Gaskets and packaging components need to be evaluated to determine if they will become excessively brittle at -40 °C. This may be accomplished by actual testing, referring to property of material tables, obtaining data from manufacturers, etc. The shipper must also consider such things as freezing of liquid contents and evaluate the effect to ensure continued containment integrity. The shipper must also consider the buildup of pressure at elevated temperatures and ensure continued containment. <u>Designer</u>, <u>tester</u>, and <u>evaluator</u> to do and <u>shipper</u> responsibility to ensure.	The materials (fiberboard, metal strips, nails, gaskets, etc.) would not become excessively brittle at -40 °C and all gaskets used met this requirement. None of these packagings are authorized for liquids, so this requirement is not applicable. Temperatures of +70 °C would not result in any significant decrease in integrity, as shown in property of materials tables.

Table C-7. Fiberboard Containers--Compliance With Additional Design Requirements for Type A Packages (49 CFR 173.412). (9 pages total)

Regulatory requirement	Action required/by whom	Packaging category--fiberboard containers
(e) It is able to withstand the effects of any acceleration, vibration, or vibration resonance that may arise during normal transportation, without any deterioration of the effectiveness of closing devices or of the integrity of the package as a whole and without loosening or unintentional release of nuts, bolts, or other securing devices even after repeated use;	Typically, one uses actual experience as a guide. If experience is not available, one normally uses a comparison to a similar packaging with an experience profile. If this isn't possible, vibration testing can be performed. The purpose of this section is to prevent the loosening of nuts, bolts, and containment devices under conditions incident to routine transportation. Designer, tester, and evaluator to do and shipper responsibility to ensure.	Experience has consistently demonstrated that these packagings or similar designs comply with this requirement. The shipper must ensure the application of quality assurance necessary to achieve this requirement.
(f) It includes a containment system securely closed by a positive fastening device that cannot be opened unintentionally or by pressure that may arise within the package during normal transport. Special form, as demonstrated in accordance with §173.469, may be considered as a component of the containment system;	Screw-type closures can qualify. Friction fit normally does not qualify. Security clips on cans could be acceptable. However, one cannot depend on friction alone. Designer, tester, and evaluator to do and shipper responsibility to ensure.	All packagings evaluated meet this requirement, as shown in the figures or in the packaging descriptions in Section 5.0.

Table C-7. Fiberboard Containers--Compliance With Additional Design Requirements for Type A Packages (49 CFR 173.412). (9 pages total)

Regulatory requirement	Action required/by whom	Packaging category--fiberboard containers
(g) The materials of the packaging and any components or structures are physically and chemically compatible with each other and with the contents, taking into account the behavior of each under irradiation;	Designer to do and shipper responsibility to ensure.	Shipper responsibility to ensure.
(h) For each component of the containment system account is taken, where applicable, of radiolytic decomposition of materials and the generation of gas by chemical reaction and radiolysis;	Designer to do and shipper responsibility to ensure.	Shipper responsibility to ensure.

Table C-7. Fiberboard Containers--Compliance With Additional Design Requirements for Type A Packages (49 CFR 173.412). (9 pages total)

Regulatory requirement	Action required/by whom	Packaging category--fiberboard containers
(i) The containment system will retain its radioactive contents under the reduction of ambient pressure to .25 kilograms per square centimeter (3.5 pounds per square inch);	The containment system is defined as the components intended to retain the radioactive contents during transportation. Thus, one starts by identifying the containment system. The radioactive contents must be completely retained in the containment system if the package is subjected to reduced pressure. A filtered packaging is possible as long as it can be demonstrated that the filtered package will retain the contents and that the filter is not susceptible to damage from any other tests. Caution should be exercised to ensure that the contents and internal packaging components (e.g., plastic boxes, etc.) will not effectively seal the filter during normal use. In cases where a pressure differential will not build up because of the free-flow through a filter, the requirement of demonstrating the retention of contents must still be met. For a package that breathes (does not hold 11.2 psi), such as a wooden box, one must demonstrate that, even with breathing, the contents will be retained. Otherwise, a separate inner containment capable of meeting the reduced pressure requirement is required. Designer, tester, and evaluator to do and shipper responsibility to ensure.	Except for LLNL's package, this test was not conducted on any of the fiberboard packagings since they obviously are not leak tight. With the exception of the LLNL package previously mentioned, these packagings are authorized only for Form No. 3 materials. Since Form No. 3 materials by definition have no dispersible contamination, a movement of air from inside the package to the outside would have no adverse consequences. Thus, all these packagings authorized for only Form No. 3 material would meet this requirement. For the one exception, the LLNL packaging, two separate inner metal containers (No. 10 cans), were tested in a bell jar assembly and passed. The metal inner container (containment system) was immersed in a beaker of water inside a bell jar for approximately 5 min., and the pressure inside the bell jar was reduced to 3.6 psi. The water was checked for bubbles and, in both cases, none were detected. Thus, the metal inner container (No. 10 can) passed this test by itself.

Table C-7. Fiberboard Containers--Compliance With Additional Design Requirements for Type A Packages (49 CFR 173.412). (9 pages total)

Regulatory requirement	Action required/by whom	Packaging category--fiberboard containers
(j) Each valve through which the radioactive contents could otherwise escape is protected against damage and unauthorized operation and, except for a pressure relief device, has an enclosure to retain any leakage;	Designer to do and shipper responsibility to ensure.	None of these packagings have valves.
(k) Any radiation shield that encloses a component of the packaging specified as part of the containment system will prevent the unintentional escape of that component from the shield;	The shield shall be securely closed or, by way of packaging design, ensure against escape of a containment component. One example is a package with cellotex on top of a lead shield with a press-fit lid in which closure of the cellotex holds the lid in place. The shipper must make sure that under the tests prescribed in 49 CFR 173.465, there will be no rearrangement of the original containment/shield orientation. Designer, tester, and evaluator to do and shipper responsibility to ensure.	None of these packagings have shielding as described.
(l) Failure of any tie-down attachment on the packaging under excessive load will not impair the ability of the package to meet other requirements of this subpart.	Designer, tester, and evaluator to do and shipper responsibility to ensure.	None of these packagings have tie-down attachments as described.

Table C-7. Fiberboard Containers--Compliance With Additional Design Requirements for Type A Packages (49 CFR 173.412). (9 pages total)

Regulatory requirement	Action required/by whom	Packaging category--fiberboard containers
(m) When subjected to the tests specified in §173.465 or evaluated against these tests by any of the methods authorized by §173.461(a), the packaging will prevent: (1) Loss or dispersal of the radioactive contents; and (2) Any significant increase in the radiation levels recorded or calculated at the external surfaces for the condition before the test; (n) Each packaging designed for liquids will: (1) Meet the conditions prescribed in paragraph (m) of this section when subjected to the tests specified in §173.466 or evaluated against these tests by any of the methods authorized by §173.461(a);		

Table C-7. Fiberboard Containers--Compliance With Additional Design Requirements for Type A Packages (49 CFR 173.412). (9 pages total)

Regulatory requirement	Action required/by whom	Packaging category--fiberboard containers
(2) For any package with a liquid volume not exceeding 50 cubic centimeters (1.7 fluid ounces), have sufficient suitable absorbent material to absorb twice the volume of the liquid contents. The absorbent material shall be compatible with the package contents and suitably positioned to contact the liquid in the event of leakage; and		
(3) For any package with a liquid volume exceeding 50 cubic centimeters (1.7 fluid ounces), either:		
(i) Have sufficient absorbent material as prescribed in paragraph (n)(2) of this section; or		
(ii) Have a containment system composed of primary inner and secondary outer containment components designed to assure retention of the liquid contents within the secondary outer components in the event that the primary inner components leak; and		

Table C-7. Fiberboard Containers--Compliance With Additional Design Requirements for Type A Packages (49 CFR 173.412). (9 pages total)

Regulatory requirement	Action required/by whom	Packaging category--fiberboard containers
(o) Each package designed for compressed or uncompressed gases other than tritium or argon-37 not exceeding 200 curies will be able to prevent loss of contents when the package is subjected to the tests prescribed in §173.466 or evaluated against these tests by any of the methods authorized by §173.461(a).		

LLNL = Lawrence Livermore National Laboratory.

Table C-8. UF_6 Cylinders--Compliance With Additional Design Requirements for Type A Packages (49 CFR 173.412). (9 pages total)

Regulatory requirement	Action required/by whom	Packaging category--UF_6 cylinders
In addition to meeting the general design requirements prescribed in §173.411, each Type A packaging shall be designed so that:		
(a) The smallest overall external dimension of the package is not less than 10 centimeters (4 inches);	Designer to do and shipper responsibility to ensure.	As shown in the figures and as given in the packaging descriptions in Section 6.0, all packagings meet this requirement.
(b) The outside of the packaging incorporates a feature, such as a seal, that is not readily breakable, and that, while intact, is evidence that the package has not been opened. In the case of packages shipped in exclusive use closed transport vehicles, the cargo compartment may be sealed instead of the individual packages;	For this requirement, the package designer may need to be skilled and creative. This is especially true for packages such as fiberboard cartons and wooden boxes. A padlock is not effective as a security seal. It is not possible with most types of padlocks to ascertain if they have been illicitly opened. One acceptable approach toward meeting this requirement is serially numbered lead-wire seals, or, in the case of fiberboard packages, a tape of sufficient adhesive strength to damage the fiberboard upon removal. Designer to do and shipper responsibility to ensure.	There are acceptable approaches to compliance for all evaluated packagings. It is the shipper's responsibility to ensure compliance with this requirement.
(c) As far as practicable, the external surfaces are free from protrusions and are designed so that they can be easily decontaminated;	The intent is to minimize the number of protrusions by consideration during design and/or as a result of any modifications to the packaging. Designer to do and shipper responsibility to ensure.	All evaluated packages meet this requirement.

Table C-8. UF_6 Cylinders--Compliance With Additional Design Requirements for Type A Packages (49 CFR 173.412). (9 pages total)

Regulatory requirement	Action required/by whom	Packaging category--UF_6 cylinders
(d) Containment and shielding would be maintained during transportation and storage in a temperature range of -40°C (-40°F) to 70°C (158°F) with account being taken of the possibility of brittle fracture;	This does not mean any of the tests must necessarily be performed at the temperature extremes. [Note: 49 CFR 173.461(b)] the regulations allow the assumption that the packaging is in equilibrium at 38 °C prior to testing. One must evaluate the packaging components with respect to behavior at the temperature extremes under conditions incidental to transportation (i.e., the jiggles, bounces, and bumps normally encountered in transportation). Gaskets and packaging components need to be evaluated to determine if they will become excessively brittle at -40 °C. This may be accomplished by actual testing, referring to property of material tables, obtaining data from manufacturers, etc. The shipper must also consider such things as freezing of liquid contents and evaluate the effect to ensure continued containment integrity. The shipper must also consider the buildup of pressure at elevated temperatures and ensure continued containment. Designer, tester, and evaluator to do and shipper responsibility to ensure.	Metals used in these cylinders will not become excessively brittle at -40 °C and all gaskets used also meet this requirement. None of these packagings are authorized for liquids, so freezing of contents is not a concern. Temperatures of +70 °C will not result in any significant decrease in containment integrity, as shown in property of materials tables.

Table C-8. UF_6 Cylinders--Compliance With Additional Design Requirements for Type A Packages (49 CFR 173.412). (9 pages total)

Regulatory requirement	Action required/by whom	Packaging category--UF_6 cylinders
(e) It is able to withstand the effects of any acceleration, vibration, or vibration resonance that may arise during normal transportation, without any deterioration of the effectiveness of closing devices or of the integrity of the package as a whole and without loosening or unintentional release of nuts, bolts, or other securing devices even after repeated use;	Typically, one uses actual experience as a guide. If experience is not available, one normally uses a comparison to a similar packaging with an experience profile. If this isn't possible, vibration testing can be performed. The purpose of this section is to prevent the loosening of nuts, bolts, and containment devices under conditions incident to routine transportation. Designer, tester, and evaluator to do and shipper responsibility to ensure.	Experience has consistently demonstrated that these packagings or similar designs comply with this requirement. The shipper must ensure the application of quality assurance necessary to achieve this requirement.
(f) It includes a containment system securely closed by a positive fastening device that cannot be opened unintentionally or by pressure that may arise within the package during normal transport. Special form, as demonstrated in accordance with §173.469, may be considered as a component of the containment system;	Screw-type closures can qualify. Friction fit normally does not qualify. Security clips on cans could be acceptable. However, one cannot depend on friction alone. Designer, tester, and evaluator to do and shipper responsibility to ensure.	All packagings evaluated meet this requirement, as shown in the figures or in the packaging descriptions in Section 6.0.

Table C-8. UF_6 Cylinders--Compliance With Additional Design Requirements for Type A Packages (49 CFR 173.412). (9 pages total)

Regulatory requirement	Action required/by whom	Packaging category--UF_6 cylinders
(g) The materials of the packaging and any components or structures are physically and chemically compatible with each other and with the contents, taking into account the behavior of each under irradiation;	Designer to do and shipper responsibility to ensure.	Shipper responsibility to ensure.
(h) For each component of the containment system account is taken, where applicable, of radiolytic decomposition of materials and the generation of gas by chemical reaction and radiolysis;	Designer to do and shipper responsibility to ensure.	Shipper responsibility to ensure.

Table C-8. UF_6 Cylinders--Compliance With Additional Design Requirements for Type A Packages (49 CFR 173.412). (9 pages total)

Regulatory requirement	Action required/by whom	Packaging category--UF_6 cylinders
(i) The containment system will retain its radioactive contents under the reduction of ambient pressure to .25 kilograms per square centimeter (3.5 pounds per square inch);	The containment system is defined as the components intended to retain the radioactive contents during transportation. Thus, one starts by identifying the containment system. The radioactive contents must be completely retained in the containment system if the package is subjected to reduced pressure. A filtered packaging is possible as long as it can be demonstrated that the filtered package will retain the contents and that the filter is not susceptible to damage from any other tests. Caution should be exercised to ensure that the contents and internal packaging components (e.g., plastic boxes, etc.) will not effectively seal the filter during normal use. In cases where a pressure differential will not build up because of the free-flow through a filter, the requirement of demonstrating the retention of contents must still be met. For a package that breathes (does not hold 11.2 psi), such as a wooden box, one must demonstrate that, even with breathing, the contents will be retained. Otherwise, a separate inner containment capable of meeting the reduced pressure requirement is required. Designer, tester, and evaluator to do and shipper responsibility to ensure.	All cylinders are designed to withstand pressures far in excess of 11.2 psi. The minimum service pressure for any of these cylinders is 100 psig and extends up to 200 psig for nine of the cylinders.

Table C-8. UF_6 Cylinders--Compliance With Additional Design Requirements for Type A Packages (49 CFR 173.412). (9 pages total)

Regulatory requirement	Action required/by whom	Packaging category--UF_6 cylinders
(j) Each valve through which the radioactive contents could otherwise escape is protected against damage and unauthorized operation and, except for a pressure relief device, has an enclosure to retain any leakage;	Designer to do and shipper responsibility to ensure.	Each valve is protected against damage, sealed against unauthorized operation, and capped to retain any leakage.
(k) Any radiation shield that encloses a component of the packaging specified as part of the containment system will prevent the unintentional escape of that component from the shield;	The shield shall be securely closed or, by way of packaging design, ensure against escape of a containment component. One example is a package with cellotex on top of a lead shield with a press-fit lid in which closure of the cellotex holds the lid in place. The shipper must make sure that under the tests prescribed in 49 CFR 173.465, there will be no rearrangement of the original containment/shield orientation. Designer, tester, and evaluator to do and shipper responsibility to ensure.	None of these packagings have shielding as described.
(l) Failure of any tie-down attachment on the packaging under excessive load will not impair the ability of the package to meet other requirements of this subpart;	Designer, tester, and evaluator to do and shipper responsibility to ensure.	Only one configuration (48-in. cylinder) uses/incorporates tie-down attachments. Table C-9 shows the calculated safety factors and the failure mode analyses. In all cases, it was demonstrated that the lug would fail, not the cylinder. Thus, the integrity of the cylinder would not be impaired.

Table C-8. UF_6 Cylinders--Compliance With Additional Design Requirements for Type A Packages (49 CFR 173.412). (9 pages total)

Regulatory requirement	Action required/by whom	Packaging category--UF_6 cylinders
(m) When subjected to the tests specified in §173.465 or evaluated against these tests by any of the methods authorized by §173.461(a), the packaging will prevent: (1) Loss or dispersal of the radioactive contents; and (2) Any significant increase in the radiation levels recorded or calculated at the external surfaces for the condition before the test; (n) Each packaging designed for liquids will: (1) Meet the conditions prescribed in paragraph (m) of this section when subjected to the tests specified in §173.466 or evaluated against these tests by any of the methods authorized by §173.461(a);		

Table C-8. UF_6 Cylinders--Compliance With Additional Design Requirements for Type A Packages (49 CFR 173.412). (9 pages total)

Regulatory requirement	Action required/by whom	Packaging category--UF_6 cylinders
(2) For any package with a liquid volume not exceeding 50 cubic centimeters (1.7 fluid ounces), have sufficient suitable absorbent material to absorb twice the volume of the liquid contents. The absorbent material shall be compatible with the package contents and suitably positioned to contact the liquid in the event of leakage; and		
(3) For any package with a liquid volume exceeding 50 cubic centimeters (1.7 fluid ounces), either:		
(i) Have sufficient absorbent material as prescribed in paragraph (n)(2) of this section; or		
(ii) Have a containment system composed of primary inner and secondary outer containment components designed to assure retention of the liquid contents within the secondary outer components in the event that the primary inner components leak; and		

Table C-8. UF_6 Cylinders--Compliance With Additional Design Requirements for Type A Packages (49 CFR 173.412). (9 pages total)

Regulatory requirement	Action required/by whom	Packaging category--UF_6 cylinders
(o) Each package designed for compressed or uncompressed gases other than tritium or argon-37 not exceeding 200 curies will be able to prevent loss of contents when the package is subjected to the tests prescribed in §173.466 or evaluated against these tests by any of the methods authorized by §173.461(a).		

Table C-9. Calculated Safety Factor for UF_6 Cylinders.

Cylinder	Weight (lb)	Calculated Safety Factor	Result
48X	25,530	12	Pass
48Y	32,760	10	Pass
48G	30,600	10	Pass
48H	31,190	10	Pass
48HX	31,190	10	Pass

Table C-10. Liquid and Gas Packagings--Compliance With Additional Design Requirements for Type A Packages (49 CFR 173.412). (9 pages total)

Regulatory requirement	Action required/by whom	Packaging category--liquid and gas packagings
In addition to meeting the general design requirements prescribed in §173.411, each Type A packaging shall be designed so that:		
(a) The smallest overall external dimension of the package is not less than 10 centimeters (4 inches);	Designer to do and shipper responsibility to ensure.	As shown in the figures and as given in the packaging descriptions in Section 7.0, all packagings meet this requirement.
(b) The outside of the packaging incorporates a feature, such as a seal, that is not readily breakable, and that, while intact, is evidence that the package has not been opened. In the case of packages shipped in exclusive use closed transport vehicles, the cargo compartment may be sealed instead of the individual packages;	For this requirement, the package designer may need to be skilled and creative. This is especially true for packages such as fiberboard cartons and wooden boxes. A padlock is not effective as a security seal. It is not possible with most types of padlocks to ascertain if they have been illicitly opened. One acceptable approach toward meeting this requirement is serially numbered lead-wire seals, or, in the case of fiberboard packages, a tape of sufficient adhesive strength to damage the fiberboard upon removal. Designer to do and shipper responsibility to ensure.	There are acceptable approaches to compliance for all evaluated packagings. It is the shipper's responsibility to ensure compliance with this requirement.
(c) As far as practicable, the external surfaces are free from protrusions and are designed so that they can be easily decontaminated;	The intent is to minimize the number of protrusions by consideration during design and/or as a result of any modifications to the packaging. Designer to do and shipper responsibility to ensure.	All evaluated packagings meet this requirement.

Table C-10. Liquid and Gas Packagings--Compliance With Additional Design Requirements for Type A Packages (49 CFR 173.412). (9 pages total)

Regulatory requirement	Action required/by whom	Packaging category--liquid and gas packagings
(d) Containment and shielding would be maintained during transportation and storage in a temperature range of -40°C (-40°F) to 70°C (158°F) with account being taken of the possibility of brittle fracture;	This does not mean any of the tests must necessarily be performed at the temperature extremes. [Note: 49 CFR 173.461(b)] the regulations allow the assumption that the packaging is in equilibrium at 38 °C prior to testing. One must evaluate the packaging components with respect to behavior at the temperature extremes under conditions incidental to transportation (i.e., the jiggles, bounces, and bumps normally encountered in transportation). Gaskets and packaging components need to be evaluated to determine if they will become excessively brittle at -40 °C. This may be accomplished by actual testing, referring to property of material tables, obtaining data from manufacturers, etc. The shipper must consider such things as freezing of liquid contents and evaluate the effect to ensure continued containment integrity. The shipper must also consider the buildup of pressure at elevated temperatures and ensure continued containment. Designer, tester, and evaluator to do and shipper responsibility to ensure.	The materials (wood, caulking, metal strips, nails, gaskets, etc.) would not become excessively brittle at -40 °C. Temperatures of +70 °C would not result in any significant decrease in integrity either, as shown in property of materials tables. The shipper must ensure that, if the contents freeze, no rupture of the container will occur. In addition, the shipper must evaluate the potential for pressure buildup at elevated temperatures.

Table C-10. Liquid and Gas Packagings--Compliance With Additional Design Requirements for Type A Packages (49 CFR 173.412). (9 pages total)

Regulatory requirement	Action required/by whom	Packaging category--liquid and gas packagings
(e) It is able to withstand the effects of any acceleration, vibration, or vibration resonance that may arise during normal transportation, without any deterioration of the effectiveness of closing devices or of the integrity of the package as a whole and without loosening or unintentional release of nuts, bolts, or other securing devices even after repeated use;	Typically, one uses actual experience as a guide. If experience is not available, one normally uses a comparison to a similar packaging with an experience profile. If this isn't possible, vibration testing can be performed. The purpose of this section is to prevent the loosening of nuts, bolts, and containment devices under conditions incident to routine transportation. Designer, tester, and evaluator to do and shipper responsibility to ensure.	Experience has consistently demonstrated that these packagings or similar designs comply with this requirement. The shipper must ensure the application of quality assurance necessary to achieve this requirement.
(f) It includes a containment system securely closed by a positive fastening device that cannot be opened unintentionally or by pressure that may arise within the package during normal transport. Special form, as demonstrated in accordance with §173.469, may be considered as a component of the containment system;	Screw-type closures can qualify. Friction fit normally does not qualify. Security clips on cans could be acceptable. However, one cannot depend on friction alone. Designer, tester, and evaluator to do and shipper responsibility to ensure.	All packagings evaluated meet this requirement, as shown in the figures or in the packaging descriptions in Section 7.0.

Table C-10. Liquid and Gas Packagings--Compliance With Additional Design Requirements for Type A Packages (49 CFR 173.412). (9 pages total)

Regulatory requirement	Action required/by whom	Packaging category--liquid and gas packagings
(g) The materials of the packaging and any components or structures are physically and chemically compatible with each other and with the contents, taking into account the behavior of each under irradiation;	Designer to do and shipper responsibility to ensure.	Shipper responsibility to ensure.
(h) For each component of the containment system account is taken, where applicable, of radiolytic decomposition of materials and the generation of gas by chemical reaction and radiolysis;	Designer to do and shipper responsibility to ensure.	Shipper responsibility to ensure.

Table C-10. Liquid and Gas Packagings--Compliance With Additional Design Requirements for Type A Packages (49 CFR 173.412). (9 pages total)

Regulatory requirement	Action required/by whom	Packaging category--liquid and gas packagings
(i) The containment system will retain its radioactive contents under the reduction of ambient pressure to .25 kilograms per square centimeter (3.5 pounds per square inch);	The containment system is defined as the components intended to retain the radioactive contents during transportation. Thus, one starts by identifying the containment system. The radioactive contents must be completely retained in the containment system if the package is subjected to reduced pressure. A filtered packaging is possible as long as it can be demonstrated that the filtered package will retain the contents and that the filter is not susceptible to damage from any other tests. Caution should be exercised to ensure that the contents and internal packaging components (e.g., plastic boxes, etc.) will not effectively seal the filter during normal use. In cases where a pressure differential will not build up because of the free-flow through a filter, the requirement of demonstrating the retention of contents must still be met. For a package that breathes (does not hold 11.2 psi), such as a wooden box, one must demonstrate that, even with breathing, the contents will be retained. Otherwise, a separate inner containment capable of meeting the reduced pressure requirement is required. Designer, tester, and evaluator to do and shipper responsibility to ensure.	This analysis requires a more detailed discussion to provide adequate information. See Table C-11.

Table C-10. Liquid and Gas Packagings--Compliance With Additional Design Requirements for Type A Packages (49 CFR 173.412). (9 pages total)

Regulatory requirement	Action required/by whom	Packaging category--liquid and gas packagings
(j) Each valve through which the radioactive contents could otherwise escape is protected against damage and unauthorized operation and, except for a pressure relief device, has an enclosure to retain any leakage;	Designer to do and shipper responsibility to ensure.	Two packagings in this category have valves as described below: (1) LLNL Gas Cylinders: These cylinders are packaged in a 17H 30-gal steel drum, which provides the physical protection and protects against unauthorized operation. The 17H 30-gal drum also provides an enclosure to retain any leakage. More positively, each valve outlet is capped to retain any leakage. (2) ORNL Gas Cylinders: Each cylinder has a threaded protective cap and is sealed against unauthorized operation. The threaded caps also retain any leakage.
(k) Any radiation shield that encloses a component of the packaging specified as part of the containment system will prevent the unintentional escape of that component from the shield;	The shield shall be securely closed or, by way of packaging design, ensure against escape of a containment component. One example is a package with cellotex on top of a lead shield with a press-fit lid in which closure of the cellotex holds the lid in place. The shipper must make sure that under the tests prescribed in 49 CFR 173.465, there will be no rearrangement of the original containment/shield orientation. Designer, tester, and evaluator to do and shipper responsibility to ensure.	The packagings meeting this criterion are discussed in Table C-12.

Table C-10. Liquid and Gas Packagings--Compliance With Additional Design Requirements for Type A Packages (49 CFR 173.412). (9 pages total)

Regulatory requirement	Action required/by whom	Packaging category--liquid and gas packagings
(l) Failure of any tie-down attachment on the packaging under excessive load will not impair the ability of the package to meet other requirements of this subpart; (m) When subjected to the tests specified in §173.465 or evaluated against these tests by any of the methods authorized by §173.461(a), the packaging will prevent: (1) Loss or dispersal of the radioactive contents; and (2) Any significant increase in the radiation levels recorded or calculated at the external surfaces for the condition before the test; (n) Each packaging designed for liquids will: (1) Meet the conditions prescribed in paragraph (m) of this section when subjected to the tests specified in §173.466 or evaluated against these tests by any of the methods authorized by §173.461(a);	Designer, tester, and evaluator to do and shipper responsibility to ensure.	None of the packagings have tie-down attachments as described.

Table C-10. Liquid and Gas Packagings--Compliance With Additional Design Requirements for Type A Packages (49 CFR 173.412). (9 pages total)

Regulatory requirement	Action required/by whom	Packaging category--liquid and gas packagings
(2) For any package with a liquid volume not exceeding 50 cubic centimeters (1.7 fluid ounces), have sufficient suitable absorbent material to absorb twice the volume of the liquid contents. The absorbent material shall be compatible with the package contents and suitably positioned to contact the liquid in the event of leakage; and		
(3) For any package with a liquid volume exceeding 50 cubic centimeters (1.7 fluid ounces), either:		
(i) Have sufficient absorbent material as prescribed in paragraph (n)(2) of this section; or		
(ii) Have a containment system composed of primary inner and secondary outer containment components designed to assure retention of the liquid contents within the secondary outer components in the event that the primary inner components leak; and		

Table C-10. Liquid and Gas Packagings--Compliance With Additional Design Requirements for Type A Packages (49 CFR 173.412). (9 pages total)

Regulatory requirement	Action required/by whom	Packaging category--liquid and gas packagings
(o) Each package designed for compressed or uncompressed gases other than tritium or argon-37 not exceeding 200 curies will be able to prevent loss of contents when the package is subjected to the tests prescribed in §173.466 or evaluated against these tests by any of the methods authorized by §173.461(a).		

LLNL = Lawrence Livermore National Laboratory
ORNL = Oak Ridge National Laboratory.

Table C-11. Liquid and Gas Packagings--"Reduced Pressure" Tests Summary. (2 pages total)

Packaging/ Principal User	Model/Size	Containment System	Test/Analysis	Results
Lovelace	MS-24347-7	Glass bottle with screw cap	Two of the glass bottles with caps screwed on by hand were inverted in a beaker of water, and a vacuum was drawn (3.6 psi). After 5 min. there was no evidence of leakage (bubbles in the water). Also, the metal drum itself passed the reduced pressure test, so the tests on the bottles would not have been required.	Pass
LANL	Fiberboard box with inner lead container	Inner lead container with screw-top cap and O-ring seal	The inner lead container was inverted in a beaker of water, and a vacuum was drawn (3.6 psi). After 5 min., there was no evidence of leakage (bubbles in the water).	Pass
LLNL	3A-1800 3E-1800	Steel drum Gas cylinders	Each of the cylinders was pressurized before being sent to Mound. The pressure was measured in each one upon receipt and averaged approximately 92 psig per cylinder. These data and the fact that the surface pressure was ambient (1 atm) indicate compliance with the 11.2 psi requirements.	Pass
ORNL	Fiberboard box for liquids and solids	Glass bottles with plastic screw-top caps: 15 mL - 6 tested 25 mL - 6 tested 50 mL - 5 tested 100 mL - 4 tested	Four to six bottles of each size were inverted in a glass beaker of water in a bell jar. The pressure was reduced (vacuum drawn) to 3.6 psig and held for 5 min. There was no leakage (bubbles in the water) in any case.	Pass

Table C-11. Liquid and Gas Packagings--"Reduced Pressure" Tests Summary. (2 pages total)

Packaging/ Principal User	Model/Size	Containment System	Test/Analysis	Results
ORNL	Fiberboard box for gases	Glass ampules: 2 cc - 4 tested 5 cc - 4 tested 10 cc - 4 tested 20 cc - 4 tested	Four ampules of each size were immersed in water in glass beaker in a bell jar. The pressure was reduced (vacuum drawn) to 3.6 psig and held for 5 min. There was no leakage (bubbles in the water) in any case.	Pass
ORNL	Fiberboard box for liquids and solids	Glass bottles with plastic screw-top caps:	Four to six bottles of each size were inverted in a glass beaker of water in a bell jar. The pressure was reduced (vacuum drawn) to 3.6 psig and held for 5 min.	Pass
ORNL	Aluminum clad wood box (returnable)	Glass bottles with plastic screw-top caps:	Four to six bottles of each size were inverted in a glass beaker of water in a bell jar. The pressure was reduced (vacuum drawn) to 3.6 psig and held for 5 min. There was no leakage (bubbles in the water) in any case.	Pass
ORNL	Gas cylinders in returnable plastic boxes	Gas cylinders as listed in Figures 7-9, 7-10, and 7-11.	Each of these cylinders is designed for and tested at pressures well above 11.2 psi.	Pass
LANL	LANL-2	Combination outer steel drum with inner shielded container (pig)	Qualified based on previous testing of DOT-17C 55-gal steel drums.	Pass
HF	WHC Liquid Sample Packaging	Combination outer steel drum with inner polyethylene bottle	RTV silicone rubber sealant was applied to the drum gasket for the test. [Docket 90-14-7A]	Pass
Rocky Flats	RF Container Model LWS-1	Containment plus twice the absorbent required	10 vials containing 5 ml of RC-77 Fluorescent Penetrant each. [Docket 91-25-7A]	Pass

HF = Hanford, Richland, Washington
LANL = Los Alamos National Laboratory
LLNL = Lawrence Livermore National Laboratory
Mound = Mound Laboratory
ORNL = Oak Ridge National Laboratory
WHC = Westinghouse Hanford Company.

Table C-12. Packages Meeting 49 CFR 173.412(k) Criterion.

Packaging	Containment System	Analysis	Results
LANL fiberboard box with inner lead shielded containers	Inner lead container (2-in. outside diameter) with screw-cap and O-ring seal	The inner container is held in place by a lid with three bolts. Thus the outer shield is securely closed. There was no rearrangement during the tests specified in 49 CFR 173.465.	Pass
ORNL fiberboard boxes with shielded inner containers	Glass ampule or bottle with screw cap and a sealed metal can.	The packaging components are firmly held in place by the sealed metal can.	Pass
ORNL aluminum clad wood box	Glass bottle and the 2R containers.	The 2R container is held in place by the bolt closure lid of the stainless-steel-clad lead carrier.	Pass
ORNL gas cylinder	The cylinder itself	The lead shielding, when used, fills the void between the inner and outer wall and prevents escape.	Pass
LANL-2 drum with inner container	The inner container	The tubing, valves and shielding are securely held in place by the upper and lower shell, which is bolted in place.	Pass

LANL = Los Alamos National Laboratory
ORNL = Oak Ridge National Laboratory.

Table C-13. Miscellaneous Packagings--Compliance With Additional Design Requirements for Type A Packages (49 CFR 173.412). (9 pages total)

Regulatory requirements	Action required/by whom	Package category--miscellaneous packagings
In addition to meeting the general design requirements prescribed in §173.411, each Type A packaging shall be designed so that:		
(a) The smallest overall external dimension of the package is not less than 10 centimeters (4 inches);	Designer to do and shipper responsibility to ensure.	As shown in the figures and as given in the packaging descriptions in Section 8.0, all packagings meet this requirement.
(b) The outside of the packaging incorporates a feature, such as a seal, that is not readily breakable, and that, while intact, is evidence that the package has not been opened. In the case of packages shipped in exclusive use closed transport vehicles, the cargo compartment may be sealed instead of the individual packages;	For this requirement, the package designer may need to be skilled and creative. This is especially true for packages such as fiberboard cartons and wooden boxes. A padlock is not effective as a security seal. It is not possible with most types of padlocks to ascertain if they have been illicitly opened. One acceptable approach toward meeting this requirement is serially numbered lead-wire seals, or, in the case of fiberboard packages, a tape of sufficient adhesive strength to damage the fiberboard upon removal. Designer to do and shipper responsibility to ensure.	There are acceptable approaches to compliance for all evaluated packagings. It is the shipper's responsibility to ensure compliance with this requirement.
(c) As far as practicable, the external surfaces are free from protrusions and are designed so that they can be easily decontaminated;	The intent is to minimize the number of protrusions by consideration during design and/or as a result of any modifications to the packaging. Designer to do and shipper responsibility to ensure.	All evaluated packagings meet this requirement.

Table C-13. Miscellaneous Packagings--Compliance With Additional Design Requirements for Type A Packages (49 CFR 173.412). (9 pages total)

Regulatory requirements	Action required/by whom	Package category--miscellaneous packagings
(d) Containment and shielding would be maintained during transportation and storage in a temperature range of -40°C (-40°F) to 70°C (158°F) with account being taken of the possibility of brittle fracture;	This does not mean any of the tests must necessarily be performed at the temperature extremes. [Note: 49 CFR 173.461(b)] the regulations allow the assumption that the packaging is in equilibrium at 38 °C prior to testing. One must evaluate the packaging components with respect to behavior at the temperature extremes under conditions incidental to transportation (i.e., the jiggles, bounces, and bumps normally encountered in transportation). Gaskets and packaging components need to be evaluated to determine if they will become excessively brittle at -40 °C. This may be accomplished by actual testing, referring to property of material tables, obtaining data from manufacturers, etc. The shipper must also consider the buildup of pressure at elevated temperatures and evaluate the effect to ensure continued containment. Integrity. The shipper must also consider the buildup of pressure at elevated temperatures and ensure continued containment. Designer, tester, and evaluator to do and shipper responsibility to ensure.	The materials (wood, caulking, metal strips, nails, gaskets, etc.) would not become excessively brittle at -40 °C. Temperatures at +70 °C would not result in any significant decrease in containment integrity, as shown in property of material tables.

Table C-13. Miscellaneous Packagings--Compliance With Additional Design Requirements for Type A Packages (49 CFR 173.412). (9 pages total)

Regulatory requirements	Action required/by whom	Package category--miscellaneous packagings
(e) It is able to withstand the effects of any acceleration, vibration, or vibration resonance that may arise during normal transportation, without any deterioration of the effectiveness of closing devices or of the integrity of the package as a whole and without loosening or unintentional release of nuts, bolts, or other securing devices even after repeated use;	Typically, one uses actual experience as a guide. If experience is not available, one normally uses a comparison to a similar packaging with an experience profile. If this isn't possible, vibration testing can be performed. The purpose of this section is to prevent the loosening of nuts, bolts, and containment devices under conditions incident to routine transportation. Designer, tester, and evaluator to do and shipper responsibility to ensure.	Experience has consistently demonstrated that these packagings or similar designs comply with this requirement. The shipper must ensure the application of quality assurance necessary to achieve this requirement.
(f) It includes a containment system securely closed by a positive fastening device that cannot be opened unintentionally or by pressure that may arise within the package during normal transport. Special form, as demonstrated in accordance with §173.469, may be considered as a component of the containment system;	Screw-type closures can qualify. Friction fit normally does not qualify. Security clips on cans could be acceptable. However, one cannot depend on friction alone. Designer, tester, and evaluator to do and shipper responsibility to ensure.	All packagings evaluated meet this requirement, as shown in the figures or in the packaging descriptions in Section 8.0.

Table C-13. Miscellaneous Packagings--Compliance With Additional Design Requirements for Type A Packages (49 CFR 173.412). (9 pages total)

Regulatory requirements	Action required/by whom	Package category--miscellaneous packagings
(g) The materials of the packaging and any components or structures are physically and chemically compatible with each other and with the contents, taking into account the behavior of each under irradiation;	Designer to do and shipper responsibility to ensure.	Shipper responsibility to ensure.
(h) For each component of the containment system account is taken, where applicable, of radiolytic decomposition of materials and the generation of gas by chemical reaction and radiolysis;	Designer to do and shipper responsibility to ensure.	Shipper responsibility to ensure.

Table C-13. Miscellaneous Packagings--Compliance With Additional Design Requirements for Type A Packages (49 CFR 173.412). (9 pages total)

Regulatory requirements	Action required/by whom	Package category--miscellaneous packagings
(i) The containment system will retain its radioactive contents under the reduction of ambient pressure to .25 kilograms per square centimeter (3.5 pounds per square inch);	The containment system is defined as the components intended to retain the radioactive contents during transportation. Thus, one starts by identifying the containment system. The radioactive contents must be completely retained in the containment system if the package is subjected to reduced pressure. A filtered packaging is possible as long as it can be demonstrated that the filtered package will retain the contents and that the filter is not susceptible to damage from any other tests. Caution should be exercised to ensure that the contents and internal packaging components (e.g., plastic boxes, etc.) will not effectively seal the filter during normal use. In cases where a pressure differential will not build up because of the free-flow through a filter, the requirement of demonstrating the retention of contents must still be met. For a package that breathes (does not hold 11.2 psi), such as a wooden box, one must demonstrate that, even with breathing, the contents will be retained. Otherwise, a separate inner containment capable of meeting the reduced pressure requirement is required. Designer, tester, and evaluator to do and shipper responsibility to ensure.	See Table C-14.

Table C-13. Miscellaneous Packagings--Compliance With Additional Design Requirements for Type A Packages (49 CFR 173.412). (9 pages total)

Regulatory requirements	Action required/by whom	Package category--miscellaneous packagings
(j) Each valve through which the radioactive contents could otherwise escape is protected against damage and unauthorized operation and, except for a pressure relief device, has an enclosure to retain any leakage;	Designer to do and shipper responsibility to ensure.	The only packaging meeting this criterion is the SNL Tritium Waste Package. The 17H 30-gal drum provides the physical protection against unauthorized operation. The asphalt which surrounds the entire inner packaging and the 17H steel drum will retain any contents.
(k) Any radiation shield that encloses a component of the packaging specified as part of the containment system will prevent the unintentional escape of that component from the shield;	The shield shall be securely closed or, by way of packaging design, ensure against escape of a containment component. One example is a package with cellotex on top of a lead shield with a press-fit lid in which closure of the cellotex holds the lid in place. The shipper must make sure that under the tests prescribed in 49 CFR 173.465, there will be no rearrangement of the original containment/shield orientation. Designer, tester, and evaluator to do and shipper responsibility to ensure.	The only packaging meeting this criterion is the LLNL (Spec. 55) container. The packaging/shield is one piece, so it is obviously the containment system also. Since the containment system and the radiation shield are all the same, they cannot escape/separate.
(l) Failure of any tie-down attachment on the packaging under excessive load will not impair the ability of the package to meet other requirements of this subpart.	Designer, tester, and evaluator to do and shipper responsibility to ensure.	None of these packagings have tie-down attachments as described.

Table C-13. Miscellaneous Packagings--Compliance With Additional Design Requirements for Type A Packages (49 CFR 173.412). (9 pages total)

Regulatory requirements	Action required/by whom	Package category--miscellaneous packagings
(m) When subjected to the tests specified in §173.465 or evaluated against these tests by any of the methods authorized by §173.461(a), the packaging will prevent: (1) Loss or dispersal of the radioactive contents; and (2) Any significant increase in the radiation levels recorded or calculated at the external surfaces for the condition before the test; (n) Each packaging designed for liquids will: (1) Meet the conditions prescribed in paragraph (m) of this section when subjected to the tests specified in §173.466 or evaluated against these tests by any of the methods authorized by §173.461(a);		

Table C-13. Miscellaneous Packagings--Compliance With Additional Design Requirements for Type A Packages (49 CFR 173.412). (9 pages total)

Regulatory requirements	Action required/by whom	Package category--miscellaneous packagings
(2) For any package with a liquid volume not exceeding 50 cubic centimeters (1.7 fluid ounces), have sufficient suitable absorbent material to absorb twice the volume of the liquid contents. The absorbent material shall be compatible with the package contents and suitably positioned to contact the liquid in the event of leakage; and		
(3) For any package with a liquid volume exceeding 50 cubic centimeters (1.7 fluid ounces), either:		
(i) Have sufficient absorbent material as prescribed in paragraph (n)(2) of this section; or		
(ii) Have a containment system composed of primary inner and secondary outer containment components designed to assure retention of the liquid contents within the secondary outer components in the event that the primary inner components leak; and		

Table C-13. Miscellaneous Packagings--Compliance With Additional Design Requirements for Type A Packages (49 CFR 173.412). (9 pages total)

Regulatory requirements	Action required/by whom	Package category--miscellaneous packagings
(o) Each package designed for compressed or uncompressed gases other than tritium or argon-37 not exceeding 200 curies will be able to prevent loss of contents when the package is subjected to the tests prescribed in §173.466 or evaluated against these tests by any of the methods authorized by §173.461(a).		

LLNL = Lawrence Livermore National Laboratory
SNL = Sandia National Laboratory.

Table C-14. Liquid and Gas Packagings Containment System Analysis. (2 pages total)

Packaging/ Principal User	Model/Size	Containment System	Test/Analysis	Results
LLNL	Spec 55	There is only one packaging component, so this obviously is the containment.	The cavity of this packaging was filled with a water-fluorescein solution. The package was inverted in a bell jar and subjected to a reduced pressure of 3.6 psi for 5 min. Upon completion of the test there was no visible loss of contents and no loss found with a black light.	Pass
ORNL	ORNL-TRU	Because the contents are restricted to Special Form [49CFR 173.403(z)], Form [49CFR 173.403(z)], this provides the containment system.	This test has little meaning since there is no loose contamination available for dispersion or transfer. This test was not conducted, but obviously would meet the criterion, if tested, of "No Loss of Contents."	Pass
FEMA	FEMA Source Overpack	Because the contents are restricted to Special Form [49CFR 173.403(z)], Form [49CFR 173.403(z)], this provides the containment system.	This test has little meaning since there is no loose contamination available for dispersion or transfer. This test was not conducted, but obviously would meet the criterion, if tested, of "No Loss of Contents."	Pass
LLNL	SNL Tritium Waste Package	Modified DOT 5C-304 15-gal stainless steel drum.	The inner container was subjected to a hydrostatic pressure of 80 psi for 5 min., with no leakage.	Pass
LANL	LANL-1 Aluminum Packaging	Form No. 3 Material (self-contained)	The material form of the contents would prevent dispersal when the package was exposed to the reduced pressure conditions. Testing was not needed.	Pass

Table C-14. Liquid and Gas Packagings Containment System Analysis. (2 pages total)

Packaging/ Principal User	Model/Size	Containment System	Test/Analysis	Results
WIPP	RH-TRU Canister	Steel Cylinder, Welded Construction, NucFil[a] Filter	The NucFil filter would prevent pressure differentials. Testing was not needed. [Docket 89-03-7A]	Pass

[a]NucFil is a trademark of Nuclear Filter Technology, Inc.

DOT = U.S. Department of Transportation
FEMA = Federal Emergency Management Agency
LANL = Los Alamos National Laboratory
LLNL = Lawrence Livermore National Laboratory
ORNL = Oak Ridge National Laboratory
RH = Remotely handled
SNL = Sandia National Laboratory
TRU = Transuranic
WIPP = Waste Isolation Pilot Plant.

APPENDIX D

SUMMARY OF TYPE A PACKAGING TESTS (49 CFR 173.465)

This page intentionally left blank.

TABLE OF CONTENTS

D1.0 INTRODUCTION D-5
D1.1 49 CFR 173.465(a) D-5
D1.2 PACKAGING CATEGORY--STEEL DRUMS D-7
D1.3 PACKAGING CATEGORY--STEEL BOXES D-11
D1.4 PACKAGING CATEGORY--WOODEN BOXES D-13
D1.5 WATER INLEAKAGE--WOODEN BOXES D-16
D1.6 WATER INLEAKAGE--FIBERBOARD CONTAINERS D-18

TABLE OF REQUIREMENTS

D-1 Water Spray Test D-6
D-2 Free Drop Test D-22
D-3 Compression Test D-66
D-4 Penetration Test D-87

LIST OF TABLES

D-1 Water Spray Test Results for Steel Drums D-8
D-2 Water Spray Test Results for Steel Boxes D-12
D-3 Water Spray Test Results for ANL and LLNL Wooden Boxes D-14
D-4 Water Spray Test Results for Mound Wooden Boxes D-14
D-5 Water Spray Test Results for Wooden Boxes D-15
D-6 Water Spray Test Results for Fiberboard Containers D-17
D-7 Water Spray Test Results for UF_6 Cylinders D-19
D-8 Water Spray Test Results for Liquid and Gas Packagings D-20
D-9 Water Spray Test Results for Miscellaneous Packagings D-21

D-10 Four-ft Free Drop Test Results for Steel Drums D-24
D-11 Four-ft Free Drop Test Results for Steel Boxes D-37
D-12 Four-ft Free Drop Test Results for ANL and LLNL Wooden Boxes . . D-47
D-13 Four-ft Free Drop Test Results for Wooden Boxes D-48
D-14 Four-ft Free Drop Test Results for NLO Family of Banded Wooden Boxes D-53
D-15 Four-ft Free Drop Test Results for Fiberboard Boxes D-54
D-16 Four-ft Free Drop Test Results for DOT-21C Fiberboard Drums . . . D-55
D-17 Four-ft Free Drop Test Results for UF_6 Cylinders D-55
D-18 Thirty-ft Free Drop Test Results for Liquid and Gas Packagings . D-56
D-19 Four-ft Free Drop Test Results for Miscellaneous Packagings . . . D-61
D-20 Corner Free Drop Test Results for Wooden Boxes D-62
D-21 Corner Free Drop Test Results for Fiberboard Boxes D-64
D-22 Corner Free Drop Test Results for DOT-21C Fiberboard Drums . . . D-65

LIST OF TABLES (cont)

D-23 Compression Test Results for Steel Drums D-67
D-24 Compression Test Results for Steel Boxes D-69
D-25 Compression Test Results for Wooden Boxes D-73
D-26 Compression Test Results for Fiberboard Containers D-79
D-27 Compression Test Results for UF_6 Cylinders D-81
D-28 Compression Test Results for Liquid and Gas Packagings D-82
D-29 Compression Test Results for Miscellaneous Packagings D-86

D-30 Penetration Test Results for Steel Drums D-88
D-31 Penetration Test Results for Steel Boxes D-91
D-32 Penetration Test Results for Wooden Boxes D-96
D-33 Penetration Test Results for Fiberboard Containers D-102
D-34 Penetration Test Results for UF_6 Cylinders D-104
D-35 Penetration Test Results for Liquid and Gas Packagings D-105
D-36 Penetration Test Results for Miscellaneous Packagings D-108

D1.0 INTRODUCTION

The purpose of this section is to provide more details concerning the Type A packaging tests that were conducted or against which the packages were analyzed for compliance. The tests involved are as follow:

1. Water spray
2. Free drop
3. Compression
4. Penetration.

These tests, test methods, and determination of pass/fail criteria are discussed at length in Section 1.0.

D1.1 49 CFR 173.465(a)

(a) The proposed packaging with proposed contents must be capable of withstanding the tests prescribed in this section. One prototype may be used for all tests if the requirements of paragraph (b) of this section are complied with.

Requirement D-1. Water Spray Test.

49 CFR 173.465	Discussion
(b) Water Spray Test The water spray test must precede each test or test sequence prescribed in this section. The water spray test shall simulate exposure to rainfall of approximately 5 centimeters (2 inches) per hour for at least one hour. The time interval between the end of the water spray test and the beginning of the next test shall be such that the water has soaked in to the maximum extent without appreciable drying of the exterior of the specimen. In the absence of evidence to the contrary, this interval may be assumed to be two hours if the water spray is applied from four different directions simultaneously. However, no time interval may elapse if the water spray is applied from each of the four directions consecutively.	Major Points (1) Must precede each test (2) 2 in./hr (3) 1-hr duration Comments This is usually a conditioning of a package, rather than a test as such. One would not expect a loss of contents or significant increase in dose rate resulting from just the water spray test. However, consideration must be given to the possibility of water leakage into the package with subsequent transport of radioactive contents out as leakage. Designer, tester, and evaluator to do and shipper responsibility to ensure.

D1.2 PACKAGING CATEGORY--STEEL DRUMS

In evaluating steel drums against this requirement, one would consider the following:

- The effect the water spray would have on the ability of the steel drums to meet the other Specification 7A performance requirements
- The potential for inleakage of water with the subsequent potential for transport of the radioactive contents out of the packagings
- Because these same packagings are air-leak tight, prevention of the inleakage of water under such passive conditions as a water spray (rain) is expected.

As shown in Table D-1, nine different types of steel drums (a total of 26 different packagings) were subjected to this test. In all cases, as one would expect based on materials and methods of construction, closure mechanisms, gaskets, and the painted surfaces, the water spray had no effect that could possibly be interpreted as decreasing the ability of the steel drums to meet all Specification 7A performance criteria. This is not surprising since there are years of experience demonstrating that lengthy exposures to rain have not had a negative effect on containment integrity. In addition, in each of the 26 individual tests, a careful inspection demonstrated there was no inleakage of water as a result of these tests. Because these same packagings are air-leak tight, one would also expect them to prevent the inleakage of water under such passive conditions as a water spray (rain).

As a final point of mainly academic discussion, because the steel drums are air-leak tight to begin with, in the unlikely event of an inleakage of water, it would be equally unlikely that this expected minute quantity of water would leak out. Thus, based on the test data below and after comparison of the similarity in materials and methods of construction of the untested steel drums, one can readily conclude that these steel drums meet this requirement.

Table D-1. Water Spray Test Results for Steel Drums. (3 pages total)

STEEL DRUMS	
Specific packaging	Test/Analysis Results
DOT-6C, 5-gal	By comparison, this drum would meet this requirement.
DOT-6C, 10-gal	By comparison, this drum would meet this requirement.
DOT-17C, 5-gal	By comparison, this drum would meet this requirement.
DOT-17C, 30-gal	By comparison, this drum would meet this requirement.
DOT-17C, 35-gal	Three loaded and three empty drums were tested and passed.
DOT-17C 55-gal	Three drums were subjected to this test and passed (Configuration RF-1).
DOT-17C, 55-gal w/pressure relief device	Three lids with the Nucfil[a] filters were subjected to the water spray test and no water passed through the filter (Configurations HF-1 and RF-2).
DOT-17C, 55-gal w/HDPE liner	The same data shown for the 17C 55-gal drum would apply here (Configurations HF-2, LL-1, MD-1 and RF-3).
DOT-17C, 55-gal w/HDPE vented liner	One test unit package was subjected to the test conditions and passed (Configurations RF-4 through RF-8). [Dockets 89-13-7A and 90-18-7A]
DOT-17H, 30-gal	Three drums were subjected to this test and passed (Configuration OR-1).
DOT-17H, 30-gal w/filter	One test unit package was subjected to the test conditions and passed (Configurations AW-1 and FM-1). [Dockets 90-17-7A and 90-20-7A]
DOT-17H, 55-gal	Three drums were subjected to this test and passed.
MS-24327-1	By comparison, this drum would meet this requirement.
MS-24347-7	Two drums were subjected to this test and passed.
MS-27684-1	By comparison, this drum would meet this requirement.
MS-27684-2	By comparison, this drum would meet this requirement.
MS-27684-3	Three drums were subjected to this test and passed.
MS-27684-6	By comparison, this drum would meet this requirement.
MS-27684-8	Three drums were subjected to this test and passed.
MS-27683-7	Three drums were subjected to this test and passed.
MS-27683-13	By comparison, this drum would meet this requirement.
MS-24683-21	Three drums were subjected to this test and passed.

Table D-1. Water Spray Test Results for Steel Drums. (3 pages total)

PACKAGING SPECIALTIES, SQUARE STEEL DRUMS				
Specific packaging	No. tested	Contents	Results	Comments
Style 1A	1	Flour and fluorescein	Pass	The drum was opened upon completion of the test and the 2-hr waiting period. An inspection demonstrated that there had been no inleakage of water.
	2	Cement in a plastic liner inside the steel drum Flour and fluorescein were placed between the plastic liner and the wall of the steel drum.	Pass	One drum was dropped (angle) on both the top and the bottom (same drum). The drum passed the drop test with no effect apparent from the water spray test. A second drum was dropped flat on its side and again it passed the drop test with no effect from the water spray test.
Style 1B	1	Empty	Pass	The drum was opened upon completion of the test and the 2-hr waiting period. An inspection demonstrated that there had been no inleakage of water.
	2	Flour and fluorescein on top and bottom Sand and metal weights as required for weight Plastic cover between sand and flour, top and bottom	Pass	One drum was dropped (angle) on both the top and the bottom (same drum). The drum passed the drop test with no effect apparent from the water spray test. A second drum was dropped flat on its side and again it passed the drop test with no effect from the water spray test.

Table D-1. Water Spray Test Results for Steel Drums. (3 pages total)

PACKAGING SPECIALTIES, SQUARE STEEL DRUMS				
Specific packaging	No. tested	Contents	Results	Comments
Style 2	1	Empty	Pass	The drum was opened upon completion of the test and the 2-hr waiting period. An inspection demonstrated that there had been no inleakage of water.
	2	Flour and fluorescein on top and bottom Sand and metal weights as required for weight Plastic cover between sand and flour, top and bottom	Pass	One drum was dropped (angle) on both the top and the bottom (same drum). The drum passed the drop test with no effect apparent from the water spray test. A second drum was dropped flat on its side and again it passed the drop test with no effect from the water spray test.
Style 3	1	Empty	Pass	The drum was opened upon completion of the test and the 2-hr waiting period. An inspection demonstrated that there had been no inleakage of water.
	2	Flour and fluorescein on top and bottom Sand and metal weights as required for weight Plastic cover between sand and flour, top and bottom	Pass	One drum was dropped (angle) on both the top and bottom (same drum). The drum passed the drop test. A second drum was dropped flat on its side and again it passed the drop test with no effect from the water spray test.

[a]Nucfil is a trademark of Nuclear Filter Technology, Inc.

AW = Argonne National Laboratory - West
DOT = U.S. Department of Transportation
FM = Feed Materials Production Center
HDPE = High-density polyethylene
HF = Hanford, Richland, Washington
LL = Lawrence Livermore National Laboratory
MD = Mound Laboratory
MS = Military specification
OR = Oak Ridge National Laboratory
RF = Rocky Flats.

D1.3 PACKAGING CATEGORY--STEEL BOXES

In evaluating steel boxes against this requirement, one would consider the following:

- The effect the water spray would have on the ability of the steel boxes to meet the other Specification 7A performance requirements
- The potential for inleakage of water with the subsequent potential for transport of the radioactive contents out of the packagings
- Because these same packagings are air-leak tight, prevention of the inleakage of water under such passive conditions as a water spray (rain) is expected.

In all cases but one (the Argonne National Laboratory - West [ANL-W] 7A-960 steel box), as one would expect based on materials and methods of construction, closure mechanisms, gaskets, and painted surfaces, the water spray would have no effect that could be interpreted as decreasing the ability of the steel boxes to meet all Specification 7A performance criteria. This is not surprising since there are years of experience demonstrating that lengthy exposures to rain have no negative effect on containment integrity. Because these same packagings are air-leak tight, one would also expect them to prevent the inleakage of water under such passive conditions as a water spray (rain).

As a final point of mainly academic discussion, because the steel boxes are air-leak tight to begin with, in the unlikely event of an inleakage of water, it would be equally unlikely that this expected minute quantity of water would leak out. Thus, based on the information below and after comparison of the similarity in materials and methods of construction of the steel boxes, one can readily conclude that all the steel boxes meet this requirement (with the exception of the ANL-W 7A-960, as discussed in Table D-2).

Table D-2. Water Spray Test Results for Steel Boxes.

Specific packaging	Test Analysis Results
All - Capital Industries - Container Products Corp. - RoGar Chemical and Nuclear Services - Rocky Flat SAND Boxes - Argonne M-4 Steel Bin	All these boxes pass by analysis of materials, methods of construction, years of experience (exposure to a variety of weather conditions, including heavy rains), and air-leak or water-leak tests that have demonstrated the boxes to be leak tight. The tests referenced are the reduced pressure tests (Appendix C). The filters (for filtered boxes) have been tested and demonstrated to be water-leak resistant also.
TRUPACT-II - SWB	The water spray test was conducted on the SWB Steel Box prior to each of the Type A tests. In all cases the packagings passed the performance requirements. In addition, the box was tested empty to evaluate the potential inleakage of water. Test Unit No. 1 was tested and then opened and inspected for the presence of water. None was found.
ANL-W 7A-960	Because this package does not have a gasket, one has to assume there could be an inleakage of water, however slight. To protect against the possibility of exposure to water, the contents must be enclosed in plastic or equally water resistant materials, or the shipper must ensure that, if the contents were exposed to such water, there would be no transfer of radioactive materials to the liquid. See the Restriction/Specification sections in Appendix B. A preferred method (since the introduction of any water into a radioactive material shipping container is highly undesirable) is to use a gasket. Thus, all of the steel boxes except the ANL-W 7A-960 meet this requirement without any restrictions or specifications, and the ANL-W 7A-960 meets this requirement when used as prescribed in Appendix B.
ORNL Low-Level Waste Container	Package 7V-90-0002 was subjected to the water spray test conditions for 1 hr with no adverse affects. There were no cracks or crevices where water could collect, which would cause damage to the package. No inleakage was observed. No other packages were water sprayed, since water will have no adverse affects on the metal packaging. [Docket 89-04-7A]

ANL-W = Argonne National Laboratory - West
ORNL = Oak Ridge National Laboratory
SWB = Standard waste box.

D1.4 PACKAGING CATEGORY--WOODEN BOXES

In evaluating wooden boxes against this requirement, one would consider the following:

- The effect the water spray would have on the ability of the wooden boxes to meet the other Specification 7A performance requirements
- The potential for inleakage of water with the subsequent potential for transport of radioactive contents out of the packagings.

As shown in Table D-3, 14 different types of wooden boxes (a total of 24 different packagings) were subjected to this test. In all cases, as one would expect based on materials and methods of construction, closure mechanisms, and caulking/glue, the water spray had no effect that could be interpreted as decreasing the ability of the wooden boxes to meet the remaining Specification 7A performance criteria. This is not surprising since there are years of experience demonstrating that exposure to rain has not had a significant effect on containment integrity.

With respect to the potential for inleakage of water, some boxes constructed of normal exterior grade plywood did allow small amounts of water to penetrate. For test purposes, the insides of the test boxes were lined with paper, and the box was subjected to the water spray test for 1 hr and allowed to sit for 2 hr. At the end of this period, the paper was inspected for spots which would indicate the presence of water.

Table D-3. Water Spray Test Results for ANL and LLNL Wooden Boxes.

Specific packaging	Test Analysis Results
ANL-W Family of Boxes	By comparison, these boxes would meet this requirement.
LLNL FLUSH Panel Box	By comparison, these boxes would meet this requirement.

ANL-W = Argonne National Laboratory - West
LLNL = Lawrence Livermore National Laboratory.

Table D-4. Water Spray Test Results for Mound Wooden Boxes.

Configuration (Dimensions in Inches)	1st Test As Built	2nd Test RTV Used to Seal Seams on Inside	3rd Test Water Sealant Applied to Boxes[a]
Mound Configuration A 8 × 8 × 36	Pass - No indication of water	Fail[b]	Pass
Mound Configuration B 12 × 12 × 36	Pass - No indication of water	Pass	Pass
Mound Configuration C 12 × 12 × 36	Fail - Water absorbed on paper	Fail	Pass
Mound Configuration D 12 × 15 1/2 × 48	Fail - Water absorbed on paper	Fail	Pass
Mound Configuration E 21 × 21 × 22 1/2	Fail - Water absorbed on paper	Fail	Pass

[a]GEOCEL, brushable sealant, 1 coat. GEOCEL is a trademark of GEOCEL Limited, Inc.
[b]Water detected on paper.

Mound = Mound Laboratory.

Table D-5. Water Spray Test Results for Wooden Boxes.

Specific packaging	Test/analysis results
NLO Family of Boxes	By comparison, these boxes would meet this requirement.
Y-12 B Series B-1 through B-8	Each of these packagings was subjected to the water spray test for 1 hr, allowed to sit for 2 hr, and then subjected to the drop test. There was no evidence of a decrease in containment integrity as a result of this test. Considering the materials and methods of construction, all of the other wooden boxes would also meet this requirement.
Y-12 Picture Frame Boxes PF-1 through PF-8, and PF-10	By comparison, these boxes would meet this requirement.
Rocky Flats - RA Series of Boxes	By comparison, these boxes would meet this requirement.
ORNL Y-12 C-Series	A test unit of each model (C-1, C-2, and C-3) was subjected to the test conditions and passed. [Docket 89-01-7A]
	Two of the boxes were tested for 1 hr without painting (as received from Y-12). In both cases significant water was detected within the boxes after the test (determined by comparing weights before and after the test). The boxes were painted (two separate coats of exterior grade paint) and the tests were conducted again. This time there was no free liquid detected, although the bottom portions of the walls were noticeably damp. This amount of water is no reason to cause these boxes to fail this test. A third coat was placed on the boxes to see if that made any difference. The tests were redone, but the results were the same, a slight dampness of the bottom portion of the wall. Each box was also tested prior to the other Type A tests and in no case did this test have an effect on the ability of the package to meet the performance requirements. [Docket 90-19-7A]
WMCO Family of Boxes	Water spray tests were conducted on all boxes and varying degrees of water inleakage were noted in all boxes. There was no evidence that the water spray test decreased the containment integrity of the boxes when the drop test was performed. [Docket 89-09-7A]

NLO = National Lead Corporation
ORNL = Oak Ridge National Laboratory
WMCO = Westinghouse Materials Company of Ohio.

D1.5 WATER INLEAKAGE--WOODEN BOXES

As shown in Table D-4, small amounts of water did appear at times on the paper, indicating an inleakage of water. The majority of the inleakage occurred at the corners and at some points in the seams; however, a few spots occurred that indicated inleakage through the walls themselves. Three possible approaches are described that are acceptable with respect to addressing this inleakage and ensuring that there is no transport of radioactive materials out of the packaging.

- Securely enclose the radioactive contents within the box so that any inleaking water cannot come in contact with the radioactive material.

- Seal the box using GEOCEL or its equivalent. If the box is reused, it must be re-coated with at least one coat to cover the seal areas before each shipment.

- Ensure that there is no loose or removable contamination that could be entrained in any liquid and that the radioactive material is not soluble in the liquid. Thus, even if the liquids come in contact with the radioactive material, there could be no transport from the package.

NOTE: These three approaches are presented in the Restrictions/ Specifications sections for each of the evaluated packagings in Section 4.0. There are obviously other possible approaches; however, if an alternative approach is chosen, the basis for the choice must be supported and documented. The use of one of these alternatives or an equivalent allows these wooden boxes to meet this requirement.

Table D-6. Water Spray Test Results for Fiberboard Containers.

Specific packaging	Test/analysis results
Fiberboard Boxes 12B-65 Fiberboard Box LLNL Fiberboard Box Tri-Wall	Each of these packagings was subjected to this test prior to each of the three tests: free drop, compression, and penetration. As a result of the water spray, the addition of triple-wall support was required in many of the containers so that these packagings could withstand the compression test. This test also demonstrated the need for water-resistent tape as required in the Restrictions/Specifications sections. As one would expect, the boxes were softened considerably; however, this didn't seem to make much difference in the drop or penetration tests.
Fiberboard Drums	Since one has to assume an inleakage of water, each shipper must address this potential inleakage of water and ensure there is no transport of radioactive materials out of the packaging by the methods discussed in Section D1.6 or their equivalent.

LLNL = Lawrence Livermore National Laboratory.

D1.6 WATER INLEAKAGE--FIBERBOARD CONTAINERS

The following two possible approaches are acceptable with respect to addressing this potential inleakage and ensuring that there is no transport of radioactive materials out of the packaging.

- Securely enclose the radioactive contents within the box so that any inleaking water cannot come in contact with the radioactive material.

- Ensure that there is no loose or removable contamination which could be entrained in any liquid and that the radioactive material is not soluble in the liquid. Thus, even if the liquids come in contact with the radioactive material, there could be no transport from the package.

NOTE: These two approaches are presented in the Restrictions/ Specifications section for each of the evaluated packagings in Section 5.0. There are obviously other possible approaches; however, if an alternative approach is chosen, the basis for the choice must be supported and documented. The use of one of these alternatives or an equivalent method allows these fiberboard packagings to meet this requirement.

Table D-7. Water Spray Test Results for UF_6 Cylinders.

Specific packaging	Test/analysis results
Models	
1S 2S 5A 8A 12A 12B 30A 30B 48G 48H 48HX 48X 48Y	The factors to be considered in evaluating compliance as mentioned previously were as follows: (1) The effect the water spray would have on the ability of the UF_6 cylinders to meet the other Specification 7A performance requirements (2) The potential for inleakage of water with the subsequent potential for transport of the radioactive contents out of the packagings. The materials and method of construction make it obvious that a water spray (rain) would not have any significant effect on the structural integrity. This is well-substantiated by years of shipping thousands of these packagings through a wide variety of weather conditions. The potential for inleakage of water is not credible because these cylinders have welded seams and threaded valves that are gas-leak tight. Thus, these packagings meet this requirement.
Modified	
5A 5B	One test unit was subjected to the water spray test conditions for 1 hr with no adverse effects. There were no cracks or crevices where water could collect which would cause damage to the package. No other packages were water sprayed, because water will not have any adverse affects on the metal packaging. [Docket 89-08-7A]

ANL-W = Argonne National Laboratory - West
LLNL = Lawrence Livermore National Laboratory.

Table D-8. Water Spray Test Results for Liquid and Gas Packagings.

Specific packaging	Test/analysis results
Steel drum MS 24327-7	This test was not conducted on this packaging because the outer packaging component is a steel drum, and compliance is demonstrated as described in Table D-1.
LANL-12B-62 fiberboard box	The test was conducted prior to each of the three tests: 30-ft drop, compression, and penetration. The packaging successfully passes these three tests, which demonstrates the lack of significant effect with respect to structural aspects. Also, because the 2-in. inner container is air-leak tight, there is no potential for inleakage of water. Thus, this packaging meets this requirement.
LLNL steel drums with gas cylinders	The compliance of the outer packaging, DOT-17H 30-gal steel drum, has already been demonstrated, as described in Table D-1.
ORNL liquids and solids	The water spray test was performed prior to each test, and the packaging successfully met all requirements. Because there is a sealed metal inner container, there is no potential for further inleakage of water.
Disposable container with shielding - liquids, solids, or gases	The water spray test was performed prior to each test, and the packaging successfully met all requirements. Because there is a sealed metal inner container, there is no potential for further inleakage of water.
Wooden box returnable, shielded	The water spray test was performed prior to each test, and the packaging successfully met all requirements. The sealed inner metal containers preclude any potential for further inleakage.
Gas cylinder returnable - Hoke	The water spray test was performed prior to each test, and the packaging successfully met all requirements. The plastic box used as an overpack typically precludes any significant effect from the water spray. Considering that the inner cylinders are gas-leak tight, there is no potential for further inleakage of water.
Gas cylinder returnable J. L. Shephard	Considering the materials and method of construction and the fact that these cylinders are gas-leak tight, there is no potential for inleakage of water.

ANL-W = Argonne National Laboratory - West
LLNL = Lawrence Livermore National Laboratory
MS = Military specifications
ORNL = Oak Ridge National Laboratory.

Table D-9. Water Spray Test Results for Miscellaneous Packagings.

Specific packaging	Test/analysis results
LANL Spec 55	This test was not conducted because, considering the materials and methods of construction, it is obvious that this test would not adversely affect the ability of the package to meet the additional Specification 7A requirements. In addition, because the package was demonstrated to be water-leak tight even after the 4-ft drop, there is no potential for inleakage of water.
ORNL TRU shipping container	This test was not conducted because, considering the material and methods of construction, it is obvious that this test would not adversely affect the ability of the package to meet the additional Specification 7A requirements. In addition, because the inner (source) containment has to meet the Special Form [173.412(z)] criteria, the inleakage of water would not result in a potential transport of radioactive material from the package.
FEMA source overpack	This test was not conducted because, considering the materials and methods of construction, it is obvious that this test would not adversely affect the ability of the package to meet the additional Specification 7A requirements. In addition, because the inner (source) containment has to meet the Special Form [173.412(z)] criteria, the inleakage of water would not result in a potential transport of radioactive material from the package.
SNL tritium waste package	The compliance of the outer packaging, DOT-17H 30-gal steel drums, has already been demonstrated and discussed in Table D-1.
LANL Aluminum Packaging (LANL-1)	This test was not conducted because, considering the materials and methods of construction, it is obvious that this test would not adversely affect the ability of the package to meet the additional Specification 7A requirements. In addition, there would be no inleakage of water expected.
WIPP RH-TRU Canister	Test Unit Package LA02 was subjected to the water spray test conditions for 1 hr with no adverse affects. Result: Pass. [Docket 89-03-7A]

ANL-W = Argonne National Laboratory - West
FEMA = Federal Emergency Management Agency
LLNL = Lawrence Livermore National Laboratory.

Requirement D-2. Free Drop Test. (2 pages total)

49 CFR 173.465	Discussion
(c) Free Drop Test The free-drop test consists of a fall onto the target in a manner that causes maximum damage to the safety features being tested, and:	Major Points (1) 4-ft drop (2) Manner to cause maximum damage
(1) For packages weighing 5,000 kilograms (11,000 pounds) or less, the distance of the fall measured from the lowest point of the packaging to the upper surface of the target shall not be less than 1.2 meters (4 feet).	Comments (1) The orientation causing maximum damage may not be readily apparent. Typically, the following guidelines should be considered: (a) Drums - side drop with bolt closure ring (BCR) at impact point; - angle drop (approximately 45° on BCR and on bottom at intersection of chime and side seam); (b) Boxes - Top (lid) corner near features, such as lifting rings and filters, if any exist; (c) Approximate center of gravity over impact point. (2) A quick release device is required to ensure no change in package orientation.
(2) For packages weighing more than 5,000 kilograms (11,000 pounds), the distance of the fall shall not be less than the distance specified in Table 11, for the applicable packaging weight:	Straightforward

Requirement D-2. Free Drop Test. (2 pages total)

Table 11. Free-fall distance for packaging weighing more than 5,000 kilograms.				Comments
Packaging weight		Free-fall distance		Designer, tester, and evaluator to do and shipper responsibility to ensure.
kilograms	pounds	feet	meters	
> 5,000 to 10,000	>11,000 to 22,000	3	0.9	
>10,000 to 15,000	>22,000 to 33,000	2	0.6	
>15,000	>33,000	1	0.3	

(3) For Fissile Class II packagings, the free drop specified in subparagraph (1) or (2) of this paragraph shall be preceded by a free drop from a height of .3 meter (1 foot) on each corner. For cylindrical packagings, the .3 meter (1 foot) drop shall be onto each of the quarters of each rim.	For packagings to be used for Fissile Class II shipments, further testing and evaluation per subparagraph (3) are required.
(4) For fiberboard or wood rectangular packages not exceeding 50 kilograms (110 pounds) in weight, a separate specimen of the proposed packaging shall be subjected to a free drop onto each corner from a height of .3 meters (1 foot).	Designer, tester, evaluator to do and shipper responsibility to ensure.
(5) For fiberboard cylindrical packages weighing not more than 100 kilograms (220 pounds), a separate specimen of the proposed packaging shall be subjected to a free drop onto each of the quarters of each rim from a height of .3 meters (1 foot).	Designer, tester, evaluator to do and shipper responsibility to ensure.
(6) The target shall have a flat, horizontal surface of such mass and rigidity that any increase in its resistance to displacement or deformation upon impact by the specimen would not significantly increase the damage to the specimen.	As a rule of thumb, an essentially nonyielding surface is one at least five times the mass of the impacting object. Tester and evaluator to do and shipper responsibility to ensure.

Table D-10. Four-ft Free Drop Test Results for Steel Drums. (13 pages total)

Specific packaging	Weight[a] (lb)	Contents	RTV/ liner	45° Top[b] No. tested	45° Top[b] Results	45° Bottom[c] No. tested	45° Bottom[c] Results	Side[d,e] No. tested	Side[d,e] Results
DOT-6C (5-gal)	80	F/F/S/Pb[f]	RTV	2	2 pass	2	2 pass	1	1 pass
DOT-6C (10-gal)	160	F/F/S/Pb	RTV	2	2 pass	2	2 pass	1	1 pass
DOT-17C (5-gal)	100	F/F/S/Pb	RTV	1	1 pass	1	1 pass	1	1 pass
DOT-17C (30-gal)	400	(Form 1)		Tests were not done on the 17C (30-gal). This evaluation is based on testing of the 17H (30-gal) drum, which has structural integrity equal to the 17C drum.					
	500	(Form 2)	None						
DOT-17C (55-gal) (Config. RF-1)	900	(Form 1) F/F/S/Pb	Liner[g]	5	5 pass	5	5 pass	7	7 pass
	1,000	(Form 2) S/Pb[h]	None	5	5 pass	5	5 pass	6	6 pass
				Flat on top and bottom					
DOT-17C (55-gal) (Config. RF-1)	900	F/F/S/Pb	--	3	3 pass	3	3 pass	--	--
DOT-17C (55-gal) with Pressure Relief Device - Vent Clip (Config. HF-1)	900	F/F/S/Pb	Liner	4	4 pass	2	2 pass	2	2 pass
	1,000	S[i]	None	--	--	--	--	--	--
DOT-17C (55-gal) with Pressure Relief Device - Filter (Config. RF-2)	900	F/F/S/Pb	None	3	3 pass	--	--	3	3 pass
				Flat on top					
DOT-17C (55-gal) - Filter Installed (Config. RF-2)	900	F/F/S/Pb	None	3	3 pass	--	--	--	--
DOT-17C (55-gal) with 90-mil HDPE Liners (Configs. HF-2, LL-1, MD-1, RF-3)	900	F/F/S/Pb	HDPE liner	5	5 pass	5	5 pass	5	5 pass
	900	F/F/S/Pb	HDPE liner	5	5 pass	5	5 pass	5	5 pass
	900	F/F/S/Pb	HDPE liner	2	2 pass	2	2 pass	3	3 pass

Table D-10. Four-ft Free Drop Test Results for Steel Drums. (13 pages total)

Specific packaging	Weight (lb)	Contents	RTV/ liner	Orientation	No. tested	Results
DOT-17C (55-gal) HDPE Liner (Configs. RF-4, RF-5 thru RF-8) [Dockets 89-13-7A, 90-18-7A]	950	F/F/S/Pb	HDPE liner	CG over bolt	1	1 pass
				Flat on bottom	1	1 pass
	1,025	S/Pb	HDPE liner	CG over bolt	1	1 pass
				Flat on bottom	1	1 pass
	935	F/F/S/Pb	HDPE liner	Side flat on bolt	1	1 pass
				CG over bottom rim	1	1 pass
				Flat on top	1	1 pass
	1,050	S/Pb	HDPE liner	Side flat on bolt	1	1 pass
				CG over bottom rim	1	1 pass
				Flat on top		
DOT-17C (30-gal) Filtered drum with bag liner (Configs. AW-1, FM-1) [Dockets 90-17-7A, 90-20-7A]	900	F/F/S[j]	Bag liner	Flat on top	1	1 pass
				Flat on bottom	1	1 pass
				CG over top	1	1 pass
				CG over bottom	1	1 pass
	420	F/F/S	Bag liner	CG over top on bolt	1	1 pass
				CG over bottom	1	1 pass

Table D-10. Four-ft Free Drop Test Results for Steel Drums. (13 pages total)

Specific packaging	Weight[a] (lb)	Contents	RTV/ liner	45° Top[b] No. tested	45° Top[b] Results	45° Bottom[c] No. tested	45° Bottom[c] Results	Side[d,e] No. tested	Side[d,e] Results
DOT-17H (30-gal) (Config. OR-1)	400	F/F/S/Pb	RTV	2	2 pass	1	1 pass	2	2 pass
	400	F/F/S/Pb	4-mil	2	2 pass	2	2 pass	2	2 pass
	400	F/F/S/Pb	None	1	1 pass	1	1 pass	1	1 pass
	500	S/Pb	None	2	2 pass	2	2 pass	2	2 pass
DOT-17H (55-gal)	1,000	S/Pb	None	8	8 pass	8	8 pass	4	4 pass
				Flat on Top and Bottom					
DOT-17H (55-gal)	1,000	S/Pb	None	5	5 pass	5	5 pass	--	--
DOT-17H	900	F/F/S/Pb	4-mil	5	5 pass	5	5 pass	--	--
	900	F/F/S/Pb	None	6	6 pass	--	--	7	2 pass 5 fail
	900	F/F/S/Pb	4-mil	8	8 pass	2	2 pass	11	11 pass
	900	F/F/S/Pb	RTV	5	5 pass	5	5 pass	5	5 pass
MS-24347-1 (0.25-gal)	10	F/F/S/Pb	None	2	2 fail	--	--	3	2 pass 1 fail
	10	F/F/S/Pb	4-mil	2	2 pass	--	--	2	2 pass
MS-24347-7 (1.25-gal)	35	F/F/S/Pb	None	1	1 fail	--	--	1	1 fail
		F/F/S/Pb	4-mil	3	3 pass	--	--	3	3 pass
MS-27684-1 (3-gal)	60	F/F/S/Pb	4-mil	3	3 pass	--	--	1	1 pass
		S/Pb		--	--	--	--	1	1 pass
MS-27684-2 (4-gal)	110	F/F/S/Pb	None	4	4 pass	4	4 pass	4	4 pass

Table D-10. Four-ft Free Drop Test Results for Steel Drums. (13 pages total)

Specific packaging	Weight[a] (lb)	Contents	RTV/ liner	45° Top[b] No. tested	45° Top[b] Results	45° Bottom[c] No. tested	45° Bottom[c] Results	Side[d,e] No. tested	Side[d,e] Results
MS-27684-2 (4-gal)	110	F/F/S/Pb	None	4	4 pass	4	4 pass	--	--
MS-27684-3 (6-gal)	80	F/F/S/Pb	4-mil	3	3 pass	k k	--	1	1 pass
		S/Pb	None	--	--		--	1	1 pass
MS-27684-6 (8-gal)	80	F/F/S/Pb	None	3	3 pass	k	--	2	2 pass
MS-27684-8 (12-gal)	200	F/F/S/Pb	4-mil	2	2 pass	k k	--	1	1 pass
	200	S/Pb	None	1	1 pass		--	1	1 pass
MS-27683-13 (30-gal)	400	F/F/S/Pb	4-mil	2	2 pass	k k	--	1	1 pass
	400	S/Pb	None	1	1 pass		--	1	1 pass
MS-27683-13 (45-gal)	500	F/F/S/Pb	4-mil Liner	3	3 pass	k	--	2	2 pass
		F/F/S/Pb	None	--	--	k	--	1	1 pass
MS-27683-21 (85-gal)	800	F/F/S/Pb	RTV	2	2 pass	k	--	2	2 pass

Table D-10. Four-ft Free Drop Test Results for Steel Drums. (13 pages total)

Test unit	Authorized gross weight (lb)	Weight (lb)	Test contents	RTV/ liner	No. tested	Orientation	Results	Comments
DOT-17C (35-gal)	400	>400	S/F/F[l]	RTV	5	Top Edge[m]	5 pass	The only result was a minor dent at the point of impact. The largest dent was 1 1/8 in. during the drop test on the top edge.
DOT-17C (35-gal)	400	>400	S/F/F	RTV	5	Bottom Edge	5 pass	The only result was a minor dent at the point of impact. The largest dent was 1/2 in.
DOT-17C (35-gal)	400	>400	S/F/F	RTV	3	Flat on Side	3 pass	The only result was a minor dent at the point of impact. The largest dent was 3/4 in. at the top of one drum.
DOT-17C (35-gal)	400	>400	S/F/F	RTV	1	Flat on Top and Bottom	1 pass	There was no effect.

Table D-10. Four-ft Free Drop Test Results for Steel Drums. (13 pages total)

Specific packaging	No. tested	Results	Contents and weight	Drop orientation	Comments
			PACKAGING SPECIALTIES SQUARE STEEL DRUMS		
Style 1A[n,o]	1	1 pass	Concrete matrix with pieces of steel F/F[p] between liner and bottom of drum F/F on top of concrete (1,370 lb)	Flat on top of the drum	Monitoring for fluorescein in each case below demonstrated "no release of contents." Decreased height ~5/16 in.
	1	1 pass	Same as above (1,370 lb--same drum)	Flat on bottom	Overall height did not change
	1	1 pass	Same as above (1,368 lb)	Flat on side edge closest to bung	1/4-in. dent, top and bottom
	1	1 pass	Same as above (1,366 lb)	Flat on side closest to bung	Rolling hoops dented 1/4 in.
	1	1 pass	Same as above (1,380 lb)	Flat on side with weld seam	Rolling hoops dented 1/4 in.
			ANGLE DROPS		
	1	1 pass	Same as above (1,356 lb)	Top corner near bung	Dent of 3 in.
	1	1 pass	Same as above (1,360 lb--same drum)	Bottom corner at weld seam	Dent of 1 3/4 in.
	1	1 pass	Same as above (1,360 lb)	Top corner at bung	Dent of 4 in.
	1	1 pass	Same as above (1,360 lb)	Bottom corner closest to weld seam	Dent of 1 3/4 in.
	1	1 pass	Same as above (1,380 lb)	Flat on top long edge nearest weld seam	Dent of 2 1/4 in.

Table D-10. Four-ft Free Drop Test Results for Steel Drums. (13 pages total)

Specific packaging	No. tested	Results	Contents and weight	Drop orientation	Comments
			PACKAGING SPECIALTIES SQUARE STEEL DRUMS		
	1	1 pass	Same as above (1,380 lb)	Flat on long edge of bottom nearest weld seam	Dent of 1 in.
	1	1 pass	Same as above (1,372 lb)	Top corner nearest weld seam	Dent of 3 1/4 in.
	1	1 pass	Same as above (1,372 lb)	Bottom corner nearest weld seam	Dent of 1 7/8 in.
	1	1 pass	Same as above (1,364 lb)	Top corner at weld seam	Dent of 3 1/2 in.
	1	1 pass	Same as above (1,364 lb)	Flat on bottom edge containing weld seam	Dent of 1 in.
Style 1B	1	1 pass	Sand and steel weight F/F on top and bottom (1,394 lb)	Top corner nearest bung	Dent of 3 1/2 in.
	1	1 pass	Same as above (1,394 lb)	Bottom corner nearest weld seam	Dent of 4 in.
	1	1 pass	Same as above (1,356 lb)	Top corner nearest bung	Dent of 3 in.
	1	1 pass	Same as above (1,356 lb)	Bottom corner nearest weld seam	Dent of 3 1/2 in.
	1	1 pass	Same as above (1,392 lb)	Top corner nearest bung	Dent of 3 1/4 in.
	1	1 pass	Same as above (1,392 lb)	Bottom corner opposite the weld seam	Dent of 3 1/2 in.
	1	1 pass	Same as above (1,390 lb)	Top corner nearest weld seam	Dent of 3 7/8 in.

Table D-10. Four-ft Free Drop Test Results for Steel Drums. (13 pages total)

Specific packaging	No. tested	Results	Contents and weight	Drop orientation	Comments
			PACKAGING SPECIALTIES SQUARE STEEL DRUMS		
	1	1 pass	Same as above (1,390 lb)	Bottom corner opposite the weld seam	Dent of 3 3/8 in.
	1	1 pass	Same as above (1,352 lb)	Flat on long edge nearest bung	Dent of 1 3/4 in.
	1	1 pass	Same as above (1,352 lb)	Flat on long edge nearest weld seam (bottom)	Dent of 2 in.
	1	1 pass	Cement with F/F (1,384 lb)	Top corner nearest bung at top and bottom of drum[q]	Dent of 3 1/4 in.
	1	1 pass	Same as above (1,384 lb)	Bottom corner nearest weld seam	Dent of 2 1/4 in.
	1	1 pass	Same as above (1,368 lb)	Top corner nearest bung	Dent of 3 1/8 in.
	1	1 pass	Same as above (1,368 lb)	Bottom corner nearest weld seam	Dent of 1 7/8 in.
			SLIDE DROPS		
	1	1 pass	Same as above (1,354 lb)	Flat on side - long edge nearest bung	Dent of 1 in. - top Dent of 1 in. - bottom
	1	1 pass	Same as above (1,382 lb)	Flat on side nearest bung	Dent of 0 in. - top Dent of 1/8 in. - bottom
	1	1 pass	Same as above (1,354 lb)	Flat on side with weld (nearest bung)	Dent of 0 in. - top Dent of 1/8 in. - bottom
	1	1 pass	Same as above (1,366 lb)	Flat on top	No effect

Table D-10. Four-ft Free Drop Test Results for Steel Drums. (13 pages total)

Specific packaging	No. tested	Results	Contents and weight	Drop orientation	Comments
			PACKAGING SPECIALTIES SQUARE STEEL DRUMS		
	1	1 pass	Same as above (1,366 lb)	Flat on bottom	No effect
Style 2	1	1 pass	Sand and steel weights F/F top and bottom (1,414 lb)	Top corner at lugs	Dent of 3 3/4 in.
	1	1 pass	Same as above (1,414 lb)	Bottom corner nearest weld seam	Dent of 3 5/8 in.
	1	1 pass	Same as above (1,354 lb)	Top corner nearest lugs and weld seam	Dent of 3 1/4 in.
	1	1 pass	Same drum (1,354 lb)	Bottom corner nearest weld seam	Dent of 3 1/4 in.
	1	1 pass	Same as above (1,352 lb)	Top corner nearest lugs	Dent of 3 1/2 in.
	1	1 pass	Same drum (1,352 lb)	Flat on long edge of bottom nearest weld seam	Dent of 1 1/2 in.
	1	1 pass	Same as above (1,356 lb)	Top corner nearest bung	Dent of 3 1/2 in.
	1	1 pass	Same drum (1,356 lb)	Bottom corner opposite welded seam	Dent of 3 1/4 in.
	1	1 pass	Same as above (1,354 lb)	Flat on long edge nearest lugs and weld seam	Dent of 1 1/2 in.
	1	1 pass	Same drum	Bottom corner nearest weld seams	Dent of 3 1/8 in.

Table D-10. Four-ft Free Drop Test Results for Steel Drums. (13 pages total)

Specific packaging	No. tested	Results	Contents and weight	Drop orientation	Comments
			PACKAGING SPECIALTIES SQUARE STEEL DRUMS		
Style 2	1	1 pass	Same as above (1,382 lb)	Top corner nearest lugs and weld seam	Dent of 3 in.
	1	1 pass	Same drum	Bottom corner nearest weld	Dent of 3 3/4 in.
	1	1 pass	Same as above (1,374 lb)	Top corner nearest bung and weld seam	Dent of 3 in.
	1	1 pass	Same drum	Bottom corner nearest weld seam	Dent of 3 1/4 in.
Style 2	1	1 pass	Cement with F/F at top and bottom (1,390 lb)	Top corner nearest lugs and weld seam	Dent of 1 7/8 in.
	1	1 pass	Same drum	Bottom corner nearest weld seam	Dent of 2 in.
	1	1 pass	Same as above (1,386 lb)	Top corner nearest bung	Dent of 3 in.
	1	1 pass	Same drum	Bottom corner nearest weld seam	Dent of 2 in.
			SIDE DROPS		
	1	1 pass	Sand and steel weights F/F top and bottom (1,356 lb)	Flat on long edge nearest lugs	Dent of 3/4 in. - top Dent of 3/4 in. - bottom
	1	1 pass	Same as above (1,358 lb)	Flat on side nearest bung	Dent of 0 in. - top Dent of 3/16 in. - bottom
	1	1 pass	Same as above (1,358 lb)	Flat on side nearest lugs, bung and weld seam	Dent of 0 in. - top Dent of 1/8 in. - bottom

Table D-10. Four-ft Free Drop Test Results for Steel Drums. (13 pages total)

Specific packaging	No. tested	Results	Contents and weight	Drop orientation	Comments
			PACKAGING SPECIALTIES SQUARE STEEL DRUMS		
			END DROP		
Style 2	1	1 pass	Same as above (1,352 lb)	Flat on top and bottom ends	No significant effect
Style 3	1	1 pass	Sand and steel weights F/F at top and bottom (1,386 lb)	Top corner nearest bung	Dent of 3 3/4 in.
	1	1 pass	Same as above	Bottom corner nearest weld seam	Dent of 4 in.
	1	1 pass	Same as above (1,386 lb)	Top corner nearest bung	Dent of 3 5/8 in.
	1	1 pass	Same as above	Bottom corner nearest weld seam	Dent of 4 1/2 in.
	1	1 pass	Same as above (1,358 lb)	Top corner nearest weld seam	Dent of 3 in.
	1	1 pass	Same as above (1,386 lb)	Top corner nearest weld seam	Dent of 3 1/2 in.
	1	1 pass	Same drum	Bottom corner opposite weld seam	Dent of 4 in.
	1	1 pass	Same as above (1,378 lb)	Flat on top long edge nearest bung and weld seam	Dent of 1 1/4 in.
	1	1 pass	Same drum	Flat on bottom long edge nearest weld seam	Dent of 1 1/2 in.

Table D-10. Four-ft Free Drop Test Results for Steel Drums. (13 pages total)

Specific packaging	No. tested	Results	Contents and weight	Drop orientation	Comments
			PACKAGING SPECIALTIES SQUARE STEEL DRUMS		
Style 3	1	1 pass	Cement with F/F at top and bottom (1,408 lb)	Top corner nearest bung and weld seam	Dent of 2 in. Dent of 2 in.
	1	1 pass	Same drum	Bottom corner nearest weld seam	Dent of 2 in.
	1	1 pass	Same as above (1,418 lb)	Top corner nearest weld seam	Dent of 2 in.
	1	1 pass	Same drum	Bottom corner nearest weld seam	Dent of 2 1/8 in.
			SIDE DROPS WITH SAND AND STEEL		
	1	1 pass	Sand and steel weights F/F at top and bottom (1,362 lb)	Flat on long edge nearest to bung	Dent of 1 3/8 in. - top Dent of 1 3/8 in. - bottom
	1	1 pass	Same as above (1,388 lb)	Flat on side with weld seam	Dent of 1/2 in. - top Dent of 3/8 in. - bottom
	1	1 pass	Same as above (1,394 lb)	Flat on side with weld seam and nearest bung	Dent of 1/2 in. - top Dent of 3/8 in. - bottom

Table D-10. Four-ft Free Drop Test Results for Steel Drums. (13 pages total)

Specific packaging	No. tested	Results	Contents and weight	Drop orientation	Comments
			PACKAGING SPECIALTIES SQUARE STEEL DRUMS		
			END DROP WITH SAND AND STEEL		
	1	1 pass	Same as above (1,380 lb)	Flat on top and bottom	No effect

[a]This is the authorized gross weight. In each case, the actual test weights exceeded this value.
[b]Approximately a 45° angle with the package impacting on the bolt of the bolt closure ring.
[c]Approximately a 45° angle with the package impacting on the bottom chime.
[d]Oriented so that the bolt is at the point of impact.
[e]4-ft drops flat on the top and flat on the bottom were conducted on the DOT-17H and DOT-17C 55-gal steel drums, but were not deemed necessary for other drums because of the almost total lack of effect.
[f]Flour, fluorescein, sand, and lead, as required to achieve desired weight.
[g]4-mil polyethylene bag, not the 90-mil high-density polyethylene (HDPE) liner discussed later.
[h]Sand and lead, as required to achieve desired weight.
[i]Sand, as required to achieve desired weight.
[j]Flour, fluorescein, and sand, as required to achieve desired weight.
[k]No tests were conducted because these were one-piece structures with no seals or chimes to test.
[l]Sand, flour, fluorescein and weights as needed.
[m]The top and bottom edge drops were done at about a 45° angle. The bolt was oriented at the point of impact during the side drops.
[n]After all the tests on Style 1A packagings, a hole was drilled at the point of impact to ensure the presence of F/F between the liner and the drum.
[o]After all the tests on Style 1A packagings, the bung on the top was removed to verify the presence of F/F.
[p]Flour and fluorescein mixture.
[q]Plastic sheet (4 mil) was used to separate F/F from the concrete.

DOT = U.S. Department of Transportation
MS = Military specification
-- = Not applicable.

Table D-11. Four-ft Free Drop Test Results for Steel Boxes.[a] (10 pages total)

Specific packaging	Weight (lb)	Contents	Results	Comments
Manufacturer				
Capital Industries S-0510-0823	7,000	F/F/S[b]	Pass	Angle drop on top corner. No loss of contents or significant change in package geometry. Authorized for Form No. 1, No. 2, and No. 3 materials.
V-0510-0823	7,000	F/F/S	Pass	Angle drop on top corner. No loss of contents or significant change in package geometry. Authorized for Form No. 1, No. 2, and No. 3 materials.
S-0840-1440	22,700	F/F/S	Pass	Angle drop on top corner. No loss of contents or significant change in package geometry. Authorized for Form No. 1, No. 2, and No. 3 materials.
S-0730-1006	10,400	F/F/S	Pass	Angle drop on top corner. No loss of contents or significant change in package geometry. Authorized for Form No. 1, Nc. 2, and No. 3 materials.
S-0730-00846	8,700	Not tested	Pass	Evaluated by analysis and comparison (lid, lid reinforcing angle, bolt size, bolt spacing, container flange, and materials) to packaging S-0730-1006, which was tested and evaluated. All materials and methods of construction were equal to or better than the evaluated packaging, and the authorized gross weight was 1,700 lb less than that for the evaluated packaging. Authorized for Form No. 1, No. 2, and No. 3 materials.

Table D-11. Four-ft Free Drop Test Results for Steel Boxes.[a] (10 pages total)

Specific packaging	Weight (lb)	Contents	Results	Comments
Capital Industries				
S-0480-0906	6,120	Not tested	Pass	Evaluated by analysis and comparison (lid, lid reinforcing angle, bolt size, bolt spacing, container flange, and materials) to packaging S-0510-0823, which was tested and evaluated. All materials and methods of construction were equal to or better than the evaluated packaging, and the authorized gross weight was 820 lb less than that for the evaluated packaging. Authorized for Form No. 1, No. 2, and No. 3 materials.
S-0450-0846	5,240	Not tested	Pass	Evaluated by analysis and comparison (lid, lid reinforcing angle, bolt size, bolt spacing, container flange, and materials) to packaging S-0510-0823, which was tested and evaluated. All materials and methods of construction were equal to or better than the evaluated packaging, and the authorized gross weight was 1,760 lb less than that for the evaluated packaging. Authorized for Form No. 1, No. 2, and No. 3 materials.
S-0240-0906	3,672	Not tested	Pass	Evaluated by analysis and comparison (lid, lid reinforcing angle, bolt size, bolt spacing, container flange, and materials) to packaging S-0510-0823, which was tested and evaluated. All materials and methods of construction were equal to or better than the evaluated packaging, and the authorized gross weight was 3,328 lb less than that for the evaluated packaging. Authorized for Form No. 1, No. 2, and No. 3 materials.

Table D-11. Four-ft Free Drop Test Results for Steel Boxes.[a] (10 pages total)

Specific packaging	Weight (lb)	Contents	Results	Comments
Capital Industries S-0480-1376	9,295	Not tested	Pass	Evaluated by analysis and comparison (lid, lid reinforcing angle, bolt size, bolt spacing, container flange, and materials) to packaging S-0730-1006, which was tested and evaluated. All materials and methods of construction were equal to or better than the evaluated packaging, and the authorized gross weight was 1,105 lb less than that for the evaluated packaging. Authorized for Form No. 1, No. 2, and No. 3 materials.
Container Products Corp.				
B-12-44-4-S/L FD Drawing No. 01-3100-1-00 Rev. B	4,625	F/F/S	Pass	Angle drop on top corner. Authorized for Form No. 1, No. 2, and No. 3 materials.
B-25-4-S/L FD Drawing No. 01-2800-1-00 Rev. C	4,820	Not tested	Pass	Evaluated by analysis and comparison to tests of B-96-5 S/L FD, which has identical lid seal characteristics. In addition, this package was tested using just sand with no loss of contents. Authorized for Form No. 1, No. 2, and No. 3 materials.
B-52-4-S/L FD Drawing No. 04-1000-1-00 Rev. F	4,775	Not tested	Pass	Evaluated by analysis and comparison to tests of B-96-5 S/L FD, which has identical lid seal characteristics. In addition, this package was tested using just sand with no loss of contents. Authorized for Form No. 1, No. 2, and No. 3 materials.

Table D-11. Four-ft Free Drop Test Results for Steel Boxes.[a] (10 pages total)

Specific packaging	Weight (lb)	Contents	Results	Comments
Container Products Corp.				
B-82-6-S/L FD Drawing No. 01-2300-1-00 Rev. D	6,775	Not tested	Pass	Evaluated by analysis and comparison to tests of B-96-5 S/L FD, which has identical lid seal characteristics. In addition, this package was tested using just sand with no loss of contents. Authorized for Form No. 1, No. 2, and No. 3 materials.
B-87-6-S/L FD Drawing No. 04-1300-1-00 Rev. B	6,970	Not tested	Pass	Evaluated by analysis and comparison to tests of B-96-5 S/L FD, which has identical lid seal characteristics. Authorized for Form No. 1, No. 2, and No. 3 materials.
B-96-6-S/L FD Drawing No. 04-1200-1-00 Rev. 0	7,000	Not tested	Pass	Evaluated by analysis and comparison to tests of B-96-8 S/L FD, which has identical lid seal design. By analysis, the six side drive clips are comparable to the eight side drive clips for the B-96-8 S/L FD considering the difference of 2,000 lb in authorized gross weight. Authorized for Form No. 1, No. 2, and No. 3 materials.
B-96-8-S/L FD Drawing No. 04-1200-2-00 Rev. 0	9,100	F/F/S	Pass	Angle drop on top corner. Authorized for Form No. 1, No. 2, and No. 3 materials.
B-96-5-S/L FD Drawing No. 01-2101-1-00 Rev. 0	6,050	F/F/S	Pass	Angle drop on top corner. Authorized for Form No. 1, No. 2, and No. 3 materials.

Table D-11. Four-ft Free Drop Test Results for Steel Boxes.[a] (10 pages total)

Specific packaging	Weight (lb)	Contents	Results	Comments
Container Products Corp.				
B-96-5-S/L RA Drawing No. 01-1901-1-00 Rev. 0	6,800	Not tested	Pass	Identical to B-96-5-S/L FD (except for strength members added to meet reduced pressure test), which was tested and passed. Authorized for Form No. 1, No. 2, and No. 3 materials.
B-96-5-RA B Drawing No. 01-2201-1-01 Rev. 0	6,500	Not tested	Pass	Identical to B-96-5-S/L FD (except there is no filter), which was tested and passed. Authorized for Form No. 1, No. 2, and No. 3 materials.
467-C-S/L FD Drawing No. 01-3700-1-00 Rev. C	4,000	Not tested	Pass	Evaluated by analysis and comparison to tests of B-96-5 S/L FD, which has identical lid seal characteristics. In addition, tests have been completed using just sand with no loss of contents. Authorized for Form No. 1, No. 2, and No. 3 materials.
B-96-5 FD B Drawing No. 01-2301-1-01 Rev. 0	6,500	F/F/S	Pass	Angle drop on top corner. Authorized for Form No. 1, No. 2, and No. 3 materials.

Table D-11. Four-ft Free Drop Test Results for Steel Boxes.[a] (10 pages total)

Specific packaging	Weight (lb)	Contents	Results	Comments
RoGar Chemical and Nuclear Services				
Model R-1	7,750	Not tested	Pass	Evaluated by analysis and comparison (lids, lid reinforcing angle, bolt size, bolt spacing, container flange, materials of construction, etc.) to Model R-3. All materials and methods of construction were equal to or better than the test packaging, the dimensions were substantially less, and the authorized gross weight was 170 lb less than that for the test packaging.
Model R-2	7,820	Not tested	Pass	Evaluated by analysis and comparison (lids, lid reinforcing angle, bolt size, bolt spacing, container flange, materials of construction, etc.) to Model R-3. All materials and methods of construction were equal to or better than the test packaging, the dimensions were substantially less, and the authorized gross weight was 100 lb less than that for the test packaging.

Table D-11. Four-ft Free Drop Test Results for Steel Boxes.[a] (10 pages total)

Specific packaging	Weight (lb)	Contents	Results	Comments
RoGar Chemical and Nuclear Services				
Model R-3	7,920	F/F/S	Pass	This package was dropped 4 ft on a top (lid) corner. There was no loss of contents or significant change in package geometry. Authorized for Form No. 1, No. 2, and No. 3 materials.
Model R-4	7,920	Not tested	Pass	Evaluated by analysis and comparison (lids, lid reinforcing angle, bolt size, bolt spacing, container flange, materials of construction, etc.) to Model R-3. All materials and methods of construction were equal to or better than the test packaging, the dimensions were substantially less, and the gross weight remained the same.
Rocky Flats SAND Box				
Style 1	7,000	Gravel and water	Pass	A number of tests were conducted at different orientations (45° on top, 45° on bottom, etc.) for each packaging. After each test, the packagings were successfully air-leak tested to 0.5 psi. The use of water and gravel was more conservative than the use of flour and fluorescein to simulate the contents. Authorized for Form No. 1, No. 2, and No. 3 materials.

Table D-11. Four-ft Free Drop Test Results for Steel Boxes.[a] (10 pages total)

Specific packaging	Weight (lb)	Contents	Results	Comments
Rocky Flats SAND Box				
Style 2	6,000	Gravel and water	Pass	A number of tests were conducted at different orientations (45° on top, 45° on bottom, etc.) for each packaging. After each test, the packagings were successfully air-leak tested to 0.5 psi. The use of water and gravel was more conservative than the use of flour and fluorescein to simulate the contents. Authorized for Form No. 1, No. 2, and No. 3 materials.
Style 3	6,000	Gravel and water	Pass	A number of tests were conducted at different orientations (45° on top, 45° on bottom, etc.) for each packaging. After each test, the packagings were successfully air-leak tested to 0.5 psi. The use of water and gravel was more conservative than the use of flour and fluorescein to simulate the contents. Authorized for Form No. 1, No. 2 and No. 3 materials.
Style 4	6,000	Gravel and water	Pass	A number of tests were conducted at different orientations (45° on top, 45° on bottom, etc.) for each packaging. After each test, the packagings were successfully air-leak tested to 0.5 psi. The use of water and gravel was more conservative than the use of flour and fluorescein to simulate the contents. Authorized for Form No. 1, No. 2 and No. 3 materials.

Table D-11. Four-ft Free Drop Test Results for Steel Boxes.[a] (10 pages total)

Specific packaging	Weight (lb)	Contents	Results	Comments
Argonne M-4 Bin	3,000[c]	Four 55-gal drums filled with sand, two 5-gal pails, and approx. 300 lb of loose sand.	Pass	Dropped on one of the bottom corners. Previous analysis had shown this orientation to be most vulnerable to damage. After the drop the bin was filled with 24 in. of water, 18 in. above the damage area. The bin was leak-tight. Authorized for Forms No. 1, No. 2, and No. 3 materials.
ANL-W 7A-960	960	Solid pieces of lead	Pass	Dropped on top corner of lid. There was no loss of contents and no significant pathways created by which contents could escape. Authorized only for Form No. 3 materials.
ORNL Low-Level Waste Container [Docket 89-04-7A] Vented	8,150	Misc. Debris F/F/S	Pass	Test unit package no. 7V-90-0003 was subjected to four different 4-ft drop tests in different orientations and passed.
Nonvented	10,230	Misc. Debris F/F/S	Pass	Test unit package no. 7NV-90-0003 was subjected to three different 4-ft drop tests in different orientations and passed.

Table D-11. Four-ft Free Drop Test Results for Steel Boxes.[a] (10 pages total)

FOUR-FT FREE DROP TEST RESULTS FOR TRUPACT-II STANDARD WASTE BOX (SWB)[d]								
Test unit	Authorized gross weight (lb)	Test weight (lb)	Contents	Form	No. tested	Orientation	Results	Comments
TU-1A	4,000	4,040	F/F/S	1 & 2	1	Top corner	1 pass	The only result was a minor dent at the point of impact. The largest dent was 1/2 in. during the drop test on the bottom corner.
TU-1B	4,000	4,100	F/F/S	1 & 2	2[e]	Bottom corner	2 pass	Dent of 4 in.
TU-2	4,000	4,092	Debris[f]	3 & 4	1	Flat on end	1 pass	The only results were minor dents on the end surface.
TU-3B	4,000	4,100	Four loaded steel drums[g]	5	1	Top corner	1 pass	The only results were minor dents at the point of impact due to the drums.
TU-3B(1B)[h]	4,000	4,100	Four loaded steel drums[g]	5	1	Top corner	1 pass	Same as above.

[a]General Comments: The primary drop orientation was inverting the box (lid down) with a corner as the point of impact. When filters were used, they were typically placed in an end, and the corner chosen for the impact point was the corner closest to the filter location.

[b]Flour, fluorescein, and sand.

[c]The authorized gross weight is 3,000 lb; however, the actual gross weight for testing was 3,215 lb.

[d]General Comments: These drops were conducted on top corners, bottom corners, and flat on the end of the box. In each case there was no loss of contents and the box is authorized for the contents as specified in this table. The water spray test was conducted prior to the free drop test for TU-1, and the packaging was allowed to set for 2 hr prior to the drop test.

[e]Same packaging was dropped twice.

[f]Debris represents motors, pipes, steel plates, concrete blocks, etc. which would represent Form No. 3. To provide Form No. 1 contents, F/F was added. The pass/fail criteria then becomes no release of F/F.

[g]F/F was placed on top of the drums.

[h]Test Unit 1B was emptied and refilled with Form No. 5 contents.

ANL-W = Argonne National Laboratory - West
ORNL = Oak Ridge National Laboratory.

Table D-12. Four-ft Free Drop Test Results for ANL and LLNL Wooden Boxes.

Specific packaging	Weight (lb)	Contents	Results	Comments
ANL-W				
7A-217 7A-375 7A-880 7A-995 7A-1315	217 375 880 995 1,315	Solid materials simulating Form No. 3 materials were used for all tests.	Pass	Packagings were dropped on a top corner, which included the lid. In all cases the packaging met the requirements for Form No. 3 materials. Authorized only for Form No. 3 materials.
7A-670	670	55-gal drum filled with soil placed inside the wooden box.	Pass	Packaging was dropped on a top corner, which included the lid. In all cases, the packaging met the requirement for Form No. 3 materials. Authorized only for Form No. 3 materials.
LLNL				
Flush Panel	2,500	Drysorb 75% by weight; Microsel-E 25% by weight	Pass	Packaging was dropped on a top corner, which included the lid. There was no release of contents and the packaging was authorized for Form No. 2 and No. 3 materials.

ANL-W = Argonne National Laboratory - West
LLNL = Lawrence Livermore National Laboratory
ORNL = Oak Ridge National Laboratory.

Table D-13. Four-ft Free Drop Test Results for Wooden Boxes.[a] (5 pages total)

Specific packaging	Weight (lb)	Contents	No. tested	Results	Comments
Mound Wooden Boxes - Configuration A					
MA-1	40	S/Pb[b]	2	2 pass	Authorized only for Form No. 2 and No. 3 materials.
MA-2	100	S/Pb	2	2 pass	
MA-3	100	S/Pb	1	1 pass	
		F/F/S/Pb[c]	1	1 pass	
MA-4	100	S/Pb	1	1 pass	
		F/F/S/Pb	1	1 pass	
Mound Wooden Boxes - Configuration B					
MB-1	150	F/F/S/Pb	2	2 pass	Authorized only for Form No. 2 and No. 3 materials.
MB-2	150	F/F/S/Pb	2	2 pass	
MB-3	200	F/F/S/Pb	2	2 pass	
MB-4	150	F/F/S/Pb	2	2 pass	
MB-5	150	F/F/S/Pb	2	2 pass	
MB-6	200	F/F/S/Pb	1	1 pass	

Table D-13. Four-ft Free Drop Test Results for Wooden Boxes.[a] (5 pages total)

Specific packaging	Weight (lb)	Contents	No. tested	Results	Comments
Mound Wooden Boxes - Configuration C					
MC-1	150	F/F/S/Pb	1	1 pass	Authorized only for Form No. 2 and No. 3 materials
		S	1	1 pass	
MC-2	300	F/F/S/Pb	1	1 pass	
		S/Pb	1	1 pass	
MC-3	250	F/F/S/Pb	1	1 pass	
		S/Pb	1	1 pass	
MC-4	100	F/F/S/Pb	1	1 pass	
		S	1	1 pass	
MC-5	150	F/F/S	1	1 pass	
Mound Wooden Boxes - Configuration D					
MD-1	200	F/F/S/Pb	2	2 pass	Authorized only for Form No. 2 and No. 3 materials
MD-2	300	F/F/S/Pb	1	1 pass	
MD-3	250	F/F/S	2	2 pass	
MD-4	250	F/F/S	2	2 pass	
MD-5	200	F/F/S/Pb	2	2 pass	
MD-6	200	F/F/S/Pb	2	2 pass	

Table D-13. Four-ft Free Drop Test Results for Wooden Boxes.[a] (5 pages total)

Specific packaging	Weight (lb)	Contents	No. tested	Results	Comments
Mound Wooden Boxes - Configuration E					
ME-1	150	S	1	1 pass	Authorized only for Form No. 2 and No. 3 materials.
ME-2	150	S	2	2 pass	
ME-3	150	F/F/S	1	1 pass	
Y-12 B-Series Wooden Boxes					
B-1	400	S/Pb	2	2 pass	Authorized only for Form No. 3 materials.
B-2	400	S/Pb	2	2 pass	
B-3	400	S/Pb	2	2 pass	
B-4	400	S/Pb	2	2 pass	
B-5	400	S/Pb	2	2 pass	
B-6	400	S/Pb	2	2 pass	
B-7	400	S/Pb	2	2 pass	
B-8	400	S/Pb	2	2 pass	

Table D-13. Four-ft Free Drop Test Results for Wooden Boxes.[a] (5 pages total)

Specific packaging	Weight (lb)	Contents	No. tested	Results	Comments
Y-12 Picture Frame Boxes Picture Frame					
PF-1	500	S/Pb	1	1 pass	Authorized only for Form No. 3 materials.
PF-2	750	Pb	2	2 pass	
PF-3	1,000	Pb	2	2 pass	
PF-4	500	Pb	2	2 pass	
PF-5	750	S/Pb	2	2 pass	
PF-6	1,000	Pb	2	2 pass	
PF-7	750	Pb	2	2 pass	
PF-8	1,000	Pb	2	2 pass	
PF-10	2,500	S/Pb	1	1 pass	
Rocky Flats RA Series					
Configuration 1	900	Solid material	1	1 pass	Authorized only for Form No. 3 materials.
Configuration 2	1,250	Solid material	1	1 pass	
ORNL Y-12 Series					Docket 89-01-7A
C-1	1,190	Concrete block	1	1 pass	Authorized only for Form No. 3 materials.
	1,181	Concrete cyl.	1	1 pass	Authorized only for Form No. 3 materials.
C-2	1,804	Concrete block	1	1 pass	Authorized only for Form No. 3 materials.
	1,735	Concrete cyl. and lead	1	1 pass	Authorized only for Form No. 3 materials.
C-3	2,326	Concrete block	1	1 pass	Authorized only for Form No. 3 materials.
	2,260	Concrete cyl. and lead	1	1 pass	Authorized only for Form No. 3 materials.

Table D-13. Four-ft Free Drop Test Results for Wooden Boxes.[a] (5 pages total)

Specific packaging	Weight (lb)	Contents	No. tested	Orientation	Results	Comments
C-280 (1) (3/8-in. bands)	>280	S/Pb	1	Top corner	Pass	Authorized only for Form No. 3 materials.
C-280 (2) (3/8-in. bands)	>280	S/Pb	1	Bottom corner	Pass	Authorized only for Form No. 3 materials.
C-400 (1) (3/4-in. bands)	>400	S/Pb	1	Top corner	Pass	Authorized only for Form No. 3 materials.
C-400 (2) (3/4-in. bands)	>400	S/Pb	1	Bottom corner	Pass	Authorized only for Form No. 3 materials.
C-600 (2) (3/4-in. bands)	606	S/Pb	1	Bottom corner	Pass	Authorized only for Form No. 3 materials.
C-600 (2) (3/4-in. bands)	606	S/Pb	1	Top corner	Pass	Authorized only for Form No. 3 materials.
C-600 (1) (3/4-in. bands)	608	S/Pb	1	Top corner	Pass	Authorized only for Form No. 3 materials.
C-600 (1) (3/4-in. bands)	608	S/Pb	1	Bottom corner	Pass	Authorized only for Form No. 3 materials.
C-1000 (1) (3/4-in. bands)	1,004	S/Pb	1	Top corner	Pass	Authorized only for Form No. 3 materials.
C-1000 (1) (3/4-in. bands)	1,004	S/Pb	1	Bottom corner	Pass	Authorized only for Form No. 3 materials.
C-1000 (2) (3/4-in. bands)	1,008	S/Pb	1	Top corner	Pass	Authorized only for Form No. 3 materials.
C-1000 (2) (3/4-in. bands)	1,008	S/Pb	1	Bottom corner	Pass	Authorized only for Form No. 3 materials.

[a]General Comments: All drops were conducted on a top corner of the lid. There was no loss of contents and the packagings were authorized for Form No. 2 and No. 3 materials.

[b]Sand and lead.

[c]Flour, fluorescein, sand, and lead.

ORNL = Oak Ridge National Laboratory.

Table D-14. Four-ft Free Drop Test Results for NLO Family of Banded Wooden Boxes.[a]

Specific packaging	Weight (lb)	Results	Orientation	Comments
G-4214	1,805	Pass	All drops were conducted on a top corner of lid. In several instances these packagings survived drops of 30 ft (7.5 times the prescribed distance) with no release of contents.	Authorized only for Form No. 3 materials.
G-4245	250	Pass		
G-4255	1,500	Pass		
G-4273	3,250	Pass		
G-4292	852	Pass		
WMCO Banded Wooden Boxes				
G-4214-1A	1,264	Pass	Drop on top corner of lid and opposite bottom corner. Both at ~45°	Authorized only for Form No. 3 materials. [Docket 89-09-7A]
G-4214-1B	1,256	Pass	Drop on top corner of lid at 45° and flat on opposite end	
G-4245-3A	225	Pass	Drop on top corner of lid and opposite bottom corner. Both at ~45°	
G-4245-3B	201	Pass	Drop on top corner of lid at 45° and flat on opposite end	
G-4255-4A	1,448	Pass	Drop on lid top corner at 45°	
G-4255-4B	1,474	Pass	Drop on bottom corner at 45°	
G-4273-5A	3,035	Pass	Drop on lid top corner at 45°	
G-4273-5B	2,960	Pass	Drop on bottom corner at 45°	
G-4273-6A	3,646	Pass	Drop on bottom corner at 45°	
G-4273-6B	3,649	Pass	Drop on top corner at 45°	
G-4292-2A	1,334	Pass	Drop on lid top corner at 45°	
G-4292-2B	1,331	Pass	Drop on bottom corner at 45°	

[a]General Comments: All drops were conducted on a top corner of the lid. There was no loss of contents and the packagings were authorized for Form No. 3 materials.

WMCO = Westinghouse Materials Company of Ohio.

Table D-15. Four-ft Free Drop Test Results for Fiberboard Boxes.[a]

Specific packaging	Weight (lb)	Contents	No. tested	Results	Comments
12B-65 Fiberboard Boxes					
1	65	Pb[b]	2	2 pass	Authorized only for Form No. 3 materials.
2	65	Pb	3	3 pass	
3	65	Pb	1	1 pass	
4	65	S[c]	2	2 pass	
5	65	S	2	2 pass	Authorized only for Form No. 3 materials.
6	65	S	1	1 pass	
7	65	S	2	2 pass	
8	65	S	2	2 pass	
9	65	S	2	2 pass	
10	65	S	2	2 pass	
11	65	S	1	1 pass	
12	65	S	2	2 pass	
13	65	S	2	2 pass	
LLNL 12B-10 with inner metal can[d]	10	Inner metal can filled with rocks	3	3 pass	Authorized for Form No. 1, No. 2, and No. 3 materials. Inner can was air-leak tested after each test.
Tri-Wall Fiberboard Box	350	Sand in plastic bags	2	2 pass	Authorized only for Form No. 3 materials.

[a]General Comments: All drops were conducted on a top corner of the lid. There was no loss of contents and the packagings were authorized for Form No. 3 materials.
[b]Lead
[c]Sand
[d]The inner metal can was removed after each test and leak checked in a bell jar under water.

LLNL = Lawrence Livermore National Laboratory.

Table D-16. Four-ft Free Drop Test Results for DOT-21C Fiberboard Drums.

Specific packaging	Weight (lb)	Contents	45° Top		45° Bottom		Side		Comments
			No. tested	Results	No. tested	Results	No. tested	Results	
1	115	F/F/S[a]	1	1 pass	1	1 pass	1	1 pass	
2	115	F/F/S/Pb[b]	1	1 pass	1	1 pass	1	1 pass	
3	115	F/F/S	1	1 pass	1	1 pass	1	1 pass	Authorized only for Form No. 3 materials.[c]
4	115	F/F/S/Pb	1	1 pass	1	1 pass	1	1 pass	
5	115	F/F/S	1	1 pass	1	1 pass	1	1 pass	
6	115	F/F/S	1	1 pass	1	1 pass	1	1 pass	

[a]Flour, fluorescein, and sand.
[c]Flour, fluorescein, sand, and lead.
[b]Even though these packagings passed the drop test without release of the flour and fluorescein, they were authorized only for Form No. 3 materials because their performance in the penetration test was sporadic.

Table D-17. Four-ft Free Drop Test Results for UF_6 Cylinders.

Specific packaging	Weight (lb)	Orientation	Comments
1S	2	This category of packagings was evaluated based on numerous drop tests conducted on Models 5A, 8A, 12B, 30B, and 48X cylinders. These tests included the 4-ft drop (side and angle), the much more severe 30-ft drop (side and angle), and the 4-ft drop onto the bar (puncture test). In all of these tests, there was no loss of contents. When analyses were performed, data such as materials of construction, dimensions, authorized gross weight, and effects of testing were used to verify that the cylinders not tested meet the Specification 7A requirements.	These packagings are authorized for Form No. 1, No. 2, and No. 3 materials (recognizing that Form No. 2 and No. 3 are not really appropriate).
2S	9.5		
5A	110		
8A	375		
12A	645		
12B	650		
30A	6,350		
30B	6,420		
48G	30,600		
48H	30,150		
48HX	30,150		
48X	25,530		
48Y	32,760		
Modified			
5A	110	Four test units were subjected to 4-ft drop tests with different orientations with no adverse affects.	Docket 89-08-7A
5B			

Table D-18. Thirty-ft Free Drop Test Results for Liquid and Gas Packagings. (5 pages total)

Specific packaging	Weight (lb)	Contents	Results/Comments
Steel Drum MS-24347-7	6	Water	Top (45°): No. tested - 3; Results - 3 pass Flat on Top: No. tested - 1; Results - 1 pass Bottom (45°): No. tested - 3; Results - 3 pass Side: No. tested - 2; Results - 2 pass Three 30-ft drops were done consecutively on the same package. The inner containment vessel (glass bottle) was removed and inverted for 10 min to determine if there had been any loss of contents. After nine 30-ft drops, there was no evidence of leakage, and the package was evaluated as meeting all requirements.
LANL 12B-62 Fiberboard Box	62	Water	One 30-ft drop was done on this packaging. The impact point was a top corner (package was inverted). After completion of the test, the inner containment vessel (glass ampule) was removed and inverted for 10 min to determine if there had been any loss of contents. There was no loss of contents. In addition, after an additional 30-ft drop, the 2-in diameter inner shield container with the threaded cap and O-ring seal was air-leak tested and passed. Thus, this packaging meets all requirements with any appropriate inner containment.
LANL Steel Drums with Gas Cylinders			A 30-ft drop test was conducted on both configurations. After each drop test, it was determined that there had been no loss of contents (by comparison of pre-test pressure to post-test pressure) from any of the seven test cylinders. Thus, there was no loss of contents, and this package meets all requirements.
3A 1800	68	Air	
3E 1800	60	Air	

Table D-18. Thirty-ft Free Drop Test Results for Gas and Liquid Packagings. (5 pages total)

Specific packaging	Weight (lb)	Contents	Results/Comments
LANL-1	495		Top (45°): No. tested - 3; Results - 3 pass Three 30-ft drops were conducted using the same inner container (Fenton Hill Pig) and the same Celotex* disks placed in new 17C 55-gal steel drums. The drops orientations were all on the top, at approximately a 45° angle and positioned so that the bolt of the bolt closure ring was at the point of impact.

Drop No.	Maximum dent (in.)	Effect on lid	Movement of inner container	Results/Comments
1	4	Separated on sides away from impact point	Minimal (<1 in.)	After each drop test the inner container was removed, the cover taken off, and the container inverted over paper for at least 10 min, looking for evidence of leakage. None was found. All pass.
2	4.75	Same as above	Same as above	
3	4	Same as above	Same as above	

Table D-18. Thirty-ft Free Drop Test Results for Gas and Liquid Packagings. (5 pages total)

Specific packaging	Weight (lb)	Contents	Results/Comments
ORNL Fiberboard Box - Liquids and Solids	33	Water	A 30-ft drop test was conducted on this packaging. The impact was on the bottom edge of the cardboard box. There was no evidence of loss of contents, and this packaging meets all requirements.
ORNL Fiberboard Box - Gases	33	Water	A 30-ft drop test was conducted on this packaging. The impact was on the bottom edge of the cardboard box. There was no evidence of loss of contents, and this packaging meets all requirements.
ORNL Fiberboard Box - Liquids and Solids with Shielding	33	Water	A 30-ft drop test was conducted on this packaging. The impact was on the bottom edge of the cardboard box. There was no evidence of loss of contents, and this packaging meets all requirements.
ORNL Wooden Box - Returnable, Shielded	212	Water	Two 30-ft drops were conducted: one with the entire packaging assembly and one with just the stainless steel clad lead shield by itself (without the wooden box). The second drop indicated that this inner assembly could withstand the 30-ft drop test by itself. After both tests, the glass inner container was removed and examined. There was no loss of contents (leakage of water), and this packaging meets all requirements.
ORNL Gas Cylinder Returnable (Hoke Cylinders)			
HOH-50	9		Thirty-ft drop tests were conducted on the 1,000-ml (not currently used) and 500-ml gas shipping cylinders. The test packages were dropped with the valve cover down. There was no loss of contents, and these packagings meet this requirement. These two tests subjected the packaging to maximum stress, so, after consideration of material of construction, thickness of materials, package weights, etc., the analysis demonstrated that all listed packagings meet all requirements.
HOXe-50	15		
HOKr-50	15		
HOH-150	11		
HOXe-1150	35		
HOKr-150	35		
HOH-300	12		
HOKr-300	36		
HOH-500	15		
HOKr-500	50		

Table D-18. Thirty-ft Free Drop Test Results for Gas and Liquid Packagings. (5 pages total)

Specific packaging	Weight (lb)	Contents	Results/Comments
ORNL Gas Cylinder Returnable (J. L. Shephard)			
Cylinder 1 Cylinder 2 Cylinder 3	24 40 60		A 30-ft drop test was conducted on a J. L. Shephard Model 394-500-L gas shipping cylinder. The cylinder landed on its top. Helium leak testing before and after the testing demonstrated that there was no loss of contents, and this packaging meets this requirement. Because this packaging would be subject to the greatest stress, all smaller packagings also meet all requirements.
WHC Liquid Sample Packaging	46.75	Saturated salt water, colored water	The package was subjected to 30-ft drops. Two drop orientations were used: (1) package oriented to strike on the side, and (2) package oriented with the center of gravity over top rim positioned to strike on the closure bolt area.
	43.25	Saturated salt water, colored water	The damage observed from the drop for orientation was (1) the side of the package flattened approximately 0.25 in. for orientation and (2) the rim and drum edge were pushed down 1.25 in. In both cases, the packaging passed the test.
SRP Process Water Sample Packaging	118	Water	The package was subjected to 4-ft and 30-ft drop tests with varying orientations. In all cases, the packaging passed the tests.

Table D-18. Thirty-ft Free Drop Test Results for Gas and Liquid Packagings. (5 pages total)

Specific packaging	Weight (lb)	Contents	Results/Comments
RF Container Model LWS-1	12	Fluorescent penetrant	The package was subjected to 4-ft and 30-ft drops. Three drop orientations were used: (1) package oriented with the center of gravity over top rim positioned to strike on the closure bolt area, (2) package oriented to drop directly onto the bottom, and (3) package oriented to drop flat on the side. The damage observed from the drop for orientation was (1) the rim being driven inward about 1 in., (2) the bottom rim was driven up even with the bottom of the drum, and (3) the side of the packaging was flattened along the height of the drum side and was pushed in about 1 in. from the original position. In all three cases, the packaging passed the test. The inner packaging moves within the space provided in the foam. The movement could influence the radiation readings.

*Celotex is a trademark of the Celotex Corporation.

LANL = Los Alamos National Laboratory
ORNL = Oak Ridge National Laboratory
RF = Rocky Flats
SRP = Savannah River Plant
WHC = Westinghouse Hanford Company.

Table D-19. Four-ft Free Drop Test Results for Miscellaneous Packagings.

Specific packaging	Weight (lb)	Comments
LANL-Old Spec 55	50	Two of these packagings were filled with a water/fluorescein solution, sealed, and dropped on a lid edge. There was no loss of contents, even with these conservative contents. Thus, this packaging meets all requirements.
ORNL TRU Shipping Container	3,750	Because this packaging is certified only for Special Form [49 CFR 173.403(z)] contents, this test has little meaning from a loss of contents standpoint. However, the test was conducted on the top edge with no significant effect on the packaging. Thus, the packaging plus the Special Form contents meet all requirements.
FEMA Source Overpack	200	Because this package is authorized only for Special Form [49 CFR 173.403(z)] contents, this test has little meaning from a loss of contents standpoint. However, the test was conducted on the top edge with no significant effect on the packaging. Thus, the packaging plus the Special Form contents meet all requirements.
SNL Tritium Waste Package	200	The inner container was dropped 6 ft on a chime and 4 ft on a protected valve, and the entire package was dropped 4 ft on the top bolt closure ring, all with no loss of contents. The packaging meets all requirements.
LANL Aluminum Packaging (LANL-1)	170	The same packaging was dropped three times: on the top cover at approximately a 45° angle; flat on a side flange; and flat on an end flange. There were no significant effects on the packaging; there were no significant dents or indents; and there was no movement of the inner contents.
WIPP RH-TRU Canister	5,980	Test Unit LA01 was subjected to three drop tests with varying orientations with no adverse affects.
	5,250	Test Unit LA02 was subjected to three drop tests with varying orientations, also with no adverse affects. [Docket 89-03-7A]

FEMA = Federal Emergency Management Agency
LANL = Los Alamos National Laboratory
ORNL = Oak Ridge National Laboratory
RH-TRU = Remotely handled transuranic
SNL = Sandia National Laboratory
WIPP = Waste Isolation Pilot Plant.

Table D-20. Corner Free Drop Test Results for Wooden Boxes.[a] (2 pages total)

Specific packaging	Weight (lb)	Contents	No. tested	Results	Comments
Mound Wooden Boxes - Configuration A					
MA-1	40	S/Pb[b]	1	1 pass	0.25-in. indent
MA-2	100	S/Pb	1	1 pass	0.25-in. indent
MA-3	100	S/Pb	1	1 pass	0.375-in. indent
MA-4	100	S/Pb	1	1 pass	0.25-in. indent
Mound Wooden Boxes - Configuration B					
MB-1	150	F/F/S/Pb[c]	1	1 pass	0.25-in. indent
MB-2	150	F/F/S/Pb	1	1 pass	0.375-in. indent
MB-3	200	F/F/S/Pb	1	1 pass	0.375-in. indent
MB-4	150	F/F/S/Pb	1	1 pass	0.375-in. indent
MB-5	150	F/F/S/Pb	1	1 pass	0.375-in. indent
MB-6	200	F/F/S/Pb	1	1 pass	0.375-in. indent
Mound Wooden Boxes - Configuration C					
MC-1	150	S/Pb	1	1 pass	0.5-in. indent
MC-2	300	S[d]	1	1 pass	0.25-in. indent
MC-3	250	S/Pb	1	1 pass	0.5-in. indent
MC-4	100	S/Pb	1	1 pass	0.25-in. indent
MC-5	150	S	1	1 pass	0.25-in. indent
Mound Wooden Boxes - Configuration D					
MD-1	200	F/F/S/Pb	1	1 pass	0.25-in. indent
MD-2	200	F/F/S/Pb	1	1 pass	0.25-in. indent
MD-3	250	F/F/S[e]	1	1 pass	0.25-in. indent
MD-4	250	F/F/S	1	1 pass	0.375-in. indent
MD-5	200	F/F/S/Pb	1	1 pass	0.25-in. indent
MD-6	200	F/F/S/Pb	1	1 pass	0.25-in. indent

Table D-20. Corner Free Drop Test Results for Wooden Boxes.[a] (2 pages total)

Specific packaging	Weight (lb)	Contents	No. tested	Results	Comments
Mound Wooden Boxes - Configuration E					
ME-1	150	S	1	1 pass	0.25-in. indent
ME-2	150	S	1	1 pass	0.25-in. indent
ME-3	150	S	Not tested	--	Pass, based on testing of similar packagings.
Y-12 Series B Wooden Boxes					
B-1	400	S/Pb	1	1 pass	0.55-in. indent
B-2	400	S/Pb	1	1 pass	0.25-in. indent
B-6	400	S/Pb	1	1 pass	0.125-in. indent

[a]General Comments: Eight 1-ft drops were conducted (one on each corner). There was no loss of contents or other effects on containment integrity. The slight dimensional changes are shown in the last column.

[b]Sand and lead.

[c]Flour, fluorescein, sand, and lead.

[d]Sand.

[e]Flour, fluorescein, and sand.

-- = Not applicable.

Table D-21. Corner Free Drop Test Results for Fiberboard Boxes.[a]

Specific packaging	Weight (lb)	Contents	No. tested	Results	Comments
12B-65					
1	65	PB[b]	2	2 pass	0.25-in. indent
2	--	--	Not tested	--	Pass, based on testing of similar packagings.
3	65	S/Pb[c]	1	1 pass	0.25-in. indent
4	65	S[d]	2	2 pass	0.25-in. indent
5	65	Pb	2	2 pass	0.25-in. indent
6	65	S	2	2 pass	0.25-in. indent
7	65	S	2	2 pass	0.25-in. indent
8	65	S	2	2 pass	0.25-in. indent
9	65	S	1	1 pass	0.25-in. indent
10	65	S	2	2 pass	0.25-in. indent
11	65	S	2	2 pass	0.25-in. indent
12	65	S	2	2 pass	0.25-in. indent
13	65	S/Pb	2	2 pass	0.25-in. indent
LLNL 12B-10	--	--	Not tested	--	Pass, based on testing of similar packagings.

[a]General Comments: Eight 1-ft drops were conducted (one on each corner). There was no loss of contents or other effects on containment integrity. The slight dimensional changes are shown in the last column.

[b]Sand and lead.

[c]Flour, fluorescein, sand, and lead.

[d]Sand.

LLNL = Lawrence Livermore National Laboratory

-- = not applicable.

Table D-22. Corner Free Drop Test Results for DOT-21C Fiberboard Drums.[a]

Specific packaging	Weight (lb)	Contents	No. tested	Results	Comments
1	115	F/F/S/Pb[b]	1	1 pass	0.25-in. indent
2	115	F/F/S/Pb	1	1 pass	0.125-in. indent
3	115	F/F/S/Pb	1	1 pass	0.25-in. indent
4	115	F/F/S/Pb	1	1 pass	0.25-in. indent
5	115	F/F/S[c]	1	1 pass	0.25-in. indent
6	115	F/F/S	1	1 pass	0.25-in. indent

[a]General Comments: Eight 1-ft drops were conducted (one on each of the quarters of each rim). There was no loss of contents or other effects on containment integrity. The slight dimensional changes are shown in the last column.

[b]Flour, fluorescein, sand, and lead.

[c]Flour, fluorescein, and sand.

Requirement D-3. Compression Test.

49 CFR 173.465	Discussion
(d) Compression Test The compression test shall last for a period of at least 24 hours and consist of a compressive load equivalent to the greater of the following: (1) Five times the weight of the actual package; or (2) 1300 kilograms per square meter (265 pounds per square foot) multiplied by the vertically projected area of the package. The compressive load shall be applied uniformly to two opposite sides of the packaging specimen, one of which must be the base on which the package would normally stand.	Major Points (1) 5 times actual weight (2) 265 lb/ft^2 times the area of package Comments (1) Be alert. For packages with a large top surface area, the 265 lb/ft^2 can quickly become very large. (2) Any decreases in distances to package surfaces should be documented for use in evaluating the "no significant dose rate increase" requirement. Tester and evaluator to do and shipper responsibility to ensure.

Table D-23. Compression Test Results for Steel Drums. (2 pages total)

Specific packaging	Authorized gross weight (lb)	Compression test weight (lb)	Test duration (hr)	Test/analysis data and results		Comments
				No. tested	Results	
DOT-6C 5-gal	80	500	>24	1	1 pass	No detectable effect.
DOT-6C 10-gal	160	928	>24	1	1 pass	No detectable effect.
DOT-17C 5-gal	100	520	>24	1	1 pass	No detectable effect.
DOT-17C 30-gal	500	Not tested[a]	--	--	--	Pass, based on testing of DOT-17H 30-gal drum.
DOT-17C 35-gal	400	2,060	>24	1	1 pass	No detectable effect.
DOT-17C 55-gal	1,000	Not tested[b]	--	--	--	Pass, based on testing of DOT-17H 55-gal drum.[c]
DOT-17C 55-gal with pressure relief devices	1,000	Not tested[c]	--	--	--	Pass, based on testing of DOT-17H 55-gal drum.[c]
DOT-17C 55-gal with HDPE liner	1,000	5,525	>24	1	1 pass	Passed. [Dockets 89-13-7A and 90-18-7A]
DOT-17H 30-gal	500 400	2,700 2,069	>24 >24	1 1	1 pass 1 pass	No detectable effect. No detectable effect. [Dockets 90-17-7A and 90-20-7A]
DOT-17H 55-gal	1,000	5,100	>24	1	1 pass	No detectable effect.
MS-24347-1	10	100	48	1	1 pass	No detectable effect.
MS-24347-7	35	200	48	1	1 pass	No detectable effect.
MS-24684-1	60	300	>24	1	1 pass	No detectable effect.
MS-27684-2	110	Not tested	--	--	--	Pass, based on comparison to test data on comparable drum.
MS-27684-3	80	401	>24	1	1 pass	No detectable effect.

Table D-23. Compression Test Results for Steel Drums. (2 pages total)

Specific packaging	Authorized gross weight (lb)	Compression test weight (lb)	Test duration (hr)	Test/analysis data and results		Comments
				No. tested	Results	
MS-27684-5	80	500	>24	1	1 pass	No detectable effect.
MS-27684-8	200	1,000	>24	1	1 pass	No detectable effect.
MS-27683-7	400	2,072	>24	1	1 pass	No detectable effect.
MS-27683-13	500	2,752	>24	1	1 pass	No detectable effect.
MS-27683-21	800	5,500	>24	1	1 pass	No detectable effect.
PACKAGING SPECIALTIES SQUARE STEEL DRUMS						
Style 1A	1,350	7,506	>24	1	1 pass	The test had no effect on the drum.
Style 1B	1,350	7,492	>24	1	1 pass	The test had no effect on the drum.
Style 2	1,350	7,508	>24	1	1 pass	The test had no effect on the drum.
Style 3	1,350	7,486	>24	1	1 pass	The test had no effect on the drum.

[a]The test data for the DOT-17H 30-gal drum are directly applicable because the construction specifications for these two drums (DOT-17H 30-gal and DOT-17C 30-gal) are essentially the same.

[b]A DOT-17C 55-gal drum filled with concrete was tested to 8,142 lb (for 24 hr) and passed.

[c]The test data for the DOT-17H 55-gal drum are directly applicable (although conservative), because the only major difference between the DOT-17H and the DOT-17C 55-gal drums is the thickness of the body sheet. The DOT-17H body sheet is 18 gauge, and the DOT-17C is 16 gauge.

DOT = U.S. Department of Transportation
HDPE = High-density polyethylene
MS = Military specification
-- = Not applicable.

Table D-24. Compression Test Results for Steel Boxes. (4 pages total)

Specific packaging	Authorized gross weight (lb)	Compression test weight (lb)	Test duration (hr)	Test/analysis data and results		Comments
				No. tested	Results	
Capital Industries						
S-0510-0823	7,000	35,000	>24	1	1 pass	No detectable effect.
V-0510-0823	7,000	35,000	>24	1	1 pass	No detectable effect.
S-0450-0844	5,240	Not tested	--	--	--	Pass, based on testing of Model S-0510-0823. This model passed with a load of 2,500 lb/corrugation. Model S-0450-0844 would require a test of 1,871 lb/corrugation, which would be expected to pass.
S-0730-0846	8,700	Not tested	--	--	--	Pass, based on testing of Model S-0730-1006. This model passed with a load of 2,167 lb/corrugation. Model S-0730-0846 would require a test of 2,175 lb/corrugation, which would be expected to pass.
S-0240-0906	3,672	Not tested	--	--	--	Pass, based on testing of Model S-0510-0823. This model passed with a load of 2,500 lb/corrugation. Model S-0240-0906 would require a test of 1,353 lb/corrugation, which would be expected to pass.

Table D-24. Compression Test Results for Steel Boxes. (4 pages total)

Specific packaging	Authorized gross weight (lb)	Compression test weight (lb)	Test duration (hr)	Test/analysis data and results		Comments
				No. tested	Results	
Capital Industries						
S-0480-0906	6,120	Not tested	--	--	--	Pass, based on testing of Model V-0510-0823. This model passed with a load of 2,500 lb/corrugation. Model S-0480-0906 would require a test of 1,913 lb/corrugation, which would be expected to pass.
S-0730-0906	10,400	52,000	>24	1	1 pass	No detectable effect.
S-0840-1440	22,700	124,184	>24	1	1 pass	No detectable effect.
S-0480-1376	--	Not tested	--	--	--	Pass, based on testing of Model S-0730-1006. This model passed with a load of 2,176 lb/corrugation. Model S-0480-1376 would require a test of 1,936 lb/corrugation, which would be expected to pass.
Container Products Corp.						
B-96-5-S/L-FD	6,050	30,250	>24	1	1 pass	No detectable effect.
B-96-5-S/L-RA	6,801	Not tested	--	--	--	Pass, based on testing of a comparable container, B-96-5-S/L-FD, which met this requirement.
B-96-5-S/L-RA	6,500	Not tested	--	--	--	Pass, based on testing of a comparable container, B-96-5-S/L-FD, which met this requirement.

Table D-24. Compression Test Results for Steel Boxes. (4 pages total)

Specific packaging	Authorized gross weight (lb)	Compression test weight (lb)	Test duration (hr)	Test/analysis data and results		Comments
				No. tested	Results	
Container Products Corp.						
467-C-S/L-FD TRU Waste Container	4,000	20,000	>24	1	1 pass	No detectable effect.
B-12-44-4-S/L-FD	4,625	Not tested	--	-	-	Pass, based on testing of a comparable container, B-25-4-S/L-FD, which met this requirement.
B-25-4-S/L-FD	4,820	25,000	>24	1	1 pass	No detectable effect.
B-52-4-S/L-FD	4,775	29,000	>24	1	1 pass	No detectable effect.
B-82-6-S/L-FD	6,775	35,000	>24	1	1 pass	No detectable effect.
B-87-6-S/L-FD	6,970	Not tested	--	--	--	Pass, based on testing of a comparable container, B-96-6-S/L-FD, which met this requirement.
B-96-6-S/L-FD	7,005	40,020	>24	1	1 pass	No detectable effect.
B-96-8-S/L-FD	9,100	47,000	>24	1	1 pass	No detectable effect.
Rocky Flats SAND Box						
Style 1	7,000	36,760	>24	2	2 pass	No detectable effect.
Style 2	6,000	32,000	>24	3	3 pass	No detectable effect.
Style 3	6,000	32,000	>24	1	1 pass	No detectable effect.
Style 4	6,000	32,000	>24	2	2 pass	No detectable effect.

Table D-24. Compression Test Results for Steel Boxes. (4 pages total)

Specific packaging	Authorized gross weight (lb)	Compression test weight (lb)	Test duration (hr)	Test/analysis data and results		Comments
				No. tested	Results	
Argonne						
M-4 Bin	3,000	Not tested	--	--	--	Pass, based on testing of the M-III steel bin with a compression load of 40,000 lb. The M-4 is of equal or better structural strength and would be expected to meet this requirement.
ANL-W						
Steel Box	960	4,800	>24	1	1 pass	No detectable effect.
TRUPACT-II, TU-2	4,000	21,105	>24	1	1 pass	Test had no detectable effect and there was no loss of contents as evidenced by an inspection for fluorescein using ultraviolet light.
ORNL Low Level Waste Container [Docket 89-04-7A]						
Vented	8,150	42,475	24	1	1 pass	No detectable effect.
Nonvented	10,230	51,430	24	1	1 pass	No detectable effect.

ANL-W = Argonne National Laboratory - West
ORNL = Oak Ridge National Laboratory
TRU = Transuranic
-- = Not applicable.

Table D-25. Compression Test Results for Wooden Boxes. (6 pages total)

Specific packaging	Authorized gross weight (lb)	Compression test weight (lb)	Test duration (hr)	Test/analysis data and results		Comments
				No. tested	Results	
ANL-W						
7A-217	217	10,875	24	1	1 pass	No detectable effect.
7A-375	375	4,000	24	1	1 pass	No detectable effect.
7A-880	880	5,168	24	1	1 pass	No detectable effect.
7A-995	995	6,308	24	1	1 pass	No detectable effect.
7A-1315	1,315	7,000	24	1	1 pass	No detectable effect.
7A-670	670	4,000	24	1	1 pass	No detectable effect.
LLNL Flush Panel	2,500	25,000	>24	1	1 pass	No detectable effect.
Mound Wooden Boxes - Configuration A						
MA-1	40	265	>24	1	1 pass	No detectable effect.
MA-2	100	500	>24	1	1 pass	No detectable effect.
MA-3	100	500	>24	1	1 pass	No detectable effect.
MA-4	100	500	>24	1	1 pass	No detectable effect.
Mound Wooden Boxes - Configuration B						
MB-1	150	Not tested	--	--	--	Pass, based on shown testing of boxes of similar materials and construction methods at weights in excess of those actually required.
MB-2	150	1,500	>24	1	1 pass	No detectable effect.
MB-3	200	Not tested	--	--	--	Pass, based on testing of boxes of similar materials and construction methods at weights in excess of those actually required.

Table D-25. Compression Test Results for Wooden Boxes. (6 pages total)

Specific packaging	Authorized gross weight (lb)	Compression test weight (lb)	Test duration (hr)	Test/analysis data and results		Comments
				No. tested	Results	
MB-4	150	Not tested	--	--	--	Pass, based on testing of boxes of similar materials and construction methods at weights in excess of those actually required.
MB-5	150	Not tested	--	--	--	Pass, based on testing of boxes of similar materials and construction methods at weights in excess of those actually required.
MB-6	200	1,116	>24	1	1 pass	No detectable effect.
Mound Wooden Boxes - Configuration C						
MC-1	150	770	>24	1	1 pass	No detectable effect.
MC-2	300	1,550	>24	1	1 pass	No detectable effect.
MC-3	250	1,000	>24	1	1 pass	No detectable effect.
MC-4	100	520	>24	1	1 pass	No detectable effect.
MC-5	150	770	>24	1	1 pass	No detectable effect.
Mound Wooden Boxes - Configuration D						
MD-1	200	Not tested	--	--	--	Pass, based on testing of boxes of similar materials and construction methods at weights in excess of those actually required.
MD-2	300	1,528	>24	1	1 pass	No detectable effect.
MD-3	250	Not tested	--	--	--	Pass, based on testing of boxes of similar materials and construction methods at weights in excess of those actually required.

Table D-25. Compression Test Results for Wooden Boxes. (6 pages total)

Specific packaging	Authorized gross weight (lb)	Compression test weight (lb)	Test duration (hr)	Test/analysis data and results		Comments
				No. tested	Results	
MD-4	250	1,351	>24	1	1 pass	No detectable effect.
MD-5	200	Not tested	--	--	--	Pass, based on testing of boxes of similar materials and construction methods at weights in excess of those actually required.
MD-6	200	Not tested	--	--	--	Pass, based on testing of boxes of similar materials and construction methods at weights in excess of those actually required.
Mound Wooden Boxes - Configuration E						
ME-1	150	Not tested	--	--	--	Pass, based on testing of boxes of similar materials and construction methods at weights in excess of those actually required.
ME-2	150	755	>24	1	1 pass	No detectable effect.
ME-3	150	755	>24	1	1 pass	No detectable effect.
NLO Family of Banded Wooden Boxes						
G-4214	1,805	10,000	>24	1	1 pass	No detectable effect.
G-4245	250	1,000	>24	1	1 pass	No detectable effect.
G-4255	1,500	7,500	>24	1	1 pass	No detectable effect.
G-4273	3,250	18,000	>24	1	1 pass	No detectable effect.
G-4292	852	4,500	>24	1	1 pass	No detectable effect.

Table D-25. Compression Test Results for Wooden Boxes. (6 pages total)

Specific packaging	Authorized gross weight (lb)	Compression test weight (lb)	Test duration (hr)	Test/analysis data and results		Comments
				No. tested	Results	
Y-12 Series B Wooden Boxes						
B-1	400	2,072	70	1	1 pass	No detectable effect.
B-2	400	2,028	69	1	1 pass	No detectable effect.
B-3	400	2,015	72	1	1 pass	No detectable effect.
B-4	400	2,028	>24	1	1 pass	No detectable effect.
B-5	400	2,072	>24	1	1 pass	No detectable effect.
B-6	400	2,028	>24	1	1 pass	No detectable effect.
B-7	400	2,072	>24	1	1 pass	No detectable effect.
B-8	400	2,028	>24	1	1 pass	No detectable effect.
Y-12 Picture Frame Wooden Boxes						
PF-1	500	Not tested	--	--	--	Pass, based on testing of boxes of similar materials and construction methods at weights in excess of those actually required.
PF-2	750	3,770	>24	1	1 pass	No detectable effect.
PF-3	1,000	Not tested	--	--	--	Pass, based on testing of boxes of similar materials and construction methods at weights in excess of those actually required.
PF-4	500	Not tested	--	--	--	Pass, based on testing of boxes of similar materials and construction methods at weights in excess of those actually required.
PF-5	750	3,770	>24	1	1 pass	No detectable effect.
PF-6	1,000	5,100	>69	1	1 pass	No detectable effect.

Table D-25. Compression Test Results for Wooden Boxes. (6 pages total)

Specific packaging	Authorized gross weight (lb)	Compression test weight (lb)	Test duration (hr)	Test/analysis data and results		Comments
				No. tested	Results	
PF-7	750	Not tested	--	--	--	Pass, based on testing of boxes of similar materials and construction methods at weights in excess of those actually required.
PF-8	1,000	5,100	47	1	1 pass	No detectable effect.
PF-10	2,500	13,320	24	1	1 pass	No detectable effect.
Rocky Flats RA Series of Wooden Boxes						
Configuration 1	900	4,541	24	1	1 pass	No detectable effect.
Configuration 2	1,250	6,664	24	1	1 pass	No detectable effect. Docket 89-01-7A
ORNL Y-12 C-Series						
C-1	1,130	6,000	24	1	1 pass	No detectable effect.
C-2	1,700	9,030	24	1	1 pass	No detectable effect.
C-3	2,230	11,500	24	1	1 pass	No detectable effect.
Y-12 C-280	280	2,387	>24	1	Pass	This weight represents the top surface area times 265 lb/ft^2. There was no effect as a result of this test.
Y-12 C-400	400	2,418	>24	1	Pass	There was no effect.
Y-12 C-600	600	3,974	>24	1	Pass	There was no effect.
Y-12 C-100	1,000	5,013	>24	1	Pass	This weight represents 5 x the gross weight. There was no effect. Docket 89-09-7A

Table D-25. Compression Test Results for Wooden Boxes. (6 pages total)

Specific packaging	Authorized gross weight (lb)	Compression test weight (lb)	Test duration (hr)	Test/analysis data and results		Comments
				No. tested	Results	
WMCO Banded Wooden Boxes						
G-4214	1,260	7,144	>24	1	1 pass	No detectable effect.
G-4245	225	1,262	>24	1	1 pass	No detectable effect.
G-4255	1,470	10,230	>24	1	1 pass	No detectable effect.
G-4273-5	3,035	17,700	>24	1	1 pass	No detectable effect.
G-4273-6	3,540	17,700	>24	1	1 pass	No detectable effect.
G-4292	1,330	7,650	>24	1	1 pass	No detectable effect.

ANL-W = Argonne National Laboratory - West
LLNL = Lawrence Livermore National Laboratory
NLO = National Lead Corporation
ORNL = Oak Ridge National Laboratory
WMCO = Westinghouse Materials Company of Ohio
-- = Not applicable.

Table D-26. Compression Test Results for Fiberboard Containers. (2 pages total)

Specific packaging	Authorized gross weight (lb)	Compression test weight (lb)	Test duration (hr)	Test/analysis data and results		Comments
				No. tested	Results	
DOT-12B-65 Fiberboard Boxes						
1	65	Not tested	--	--	--	Pass, based on testing of boxes of similar materials and construction methods at weights in excess of those actually required.
2	65	Not tested	--	--	--	Pass, based on testing of boxes of similar materials and construction methods at weights in excess of those actually required.
3	65	Not tested	--	--	--	Pass, based on testing of boxes of similar materials and construction methods at weights in excess of those actually required.
4	65	330	>24	1	1 pass	No detectable effect.
5	65	Not tested	--	--	--	Pass, based on testing of boxes of similar materials and construction methods at weights in excess of those actually required.
6	65	330	>24	1	1 pass	No detectable effect.
7	65	325	>24	1	1 pass	No detectable effect.
8	65	328	>24	1	1 pass	No detectable effect.
9	65	328	>24	1	1 pass	No detectable effect.
10	65	325	>24	1	1 pass	No detectable effect.
11	65	328	>24	1	1 pass	No detectable effect.

Table D-26. Compression Test Results for Fiberboard Containers. (2 pages total)

Specific packaging	Authorized gross weight (lb)	Compression test weight (lb)	Test duration (hr)	Test/analysis data and results		Comments
				No. tested	Results	
DOT-12B-65 Fiberboard Boxes (Continued)						
12	65	Not tested	--	--	--	Pass, based on testing of boxes of similar materials and construction methods at weights in excess of those actually required.
13	65	Not tested	--	--	--	Pass, based on testing of boxes of similar materials and construction methods at weights in excess of those actually required.
LLNL 12B-10 with inner metal can	10	100	>24	1	1 pass	No detectable effect.
Tri-Wall Fiberboard Box	350	2,510	>24	2	2 pass	Box was compressed 0.5 in. in the middle as a result of this test.
DOT-21C Fiberboard Drums						
1	115	603	>24	1	1 pass	No detectable effect.
2	115	600	>24	1	1 pass	No detectable effect.
3	115	601	>24	1	1 pass	No detectable effect.
4	115	603	>24	1	1 pass	No detectable effect.
5	115	603	>24	1	1 pass	No detectable effect.
6	115	601	>24	1	1 pass	No detectable effect.

DOT = U.S. Department of Transportation
LLNL = Lawrence Livermore National Laboratory
-- = Not applicable.

Table D-27. Compression Test Results for UF_6 Cylinders.

Packaging	Calculated no. of packages required for stress leading to failure	Results	Comments
1S	60	Pass	Two methods of analysis were used to evaluate the containers:
2S	>100	Pass	
5A	21	Pass	
8A	15	Pass	(1) A linear elastic stress and buckling analysis using shell of revolution program BOSOR; and
12A	>100	Pass	
12B	>100	Pass	
30A	12	Pass	
30B	12	Pass	(2) A linear elastic buckling analysis and a nonlinear elastic-plastic collapses analysis using the finite element program NASTRAN.[a]
48G	9	Pass	
48H	9	Pass	
48HX	12	Pass	
48X	12	Pass	
48Y	9	Pass	
Modified			
5A 5B	--	Pass	Evaluated by analysis. [Docket 89-08-7A]

[a]NASTRAN is a trademark of the National Aeronautics and Space Admistration.

-- = Not applicable.

Table D-28. Compression Test Results for Liquid and Gas Packagings. (4 pages total)

Specific packaging	Authorized gross weight (lb)	Compression test weight (lb)	Test duration (hr)	Test/analysis data and results		Comments
				No. tested	Results	
Steel Drum MS-24347-7	10	Not tested	--	--	--	Pass, see Table D-22 of this addendum for test results on this drum.
LANL 12B-62 Fiberboard Box	62	328	>24	1	1 pass	No detectable effect.
LLNL Steel Drums with Gas Cylinders	--	Not tested	--	--	--	Pass, see Table D-23 for test results on 17H 30-gal steel drums.
ORNL Fiberboard Box - Liquids and Solids	33	165	>24	1	1 pass	Deformation of up to 1 in. on all four sides and less than 0.5 in. on the top end button.
ORNL Fiberboard Box - Gases	33	165	>24	1	1 pass	Deformation of up to 1 in. on all four sides and less than 0.5 in. on the top end button.
ORNL Fiberboard Box - Liquids and Solids with Shielding	33	165	>24	1	1 pass	Deformation of up to 1 in. on all four sides and less than 0.5 in. on the top end button.
ORNL Wooden Box - Returnable, Shielded	212	1,040	>24	1	1 pass	Tests on a slightly smaller packaging at a slightly less compressive load demonstrated that this packaging would be expected to meet this requirement.

Table D-28. Compression Test Results for Liquid and Gas Packagings. (4 pages total)

Specific packaging	Authorized gross weight (lb)	Compression test weight (lb)	Test duration (hr)	Test/analysis data and results		Comments
				No. tested	Results	
ORNL Gas Cylinder Returnable (Hoke Cylinders)	212	1,060	>24	1	1 pass	No damage to the packaging.
HOH-50	9	Not tested	--	--	--	Pass, based on comparison to test data on heaviest cylinder, HOKr-500, shown below.
HOXe-50	15	Not tested	--	--	--	Pass, based on comparison to test data on heaviest cylinder, HOKr-500, shown below.
HOKr-50	15	Not tested	--	--	--	Pass, based on comparison to test data on heaviest cylinder, HOKr-500, shown below.
HOH-150	11	Not tested	--	--	--	Pass, based on comparison to test data on heaviest cylinder, HOKr-500, shown below.
HOXe-150	35	Not tested	--	--	--	Pass, based on comparison to test data on heaviest cylinder, HOKr-500, shown below.
HOKr-150	35	Not tested	--	--	--	Pass, based on comparison to test data on heaviest cylinder, HOKr-500, shown below.
HOH-300	12	Not tested	--	--	--	Pass, based on comparison to test data on heaviest cylinder, HOKr-500, shown below.
HOKr-300	36	Not tested	--	--	--	Pass, based on comparison to test data on heaviest cylinder, HOKr-500, shown below.

Table D-28. Compression Test Results for Liquid and Gas Packagings. (4 pages total)

Specific packaging	Authorized gross weight (lb)	Compression test weight (lb)	Test duration (hr)	Test/analysis data and results		Comments
				No. tested	Results	
HOH-500	15	Not tested	--	--	--	Pass, based on comparison to test data on heaviest cylinder, HOKr-500, shown below.
HOKr-500	50	285	24	1	1 pass	No damage to the packaging.
						Tests were also conducted with a 1,000-ml container in which a compressive load of 580 lb was applied for 24 hr. There was no damage to the package. Because these cylinders are all identical in construction except for size and weight, the testing of the two heaviest packagings represents the worst possible cases. Thus, all of the above cylinders would pass this test.
ORNL Gas Cylinder Returnable (J. L. Shephard)						
Cylinder 1	24	--	--	--	--	Pass, based on evaluation; based on letter describing testing conducted by ORNL, subject "J. L. Shephard Gas Cylinder," D. M. Ferren/D. A. Edling, April 30, 1985.
Cylinder 2	40	--	--	--	--	
Cylinder 3	60	--	--	--	--	

Table D-28. Compression Test Results for Liquid and Gas Packagings. (4 pages total)

Specific packaging	Authorized gross weight (lb)	Compression test weight (lb)	Test duration (hr)	Test/analysis data and results		Comments
				No. tested	Results	
WHC Liquid Sample Packaging	46 3/4	331	24	1	1 pass	Pass. This test was conducted with 331 lb for 24 hr with no adverse effects on the package.
SRP Process Water Sample Packaging	118	2,006	24	1	1 pass	Pass. This test was conducted with 331 lb for 24 hr with no adverse effects on the package.
RF Container Model LWS-1	12	200	24	1	1 pass	Pass. This test was conducted with 200 lb for 24 hr with no adverse effects on the package.

LANL = Los Alamos National Laboratory
LLNL = Lawrence Livermore National Laboratory
ORNL = Oak Ridge National Laboratory
RF = Rocky Flats
SRP = Savannah River Plant
WHC = Westinghouse Hanford Company
-- = Not applicable.

Table D-29. Compression Test Results for Miscellaneous Packagings.

Specific packaging	Authorized gross weight (lb)	Compression test weight (lb)	Test duration (hr)	Test/analysis data and results		Comments
				No. tested	Results	
LLNL Old Spec 55	50	300	>24	1	1 pass	No detectable effect.
ORNL TRU Shipping Container	3,700	Not tested	--	--	--	Analysis demonstrates that even 50,000 lb, a severe over-test, would not have a significant effect.
FEMA Source Overpack	200	1,070	>24	1	1 pass	No detectable effect.
SNL Tritium Waste Package	200	Not tested	--	--	--	Pass, see Table D-23 of this document for test data on the DOT-17H 30-gal drum.
LANL-1	170	Not tested	--	--	--	This test was not conducted because a comparison to other metal packagings demonstrates that this test would have no effect. In addition, the configuration of this package would make stacking of similar packagings impossible and the application of a compressive load very difficult.
WIPP RH-TRU Canister	5,980 5,250	30,040	24	1	1 pass	No detectable effect. [Docket 89-03-7A]

DOT = U.S. Department of Transportation
FEMA = Federal Emergency Management Agency
LANL = Los Alamos National Laboratory
LLNL = Lawrence Livermore National Laboratory
ORNL = Oak Ridge National Laboratory
RH-TRU = Remotely handled transuranic
SNL = Sandia National Laboraotry
TRU = Transuranic
WIPP = Waste Isolation Pilot Plant
-- = Not applicable.

Requirement D-4. Penetration Test.

49 CFR 173.465	Discussion
(e) Penetration Test For the penetration test the packaging specimen shall be placed on a rigid, flat, horizontal surface that will not move while the test is being performed. The test shall consist of: (1) A bar 3.2 centimeters (1.25 inches) in diameter with a hemispherical end, weighing 6 kilograms (13.2 pounds) being dropped with its longitudinal axis vertical, onto the center of the weakest part of the packaging specimen, so that, if it penetrates far enough, it will hit the containment system. The bar must not be deformed by the test; and (2) The distance of the fall of the bar measured from its lower end to the upper surface of the packaging specimen shall not be less than 1 meter (3.3 feet).	Major Points (1) 13-lb bar (2) 1 m (3.3 ft) (3) Most vulnerable point Comments Penetration of the outer packaging(s) is not necessarily a cause for failure. The question is, "Did the test result in a loss of contents?" For outer packaging components not meeting this requirement, one could specify an inner component(s) that will meet the requirement or design protective devices to ensure that the bar cannot reach the primary containment system. Tester and evaluator to do and shipper responsibility to ensure.

Table D-30. Penetration Test Results for Steel Drums. (3 pages total)

Specific packaging	Test/analysis results: No. tested	Location	Results	Comments
DOT-6C (5-gal)	1	Lid at center	1 pass	0.50-in. dent
	1	Side at seam	1 pass	1.00-in. dent
	1	Lid near closure ring	1 pass	0.25-in. dent
DOT-6C (10-gal)	1	Lid at center	1 pass	0.50-in. dent
	1	Side at seam	1 pass	0.75-in. dent
	1	Lid near closure ring	1 pass	0.50-in. dent
DOT-17C (5-gal)	Not tested	--	--	Pass, based on test data shown for comparable or lesser gauge steels.
DOT-17C (30-gal)	Not tested	--	--	Pass, based on test data shown for comparable or lesser gauge steels.
DOT-17C (35-gal)	1	Lid near center	1 pass	0.625-in. dent
	2	Lid near edge	2 pass	0.500-in. dent max.
	1	Side near seam	1 pass	0.250-in. dent
DOT-17C (55-gal)	Not tested	--	--	Pass, based on test data shown for comparable or lesser gauge steels.
DOT-17C (55-gal) Pressure Relief Device Nucfil[a] Filter	3	Center of filter	3 pass	Air flow was established after each test with flour/fluorescein as contents. There was no visible evidence of loss of contents, and no loss of contents was detected under a black light.
DOT-17C (55-gal) with HDPE Liners	1	Lid center	1 pass	Minor damage
	1	Side	1 pass	Same result
	1	Bottom	1 pass	Same result
	1	Filter	1 pass	Minor damage [Dockets 89-13-7A and 90-18-7A]
DOT-17H (30-gal)	1	Lid at center	1 pass	0.125-in. dent
	1	Side at seam	1 pass	0.125-in. dent
	1	Lid near closure ring	1 pass	0.055-in. dent
	1	Lid	1 pass	0.230-in. dent [Dockets 90-17-7A and 90-20-7A]
	1	Bottom	1 pass	0.320-in. dent [Dockets 90-17-7A and 90-20-7A]
	1	Side	1 pass	0.300-in. dent [Dockets 90-17-7A and 90-20-7A]

Table D-30. Penetration Test Results for Steel Drums. (3 pages total)

Specific packaging	Test/analysis results: No. tested	Location	Results	Comments
DOT-17H (55-gal)	1	Lid at center	1 pass	0.125-in. dent
	1	Side at seam	1 pass	0.125-in. dent
	1	Lid near closure ring	1 pass	0.055-in. dent
MS-24347-1 (0.25-gal)	1	Lid at middle	1 pass	0.075-in. dent
	1	Side at seam	1 pass	1.250-in. dent
MS-24347-7 (1.25-gal)	1	Lid at middle	1 pass	0.500-in. dent
	1	Side at seam	1 pass	1.250-in. dent
	1	Lid near closure ring	1 pass	0.125-in. dent
MS-27684-1 (3-gal)	1	Lid at middle	1 pass	0.75-in. dent
	1	Side at seam	1 pass	1.00-in. dent
MS-27684-2 (4-gal)	Not tested	--	--	Pass, based on test data shown for drums of lesser gauge and size.
MS-27684-3 (6-gal)	1	Lid at middle	1 pass	1.00-in. dent
	1	Side at seam	1 pass	0.50-in. dent
MS-27684-6 (8-gal)	1	Lid at middle	1 pass	0.125-in. dent
	1	Side at seam	1 pass	1.000-in. dent
MS-27684-8 (12-gal)	1	Lid at middle	1 pass	1.000-in. dent
	1	Side at seam	1 pass	0.562-in. dent
MS-27683-7 (30-gal)	1	Lid at middle	1 pass	1.000-in. dent
	1	Side at seam	1 pass	0.562-in. dent
MS-27683-13 (45-gal)	1	Lid at middle	1 pass	0.125-in. dent
	1	Side at seam	1 pass	0.125-in. dent
MS-27683-21 (85-gal)	Not tested	--	--	Pass, based on test data shown for drums of lesser gauge and size.

Table D-30. Penetration Test Results for Steel Drums. (3 pages total)

Specific packaging	Test/analysis results: No. tested	Location	Results	Comments
		PACKAGING SPECIALTIES SQUARE STEEL DRUMS		
Style 1A	1	Center of cover	1 pass	Only effect was a dent of approximately 0.25 in.
	1	Center of bung	1 pass	Only effect was a dent of approximately 0.25 in.
Style 1B	1	Center of cover	1 pass	Only effect was a dent of approximately 0.25 in.
	1	Center of bung	1 pass	Only effect was a minor scrape (no dent)
Style 2	1	Center of cover	1 pass	Only effect was a dent of approximately 0.0625 in.
	1	Center of bung	1 pass	Only effect was a minor scrape (no dent)
	1	On lug closure	1 pass	No effect
Style 3	1	Center of cover	1 pass	Only effect was a dent of approximately 0.25 in.
	1	Center of bung	1 pass	No effect
	1	On lug closure	1 pass	No effect

[a]Nucfil is a trademark of Nuclear Filter Technology, Inc.

y DOT = U.S. Department of Transportation
HDPE = High-density polyethylene
MS = Military specifications
-- = Not applicable.

Table D-31. Penetration Test Results for Steel Boxes. (5 pages total)

Specific packaging	Test/analysis results: No. tested	Location	Results	Comments
Capital Industries				
S-0510-0823	1	Middle top	Pass	In all cases below, including the filter test, the only effect was a minor dent. This is expected based on materials of construction and comparative testing of lesser gauge materials.
V-0510-0823	1	Center of filter	Pass	
S-0840-1440	1	Middle top	Pass	
S-0730-1006	1	Middle top	Pass	
S-0730-0846	Not tested	--	Pass	Evaluated by analysis and comparison (lid, lid reinforcing angle, bolt size, bolt spacing, container flange, and materials) to packaging S-0730-1006, which was tested and evaluated. All materials and methods of construction were equal to or better than those of the tested packaging.
S-0480-0906	Not tested	--	Pass	Evaluated by analysis and comparison (lid, lid reinforcing angle, bolt size, bolt spacing, container flange, and materials) to packaging S-0510-0823, which was tested and evaluated. All materials and methods of construction were equal to or better than those of the tested packaging.
S-0450-0846	Not tested	--	Pass	Evaluated by analysis and comparison (lid, lid reinforcing angle, bolt size, bolt spacing, container flange, and materials) to packaging S-0580-0823, which was tested and evaluated. All materials and methods of construction were equal to or better than those of the tested packaging.

Table D-31. Penetration Test Results for Steel Boxes. (5 pages total)

Specific packaging	Test/analysis results: No. tested	Location	Results	Comments
S-0240-0906	Not tested	--	Pass	Evaluated by analysis and comparison (lid, lid reinforcing angle, bolt size, bolt spacing, container flange, and materials) to packaging S-0580-0823, which was tested and evaluated. All materials and methods of construction were equal to or better than those of the tested packaging.
S-0480-1736	Not tested	--	Pass	Evaluated by analysis and comparison (lid, lid reinforcing angle, bolt size, bolt spacing, container flange, and materials) to packaging S-0730-1006, which was tested and evaluated. All materials and methods of construction were equal to or better than those of the tested packaging.
Container Products Corp.				
B-12-44-4-S/L FD Drawing No. 01-3100-1-00 Rev. B	Not tested	--	Pass	Evaluated by analysis and comparison to packaging B-25-4-S/L FD, whose top is constructed of materials of equal thickness.
B-25-4-S/L FD Drawing No. 01-2800-1-00 Rev. C	1	Top Cover	Pass	Only effect was a minor dent.
B-52-4-S/L FD Drawing No. 04-1000-1-00 Rev. F	1	Top Cover	Pass	Only effect was a minor dent.
B-82-6-S/L FD Drawing No. 01-2300-1-00 Rev. D	1	Top cover	Pass	Only effect was a minor dent.
B-87-6-S/L FD Drawing No. 04-1300-1-00 Rev. B	Not tested	--	Pass	Evaluated by analysis and comparison to packaging B-96-6-S/L FD, whose top is constructed of materials of equal thickness.

Table D-31. Penetration Test Results for Steel Boxes. (5 pages total)

Specific packaging	Test/analysis results			Comments
	No. tested	Location	Results	
B-96-6-S/L FD Drawing No. 04-1200-1-00 Rev. 0	1	Top cover	Pass	Only effect was a minor dent.
B-96-8-S/L FD Drawing No. 04-1200-2-00 Rev. 0	1	Top cover	Pass	Only effect was a minor dent.
B-96-5-S/L FD Drawing No. 01-2101-1-00 Rev. 0	1	Top	Pass	Only effect was a minor dent.
B-96-5-S/L RA Drawing No. 01-1901-1-00 Rev. 0	Not tested	--	Pass	Evaluated by analysis and comparison to packaging B-96-5-S/L FD, whose top is constructed of materials of equal thickness.
B-96-5-RA-B Drawing No. 01-2201-1-01 Rev. 0	Not tested	--	Pass	Evaluated by analysis and comparison to packaging B-96-5-S/L FD, whose top is constructed of materials of equal thickness.
467-C-S/L FD Drawing No. 01-3700-1-00 Rev. C	1	Top cover	Pass	Only effect was a minor dent.

Table D-31. Penetration Test Results for Steel Boxes. (5 pages total)

Specific packaging	Test/analysis results: No. tested	Location	Results	Comments
RoGar Chemical and Nuclear Services				
Model R-1	Not tested	--	Pass	Evaluated by analysis and comparison (lid, lid reinforcing angle, bolt size, bolt spacing, container flange, and materials of construction) to test package (Model R-3). All materials and methods of construction were equal to or better than those of the tested packaging.
Model R-2	Not tested	--	Pass	Evaluated by analysis and comparison (lid, lid reinforcing angle, bolt size, bolt spacing, container flange, and materials of construction) to test package (Model R-3). All materials and methods of construction were equal to or better than those of the tested packaging.
Model R-3	1	Top cover	Pass	The only effect was a minor dent.
	1	Center of filter	Pass	The only effect was a minor dent.
Model R-4	Not tested	--	Pass	Evaluated by analysis and comparison (lid, lid reinforcing angle, bolt size, bolt spacing, container flange, and materials of construction) to test package (Model R-3). All materials and methods of construction were equal to or better than those of the tested packaging.
Rocky Flats SAND Box				
Style 1	1	Top	1 pass	Other than a minor dent, there was no damage in any instance.
	1	Side	1 pass	
	1	Filter	1 pass	

Table D-31. Penetration Test Results for Steel Boxes. (5 pages total)

Specific packaging	Test/analysis results: No. tested	Location	Results	Comments
Style 2	1	Top	1 pass	Other than a minor dent, there was no damage in any instance.
	1	Side	1 pass	
	1	Filter	1 pass	
Style 3	1	Top	1 pass	Other than a minor dent, there was no damage in any instance.
	1	Side	1 pass	
	1	Filter	1 pass	
Style 4	1	Top	1 pass	Other than a minor dent, there was no damage in any instance.
	1	Side	1 pass	
	1	Filter	1 pass	
ANL-E M-4 Bin	1	Top	1 pass	Other than a minor dent, there was no damage in any instance.
	1	Side	1 pass	
ANL-W 7A-960	1	Top	1 pass	Other than a minor dent, there was no damage in any instance.
TRUPACT-II - SWB	1	Center of cover	1 pass	There was no effect, not even a minor dent.
	1	Filter housing	1 pass	The filter housing was scuffed/scraped at the point of impact, but that was the only visible effect. An inspection with the ultraviolet light provided no indication of fluorescein.
ORNL Low-Level Waste Container Vented/Nonvented	1	Center of lid	1 pass	Slight indentation. Docket 89-04-7A

ANL-E = Argonne National Laboratory - East
ANL-W = Argonne National Laboratory - West
ORNL = Oak Ridge National Laboratory
SWB = Standard waste box
-- = Not applicable.

Table D-32. Penetration Test Results for Wooden Boxes. (6 pages total)

Specific packaging	Test/analysis results: No. tested	Location	Results	Comments
ANL-W				
7A-217	1	Top	1 pass	Only effect was a minor dent in each case.
7A-375	1	Top	1 pass	
7A-880	1	Top	1 pass	
7A-995	1	Top	1 pass	
7A-1315	1	Top	1 pass	
7A-670	1	Top	1 pass	
LLNL				
Flush panel	1	Top	1 pass	Only effect was a minor dent.
Mound - Configuration A				
MA-1	1	Top	1 pass	Only effect was a minor dent in each case.
	1	Side	1 pass	
MA-2	1	Top	1 pass	Only effect was a minor dent in each case.
	1	Side	1 pass	
MA-3	1	Top	1 pass	Only effect was a minor dent in each case.
	1	Side	1 pass	
MA-4	1	Top	1 pass	Only effect was a minor dent in each case.
	1	Side	1 pass	
Mound - Configuration B				
MB-1	Not tested	--	--	Pass, based on testing of boxes of similar materials and construction methods at weights in excess of those actually required.
MB-2	1	Bottom	1 pass	Only effect was a minor dent in each case. The bottom was chosen because it was still wet at the time.
	1	Side	1 pass	

Table D-32. Penetration Test Results for Wooden Boxes. (6 pages total)

Specific packaging	Test/analysis results: No. tested	Location	Results	Comments
MB-3	Not tested	--	--	Pass, based on testing of boxes of similar materials and construction methods at weights in excess of those actually required.
MB-4	Not tested	--	--	Pass, based on testing of boxes of similar materials and construction methods at weights in excess of those actually required.
MB-5	Not tested	--	--	Pass, based on testing of boxes of similar materials and construction methods at weights in excess of those actually required.
MB-6	1 1	Top Side	1 pass 1 pass	Only effect was a minor dent in each case.
Mound - Configuration C				
MC-1	1 1	Top Side	1 pass 1 pass	Only effect was a minor dent in each case.
MC-2	1 1	Top Side	1 pass 1 pass	Only effect was a minor dent in each case.
MC-3	1 1	Top Side	1 pass 1 pass	Only effect was a minor dent in each case.
MC-4	1 1	Top Side	1 pass 1 pass	Only effect was a minor dent in each case.
MC-5	1 1	Top Side	1 pass 1 pass	Only effect was a minor dent in each case.
Mound - Configuration D				
MD-1	Not tested	--	--	Pass, based on testing of boxes of similar materials and construction methods.
MD-2	Not tested	--	--	Pass, based on testing of boxes of similar materials and construction methods.

Table D-32. Penetration Test Results for Wooden Boxes. (6 pages total)

Specific packaging	Test/analysis results: No. tested	Location	Results	Comments
MD-3	Not tested	--	--	Pass, based on testing of boxes of similar materials and construction methods.
MD-4	Not tested	--	--	Pass, based on testing of boxes of similar materials and construction methods.
MD-5	Not tested	--	--	Pass, based on testing of boxes of similar materials and construction methods.
MD-6	Not tested	--	--	Pass, based on testing of boxes of similar materials and construction methods.
Mound - Configuration E				
ME-1	1	Top	1 pass	Only effect was a minor dent in each case.
	1	Side	1 pass	
ME-2	1	Top	1 pass	Only effect was a minor dent in each case.
	1	Side	1 pass	
ME-3	1	Top	1 pass	Only effect was a minor dent in each case.
	1	Side	1 pass	
NLO Family of Banded Wooden Boxes				
G-4214	1	Top	1 pass	Only effect was a minor dent in each case.
G-4245	1	Top	1 pass	Only effect was a minor dent in each case.
G-4255	1	Top	1 pass	Only effect was a minor dent in each case.
G-4273	1	Top	1 pass	Only effect was a minor dent in each case.
G-4292	1	Top	1 pass	Only effect was a minor dent in each case.

Table D-32. Penetration Test Results for Wooden Boxes. (6 pages total)

Specific packaging	Test/analysis results			Comments
	No. tested	Location	Results	
Y-12 Series B				
B-1	1 1	Top Side	1 pass 1 pass	All packages were water spray tested before testing. Only effect of the test was a minor dent in each case.
B-2	1 1	Top Side	1 pass 1 pass	All packages were water spray tested before testing. Only effect of the test was a minor dent in each case.
B-3	1 1	Top Side	1 pass 1 pass	All packages were water spray tested before testing. Only effect of the test was a minor dent in each case.
B-4	1 1	Top Side	1 pass 1 pass	All packages were water spray tested before testing. Only effect of the test was a minor dent in each case.
B-5	1 1	Top Side	1 pass 1 pass	All packages were water spray tested before testing. Only effect of the test was a minor dent in each case.
B-6	1 1	Top Side	1 pass 1 pass	All packages were water spray tested before testing. Only effect of the test was a minor dent in each case.
B-7	1 1	Top Side	1 pass 1 pass	All packages were water spray tested before testing. Only effect of the test was a minor dent in each case.
B-8	1 1	Top Side	1 pass 1 pass	All packages were water spray tested before testing. Only effect of the test was a minor dent in each case.

Table D-32. Penetration Test Results for Wooden Boxes. (6 pages total)

Specific packaging	Test/analysis results: No. tested	Location	Results	Comments
Y-12 Picture Frame				
PF-1	1 1	Top center Top edge	1 pass 1 pass	Only effect was a minor dent in each case.
PF-2	Not tested	--	--	Pass, based on testing of boxes of similar materials and construction methods.
PF-3	Not tested	--	--	Pass, based on testing of boxes of similar materials and construction methods.
PF-4	Not tested	--	--	Pass, based on testing of boxes of similar materials and construction methods.
PF-5	1 1	Top center Top edge	1 pass 1 pass	Only effect was a minor dent in each case.
PF-6	1 1	Top center top edge	1 pass 1 pass	Only effect was a minor dent in each case.
PF-7	Not tested	--	--	Pass, based on testing of boxes of similar materials and construction methods.
PF-8	Not tested	--	--	Pass, based on testing of boxes of similar materials and construction methods.
PF-10	1	Top center Top edge	1 pass 1 pass	Only effect was a minor dent.
Rocky Flats RA Series				
Configuration 1	1	Top	1 pass	Only effect was a minor dent in each case. Docket 89-01-7A
Configuration 2	1	Top	1 pass	
ORNL Y-12 C-Series				
C-1	1	Top	1 pass	Minor dent.
C-2	1	Top	1 pass	Minor dent.

Table D-32. Penetration Test Results for Wooden Boxes. (6 pages total)

Specific packaging	Test/analysis results: No. tested	Location	Results	Comments
C-3	1	Top	1 pass	Minor dent.
Y-12 C-280	1	Top center	Pass	Only effect was a 1/16-in. dent.
		Cover near latch	Pass	Only effect was a 1/4-in. dent.
		Right latch	Pass	Only effect was a minor dent. Latch did not loosen.
Y-12 C-400	1	Top center	Pass	Only effect was a 1/32-in. dent.
		Cover at latch	Pass	No effect.
		Side near latch	Pass	Only effect was a 1/16-in. dent.
		Side at latch	Pass	Only effect was a 1/8-in. dent.
Y-12 C-600	--	Engineering analysis (EA)	Pass	The test was not done because tests on similar packagings as shown above (C-280 and C-400) demonstrate that this test has very little effect and would pass this test since the materials and methods of construction are the same.
Y-12 C-1000	--	EA	Pass	Same as above (C-600). Docket 89-09-7A
WMCO Banded Wooden Boxes				
G-4214	1	Top	1 pass	Only effect was a minor imprint in lid.
G-4245	1	Top	1 pass	Minor indentation and slight cracking of lid.
G-4255	1	Top	1 pass	Only effect was a minor imprint in lid.
G-4273-5	1	Top	1 pass	Only effect was a minor imprint in lid.
G-4273-6	1	Top	1 pass	Only effect was a minor imprint in lid.
G-4292	1	Top	1 pass	Only effect was a minor imprint in lid.

ANL-W = Argonne National Laboratory - West
LLNL = Lawrence Livermore National Laboratory
NLO = National Lead Corporation
ORNL = Oak Ridge National Laboratory
WMCO = Westinghouse Materials Company of Ohio
-- = Not applicable.

Table D-33. Penetration Test Results for Fiberboard Containers. (2 pages total)

Specific packaging	Test/analysis results: No. tested	Location	Results	Comments
12B-65 Fiberboard Boxes				
1	1 1 1	Bottom Top Side	Pass Pass Pass	No penetration. Only effect was a minor dent in each case.
2	1	Side	Pass	No penetration.
3	Not tested	--	--	Pass, based on testing of boxes of similar materials and construction methods.
4	1 1	Top Side	Pass Pass	Penetration. Penetration.
5	1 1	Top Side	Pass Pass	No penetration. Only effect was a minor dent in each case.
6	1 1	Top Side	Pass Pass	Penetration. Penetration.
7	1 1	Top Side	Pass Pass	Penetration. Only effect was a minor dent in each case.
8	1 1	Top Side	Pass Pass	Penetration. Penetration.
9	1 1	Top Side	Pass Pass	No penetration. Only effect was a minor dent in each case.
10	1 1	Top Side	Pass Pass	Penetration. Only effect was a minor dent in each case.
11	Not tested	--	--	Pass, based on testing of boxes of similar materials and construction methods.
12	1 1	Top Side	Pass Pass	Penetration. Only effect was a minor dent in each case.

Table D-33. Penetration Test Results for Fiberboard Containers. (2 pages total)

Specific packaging	Test/analysis results: No. tested	Location	Results	Comments
12B-65 Fiberboard Boxes				
13	1	Top	Pass	No penetration on top. Penetration on side.
	1	Side	Pass	Only effect was a minor dent in each case.
12B-10 with inner metal can	1	Top	Pass	Bar made 0.5-in. dent in inner can in in each case. A leak check (air) of the can in each case demonstrated continued leak tightness.
		Side	Pass	
Tri-Wall Fiberboard Box				
	1	Top	Pass	Penetration.
	1	Side	Pass	Penetration.
21C Fiberboard Drums				
1	1	Top	Pass	No penetration in either case.
	1	Side	Pass	
2	1	Top	Pass	No penetration in either case.
	1	Side	Pass	
3	1	Top	Pass	No penetration in either case.
	1	Side	Pass	
4	1	Top	Pass	No penetration on top. Penetration on side.
	1	Side	Pass	
5	1	Top	Pass	No penetration on top. Penetration on side.
	1	Side	Pass	
6	1	Top	Pass	No penetration in either case.
	1	Side	Pass	

-- = Not applicable.

Table D-34. Penetration Test Results for UF_6 Cylinders.

Specific packaging	Test/analysis results
Model No.	
1S 2S 5A 8A 12A 12B 30A 30B 48G 48H 48HX 48X 48Y	Evaluated based on the materials and material thicknesses and by comparison to test data shown for much lesser thicknesses. This test would not have any effect (as verified by testing) on the sides of these cylinders. Testing was also conducted to demonstrate that this test, when conducted on the valve assembly/assembly cover, would also have no effect. Thus, all these cylinders meet this requirement.
Modified	
5A 5B	Two penetration impacts were performed on two test unit packages. Each resulted in only a slight impression. [Docket 89-08-7A]

Table D-35. Penetration Test Results for Liquid and Gas Packagings. (3 pages total)

Specific packaging	Test/analysis results: No. tested	Location	Results	Comments
Steel Drum MS-24347-7	--	--	--	Pass, based on test data shown on Table D-30.
LANL 12B-62 Fiberboard Box	1 1	Top Side	1 pass 1 pass	There was penetration in both tests, but the bar did not contact the inner container in either case.
LLNL Steel Drums with Gas Cylinders	--	--	--	Pass, based on test data shown on Table D-30.
ORNL Fiberboard Box - Liquids and Solids	1	Top (center)	1 pass	A nonpenetrating deformation of the wet cardboard box and a 0.55-in.-deep by 0.75-in.-diameter indentation in the top of the inner metal can.
ORNL Fiberboard Box - Gases	1	Top (center)	1 pass	A nonpenetrating deformation of the wet cardboard box and a 0.55-in.-deep by 0.75-in.-diameter indentation in the top of the inner can.
ORNL Fiberboard Box - Liquids and Solids	1	Top (center)	1 pass	A nonpenetrating deformation of the wet cardboard box and a 0.55-in.-deep by 0.75-in.-diameter indentation in the top of the inner metal can.
ORNL Wooden Box Returnable, Shielded	1	Top (center)	1 pass	Minor, nonpenetrating dent.

Table D-35. Penetration Test Results for Liquid and Gas Packagings. (3 pages total)

Specific packaging	Test/analysis results: No. tested	Location	Results	Comments
ORNL Gas Cylinder Returnable (Hoke Cylinders)				
HOH-50 HOXe-50 HOKr-50 HOH-150 HOXe-150 HOKr-150 HOH-300 HOKr-300 HOH-500 HPKr-500	1	Top (center of protective valve cap)	1 pass	This test was conducted on the HOKr 1000-mL cylinder (which is not listed), but the results can be used to evaluate the smaller packagings.
ORNL Gas Cylinder Returnable (J. L. Shephard)				
Cylinder 1 Cylinder 2 Cylinder 3	--	--	Pass	Evaluated based on testing conducted by ORNL, letter dated April 30, 1985, D. M. Ferren/ D. A. Edling.
LLNL Old Spec 55	2	Lid bolts	2 pass	No detectable effect other than a scratch.
ORNL TRU Shipping Container	1 1	Top Side	1 pass 1 pass	Only effect was a minor dent in each case.
FEMA Source Overpack	1	Top	1 pass	Only effect was a minor scratch.
LANL-2	1 1 1	Lid at Center Side at Seam Lid near closure ring	1 pass 1 pass 1 pass	0.125-in. dent 0.125-in. dent 0.055-in. dent

Table D-35. Penetration Test Results for Liquid and Gas Packagings. (3 pages total)

Specific packaging	Test/analysis results			Comments
	No. tested	Location	Results	
WHC Liquid Sample	1	Top	1 pass	Movement of surface inward was less than 1/2 in.
		Side	1 pass	Movement of surface inward was less than 5/8 in.
SRP Process Water Packaging	1	Top center	1 pass	No significant distortion.
RF Container Model	1	Top center	1 pass	Movement of surface inward was less than 1 in.
		Side	1 pass	Movement of surface inward was less than 1 in.

FEMA = Federal Emergency Management Agency
LANL = Los Alamos National Laboratory
LLNL = Lawrence Livermore National Laboratory
ORNL = Oak Ridge National Laboratory
RF = Rocky Flats
TRU = Transuranic
SRP = Savannah River Plant
WHC = Westinghouse Hanford Company
-- = Not applicable.

Table D-36. Penetration Test Results for Miscellaneous Packagings.

Specific packaging	Test/analysis results			Comments
	No. tested	Location	Results	
SNL Tritium Waste Package	--	--	--	Pass, based on test data shown on Table D-30.
LANL Aluminum Packaging (LANL-1)	1	Top of cover	Pass	There was no measurable dent.
	1	Flange	Pass	There was no measurable dent.
	1	Eyebolt	Pass	There was no measurable dent.
WIPP RH-TRU Canister	1	Top center	Pass	Slight depression.
	1	Side center	Pass	Slight depression. [Docket 89-03-7A]

LANL = Los Alamos National Laboratory
RH-TRU = Remotely handled transuranic
SNL = Sandia National Laboratory
WIPP = Waste Isolation Pilot Plant
-- = Not applicable.

APPENDIX E

U.S. DEPARTMENT OF TRANSPORTATION LETTER OF CONCURRENCE

This page intentionally left blank.

Figure E-1. U.S. Department of Transportation Letter of Concurrence.

U.S. Department
of Transportation

**Research and
Special Programs
Administration**

400 Seventh Street, S.W.
Washington, D.C. 20590

APR 21 1992

Michael E. Wangler, Director
Transportation and Packaging Safety Division
EH-33.3
U.S. Department of Energy
Washington, DC 20585

Dear Mr. Wangler:

This letter refers to your request for our review of the revision to your document entitled "Test and Evaluation Document for DOT Specification 7A Type A Packagings" DOE/DP/00052-H1. This document is intended to assist shippers in satisfying some of the requirements for documenting the results of testing of DOT Specification 7A packaging.

We have reviewed the subject document and concur with its purpose and contents. The document will provide DOE contractors and other radioactive materials shippers with information about the types of packaging components that can be used with various DOT specification packagings, the results of tests performed on the various packaging configurations, and quality control requirements for using the packagings. This information is essential for a program that offers a broad range of Type A packages for radioactive materials transported by a number of shippers.

We continue to concur with the restrictions that you place on using the document. Historically, some shippers have assumed that this type of document, as extracted or by itself, provides the complete documentation required by 49 CFR 173.415 for offering a Type A package for transportation. You emphasize that in addition to having this report, the shipper must also maintain documentation on other aspects of the shipment. These aspects include a comparison of the physical properties of the actual content of the package to those surrogate materials used for testing, and the implementation of a quality control program to ensure that package use complies with the applicable DOE and DOT requirements. This documentation is required for shippers to meet DOT requirements.

Thank you for the opportunity to review your document.

Sincerely,

Alan I. Roberts
Associate Administrator for
Hazardous Materials Safety

This page intentionally left blank.

DISTRIBUTION

Number of Copies

OFFSITE

1	U.S. Department of Energy-Headquarters DP-12 19901 Germantown Road Germantown, Maryland 20874 J. F. Leonard
1	U.S. Department of Energy-Headquarters DP22.5 GTN Washington, DC 20585 T. J. Dobry
1	U.S. Department of Energy-Headquarters DP-23, GTN Washington, DC 20585 M. H. Rao
1	U.S. Department of Energy-Headquarters DP-635, GTN Washington, DC 20585 D. Yates
1	U.S. Department of Energy-Headquarters DP 345.1, GTN Washington, DC 20585 J. Schvimmer
42	U.S. Department of Energy-Headquarters EH-33.3, GTN Washington, DC 20585 T. Needels F. G. Punch, Jr. M. E. Wangler (40)
3	U.S. Department of Energy-Headquarters NE-53, GTN Washington, DC 20585 V. Cassella (3)

DISTRIBUTION (cont.)

Number of Copies	
OFFSITE	
8	U.S. Department of Energy Albuquerque Operations Office P.O. Box 5400 Albuquerque, New Mexico 87115 K. Elliott K. Golliher R. F. Lucero W. C. Purchase D. Seamster E. M. Roybal S. A. Thompson D. Umshler
1	U.S. Department of Energy Amarillo Area Office P.O. Box 30020 Amarillo, Texas 79107 P. M. Ramey
1	U.S. Department of Energy Brookhaven Area Office Upton, New York 11973 M. Butler
1	U.S. Department of Energy CEBAF Site Office 12000 Jefferson Avenue Newport News, Virginia 23606 G. Fitzpatrick
3	U.S. Department of Energy Chicago Operations Office 9800 South Cass Avenue Argonne, Illinois 60439 R. Edler (2) M. Klimas

DISTRIBUTION (cont.)

Number of Copies	
OFFSITE	
1	U.S. Department of Energy Dayton Area Office P.O. Box 3000 Miamisburg, Ohio 45343 J. A. Morley
2	U.S. Department of Energy Grand Junction Project Office P.O. Box 2567 Grand Junction, Colorado 81502 R. E. Ivey M. K. Tucker
6	U.S. Department of Energy Idaho Operations Office 785 DOE Place Idaho Falls, Idaho 83401 J. H. Barry R. D. Hoffman M. Howard R. A. Long J. Martin D. R. Steffes
1	U.S. Department of Energy Kansas City Area Office P.O. Box 410202 Kansas City, Missouri 64141 E. W. Bean
1	U.S. Department of Energy Los Alamos Area Office P.O. Box 11 Los Alamos, New Mexico 87545 H. E. Valencia
1	U.S. Department of Energy Management Support Division P.O. Box 5400 Albuquerque, New Mexico 87115 A. Chersnoff

DISTRIBUTION (cont.)

Number of Copies	
OFFSITE	
1	U.S. Department of Energy New Brunswick Laboratory 9800 South Cass Avenue Argonne, Illinois 60439 N. Trahey
1	U.S. Department of Energy Oak Ridge Operations Office P.O. Box E Oak Ridge, Tennessee 37831 G. B. Brooks
1	U.S. Department of Energy Oak Ridge Operations Office P.O. Box 2001 Oak Ridge, Tennessee 37831 J. R. Russell
1	U.S. Department of Energy Oak Ridge Operations (EW-92) P.O. Box 2001 Oak Ridge, Tennessee 37831 M. E. Bennett
1	U.S. Department of Energy Oak Ridge Operations/Energy R&D P.O. Box 2008 Oak Ridge, Tennessee 37831 R. Collier

DISTRIBUTION (cont.)

Number of Copies	
OFFSITE	
8	U.S. Department of Energy Nevada Operations Office P.O. Box 98518 Las Vegas, Nevada 89193 J. R. Boland A. Colarusso R. Dye C. R. Hickman L. Krivanek J. W. LaComb D. T. Newman L. O'Neil
1	U.S. Department of Energy Pinellas Area Office P.O. Box 2908 Largo, Florida 34294 E. E. Patenaude
1	U.S. Department of Energy San Francisco Operations Office 1333 Broadway Oakland, California 94612 C. J. Dankowski
2	U.S. Department of Energy Savannah River Operations Office P.O. Box A Aiken, South Carolina 29801 G. W. May R. McLain
2	U.S. Department of Energy West Valley Project Office P.O. Box 191 West Valley, New York 14171 W. W. Bixby A. Yeazel

DISTRIBUTION (cont.)

Number of Copies	
OFFSITE	
1	U.S. Department of Energy 4821 Bel Pre Road Rockville, Maryland 20853 D. Smith
3	U.S. Department of Energy 12800 Middlebrook Rd. Germantown, Maryland 20874 L. G. Blalock (3)
1	AEC Limited Research Company Chalk River Nuclear Laboratories Chalk River Ontario, British Columbia R. J. Lesco
1	Alabama Power Company P.O. Drawer 470 Ashford, Alabama 36312 D. N. Morey
1	Alliant Techsystems, Inc. MN48-1450 7225 North Land Drive Brooklyn Park, Minnesota 55428 L. Zwiefelhofer
1	Alliant Techsystems, Inc. MN50-4110 5901 Lincoln Drive Edina, Minnesota 55436 M. Bohlen
1	Allied Signal Kansas City Division 2000 East 95th Street/P.O. Box 419159 Kansas City, Missouri 64141 A. G. Rittle

DISTRIBUTION (cont.)

Number of Copies

OFFSITE

1	Ames Laboratory Iowa State University Ames, Iowa 50011 R. Staggs
1	Analysas Corporation 55 Jefferson Circle/Room 113 Oak Ridge, Tennessee 37830 J. A. Lamb
1	Analysas Corporation 300 South Tulane Avenue Oak Ridge, Tennessee 37830 B. J. Turner
4	Argonne National Laboratory-East 9700 South Cass Avenue Argonne, Illinois 60439 K. Gablin E. Kwirant I. Phillips G. Popper
1	Argonne National Laboratory-West P.O. Box 2528 Idaho Falls, Idaho 83401 J. S. Molan
1	Arizona Radiation Regulatory Agency 4814 South 40th Street Phoenix, Arizona 85040 J. Geringer
1	Atlas Wireline Services P.O. Box 1407 Houston, Texas 77251 E. Mott

DISTRIBUTION (cont.)

Number of Copies

OFFSITE

1	Atomergic - Chemietals 222 Sherwood Avenue Farmingdale, New York 11735 M. Hollander
1	A.W.C. Lockhead 5335 West Tropicana Avenue-Ste Las Vegas, Nevada 89103 G. G. Eadie
1	Babcock & Wilcox, NNFD-RL P.O. Box 11165 Lynchburg, Virginia 24560 K. D. Long
1	Battelle - Columbus Division 505 King Avenue Columbus, Ohio 43201 T. Emswiler
1	Battelle Northwest Laboratory Safety P.O. Box 999 Richland, Washington 99352 J. M. Taylor
1	Bioenvironmental Engineering Service Base Radiation Safety Officer SA-ALC/EHB Kelly Air Force Base, Texas 78241 L. M. Maulden
1	Boeing Aerospace Company 9L-14 P.O. Box 3999 Seattle, Washington 98124 V. F. Simmons

DISTRIBUTION (cont.)

Number of Copies

OFFSITE

1	Boeing Petroleum Services EF-44 850 South Clearview Parkway New Orleans, Louisiana 11023 L. Sapia
1	Boston Edison Company Pilgrim Nuclear Power Station RFD #1 Rocky Hill Road Plymouth, Massachusetts 02360 R. L. Schular
1	Brainard Associates 5381 Brainard Road Solon, Ohio 44139 J. D. Greaves
3	Brookhaven National Laboratory Upton, New York 11973 K. Dahms P. Kwashyn R. Hannel
1	CDM Federal Program Corporation 1900 The Exchange NW-Suite 415 Atlanta, Georgia 30339 K. Finder
1	John Cece 7004 Kepner Court Lanham, Maryland 20716
1	CH2M Hill 599 Oak Ridge Turnpike Oak Ridge, Tennessee 37830 P. Scofield

DISTRIBUTION (cont.)

Number of Copies

OFFSITE

1	Chemical Nuclear Systems, Inc. Regional Marketing 135 Parking Drive Avon, Connecticut 06001 M. H. Kirsche
1	Consumers Power Company Palisades Nuclear Power Plant 22780 Blue Star Highway South Haven, Michigan 49090 M. L. Grogan
1	Container Products Corporation P.O. Box 91068 Portland, Oregon 97291 G. S. Kasler
1	Data Management Nuclear Metals, Inc. 2229 Main Street Concord, Massachusetts 01742 T. Carpenito
1	Data Measurement Corporation P.O. Box 490 Gaithersburg, Maryland 20884 C. Burnett
1	Decommissioning Section Central Elec. General Board Barnett Wy-Barnwood-Gloucester GL4 7RS England G. Holt
1	Department of the Air Force HQ Sacramento Air Logistics Center McLellan Air Force Base, California 95652 J. K. Ching

DISTRIBUTION (cont.)

Number of Copies

OFFSITE

1	Department of the Air Force Office of Environmental Management HQ 2750th Air Base Wing (AFLC) Wright-Patterson Air Force Base, Ohio 45433 M. Mays
1	Diversified Scientific Services P.O. Box 863 Kingston, Tennessee 37763 J. T. McVey
1	Ecotek, LSI 3342 International Park Drive SE Atlanta, Georgia 30316 L. Bishop
1	EG&G P.O. Box 1912 Las Vegas, Nevada 89125 A. Mott
4	EG&G Applied Technologies Mound Plant P.O. Box 3000 Miamisburg, Ohio 45343 J. Bayne H. Coleman J. Crawford D. A. Edling
1	EG&G Energy Measurements Amador Valley Operations P.O. Box 9051 Pleasanton, California 94566 J. Forte

DISTRIBUTION (cont.)

Number of Copies	
OFFSITE	
1	EG&G Energy Measurements Kirtland Operations P.O. Box 4339 Station A Albuquerque, New Mexico 87196 J. Fletcher
4	EG&G Energy Measurements Las Vegas Area Operations P.O. Box 1912 Las Vegas, Nevada 89125 D. McNeely, III (4)
1	EG&G Energy Measurements Los Alamos Operations P.O. Box 809 Los Alamos, New Mexico 87544 G. McDonald
2	EG&G Energy Measurements Washington Aerial Measurement Division P.O. Box 380 Suitland, Maryland 20752 S. Jones T. Wiard
1	EG&G Energy Measurements 19 Wheeling Road Woburn, Massachusetts 1801 V. George
8	EG&G Idaho/INEL P.O. Box 1625 Idaho Falls, Idaho 83415 A. Anselmo B. Barry B. Berry M. Geisler S. Keating H. Orme A. Rogers R. Wasson

DISTRIBUTION (cont.)

Number of Copies

OFFSITE

3	EG&G Rocky Flats Plant P.O. Box 464, Building 111 Golden, Colorado 80402 F. Adcock D. Kreig R. R. Riddle
2	EG&G Washington Analytical Service Center, Inc. P.O. Box 880 Morgantown, West Virginia 26505 D. Bellay G. Cox
1	Electro-Panel 10629 Dutchtown Road Knoxville, Tennessee 37932 J. Rizzie
1	ENICO 1955 Freemon Avenue/P.O. Box 2800 Idaho Falls, Idaho 83403 D. J. Sorenson
1	ENPAC Corporation 8400 Baymeadows Way/Building 18 Jacksonville, Florida 32256 C. Hilty
1	Envirosphere Company 10900 NE 8th Street Bellevue, Washington 98004 T. M. Wagner
1	FBF Nuclear Containers 1201 Hilton Road Knoxville, Tennessee 37921 H. Stringfield

DISTRIBUTION (cont.)

Number of Copies	
OFFSITE	
2	Fermi National Accelerator Laboratory P.O. Box 500 Batavia, Illinois 60510 C. Weissart C. Zonick
1	Florida Power and Light P.O. Box 14000 Juno Beach, Florida 33408 P. Stoner
1	Fuel Services, Inc. Decommissioning Project-Pu Nuclear 205 Banner Hill Road Erwin, Tennessee 37650 J. E. Kirkpatrick
1	GA Technologies, Inc. Fuel Fabrication Division P.O. Box 85605 San Diego, California 92138 R. Noren
1	Gem City Packaging and Manufacturing 6209 Germantown Road Middletown, Ohio 45042 D. Fox
1	General Electric-Aerospace Division Neutron Devices Department MS 035 P.O. Box 2908 Largo, Florida 34649 O. George
1	General Electric Company Knolls Atomic Power Laboratory P.O. Box 1072 Schenectady, New York 12301 R. Cappola

DISTRIBUTION (cont.)

Number of Copies

OFFSITE

1	George Washington University Radiation Safety Officer 2300 Eye Street, N.W. Washington, DC 20037 J. A. Johnson
1	Georgia-Pacific Corporation 4600 Northeast Expressway Doraville, Georgia 30340 K. E. Ewing
1	Georgia Power Company P.O. Box 439 Baxley, Georgia 31513 J. Reddick
2	Gregory Environmental Systems Box 2308 Carlsbad, New Mexico 88220 M. Caviness L. Gregory
1	Greif Bros. Corporation East Coast Division P.O. Box 799 Chester, Pennsylvania 19016 C. W. Thomas, Jr.
1	Holmes & Narver, Inc. P.O. Box 29939 Honolulu, Hawaii 96853 B. Johnson
1	HQ AFLC/DST2T (W. Assink)Af Evaluation Activity Building 70, Area C Wright-Patterson Air Force Base, Ohio 45433 C. P. Edmonson

DISTRIBUTION (cont.)

Number of Copies	
OFFSITE	
1	Idaho Radiation Control Program Senior Radiation Physict 1410 North Hilton Boise, Idaho 83706 M. Mays
1	Illinois Department of Nuclear Safety 800 Roosevelt Road-Suite 200 Glen Ellyn, Illinois 60137 A. Gulczynski
1	Inhalation Tox. Res. Institution P.O. Box 5890 Albuquerque, New Mexico 87185 J. J. Thompson
1	R. J. Jackson, Consultant 309 Catskill Richland, Washington 99352
1	Jacobs Engineering 7295 Highway 94 South Saint Charles, Missouri 63303 N. Horton
4	Lawrence Berkeley Laboratory One Cyclotron Road Berkeley, California 94720 R. Kloepping P. G. Marshall G. J. Moore D. Saucer
1	Lawrence Livermore National Laboratory L-347 Building 233 Livermore, California 94550 M. Tandy

DISTRIBUTION (cont.)

Number of Copies

OFFSITE

1	Lawrence Livermore National Laboratory L-515 Building 411 Livermore, California 94550 S. Hunt
1	Lawrence Livermore National Laboratory L-520 Building 419 Livermore, California 94550 M. Hays
1	Lawrence Livermore National Laboratory P.O. Box 45 Mercury, Nevada 89023 W. Hyatt
2	Lawrence Livermore National Laboratory University of California P.O. Box 808 (L-515) Livermore, California 94550 D. Barrett S. Shoemaker
2	Los Alamos National Laboratory G-726 P.O. Box 1663 Los Alamos, New Mexico 87545 S. A. Dalton N. King, Jr.
1	Los Alamos National Laboratory Nevada Test Site P.O. Box 0 Mercury, Nevada 89023 T. B. Williamson

DISTRIBUTION (cont.)

Number of Copies	
OFFSITE	
1	Los Alamos National Laboratory University of California P.O. Box 990 Los Alamos, New Mexico 87545 D. McCollum
1	Lovelace Biomedical and Environmental Research Institute P.O. Box 5890 Albuquerque, New Mexico 87115 P. Kaplan
1	Mare Island Naval Shipyard Shipyard Technical Library Code 202.13 T4/483 Vallejo, California 94592 J. Edwards
1	Martin Marietta Energy Systems Building C-102 T6 P.O. Box 1410 Paducah, Kentucky 42001 B. K. Hook
5	Martin Marietta Energy Systems Oak Ridge National Laboratory P.O. Box X Oak Ridge, Tennessee 37831 K. W. Haff M. E. McCormack C. L. Ottinger J. Ratledge L. B. Shappert

DISTRIBUTION (cont.)

Number of Copies

OFFSITE

5	Martin Marietta Energy Systems Oak Ridge Gaseous Diffusion Plant P.O. Box 2003 Oak Ridge, Tennessee 37831 C. Barlow M. Childs R. F. Holdaway H. Nennsirel J. R. Rutherford
9	Martin Marietta Energy Systems Oak Ridge National Laboratory P.O. Box 2008 Oak Ridge, Tennessee 37831 R. Bieniek C. W. Cross M. Q. Kosier S. D. Moses R. R. Rawl W. A. Shunk G. W. Stout E. Stumpl R. M. Walker
2	Martin Marietta Energy Systems P.O. Box 2009 Oak Ridge, Tennessee 37830 G. Turner R. D. Yarborough
3	Martin Marietta Energy Systems Paducah Gaseous Diffusion Plant P.O. Box 1410 Paducah, Kentucky 42001 P. Gourieux M. Maline R. I. Reynolds

DISTRIBUTION (cont.)

Number of Copies

OFFSITE

4	Martin Marietta Energy Systems Portsmouth Gaseous Diffusion Plant P.O. Box 628 Piketon, Ohio 45661 R. A. Boelens F. Kovac D. L. McCarty L. Williams
4	Martin Marietta Energy Systems Y-12 Plant P.O. Box Y Oak Ridge, Tennessee 37831 J. Copeland C. L. Ford, Jr. R. G. Taylor J. N. Underwood
1	Martin Marietta Energy Systems Y-12 Plant, Building 8098 Building 9116 Oak Ridge, Tennessee 37830 J. Radle
3	Mason & Hanger Silas Mason Company, Inc. P.O. Box 30020 Amarillo, Texas 79177 A. Jurado W. C. Skipworth D. Whitson
1	Michigan State University ORCBS C-124/Research Complex Engr E. Lansing, Michigan 48824 M. Mitchell
1	Mirax Chemical Production Corporation 4999 Fyler Avenue St. Louis, Missouri 63139 O. Clerk

DISTRIBUTION (cont.)

Number of Copies

OFFSITE

1	Mitsui & Company (USA), Inc. 200 Park Avenue New York, New York 10166 M. Ikeda
1	MM&S, Inc. P.O. Box 2003 Oak Ridge, Tennessee 37831 R. Stachowiak
1	Morgantown Energy Technology Center P.O. Box 880 3610 Collins Ferry Morgantown, West Virginia 26505 M. Adams
1	MSE, Inc. P.O. Box 3767 Butte, Montana 59702 A. Christensen
1	Naval Sea Systems Command WEA05M3 Washington, DC 20362 Mr. Bosford
1	The NDL Organization, Inc. P.O. Box 791 Peekskill, New York 10566 P. Pastorelle
1	North Anna Power Station Health Physics P.O. Box 402 Mineral, Virginia 23117 D. M. Ross

DISTRIBUTION (cont.)

Number of Copies

OFFSITE

1	Nuclear Fuel Services, Inc. Criticality and Licensing 205 Banner Hill Road Erwin, Tennessee 37650 R. P. Droke
3	Oak Ridge Associated University P.O. Box 117, Badger Avenue Oak Ridge, Tennessee 37831 J. W. Arendt E. B. Darden, Jr. L. O'Barr
1	Occupational Health Services P.O. Box 1912 Las Vegas, Nevada 89125 P. C. Murphy
1	Office of Environmental Health and Safety 18111 Nordhoff Street-EH&S Northridge, California 91330 J. S. Mueller
1	Packaging Specialties 9520 Richmond Avenue Cleveland, Ohio 44105 R. Syme
1	Pacific Nuclear Systems 1010 S. 336th Federal Way, Washington 98003 C.J. Temus
1	Pactech 11655 SE 50th Place Bellevue, Washington 98006 R. T. Haelsig

DISTRIBUTION (cont.)

Number of Copies

OFFSITE

2	PAI Corporation 116 Miland Way Oak Ridge, Tennessee 37830 S. Brown W. A. Pryor
2	Pan Am Johnson Control P.O. Box 587 Oak Ridge, Tennessee 37813 R. Long S. Nally
1	Pantex Plant P.O. Box 30020 Amarillo, Texas 79177 B. Rogers
1	Pennsylvania Power and Light Company Two North Ninth Street Building A1-2 Allentown, Pennsylvania 18101 R. Stigers
2	Pittsburgh Energy Technology Center P.O. Box 10940 Pittsburgh, Pennsylvania 15236 R. Price J. L. Sitar
1	Pittsburgh Naval Reactors Transportation Office P.O. Box 109 West Mifflin, Pennsylvania 15122 R. P. English
2	Princeton Plasma Physics Laboratory P.O. Box 451 Princeton, New Jersey 08540 J. Stencel F. Tulipano

DISTRIBUTION (cont.)

Number of Copies

OFFSITE

1	Princeton University Plasma Physics Laboratory Route #1-Forrestal Campus Princeton, New Jersey 08540 J. Siminoff
1	Public Service of Colorado 16805 Weld County Road 19 and 1/2 Plattville, Colorado 80651 C. Cummin
1	R/A Services, Inc. P.O. Box 13327 Odessa, Texas 79768 D. Hicks
1	Radiation Protection Management Service 6027 West Roscoe Street Chicago, Illinois 60634 D. Derenzo
1	Radiation Safety Office 1412 Blockley Hall 418 Service Drive Philadelphia, Pennsylvania 19104 J. F. Kane
1	Raytheon 1050 East Flamingo P.O. Box 95487 Las Vegas, Nevada 89193 H. Jacocks
3	REECO P.O. Box 9821 Las Vegas, Nevada 89193 A. K. Fowkes E. W. Kendall C. E. Rosenberry

DISTRIBUTION (cont.)

Number of Copies

OFFSITE

1	Remedial Action Project 7295 Highway 94 South St. Charles, Missouri 63303 J. H. McCracken
1	Reynolds, Electrical and Engineering Company, Inc. 2501 Wyandotte Avenue/P.O. Box 98521 Las Vegas, Nevada 89193 M. Janelli
3	RMI Company Extrusion Plant P.O. Box 579 Ashtabula, Ohio 44004 R. Niemela F. G. VanLoocke F. Willis
1	Rochester Gas and Electric GINNA Nuclear Power Plant 1503 Lake Road Ontario, New York 14519 F. Mis
2	Rockwell International Corporation Idaho National Engineering Laboratory P.O. Box 1469 Idaho Falls, Idaho 83403 R. Murdock D. Ross
3	Rockwell International Corporation Rocketdyne Division 6633 Cangoa Avenue Canoga Park, California 91303 R. Dillon P. H. Horton J. Kucinskas

DISTRIBUTION (cont.)

Number of Copies	
OFFSITE	
1	Rogers & Associates Engineering Corporation P.O. Box 330 Salt Lake City, Utah 84110 D. E. Bernhardt
1	Ross Aviation, Inc. P.O. Box 9124 Albuquerque, New Mexico 87119 E. Carr
1	Roy F. Weston 955 L'Enfant Plaza SW-8th Fl. Washington, DC 20024 R. E. Hahn
3	Sandia National Laboratories P.O. Box 5800 Albuquerque, New Mexico 87119 F. Gallegos P. Padilla P. D. Yourick
2	Sandia National Laboratories 7011 East Avenue Livermore, California 94550 G. Miranda D. Wagner
1	Savannah River Operations Office P.O. Box A Aiken, South Carolina 29801 R. McClain
1	SBDC-WSU St. University Building SOMSEN 101 Winona, Minnesota 55987 D. Poffenberger

DISTRIBUTION (cont.)

Number of Copies

OFFSITE

2	Schenectady Naval Reactors P.O. Box 1069 Schenectady, New York 12301 T. A. Bisnett J. Pescosolido
1	Science Applications International Corporation 800 Oak Ridge Turnpike P.O. Box 2501 Oak Ridge, Tennessee 37830 A. Rymer
1	Sequoyah Fuels Corporation P.O. Box 610 Gore, Oklahoma 74435 R. Miller
1	Services Inc. Traver Road-P.O. Box 388/Road 1 Pleasant Valley, New York 12569 A. H. Jones
1	Skolnik Industries, Inc. 4900 South Kilbourn Avenue Chicago, Illinois 60632 H. B. Skolnik
1	Social & Scientific Systems Suite 210 20030 Century Boulevard Germantown, Maryland 20874 A. E. Wiles
1	Solar Energy Research Institute 1617 Cole Boulevard Golden, Colorado 80401 B. Boehler

DISTRIBUTION (cont.)

Number of Copies

OFFSITE

1	Southwest Research Institute Division 17 6211 Culebra San Antonio, Texas 78284 C. Barrera
1	Stanford Linear Accelerator Center Stanford University P.O. Box 4349 Stanford, California 94305 R. A. Fuendeling
1	Sterling Drug, Inc. 9 Great Valley Parkway Malvern, Pennsylvania 19355 P. W. Wilson
1	Super Conductor Super Collider Laboratory 2550 Becklemead Avenue Dallas, Texas 75237 C. Williamson
1	System Energy Resources, Inc. Grand Gulf Nuclear Station P.O. Box 756 Port Gibson, Mississippi 39150 T. O. Hildebrandt
1	System Energy Resources, Inc. Radiological and Environmental Services P.O. Box 31995 Jackson, Mississippi 39286 R. R. Jackson
1	TNO Center for Polymeric Material P.O. Box 71, 2600 AB Delft Netherlands T. Schilperoord

DISTRIBUTION (cont.)

Number of Copies

OFFSITE

1	Toledo/Edison Company 300 Madison Avenue Toledo, Ohio 43652 B. L. Geddes
1	Tri-State Motor Transit P.O. Box 113 Joplin, Missouri 64802 E. Rutenkroger
1	Trojan Nuclear Plant 71760 Columbia River Highway Ranier, Oregon 97048 L. D. Larson
1	UCLA Radiation Safety Office 10833 Le Conte Vanue Los Angeles, California 90024 R. C. Crott
2	UNC-Geotech P.O. Box 14000 Grand Junction, Colorado 81502 E. Craft M. Sandvig
1	University of Illinois Nuclear Engineering Department 103 South Goodwin Avenue Urbana, Illinois 61801 N. M. Barss
1	University of Illinois Reactor Operations 103 South Goodwin Avenue Urbana, Illinois 61801 C. S. Pohlod

DISTRIBUTION (cont.)

Number of Copies

OFFSITE

1	University of Miami Radiation Control Officer R-61 P.O. Box 016960 Miami, Florida 33101 J. Owens
1	University of Minnesota Borton Health Services W-168 Aid Church Street, SE Minneapolis, Minnesota 55455 J. W. Staiger
1	University of Nevada Systems Radiation Safety Office P.O. Box 60220 Reno, Nevada 89506 A. K. Bhuiya
1	University of North Carolina Health and Safety Office 212 Finley Road Chapel Hill, North Carolina 27514 B. Wilson
1	University of Pennsylvania Radiation Safety Office 1412 Blockley Hall/418 Service Drive Philadelphia, Pennsylvania 19104 P. W. Wilson
1	University of Tennessee Space Institute Tullahoma, Tennessee 37388 L. Stricklin

DISTRIBUTION (cont.)

Number of Copies

OFFSITE

1	University of Texas at Austin 10100 Burnet Road Austin, Texas 78758 R. C. Woodward
1	U.S. Army White Sands Missile Radiation Protection Office STEWS STEWS-RP White Sands MR, New Mexico 88002 Commander
1	U.S. Department of Agriculture Agricultural Research Staff Beltsville, Maryland 20705 R. D. Jarrett
1	U.S. Department of Transportation DHM-21 400 7th Street, SW Washington, DC 20590 G. Brown
1	U.S. Department of Transportation RSPA/OHMT/OE DHM42.2400 7th Street Washington, DC 20590 K. Blackwell
2	U.S. Nuclear Regulatory Commission Washington, DC 20555 E. Easton A. W. Grella
1	Veterans Administration Medical Center 150 Muir Road Martinez, California 94553 J. A. Bryan

DISTRIBUTION (cont.)

Number of Copies	
OFFSITE	
1	Wah Chang Albany Corporation Library P.O. Box 460 Albany, Oregon 97321 M. E. Hancock
1	Waste Containment System 4659 Lakewood Street Pleasanton, California 94566 W. Cromwell
1	West Valley Demolition Project P.O. Box 191 West Valley, New York 14171 L. Keefe
2	Western Area Power Administration P.O. Box 3402 Golden, Colorado 80401 D. Buck A. Nikolas
2	Westinghouse Idaho Nuclear Company, Inc. P.O. Box 4000 Idaho Falls, Idaho 83403 W. C. Olsen R. Smith
2	Westinghouse Electric Corporation Bettis Atomic Power Laboratory P.O. Box 79 West Mifflin, Pennsylvania 15122 L. Laude G. Leighty
1	Westinghouse Electric Corporation Hazardous Materials Evaluation W. Bldg./Gateway Center Pittsburgh, Pennsylvania 15222 R. J. Wengrzyn

DISTRIBUTION (cont.)

Number of Copies

OFFSITE

2	Westinghouse Electric Corporation Naval Reactor Facility P.O. Box 2068 Idaho Falls, Idaho 83403 W. D. Kimball K. Nelson
1	Westinghouse Electric Corporation Nuclear Waste Department P.O. Box 3912 Pittsburgh, Pennsylvania 15230 R. M. Mellow
3	Westinghouse Electric Corporation Waste Isolation Pilot Plant (WIPP) P.O. Box 2078 Carlsbad, New Mexico 88220 W. R. Chiquelin J. Weaver J. Winkel
1	Westinghouse Energy Systems Inc. Rue De Stalle, 73 B-1180 Brussells, Belgium F. Nuhaan
3	Westinghouse Savannah River Company Building 713-A Aiken, South Carolina 29808 H. Brinke S. O'Rear T. W. Wilson
2	Westinghouse Savannah River Company 730-A P.O. Box A Aiken, South Carolina 29808 J. M. Ferrell M. N. Van Alstine

DISTRIBUTION (cont.)

Number of Copies		
OFFSITE		
2	Westinghouse Savannah River Company P.O. Box 616 Aiken, South Carolina 29802	
	B. Maurer E. Opperman	
2	Westinghouse Materials Company of Ohio P.O. Box 398704 Cincinnati, Ohio 45239	
	C. E. Block R. Fitzgerald	
1	Westinghouse/WVNS Rocksprings Road West Valley, New York 14171	
	J. Hollinden	
1	WINCO P.O. Box 2068 Idaho Falls, Idaho 83403	
	B. Skinner	
ONSITE		
1	U.S. Department of Energy, Richland Field Office	
	R. F. Jarrell	A6-80
2	Pacific Northwest Laboratory	
	J. M. Taylor	P7-68
	PNL Technical Files	K1-11

DISTRIBUTION (cont.)

Number of Copies

ONSITE

34 Westinghouse Hanford Company

J. M. Bishop	L6-26
V. L. Blanchard	N3-11
H. Brager	L5-65
J. R. Cooper	R3-10
J. M. Cruse (3)	G2-02
J. G. Field	G2-02
R. P. Genoni	G2-02
C. D. Hansen	G2-02
J. H. Hummer	G2-02
D. R. Kibbe	R2-82
J. C. Krogness	N1-42
E. J. Manthos	T5-54
D. L. McCall	G2-02
J. H. O'Brien (5)	G2-02
L. E. Rice	G2-02
M. Serkowski	S6-70
S. Skvarek	S0-04
D. W. Smith	L6-35
W. Thompson	S0-04
J. W. Thornton	G2-03
E. F. Votaw	G2-02
M. V. Weber	G2-02
Public Reading Room (2)	A1-65
Document Processing and Distribution (2)	L8-15
Central Files	L8-04
Information Release Adminstration	L8-07

This page intentionally left blank.

U.S. GOVENRMENT PRINTING OFFICE: 1992 - 695-097/63071