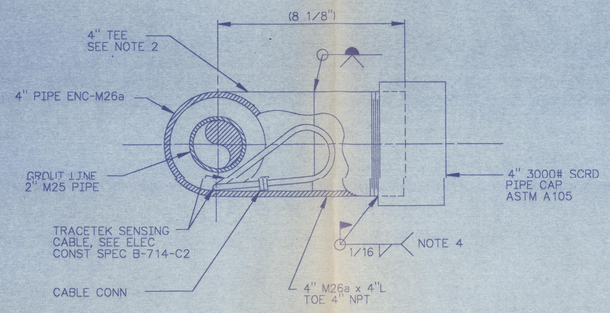

SECTION (A) H-2-77596, H-2-77611 SH1 & 2
SCALE: 3/8" = 1"

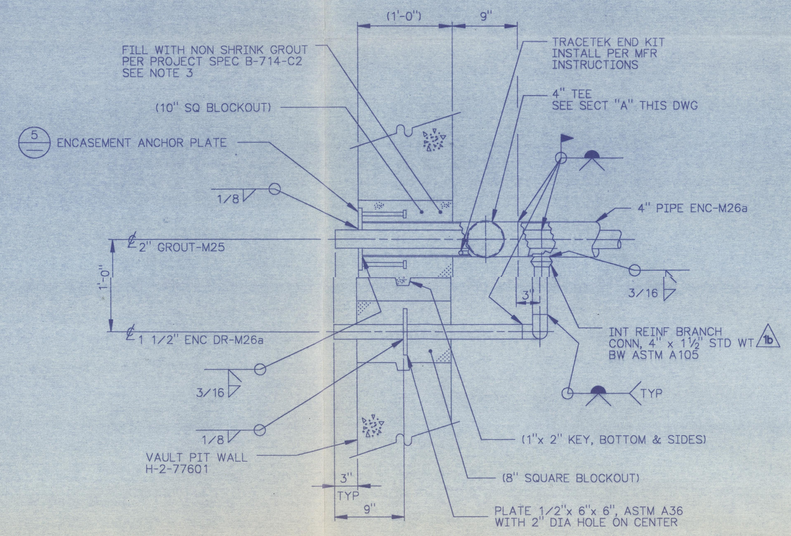

DETAIL (8) H-2-77601
SCALE:1 1/2"=1'-0"

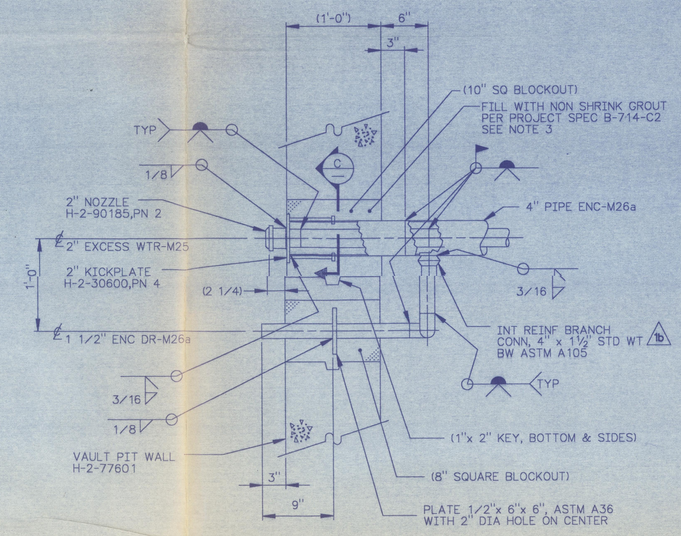

DETAIL (11) H-2-77601 & H-2-77612
SCALE:1 1/2"=1'-0"

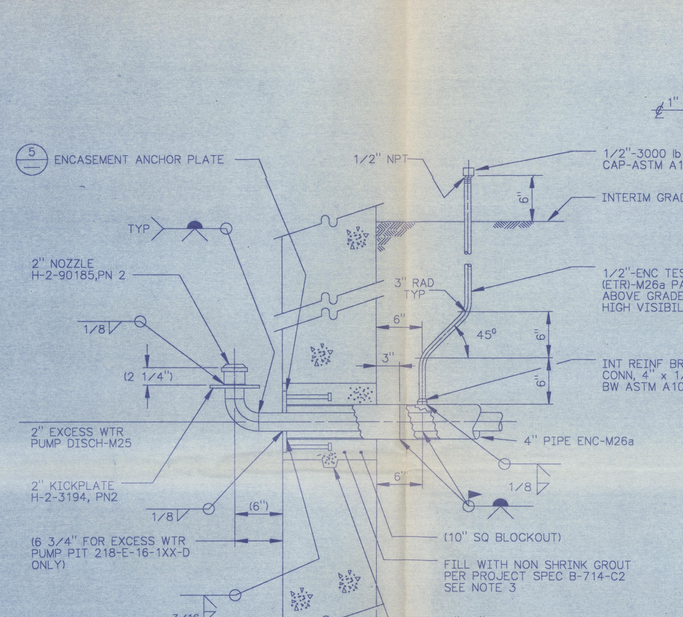

DETAIL (7) H-2-77601
H-2-77602 SH1 & 2
SCALE:1 1/2"=1'-0"

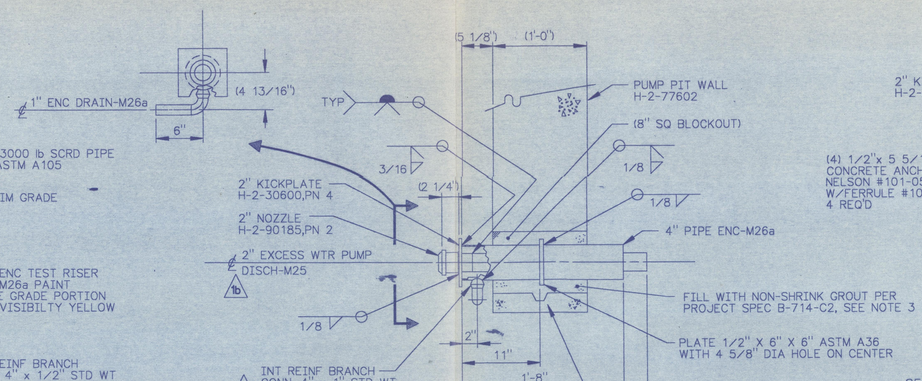

DETAIL (10) H-2-77602, SH 2 (1c)
SCALE:NONE

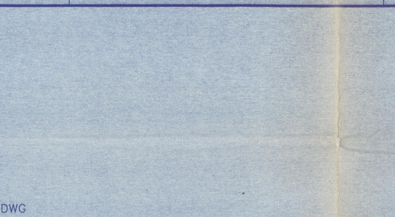

SECT C-C
SCALE:3"=1'-0"

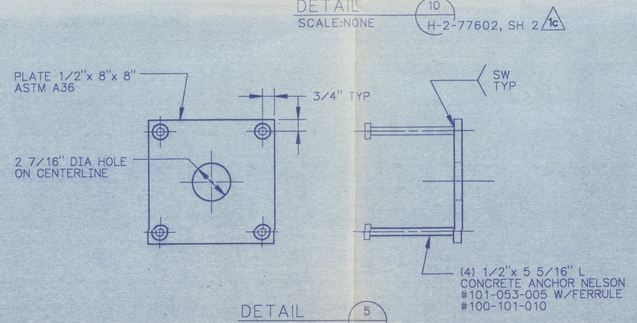

DETAIL (5)
SCALE:NONE

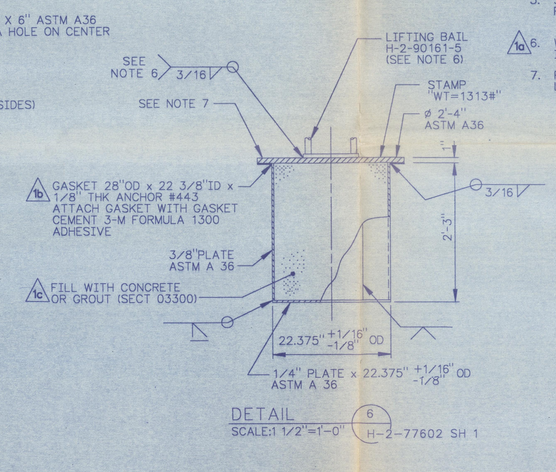

DETAIL (6) H-2-77602 SH 1
SCALE:1 1/2"=1'-0"

NOTES:

1. FOR GENERAL NOTES SEE H-2-77596.
2. SEE ELECTRICAL CONSTRUCTION SPECIFICATION B-714-C2 FOR TRACETEK CABLE REQUIREMENTS PRIOR TO INSTALLATION OF TEES.
3. NOZZLES TO BE GROUTED IN PLACE AFTER PIPING SLOPES HAVE BEEN ESTABLISHED AND BACKFILL ACCOMPLISHED.
4. AFTER COMPLETION OF SENSING CABLE INTER-CONNECTIONS STUFF BUNDLE INTO CONFINES OF 4" ENC. TIGHTEN PIPE CAP & GRIND EXPOSED THREADS FOR WELD PREP. PROTECT (WITH WET CLOTH ECT.) TEE OUTLET FROM TEMPERATURE EXCEEDING 200° F.
5. SUBSTITUTE APPROPRIATE VAULT NUMBER IN PLACE OF "XX".
6. (1a) WELD AND EXAMINE LIFTING BAIL ATTACHMENT IN ACCORDANCE WITH AWS D1.1, SECTION 8.
7. PAINT STENCILED MARKING USING 1/2" HIGH LETTERS BLACK ON YELLOW AS FOLLOWS:

H-2-77597, REV 0, DET 6

NUMBER	TITLE
	DRAWING TRACEABILITY LIST

NUMBER	TITLE	REFERENCES
H-2-77573	DRAWING LIST	
	NEXT USED ON	

REV	BY	DATE	DESCRIPTION
1	TKE	7-11-90	c) B-714-55; Z83,B4 b) B-714-22; ZE4, E1, C5, B3 a) B-714-10; ZC1-2 THRU B-714-61 GENL REV: INCORP ALL ECNs

MICROFILMED — BY-DATE — WHC APPROVAL — KEH APPROVAL — COMMENT REVIEW

		DATE
WHC APPROVAL	BY SR BRIGGS 1-20-89	12-28-1988
PROJ ENGR	JD CLOUD 1-20-89	12-28-1988
QA	HWH 1-10-89 H. HENDRICKSON	7-29-88
APPROVED	BY WJM ROBERT M. ITEN	7-27-88
SAFETY	A.G. MINISTER	7-21-88
APPROVED BY	CRZ 1-9-89 CRZ JR. COLLINS	7-19-88
CHECKED BY	L. HALL	7-19-88
DRAWN BY	D.MILTON	1-6-1988
DESIGNED BY	D.MILTON	1-6-1988

IMPACT LEVEL 2 EDT # 101089

DOES NOT CONTAIN CLASSIFIED OR UNCLASSIFIED CONTROLLED NUCLEAR INFORMATION
Reviewing Official/ADC
Kaiser Engineers Hanford Company
11-28-88
Date

U.S. DEPARTMENT OF ENERGY
RICHLAND OPERATIONS OFFICE
KAISER ENGINEERS HANFORD COMPANY

M

PIPING MISCELLANEOUS DETAILS

PROJECT TITLE: GROUT VAULT PAIR 218-E-16-102&103

PROJ	WO	JOB
B-714	ER1060	242500
SCALE: SHOWN	BLDG: 218-E-16	INDEX: 0402

DRAWING NUMBER	SHEET	OF	REV
H-2-77597	1	1	1

KEH-6A0 H27597B1 C 11/20/90

(012485)