AR TARGET SHEET

The following document was too large to scan as one unit, therefore it has been broken down into sections.

DOCUMENT # DOE/RL 90-39

EDMC # 0015429

SECTION 2 OF 2

Drawing No. H-2-72001 to
" " H-2-99099

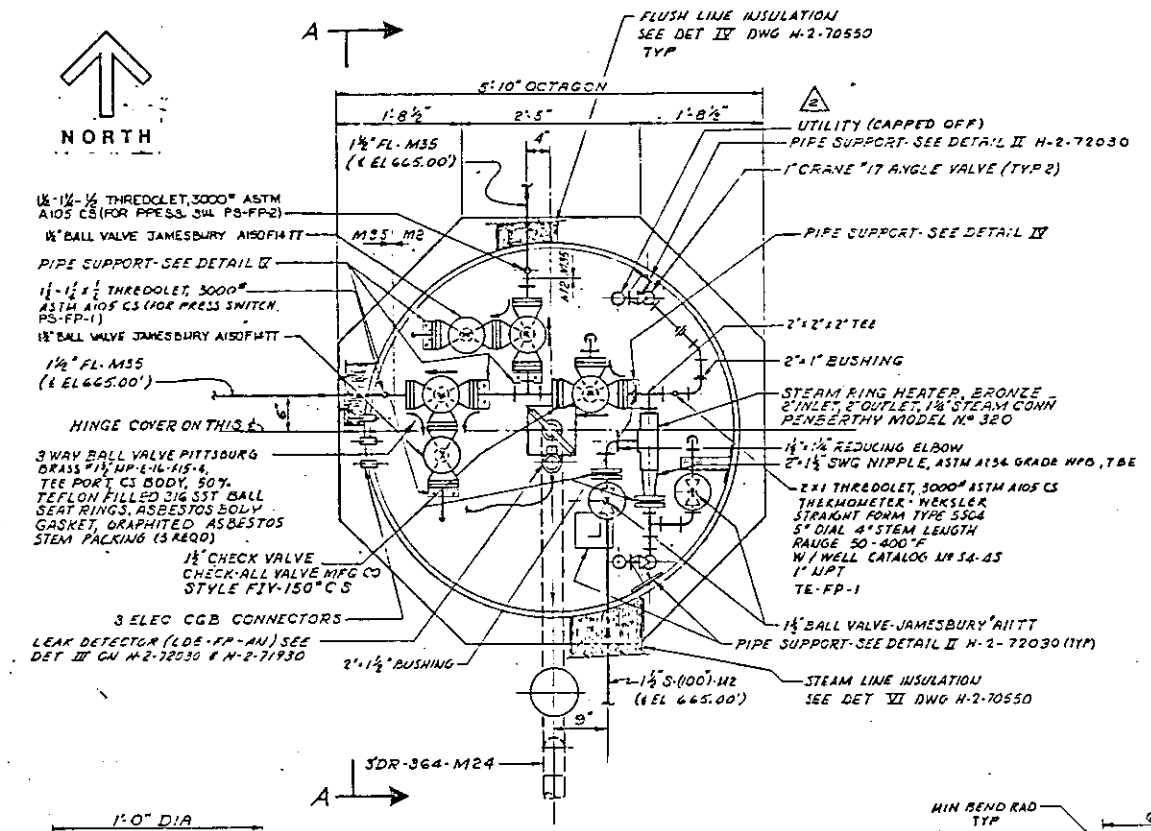

PLAN-FLUSH PIT

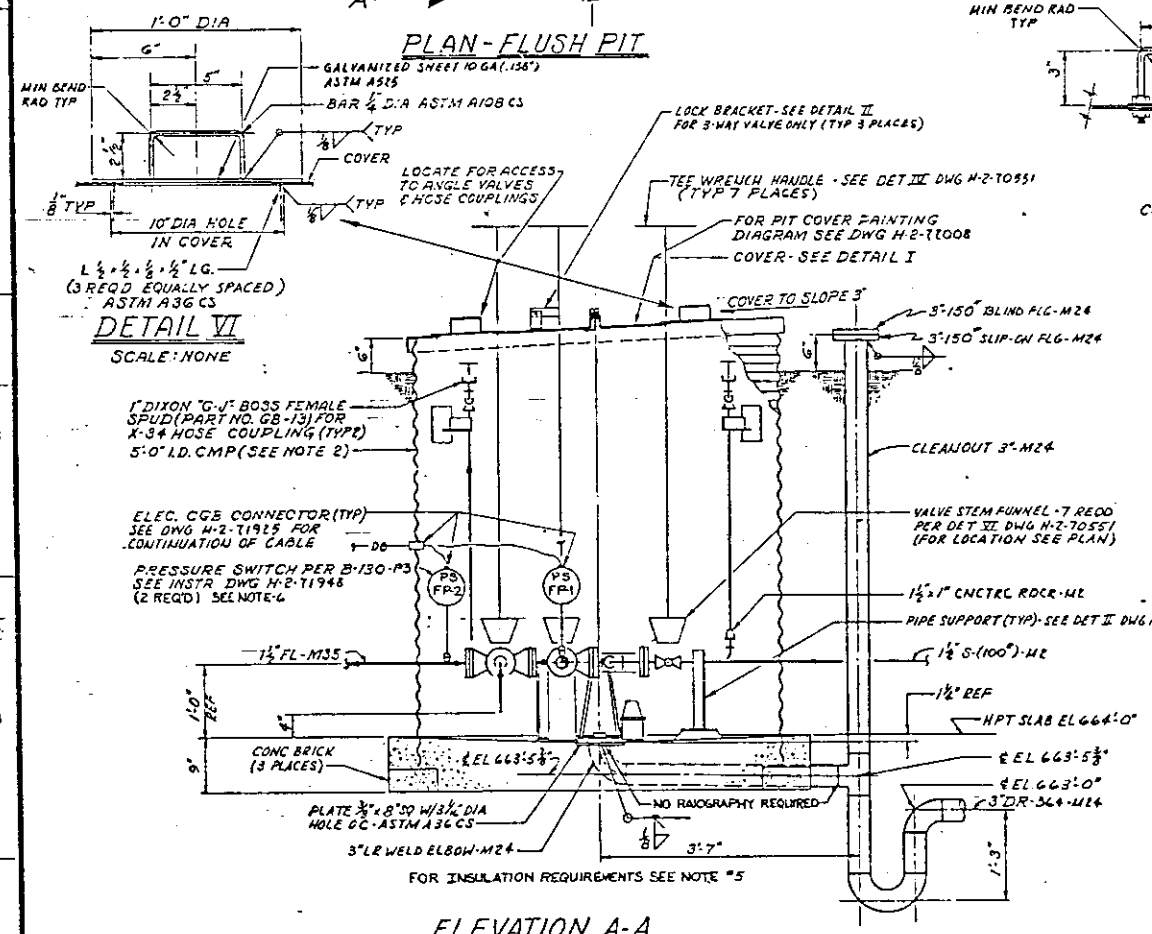

ELEVATION A-A

NOTE: FOR CONTINUATION OF LINES SEE DWG H-2-71989

0 2 FT.

SCALE: 1" = 1'-0"

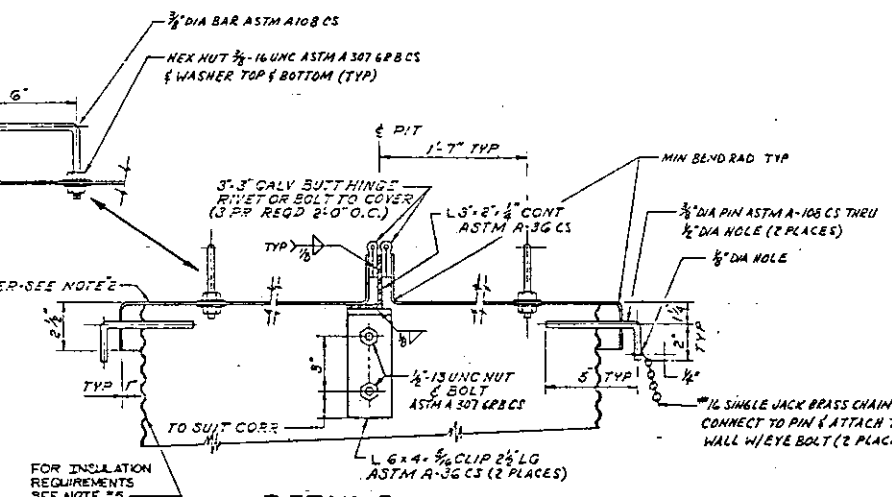

DETAIL I

0 6 IN.

SCALE: 3" = 1'-0"

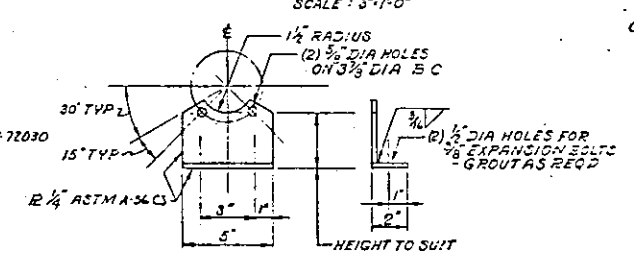

DETAIL IV

0 6 IN.

SCALE: 3" = 1'-0"

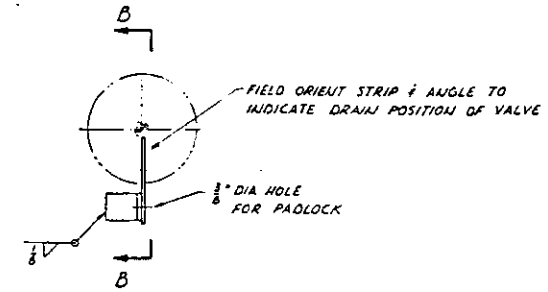

PLAN

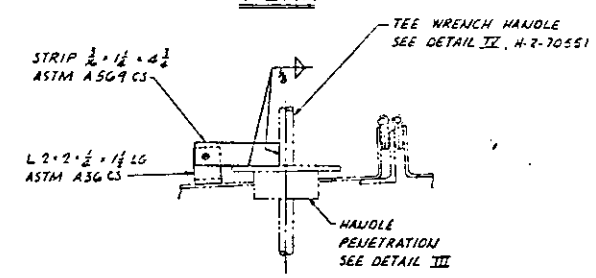

SECTION B-B

DETAIL II

0 6 IN.

SCALE: 3" = 1'-0"

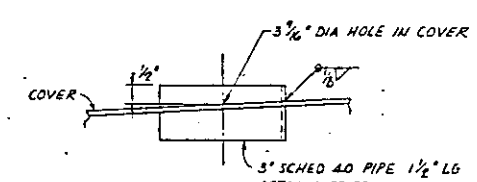

DETAIL III (HANDLE PENETRATION) (FROM DETAIL II ABOVE)

0 2 IN.

SCALE: ½" = 1"

NOTES:

1. FOR GENERAL NOTES SEE DWG H-2-71986.
2. CULVERT PIPE TO BE GALVANIZED, CORRUGATED METAL PIPE PER FEDERAL SPECIFICATION WW-P-405A, CLASS 1, SERIES A, 10 GAGE. PIT COVERS TO BE 14 GAGE GALVANIZED STEEL, COMMERCIAL QUALITY PER ASTM A-526.
3. SEAL AROUND ALL PENETRATIONS THRU CORRUGATED METAL PIPE WITH PERMATEX "FORM-A-GASKET" NO 2.
4. FOR NZ PIPE CODE INSIDE OF FLUSH PIT USE THE FOLLOWING:
   a) FLGS - 150 LB FORGED STL SCRD ASTM A181 GR I OR II USE FLAT FACE WHERE MATING TO FLAT FACE FLANGES.
   b) BOLTING TO BE CARBON STEEL, HEAVY HEX SERIES BOLTS & NUTS PER ASTM A307, GRADE B.
   c) GASKETS TO BE COMPRESSED ASBESTOS SHEET ⅛" THK; GARLOCK NO 900. USE FULL FACE GASKET WITH FLAT FACE FLANGES.
5. INSULATE INSIDE OF COVER, AND INSIDE OF WALLS TO A DEPTH OF 1'-6" BELOW GRADE. INSULATION TO BE 1" THK FOAMED PLASTIC SHEET BUILT UP TO 3" THICKNESS ARMSTRONG "ARMAFLEX" BOND WITH RUBBER ADHESIVE. ARMSTRONG #520.
6. ADD ISOLATION VALVES AND CALIBRATION TEES (PER NPS-410-1) TO PS-FP-1 AND PS-FP-2. THE VALVES AND TEES TO MEET B-130-C, SECTION 15415, PIPING SPECIFICATION.
7. SEE DWG. H-2-71999 FOR ELECTRICAL BONDING JOINT DET.

RELEASED FOR CONSTRUCTION
BY [illegible] DATE [illegible]
DOE

1999)	—	PIPING PLAN & DETAILS			
1993	—	DRAWING INDEX			
REFERENCE DRAWINGS					
NEXT USED ON		H-2-72001			

2	REVISED PER CED 7267				
1	AS BUILT 1) ADDED TO REF. BLOCK DWG ADDED 2) ADDED NOTE 7 IN B-2 VALVES ADDED (3) ZN-B10 NOTE CALLOUT CHANGED (4) ZN-F11 ADDED (5) NOTE CHANGED WD9 (6) NOTE ADDED (7) CALLOUT F13				
REVISIONS					
DRAWING STATUS					

ENERGY RESEARCH & DEVELOPMENT ADMINISTRATION
NEVADA OPERATIONS OFFICE

VITRO ENGINEERING
a division of AUTOMATION INDUSTRIES, INC

PIPING PLAN & DETAILS
FLUSH PIT 241-AN

SCALE: AS NOTED	PROJ. NO. B-130
	PROJ. TITLE: 241-AN TANK FARM
QUANTITY: NOT REQUIRED	241-AN 0402
NONE	H-2-72001

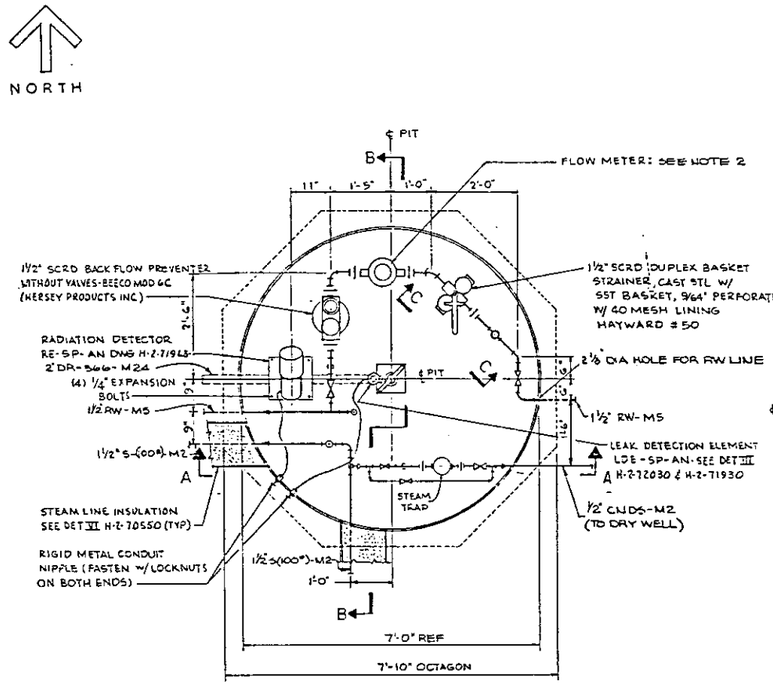

PLAN

2 SEE SHEET 2 FOR ORIENTATION PLAN

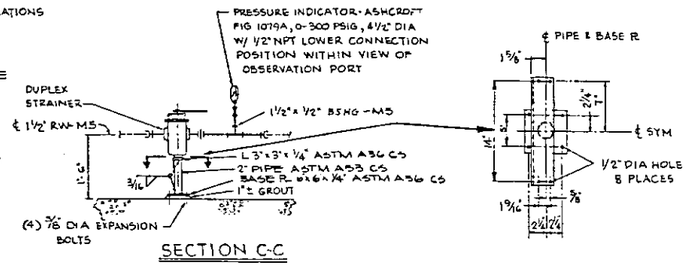

SECTION C-C

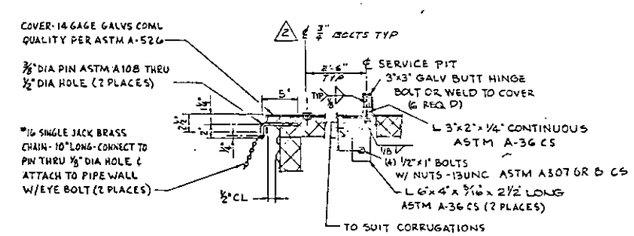

SECTION D-D

SCALE: NONE

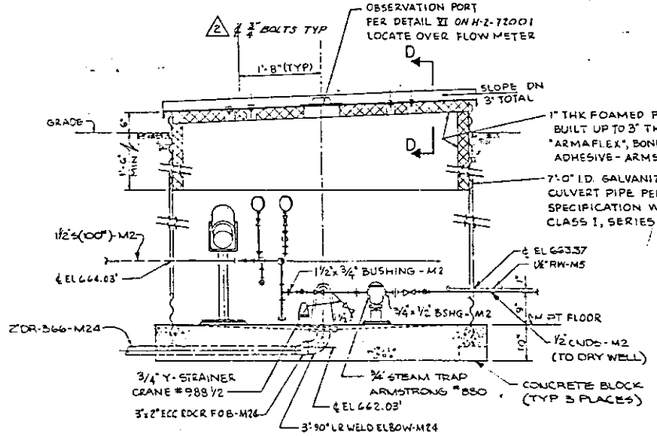

SECTION A-A

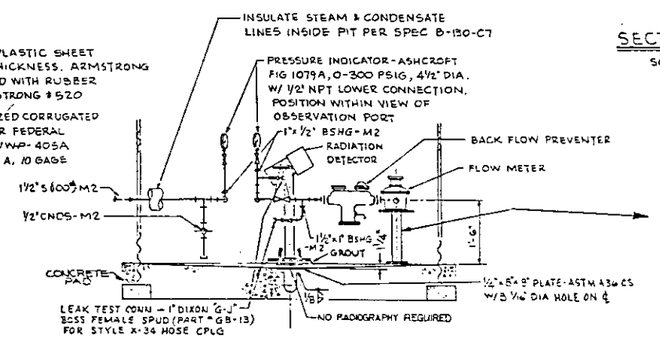

SECTION B-B

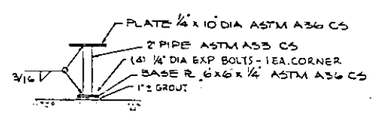

NOTES:

1. FOR GENERAL NOTES SEE DWG H-2-71986
2. 1½" FLOWMETER, FM-SP-AN-1, BADGER METER CO. MODEL SC-ER, SCREWED W/FEMALE SPUDS FOR UNION CONNECTIONS & HARD RUBBER NUTATING DISC, 5-100 GPM RANGE PULSE TRANSMITTER, FT-SP-AN-1 BADGER METER CO. MODEL MS-E2 W/GEAR RATIO COMPATIBLE WITH FLOWMETER, OUTPUT SIGNAL COMPATIBLE WITH TOTALIZER FQ-SP-AN-1 SEE DWG H-2-71968.
3. SEAL AROUND ALL PENETRATIONS THRU CORRUGATED METAL PIPE WITH PERMATEX "FORM-A-GASKET" № 2.
4. INSTRUMENT TAGGING NUMBERS SHALL BE IN ACCORDANCE WITH DWG H-2-71968, REV. 0
5. SEE DWG. H-2-71999 FOR ELECTICAL BONDING JOINTS DET.
6. 2 WELD AND INSPECT PER AWS D1.1. VT WELDS AT FINAL PASS. DOCUMENT WELDS PER APPROVED INSPECTION PLAN. WELDING QUALIFICATIONS PER ASME SECTION II ARE ACCEPTABLE.
7. 2 UNLESS OTHERWISE SPECIFIED DIMENSIONS ARE IN INCHES. ANGLES ±1°, FRACTIONS ± 1/8", BOLT HOLES ± 1/32". DO NOT SCALE PRINT.

0 1 FT
SCALE: ¾"=1'-0"

2	H-2-71999	0	PIPING PLAN & SECTION
	H-2-71999	–	PIPING PLAN & DETAILS
	H-2-71999	0	DRAWING INDEX
	NO.		TITLE

REFERENCES

NEXT USED ON H-2-72002

REV	DESCRIPTION
2	CEO 19275 AND 129452 REVISION PER CEO 06319.
1	AS BUILT (1) ADDED NOTE 5 ZN C-3 (2) ADDED TO REF. BLOCK ZN A-6 (3) ZN-B10-CHANGE ℄ EL. 1½" RW-M5 (4) ZN-C9 CALLOUT CHANGED (5) CHANGED NOTE (1) ADDED NOTE

REVISIONS

COMMENT PRT ISSUED NO 1 — CHECK PRT ISSUED NO 1

DRAWING STATUS

U.S. ENERGY RESEARCH AND DEVELOPMENT ADMINISTRATION

VITRO ENGINEERING CORPORATION

PIPING
PLAN & SECTIONS
SERVICE PIT 241-AN

J. DOVEY

241-AN TANK FARM

2 SHOWN — 241-AN — 0402

NONE

H-2-72002 — 1 | 2

PARTS LIST				
QTY	PART	DESCRIPTION	MATERIAL/REFERENCE	REF LTR

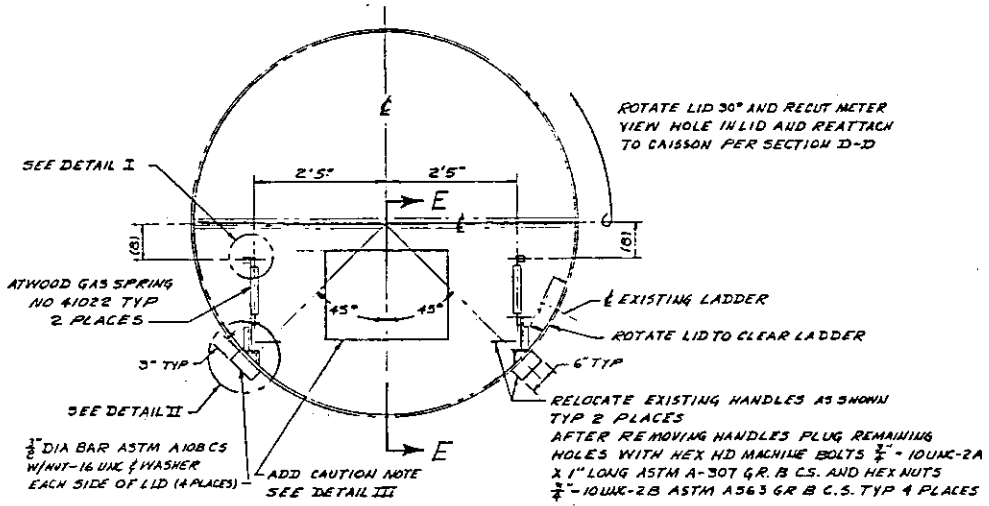

ORIENTATION PLAN

SCALE: 3/4" = 1'-0"

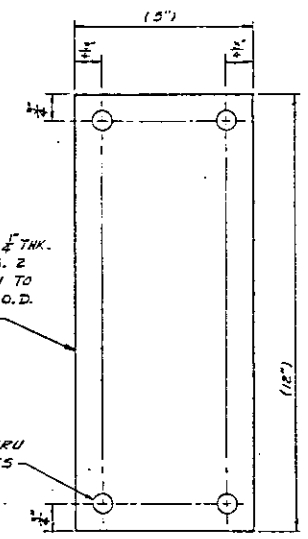

ATTACHMENT PLATES

SCALE: 1/2

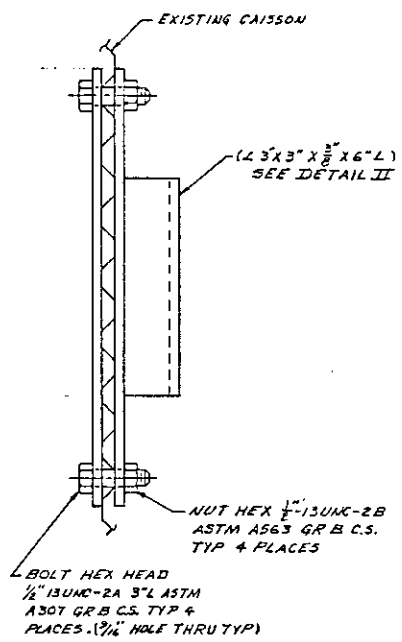

DETAIL V

SCALE: 1/2

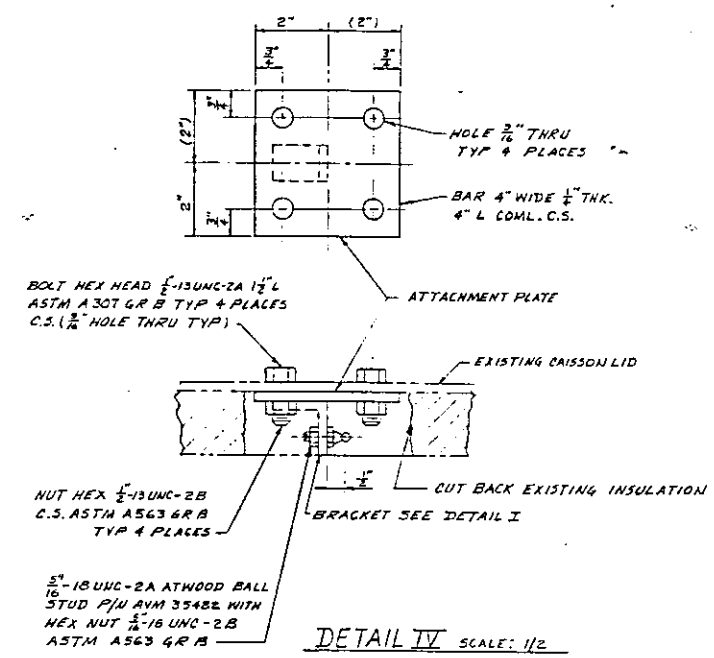

DETAIL IV SCALE: 1/2

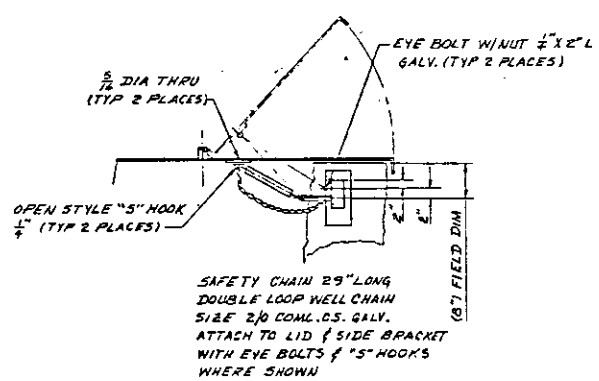

SECTION E-E

SCALE: NONE

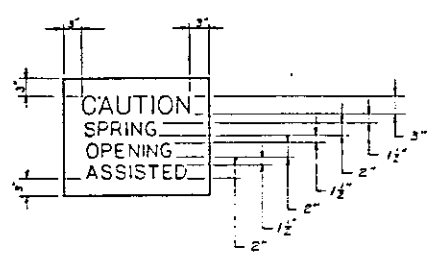

CAUTION SIGN NOTE:
MARK LID ASSEMBLY PER HS-B5-0015 TYPE B WITH NOTE AS SHOWN ABOVE IN LOCATION INDICATED AT ORIENTATION PLAN USING HEIGHT INDICATED FOR BLACK CHARACTERS ON YELLOW BACK GROUND. 1/2" BLACK BORDER AROUND YELLOW BACKGROUND

DETAIL III

SCALE: NONE

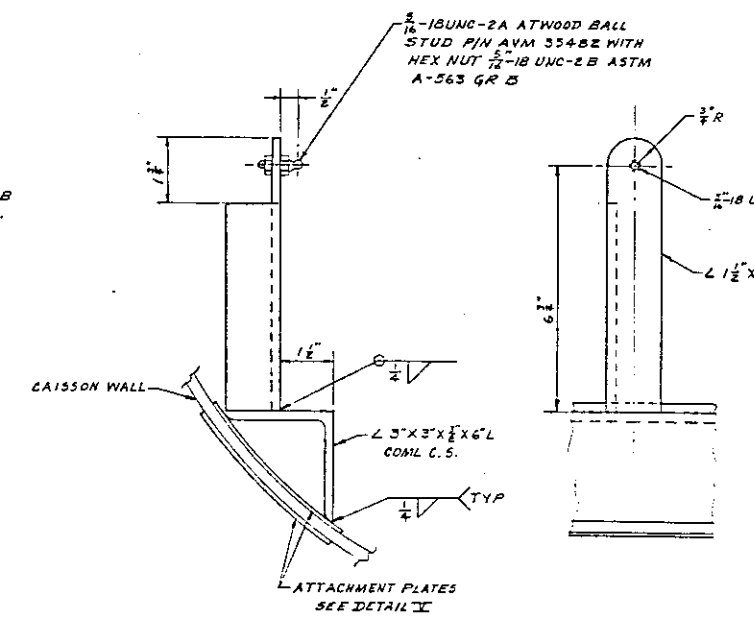

DETAIL II

SCALE: 1/2

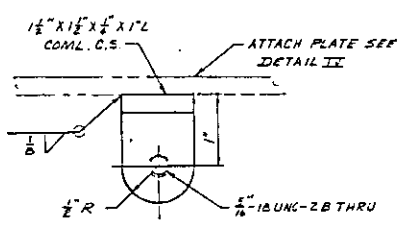

DETAIL I

SCALE: 1/1

OFFICIAL RELEASE BY WHC
DATE MAR 25 1991

ECN 129452

DRAWN B. DIXON	11/8/90	U.S. DEPARTMENT OF ENERGY	
CHECKED J. Wh..	1-7-91	Richland Operations Office	
DESIGN APPROVAL	1-23-91	Westinghouse Hanford Company	
CODE ENGR	2-25-91	PIPING PLAN & SECTIONS SERVICE PIT 241 AN	
SIZE F	BLDG NO 241-AN	INDEX NO 0402	DWG NO H-2-72002 REV 0
SCALE NOTED		SHEET 2 OF 2	

DWG NO	TITLE	REF NUMBER	TITLE
DRAWING TRACEABILITY LIST		NEXT USED ON	

REFERENCES

REV NO	DESCRIPTION	REV BY DATE	CHK BY DATE	APVD BY DATE	CODE ENGR	OTHER	OTHER
	REVISIONS				APPROVALS BY/DATE		

54-6000-027(5/89)

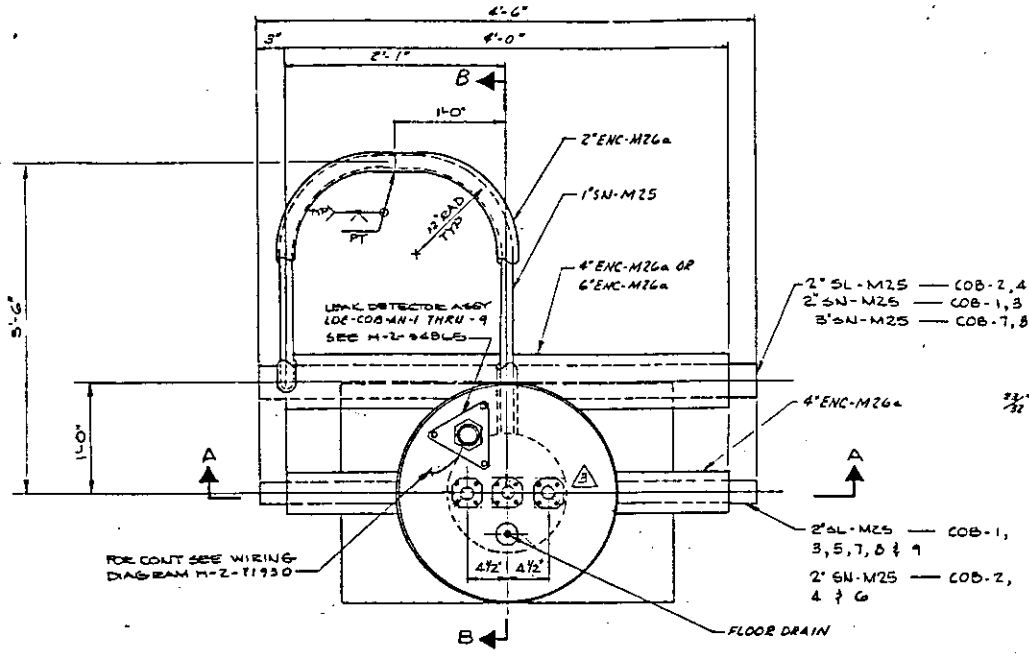

PLAN (BELOW HEADER)
COB-AN-1 THRU-9

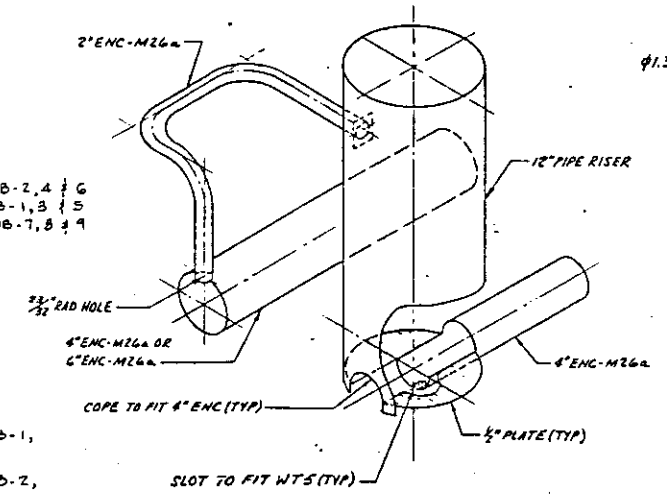

ENCASEMENT-ISOMETRIC
SCALE: NONE

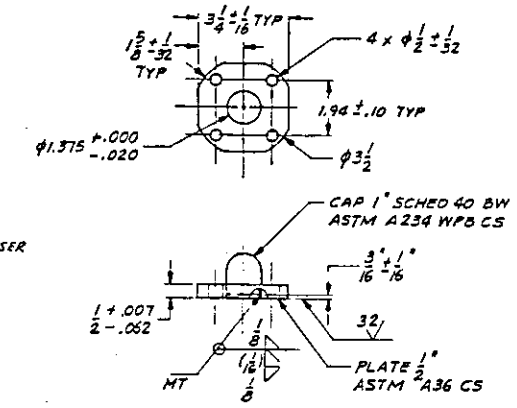

3 DETAIL III
NO SCALE

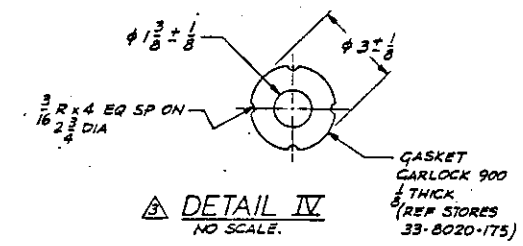

3 DETAIL IV
NO SCALE.

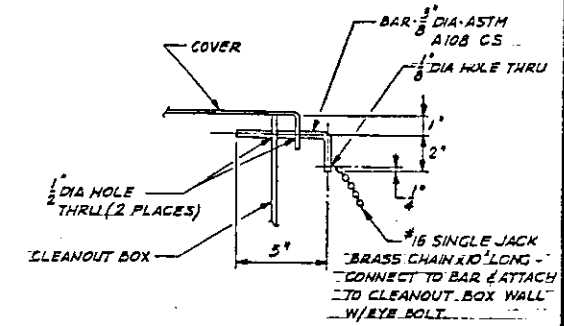

DETAIL 1
TYP 2 PLACES @ 180°
SCALE: NONE

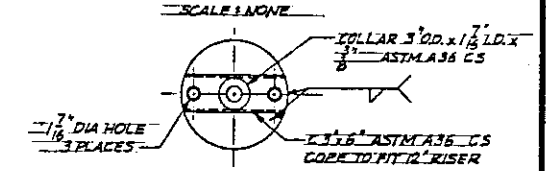

DETAIL 2
SCALE: NONE

COB NO	2" SL-M25		2" SN-M25		3" SN-M25	
	BOP-ENC-EL	LINE NO.	BOP-ENC-EL	LINE NO.	BOP-ENC-EL	LINE NO.
COB-AN-1	666.51'	160	667.01'	260	—	—
COB-AN-2	666.53'	160	667.03'	260	—	—
COB-AN-3	666.30'	160	666.76'	260	—	—
COB-AN-4	666.31'	160	666.78'	260	—	—
COB-AN-5	666.09'	160	666.57'	260	—	—
COB-AN-6	666.10'	160	666.53'	260	—	—
COB-AN-7	664.31'	161	—	—	664.49'	261
COB-AN-8	666.56'	164	—	—	664.67'	264
COB-AN-9	664.79'	167	—	—	665.18'	267

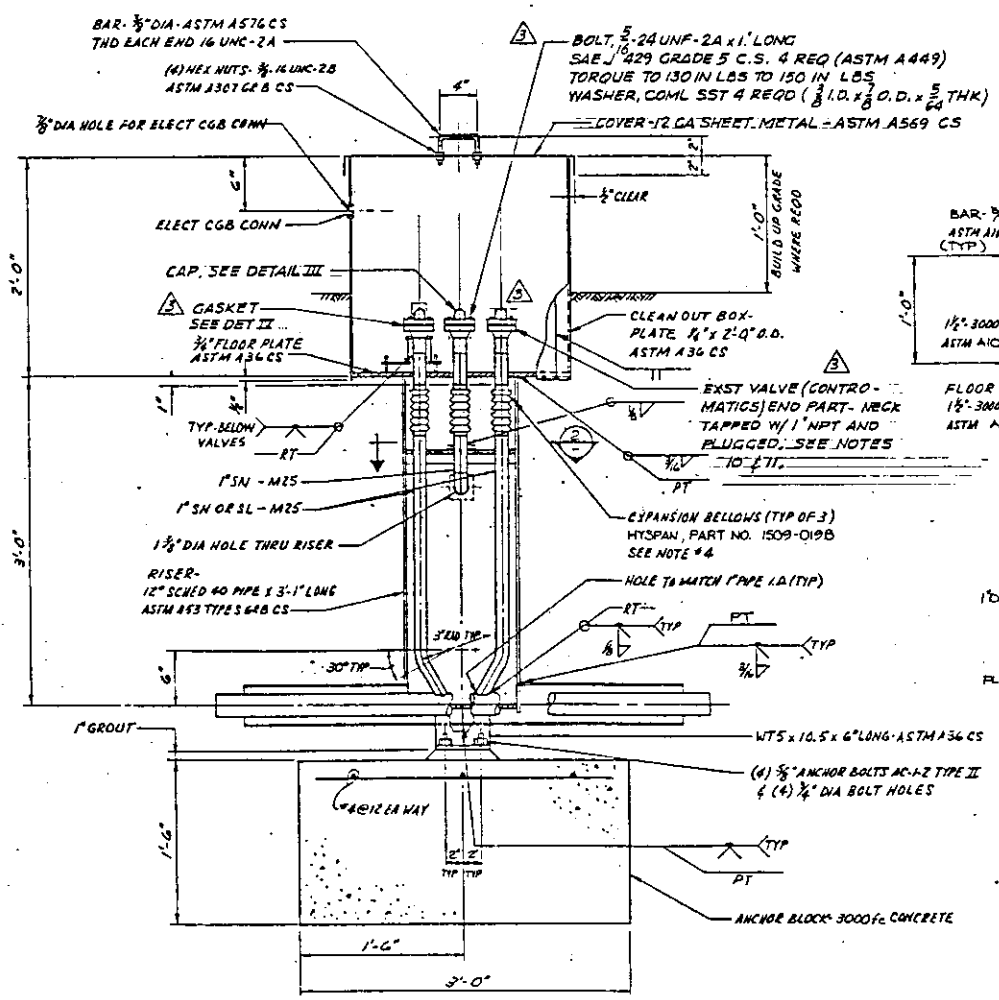

SECTION A-A

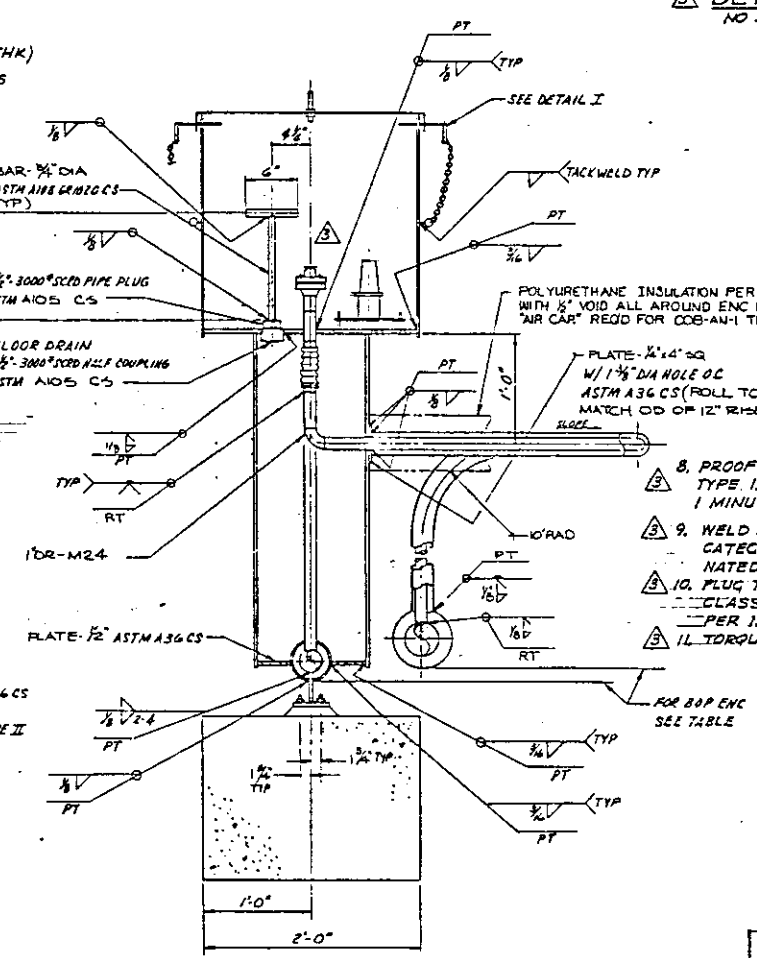

SECTION B-B

NOTES (CONT.)

NOTES (CONT):

3 8. PROOF AND LEAK TEST EACH ASSY PER HS-BS-0077 TYPE 1. THERE SHALL BE NO PRESSURE DECAY FOR 1 MINUTE AFTER PRESSURE STABILIZATION.

3 9. WELD AND INSPECT DETAIL III PER ANSI B31.3, CATEGORY M. VT ALL FINAL PASSES, MT DESIGNATED WELD.

3 10. PLUG TAPPED HOLE WITH PLUG, SQUARE HEAD COMML, CLASS 3000# CARBON STEEL. USE DEVCON "A" PER MANUF. INSTRUCTIONS TO FILL THREAD VOIDS.

3 11. TORQUE PLUG TO 70 FT # MINIMUM.

NOTES:

1. FOR GENERAL NOTES SEE DWG H-2-71986.
2. UNLESS OTHERWISE NOTED TOLERANCES SHALL BE AS FOLLOWS: FRACTIONAL ± 1/16; DECIMAL ± .010; ANGULAR ± 1°
3. HYDROSTATIC TEST AS FOLLOWS:
   SL & SN ..... 600 PSIG
   ENCASEMENTS ..... 90 PSIG
4. BELLOWS ASSEMBLIES SHALL BE MODIFIED TO INCLUDE BUTT WELD SCHED 40 PIPE. OVERALL LENGTH SHALL NOT EXCEED 3'. OPERATING PRESSURE FOR THE BELLOWS ASSEMBLY IS 400 PSIG AT 200°F. PROOF TEST IS 600 PSIG. STAINLESS STEEL & FITTINGS MADE FROM
5. FOR HANING & FLUSHING SEE H-2-71200 NOTE 3 & DET IV
6. ~~BALL VALVE SHALL BE CONTROMATICS #CC-3000-DC LINE FULL PORT STAINLESS STEEL BALL CARBON STEEL BODY, LONG NOSED, BUTT WELD ENDS, TEFLON BALL SEAT RINGS, BODY GASKET & STEM PACKING. ONE END CAP SHALL HAVE INTERNALLY THREADED HOLES IN FLANGE FOR THE FOUR BODY BOLTS. REQUIRED PRESSURE TEST MUST HAVE 15 PSIG AND PROOF TEST 90 PSIG RING.~~
7. DELETE THE REQUIREMENT FOR MANUFACTURERS CERTIFIED MAT'LS TEST REPORT AND SUB A CERTIFICATE OF COMPLIANCE FOR THE FOLLOWING ITEMS:
   A. 4-HEX NUTS 3/8-16 UNC 2B ASTM A307 GR-B CS (ZN E-11,12)
   B. 2-1" 3000# SCRD PIPE CAPS ASTM A338 GR-350B(MIZN E-9,10)
   C. 1-1 1/2" 3000# SCRD PIPE PLUG ASTM A105 CS (SECT B-B, ZN D-7,8)
   D. 1-1 1/2" 3000# SCRD HALF CPLG. ASTM A105 CS (SECT B-B, ZN D-8)

RELEASED FOR CONSTRUCTION
BY [signature] DATE 1/1/72
ERDA

REV 1 DOE [signature] DATE 2/21/72

0 1FT
SCALE: 1 1/2" = 1'-0"

REV	DRAWING INDEX	
0	DRAWING INDEX	
NO.	TITLE	
REFERENCES		
NEXT USED ON		

REVISIONS

REV	DATE	DESCRIPTION
3	12-17-70	INCORP CEOS 1575, 1577 & 22106
2	12-21-70	AS-BUILT 3) NOTE CHANGED CHANGE DIM CALLOUT CHANGED 4) NOTE CHANGED (NO DIMENSION) 5) SUPPORT ADDED (NOTE ADDED 6) ZN-E & ELEVATIONS CHANGED
1	2-13-69	1) WAS FOR-WEB, ZN C17, G10 (E-10) COB-AN-9, ZN D5, E5, F5 FIG. E11 2) REVISED NOTES 9 & 10, ZN D-9, C-8 ADDED 3) WAS "WHICH IS CRF" BALL VALVE, ZN H10

DRAWING STATUS: COMMENT PRT. ISSUE NO. 1 — 4/21/69; CHECK PRT ISSUE NO. 1 — 7/27/69

U.S. ENERGY RESEARCH AND DEVELOPMENT ADMINISTRATION
VITRO ENGINEERING CORPORATION
Architects • Engineers

CLEANOUT BOX - PLANS & SECTIONS

PROJECT TYPE	241-AN TANK FARM
SCALE	AS SHOWN
SUBJECT	241-AN
DWG NO.	H-2-72003
SHEET	1
SCALE	NONE

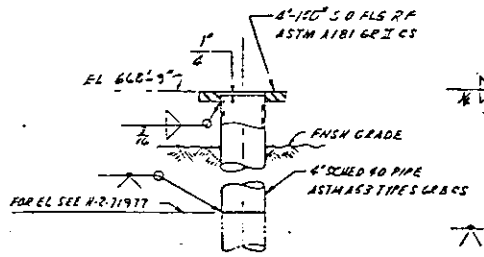

DETAIL I
SCALE: 1½" = 1'-0"
SEE NOTE 6

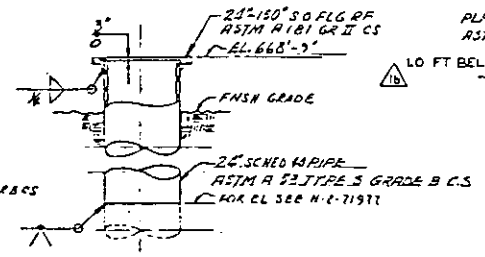

DETAIL III
SCALE: ½" = 1'-0"
SEE NOTE 6

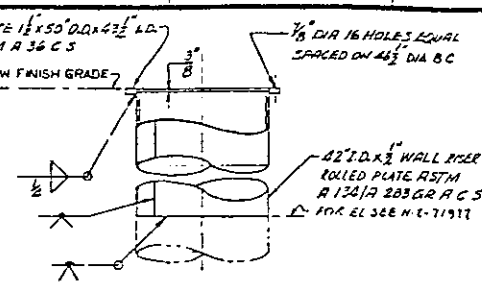

DETAIL V
SCALE: ½" = 1'-0"
SEE NOTE 6

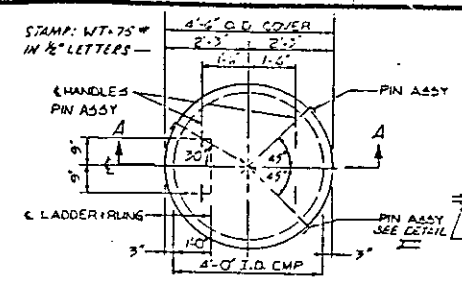

PLAN

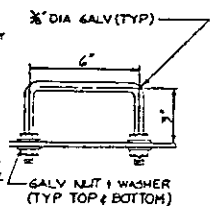

HANDLE

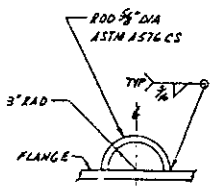

LIFTING BAIL TYPE 'A'
FOR 12" PLUG

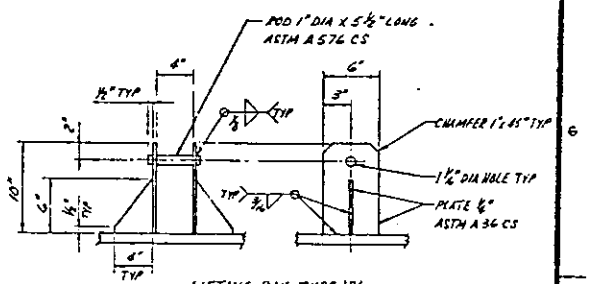

LIFTING BAIL TYPE 'B'
FOR 24" & 42" PLUG

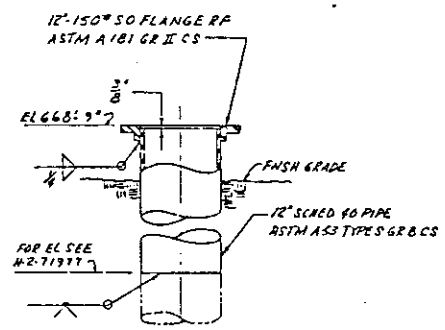

DETAIL II
SCALE: 1" = 1'-0"
SEE NOTE 6

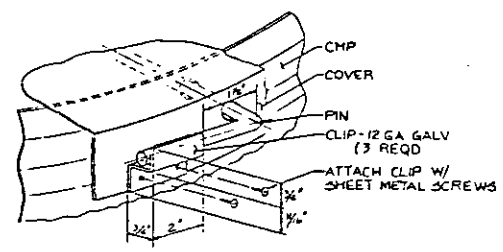

EXPLODED VIEW
DETAIL XIII
SEE NOTE 6

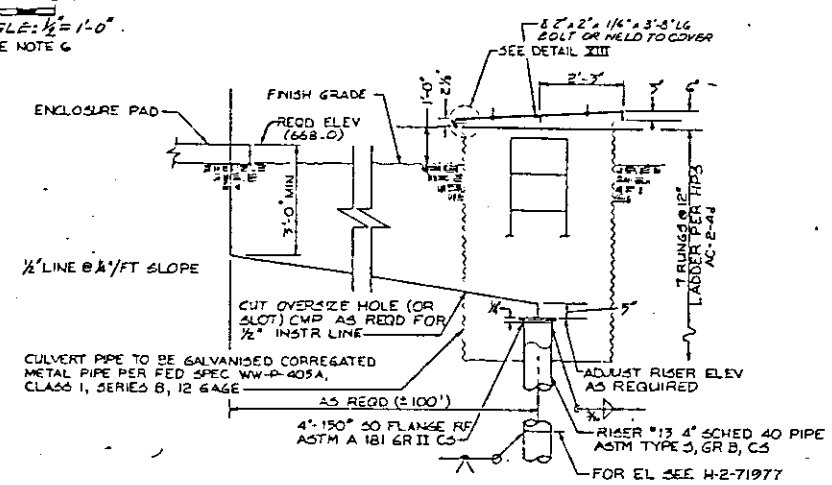

SECTION A-A
DETAIL IX
SEE NOTE 6

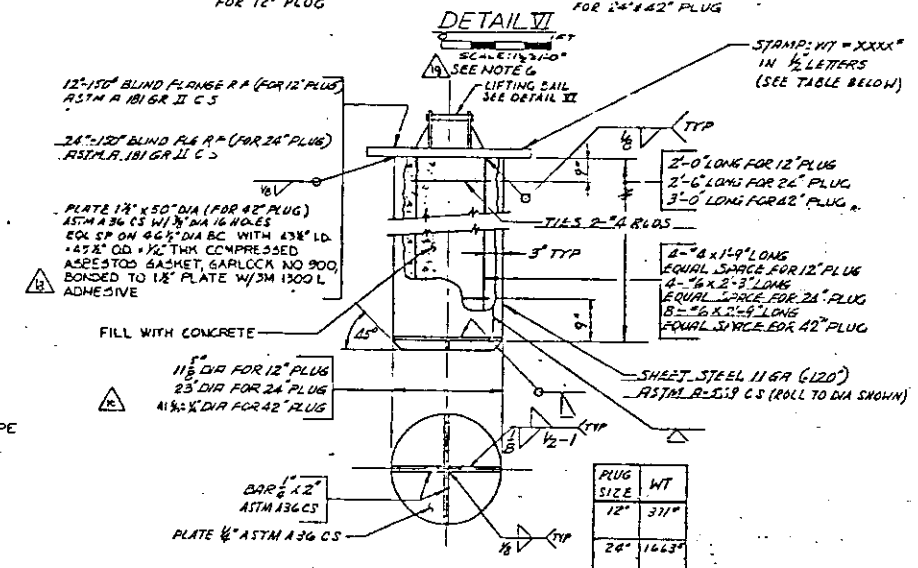

PLUG SIZE	WT
12"	371#
24"	1663#
42"	5286#

DETAIL X 12" 24" & 42" RISER PLUGS
SCALE: NONE
SEE NOTE 5
SEE NOTE 6

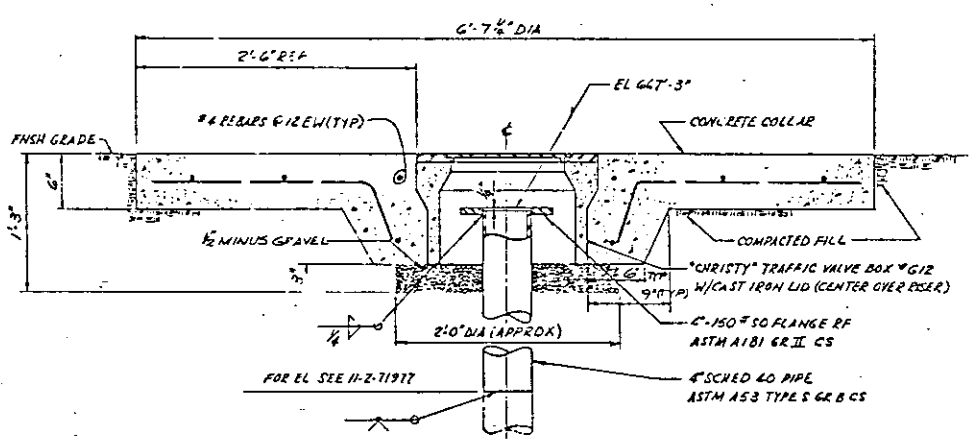

DETAIL VII
SCALE: 1½" = 1'-0"
SEE NOTE 6

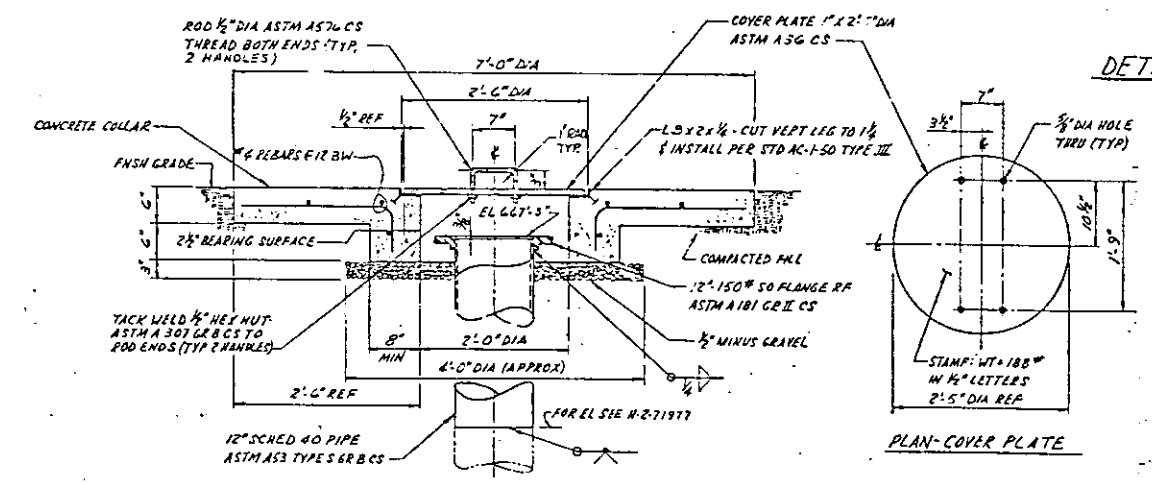

DETAIL VIII
SCALE: 1" = 1'-0"
SEE NOTE 6

PLAN - COVER PLATE

NOTES:

1. FOR GENERAL NOTES SEE DRAWING H-2-71986.
2. DETAILS ON THIS DRAWING APPLY AT THE LOCATIONS INDICATED ON TANK PIPING PLAN DRAWINGS H-2-71991 THRU H-2-71996.
3. PAINT ALL EXPOSED METAL SURFACES OF TRAFFIC BOXES AND RISERS WITH ONE COAT PRIMER. PAINT ALL TRAFFIC BOX COVERS AND TOP OF RISER PLUGS WITH TWO COATS "SAFETY YELLOW" ENAMEL. PAINT RISER NUMBER ON TRAFFIC BOX COVERS AND TOP OF RISER PLUGS IN 2" LETTERS USING BLACK ENAMEL. ALL PAINTING PER SPEC B-150-C2. DO NOT PAINT THREADS ON BOLTS.
4. TRAFFIC BOXES ARE DESIGNED TO SUPPORT 25 TON CRANE IN UNLOADED CONDITION. DO NOT PLACE LOADED CRANE OR OUTRIGGERS ON TRAFFIC BOXES.
5. FOR ATTACHMENT OF PLUG TO RISER SEE DETAIL II.
6. SEE DETAIL XIV FOR TYPICAL RISER FLANGE AND WELDING.

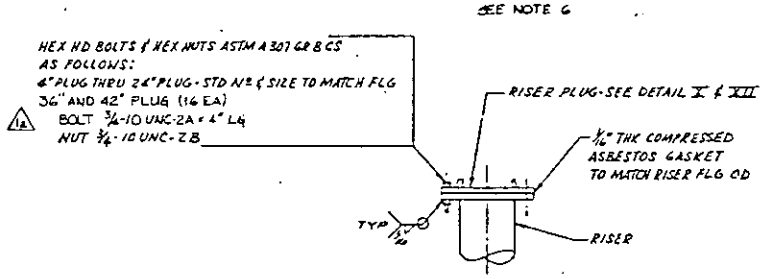

DETAIL IV TYP RISER PLUG TO FLANGE
SCALE: NONE
SEE NOTE 6

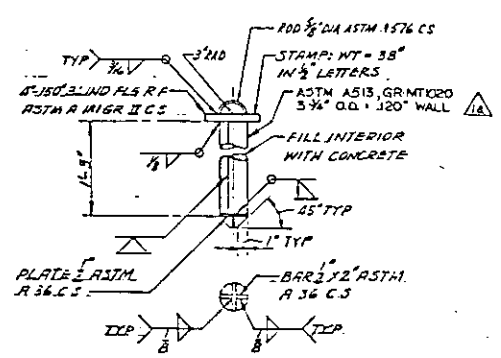

DETAIL XII 4" RISER PLUG
SCALE: NONE WT = 38# SEE NOTE 5

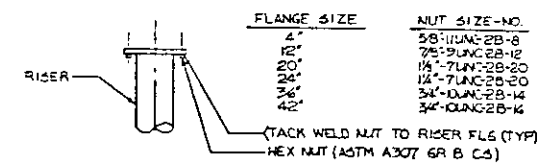

FLANGE SIZE	NUT SIZE-NO.
6"	⅝"-11UNC-2B-8
12"	⅞"-9UNC-2B-12
20"	1¼"-7UNC-2B-20
24"	1¼"-7UNC-2B-20
36"	3¼"-4UNC-2B-14
42"	3¼"-4UNC-2B-14

DETAIL XIV
TYPICAL RISER FLANGE
SCALE: NONE

RELEASED FOR CONSTRUCTION
BY [illegible] DATE 3/1/78
DOE

AC-1-50	—	HPS EMBEDDED ANGLE
M-2-71977	—	TANK PENETRATION FITTING
M-2-71976	—	PLOT TANK PENETRATIONS
H-2-71921	—	DRAWINGS INDEX
NO.		TITLE

REFERENCES
NEXT USE ON U-2-72004

AS BUILT
AND IN F-2.5
1) NOTE 6 CALLOUT ADDED IN D-2
2) NOTE 6 ADDED IN B-1, 2 & 5
3) DETAIL ADDED IN A-4, 5 & 6
4) DETAIL CHANGED IN E, F-5, G & 7
5) TOLERANCE CHANGED IN E-4
6) ELEVATION CHANGED IN G-9 (10 B-5)
7) CALLOUT CHANGED IN E-4, B-7

REVISIONS
COMMENT PRT ISSUE NO 1 CHECK PRT ISSUE NO 1
DRAWING STATUS

U.S. ENERGY RESEARCH AND DEVELOPMENT ADMINISTRATION
VITRO ENGINEERING CORPORATION
Architects • Engineers

TANK RISER AND PLUG DETAILS

PROJECT TITLE: 24-MAN TANK FARM
PROJ NO. A130002
DRAWN BY: D. MERRIMAN
SCALE: 25" SHOWN
PROJECT NO. 24-MAN
SHEET NO. 060.1
NONE
H-2-72004

PUMP SCHEDULE

ARRANGEMENT (SEE NOTE #2)	PUMP LENGTH	DISCH HEAD	CAPACITY GPM	SPECIFIC GRAVITY	PROCUREMENT SPEC NO.
P 1 (SUPERNATANT PUMP)	45'0"	300 FT	85	1.7	HWS-5643 (REV 10)
P 2 (ANNULUS PUMP)	46'2½"	93.2 FT	100		HWS 5643 (REV 10)
P 3 (LEAK DETECTION PUMP)	51'8½"	56.3 FT	10		HWS 5643 (REV 10)

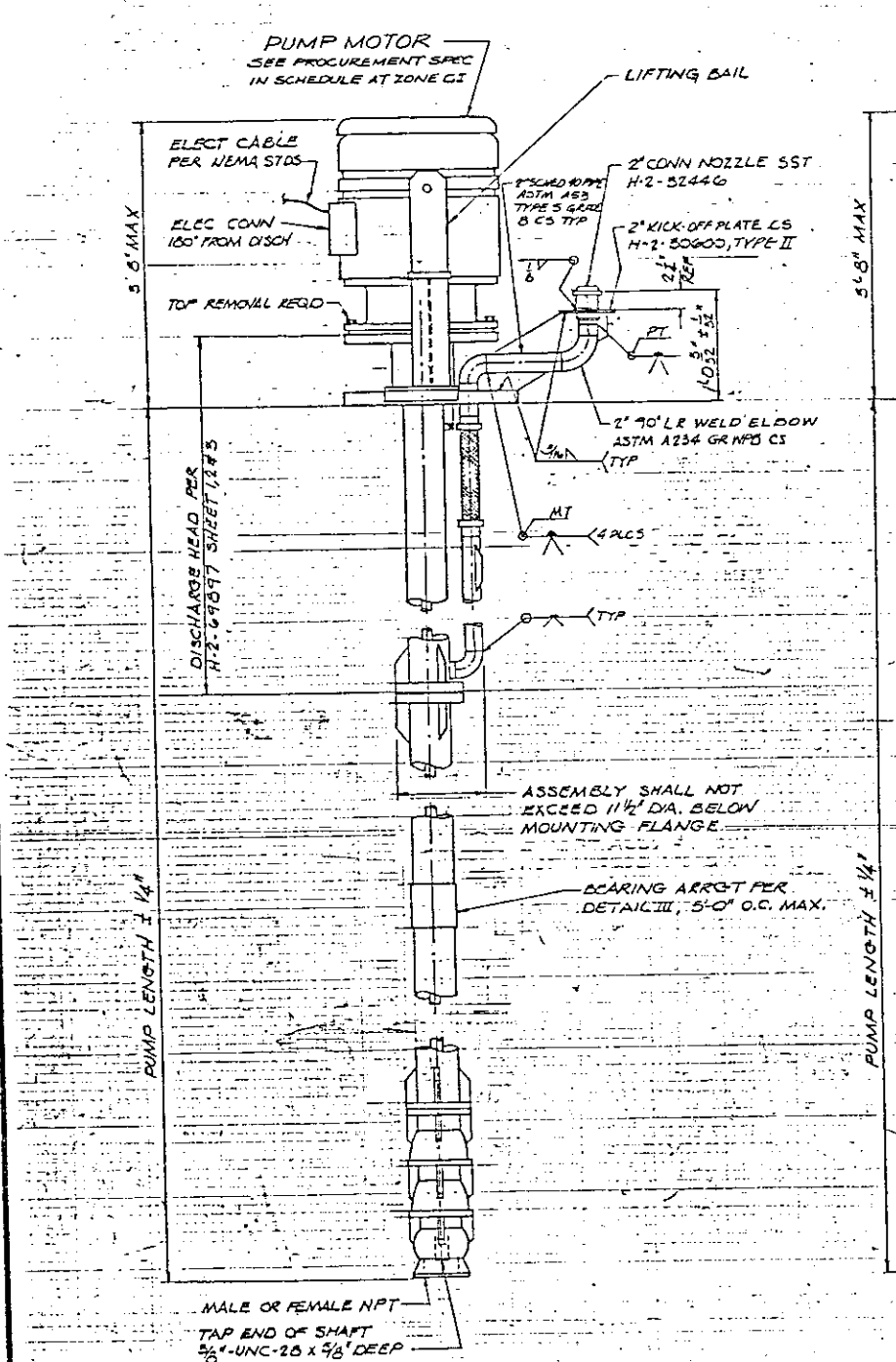

ELEVATION B-B

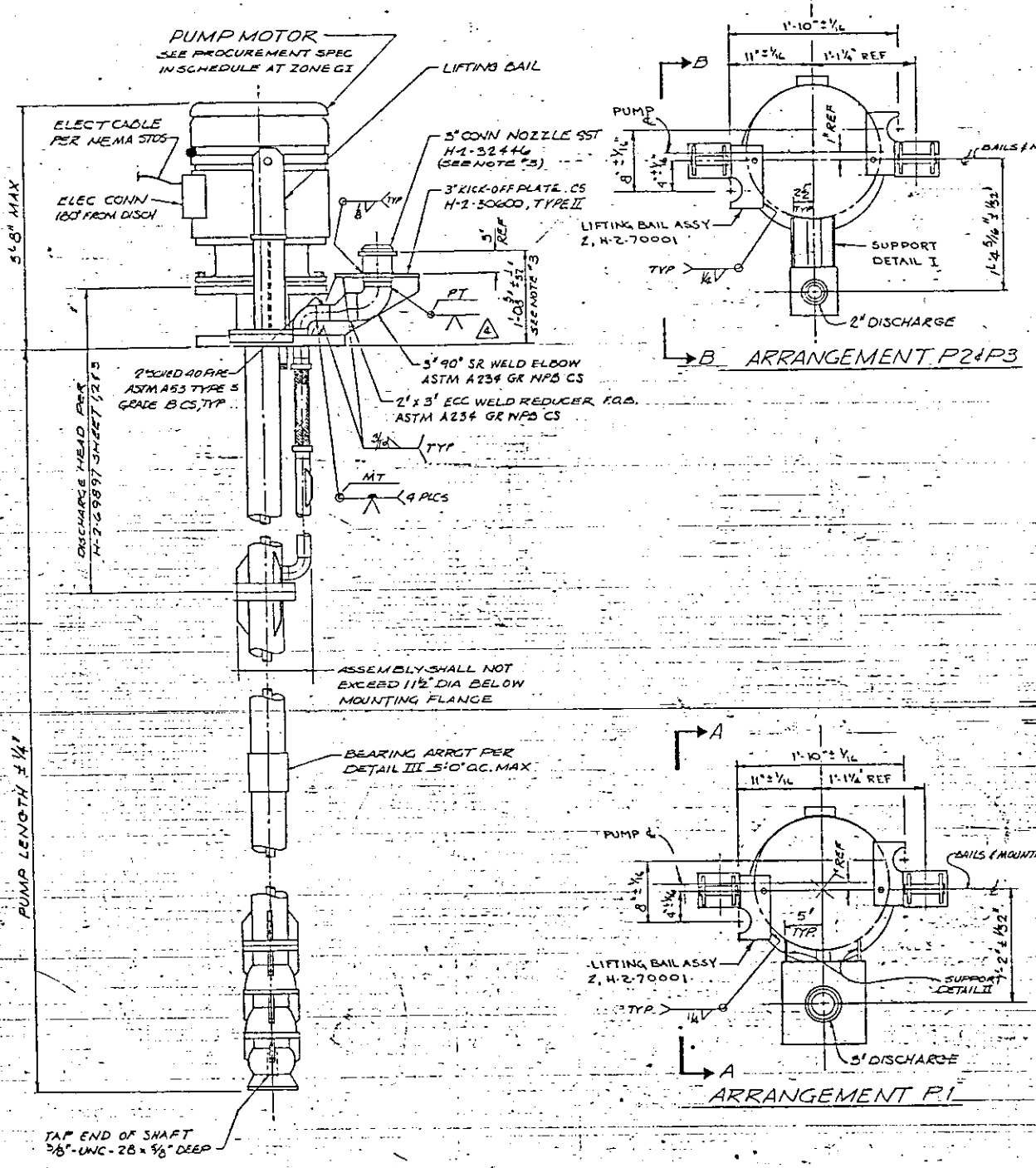

ELEVATION A-A

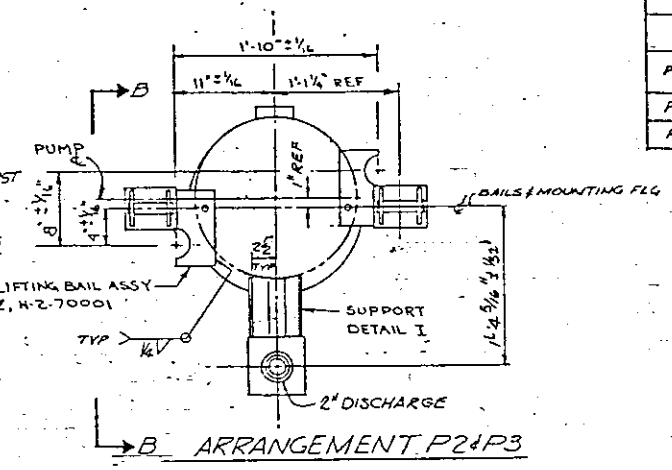

B ARRANGEMENT P2 & P3

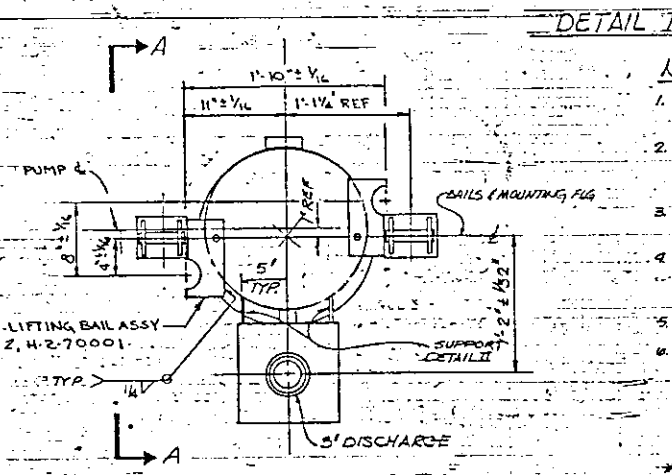

A ARRANGEMENT P1

WELDING AND INSPECTION REQUIREMENTS

FABRICATION	1. WELDING STANDARD	☐ ASME ☒ ASME B31.1 ☐ ASME
	2. PROCEDURE SPEC. & PERFORMANCE CERT.	☒ HWS-10053-OPTIONAL (UK-HWUK) ☒ ASME SECTION IX ☐ ASME
	3. FILLER MATERIAL	☒ ASME SFA/AWS A5 ☐
INSPECTION	4. VISUAL (VT)	☒ WELDING STD IN (%) SEP 7.5.8-C (UK-HWUK) ☒ FITUP ☒ ROOT PASS ☒ FINAL
	5. PENETRANT (PT)	☒ WELDING STD IN (%) SEP 7.5.8-B (UK-HWUK)
	6. MAGNETIC PARTS (MT)	☒ WELDING STD IN (%) SEP 7.3.10-A (UK-HWUK)
	7. ULTRASONIC (UT)	☐ WELDING STD IN (%) ☐
	8. RADIOGRAPHY (RT)	☐ WELDING STD IN (%) ☐
	9. LEAK TEST (LT)	☐
	☒ OTHER (NOTE)	WELD PROCESS FOR DISCHARGE PIPING ABOVE FLG SHALL BE GTAW. WELD PROCESS FOR BIAIL WELDS SHALL BE STAN. BE SMAW (X56(a)) SEE B-130-C7 CONSTRUCTION SPEC.

PT ON FINAL PASS MT ON FINAL PASS (WHERE SHOWN)

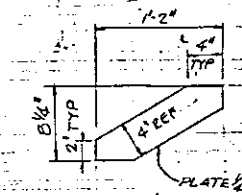

DETAIL I

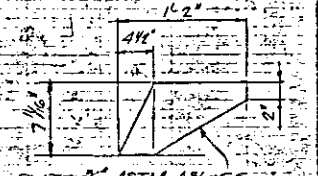

DETAIL II

NOTES:

1. TOLERANCE, UNLESS OTHERWISE NOTED, SHALL BE: FRACTIONAL ± 1/16, DECIMAL ± .010
2. PAINT ALL UNPAINTED CARBON STEEL ABOVE THE MOUNTING FLANGE WITH ONE PRIME COAT AND ONE FINISH COAT OF GRAY ENAMEL IN ACCORDANCE WITH SPECIFICATION B-130-C7.
3. TO HOIST ASSEMBLY USE ADJUSTABLE SELF-LOCKING YOKE ASSEMBLY PER DWG H-2-70205
4. PUMP PERFORMANCE REQUIREMENTS AND ASSEMBLY CRITICAL DIMENSIONS ARE SHOWN ON THIS DRAWING. PUMPS SHALL BE SUPPLIED BY THE OPERATING CONTRACTOR.
5. PUMPS SHALL BE REDUCED IN ACCORDANCE WITH HWS-5643, REV 10.
6. PREVIOUSLY PROCURED (EXISTING) PUMPS SELECTED AND MODIFIED BY OPERATING CONTRACTOR TO MEET DRAWING REQUIREMENTS:

IDENTIFICATION	* EXIST PUMP NO	* EXIST PUMP HORSEPOWER
P1- CENT PUMP AT		
P2- ANNULUS PUMP AT		
P3- LEAK DETECTION AT	B5-P-10	

* AS BUILT INFORMATION TO BE ADDED BY OPERATING CONTRACTOR.

SCALE: 1½" = 1'-0"

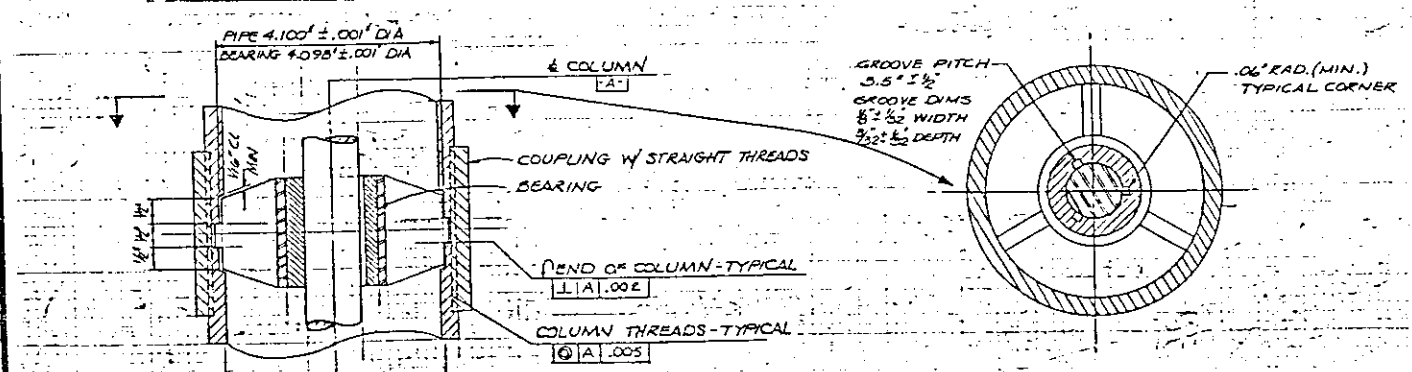

DETAIL III

SCALE: NONE

H-2-70001	3	LIFTING BAILS
H-2-30600	3	KICK-OFF PLATE
H-2-32446	6	CONNECTOR NOZZLES
H-2-69897	4	DISCHARGE HEAD - 3 SHEETS
H-2-71005	—	DRAWING INDEX

REFERENCE DRAWINGS

NEXT USED ON H-2-71005

REV			REVISION PER ECO 1893		
M			AS BUILT	3	
M	6-20-80		•FIELD STRUCTS, GAM ADDED PER ECO 2 & 4 •WELD STANDARD, ZM ECO 3 •CHECKED AS REVISED NOTED, ZM ECO 3, AJ ADDED	2	
M	7/19/79		FT: CAPACITY GPM 100, ZM ECO 3 PUMP P1, WAS DISCH HD 316.8	1	

REVISIONS

DRAWING STATUS

Q-A LEVEL II

ENERGY RESEARCH & DEVELOPMENT ADMINISTRATION
NUCLEAR OPERATIONS OFFICE

VITRO ENGINEERING, INC. AUTOMATION INDUSTRIES, INC.

PUMP ARRANGEMENTS

PROJ NO B1507/B1508 TITLE
WO NO B1509.2 241-AN-TANK FARM

241-AN

NONE

H-2-72005

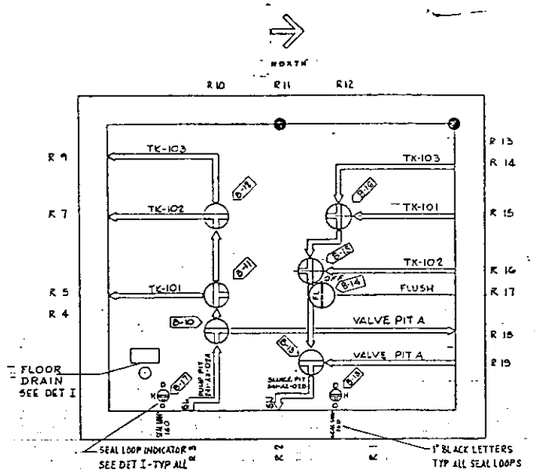

VALVE PIT 241-AN-B

SCALE: NONE

ARRANGEMENT #1 (FOR ARRANGEMENT #2 SEE SH 2)

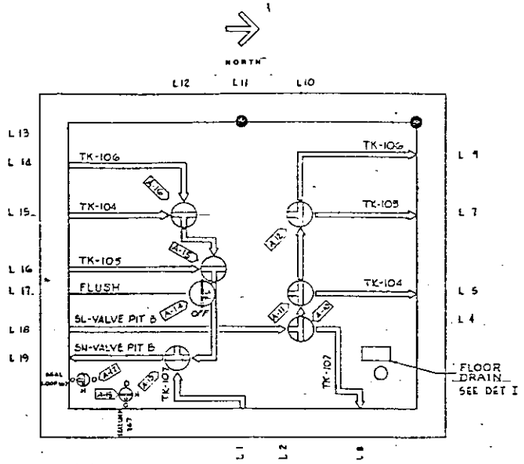

VALVE PIT 241-AN-A

SCALE: NONE

ARRANGEMENT #1 (FOR ARRANGEMENT #2 SEE SH 2)

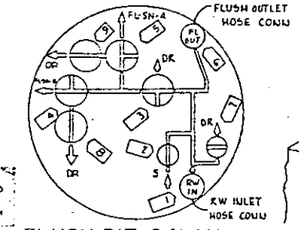

FLUSH PIT 241-AN

0 2FT

SCALE: 3/4" = 1'-0"

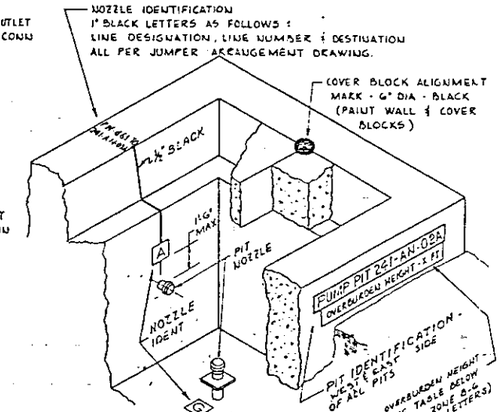

TYPICAL PIT ISOMETRIC

SCALE: NONE

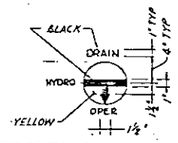

SEE ARRGT DWGS FOR TRUE ORIENTATION

SEAL LOOP

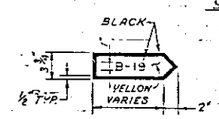

VALVE IDENT.

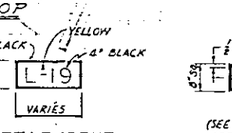

NOZZLE IDENT.

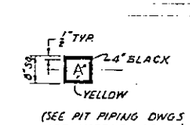

(SEE PIT PIPING DWGS FOR NOZZLE IDENT.)

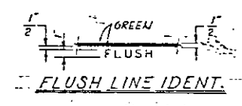

FLUSH LINE IDENT.

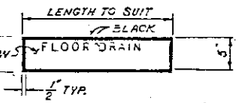

FLOOR DRAIN

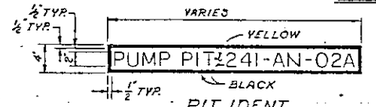

PIT IDENT.

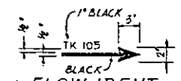

FLOW IDENT.

DETAIL I

GENERAL PAINTING DIMENSIONS

LEGEND

SYMBOL	DESCRIPTION
	3 WAY BALL VALVE INDICATOR DISC
DR	DRAIN
FL	FLUSH
RW	RAW WATER
S	STEAM
SL	SLURRY
SN	SUPERNATANT
	BALL VALVE INDICATOR DISC
	BALL VALVE OPEN
	BALL VALVE CLOSED

NOTES:

1. FOR GENERAL NOTES SEE H-2-71986.
2. PAINT ALL PIT IDENTIFICATIONS & PIT COVER FLOW DIAGRAMS PER SPEC B-130-C7 EXCEPT AS OTHERWISE NOTED ON THIS DRAWING.
3. EXTEND FLOW IDENTIFICATION LINES TO THE VALVE ACCESS HOLES.
4. ORIENTATION OF VALVE INDICATOR DISCS SHALL BE VERIFIED WITH FLOW PATTERN OF BALL VALVES.
5. PAINT VALVE INDICATOR DISCS YELLOW WITH BLACK FOR PRODUCT FLOW & GREEN FOR FLUSH.
6. VALVE EXTENSION HANDLES & TEE WRENCH ASSYS WITH VALVE INDICATOR DISCS ARE REFERENCED ON INDIVIDUAL PIT JUMPER/ ARRGT OR FLUSH PIT DRAWINGS.

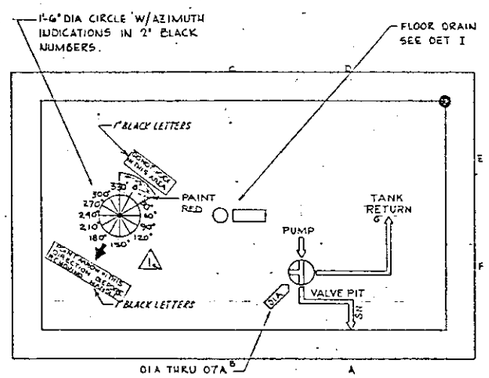

CENTRAL PUMP PIT
241-AN-01A THRU 241-AN-07A

NORTH 01A, 02A, 04A, 05A

NORTH 03A, 06A, 07A

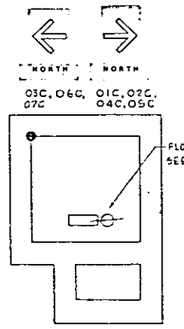

LEAK DETECTION PIT
241-AN-01C THRU 07C

0 2FT

SCALE: 3/8" = 1'-0"

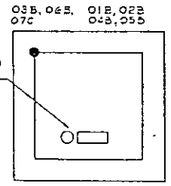

ANNULUS PUMP PIT
241-AN-01B THRU 07B

0 2FT

SCALE: 3/8" = 1'-0"

NORTH 03C, 06C, 07C 01C, 02C, 04C, 05C

NORTH 03B, 06B, 07C 01B, 02B 04B, 05B

0 2FT

SCALE: 1/2" = 1'-0"

PIT	OVERBURDEN HEIGHT
CENTRAL PUMP PIT 241-AN-01A THRU-07A	6'-9"
ANNULUS PUMP PIT 241-AN-01B THRU-07B	15'-6"

M					Z1-11F, Z1-12F, Z1-8F, Z1-9F 3) REV. V. PIT 24-AN-A (241-AN-B H-2-72005 TO H-2-71900 Z1-6A Z1-10E 5) NEXT USED ON WAS FOR ARRANGEMENT #1. Z1-11E & Z1-9E 0) ADDED: Z1-2B. D) ADDED: ARRANGEMENT Z1-1A. C) ADDED: G LEVEL III D4-2966 B) ADDED: SH 1 OF 2 A) DIP DWG CHANGE PER	2
1C					AS BUILT 3) CHANGED CALLOUT 2) REVISED DETAIL IN F-5 1) REVISED DETAIL IN D-3 REVISED DETAIL IN C-5	1
					DESCRIPTION	REV. NO.
					REVISIONS	
					DRAWING STATUS	REV. NO. 2

H-2-71900	DRAWING INDEX
REFERENCE DRAWINGS	
NEXT USED ON	H-2-71900

RELEASED FOR CONSTRUCTION BY [illegible] DATE 3/1/78

QUALITY ASSURANCE LEVEL III

ENERGY RESEARCH & DEVELOPMENT ADMINISTRATION
SCHENECTADY OPERATIONS OFFICE

VITRO ENGINEERING, a division of AUTOMATION INDUSTRIES INC.

PIT & PIT COVER PAINTING DIAGRAMS 241-AN TANK FARM

J. DOVEY

SCALE AS NOTED

NOT REQUIRED

NONE

PROJ. NO. AN-1310
W.O. NO. 9-5-2-3

PROJ. TITLE 241-AN TANK FARM

241-AN

0402

H-2-72008

1 2

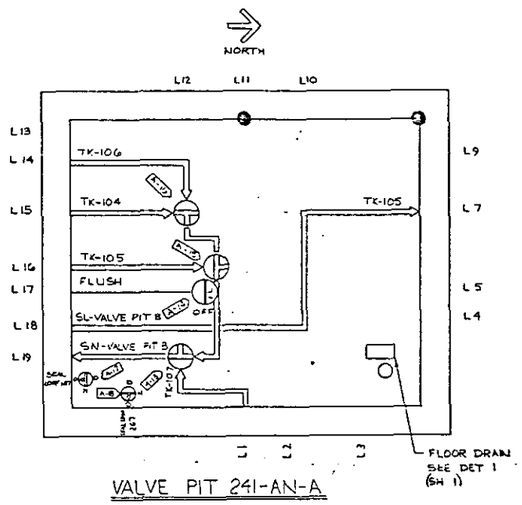

VALVE PIT 241-AN-A

ARRANGEMENT # 2

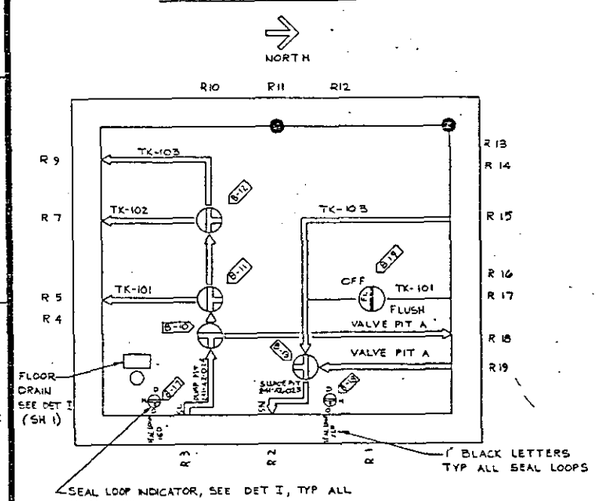

VALVE PIT 241-AN-B

ARRANGEMENT # 2

QUALITY ASSURANCE LEVEL III

DRAWING APPROVALS	DATE
	11/6/83
	5/11/83
	4/13/84
D.F. SALSMAN	6/83
	7/13/83
	7/15/83
	7/15/83

U. S. Department of Energy
Richland Operations Office

Rockwell Hanford Operations
Richland, Washington 99352

PIT & PIT COVER
PAINTING DIAGRAMS
241-AN TANK FARM

SCALE	DRAWING NO	SHEET NO
NONE	241-AN	0402

DESIGN AGENCY	DRAWING NO	SHEET	SHEETS
NONE	H-2-72008	2	2

H-2-71900	DRAWING INDEX								
REFERENCE DRAWINGS		REVISION APPROVALS						REVISIONS	
		COMMENT PRT ISSUE NO						CHECK PRT ISSUE NO 3 9-9-83	0

DRAWING STATUS

2-13 2-12 2-11 2-10 2-9 2-8 2-7 2-6 2-5 2-4 2-3 2-2 2-1

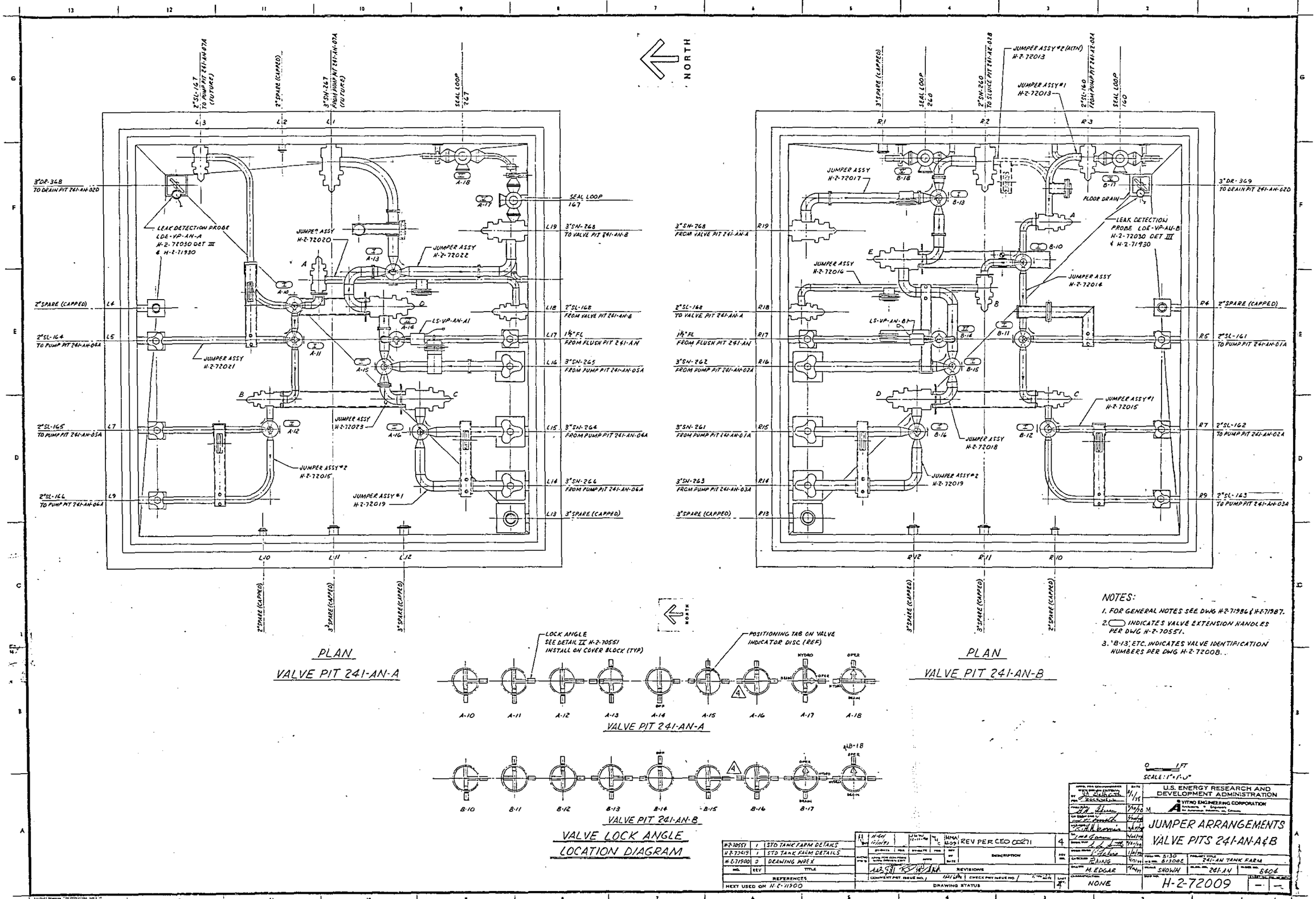
NORTH
2"SL-167 TO PUMP PIT 241-AN-07A (FUTURE)
2"SPARE (CAPPED)
3"SN-267 FROM PUMP PIT 241-AN-07A (FUTURE)
SEAL LOOP 267
3"DR-368 TO DRAIN PIT 241-AN-02D
LEAK DETECTION PROBE LDE-VP-AN-A H-2-72030 DET III & H-2-71930
JUMPER ASSY H-2-72020
JUMPER ASSY H-2-72022
SEAL LOOP 167
3"SN-268 TO VALVE PIT 241-AN-B
2"SPARE (CAPPED)
2"SL-168 FROM VALVE PIT 241-AN-B
2"SL-164 TO PUMP PIT 241-AN-04A
LS-VP-AN-A1
1½"FL FROM FLUSH PIT 241-AN
JUMPER ASSY H-2-72021
3"SN-265 FROM PUMP PIT 241-AN-05A
2"SL-165 TO PUMP PIT 241-AN-05A
JUMPER ASSY H-2-72023
3"SN-264 FROM PUMP PIT 241-AN-04A
JUMPER ASSY #2 H-2-72015
2"SL-166 TO PUMP PIT 241-AN-06A
JUMPER ASSY #1 H-2-72019
3"SN-266 FROM PUMP PIT 241-AN-06A
3"SPARE (CAPPED)
2"SPARE (CAPPED)
3"SPARE (CAPPED)
3"SPARE (CAPPED)
PLAN
VALVE PIT 241-AN-A
3"SPARE (CAPPED)
SEAL LOOP 260
2"SN-260 TO SLUICE PIT 241-AZ-02B
JUMPER ASSY #2 (ALTN) H-2-72013
JUMPER ASSY #1 H-2-72013
2"SL-160 FROM PUMP PIT 241-AZ-02A
SEAL LOOP 160
JUMPER ASSY H-2-72017
3"DR-369 TO DRAIN PIT 241-AN-02D
FLOOR DRAIN
3"SN-268 FROM VALVE PIT 241-AN-A
LEAK DETECTION PROBE LDE-VP-AN-B H-2-72030 DET III & H-2-71930
JUMPER ASSY H-2-72016
JUMPER ASSY H-2-72014
2"SL-168 TO VALVE PIT 241-AN-A
2"SPARE (CAPPED)
1½"FL FROM FLUSH PIT 241-AN
LS-VP-AN-B1
2"SL-161 TO PUMP PIT 241-AN-01A
3"SN-262 FROM PUMP PIT 241-AN-02A
JUMPER ASSY #1 H-2-72015
3"SN-261 FROM PUMP PIT 241-AN-01A
JUMPER ASSY H-2-72018
2"SL-162 TO PUMP PIT 241-AN-02A
3"SN-263 FROM PUMP PIT 241-AN-03A
JUMPER ASSY #2 H-2-72019
3"SPARE (CAPPED)
2"SL-163 TO PUMP PIT 241-AN-03A
3"SPARE (CAPPED)
3"SPARE (CAPPED)
2"SPARE (CAPPED)
PLAN
VALVE PIT 241-AN-B
LOCK ANGLE SEE DETAIL II H-2-70551 INSTALL ON COVER BLOCK (TYP)
POSITIONING TAB ON VALVE INDICATOR DISC (REF)
A-10 A-11 A-12 A-13 A-14 A-15 A-16 A-17 A-18
VALVE PIT 241-AN-A
B-10 B-11 B-12 B-13 B-14 B-15 B-16 B-17
VALVE PIT 241-AN-B
VALVE LOCK ANGLE LOCATION DIAGRAM
NOTES:
1. FOR GENERAL NOTES SEE DWG H-2-71986 & H-2-71987.
2. INDICATES VALVE EXTENSION HANDLES PER DWG H-2-70551.
3. 'B-13', ETC. INDICATES VALVE IDENTIFICATION NUMBERS PER DWG H-2-72008.
SCALE: 1"=1'-0"
U.S. ENERGY RESEARCH AND DEVELOPMENT ADMINISTRATION
VITRO ENGINEERING CORPORATION
JUMPER ARRANGEMENTS VALVE PITS 241-AN-A&B
H-2-70551 1 STD TANK FARM DETAILS
H-2-72419 1 STD TANK FARM DETAILS
H-2-71900 0 DRAWING INDEX
REFERENCES
NEXT USED ON H-2-71900
REV PER CEO 00271
DESCRIPTION
REVISIONS
DRAWING STATUS
M. EDGAR
NONE
SHOWN
241-AN TANK FARM
8404
H-2-72009

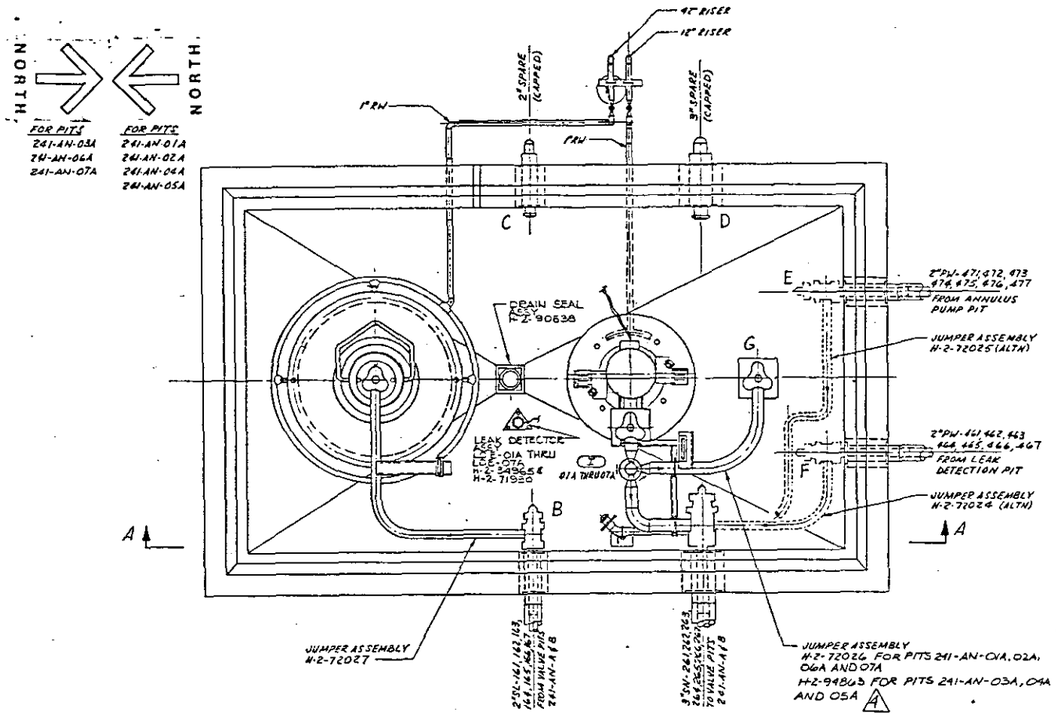

PLAN - PUMP PIT 01A THRU 07A
(COVER BLOCK NOT SHOWN FOR CLARITY)

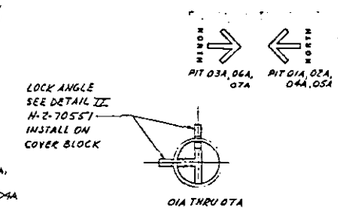

VALVE LOCK ANGLE LOCATION DIAGRAM

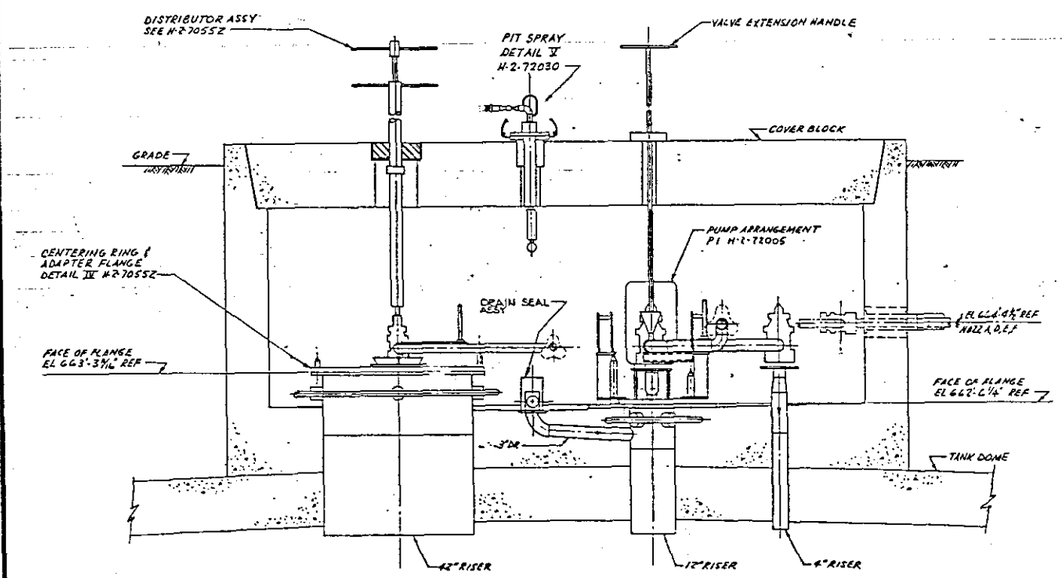

SECTION A-A

NOTES:
1. FOR GENERAL NOTES SEE DWG H-2-71986
2. 02A, ETC. INDICATES VALVE IDENTIFICATION NUMBERS PER DWG H-2-72008
3. ⬭ INDICATES VALVE EXTENSION HANDLES PER H-2-70551

0 1FT
SCALE: 3/8" = 1'-0"

H-2-52963	9	DETAIL - FREE NUT
H-2-70554	—	STD TANK FARM DETAILS
H-2-70552	F	STD TANK FARM DETAILS
H-2-70551	1	STD TANK FARM DETAILS
H-2-70613	1	STD TANK FARM DETAILS
H-2-71900	0	DRAWING INDEX

REFERENCE DRAWINGS
NEXT USED ON H-2-71900

11	11/17/90 RB	12-11-90	12-11-90	REV PER CEO 15419	9

REVISIONS
COMMENT PRINT ISSUE NO. 1 — CHECK PRINT ISSUE NO. 1
DRAWING STATUS 9

JD Gallegos 3/1/78
ENERGY RESEARCH & DEVELOPMENT ADMINISTRATION
RICHLAND OPERATIONS OFFICE
VITRO ENGINEERING
AUTOMATION INDUSTRIES, INC.
BAINS
MEDGAR
SCALE SHOWN
NOT REQD
NONE
JUMPER ARRANGEMENT CENTRAL PUMP PIT 241-AN-01A THRU 07A
241-AN TANK FARM
241-AN
8404
H-2-72010

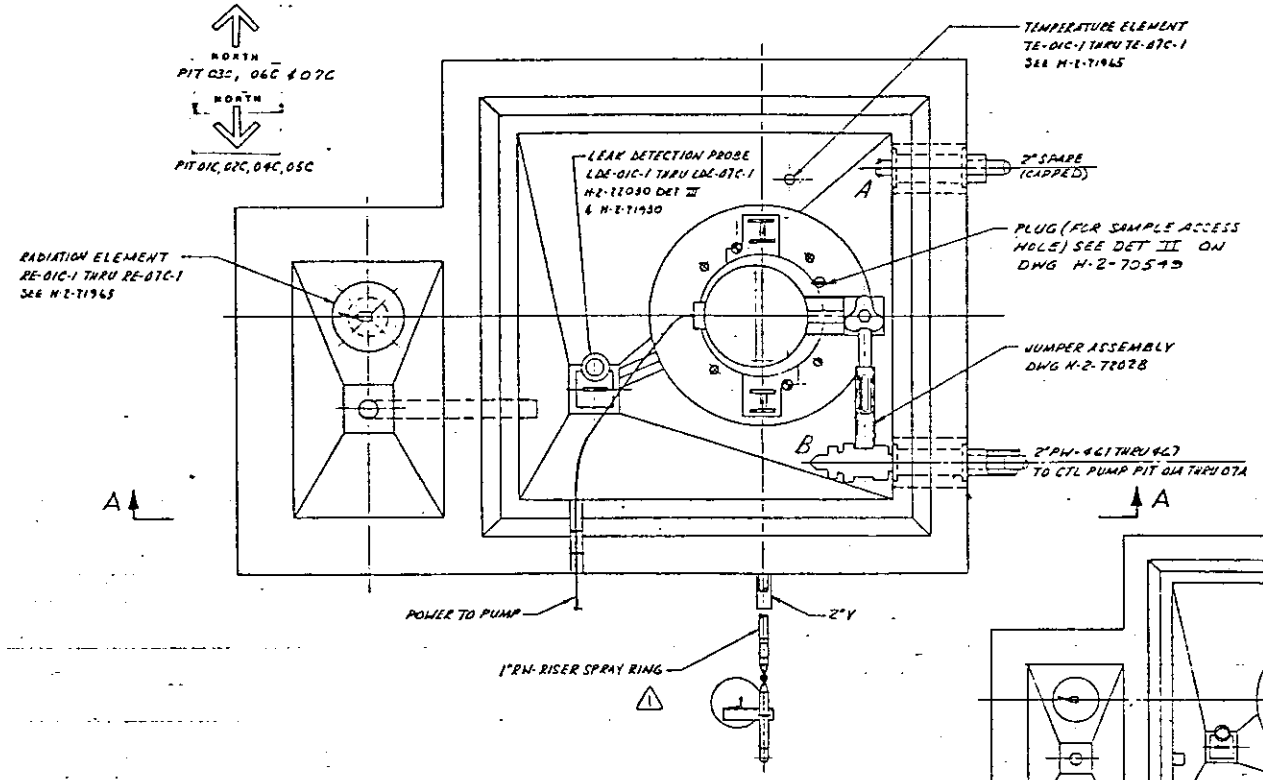

PLAN-LEAK DETECTION PIT 241-AN-01C THRU 07C
(COVER BLOCK NOT SHOWN FOR CLARITY)
SCALE: 1"=1'-0"

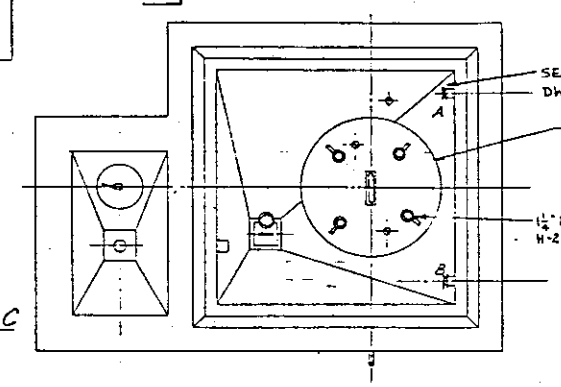

PLAN WITH PUMP REMOVED
LEAK DETECTION PIT
SCALE: NONE

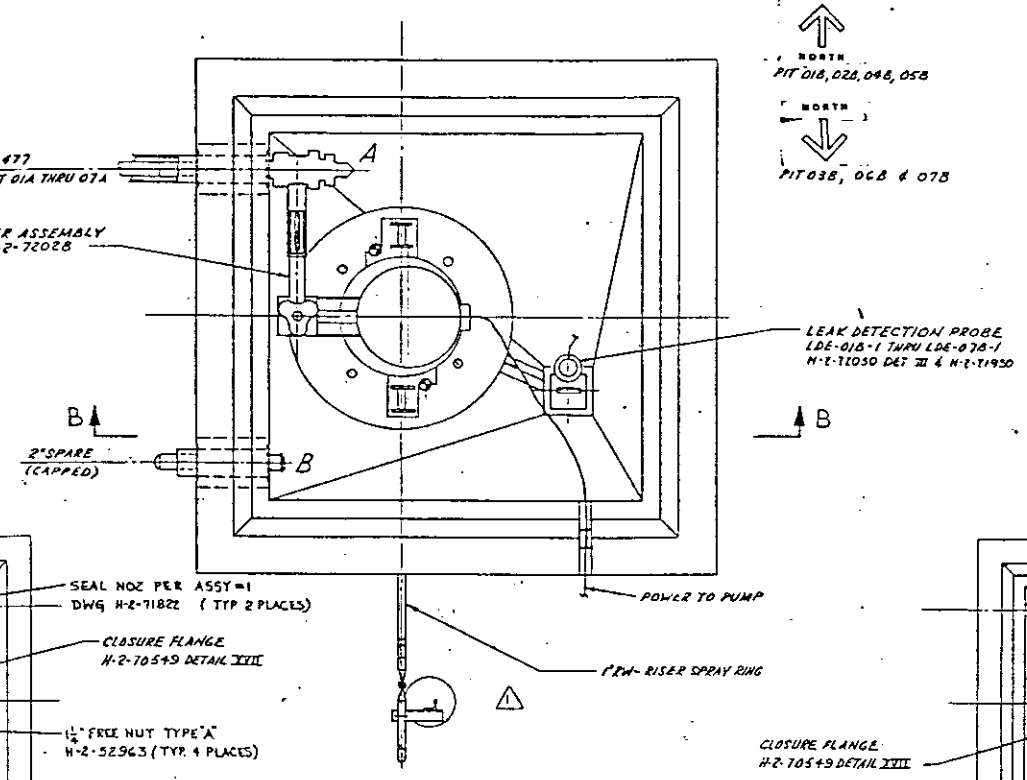

PLAN-ANNULUS PUMP PIT 241-AN-01B THRU 07B
(COVER BLOCK NOT SHOWN FOR CLARITY)
SCALE: 1"=1'-0"

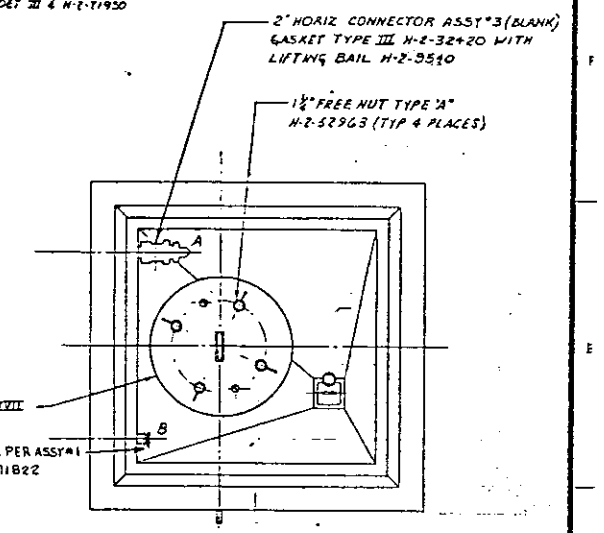

PLAN WITH PUMP REMOVED
ANNULUS PUMP PIT
SCALE: NONE

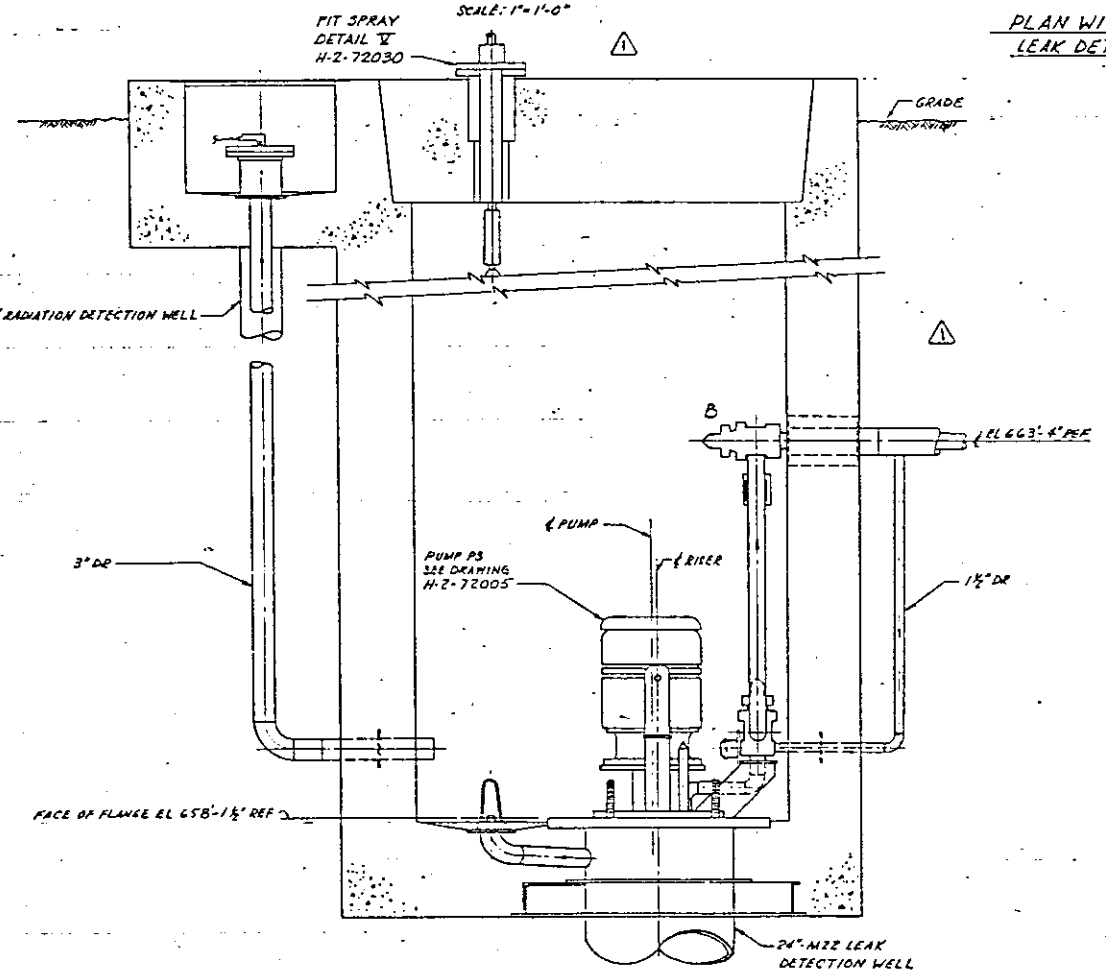

SECTION A-A
SCALE: 1"=1'-0"

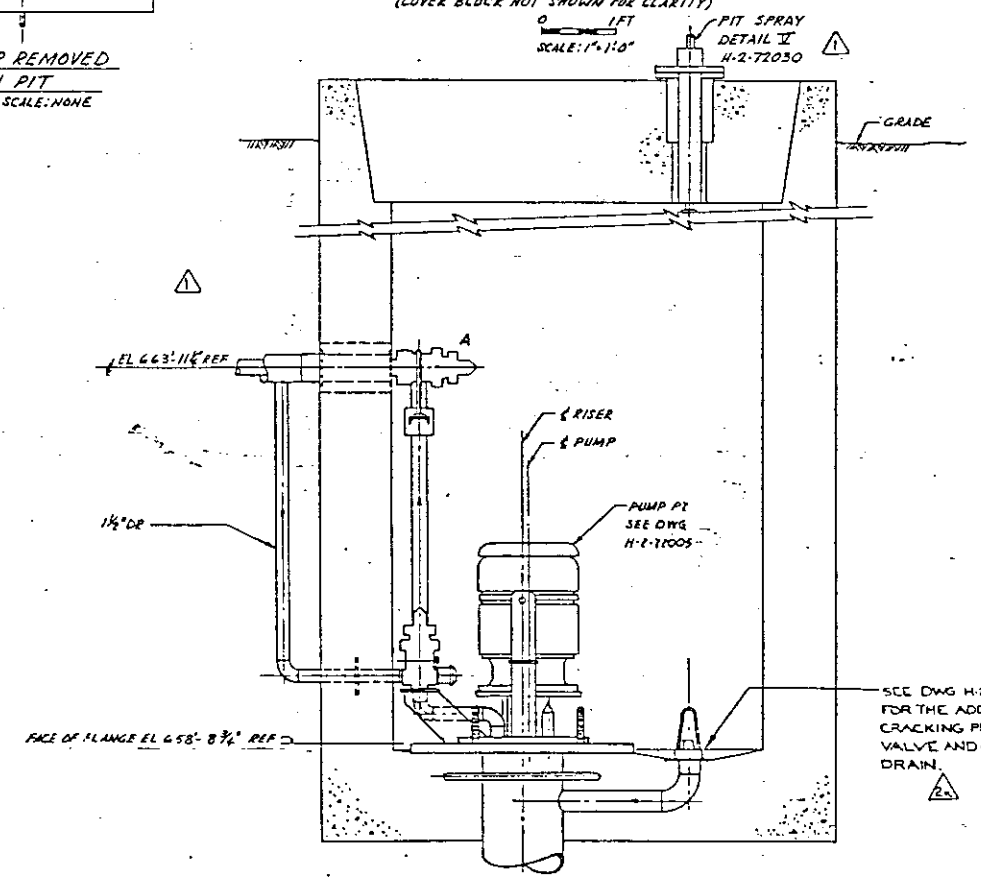

SECTION B-B
SCALE: 1"=1'-0"

NOTE:
FOR GENERAL NOTES SEE DWG H-2-71986

REV 1 DOE DATE 7/5/78

RELEASED FOR CONSTRUCTION
BY DATE 2/1/78
DOE

REFERENCE DRAWINGS	
H-2-95340	PIPING - 2" HORIZ. BLANK CONN. LIFTING BAIL ASSY & DETAILS
H-2-57231	DETAIL - FREE NUT
H-2-57410	ASSY - HORIZ. GASKET CONN. 2" CONNECTOR
H-2-70549	STD TANK FARM DETAILS
H-2-70419	STD TANK FARM DETAILS
H-2-71930	DRAWING INDEX

NEXT USED ON

REVISIONS		
1	AS-BUILT ADDED NOTE ZN B3	2
0	ADDED PIT SPRAY, IN D-4, D-10 PIPING, IN E-5, D-7, E-10 & C-9; REMOVED PIT SPRAY RISER &	1

DRAWING STATUS

ENERGY RESEARCH & DEVELOPMENT ADMINISTRATION
RICHLAND OPERATIONS OFFICE

VITRO ENGINEERING
Division of AUTOMATION INDUSTRIES, INC.

JUMPER ARRANGEMENTS LEAK DETECTION PIT & ANNULUS PUMP PIT

J. DOWEY
M. EDGAR
SCALE SHOWN
ANDT 2100
241-AN
8806
NONE
H-2-72011

QTY.	QTY.	PART NO.	DESCRIPTION	MATERIAL
	X	1	ASSEMBLY R3-A	——
X		2	ASSEMBLY R2-A (ALTN)	——
1	-	3	3" HOKIE CONNECTOR ASSY #3 GASKET TYPE III	H-2-32430
1	2	4	2" HOKIE CONNECTOR ASSY #1 GASKET TYPE III	H-2-32420
AR	AR	5	2" SCHED 40 PIPE	ASTM A53 - "TYPE E" GR B CS
1	1	6	C4 x 5.4 x 10"	ASTM-A36 CS
1	1	7	PLATE 1/2" x 1" x 4 1/2"	ASTM-A36 CS
1	1	8	LIFTING RAIL	H-2-3145

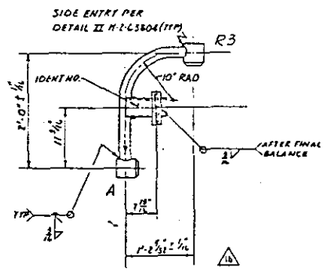

PLAN

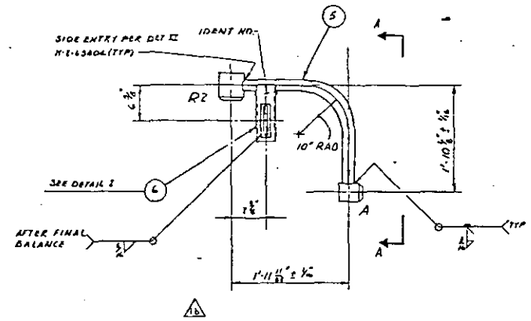

PLAN

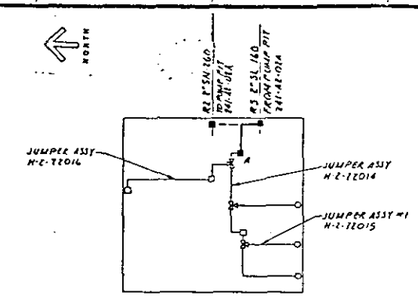

KEY PLAN

SCALE: NONE

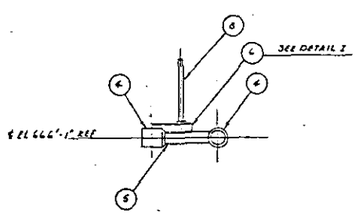

ELEVATION

1 ASSEMBLY

SCALE: 1" = 1'-0"

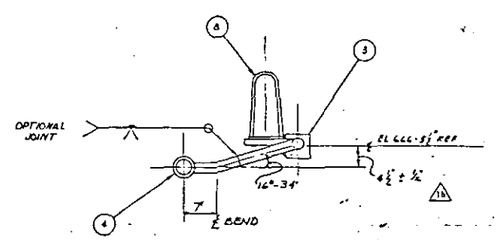

ELEVATION A-A

2 ASSEMBLY

SCALE: 1" = 1'-0"

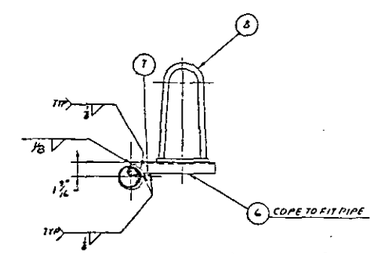

DETAIL I

SCALE: 1 1/2" = 1'-0"

GENERAL NOTES:

1 — FABRICATION AND TESTING SHALL BE IN ACCORDANCE WITH HANFORD SPECIFICATION HWS-5786, REV. 11. ALL BUTT WELDS TO BE FULL PENETRATION

2 — HYDROSTATIC TEST AT 400 PSIG.

3 — ANGULAR FABRICATION TOLERANCE TO BE ±1°. HANDLE RECEIVER FUNNELS TO BE LOCATED FRACTIONAL ± 1/16"

RELEASED FOR CONSTRUCTION
BY R.L. Lusby DATE 2/6/72
DOE

H-E-72009	0	241-AN & B JUMPER ARRGT VALVE PITS
H-E-71900	0	DRAWING INDEX
NO.	REV.	TITLE
REFERENCES		
NEXT USED ON H-2-72009		

NO.	REVISIONS	DESCRIPTION	REV. NO.
		AS BUILT DIMENSIONS REV NO. 2 IN E-11 TOLERANCES 2 N C 3, E, F7 (N) CHANGED NOTES (N) CHANGED	1

COMMENT PKT ISSUE NO. 1 — CHECK PKT ISSUE NO. 1 — DRAWING STATUS

U.S. ENERGY RESEARCH AND DEVELOPMENT ADMINISTRATION

VITRO ENGINEERING CORPORATION

JUMPER ASSEMBLY
R3-A, R2-A (ALTN)
VALVE PIT 241-AN-B

PROJECT TITLE	241-AN TANK FARM
DRAWN BY	D. MERRIMAN
SCALE	NOTED
PROJECT NO.	241-AN
DRAWING NO.	8405
CLASSIFICATION	NONE
DRAWING NO.	H-2-72013

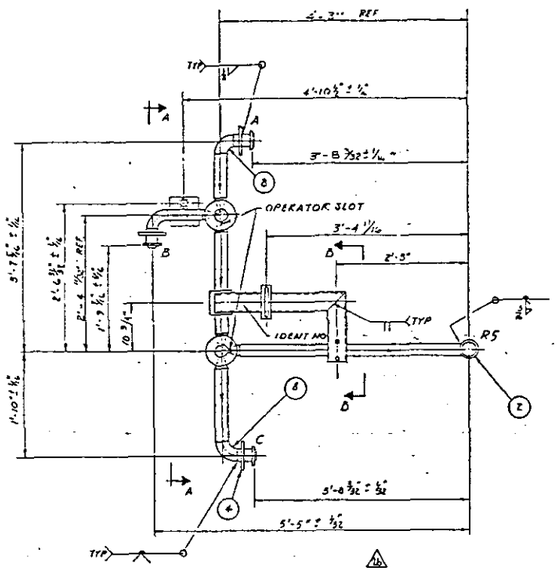

PLAN

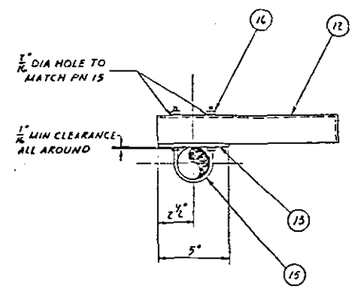

SECTION B-B

0 3 6"

SCALE: 3" = 1'-0"

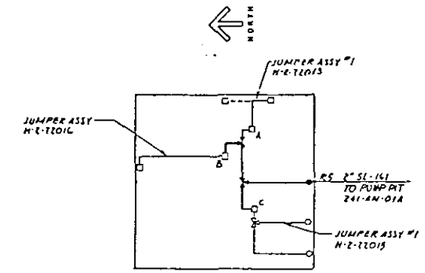

KEY PLAN

NO SCALE

QTY.	PART NO.	DESCRIPTION	MATERIAL
	1	ASSEMBLY	—
1	2	2" VERT CONN ASSY #2, GASKET TYPE III	H-2-32220
3	3	2" MALE CONN NOZZLE PN 3	H-2-32446
3	4	2" KNK-OFF PLATE TYPE I	H-2-30600
1	5	LIFTING BAIL	H-2-3245
2	6	HANDLE RECEIVER FUNNEL	H-2-70581 DETAIL III-A-0
2	7	2" 3-WAY BALL VALVE TEE PORT SEE NOTE 3	PITTSBURG BRASS CO #2WF-E-17-AM-6
6	8	2" SCHED 40 · 90° LR WELD ELBOW	ASTM-A234 GR-WPB CS
AR	9	2" SCHED 40 PIPE	ASTM-A53 TYPE S GR B CS
1	10	PLATE	ASTM A36 CS
AR	11	1½" SCHED 40 PIPE (SUPPORT)	ASTM-A53 TYPE S GR B CS
AR	12	C6 X 5.6	ASTM-A36 CS
1	13	PLATE ¼" x 5" x 5" W/(2) - 7/16" DIA HOLES FOR U-BOLT	ASTM-A36 CS
1	14	SUPPORT (ALL WELD ASTM A36 CS)	H-2-53804 DET II
1	15	U-BOLT ⅜" DIA x 8" TAN (FOR 2" PIPE) W/ ⅜"-16 UNC-2A x 5" LG THD	ASTM A307 GR B CS
4	16	HEX NUT ⅜"-16 UNC-2B	ASTM A307 GR B CS

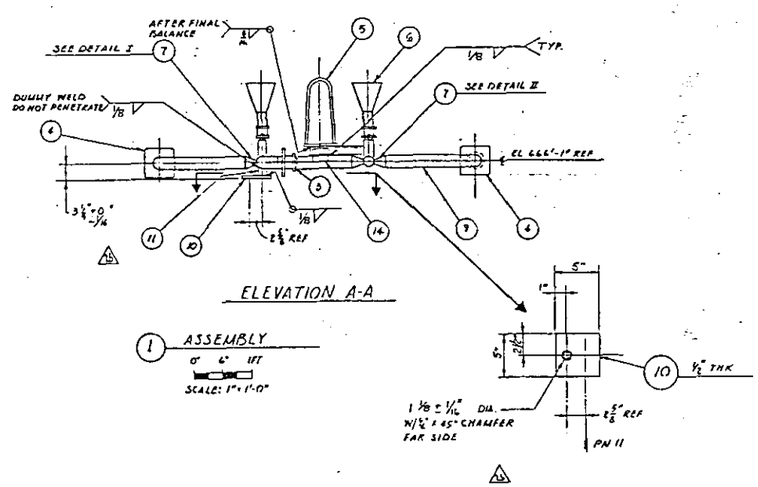

ELEVATION A-A

1 ASSEMBLY

0" 6" 1FT

SCALE: 1" = 1'-0"

DETAIL I

90° ROTATION

SCALE: NONE

DETAIL II

90° ROTATION

SCALE: NONE

GENERAL NOTES:

1 — FABRICATION AND TESTING SHALL BE IN ACCORDANCE WITH HANFORD SPECIFICATION HWS-5786, REV. 11 ALL BUTT WELDS SHALL BE FULL PENETRATION.

2 — HYDROSTATIC TEST AT 600 PSIG.

3 - 3-WAY BALL VALVE (PN7) SHALL CONFORM TO THE FOLLOWING SPECIFICATIONS:

a) CARBON STEEL BODY.
b) BUTT WELD ONE PIECE CASTING CARBON STEEL END FITTINGS, INTEGRALLY CAST AND MACHINED.
c) 50% - 316 STAINLESS STEEL FILLED TEFLON BALL SEAT RING.
d) ASBESTOS BODY GASKET
e) GRAPHITED ASBESTOS STEM PACKING
f) PRIOR TO INSTALLATION VERIFY THAT ALL STOP PINS HAVE BEEN REMOVED FROM VALVE BODY

4 - ANGULAR FABRICATION TOLERANCE TO BE ±1°. HANDLE RECEIVER FUNNELS TO BE LOCATED FRACTIONAL ± 1/16"

REV 1 DOE DATE 3/5/79

RELEASED FOR CONSTRUCTION
BY DOE DATE

H-2-72009	0	241-AN-A2.0 JUMPER ARRGT VALVE PITS	
H-2-71909	0	DRAWING INDEX	
NO.	REV	TITLE	
REFERENCES			
NEXT USED ON H-2-72009			

REV	DESCRIPTION
2	AS-BUILT CHANGED REV NO. ZN E-11 CHANGED ZN DH, G2, GW (a) CHANGED NOTES(3) TOLERANCES
1	ADDED NOTE 3F, ZN 11-6

REVISIONS

COMMENT PRT ISSUE NO 1 CHECK PRT ISSUE NO 1 11-16-77

DRAWING STATUS

U.S. ENERGY RESEARCH AND DEVELOPMENT ADMINISTRATION

VITRO ENGINEERING CORPORATION

JUMPER ASSEMBLY

R5-A-15-C

VALVE PIT 241-AN-B

PROJ NO. A-1750 SUB NO. A13002 PROJECT TITLE 241-AN TANK FARM

DRAWN D. MERRIMAN NOTED SCALE 241-AN SUBJ NO. 8405

CLASSIFICATION NONE DWG NO. H-2-72014

ADMIN. CONTROL OF DOCUMENTS WITH ENGINEERING CONTROL BY DATE 3/1/78

© VITRO ENGINEERING CORPORATION

QTY.	QTY.	PART NO.	DESCRIPTION	MATERIAL
		1	ASSEMBLY · C · R7 & R8	——
		2	ASSEMBLY B - L7 & L9	——
1	1	3	2" HORIZ CONNECTOR ASSY #1 GASKET TYPE II	H-2-32620
2	2	4	2" VERT CONNECTOR ASSY #2 GASKET TYPE III	H-2-32620
1	1	5	2"-3 WAY BALL VALVE TEE PORT SEE NOTE 3	PITTSBURG GLASS CO. #2 DET 2-37-AN &
AR	AR	6	2" SCHED 40 PIPE	ASTM-A53 TYPE S GR B CS
AR	AR	7	C6 x 5.6	ASTM-A36 CS
1	1	8	PLATE 1/4 x 3 x 5" W/(2) 5/16 DIA HOLES FOR U-BOLT	ASTM-A36 CS
1	1	9	U-BOLT 3/8 DIA x 6" TAN (FOR 2" PIPE) W/ 3/8-16UNC-2A & 3-LG THD	ASTM-A307 CS GR B
4	4	10	HEX NUT 3/8"-16UNC-2B	ASTM-A307 CS GR B
1	1	11	HANDLE RECEIVER FUNNEL	H-2-70551 DETAIL VII-A-D
1	1	12	SUPPORT (ALL WELD) ASTM A36	H-2-63804, DET III
1	1	13	LIFTING RAIL	H-2-3245

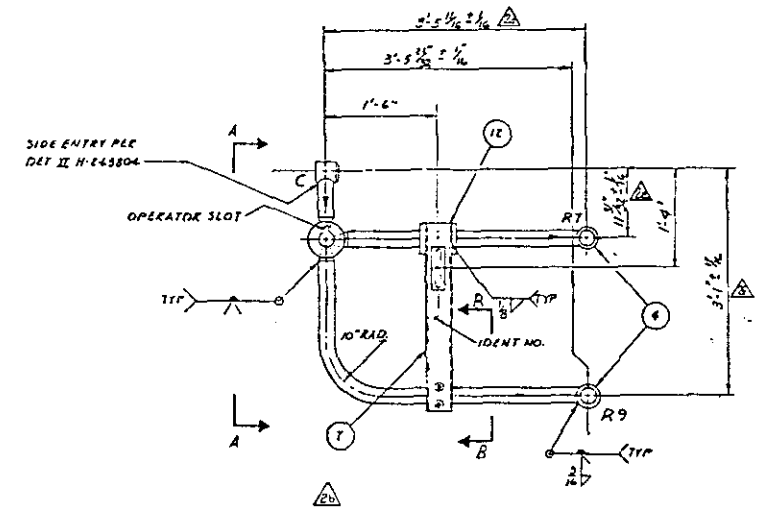

PLAN

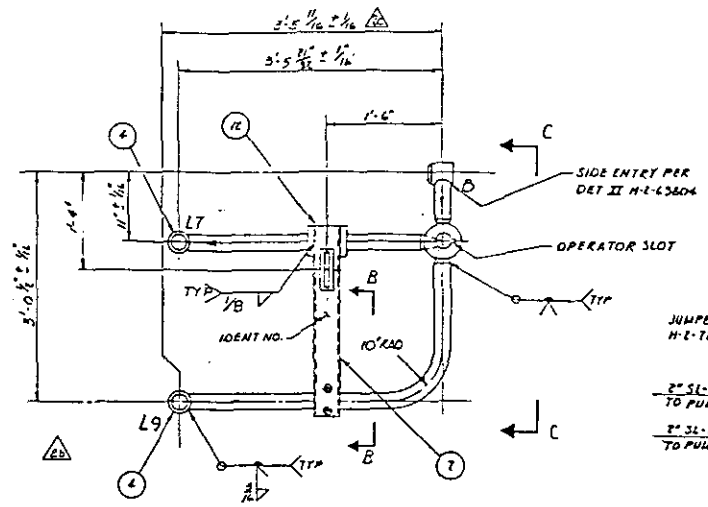

PLAN

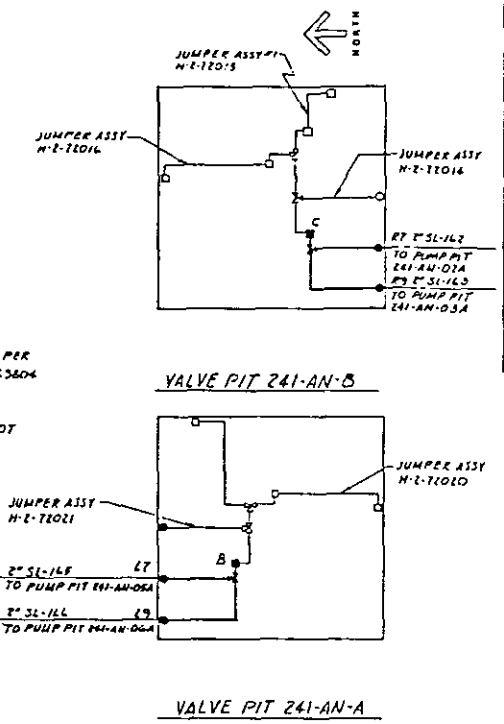

KEY PLANS
SCALE: NONE

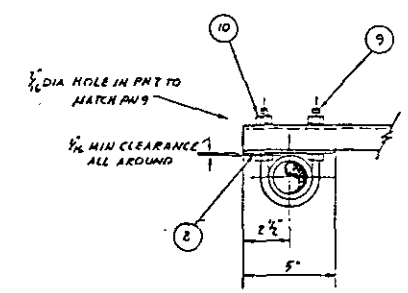

SECTION B-B
SCALE: 3" = 1'-0"

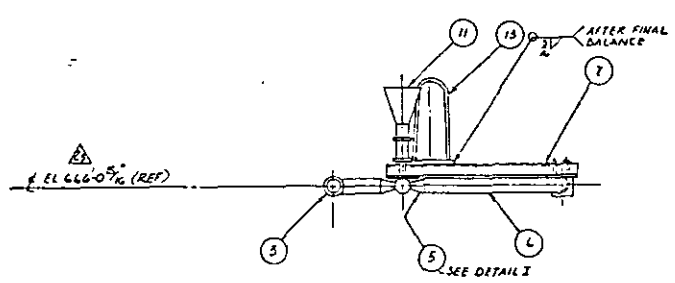

ELEVATION A-A

1 ASSEMBLY
SCALE: 1" = 1'-0"

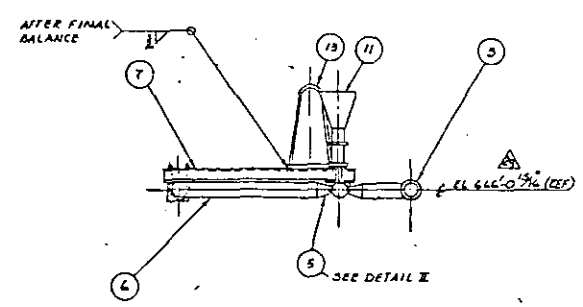

ELEVATION C-C

2 ASSEMBLY
SCALE: 1" = 1'-0"

DETAIL I
90° ROTATION
SCALE: NONE

DETAIL II
90° ROTATION
SCALE: NONE

GENERAL NOTES:

1 – FABRICATION AND TESTING SHALL BE IN ACCORDANCE WITH HANFORD SPECIFICATION HWS-5786, REV. " ALL BUTT WELDS SHALL BE FULL PENETRATION.

2 – HYDROSTATIC TEST AT 600 PSIG.

3 – 3-WAY BALL VALVE (PN 5) SHALL CONFORM TO THE FOLLOWING SPECIFICATIONS:

a) CARBON STEEL BODY

b) BUTT WELD, ONE PIECE CASTING, CARBON STEEL END FITTINGS, INTEGRALLY CAST AND MACHINED.

c) 50 PERCENT 316 STAINLESS STEEL FILLED TEFLON BALL SEAT RINGS.

d) ASBESTOS BODY GASKET

e) GRAPHITED ASBESTOS STEM PACKING.

f) PRIOR TO INSTALLATION VERIFY THAT ALL STOP PILS HAVE BEEN REMOVED FROM VALVE BODY

4 – ANGULAR FABRICATION TOLERANCE TO BE ± 1°, HANDLE RECEIVER FUNNELS TO BE LOCATED FRACTIONAL ± 1/8"

REV 1 DOE DATE 2/9/72

RELEASED FOR CONSTRUCTION
BY DOE DATE

							C13	AS BUILT W/ IN GEN. NOTES #1 ZN E-12 GLC-1 ZN F-2 & F-8 W/REVISED REV. ZN B-4(F) WAS 5 0/2" ZN C-4(5) WAS EL ZN B-7(G) ADDED 5 5/8" ZN K-3(C) WAS 11" CHANGED Z N C 2, CL(C) ADDED 3'-5 1/2" #2 NOTE CHANGED (6) TOLERANCES	2
							1	ADDED NOTE 3F, ZN 11-6	1
H-2-71069	0	JUMPER ASSY GASKET TYPE PITS 241-AN A & B							
H-2-71900	0	DRAWING INDEX							
NO.	REV	TITLE						DESCRIPTION	

REFERENCES

NEXT USED ON H-2-71009

REVISIONS

COMMENT PKT ISSUE NO 1 | CHECK PKT ISSUE NO/ 11-1-72

DRAWING STATUS

U.S. ENERGY RESEARCH AND DEVELOPMENT ADMINISTRATION

VITRO ENGINEERING CORPORATION

JUMPER ASSEMBLY
C-R7 & R9/B-L7 & L9
VALVE PITS 241-AN-A & B

PROJ. NO. 6130	PRODUCT TYPE 241-AN TANK FARM
TASK NO. 8130DL	
SCALE NOTED	DWG. NO. 241-AN 8605
DRAWN BY D. HERRIMAN	
CALCULATION NONE	DATE NONE
H-2-72015	

QTY.	PART NO.	DESCRIPTION	MATERIAL
X	1	ASSEMBLY	—
2	2	2" HORIZ CONN ASSY #1, GASKET TYPE III	H-2-32420
1	3	2" SCHED 40-90° LR WELD ELBOW	ASTM-A234 GR WPB CS
AR	4	2" SCHED 40 PIPE	ASTM-A53 TYPE S GR B CS
AR	5	C4 x 5.4 x 6"	ASTM-A36 CS
1	6	LIFTING BAIL	H-2-3245
1	7	PLATE 1/4" x 1" x 4 1/2"	ASTM-A36 CS

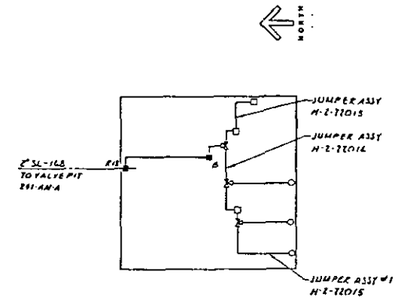

KEY PLAN
SCALE: NONE

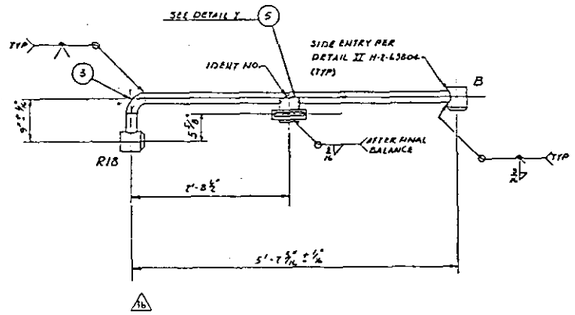

PLAN

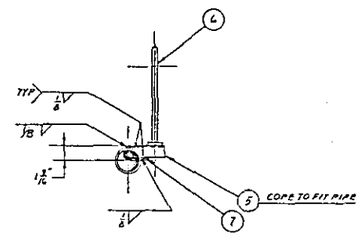

DETAIL I
0 1FT
SCALE: 1 1/2" = 1'-0"

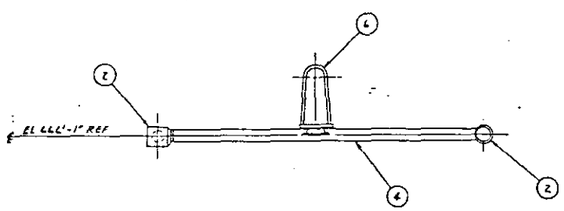

ELEVATION

1 ASSEMBLY
0 1FT
SCALE: 1" = 1'-0"

GENERAL NOTES:

1 – FABRICATION AND TESTING SHALL BE IN ACCORDANCE WITH HANFORD SPECIFICATION HWS-5786, REV. 11 ALL BUTT WELDS SHALL BE FULL PENETRATION.

2 – HYDROSTATIC TEST AT 600 PSIG.

3 – ANGULAR FABRICATION TOLERANCES TO BE ±1. HANDLE RECEIVER FUNNELS TO BE LOCATED FRACTIONAL ±1/8".

RELEASED FOR CONSTRUCTION
BY [signature] DATE 3/1/78
DOE

NO.	REV	TITLE
H-2-72009	0	241-AN-A & B JUMPER ARROT VALVE PITS
H-2-71900	0	DRAWING INDEX

REFERENCES
NEXT USED ON H-2-72009

REVISIONS
AS BUILT
CHANGED REV NO. ZN E-11
CHANGED ZN C3
(2) NOTE CHANGED (6) TOLERANCES
DESCRIPTION
CONN ENT PRT ISSUE NO 1 1/8/78 DATE | CHECK PRT ISSUE NO 1 11-16-77 DATE
DRAWING STATUS

U.S. ENERGY RESEARCH AND DEVELOPMENT ADMINISTRATION
VITRO ENGINEERING CORPORATION

JUMPER ASSEMBLY
R18-B
VALVE PIT 241-AN-B

PROJ NO. B-130 | PROJECT TITLE 241-AN TANK FARM
DRAWN BY D. MERRIMAN | SCALE NOTED | BLDG. NO. 241-AN | DWG NO. 8405
CLASSIFICATION NONE | DWG NO. H-2-72016

QTY.	PART NO.	DESCRIPTION	MATERIAL
X	1	ASSEMBLY	——
2	2	3" HORIZ CONN ASSY #1, GASKET TYPE III	H-2-52430
1	3	3" MALE CONN NOZZLE PN E	H-2-32446
1	4	3" 3-WAY BALL VALVE, TEE PORT, SEE NOTE 3	PITTSBURG BRASS #3-NP-E-19-BM-6
3	5	3" SCHED 40 · 90° LR WELD ELBOW	ASTM A234 GR WPB CS
AR	6	3" SCHED 40 PIPE	ASTM-A53 TYPE S GR B CS
1	7	HANDLE RECEIVER FUNNEL	H-2-70951 DET III-A-B
1	8	3" KICK-OFF PLATE TYPE I	H-2-30600
1	9	SUPPORT ALL MATERIAL ASTM A36 CS	H-2-63806 DET II
1	10	LIFTING BAIL	H-2-5245
1	11	PLATE 1/2" x 6 x 6	ASTM-A36 CS
4	12	SPACER BLOCK 2 1/2" x 4 1/2" x 1" THK	ASTM A36 CS
4	13	U-BOLT 1/2"-13UNC-2A x 5" LG (FOR 3" PIPE)	ASTM-A307 GR B CS
AR	14	C4 x 5.4	ASTM A36 CS

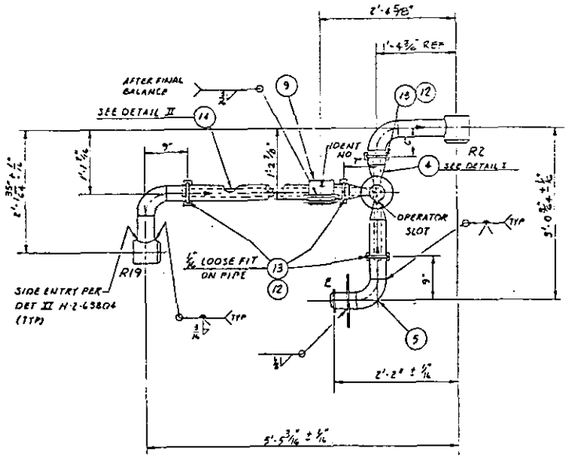

PLAN

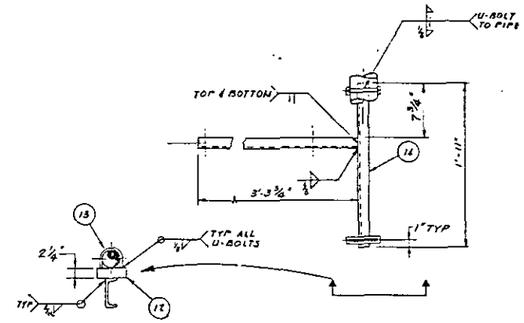

DETAIL II
SUPPORT FRAME - PIPING REMOVED
0" 6" 1FT
SCALE: 1 1/2" = 1'-0"

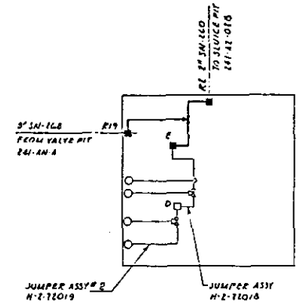

KEY PLAN
SCALE: NONE

DETAIL I
180° ROTATION
SCALE: NONE

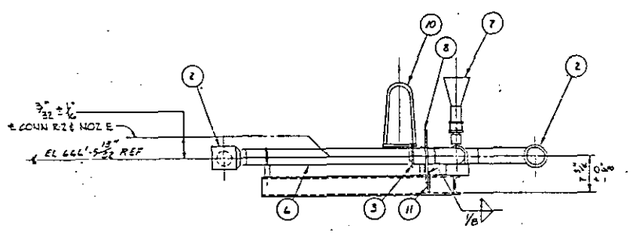

ELEVATION

1 ASSEMBLY
0 1FT
SCALE: 1" = 1'-0"

GENERAL NOTES:

1 — FABRICATION AND TESTING SHALL BE IN ACCORDANCE WITH HANFORD SPECIFICATION HWS-5786, REV. 11. ALL BUTT WELDS SHALL BE FULL PENETRATION.

2 — HYDROSTATIC TEST AT 450 PSIG.

3 - 3-WAY BALL VALVE (PN4) SHALL CONFORM TO THE FOLLOWING SPECIFICATION AND DETAIL I: △3
- a) CARBON STEEL BODY
- b) BUTT WELD ONE PIECE CASTING CARBON STEEL END FITTINGS INTEGRALLY CAST AND MACHINED.
- c) 90% · 316 STAINLESS STEEL FILLED TEFLON BALL SEAT RING.
- d) ASBESTOS BODY GASKET
- e) GRAPHITED ASBESTOS STEM PACKING
- f) PRIOR TO INSTALLATION VERIFY THAT ALL STOP PINS HAVE BEEN REMOVED FROM VALVE BODY.

4 - ANGULAR FABRICATION TOLERANCE TO BE ± 1°, HANDLE RECEIVER FUNNELS TO BE LOCATED FRACTIONAL ± 1/8"

△3 QUALITY ASSURANCE LEVEL II

H-2-72009	0	241-AN-A & D JUMPER ARGT VALVE PITS	
H-2-71900	0	DRAWING INDEX	
NO.	REV	TITLE	
REFERENCES			
NEXT USED ON		H-2-72009	

13	DS		11-16-77	REV PER CEO 00266	3
				DESCRIPTION	REV NO.
REVISIONS					
COMMENT PKT ISSUE NO 1			CHECK PKT ISSUE NO 1 11-16-77 DATE		LAST REV 3
DRAWING STATUS					

APPD FOR PROCUREMENT WITH HANFORD CONTROLS BY J.D. CHADWICK DATE 9/1/78
PROJECT ENGR 7/10/78
SYSTEM ENGR 7/10/78
SAFETY ENGR 8/10/78
DESIGN ENGR 10/2/78
DRAWN BY D.J. Sebe 11/21/78
CHECKED 7/10/78
DRAWN BY D. MERRIMAN 7/10/78

U.S. ENERGY RESEARCH AND DEVELOPMENT ADMINISTRATION
VITRO ENGINEERING CORPORATION
Architects • Engineers

JUMPER ASSEMBLY
R2-R19-E
VALVE PIT 241-AN-B

PROJ NO. 6-130 · PROJECT TITLE 241-AN TANK FARM
DWG NO. 2150021
SCALE NOTED · BLDG NO. 241-AN · DWG NO. 8405
CLASSIFICATION NONE
DWG NO. H-2-72017
SHEET NO. OF NO. SHEETS — —

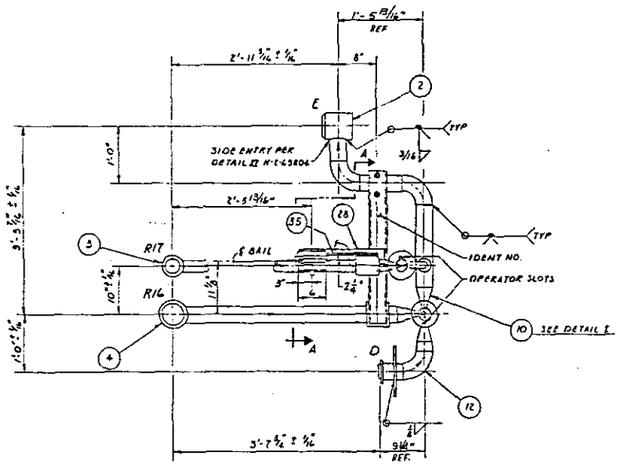

PLAN

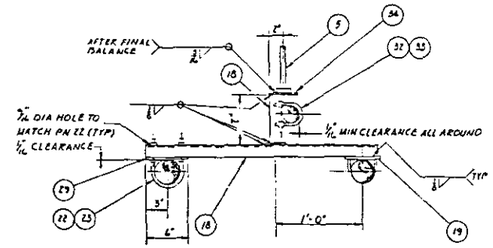

SECTION A-A

0" 6" 1FT

SCALE: 1 1/2" = 1'-0"

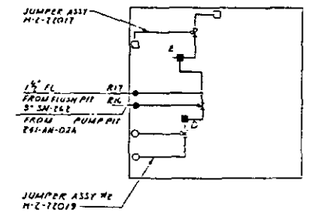

KEY PLAN

SCALE: NONE

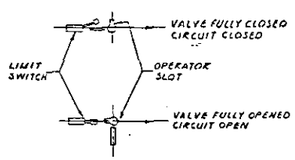

FLUSH VALVE (PN 11) OPERATION

DETAIL III

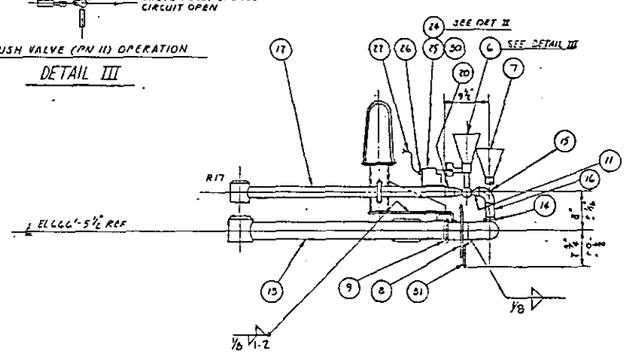

ELEVATION

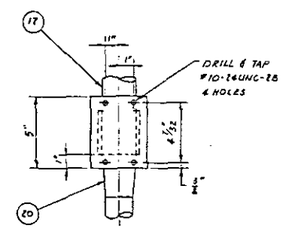

PLAN

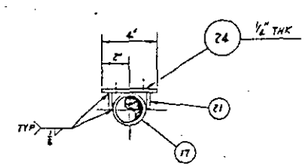

ELEVATION

DETAIL II

0" 4"

SCALE: 3" = 1'-0"

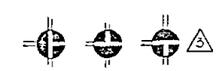

DETAIL I

SCALE: NONE

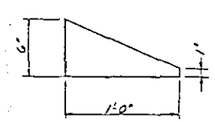

35 1/4" THK

1 ASSEMBLY

0" 6" 1FT

SCALE: 1" = 1'-0"

QTY.	PART NO.	DESCRIPTION	MATERIAL
X	1	ASSEMBLY	——
1	2	3" NORTH CONN-ASSY #1 GASKET TYPE II	H-2-32430
1	3	2" YERT CONN-ASSY #2 GASKET TYPE II	H-2-32420
1	4	3" YERT CONN-ASSY #2 GASKET TYPE II	H-2-32430
1	5	LIFTING BAIL	H-2-3245
1	6	HANDLE RECEIVER FUNNEL W/ARM	H-2-70551 DET III-C-F
1	7	HANDLE RECEIVER FUNNEL	H-2-70551 DET III-A-E
1	8	3" KICK-OFF PLATE TYPE I	H-2-30400
1	9	3" MALE CONNECTOR NOZZLE PART #2	H-2-32446
1	10	3" 3-WAY BALL VALVE, SEE PORT SEE NOTE 3	PITTSBURG BRASS #3-MP-E-19-CIN-4
1	11	1 1/2" BALL VALVE	WORCESTER MISER #T-72-444-TAW
3	12	3" SCHED 40-90° LR WELD ELBOW	ASTM A234 GR WPB CS
AR	13	3" SCHED 40 PIPE	ASTM-A53 GR B CS
1	14	3" x 1 1/2" WELDOLET - STD WT	ASTM-A105 CS
1	15	1 1/2" SCHED 40-90° LR WELD ELBOW	ASTM-A234 GR WPB CS
AR	16	1 1/2" SCHED 40-PIPE	ASTM-A106 GR B CS
AR	17	2" SCHED 40-PIPE	ASTM-A53 TYPE S GR B CS
AR	18	C4 x 5.4	ASTM-A36 CS
1	19	SUPPORT ALL MATL ASTM-A36 CS	H-2-63804 DET II
1	20	2" x 1 1/2" SCHED 40-CNCTRC WELD REDUCER	ASTM-A234 GR WPB CS
2	21	PLATE 1/4 x 1 3/4 x 3	ASTM-A36 CS
1	22	U-BOLT 7/8" DIA x 5" TAN (FOR 3" PIPE) W/7/8"-13UNC-2A x 4" LG THD	ASTM-A307 GR B CS
4	23	HEX NUT 7/8"-13UNC-2B	ASTM-A307 GR B CS
1	24	MOUNTING PLATE SEE DETAIL II	ASTM-A36 CS
1	25	LIMIT SWITCH LS-VP-AA-N-1	SQUARE D, TYPE F5151 W/LEVER ARM TYPE D12
1	26	ELECTRICAL CONNECTOR	TYPE CGB
1	27	CABLE	H-2-71925
1	28	FLAT BAR 1/4 x 3 x 1'-6"	ASTM-A108 GR 1020 CS
1	29	PLATE 1/4 x 6 x 6 (W/2-7/8" DIA HOLES FOR U-BOLT)	ASTM-A36 CS
6	30	HEX HD MACHINE SCREW #10-24UNC-2A x 3/4" LG W/LOCK WASHER	ASTM-A307 & ASTM-A325
1	31	PLATE 1/4 x 4 x 6	ASTM-A36 CS
1	32	U-BOLT-7/8" DIA-4" TANGENT (FOR 2" PIPE) W/ 7/8"-9UNC-2A x 2" THD	ASTM-A307 GR B CS
4	33	HEX NUT 7/8"-9UNC-2B	ASTM-A307 GR B CS
1	34	PLATE 1/4 x 4 x 6	ASTM-A36 CS
1	35	GUSSET	ASTM A36 CS

GENERAL NOTES:

1 — FABRICATION AND TESTING SHALL BE IN ACCORDANCE WITH HANFORD SPECIFICATION HWS-5786, REV. 11. ALL BUTT WELDS SHALL BE FULL PENETRATION.

2 — HYDROSTATIC TEST AT 450 PSIG.

3 - 3-WAY VALVE (PN 10) SHALL CONFORM TO THE FOLLOWING SPECIFICATION AND DETAIL I: 3
- a) CARBON STEEL BODY
- b) BUTT WELD, ONE PIECE CASTING, CARBON STEEL END FITTINGS, INTEGRALLY CAST AND MACHINED
- c) 50% 316 STAINLESS STEEL FILLED TEFLON BALL SEAT RINGS
- d) ASBESTOS BODY GASKET
- e) GRAPHITED ASBESTOS STEM PACKING

4 - FOR LIMIT SWITCH ELECTRICAL SCHEMATIC SEE DRAWING H-2-71925

5 - ANGULAR FABRICATION TOLERANCE TO BE ±1°. HANDLE RECEIVER FUNNELS TO BE LOCATED FRACTIONAL ± 1/8".

QUALITY ASSURANCE LEVEL II 2

H-2-72019	0	JUMPER ARRGT VALVE PIT 241-AN-8 & 8
H-2-71900	0	DRAWING INDEX
NO.	REV	TITLE
REFERENCES		
NEXT USED ON H-2-72019		

3	REV PER CEO 00267	
REV	DESCRIPTION	
REVISIONS		
DRAWING STATUS		

U.S. ENERGY RESEARCH AND DEVELOPMENT ADMINISTRATION

VITRO ENGINEERING CORPORATION

JUMPER ASSEMBLY

R16-R17-E-D

VALVE PIT 241-AN-8

DRAWN	D. MERRIMAN	1/21/77	
SCALE	NOTED	PROJECT TITLE	241-AN TANK FARM
DWG. NO.	241-AN		8405
CLASSIFICATION	NONE	DWG. NO.	H-2-72018

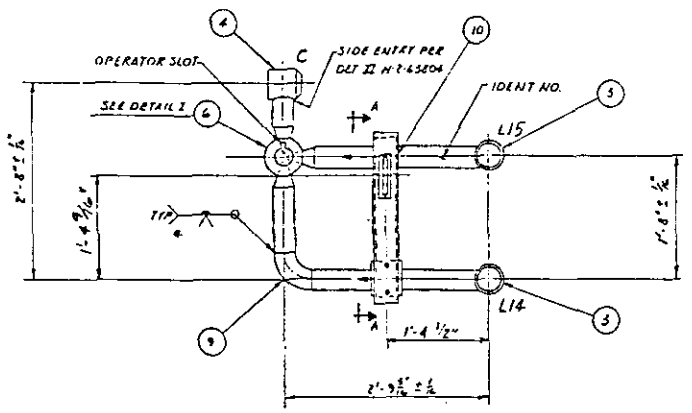

PLAN

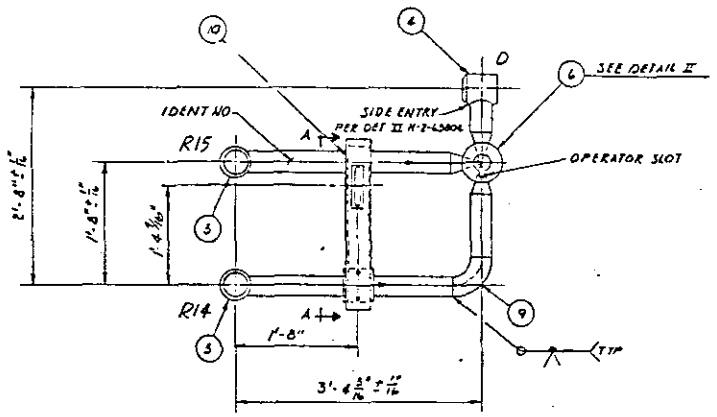

PLAN

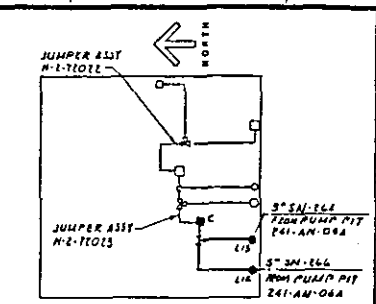

VALVE PIT Z41-AN-A

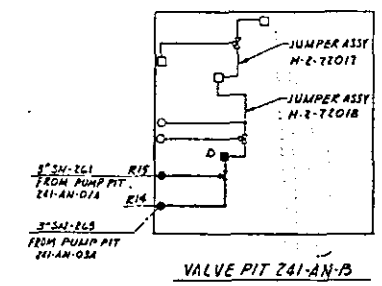

VALVE PIT Z41-AN-B

KEY PLANS

SCALE: NONE

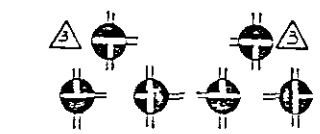

DETAIL I

3 180° ROTATION
SCALE: NONE

DETAIL II

3 180° ROTATION
SCALE: NONE

QTY.	QTY.	PART NO.	DESCRIPTION	MATERIAL
	X	1	ASSEMBLY L14, L15-C	—
X		2	ASSEMBLY R14, R15-D	—
2	2	3	3" VERT CONNECTOR ASSY # 2 GASKET TYPE III	H-2-32430
1	1	4	3" HORIZ CONNECTOR ASSY # 1 GASKET TYPE III	H-2-32430
1	1	5	LIFTING RAIL	H-2-5245
1	1	6	3" 3-WAY BALL VALVE, TEE PORT SEE NOTE 3	PITTSBURG BRASS #3-HC-E-19-RM-4
1	1	7	HANDLE RECEIVER FUNNEL	H-2-76054 SHEET II-A-E
AR	AR	8	3" SCHED 40 PIPE	ASTM A53 TYPE S GR B CS
1	1	9	3" SCHED 40-90° LR WELD ELBOW	ASTM A234 GR WPB CS
AR	AR	10	C4 X 5.4	ASTM A36 CS
~~X~~	~~X~~	~~11~~	~~PLATE 1/4" X 1 1/2"~~	~~ASTM A36 CS~~
1	1	12	SUPPORT-DETAIL II ASTM A36 CS	H-2-63504
1	1	13	U-BOLT 3/4"-13UNC-2A X 5" LG (FOR 3" PIPE)	ASTM A307 GR B CS
4	4	14	HEX NUT 3/4"-13UNC-2B	ASTM A307 GR B CS
1	1	15	PLATE 1/4 X 5 X 6 (W/2 HOLES FOR U-BOLT)	ASTM A36 CS

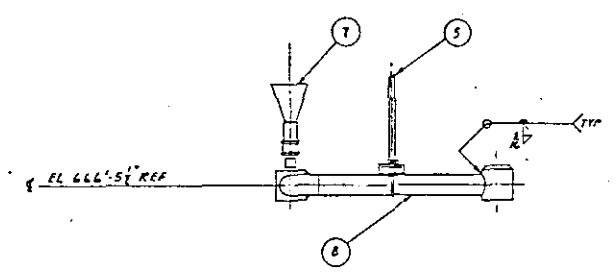

ELEVATION

1 ASSEMBLY

0" 6" 1FT
SCALE: 1" = 1'-0"

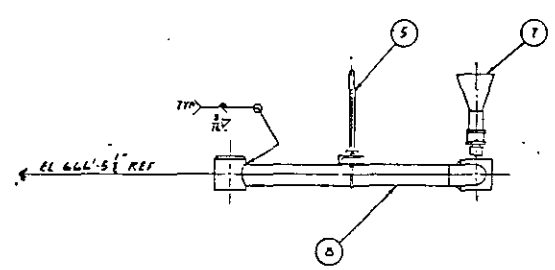

ELEVATION

2 ASSEMBLY

0" 6" 1FT
SCALE: 1" = 1'-0"

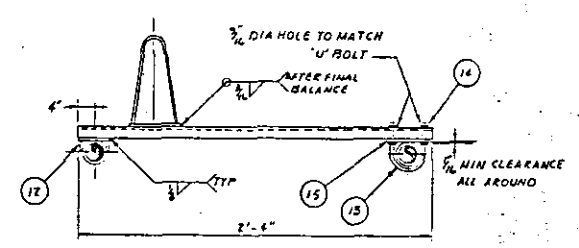

SECTION A-A

0 6 1FT
SCALE: 1" = 1'-0"

GENERAL NOTES:

1 – FABRICATION AND TESTING SHALL BE IN ACCORDANCE WITH HANFORD SPECIFICATION HWS-5786, REV. 12. ALL BUTT WELDS SHALL BE FULL PENETRATION.

2 – HYDROSTATIC TEST AT 450 PSIG.

3 – 3-WAY VALVE (PN 6) SHALL CONFORM TO THE FOLLOWING SPECIFICATION AND DETAIL I OR II: 3
- a) CARBON STEEL BODY
- b) BUTT WELD, ONE PIECE CASTING, CARBON STEEL END FITTINGS, INTEGRALLY CAST AND MACHINED.
- c) 50 PERCENT 316 STAINLESS STEEL FILLED TEFLON BALL SEAT RINGS
- d) ASBESTOS BODY GASKET
- e) GRAPHITED ASBESTOS STEM PACKING
- f) PRIOR TO INSTALLATION VERIFY THAT ALL STOP PINS HAVE BEEN REMOVED FROM VALVE BODY.

4 – ANGULAR FABRICATION TOLERANCE TO BE ±1°. HANDLE RECEIVER FUNNEL TO BE LOCATED FRACTIONAL ±1/8".

5. 5 MIL PAINT THICKNESS IS DELETED ON ALL JUMPERS (REF LTR 65222-79-012)

3 QUALITY ASSURANCE LEVEL II

H-2-71079	0	JUMPER ASSY VALVE PITS IN AREA B					
H-2-71900	0	DRAWING INDEX					
NO.	REV.	TITLE					
REFERENCES							
NEXT USED ON H-2-72009							

REVISIONS: 3 — REV PER CED 00268

DRAWING STATUS: COMMENT PRT ISSUE NO. 1 — CHECK PRT ISSUE NO. 1 — 11-21-77

U.S. ENERGY RESEARCH AND DEVELOPMENT ADMINISTRATION

VITRO ENGINEERING CORPORATION

JUMPER ASSEMBLY

L14-L15-C & R14-R15-D
VALVE PITS Z41-AN-A & B

PROJECT TITLE: Z41-AN TANK FARM

SCALE: NOTED

Z41-AN

CLASSIFICATION: NONE

DRAWING NO. H-2-72019

REV. -

QTY.	PART NO.	DESCRIPTION	MATERIAL
X	1	ASSEMBLY	——
2	2	2" HORIZ CONN ASSY #1, GASKET TYPE III	H-2-32420
1	3	2" SCHED 40-90° LR WELD ELBOW	ASTM A234 GR WPB CS
AR	4	2" SCHED 40 PIPE	ASTM A53 TYPE S GR B CS
1	5	C4 x 5.4 x 6	ASTM-A36 CS
1	6	LIFTING BAIL	H-2-3245
1	7	STRIP 1/8" x 1" x 4 1/2"	ASTM A36 CS

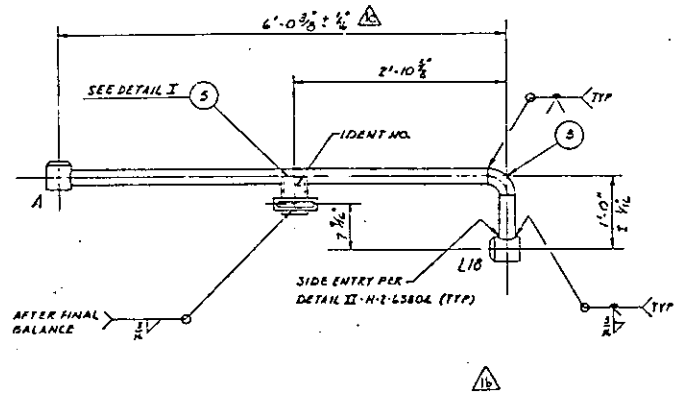

PLAN

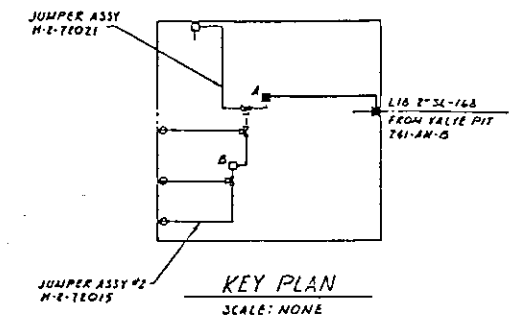

KEY PLAN
SCALE: NONE

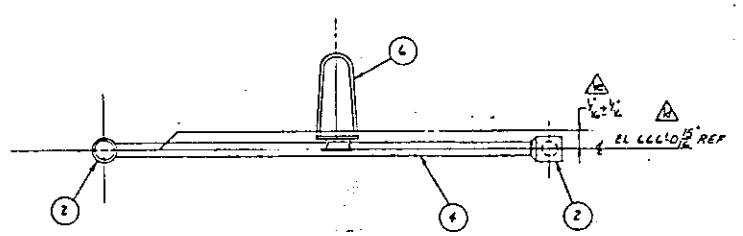

ELEVATION

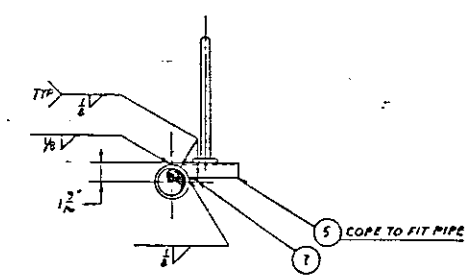

DETAIL I
SCALE: NONE

1 ASSEMBLY
SCALE: 1" = 1'-0"

GENERAL NOTES:

1 – FABRICATION AND TESTING SHALL BE IN ACCORDANCE WITH HANFORD SPECIFICATION HWS-5786, REV. 11. ALL BUTT WELDS SHALL BE FULL PENETRATION.

2 – HYDROSTATIC TEST AT 600 PSIG.

3 – ANGULAR FABRICATION TOLERANCE TO BE ± 1°, HANDLE RECEIVER FUNNELS TO BE LOCATED FRACTIONAL ± 1/8".

RELEASED FOR CONSTRUCTION
BY [signature] DATE 3/1/78
DOE

NO.	REV	TITLE
H-2-72009	0	241-AN-A & B JUMPER ARRGT VALVE PITS
H-2-71900	0	DRAWING INDEX

REFERENCES

NEXT USED ON H-2-72009

AS BUILT
DIM ZN B-5
(d) EL WAS 666'-1" ZN F-5 (e) ADDED CHANGED ZN C-4 (c) WAS 6'-0 7/16" ZN B-4 (a) NOTE CHANGED (b) TOLERANCE

REVISIONS

COMMENT PKT ISSUE NO. 1 — CHECK PKT ISSUE NO. 11-21-77

DRAWING STATUS

U.S. ENERGY RESEARCH AND DEVELOPMENT ADMINISTRATION
VITRO ENGINEERING CORPORATION
Arizona • Beginning

JUMPER ASSEMBLY
L18-A
VALVE PIT 241-AN-A

PROJ. NO. B-150 — PROJECT TITLE 241-AN TANK FARM
DWG. NO. B13002
SCALE NOTED — BLDG. NO. 241-AN — DWG. NO. 5405
CLASSIFICATION NONE
DWG. NO. H-2-72020

QTY.	PART NO.	DESCRIPTION	MATERIAL
X	1	ASSEMBLY	
1	2	2" HORIZ CONNECTOR - ASSY #1 (GASKET TYPE)	H-2-32420
1	3	2" VERT CONNECTOR - ASSY #2 (GASKET TYPE)	H-2-32420
2	4	2" MALE CONNECTOR NOZZLE PW 3	H-2-32446
2	5	2" KICK-OFF PLATE TYPE I	H-2-30600
1	6	LIFTING BAIL	H-2-3245
2	7	HANDLE RECEIVER FUNNEL	H-2-70521 DET — A-1
2	8	2" 3 WAY BALL VALVE (SEE PORT SEE NOTE 3)	PT03-NCG-SPPOCO "2-UP-E-11-SWC"
1	9	SUPPORT (ALL MATL ASTM A36 CS)	H-2-69304 DETAIL —
2	10	2" SCHED 40 90° LR WELD ELBOW	ASTM A234 GR. WPB-CS
AR	11	2" SCHED 40 PIPE	ASTM A53 TYPE S-GR-B-CS
1	12	CH 3.4 x 2'-6"	ASTM A36 CS
1	13	PLATE 1/4" x 5" x 5"	ASTM A36 CS
4	14	3/8"-16UNC-2B HEX NUT	ASTM A307 GRADE B CS
1	15	U-BOLT 3/8 DIA x 4" TAN (FOR 2" PIPE) W/ 3/8"-16UNC-2A x 2" LG THD	ASTM A307 GRADE B CS
1	16	PLATE 1/4" x 4" x 4"	ASTM A36 CS

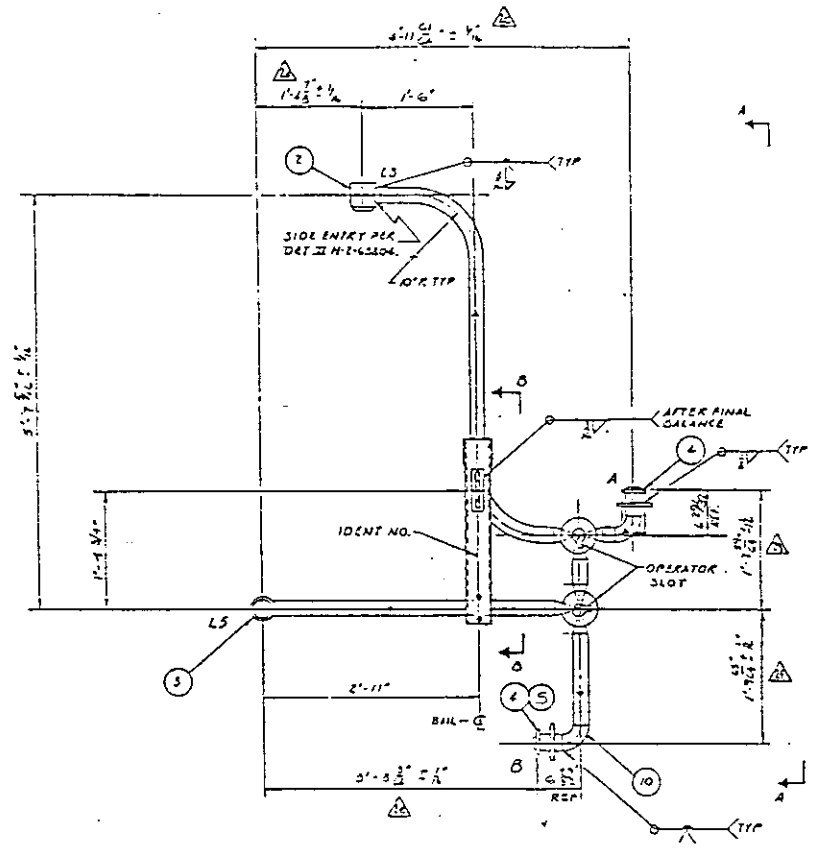

PLAN

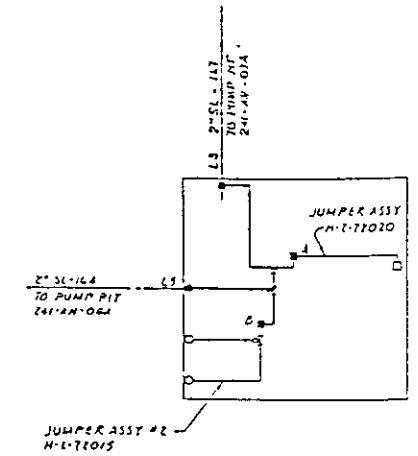

KEY PLAN
NO SCALE

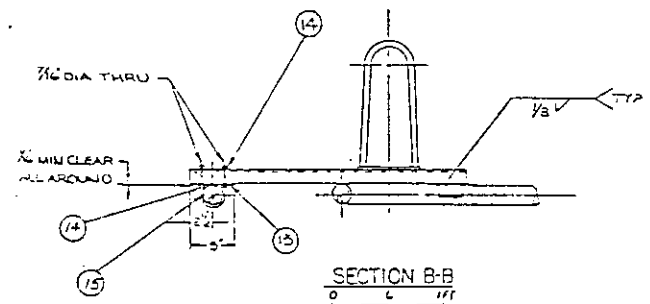

SECTION B-B
SCALE: 1 1/2" = 1'-0"

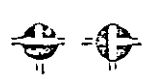

DETAIL I
90° ROTATION

DETAIL II
90° ROTATION

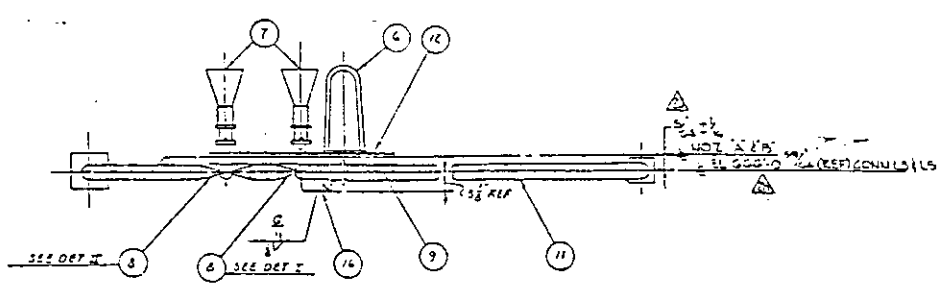

ELEVATION A-A

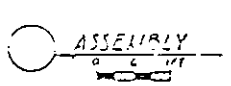

ASSEMBLY
SCALE: 1" = 1'-0"

GENERAL NOTES:

1 – FABRICATION AND TESTING SHALL BE IN ACCORDANCE WITH HANFORD SPECIFICATION HWS-5706 REV. 11 ALL BUTT WELDS SHALL BE FULL PENETRATION.

2 – HYDROSTATIC TEST AT 600 PSIG.

3 - 3WAY VALVE (PW 6) SHALL CONFORM TO THE FOLLOWING SPECIFICATIONS:
- a) CARBON STEEL BODY
- b) BUTT WELD, ONE PIECE CASTING, CARBON STEEL END FITTINGS, INTEGRALLY CAST & MACHINED
- c) 50 PERCENT 316 STAINLESS STEEL FILLED TEFLON BALL SEAT RINGS
- d) ASBESTOS BODY GASKET
- e) GRAPHITED ASBESTOS STEM PACKING
- f) PRIOR TO INSTALLATION VERIFY THAT ALL STOP PINS HAVE BEEN REMOVED FROM VALVE BODY

4 - ANGULAR FABRICATION TOLERANCE TO BE ± 1°, HANDLE RECEIVER FUNNELS TO BE LOCATED FRACTIONAL ± 1/16".

REV 1 DOE DATE 2/5/14

RELEASED FOR CONSTRUCTION BY DOE DATE 2/5/14

U.S. ENERGY RESEARCH AND DEVELOPMENT ADMINISTRATION

VITRO ENGINEERING CORPORATION

JUMPER ASSEMBLY
LS-A-LS-B
VALVE PIT 241-AN-A

DRAWING STATUS	NONE
DRAWN	D. MERRIMAN
SCALE	NONE
DRAWING NO.	H-2-72021
SHEET	—
SHEETS	—

241-AN-A & B
JUMPER ASSY - VALVE PITS
DRAWING INDEX
TITLE
NEXT USED ON H-2-72009

REVISIONS
DRAWING STATUS

QTY.	PART NO.	DESCRIPTION	MATERIAL
X	1	ASSEMBLY	
2	2	3" HORIZ CONNECTOR ASSY #1, GASKET TYPE II	H-2-32490
1	3	3" MALE CONN NOZZLE PN E	H-2-32466
1	4	3" 3-WAY BALL VALVE, TEE PORT, SEE NOTE 3	PITTSBURG BRASS #3-MP-E-49-SW-L
1	5	3" KICK-OFF PLATE TYPE I	H-2-30600
3	6	3" SCHED 40 - 90° LR WELD ELBOW	ASTM-A234 GR WPB CS
AR	7	3" SCHED 40 PIPE	ASTM-A53 TYPE S GR B CS
1	8	HANDLE RECEIVER FUNNEL	H-2-70551 DETAIL XII DET A-E
1	9	COUNTERWEIGHT 4" SCHED 40 PIPE x 2" LONG FILLED WITH LEAD APPROX WT = 49 LBS	ASTM A53 TYPE S GR B CS & LEAD
1	10	LIFTING BAIL	H-2-5245
1	11	SUPPORT ALL MATERIAL ASTM A36 CS	H-2-63604, DET II
1	12	PLATE 1/4" x 4" x 4"	ASTM A36 CS
2	13	PLATE 1/4" x 4 1/2" DIA	
AR	14	C4 x 5.4	
3	15	U-BOLT 1/2"-UNC-2A x 5" LG (FOR 3" PIPE)	ASTM A307 GR B CS
3	16	SPACER BLOCK 2 1/4 x 4 1/2" x 1" THK	ASTM A36 CS

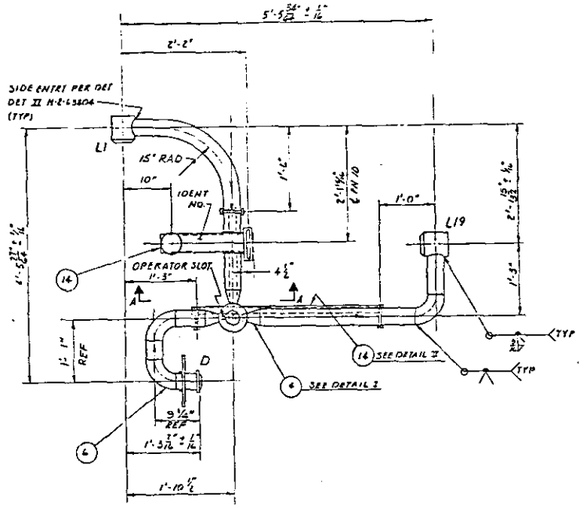

PLAN

DETAIL I

SCALE: NONE

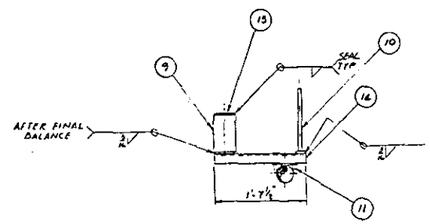

SECTION A-A

SCALE: 1" = 1'-0"

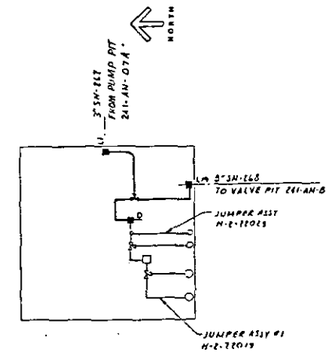

KEY PLAN

SCALE: NONE

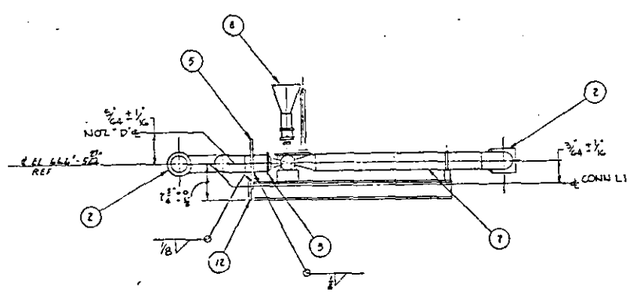

ELEVATION

1 ASSEMBLY

SCALE: 1" = 1'-0"

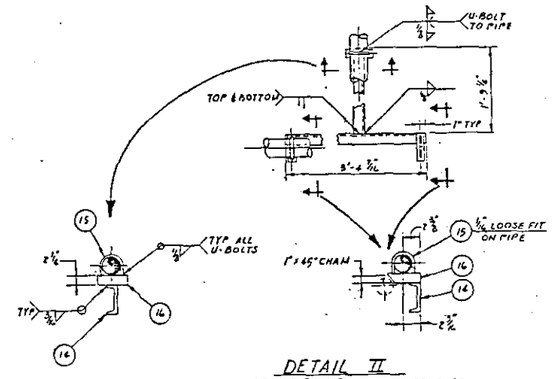

DETAIL II

SUPPORT FRAME - PIPING REMOVED

SCALE: NONE

GENERAL NOTES:

1 — FABRICATION AND TESTING SHALL BE IN ACCORDANCE WITH HANFORD SPECIFICATION HWS-5786, REV. 11. ALL BUTT WELDS SHALL BE FULL PENETRATION.

2 — HYDROSTATIC TEST AT 450 PSIG.

3 — 3-WAY VALVE (PN4) SHALL CONFORM TO THE FOLLOWING SPECIFICATION AND DETAIL I: 3
- a) CARBON STEEL BODY
- b) BUTT WELD, ONE PIECE CASTING, CARBON STEEL END FITTINGS, INTEGRALLY CAST AND MACHINED.
- c) 50 PERCENT 316 STAINLESS STEEL FILLED TEFLON BALL SEAT RINGS.
- d) ASBESTOS BODY GASKET
- e) GRAPHITED ASBESTOS STEM PACKING
- f) PRIOR TO INSTALLATION VERIFY THAT ALL STOP PINS HAVE BEEN REMOVED FROM VALVE BODY.

4 — ANGULAR FABRICATION TOLERANCE TO BE ± 1°, HANDLE RECEIVER FUNNELS TO BE LOCATED FRACTIONAL ± 1/16".

3 QUALITY ASSURANCE LEVEL II

H-2-72009	0	241-AN-A & B JUMPER ASSY VALVE PITS
H-2-71900	0	DRAWING INDEX
NO.	REV	TITLE

REFERENCES

NEXT USED ON H-2-71009

REV	DESCRIPTION
3	REV PER CEO 00269

REVISIONS

DRAWING STATUS

U.S. ENERGY RESEARCH AND DEVELOPMENT ADMINISTRATION

VITRO ENGINEERING CORPORATION

JUMPER ASSEMBLY

L1 — L19-D

VALVE PIT 241-AN-A

PROJ. NO.	A-150
SYS. NO.	A13001
PROJECT TITLE	241-AN TANK FARM
SCALE	NOTED
BLDG. NO.	241-AN
BLDG. NO.	6405
DWG NO.	H-2-72022
REV.	-

DRAWN BY D. MERRIMAN

CLASSIFICATION NONE

QTY.	PART NO.	DESCRIPTION	MATERIAL
X	1	ASSEMBLY	
1	2	5" HORIZ CONN-ASSY #1 GASKET TYPE III	H-2-52630
1	3	2" VERT CONN-ASSY #2 GASKET TYPE III	H-2-52620
1	4	5" VERT CONN-ASSY #2 GASKET TYPE III	H-2-52630
1	5	LIFTING RAIL	H-2-5245
1	6	HANDLE RECEIVER FUNNEL W/ARM	H-2-70551 DET III-C-F
1	7	HANDLE RECEIVER FUNNEL	H-2-70551 DET III-A-2
1	8	5" KICK-OFF PLATE TYPE I	H-2-50600
1	9	5" MALE CONNECTOR NOZZLE PART #2	H-2-52446
1	10	5" 3-WAY BALL VALVE, TEE PORT SEE NOTE 3	PITTSBURG BRASS #3-MP-6-19-GW-4
1	11	1½" BALL VALVE	WORCESTER MISER #176-4662BW
1	12	5" SCHED 40-90° LR WELD ELBOW	ASTM A234 GR WPB CS
AR	13	5" SCHED 40-PIPE	ASTM-A53 TYPE S GR B CS
1	14	5" x 1½" WELDOLET - STD WT	ASTM-A105 CS
1	15	1½" SCHED 40-90° LR-WELD ELBOW	ASTM-A234 GR WPB CS
AR	16	1½" SCHED 40-PIPE	ASTM-A106 GR B CS
AR	17	2" SCHED 40-PIPE	ASTM-A53 TYPE S GR B CS
AR	18	C4 x 5.4	ASTM-A36 CS
1	19	SUPPORT ALL MATL ASTM A36 CS MODIFIED AS SHOWN	H-2-63804 DET II
1	20	2" x 1½" SCHED-CNCTRC WELD REDUCER	ASTM-A234 GR WPB CS
2	21	PLATE ¼" x 1¾" x 5"	ASTM-A36 CS
1	22	U-BOLT ⅜" DIA - 4" TANGENT (FOR 2" PIPE)	ASTM-A307 GR B CS
4	23	HEX NUT ⅜"-16UNC-2B	ASTM-A307 GR B CS
1	24	MOUNTING PLATE SEE DETAIL II	ASTM-A36 CS
1	25	LIMIT SWITCH LS-1P-AX-A	SQUARE D TYPE ITS51 W/LEVER ARM TYPE M1C
1	26	ELECTRICAL CONNECTOR	TYPE CGB
1	27	CABLE	H-2-71925
1	28	PLATE ½" x 5" x 5"	ASTM-A36 CS
1	29	PLATE ¼" x 4" x 4"	ASTM-A36 CS
4	30	HEX HD MACHINE SCR W/10-24UNC-2A x ⅝" LG W/LOCK WASHER	ASTM-A 307 & ASTM-A 325
1	31	GUSSET	ASTM-A36 CS
3	32	U-BOLT ½" DIA (FOR 3" PIPE)	ASTM A307 GR B CS
3	33	SPACER BLOCK 2¼ x 4¾ x 1" THK	ASTM A36 CS

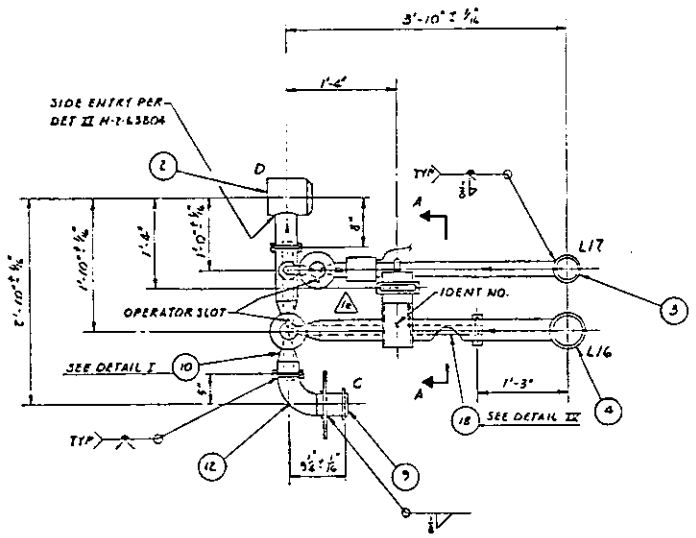

PLAN

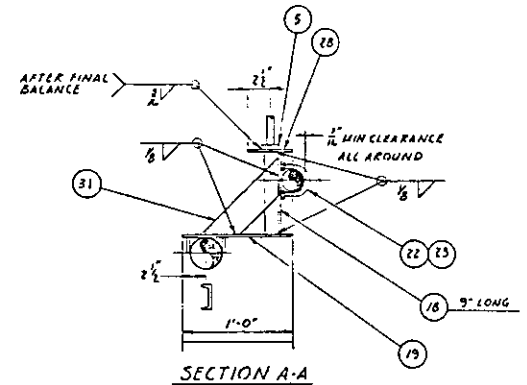

SECTION A-A

SCALE: 1½" = 1'-0"

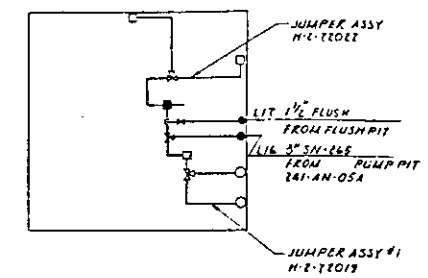

KEY PLAN

SCALE: NONE

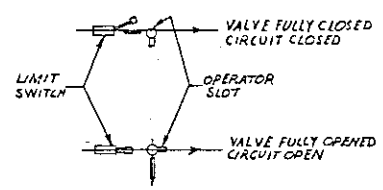

FLUSH VALVE (PN 11) OPERATION

DETAIL III

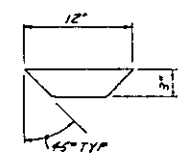

31 ⅛" THK

SCALE: NONE

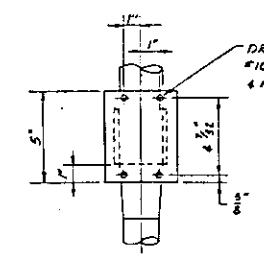

PLAN

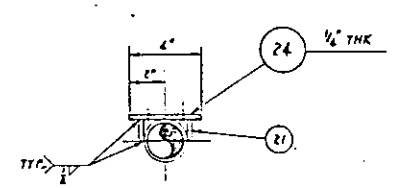

ELEVATION

DETAIL II

SCALE: 3" = 1'-0"

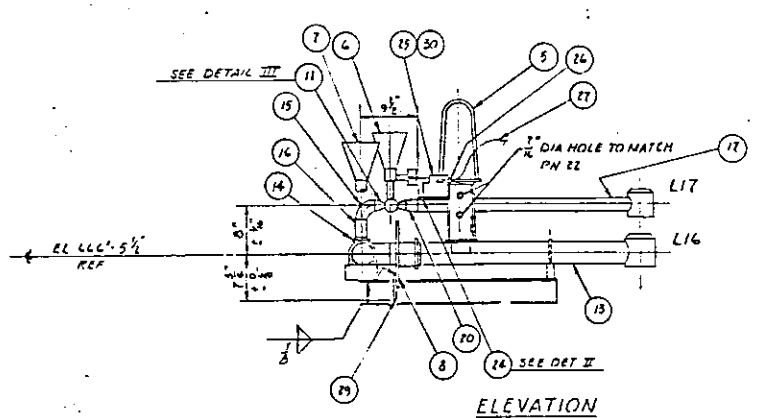

ELEVATION

1 ASSEMBLY

SCALE: 1" = 1'-0"

DETAIL I

180° ROTATION

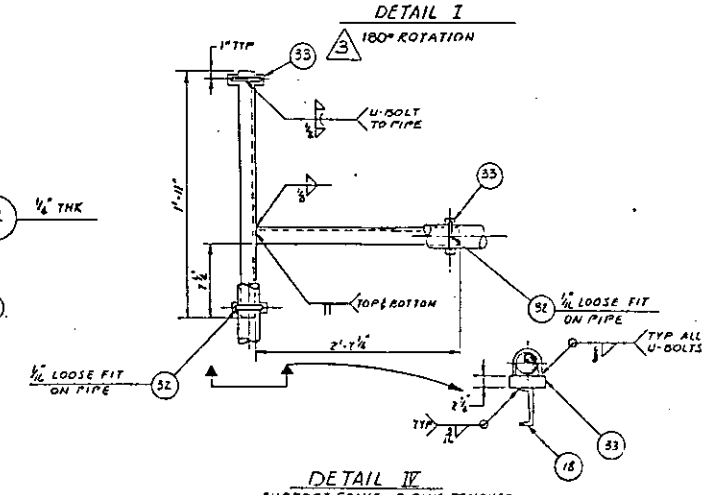

DETAIL IV

SUPPORT FRAME - PIPING REMOVED

SCALE: NONE

GENERAL NOTES:

1 – FABRICATION AND TESTING SHALL BE IN ACCORDANCE WITH HANFORD SPECIFICATION HWS-5786, REV. 11 ALL BUTT WELDS SHALL BE FULL PENETRATION.

2 – HYDROSTATIC TEST AT 450 PSIG.

3 – 5-WAY VALVE (PN 10) SHALL CONFORM TO THE FOLLOWING SPECIFICATION AND DETAIL I: 3
- a) CARBON STEEL BODY
- b) BUTT WELD, ONE PIECE CASTING, CARBON STEEL END FITTINGS, INTEGRALLY CAST AND MACHINED
- c) 50% 316 STAINLESS STEEL FILLED TEFLON BALL SEAT RINGS
- d) ASBESTOS BODY GASKET
- e) GRAPHITED ASBESTOS STEM PACKING
- f) PRIOR TO INSTALLATION VERIFY THAT ALL STOP PINS HAVE BEEN REMOVED FROM VALVE BODY.

4 – FOR LIMIT SWITCH ELECTRICAL SCHEMATIC SEE DRAWING H-2-71925.

5 – ANGULAR FABRICATION TOLERANCES TO BE "L HANDLE RECEIVER FUNNELS TO BE LOCATED FRACTIONAL = ⅛".

3 QUALITY ASSURANCE LEVEL II

NO.	REV.	TITLE
H-2-72009	0	JUMPER ASSY-VALVE PIT 241-AN-A LS
H-2-71900	0	DRAWING INDEX

REFERENCES

NEXT USED ON H-2-72009

REVISIONS

REV	DESCRIPTION
0	REV PER CEO 00270

DRAWING STATUS

U.S. ENERGY RESEARCH AND DEVELOPMENT ADMINISTRATION

VITRO ENGINEERING CORPORATION

JUMPER ASSEMBLY

L16 - L17 - C - D

VALVE PIT 241-AN-A

PROJ. NO.	5-120
PROJECT TITLE	241-AN TANK FARM
DRAWN BY	D. HERRIMAN
SCALE	NOTED
241-AN	
8605	
CLASSIFICATION	NONE
DWG NO.	H-2-72023

QTY.	PART NO.	DESCRIPTION	MATERIAL
X	1	ASSEMBLY	
1	2	3" HORIZ CONN ASSY #3 GASKET TYPE III	H-2-32430
1	3	2" HORIZ CONN ASSY #1 GASKET TYPE III	H-2-32420
1	4	LIFTING BAIL	H-2-30777
1	5	SUPPORT ALL MATL ASTM-A36 CS	H-2-63804 DET II
AR	6	2" SCHED 40 PIPE	ASTM A53 TYPE S GR B CS
1	7	C4 x 5.4 x 12"	ASTM A36 CS

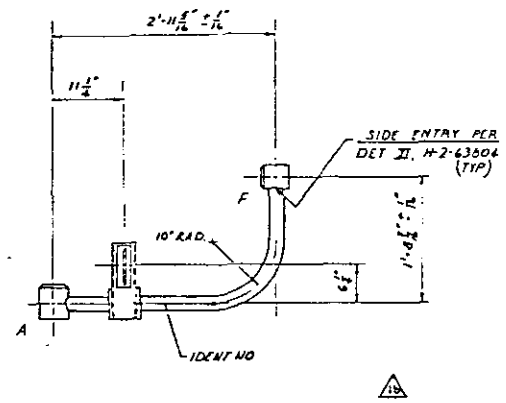

PLAN

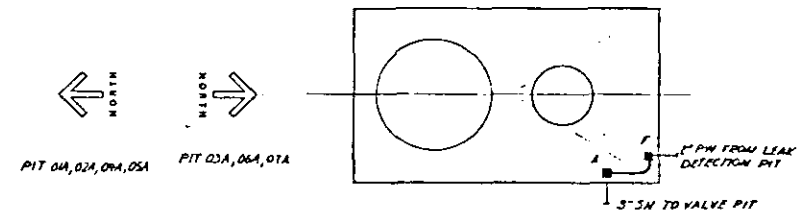

KEY PLAN

SCALE: NONE

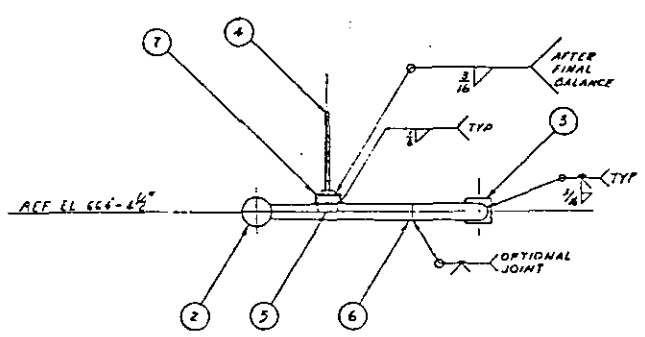

ELEVATION

1 ASSEMBLY

0 HT

SCALE: 1" = 1'-0"

GENERAL NOTES

1- FABRICATION AND TESTING SHALL BE IN ACCORDANCE WITH HANFORD SPECIFICATION HMS-5786, REVISION 11 ALL BUTT WELDS SHALL BE FULL PENETRATION.

2- HYDROSTATIC TEST AT 200 PSIG.

3- ANGULAR FABRICATION TOLERANCE TO BE ±1°, HANDLE RECEIVER FUNNELS TO BE LOCATED FRACTIONAL ±1/16".

RELEASED FOR CONSTRUCTION
BY [illegible] DATE 3/6/78
DAC

H-2-72010	0	JUMPER ARRGT - CENTRAL PUMP PIT				
H-2-71930	0	DRAWING INDEX				
REFERENCE DRAWINGS						
NEXT USED ON H-2-72010						

REVISIONS

REV. NO.	DESCRIPTION	DATE	CHECKED	APPROVED
1	AS BUILT CHANGED REV NO. ZN D-3 CHANGED ZN F & NOTE CHANGE IN TOLERANCE	1/20/81		

COMMENT PIT TRIPLE NO. 1 — CHECK PIT TRIPLE NO. 1

DRAWING STATUS: 1

ENERGY RESEARCH & DEVELOPMENT ADMINISTRATION
RICHLAND OPERATIONS OFFICE

VITRO ENGINEERING CORPORATION

DESIGNED	J. M. GUIMARDO	4/1/78
DRAWN		
CHECKED		
APPROVED		
SCALE	AS NOTED	
CLASSIFICATION	NOT REQD	
FOLDER CONTENTS	NONE	

JUMPER ASSEMBLY
A TO F (ALTJ)

CENTRAL PUMP PIT 241-AN-01A THRU 07A

FOLDER NO.	81SCL8810, 81SCL8812
PROJ. TITLE	241-AN TANK FARM
PROJ. NO.	241-AN
PROJ. NO.	8405
DRAWING NO.	H-2-72024
SHEET NO.	-
SHEETS	-

QTY.	PART NO.	DESCRIPTION	MATERIAL
X	1	ASSEMBLY	
1	2	3" HORIZ CONN ASSY #3 GASKET TYPE III	H-2-32430
1	3	2" HORIZ CONN ASSY #1 GASKET TYPE III	H-2-32420
1	4	LIFTING BAIL	H-2-30727
1	5	SUPPORT ALL MATL ASTM A36 CS	H-2-63804 DET III
AR	6	2" SCHED 40 PIPE	ASTM A53 TYPE S GR B CS
2	7	2" SCHED 40 90° LR WELD ELBOW	ASTM A234 GR WPB CS
1	8	C6 x 5.6 x 1'-3"	ASTM A36 CS

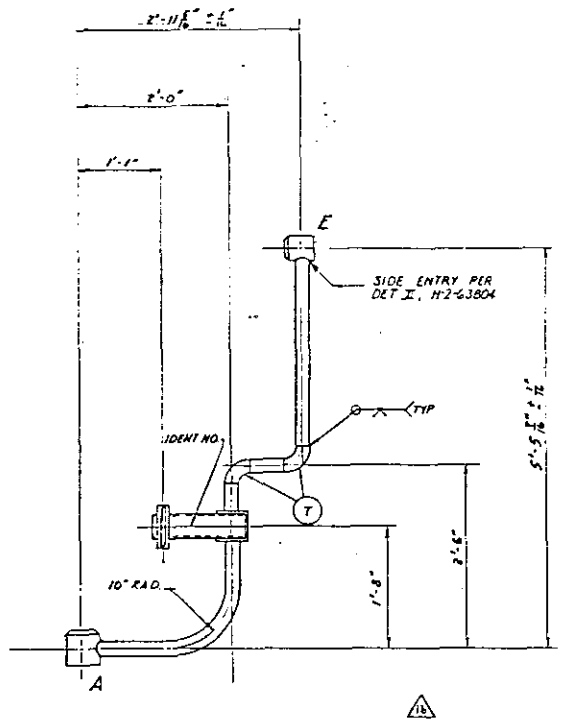

PLAN

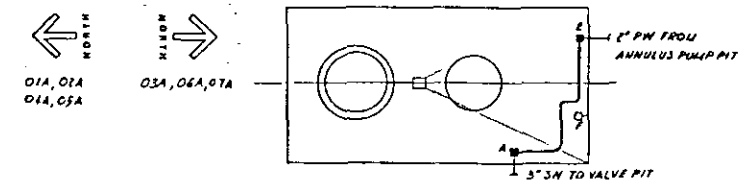

KEY PLAN

SCALE: NONE

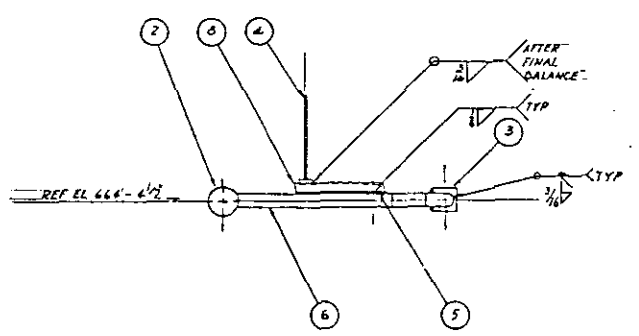

ELEVATION

1 ASSEMBLY

0 1FT

SCALE: 1" = 1'-0"

GENERAL NOTES

1 - FABRICATION AND TESTING SHALL BE IN ACCORDANCE WITH HANFORD SPECIFICATION HWS-5786, REVISION N. ALL BUTT WELDS SHALL BE FULL PENETRATION.

2 - HYDROSTATIC TEST AT 200 PSIG.

3 - ANGULAR FABRICATION TOLERANCE TO BE ±°L. HANDLE RECEIVER FUNNELS TO BE LOCATED FRACTIONAL ± 1/8".

RELEASED FOR CONSTRUCTION
BY [illegible] DATE 2/1/72

H-2-72010	0	JUMPER ARRGT CTL PUMP PIT
H-2-71900	0	DRAWING INDEX

REFERENCE DRAWINGS

NEXT USED ON H-2-72010

						AS BUILT (1) CHANGED REV NO. ZN D-2 CHANGED ZN E10, (4) NOTE CHANGED INTOLERANCE	1

REVISIONS

COMMENT PRT ISSUE NO. 1 — CHECK PRT ISSUE NO. 2

DRAWING STATUS

ENERGY RESEARCH & DEVELOPMENT ADMINISTRATION
RICHLAND OPERATIONS OFFICE

VITRO ENGINEERING CORPORATION

JUMPER ASSEMBLY
A TO E (ALTN)
CENTRAL PUMP PIT 241-AN-01A THRU 07A

DRAWING NO. 01-241-PS-12 / 01-5202 — PROJ. TITLE 241-AN TANK FARM

SCALE NOTED — SUBMITTED BY NOT REQD — 241-AN — 8405

CLASSIFICATION NONE — H-2-72025

QTY.	PART NO.	DESCRIPTION	MATERIAL
X	1	ASSEMBLY	
1	2	3" HOSE CONN ASSY #1 GASKET TYPE III	H-2-52430
2	3	3" VERT CONN ASSY #2 GASKET TYPE III	H-2-52430
1	4	HANDLE RECEIVER FUNNEL	H-2-70551 MT III & E
1	5	LIFTING BAIL	H-2-50777
1	6	3"-3-WAY BALL VALVE, TEE PORT, SEE NOTE 3 & ELEVATION	PITTSBURG BRASS #3-WP-2-19-BW-4
1	7	C4 x 5.4 x 10"	ASTM-A36 CS
AR	8	3" SCHED 40 PIPE	ASTM A53 TYPE 2 GR B CS
1	9	3" SCHED 40-90° LR WELD ELBOW	ASTM A234 GR WPB CS
1	10	3" SCHED 40-90° SR WELD ELBOW	ASTM A234 GR WPB CS
1	11	BAR $\frac{1}{8}$" x 1" x $4\frac{1}{2}$"	ASTM-A36 GR 1020 CS
AR	12	C3 x 4.1	ASTM A36 CS
3	13	'U' BOLT $\frac{1}{4}$" DIA (FOR 3" PIPE)	ASTM A307 GR B CS

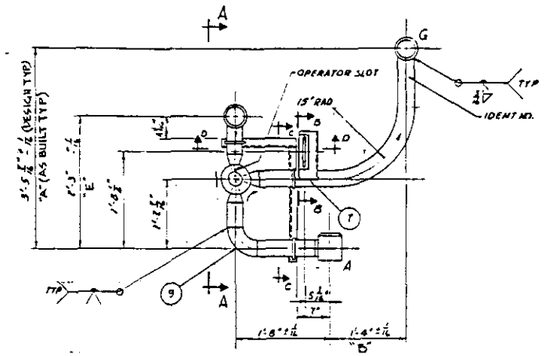

PLAN

AS BUILT CONNECTOR TABLE					
CENTRAL PUMP PIT	"A"	"B"	"C"	"D"	"E"
241-AN-01A	3'-5 3/64	1'-4 11/32	6 15/16	666'-4 11/16	2'-3 9/16
241-AN-02A	3'-5 3/8	1'-3 35/64	6 11/16	666'-4 3/16	2'-3 11/16
~~241-AN-06A~~	~~3'-5 3/8~~	~~1'-3 35/64~~	~~6 11/16~~	~~666'-4 3/16~~	~~2'-3 11/16~~
~~241-AN-07A~~	~~3'-5 3/8~~	~~1'-3 35/64~~	~~6 11/16~~	~~666'-4 3/16~~	~~2'-3 11/16~~
241-AN-06A	3'-5 3/64	1'-3 11/32	6 5/16	666'-4 1/16	2'-3 9/16
241-AN-07A	3'-5 3/64	1'-3 11/32	6 5/16	666'-4 1/16	2'-3 9/16

N
PIT-01A, 02A

3 N
PIT-06A, 07A

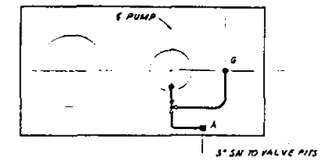

KEY PLAN
SCALE: NONE

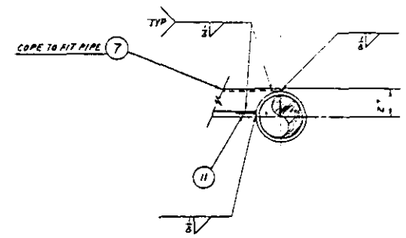

SECTION B-B
SCALE: 3" = 1'-0"

DETAIL I
90° ROTATION
SCALE: NONE

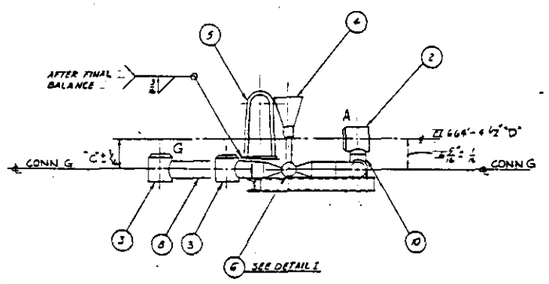

ELEVATION A-A

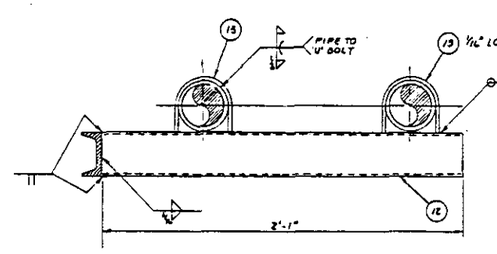

SECTION C-C
SCALE: 3" = 1'-0"

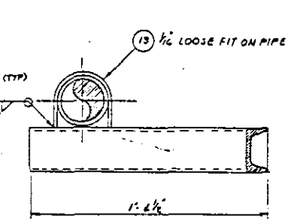

SECTION D-D
SCALE: 3" = 1'-0"

1 ASSEMBLY
SCALE: 1" = 1'-0"

GENERAL NOTES

1 - FABRICATION AND TESTING SHALL BE IN ACCORDANCE WITH HANFORD SPECIFICATION HHS-5788, REVISION 11. ALL BUTT WELDS SHALL BE FULL PENETRATION.

2 - HYDROSTATIC TEST 650 PSIG.

3 - 3-WAY BALL VALVE (PN 6) SHALL CONFORM TO THE FOLLOWING SPECIFICATIONS:

a) CARBON STEEL BODY
b) BUTT WELD, ONE PIECE CASTING, CARBON STEEL END FITTINGS, INTEGRALLY CAST AND MACHINED.
c) 50 PERCENT 316 STAINLESS STEEL FILLED TEFLON BALL SEAT RINGS
d) ASBESTOS BODY GASKET
e) GRAPHITED ASBESTOS STEM PACKING
f) PRIOR TO INSTALLATION VERIFY THAT ALL STOP PINS HAVE BEEN REMOVED FROM VALVE BODY.

4 - ANGULAR FABRICATION TOLERANCE TO BE ± 1°, HANDLE RECEIVER FUNNELS TO BE LOCATED FRACTIONAL ± 1/8".

H-2-72010	0	HANDLE RAMPS CENTRAL PUMP PIT							
H-2-71952	0	DRAWING INDEX							
DWG. NO.	REV. NO.	DRAWING TITLE OR DWG. NO.							
REFERENCE DRAWINGS									
NEXT USED ON	H-2-72010								

	H.K.H. 9-2-71					14749 15241 & 15243 REVISED DWG PER CCD 10451.	3
						DESCRIPTION	REV. NO.
						REVISIONS	
						CHECK PRT ISSUE NO. 1	
						DRAWING STATUS	3

ENERGY RESEARCH & DEVELOPMENT ADMINISTRATION
HIGHLAND OPERATIONS OFFICE
VITRO ENGINEERING CORPORATION

JUMPER ASSEMBLY
A-G-PUMP
CENTRAL PUMP PITS 241-AN-01A, 02A, 06A & 07A

SCALE	NOTED
CLASSIFICATION	NOT REQD
	NONE
PROJ. NO.	8130/8170 21352
PROJ. TITLE	241-AN TANK FARM
DWG. NO.	241-AN
SHEET NO.	6405
DWG. NO.	H-2-72026
SHEET NO.	-
SPEC.	-

QTY.	PART NO.	DESCRIPTION	MATERIAL
	1	ASSEMBLY	
1	2	2" VERT CONN - GASKET, TYPE III	H-2-32420-5
1	3	2" HORIZ CONN ASSY W/ GASKET TYPE III	H-2-32420
1	4	LIFTING BAIL	H-2-30161-3"
AR	5	2" SCHED 40 PIPE	ASTM-A53 TYPE S GR B CS
1	6	C4 x 5.4 x 1'-8"	ASTM-A36 CS
1	7	STRIP 1/8" x 1" x 4 1/2"	↓
AR	8	BAR 1/4" x 2"	ASTM A 575
1	9	TUBE, 1 3/4" O.D. X .110 WALL	ASTM A 269 GR TP 304L SST

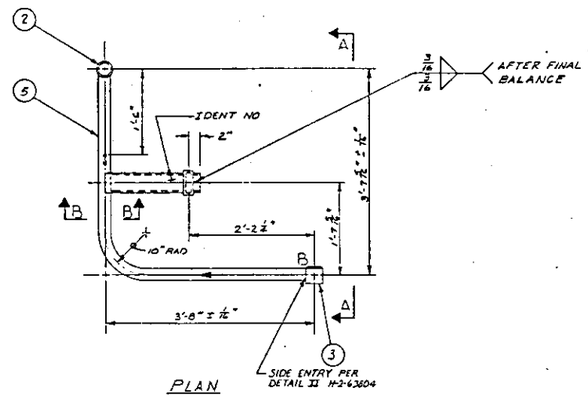

PLAN

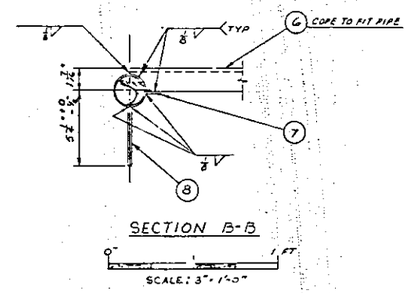

SECTION B-B

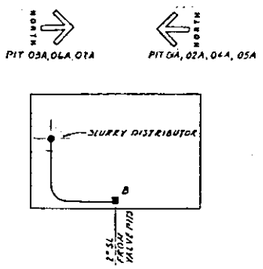

KEY PLAN
SCALE: NONE

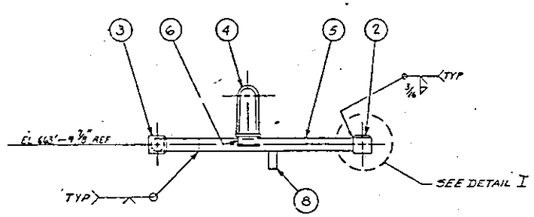

ELEVATION A-A

1 ASSEMBLY

SCALE: 1" = 1'-0"

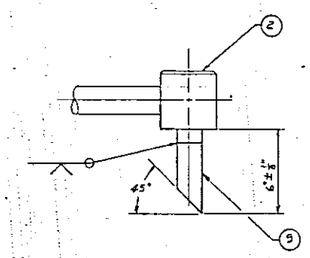

DETAIL I
SCALE: NONE

GENERAL NOTES

1 — FABRICATION AND TESTING SHALL BE IN ACCORDANCE WITH HANFORD SPECIFICATION HWS-5786, ~~[illegible]~~

2 — HYDROSTATIC TEST AT 600 PSIG.

~~3 — ANGULAR FABRICATION TOLERANCE TO BE ±1/2, HANDLE RECEIVER SHOULD TO BE LOCATED FRACTIONAL 1/16~~

RELEASED FOR CONSTRUCTION
BY [illegible] DATE 2/1/82

2	HKH 2/10/82				REVISION PER FCN 54873		2
1					AS-BUILT CHANGED & NOTE CHANGED TO TOLERANCE		1
	STATUS	FOR	STATUS	FOR	DESCRIPTION		

REVISIONS

H-2-72010	0	JUMPER ARRGT CTL PUMP PIT
H-2-71920	0	DRAWING INDEX
REFERENCE DRAWINGS		
NEXT USED ON	H-2-72017	

COMMENT PRT ISSUE NO. | CHECK PRT ISSUE NO. | DRAWING STATUS

ENERGY RESEARCH & DEVELOPMENT ADMINISTRATION
RICHLAND OPERATIONS OFFICE
VITRO ENGINEERING CORPORATION

JUMPER ASSEMBLY
B TO DISTRIBUTOR
CENTRAL PUMP PIT 241-AN-01A THRU 07A

SCALE	AS SHOWN
CLASSIFICATION	NOT REQD
	NONE
PROJ. NO.	B330/B378/B1042
PROJ. TITLE	241-AN TANK FARM
DRAWING NO.	H-2-72027
SHEET NO.	—
SHEETS	—

QTY.	PART NO.	DESCRIPTION	MATERIAL
X	1	ASSEMBLY	
1	2	2" HORIZ CONN ASSY #1, GASKET TYPE III	H-2-32420
1	3	2" VERT CONN ASSY #2, GASKET TYPE III	H-2-32420
1	4	LIFTING BAIL	H-2-30777
1	5	2" SUPPORT DETAIL III EXCEPT ASTM-A36 CS	H-2-63804
AR	6	2" SCHED 40 PIPE	ASTM-A53 TYPE S GR B CS
1	7	C3 x 4.1 x 1'-0"	ASTM-A36-CS

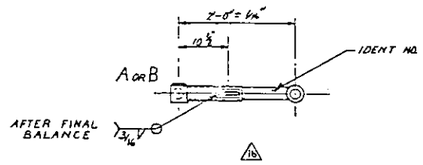

PLAN

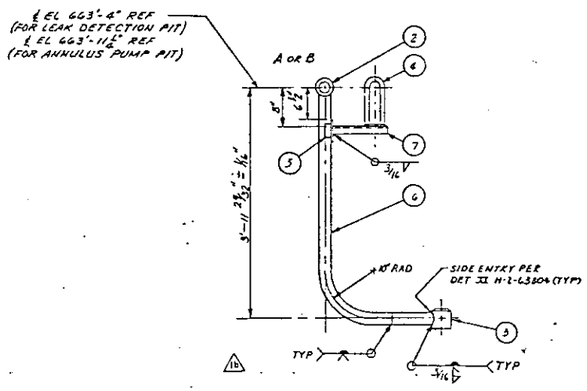

ELEVATION

(1) ASSEMBLY

0' 1FT
SCALE: 1"=1'-0"

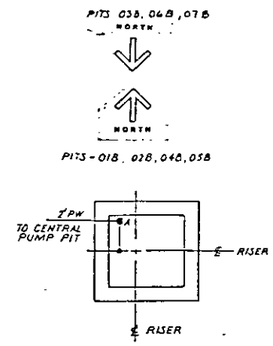

KEY PLAN
NO SCALE

ANNULUS PUMP PITS
241-AN-01B-THRU-07B

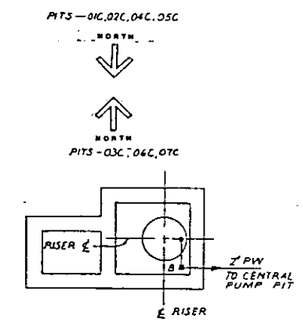

KEY PLAN
NO SCALE

LEAK DETECTION PITS
241-AN-01C-THRU-07C

GENERAL NOTES:

1 — FABRICATION AND TESTING SHALL BE IN ACCORDANCE WITH HANFORD SPECIFICATION HWS-5786, REV. 11, ALL BUTT WELDS SHALL BE FULL PENETRATION.

2 — HYDROSTATIC TEST AT 200 PSIG.

3 — ANGULAR FABRICATION TOLERANCE TO BE ±1°. HANDLE, RECEIVER FUNNELS TO BE LOCATED FRACTIONAL ±1/16".

RELEASED FOR CONSTRUCTION
BY [signature] DATE 2/1/72
DOE

H-2-72011	0	JUMPER ARRANGEMENT LEAK DETECTION PIT ANNULUS PUMP PIT
H-2-72022	0	DRAWING INDEX
NO.		TITLE
REFERENCES		
NEXT USED ON	H-2-72011	

H	1/3/72		AS BUILT
			CHANGED REV NO Z N E-12 CHANGED Z N B3, E2. ADD NOTE CHANGED TOLERANCE
			1
			DESCRIPTION
			REVISIONS
			DRAWING STATUS

U.S. ENERGY RESEARCH AND DEVELOPMENT ADMINISTRATION
VITRO ENGINEERING CORPORATION

JUMPER ASSEMBLY
ANNULUS PUMP PIT & LEAK DETECTION PIT

J. DOVER
J M GUAJARDO
NONE
NOTED
241 AN TANK FARM
241 AN
8405
H-2-72028

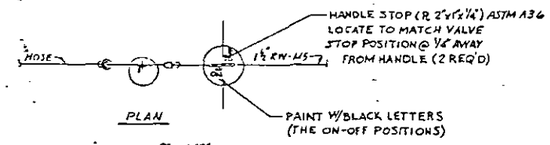

PLAN

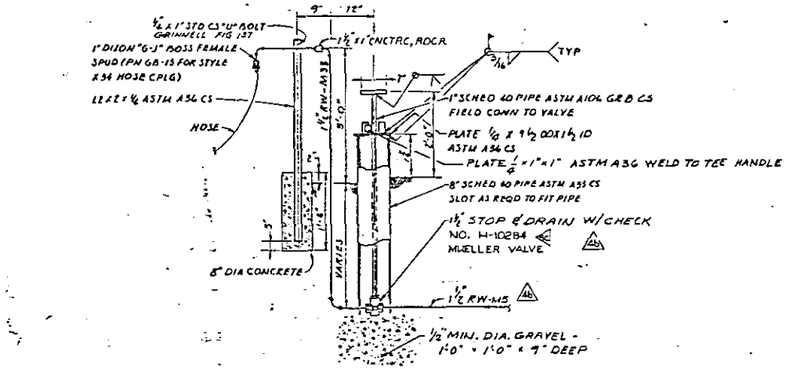

ELEVATION

DETAIL I

SCALE: 3/4" = 1'-0"

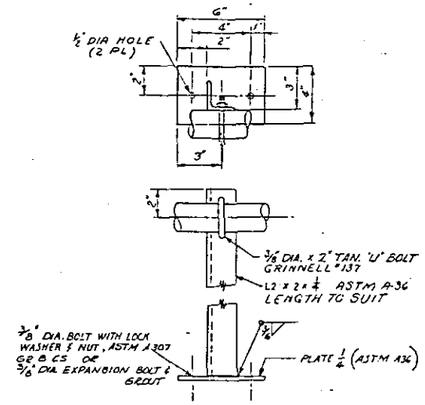

DETAIL II

SCALE: 1/4" = 1"

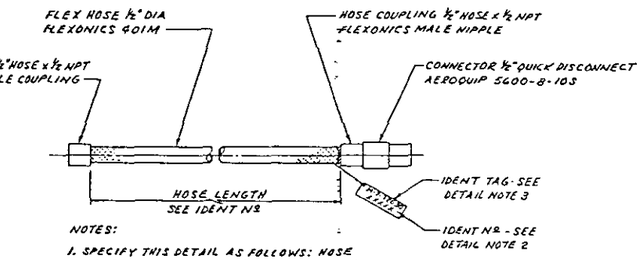

NOTES:

1. SPECIFY THIS DETAIL AS FOLLOWS: HOSE ASSEMBLY - SEE DETAIL IV DWG H-2-72030-XXXXX.
2. IDENTIFICATION NUMBER H-2-72030-XXXXX INDICATES DWG Nº AND HOSE LENGTH IN FEET, INCHES AND EIGHTHS OF AN INCH. EXAMPLE: H-2-72030-04064
   - DWG Nº
   - (4) FEET
   - (6) INCHES
   - (4/8) EIGHTHS OF AN INCH
3. IDENTIFICATION TAG SHALL BE 3/16" x 3/4" x 2" CORROSION RESISTANT METAL. STAMP OR ENGRAVE IDENT Nº IN 3/16" HIGH CHARACTERS. ATTACH TO HOSE ASSEMBLY WITH CORROSION RESISTANT WIRE.
4. MAXIMUM WORKING PRESSURE AT 70°F IS 1310 PSIG; MAXIMUM TEMPERATURE, 1500°F.

DETAIL IV HOSE ASSEMBLY

SCALE: NONE

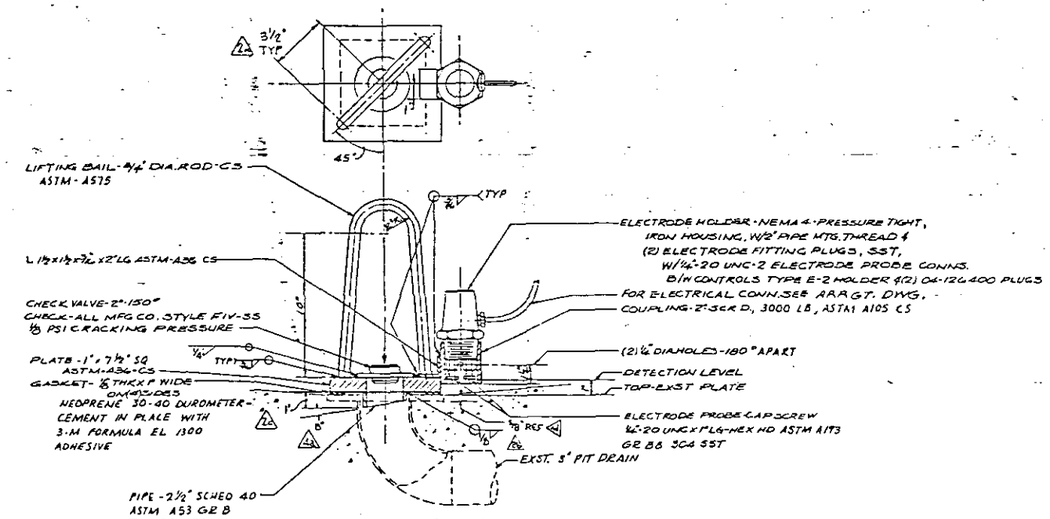

DETAIL III

SCALE: 3" = 1'-0"

NOTES:

1. UNLESS OTHERWISE SPECIFIED, TOLERANCE SHALL BE: FRACTIONAL ± 1/8", DECIMAL ± .010; ANGULAR ± 1°.
2. ALL PIPING MATERIAL, FABRICATION, WELDING, WELD INSPECTION, CLEANING & TESTING SHALL BE PER PROJECT SPECIFICATION.
3. FOR ADDITIONAL STANDARD TANK FARM DETAILS SEE DWGS H-2-70419, H-2-70549 THRU H-2-70552.

REV 3 DOE DATE 3/6/09

REV 2 DOE DATE 10/11/78

REV 1 DOE DATE 10/11/78

RELEASED FOR CONSTRUCTION
BY DOE DATE 3/1/77

REV	DATE	DESCRIPTION
4	3/6/09	AS BUILT 1) ZN B-10 ADDED D.M. REF. 2) ZN C-11 CHNG NO. FROM 10204 3) ZN E-10 CHANGED CALLOUT 4) CHANGED LOCATION G ZN B-12
3	10/11/78	ADDED SHEET 2
2	10/11/78	1) WAS 2" L4 PIPE CUT AT 75, ZN B12 2) WAS 1/16" WELD, ZN D-10; 3) ADDED 5 1/2" DIM., ZN C-12
1	7/14/78	ADDED DETAIL IV ZN E-5 TO B-3 & L

REFERENCES: NEXT L-TED ON

DRAWING STATUS: ISSUED FOR CONSTRUCTION / ISSUED FOR PROCUREMENT / APPR / CHECK PRT ISSUE NO. 1

U.S. ENERGY RESEARCH AND DEVELOPMENT ADMINISTRATION

VITRO ENGINEERING CORPORATION

STANDARD TANK FARM DETAILS

PROJECT TITLE: 241-AN TANK FARM

SCALE: NONE

H-2-72030

SHEET 1 OF 2

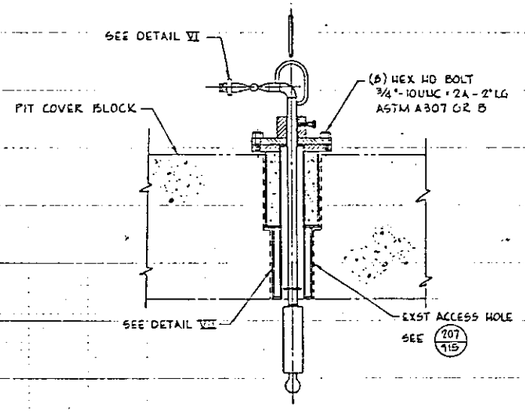

DETAIL V

0 1FT

SCALE : 1 1/2" = 1'-0"

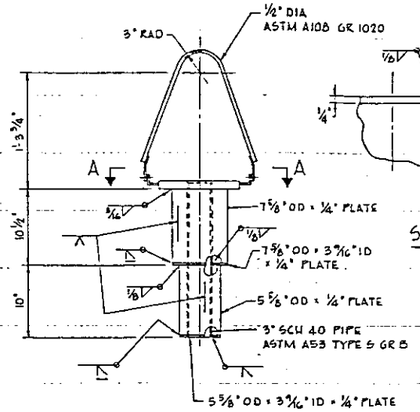

DETAIL VII

0 1FT

SCALE : 1 1/2" = 1'-0"

NOTE: ALL PLATE, ANGLE & FLAT BAR TO BE MADE FROM ASTM A36

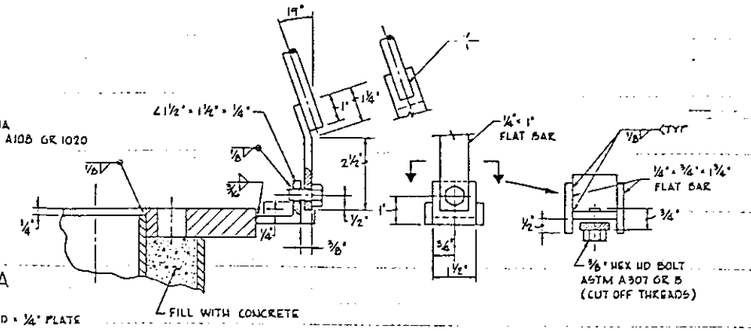

SECTION B-B

0 3 IN.

SCALE : 6" = 1'-0"

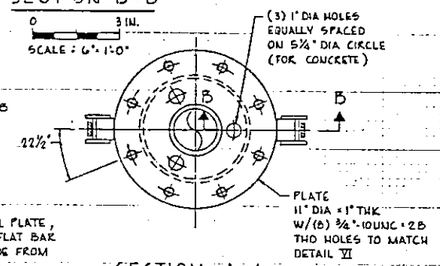

SECTION A-A

0 6 IN.

SCALE : 3" = 1'-0"

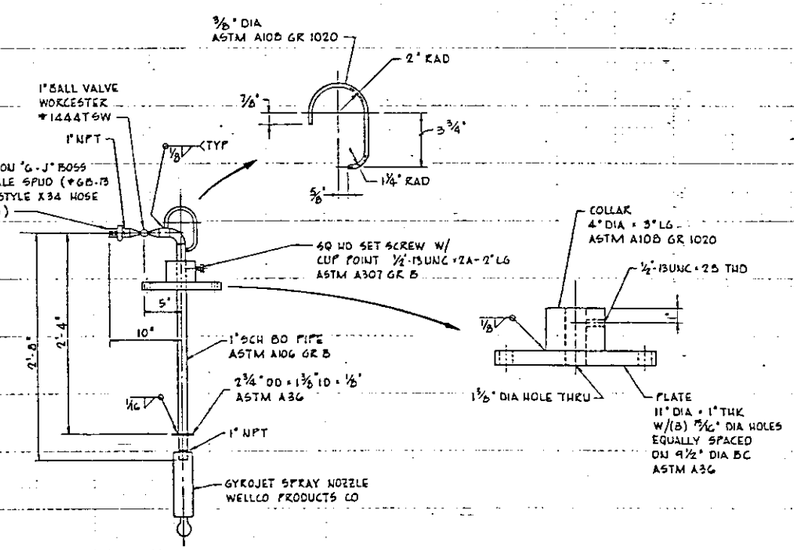

DETAIL VI

0 1FT

SCALE : 1 1/2" = 1'-0"

FOR NOTES SEE SHEET 1

RELEASED FOR CONSTRUCTION
BY [illegible] DATE 9/5/79
DOE

								AS-BUILT	1
H-2-71915	STRUCT CONC PAD & MISC DET								
H-2-71900	DRAWING LIST								
NUMBER	TITLE								
	REFERENCES								
NEXT USED ON									

CLIENT APPROVAL	APPROVED	REV BY DATE	DESCRIPTION
REVISIONS			LAST REV 1
COMMENT REVIEW LLB 8/31/79		TRM 8/31/79	

CLIENT CONTACT		DATE	
BY [illegible]		9/4/79	
FOR ROCKWELL			
MECH		8-31	
DESIGN		8-27-79	
DRAFT		8/27/79	
SPEC		8/27/79	
CHECK ENGR		8/27/79	
CHECK ENGR		8/27/79	
PROJ ENGR		8/27/79	
CHECKED	R. FARRAHER	8/27/79	
DRAWN BY	D. O'CONNOR	8-6-79	
CLASSIFICATION	NONE	NOT REQD	

VITRO JOB No. R013A3

U. S. Department of Energy
Richland Operations Office

M

VITRO ENGINEERING CORPORATION

STANDARD TANK FARM DETAILS

PROJ NO R-130
WO NO R13007
PROJECT TITLE 241-AN TANK FARM
SCALE SHOWN
BLDG NO 200 GEN
MODEL NO 0402

DRAWING NUMBER H-2-72030
SHEET 2 OF 2

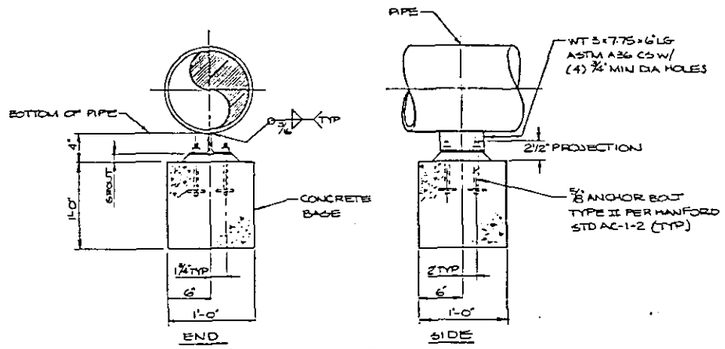

DETAIL I
PIPE ANCHOR
SCALE: NONE

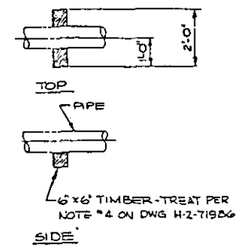

DETAIL II
UNDERGROUND PIPE SUPPORT
SCALE: NONE

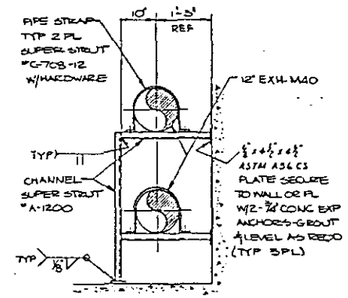

DETAIL III
SUPPORT FRAME
SCALE: NONE

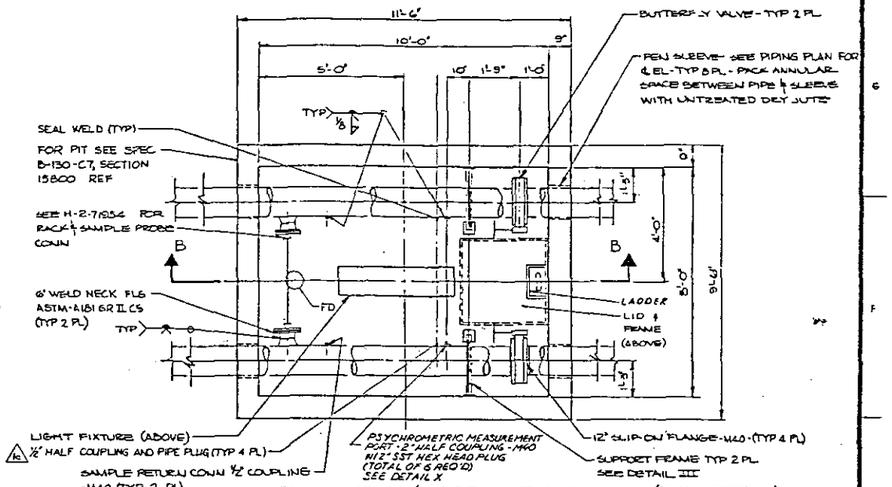

PLAN - VENT/INSTR PIT #1, #2 & #3 (FROM H-2-71992, H-2-71994 & H-2-71995)
((COVER BLOCK OMITTED))
SCALE: ½" = 1'-0"

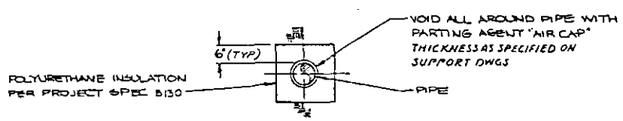

DETAIL IV
SCALE: NONE

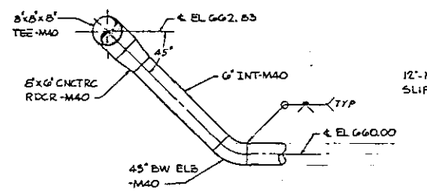

DETAIL IX (FROM H-2-71993)
SCALE: NONE

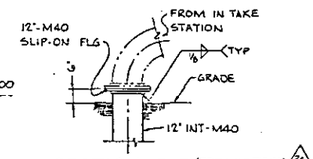

SECTION C-C (FROM H-2-71991 THRU H-2-71996 AND H-2-72039)
SCALE: NONE

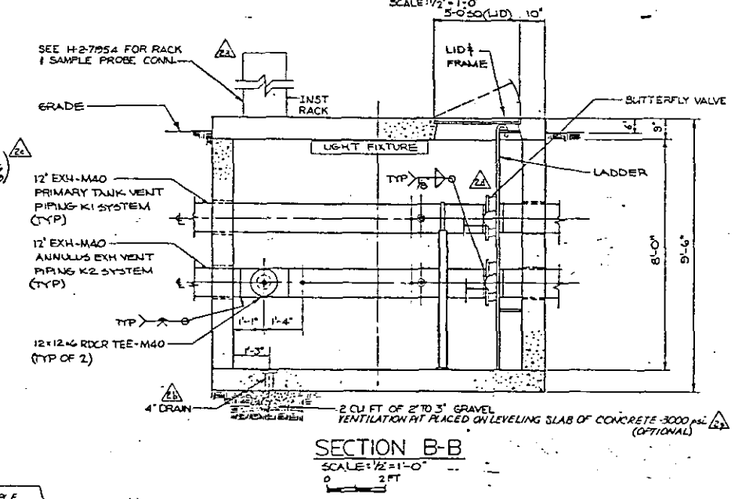

SECTION B-B
SCALE: ½" = 1'-0"

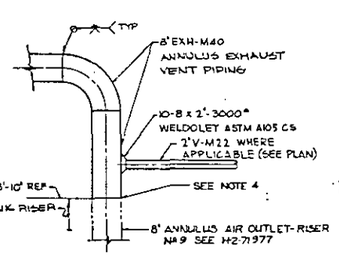

DETAIL V (FROM H-2-71991 THRU H-2-71996 AND H-2-72039)
SCALE: NONE

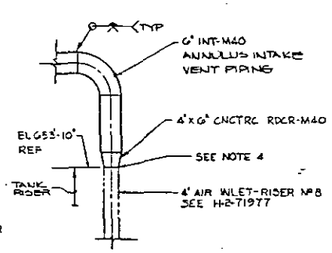

DETAIL VI (FROM H-2-71991 THRU H-2-71996 AND H-2-72039)
SCALE: NONE

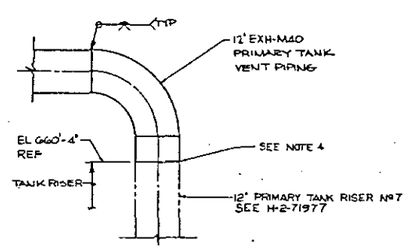

DETAIL VII (FROM H-2-71991 THRU H-2-71996 AND H-2-72039)
SCALE: NONE

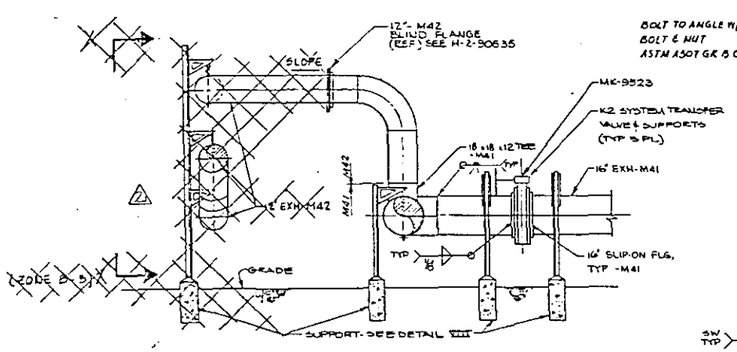

SECTION A-A (FROM H-2-71995)
VENT SYSTEM TRANSFER PIPING
SCALE: NONE

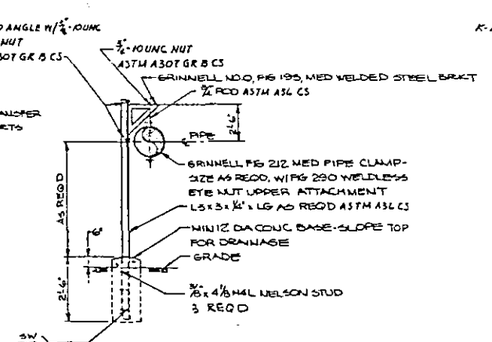

NOTE: MAINTAIN MIN 1" CLEARANCE BETWEEN PIPE CLAMP TO SUPPORT STRUCTURE

DETAIL VIII
VENT PIPING SUPPORT
SCALE: NONE

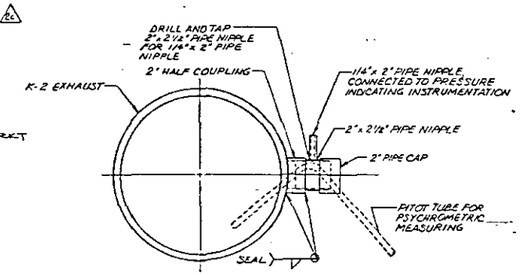

1. ASSEMBLY REQ'D AT 6 LOCATIONS
2. WELDS CHECKED W/DP

DETAIL X
SCALE: NONE

NOTES:

1. FOR PIPING GENERAL NOTES SEE H-2-71986.
2. FOR HVAC GENERAL NOTES SEE H-2-71937.
3. FOR IDENTIFICATION OF HVAC VALVES (MK-XXXX) SEE VALVE SCHEDULE ON H-2-71937.
4. SCHED 40 PIPE MUST BE TAPER BORED TO MATCH I.D. OF M40 PIPE AT WELDED CONNECTION.
5. SEE DWG. H-2-71999 FOR ELECTRICAL BONDING JOINTS DETS.

REV 1 DOE 2/1/78 DATE 2/1/78

RELEASED FOR CONSTRUCTION
BY DOE DATE 2/1/78

AS BUILT
DELETED XX AND ADDED X-ZN SCH-6
AA & ADDED 7 ELBOWS ZN A-6 (1)
ZN A-6 (1) DELETED PART OF SEQ
2 (H-2-72167-4-4) ADDED REF DWG
B-3 NOTE ADDED 9) ADDED NOTES
E-5 COUPLING ADDED (3) ZN
4 ZN D-2 VALVE ADDED 4) ZN
12-C, 10-C, 7-C, 6-D REP CHANGED
2 ZN C-4 DRAIN REVISED (6) ZN
4 ZN E-4 RACK RELOCATED (N

REV	DATE	DESCRIPTION
2		
1	2-1-78	ADDED ELEV 'X-X', ZU B-5

H-2-71999	–	PIPING PLAN & DETAILS
H-2-71900		DRAWING INDEX
NO.		TITLE
REFERENCES		
NEXT USED ON		H-2-71031

REVISIONS
COMMENT PIT ISSUE NO 1 — 7/14/80 — CHECK PIT ISSUE NO 1 — 7/14/77 — WELDING
DRAWING STATUS

U.S. ENERGY RESEARCH AND DEVELOPMENT ADMINISTRATION
VITRO ENGINEERING CORPORATION

PIPING
MISC DETAILS

J. DAVEY
241-AN TANK FARM
SCALE AS SHOWN
241-AN
NONE
H-2-72031

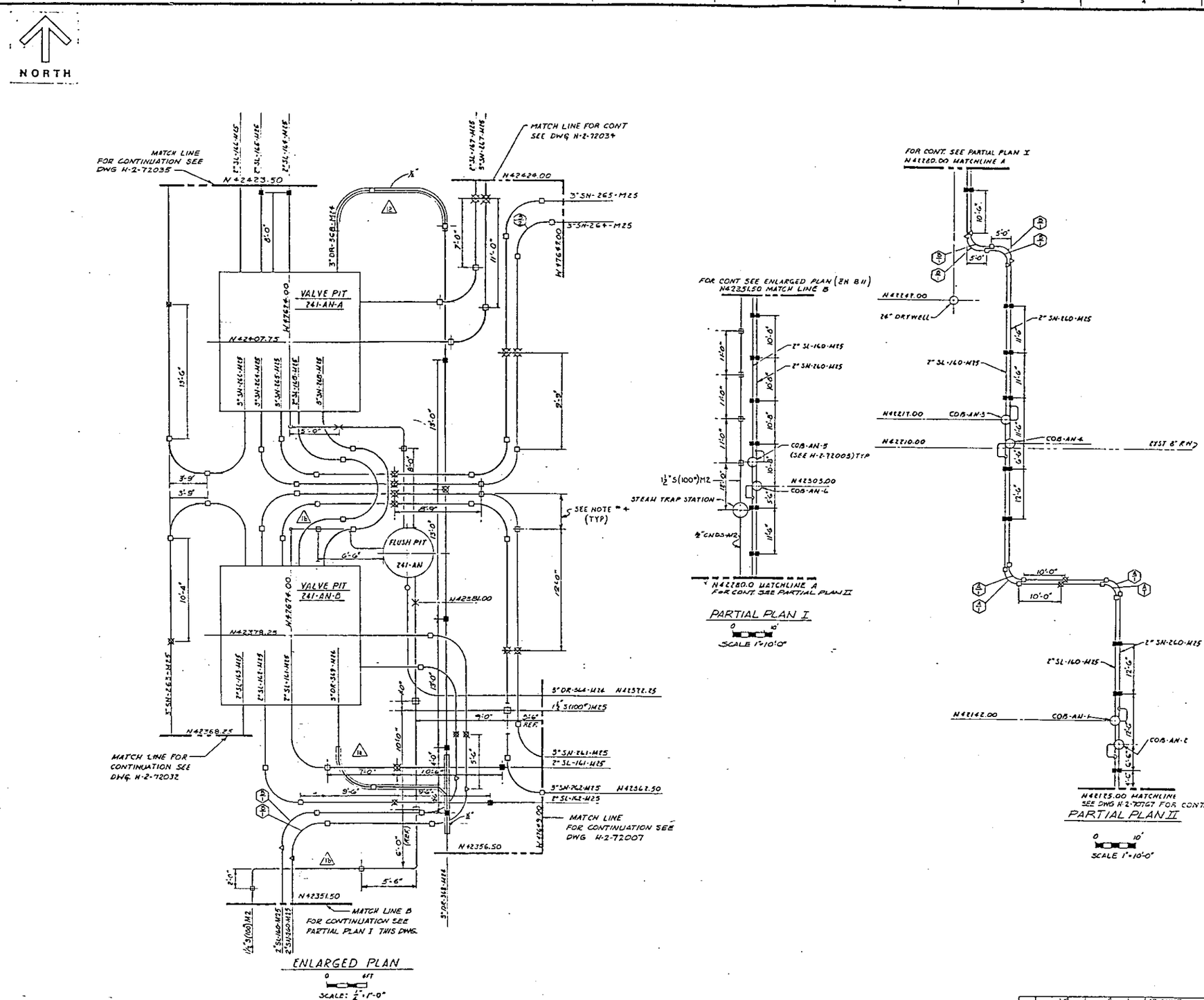

RELEASED FOR CONSTRUCTION
BY DOE DATE 2/1/58

H-2-71900 0	DRAWING INDEX	1	2/10/58	25-BUILT 2H 811 STEAM LINE SUPPORT CHANGED 2H-811, 11 AIR CAP ADDED	I
REFERENCE DRAWINGS				REVISIONS	
NEXT INDEX ON				DRAWING STATUS	

U. S. ATOMIC ENERGY COMMISSION
RICHLAND OPERATIONS OFFICE
AUTOMATION INDUSTRIES, INC.
VITRO ENGINEERING DIVISION

PIPING SUPPORT PLAN-MISC

D. HERRINGAN
SCALE NOTED
NOT REQD
NONE

PROJ NO 8150
WO NO 215002
PROJ TITLE 241-AN TANK FARM
241-AN
8511
H-2-72036
1 | 2

NORTH

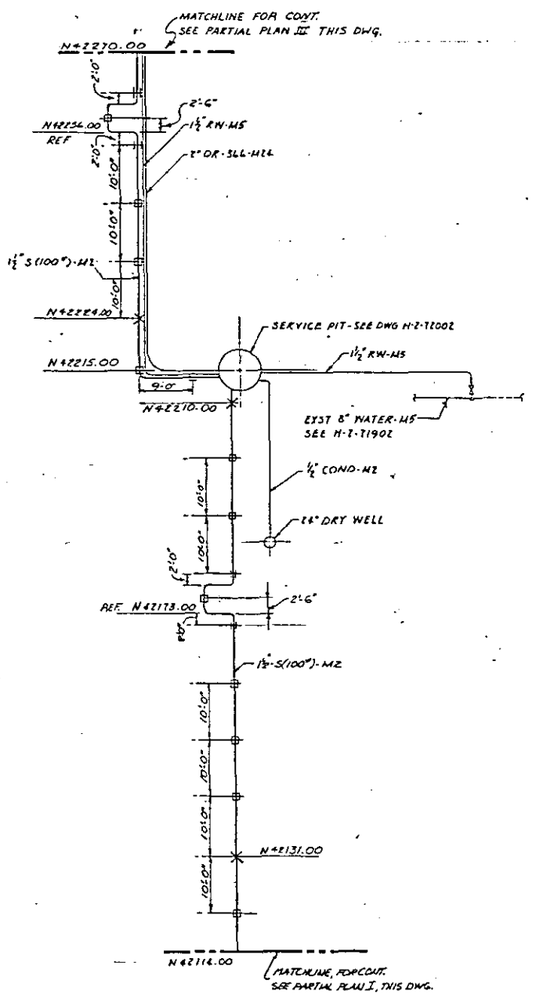

PARTIAL PLAN II

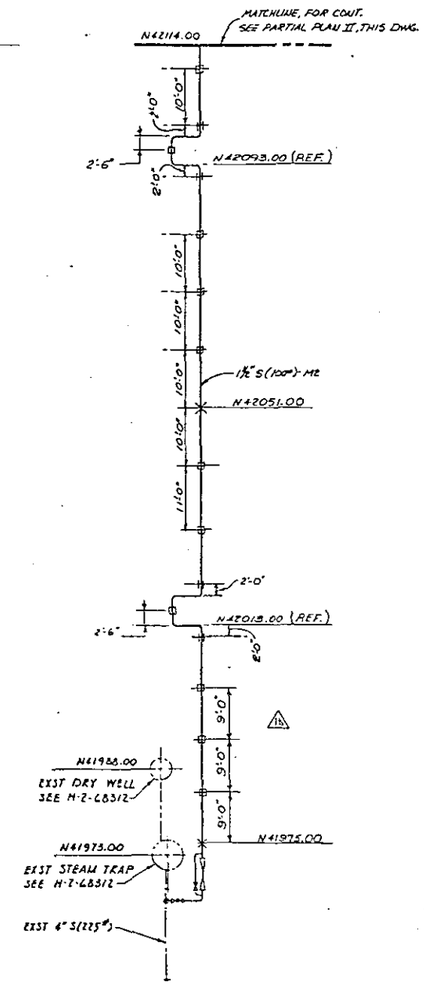

PARTIAL PLAN I

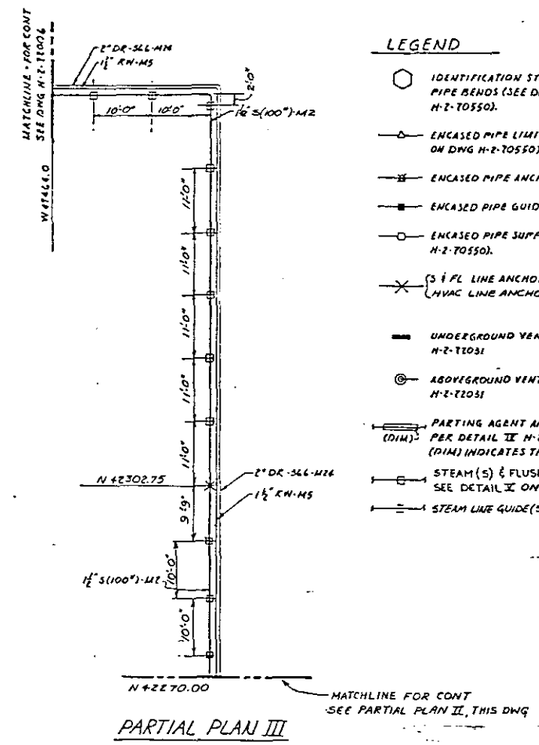

PARTIAL PLAN III

LEGEND

- IDENTIFICATION SYMBOL FOR PROPER VOID SIZE AT PIPE BENDS (SEE DETAIL III & SECTION A-A ON DWG H-2-70550).
- ENCASED PIPE LIMIT STOP SUPPORT (SEE DET II ON DWG H-2-70550).
- ENCASED PIPE ANCHOR (SEE DETAIL I ON DWG H-2-70550)
- ENCASED PIPE GUIDE (SEE DETAIL II ON DWG H-2-70550).
- ENCASED PIPE SUPPORT (SEE DETAIL XIII ON DWG H-2-70550).
- S & FL LINE ANCHOR (SEE DETAIL I ON DWG H-2-70550). HVAC LINE ANCHOR (SEE DETAIL I ON DWG H-2-72025)
- UNDERGROUND VENT PIPING SUPPORT PER DETAIL II, H-2-72031
- ABOVEGROUND VENT PIPING SUPPORT PER DETAIL III, H-2-72031
- (DIM) PARTING AGENT AND POLYURETHANE INSULATION PER DETAIL II H-2-72031 (DIM) INDICATES THICKNESS ($^{1/2}_{-0}$) OF PARTING AGENT.
- STEAM (S) & FLUSH (FL) LINE SUPPORT SEE DETAIL I ON DWG H-2-70550
- STEAM LINE GUIDE (SEE DETAIL III ON DWG H-2-70550)

NOTES:

1. FOR GENERAL NOTES DRAWING H-2-71986.
2. FOR DETAILS OF PIPE ANCHOR AT CLEANOUT BOX (COB) SEE DWG H-2-72003.
3. UNDERGROUND SUPPORTS PER DETAIL III ON DWG H-2-70550 SHALL BE LOCATED AT ALL ENCASED PIPE SUPPORT & GUIDES.
4. THE DISTANCE FROM BEND TANGENT INTERSECTION TO ℄ OF SUPPORT (H-2-70550, DET III) OR LIMIT STOP SUPPORT (H-2-70550, DET II) SHALL BE 3'-3" FOR ALL 2"&3" SL, SH, PW & DR LINES.

RELEASED FOR CONSTRUCTION
BY [illegible] DATE 8/1/78
DOE

0 10 FT
SCALE: 1" = 10'-0"

H-2-71900	0	DRAWING INDEX
REFERENCE DRAWINGS		
NEXT USED ON		

REVISIONS

					1
				AS-BUILT STEAM LINE SUPPORT CHANGED 4) NOTE #4 CHANGED	1
COMMENT PRT ISSUE NO. 1	9-11-78	CHECK PRT ISSUE NO. 1			

DRAWING STATUS

U. S. ATOMIC ENERGY COMMISSION
RICHLAND OPERATIONS OFFICE
AUTOMATION INDUSTRIES, INC.
VITRO ENGINEERING DIVISION

PIPING SUPPORT PLAN-MISC

D. MERRIMAN
SCALE 1" = 10'-0"
NOT REQD.
NONE
PROJ. NO. K-135 A1900E
PROJ. TITLE 281-AN TANK FARM
281-AN
8511
H-2-72036
2 2

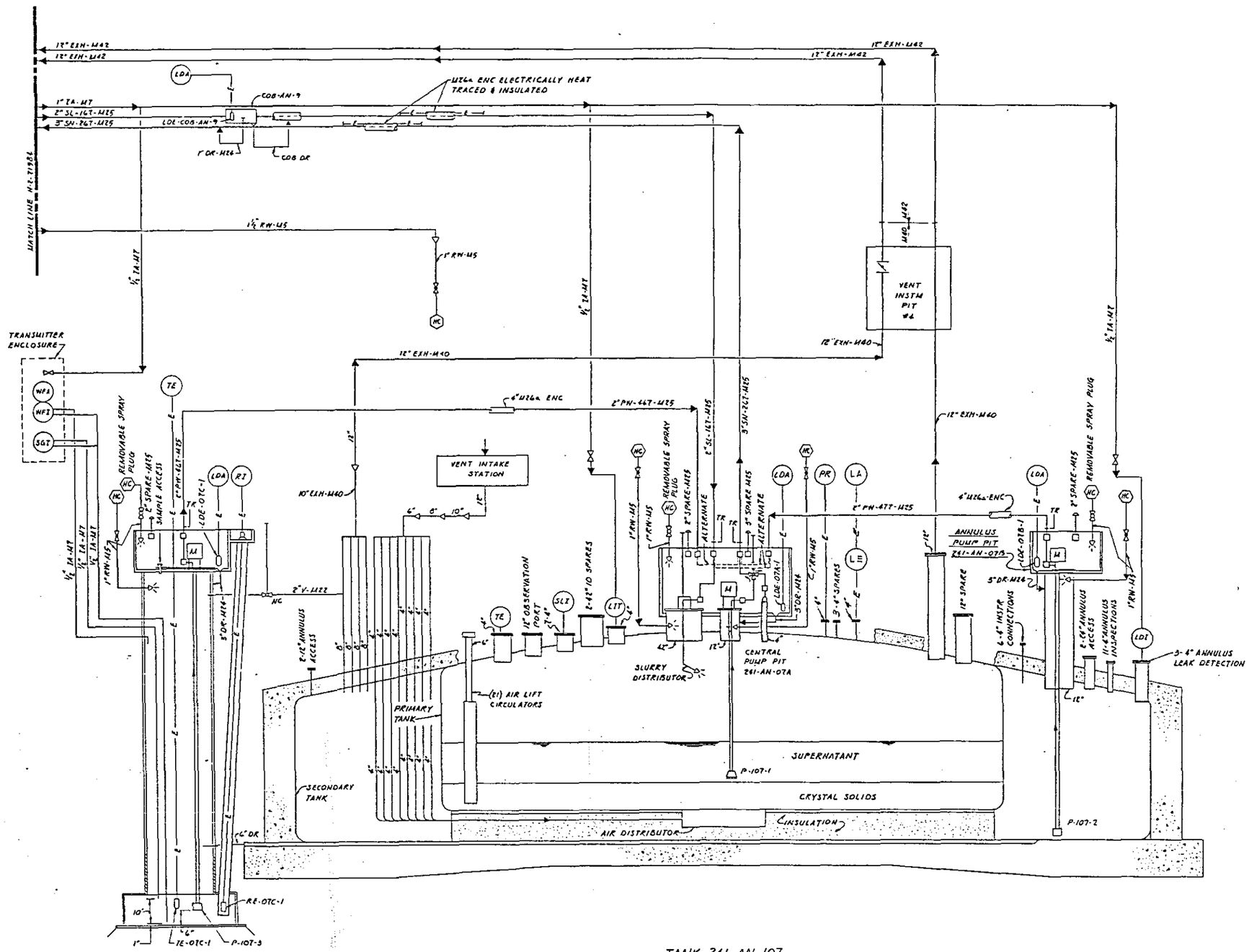

TANK 241-AN-107

NOTES:

1- FOR GENERAL NOTES SEE H-2-71981.

2- FOR LEGEND SEE H-2-71979.

REV 2 DOE [signature] DATE 9/5/79

REV 1 DOE [signature] DATE 1/3/79

RELEASED FOR CONSTRUCTION BY [signature] DOE DATE 5/16/79

H-2-71900	0	DRAWING INDEX	
REFERENCE DRAWINGS			
NEXT USED ON	H-2-72037		

REV	DESCRIPTION	
	AS BUILT	3
	ZONE D-5, D-6 & D-12 SPRAY PLUG WAS PIT MOUNTED	2
	6) ADDED LE & LA ZONE D-6 2) WAS 4 SPARES ZONE C-7	1

REVISIONS

COMMENT PRT ISSUE NO. 1 — CHECK PRT ISSUE NO. 1

DRAWING STATUS 3

U. S. Department of Energy, Richland Operations Office

VITRO ENGINEERING CORPORATION

ENGINEERING FLOW DIAGRAM

TANK 241-AN-107

DRAWN D. MERRIMAN 2-13-78

SCALE NONE

CLASSIFICATION NONE

PROJECT TITLE 241-AN TANK FARM

DWG NO. X17002

SHEET NO. 241-AN

DWG NO. 7001

H-2-72037

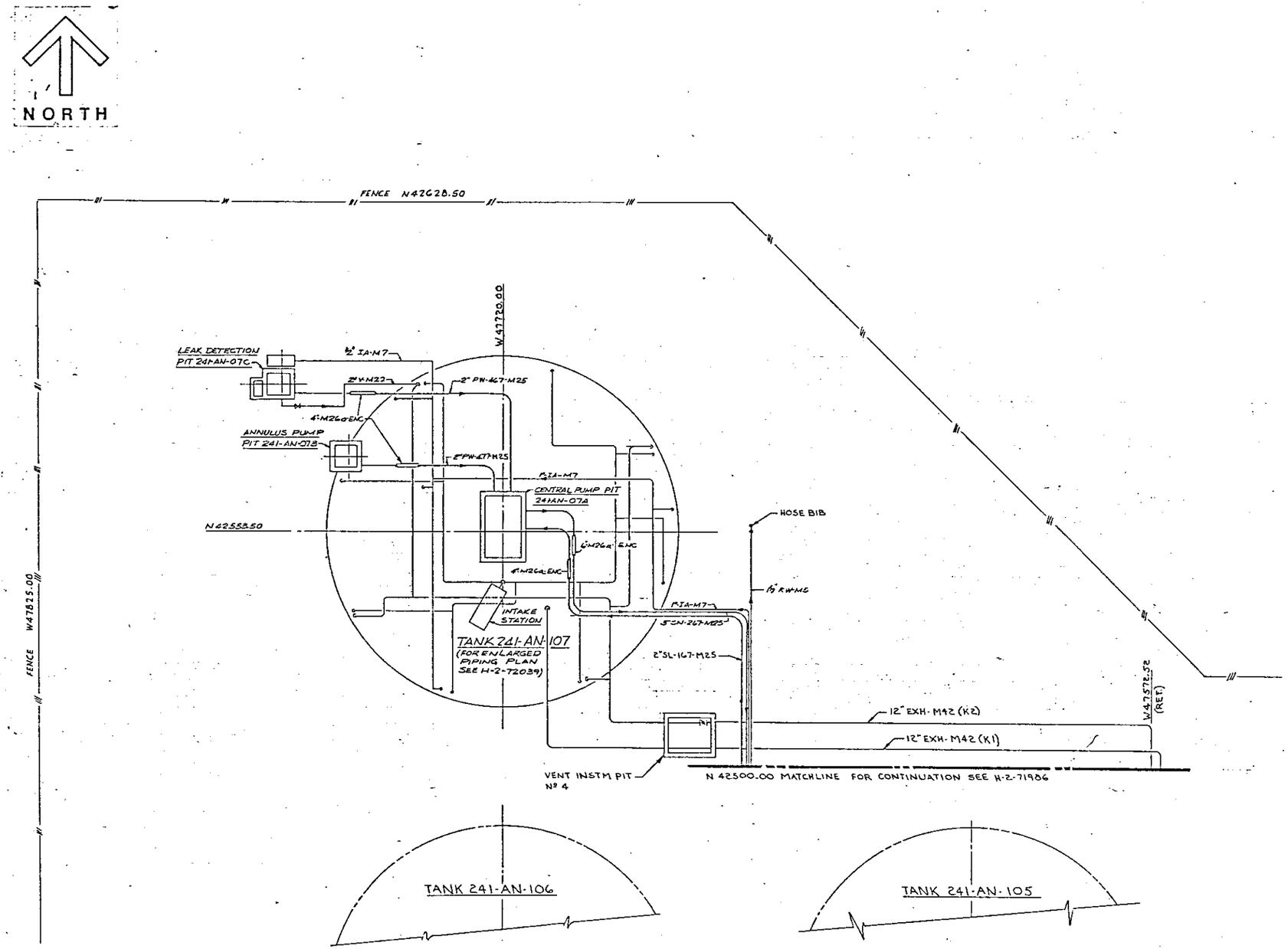

FOR GENERAL NOTES SEE DWG. H-2-71986

RELEASED FOR CONSTRUCTION
BY [signature] DATE 5/26/72
DOE

0 10 FT
SCALE: 1" = 10'-0"

H-2-71900	DRAWING INDEX					AS - BUILT	1
NUMBER	TITLE						
	REFERENCES						
NEXT USED ON							

REVISIONS

COMMENT REVIEW LEB 4/1/70 [signature] LAST REV 1

CLIENT APPROVAL	U.S. Department of Energy, Richland Operations Office
	VITRO ENGINEERING CORPORATION
	PIPING PLAN 241-AN TANK FARM
CHECKED J. DOVEY	PROJ. NO. 3-170 / NO. NO. X-17002 / PROJECT TITLE 241-AN TANK FARM
DRAWN J.A. KERR	SCALE AS SHOWN / BLDG NO. 241-AN / INDEX NO. 0402
CLASSIFICATION NONE	DRAWING NUMBER H-2-72038

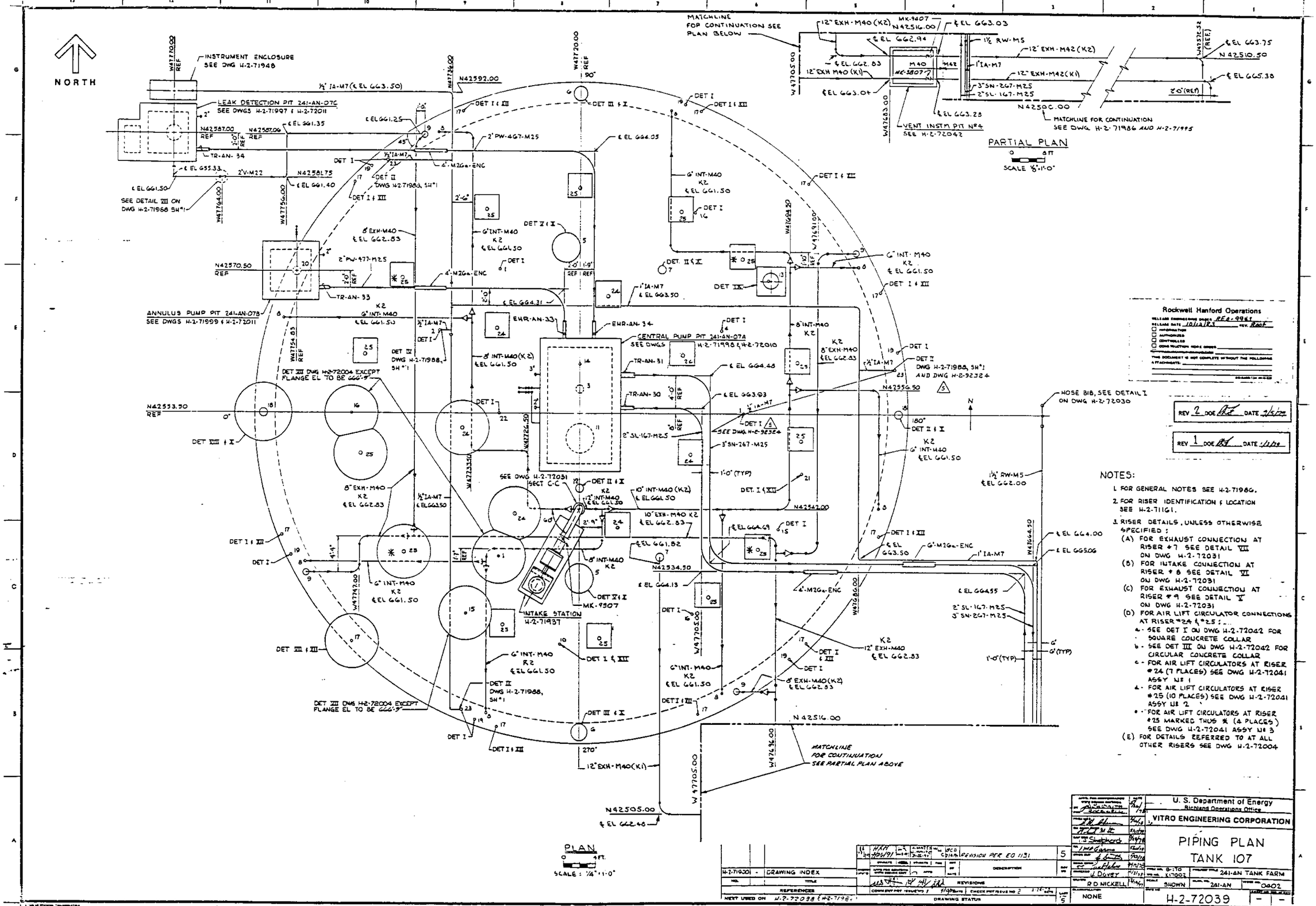

NOTES:

1. FOR GENERAL NOTES SEE H-2-71986.
2. FOR RISER IDENTIFICATION & LOCATION SEE H-2-71161.
3. RISER DETAILS, UNLESS OTHERWISE SPECIFIED:
   - (A) FOR EXHAUST CONNECTION AT RISER #7 SEE DETAIL VII ON DWG H-2-72031
   - (B) FOR INTAKE CONNECTION AT RISER #8 SEE DETAIL VI ON DWG H-2-72031
   - (C) FOR EXHAUST CONNECTION AT RISER #9 SEE DETAIL V ON DWG H-2-72031
   - (D) FOR AIR LIFT CIRCULATOR CONNECTIONS AT RISER #24 & #25:
     - a - SEE DET I ON DWG H-2-72042 FOR SQUARE CONCRETE COLLAR
     - b - SEE DET III ON DWG H-2-72042 FOR CIRCULAR CONCRETE COLLAR
     - c - FOR AIR LIFT CIRCULATORS AT RISER #24 (7 PLACES) SEE DWG H-2-72041 ASSY Nº 1
     - d - FOR AIR LIFT CIRCULATORS AT RISER #25 (10 PLACES) SEE DWG H-2-72041 ASSY Nº 2
     - e - FOR AIR LIFT CIRCULATORS AT RISER #25 MARKED THUS * (4 PLACES) SEE DWG H-2-72041 ASSY Nº 3
   - (E) FOR DETAILS REFERRED TO AT ALL OTHER RISERS SEE DWG H-2-72004

Rockwell Hanford Operations

REV 2 DOE DATE 9/5/79

REV 1 DOE DATE 1/1/79

H-2-71930	-	DRAWING INDEX	
NO.		TITLE	
REFERENCES			
NEXT USED ON	H-2-72038 & H-2-71961		

REVISION PER EO 1131 — 5

DRAWING STATUS — 5

U. S. Department of Energy
Richland Operations Office

VITRO ENGINEERING CORPORATION

PIPING PLAN
TANK 107

241-AN TANK FARM

SHOWN — 241-AN — 0402

NONE

H-2-72039

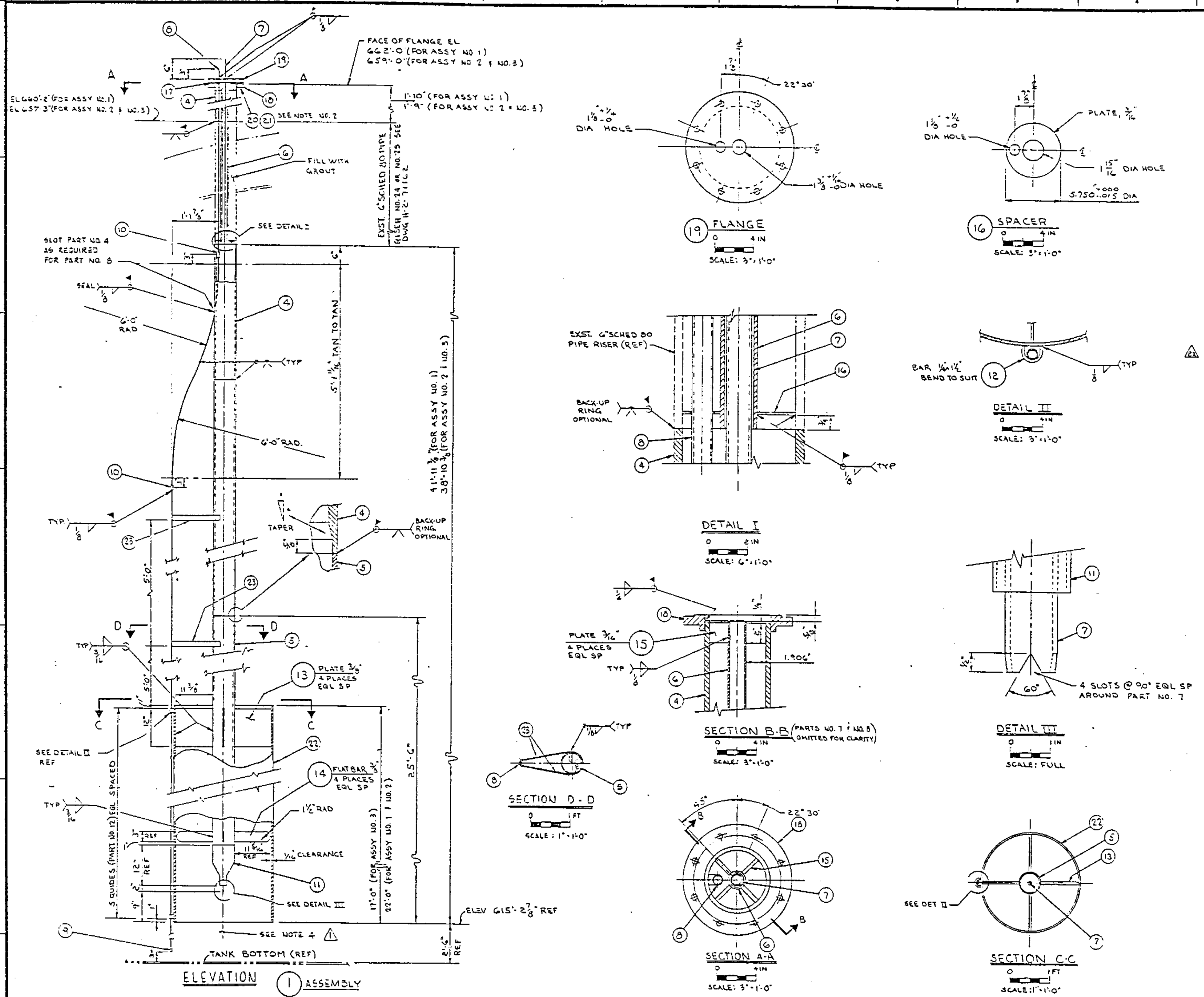

	QTY	QTY	QTY	NO	DESCRIPTION	MATERIAL
	—	—	X	1	ASSEMBLY	———
	—	X	—	2	ASSEMBLY	———
	X	—	—	3	ASSEMBLY	———
	AR	AR	AR	4	6" SCHED 80 PIPE	ASTM A53 TYPE S GR B CS
	AR	AR	AR	5	6" SCHED 40 PIPE	ASTM A53 TYPE S GR B CS
	AR	AR	AR	6	1 1/2" SCHED 40 PIPE	ASTM A106 GR B CS
	AR	AR	AR	7	1" SCHED 40 PIPE	ASTM A106 GR B CS
	AR	AR	AR	8	3/4" SCHED 40 PIPE	ASTM A106 GR B CS
	1	1	1	9	3/4" SCHED 40, WELD CAP	ASTM A234 GR WPB CS
	2	2	2	10	3/4" COUPLING, 2000 LBS, SKT WELD	ASTM A105, CS.
	1	1	1	11	6"x1 1/2" SCHED 40 SWAGED NIPPLE	ASTM A234 GR WPB CS.
	5	5	5	12	GUIDE	ASTM A36 CS
	4	4	4	13	SUPPORT	ASTM A36 CS
	4	4	4	14	FIN	ASTM A36 CS
	4	4	4	15	SPACER	ASTM A36 CS
	1	1	1	16	SPACER	ASTM A36 CS
	1		1	17	GASKET, 8 1/2" OD x 6 3/4" ID x 1/16 THK	SEE NOTE 3
	1	1	1	18	6" 150# SLIP-ON FLG, RF	ASTM A181 GR II CS.
	1	1	1	19	6" 150# BLIND FLG, RF	ASTM A181 GR II CS.
	8	8	8	20	3/4-10 UNC-2A HEX HD BOLT x 3" LG	ASTM A307 GR B CS
	8	8	8	21	3/4-10 UNC-2B HEX NUT	ASTM A307 GR B CS
△2	AR	AR	AR	22	30" SCHED 10 PIPE	ASTM A285 GR C CS
	4	4	4	23	BAR 3/8" x 1 1/2" x 1'-3" LG	ASTM A36 CS

NOTES:

1. FOR GENERAL NOTES SEE DWG H-2-71906.
2. TACK WELD BOLTS (PART NO. 20) TO FLANGE (PART NO. 19).
3. MATERIAL FOR PART NO. 17 IS COMPRESSED WHITE ASBESTOS, GARLOCK NO. 900 OR JOHNS-MANSVILLE NO. 61.
4. △1 ℄ CIRCULATOR TO BE PLUMB WITHIN 1/4".

REV 1 DOE [signature] DATE 8/2/78

RELEASED FOR CONSTRUCTION
BY [signature] DATE 8/22/78
DOE

REF NO.	TITLE
H-2-71900	DRAWING INDEX

REFERENCES
NEXT USED ON

CLIENT APPROVAL	APPROVED	BY DATE	DESCRIPTION	REV NO.
[signature]	[signature]	[signature]	NZN 23 CALLOUT CHANGED	2
[signature]	[signature]	[signature]	ADDED NOTE 4, ZU AH. 5-3	1

REVISIONS
COMMENT REVIEW [signatures] 4/19/78
LAST REV 2

CLIENT APPROVAL [signature]
U.S. Department of Energy
Richland Operations Office
VITRO ENGINEERING CORPORATION

TANK - 107
AIR LIFT CIRCULATOR
ASSEMBLY AND DETAILS

SAFETY I.A. Shepherd
CHECKED J. Dever
DRAWN G. CLEVELAND
PROJ NO. 3-170
PROJECT TITLE 241-AN TANK FARM
SCALE AS SHOWN
BLDG NO. 241-AN
INDEX NO. 0402
CLASSIFICATION NONE
NOT REQD
DRAWING NUMBER H-2-72041

LINE NUMBER	SHT. NUMBER	FROM	TO	REFERENCE DRAWINGS
A001	5	202-A	291-A STACK	H-2-58096, H-2-58000, H-2-57022
B001	5			
C001	5			
D602	3	241-AZ-102	241-AZ-152	H-2-68358, H-2-68359
D603	3	241-AZ-101	241-AZ-152	H-2-68354, H-2-68353, H-2-68312, H-2-68313
DP-1 - DP-22	5	291-A FILTER NO. 2	INSTR. HOUSE	H-2-58581
K128		203-A	202-A	H-2-54823
K160				H-2-54823
P103				H-2-54820
S603	3	241-AZ-102	241-AZ-152	H-2-68358, H-2-68359
S605		241-AZ-102		H-2-68358, H-2-68359
S608		241-AZ-101		H-2-68354, H-2-68354, H-2-68312, H-2-68313
S609		241-AZ-101		H-2-68354, H-2-68358, H-2-68312, H-2-68313
SL160		241-AN-B	241-AZ-102	H-2-70765, H-2-71986, H-2-71987
SL167	4,5	241-AW-B	242-A	H-2-70398, H-2-70399
SL168	4,5	241-AW-A	242-A	H-2-70398, H-2-70399
SL500	3,4	241-AX-A	241-AZ-102	H-2-70763, H-2-70765
SN219	4,5	241-AW-B	242-A	H-2-70397, H-2-70398, H-2-70399
SN220	4,5	241-AW-A	242-A	H-2-70397, H-2-70398, H-2-70399
SN260	3	241-AN-B	241-AZ-102	H-2-70765, H-2-71986, H-2-71987
SN269	4,5	241-AW-102	242-A	H-2-70398, H-2-70399
SN270	4,5	241-AW-102	242-A	H-2-70398, H-2-70399
SN600	3,4	241-AX-A	241-AZ-102	H-2-70763, H-2-70765
T020	5	MISC. DRAINS	216-A-TK-16-Z	H-2-55036
T021	5	MISC. DRAINS	216-A-TK-16-Z	H-2-55036
T036		213-A	202-A	H-2-57826
T054		MISC. DRAINS	216-A-TK-16-Z	H-2-55036
T075				
T127				
T160		216-A-TK-Z	216-A SAMPLE PIT	
T162		MISC. DRAINS	216-A-TK-16-Z	
T167		216-A-TK-Z	216-A SAMPLE PIT	
T168		216-A-TK-Z	216-A SAMPLE PIT	
U285		202-A LAB	202-A	H-2-53360
V012		241-A-151	216-A SAMPLE PIT	H-2-55036, H-2-58997
V027		TK-302-A	241-A-151	H-2-55101
V028		TK-302-A	241-A-151	H-2-55101
V360	1,2	241-ER-154	241-UX-154	H-2-43049 THRU H-2-43056, H-2-43158
V361				
V362				
V363				
V364				
V366				
100	4	241-AX-A	241-A-A	H-2-69188, H-2-69189, H-2-69240, H-2-69241
101		241-AX-B	241-A-B	H-2-69188, H-2-69189, H-2-69240, H-2-69241
113		241-A-B	242-A	H-2-69183, H-2-69188, H-2-69189
114		241-A-A	242-A	H-2-69183, H-2-69188, H-2-69189
215	3,4	244-A	241-A-A	H-2-38202, H-2-38225, H-2-69188
216	3,4	244-A	241-A-B	H-2-38202, H-2-38225, H-2-69188
228	1,2,3,4	241-ER-152	241-ER-153	H-2-36641 THRU H-2-36644, H-2-36649, H-2-37023, H-2-37965, H-2-37968, H-2-37970
229	2	241-ER-151	241-ER-152	H-2-37969
232	3	241-ER-153	244-A	H-2-37970, H-2-38202,
233		241-ER-153	244-A	H-2-37970, H-2-38202
244		244-CR	241-ER-153	H-2-36642, H-2-36646, H-2-36652, H-2-37970
244	1,2,3,4	241-ER-152	241-ER-153	H-2-36641 THRU H-2-36644, H-2-36649, H-2-37023, H-2-37965, H-2-37968, H-2-37970
3018	2	225-B AREA	—	H-2-67188
4001	4,5	241-AX-151	202-A	H-2-44764 THRU H-2-44767, H-2-44789, H-2-44816
4002	2	225-B AREA	—	H-2-67188
4002	4,5	241-AX-151	202-A	H-2-44764 THRU H-2-44767, H-2-44789, H-2-44816
4003				
4004				
4006	4	244-AR	241-AX-151	H-2-44789, H-2-36645, H-2-36647
4007	4	242-AR	241-AX-151	H-2-44789, H-2-36645, H-2-36647
4017	4	241-AX-151	241-AX-152	H-2-44631, H-2-44773, H-2-44789, H-2-44820, H-2-61963
4023	5	4003	202-A	H-2-44764 THRU H-2-44767, H-2-44789, H-2-44816
4028	5	241-AX-151	202-A	H-2-44816
4076	2	225-B AREA	—	H-2-67188
4502/8108	4	241-AY-101	241-AX-152	H-2-44681, H-2-64409, H-2-64463
4503/8106	4	241-AY-102	241-AX-152	H-2-44681, H-2-64409, H-2-64463
V224	2	241-ER-311	241-ER-152	H-2-2537, H-2-37965
V226	2	241-ER-311	241-ER-151	H-2-2537, H-2-43036
V226-(1)	2	241-ER-311	241-ER-151	H-2-2537, H-2-43036
702/8133	4	204-AR	241-A-A	H-2-70682, H-2-69188
4522	4	241-AX-152	241-AY-101 & -102	H-2-64405, H-2-64406, H-2-64414, H-2-44681
4523				
4526				
4527				
4531				
4532		241-AY-01F	241-AY-01A	H-2-64405
4606		241-AY-02F	241-AY-02A	H-2-64406
4607	3	241-AZ-102	241-AZ-152	H-2-68358, H-2-68359
	3	241-AZ-101	241-AZ-152	H-2-68312, H-2-68313, H-2-68353, H-2-68354

(CONT. ON SHT. 7)

NOTES (CONT)

35. THE B18 PORTION IS 3", SCH 40, TYPE 304 SST PIPE (M-9). THE B34 & B653 PORTIONS ARE 3", SCH 10, TYPE 304-L SST PIPE. THE ENTIRE LINE IS IN CONCRETE ENCASEMENT.
36. 3", SCH 40, C. STL PIPE (M-35) ENCASED IN 6", SCH 40, C. STL PIPE (M-35). DIRECT BURIED
37. 4", SCH 40, C. STL PIPE (M-35), DIRECT BURIED.
38. 2", SCH 40, TYP 304-L SST PIPE (M-8) DIRECT BURIED.
39. 3/4", SCH 40, TYPE 304-L SST PIPE (M-9) ENCASED IN GILSO-THERM 70.
40. 1", SCH 40, TYPE 304-L SST PIPE (M-9) ENCASED IN GILSO-THERM 70.
41. 2", SCH 40, C. STL PIPE (M-35), DIRECT BURIED.
42. 8", SCH 10, TYPE 304-L SST PIPE (M-8), DIRECT BURIED.
43. 4", SCH 40, TYPE 304-L SST PIPE (M-8), DIRECT BURIED.
44. 3", SCH 40, TYPE 304-L SST PIPE (M-21) IN CONCRETE ENCASEMENT.
45. 4", SCH 40, TYPE 304-L SST PIPE (M-21), DIRECT BURIED.
46. 1", SCH 40, TYPE 304-L SST PIPE (M-21), DIRECT BURIED.
47. 8", SCH 40, TYPE 304-L SST PIPE (M-9), DIRECT BURIED.
48. 8", SCH 10, TYPE 304-L SST PIPE, DIRECT BURIED.
49. 6", SCH 10, TYPE 304-L SST PIPE, (M-8), DIRECT BURIED.
50. 8", SCH 10, TYPE 304-L SST PIPE, (M-21), DIRECT BURIED.
51. 2", SCH 40, TYPE 304-L SST PIPE, (M-21), DIRECT BURIED.
52. 3", SCH 40, TYPE 304-L SST PIPE, (M-21), DIRECT BURIED.
53. 3", SCH 40, TYPE 304-L SST PIPE, (M-8), DIRECT BURIED.
54. 3", SCH 40, TYPE 304-L SST PIPE, (M-9), DIRECT BURIED.
55. 8", SCH 10, TYPE 304-L SST PIPE, (M-21) IN CONCRETE ENCASEMENT.
56. 4", SCH 40, C. STL PIPE (M-2) FROM 221-BB TO COORD N48937.0 & N54740.5 WITH THE REMAINDER 4" FIBERGLASS REINFORCED EPOXY PIPE. (H-2-34526 DETAIL G) THE ENTIRE LINE IS DIRECT BURIED
57. 8", SCH 40, C. STL PIPE, (M-35), DIRECT BURIED. PORTION AT 221-BB IS 6"
58. 1/2" x .035 WALL SST TUBING.
59. A COMBINATION OF 2" AND 3" SCH 40, TYPE 304-L SST PIPE (M-21).
61. UNLESS OTHERWISE SPECIFIED, CATCH TANKS ARE MADE OF CARBON STEEL.
62. 16 GA, TYPE 304-L ROUND SST DUCT.
63. PART OF THE PIPE LINE IS NOT CONCRETE ENCASED AND REQUIRES CATHODIC PROTECTION.

CONCEPTUAL SD-234-CDR-001

REVISIONS				
COMMENT PRT ISSUE NO 2	1-OCT81	CHECK PRT. ISSUE NO 2	8-OCT 1981	
DRAWING STATUS		DI 1136		

REVISION APPROVALS				DESCRIPTION	REV. NO.
				INSTRUCTIONS. REVISION PER ENGINEER'S PER D.I.-E420, EXTENSIVE a) DIRECT DWG CHANGE	1

REFERENCE DRAWINGS

NEXT USED ON H-2-72521 SH. 1

DRAWING APPROVALS

NOT REQD

ENERGY RESEARCH & DEVELOPMENT ADMINISTRATION
RICHLAND OPERATIONS OFFICE
Rockwell International

LONG TERM CATHODIC PROTECTION PLAN 200-EAST

SCALE: NONE | 200-E | 7801

CLASSIFICATION: NONE | "NOT REQD" | DRAWING NO. H-2-72531 | SHEET NO. 6 | OF 7

(CONT. FROM SHT. 6)

LINE NUMBER	SHT. NUMBER	FROM	TO	REFERENCE DRAWINGS
4608/ B220	3,4	241-AZ-152	241-AY-01A	H-2-64405, H-2-64414, H-2-68354, H-2-68355
7717	5	202-A	216-A-5 NEUT. TANK	H-2-55099, H-2-56049
7718	5	202-A	216-A-5 NEUT. TANK	H-2-55099, H-2-56049
833/8618/809	1,2,4	221-B	244-AR	H-2-34173, H-2-34179, H-2-43043 THRU H-2-43045, H-2-61968, H-2-61970, H-2-61973
834/8653/818	1,2,4	221-B	244-AR	H-2-34173, H-2-34179, H-2-43043 THRU H-2-43045, H-2-61968, H-2-61970, H-2-61973
8912	2	225-B AREA	—	H-2-67188
9219			—	
9220			—	
9221			—	
9253			—	
9808	1,2	241-ER-151	241-BX-104	H-2-35862, H-2-43046
24" & 34" DUCT	2	225-B	225-B STACK	H-2-66543
"AN" TANK FARM	3	—	—	H-2-71986, H-2-71987
"AW" TANK FARM	5	—	—	H-2-70399, H-2-70400
23 NO. LINES		241-A-151	202-A	H-2-55096
(1)-5 UNNUMBERED		216-A-10 VALVE BOX	216-A-38-1 CRIB	H-2-62875
(8)-5		216-A-10 VALVE BOX	216-A-10 CRIB	H-2-55576
(9)-5		202-A	216-A-36-A CRIB	H-2-59804, H-2-59805
(12)-5		216-A-5 NEUT. TANK	216-A-5 SMPL.PIT	H-2-56049
(25)-5		291-A FILTER NO.2	291-A FILTER DRN. TK	H-2-58540, H-2-58577
(26)-5		291-A FILTER NO.2	291-A FILTER DRN. TK	H-2-58540, H-2-58577
(40)-5		202-A	202-A AREA	H-2-59804
(19)-2	2	221-BB	216-B-62	H-2-60330
(20)-2			216-B-64	H-2-37886
(21)-2			216-B-64 AREA	H-2-37886
(6)-2		225-B	221-B	H-2-66434
(8)-2		291-B FAN	221-B	H-2-32470
(9)-2		291-B STACK	291-B-FAN	H-2-37477
(10)-2		291-B STACK	291-B-FAN	H-2-37477
(27)-5	5	291-A FILTER #3	EXIST. DRAIN LINE	H-2-64921
334	4,5	242-A	DRAIN LINE	H-2-69267
335	4,5	242-A	DRAIN LINE	H-2-69267
343	4,5	242-A	DRAIN LINE	H-2-69267
SL502	4	241-AX-B	241-AY-102	H-2-69244
V714-M9	4,5	202-A	244-AR	H-2-90357, H-2-90281, H-2-90358
V713-M25	4	241-AY-101	LINE 4608	H-2-90354
V021-M9	5	DIV BOX 241-A-151	VALVE PIT-241-AW-A	H-2-90281, H-2-90282, H-2-90283
V022-M9	5		VALVE PIT-241-AW-B	
V023-M9	5		VALVE PIT-241-AW-B	
BCP-101	2	221-BF	221-BB	H-2-37888
BCP-105		221-BF	BCP CRIB (ABANDONED)	H-2-37888
BCP-106		221-BF	BCP-111	H-2-37886, H-2-37894, H-2-37895
BCP-107		221-BF	221-BB	H-2-37888
BCP-111		BCP-106	BCS DIV. PIT	H-2-37894, H-2-37895
BCP-112		BCP-106	BCS/BCP-217	H-2-37894, H-2-37895
BCS-201		BCS-211	221-BF	H-2-37888
BCS-211		221-BB	BCS DIV PIT	H-2-37894, H-2-37895
BCS-212		BCS-DIV. PIT	216-B-55 CRIB	
BCS/BCP-213		BCS-DIV PIT	216-B-55 RET BASIN	
BCS/BCP-215	2	216-B-64 RET BASIN	216-B-64 PIT	H-2-37894, H-2-37895
BCS/BCP-216		216-B-64 RET BASIN	216-B-64 PIT	
BCS/BCP-217		216-B-64 PIT	BCS/BCP-213	
BCS-218		216-B-64 PIT	BCS-211	
SL-161 (AN)	3	241-AN-101	VALVE PIT 241-AN-B	H-2-71986, H-2-71987
SL-162		241-AN-102		
SL-163		241-AN-103		
SL-164		241-AN-104	241-AN-A	
SL-165		241-AN-105		
SL-166		241-AN-106		
SN-247		241-AN-101	241-AX-B	H-2-69244
SN-261		241-AN-101	241-AN-B	H-2-71986, H-2-71987
SN-262		241-AN-102		
SN-263		241-AN-103		
SN-264		241-AN-104	241-AN-A	
SN-265		241-AN-105		
SN-266		241-AN-106		
SN-267	3	241-AN-107		
SN-268 AW	4	241-AW-102	241-AW-A/B	H-2-70401
300		LIFT STA. 241-A-350	241-A-A	H-2-44501, H-2-70397
307				H-2-69188
311				H-2-69188
314		DR	241-AX-B	H-2-69244
317		LIFT STA. 241-A-350	SL-100	H-2-70397, H-2-44501
326		370 DR (3")	VALVE PIT 241-AX-A	H-2-69244
327		241-AX SVC PIT	241-AX SEAL POT	H-2-69244
370		326 DR, 327 DR		H-2-69244
4550	4	SLUICE TRANS. BOX 241-AZ-152		H-2-68370

LINE NUMBER	SHT. NUMBER	FROM	TO	REFERENCE DRAWINGS
SL-161 AW	5	241-AW-101	VALVE PIT 241-AW-A	H-2-70401
SL-162		-102	-B	
SL-163		-103	-A	
SL-164		-104	-B	
SL-165		-105	-A	
SL-166		[illegible]	-B	
SN-261		[illegible]	-A	
SN-262		-102	-B	
SN-263		-103	-A	
SN-264		-104	-B	
SN-265		-105	-A	
SN-266 AW	5	241-AW-106	VALVE PIT 241-AW-B	H-2-70401

CONCEPTUAL SD-234-CDR-001

REV.	DESCRIPTION	REVISION APPROVALS
2	INSTRUCTIONS REVISION PER ENGINEER'S 01-E420, EXTENSIVE a DIRECT DWG CHANGE PER	PNR 9-17-82; RKW 5/21/82
1	THRU V023-M9 ADDED LINES V712-M9 DIRECT DWG CHNG. PER DJ 6110	

COMMENT PRT ISSUE NO. 1 1-OCT 81 — CHECK PRT. ISSUE NO 2 8-OCT 81 — DRAWING STATUS D.I. 1186

DRAWING APPROVALS: NOT REQD; P.D. KECK; DMANTELE 10/78

U. S. Department of Energy
Richland Operations Office
Rockwell Hanford Operations
Richland, Washington 99352

LONG TERM CATHODIC PROTECTION PLAN-200 EAST

SCALE NONE — BLDG NO. 200-E — INDEX NO. 7801 — CLASSIFICATION NONE — NOT REQ'D — H-2-72531 — SHEET 7 OF 7

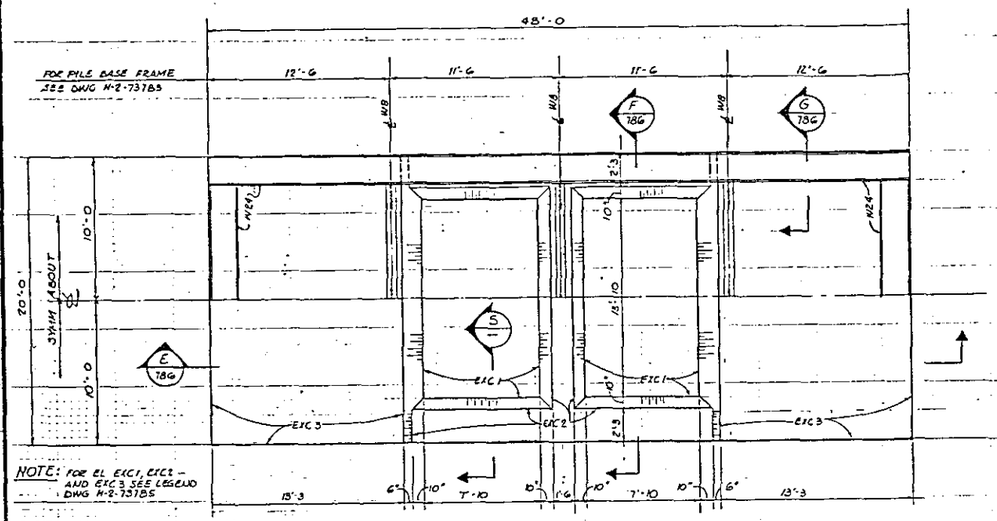

NOTE: FOR EL EXC1, EXC2 – AND EXC3 SEE LEGEND DWG H-2-73785

EXCAVATION PLAN
1/16" = 1'-0

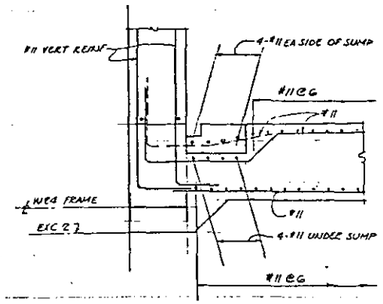

SECTION S
1/2" = 1'-0

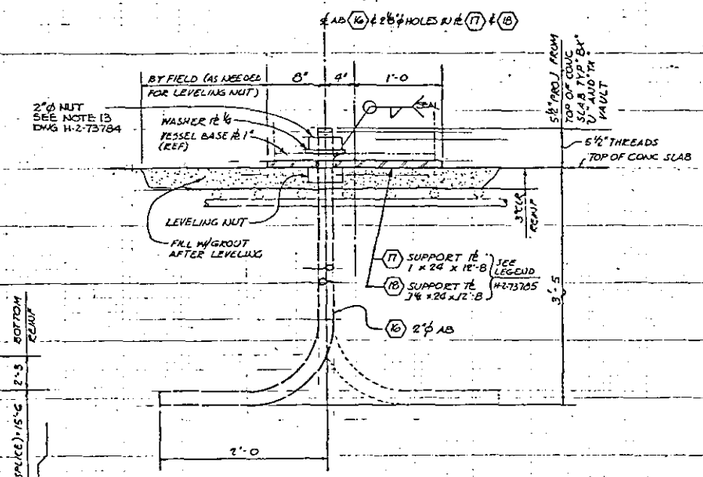

SECTION T
NTS

NOTES:

1. FOR GENERAL NOTES SEE DWG H-2-73784

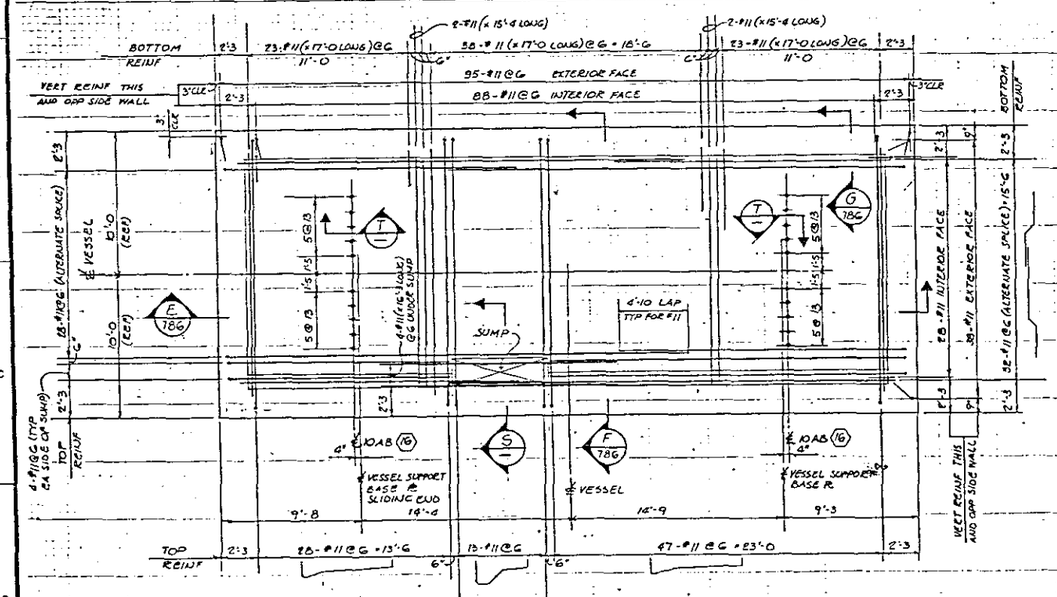

PLAN - BOTTOM SLAB REINF
1/4" = 1'-0

GRAPHIC SCALES:

1/8" = 1'-0 (0 1 3 6 10 FT)

1/4" = 1'-0 (0 1 2 5 FT)

IMPACT LEVEL 2

					ECN-101480 PER ECN-101478 & DIRECT DRAWING CHANGE EO-17557, EO-17548 & EO-8462 INCORPORATED EO-17547.	2	
					AS-BUILT (REV PER DFC-B180-46) E5-7 (ADDED WELD & CALLOUT ZN)	1	
					DESCRIPTION	REV NO	REV BY DATE

CLIENT APPROVAL	APPROVED	REVISIONS	LAST REV 2
COMMENT REVIEW			

H-2-73780	DRAWING LIST		
NUMBER	TITLE		
REFERENCES			
NEXT USED ON H-2-73780			

VITRO JOB NO. R074A2

U. S. Department of Energy
Richland Operations Office

VITRO ENGINEERING CORPORATION

STRUCTURAL
RCVR VAULT 244-BX, TX & U
PLANS AND SECTIONS

PROJ NO E-180	PROJECT TITLE SALT WELL RECEIVER VESSEL		
WO NO X18002			
SCALE SHOWN	244 BX U & TX	INDEX NO 0900	
CLASSIFICATION NONE	NOT REQD	DRAWING NUMBER H-2-73789	SHEET 1 / 2

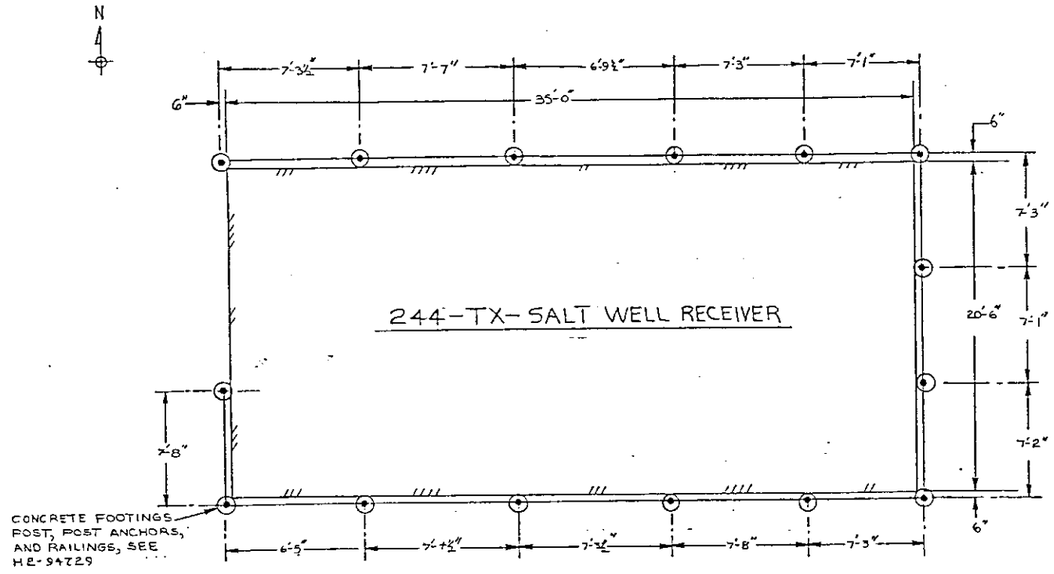

PLAN

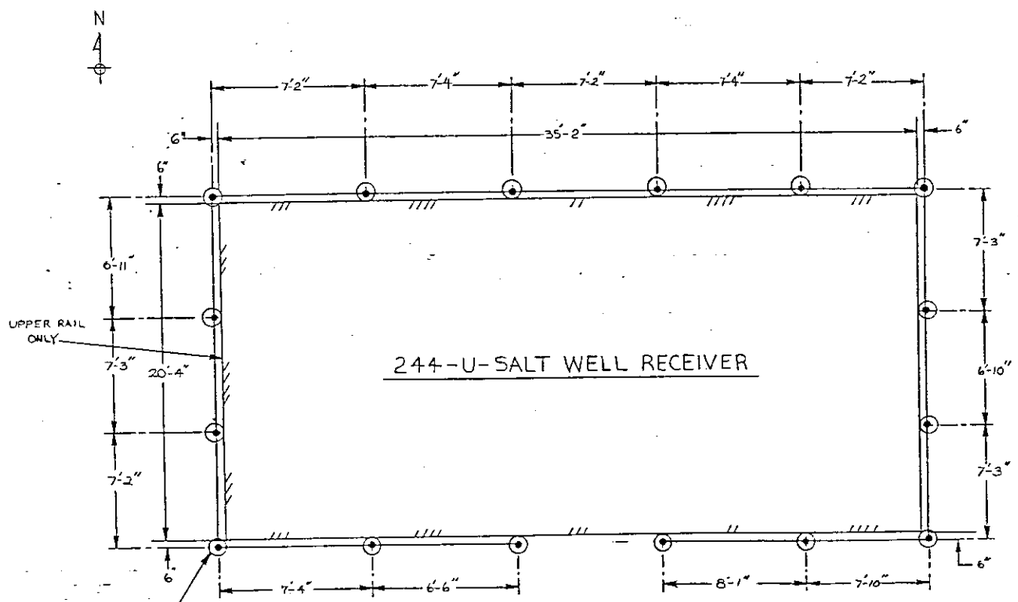

PLAN

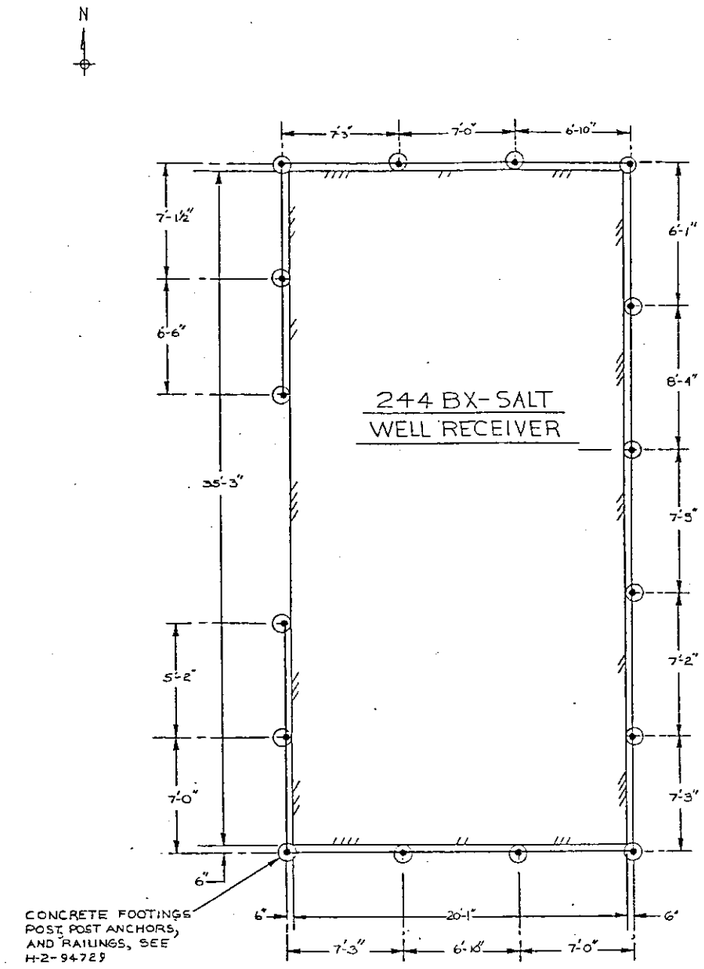

PLAN

Dwg. No.	Title
H-2-94729	OVER HOUSEKEEPING GUARDRAIL SYSTEM

DRAWING TRACEABILITY LIST — REFERENCE DRAWINGS — NEXT USED ON H-2-73740 SHEET 1

Rev. No.	Description	By Date	Checking	Eng. Engineer	Other	Other
0	PER ECN-101480 DIRECT DWG CHANGE					

REVISIONS — APPROVALS BY/DATE

Drawn 7-1-92
Checked
Eng. Engineer
DA
Other
Other
Other
Other
Approved for implementation by
For Date

Sheet Level 2 of 1

U.S. DEPARTMENT OF ENERGY
Richland Operations Office
Westinghouse Hanford Company

STRUCTURAL RCVR VAULT SAFETY GUARDRAILS

Size F | Ident. No. 244-TX-U | Index No. 0900 | Drawing No. H-2-73789 | Rev. 0

Scale NONE | ESR-8452 | Sheet 2 of 2

H-2-73789

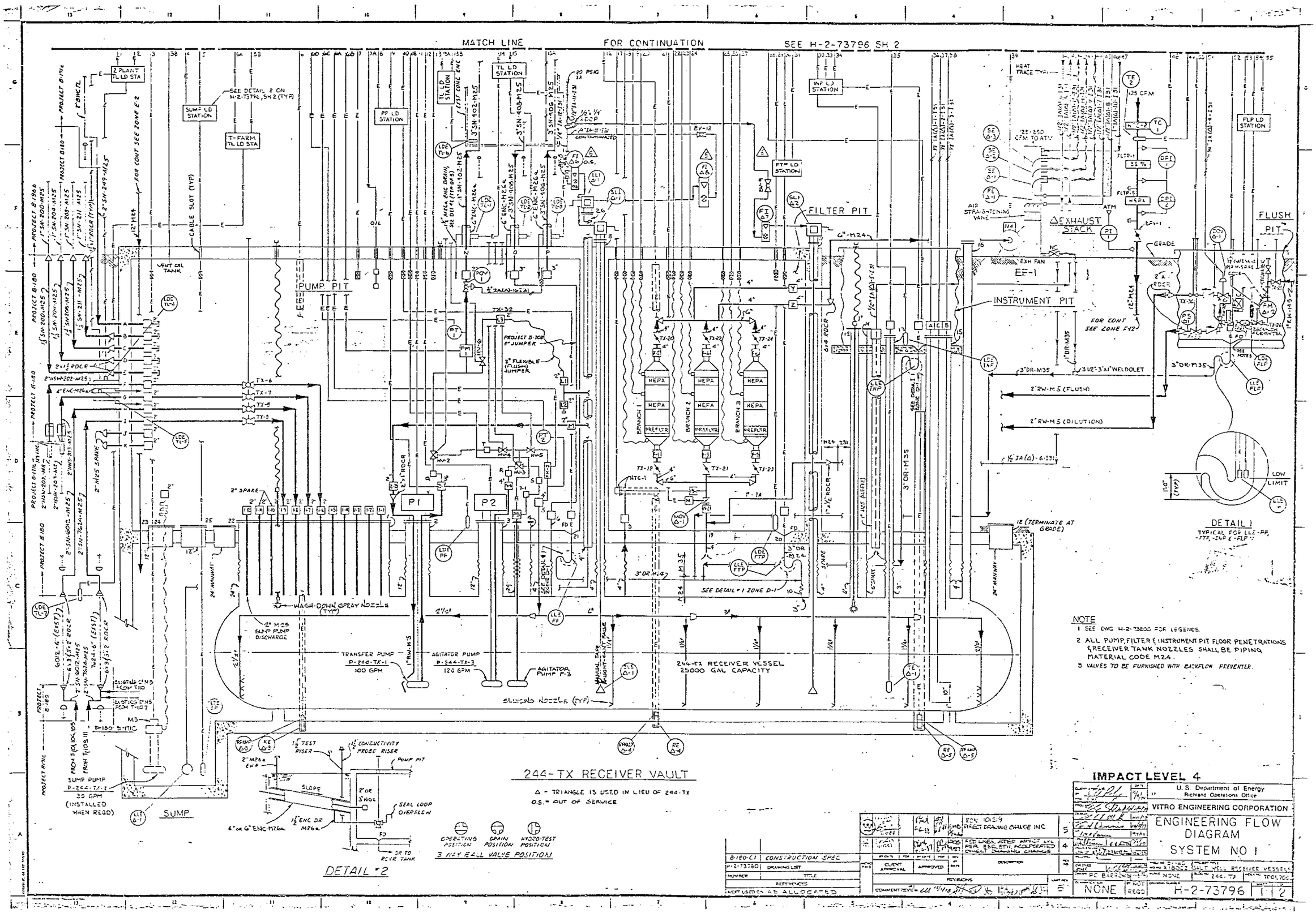
MATCH LINE
FOR CONTINUATION
SEE H-2-73796 SH 2
PUMP PIT
FILTER PIT
INSTRUMENT PIT
EXHAUST STACK
FLUSH PIT
EF-1
P1
P2
244-TX RECEIVER VESSEL
25000 GAL CAPACITY
TRANSFER PUMP
P-244-TX-1
100 GPM
AGITATOR PUMP
P-244-TX-3
120 GPM
AGITATOR PUMP P-3
SLUICING NOZZLE (TYP)
WASH-DOWN SPRAY NOZZLE (TYP)
SUMP PUMP
P-244-TX-2
30 GPM
(INSTALLED WHEN REQD)
SUMP
SEE DETAIL #1 ZONE D-1
2" RW-M5 (FLUSH)
2" RW-M5 (DILUTION)
3" DR-M35
3 1/2"-3"x1" WELDOLET
FOR CONT SEE ZONE F-12
DETAIL 1
TYPICAL FOR LLE-PP, -FTP, -INP & -FLP
LOW LIMIT
DETAIL #2
OPERATING POSITION
DRAIN POSITION
HYDRO-TEST POSITION
3 WAY BALL VALVE POSITION
NOTE
1 SEE DWG H-2-73800 FOR LEGENDS.
2 ALL PUMP, FILTER & INSTRUMENT PIT FLOOR PENETRATIONS & RECEIVER TANK NOZZLES SHALL BE PIPING MATERIAL CODE M24.
3 VALVES TO BE FURNISHED WITH BACKFLOW PREVENTER.
244-TX RECEIVER VAULT
Δ - TRIANGLE IS USED IN LIEU OF 244-TX
O.S. = OUT OF SERVICE
IMPACT LEVEL 4
U.S. Department of Energy
Richland Operations Office
VITRO ENGINEERING CORPORATION
ENGINEERING FLOW DIAGRAM
SYSTEM NO 1
B-180-C1 CONSTRUCTION SPEC
H-2-73760 DRAWING LIST
NEXT USED ON AS ALLOCATED
REVISIONS
NONE
H-2-73796
1 2

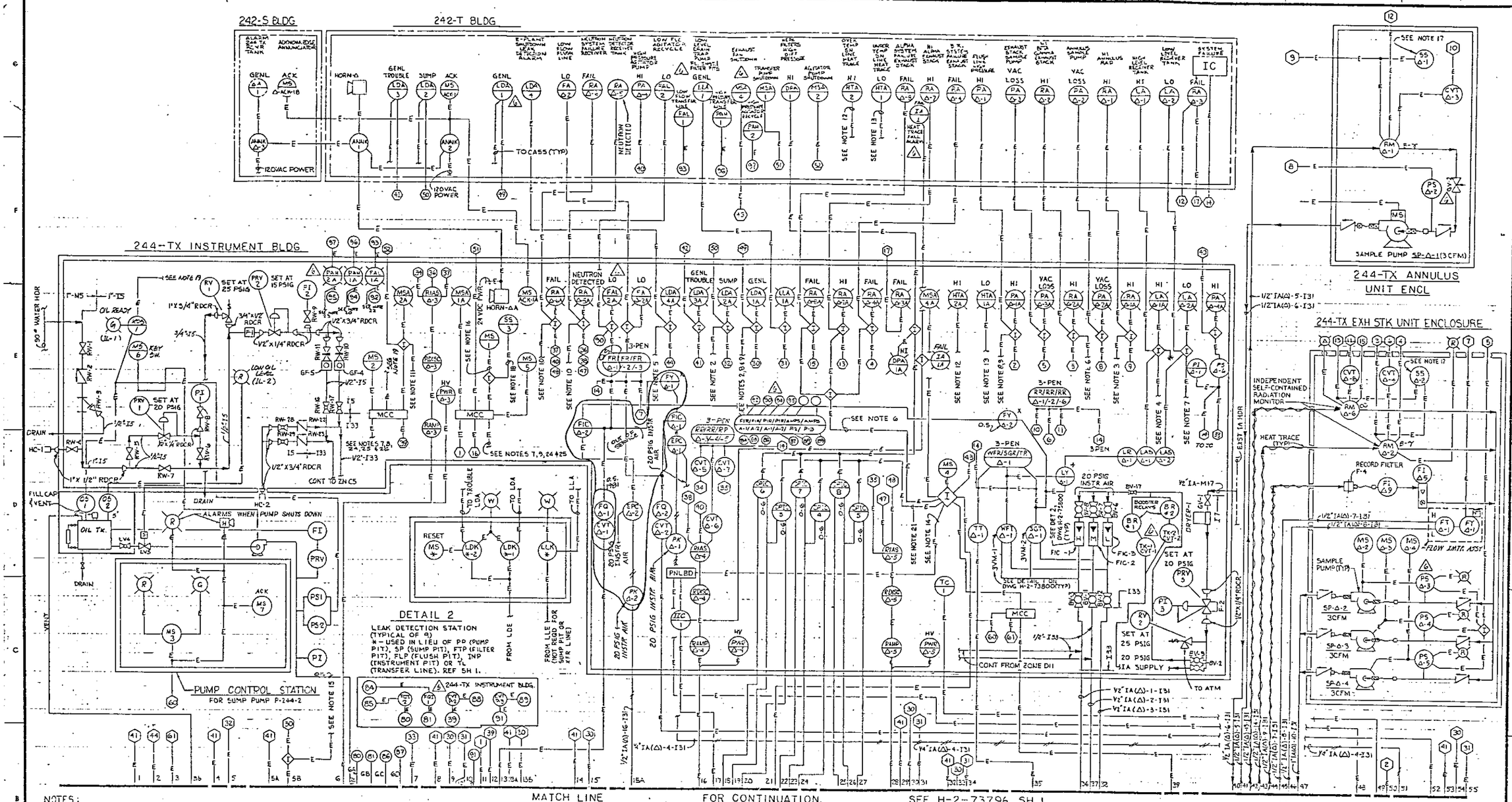

NOTES:

1. SEE DWG H-2-73800 FOR LEGENDS.
2. SHUTS DOWN 241-T,-TX & -TY TK FARM SALT WELL PUMPS AND Z PLANT PUMP ON SUMP LEAK DETECTION OR PUMP PIT LEAK DETECTION.
3. SHUTS DOWN 241-T,-TX & -TY TK FARM SALT WELL PUMPS AND Z PLANT ON ANNULUS HIGH RADN.
4. SHUTS DOWN 241-T,-TX & -TY TK FARM SALT WELL PUMPS AND Z PLANT ON HIGH LEVEL
5. SHUTS DOWN Z PLANT PUMP ON Z PLANT TRANSFER LINE LEAK DETECTIONS.
6. SHUTS DOWN EXHAUST FAN ON STACK HIGH RADIATION OR RADIATION SYS FAILURE.
7. SHUTS DOWN AGITATOR PUMP (P-244-TX-3) OR P-244-TX-2) AND TRANSFER PUMP (P-244-TX-1) ON LOW LEVEL.
8. SHUTS DOWN AGITATOR PUMP (P-244-TX-3) OR P-244-TX-2) ON SUMP PIT LEAK DETECTION, FLUSH PIT LEAK DETECTION, OR FLUSH LINE HIGH PRESSURE.
9. SHUTS DOWN TRANSFER PUMP (P-244-TX-1) ON PUMP PIT LEAK DETECTION, TRANSFER LINE LEAK DETECTIONS OR FLUSH LINE HIGH PRESSURE, OR FLUSH PIT LEAK DETECTION.
10. SHUTS DOWN Z PLANT PUMP ON NEUTRON DETECTION OR NEUTRON MONITOR EQUIPMENT FAILURE.
11. SHUTS DOWN Z PLANT PUMP ON AGITATOR PUMP (P-244-TX-3) (OR P-244-TX-2) SHUT DOWN.
12. FROM HEAT TRACE HIGH TEMPERATURE ALARM RELAYS
13. FROM HEAT TRACE LOW TEMPERATURE ALARM RELAYS
14. SHUTS DOWN AIR INTAKE HEATER (HTC-2) ON EXHAUST FAN SHUT DOWN.
15. SHUTS DOWN 241-T TK FARM SALT WELL PUMPS ON XFR LINE LEAK DETECTION.
16. (G) THE AGITATOR PUMP (P-244-TX-3) (OR P-244-TX-2) MUST BE RUNNING BEFORE THE TRANSFER PUMP (P-244-TX-1) CAN BE STARTED. FAILURE OF EITHER AGITATOR PUMP WILL SHUT DOWN THE TRANSFER PUMP.
17. INCORPORATES A KEY-SWITCH AND TIMED BY-PASS CIRCUIT FOR CALIBRATION PURPOSES.
18. THE BY-PASS KEY-SWITCH PERMITS STARTING THE TRANSFER PUMP (P-244-TX-1) WHEN THE AGITATOR PUMP (P-244-TX-3) IS NOT OPERATING.
19. SHUTS DOWN AGITATOR PUMP (P-244-TX-3) ON LOW OIL LEVEL.
20. SHUTS DOWN TRANSFER PUMP (P-244-TX-1) AND AGITATOR PUMP (P-244-TX-2 OR P-244-TX-3) ON HIGH PRESSURE TRANSFER LINE. LIMIT SWITCH FOR HV-2 MUST BE SET FROM AGITATOR PUMPS TO SN-402 FOR AGITATOR PUMP SHUT OFF. TRANSFER PUMP WILL NOT ENGAGE UNLESS HV-2 IS IN MI TO SN-402 POSITION.
21. SHUTS DOWN EXHAUST FAN EF-1 ON LOW DIFFERENTIAL PRESSURE ON BRANCH 1 OR 2, OR 3.
22. SHUTS DOWN AGITATOR PUMP (P-244-TX-2 OR P-244-TX-3) ON LOW FLOW AGITATOR LINE.
23. SHUTS DOWN AGITATOR PUMP (P-244-TX-2 OR P-244-TX-3) ON HIGH PRESSURE AGITATOR LINE.
24. SHUTS DOWN TRANSFER PUMP (P-244-TX-1) AND AGITATOR PUMP (P-244-TX-2 OR P-244-TX-3) ON HIGH OR LOW AMPERAGE.
25. SHUTS DOWN TRANSFER PUMP (P-244-TX-1) AND AGITATOR PUMP (P-244-TX-2 OR P-244-TX-3) ON FLUSH PIT LIMIT SWITCH TX-19.
26. HV-3 LIMIT SWITCH AND POWER TRANSFER SWITCH MUST BOTH BE ENGAGED TO THE SAME AGITATOR PUMP EITHER (P-244-TX-2 OR P-244-TX-3).

O.S. - OUT OF SERVICE

* - CONNECTED IN SERIES W/WFK-1 RELAY SEE H-2-73815 PRIOR TO 10/85.

ED-25740 CHANGES OIL PUMP TO AGITATOR AS SHOWN IN D-12,13 & C-12,13.

IMPACT LEVEL 4

H-2-73150	DRAWING LIST		
NUMBER	TITLE		
REFERENCES			
NEXT USED ON AS ALLOCATED			

6			NC 370 73147 DIRECT DRAWING CHANGE INCORPORATED ECN 106370 AND	
5			IMPACT LEVEL LINES ED-25740, ADD ESR 8511, INCORPORATED RED DIRECT DRAWING CHANGE PER	
REV	BY DATE	CLIENT APPROVAL	APPROVED	DESCRIPTION
REVISIONS				
COMMENT REVIEW				LAST REV 6

VITRO JOB NO R074A2

U.S. Department of Energy
Richland Operations Office

VITRO CORPORATION

ENGINEERING FLOW DIAGRAM
SYSTEM NO 1

DRAWN	DC BARRONS 8-18-78	PROJECT TITLE	HALT WELL RECEIVER VESSELS
CLASSIFICATION	NONE	SCALE	NONE
BLDG NO	244-TX	FACILITY NO	7001, 7002
DRAWING NUMBER	H-2-73796	SHEET 2 OF 2	

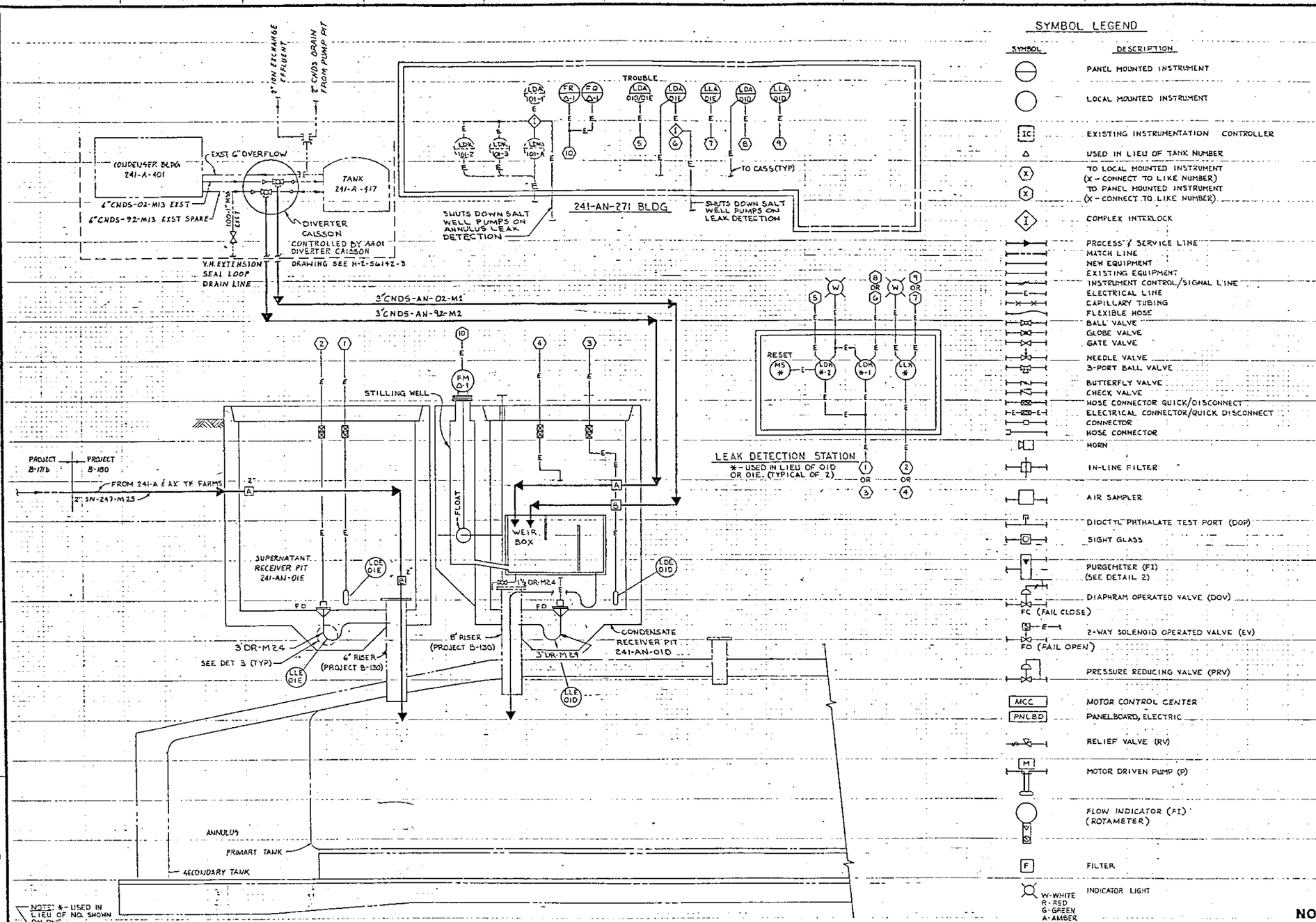

SYMBOL LEGEND

SYMBOL	DESCRIPTION
	PANEL MOUNTED INSTRUMENT
	LOCAL MOUNTED INSTRUMENT
IC	EXISTING INSTRUMENTATION CONTROLLER
Δ	USED IN LIEU OF TANK NUMBER
X	TO LOCAL MOUNTED INSTRUMENT (X - CONNECT TO LIKE NUMBER)
X	TO PANEL MOUNTED INSTRUMENT (X - CONNECT TO LIKE NUMBER)
I	COMPLEX INTERLOCK
	PROCESS & SERVICE LINE
	MATCH LINE
	NEW EQUIPMENT
	EXISTING EQUIPMENT
	INSTRUMENT CONTROL/SIGNAL LINE
	ELECTRICAL LINE
	CAPILLARY TUBING
	FLEXIBLE HOSE
	BALL VALVE
	GLOBE VALVE
	GATE VALVE
	NEEDLE VALVE
	3-PORT BALL VALVE
	BUTTERFLY VALVE
	CHECK VALVE
	HOSE CONNECTOR QUICK/DISCONNECT
	ELECTRICAL CONNECTOR/QUICK DISCONNECT
	CONNECTOR
	HOSE CONNECTOR
	HORN
	IN-LINE FILTER
	AIR SAMPLER
	DIOCTYL PHTHALATE TEST PORT (DOP)
	SIGHT GLASS
	PURGEMETER (FI) (SEE DETAIL 2)
	DIAPHRAM OPERATED VALVE (DOV)
	FC (FAIL CLOSE)
S	2-WAY SOLENOID OPERATED VALVE (EV)
	FO (FAIL OPEN)
	PRESSURE REDUCING VALVE (PRV)
MCC	MOTOR CONTROL CENTER
PNLBD	PANELBOARD, ELECTRIC
	RELIEF VALVE (RV)
M	MOTOR DRIVEN PUMP (P)
	FLOW INDICATOR (FI) (ROTAMETER)
F	FILTER
	INDICATOR LIGHT W-WHITE R-RED G-GREEN A-AMBER
÷	DIVIDER
X	MULTIPLIER

INSTRUMENT SYMBOL LEGEND

SYMBOL	PROCESS VARIABLE FIRST LETTER	INSTRUMENT FUNCTION SUCCEEDING LETTER
A		ALARM
AMP		AMPLIFIER
AN		ANALYZER
C		CONTROLLER
CR	COUNT RATE	
CVT	CONVERTER	
D	DIFFERENTIAL	
E		ELEMENT
EPC	ELECTRO-PNUEMATIC CONVERTER	
F	FLOW	
I	CURRENT	INDICATOR
K	RELAY	RELAY
L	LIQUID, LEVEL	LEVEL
LD	LEAK DETECTION	
M	MANUAL	METER
P	PRESSURE/PNUEMATIC	PRESSURE
PAMP		PRE-AMPLIFIER
PWR	POWER (HIGH VOLTAGE)	
Q		INTEGRATOR
R	RADIATION	RECORDER
S	SLUDGE	SWITCH
SG	SPECIFIC GRAVITY	
T	TEMPERATURE	TRANSMITTER
WF	WEIGHT FACTOR	
Y		COMPUTER
DISC		DISCRIMINATOR
PK	PNEUMATIC RELAY	

SERVICE CODE

SYMBOL	DESCRIPTION
CASS	COMPUTER AUTOMATED SURVEILLANCE SYSTEM
CNDS	CONDENSATE
DR	DRAIN
FD	FLOOR DRAIN
IA	INSTRUMENT AIR
RW	RAW WATER
S(90)	STEAM (90 PSI)
SN	SUPERNATANT

LINE CODE

2" - SN - 200 - M25

- MATERIAL CODE (12, 17, 131, 133, M1, M2 M7, M17, M24 OR M25)
- LINE NUMBER
- SERVICE
- LINE SIZE

NO IMPACT LEVEL REQUIREMENTS

A				CIP	AND ADD NO IMPACT LEVEL PER ESR 8511, INC RED LINES, DIRECT DRAWING CHANGE	5
M				9-21-94	1) 50 06245, 03634 & 02094 D.L.S-399 b) INCORPORATED c) DIRECT DWG CHANGE PER	4

REV. BY	DATE	DESCRIPTION	REV. BY	DATE
CLIENT APPROVAL		APPROVED		

REVISIONS

COMMENT REVIEW

LAST REV 5

B-180-C1	CONSTRUCTION SPEC
H-2-73760	DRAWING LIST (INDEX)
NUMBER	TITLE
REFERENCES	
NEXT USED ON H-2-73790	

VITRO JOB # R074A2

U.S. Department of Energy
Richland Operations Office

VITRO ENGINEERING CORPORATION

ENGINEERING FLOW DIAGRAM
SYSTEM NO 5

PROJ NO B-180	PROJECT TITLE 241-AN WELL RECEIVER VESSELS
WO NO X15002	
SCALE NONE	BLDG NO 241-A, AX & AN
CLASSIFICATION NONE	NOT REQD
DRAWING NUMBER H-2-73800	

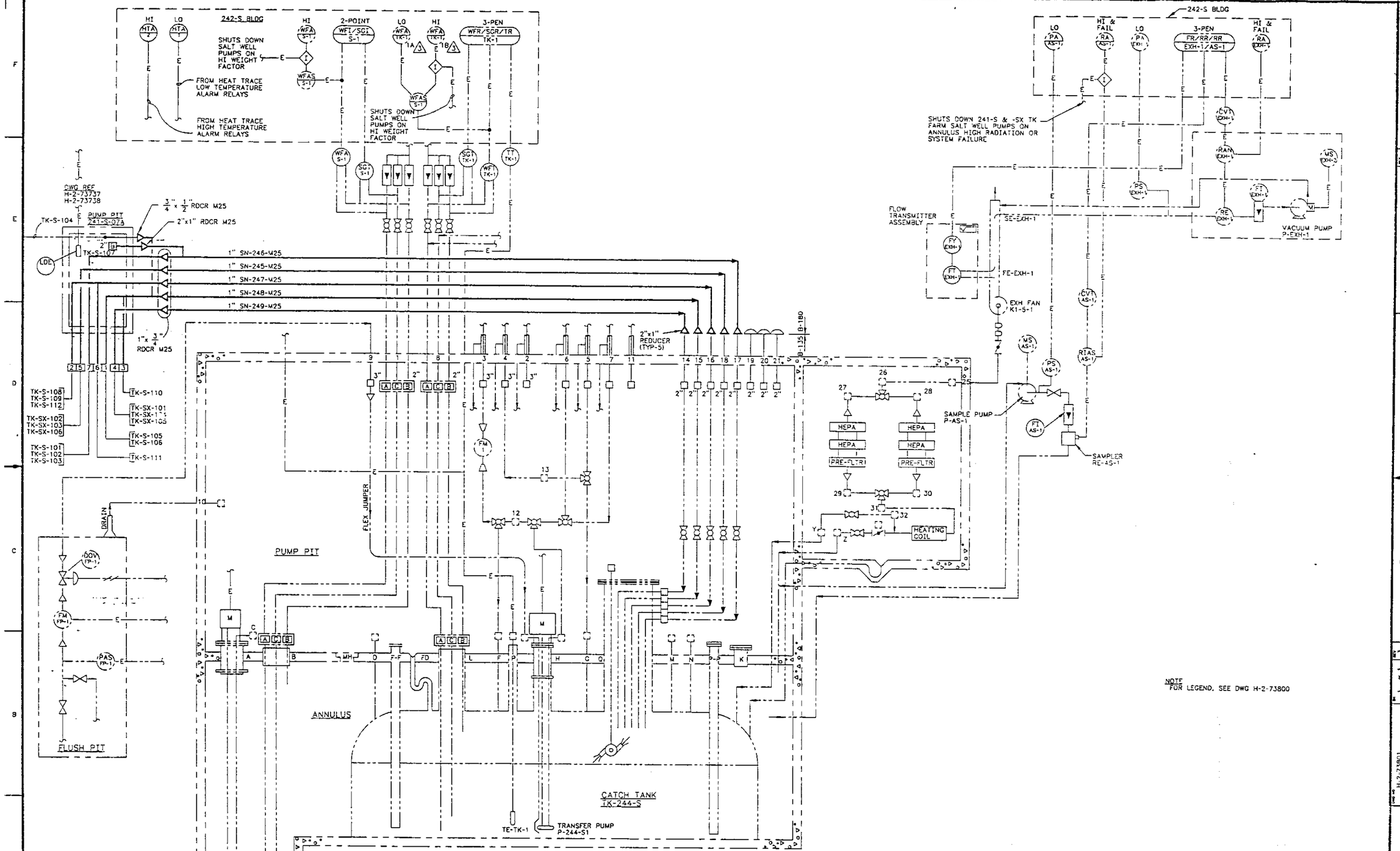

244-S CATCH STATION

REF DWG H-2-71085
Δ-TRIANGLE USED IN LIEU OF 244-S

DWG NO	TITLE
H-2-71085	IEFD-244-S CATCH STATION
H-2-73737	EFD-SALT WELL SYSTEM
H-2-73738	EFD-SALT WELL SYSTEM
H-2-73780	DRAWING LIST (INDEX)

DRAWING TRACEABILITY LIST

REF NUMBER	TITLE
NEXT USED ON	REFERENCES

REV	DESCRIPTION	REV BY DATE	CHK DATE	APVD DATE	ENGR CHECK	OTHER	OTHER
3	REMOVED REV 1 & 2 ECN 136734 PER FIELD VERIFICATION REDRAWN & UPDATED	JSF 3-91	J.W.L.D 3/27/91				

REVISIONS

CADFILE H2738018 CADCODE

Drawn BARROWS 7/25/79
Checked R.C. SWAN 7/9/79
Date Appd H.J. STEFFENS 7/9/79
Des Appd E. STRULITO 10/9/79
Dr IMA GARCIA 10/5/79
Other R.H. DENNIS 10/5/79
Other
Other
Appd for Implementation L.A. POLY 10/9/79

U.S. DEPARTMENT OF ENERGY
Richland Operations Office
Westinghouse Hanford Company

ENGINEERING FLOW DIAGRAM SYSTEM No. 6

Size	Block No.	Sheet No.	Dwg No.	Rev
F	241-S 244-S	7001 7002	H-2-73801	3

Scale NONE
Sheet 1 of 1

FOR FIELD VERIFICATION STATUS SEE

54-5000-027(5/89)

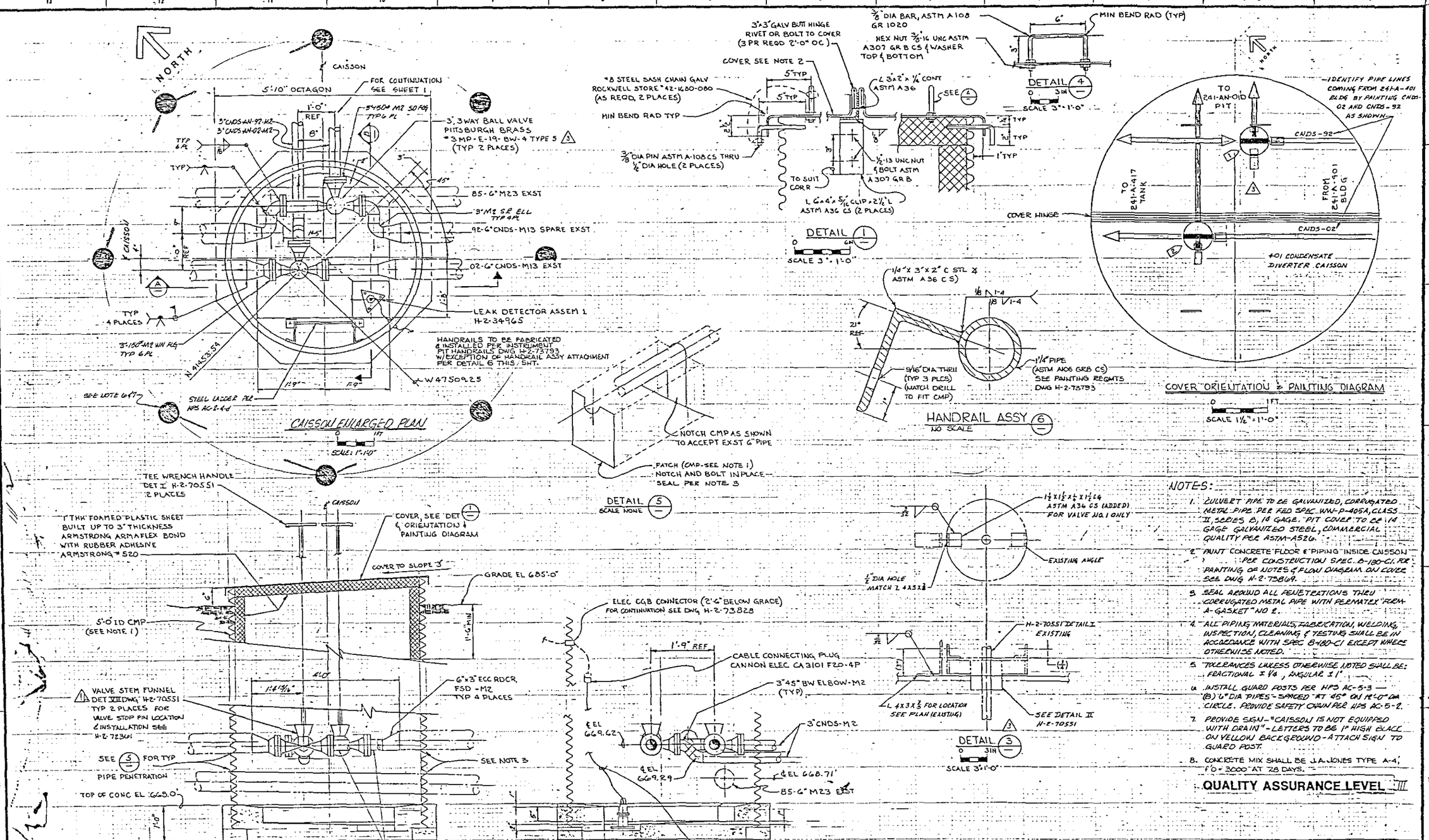

NOTES:

1. CULVERT PIPE TO BE GALVANIZED, CORRUGATED METAL PIPE PER FED SPEC WW-P-405A, CLASS II, SERIES B, 14 GAGE. PIT COVER TO BE 14 GAGE GALVANIZED STEEL, COMMERCIAL QUALITY PER ASTM-A526.
2. PAINT CONCRETE FLOOR & PIPING INSIDE CAISSON PER CONSTRUCTION SPEC. B-180-C1. RE PAINTING OF NOTES & FLOW DIAGRAM ON COVER SEE DWG H-2-73869.
3. SEAL AROUND ALL PENETRATIONS THRU CORRUGATED METAL PIPE WITH PERMATEX "FORM-A-GASKET" NO 2.
4. ALL PIPING MATERIALS, FABRICATION, WELDING, INSPECTION, CLEANING & TESTING SHALL BE IN ACCORDANCE WITH SPEC B-180-C1 EXCEPT WHERE OTHERWISE NOTED.
5. TOLERANCES UNLESS OTHERWISE NOTED SHALL BE: FRACTIONAL ± 1/4, ANGULAR ± 1°.
6. INSTALL GUARD POSTS PER HPS AC-5-3 — (8) 6" DIA PIPES - SPACED AT 45° ON 14'-0" DIA CIRCLE. PROVIDE SAFETY CHAIN PER HPS AC-5-2.
7. PROVIDE SIGN - "CAISSON IS NOT EQUIPPED WITH DRAIN" - LETTERS TO BE 1" HIGH BLACK ON YELLOW BACKGROUND - ATTACH SIGN TO GUARD POST.
8. CONCRETE MIX SHALL BE J.A. JONES TYPE A-4, f'c = 3000 AT 28 DAYS.

QUALITY ASSURANCE LEVEL III

REV	DESCRIPTION	BY	DATE
3	6577 AND 12483 REVISED PER CEO'S 3633,		
2	INCORP. CEO #02096		
1	AS BUILT (REV. PER DFC B-180-207, 226) F9; REV COVER HINGE. ZN F1-3 C-D1-3; RELABEL REF NOTE ZN Z ZN D1; CHGD NOTE 2 ZN NOTE 8 ZN B1-3; DADD 181 ZN CALLOUT ZN C12 & D12; ADDD ZN E5 & ADDD DET IV & VI 6) ADDD DET 6 ZN E5 & NOTE		

H-2-73780	DRAWING LIST	
NUMBER	TITLE	
REFERENCES		
NEXT USED ON	W-2-72361	

CLIENT APPROVAL — APPROVED — REVISIONS — COMMENT REVIEW

VITRO JOB NO. RD74A3

U.S. Department of Energy
Richland Operations Office

VITRO ENGINEERING CORPORATION

PIPING DETAILS
401-A CONDENSATE DIVERTER CAISSON
241-AY TANK FARM

PROJ NO B-180	PROJECT TITLE SALT WELL
SPEC NO X18002	RECEIVER VESSEL
SCALE SHOWN	BLDG NO 241-A, 241-AX
0402	
CLEVELAND	
NONE	NOT REQD
H-2-73842	SHEET 2 OF 2

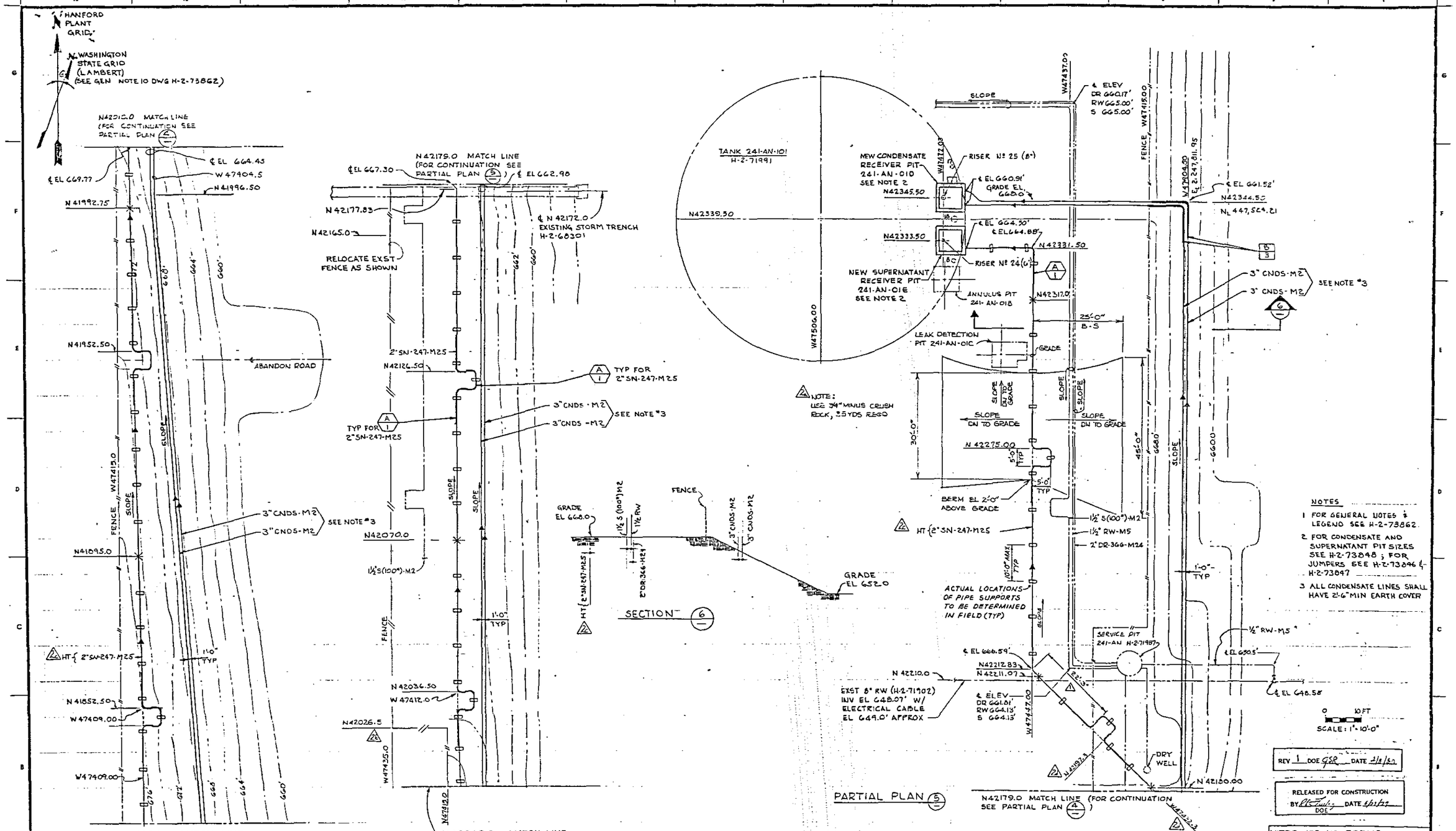
HANFORD PLANT GRID
WASHINGTON STATE GRID (LAMBERT) (SEE GEN NOTE 10 DWG H-2-73862)
N42012.0 MATCH LINE (FOR CONTINUATION SEE PARTIAL PLAN 5)
℄ EL 664.45
W 47404.5
N 41996.50
℄ EL 669.77
N 41992.75
N 41952.50
ABANDON ROAD
W47415.0
FENCE
SLOPE
N41895.0
3" CNDS-M2
SEE NOTE #3
N41820.0 MATCH LINE (FOR CONTINUATION SEE PARTIAL PLAN 2)
PARTIAL PLAN 3
N42179.0 MATCH LINE (FOR CONTINUATION SEE PARTIAL PLAN 5)
℄ EL 667.30
℄ EL 662.90
N 42177.83
N42165.0
RELOCATE EXST FENCE AS SHOWN
℄ N 42172.0 EXISTING STORM TRENCH H-2-68301
2"SN-247-M25
N42126.50
TYP FOR 2"SN-247-M25
N42070.0
1½"S(100#)-M2
1'-0" TYP
N42036.50
W 47412.0
N42026.5
W47435.0
W47412.0
N42010.0 MATCH LINE (FOR CONTINUATION SEE PARTIAL PLAN 3)
PARTIAL PLAN 4
GRADE EL 668.0
1½"S (100#)-M2
1½" RW
FENCE
3" CNDS-M2
2" DR-366-M24
HT {2"SN-247-M25
GRADE EL 652.0
SECTION 6
TANK 241-AN-101 H-2-71991
N42339.50
W47506.00
NEW CONDENSATE RECEIVER PIT 241-AN-010 SEE NOTE 2
N42345.50
W47437.00
RISER Nº 25 (8")
℄ EL 660.91' GRADE EL 660.0'
N42333.50
℄ EL 664.50' ℄ EL 664.88'
RISER Nº 24 (6")
N42331.50
NEW SUPERNATANT RECEIVER PIT 241-AN-016 SEE NOTE 2
ANNULUS PIT 241-AN-018
N42317.0
LEAK DETECTION PIT 241-AN-01C
GRADE
NOTE: USE 3/4" MINUS CRUSH ROCK, 35 YDS REQD
SLOPE DN TO GRADE
N 42275.00
5'-0" TYP
BERM EL 2'-0" ABOVE GRADE
HT {2"SN-247-M25
1½" S(100#)-M2
1½" RW-M5
2" DR-366-M24
ACTUAL LOCATIONS OF PIPE SUPPORTS TO BE DETERMINED IN FIELD (TYP)
SERVICE PIT 241-AN H-2-71987
℄ EL 666.59'
N42212.83
N 42210.0
N42211.07
EXST 8" RW (H-2-71902) INV EL 648.07' W/ ELECTRICAL CABLE EL 649.0' APPROX
℄ ELEV DR 661.01' RW 664.13' S 664.13'
W47437.00
DRY WELL
N 42100.00
PARTIAL PLAN 5
N42179.0 MATCH LINE (FOR CONTINUATION SEE PARTIAL PLAN 4)
℄ ELEV DR 660.17' RW 665.00' S 665.00'
W47415.00
FENCE
W47404.50
℄ EL 661.52'
N42344.50
N 447,524.21
3" CNDS-M2
SEE NOTE #3
℄ EL 650.5'
℄ EL 648.58'
25'-0" B-S
30'-0"
45'-0"
1'-0" TYP
NOTES
1 FOR GENERAL NOTES & LEGEND SEE H-2-73862.
2 FOR CONDENSATE AND SUPERNATANT PIT SIZES SEE H-2-73848 ; FOR JUMPERS SEE H-2-73846 & H-2-73847
3 ALL CONDENSATE LINES SHALL HAVE 2'-6" MIN EARTH COVER
0 10 FT
SCALE: 1" = 10'-0"
REV 1 DOE GSR DATE 4/8/92
RELEASED FOR CONSTRUCTION BY DOE DATE 5/21/92
VITRO JOB NO. R07442
U. S. Department of Energy Richland Operations Office
VITRO ENGINEERING CORPORATION
PIPING PLAN
241-AN TANK FARM FROM 241-AX TANK FARM SYSTEM Nº 5
SALT WELL RECEIVER NO. 2-E-15
SCALE SHOWN
241-AX,AN
0402
NONE
H-2-73843
H-2-73780
DRAWING LIST
NUMBER
TITLE
REFERENCES
NEXT USED ON
CLIENT APPROVAL
APPROVED
REVISIONS
COMMENT REVIEW
AS BUILT
ADDED 22'-3" DIM
DESCRIPTION
LAST REV 2

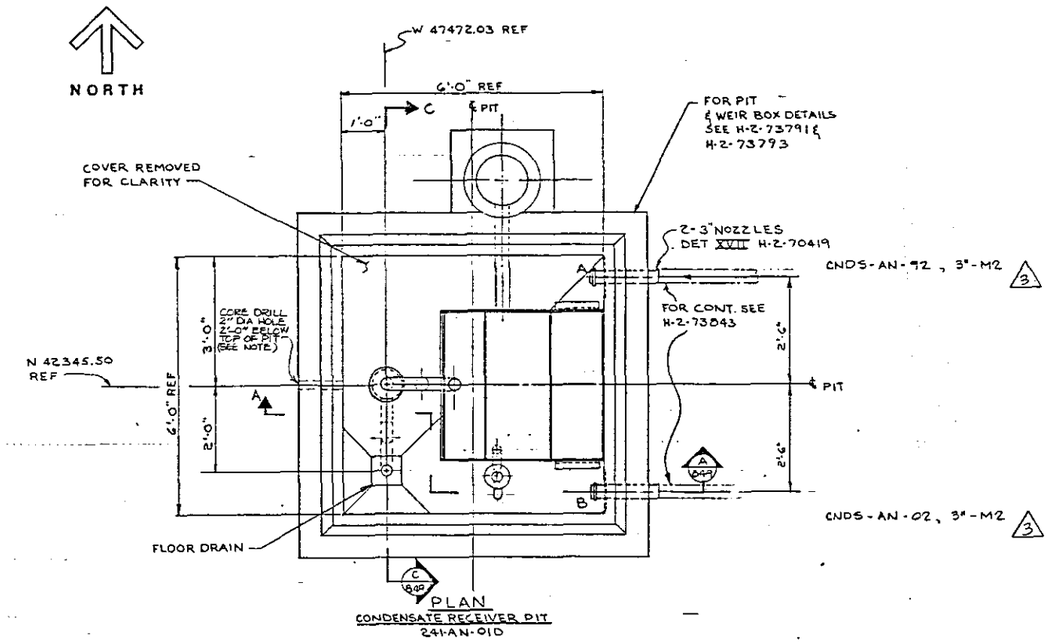

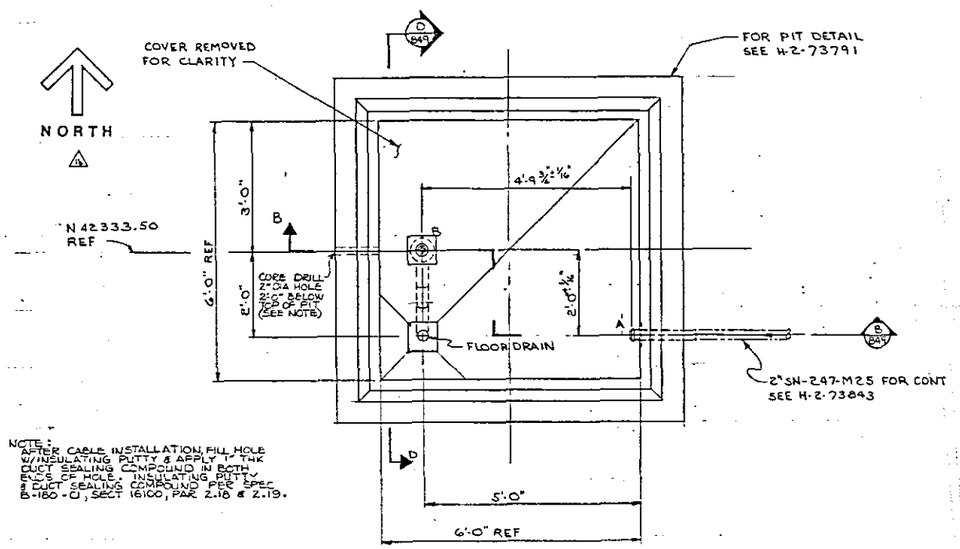

NOTE:
AFTER CABLE INSTALLATION, FILL HOLE W/INSULATING PUTTY & APPLY 1" THK DUCT SEALING COMPOUND IN BOTH ENDS OF HOLE. INSULATING PUTTY & DUCT SEALING COMPOUND PER SPEC B-180-01, SECT 16100, PAR 2.18 & 2.19.

NOTES

1. FOR GENERAL NOTES & LEGEND SEE DWG H-2-73862
2. FOR PAINTING OF PIT COVERS SEE DWG H-2-73869

WELDING FABRICATION REQUIREMENTS			
A WELDING STANDARD(S)	WPS-270-W	WPS-270-W	WPS-210-W
B WELD PROCESS	STAW	SAW	OPTIONAL
C PROCEDURE SPEC.	ASME SEC. IX	AWS D1.1	WPS-210-W
D PERFORMANCE CERT.	ASME SEC. IX	AWS W.1	WPS-210-W
E MATERIAL SPEC.	ASME SEC. II	AWS D1.1-(2)	WPS-210-W
F VISUAL (VT)	WPS-270-W	WPS-270-W	WPS-210-W
G PENETRANT (PT)	ASME SEC. VIII	ASME SEC. V	ASME SEC. VIII
H MAGNETIC PART. (MT)	ASME SEC. VIII	ASME SEC. VIII	ASME SEC. VIII
I ULTRASONIC (UT)	ASME SEC. V	ASME SEC. VIII	AWS D1.1
J RADIOGRAPHIC (RT)	ASME SEC. VIII	ASME SEC. V	ASME SEC. VIII
■ OTHER PARTS.	(N)(F)(G)(K) ANSI B31.1		
	(G)(K) SEE B-180-C1 CONSTRUCTION SPEC		

REV 1 DOE 95R DATE 2/9/00

RELEASED FOR CONSTRUCTION
BY [illegible] DATE 6/17/99
DOE

Rockwell Hanford Operations
RELEASE ENGINEERING ORDER REO-12163
RELEASE DATE 4-27-1984 REV. 003
☐ INFORMATION ONLY
☐ AUTHORIZED
☐ CONTROLLED
☐ CONSTRUCTION WORK ORDER
☐ ATTACHMENTS NOT REQUESTED
THIS DOCUMENT IS NOT COMPLETE WITHOUT THE FOLLOWING ATTACHMENTS:

SCALE 3/4" = 1'-0"

VITRO JOB NO. R074A2

U. S. Department of Energy
Richland Operations Office

VITRO ENGINEERING CORPORATION

PIPING PLANS 241-AN-01D & 01E RECEIVER PITS

REV	DESCRIPTION	BY	DATE
4	INCORP. CEO 6245 & 2016		
2	(173) AS-BUILT (12) & (12) (PER DFC B-180-47 (2) ADDED HOLE & NOTE ZN13 B13,		
1	ZN 711 ARROW ZN013 c) REV SECT A a) WAS M24 ZN F9 & ADD NORTH		

CLIENT APPROVAL: APPROVED
COMMENT REVIEW
LAST REV. 3

DRAWING LIST	H-2-73750
TITLE	
REFERENCES	
NEXT USED ON	H-2-73760

CLIENT APPROVAL BY [illegible] FOR ECC/CWLC
PROJECT ENGINEER [illegible]
DESIGNER [illegible]
DRAFTER [illegible]
SUPERVISOR [illegible]
CHECKED BY [illegible]
DESIGN S. CLEVELAND
CLASSIFICATION NONE
NOT PEGD
PROJ NO. 0-180
WO NO. X18002
SCALE SHOWN
PROJECT TITLE SALT WELL RECEIVER VESSELS
PLANT NO. 241-AN
PLANT NO. 0402
DRAWING NUMBER H-2-73848
SHEET —

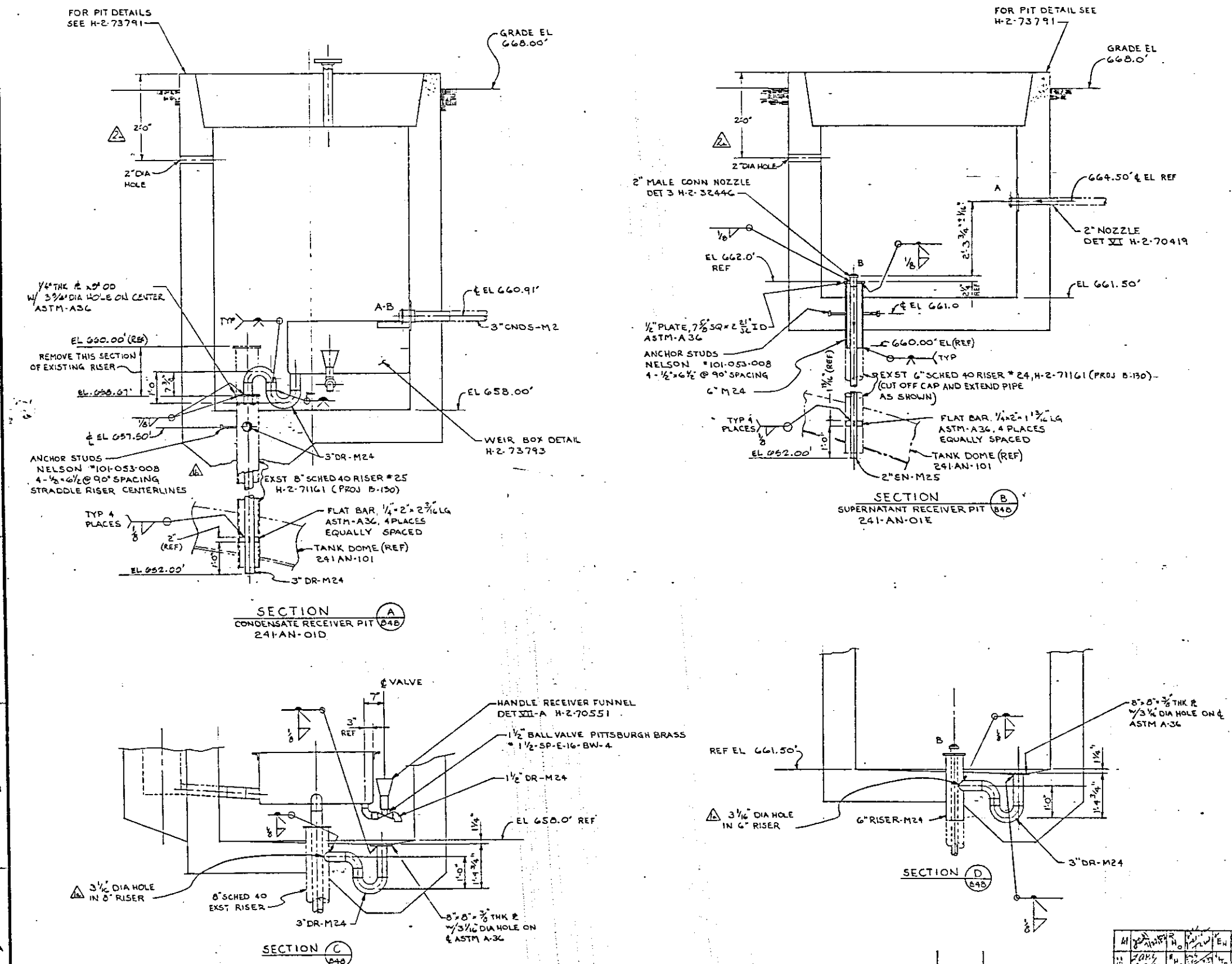

NOTES

1 FOR GENERAL NOTES & LEGEND SEE H-2-73862

REV 1 DOE GSR DATE 2/8/80

RELEASED FOR CONSTRUCTION BY [signature] DOE DATE 6/27/79

SCALE: 3/4"=1'-0"

VITRO JOB NO. R074A2

U. S. Department of Energy
Richland Operations Office

VITRO ENGINEERING CORPORATION

PIPING SECT & DET
241-AN-01D & 01E
RECEIVER PITS

PROJ NO B130 | PROJECT TITLE SALT WELL RECEIVER VESSELS
SCALE SHOWN | BLDG NO 241-AN | PIPING NO 0402

DRAWING NUMBER H-2-73849

REV	DESCRIPTION	REV NO
2	(PER DFC B-180-91) AS-BUILT WADDED HOLE 2NF7-8 & 12	2
1	REV SECT A WADDED 3 1/2" HOLE 2NB8, A13 &	1

CLIENT APPROVAL | APPROVED | REVISIONS | LAST REV 2

COMMENT REVIEW

H-2-73780 DRAWING LIST
NUMBER | TITLE
REFERENCES
NEXT USED ON

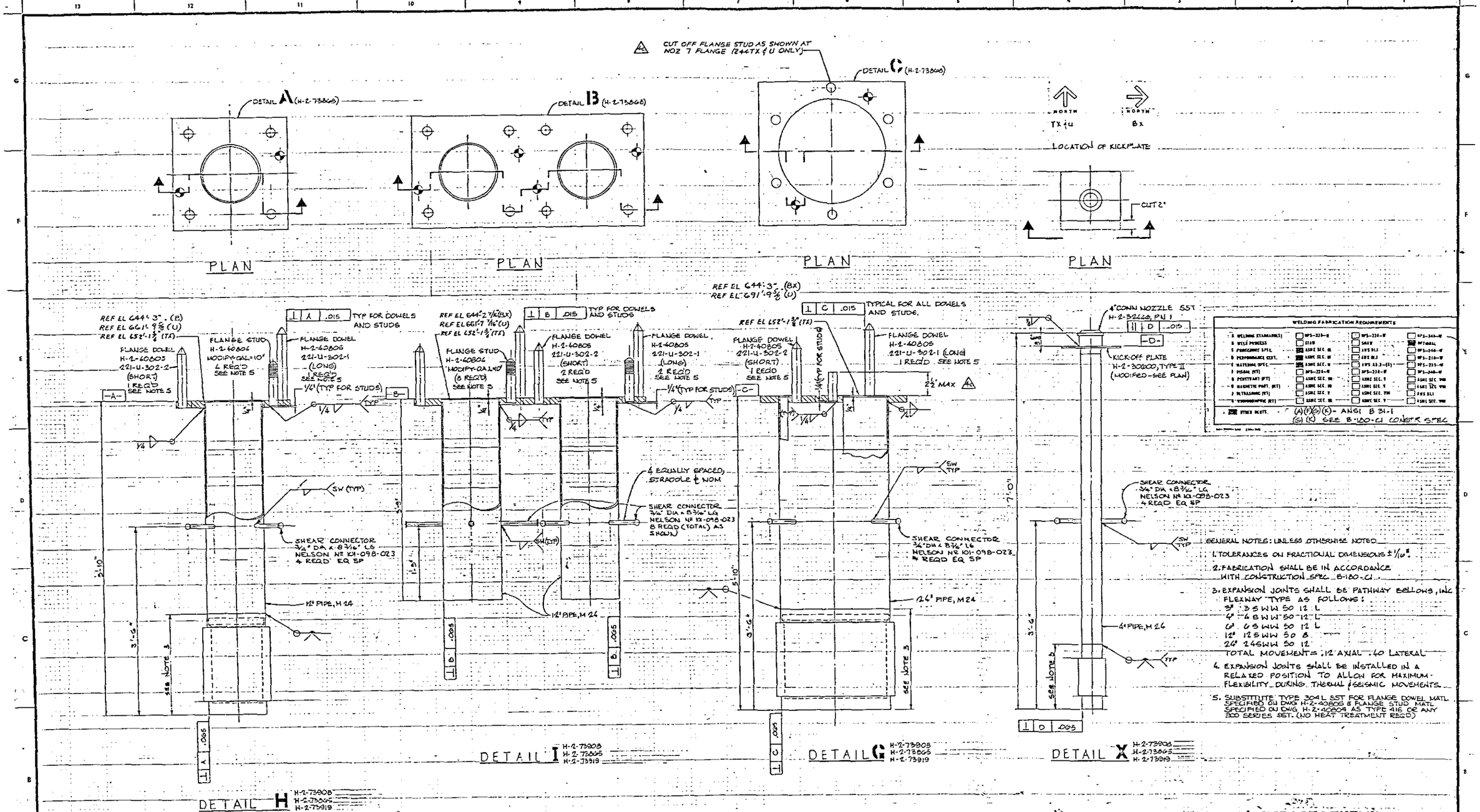
CUT OFF FLANGE STUD AS SHOWN AT NOZ 7 FLANGE (244TX & U ONLY)
DETAIL A (H-2-73866)
DETAIL B (H-2-73866)
DETAIL C (H-2-73866)
NORTH TX & U
NORTH BX
LOCATION OF KICKPLATE
CUT 2"
PLAN
PLAN
PLAN
PLAN
REF EL 644'-3" (BX)
REF EL 691'-9 5/8" (U)
REF EL 644'-3" (B)
REF EL 661'-9 5/8" (U)
REF EL 652'-1 3/8" (TX)
REF EL 644'-2 7/16" (BX)
REF EL 661'-7 7/16" (U)
REF EL 652'-1 3/8" (TX)
REF EL 652'-1 3/8" (TX)
TYP FOR DOWELS AND STUDS
TYPICAL FOR ALL DOWELS AND STUDS.
FLANGE DOWEL H-2-40805 221-U-302-2 (SHORT) 1 REQ'D SEE NOTE 5
FLANGE STUD H-2-40806 MODIFY-DA=10" 6 REQ'D SEE NOTE 5
FLANGE DOWEL H-2-40805 221-U-302-1 (LONG) 1 REQ'D SEE NOTE 5
FLANGE STUD H-2-40806 MODIFY-DA=10" (8 REQ'D SEE NOTE 5
FLANGE DOWEL H-2-40805 221-U-302-1 (LONG) 2 REQ'D SEE NOTE 5
FLANGE DOWEL H-2-40805 221-U-302-2 (SHORT) 2 REQ'D SEE NOTE 5
FLANGE DOWEL H-2-40805 221-U-302-1 (LONG) 1 REQ'D SEE NOTE 5
4" CONN NOZZLE SST H-2-52446, PN 1
KICK-OFF PLATE H-2-30800, TYPE II (MODIFIED-SEE PLAN)
1/4" (TYP FOR STUDS)
2 1/2" MAX
SW (TYP)
SHEAR CONNECTOR 3/4" DIA x 8 3/16" LG NELSON Nº K1-098-023 4 REQ'D EQ SP
4 EQUALLY SPACED, STRADDLE ℄ NOM
SHEAR CONNECTOR 3/4" DIA x 8 3/16" LG NELSON Nº K1-098-023 8 REQ'D (TOTAL) AS SHOWN
SHEAR CONNECTOR 3/4" DIA x 8 3/16" LG NELSON Nº K1-098-023 4 REQ'D EQ SP
12" PIPE, M 24
24" PIPE, M 24
4" PIPE, M 24
SEE NOTE 3
DETAIL H H-2-73808 H-2-73805 H-2-73919
DETAIL I H-2-73808 H-2-73805 H-2-73919
DETAIL G H-2-73808 H-2-73805 H-2-73919
DETAIL X H-2-73808 H-2-73805 H-2-73809
WELDING FABRICATION REQUIREMENTS
(A)(F)(G)(K) - ANSI B 31.1
(G)(K) SEE B-100-C1 CONSTR SPEC
GENERAL NOTES: UNLESS OTHERWISE NOTED
1. TOLERANCES ON FRACTIONAL DIMENSIONS ± 1/16".
2. FABRICATION SHALL BE IN ACCORDANCE WITH CONSTRUCTION SPEC B-100-C1
3. EXPANSION JOINTS SHALL BE PATHWAY BELLOWS, INC FLEXWAY TYPE AS FOLLOWS:
3" 3 S WW 50 12 L
4" 4 B WW 50 12 L
6" 6 S WW 50 12 L
12" 12 S WW 50 8
24" 24 S WW 50 12
TOTAL MOVEMENT = .12 AXIAL .40 LATERAL
4. EXPANSION JOINTS SHALL BE INSTALLED IN A RELAXED POSITION TO ALLOW FOR MAXIMUM FLEXIBILITY DURING THERMAL & SEISMIC MOVEMENTS.
5. SUBSTITUTE TYPE 304L SST FOR FLANGE DOWEL MATL SPECIFIED ON DWG H-2-40805 & FLANGE STUD MATL SPECIFIED ON DWG H-2-40806 AS TYPE 416 OR ANY 300 SERIES SST. (NO HEAT TREATMENT REQ'D)
IMPACT LEVEL II
VITRO JOB NO.: R0764.2
U.S. Department of Energy
Richland Operations Office
VITRO ENGINEERING CORPORATION
PIPING DETAILS
RECEIVER VAULT
SALT WELL RECEIVER VESSELS
H-2-73866
NONE
4
3
2
1
CEO 41634 LEVEL II. c) INCORPORATED ESR 10687. b) ADDED IMPACT a) DIRECT DWG. CHANGE PER
AS-BUILT (PER DEC B-100-25 & NCR B-100-103 (2) E 5-13 b) ADD ELEV 221 E-F 10 (3) ADDED NOTE 5 ZN D-E 1-3 & REFS
GENERAL REVISION
ADDED REF DL IN E13, ER & ET11 (NIS)
DRAWING LIST (INDEX)
H-2-73789
REFERENCES
NEXT USED ON AS ALLOCATED
CLIENT APPROVAL
APPROVED
REVISIONS
COMMENT REVIEW
DRAWING 4.1.17 2/3/68

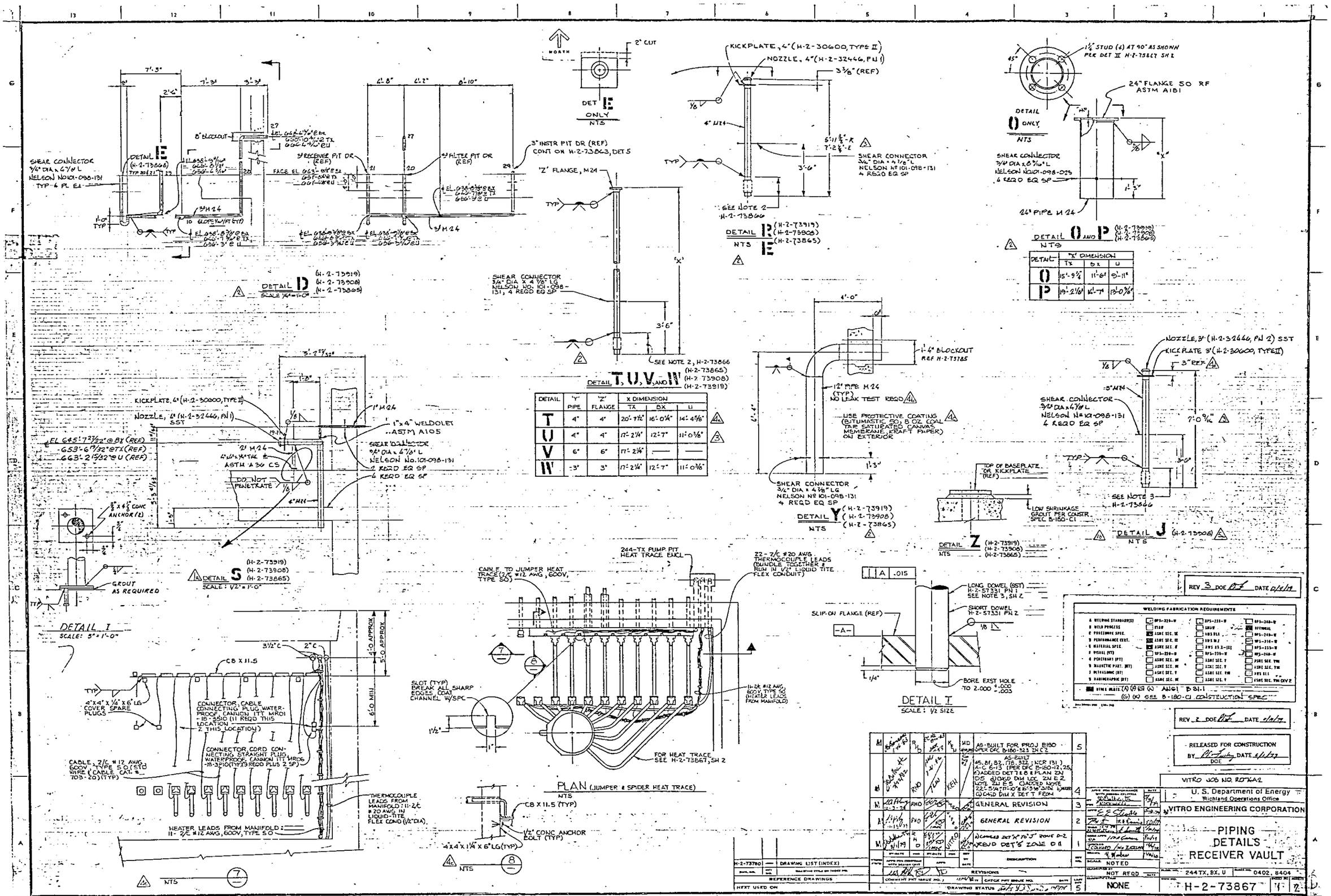
DETAIL E (H-2-73868)
SHEAR CONNECTOR 3/4" DIA x 4 7/8" L NELSON NO 101-098-131 TYP-4 PL EL
8" BLOCKOUT
3" RECEIVER PIT DR (REF)
3" FILTER PIT DR (REF)
3" INSTR PIT DR (REF) CONT ON H-2-73863, DET 5
FACE EL 663'-6 1/2" EX
3" H24
1'-0" TYP
DETAIL D (H-2-73919) (H-2-73908) (H-2-73865)
SCALE 1/4"=1'-0"
NORTH
2" CUT
DET E ONLY NTS
'Z' FLANGE, M24
TYP
SHEAR CONNECTOR 3/4" DIA X 4 7/8" LG NELSON NO. 101-098-131, 4 REQD EQ SP
3'-6"
SEE NOTE 2, H-2-73866
DETAIL T, U, V, AND W (H-2-73865) (H-2-73908) (H-2-73919)
KICKPLATE, 4" (H-2-30600, TYPE II)
NOZZLE, 4" (H-2-32446, PN 1)
3 3/8" (REF)
4" H24
SHEAR CONNECTOR 3/4" DIA x 4 1/8" L NELSON Nº 101-098-131 4 REQD EQ SP
SEE NOTE 2 H-2-73866
DETAIL P (H-2-73919) (H-2-73908) (H-2-73865)
NTS E
1 1/4" STUD (4) AT 90° AS SHOWN PER DET II H-2-73867 SH 2
24" FLANGE SO RF ASTM A181
DETAIL O ONLY NTS
SHEAR CONNECTOR 3/4" DIA x 6 3/16" L NELSON NO 101-098-023 4 REQD EQ SP
24" PIPE M 24
DETAIL O AND P (H-2-73910) (H-2-73908) (H-2-73865)
NTS
DETAIL | 'X' DIMENSION | TX | BX | U
O | 15'-9 1/4" | 11'-6" | 9'-11"
P | 19'-2 1/16" | 14'-7" | 13'-0 3/16"
DETAIL Y (H-2-73919) (H-2-73908) (H-2-73865)
NTS
4'-0"
1'-4" BLOCKOUT REF H-2-73785
12" PIPE M 24 (TYP) NO LEAK TEST REQD
USE PROTECTIVE COATING (BITUMASTIC 50, 8 OZ COAL TAR SATURATED CANVAS MEMBRANE, KRAFT PAPER) ON EXTERIOR
1'-3"
SHEAR CONNECTOR 3/4" DIA x 4 1/8" LG NELSON Nº 101-098-131 4 REQD EQ SP
NOZZLE, 3" (H-2-32446, PN 2) SST
KICKPLATE 3" (H-2-30600, TYPE II)
3" REF
3" H24
SHEAR CONNECTOR 3/4" DIA x 4 7/8" L NELSON Nº 101-098-131 4 REQD EQ SP
7'-0 9/16"
3'-0"
SEE NOTE 3 H-2-73866
DETAIL J (H-2-73908)
NTS
KICKPLATE, 4" (H-2-30600, TYPE II)
NOZZLE, 4" (H-2-32446, PN 1) SST
EL 645'-7 27/32" @ BX (REF)
653'-6 19/32" @ TX (REF)
663'-2 15/32" @ U (REF)
1" H24
1" x 4" WELDOLET ASTM A105
SHEAR CONNECTOR 3/4" DIA x 4 7/8" L NELSON No. 101-098-131 4 REQD EQ SP
2" H24
4" x 1/4" x 1/4" THK ASTM A 36 CS
DO NOT PENETRATE
4" H24
3/4" x 4 1/8" CONC ANCHOR (2)
GROUT AS REQUIRED
DETAIL S (H-2-73919) (H-2-73908) (H-2-73865)
SCALE: 1/2" = 1'-0"
TOP OF BASEPLATE OR KICKPLATE (REF)
LOW SHRINKAGE GROUT PER CONSTR SPEC B-180-C1
DETAIL Z (H-2-73919) (H-2-73908) (H-2-73865)
NTS
DETAIL J (H-2-73908)
NTS
DETAIL I
SCALE: 5" = 1'-0"
3 1/2" C
2" C
CB X 11.5
4" x 4" x 1/4" x 6" LG COVER SPARE PLUGS
CONNECTOR, CABLE CONNECTING PLUG, WATERPROOF, CANNON ITT MR01-18-3S10 (11 REQD THIS LOCATION 2 THIS LOCATION)
CONNECTOR, CORD CONNECTING STRAIGHT PLUG WATERPROOF, CANNON ITT MR06-18-3S10 (TYP 23 REQD PLUS 2 SP)
CABLE 2/C #12 AWG 600V, TYPE SO (STD WIRE & CABLE CAT # 703-20) (TYP)
THERMOCOUPLE LEADS FROM MANIFOLD: 11-2/C #12 AWG, 600V, TYPE SO
HEATER LEADS FROM MANIFOLD: 11-2/C #12 AWG, 600V, TYPE SO
4'-0 APPROX
5'-0 APPROX
6'-0 MIN
NTS
244-TX PUMP PIT HEAT TRACE EXCL
CABLE TO JUMPER HEAT TRACE (2/C #12 AWG, 600V, TYPE SO)
22-7/C #20 AWG THERMOCOUPLE LEADS (BUNDLE TOGETHER & RUN IN 1/2" LIQUID TITE FLEX CONDUIT)
SLOT (TYP) BREAK ALL SHARP EDGES, COAT CHANNEL W/SPC
11-2/C #12 AWG, 600V, TYPE SO (HEATER LEADS FROM MANIFOLD)
FOR HEAT TRACE SEE H-2-73867, SH 2
PLAN (JUMPER & SPIDER HEAT TRACE)
NTS
CB X 11.5 (TYP)
1/2" CONC ANCHOR BOLT (TYP)
4" x 4" x 1/4" x 6" LG (TYP)
NTS
A .015
LONG DOWEL (SST) H-2-57331 PN 1 SEE NOTE 3, SH 2
SHORT DOWEL H-2-57331 PN 2
SLIP-ON FLANGE (REF)
-A-
1/4"
BORE EXST HOLE TO 2.000 +.000 -.003
DETAIL T
SCALE: 1/2 SIZE
REV 3 DOE DATE 6/14/74
WELDING FABRICATION REQUIREMENTS
REV 2 DOE DATE 6/14/74
RELEASED FOR CONSTRUCTION BY DATE 6/14/74 DOE
AS-BUILT FOR PROJ B180 PER DFC B180-523 IN C2
GENERAL REVISION
GENERAL REVISION
REVISED DET'S "K" TO "J" ZONE D-2
REVISED DET'S ZONE D 11
REVISIONS
DRAWING STATUS
H-2-73780 DRAWING LIST (INDEX)
REFERENCE DRAWINGS
NEXT USED ON
VITRO JOB NO. RO-KA2
U. S. Department of Energy
Richland Operations Office
VITRO ENGINEERING CORPORATION
PIPING DETAILS RECEIVER VAULT
SCALE NOTED
NOT REQD
NONE
244 TX, BX, U
0402, 8404
H-2-73867

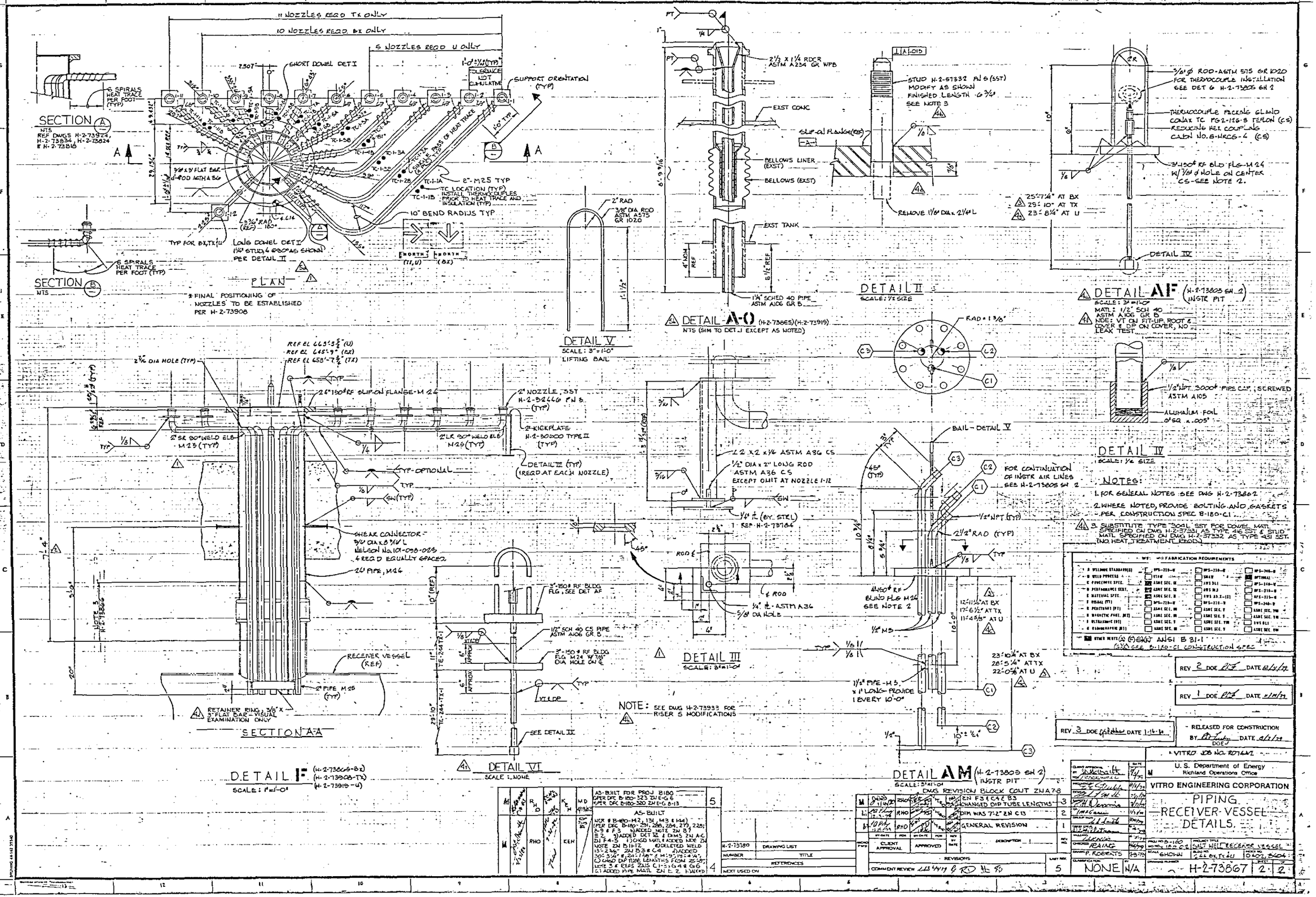
11 NOZZLES REQD TX ONLY
10 NOZZLES REQD BX ONLY
5 NOZZLES REQD U ONLY
SECTION A
SECTION B
PLAN
DETAIL I
DETAIL II
DETAIL III
DETAIL IV
DETAIL V
DETAIL VI
DETAIL AF
DETAIL A-O
DETAIL AM
SECTION A-A
NOTES:
1. FOR GENERAL NOTES SEE DWG H-2-73862
2. WHERE NOTED, PROVIDE BOLTING AND GASKETS PER CONSTRUCTION SPEC B-180-C1
3. SUBSTITUTE TYPE 304L SST FOR DOWEL MATL SPECIFIED ON DWG H-2-37331, AS TYPE 416 SST & STUD MATL SPECIFIED ON DWG H-2-37332 AS TYPE 431 SST. (NO HEAT TREATMENT REQD)
U. S. Department of Energy
Richland Operations Office
VITRO ENGINEERING CORPORATION
PIPING
RECEIVER VESSEL
DETAILS
H-2-73867
RELEASED FOR CONSTRUCTION

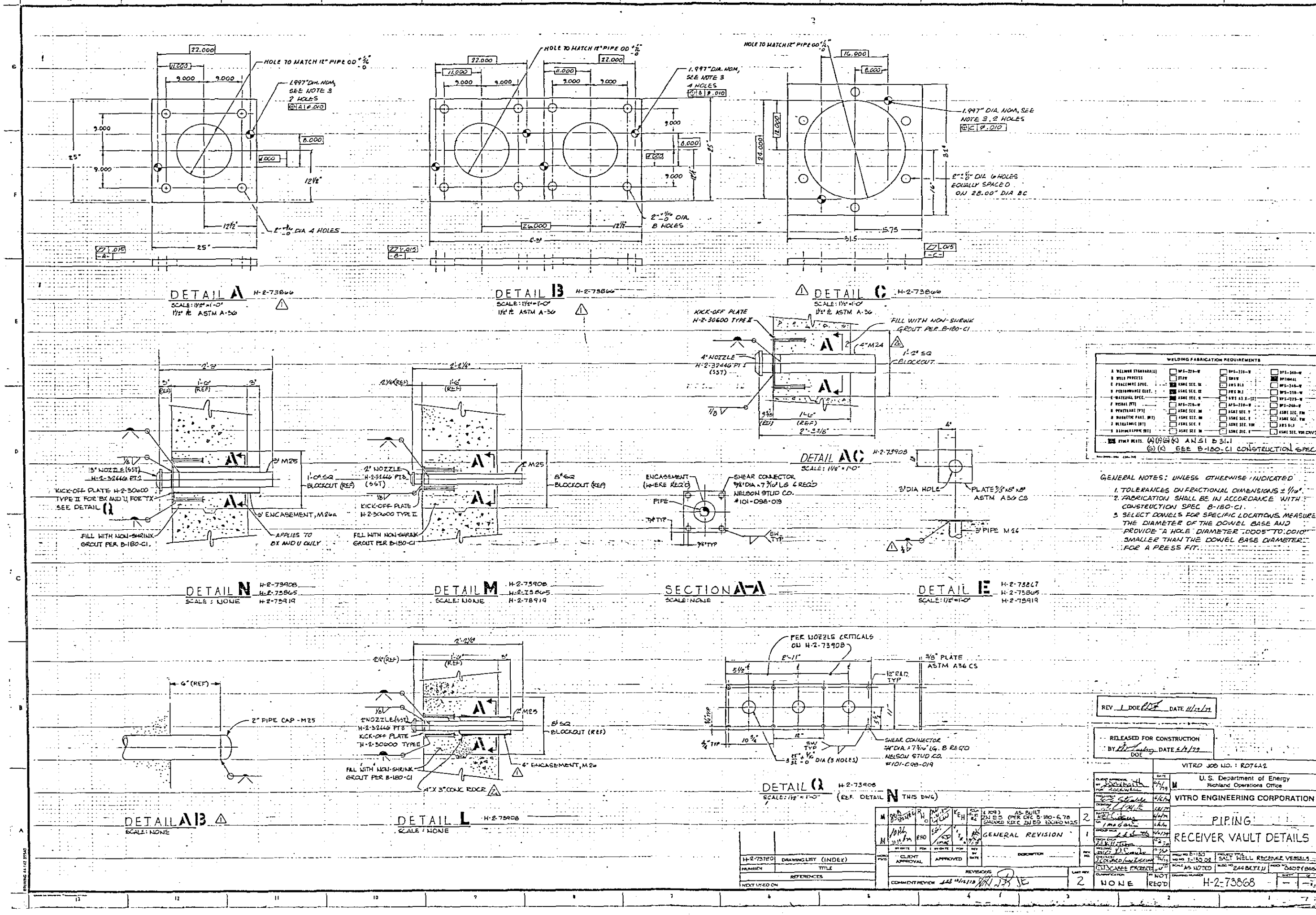

DETAIL A H-2-73866
SCALE: 1½" = 1'-0"
1½" PL ASTM A-36
HOLE TO MATCH 12" PIPE OD
1.997" DIA. NOM, SEE NOTE 3 2 HOLES
2" DIA 4 HOLES
DETAIL B H-2-73866
SCALE: 1½" = 1'-0"
1½" PL ASTM A-36
1.997" DIA. NOM, SEE NOTE 3 4 HOLES
2" DIA. 8 HOLES
DETAIL C H-2-73866
SCALE: 1½" = 1'-0"
1½" PL ASTM A-36
1.997" DIA. NOM, SEE NOTE 3, 2 HOLES
2" DIA 6 HOLES EQUALLY SPACED ON 28.00" DIA BC
DETAIL AC H-2-73908
SCALE: 1½" = 1'-0"
KICK-OFF PLATE H-2-30600 TYPE II
FILL WITH NON-SHRINK GROUT PER B-180-C1
4" NOZZLE H-2-32446 PT 1 (SST)
1'-2" SQ BLOCKOUT
DETAIL N H-2-73908 H-2-73865 H-2-73919
SCALE: NONE
3" NOZZLE (SST) H-2-32446 PT 2
KICK-OFF PLATE H-2-30600 TYPE II FOR BX AND U, FOR TX SEE DETAIL Q
1'-0" SQ BLOCKOUT (REF)
6" ENCASEMENT, M26a
APPLIES TO BX AND U ONLY
FILL WITH NON-SHRINK GROUT PER B-180-C1
DETAIL M H-2-73908 H-2-73865 H-2-73919
SCALE: NONE
2" NOZZLE H-2-32446 PT 3 (SST)
KICK-OFF PLATE H-2-30600 TYPE II
8" SQ BLOCKOUT (REF)
SECTION A-A
SCALE: NONE
ENCASEMENT (WHERE REQ'D)
SHEAR CONNECTOR 5/8" DIA x 7 3/16" LG 4 REQ'D NELSON STUD CO. #101-098-019
PIPE
DETAIL E H-2-73867 H-2-73865 H-2-73919
SCALE: 1½" = 1'-0"
3" DIA HOLE
PLATE 3/8" x 8" x 8" ASTM A36 CS
3" PIPE M26
DETAIL AB
SCALE: NONE
6" (REF)
2" PIPE CAP - M25
DETAIL L H-2-73908
SCALE: NONE
2" NOZZLE (SST) H-2-32446 PT 3
KICK-OFF PLATE H-2-30600 TYPE II
8" SQ BLOCKOUT (REF)
4" ENCASEMENT, M26
4" X 3" CONC RDCR
DETAIL Q H-2-73908
SCALE: 1½" = 1'-0"
(REF. DETAIL N THIS DWG)
PER NOZZLE CRITICALS ON H-2-73908
3/8" PLATE ASTM A36 CS
1/2" RAD. TYP
SHEAR CONNECTOR 5/8" DIA x 7 3/16" LG. 8 REQ'D NELSON STUD CO. #101-098-019
WELDING FABRICATION REQUIREMENTS
ATTACH DETAILS (A)(F)(G)(K) ANSI B31.1
(G)(K) SEE B-180-C1 CONSTRUCTION SPEC
GENERAL NOTES: UNLESS OTHERWISE INDICATED
1. TOLERANCES ON FRACTIONAL DIMENSIONS ± 1/16".
2. FABRICATION SHALL BE IN ACCORDANCE WITH CONSTRUCTION SPEC B-180-C1.
3. SELECT DOWELS FOR SPECIFIC LOCATIONS. MEASURE THE DIAMETER OF THE DOWEL BASE AND PROVIDE A HOLE DIAMETER .0005" TO .0010" SMALLER THAN THE DOWEL BASE DIAMETER FOR A PRESS FIT.
REV 1 DOE DATE 11/10/79
RELEASED FOR CONSTRUCTION BY DOE DATE 6/4/79
VITRO JOB NO.: R074A2
U.S. Department of Energy Richland Operations Office
VITRO ENGINEERING CORPORATION
PIPING
RECEIVER VAULT DETAILS
H-2-73868
NONE
NOT REQ'D
H-2-73780 DRAWING LIST (INDEX)
NUMBER TITLE
REFERENCES
NEXT USED ON
REVISIONS
COMMENT REVIEW
LAST REV 2
GENERAL REVISION
AS-BUILT

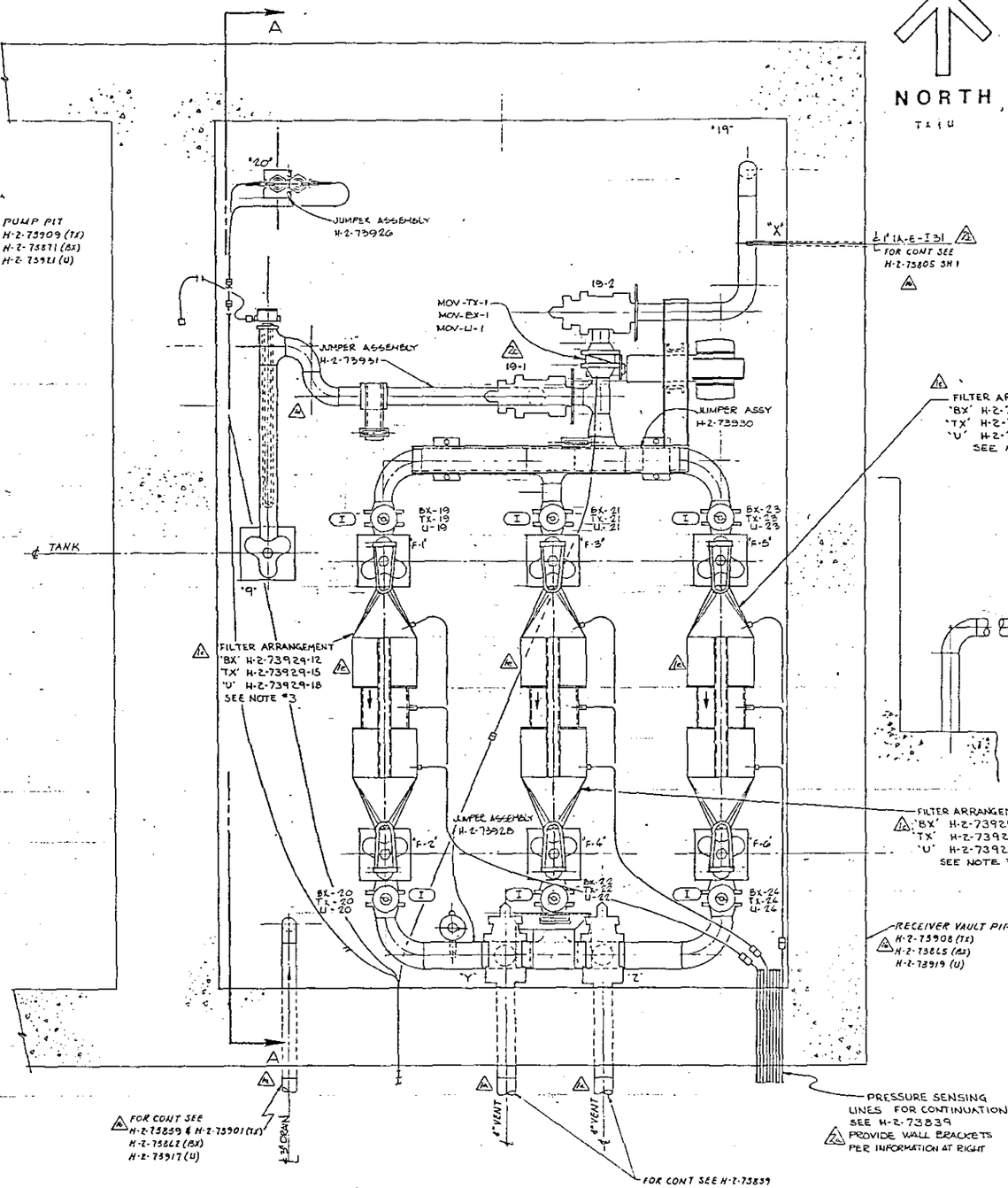

FILTER PIT PLAN

SCALE 1" = 1'-0"

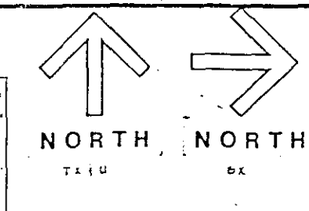

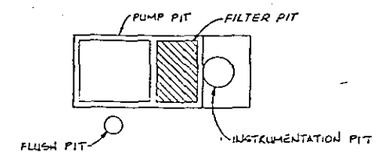

KEY PLAN

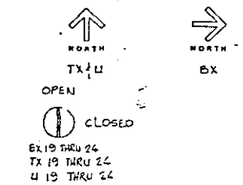

VALVE LOCK LOCATION DIAGRAM

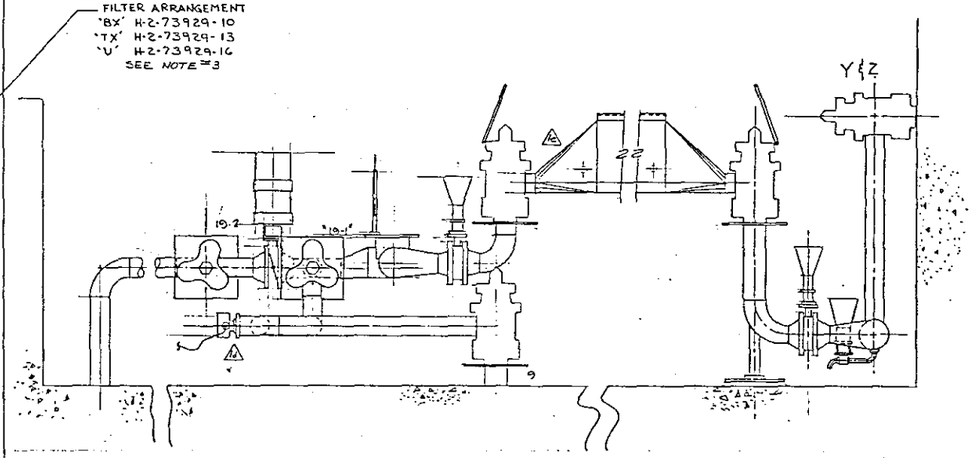

SECTION A-A

SCALE 1" = 1'-0"

PROVIDE WALL BRACKETS FOR VENT SYSTEM SENSING LINES & ELECT LEADS AS FOLLOWS:

1. FILTERS – BRACKETS SHALL BE PLACED IN SUCH A WAY THAT THE THREE SENSING LINES FOR EA INDIVIDUAL FILTER BANK WILL MAINTAIN A GRADUAL, NO TRAP SLOPE INTO THE CONNECTION POINTS ON THE FILTER BANK ASSEMBLY. THESE SENSING LINES SHALL HAVE TOTAL LENGTH ENOUGH TO PERMIT GRASPING A SET OF THREE W/A HOOK POLE & TO PULL QUICK DISCONNECT POINT OUT 2½ FT. AREA FOR DISCONNECTING IN A LOW RADIATION ZONE. MATCHING "IDENT" TAGS SHALL BE PROVIDED ON EA SIDE OF THE QUICK DISCONNECT. TAGS SHALL BE WRAP-AROUND TYPE, METAL OR PLASTIC.
2. ELECTRICAL – ELECT LEADS SHALL HAVE AT LEAST ONE BRACKET WHICH WILL ALLOW THEM TO BE SLIGHTLY ABOVE THE SENSING LINES, THEN TO DROP DOWN THE WALL NEAR THE HEATER & LEAK DETECTOR ASSEMBLIES. THESE LEADS MUST BE LONG ENOUGH TO PERMIT GRASPING THE GROUP OF WIRES & DISCONNECT THE DESIRED ONES OUTSIDE OF THE PIT AREA. MATCHING "IDENT" TAGS SHALL BE PROVIDED ON EA SIDE OF EA DISCONNECT. TAGS SHOULD BE WRAP-AROUND TYPE, METAL OR PLASTIC.

NOTES:

1. FOR GENERAL NOTES SEE DWG H-2-73862.
2. (I) INDICATES VALVE HANDWHEEL EXTENTION PER H-2-70551 (DETAIL I OR II SHOWN INSIDE OF SYMBOL), EXCEPT OMIT THE VALVE INDICATOR DISC AND ADD DETAIL (1) DWG H-2-73851.
3. NOZZLE IDENTIFICATION FOR FILTER TO BE PAINTED PER THIS DWG.

REV 1 DOE ~~[illegible]~~ DATE 1-16-80

RELEASED FOR CONSTRUCTION
BY [illegible] DATE 8/16/79
DOE

H-2-73780	DRAWING LIST
NUMBER	TITLE
	REFERENCES
NEXT USED ON	

REV	DESCRIPTION	BY	DATE	CHK	ENG	CLIENT APPROVAL	APPROVED
H	AS-BUILT PER DFC 8-150-104,192,254 & 7 OLDV JUMPER 2U & F-69 & C 4-6 ADDED FDN'S 2U & ADDED NOTE & REF 2U & 7 &						
M	PER DWG # E-73929 SH 9,10,11 & 12 H-2-73931 EN 8,11 & CHANGED FILTERS TO FILTER EN AT 2U & CROSSIGN & ADDED REF DWGS EN 2 & 8,11,12, 7 & 7 & CHANGED WALL EN 13, 10 & 11, & ADDED NAME & EXTENDED BX & VENT PIPES THRU						

COMMENT REVIEW

REVISIONS

LAST REV 2

CLIENT APPROVAL	[illegible]
PROJ MGR	[illegible]
DESIGN	[illegible]
DRAFTING	[illegible]
CHECKED	[illegible]
DRAWN	S.Y. INES
CLIENT PROJECT	NONE
PROJ NO	8-150
PROJECT TITLE	SALT WELL RECEIVER VESSEL
SCALE	1" = 1'-0"
PROJECT NO	8606
DRAWING NUMBER	H-2-73872
SHEET	—
REV	—

VITRO JOB NO. R 074A2

U.S. Department of Energy
Richland Operations Office

VITRO ENGINEERING CORPORATION

JUMPER ARRANGEMENT
FILTER PIT
244BX/244TX/244U RECEIVER PIT

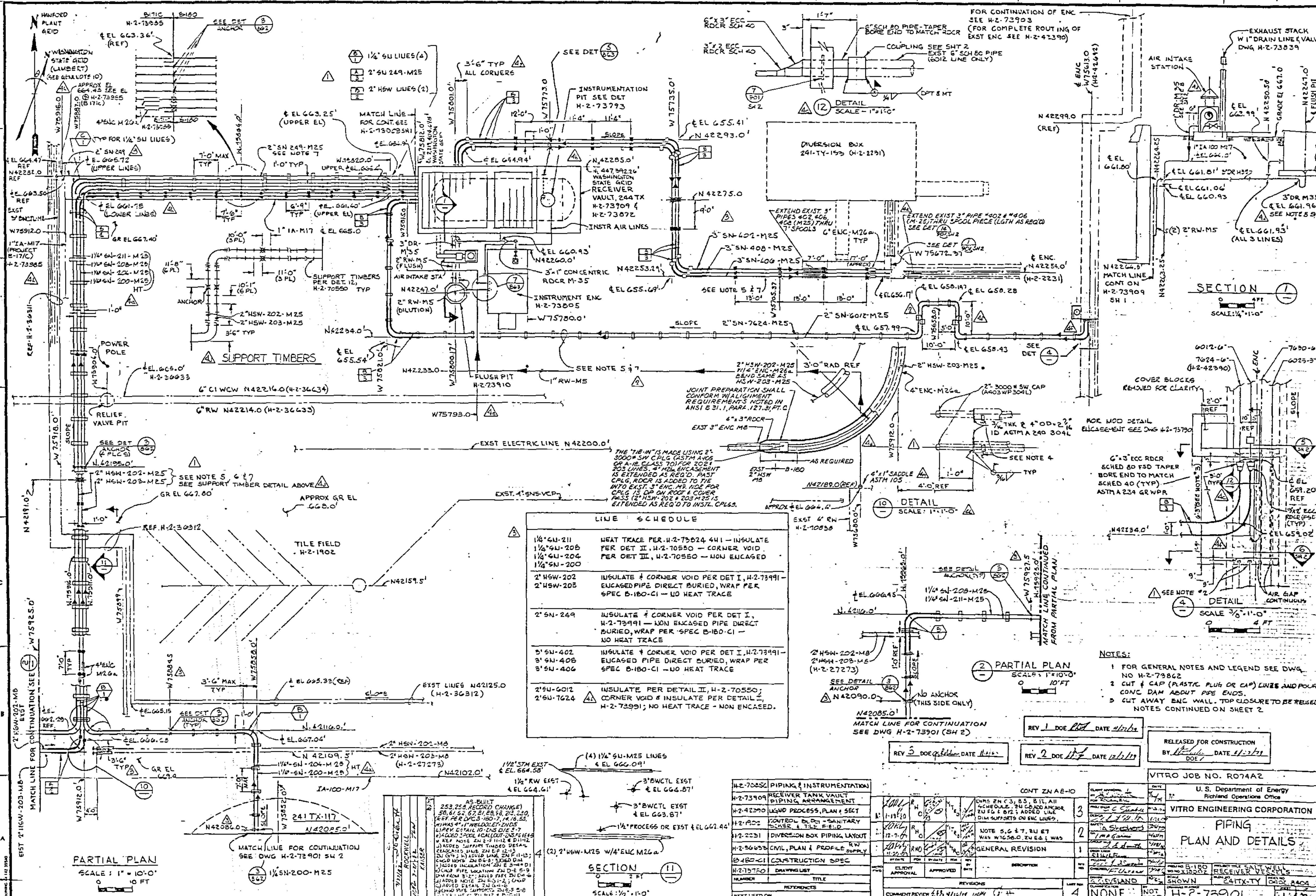

LINE	SCHEDULE
1¼" SN-211 1¼" SN-208 1¼" SN-204 1¼" SN-200	HEAT TRACE PER H-2-73824 SH 1 — INSULATE PER DET II, H-2-70550 — CORNER VOID PER DET III, H-2-70550 — NON ENCASED
2" HSW-202 2" HSW-203	INSULATE & CORNER VOID PER DET I, H-2-73991 — ENCASED PIPE DIRECT BURIED, WRAP PER SPEC B-180-C1 — NO HEAT TRACE
2" SN-249	INSULATE & CORNER VOID PER DET I, H-2-73991 — NON ENCASED PIPE DIRECT BURIED, WRAP PER SPEC B-180-C1 — NO HEAT TRACE
3" SN-402 3" SN-408 3" SN-406	INSULATE & CORNER VOID PER DET I, H-2-73991 — ENCASED PIPE DIRECT BURIED, WRAP PER SPEC B-180-C1 — NO HEAT TRACE
2" SN-6012 2" SN-7624	INSULATE PER DETAIL II, H-2-70550; CORNER VOID & INSULATE PER DETAIL I, H-2-73991; NO HEAT TRACE - NON ENCASED.

NOTES:

1. FOR GENERAL NOTES AND LEGEND SEE DWG NO H-2-73862
2. CUT & CAP (PLASTIC PLUG OR CAP) LINES AND POUR CONC DAM ABOUT PIPE ENDS.
3. CUT AWAY ENC WALL. TOP CLOSURE TO BE REUSED

NOTES CONTINUED ON SHEET 2

REV 1 DOE DATE

REV 2 DOE DATE 12/7/79

REV 3 DOE DATE

RELEASED FOR CONSTRUCTION BY DOE DATE

NUMBER	TITLE
H-2-70852	PIPING & INSTRUMENTATION
H-2-73909	RECEIVER TANK VAULT PIPING ARRANGEMENT
H-2-42390	UGND PROCESS, PLAN & SECT
H-2-1902	CONTROL BLDG - SANITARY SEWER & TILE FIELD
H-2-2231	DIVERSION BOX PIPING LAYOUT
H-2-36633	CIVIL, PLAN & PROFILE RW SUPPLY
B-180-C1	CONSTRUCTION SPEC
H-2-73750	DRAWING LIST

REFERENCES

NEXT USED ON

CONT ZN A8-10

REV NO.	DESCRIPTION
3	DIMS ZN C3, B5, B11, A11 SCHEDULE, ZN C8 ADD ANCHOR ZN F6 & B12; ADDED LINE DIM SUPPORTS ON ENC LINES.
2	NOTE 5, 6 & 7, ZN E7 WAS W7658.0, ZN E4; WAS
1	GENERAL REVISION

REVISIONS

LAST REV 4

VITRO JOB NO. R074A2

U.S. Department of Energy
Richland Operations Office

VITRO ENGINEERING CORPORATION

PIPING
PLAN AND DETAILS

PROJ NO B-180 · WO NO X19002 · PROJECT TITLE SALT WELL RECEIVER VESSELS · BLDG NO 241TX-TY · SCALE SHOWN · DRAWN G. CLEVELAND · CLASSIFICATION NONE · INDEX NO 0402 8404

H-2-73901 · SHEET 1 OF 2

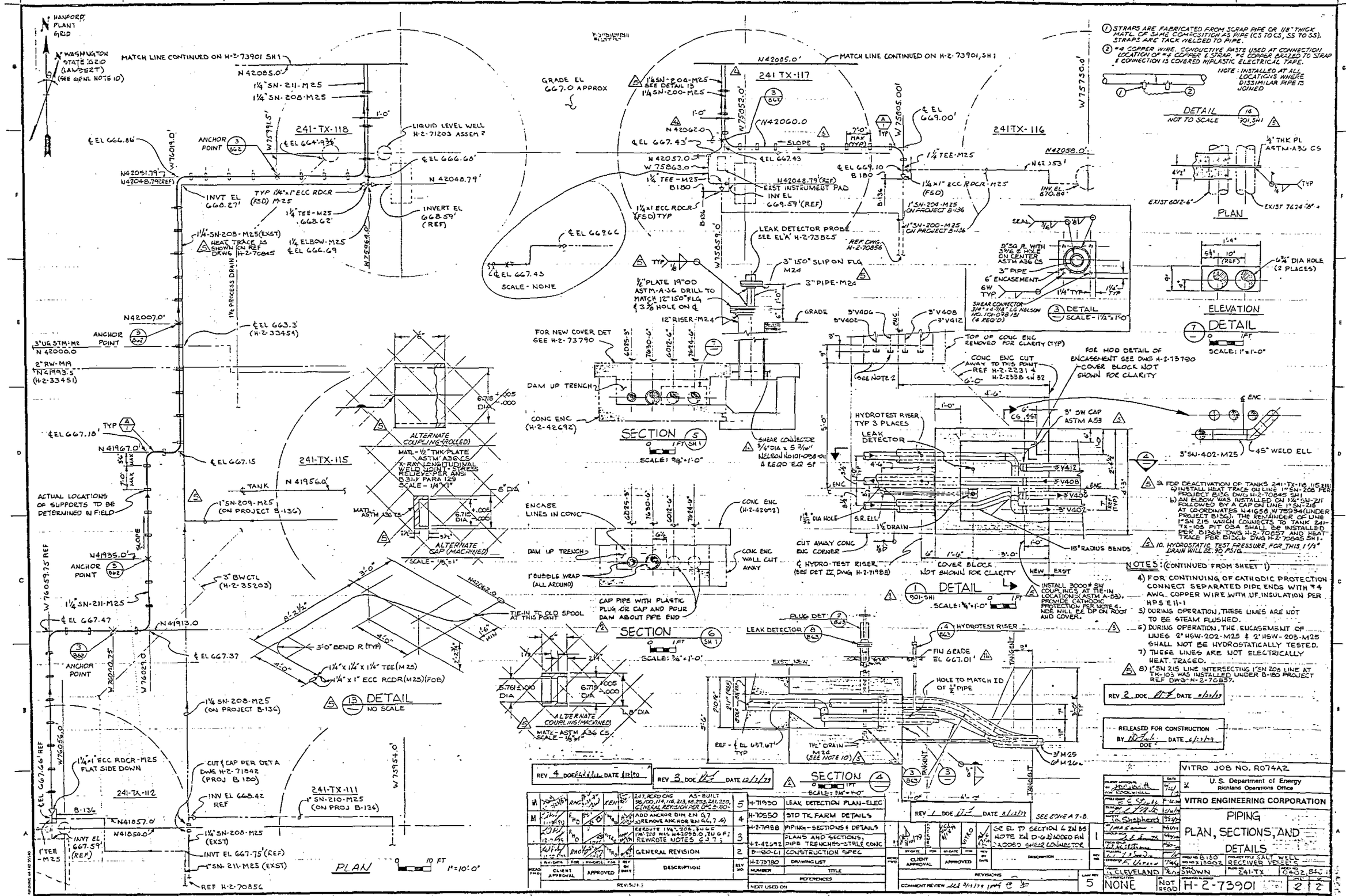

① STRAPS ARE FABRICATED FROM SCRAP PIPE OR 1/8" THICK MATL. OF SAME COMPOSITION AS PIPE (CS TO CS, SS TO SS). STRAPS ARE TACK WELDED TO PIPE.

② #4 COPPER WIRE. CONDUCTIVE PASTE USED AT CONNECTION LOCATION OF #8 COPPER & STRAP. #6 COPPER BRAZED TO STRAP & CONNECTION IS COVERED W/PLASTIC ELECTRICAL TAPE.

NOTE: INSTALLED AT ALL LOCATIONS WHERE DISSIMILAR PIPE IS JOINED

9. FOR DEACTIVATION OF TANKS 241-TX-115, 115 & 116:
a) INSTALL HEAT TRACE ON LINE 1" SN-208 PER PROJECT B136 DWG H-2-70845 SH 1.
b) AN ELBOW WAS INSTALLED ON 1¼" SN-211 FOLLOWED BY A CAP ON LINE 1" SN-215 AT COORDINATES N 41658, W 75934 (UNDER PROJECT B136). THE REMAINDER OF LINE 1" SN 215 WHICH CONNECTS TO TANK 241-TX-103 PIT 03A SHALL BE INSTALLED PER D1266 DWG H-2-70857 AND HEAT TRACE PER D1326 DWG H-2-70845 SH 1.

10. HYDROSTATIC TEST PRESSURE FOR THIS 1 1/2" DRAIN WILL BE 90 PSIG.

NOTES: (CONTINUED FROM SHEET 1)

4) FOR CONTINUING OF CATHODIC PROTECTION CONNECT SEPARATED PIPE ENDS WITH #4 AWG. COPPER WIRE WITH UF INSULATION PER HPS E11-1

5) DURING OPERATION, THESE LINES ARE NOT TO BE STEAM FLUSHED.

6) DURING OPERATION, THE ENCASEMENT OF LINES 2" HSW-202-M25 & 2" HSW-203-M25 SHALL NOT BE HYDROSTATICALLY TESTED.

7) THESE LINES ARE NOT ELECTRICALLY HEAT TRACED.

8) 1" SN 215 LINE INTERSECTING 1" SN 208 LINE AT TK-103 WAS INSTALLED UNDER B-180 PROJECT REF DWG H-2-70857.

REV	DESCRIPTION	DWG NO
5	2.27, RCRD CHG AS-BUILT 96,100,114,116,213,16,233,261,230, GENERAL REVISION PER DFC 2-80	H-71930 LEAK DETECTION PLAN-ELEC
4	ADD ANCHOR DIM EN G7 REMOVE ANCHOR EN G6, 7 4)	H-70550 STD TK FARM DETAILS
3	REROUTE 1¼" SN-208 & 1" SN-209 1¼" SN-209 WAS M42058.0, 3W G F; REWROTE NOTES 6 & 7	H-2-71988 PIPING-SECTIONS & DETAILS
2	GENERAL REVISION	H-2-42692 PLANS AND SECTIONS, PIPE TRENCHES-STRLE CONC
		D-180-C1 CONSTRUCTION SPEC
		H-2-73780 DRAWING LIST

NUMBER / TITLE / REFERENCES / NEXT USED ON

REV. 5-21-73

CLIENT APPROVAL / APPROVED

REVISIONS

COMMENT REVIEW 3/11/79

SEE ZONE A 7-8

GE EL TO SECTION 4 IN B5 NOTE 2 & D-G ADDED FIN ADDED SHEAR CONNECTOR

CLIENT APPROVAL / APPROVED / DESCRIPTION

REV. 5

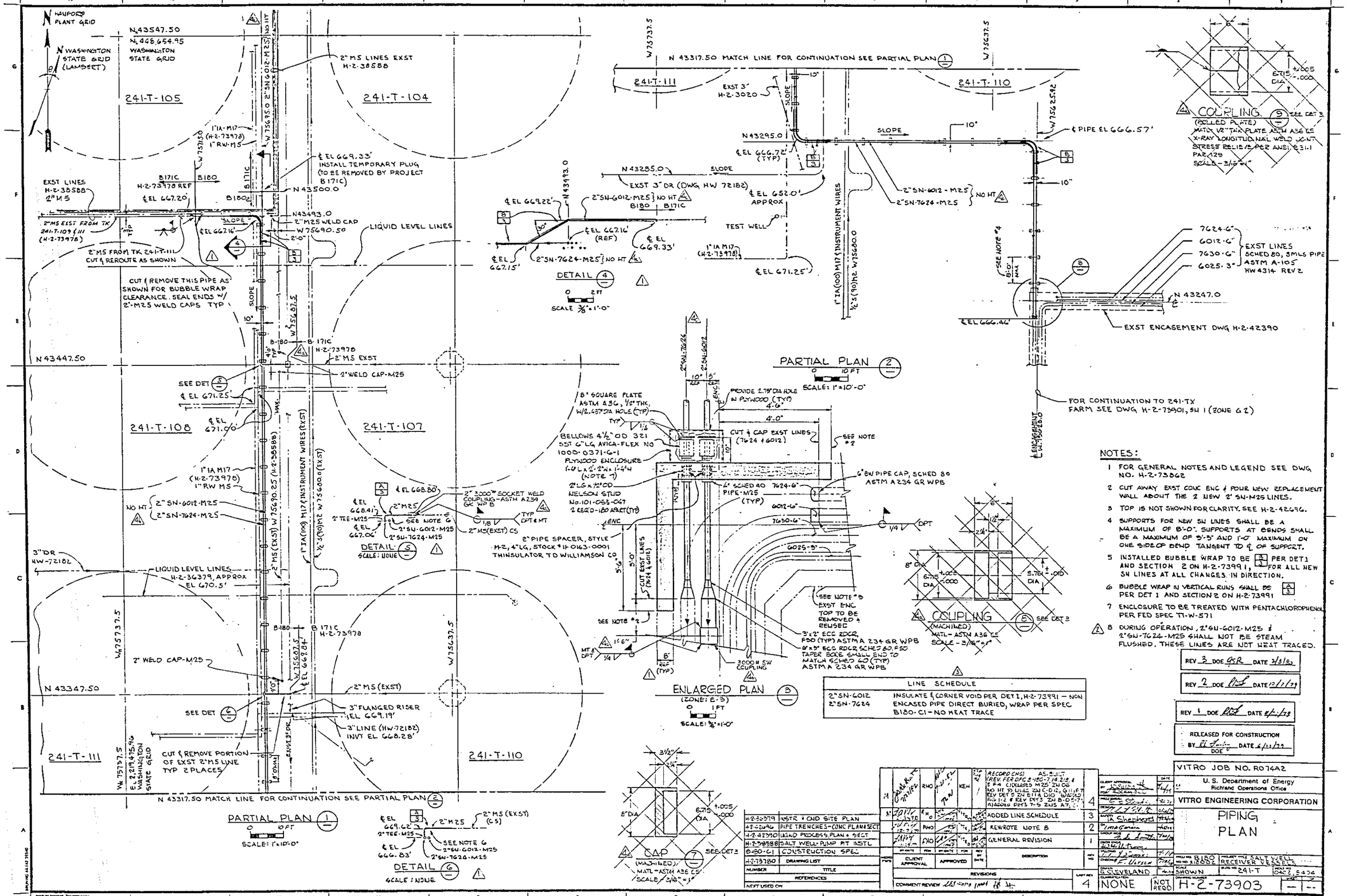

NOTES:

1. FOR GENERAL NOTES AND LEGEND SEE DWG. NO. H-2-73062
2. CUT AWAY EXST CONC ENC & POUR NEW REPLACEMENT WALL ABOUT THE 2 NEW 2" SN-M25 LINES.
3. TOP IS NOT SHOWN FOR CLARITY. SEE H-2-42696.
4. SUPPORTS FOR NEW SN LINES SHALL BE A MAXIMUM OF 8'-0". SUPPORTS AT BENDS SHALL BE A MAXIMUM OF 3'-3" AND 1'-0" MAXIMUM ON ONE SIDE OF BEND TANGENT TO ℄ OF SUPPORT.
5. INSTALLED BUBBLE WRAP TO BE 3/3 PER DET 1 AND SECTION 2 ON H-2-73991, 3/3 FOR ALL NEW SN LINES AT ALL CHANGES IN DIRECTION.
6. BUBBLE WRAP IN VERTICAL RUNS SHALL BE 3/3 PER DET 1 AND SECTION 2 ON H-2-73991
7. ENCLOSURE TO BE TREATED WITH PENTACHLOROPHENOL PER FED SPEC TT-W-571
8. DURING OPERATION, 2" SN-6012-M25 & 2" SN-7624-M25 SHALL NOT BE STEAM FLUSHED. THESE LINES ARE NOT HEAT TRACED.

LINE SCHEDULE	
2" SN-6012	INSULATE & CORNER VOID PER DET 1, H-2-73991 – NON
2" SN-7624	ENCASED PIPE DIRECT BURIED, WRAP PER SPEC B180-C1 – NO HEAT TRACE

H						RECORD CHG. AS-BUILT (REV. FER DFC 8-180-7.14.2.1.2 & 5 F4 (DELETED M25 2" SN DG NO HT 19 LINES 2" C-D-12, G11, F7 REV DET 5 2" E11A D10 (DELETED FIG 1-2 & REV DET 3 2" SN B-D-2-7-1 (DELETED DET 3 7-5 2" US A7, C1	4
N						ADDED LINE SCHEDULE	3
						REWROTE NOTE B	2
						GENERAL REVISION	1
REVISIONS	CLIENT APPROVAL	APPROVED	DESCRIPTION	REV NO			

NUMBER	TITLE
H-2-36379	INSTR + CND SITE PLAN
H-2-42696	PIPE TRENCHES-CONC PLAN & SECT
H-2-42390	LEND PROCESS PLAN + SECT
H-2-38588	SALT WELL PUMP PIT INSTL
B-180-C1	CONSTRUCTION SPEC
H-2-73180	DRAWING LIST

REFERENCES

NEXT USED ON

COMMENT REVIEW

CLIENT APPROVAL	U.S. Department of Energy, Richland Operations Office
	VITRO ENGINEERING CORPORATION
	PIPING PLAN
DRAWN G. CLEVELAND	PROJ NO. B180 — PROJECT NAME SALT WELL RECEIVER VESSELS
CLASSIFICATION NONE	SCALE SHOWN — DRAWING NUMBER 241-T
NOT REQD	H-2-73903

REV 3 DOE GSR DATE 3/31/80

REV 2 DOE [illegible] DATE 12/1/79

REV 1 DOE [illegible] DATE [illegible]

RELEASED FOR CONSTRUCTION BY [illegible] DATE 6/13/79 DOE

VITRO JOB NO. R0742

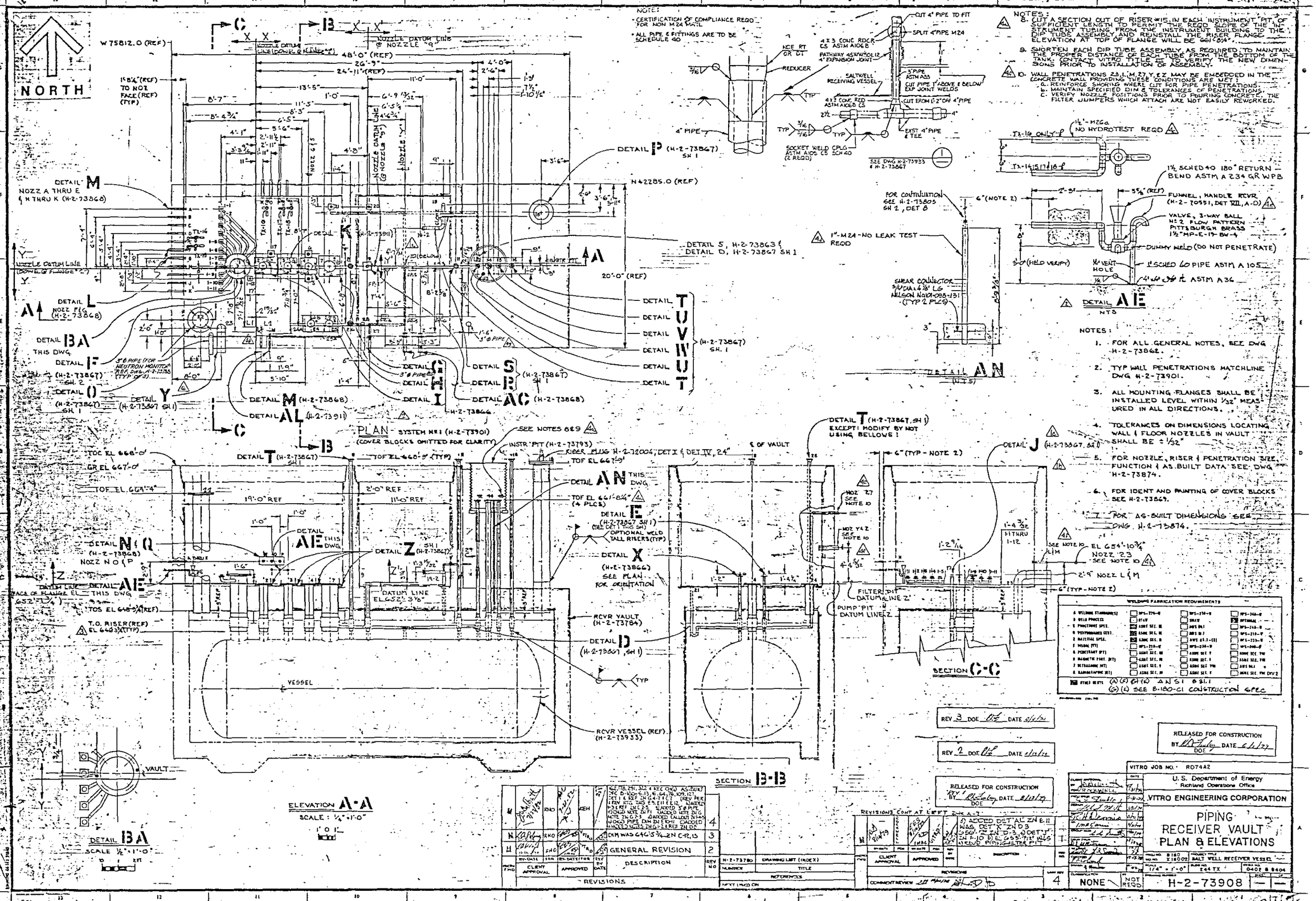
NORTH
PLAN - SYSTEM No. 1 (H-2-73901)
(COVER BLOCKS OMITTED FOR CLARITY)
SECTION B-B
SECTION C-C
ELEVATION A-A
SCALE: 1/4" = 1'-0"
DETAIL BA
SCALE 1/2" = 1'-0"
DETAIL AE
NTS
DETAIL AN
(NTS)
NOTES:
1. FOR ALL GENERAL NOTES, SEE DWG H-2-73862.
2. TYP WALL PENETRATIONS MATCHLINE DWG H-2-73901.
3. ALL MOUNTING FLANGES SHALL BE INSTALLED LEVEL WITHIN 1/32" MEASURED IN ALL DIRECTIONS.
4. TOLERANCES ON DIMENSIONS LOCATING WALL & FLOOR NOZZLES IN VAULT SHALL BE ± 1/32"
5. FOR NOZZLE, RISER & PENETRATION SIZE, FUNCTION & AS-BUILT DATA SEE DWG H-2-73874.
6. FOR IDENT AND PAINTING OF COVER BLOCKS SEE H-2-73869.
7. FOR AS-BUILT DIMENSIONS SEE DWG. H-2-73874.
8. CUT A SECTION OUT OF RISER #15 IN EACH INSTRUMENT PIT OF SUFFICIENT LENGTH TO PERMIT THE REQD SLOPE OF THE INSTRUMENT TUBING FROM THE INSTRUMENT BUILDING TO THE DIP TUBE ASSEMBLY AND REINSTALL THE RISER FLANGE. ELEVATION AT TOP OF FLANGE WILL BE 661'-0 1/4".
9. SHORTEN EACH DIP TUBE ASSEMBLY AS REQUIRED TO MAINTAIN THE PROPER DISTANCE OF EACH TUBE FROM THE BOTTOM OF THE TANK. CONTACT VITRO TITLE II TO VERIFY THE NEW DIMENSIONS PRIOR TO INSTALLATION OF ASSEMBLY.
10. WALL PENETRATIONS 23, L, M, 27, Y, EZ MAY BE EMBEDDED IN THE CONCRETE WALL PROVIDING THESE CONDITIONS ARE MET:
a. REINFORCE SWORDS WHERE CUT FOR PIPE PENETRATIONS.
b. MAINTAIN SPECIFIED DIM & TOLERANCES OF PENETRATIONS.
c. VERIFY NOZZLE POSITIONS PRIOR TO POURING CONCRETE. THE FILTER JUMPERS WHICH ATTACH ARE NOT EASILY REWORKED.
RELEASED FOR CONSTRUCTION
RELEASED FOR CONSTRUCTION
VITRO JOB NO. RO74A2
U.S. Department of Energy
Richland Operations Office
VITRO ENGINEERING CORPORATION
PIPING
RECEIVER VAULT
PLAN & ELEVATIONS
H-2-73908

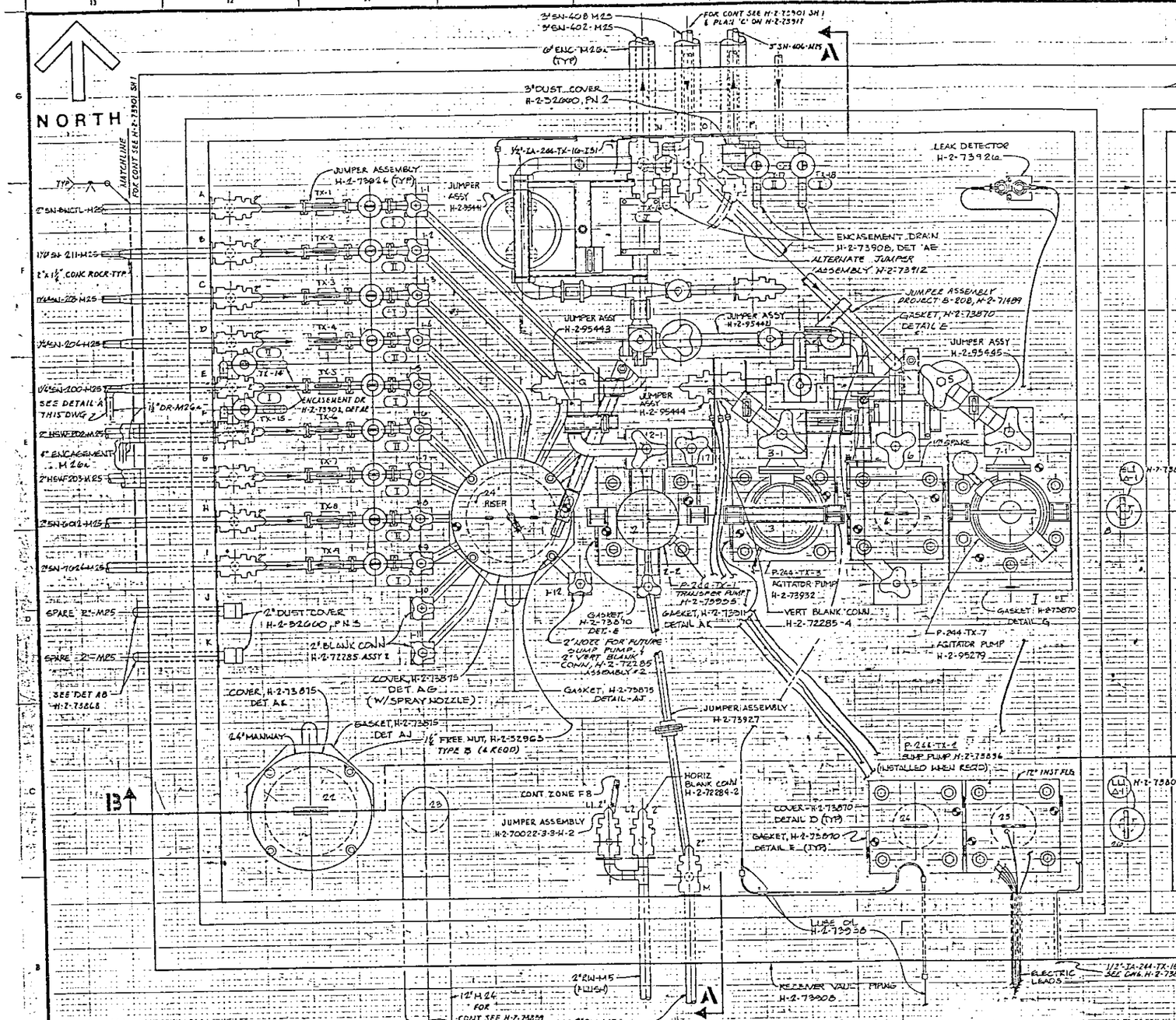

NOTES:

1. FOR GENERAL NOTES SEE DWG H-2-73862.
2. (I) INDICATES VALVE HANDLE EXTENSION PER H-2-70551 (DET I OR II SHOWN INSIDE OF SYMBOL), EXCEPT OMIT VALVE INDICATOR DISC & ADD DETAIL (I) DWG H-2-73861.
3. TX-5' INDICATES VALVE IDENTIFICATION NUMBERS PER H-2-73863.
4. FOR HEAT TRACE DETAILS, SEE B-160 DWG. H-2-73829

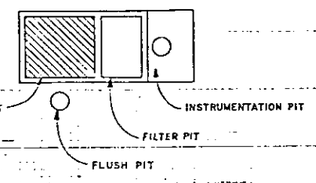

KEY PLAN

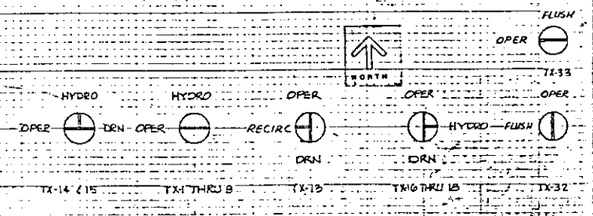

VALVE LOCK LOCATION DIAGRAM

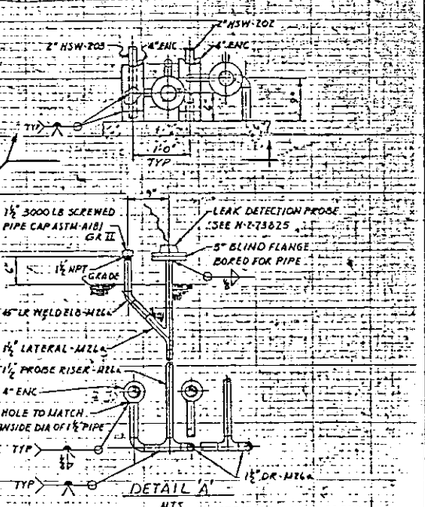

					10359, INCORPORATE CEO 36934 DIRECT DWG CHANGE PER ECN	5	
					(DFC 13, 86, 113, 162, 205) 2U B10; CALLOUT W45 (I), 2U F9 JUMPER WAS H-2-70022-3-3-6-2 1/4" I.A., 2U D7; CLEAN NOZZLE, ADDED (I), 2U F9; b) ADDED a) CHANGED JUMPER PICTURE.	3	
					Q RELOCATED ELEC. 2U B4 R REVISED TRANSFER PUMP 2U D-7 ADDED LUBE OIL PIPING 2U B-8	2	
					GENERAL REVISION	1	
					DESCRIPTION	REV. NO.	

H-2-73880	DRAWING LIST (BLOCK)
NUMBER	TITLE
REFERENCES	
NEXT USED ON H-2-73750	

CLIENT APPROVAL — APPROVED

REVISIONS — COMMENT REVIEW

SHEET 5 OF 5

CLASSIFICATION: NONE

IMPACT LEVEL 3

VITRO JOB NO. R074A2

U. S. Department of Energy
Richland Operations Office

VITRO ENGINEERING CORPORATION

JUMPER ARRANGEMENT PUMP PIT 244 TX RECEIVER VAULT

PROJECT TITLE: SALT WELL RECEIVER VESSELS

SCALE: SHOWN

PROJECT NO. 244 TX

DRAWING NUMBER: H-2-73909

SHEET 1 OF 2

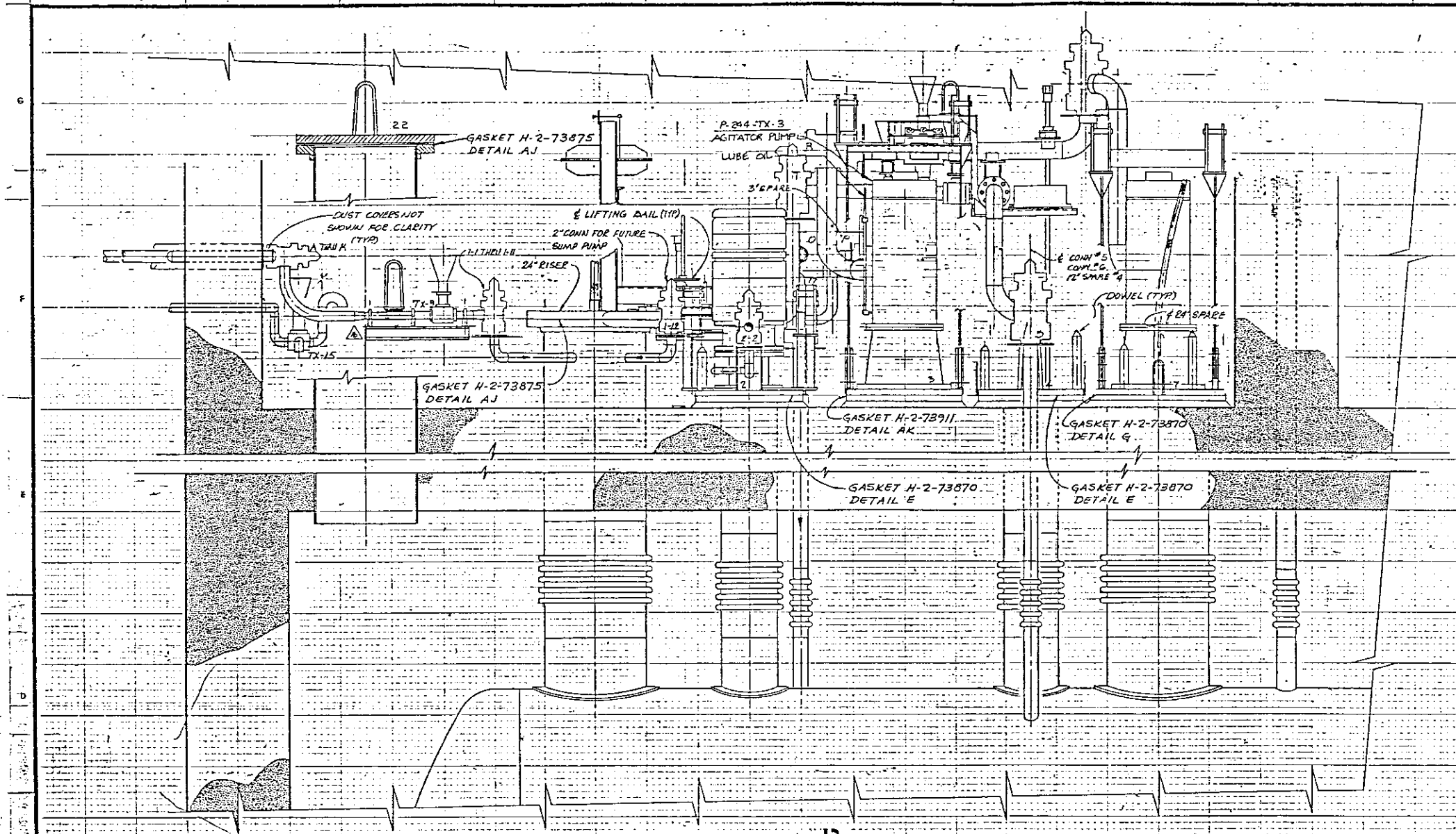

NOTE

1. FOR GENERAL NOTES SEE DRAWING H-2-73862.

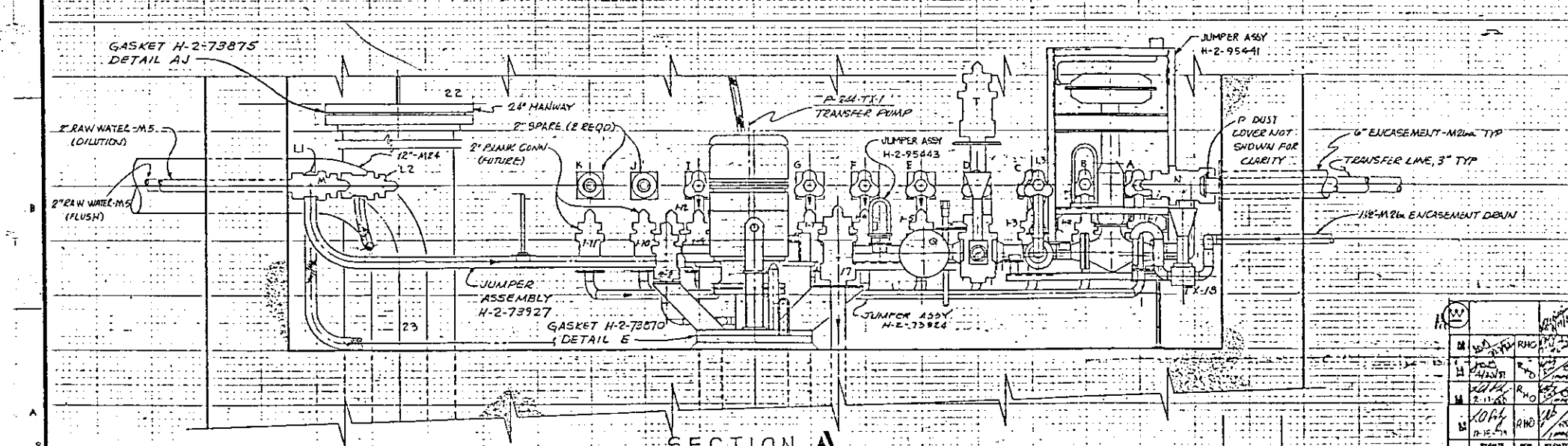

SCALE: 1"=1'-0"

IMPACT LEVEL 3

							10359, INCORPORATE CEO 36534 DIRECT DWG CHANGE PER ECN	5	
							AS-BUILT	4	
							EN "DD" (RPC 705) CHANGED JUMPER PICTURE	3	
							REVISED TRANSFER PUMP IN 1-9 CHANGED LUBE OIL PIPING IN 1-9	2	
							JUMPER A-K WAS 1-1-4 IN FIG. EN 8 CHAN RELOCATED REDUCER ON A) DELETED DOWEL AT RISER 22 IN	1	
							DESCRIPTION	REV. NO.	

H-2-75783 DRAWING LIST (INDEX)

NUMBER	TITLE
REFERENCES	
NEXT USED ON H-2-93909 SH 1	

CLIENT APPROVAL — APPROVED

REVISIONS — COMMENT REVIEW

UNIT REV 5

CLASSIFICATION: NONE

VITRO JOB NO.: R074A2

U. S. Department of Energy
Richland Operations Office

VITRO ENGINEERING CORPORATION

PIPING
PUMP-PIT-SECTIONS
244 TX RCVR VAULT

PROJ NO. 8180 WO NO. A180 DE

PROJECT TITLE: SALT WELL RECEIVER VESSELS

SCALE: 1" = 1'-0"

FILE NO. 244-TX

MODEL NO. 8404 & 8402

DRAWING NUMBER: H-2-73909

SHEET 2 OF 2

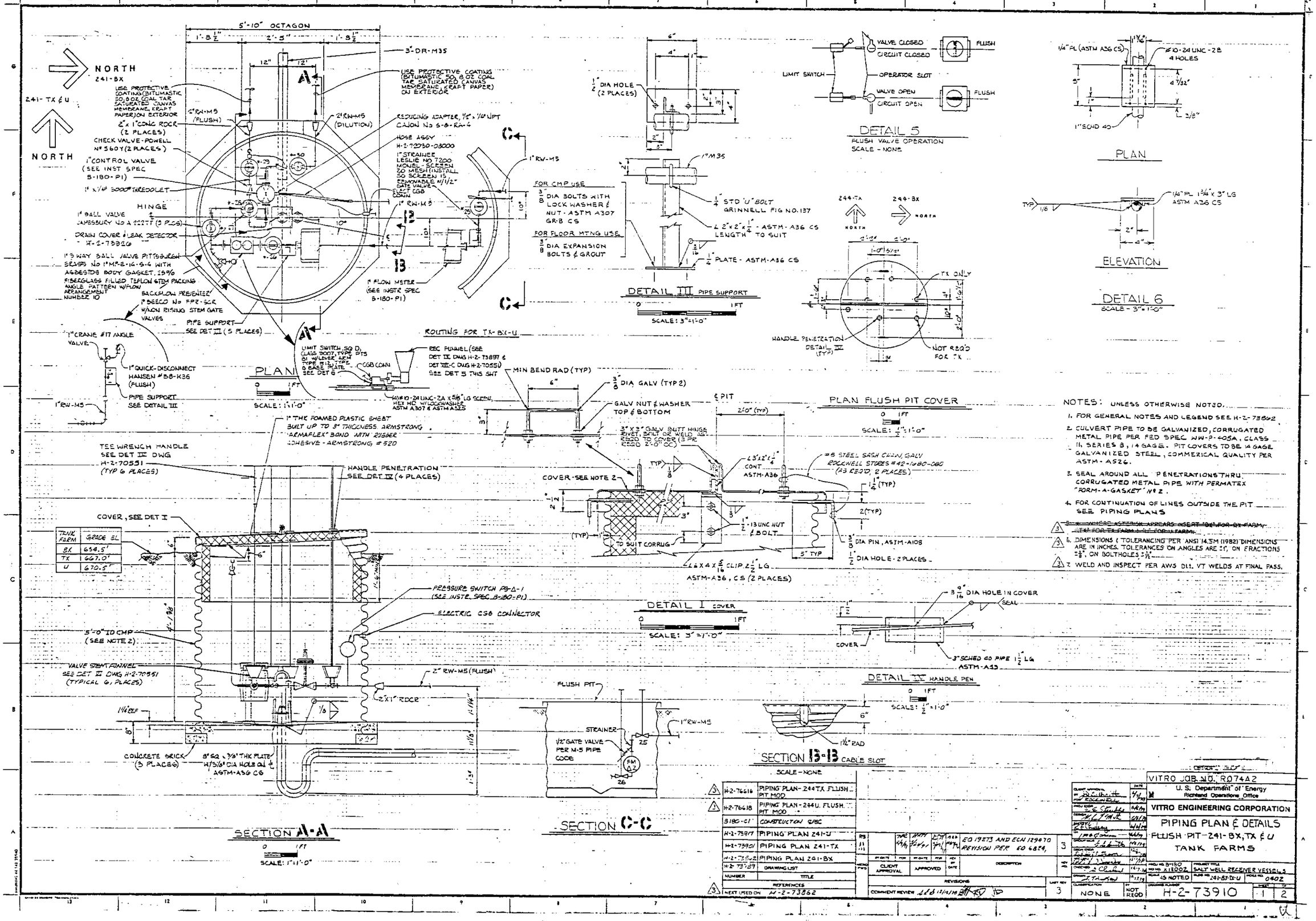

NOTES: UNLESS OTHERWISE NOTED.

1. FOR GENERAL NOTES AND LEGEND SEE H-2-73842
2. CULVERT PIPE TO BE GALVANIZED, CORRUGATED METAL PIPE PER FED SPEC WW-P-405A, CLASS II, SERIES B, 14 GAGE. PIT COVERS TO BE 14 GAGE GALVANIZED STEEL, COMMERICAL QUALITY PER ASTM-A526.
3. SEAL AROUND ALL PENETRATIONS THRU CORRUGATED METAL PIPE WITH PERMATEX "FORM-A-GASKET" Nº 2.
4. FOR CONTINUATION OF LINES OUTSIDE THE PIT SEE PIPING PLANS
5. ~~WHERE ASTERISK APPEARS INSERT "DET FOR BX FARM" "TX" FOR TX FARM & "U" FOR U FARM.~~
6. DIMENSIONS (TOLERANCING) PER ANSI 14.5M (1982) DIMENSIONS ARE IN INCHES. TOLERANCES ON ANGLES ARE ±1°, ON FRACTIONS ±1/8", ON BOLTHOLES ±1/16"
7. WELD AND INSPECT PER AWS D1.1. VT WELDS AT FINAL PASS.

H-2-76616	PIPING PLAN - 244TX FLUSH PIT MOD
H-2-76618	PIPING PLAN - 244U. FLUSH PIT MOD
B180-C1	CONSTRUCTION SPEC
H-2-75917	PIPING PLAN 241-U
H-2-73901	PIPING PLAN 241-TX
H-2-73902	PIPING PLAN 241-BX
H-2-73739	DRAWING LIST
NUMBER	TITLE
REFERENCES	
NEXT USED ON	H-2-73862

REV	DESCRIPTION	LAST REV
3	ECO 19873 AND ECN 129470 REVISION PER ECO 6824,	3
	REVISIONS	
COMMENT REVIEW		3

VITRO JOB NO. R074A2

U. S. Department of Energy
Richland Operations Office

VITRO ENGINEERING CORPORATION

PIPING PLAN & DETAILS
FLUSH PIT - 241-BX, TX & U
TANK FARMS

PROJ NO. B-150
NO. NO. X18002
PROJECT TITLE: SALT WELL RECEIVER VESSELS
SCALE: AS NOTED
DWG NO. 241-B1-D-U
SHEET NO. 040Z
CLASSIFICATION: NONE
NOT REQ'D
DRAWING NUMBER: H-2-73910
SHEET 1 OF 2

PARTS LIST				
QTY	PART	DESCRIPTION	MATERIAL/REFERENCE	SPEC CODE

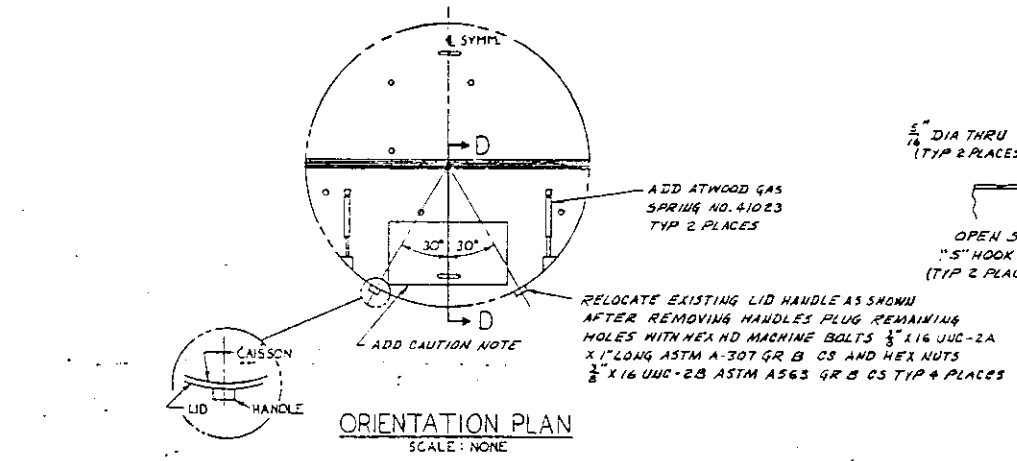

ORIENTATION PLAN
SCALE: NONE

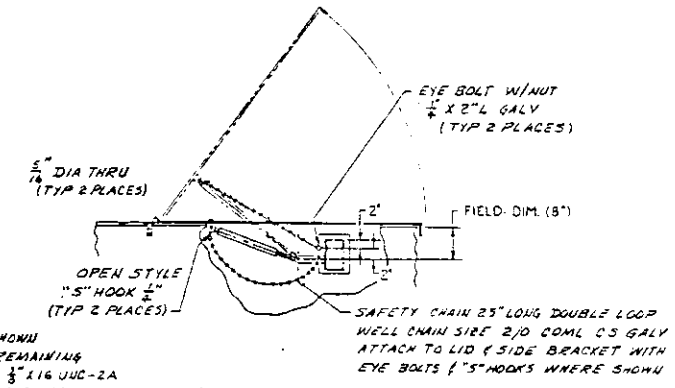

SECTION D-D
SCALE: NONE

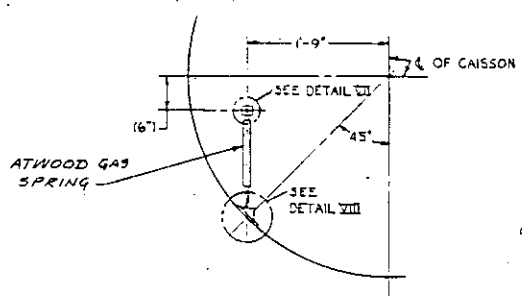

PLAN
SCALE: NONE

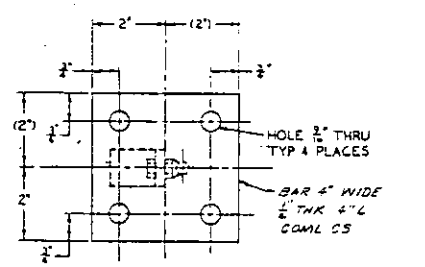

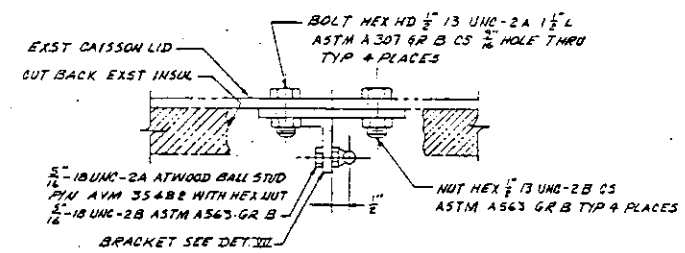

DETAIL IX
SCALE: NONE

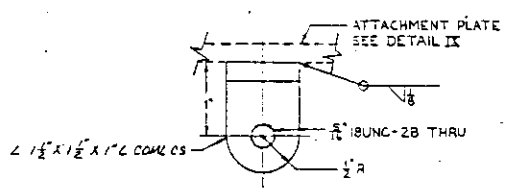

DETAIL VII
SCALE: FULL

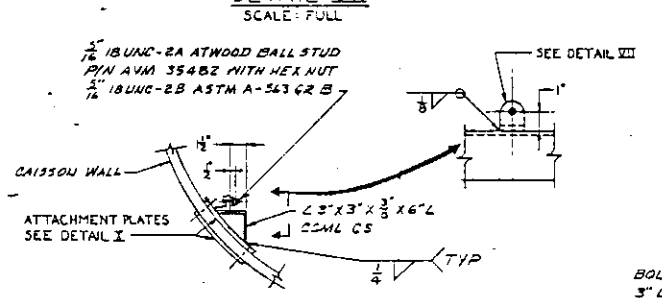

DETAIL VIII
SCALE: NONE

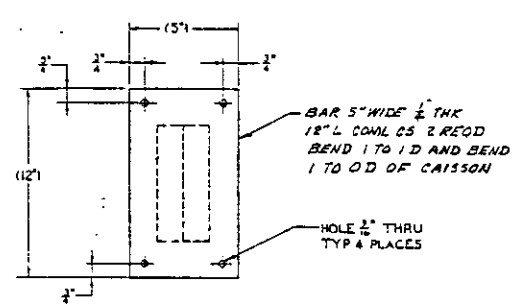

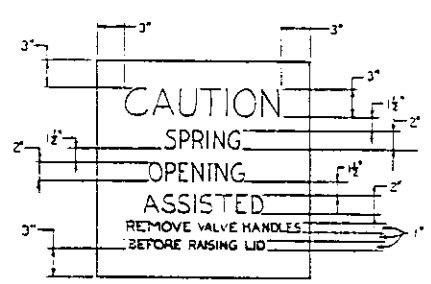

DETAIL XI
SCALE: NONE

CAUTION SIGN NOTE:
MARK LID ASSEMBLY PER HS-B5-0015 TYPE B WITH NOTE AS SHOWN ABOVE IN LOCATION INDICATED AT ORIENTATION PLAN USING HEIGHT INDICATED FOR BLACK CHARACTERS ON YELLOW BACKGROUND. 1/2" BLACK BORDER AROUND YELLOW BACKGROUND

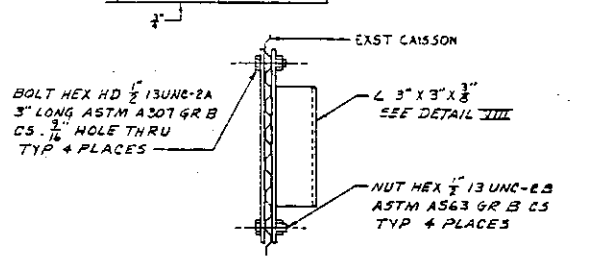

DETAIL X
SCALE: NONE

OFFICIAL RELEASE BY WHC
DATE: MAY 13 1991

ECN 123670

DRAWN	D. HAMANN	4-23-90
CHECKED		5-10-91
DFTG APPD		5/21/91
DSN CHK		5/21/91
QA		
OTHER		
OTHER		
OTHER		
APVD FOR IMPLEMENTATION		

U.S. DEPARTMENT OF ENERGY
Richland Operations Office
Westinghouse Hanford Company

PIPING PLAN & DETAILS
FLUSH PIT 241-BX, TX, & U
TANK FARMS

SIZE	DWG NO	SHEET NO	DFTG NO	REV
F	241-BX-TX-U	0402	H-2-73910	0

SCALE SHOWN — SHEET 2 OF 2

DWG NO	TITLE	REF NUMBER	TITLE
DRAWING TRACEABILITY LIST	REFERENCES	NEXT USED ON	

REV NO	DESCRIPTION	REV BY DATE	CHK BY DATE	DFTG APVD DATE	DSN CHK	OTHER	OTHER
REVISIONS					APPROVALS BY/DATE		

54-8000-02715/891

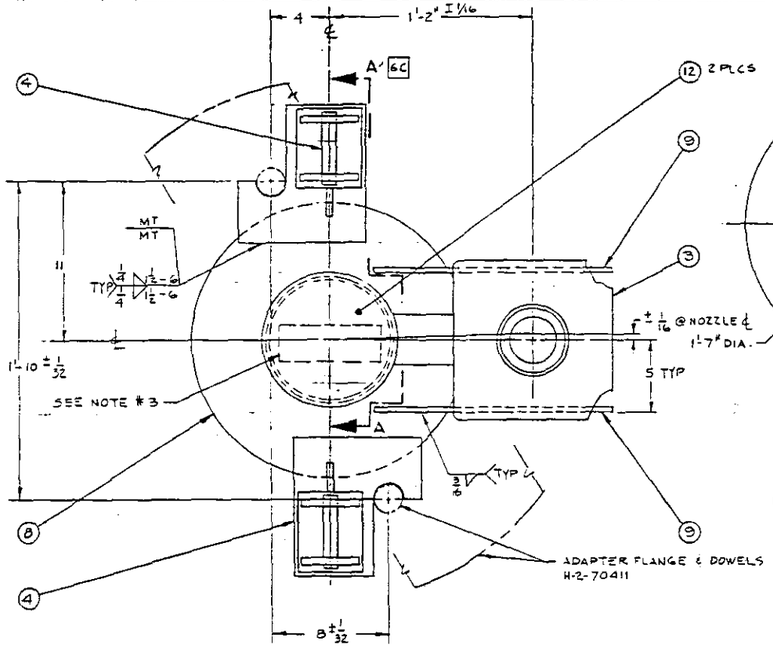

PLAN

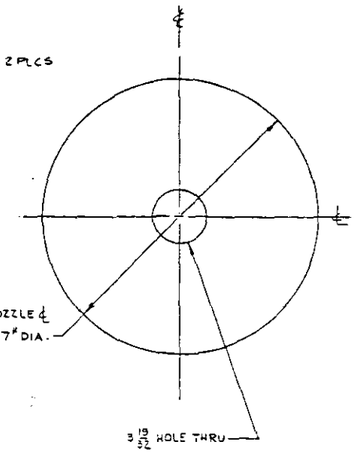

8 FLANGE

SCALE : 3"=1'-0"

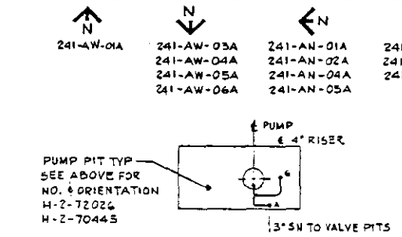

KEY PLAN

SCALE NONE

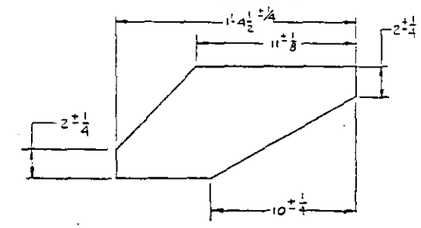

9 BRACKET

QTY	PT NO	DESCRIPTION	MATL/REF
X	1	ASSEMBLY	
1	2	CONNECTOR NOZZLE 3"	H-2-32446-2
1	3	KICK-OFF PLATE 3"	H-2-30600, TYPE II
2	4	LIFTING BAIL -	H-2-70001-2
1	5	8" PIPE SCHED 40 x 6" LG	ASTM-A53 GR B CS TYPE S
AR	6	3" PIPE SCHED 40	ASTM-A53 GR B CS TYPE S
2	7	ELBOW-90° S.R.-3"-SCHED 40 BUTTWELD	ASTM-A234 GR WPB CS
1	8	PL 1" THK	ASTM-A36 CS
2	9	BAR 3/8 THK	ASTM-A575 GR 1020 CS
2	10	BAR 1/4 THK	ASTM-A575 GR 1020 CS
AR	11	COUNTERWEIGHT - 36 LBS APPROX.	ASTM B29 - LEAD
2	12	PL 1/4 THK x 9 1/4 DIA	ASTM-A36 CS

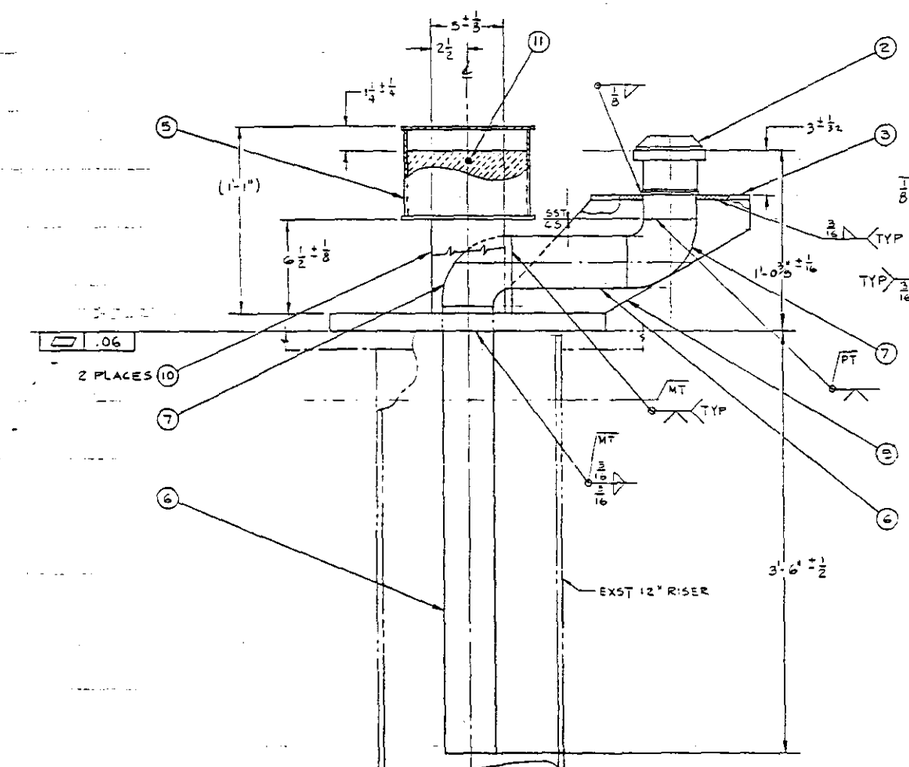

ELEVATION -(BAILS NOT SHOWN FOR CLARITY)

1 ASSEMBLY

SCALE : 3"=1'-0"

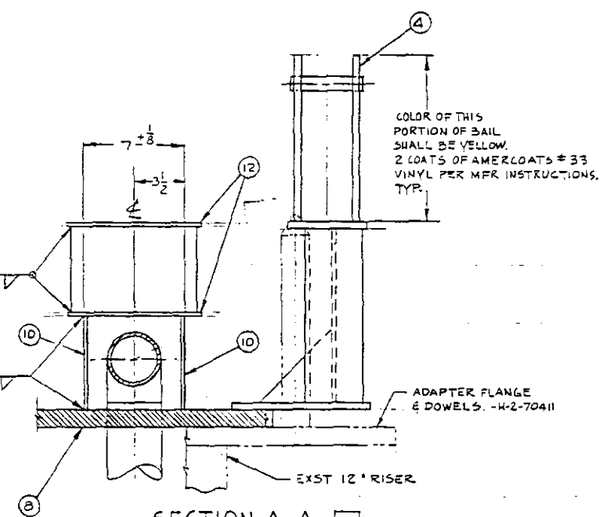

SECTION A-A 106

SCALE : 3"=1'-0"

GENERAL NOTES :

1 - REMOVE BURRS AND BREAK SHARP EDGES.
2 - PAINT ALL EXPOSED CS SURFACES W/ONE COAT OF AMERCOAT #38 PRIMER AND TWO COATS OF AMERCOAT #33 VINYL PER MFR INSTRUCTIONS. COLOR SHALL BE GRAY, EXCEPT AS NOTED.
3 - IDENTIFY ASSEMBLY W/ DRAWING NUMBER, PART NUMBER, AND DWG REV NUMBER W/ 1/2" HIGH LETTERS. COLOR SHALL BE BLACK, AMERCOAT #33 PER MFRS INSTRUCTION. NO PRIMER COAT IS NEEDED ON CS.
4 - HYDRO TEST PIPING AT 200 PSIG.

WELDING AND INSPECTION REQUIREMENTS

FABRICATION	1. WELDING STANDARD	☐ ASME	☒ ASME B31.1 ☒ ASME DI.1 ☒ HWS-10033 OPTIONAL (IN-HOUSE)
	2. PROCEDURE SPEC. & PERFORMANCE CERT.	☒ ASME SEC. IX	☒ ASME DI.1 ☐
	3. FILLER MATERIAL	☒ ASME SFA-5.18	☐
INSPECTION	4. VISUAL (VT)	☒ WELDING STD. NO. (1) ☐ PTLP	☐ MOOT PASS ☒ FINAL SPP 2.5.0 (B) (IN HOUSE)
	5. PENETRANT (PT)	☒ WELDING STD. NO. (1)	☒ SPP 2.1.0(B) (IN HOUSE)
	6. MAGNETIC PART. (MT)	☒ WELDING STD. NO. (1)	☒ SPP 2.2.0(B) (IN HOUSE)
	7. ULTRASONIC (UT)	☐ WELDING STD. NO. (1)	☐
	8. RADIOGRAPH (RT)	☐ WELDING STD. NO. (1)	☐
	9. LEAK TEST (LT)	☐	☐

☒ OTHER REQTS.
MT & PT FINAL PASS WHERE SHOWN.

UNLESS OTHERWISE SPECIFIED
DIMENSIONS ARE IN INCHES
TOLERANCE ON:
DECIMALS ANGLES FRACTIONS
— — ± 1/16

DO NOT SCALE PRINT

H-2-70445	JUMPER ASSY - A-G PUMP	PB 1"				REVISION PER FCN 52316	1
H-2-72026	JUMPER ASSY - A-G PUMP						
H-2-70411	CENTRAL PUMP PIT						
REFERENCE DRAWINGS			COMMENT PRT ISSUE NO. 2	3/19/80	CHECK PRT ISSUE NO. 1	3/10/80	1
NEXT USED ON			DRAWING STATUS				

DRAWING APPROVALS — DATE

J. WILL 3/80
J. Wenger 3/19/80
A.N. VAN DAN 3/7/80

U. S. Department of Energy
Richland Operations Office
Rockwell Hanford Operations
Richland, Washington 99352

DUMMY PUMP HEAD

SCALE SHOWN | DWG NO. 241-G | REV NO. 0402

NONE | NOT REQ'D | H-2-75255 | SHEET 1 OF 1

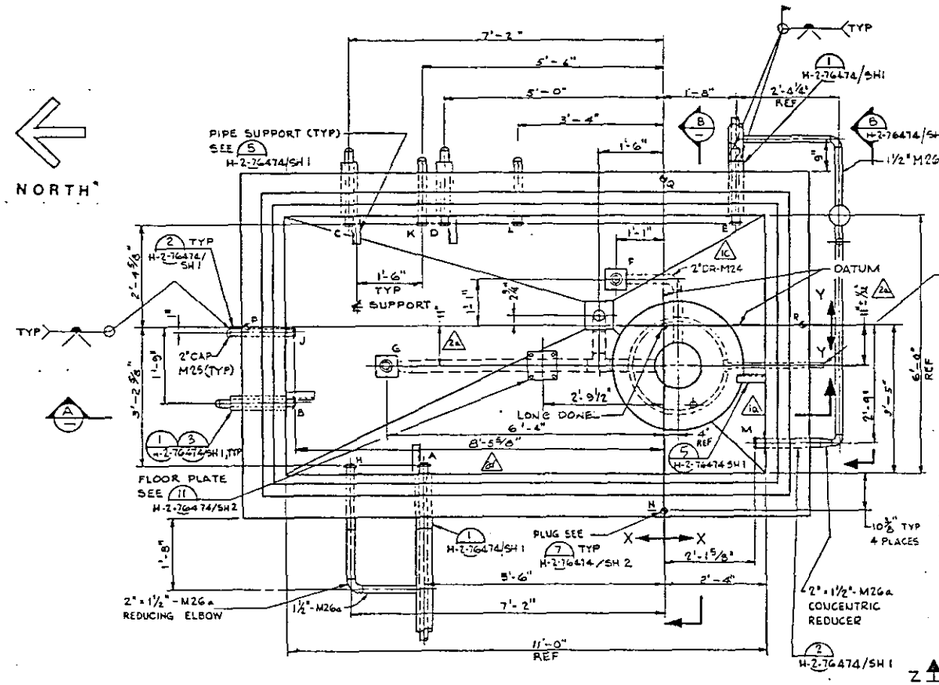

PLAN SHOWN WITH COVER BLOCK REMOVED

ARRANGEMENT

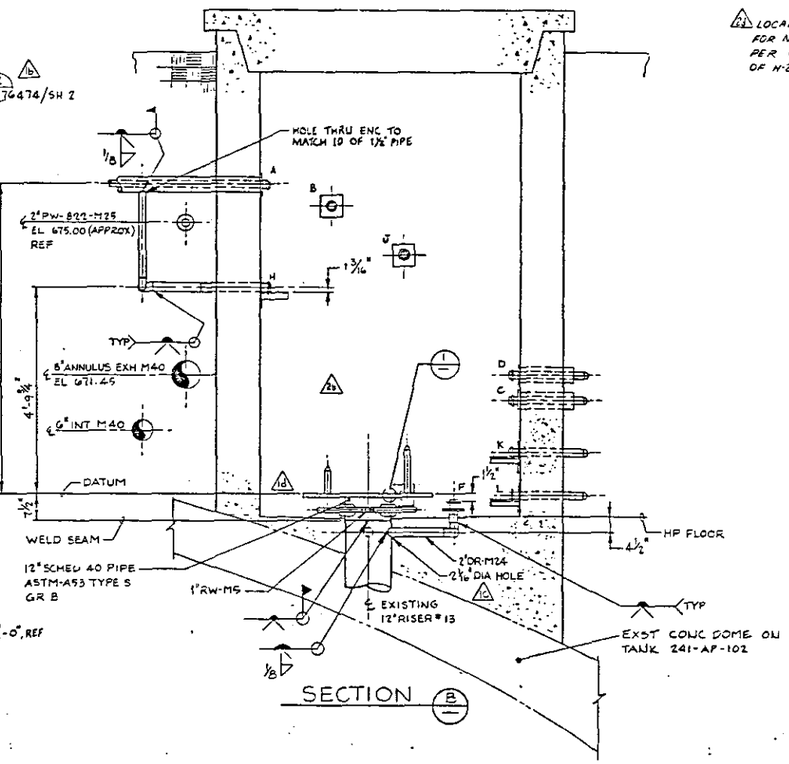

SECTION B

AS BUILT DIMENSIONS			
	"X"	"Y"	"Z"
A	5'-6 3/64"	3'-2 53/64"	7'-2 3/64"
B	8'-5 3/64"	1'-8 53/64"	6'-8 53/64"
C	7'-2 3/64"	2'-4 53/64"	2'-2 3/64"
D	5'-0 3/64"	2'-4 53/64"	2'-9 3/64"
E	1'-8 3/64"	2'-4 53/64"	2'-1 3/64"
F	1'-0 3/64"	1'-1 3/64"	0'-1 3/64"
G	6'-3 53/64"	0'-11 3/64"	0'-0 3/64"
H	7'-2 3/64"	3'-2 53/64"	4'-9 3/64"
J	8'-5 3/64"	0'-1 1/64"	5'-6 3/64"
K	5'-6 3/64"	2'-4 53/64"	1'-0 3/64"
L	3'-4 3/64"	2'-4 53/64"	0'-0 3/64"
M	2'-1 3/16"	2'-9 1/16"	0'-8 53/64"
N	—	—	10'-9 53/64"
P	—	—	10'-9 53/64"
Q	—	—	10'-9 53/64"
R	—	—	10'-9 53/64"
FACE OF FLANGE ELEVATION *			668'-8 13/64"

△2c LOCATION TOLERANCE FOR NOZZLE M TO BE PER GEN NOTE 3 OF H-2-90563

△2a

* FLANGE EL IS TAKEN AT BASE OF LONG DOWEL

NOTES:

1. FOR GENERAL NOTES SEE DWG H-2-76472.
2. FOR CONTINUATION OF PIPING SEE DWG H-2-76472.
3. NOTE DATUM LINE IS REFERENCE TO FACE OF 12" RISER FLANGE

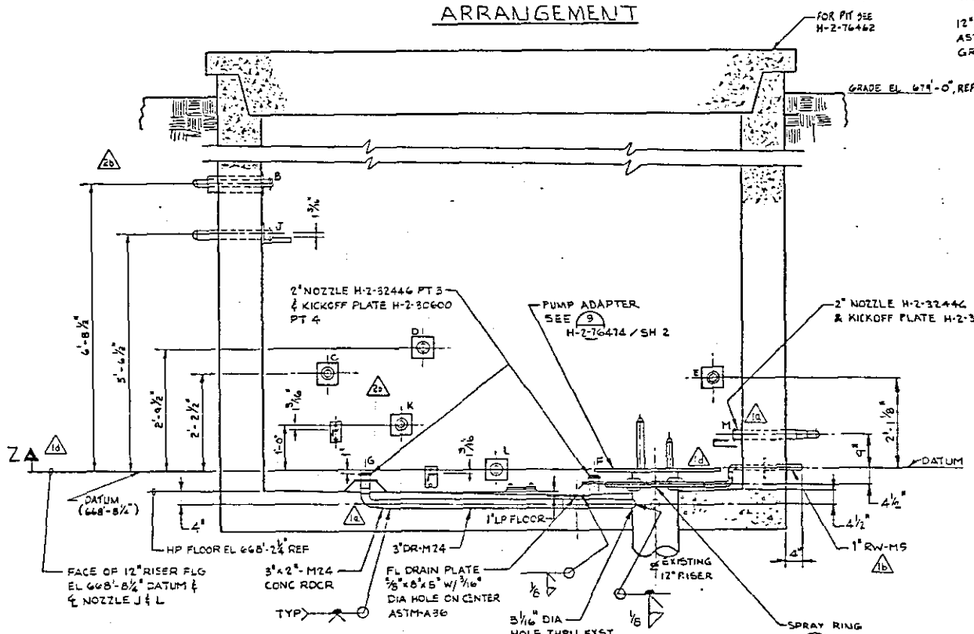

SECTION A

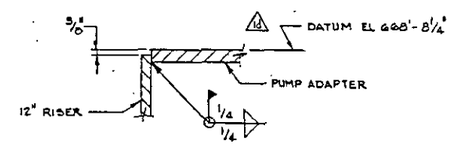

SECTION

DETAIL 1
SCALE: NONE

H-2-32446	MALE CONNECTOR NOZZLE	
H-2-30600	STD SQUARE KICKOFF PLATE	
H-2-30635	DRAWING LIST	
NUMBER	TITLE	
REFERENCES		
NEXT USED ON	H-2-90436	

H-2-90534	PIPING PLAN TANK 102
DRAWING	TIT-B
DRAWING TRACEABILITY LIST	

REV	DESCRIPTION
2	AS-BUILT FOR PROJ B-340 ADDED X Y Z DIMENSIONS NOTE & F2 c) RCD CHNG 2 E.F.1 CHNG ADD DIM & E7, ADDED 2 NOTE B-340-172 & F1 d) RCD b) DFC-B340-317 ZN B8,C7,D4 c) DFC-B340-313 ZN E2,E,T
1	REVISION IAW DFC-B340-765 a) 3"DR-M24 TO NOZZ G IN 7B 2¾" IN G8 & D1 & B b) REROUTED FLG EL 668'-8¼" DATUM WAS EL 668'-9" c) RELOCATED FACE OF 12" RISER 2"DR-M24 FROM NOZZ F ZONE G6 & DET 12 IN 5E & F3 d) REROUTED IN G6 & G8 b) ADDED 1"-RW-RS c) RELOCATED NOZZ M & SUPPORT

MICROFILMED

APPROVAL: BY-DATE; KEM APPROVAL

COMMENT REVIEW

RHO APPROVAL

RELEASED FOR CONSTRUCTION

U. S. DEPARTMENT OF ENERGY
Richland Operations Office
KAISER ENGINEERS HANFORD COMPANY

PIPING
PLAN AND SECTION
241-AP-02D PUMP PIT

PROJECT TITLE: 241-AP TANK FARM

CHECKED: D. PECK
DRAWN: B. MEYER
DESIGNED: B. MEYER
Q. APPLICATION:

PROJ: B-340 WO: X49202 JOB: R537A2
SCALE: 1/4"=1'-0" BLDG: 241-AP SHEET: 0402
DRAWING NUMBER: H-2-76473 SCALE 1 X 1 REV 2

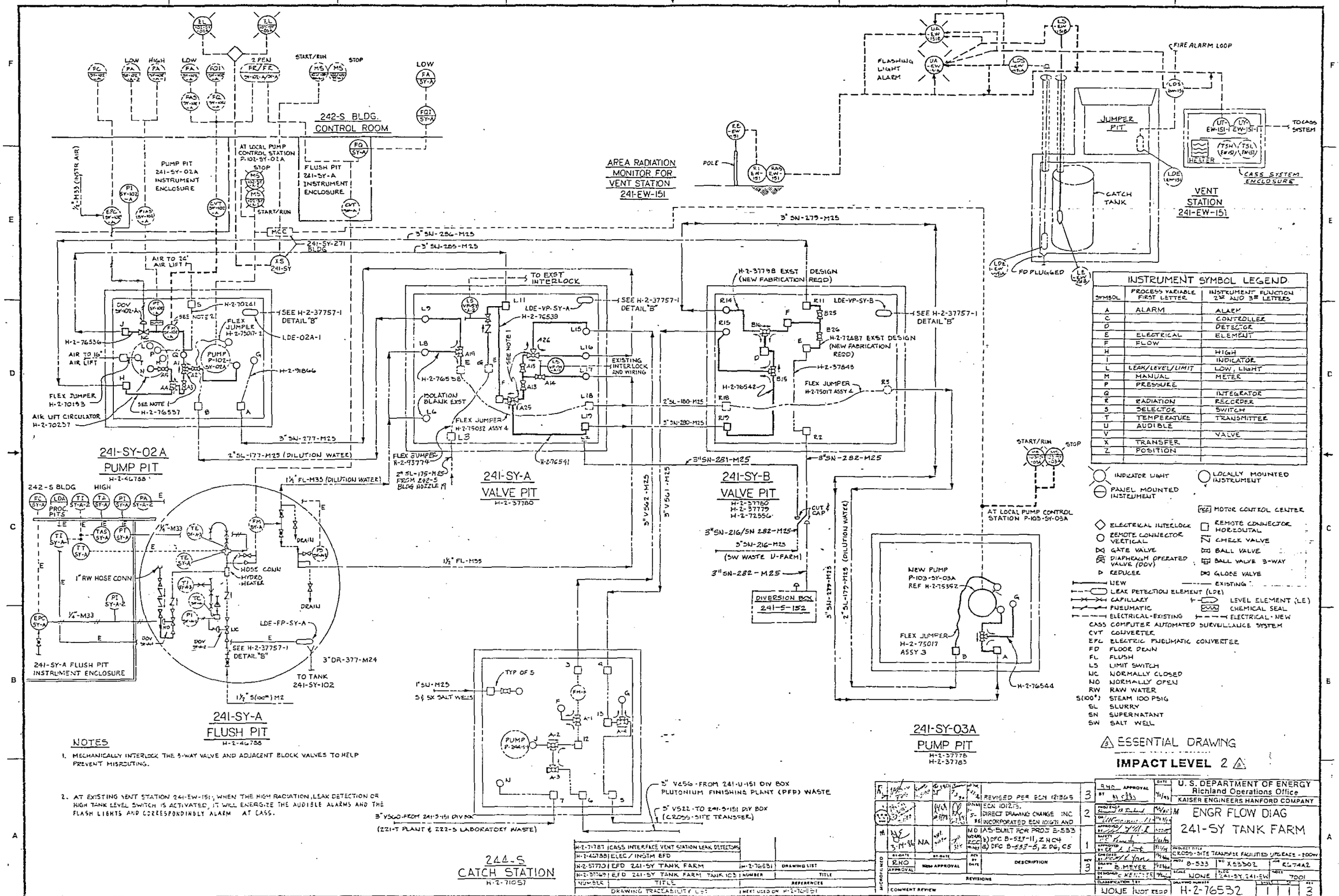
242-S BLDG.
CONTROL ROOM
PUMP PIT
241-SY-02A
INSTRUMENT
ENCLOSURE
AT LOCAL PUMP
CONTROL STATION
P-102-SY-02A
FLUSH PIT
241-SY-A
INSTRUMENT
ENCLOSURE
241-SY-271
BLDG
AIR TO 24"
AIR LIFT
AIR TO 16"
AIR LIFT
AIR LIFT CIRCULATOR
H-2-70237
FLEX JUMPER
H-2-70193
H-2-76536
H-2-76537
H-2-91866
PUMP
P-102-1
SY-02A
241-SY-02A
PUMP PIT
H-2-46788
3" SN-277-M25
2" SL-177-M25 (DILUTION WATER)
3" SN-256-M25
3" SU-255-M25
TO EXST
INTERLOCK
SEE H-2-37757-1
DETAIL "B"
LDE-02A-1
ISOLATION
BLANK EXST
FLEX JUMPER
H-2-75032 ASSY 4
FLEX JUMPER
H-2-93774
2" SL-175-M25
FROM 242-S
BLDG NOZZLE M
241-SY-A
VALVE PIT
H-2-37780
EXISTING
INTERLOCK
AND WIRING
2" SL-180-M25
3" SN-280-M25
3" SN-279-M25
H-2-37798 EXST DESIGN
(NEW FABRICATION REQD)
H-2-72487 EXST DESIGN
(NEW FABRICATION
REQD)
H-2-37843
H-2-76542
FLEX JUMPER
H-2-75017 ASSY 4
3" SN-281-M25
3" SN-282-M25
241-SY-B
VALVE PIT
H-2-37780
H-2-37779
H-2-72556
3" SN-216/SN 282-M25
3" SN-216-M25
(SW WASTE U-FARM)
3" SN-282-M25
DIVERSION BOX
241-S-152
CUT & CAP
3" V562-M25
3" V561-M25
1½" FL-M33 (DILUTION WATER)
1½" FL-M33
1½" FL-M33
1" RW HOSE CONN
HOSE CONN
HYDRO
HEATER
DRAIN
LDE-FP-SY-A
SEE H-2-37757-1
DETAIL "B"
3" DR-377-M24
TO TANK
241-SY-102
241-SY-A FLUSH PIT
INSTRUMENT ENCLOSURE
241-SY-A
FLUSH PIT
H-2-46788
NOTES
1. MECHANICALLY INTERLOCK THE 3-WAY VALVE AND ADJACENT BLOCK VALVES TO HELP PREVENT MISROUTING.
2. AT EXISTING VENT STATION 241-EW-151; WHEN THE HIGH RADIATION, LEAK DETECTION OR HIGH TANK LEVEL SWITCH IS ACTIVATED, IT WILL ENERGIZE THE AUDIBLE ALARMS AND THE FLASH LIGHTS AND CORRESPONDINGLY ALARM AT CASS.
AREA RADIATION
MONITOR FOR
VENT STATION
241-EW-151
POLE
FLASHING
LIGHT
ALARM
FIRE ALARM LOOP
JUMPER
PIT
CATCH
TANK
FD PLUGGED
TO CASS
SYSTEM
HEATER
CASS SYSTEM
ENCLOSURE
VENT
STATION
241-EW-151
AT LOCAL PUMP CONTROL
STATION P-103-SY-03A
NEW PUMP
P-103-SY-03A
REF H-2-75392
FLEX JUMPER
H-2-75017
ASSY 3
H-2-76544
241-SY-03A
PUMP PIT
H-2-37778
H-2-37783
1" SU-M25
5 & 5X SALT WELLS
TYP OF 5
PUMP
P-244-1
3" V456 - FROM 241-U-151 DIV BOX
PLUTONIUM FINISHING PLANT (PFP) WASTE
3" V522 - TO 241-S-151 DIV BOX
(CROSS-SITE TRANSFER)
3" V560 - FROM 241-S-151 DIV BOX
(221-T PLANT & 222-S LABORATORY WASTE)
244-S
CATCH STATION
H-2-71057
H-2-71787 (CASS INTERFACE VENT STATION LEAK DETECTORS)
H-1-46788 ELEC / INSTM EFD
H-2-51770 EFD 241-SY TANK FARM
H-2-37769 EFD 241-SY TANK FARM TANK 103
DRAWING LIST
NUMBER
TITLE
REFERENCES
DRAWING TRACEABILITY LIST
INSTRUMENT SYMBOL LEGEND
SYMBOL | PROCESS VARIABLE FIRST LETTER | INSTRUMENT FUNCTION 2ND AND 3RD LETTERS
A | ALARM | ALARM
C | | CONTROLLER
D | | DETECTOR
E | ELECTRICAL | ELEMENT
F | FLOW |
H | | HIGH
I | | INDICATOR
L | LEAK/LEVEL/LIMIT | LOW, LIGHT
M | MANUAL | METER
P | PRESSURE |
Q | | INTEGRATOR
R | RADIATION | RECORDER
S | SELECTOR | SWITCH
T | TEMPERATURE | TRANSMITTER
U | AUDIBLE |
V | | VALVE
X | TRANSFER |
Z | POSITION |
INDICATOR LIGHT
LOCALLY MOUNTED INSTRUMENT
PANEL MOUNTED INSTRUMENT
MOTOR CONTROL CENTER
ELECTRICAL INTERLOCK
REMOTE CONNECTOR HORIZONTAL
REMOTE CONNECTOR VERTICAL
CHECK VALVE
GATE VALVE
BALL VALVE
DIAPHRAGM OPERATED VALVE (DOV)
BALL VALVE 3-WAY
REDUCER
GLOBE VALVE
NEW
EXISTING
LEAK DETECTION ELEMENT (LDE)
CAPILLARY
LEVEL ELEMENT (LE)
PNEUMATIC
CHEMICAL SEAL
ELECTRICAL-EXISTING
ELECTRICAL-NEW
CASS COMPUTER AUTOMATED SURVEILLANCE SYSTEM
CVT CONVERTER
EPC ELECTRIC PNEUMATIC CONVERTER
FD FLOOR DRAIN
FL FLUSH
LS LIMIT SWITCH
NC NORMALLY CLOSED
NO NORMALLY OPEN
RW RAW WATER
S(100°) STEAM 100 PSIG
SL SLURRY
SN SUPERNATANT
SW SALT WELL
ESSENTIAL DRAWING
IMPACT LEVEL 2
REVISED PER ECN 121365
ECN 101273.
DIRECT DRAWING CHANGE INC
INCORPORATED ECN 101671 AND
AS-BUILT FOR PROJ B-533
DESCRIPTION
REVISIONS
COMMENT REVIEW
U. S. DEPARTMENT OF ENERGY
Richland Operations Office
KAISER ENGINEERS HANFORD COMPANY
ENGR FLOW DIAG
241-SY TANK FARM
CROSS-SITE TRANSFER FACILITIES UPGRADE - 200W
B. MEYER
NONE
H-2-76532

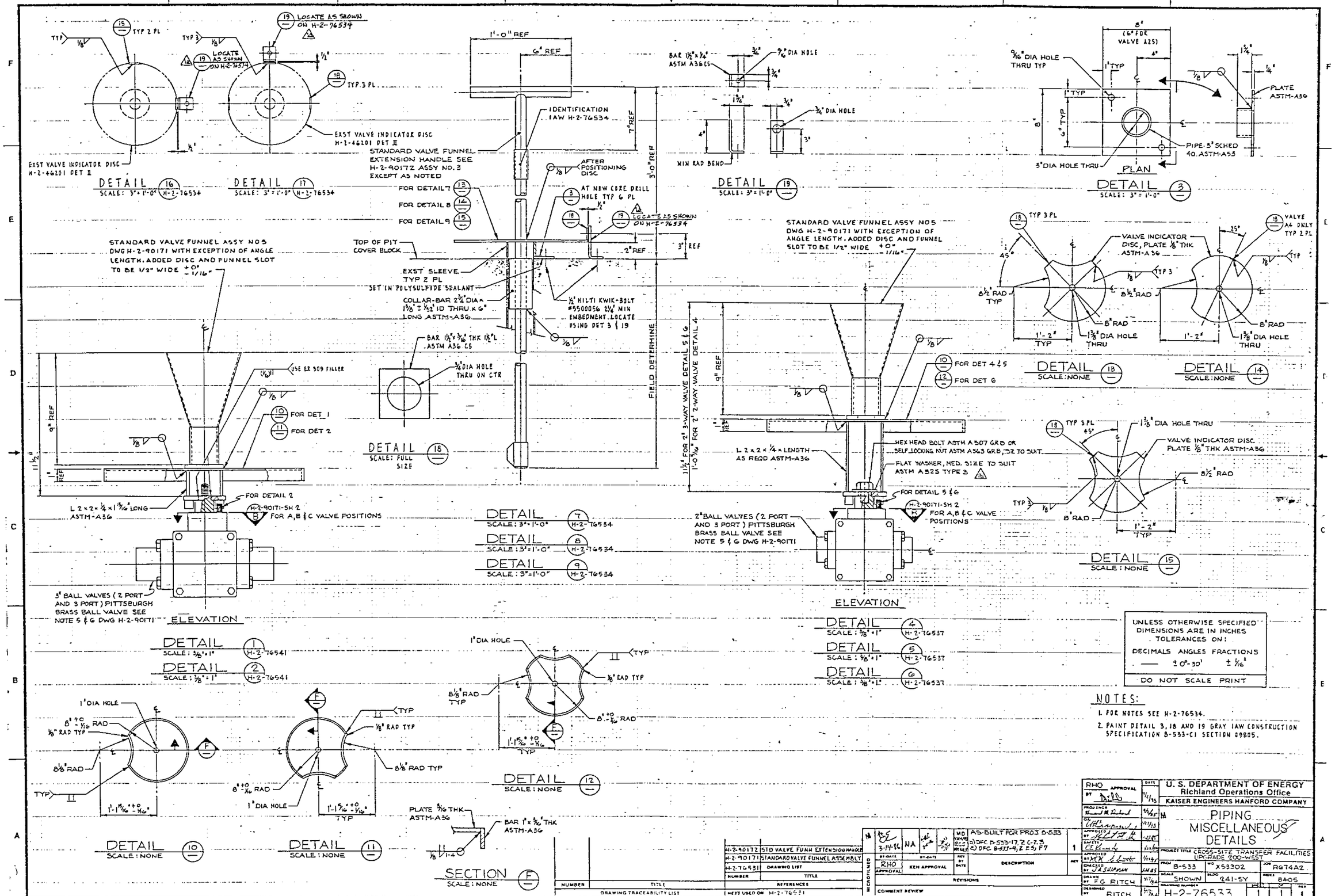

UNLESS OTHERWISE SPECIFIED DIMENSIONS ARE IN INCHES
TOLERANCES ON:
DECIMALS ANGLES FRACTIONS
— ± 0°-30' ± 1/16"
DO NOT SCALE PRINT

NOTES:

1. FOR NOTES SEE H-2-76534.
2. PAINT DETAIL 3, 18 AND 19 GRAY IAW CONSTRUCTION SPECIFICATION B-533-C1 SECTION 09805.

NUMBER	TITLE
H-2-90172	STD VALVE FUNN EXTENSION HANDLE
H-2-90171	STANDARD VALVE FUNNEL ASSEMBLY
H-2-76531	DRAWING LIST

DRAWING TRACEABILITY LIST — REFERENCES — NEXT USED ON H-2-76531

REVISIONS: AS-BUILT FOR PROJ B-533 — 1) DFC B-533-17, Z C-23 2) DFC B-533-4, Z E5, F7

COMMENT REVIEW

RHO APPROVAL — KEH APPROVAL

U. S. DEPARTMENT OF ENERGY
Richland Operations Office
KAISER ENGINEERS HANFORD COMPANY

PIPING MISCELLANEOUS DETAILS

PROJECT TITLE: CROSS-SITE TRANSFER FACILITIES UPGRADE 200-WEST

PROJ B-533 | WO X53302 | JOB R674A2
SCALE SHOWN | BLDG 241-SY | INDEX 8405
DRAWN BY F.G. RITCH | DESIGNED BY RITCH
DRAWING NUMBER H-2-76533 | SHEET 1 | OF 1 | REV 1

CONT'D FROM Z, B-1 & 2

△ 8. MATERIAL AND INSTALLATION OF INSULATION FOR NEW PIPING, VALVES AND FITTINGS SHALL BE IN ACCORDANCE WITH HPS-1114-M. INSULATION SHALL BE TYPE E, 1½ THICK. SEAL INSULATION W/ JOHNS-MANVILLE J-M ADHESIVE, 1 COAT W/ CHILDERS CP-10 MASTIC COATING PER MANUFACTURERS RECOMMENDATIONS.

△ 9: 3000# SOCKET WELD COUPLING AND/OR CAP MAY BE USED AS AN ALTERNATE AT TIE-IN AND CAP LOCATIONS WHERE RADIATION READINGS ON EXISTING LINES PRECLUDE WELD PREPARATION. MATERIAL TO BE ASTM A105. SOCKET WELD COUPLINGS MAY HAVE THE SEATING COLLAR REMOVED TO ALLOW MOVEMENT OVER THE O.D. OF THE PIPE.

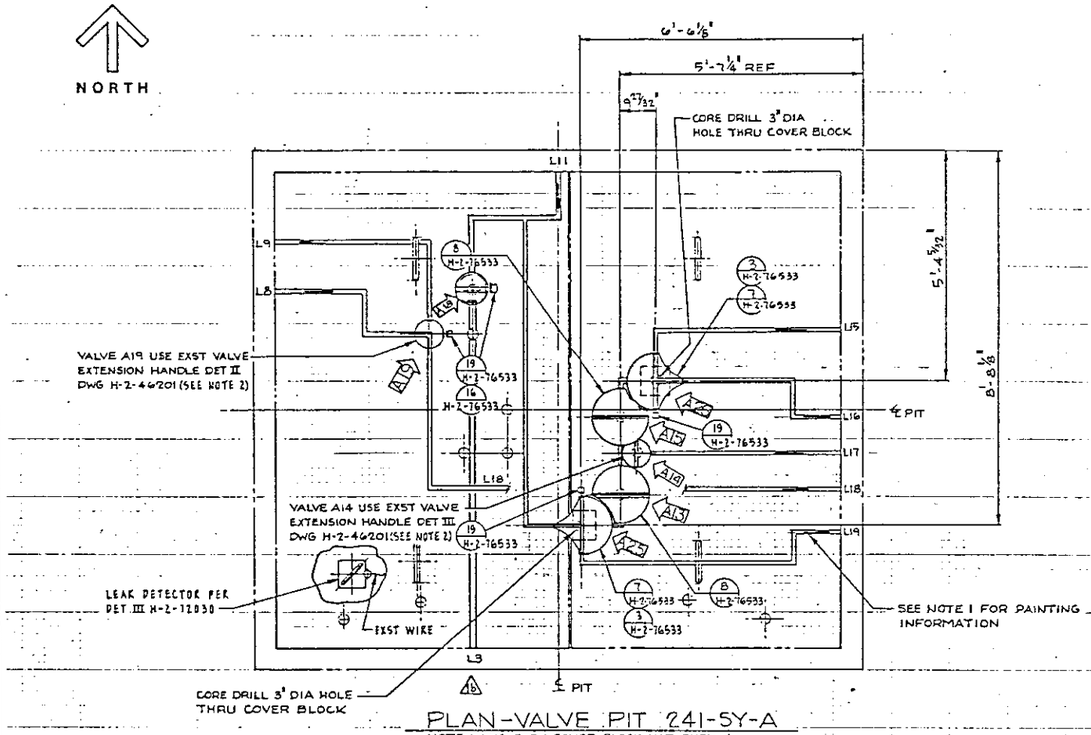

PLAN-VALVE PIT 241-SY-A

NOTE: ANGLE ON COVER BLOCK NOT SHOWN FOR CLARITY

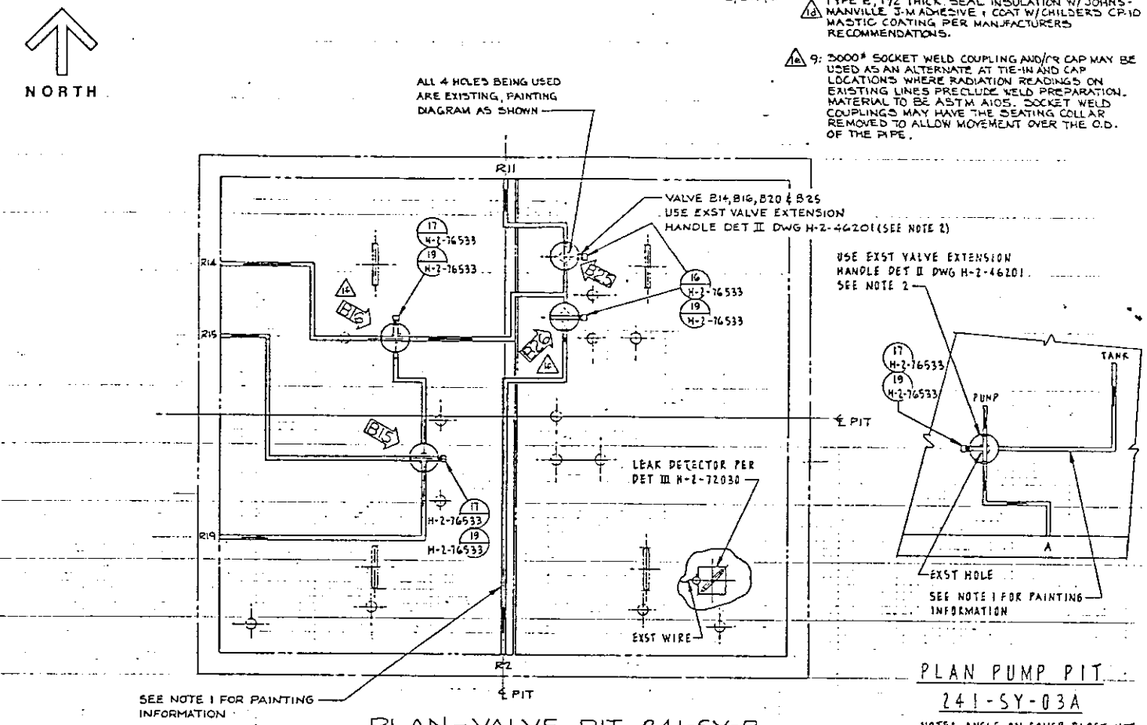

PLAN-VALVE PIT 241-SY-B

NOTE: ANGLE ON COVER BLOCK NOT SHOWN FOR CLARITY

PLAN PUMP PIT 241-SY-03A

NOTE: ANGLE ON COVER BLOCK NOT SHOWN FOR CLARITY

△ 9- PLUG UNUSED EXST VALVE EXTENSION HANDLE HOLES W/DET 204 DWG H-2-37715-FIELD DETERMINE QUANTITY

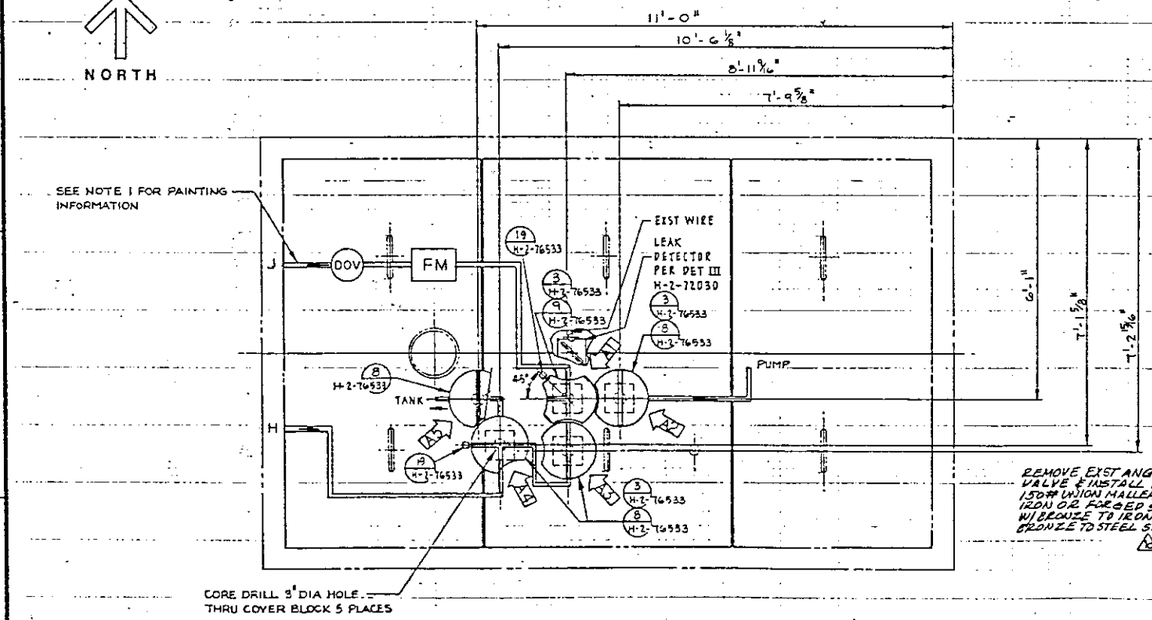

PLAN-PUMP PIT 241-SY-02A

NOTE: ANGLE ON COVER BLOCK NOT SHOWN FOR CLARITY

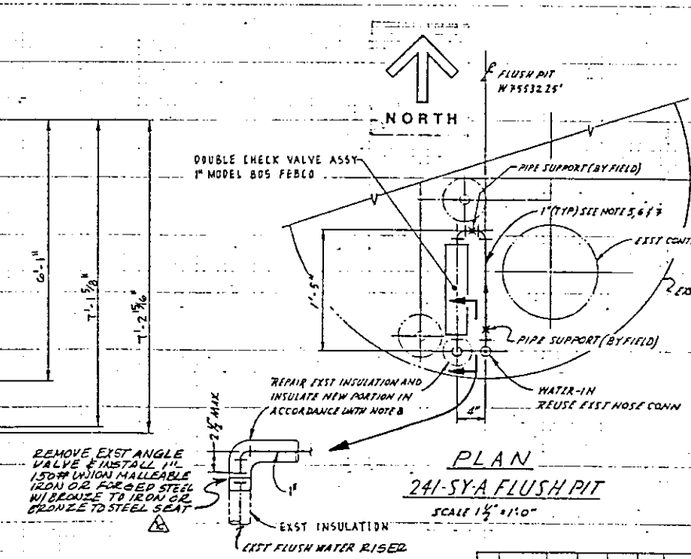

PLAN

241-SY-A FLUSH PIT

SCALE 1½" = 1'-0"

NOTES

1. PAINT ALL PIT IDENTIFICATIONS AND PIT COVER FLOW DIAGRAMS INFORMATION IAW DRAWING H-2-37797 AND CONSTRUCTION SPECIFICATION B-533-C1.
2. IF NEW FABRICATION IS REQUIRED FOR VALVE EXTENSION HANDLES H-2-46201 USE 1" SCH 80 PIPE.
3. PAINT INSIDE DIAMETER OF NEW CORE DRILLS WITH SPECIAL PROTECTIVE COATING PER CONSTRUCTION SPECIFICATION B-533-C1. (COLOR GRAY)
4. PAINT OUT EXISTING PIT COVER FLOW DIAGRAMS THAT ARE NOT USED.
5. PIPING MATERIALS SHALL BE IN ACCORDANCE WITH THE FOLLOWING:
   PIPE: SCHED 40, BLACK STEEL, PER ASTM A53 TYPE S OR E GR B.
   FITTINGS: CL150 MALLEABLE IRON, THREADED PER ANSI B16.3
   PIPE JOINT SEALANT FOR THREADED JOINTS: CRANE PACKING COMPANY "JC-30".
6. HYDROSTATIC TEST NEW PIPING AT 150 PSIG.
7. FABRICATE AND INSTALL PIPING IN ACCORDANCE WITH ANSI B31.3.

(CONTINUED AT ZONE F-1 & 2)

NUMBER	TITLE
H-2-68519	241-SY-A FLUSH PIT PIPING MODIFICATIONS
H-2-37797	PIT COVER PAINTING DIAGRAM 241-SY TK FARM

DRAWING TRACEABILITY LIST

NUMBER	TITLE
H-2-37715	STRUCT MISC DETS
H-2-46201	PIPING MISC DETS
H-2-72030	STO TANK FARM DETS
HPS-1114-M	STD SPEC FOR THERM INSULATION OF ABOVE-GROUND PIPING
H-2-37797	PIT COVER PAINTING DIAGRAM
H-2-76531	DRAWING LIST

REFERENCES — NEXT USED ON H-2-76531

REV	BY-DATE	DESCRIPTION
1	NA	AS-BUILT FOR PROJ B-533 SUPPLIED BY OTHERS 1) GEN REV FROM INFORMATION 2) DFC B-533-14, Z F-1 & 2 3) DFC B-533-11, Z F-1 & 2 4) DFC B-533-8, Z A-4 5) DFC B-533-5, Z CD & 7 6) DFC B-533-4, Z C2, A4

MICROFILMED — RHO APPROVAL BY-DATE — KEN APPROVAL BY-DATE — REVISIONS — COMMENT REVIEW

RHO APPROVAL BY — DATE 4/13/95

U. S. DEPARTMENT OF ENERGY
Richland Operations Office
KAISER ENGINEERS HANFORD COMPANY

PROJ ENGR — DATE 4/6/95
QA — DATE 4/13/95
APPROVED BY — DATE 4/13/95
SAFETY — DATE 4/13/95
APPROVED BY — DATE 4/13/95
CHECKED BY J A SHIPMAN — DATE 1/11/95
DRAWN BY F G RITCH — DATE 4/13/95
DESIGNED BY RITCH — DATE 4/13/95

PIPING SERVICE PIT AND COVER BLOCK MODIFICATIONS

PROJECT TITLE: CROSS-SITE TRANSFER FACILITIES UPGRADE-200 WEST

PROJ B-533 | WO X53802 | JOB R674A2

SCALE ½" = 1'-0" | FLDR 241-SY | SHEET 0402

DRAWING NUMBER H-2-76534 | SHEET 1 | SHEETS 1 | REV 1

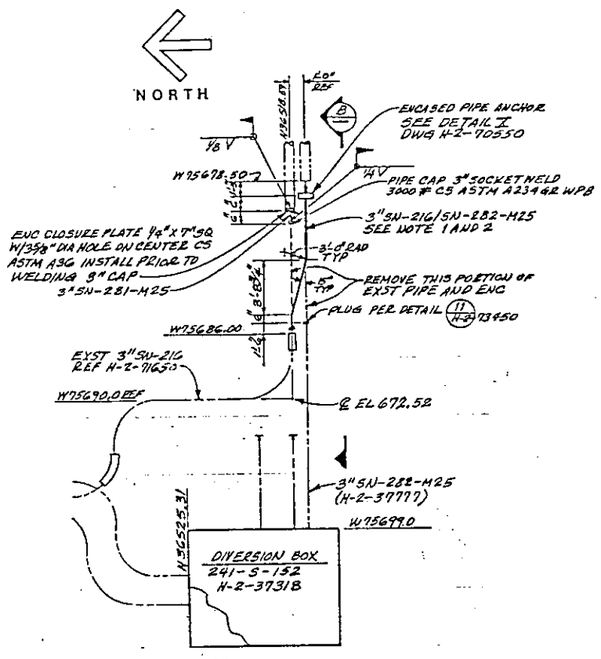

PLAN

SCALE: NONE

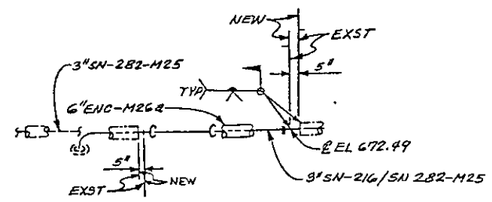

SECTION 6

SCALE: 1/4" = 1'-0"

NOTES

1 - 3000# SOCKET WELD COUPLING AND OR CAP MAY BE USED AS AN ALTERNATE AT TIE-IN AND CAP LOCATIONS WHERE RADIATION READINGS ON EXISTING LINES PRECLUDE WELD PREPARATION. MATERIAL TO BE ASTM A105. SOCKET WELD COUPLINGS MAY HAVE THE SEATING COLLAR REMOVED TO ALLOW MOVEMENT OVER THE O.D. OF THE PIPE.

2 - NEW SECTION OF 3"SN-216/SN-282-M25 PIPE & ENCASEMENT DOES NOT REQUIRE HEAT TRACE BUT WILL HAVE BUBBLE WRAP & POLYURETHANE INSULATION PER DET II ON H-2-70550

3 - ALL MATERIALS, FABRICATION AND TESTING SHALL BE IN ACCORDANCE WITH CONSTRUCTION SPEC B-533-01

NEW SHEET ADDED TO REFLECT AS-BUILT CONDITIONS PER DFC B-533-9 & 14

NUMBER	TITLE	REFERENCES
H-2-76650	PIPING PLAN & DETS 241-S, SX & SY AREAS	H-2-76531
H-2-37777	PIPING PLAN 241-SY TK FARM & 241-S-152	

DRAWING TRACEABILITY LIST

NUMBER	TITLE
H-2-73450	PIPING ISOLATION DETAILS
H-2-70550	STANDARD TANK FARM DETAILS
H-2-76531	DRAWING LIST

HERE USED ON H-2-76531

MICROFILMED

BY-DATE	BY-DATE	REV BY DATE	DESCRIPTION	REV
APPROVAL	KEN APPROVAL			

REVISIONS

COMMENT REVIEW

RHO APPROVAL BY R. Morris DATE 3/7/96

PROJ ENGR Samuel M. Robert 3/6/96

QA N/A

APPROVED BY N/A

SAFETY N/A

APPROVED BY

CHECKED BY Mary Dunnian 3/5/96

DRAWN BY RC CROSSLEY 3-5-96

DESIGNED BY N/A

U. S. DEPARTMENT OF ENERGY
Richland Operations Office
KAISER ENGINEERS HANFORD COMPANY

M PIPING PLAN AND SECTION

PROJECT TITLE CROSS-SITE TRANSFER FACILITIES UPGRADE 200-WEST

PROJ B-533 WO X53302 ACT R67742

SCALE NONE BLDG 241-SY PAGES 0402

DRAWING NUMBER H-2-76535 SHEET 1 OF 1 REV 0

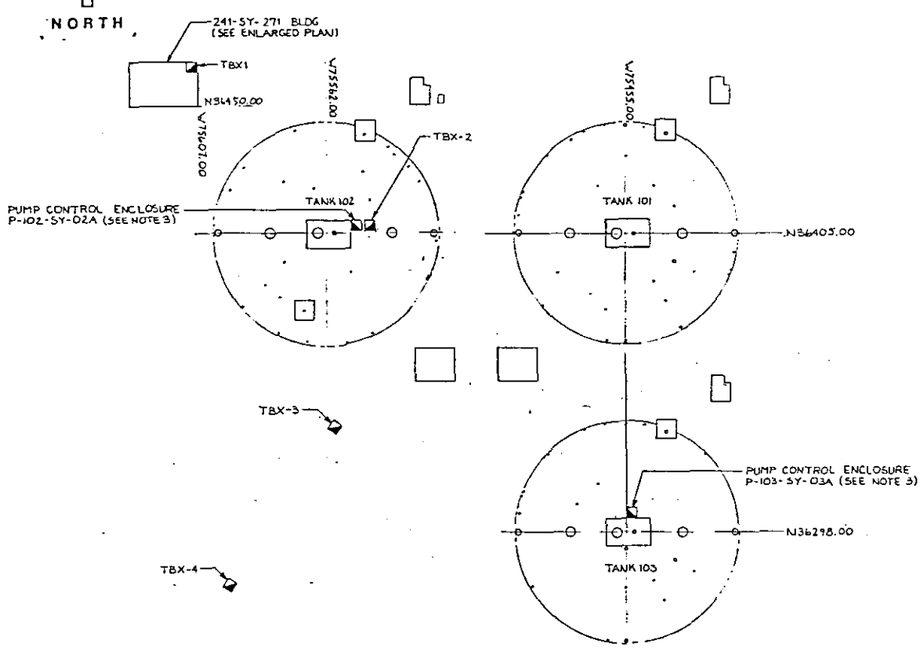

241-SY-PLAN
NTS

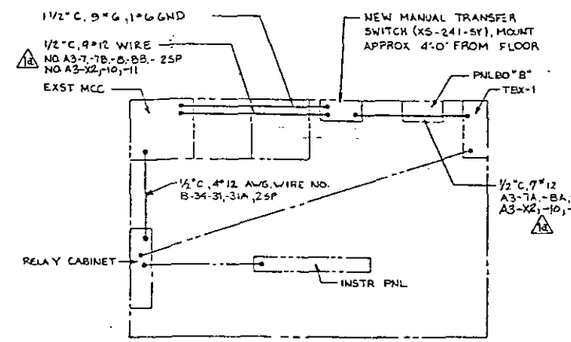

241-SY-271 BLDG ENLARGED PLAN
(REF DWG H-2-37734, H-2-46789)
SCALE: 1/4 = 1'-0"

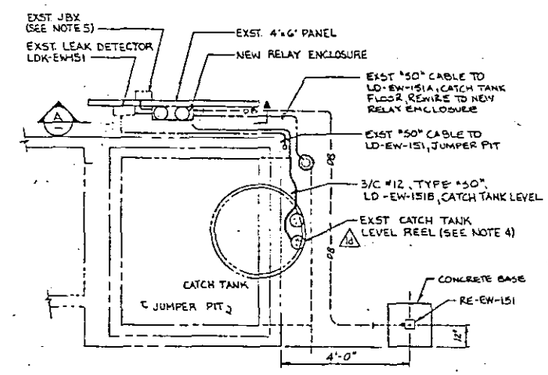

241-EW-151 VENT STATION ENLARGED PARTIAL PLAN
(REF. DWG H-2-38372 & H-2-68274)
SCALE: 3/8" = 1'-0"

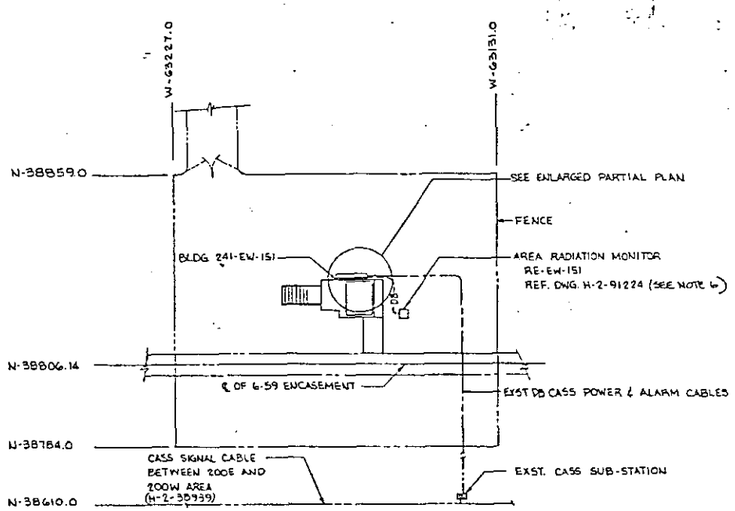

241-EW-151 VENT STATION PLAN
NTS

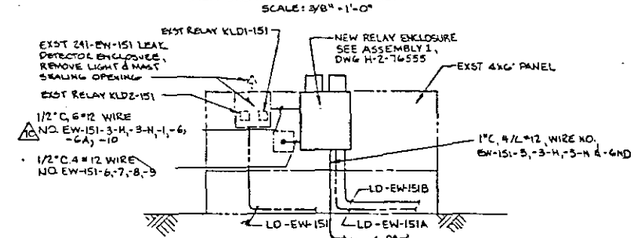

ELEVATION A
NTS

LEGEND

- △ LOCATED IN EXST PUMP CONTROL STATION ENCLOSURE P-102-SY-02A.
- ▲ LOCATED IN EXST RELAY CABINET, 241-SY-271 BLDG.
- ◇ LOCATED IN EXST 241-SY-271 MCC.
- ● LOCATED IN EXST PUMP CONTROL STATION ENCLOSURE P-103-SY-03A.
- + LOCATED IN THE NEW MANUAL TRANSFER SWITCH, 241-SY-271 BLDG.
- ◪ LOCATED IN THE 242-S BLDG CONTROL ROOM.
- ◆ LOCATED IN THE NEW 241-EW-151 RELAY ENCLOSURE (SEE DWG H-2-76555).
- ✳ LOCATED IN THE EXST 241-EW-151 LEAK DETECTOR ENCLOSURE.
- —•— △ WIRE TERMINAL OR SPLICE AND LOCATION (SEE LEGEND).
- -///- WIRING OR EQUIPMENT TO BE DELETED FROM REFERENCED PLANS AND DIAGRAMS THAT EITHER DOESN'T EXST OR IS TO BE REASSIGNED.
- ◪ EXST PUMP CONTROL ENCLOSURE.
- ◪ EXST TERMINAL BOX (TBX).
- † LOCATED IN THE NEW 241-EW-151 RADIATION MONITOR.

GENERAL NOTES:

1. ELECTRICAL SYMBOLS PER DWG H-7-1275, OR AS SHOWN.
2. SEE CONSTRUCTION B-533-C1 FOR ANY MATERIALS NOT CALLED OUT ON THE DRAWINGS AND FOR GENERAL INSTALLATION DETAILS.
3. INSTALL NEW LIGHTED "START"/"STOP" PUSHBUTTONS REWIRED PER ELEMENTARIES ON DWG. H-2-76555. CONNECT NEW PUMP P-103-SY-03A TO EXISTING PUMP CONTROL TERMINAL BOX WITH WIRE PROVIDED WITH NEW PUMP.
4. CONNECT WIRE NO. K151B -SD1 TO THE CATCH TANK LEVEL REEL, AND WIRE NO. K151B -SD2 TO THE RISER.
5. RECONNECT THE EXISTING WIRING (4#12) IN ACCORDANCE WITH THE EW-151 CASS ALARM ELEMENTRY DIAGRAM ON DWG H-2-76554.
6. AREA RADIATION MONITOR SHALL BE NUCLEAR MEASUREMENT CORP. MODEL GA-6-3-2-1-0-0-S-37. UNIT ENCLOSURE SHALL BE NEMA 4; 20 FOOT LENGTH OF CABLE SHALL BE SUPPLIED WITH ENVIRONMENTAL CONNECTORS EACH END; HIGH & FAILURE INDICATION W/MANUAL RESET SHALL BE SUPPLIED; ALSO PROVIDE DPDT CONTACTS RATED 120V AC 10 AMPS. INSTALL PER REF DWG H-2-91224 W/ THE FOLLOWING EXCEPTIONS: PARTS LIST - #6 #12 SUITABLE FOR DIRECT BURIAL & FN 4-1"C, BOTH ONLY FROM ALARM UNIT TO BELOW GRADE; FN 10 WILL CONVERT TO UNTED TYPE 12; DIRECT BURIAL CABLE WILL BE PER NFS-E-10-20.
7. CONCRETE FOR POST BASE SHALL HAVE A MINIMUM COMPRESSIVE STRESS f'_c = 3000 PSI AT 28 DAYS.
8. CONCRETE AGGREGATE SHALL BE A MAXIMUM OF 3/4" AND CONFORM TO ASTM C33.
9. MIX CONCRETE PER ASTM C94.
10. PROPORTION CONCRETE PER ACME APPROVED MIX DESIGN NO. 3047.
11. PROTECT CONCRETE FROM FREEZING.
12. CURE CONCRETE ACCORDING TO ACI 301 PARA 12.2.1 AND 12.2.3.
13. MANUAL RESET SHALL BE INSTALLED ON OUTSIDE OF ENCLOSURE.

NUMBER	TITLE
H-2-37732	ELEC SITE PLAN
H-2-37734	ELEC PLAN, ONE LINE & DIAG
H-2-37735	ELEC ELEMENTARY DIAG
H-2-38372	ELEC LEAK DETECTOR
H-2-38374	ELEC LEAK DETECTION ALARM
H-2-46789	ELEC/INSTR PLANS & DET
H-2-71767	CASS INTERFACE LEAK DET

DRAWING TRACEABILITY LIST

REFERENCES	
NUMBER	TITLE
H-7-1275	ELEC SYMBOL LIST
H-2-91224	DETECTOR MOUNTING ASSY
H-2-34965	LEAK DETECTOR ASSEMBLY
H-2-37732	ELEC SITE PLAN
H-2-37734	ELEC PLAN, ONE LINE & DIAG
H-2-37735	ELEC ELEMENTARY DIAG
H-2-37736	ELEC DETAIL
H-2-37745	VENT DUCT PLAN
H-2-37778	PIPING PLAN 241-SY
H-2-38372	ELEC LEAK DETECTOR
H-2-38374	ELEC LEAK DETECTION ALARM
H-2-38939	ELEC SURVEILLANCE SYST
H-2-46789	ELEC/INSTR PLANS & DET
H-2-68274	ELEC LEAK DETECTOR
H-2-71787	CASS INTERFACE LEAK DET
H-2-76531	DRAWING LIST
NEXT USED ON	H-2-76531

REVISIONS				
REV	DESCRIPTION	REV BY DATE	MOD NUMBER	BY DATE
1	AS-BUILT FOR PROJ B-533 ADDED NOTE CABLE TO LEVEL REEL: C-1,2 c) RCD CHNG Z C.D-5 MOVED c) DFC B-533-12,2 EF4 b) DFC B-533-4, Z C-1,2 a) DFC B-533-7,Z EF4	3-14-86	NA	3/14

MICROFILMED: RHO 3-14-86 APPROVAL; 87-DATE; 87-DATE; REH APPROVAL

COMMENT REVIEW: NONE | NOT REQD

Rockwell APPROVAL BY — DATE

U. S. DEPARTMENT OF ENERGY
Richland Operations Office
KAISER ENGINEERS HANFORD COMPANY

ELEC/INSTM PLANS, ELEVATIONS AND DETAILS

PROJECT TITLE: CROSS-SITE TRANSFER FACILITIES UPGRADE-200W

PROJ ENGR		1-20-84	
DR		9-6-84	
APPROVED		9-6-84	
SAFETY		9-5-85	
APPROVED		1-22-86	
CHECKED		1-22-86	
CHECKED		1/31/86	
DRAWN	TA NALE	12/84	
DESIGNED	C CARLSON	12/84	
CLASSIFICATION			

PROJ B-533 | WO X33302 | AUN R674A2
SCALE SHOWN | BLDG 241-EW, SY, SY, 241-S | PROJ 73CT, 7501
DRAWING NUMBER: NONE | NOT REQD | H-2-76553 | SHEET 1 | OF 1 | REV 1

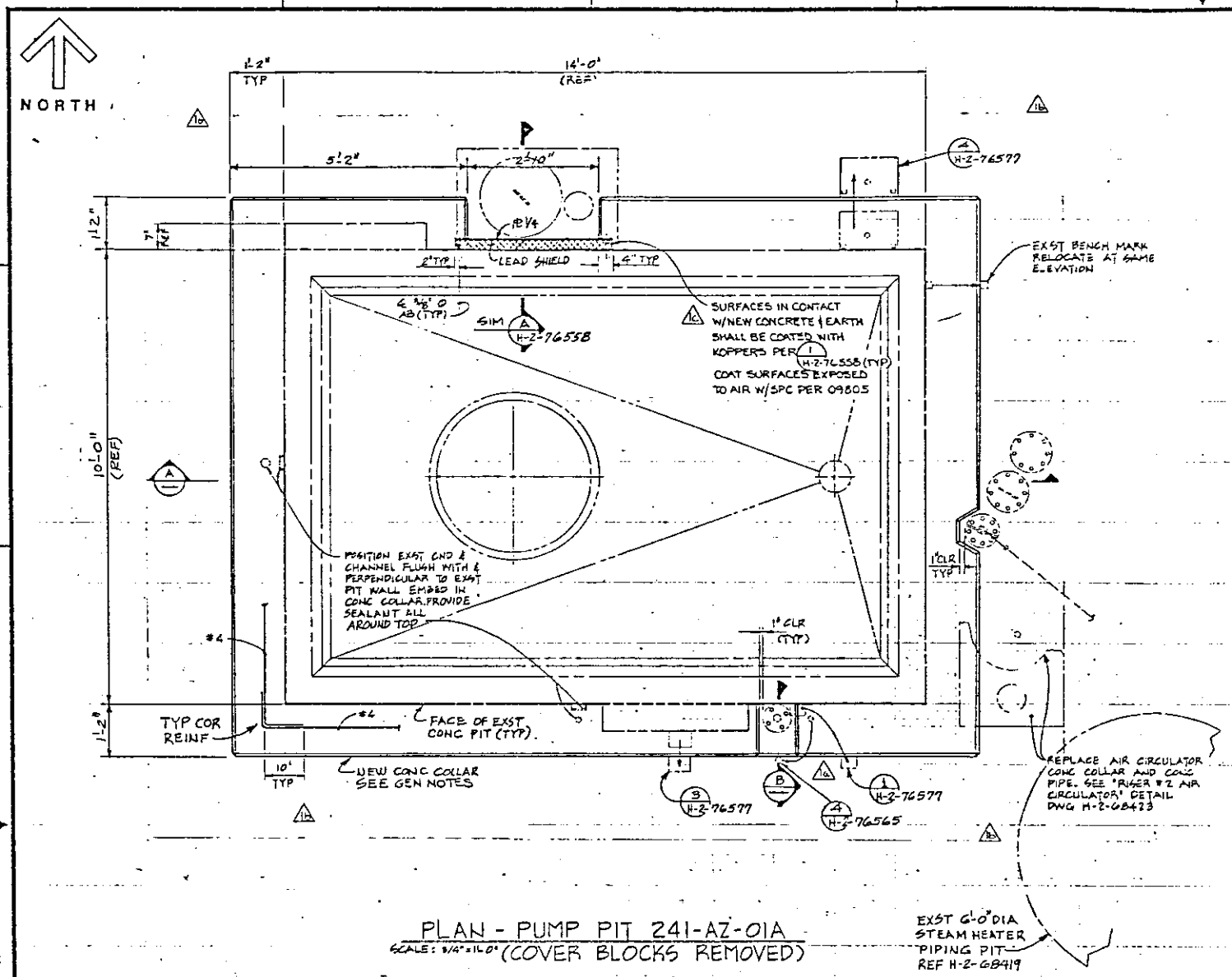

PLAN - PUMP PIT 241-AZ-01A
SCALE: 3/4" = 1'-0" (COVER BLOCKS REMOVED)

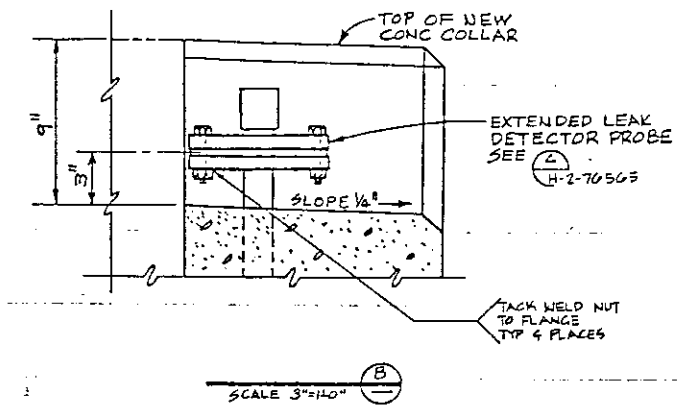

SCALE 3" = 1'-0" (B)

GENERAL NOTES

1. DESIGN STRESSES
   CAST-IN-PLACE CONCRETE – F'_c = 3000 PSI @ 28 DAYS
   REINFORCING STEEL – F_y = 60,000 PSI
   STRUCTURAL STEEL – F_y = 30,000 PSI
2. APPLY SPECIAL PROTECTIVE COATING (WHITE) TO STEEL PLATE COVER AND THE ABOVE GRADE PORTION OF NEW CONCRETE COLLARS.
3. PLACE LEAD SHEET ON SLUICE TRANSFER BOX COVER BLOCKS TO A THICKNESS OF 3/8". IF THE LEAD SHEET IS LESS THAN 5/8" THICK AND SMALLER THAN THE OVERALL DIMENSIONS OF THE COVER BLOCK PLACE SHEET IN LAYERS. ALTERNATE LAYERS SHALL BE PLACED SO THAT SEAMS IN THE LAYER BELOW ARE COVERED. SEAM WIDTHS GREATER THAN 1/16" SHALL BE FILLED W/ LEAD. MIN WIDTH OF LEAD SHEET SHALL BE 1'-0". LEAD SHEET SHALL BE A MIN 7.58 LB/FT² FOR 1/8" THK SH AND 14.75 LB/FT² FOR 1/4" THK SH.
4. REPAINT ALL PUMP PIT AND SLUICE BOX IDENTIFICATION NUMBERS COVERED BY NEW CONCRETE COLLAR. FOR PAINTING DIMENSIONS SEE DETAIL I DWG H-2-70429.
5. THE FOLLOWING MINIMUM CONCRETE COVER SHALL BE PROVIDED FOR REINFORCEMENT:
   A - CONCRETE CAST AGAINST AND PERMANENTLY EXPOSED TO EARTH — 3"
   B - ALL OTHER LOCATIONS — 1 1/2"
6. FOR CONSTRUCTION SPECIFICATION SEE B-560-C1.
7. DELETED
8. DELETED
9. DELETED
10. PLASTIC (ABS) CONDUIT AND FITTINGS SHALL CONFORM TO ASTM D2750. PLASTIC (ABS) PIPE, SCHEDULE 80, SHALL CONFORM TO ASTM D1527 AND PLASTIC (ABS) FITTINGS, SCHEDULE 80, SHALL CONFORM TO ASTM D2469. SOLVENT CEMENT SHALL CONFORM TO ASTM D2235.
11. TOLERENCES SHALL CONFORM TO ACI 117-81.

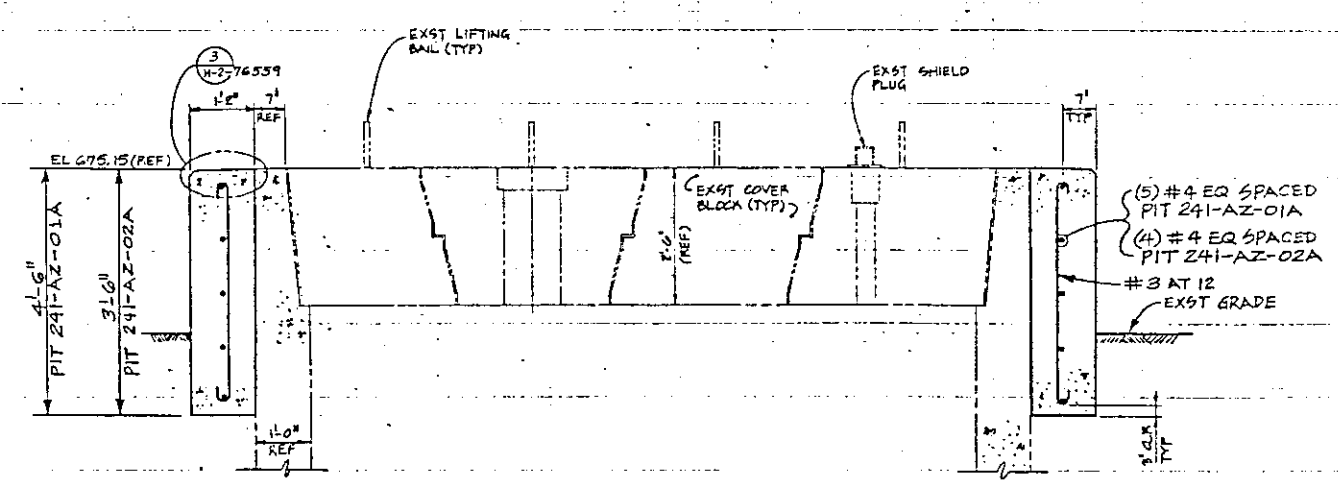

SCALE: 3/4" = 1'-0" (A) H-2-76558

NUMBER	TITLE	REFERENCES
H-2-68304	STEL CONC PUMP PIT, PLANS & SECTIONS (1ST)	H-2-70526 PIT & PIT COVER PAINTING DWG
		H-2-68423 TANK RIVER & AIRLIFT CIRCULATOR
		H-2-76555

DRAWING TRACEABILITY LIST — DRAWING LIST

NEXT USED ON H-2-76...

REV	BY-DATE	BY-DATE	REV BY DATE	DESCRIPTION
1	EGM 9/26/86	NA	MD 11/14/86	AS-BUILT FOR PROJ B-560 (1) CRCD CHNG. 2 E-6, REVISED NOTE D.E. F.S.L.7.8 (2) DFC-B36-11.2 D.1.2; B.C-1.2.3; DFC-B36-12.2 D.1.2

ROCKWELL APPROVAL — REH APPROVAL — REVISIONS — COMMENT REVIEW — MICROFILMED

RMO APPROVAL BY A.J. Wiemann	5/31/86	U. S. DEPARTMENT OF ENERGY Richland Operations Office
PROJ ENGR		KAISER ENGINEERS HANFORD COMPANY
QA		STRL MODIFICATIONS PUMP PIT 241-AZ-01A
APPROVED BY	3/6/86	
APPROVED BY	3/6/86	
APPROVED BY	3/6/86	PROJECT TITLE 153-AX TO 152-AZ RADING WASTE TRANSFER LINE
CHECKED BY R. LANG	3/6/86	PROJ B-560 WO X56002 JOB R051A2
DRAWN BY K.D. KESCHUM	3/6/86	SCALE SHOWN BLDG 241-AZ SHEET 0900
DESIGNED BY K.D. KESCHUM	3/6/86	DRAWING NUMBER H-2-76537 SHEET 1 OF 1 REV 1

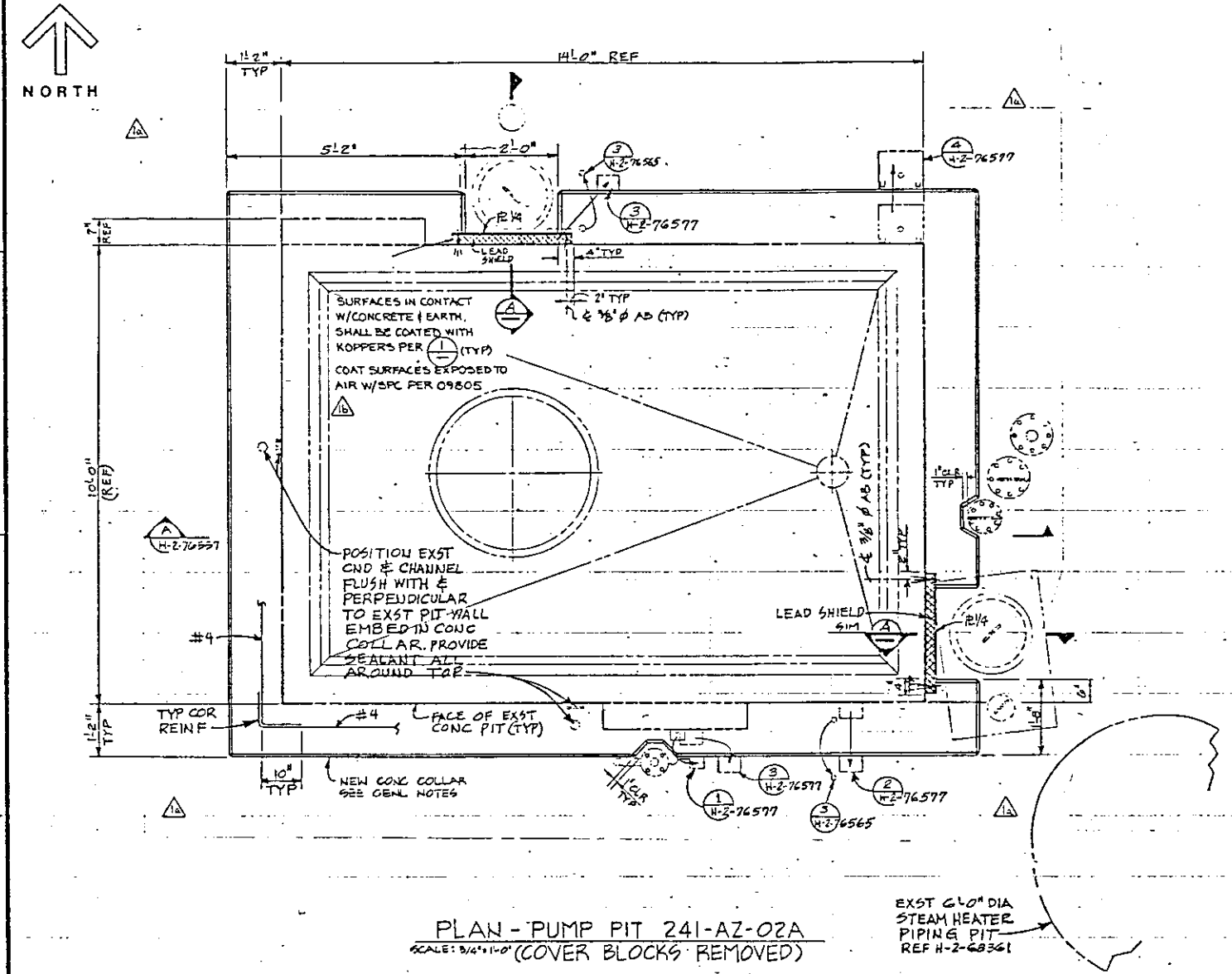

PLAN - PUMP PIT 241-AZ-02A
SCALE: 3/4"=1'-0" (COVER BLOCKS REMOVED)

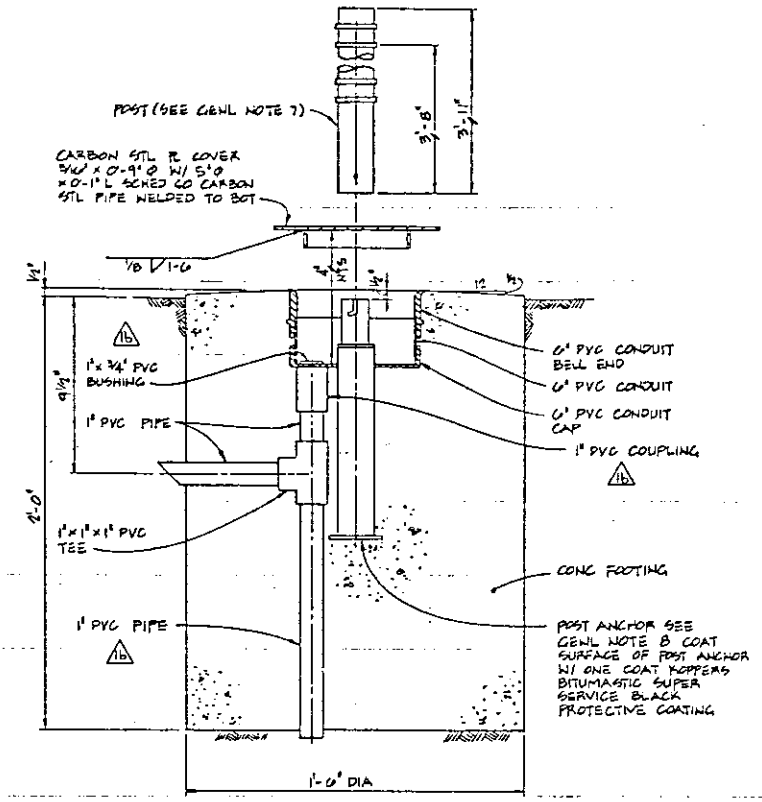

SCALE: 3"=1'-0"

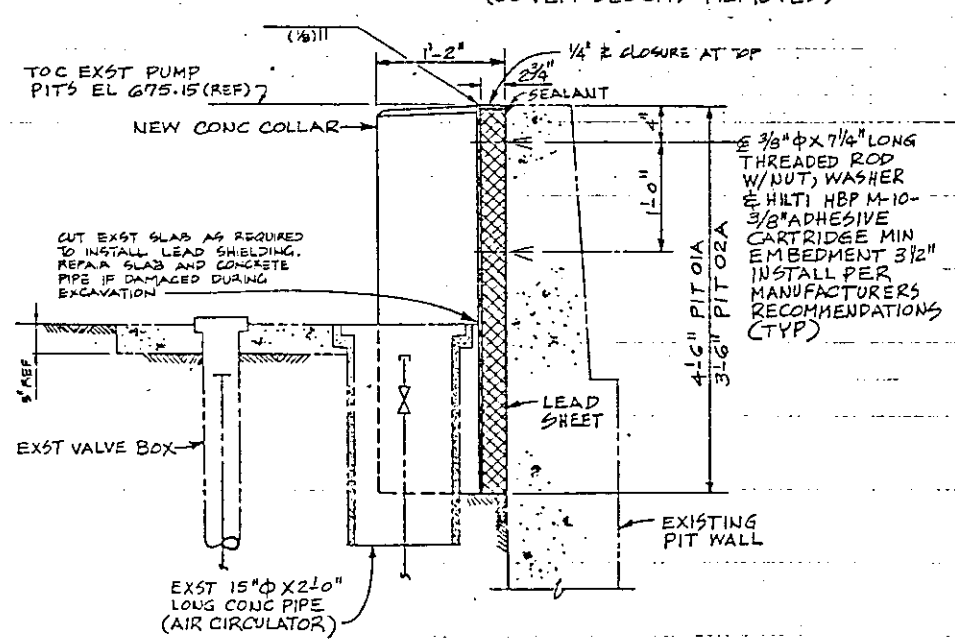

SCALE 1 1/2"=1'-0"

FOR GENERAL NOTES SEE DWG H-2-76557

NUMBER	TITLE	REFERENCES
H-2-63394	STRL CONC PUMP PIT PLANS-SECTIONS-DET	

DRAWING TRACEABILITY LIST

NUMBER	TITLE
H-2-76556	DRAWING LIST

NEXT USED ON H-2-76556

REV	DESCRIPTION
M	AS-BUILT FOR PROJ B-560 E-7 REVISED NOTE. b) RCD CHNG. (2) D, E-3,4 WAS ABS 5, 6, 7, 8 (1) DEL. B-5 & D-11, 2 D-1 & D E-

REVISIONS

COMMENT REVIEW

RHO APPROVAL BY		DATE
PROJ ENGR		
QA		
APPROVED BY		
APPROVED BY		
CHECKED BY	R. LAINE	4/4/85
DRAWN BY	R.D. AESCHLIMAN	
DESIGNED BY	R.D. AESCHLIMAN	

U. S. DEPARTMENT OF ENERGY
Richland Operations Office
KAISER ENGINEERS HANFORD COMPANY

STRL MODIFICATIONS
PUMP PIT
241-AZ-02A

PROJECT TITLE 155-AX TO 152-AZ AGING WASTE TRANSFER LINE

PROJ B-560 | WO X56002 | JOB R6513A
SCALE SHOWN | BLDG 241-AZ | PROJ 0900
DRAWING NUMBER H-2-76558 | SHEET 1 | OF 1 | REV 1

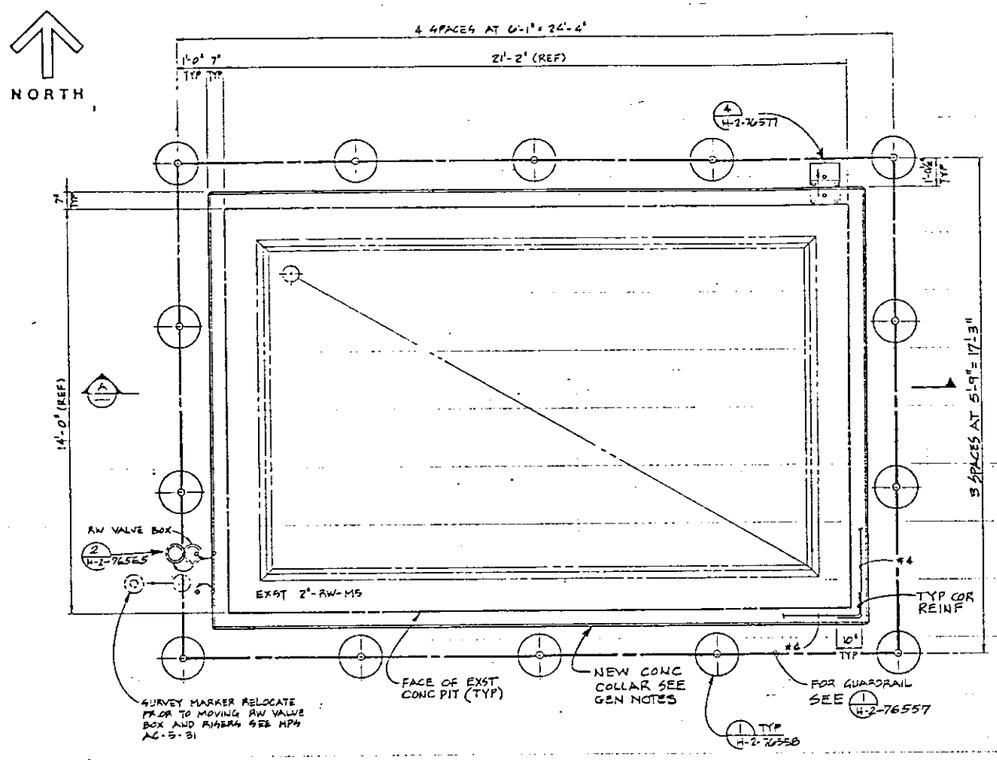

PLAN - SLUICE TRANSFER BOX 241-AZ-152
SCALE: 1/2" = 1'-0" (COVER BLOCKS REMOVED)

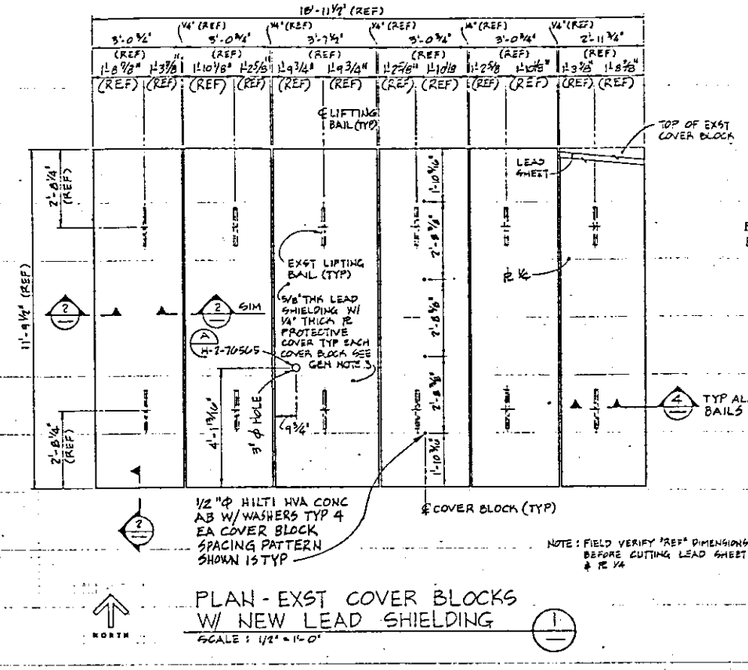

PLAN - EXST COVER BLOCKS W/ NEW LEAD SHIELDING
SCALE: 1/2" = 1'-0"

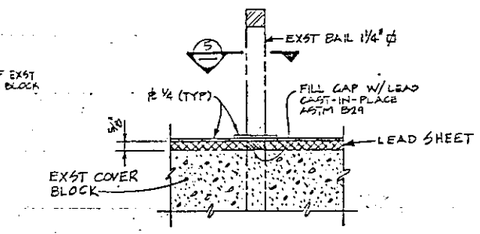

SCALE: 3" = 1'-0"

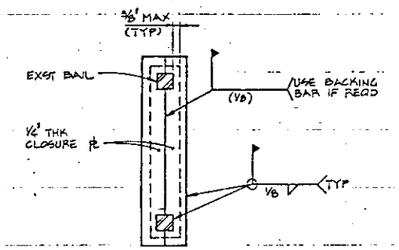

SCALE: 3" = 1'-0"

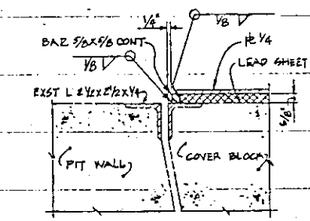

SCALE: 3" = 1'-0"

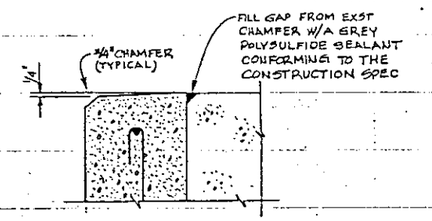

SCALE: 3" = 1'-0" 3 / H-2-76557

PLAN - SLUICE TRANSFER BOX 241-AZ-152
SCALE: 1/2" = 1'-0" (COVER BLOCKS REMOVED)

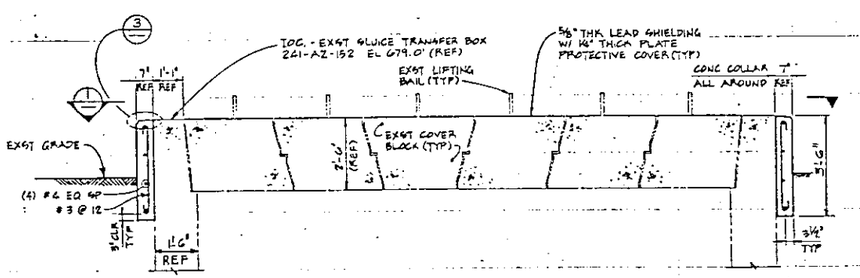

SCALE: 1/2" = 1'-0"

FOR GENERAL NOTES SEE DWG H-2-76557

NUMBER	TITLE
H-2-68307	STRL CONC SLUICE TRANSFER BOX PLAN AND DETAILS

DRAWING TRACEABILITY LIST

NUMBER	TITLE
H-2-68307	STRL CONC SLUICE TRANSFER BOX PLAN AND DETAILS

DRAWING LIST

NUMBER	TITLE
H-2-76556	REFERENCES
NEXT USED ON	H-2-76556

REV	DATE	DESCRIPTION	INIT
1	8-24-84	AS BUILT FOR PROJ B-560	

REVISIONS

MICROFILMED: NA
ROCKWELL APPROVAL: BY-DATE
KEH APPROVAL: BY-DATE
COMMENT REVIEW

RHO APPROVAL BY R.J. Vernon DATE 5/14/85

U. S. DEPARTMENT OF ENERGY
Richland Operations Office
KAISER ENGINEERS HANFORD COMPANY

PROJ ENGR J. WEES 8-17-85
CA R. H. Williams 8/1/85
APPROVED BY 8/1/85
DRAFT C. E. Kruse 8-15-85
APPROVED BY 8/16/85
CHECKED BY R. AINGE 8/16/85
DRAWN BY R.D. KETCHUM 7/24/84
DESIGNED BY R.D. KETCHUM 7/24/84

STRL MODIFICATIONS SLUICE TRANSFER BOX 241-AZ-152

PROJECT TITLE 153-AX TO 152-AZ AGING WASTE TRANSFER LINE
PROJ B-560 WO X56002 ADS R051A2
SCALE SHOWN BLDG 241-AZ PROJ 0900
DRAWING NUMBER H-2-76559 SHEET 1 OF 1 REV 1

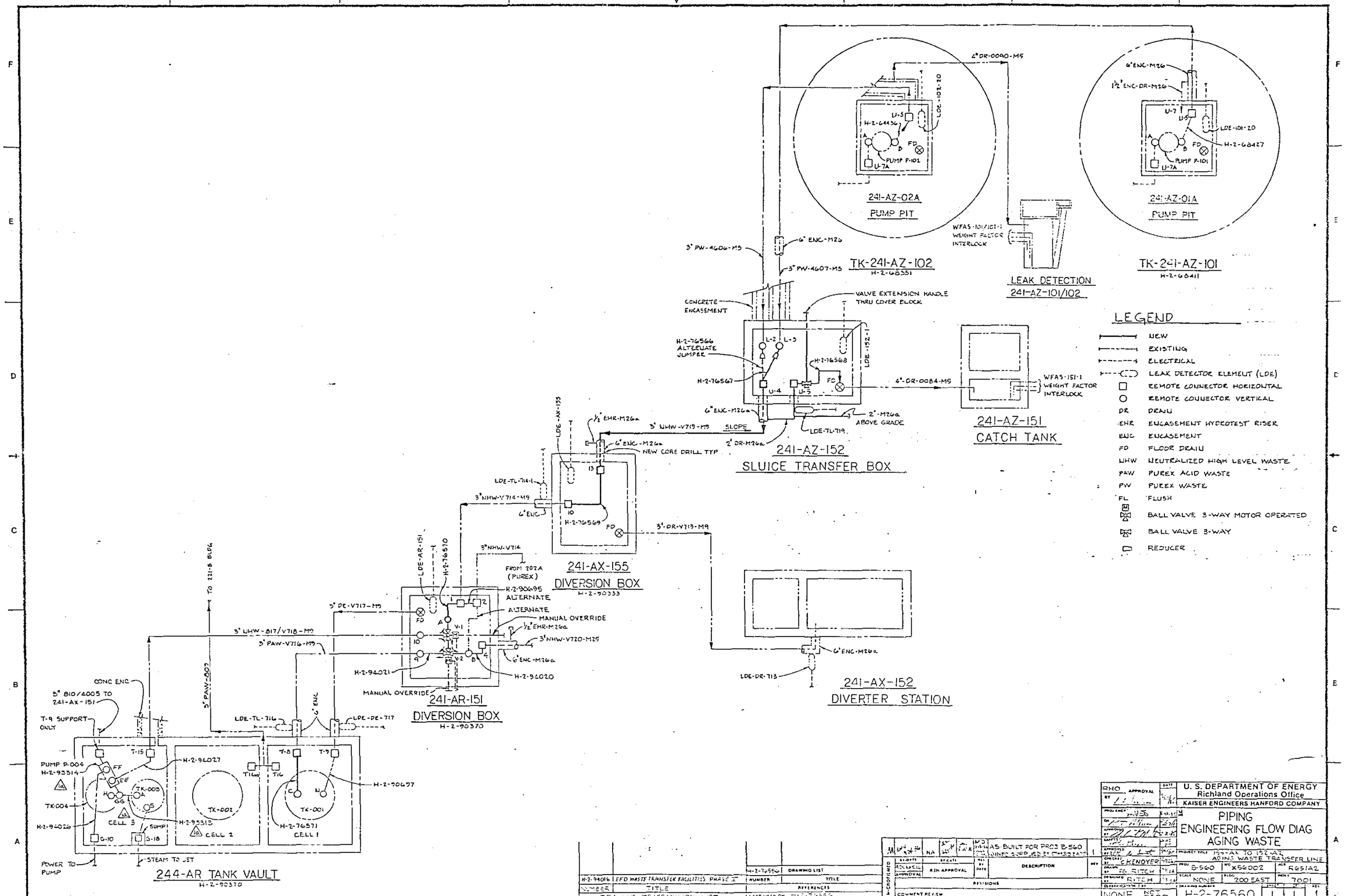

H-2-94016	EFD WASTE TRANSFER FACILITIES PHASE I	H-2-76556	DRAWING LIST
NUMBER	TITLE	NUMBER	TITLE
DRAWING TRACEABILITY LIST		REFERENCES	
		NEXT USED ON	H-2-76556

RHO APPROVAL		U. S. DEPARTMENT OF ENERGY Richland Operations Office	
		KAISER ENGINEERS HANFORD COMPANY	
PROJ ENGR		PIPING ENGINEERING FLOW DIAG AGING WASTE	
APPROVED BY		PROJECT TITLE 152-AX TO 152-AZ AGING WASTE TRANSFER LINE	
CHECKED BY	C KENOYER	PROJ B-560	WO X56002
DRAWN BY	FG RITCH	SCALE NONE	BLDG 200 EAST
DESIGNED BY	RITCH		PROJ 7001
CLASSIFICATION	NONE	DRAWING NUMBER H-2-76560	SHEET 1 OF 1 REV 1

AS-BUILT FOR PROJ B-560 LINES SUPPLIED BY OTHERS

REVISIONS

COMMENT REVIEW

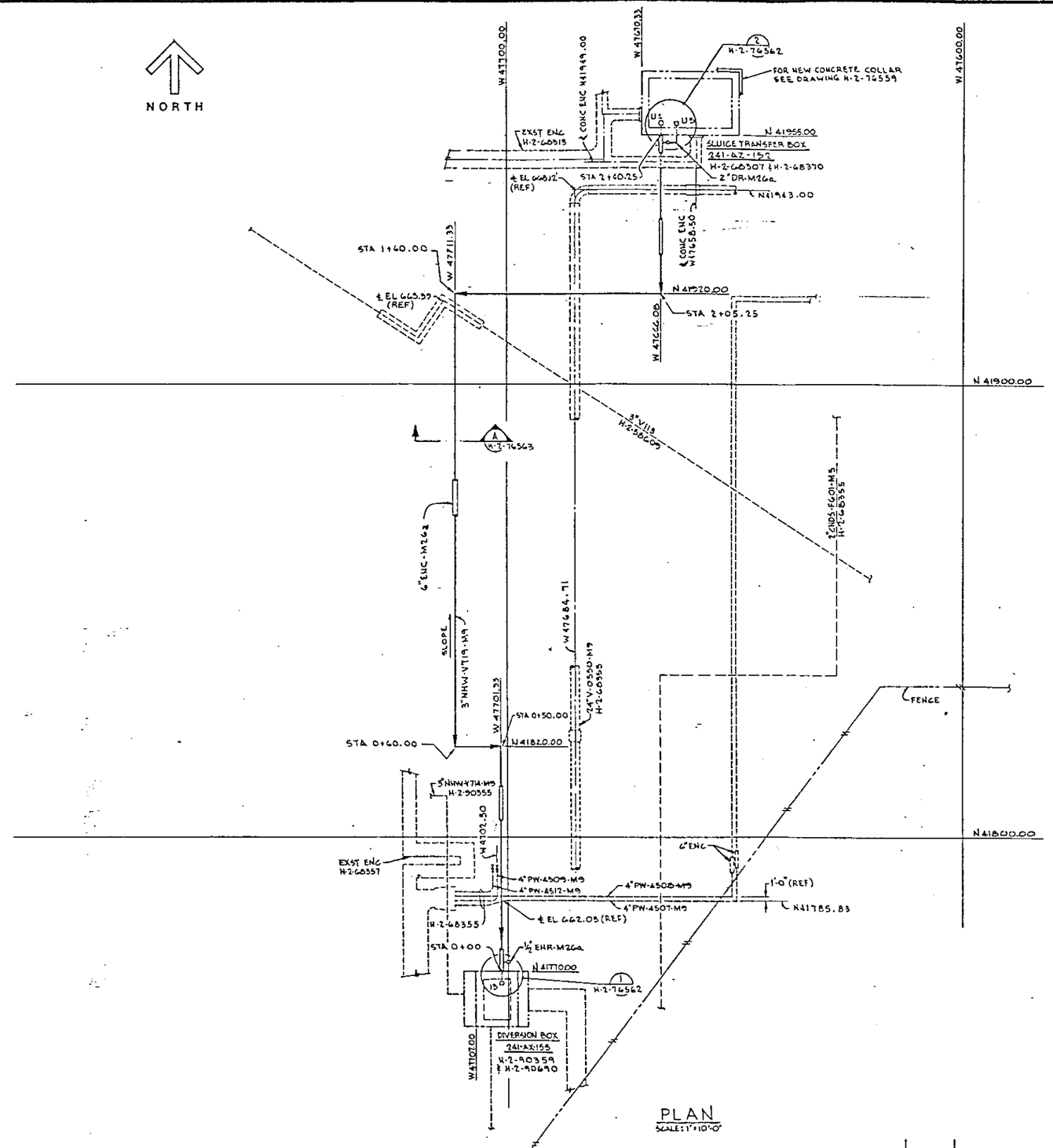

PLAN
SCALE: 1" = 10'-0"

LEGEND

———	NEW
———	EXISTING (ABOVE GRADE)
------	EXISTING (BELOW GRADE)
CNDS	CONDENSATE
DR	DRAIN
EHR	ENCASEMENT HYDROTEST RISER
ENC	ENCASEMENT
NHW	NEUTRALIZED HIGH LEVEL WASTE
PW	PROCESS WASTE
V	VENT

GENERAL NOTES:

1. ALL MATERIALS, FABRICATION AND TESTING SHALL BE IN ACCORDANCE WITH CONSTRUCTION SPEC B-560-C1.
2. ALL NEW PROCESS LINES SHALL SLOPE A MINIMUM OF 3"/100 FEET (0.25%) UNLESS OTHERWISE NOTED.
3. PIPE BENDS SHALL HAVE A 3'-0" RADIUS EXCEPT WHERE OTHERWISE SPECIFIED.
4. TOLERANCES UNLESS OTHERWISE NOTED SHALL BE:
   FRACTIONAL ± 1/8"
   ± 1/4" ON PIPE LINE ELEVATIONS
   ± 1" ON PIPE LINE PLAN LOCATIONS
   ANGULAR ± 1°
   DECIMAL ± .010"
5. FOR PROFILE OF LINE 3" NHW-V719-M9 SEE DRAWING H-2-76562.
6. FOR PIPE SUPPORTS, GUIDES AND ANCHORS SEE DRAWING H-2-76563.
7. DIRECT BURIED PIPING SHALL HAVE PROTECTIVE COATING PER CONSTRUCTION SPEC B-560-C1.
8. THE CENTER LINE OF PIPE ON LINE 3" NHW-V719-M9 SHALL BE 4'-6" MINIMUM BELOW GRADE.
9. FOR CATHODIC PROTECTION DETAILS SEE DWG H-2-76573

HOLD NO. DET 1
FOR CATHODIC PROTECTION DRAWING

NUMBER	TITLE	NUMBER	TITLE
H-2-44501 SH 69	AREA MAP 200-E A-PLANT FACILITIES		
H-2-44501 SH 80	AREA MAP 200-E A-PLANT FACILITIES		
H-2-68352	PIPING PLAN GENL ARRGMT 241-AZ TANK FARM	H-2-76556	DRAWING LIST
H-2-90355	PIPING PLAN & SECT LINE V713 & V714		

DRAWING TRACEABILITY LIST — REFERENCES — NEXT USED ON H-2-76556

MICROFILMED	BY-DATE	BY-DATE	REV BY DATE	DESCRIPTION	REV
M	ENV 4-28-86	NA	MD 10/15/86	AS BUILT FOR PROJ B-560	1
	ROCKWELL APPROVAL	KEH APPROVAL			

REVISIONS — COMMENT REVIEW

RHC APPROVAL BY [signature] DATE 7-7-86

U. S. DEPARTMENT OF ENERGY
Richland Operations Office
KAISER ENGINEERS HANFORD COMPANY

PROJ ENGR [signature] 6-17-86
DR [signature] 6-17-86
APPROVED BY [signature] 6-25-86
SAFETY [signature] 6-25-86
APPROVED BY [signature] 6-25-86
CHECKED BY [signature] 6-25-86
DRAWN BY D.O. DOUGHERTY 11-14-86
DESIGNED BY D.O. DOUGHERTY 11-14-86
CLASSIFICATION NONE — NOT REQD

PIPING
PLAN
LINE 3" NHW - V719

PROJECT TITLE: 155-AX TO 152-AZ AGING WASTE TRANSFER LINE
PROJ: B-560 — WO: X56002 — JOB: R651AZ
SCALE: AS SHOWN — BLDG: 241AX, 241AZ — INDEX: 0405 & 8409
DRAWING NUMBER: H-2-76561 — SHEET 1 — REV 1

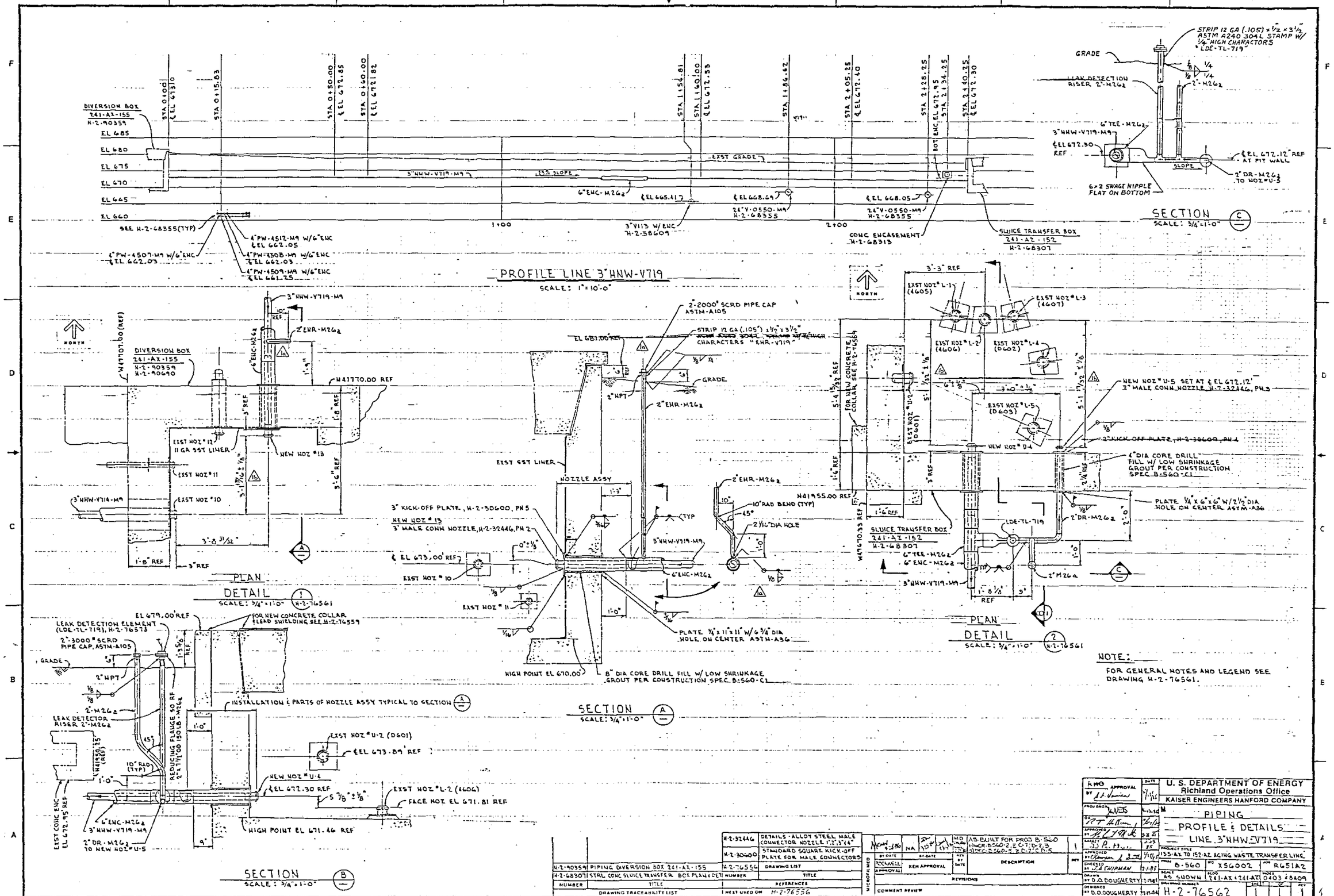

NOTE:
FOR GENERAL NOTES AND LEGEND SEE DRAWING H-2-76561.

NUMBER	TITLE
H-2-90359	PIPING DIVERSION BOX 241-AX-155
H-2-68307	STRL CONC SLUICE TRANSFER BOX PLAN & DETAILS

DRAWING TRACEABILITY LIST

NUMBER	TITLE
H-2-32446	DETAILS - ALLOY STEEL MALE CONNECTOR NOZZLE 1"2"3"&4"
H-2-30600	STANDARD SQUARE KICK-OFF PLATE FOR MALE CONNECTORS

DRAWING LIST

REFERENCES

I MEST USED ON H-2-76556

	BY	DATE
MCDONALD		
ROCKWELL		
APPROVAL		

NA — KEN APPROVAL

REV	DESCRIPTION
1	AS BUILT FOR PROJ B-560

REVISIONS

COMMENT REVIEW

R.W.O. APPROVAL BY J.J. Vanier 7/11/86

U. S. DEPARTMENT OF ENERGY
Richland Operations Office
KAISER ENGINEERS HANFORD COMPANY

PROJ ENGR W.W.ES 6-12-86
DS R.T. Allen 7/11/86
APPROVED BY 6-12-86
BASIS BY J.J.S. 5-5
APPROVED BY 7/11/86
CHECKED BY W.B. CHAPMAN 7-1-85
DRAWN BY D.D. DOUGHERTY 7-1-86
DESIGNED BY D.D. DOUGHERTY 7-1-86

PIPING
PROFILE & DETAILS
LINE 3"HNW-V719

PROJECT TITLE 155-AX TO 152-AZ ACING WASTE TRANSFER LINE
PROJ B-560 WO X56002 JOB R651A2
SCALE AS SHOWN LOCATION 241-AX & 241-AZ DWG NO 0403 & 8409
DWG SHEET NUMBER H-2-76562 SHEET 1 OF 1 REV 1

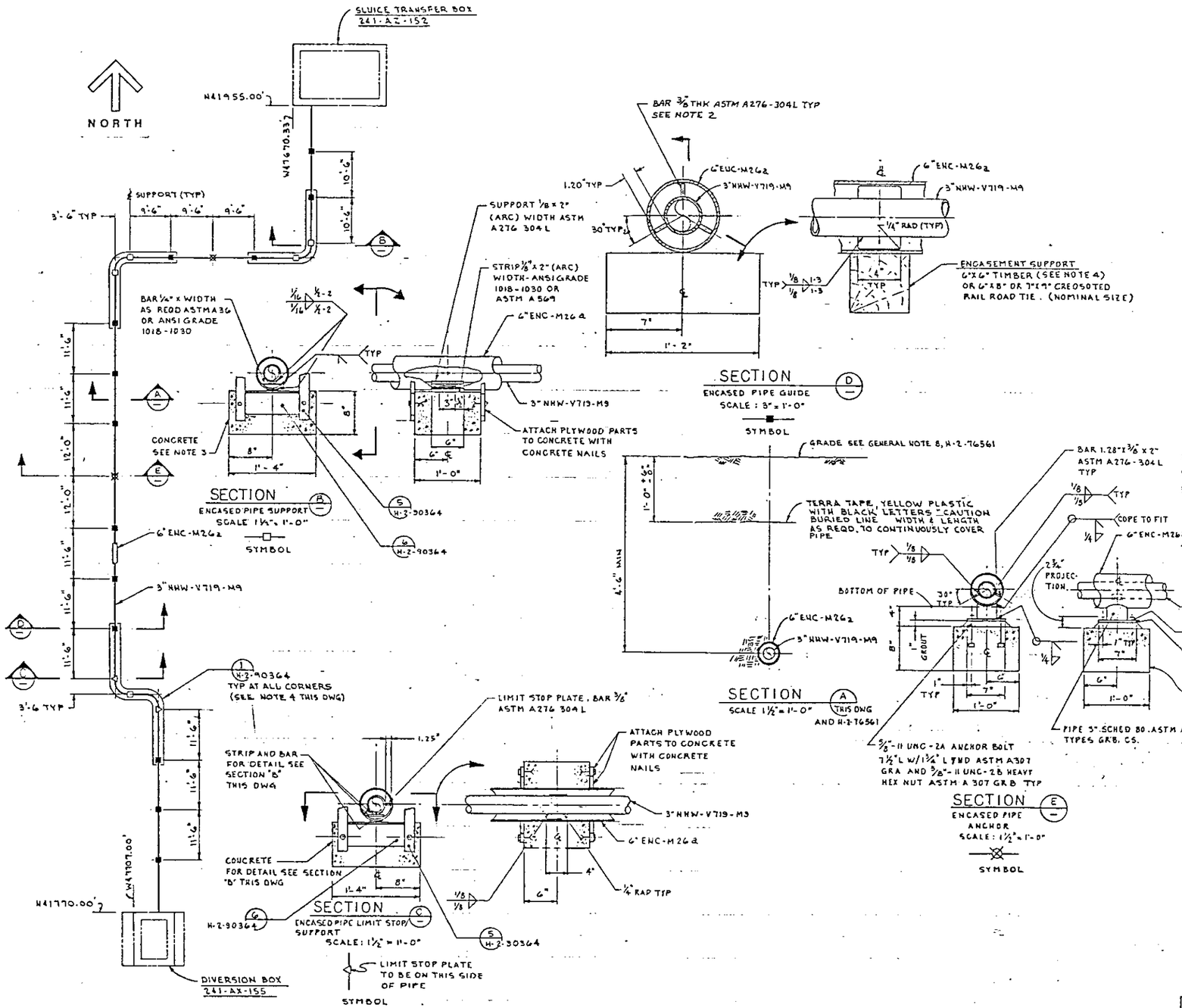

LEGEND

- EXISTING
- NEW
- ENCASED PIPE LIMIT STOP SUPPORT, SEE SECTION "C" THIS DWG.
- ENCASED PIPE ANCHOR, SEE SECTION "E" AND THIS DWG
- ENCASED PIPE SUPPORT, SEE SECTION "B" THIS DWG.
- ENCASED PIPE GUIDE, SEE SECTION "D" THIS DRAWING.
- ENC — ENCASEMENT
- NHW — NEUTRALIZED HIGH LEVEL WASTE

NOTES:

1. FOR GENERAL NOTES SEE DRAWING H-2-76561.
2. BREAK ALL SHARP EDGES AND REMOVE BURRS.
3. THE CONCRETE BASE SHOWN ON SECTION B, C & E THIS DRAWING MAY BE MADE FROM LOW SHRINKAGE GROUT.
4. ALL PLYWOOD AND LUMBER SHALL BE FIELD TREATED W/ PENTA CHLORAL PHENOL.

NUMBER	TITLE
H-2-90364	PIPING EXPANSION PLANT DETS
H-2-76556	DRAWING LIST

DRAWING TRACEABILITY LIST — REFERENCES — NEXT USED ON H-2-76556

NUMBER	TITLE
H-2-90364	PIPING EXPANSION PLANT DETS
H-2-76556	DRAWING LIST

MICROFILMED — BY-DATE — K.C. KELLY — APPROVAL — KEN APPROVAL — COMMENT REVIEW

REVISIONS

REV	DESCRIPTION
1	AS-BUILT FOR PROJ B-560 NOTE 4 PER CHNG Z D-1 Z REVISED

GWO APPROVAL BY A.F. Ulmer — DATE 9/9/86

PROJ ENGR — DATE 5-13-86

QA — DATE 7/2/86

APPROVED BY — DATE 7-2-86

APPROVED BY — DATE 7/15/86

CHECKED BY J.K. SHIPMAN — DATE 2-1-85

DRAWN BY D.O. DOUGHERTY — DATE 1-4-85

DESIGNED BY D.O. DOUGHERTY — DATE 1-4-85

U. S. DEPARTMENT OF ENERGY
Richland Operations Office
KAISER ENGINEERS HANFORD COMPANY

PIPING
SUPPORTS & DETAILS
LINE 3" NHW - V719

PROJECT TITLE: 155-AX TO 152-AZ AGING WASTE TRANSFER LINE

PROJ B-560 — WO X56002 — JOB RG15A2

SCALE NOTED — BLDG 241-AX, 241-AZ — CODE 0402 + 8409

DRAWING NUMBER H-2-76563 — SHEET 1 — SUBSHEET 1 — REV 1

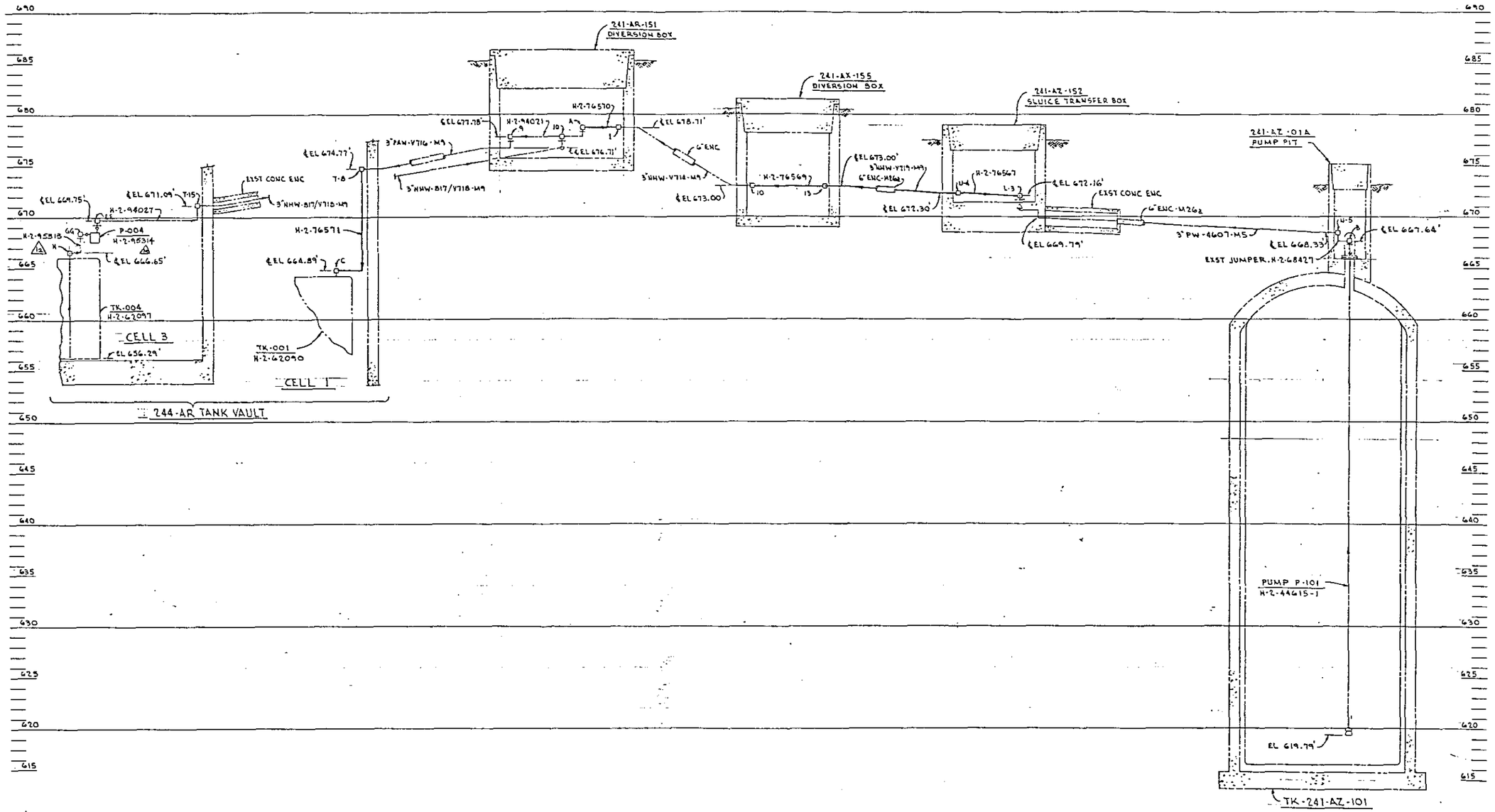

NOTE:
FOR GENERAL NOTES SEE DRAWING H-2-76561.

NUMBER	TITLE	REFERENCES
DRAWING TRACEABILITY LIST		

NUMBER	TITLE
H-2-76556	DRAWING LIST
I NEXT USED ON	H-2-76556

REV	DATE	DESCRIPTION	INT
1	7/11/85	AS-BUILT FOR PROJ B-560 BLIND SUPPLIED BY OTHERS EETS	

REVISIONS

MICROFILMED

RLO APPROVAL BY		DATE 7/11/85
PROJ ENGR		7-11-85
APPROVED BY		7-11-85
CHECKED BY		7-11-85
APPROVED BY		7/11/85
CHECKED BY J.J. SHIPMAN		7-11-85
DRAWN BY D.O. DOUGHERTY		7-11-85
DESIGNED BY D.O. DOUGHERTY		7-11-85

U. S. DEPARTMENT OF ENERGY
Richland Operations Office
KAISER ENGINEERS HANFORD COMPANY

PIPING
HYDRAULIC DIAGRAM

PROJECT TITLE: 155-AX TO 152-AZ AGING WASTE TRANSFER LINE

PROJ	WO	JOB
B-560	X56002	R65142

SCALE VERT: 1"=1'0" HORIZ: SERIES NONE
FLDG: 241-AX, 241-AZ
PAGES: 7001

DRAWING NUMBER: H-2-76564

SHEET	OF	REV
1	1	1

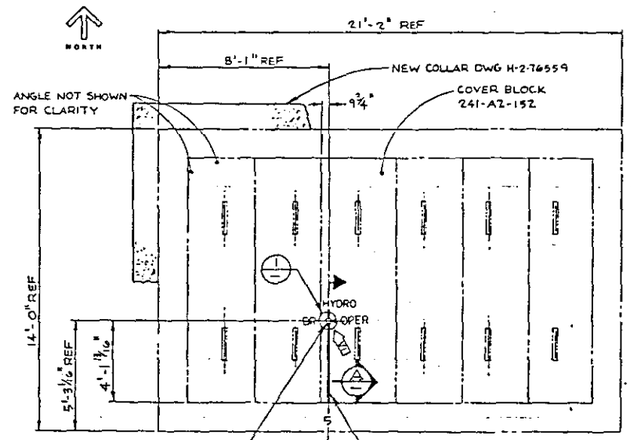

PLAN-241-AZ-152-SLUICE PIT
SCALE: 3/8" = 1'-0"

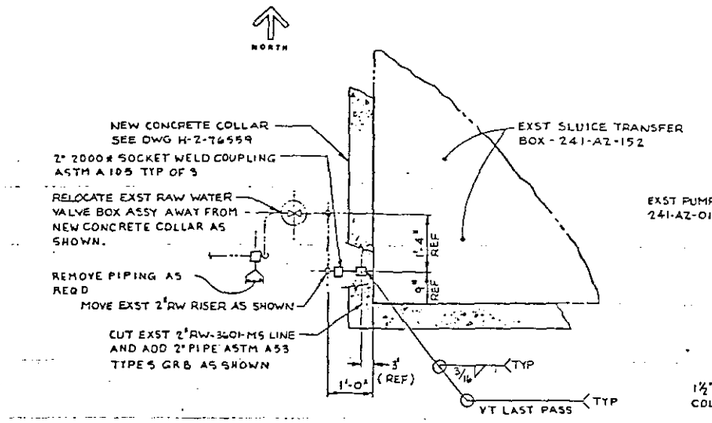

DETAIL 2
SCALE: 3/4" = 1'-0" H-2-76559

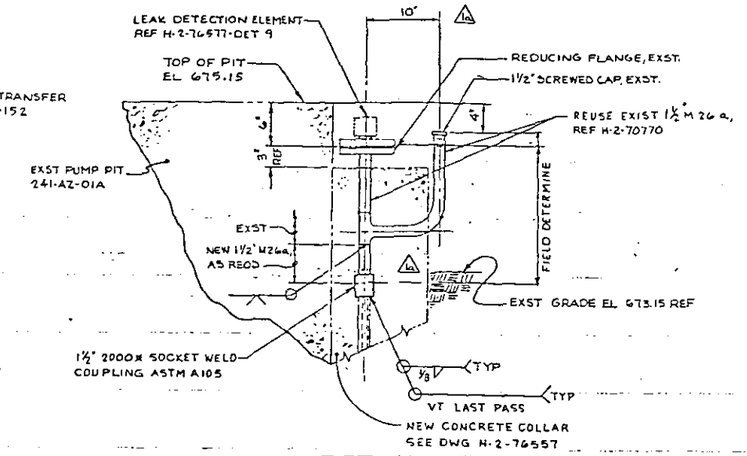

DETAIL 4
SCALE: 1 1/2" = 1'-0" H-2-76557
(LOOKING EAST)

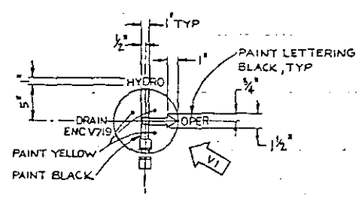

DETAIL 1
SCALE: 1 1/2" = 1'-0"

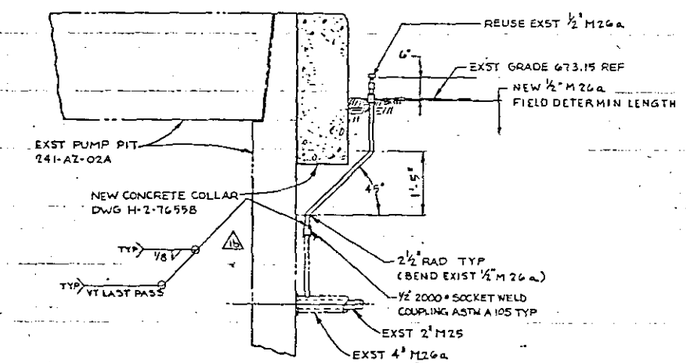

DETAIL 3
SCALE: 3/4" = 1'-0" H-2-76558

NOTES

1. FOR GENERAL NOTES SEE DWG H-2-76561.

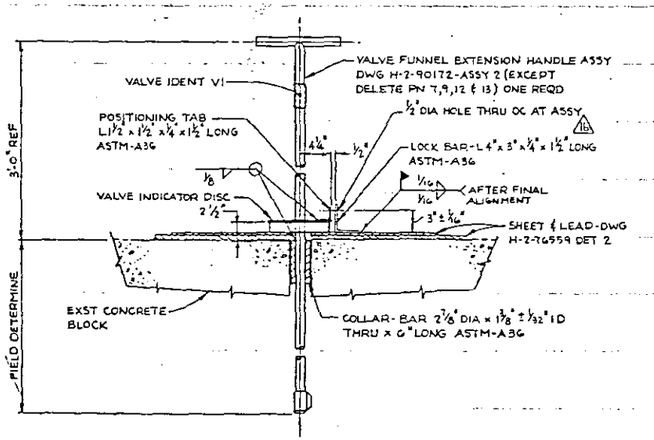

SECTION A
SCALE: 1 1/2" = 1'-0"

NUMBER	TITLE
H-2-76769	PIT MODIFICATION AZ TANK FARM
H-2-68352	PIPING PLAN AREA # 3
H-2-68307	BOX PLAN AND DETAILS STRUCTURAL CONCRETE SLUICE TRANSFER

DRAWING TRACEABILITY LIST

NUMBER	TITLE
H-2-90172	EXTENSION HANDLE STANDARD VALVE FUNNEL
H-2-37797	241-SY-TANK FARM PIT COVER PAINTING DIAGRAM
H-2-76556	DRAWING LIST

REFERENCES

NEXT USED ON H-2-76556

REV	DESCRIPTION
1	AS-BUILT FOR PROJ B-560 PADLOCK... D&L'T REMOVED PART. OF NOTE: DIRCD CHNG. P.C.D.S MOVED CALCS (DEC 8 SCALE) 7 F.F. 2.2

MICROFILMED: NA
APPROVAL: KEH APPROVAL
COMMENT REVIEW

RHO APPROVAL BY A.J. Hanson DATE 7/4/95
PROJ ENGR 7/7/95
DA 7/7/95
APPROVED BY 7/7/95
SAFETY 7/7/95
APPROVED BY 7/7/95
CHECKED BY J.A. SHIPMAN 7/11/95
DRAWN BY FG RITCH 7/7/95
DESIGNED BY RITCH 7/7/95

U. S. DEPARTMENT OF ENERGY
Richland Operations Office
KAISER ENGINEERS HANFORD COMPANY

PIPING PIT COVER BLOCK AND MISC DETAILS

PROJECT TITLE 155-AX TO 152-AZ AGING WASTE TRANSFER LINE
PROJ B-560 WO X56002 JOB R651A2
SCALE SHOWN BLDG 241-AZ MODEL 0402
DRAWING NUMBER H-2-76565 SHEET 1 OF 1 REV 1

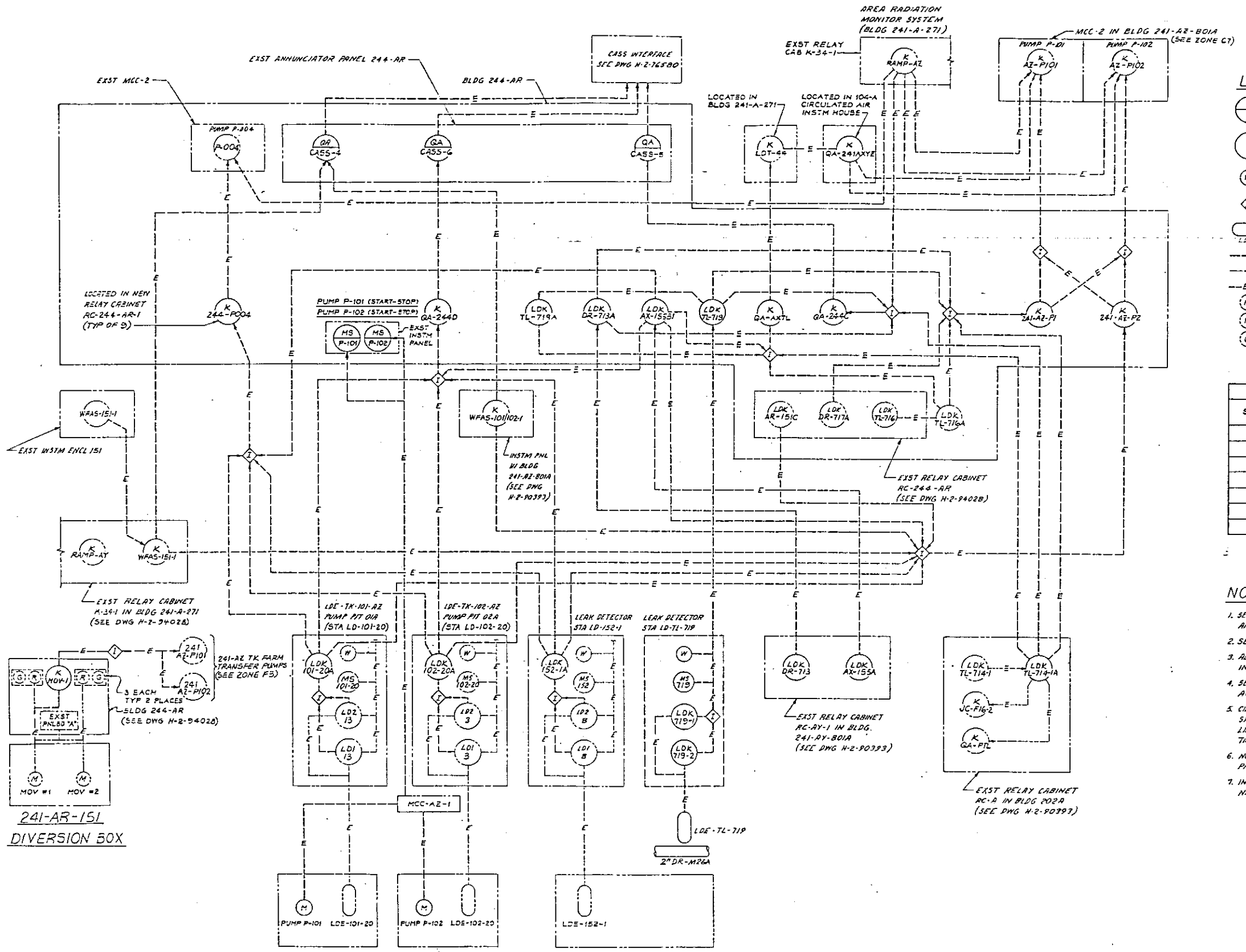

LEGEND:

- PANEL MOUNTED EQUIPMENT
- LOCAL MOUNTED EQUIPMENT
- (W) INDICATING LIGHT, WHITE STROBE
- ELECTRICAL INTERLOCK
- LDE LEAK DETECTOR ELEMENT
- NEW EQUIPMENT OR WIRING
- EXISTING EQUIPMENT OR WIRING
- —E— ELECTRICAL SIGNAL OR POWER
- (M) MOTOR
- (R) RED INDICATING LIGHT
- (G) GREEN INDICATING LIGHT

INSTRUMENT SYMBOL LEGEND		
SYMBOL	PROCESS VARIABLE FIRST LETTER	INSTRUMENT FUNCTION SUCCEEDING LETTER
A		ALARM
I		INDICATOR
K	RELAY	RELAY
M	MANUAL	
S		SWITCH
LD	LEAK DETECTOR	
GA	COMMON EVENT	

NOTES:

1. SEE CONSTRUCTION SPECIFICATION B-560-C1 FOR MATERIAL DESCRIPTION AND INSTALLATION INSTRUCTIONS UNLESS OTHERWISE NOTED.
2. SEE DRAWING H-2-1275 FOR ELECTRICAL SYMBOLS NOT INDICATED.
3. ABBREVIATIONS ARE PER ANSI Y1.1 1972 UNLESS OTHERWISE INDICATED.
4. SEE DWG H-2-76560 FOR PIPING ENGINEERING FLOW DIAGRAMS, AGING WASTE TRANSFER LINE.
5. CIRCUITS ARE INTERLOCKED FOR AUTOMATIC SHUTDOWN OF PUMPS SHOWN WHEN LEAK IS DETECTED IN THE AGING WASTE TRANSFER LINE OR IN THE PITS AND BOXES AFTER A FIVE (5) SECOND TIME DELAY.
6. NOTIFY THE CONTROL ROOM SUPERVISOR IN THE AREAS SHOWN PRIOR TO THE MODIFICATION OF ANY CIRCUIT.
7. INSTALLATIONS SHALL CONFORM TO THE 1984 EDITION OF THE NATIONAL ELECTRICAL CODE.

2 ESSENTIAL DRAWING

DRAWING LIST	
NUMBER	TITLE
H-2-94028	ELEC ENGINEERING FLOW DIAG
H-2-90393	ELEC ENGINEERING FLOW DIAG
H-2-76556	ELEC ENGINEERING FLOW DIAG
H-2-90391	ELEC ENGINEERING FLOW DIAG

DRAWING TRACEABILITY LIST		
NUMBER	TITLE	REFERENCES
		NEXT USED ON H-2-75556

REVISIONS					
REV	BY-DATE	BY-DATE	REV BY DATE	DESCRIPTION	REV
2	KSC 6/21/93			REV PER ECN 121915	2
1	NA			AS-BUILT FOR PROJ B-560	1

MICROFILMED: RECORDS APPROVAL — KEN APPROVAL — COMMENT REVIEW

U. S. DEPARTMENT OF ENERGY
Richland Operations Office
KAISER ENGINEERS HANFORD COMPANY

ELECTRICAL ENGINEERING FLOW DIAGRAM

PROJECT TITLE: 155-AX TO 152-AZ AGING WASTE TRANSFER LINE

PROJ	NO	SUB	PHASE
B-560	X56002	R6S1A2	

SCALE	BLDG	SYSTEM	PROJ
NONE	241-AZ TK FARM		7001

CLASSIFICATION	DRAWING NUMBER	REV
NONE (NOT PROP)	H-2-76575	2

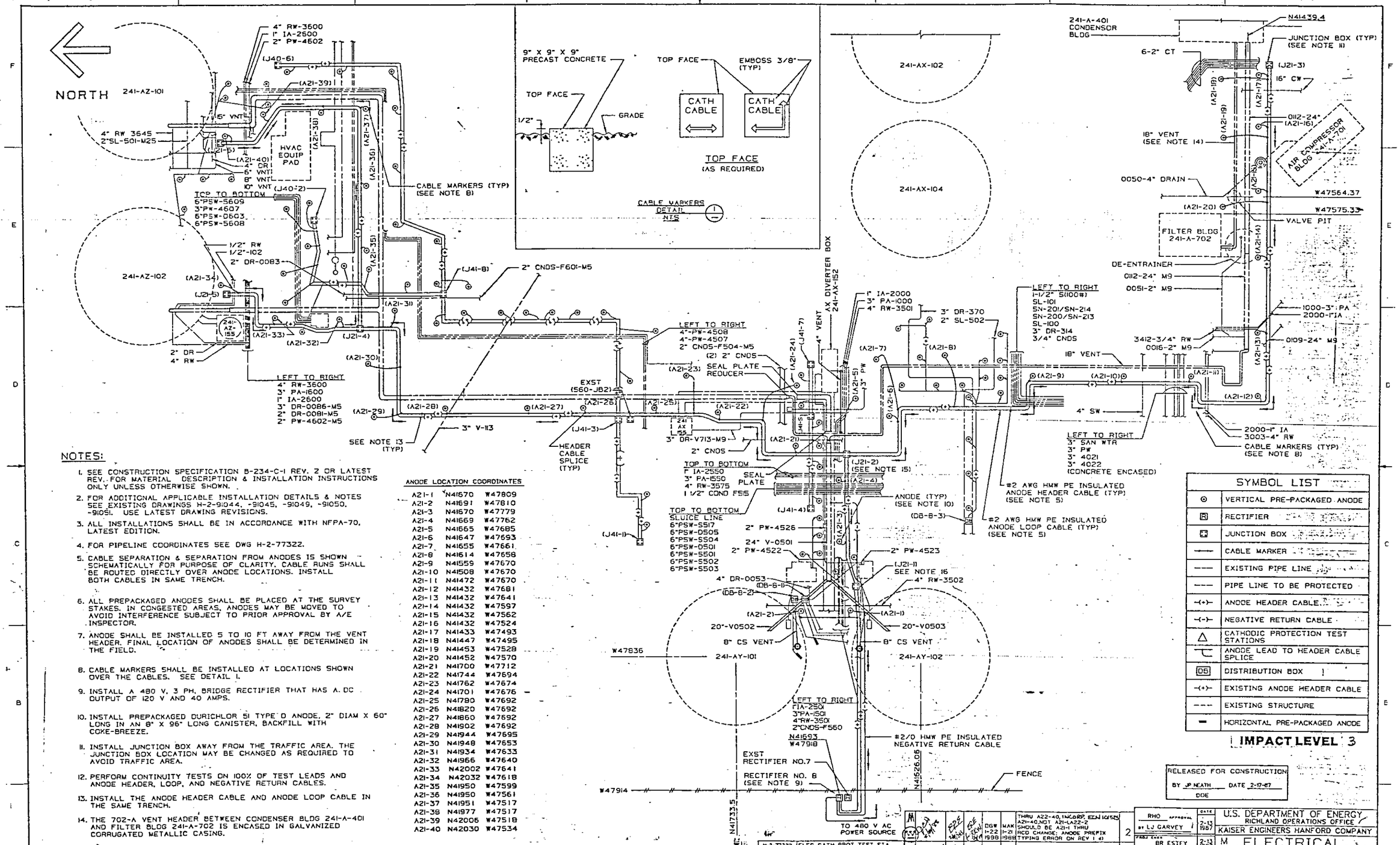

NOTES:

1. SEE CONSTRUCTION SPECIFICATION B-234-C-1 REV. 2 OR LATEST REV. FOR MATERIAL DESCRIPTION & INSTALLATION INSTRUCTIONS ONLY UNLESS OTHERWISE SHOWN.
2. FOR ADDITIONAL APPLICABLE INSTALLATION DETAILS & NOTES SEE EXISTING DRAWINGS H-2-91044, -91045, -91049, -91050, -91051. USE LATEST DRAWING REVISIONS.
3. ALL INSTALLATIONS SHALL BE IN ACCORDANCE WITH NFPA-70, LATEST EDITION.
4. FOR PIPELINE COORDINATES SEE DWG H-2-77322.
5. CABLE SEPARATION & SEPARATION FROM ANODES IS SHOWN SCHEMATICALLY FOR PURPOSE OF CLARITY. CABLE RUNS SHALL BE ROUTED DIRECTLY OVER ANODE LOCATIONS. INSTALL BOTH CABLES IN SAME TRENCH.
6. ALL PREPACKAGED ANODES SHALL BE PLACED AT THE SURVEY STAKES. IN CONGESTED AREAS, ANODES MAY BE MOVED TO AVOID INTERFERENCE SUBJECT TO PRIOR APPROVAL BY A/E INSPECTOR.
7. ANODE SHALL BE INSTALLED 5 TO 10 FT AWAY FROM THE VENT HEADER. FINAL LOCATION OF ANODES SHALL BE DETERMINED IN THE FIELD.
8. CABLE MARKERS SHALL BE INSTALLED AT LOCATIONS SHOWN OVER THE CABLES. SEE DETAIL 1.
9. INSTALL A 480 V, 3 PH, BRIDGE RECTIFIER THAT HAS A DC OUTPUT OF 120 V AND 40 AMPS.
10. INSTALL PREPACKAGED DURICHLOR SI TYPE D ANODE, 2" DIAM X 60" LONG IN AN 8" X 96" LONG CANISTER, BACKFILL WITH COKE-BREEZE.
11. INSTALL JUNCTION BOX AWAY FROM THE TRAFFIC AREA. THE JUNCTION BOX LOCATION MAY BE CHANGED AS REQUIRED TO AVOID TRAFFIC AREA.
12. PERFORM CONTINUITY TESTS ON 100% OF TEST LEADS AND ANODE HEADER, LOOP, AND NEGATIVE RETURN CABLES.
13. INSTALL THE ANODE HEADER CABLE AND ANODE LOOP CABLE IN THE SAME TRENCH.
14. THE 702-A VENT HEADER BETWEEN CONDENSER BLDG 241-A-401 AND FILTER BLDG 241-A-702 IS ENCASED IN GALVANIZED CORRUGATED METALLIC CASING.
15. IDENTIFY ALL WIRES IN JUNCTION BOX BY LETTER N, E, S OR W INDICATING WIRES COMING FROM NORTH, EAST SOUTH OR WEST.
16. JUNCTION BOX (J21-1) IS INSTALLED FOR FUTURE USE BY ANOTHER PROJECT.
17. STABILIZATION IN VICINITY OF 241-AY-101 AND 241-AY-102 TO BE PERFORMED BY PROJECT B-672.

ANODE LOCATION COORDINATES

A21-1	N41670	W47809
A21-2	N41691	W47810
A21-3	N41670	W47779
A21-4	N41669	W47762
A21-5	N41665	W47685
A21-6	N41647	W47693
A21-7	N41655	W47661
A21-8	N41614	W47658
A21-9	N41559	W47670
A21-10	N41508	W47670
A21-11	N41472	W47670
A21-12	N41432	W47681
A21-13	N41432	W47641
A21-14	N41432	W47597
A21-15	N41432	W47562
A21-16	N41432	W47524
A21-17	N41433	W47493
A21-18	N41447	W47495
A21-19	N41453	W47528
A21-20	N41452	W47570
A21-21	N41700	W47712
A21-22	N41744	W47694
A21-23	N41762	W47674
A21-24	N41701	W47676
A21-25	N41790	W47692
A21-26	N41820	W47692
A21-27	N41860	W47692
A21-28	N41902	W47692
A21-29	N41944	W47695
A21-30	N41948	W47653
A21-31	N41934	W47633
A21-32	N41966	W47640
A21-33	N42002	W47641
A21-34	N42032	W47618
A21-35	N41950	W47599
A21-36	N41950	W47561
A21-37	N41951	W47517
A21-38	N41977	W47517
A21-39	N42006	W47518
A21-40	N42030	W47534

SYMBOL LIST

⊙	VERTICAL PRE-PACKAGED ANODE
R	RECTIFIER
	JUNCTION BOX
	CABLE MARKER
	EXISTING PIPE LINE
	PIPE LINE TO BE PROTECTED
-(+)-	ANODE HEADER CABLE
-(-)-	NEGATIVE RETURN CABLE
△	CATHODIC PROTECTION TEST STATIONS
	ANODE LEAD TO HEADER CABLE SPLICE
DB	DISTRIBUTION BOX
-(+)-	EXISTING ANODE HEADER CABLE
	EXISTING STRUCTURE
▬	HORIZONTAL PRE-PACKAGED ANODE

IMPACT LEVEL 3

RELEASED FOR CONSTRUCTION
BY JP NEATH DATE 2-17-87
DOE

DRAWING TRACEABILITY LIST

NUMBER	TITLE
SD-WM-TI-316	WIRE-TO-PIPE CONNECTIONS & JUNCTION BOX WIRING DETAILS
H-2-91050	CATH PROT TRACEABILITY DWG SYMBOLS & NOTES
H-2-91042	CATH PROT PLOT PLAN ANODE INSTL
H-2-91041	CATH PROT PLOT PLAN ANODE INSTL
H-2-91040	CATH PROT PLOT PLAN ANODE INSTL

NEXT USED DWG/END ITEM

NUMBER	TITLE
H-2-77322	ELEC CATH PROT TEST STA
H-2-91046	CATHODIC PROT DETAILS TEST STATION WIRING
H-2-91051	CATHODIC PROT INSTL DETAILS
H-2-91049	CATHODIC PROT DET, AC FEED
H-2-91045	CATHODIC PROT INSTL DETAILS
H-2-91044	CATHODIC PROT INSTL DETAILS
NA	DRAWING LIST

REFERENCES

REV	DATE	DESCRIPTION
2	THRU A22-40, INCORP. ECN 101525 A21-40 NOT A21-1 A22-2 SHOULD BE A21-1 THRU RCD CHANGE: ANODE PREFIX TYPING ERROR ON REV 1 d)	
1	a) RCD CHNG Z A,B,C-6 ADDED b) DFC B-234/110-60 Z A-6,7,8 c) DFC B-234/110-65 Z A-4 d) DFC B-234/110-67 Z A-6,7,8	AS-BUILT FOR PROJ B-234/110 Z A-4,5 ADD TO LIST ANODE COORD LIST
M	JAN 10-14 1987	BRE 10-13 1987 for ECN 101525
	BRE 10-13 1987	RKW 1987
	WOO 8-28 1987	DGW 8-28 1987
	TMH 1967	MAK 1-21 1968

BY-DATE WHC APPROVAL — BY-DATE KEH APPROVAL — REV BY DATE — REVISIONS — COMMENT REVISED — MICROFILMED

RHO APPROVAL BY LJ GARVEY DATE 2-13 1987

U.S. DEPARTMENT OF ENERGY
RICHLAND OPERATIONS OFFICE
KAISER ENGINEERS HANFORD COMPANY

PROJ ENGR BR ESTEY 2-13 1987
DR WH BRAYMEN 11-21 1986
APPROVED BY RM ITEN 11-21 1986
SAFETY AC MINISTER 11-21 1986
APPROVED BY BUH/C SUBLETT 11-21 1986
CHECKED BY GP McDONALD 11-20 1986
DRAWN BY TA HALE 11-9 1986
DESIGNED BY B HAO 11-9 1986

M ELECTRICAL CATHODIC PROT ANODE INSTL

PROJECT TITLE 702-A VENT HEADER CATHODIC PROTECTION

PROJ B-234/110 | CODE CK0039 | JOB X270A2
SCALE 1"=20' | BLDG 241-A-702 | TRADE 7801
DRAWING NUMBER H-2-77321 | SHEET 1 | OF 1 | REV 2

H277321C1
C 01/26/88

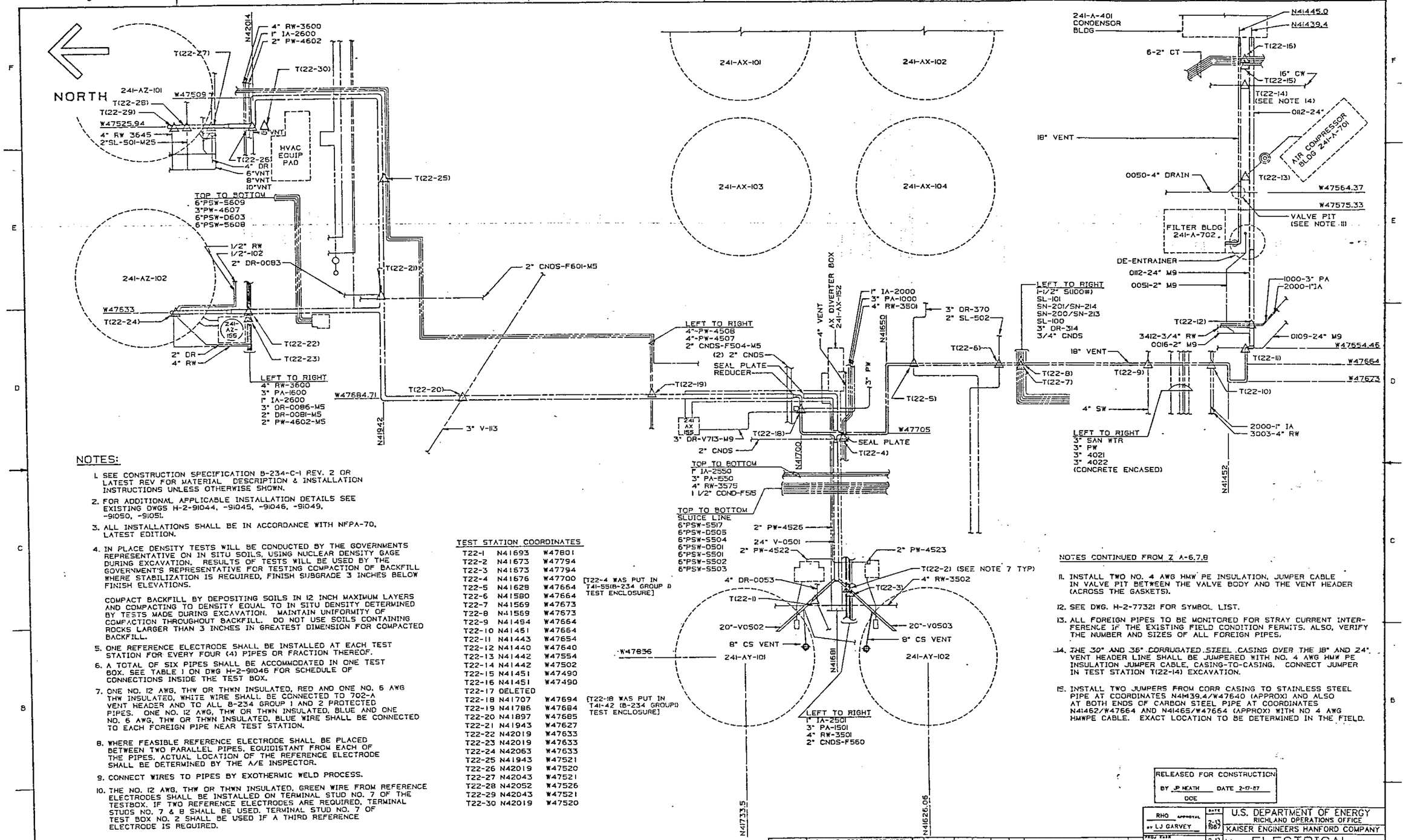

NOTES:

1. SEE CONSTRUCTION SPECIFICATION B-234-C-1 REV. 2 OR LATEST REV FOR MATERIAL DESCRIPTION & INSTALLATION INSTRUCTIONS UNLESS OTHERWISE SHOWN.
2. FOR ADDITIONAL APPLICABLE INSTALLATION DETAILS SEE EXISTING DWGS H-2-91044, -91045, -91046, -91049, -91050, -91051.
3. ALL INSTALLATIONS SHALL BE IN ACCORDANCE WITH NFPA-70, LATEST EDITION.
4. IN PLACE DENSITY TESTS WILL BE CONDUCTED BY THE GOVERNMENTS REPRESENTATIVE ON IN SITU SOILS, USING NUCLEAR DENSITY GAGE DURING EXCAVATION. RESULTS OF TESTS WILL BE USED BY THE GOVERNMENT'S REPRESENTATIVE FOR TESTING COMPACTION OF BACKFILL WHERE STABILIZATION IS REQUIRED, FINISH SUBGRADE 3 INCHES BELOW FINISH ELEVATIONS.

   COMPACT BACKFILL BY DEPOSITING SOILS IN 12 INCH MAXIMUM LAYERS AND COMPACTING TO DENSITY EQUAL TO IN SITU DENSITY DETERMINED BY TESTS MADE DURING EXCAVATION. MAINTAIN UNIFORMITY OF COMPACTION THROUGHOUT BACKFILL. DO NOT USE SOILS CONTAINING ROCKS LARGER THAN 3 INCHES IN GREATEST DIMENSION FOR COMPACTED BACKFILL.
5. ONE REFERENCE ELECTRODE SHALL BE INSTALLED AT EACH TEST STATION FOR EVERY FOUR (4) PIPES OR FRACTION THEREOF.
6. A TOTAL OF SIX PIPES SHALL BE ACCOMMODATED IN ONE TEST BOX. SEE TABLE 1 ON DWG H-2-91046 FOR SCHEDULE OF CONNECTIONS INSIDE THE TEST BOX.
7. ONE NO. 12 AWG, THW OR THWN INSULATED, RED AND ONE NO. 6 AWG THW INSULATED, WHITE WIRE SHALL BE CONNECTED TO 702-A VENT HEADER AND TO ALL B-234 GROUP 1 AND 2 PROTECTED PIPES. ONE NO. 12 AWG, THW OR THWN INSULATED, BLUE AND ONE NO. 6 AWG, THW OR THWN INSULATED, BLUE WIRE SHALL BE CONNECTED TO EACH FOREIGN PIPE NEAR TEST STATION.
8. WHERE FEASIBLE REFERENCE ELECTRODE SHALL BE PLACED BETWEEN TWO PARALLEL PIPES, EQUIDISTANT FROM EACH OF THE PIPES. ACTUAL LOCATION OF THE REFERENCE ELECTRODE SHALL BE DETERMINED BY THE A/E INSPECTOR.
9. CONNECT WIRES TO PIPES BY EXOTHERMIC WELD PROCESS.
10. THE NO. 12 AWG, THW OR THWN INSULATED, GREEN WIRE FROM REFERENCE ELECTRODES SHALL BE INSTALLED ON TERMINAL STUD NO. 7 OF THE TESTBOX. IF TWO REFERENCE ELECTRODES ARE REQUIRED, TERMINAL STUDS NO. 7 & 8 SHALL BE USED. TERMINAL STUD NO. 7 OF TEST BOX NO. 2 SHALL BE USED IF A THIRD REFERENCE ELECTRODE IS REQUIRED.

(NOTES CONTINUED IN Z C-1,2)

TEST STATION COORDINATES

T22-1	N41693	W47801
T22-2	N41673	W47794
T22-3	N41673	W47794
T22-4	N41676	W47700
T22-5	N41629	W47664
T22-6	N41580	W47664
T22-7	N41569	W47673
T22-8	N41569	W47673
T22-9	N41494	W47664
T22-10	N41451	W47664
T22-11	N41443	W47654
T22-12	N41440	W47640
T22-13	N41442	W47554
T22-14	N41442	W47502
T22-15	N41451	W47490
T22-16	N41451	W47490
T22-17	DELETED	
T22-18	N41707	W47694
T22-19	N41786	W47684
T22-20	N41897	W47685
T22-21	N41943	W47627
T22-22	N42019	W47633
T22-23	N42019	W47633
T22-24	N42063	W47633
T22-25	N41943	W47521
T22-26	N42019	W47520
T22-27	N42043	W47521
T22-28	N42052	W47526
T22-29	N42043	W47521
T22-30	N42019	W47520

NOTES CONTINUED FROM Z A-6,7,8

11. INSTALL TWO NO. 4 AWG HMW PE INSULATION, JUMPER CABLE IN VALVE PIT BETWEEN THE VALVE BODY AND THE VENT HEADER (ACROSS THE GASKETS).
12. SEE DWG. H-2-77321 FOR SYMBOL LIST.
13. ALL FOREIGN PIPES TO BE MONITORED FOR STRAY CURRENT INTERFERENCE IF THE EXISTING FIELD CONDITION PERMITS. ALSO, VERIFY THE NUMBER AND SIZES OF ALL FOREIGN PIPES.
14. THE 30" AND 36" CORRUGATED STEEL CASING OVER THE 18" AND 24" VENT HEADER LINE SHALL BE JUMPERED WITH NO. 4 AWG HMW PE INSULATION JUMPER CABLE, CASING-TO-CASING. CONNECT JUMPER IN TEST STATION T(22-14) EXCAVATION.
15. INSTALL TWO JUMPERS FROM CORR CASING TO STAINLESS STEEL PIPE AT COORDINATES N41439.4/W47640 (APPROX) AND ALSO AT BOTH ENDS OF CARBON STEEL PIPE AT COORDINATES N41462/W47664 AND N41465/W47664 (APPROX) WITH NO 4 AWG HMWPE CABLE. EXACT LOCATION TO BE DETERMINED IN THE FIELD.

DRAWING TRACEABILITY LIST			
SD-WM-TI-316	WIRE-TO-PIPE CONNECTIONS & JUNCTION BOX WIRING DETAILS	H-2-77321	ELEC CATH PROT ANODE INSTL
		H-2-91046	CATHODIC PROT DETAILS TEST STATION WIRING
H-2-91050	CATH PROT TRACEABILITY DWGS, SYMBOLS & NOTES	H-2-91051	CATHODIC PROT INSTL DETAILS
		H-2-91049	CATHODIC PROT DET AC FEED
		H-2-91045	CATHODIC PROT INSTL DETAILS
H-2-91042	CATH PROT PLOT PLAN ANODE INSTL	H-2-91044	CATHODIC PROT INSTL DETAILS
H-2-91041	CATH PROT PLOT PLAN ANODE INSTL	NA	DRAWING LIST
H-2-91040	CATH PROT PLOT PLAN ANODE INSTL	NUMBER	TITLE
NUMBER	TITLE	REFERENCES	
		NEXT USED ON H-2-77321	

REV	BY-DATE	BY-DATE	MOD	TWN	DESCRIPTION	REV
	RHC	KEH APPROVAL	B-29 1987	B-4 1987	AS-BUILT FOR PROJ B-234/110 ADDED TO LIST TEST STATION COORD: Z A-5 THWN, Z ABC-5,6 ADDED a) RCD CHANG Z B-7 ADDED OR b) DFC B-234-62(102)-7,8 c) DFC B-234-65 Z F-18 d) DFC B-234-65 ZF-7	1
	APPROVAL					

REVISIONS

MICROFILMED — COMMENT REVIEW

RELEASED FOR CONSTRUCTION
BY JP HEATH DATE 2-17-87
DOE

RHO APPROVAL BY LJ GARVEY DATE 2-13-1987

U.S. DEPARTMENT OF ENERGY
RICHLAND OPERATIONS OFFICE
KAISER ENGINEERS HANFORD COMPANY

		DATE
PROJ ENGR	BR ESTEY	2-13-1987
DR	WH BRAYMEN	11-21-1986
APPROVED BY	RM ITEN	11-21-1986
DRAFTED BY	AG MINISTER	11-21-1986
APPROVED BY	BJM/C SUBLETT	11-21-1986
CHECKED BY	GP McDONALD	11-20-1986
DES BY	YA HALE	11-14-1986
DESIGNED BY	B HAO	11-9-1986

ELECTRICAL CATHODIC PROT TEST STATIONS

PROJECT TITLE: 702-A VENT HEADER CATHODIC PROTECTION

PROJ	FG	JOB
B-234/110	CK0039	R270A2
SCALE 1"=20'	BLDG 241-A-702	INDEX 7801

DRAWING NUMBER	SHEET	OF	REV
H-2-77322	1	1	1

KEH-BAD

H27732281
C 10/12/87

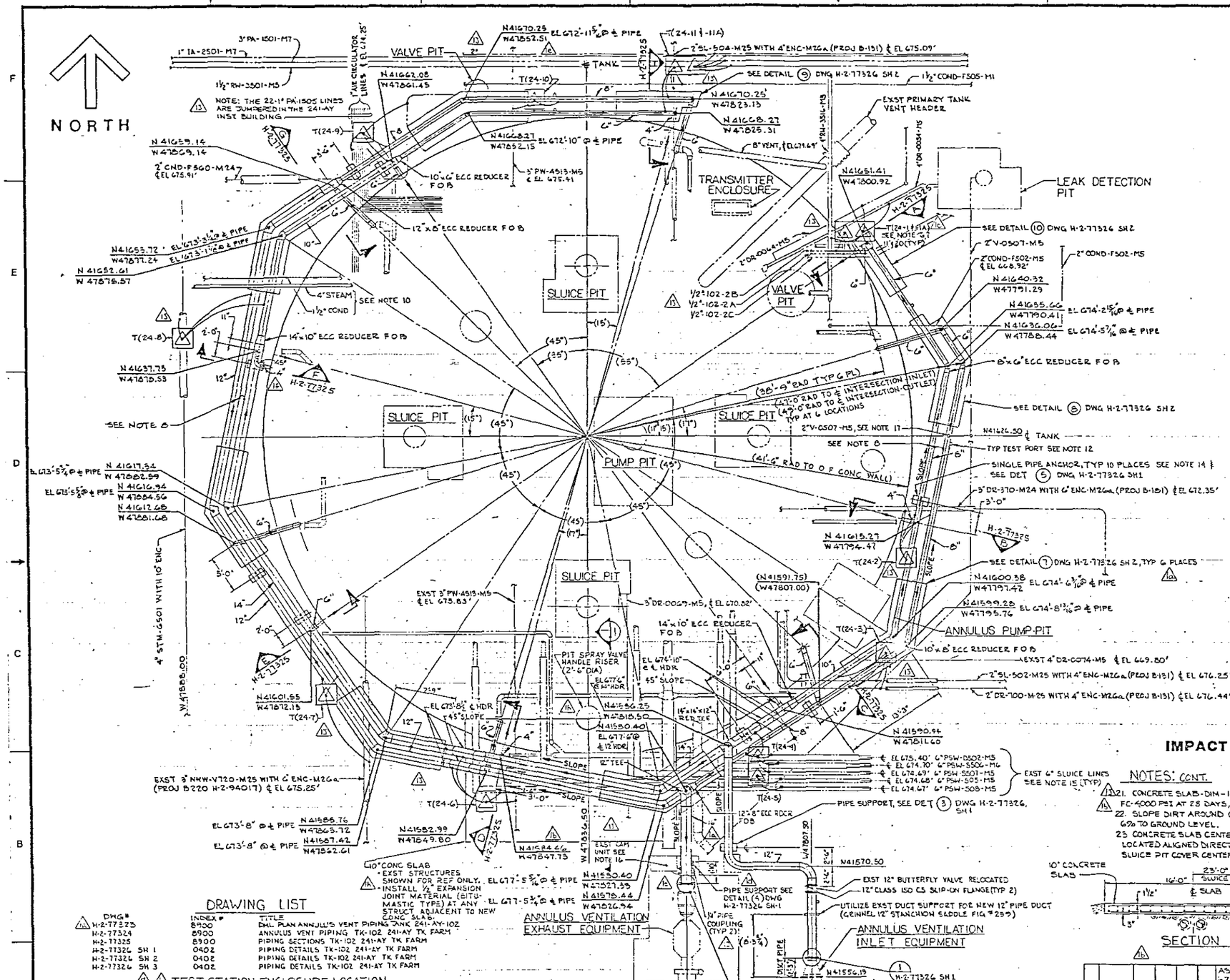

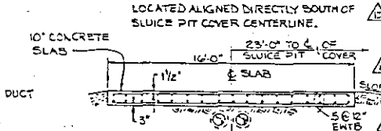

SECTION 1/—

NEW ANNULUS PIPING
EXISTING PIPING & EQUIPMENT
EXISTING ANNULUS PIPING TO BE ABANDONED
TEST STATION ENCLOSURE
TEST STATION (TYP)
TEST WIRES TO PIPE OR REFERENCE ELECTRODE (TYP)

GENERAL NOTES

1. THE EXISTING ANNULUS VENT DUCTS (SHOWN SHADED) SHALL BE CUT/CAPPED OR PLUGGED AND ABANDONED IN PLACE. LOCATIONS TO BE DETERMINED BY EXISTING FIELD CONDITIONS.
2. ALL NEW ANNULUS INLET AND EXHAUST PIPING SHALL BE SLOPED TO STORAGE TANK A MINIMUM OF 1/16 PER FOOT.
3. UNLESS OTHERWISE SHOWN, ALL BRANCH CONNECTIONS SHALL BE INTEGRALLY REINFORCED BRANCH CONNECTIONS WITH A WALL THICKNESS TO MATCH ATTACHED PIPING.
4. TIE EXISTING LEAK DETECTION PIT VENT LINE, 2" V-0507-M5, INTO TOP OF ℄ EXHAUST PIPE, AT CENTERLINE OF TANK, ZONE D-4.
5. THE EXISTING FINISHED GRADE ABOVE THE 241-AY-102 TANK IS APPROXIMATELY 679'-0".
6. TEST BOXES WILL BE INSTALLED BY ANOTHER PROJECT. AT EACH TEST STATION LOCATION, CADWELD TWO WIRES TO THE NEW ANNULUS EXHAUST AND SUPPLY HEADERS, ONE NO 12 AWG THWN INSULATED RED AND ONE NO 6 AWG THWN INSULATED WHITE WIRE AND TO ALL UNPROTECTED PIPES ONE NO 12 AWG AND ONE NO 6 AWG INSULATED BLUE WIRES, MAINTAIN 12" SEPARATION BETW TEST LEAD WELDS. SEE DET 2 ON DWG H-2-77325.
7. INSTALL PERMANENT HORIZ REF ELECTRODE AT EACH TEST BOX. ONE REF ELECTRODE SHALL BE INSTALLED FOR EVERY 4 PIPES OR FRACTION THEREOF. WHERE FEASIBLE, THE REFERENCE ELECTRODE SHALL BE -- PLACED BETWEEN THE VENTILATION PIPES EQUIDISTANCE FROM EACH PIPE. ACTUAL LOCATION OF REFERENCE ELECTRODE SHALL BE DETERMINED BY THE GOVT REP. THE PERMANENT COPPER-COPPER SULFATE REFERENCE ELECTRODE SHALL BE HARCO CORP PART NO THRP-802 OR MATCOR PART NO PEC-UG-CUSO4 OR FARWEST CORROSION PART NO FWCC-SP-150 WITH 20 FEET OF NO 12 AWG, THWN INSULATED, GREEN WIRE ROUTED UP WITH TEST LEADS. FIELD ADJUST LOCATION OF REFERENCE ELECTRODE AS NECESSARY.
8. ALL JUMPER CABLES BETWEEN PIPES SHALL BE NO 4 AWG HMW PE UNLESS OTHERWISE NOTED. JUMPER CABLE SHALL BE INSTALLED IN ACCORDANCE WITH DETAIL 3 ON DWG H-2-77325.
9. TEST WIRES SHALL NOT BE INSTALLED IN TRAFFIC AREAS OR ROADWAY. IF SUCH CONDITIONS EXIST IT SHALL BE MOVED TO A NEW LOCATION TO BE DETERMINED BY GOVT REP.
10. 4" STEAM & 1½" COND LINES FOR HEATING COILS LOCATED ABOVE GRADE AT APPROX EL 681'-5".
11. INSTALL A TEST ENCLOSURE AT EACH OF THE 10 TEST STATIONS LOCATIONS INDICATED ON THE DWG. BRING IN THE TEST WIRES IN THE TEST ENCLOSURE, BUNDLE TAPE AND TAG THE WIRES SYSTEMATICALLY FOR FUTURE TERMINATION. THE TEST ENCLOSURE SHALL BE AS MANUFACTURED BY QUAZITE CORP., PQ STYLE SERVICE BOX, MODEL NO. PC13243A OR PG13243 WITH LOCKING STEEL COVER MODEL NO. PC13245A OR PG13245.
12. INSTALL A TOTAL OF 16 TEST PORTS AS SHOWN. TEST PORTS SHALL BE LOCATED ON THE SIDE OF THE DUCTS, SEE DET 6 ON DWG H-2-77326.
13. ALL MATERIAL, FABRICATION & TESTING SHALL BE IN ACCORDANCE WITH CONSTRUCTION SPECIFICATION B-672-C2.
14. PIPE ANCHOR BLOCKS WILL NOT BE SET UNTIL THE VERTICAL EXCAVATIONS ARE BACKFILLED TO THE PIPE ANCHOR ELEVATION.
15. ESTIMATED ELEVATIONS SHOWN FOR ℄ PIPE AT INTERSECTION WITH ANNULUS EXHAUST AND INLET DUCTS.
16. FIELD LOCATE AND INSTALL EXST PITOT TUBE AND THERMOCOUPLE FOR CAM UNIT IN ACCORDANCE WITH DWG H-2-92970, SECT A-A.
17. TIE EXST 2" V-0507-M5 LEAK DETECTION PIT VENT LINE INTO TOP OF NEW 8" ANNULUS EXHAUST VENT PIPE AT N41624.50 AS SHOWN. THE EXST 2" VENT LINE ELEVATION AT TIE-IN LOCATION IS APPROX 674'-11" AND THE ELEVATION OF NEW EXHAUST PIPE IS APPROX 674'-6". THE 2" VENT LINE WILL RISE TO APPROX MAX ELEVATION 675'-7⅛". ALL ELEVATIONS ARE TO ℄ PIPE.
18. LOCATE BARRICADE AROUND PORTION OF BURIED PIPING THAT IS NOT BURIED DEEP ENOUGH TO CARRY TRAFFIC LOADS, ZN 2-3,6. INSTALL BARRICADE IN ACCORDANCE WITH HANFORD PLANT STD W-1-3.
19. ANNULUS INLET AND EXHAUST PIPING ELEVATIONS MAY BE ADJUSTED DURING CONSTRUCTION IF INTERFERENCE WITH EXISTING BURIED PIPE OCCURS AND SLOPE PER NOTE 2 IS MAINTAINED.
20. INSTALL AN ENGRAVED PHENOLIC NAMEPLATE, PER HPS-2-2-7, ON THE TOP OF EACH TEST ENCLOSURE. ENGRAVE THE NAMEPLATE USING ⅝" LETTERS AS FOLLOWS: TEST STATION OR TEST STATION ST (NO. AS SHOWN ON DWG) FASTEN THE NAMEPLATE TO THE TEST ENCLOSURE BY USE OF MACHINE SCREWS OR RIVETS. (CONT ℄ 9-3)

IMPACT LEVEL 3

NOTES: CONT.

21. CONCRETE SLAB-DIM-16'-0" X 27'-0", FC-4000 PSI AT 28 DAYS, FY-60,000 PSI
22. SLOPE DIRT AROUND CONCRETE SLAB 6% TO GROUND LEVEL.
23. CONCRETE SLAB CENTERLINE TO BE LOCATED ALIGNED DIRECTLY SOUTH OF SLUICE PIT COVER CENTERLINE.

DRAWING LIST

DWG #	INDEX #	TITLE
H-2-77325	8900	DWL PLAN ANNULUS VENT PIPING TANK 241-AY-102
H-2-77324	8900	ANNULUS VENT PIPING TK-102 241-AY TK FARM
H-2-77325	8900	PIPING SECTIONS TK-102 241-AY TK FARM
H-2-77326 SH 1	0402	PIPING DETAILS TK-102 241-AY TK FARM
H-2-77326 SH 2	0402	PIPING DETAILS TK-102 241-AY TK FARM
H-2-77326 SH 3	0402	PIPING DETAILS TK-102 241-AY TK FARM

TEST STATION ENCLOSURE LOCATION

1. TEST STATION ENCLOSURE (T24-1) (T24-1A)	N41652.6 W47800.9	6. TEST STATION ENCLOSURE (T24-7)	N41555.1 W47871.2
2. TEST STATION ENCLOSURE (T24-2)	N41610.9 W47787.7	7. TEST STATION ENCLOSURE (T24-8)	N41629.6 W47818.8
3. TEST STATION ENCLOSURE (T24-3)	N41555.5 W47799.4	8. TEST STATION ENCLOSURE (T24-9)	N41600.0 W47815.5
4. TEST STATION ENCLOSURE (T24-4) (T24-4A)	N41554.8 W47814.0	9. TEST STATION ENCLOSURE (T24-10)	N41610.1 W47849.5
5. TEST STATION ENCLOSURE (T24-6)	N41573.1 W47849.8	10. TEST STATION ENCLOSURE (T24-11) (T24-11A)	N41614.7 W47826.3

DRAWING TRACEABILITY LIST

NUMBER	TITLE	NEXT USED ON
H-2-64300	DWG LIST PUREX TANK FARM EXPANSION	
H-2-92451	ANNULUS EXHAUST SYS MODIFICATIONS	
H-2-91982	ANNULUS EXHAUST SYS MODIFICATIONS	
H-2-64464	HVAC DEHUMIDIFIER INSTALLATION	
H-2-64461	VENTILATION AIR FLOW DIAGRAM	
H-2-64430	ANNULUS VENT PIPING TK-102 241-AY TK FARM	

NUMBER	TITLE
H-2-92910	RAD MON ANNULUS VAPOR SMPLG
H-2-77324	DRAWING LIST

REFERENCES

MICROFILMED — BY-DATE — WHC APPROVAL — BY-DATE — KEM APPROVAL

REVISIONS: NAC 2.4 — REV BY DATE — DESCRIPTION — REV

AS-BUILT FOR PROJ B-672
-7, E F7 F5, 6 E5 C D4 B3
1) DFC B-672-16, B.C.1 B.E.1, 2 A B B5
2) DFC B-672-17, 2 B3, B.C.5, 6, B2
3) DFC B-672-4, 2 B1, 2
4) DFC B-672-5, 2 E7
5) DFC B-672-10, 2 F6, B5
6) DFC B-672-11, 2 B5
7) DFC B-672-13, B A B E F1, 2 C1 E6
8) DFC B-672-15, 2 A B2, 3 B5, 6
9) T.A. C1, 2, 3, B5
10) DFC B-672-16, 2 E1, 2 A5 A6

COMMENT REVIEW

RHO APPROVAL BY DOH	DATE 6/1/84	U. S. DEPARTMENT OF ENERGY Richland Operations Office
PROJ ENGR JWDE	5-3-83	KAISER ENGINEERS HANFORD COMPANY
DR Whitmarsh	5/4/83	ANNULUS VENT PIPING TK-102 241-AY TANK FARM
APPROVED BY J.H.	6-8-83	
SAFETY	5/10/83	PROJECT TITLE 241-AY ANNULUS VENTILATION DUCT UPGRADE
APPROVED BY D. Isaac	5/13/83	
CHECKED BY E.E. SMITH	5/18/83	PROJ B-672 — CK CK-0084 — PM 250500
DRAWN BY G. DOVE	1/26/83	SCALE AS SHOWN — BLDG 241-AY — INDEX 8900
DESIGNED BY D. Nakashima	1/26/81	DRAWING NUMBER H-2-77324 — SHEET 1 — OF 1 — REV 1

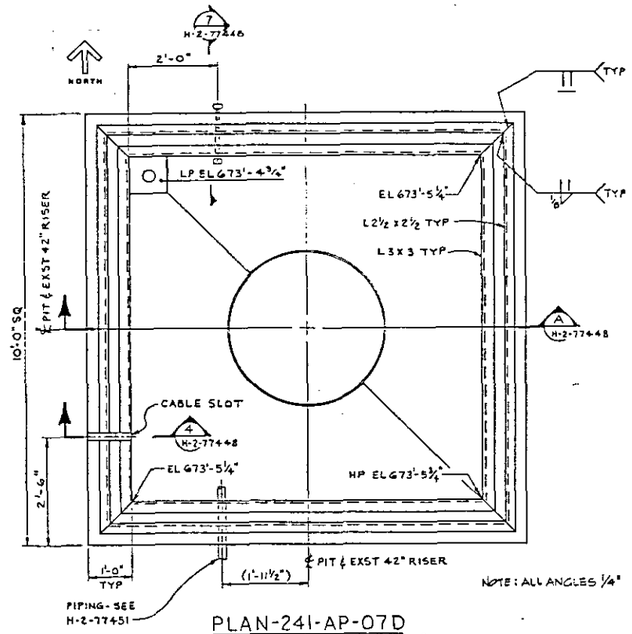

PLAN-241-AP-07D
SCALE: 3/4"=1'-0"

PLAN-241-AP-07E

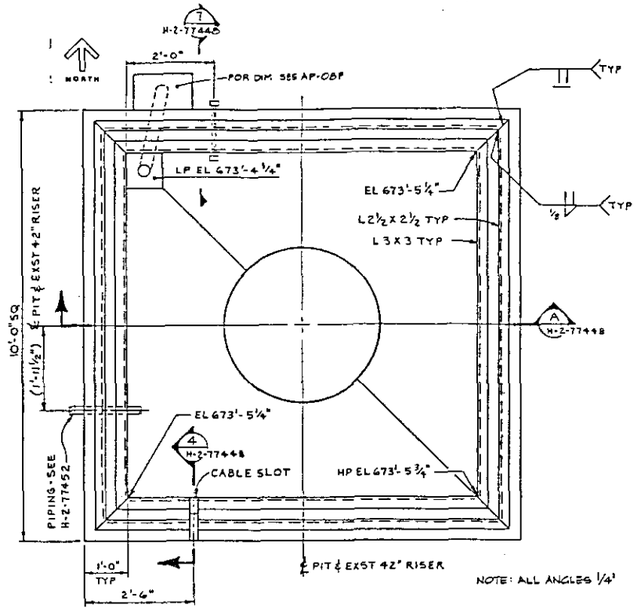

PLAN-241-AP-07F

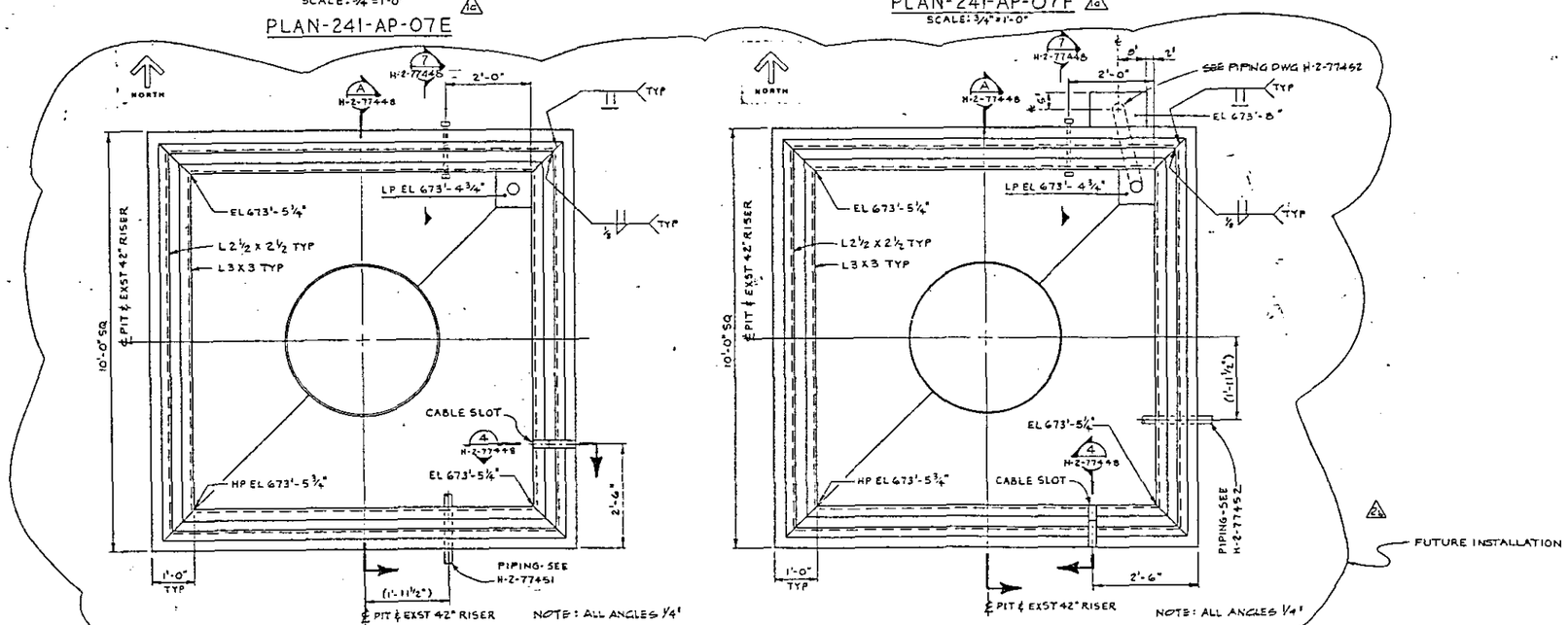

PLAN-241-AP-08D
SCALE: 3/4"=1'-0"

PLAN-241-AP-08E

PLAN-241-AP-08F

GENERAL NOTES:

1. FOR CONSTRUCTION SPECIFICATION SEE W-E01-C1.
2. DESIGN LOADING:
   - SOIL SURCHARGE - - - 250 PSF
   - SOIL DENSITY - - - - - 115 PCF
   - PIT LIVE LOADS:
     - FLOOR - - - - - - 200 PSF
     - COVER BLOCKS - - - 100 PSF — FUTURE INSTALLATION 1a 2a
     - SEISMIC - - - - - - SSE PER SDC 4.1
3. DESIGN STRESSES:
   - CONCRETE - STRENGTH @ 28 DAYS:
     - TANK DOME - - - - - - - F_c' = 5,000 PSI
     - PIT & COVER BLOCKS - - - F_c' = 4,000 PSI
     - OTHER - - - - - - - SEE SPECIFICATION
   - REINFORCING STEEL - - - F_y = 60,000 PSI
   - STRUCTURAL STEEL - - - F_y = 36,000 PSI
   - WELD ELECTRODES - - - - E70XX
4. TOLERANCES SHALL CONFORM TO ACI-117-81 EXCEPT AS NOTED BELOW:
   - INTERIOR WALL SURFACES - - - - - - ± 1/4"
   - COVER BLOCKS & COVER BLOCK RECESSES - ± 1/8"
   - SLEEVES - - - - - - - - - - - - - - ± 1/4"
   - BAILS - - - - - - - - - - - - - - - ± 1/8"
5. CONCRETE PROTECTION FOR REINFORCEMENT SHALL BE AS FOLLOWS UNLESS OTHERWISE NOTED:
   - FOOTINGS AND SLABS ON GROUND - - 3" CLR BOT & SIDES
   - WALLS & SLABS - - - - - - - - - 1 1/2" CLR
6. APPLY SPECIAL PROTECTIVE COATING PER SPECIFICATION TO THE PIT FLOORS, INTERIOR WALLS, TOP OF WALLS AND ON ALL SURFACES OF THE COVER BLOCKS INCLUDING ALL EXPOSED STEEL SURFACES EXCEPT STAINLESS STEEL NOZZLES.
7. 2a IN LIEU OF CHAMFERED EDGES, A SMOOTH RADIUS FINISHED EDGE MAY BE USED.

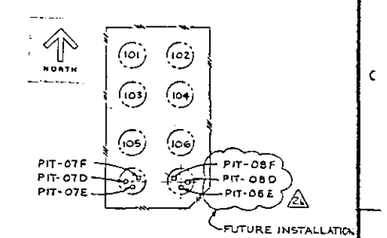

KEY PLAN
241-AP TANK FARM

OFFICIAL RELEASE BY WHC
DATE MAR 2 4 1988

ECN-160759

2	3) KA-7	EHK 12-6-1988	MAK 12-6-1988	LDS 11/29/88	AS-BUILT FOR PROJ W-E01 A-D3-8, b) ECN WE01-33 Z F1,2,BC1, a) ECN WE01-31 Z D1,2	
1					c) REVISED PER ECN W-E01-9	
REV	BY-DATE	BY-DATE	REV BY DATE		DESCRIPTION	REV
	WHC APPROVAL	ECN APPROVAL			REVISIONS	
					COMMENT REVIEW	

MICROFILMED

NUMBER	TITLE	DRAWING LIST	
		NUMBER	TITLE
			REFERENCES
DRAWING TRACEABILITY LIST		NEXT USED ON H-2-77443	

WHC APPROVAL BY D.K.F.	DATE 12/29/88	U.S. DEPARTMENT OF ENERGY Richland Operations Office	
		KAISER ENGINEERS HANFORD COMPANY	
PROJ ENGR J. Hill	12/29/88	STRL MIXER PUMP PIT PLANS	
QA S.S. Breed	3/4/88		
APPROVED BY F.C. Hitchcock	3-4-88		
SAFETY S. Pitts	3-4-88		
APPROVED BY D.K. D. Chen	3-10-88	PROJECT TITLE 107-AP & 108-AP RISER/PIT INSTALLATION	
CHECKED BY E. Cottrell	4-8-88	PROJ W-E01	WO ER 1081	JOB 240790
DRAWN BY L. EPPERLY	4-8-88	SCALE SHOWN	BLDG 241-AP	INDEX 0900
DESIGNED BY E.A. GOAKEY	4-8-88	DRAWING NUMBER H-2-77445	SHEET 1 OF 1	REV 2

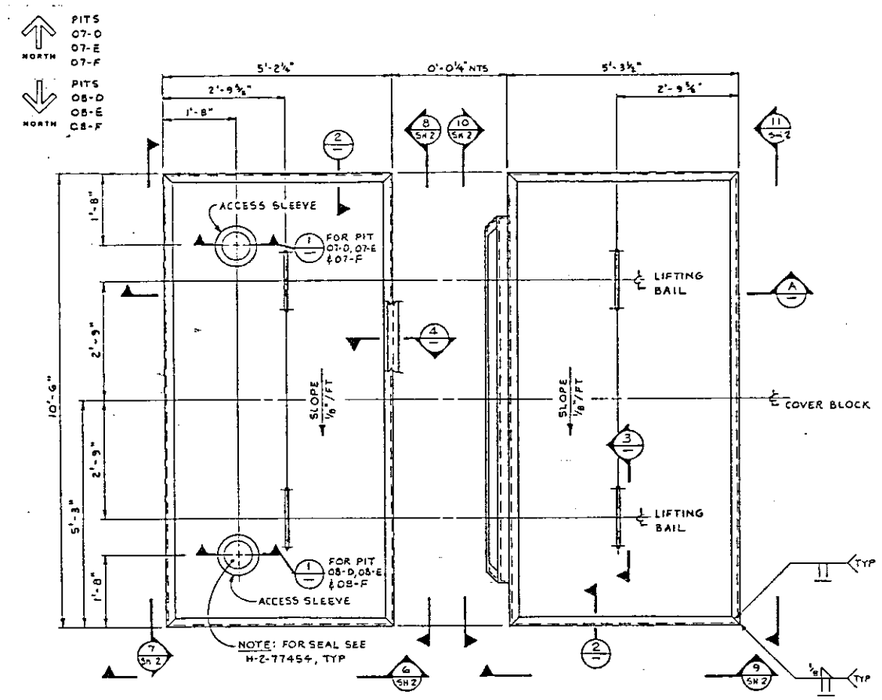

PLAN - COVER BLOCKS
SCALE: ¾" = 1'-0"

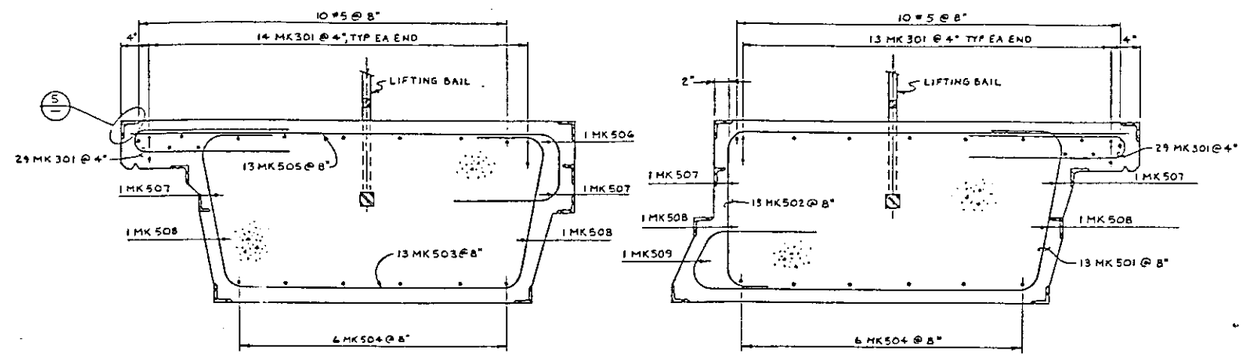

SCALE: 1½" = 1'-0"

COVER BLOCK REINFORCING BENDING DETAILS																				
ALL DIMENSIONS ARE OUT TO OUT																				
ITEM	QTY	SIZE	LENGTH	MARK	TYPE	A	B	C	D	E	G	H	H1	H2	K	K1	K2	O
1	STRAIGHT																	
2	20	5	10-2															
3	8	5	4-10															
4	8	5	4-6															
5																		
6	LIGHT BENDING																	
7	112	3		301	511								1-9					3
8																		
9	13	5	8-1	501	31		1-3	8¼	3-6	1-1½	10			8	1-9		2½	4	3-10
10	13	5	7-1	502	32	10	1-9	4-6											
11	13	5	8-7	503	30	10	1-1½	3-4	1-1½		10	1-9				4			4-[illegible]
12	12	5	13-4	504	30	10	1-8½	6-1	1-8½		10	1-8				4			8-9
13	13	5	6-5	505	32	10	9	4-10											
14	1	5	11-10	506	17		10	10-2	10										
15	4	5	15-3	507	17		3-5	8-5	3-5										
16	4	5	15-1	508	17		3-5	8-3	3-5										
17	1	5	9-5	509	17		10	7-9	10										
18																			
19																			
20																			

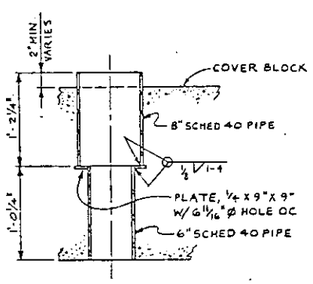

ACCESS SLEEVE
SCALE: 1½" = 1'-0"

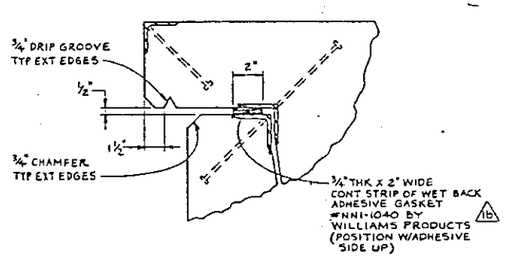

MOISTURE GUARD
SCALE: 3" = 1'-0"

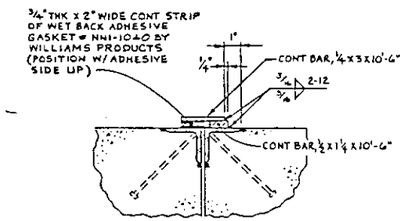

RAIN GUARD
SCALE: 3" = 1'-0"

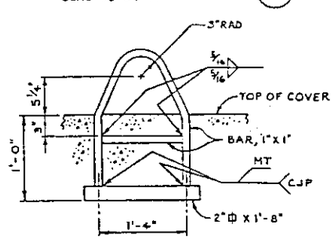

LIFTING BAIL
SCALE: 1½" = 1'-0"

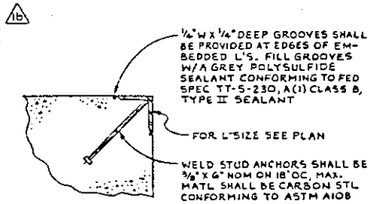

TYPICAL CORNER PROTECTION ANGLE
SCALE: 3" = 1'-0"

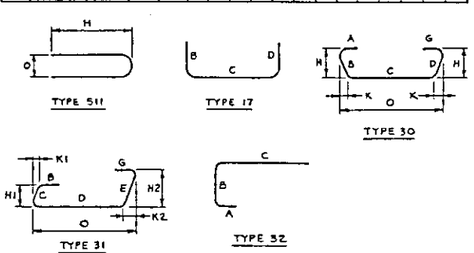

NO FABRICATION ..... THIS ENTIRE DWG IS FOR FUTURE INSTALLATION

FOR GENERAL NOTES SEE H-2-77445

OFFICIAL RELEASE BY WHC DATE MAY 24 1988

ECN-100710

NUMBER	TITLE	DRAWING LIST NUMBER	TITLE
		H-2-77443	
DRAWING TRACEABILITY LIST		NEXT USED ON H-2-77443	REFERENCES

REV	DESCRIPTION	BY	DATE
2	AS-BUILT FOR PROJ W-E01 a) ECN WE01-33 2 C1, 2		
1	b) ECN WE01-8 2N B-6 c) REVISED PER ECN W-E01-9		

REVISIONS

WHC APPROVAL — REM APPROVAL — COMMENT REVIEW

U.S. DEPARTMENT OF ENERGY
Richland Operations Office
KAISER ENGINEERS HANFORD COMPANY

STRL
COVER BLOCKS
PLAN & DETAILS

PROJECT TITLE 107-AP & 108-AP RISER/PIT INSTALLATION

PROJ W-E01	WO ER 1081	JOB 240790	
SCALE SHOWN	BLDG 241-AP	INDEX 0900	
DRAWING NUMBER H-2-77446	SHEET 1	OF 2	REV 2

DESIGNED BY E.A. GOAKEY 4-85
DRAWN BY L. EPPERLY 4-85
CHECKED BY R. OSTROM 4-10-85
APPROVED BY [illegible] 5-10-85
SAFETY [illegible] 5-10-85
APPROVED BY [illegible] 5-10-85
APPROVED BY [illegible] 5-10-85
PROJ ENGR [illegible] 5/11/85
WHC APPROVAL BY [illegible] 5/22/85

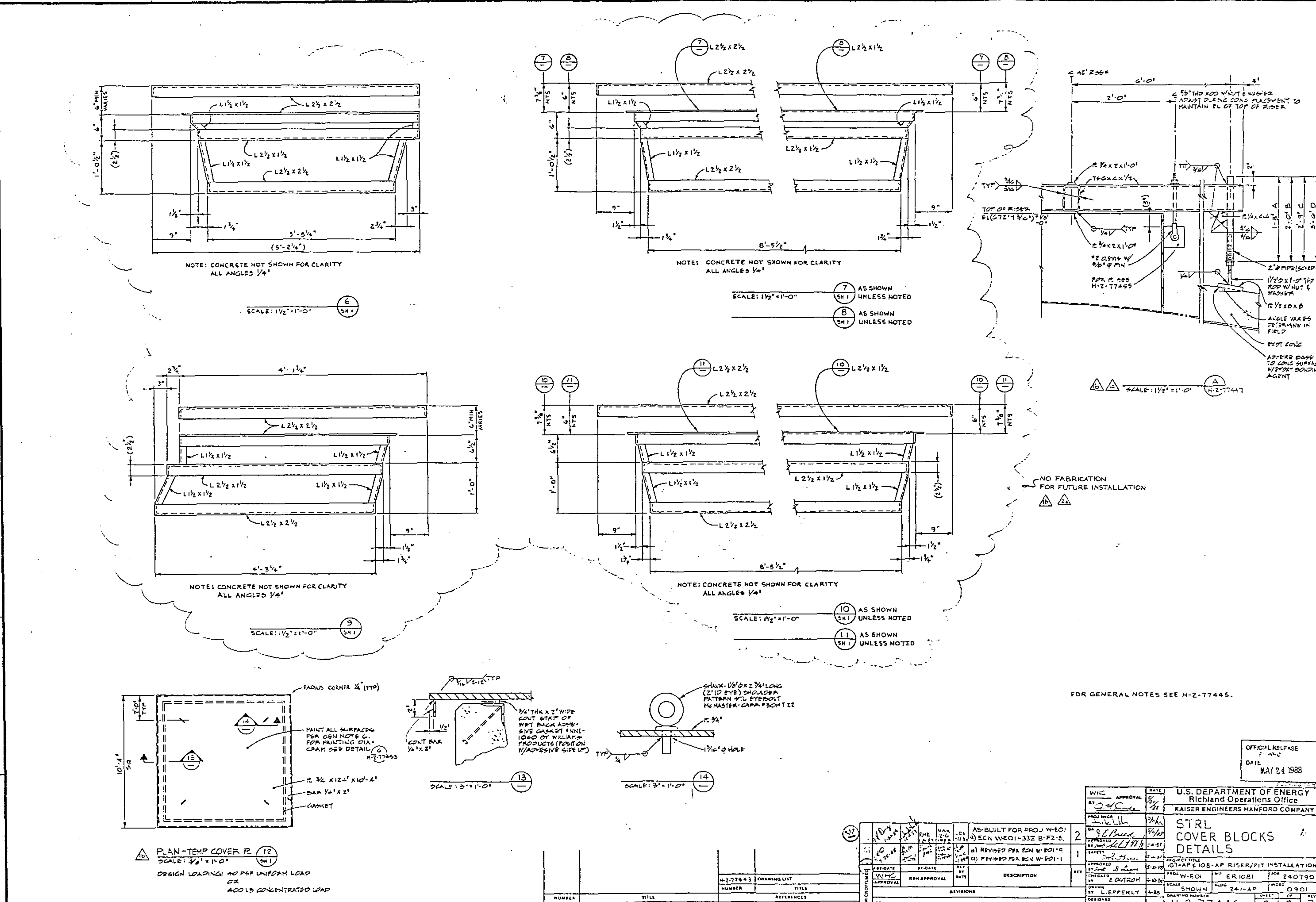

FOR GENERAL NOTES SEE H-2-77445.

OFFICIAL RELEASE BY WHC
DATE MAY 24 1988

REV	DESCRIPTION
2	AS-BUILT FOR PROJ W-E01 a) ECN WE01-333 B-F2-8.
1	b) REVISED PER ECN W-E01-9 a) REVISED PER ECN W-E01-1

U.S. DEPARTMENT OF ENERGY
Richland Operations Office
KAISER ENGINEERS HANFORD COMPANY

STRL COVER BLOCKS DETAILS

PROJECT TITLE: 107-AP & 108-AP RISER/PIT INSTALLATION

PROJ W-E01 | WO ER 1081 | JOB 240790
SCALE SHOWN | BLDG 241-AP | INDEX 0901

CHECKED BY E. OSTROM 4-10-86
DRAWN BY L. EPPERLY 4-88
DESIGNED BY E. A. GOAKEY 4-88

DRAWING NUMBER H-2-77446 | SHEET 2 OF 2 | REV 2

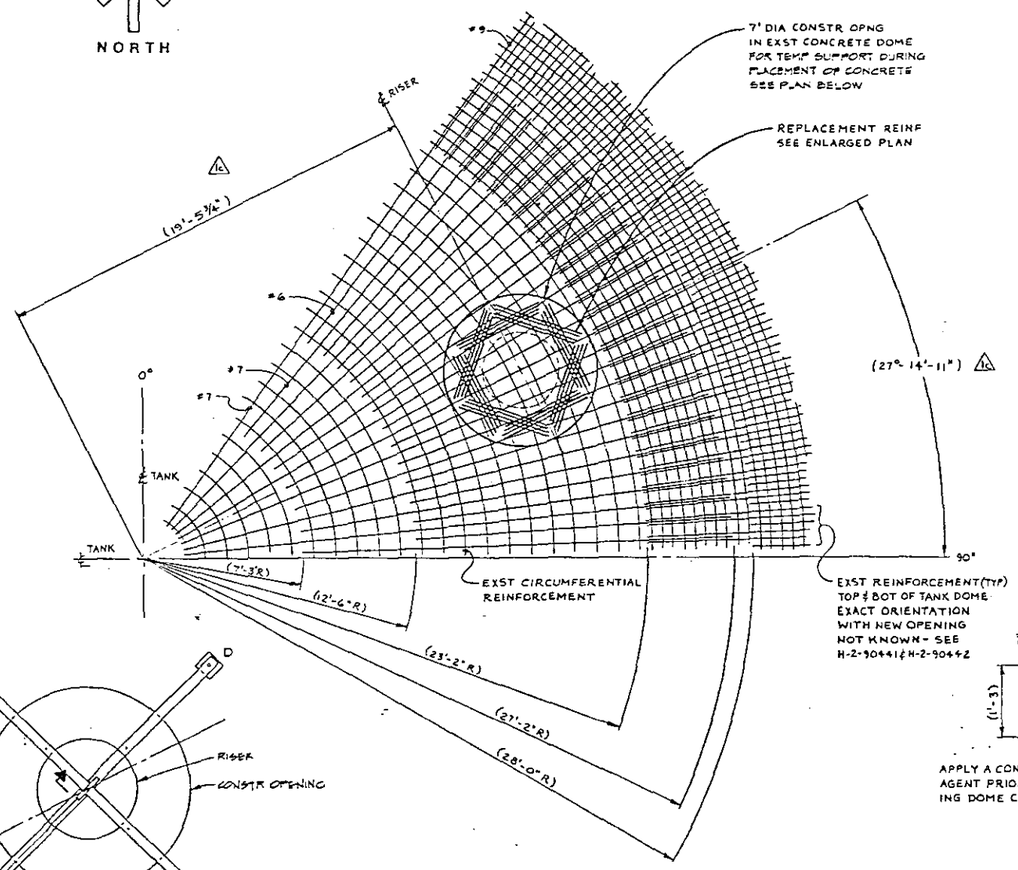

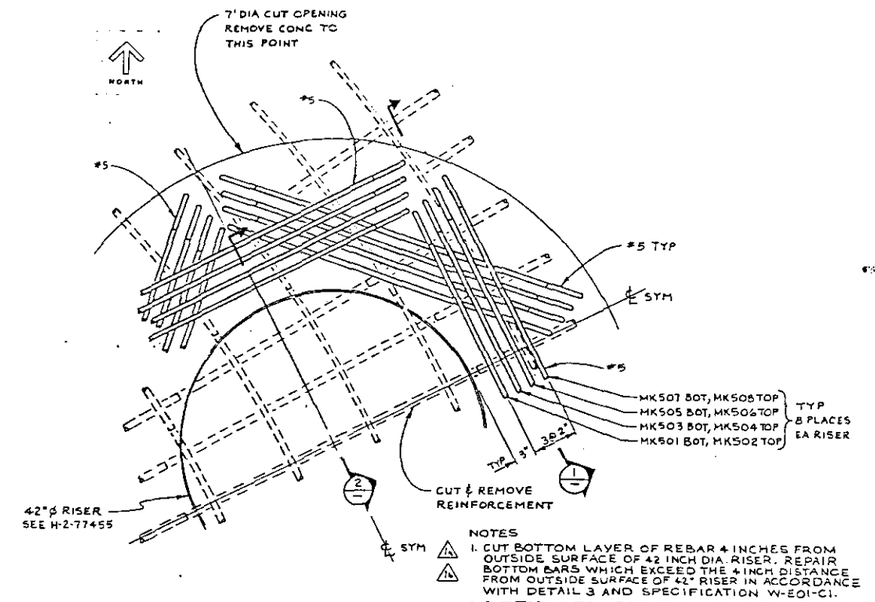

NOTES

1. CUT BOTTOM LAYER OF REBAR 4 INCHES FROM OUTSIDE SURFACE OF 42 INCH DIA RISER. REPAIR BOTTOM BARS WHICH EXCEED THE 4 INCH DISTANCE FROM OUTSIDE SURFACE OF 42" RISER IN ACCORDANCE WITH DETAIL 3 AND SPECIFICATION W-E01-C1.
2. CUT TOP LAYER OF REBAR 8 INCHES FROM EDGE OF CONCRETE CONSTR. OPNG (13 INCHES FROM OUTSIDE SURFACE OF 42 INCH DIA RISER). REPAIR TOP BARS AS SHOWN IN DETAIL NO. 3 AND IN ACCORDANCE WITH SPECIFICATION W-E01-C1

ENLARGED PLAN
SCALE: 1 1/2" = 1'-0"

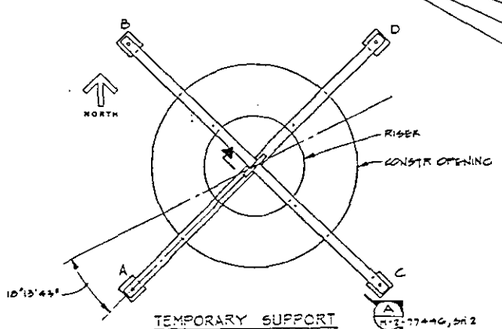

TEMPORARY SUPPORT
SCALE: 1/2" = 1'-0"

PARTIAL PLAN (TANK 107 MIXER PUMP PIT 241-AP-07F, SHOWN) (TANK 108 MIXER PUMP PIT 241-AP-08F, OPP HAND)
SCALE: 3/8" = 1'-0"

A H-2-77446, SH 2

NOTE: FOR EXST REINFORCEMENT, SEE H-2-90441 & H-2-90442

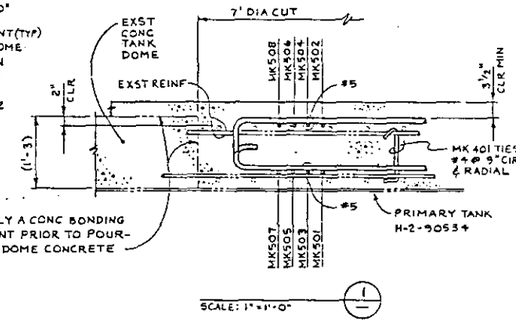

SCALE: 1" = 1'-0" 1

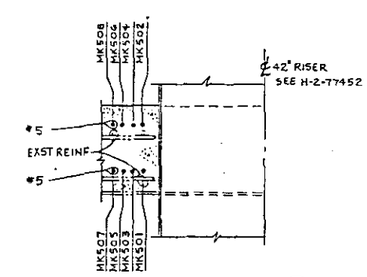

SCALE: 1" = 1'-0" 2

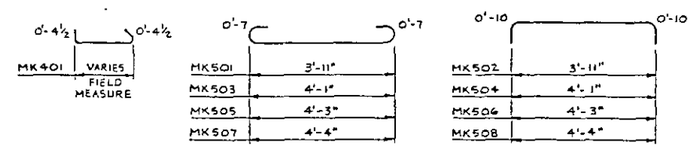

MK501	3'-11"	MK502	3'-11"
MK503	4'-1"	MK504	4'-1"
MK505	4'-3"	MK506	4'-3"
MK507	4'-4"	MK508	4'-4"

FOR GENERAL NOTES SEE H-2-77445

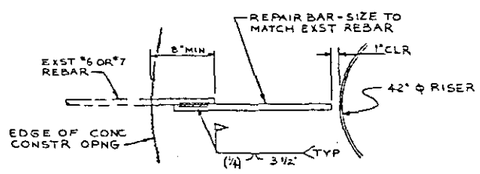

PLAN-TYP
TOP & BOTTOM REBAR REPAIR 3

OFFICIAL RELEASE BY WHC DATE MAY 24 1988

DRAWING TRACEABILITY LIST			
NUMBER	TITLE	NUMBER	TITLE
H-2-90442	STRL. TANK SECT. ON AND HAUNCH REINF	H-2-77443	DRAWING LIST
H-2-90441	STRL. DOME REINFORCEMENT, PLAN & DETAIL	REFERENCES	
		NEXT USED ON H-2-77443	

REFERENCES	
H-2-90442	STRL - TANK SECT & HAUNCH
H-2-90441	STRL - DOME REINF PLAN
H-2-90534	TANK CROSS SEC 241-AP TANKS

REVISIONS				
BY-DATE	BY-DATE	REV BY DATE	DESCRIPTION	REV
WHC APPROVAL	KEH APPROVAL			
		MAX 2-7-1986	LDS 7/11/86	AS-BUILT FOR PROJ W-E01 c) ECN WE01-22 Z E7,D4 b) ECN WE01-19 Z D2,A7 a) ECN-WE01-24 Z D2,A7

MICROFILMED

COMMENT REVIEW

		DATE
WHC APPROVAL BY		5/24/88
PROJ ENGR		7-6-88
DS		7/6/88
APPROVED BY		7-6-88
SAFETY		7-6-88
APPROVED BY		5-10-88
CHECKED BY		5-10-88
DRAWN BY	L. EPPERLY	4-88
DESIGNED BY	E.A. GOAKEY	4-88

U.S. DEPARTMENT OF ENERGY
Richland Operations Office
KAISER ENGINEERS HANFORD COMPANY

STRL
TANK DOME PENETRATION
PLAN & DETAILS

PROJECT TITLE: 107-AP & 108-AP RISER/PIT INSTALLATION

PROJ	WO	JOB
W-E01	ER-1081	240790
SCALE	BLDG	INDEX
SHOWN	241-AP	0900

DRAWING NUMBER H-2-77447 — SHEET 1 OF 1 REV 1

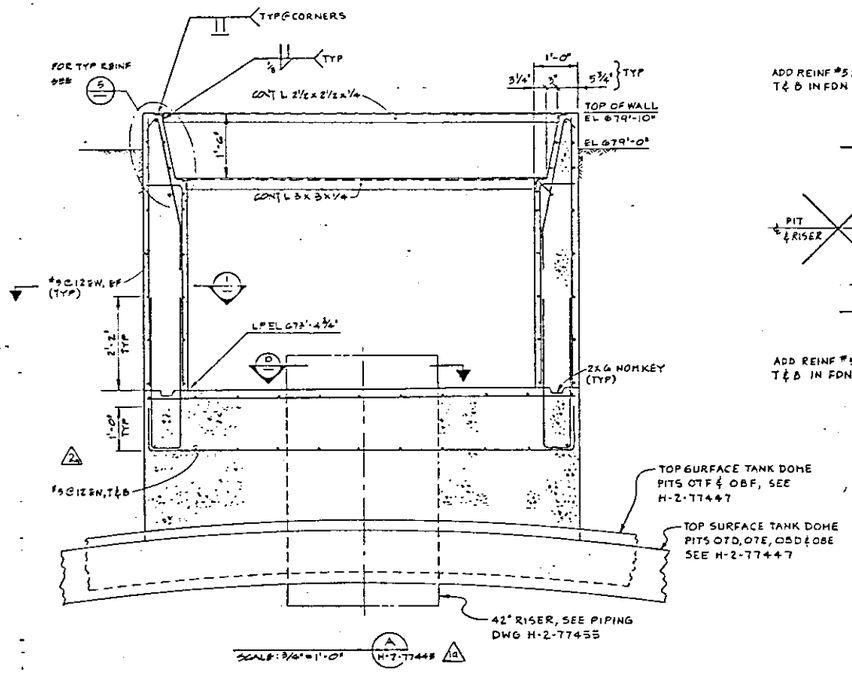

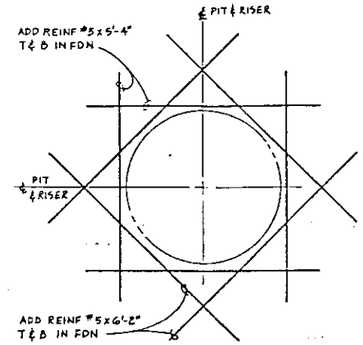

ADDITIONAL REINF D
SCALE: 3/4" = 1'-0"

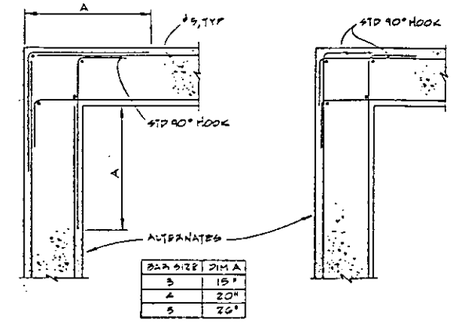

BAR SIZE	DIM A
3	15"
4	20"
5	26"

TYP WALL REINF AT CORNER 1
SCALE: 1" = 1'-0"

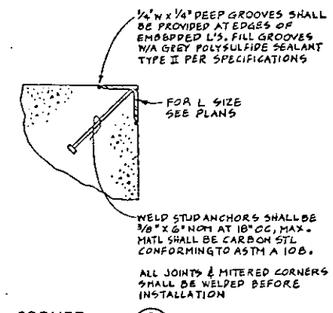

TYPICAL CORNER PROTECTION ANGLE 2
SCALE: 3" = 1'-0"

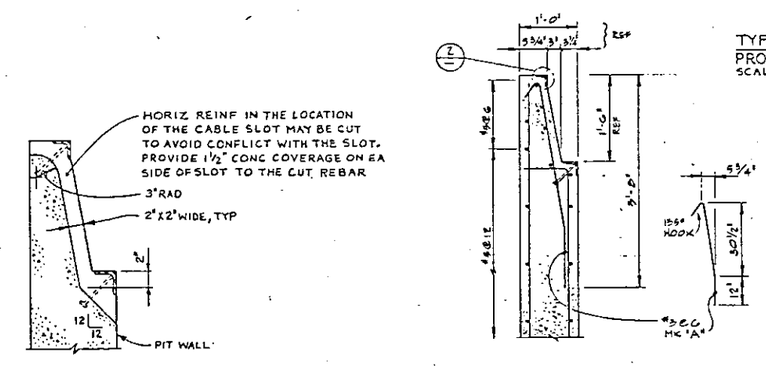

SCALE: 1" = 1'-0" 5

LEAK DETECTOR CONDUCTOR SLOT 4 H-2-77445
SCALE: 1½" = 1'-0"

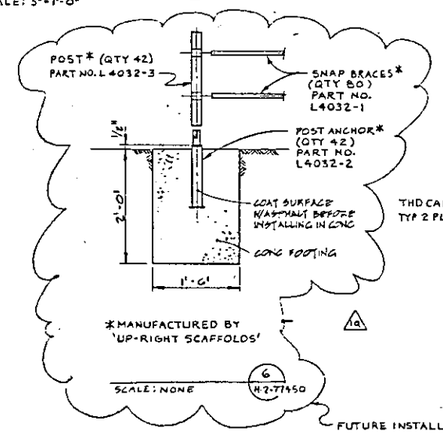

SCALE: NONE 6 H-2-77450

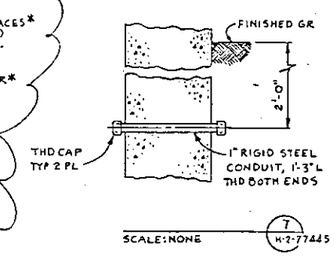

SCALE: NONE 7 H-2-77445

FOR GENERAL NOTES SEE H-2-77445

OFFICIAL RELEASE BY WHC
DATE MAY 24 1988

NUMBER	TITLE	NUMBER	TITLE
		H-2-77443	DRAWING LIST
	DRAWING TRACEABILITY LIST	NEXT USED ON H-2-77443	REFERENCES

REV	DESCRIPTION	REV
2	AS-BUILT FOR PROJ W-E01 b) ECN WE01-33 Z BC3,4 a) ECN W E01-15 Z D.E.8	2
1	a) REVISED PER ECN W-E01-9	1

REVISIONS

WHC APPROVAL — XEN APPROVAL — COMMENT REVIEW

WHC APPROVAL BY — DATE 5/26/88

U. S. DEPARTMENT OF ENERGY
Richland Operations Office
KAISER ENGINEERS HANFORD COMPANY

STRL
MIXER PUMP PIT
SECTIONS & DETAILS

PROJECT TITLE: 107-AP & 108-AP RISER/PIT INSTALLATION

PROJ W-E01	WO ER 1051	JOB 240790	
SCALE SHOWN	BLDG 241-AP	INDEX 0001	
CLASSIFICATION NONE	NOT REQD	DRAWING NUMBER H-2-77448	SHEET 1 OF 1 REV 2

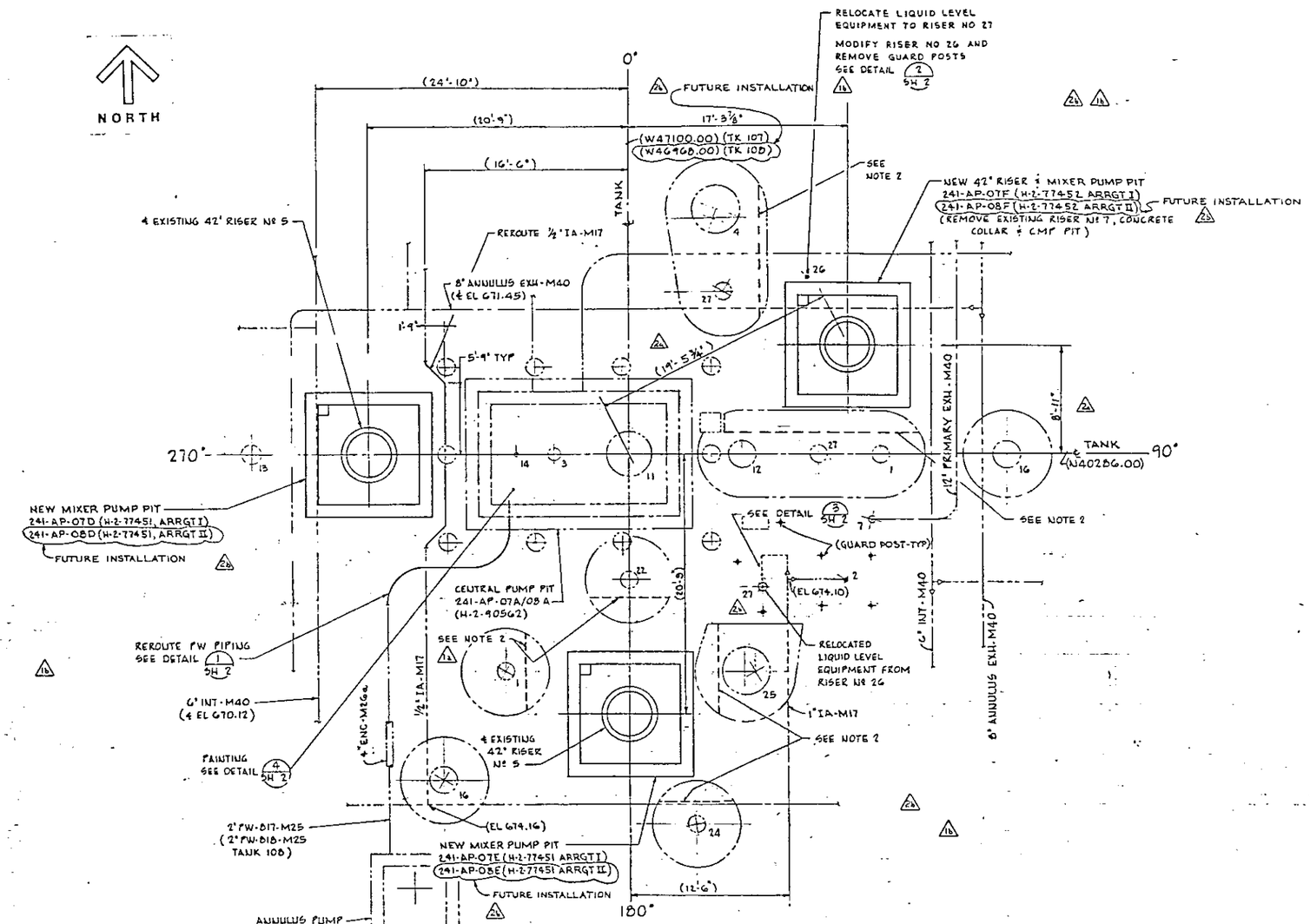

PARTIAL PLAN

TANK 107 (SHOWN) FOR EXISTING PIPING SEE H-2-90559

TANK 108 (OPPOSITE HAND) FOR EXISTING PIPING SEE H-2-90560

FUTURE INSTALLATION

SCALE : 1/4" = 1'-0"

NOTES :-

1- FOR GENERAL NOTES, SEE H-2-77453

2- CUT EXISTING CONCRETE COLLARS (1'-2" THK) USING STRAIGHT LINE CUTS AS REQUIRED TO PERMIT SHORING FOR NEW PITS.

3- TOLERANCES UNLESS OTHERWISE NOTED
FRACTIONAL ± 1/8"
± 2" ON PIPE LINE & GUARD POST LOCATION
ANGULAR ± 1°

OFFICIAL RELEASE BY WHC
DATE MAY 24 1988

EDT-100757

H-2-90596	PIT & PIT COVER PAINTING
H-2-90535	PLAN TK PENETRATIONS 105 & 107
H-2-90536	PLAN TK PENETRATIONS 106 & 108
H-2-90599	JUMPER ARRGT CENT PUMP PIT
H-2-90548	PIPING PLAN Nº 6
H-2-90594	PIPING SUPPORT PLAN TK 108
H-2-90593	PIPING SUPPORT PLAN TK 107
H-2-90540	EFD 241-AP-107 TANK
H-2-90541	EFD 241-AP-108 TANK
H-2-90560	PIPING PLAN TANK 108
H-2-90559	PIPING PLAN TANK 107

DRAWING TRACEABILITY LIST

NUMBER	TITLE
H-2-90561	PIPING MISC DETS I
H-2-90545	PIPING SUPPORT DETS
H-2-90585	PIPING EXPANSION VOID DETS
H-2-77443	DRAWING LIST

REFERENCES

NEXT USED ON

REV	BY-DATE	BY-DATE	REV BY DATE	DESCRIPTION	REV
	WHC APPROVAL	KEH APPROVAL		AS-BUILT FOR PROJ WE01 b) ECN WE01-33 GEN a) ECN-WE01-20 Z D4,E5	2
				W-E01-9 ZN 4-C, 4-F, 5-F, 3-C ZN 6-C b) INCORPORATE ECN a) INCORPORATE ECN W-E01-4	1

REVISIONS

COMMENT REVIEW

WHC APPROVAL BY [signature]

U. S. DEPARTMENT OF ENERGY
Richland Operations Office
KAISER ENGINEERS HANFORD COMPANY

PIPING
TANK 107 & 108 MOD
MIXER PUMP PITS

PROJECT TITLE: 107 AP & 108 AP RISER/PIT INSTALLATION

PROJ: W-601 | WO: ER1081 | JOB: 240750
SCALE: SHOWN | BLDG: 241-AP | MODEL: 0402
DRAWING NUMBER: H-2-77450 | SHEET 1 | OF 2 | REV 2

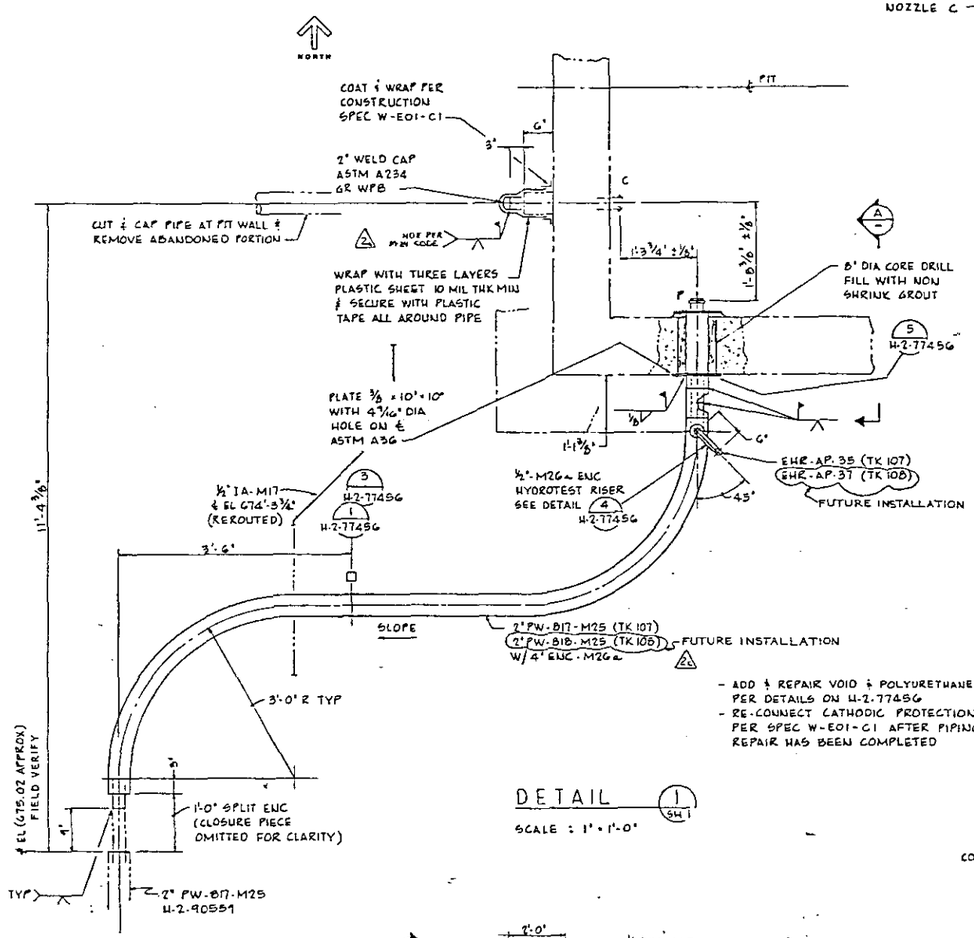

- ADD & REPAIR VOID & POLYURETHANE INSULATION PER DETAILS ON H-2-77456
- RE-CONNECT CATHODIC PROTECTION PER SPEC W-E01-C1 AFTER PIPING REPAIR HAS BEEN COMPLETED

DETAIL 1 (SH 1)

SCALE : 1" = 1'-0"

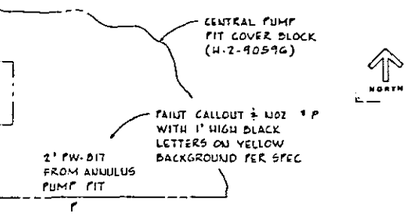

DETAIL 4 (SH 1)

SCALE : NONE

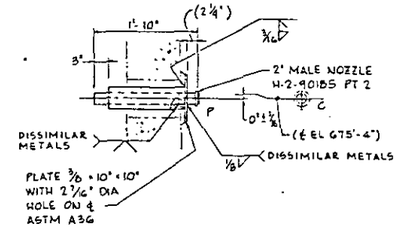

SECTION A

SCALE : 1" = 1'-0"

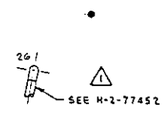

DETAIL 2 (SH 1)

SCALE : 1/2" = 1'-0"

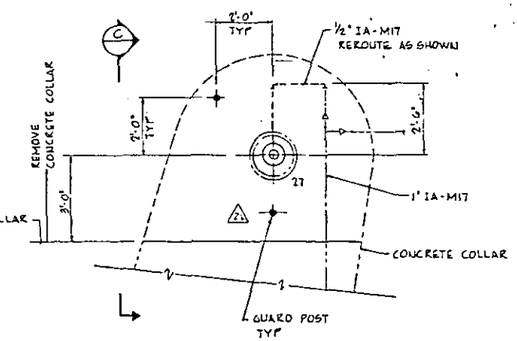

DETAIL 3 (SH 1)

SCALE: 1/2" = 1'-0"

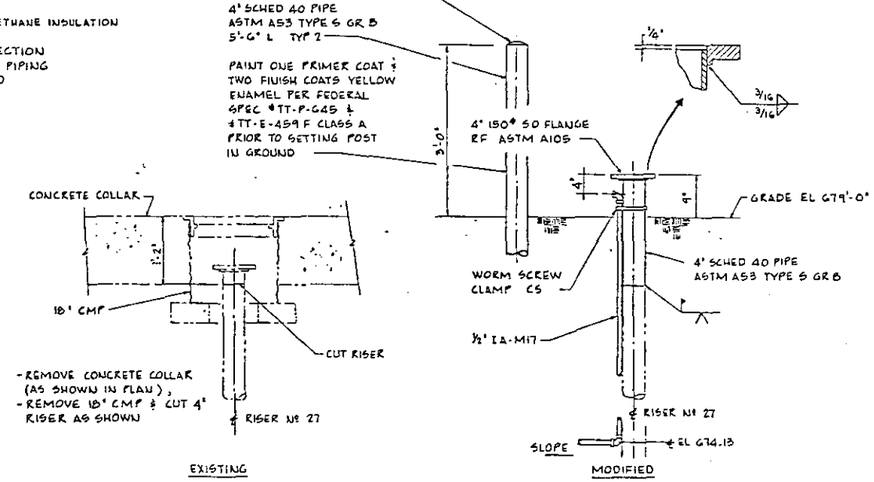

SECTION C

SCALE : 1" = 1'-0"

FOR NOTES SEE H-2-77450 SH 1

OFFICIAL RELEASE BY WHC DATE MAY 24 1988

EDT-106759

NUMBER	TITLE	REFERENCES
H-2-77463	DRAWING LIST	

DRAWING TRACEABILITY LIST — NEXT USED ON

REV	DESCRIPTION
2	AS-BUILT FOR PROJ W-E01 c) ECN WE01-33 Z D5,D6, b) ECN WE01-32 Z B6 a) ECN WE01-14 Z E7
1	CN 1-E & 2-E INCORPORATE ECN W-E01-9

REVISIONS — COMMENT REVIEW

WHC APPROVAL		DATE
PROJ ENGR		
DESIGN ENGR		
APPROVED		
SAFETY		
APPROVED		
CHECKED BY	KENOYER	
DRAWN BY	D. O'CONNOR	
DESIGNED BY	D. O'CONNOR	

U.S. DEPARTMENT OF ENERGY
Richland Operations Office
KAISER ENGINEERS HANFORD COMPANY

PIPING
TANK 107 & 108 MOD
MIXER PUMP PITS

PROJECT TITLE: 107 AP & 108AP RISER/PIT INSTALLATION

PROJ	WO	JOB
W-E01	ER 1081	240790

SCALE	BLDG	MODEL
SHOWN	241-AP	0402

DRAWING NUMBER H-2-77450 — SHEET 2 OF 2 — REV 2

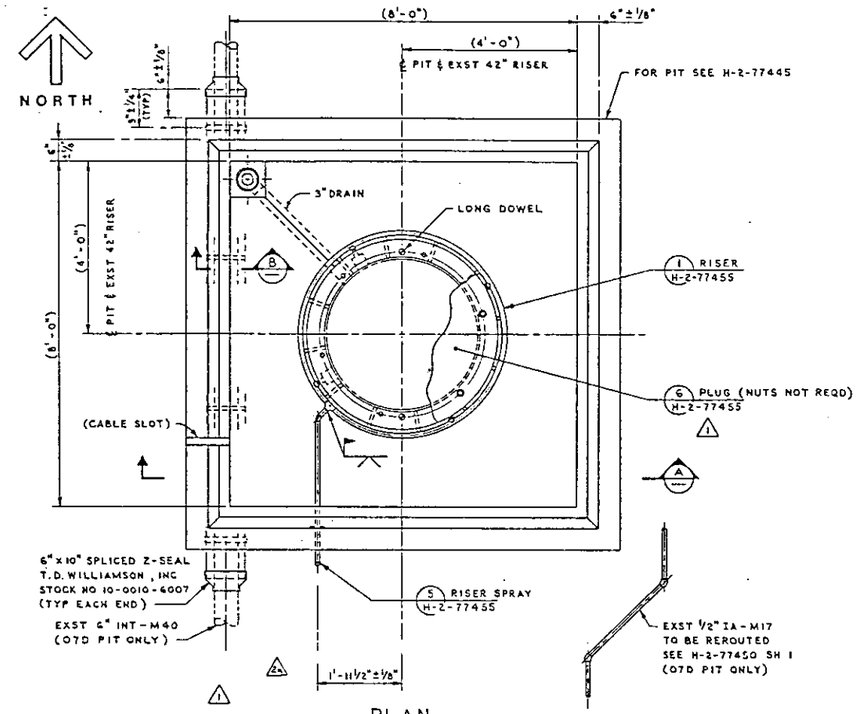

PLAN
(SHOWN WITH COVER REMOVED) 1

ARRANGEMENT I PITS 241-AP-07D & 07E
SCALE : 3/4" = 1'-0"

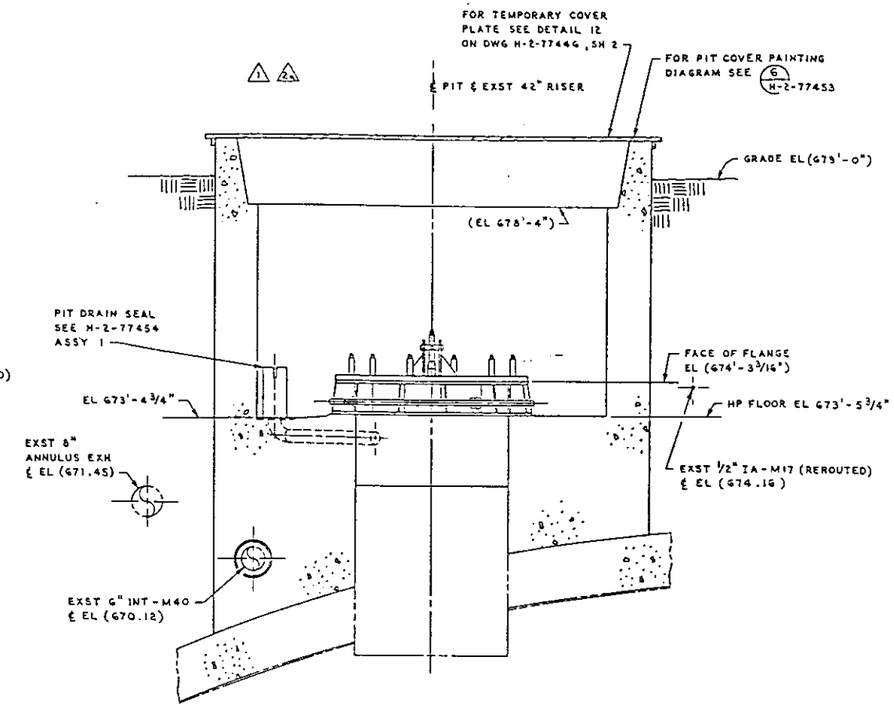

SECTION A
SCALE : 3/4" = 1'-0"

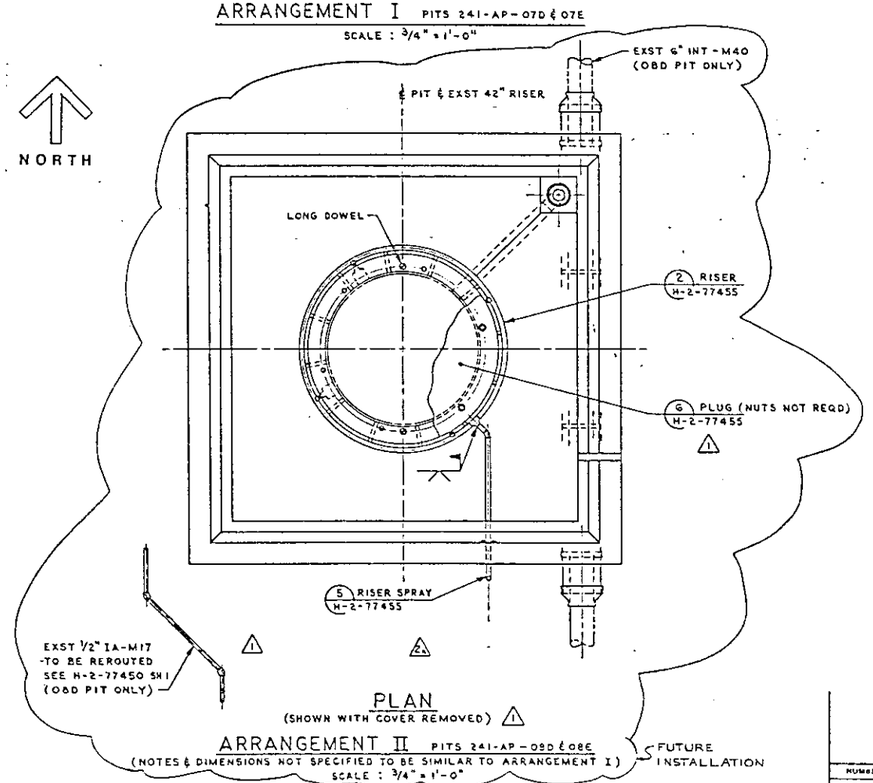

PLAN
(SHOWN WITH COVER REMOVED) 1

ARRANGEMENT II PITS 241-AP-09D & 08E
(NOTES & DIMENSIONS NOT SPECIFIED TO BE SIMILAR TO ARRANGEMENT I)
SCALE : 3/4" = 1'-0"

FUTURE INSTALLATION

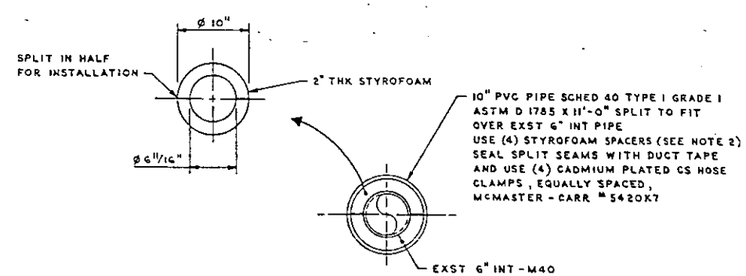

SECTION B
SCALE : 1 1/2" = 1'-0"

NOTES :

1. FOR GENERAL NOTES, SEE H-2-77543.
2. APPLY 3M SPRAY 90 ADHESIVE TO CARBON STEEL PIPE PER MANUFACTURES RECOMMENDATIONS AND ALLOW TO DRY 3 TO 4 MINUTES BEFORE ATTACHING STYROFOAM SPACERS.

OFFICIAL RELEASE BY WHC
DATE MAY 24 1988
EDT-106759

NUMBER	TITLE	NUMBER	TITLE
		H-2-77443	DRAWING LIST
			REFERENCES
		NEXT USED ON	

DRAWING TRACEABILITY LIST

REV	BY-DATE	BY-DATE	REV BY DATE	DESCRIPTION	REV
2	WHC APPROVAL	KEN APPROVAL		AS BUILT FOR PROJ W-E01 D6,7,F3,4,5 ⊙ ECN WE01-33 ⊠ A6,7,8	2
1				ZN 4-F, 6-B, 6-E, 7-A & 7-D INCORPORATE ECN W-E01-9	1

REVISIONS

COMMENT REVIEW

		DATE
WHC APPROVAL BY		5/20/88
PROJ ENGR		5/20/88
DA	J E Breed	5/11/88
APPROVED BY		5-11-88
SAFETY		5/11/88
APPROVED BY	JAN	5/16/88
CHECKED BY	C KENOYER	7/29/88
DRAWN BY	G VINCENT	3/31/88
DESIGNED BY	D O'CONNOR	3/31/88

U.S. DEPARTMENT OF ENERGY
Richland Operations Office
KAISER ENGINEERS HANFORD COMPANY

PIPING
PLAN - MIXER PUMP PIT
241-AP-07D, 07E, 08D & 08E

PROJECT TITLE 107 AP & 108 AP RISER/PIT INSTALLATION

PROJ	WO	JOB
W-E01	ER 1081	240790
SCALE SHOWN	BLDG 241-AP	INDEX 0402

DRAWING NUMBER H-2-77451 SHEET 1 OF 1 REV 2

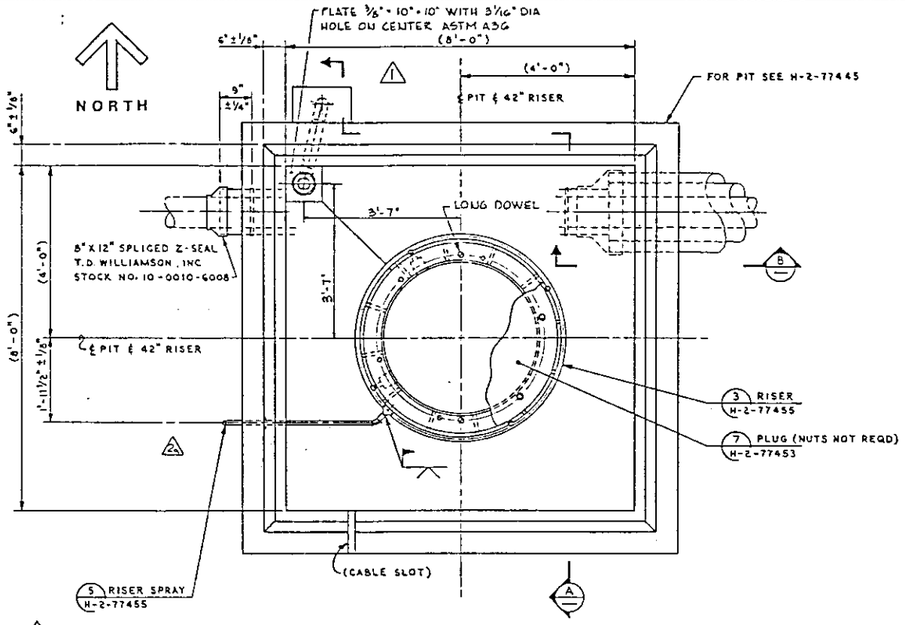

PLAN
(SHOWN WITH COVER BLOCK REMOVED) 1
ARRANGEMENT I PIT 241-AP-07F
SCALE : 3/4" = 1'-0"

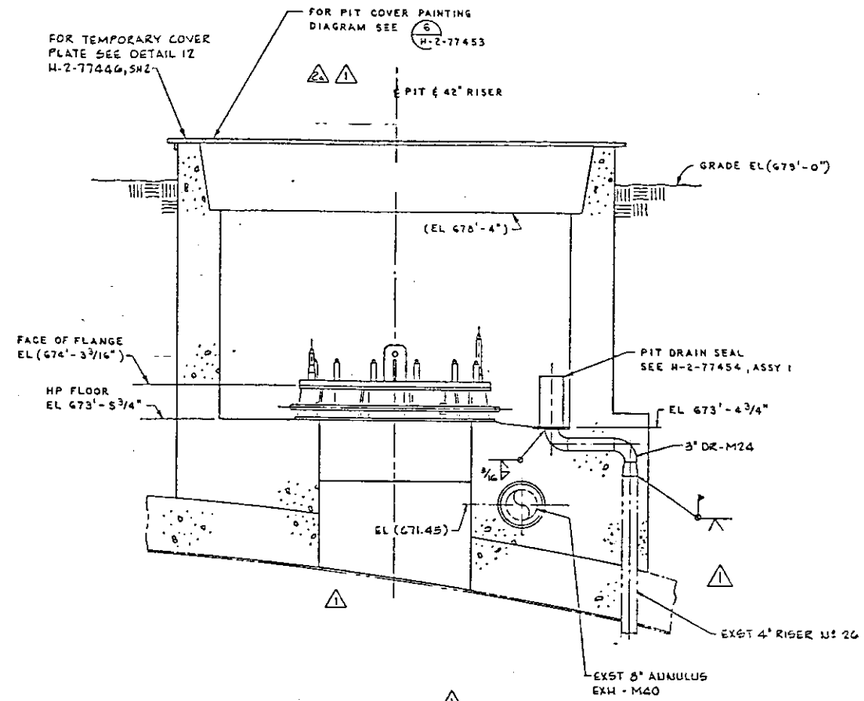

SECTION A
SCALE : 3/4" = 1'-0"

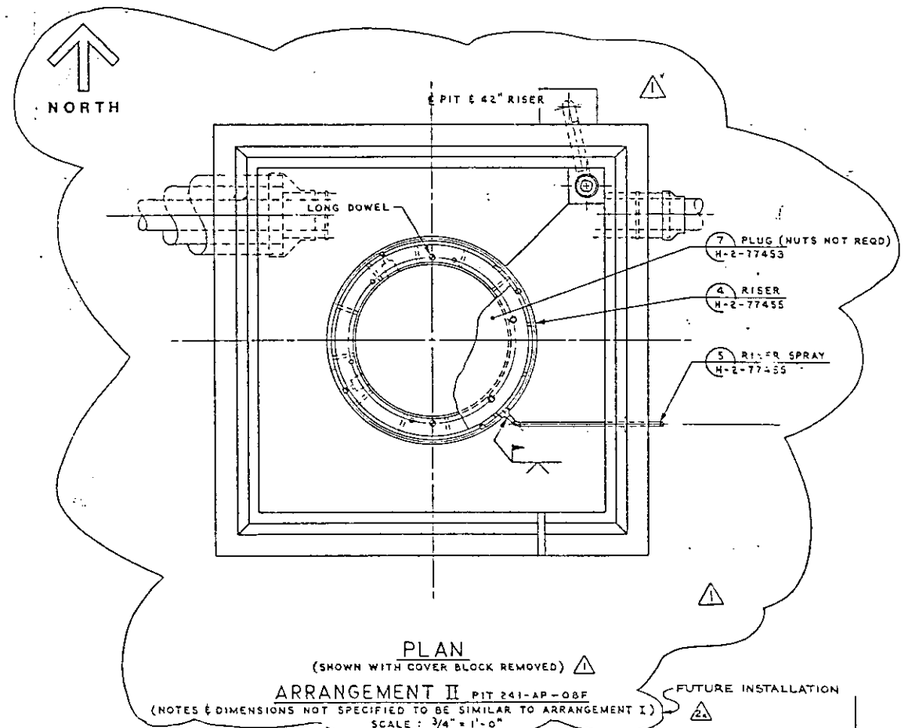

PLAN
(SHOWN WITH COVER BLOCK REMOVED) 1
ARRANGEMENT II PIT 241-AP-08F
(NOTES & DIMENSIONS NOT SPECIFIED TO BE SIMILAR TO ARRANGEMENT I)
SCALE : 3/4" = 1'-0"
FUTURE INSTALLATION 2a

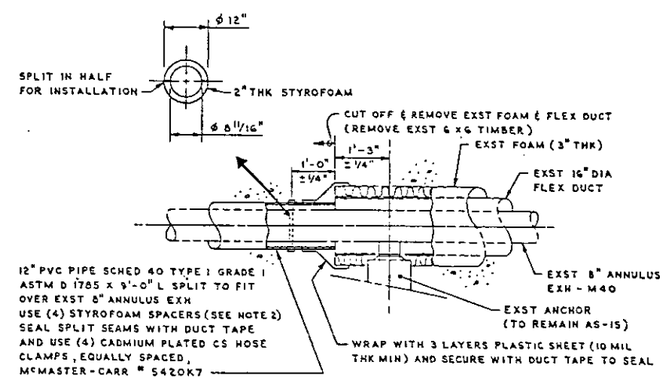

SECTION B
SCALE : 3/4" = 1'-0"

NOTES:

1- FOR GENERAL NOTES SEE H-2-77453

2- APPLY 3M SPRAY 90 ADHESIVE TO CARBON STEEL PIPE PER MANUFACTURERS RECOMMENDATIONS & ALLOW TO DRY 3 TO 4 MINUTES BEFORE ATTACHING STYROFOAM SPACERS.

OFFICIAL RELEASE BY WHC
DATE MAY 24 1988
ELF-100759

NUMBER	TITLE	NUMBER	TITLE
		H-2-77443	DRAWING LIST
DRAWING TRACEABILITY LIST		NEXT USED ON	REFERENCES

REV	DESCRIPTION	REV BY DATE
2	AS-BUILT FOR PROJ W-E01 D,E,B,F3,4. a) ECN WE01-33 & A6,7,8	
1	ZONE F-7, D-8, C-6, A-6, F-4, D-3 INCORPORATE ECN W-E01-9.	

REVISIONS

COMMENT REVIEW

WHC APPROVAL BY [signature] DATE 5/24/88
PROJ ENGR [signature] 5/24/88
QA [signature] 5/24/88
APPROVED BY [signature] 5/24/88
SAFETY [signature] 5/24/88
APPROVED BY JAN [signature] 5/24/88
CHECKED BY C KENOYER 5/24/88
DRAWN BY G VINCENT 5/24/88
DESIGNED BY D O'CONNOR 5/24/88

U.S. DEPARTMENT OF ENERGY
Richland Operations Office
KAISER ENGINEERS HANFORD COMPANY

PIPING
PLAN - MIXER PUMP PIT
241-AP-07F & 08F

PROJECT TITLE 107 AP & 108 AP RISER/PIT INSTALLATION
PROJ W-E01 | WO ER 1081 | JOB 240790
SCALE SHOWN | BLDG 241-AP | INDEX 0402
DRAWING NUMBER H-2-77452 | SHEET 1 | OF 1 | REV 2

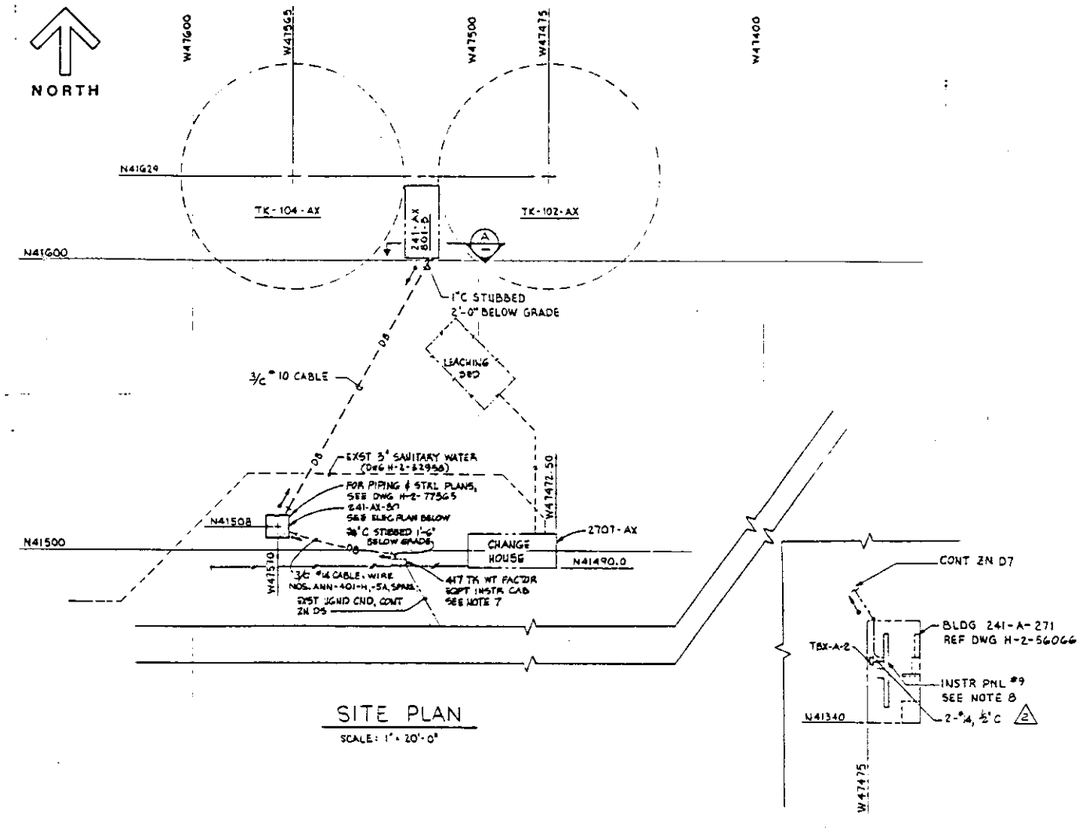

SITE PLAN

SCALE: 1" = 20'-0"

SYMBOL LIST

SYMBOL	DESCRIPTION (SEE NOTE 1)
	LOAD CENTER PANEL, 100-AMP MAIN LUGS, 1-PHASE, 3-WIRE, WITH ONE 15-AMP, 2-POLE (CIRCUITS 1 AND 3) AND TWO 20-AMP, 1-POLE (CIRCUITS 2 AND 4) BREAKERS. SURFACE MOUNT 5'-0" ABOVE GRATING. SEE NOTE 3
S	TOGGLE SWITCH, SURFACE MOUNT 4'-0" ABOVE GRATING
	GFCI DUPLEX RECEPTACLE, SURFACE MOUNT 4'-0" ABOVE GRATING
L (A)	FLUORESCENT LIGHTING FIXTURE, SURFACE MOUNT UNDER ROOF
(H)	LOW-PRESSURE SODIUM LIGHTING FIXTURE, WALL MOUNT 7'-0" ABOVEGRADE
-//-	CONDUIT, EXPOSED 1/2-INCH, UNLESS OTHERWISE NOTED. HATCH MARKS INDICATE QUANTITY OF #12 AWG CONDUCTORS
⊙	GROUND ROD
—DB—	DIRECT BURIAL CABLE
	BURIED CABLE MARKER
~G~	GROUND CONDUCTOR, BARE STRANDED COPPER, #6 AWG

GENERAL NOTES

1. SEE CONSTRUCTION SPECIFICATION CR0304-CI FOR MATERIAL DESCRIPTION AND INSTALLATION INSTRUCTIONS.
2. INSTALL 30-AMP, 2-POLE CIRCUIT BREAKER, GENERAL ELECTRIC TYPE TQ CATALOG NO. THQC230WL PANELBOARD "LB." MARK PANEL SCHEDULE "BLDG 241-AX-80."
3. PROVIDE NAMEPLATE OR PANEL ENGRAVED AS FOLLOWS:

   PANEL A
   120/240V, 1 PH, 3W
   FED FROM PNL LB
   BLDG 241-AX-801B

4. TERMINAL BOX SHALL CONSIST OF AN ABS SCREW COVER ENCLOSURE APPROXIMATELY 5 1/2 INCHES X 3 1/2 INCHES X 3 1/2 INCHES DEEP: HOFFMAN CATALOG NO. A-533CHM WITH PANEL NO. A-530P3 OR APPROVED EQUAL; AND A SIX-SPACE, 300-VOLT TERMINAL STRIP: BUSSMAN CATALOG NO. A203106-HR OR APPROVED EQUAL.
5. PROVIDE SIGNAL CABLE TO MATCH EXISTING.
6. LEAK DETECTION ASSEMBLY SHALL BE CONSTRUCTED AS SHOWN ON DRAWING H-2-34965,REV 15, SHEETS 1 AND 2, WITH THE FOLLOWING MODIFICATIONS:
   - DELETE SUPPORTING STRUCTURE
   - DELETE PART NOS. 18, 19, & 20
   - CHANGE PART NO. 24 DESCRIPTION TO THE FOLLOWING: STROBE LIGHT, WEATHERPROOF, 12 VDC, CLEAR, TOMA-ELECTRIC CORPORATION "MICROSTROBE" NO. 495.
   - CHANGE PART NO. 22 DESCRIPTION TO THE FOLLOWING: SINGLE PHASE BRIDGE RECTIFIER 200 VAC, 2 AMP, 400 WATT
7. CONNECT LEAK DETECTOR ALARM WIRES TO SPARE WIRES ROUTED TO INSTRUMENT PANEL 9 IN BUILDING 241-A-271.
8. CONNECT SPARE CONDUCTORS ROUTED FROM INSTRUMENT CABINET, ZONE D7 TO SPARE ANNUNCIATOR DROP 1-E. ENGRAVE WINDOW "241-AX-80 SERVICE PIT LEAK."
9. MOUNT EXTERIOR SIGN TO BUILDING WITH MECHANICAL FASTENERS: MOUNTING HEIGHT SHALL BE 5'-0" ABOVE FINISHED FLOOR. SIGN SHALL BE AST SIGN SYSTEMS OR APPROVED EQUAL. SIGN SHALL BE FABRICATED AS FOLLOWS:

   SIGN PANEL: FLAT 1/8 INCH THICK FIBERGLASS
   SIZE: 2'-6" WIDE X 6" HIGH
   COLOR: SC-803
   CORNERS: 1 1/2" RADIUS

   LETTER STYLE: HELVETICA BOLD (UC)
   LETTER SIZE: 3"
   MESSAGE LOCATION: CC
   TEXT: 241-AX-80
   COLOR: BLACK

10. ~~DISCONNECT WIRE NO. 8 AT TERMINAL STRIP ON COMMON LEG. REPLACE TERMINAL STRIP WITH NEW TERMINAL STRIP PER CR0304-CI. CONNECT WIRES PROPERLY.~~

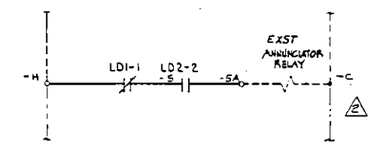

ELEMENTARY DIAGRAM

EXST ANNUNCIATOR-INSTR PNL 9
PREFIX WIRE NUMBERS WITH ANN-401

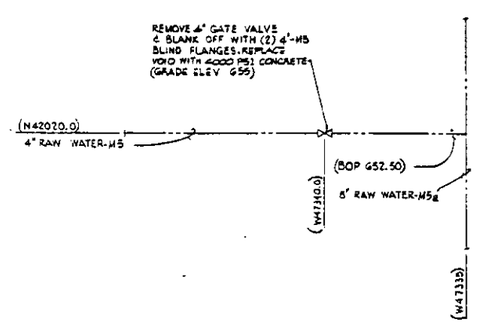

PARTIAL PLAN

SCALE: 1/2" = 1'-0"

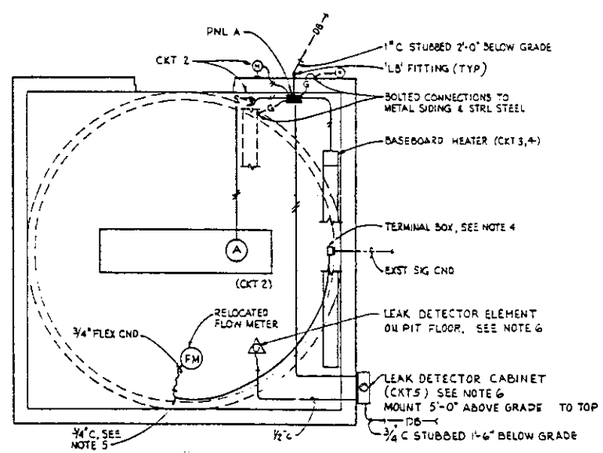

ELEC PLAN 241-AX-80

SCALE: 3/4" = 1'-0"

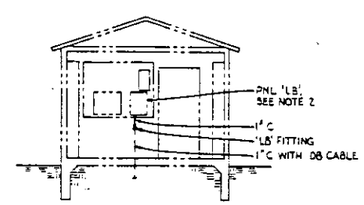

SECTION A

BLDG 241-AX-801-B
SCALE: NONE

H-2-34965	SHEET 2 LK DET ASSY TYP DET.
H-2-56066	241-A-271-A SUMPIT-2LT6 & PWR PLAN
H-2-82958	ELECTRICAL & PIPING - PLANS & SECT.
H-2-77565	ARCH/STRL/PIPING - PLANS, SECTION
—	DRAWING LIST
NUMBER	TITLE
REFERENCES	
NEXT USED ON	H-2-77565

REV	DESCRIPTION
2	REVISION PER ECN 146415
1	AS-BUILT FOR PROJ CR0304
	f) ECN CR0304-12 Z E2
	e) ECN CR0304-10 Z D3,4,5,7
	d) ECN CR0304-11, Z D5
	c) ECN CR0304-5, Z B4, F1,2
	b) ECN CR0304-3, Z D3
	a) ECN CR0304-1, Z D,E7,E,F1,2

MICROFILMED — WHC APPROVAL — KEN APPROVAL — COMMENT REVIEW — REVISIONS

OFFICIAL RELEASE BY WHC
DATE APR -5 1993

EDT NO. 100571

U. S. DEPARTMENT OF ENERGY
Richland Operations Office
KAISER ENGINEERS HANFORD COMPANY

ELEC/PIPING PLANS, SECTION & DIAGRAM

PROJECT TITLE: CROSS CONNECTION PROTECTION AX/AY/AZ TANK FARMS

DRAWN BY A. L. EDWARDS — PROJ CR0304 — JOB 239970
DESIGNED BY R. M. PEM — SCALE SHOWN — BLDG 241-AX-80 — INDEX 0302.7301.7401
CLASSIFICATION NONE — NOT REQD — DRAWING NUMBER H-2-77564 — SHEET 1 OF 1 — REV 2

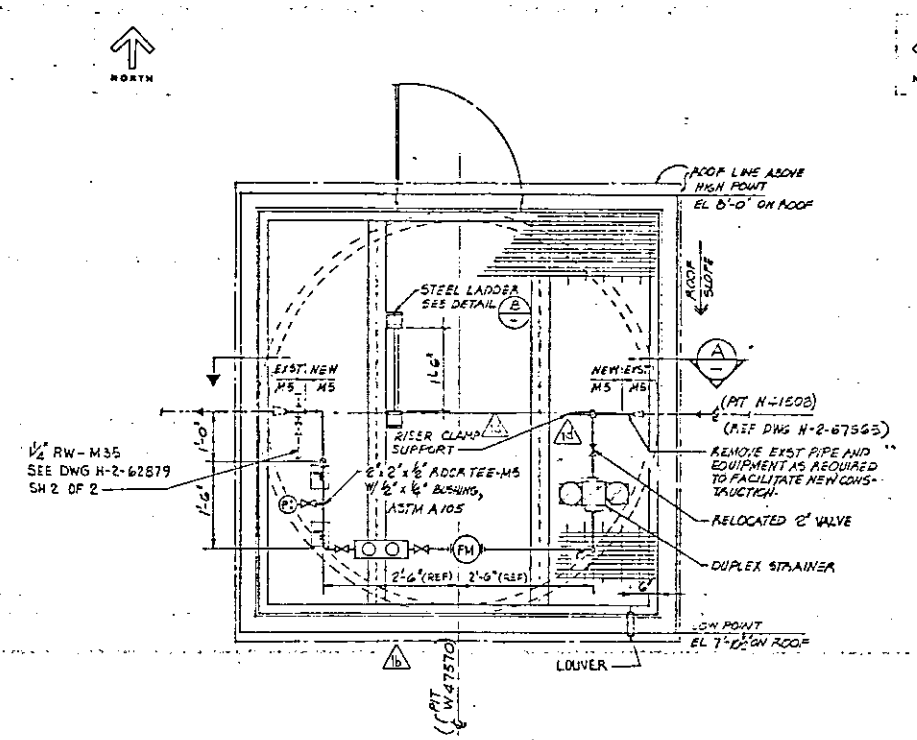

PIPING PLAN
SCALE 3/4" = 1'-0"

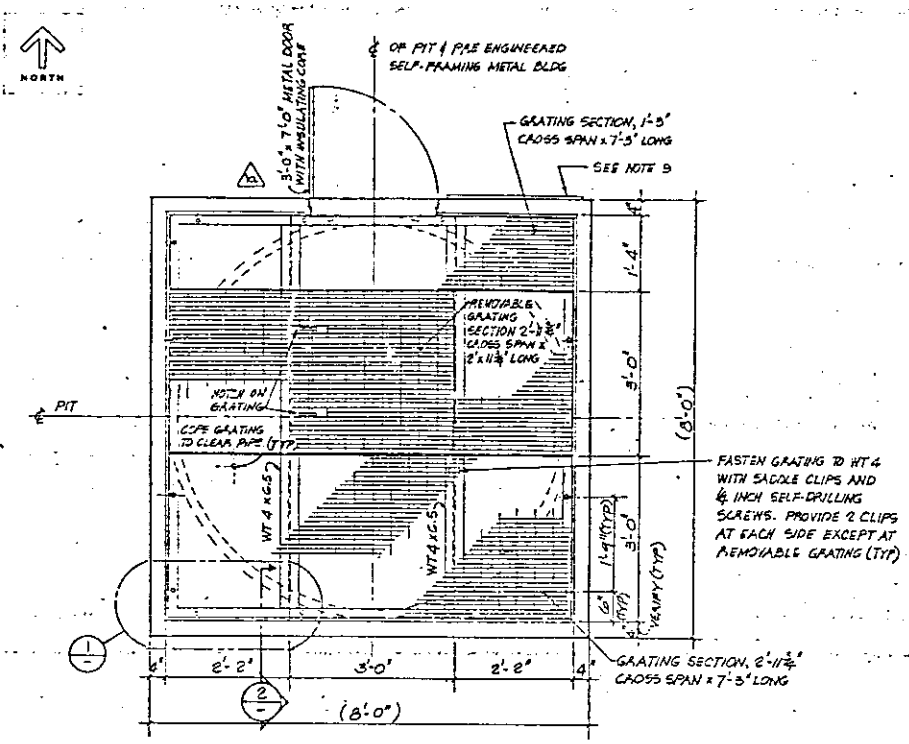

STRUCTURAL PLAN
SCALE 3/4" = 1'-0"

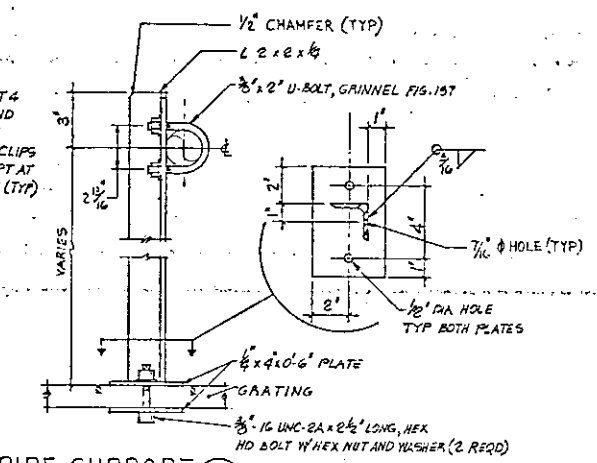

PIPE SUPPORT C
SCALE 3" = 1'-0"

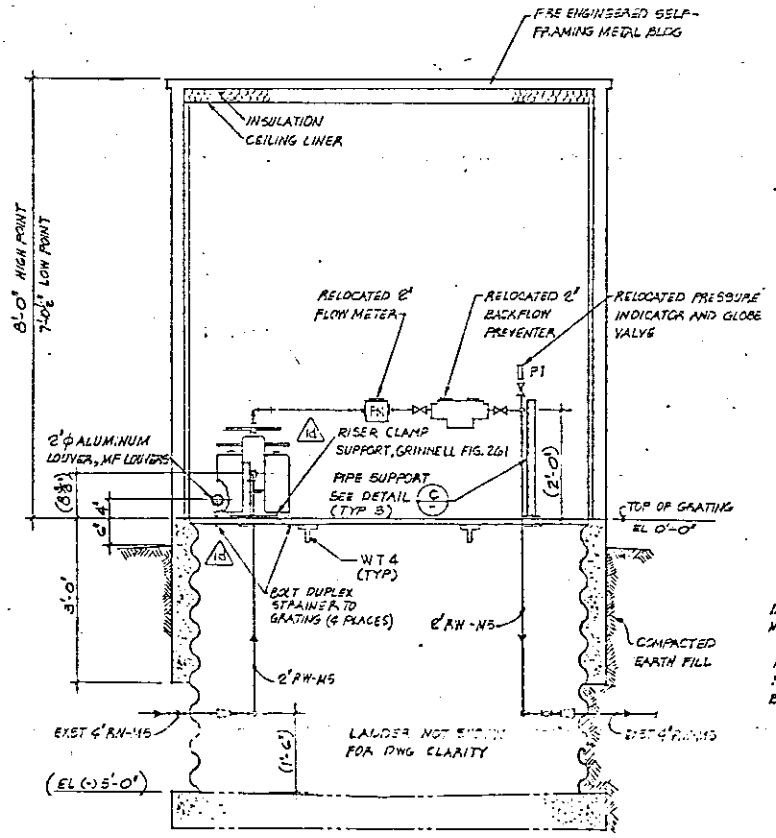

NOTE: FOR EXISTING PIT SEE DWG H-2-67563

SECTION A
SCALE 3/4" = 1'-0"

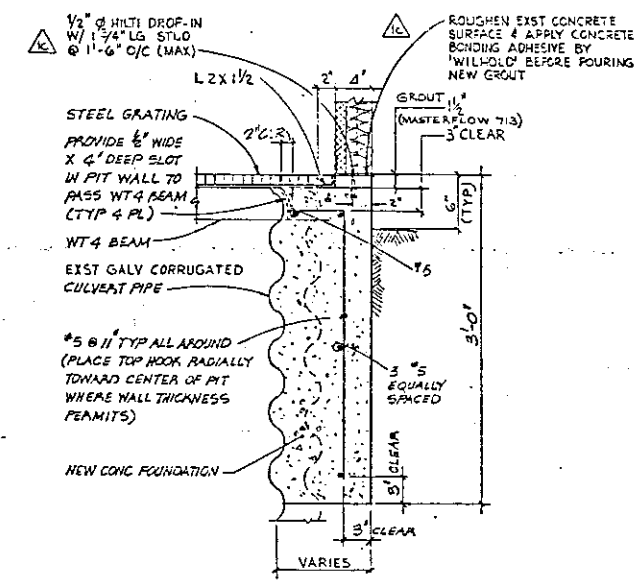

SECTION 2
SCALE 1 1/2" = 1'-0"

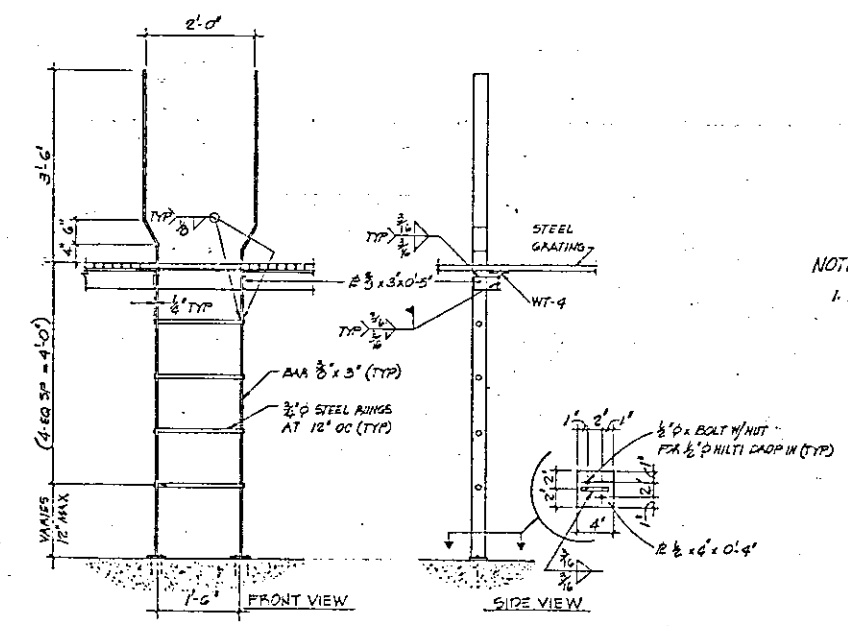

STEEL LADDER 8
SCALE 3/4" = 1'-0"

NOTE:

1. FOR GENERAL NOTES, SEE DRAWING H-2-77564

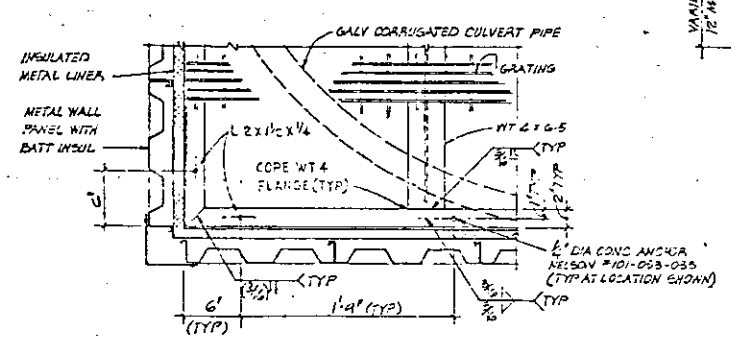

DETAIL 1
SCALE 1 1/2" = 1'-0"

OFFICIAL RELEASE BY WHC DATE APR -6 1988

EDT NO.: 100571

CROSS CONNECTION CONTROL SPECIALIST I, CERT. NO. 3108

H-2-62879	CIVIL PLOT PLAN AND FINISH GRADING SH 2 OF 2						
H-2-77564	ELEC/PIPING PLANS, SECTIONS & DETAILS						
H-2-67565	RCW WATER LINES BACKFLOW PREVENTER						
—	DRAWING LIST						
NUMBER	TITLE						
REFERENCES							
NEXT USED ON H-2-67565							

1	12/1/86	RCD	DCJ	ALE	AS-BUILT FOR PROJ. CR0304: 4) ECN CR0304-7, E37, E7 3) ECN CR0304-2, E25, C.06, 5 2) ECN CR0304-4, 2E7 1) ECN CR0304-5, 3F5		
REV	BY-DATE		BY-DATE		REV BY DATE	DESCRIPTION	REV
	WHC APPROVAL		KEH APPROVAL			REVISIONS	
COMMENTS:							

MICROFILMED

LMC APPROVAL BY	DATE	U. S. DEPARTMENT OF ENERGY Richland Operations Office	
		KAISER ENGINEERS HANFORD COMPANY	
PROJ ENGR		ARCH/STRL/PIPING PLANS, SECTIONS & DETAILS	
DR			
APPROVED			
APPROVED			
APPROVED			
CHECKED		PROJECT TITLE CROSS CONNECTION PROTECTION AY/AZ/AX TANK FARMS	
DRAWN		PROJ —	NO CR0304 / JOB 239970
DESIGNED		SCALE SHOWN	BLDG 241-AY-80 / MODEL 0402
CLASSIFICATION		DRAWING NUMBER NONE NOT REQD	H-2-77565 / SHEET 1 / OF 1 / REV 1

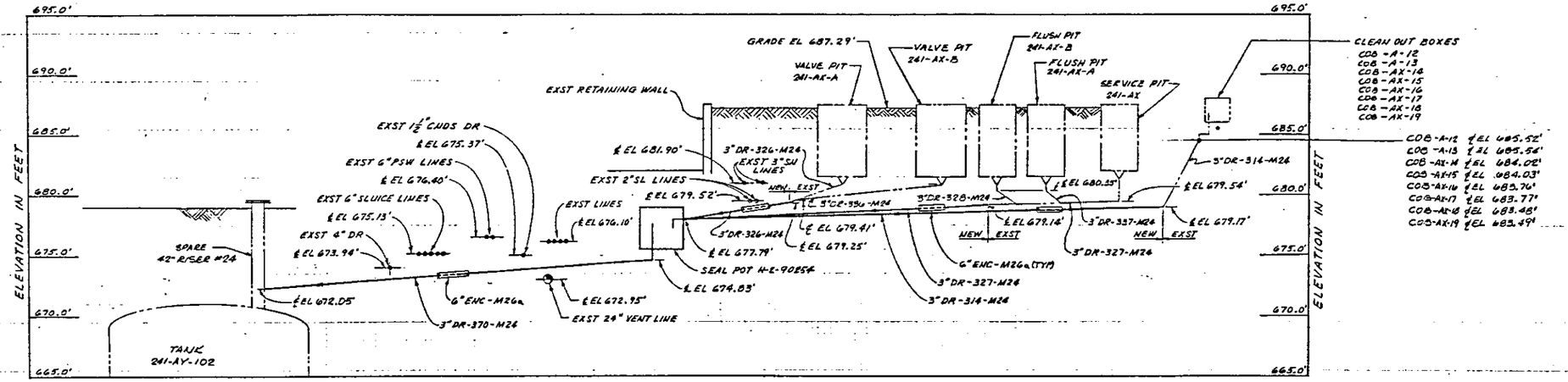

HYDRAULIC DIAGRAM (SEE NOTE 2)

SCALE: VERT - 1/4" = 1'-0", HORIZ - NONE

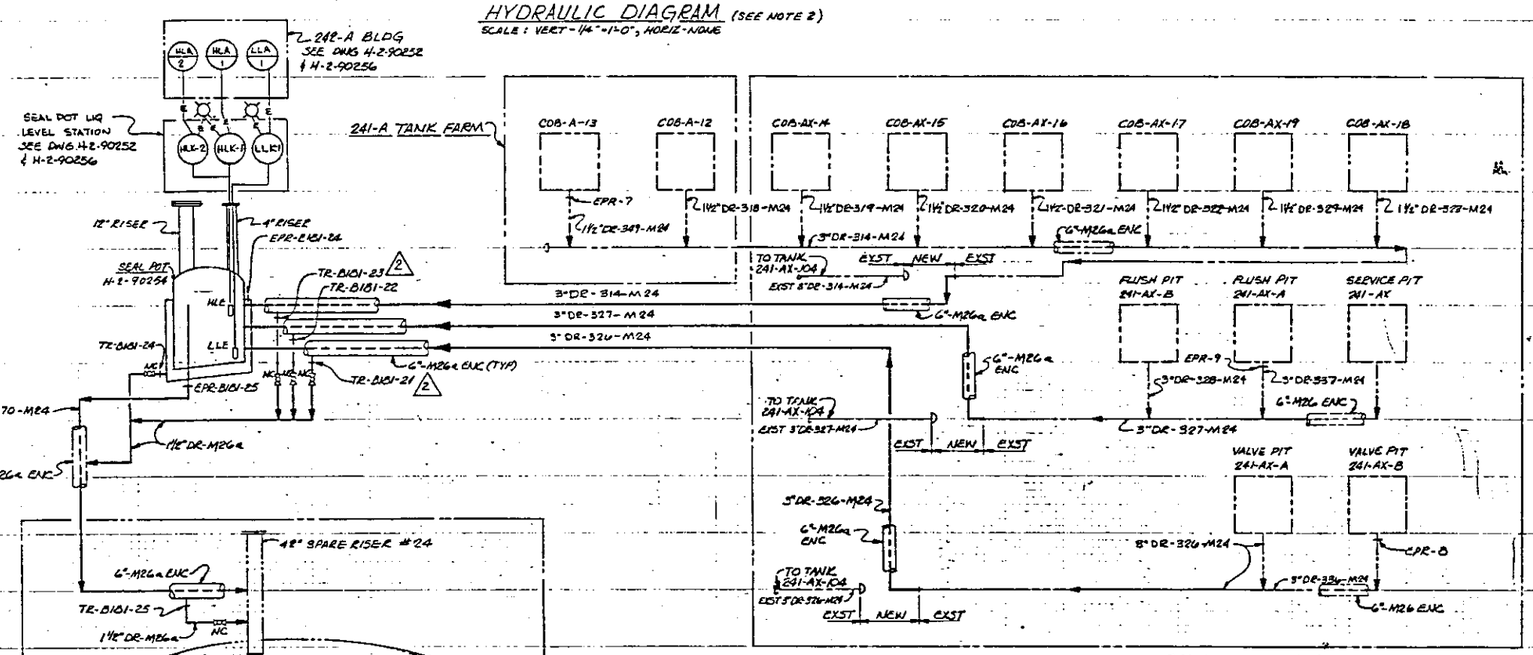

ENGINEERING FLOW DIAGRAM

SCALE: NONE

LEGEND

DR	DRAIN
ENC	ENCASEMENT
———	NEW
- - - -	EXISTING
TR	TEST RISER
	WELDED PIPE CAP
	BALL VALVE
NC	NORMALLY CLOSED
EPR	EMERGENCY PRESSURE RELIEF
LLA	LIQUID LEVEL ALARM
LLE	LOW LEVEL ELEMENT
HLA	HIGH LEVEL ALARM
HLE	HIGH LEVEL ELEMENT
LLK	LOW LEVEL RELAY
HLK	HIGH LEVEL RELAY
COB	CLEANOUT BOX
	INDICATOR LIGHT

NOTE:

1. FOR GENERAL NOTES SEE H-2-90253
2. ALL ELEVATIONS SHOWN ARE FOR REFERENCE ONLY.

NUMBER	TITLE
H-240253	DRAWING LIST

REFERENCES — NOT USED ON H-2-90250

REV.	DESCRIPTION	BY	DATE
2	REVISED PER CEO. 06244		
1	AS-BUILT		

CLIENT APPROVAL — APPROVED — REVISIONS — COMM INT REVIEW — LAST REV. 2

VITRO JOB NO. R15162

U.S. Department of Energy, Richland Operations Office

VITRO ENGINEERING CORPORATION

ENGINEERING FLOW DIAGRAM AND HYDRAULIC DIAGRAM

PROJECT TITLE: 241-AX TANK FARM DIV. REPAIR

SCALE: SHOWN

CLASSIFICATION: NONE

DRAWING NUMBER: H-2-90250

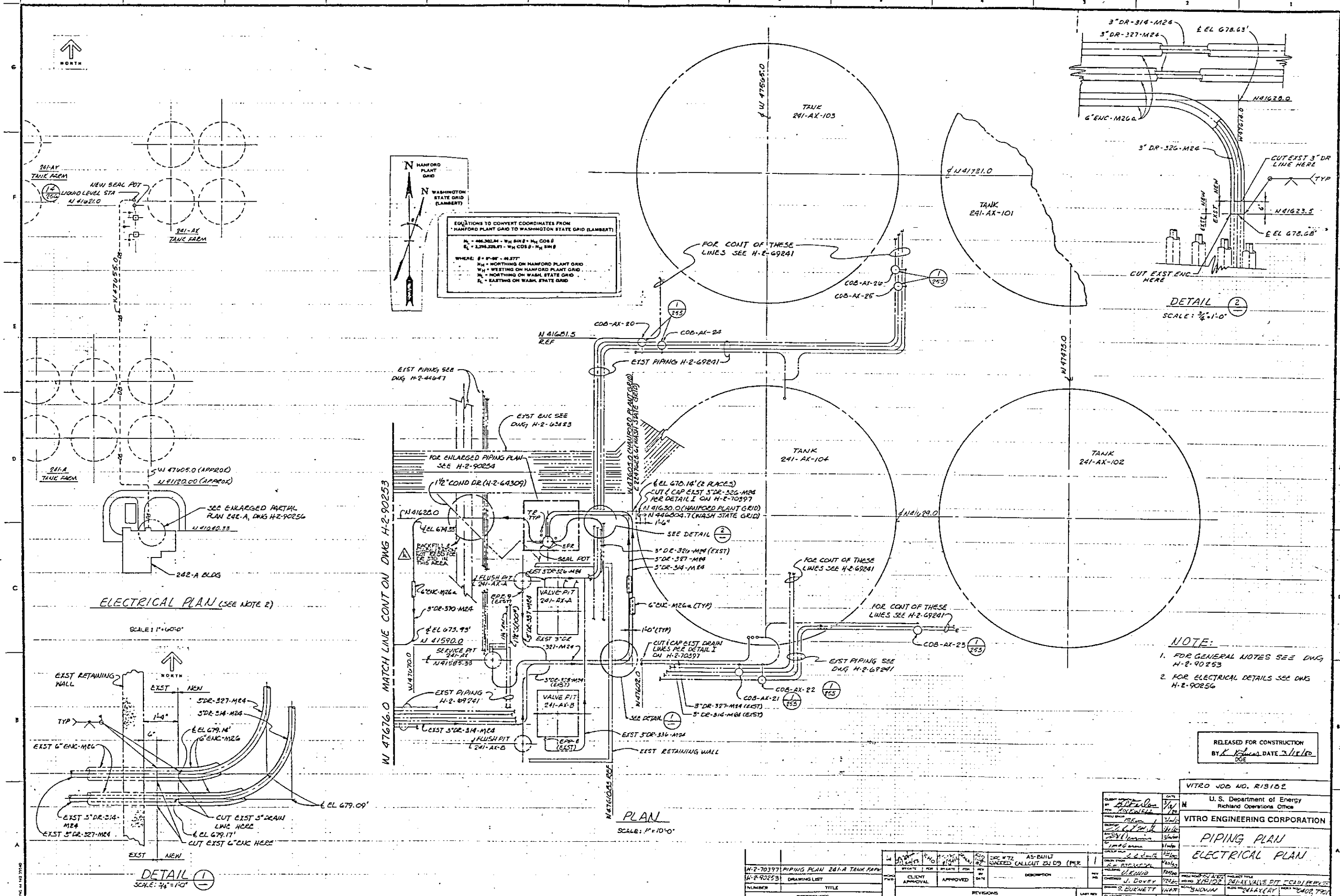
NORTH
241-AY TANK FARM
NEW SEAL POT
LIQUID LEVEL STA
N 41621.0
241-AX TANK FARM
241-A TANK FARM
W 47605.0
W 47605.0 (APPROX)
N 41120.00 (APPROX)
SEE ENLARGED PARTIAL PLAN 242-A, DWG H-2-90256
N 41080.33
242-A BLDG
ELECTRICAL PLAN (SEE NOTE 2)
SCALE: 1" = 60'-0"
N HANFORD PLANT GRID
N WASHINGTON STATE GRID (LAMBERT)
EQUATIONS TO CONVERT COORDINATES FROM HANFORD PLANT GRID TO WASHINGTON STATE GRID (LAMBERT)
WHERE: θ = 5°-00' - 48.377"
N_H = NORTHING ON HANFORD PLANT GRID
W_H = WESTING ON HANFORD PLANT GRID
N_L = NORTHING ON WASH. STATE GRID
E_L = EASTING ON WASH. STATE GRID
TANK 241-AX-103
TANK 241-AX-101
TANK 241-AX-104
TANK 241-AX-102
N 47565.0
N 41731.0
N 47475.0
N 41629.0
FOR CONT OF THESE LINES SEE H-2-69241
COB-AX-26
COB-AX-25
COB-AX-20
COB-AX-24
N 41681.5 REF
EXST PIPING H-2-69241
EXST PIPING SEE DWG H-2-44647
EXST ENC SEE DWG H-2-63823
FOR ENLARGED PIPING PLAN SEE H-2-90254
1½" COND DR (H-2-64309)
N 41628.0
EL 679.33
BACKFILL & COMPACT TO 95% PER DR 370-14 IN THIS AREA
TR TYP
EPR
SEAL POT
EXST 3"DR-326-M24
FLUSH PIT 241-AX-A
6"ENC-M26a
3"DR-370-M24
EL 673.93'
N 41590.0
SERVICE PIT 241-AX
N 41585.33
VALVE PIT 241-AX-A
EXST 3"DR-321-M24
EXST PIPING H-2-69241
EXST 3"DR-314-M24
FLUSH PIT 241-AX-B
VALVE PIT 241-AX-B
EPR-B (EXST)
W 47676.0 MATCH LINE CONT ON DWG H-2-90253
W 47670.0
W 47602.0
W 47602.0 (HANFORD PLANT GRID)
E 224926.6 (WASH STATE GRID)
EL 670.14' (2 PLACES)
CUT & CAP EXST 3"DR-326-M24 PER DETAIL I ON H-E-70397
N 41630.0 (HANFORD PLANT GRID)
E 446604.7 (WASH STATE GRID)
1'-6"
SEE DETAIL 2
3"DR-326-M24 (EXST)
3"DR-327-M24
3"DR-314-M24
6"ENC-M26a (TYP)
1'-0" (TYP)
CUT & CAP EXST DRAIN LINES PER DETAIL I ON H-2-70397
EXST PIPING SEE DWG H-2-69241
COB-AX-23
COB-AX-22
COB-AX-21
3"DR-327-M24 (EXST)
3"DR-314-M24 (EXST)
SEE DETAIL 1
EXST 3"DR-326-M24
EXST RETAINING WALL
W 47602.0 REF
PLAN
SCALE: 1" = 10'-0"
3"DR-314-M24
3"DR-327-M24
EL 678.63'
N 41628.0
W 47602.0
6"ENC-M26a
3"DR-326-M24
CUT EXST 3"DR LINE HERE
TYP
EXST
NEW
6"
N 41623.5
EL 678.68'
CUT EXST ENC HERE
DETAIL 2
SCALE: 3/4" = 1'-0"
EXST RETAINING WALL
NORTH
EXST
NEW
5"DR-327-M24
5"DR-314-M24
TYP
1'-4"
6"
EL 679.14'
6"ENC-M26
EXST 6"ENC-M26
EL 679.09'
EXST 5"DR-314-M24
EXST 5"DR-327-M24
CUT EXST 5" DRAIN LINE HERE
EL 679.17'
CUT EXST 6"ENC HERE
EXST
NEW
DETAIL 1
SCALE: 3/4" = 1'-0"
NOTE:
1. FOR GENERAL NOTES SEE DWG H-2-90253
2. FOR ELECTRICAL DETAILS SEE DWG H-2-90256
RELEASED FOR CONSTRUCTION
BY K. Kinnas DATE 3/15/10
DOE
VITRO JOB NO. R13182
U. S. Department of Energy
Richland Operations Office
VITRO ENGINEERING CORPORATION
PIPING PLAN
ELECTRICAL PLAN
H-2-70397 PIPING PLAN 241-A TANK FARM
H-2-90253 DRAWING LIST
NUMBER TITLE
REFERENCES
NEXT USED ON H-2-90252
CLIENT APPROVAL
APPROVED
REVISIONS
AS-BUILT
NONE
H-2-90252

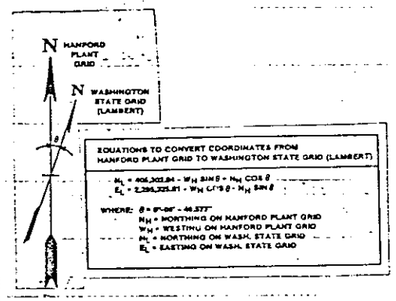

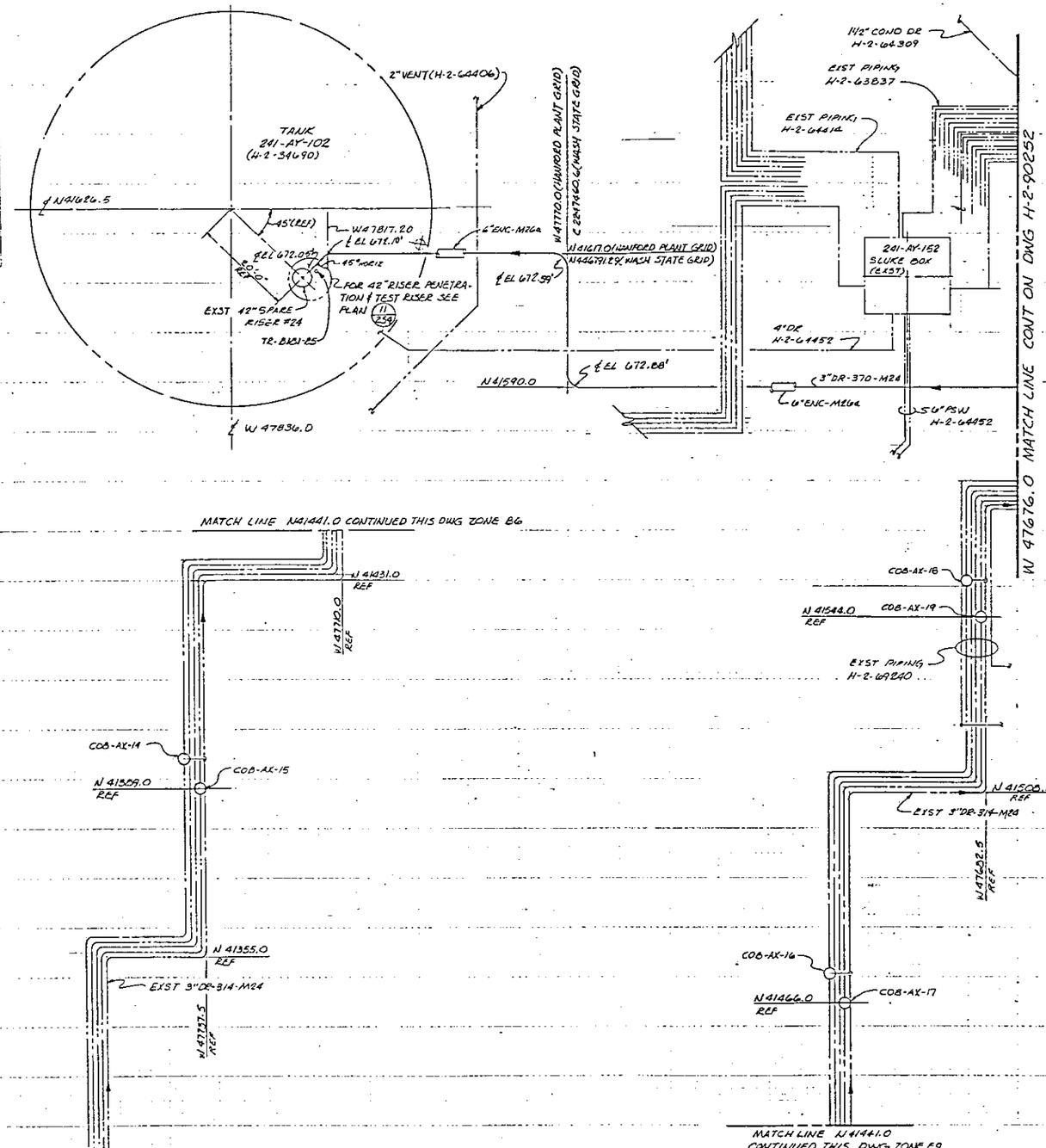

PLAN
SCALE: 1" = 10'-0"

GENERAL NOTES:

1. CLEANOUT BOXES AX-20, 21, 22, 23, 24, 25 & 26 ARE TO BE REMOVED FROM SERVICE. ALL VALVES SHALL BE CONFIRMED CLOSED, VALVE HANDLES REMOVED & BOXES SEALED PER DETAIL 1/259
2. MINIMUM SLOPE FOR DRAIN LINES SHALL BE 1/8" PER FOOT (.0105'/FT)
3. ALL PIPE MATERIAL, FABRICATION, EXAMINATION, CLEANING AND TESTING SHALL BE IN ACCORDANCE WITH SPECIFICATION B181-C3 EXCEPT WHERE OTHERWISE SPECIFIED ON THE DRAWINGS
4. UNLESS OTHERWISE SPECIFIED, PIPE BENDS IN DR (DRAIN) LINES SHALL HAVE A MINIMUM BEND RADIUS OF 3'-0" PIPE AND A MINIMUM BEND RADIUS OF 5 x NOMINAL PIPE DIA FOR 1½" PIPE
5. TOLERANCES UNLESS OTHERWISE SPECIFIED SHALL BE:
   FRACTIONAL: ± 1/8"
   ± 1/4" ON PIPE LINE ELEVATIONS
   ± 1" ON PIPE LINE PLAN LOCATIONS
   ANGULAR: ± 1°
   DECIMAL: ± .010"
6. FOR LEGEND SEE DWG H-2-90250
7. ALL DRAIN PIPING TO BE DIRECT BURIED EXCEPT ENCASED. DRAIN LINES ARE TO BE INSULATED AT BENDS AS SHOWN ON H-2-90255
8. WELDING SHALL BE PER:

		WELDING AND INSPECTION REQUIREMENTS		
FABRICATION	1.	WELDING STANDARD	☐ ASME	■ ANSI B31.1 ■ ASME ☐
	2.	PROCEDURE SPEC & PERFORMANCE QUAL.	■ ASME SECT IX	☐ ASME ☐
	3.	FILLER MATERIAL	■ ASME SPCT NUMB AS	☐
INSPECTION	4.	VISUAL (VT)	■ WELDING STD IN (1) ■ FITUP	☐ ■ ROOT PASS ■ FINAL
	5.	PENETRANT (PT)	■ WELDING STD IN (1)	☐
	6.	MAGNETIC PART (MT)	☐ WELDING STD IN (1)	☐
	7.	ULTRASONIC (UT)	☐ WELDING STD IN (1)	☐
	8.	RADIOGRAPH (RT)	■ WELDING STD IN (1)	☐
	9.	LEAK TEST (LT)	■ B1B1-C3 SPEC	
☐ OTHER REQTS.				

9. COAT ALL ABOVE GRADE PIPING WITH ONE COAT ZINC CHROMATE PRIMER (FS TT-P-645), 1.5 MIL THK AND TWO COATS HIGH VISIBILITY YELLOW GLOSS ENAMEL (FS TT-E-489) 2 MIL THK, EACH COATING.

DRAWING LIST

PIPING AND ELECTRICAL

DRAWING NO	INDEX NO	TITLE
H-2-90250	7001	ENGINEERING FLOW DIAG AND HYDRAULIC DIAG
H-2-90252	0402, 7901	PIPING PLAN, ELECTRICAL PLAN
H-2-90253	0000, 0402	PIPING PLAN AND DRAWING LIST
H-2-90254	0402	PIPING PLAN, SECTIONS AND DETAILS
H-2-90255	0402	PIPING SUPPORT AND ANCHOR PLAN, MISC SECTIONS AND DETAILS
H-2-90256	7901	ELECTRICAL DETAILS

RELEASED FOR CONSTRUCTION
BY K. Rhodes DATE 3/18/00
DOE

									AS-BUILT	1
DRAWING LIST										
NUMBER	TITLE	CLIENT APPROVAL		APPROVED					DESCRIPTION	REV BY
REFERENCES		REVISIONS								LAST REV 1
NEXT USED ON H-2-90253		COMMENT REVIEW								

VITRO JOB NO. R13182

U.S. Department of Energy
Richland Operations Office

VITRO ENGINEERING CORPORATION

PIPING PLAN AND DRAWING LIST

CLIENT APPROVAL BY		DATE 3/01
PROJ ENGR		
DESIGN		
GROUP HDR		10/00
DESIGN ENGR		10/00
VALIDATION		10/00
CHECKED	J. Dovey	10/00
DRAWN	S. BURNETT	10/00
CLASSIFICATION	NONE	

PROJ NO. (Dwg) | PROJECT TITLE
WO NO. K1B1CP | 241-AX VALVE PIT OPERN EXPANSION
SCALE NO. SHOWN | 241-AX & AY | DRAWING NO. 0000, 0402
DRAWING NUMBER H-2-90253

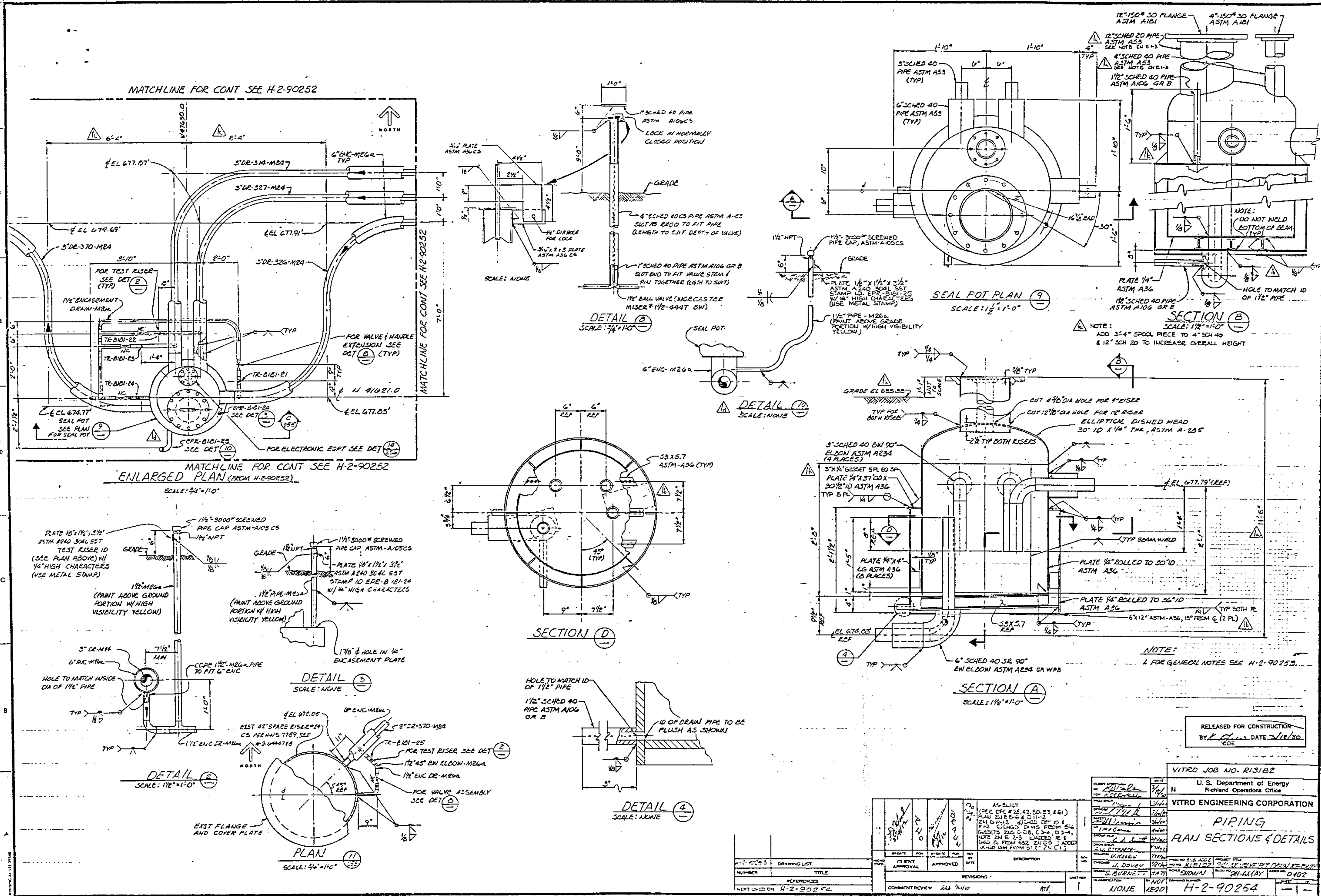

MATCHLINE FOR CONT SEE H-2-90252
ENLARGED PLAN (FROM H-2-90252)
SCALE: 3/4"=1'-0"
DETAIL (8)
SCALE: 3/4"=1'-0"
DETAIL (10)
SCALE: NONE
SEAL POT PLAN (9)
SCALE: 1 1/2"=1'-0"
SECTION (B)
SCALE: 1 1/2"=1'-0"
NOTE: ADD 3'-4" SPOOL PIECE TO 4" SCH 40 & 12" SCH 20 TO INCREASE OVERALL HEIGHT
SECTION (D)
SECTION (A)
SCALE: 1 1/2"=1'-0"
NOTE: 1. FOR GENERAL NOTES SEE H-2-90253.
DETAIL (2)
SCALE: 1 1/2"=1'-0"
DETAIL (3)
SCALE: NONE
PLAN (11)
SCALE: 3/4"=1'-0"
DETAIL (4)
SCALE: NONE
RELEASED FOR CONSTRUCTION
BY DATE
DOE
AS-BUILT
(PER DFC #28,42,50,53,&61) PLAN ZN E5-6 & D11-12 ZN G11-12 d) CHGD DET 10 & F1-2 C) CHGD DIMS FROM 5-6 GUSSETS ZNS C-D8, C3-4, D3-4, NOTE ZN E 2-3 ADDED R & CHGD EL FROM 682 ZN C5 ; ADDED CHGD DIM FROM 5'-7" ZN C1
CLIENT APPROVAL
APPROVED
DESCRIPTION
REVISIONS
COMMENT REVIEW
LAST REV 1
VITRO JOB NO. R13182
U. S. Department of Energy
Richland Operations Office
VITRO ENGINEERING CORPORATION
PIPING
PLAN SECTIONS & DETAILS
ROCKWELL
J. DOVEY
S. BURNETT
NONE
NOT REQD
SHOWN
241-AX VALVE PIT DRAIN RECONF
241-AX & AY
0402
DRAWING LIST
REFERENCES
NEXT USED ON H-2-90254
H-2-90254

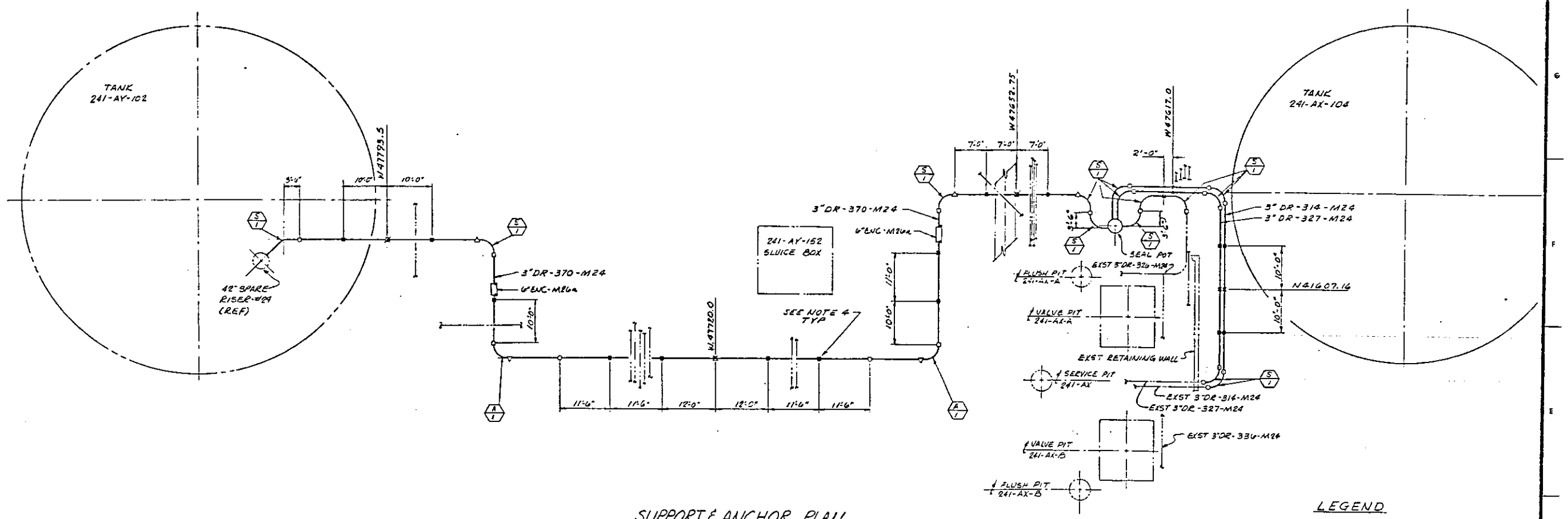

SUPPORT & ANCHOR PLAN

SCALE: 1" = 10'-0"

LEGEND

- IDENTIFICATION SYMBOL FOR PROPER VOID SIZE AT PIPE BENDS (SEE DETAIL III AND SECTION A-A ON DWG H-2-70550)
- ENCASED PIPE LIMIT STOP SUPPORT (SEE DETAIL XI ON DWG H-2-70550)
- ENCASED PIPE ANCHOR (SEE DETAIL X ON DWG H-2-70550)
- ENCASED PIPE GUIDE (SEE DETAIL IX ON DWG H-2-70550)
- ENCASED PIPE SUPPORT (SEE DETAIL XIII ON DWG H-2-70550)

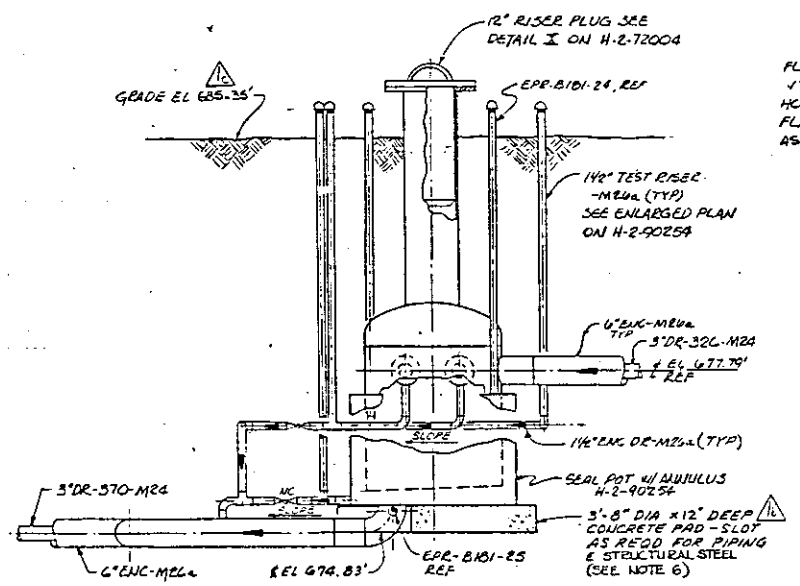

SECTION C

SCALE: 3/4" = 1'-0" (VALVE HANDLES NOT SHOWN FOR CLARITY)

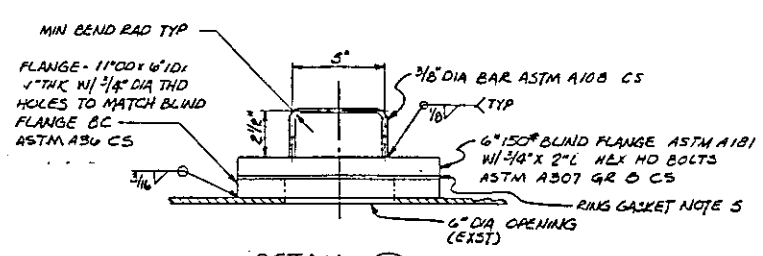

DETAIL 3

SCALE: 3" = 1'-0"

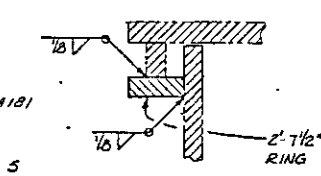

DETAIL 4

SCALE: NONE

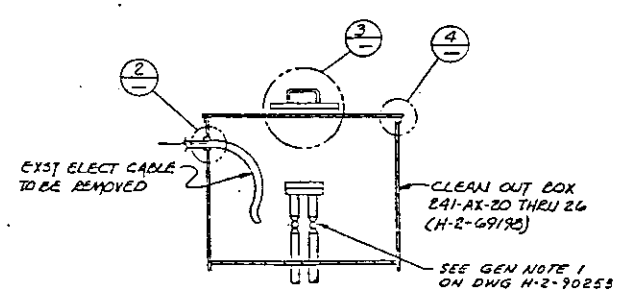

DETAIL 1

SCALE: 1" = 1'-0" (258)

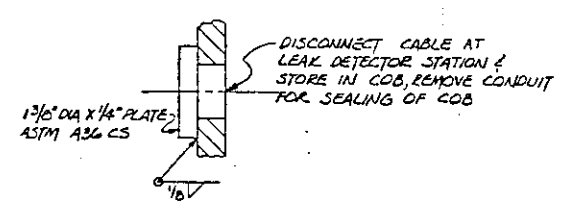

DETAIL 2

SCALE: NONE

NOTES:

1. FOR GENERAL NOTES SEE DWG H-2-90253
2. ENCASED DRAIN PIPING TO BE INSULATED AT THE BENDS ONLY PER DETAIL III ON DWG H-2-70550 AS INDICATED BY ⊖ IDENT SYMBOL
3. THE DISTANCE FROM THE BEND TANGENT INTERSECTION TO ℄ OF SUPPORT (H-2-70550, DET XIII) OR LIMIT STOP SUPPORT (H-2-70550, DET XI) OR GUIDE SUPPORT (H-2-70550, DET IX) SHALL BE 3'-6".
4. UNDERGROUND SUPPORT TIMBERS PER DETAIL XIII ON H-2-70550 SHALL BE LOCATED AT ALL ENCASED PIPE SUPPORTS, ENCASED PIPE GUIDES AND ENCASED PIPE LIMIT STOPS. SUPPORT TIMBERS SHALL BE TREATED WITH PENTACHLOROPHENOL PER FEDERAL SPEC TT-W-571(2)
5. USE COMPRESSED WHITE ASBESTOS, GARLOCK NO 900 OR JOHNS MANVILLE NO. 61
6. ALL CONCRETE WORK TO BE IN CONFORMANCE WITH ACI 301-75 DESIGN STRESS f'_c = 3000 PSI AT 28 DAYS
7. DRAIN PIPING DESIGNED TO SAFELY TRANSPORT RADIOACTIVE ALKALINE WASTE STREAMS AT TEMPERATURES UP TO 200 F.

RELEASED FOR CONSTRUCTION
BY [illegible] DATE 7/18/80
DOE

VITRO JOB NO R13182

U. S. Department of Energy
Richland Operations Office

VITRO ENGINEERING CORPORATION

PIPING SUPPORT & ANCHOR PLAN MISC SECT & DETAILS

CLIENT APPROVAL BY [illegible] FOR ROCKWELL	DATE 7/18/80	1/4	
PROJ ENGR			
DESIGN			
GROUP MGR			
DESIGN ENGR			
CHECKED			
CHECKED J. DOVEY			
DRAWN J. BARNETT			
CLASSIFICATION NONE	BY NOT REQD	DRAWING NUMBER H-2-90255	SHEET — OF —

H	[illegible]	[illegible]	[illegible]	[illegible]	[illegible]	[illegible]	AS-BUILT POINT - CHGD ELEV. ZN C12 ZN G10 C DWG COMMENT. J CHGD FROM 6" & ADDED 'O' NOTE K CHGD DIM FROM 4'-0" ZN C1		1
	BY DATE	PDP	BY DATE	PDP	REV BY	REV DATE	DESCRIPTION		REV NO
	CLIENT APPROVAL		APPROVED						
REVISIONS								LAST REV	1
COMMENT REVIEW LES 7/11/80									

H-2-90253	DRAWING LIST
NUMBER	TITLE
REFERENCES	
NOT LISTED ON H-2-90255	

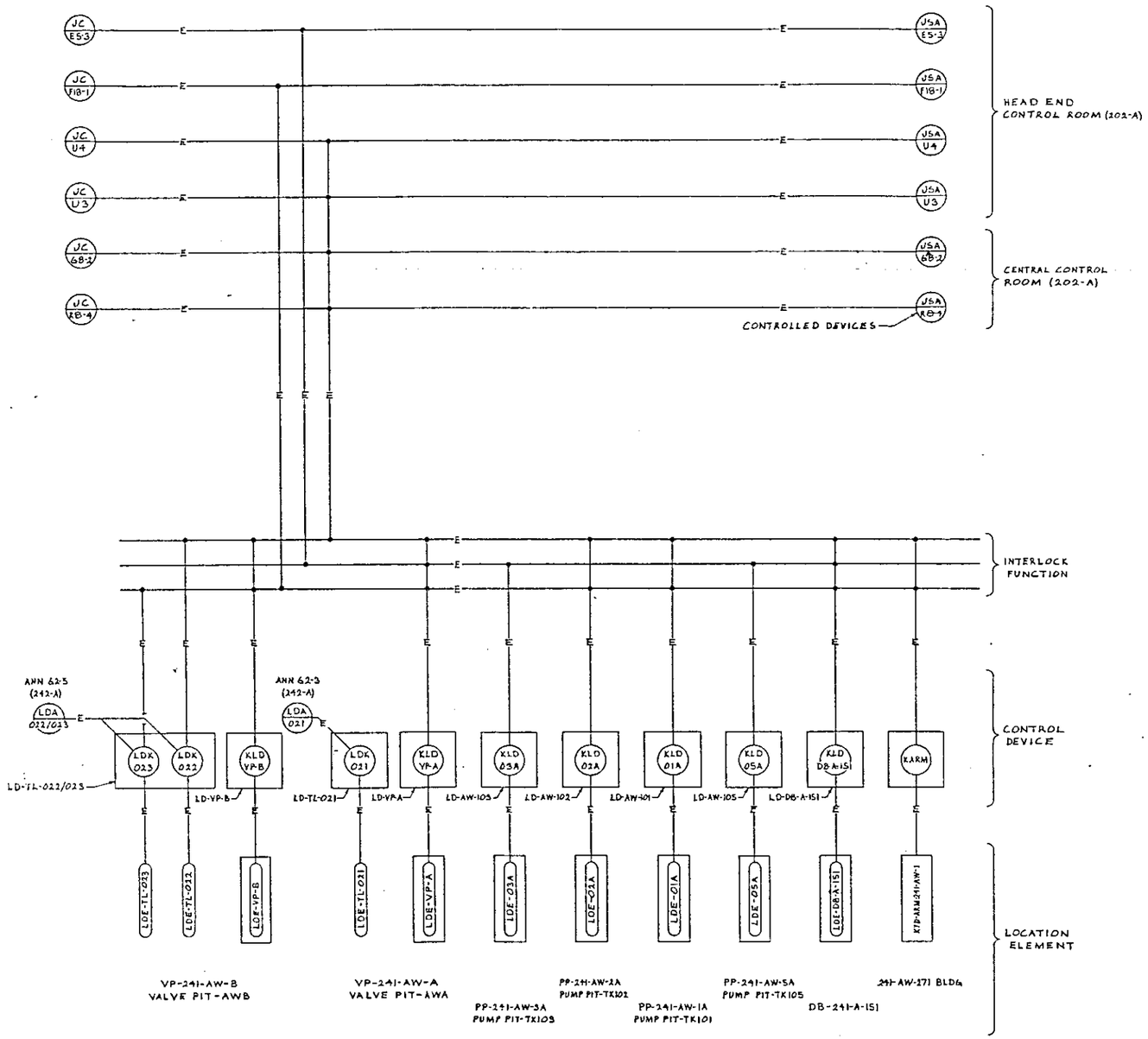

LEGEND

- LDE- — LEAK DETECTOR ELEMENT
- LOCAL MOUNTED INSTRUMENT
- PANEL MOUNTED INSTRUMENT
- JSA — JET SHUTDOWN ALARM
- —E— ELECTRICAL CONTROL
- PP — PUMP PIT
- VP — VALVE PIT
- JC — JET CONTROLLER
- DB — DIVERSION BOX
- LD — LEAK DETECTION STATION
- LDE — LEAK DETECTION ELEMENT
- LDA — LEAK DETECTION ALARM
- LDK, KLD — LEAK DETECTION RELAY
- K — RELAY
- ARM — AREA RADIATION MONITOR

INTERLOCK DIAGRAM—PUREX TO AW FARM TRANSFER SHUTDOWN

IMPACT LEVEL I

DRAWING APPROVALS	DATE
J.E. BREED	3-17-81
R.N. DENNIS	3-18-81
R.M. STEN	3-18-81
R.M. AKERSON	3-17-81
L. BERG	3-17-81
L. BERG	3-17-81
C. SUBLETT	3-17-81
D.J. KING	3-17-81

U. S. Department of Energy
Richland Operations Office
Rockwell Hanford Operations
Richland, Washington 99352

ELEC/INSTM ENGINEERING FLOW DIAGRAM

NONE | 242-A, 242-A, 241-AW | 7001

NONE | NOT REQD | H-2-90275 | 1 | 1

REVISIONS					
01	11-25-80	11/25/80	3-17-81	REVISED & REDRAWN	3

H-1-90274 DRAWING LIST

REFERENCE DRAWINGS

COMMENT PRT ISSUE NO | CHECK PRT ISSUE NO | 3

DRAWING STATUS

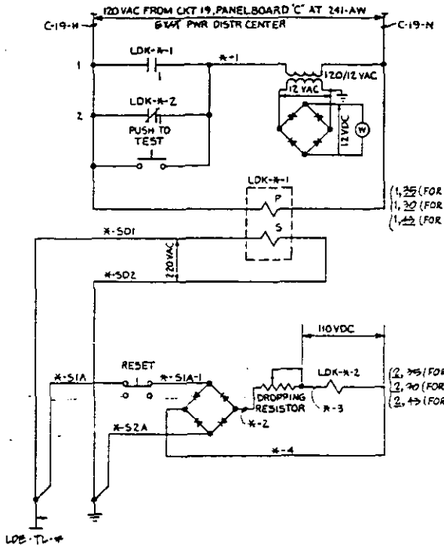

TYPICAL LEAK DETECTION ELEMENTARY DIAGRAM

*-USED IN LIEU OF TRANSFER LINE NO. 021, 022 OR 023

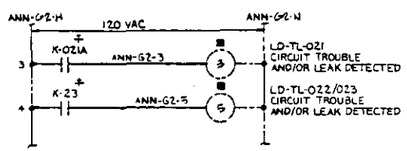

ANNUNCIATOR ANN-G2 ELEMENTARY DIAG

BLDG 242-A

(REF H-2-70362)

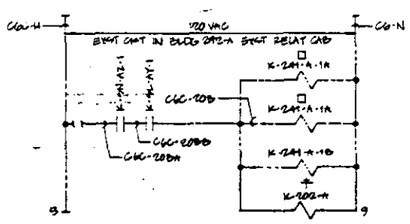

MODIFICATION TO SUPERNATANT PUMP SHUTDOWN CIRCUIT

(REF H-2-70796, SH 1)

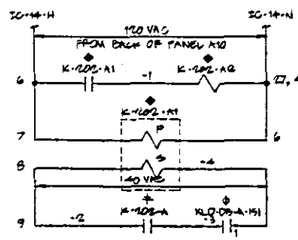

MASTER PUMP SHUTDOWN CKT INTERLOCK FOR JETS U3, U4, RB-4, GB-2 & FIB-1

(PREFIX WIRE NO. WITH IC-14)

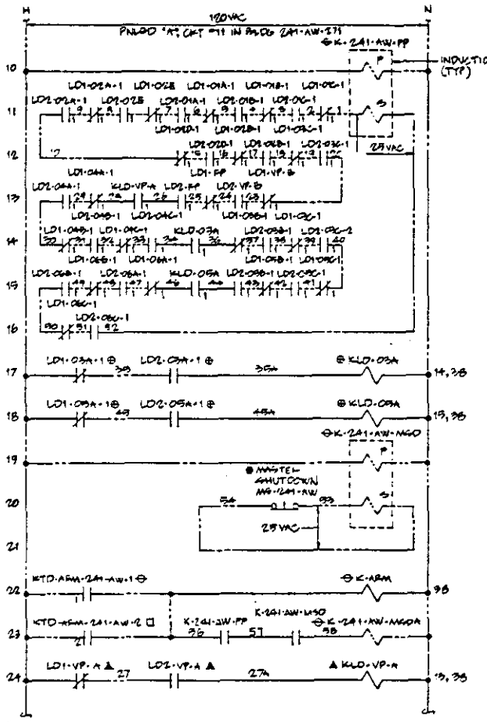

MODIFICATION OF ELEM DIAG FOR PROCESS PITS AW-03A, AW-05A & AW-VP-A AND AREA RADIATION

(SEE DWG H-2-70327) (PREFIX WIRE NO. WITH A11)

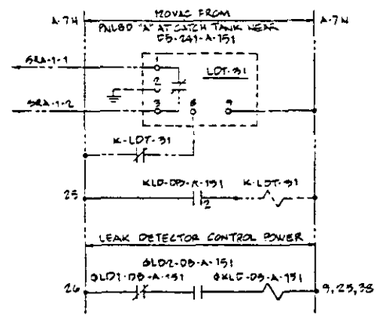

MODIFICATION OF ELEM DIAG FOR DIVERSION BOX DB-241-A-151

(FROM DWG H-2-90275)

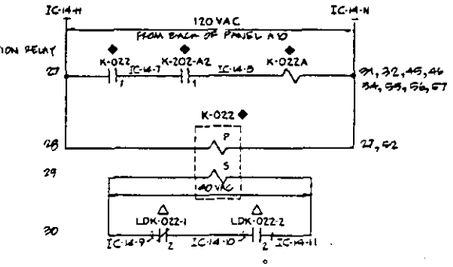

JET GB-2 & RB-4 ELEMENTARY DIAGRAM

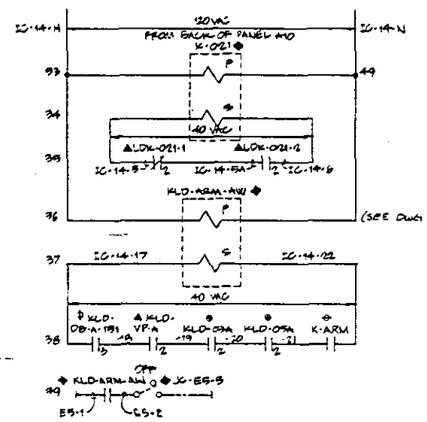

JET ES-5 ELEMENTARY DIAGRAM

(PREFIX WIRE NO. WITH IC-14 UNLESS OTHERWISE SHOWN)

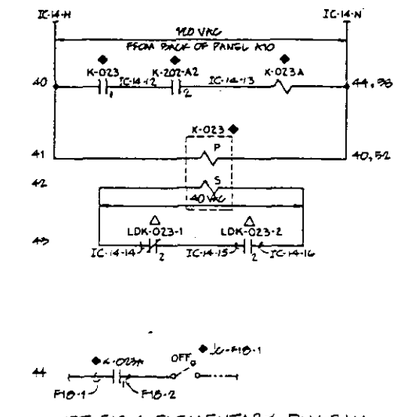

JET FIB-1 ELEMENTARY DIAGRAM

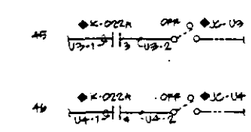

JET U3 & U4 ELEMENTARY DIAGRAM

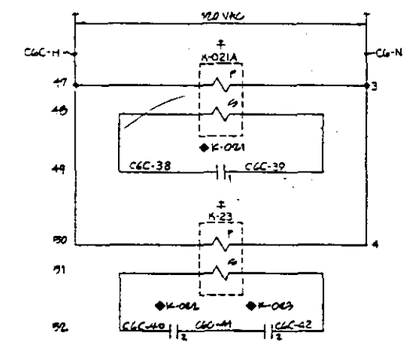

AUXILIARY ELEMENTARY DIAGRAM FOR ANNUNCIATOR ALARMS

SYMBOL LEGEND

- △ LOCATED IN LEAK DET GTR AT VALVE PIT VP-241-AW-B
- ▲ LOCATED IN LEAK DET GTR AT VALVE PIT VP-241-AW-A
- ◇ LOCATED IN CENTRAL CONTROL ROOM, 202-A BUILDING
- ◆ LOCATED IN HEAD END CONTROL ROOM, 201-A BUILDING
- □ LOCATED IN EXST RELAY CABINET, 242-A BUILDING
- ■ LOCATED AT ANN-G2, 242-A BUILDING
- ✚ LOCATED IN NEW RELAY CABINET 'A', 242-A BUILDING
- ⊕ LOCATED IN LEAK DET GTR AT DB-241-A-151
- ⊖ LOCATED IN EXST RLY CAB IN BLDG 241-AW-271
- ● LOCATED IN LEAK DET GTR AT DESIGNATED PUMP PIT ON AW TANK FARM
- —— EXISTING

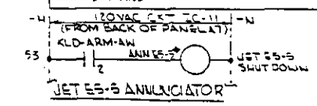

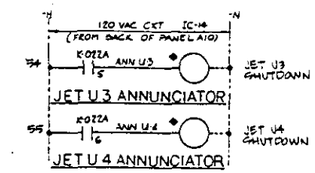

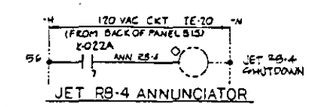

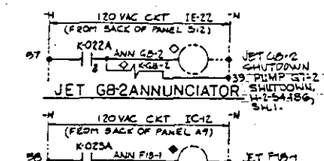

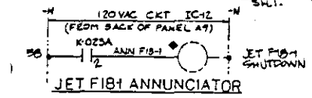

NOTE:

FOR NOTES & LEGEND SEE DWG H-2-90275.

REV 1 DOE DATE 10/1/82

M					INC ECN 102253	5
M					EO-44519, 27043 WITH ECN-102130, REVISED IN ACCORDANCE	4
M					INC EO 30415 ES-1 TO JC-ES-5 ZONE 7-D MODIFIED KLD-ARM-AW & DIRECTED JET ES-5 ANNUNCIATOR ZONE 7-D CORRECT TWO CHANGES - DELETED	3
M		N/A			AS-BUILT FOR PROJ B-281 & ASN; ZN C13-WAS CKT K241A-W b) REC/KHG ZN D-8 & DIO WAS ASN c) DFC B281-75 ZN F-1, C7.	2
M						1

REV	DESCRIPTION

REVISIONS

COMMENT REVIEW

H-2-71615	ELEC/INSTM ONE-LINE/ELEM
H-2-70796	ELEC DET / ELEM DIAG
H-2-90274	DRAWING LIST
NUMBER	TITLE
REFERENCES	
NEXT USED ON	H-2-90274

MICROFILMED

APPROVAL	DATE	
PROJ ENGR	WEBS	3-23-81
DESIGN		9/1/81
DR.		9/1/81
GROUP		9/1/81
BRANCH		7/1/81
WELDING	N/A	
CHECKED		11-17-81
DRAWN		10-23-81
CLASSIFICATION	NONE	
QA	NOT REQD	

ESSENTIAL DRAWING
IMPACT LEVEL 2

U. S. DEPARTMENT OF ENERGY
Richland Operations Office
VITRO ENGINEERING CORPORATION

ELECTRICAL ELEMENTARY DIAGRAMS

PROJECT TITLE: ADDITIONAL WASTE LINES 202-A TO 241-AW

PROJ	WO	JOB
B-281	X28102	RZ19A2

SCALE: NONE
BLDG: 242-A, 202-A, 241-AW
DRAWING NUMBER: H-2-90276
SHEET 1 OF 1
REV 5

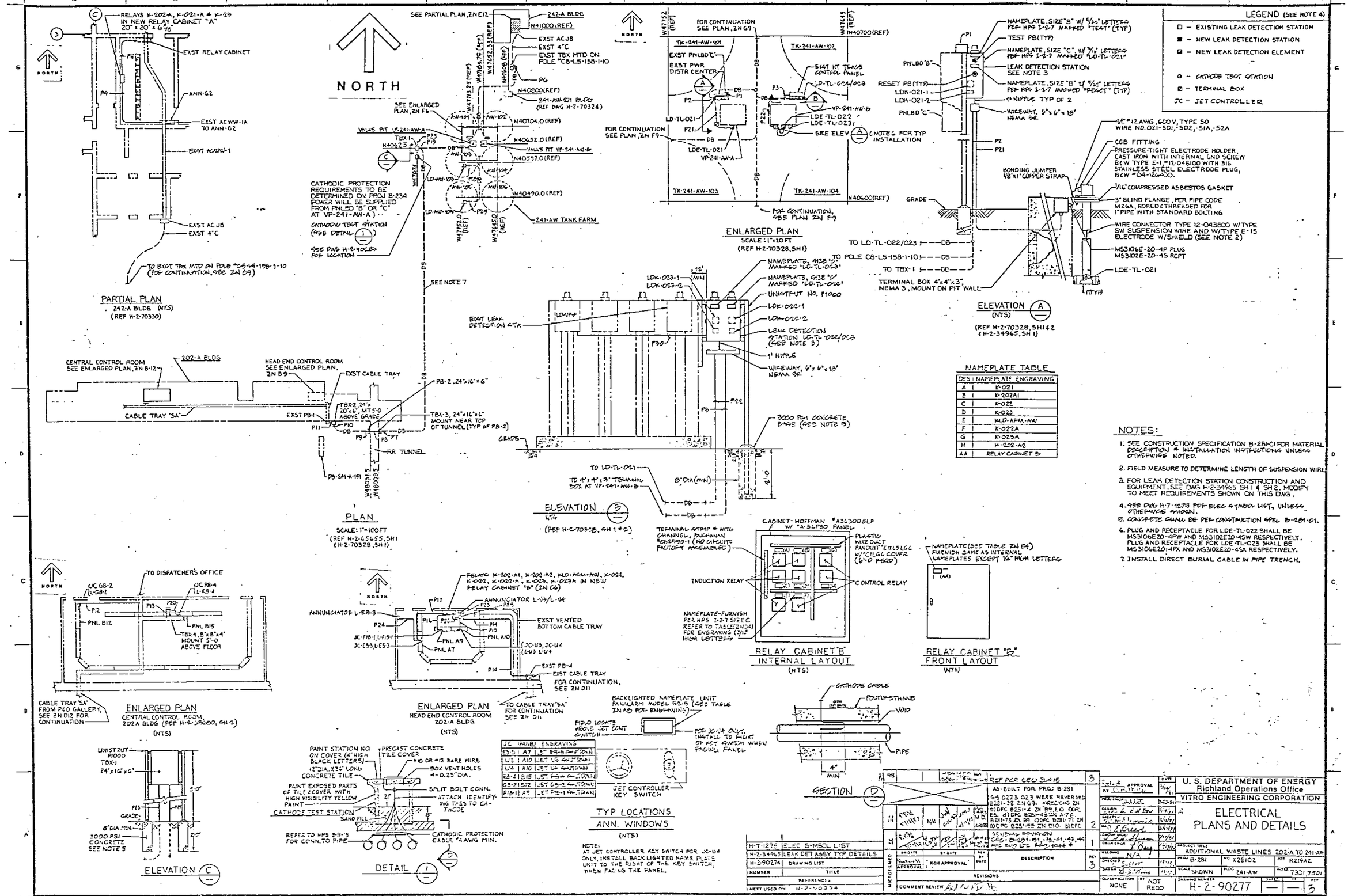
PARTIAL PLAN
242-A BLDG (NTS)
(REF H-2-70330)
NORTH
RELAYS K-202-A, K-021-A & K-23 IN NEW RELAY CABINET "A" 20" x 20" x 6 3/8"
EXST RELAY CABINET
ANN-G2
EXST AC WW-1A TO ANN-G2
EXST ANN-1
EXST AC JB
EXST 4"C
TO EXST TBX MTD ON POLE "CS-LS-158-1-10 (FOR CONTINUATION, SEE 2N G9)
PLAN
SCALE: 1"=100FT
(REF H-2-65655, SH1 & H-2-70328, SH1)
SEE PARTIAL PLAN, 2N E12
242-A BLDG
EXST AC JB
EXST 4"C
EXST TBX MTD ON POLE "CS-LS-158-1-10
SEE ENLARGED PLAN, 2N F6
VALVE PIT VP-241-AW-A
VALVE PIT VP-241-AW-B
241-AW TANK FARM
CATHODIC PROTECTION REQUIREMENTS TO BE DETERMINED ON PROJ B-234 (POWER WILL BE SUPPLIED FROM PNLBD "B" OR "C" AT VP-241-AW-A)
CATHODIC TEST STATION (SEE DETAIL 1)
SEE DWG H-2-90285 FOR LOCATION
SEE NOTE 7
ENLARGED PLAN
SCALE: 1"=20FT
(REF H-2-70328, SH1)
FOR CONTINUATION SEE PLAN, 2N G9
TK-241-AW-101
TK-241-AW-102
TK-241-AW-103
TK-241-AW-104
EXST PNLBD "C"
EXST PWR DISTR CENTER
EXST HT TRACE CONTROL PANEL
SEE ELEV A (NOTE 6 FOR TYP INSTALLATION)
FOR CONTINUATION, SEE PLAN 2N F9
ELEVATION A
(NTS)
(REF H-2-70328, SH1 & 2 & H-2-34965, SH1)
NAMEPLATE, SIZE "B" W/ 5/32" LETTERS PER HPS 1-2-7 MARKED "TEST" (TYP)
TEST PB (TYP)
NAMEPLATE, SIZE "C" W/ 3/16" LETTERS PER HPS 1-2-7 MARKED "LD-TL-021"
LEAK DETECTION STATION SEE NOTE 3
NAMEPLATE, SIZE "B" W/ 5/32" LETTERS PER HPS 1-2-7 MARKED "RESET" (TYP)
1" NIPPLE TYP OF 2
WIREWAY, 6" x 6" x 18" NEMA 3R
4/C #12 AWG, 600V, TYPE SO WIRE NO. 021-SD1, -SD2, -S1A, -S2A
CGB FITTING
PRESSURE-TIGHT ELECTRODE HOLDER, CAST IRON WITH INTERNAL GND SCREW BCW TYPE E-1, #12-048100 WITH 316 STAINLESS STEEL ELECTRODE PLUG, BCW #04-126-100.
1/16" COMPRESSED ASBESTOS GASKET
3" BLIND FLANGE, PER PIPE CODE M26A, BORED & THREADED FOR 1" PIPE WITH STANDARD BOLTING
BONDING JUMPER 1/8" x 1" COPPER STRAP
WIRE CONNECTOR TYPE 12-043800 W/ TYPE SW SUSPENSION WIRE AND W/ TYPE E-15 ELECTRODE W/ SHIELD (SEE NOTE 2)
MS3106E-20-4P PLUG
MS3102E-20-4S RCPT
LDE-TL-021
TO LD-TL-022/023
TO POLE CS-LS-158-1-10
TO TBX-1
TERMINAL BOX 4"x4"x3", NEMA 3, MOUNT ON PIT WALL
GRADE
LEGEND (SEE NOTE 4)
EXISTING LEAK DETECTION STATION
NEW LEAK DETECTION STATION
NEW LEAK DETECTION ELEMENT
CATHODE TEST STATION
TERMINAL BOX
JC - JET CONTROLLER
CENTRAL CONTROL ROOM SEE ENLARGED PLAN, 2N B-12
202-A BLDG
HEAD END CONTROL ROOM SEE ENLARGED PLAN, 2N B9
EXST CABLE TRAY
CABLE TRAY "5A"
EXST PB-1
TBX-2, 24"x 20"x6", MT 5'-0 ABOVE GRADE
TBX-3, 24"x16"x6" MOUNT NEAR TOP OF TUNNEL (TYP OF PB-2)
PB-2, 24"x16"x6"
RR TUNNEL
PB-241-A-151
ENLARGED PLAN
CENTRAL CONTROL ROOM
202-A BLDG (REF H-2-35200, SH 2)
(NTS)
TO DISPATCHER'S OFFICE
JC GB-2
JC PB-4
PNL B12
PNL B15
TBX-4, 8"x8"x4" MOUNT 5'-0 ABOVE FLOOR
CABLE TRAY "5A" FROM PCO GALLERY, SEE 2N D12 FOR CONTINUATION
ELEVATION C
ANNUNCIATOR L-E2-3
ANNUNCIATOR L-U3/L-U4
EXST VENTED BOTTOM CABLE TRAY
PNL A9
PNL A7
PNL A10
EXST PB-4
EXST CABLE TRAY FOR CONTINUATION, SEE 2N D11
TO CABLE TRAY "5A" FOR CONTINUATION SEE 2N D11
ENLARGED PLAN
HEAD END CONTROL ROOM
202-A BLDG
(NTS)
UNISTRUT P1000
TBX-1 24"x16"x6"
3000 PSI CONCRETE SEE NOTE 5
ELEVATION C
PAINT STATION NO. ON COVER (4" HIGH BLACK LETTERS)
PRECAST CONCRETE TILE COVER
#10 OR #12 BARE WIRE
BOX VENT HOLES 4-0.25" DIA.
12" DIA. X 3/8" LONG CONCRETE TILE
PAINT EXPOSED PARTS OF TILE & COVER WITH HIGH VISIBILITY YELLOW PAINT
SPLIT BOLT CONN.
ATTACH IDENTIFYING TAGS TO CATHODE
CATHODE TEST STATION
SAND FILL
REFER TO NPS 5-11-15 FOR CONN. TO PIPE
CATHODIC PROTECTION CABLE, #4 AWG MIN.
DETAIL 1
JC PANEL ENGRAVING
TYP LOCATIONS ANN. WINDOWS
(NTS)
BACKLIGHTED NAMEPLATE UNIT FANALARM MODEL 90-9 (SEE TABLE 2N A9 FOR ENGRAVING)
FIELD LOCATE ABOVE JET CONT SWITCH
FOR JC-U4 ONLY, INSTALL TO RIGHT OF KEY SWITCH WHEN FACING PANEL
JET CONTROLLER KEY SWITCH
NOTE: AT JET CONTROLLER KEY SWITCH FOR JC-U4 ONLY, INSTALL BACKLIGHTED NAME PLATE UNIT TO THE RIGHT OF THE KEY SWITCH, WHEN FACING THE PANEL.
NAMEPLATE TABLE
DES | NAMEPLATE ENGRAVING
A | K-021
B | K-202A1
C | K-02Z
D | K-023
E | KLD-APM-AW
F | K-022A
G | K-023A
H | K-202-A2
AA | RELAY CABINET "B"
NOTES:
1. SEE CONSTRUCTION SPECIFICATION B-281-C1 FOR MATERIAL DESCRIPTION & INSTALLATION INSTRUCTIONS UNLESS OTHERWISE NOTED.
2. FIELD MEASURE TO DETERMINE LENGTH OF SUSPENSION WIRE.
3. FOR LEAK DETECTION STATION CONSTRUCTION AND EQUIPMENT, SEE DWG H-2-34965 SH1 & SH2. MODIFY TO MEET REQUIREMENTS SHOWN ON THIS DWG.
4. SEE DWG H-7-1279 FOR ELEC SYMBOL LIST, UNLESS OTHERWISE SHOWN.
5. CONCRETE CHALL BE PER CONSTRUCTION SPEC B-281-C1.
6. PLUG AND RECEPTACLE FOR LDE-TL-022 SHALL BE MS3106E20-4PW AND MS3102E20-4SW RESPECTIVELY. PLUG AND RECEPTACLE FOR LDE-TL-023 SHALL BE MS3106E20-4PX AND MS3102E20-4SX RESPECTIVELY.
7. INSTALL DIRECT BURIAL CABLE IN PIPE TRENCH.
RELAY CABINET "B" INTERNAL LAYOUT
(NTS)
CABINET-HOFFMAN #A36300BLP W/ #A-BLPBO PANEL
PLASTIC WIRE DUCT PANDUIT #E1X1.5LGC W/ #C1LGC COVER (6'-0 REQD)
INDUCTION RELAY
CONTROL RELAY
NAMEPLATE-FURNISH PER HPS 1-2-7 SIZE C REFER TO TABLE (2N E4) FOR ENGRAVING (3/16" HIGH LETTERS)
NAMEPLATE (SEE TABLE 2N E4) FURNISH SAME AS INTERNAL NAMEPLATES EXCEPT 1/4" HIGH LETTERS
RELAY CABINET "B" FRONT LAYOUT
(NTS)
CATHODE CABLE
POLYURETHANE
VOID
PIPE
4" MIN
SECTION D
REF PER CEO 34-15
AS-BUILT FOR PROJ B-281
REVISIONS
DESCRIPTION
H-7-1279 ELEC SYMBOL LIST
H-2-34965 LEAK DET ASSY TYP DETAILS
H-2-90274 DRAWING LIST
U. S. DEPARTMENT OF ENERGY
Richland Operations Office
VITRO ENGINEERING CORPORATION
ELECTRICAL PLANS AND DETAILS
ADDITIONAL WASTE LINES 202-A TO 241-AW
PROJ B-281
WO X26102
AOR R219AZ
SCALE SHOWN
PLOT 241-AW
MOD 7301.7501
CLASSIFICATION NONE
DRAWING NUMBER H-2-90277
SHEET —
REV 3

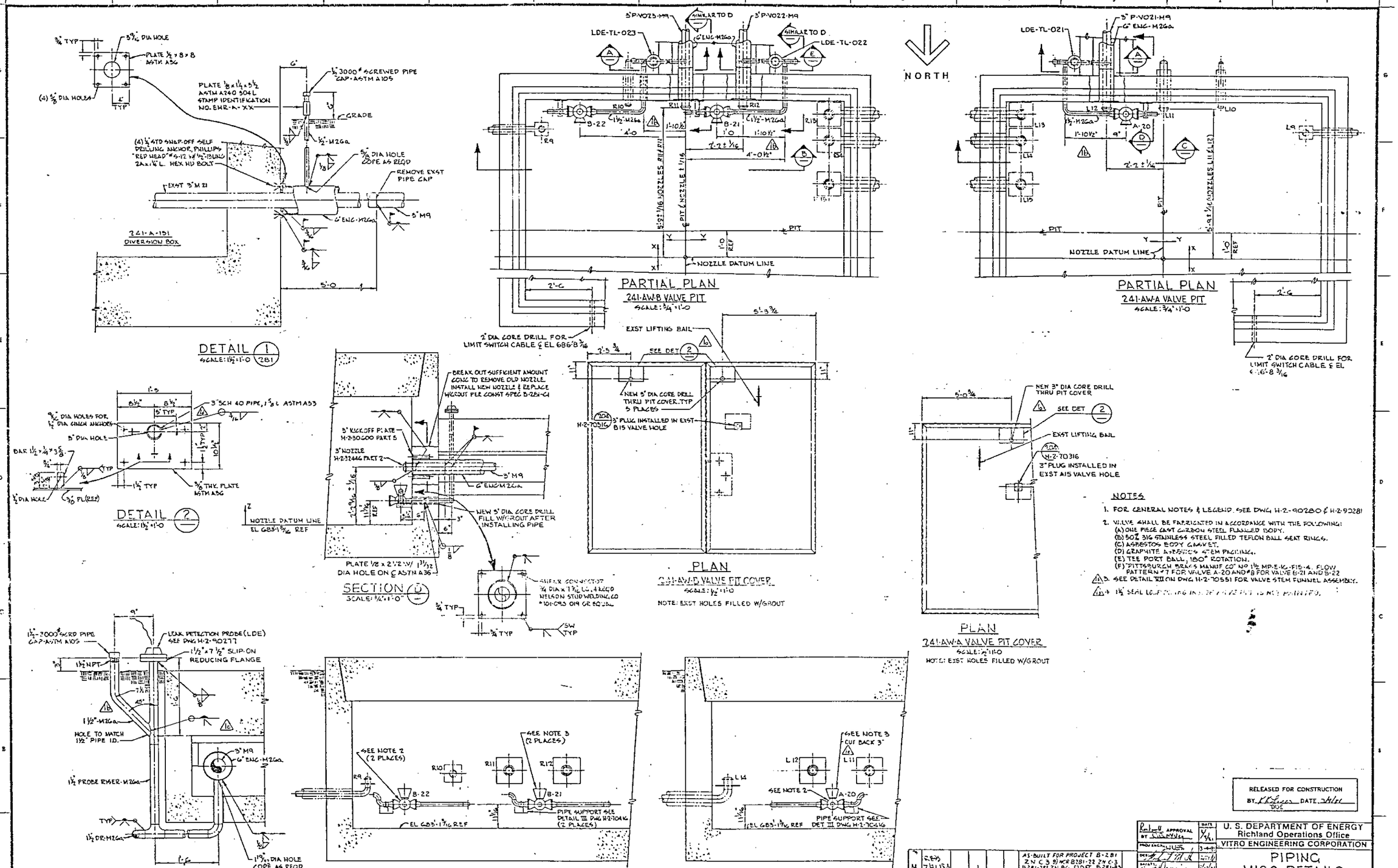

NOTES

1. FOR GENERAL NOTES & LEGEND, SEE DWG H-2-90280 & H-2-90281
2. VALVE SHALL BE FABRICATED IN ACCORDANCE WITH THE FOLLOWING:
   (A) ONE PIECE CAST CARBON STEEL FLANGED BODY.
   (B) 50% 316 STAINLESS STEEL FILLED TEFLON BALL SEAT RINGS.
   (C) ASBESTOS BODY GASKET.
   (D) GRAPHITE ASBESTOS STEM PACKING.
   (E) TEE PORT BALL, 180° ROTATION.
   (F) PITTSBURGH BRASS MANUF. CO. NO. 1½ MP.E.K.-F15-4. FLOW PATTERN #7 FOR VALVE A-20 AND #8 FOR VALVE B-21 AND B-22
3. SEE DETAIL III ON DWG H-2-70551 FOR VALVE STEM FUNNEL ASSEMBLY.
4. 1½" SEAL LOCATION IN DETAIL VALVE PIT IS NOT PAINTED.

RELEASED FOR CONSTRUCTION
BY: K.K. Green DATE: 7/1/91
DOE

H-2-70316	STRUCTURAL SECT & DETS	H-2-70551	STANDARD TANK FARM DETS
H-2-70416	PIPING PLANS + DETS FLUSH P	H-2-90214	DRAWING LIST
H-2-32446	DETS ALLOY STEEL MALE CON	NUMBER	TITLE
H-2-30600	STD SQUARE KICKOFF PLATE	REFERENCES	
H-2-71997	STD TANK FARM DETAILS	NEXT USED ON	

MICROFILMED

BY-DATE	BY-DATE	REV BY DATE	DESCRIPTION	REV
M	REV 7/31/93	N/A	AS-BUILT FOR PROJECT B-281 2N C.3 9) WKR B281-22 2N C-3 B281-156 2N B6.1) DFC B281-83 2) DFC B281-76 2N D12.3) DFC 3) DFC B281-5 2N B-12.13 5) DFC B281-16 2N F.6-3.4.7. 6) DFC B281-67 2N D6.4.6.7.	1

REVISIONS

APPROVAL: RHO

COMMENT REVIEW

Railroad APPROVAL BY	DATE	U. S. DEPARTMENT OF ENERGY Richland Operations Office
PROJ ENGR		VITRO ENGINEERING CORPORATION
DES		PIPING MISC DETAILS 241-AW VALVE PITS
SAFETY		
QA		
GROUP SUP		
DESIGN ENGR		PROJECT TITLE ADDITIONAL WASTE LINES 202 A TO 241 AW
WELDING		
CHECKED R. Zomo		PROJ B-281 WO X28102 JOB R 21982
DRAWN R. C. DOVE		SCALE AS SHOWN BLDG 200-E SHEET 0402
CLASSIFICATION NONE	BY NOT REQD	DRAWING NUMBER H-2-90284 — — 1

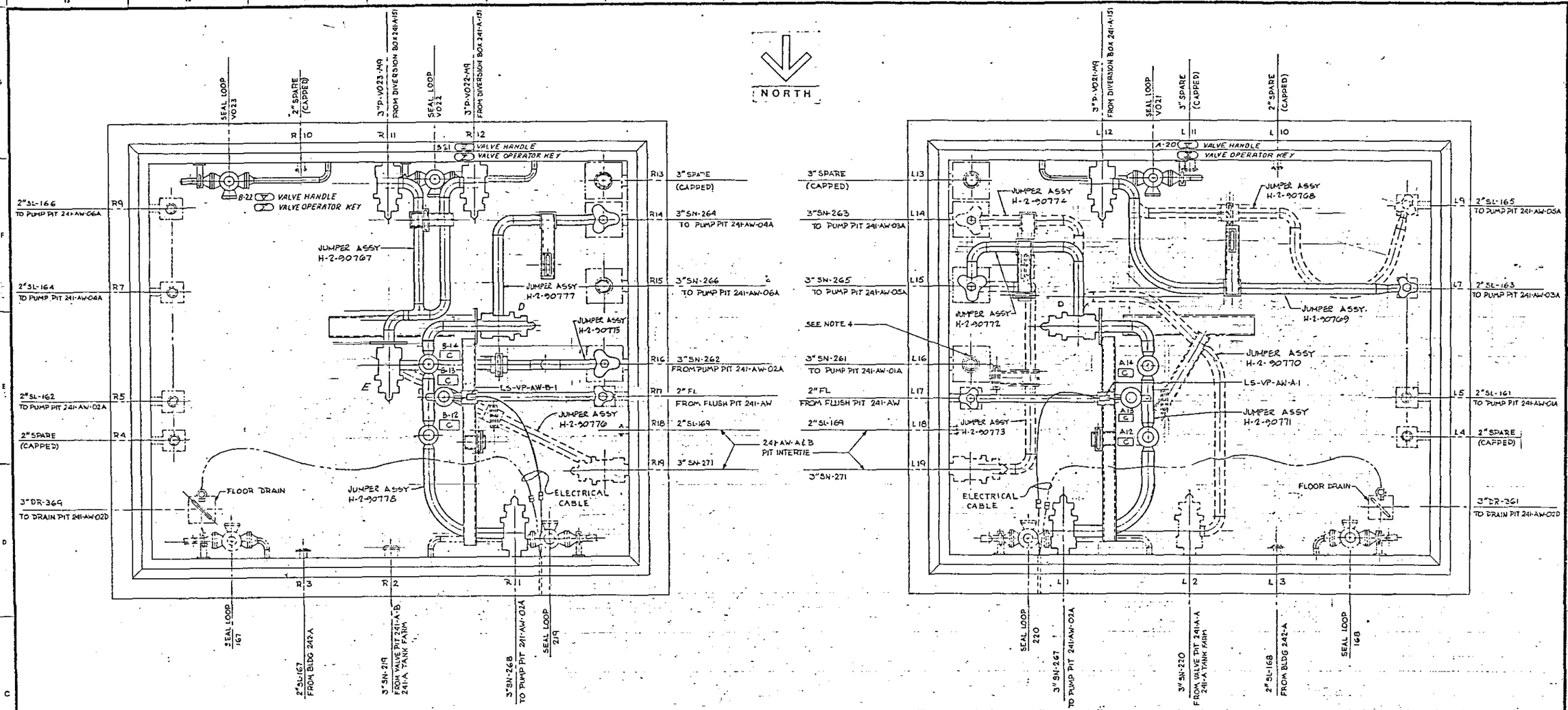

PLAN
VALVE PIT 241-AW-B
SCALE: 1" = 1'-0"

PLAN
VALVE PIT 241-AW-A
SCALE: 1" = 1'-0"

1. FOR GENERAL NOTES SEE DWG H-2-90281.
2. 'B-18' — INDICATES VALVE IDENTIFICATION NUMBERS PER H-2-70426. INDICATES VALVE EXTENSION HANDLES PER H-2-70551. INDICATES VALVE EXTENSION HANDLES PER H-2-90295
3. NEW PIPING; ALTERNATE PIPING (NEW FABRICATION)
4. JUMPER L16-D IS NOT IN CONTRACT (TO BE SUPPLIED BY ROCKWELL HANFORD OPERATIONS)
5. FOR VALVE PIT DIMENSIONS SEE H-2-70401

4 THIS DRAWING IS MODIFIED BY DWG H-2-90732 SHT 1 REV 1, AS BUILT RELEASED BY CED 21663

NUMBER	TITLE
H-2-70426	PIT & PIT COVER PAINTING DIAG
H-2-70551	STANDARD TANK FARM DETS
H-2-90274	DRAWING LIST

REFERENCES
NEXT USED ON H-2-90274

REV	BY-DATE	DESCRIPTION	REV
4		REV PER CED 34105	4
3		AS-BUILT FOR PROJ B-281 DFC B281-81 ZN C4,6,11 & F-11	3
2		AS-BUILT FOR PROJ B-281.	2
1		a. ADDED NOTE ZN E-7 c. ADDED TO NOTE 2. b. ADDED NOTE 3,4,5 VALVE PIT 241-AW-A & B. d. CHANGED ALL JUMPERS IN	1

REVISIONS
COMMENT REVIEW

U. S. DEPARTMENT OF ENERGY
Richland Operations Office
VITRO ENGINEERING CORPORATION

JUMPER ARRANGEMENTS
VALVE PITS 241-AW-A & B

PROJECT TITLE ADDITIONAL WASTE LINES 202-A TO 241-AW
PROJ B-281 | WO X28102 | JOB P219A2
SCALE SHOWN | BLDG 241-AW | INDEX 8404
CLASSIFICATION NONE | BY NOT REQD
DRAWING NUMBER H-2-90287 | REV 4

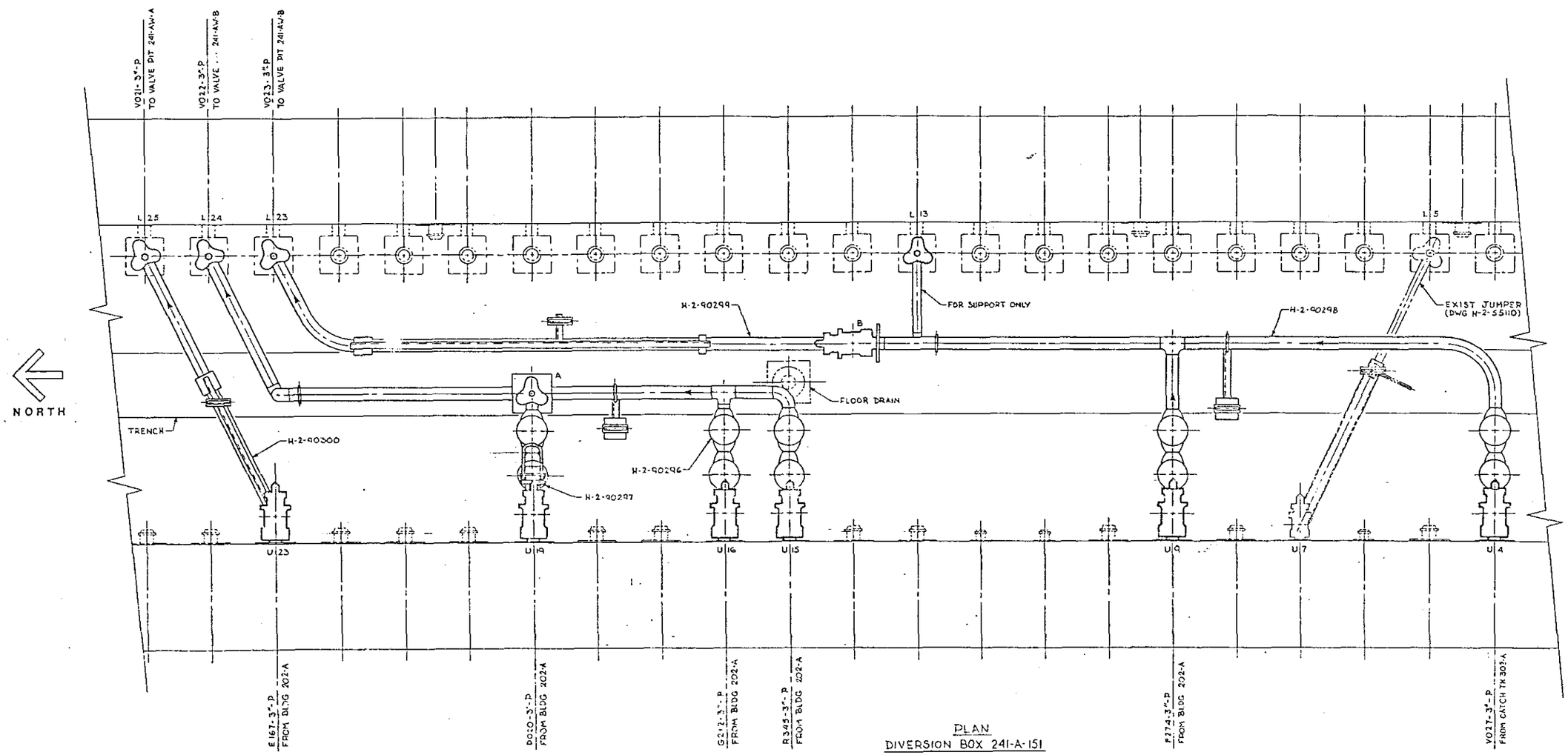

PLAN
DIVERSION BOX 241-A-151

SCALE: 1"=1'-0"

RELEASED FOR CONSTRUCTION
BY ... DATE 3/4/91
DOE

H-2-90274	DRAWING LIST
NUMBER	TITLE
REFERENCES	
NEXT USE ON H-2-90274	

REV	BY-DATE	BY-DATE	REV BY DATE	DESCRIPTION	REV
1	RBS 3/1/91	N/A	LW 3/1/91	AS-BUILT FOR PROJ B-281	1
	RHO APPROVAL	KEN APPROVAL			
REVISIONS					
COMMENT REVIEW					

MICROFILMED

Rockwell APPROVAL BY ... DATE 3/1/91

PROJ ENGR		1-4-91
DESIGN		1/4/91
SAFETY		1/4/91
QA		1/4/91
GROUP MGR		1/4/91
DSGN ENGR		1/4/91
WELDING	N/A	
ENGINEER		1-4-91
DRAWN	C RUNDELL	1/4/91
CLASSIFICATION	NONE	BY NOT REQD

U. S. DEPARTMENT OF ENERGY
Richland Operations Office
VITRO ENGINEERING CORPORATION

JUMPER ARRANGEMENT
DIVERSION BOX 241-A-151

PROJECT TITLE ADDITIONAL WASTE LINES 202-A TO 241-AW

PROJ	WO	JOB
B-281	X28102	R219A2

SCALE	BLDG	SHEET
SHOWN	241-AW	8404

DRAWING NUMBER H-2-90288 — — 1

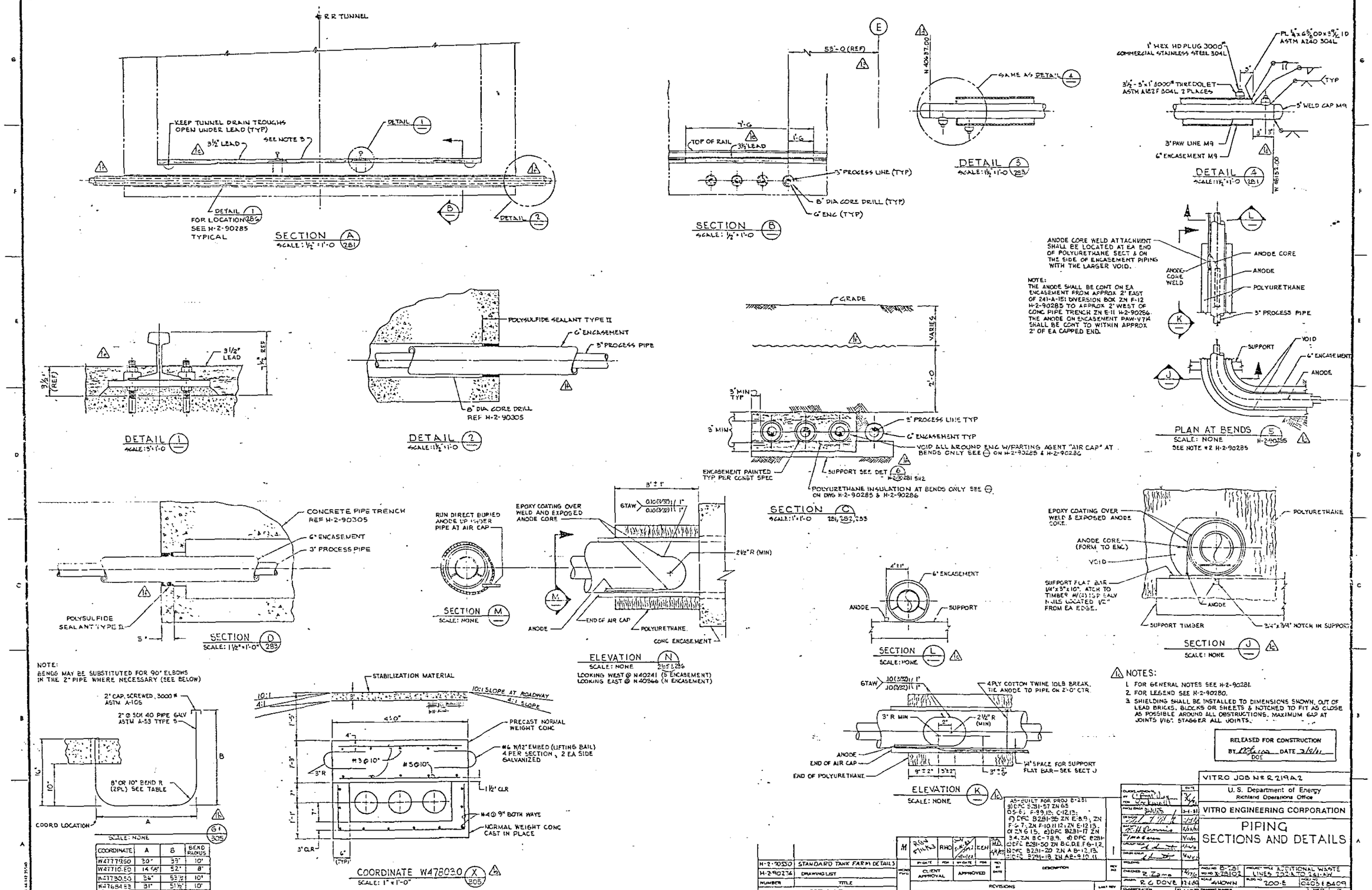

NOTES:

1. FOR GENERAL NOTES SEE H-2-90281.
2. FOR LEGEND SEE H-2-90280.
3. SHIELDING SHALL BE INSTALLED TO DIMENSIONS SHOWN, OUT OF LEAD BRICKS, BLOCKS OR SHEETS & NOTCHED TO FIT AS CLOSE AS POSSIBLE AROUND ALL OBSTRUCTIONS. MAXIMUM GAP AT JOINTS 1/16". STAGGER ALL JOINTS.

RELEASED FOR CONSTRUCTION
BY [illegible] DATE 3/9/01
DOE

NUMBER	TITLE
H-2-90350	STANDARD TANK FARM DETAILS
H-2-90274	DRAWING LIST

REFERENCES
NEXT USED ON H-2-90274

M	REV STATUS	RHO	CLIENT APPROVAL	EEN	MD	DESCRIPTION
			APPROVED			AS-BUILT FOR PROJ B-231 a) DFC B231-57 ZN G5 D5-6; F-9,10,12; C-12,13; f) DFC B231-85 ZN E-8,9; ZN F-5-7; ZN F-10,11,12; ZN E-12,13; ZN G 15; e) DFC B231-17 ZN B-4; ZN B C-7,8,9; d) DFC B231-0 DFC B231-50 ZN B.C.D.E.F.G-1,2; b) DFC B231-20 ZN A B-12,13; c) DFC B231-18, ZN A B-9,10,11

REVISIONS
COMMENT REVIEW

VITRO JOB № R 219A2
U. S. Department of Energy
Richland Operations Office
VITRO ENGINEERING CORPORATION

PIPING SECTIONS AND DETAILS

PROJ NO B-231
WO NO X 218102
PROJECT TITLE ADDITIONAL WASTE LINES 222-S TO 241-AW
SCALE 4 SHOWN
BLDG NO 200-E
CODE 0405 & 0409
CLASSIFICATION NONE
SHEET NOT REQ
DRAWING NUMBER H-2-90291

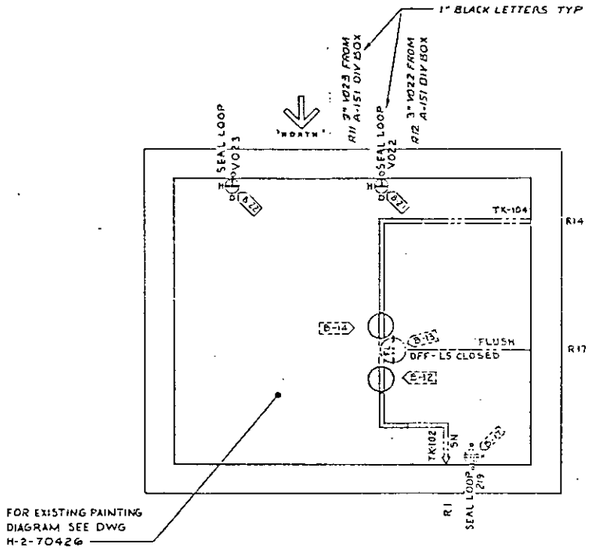

VALVE PIT 241-AW-B

SCALE: ½" = 1'-0 1c

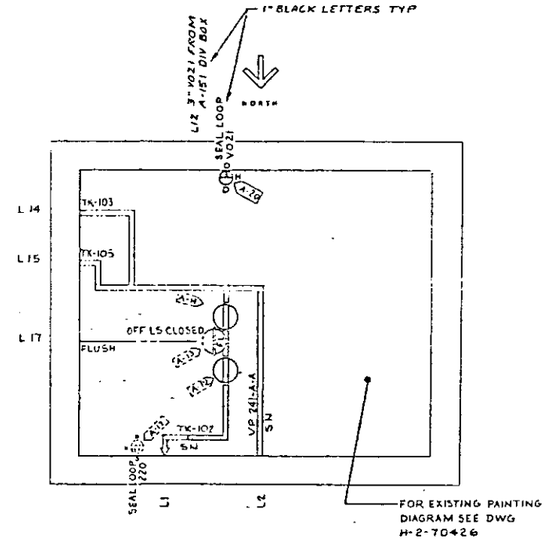

VALVE PIT 241-AW-A

SCALE: ½" = 1'-0 1c

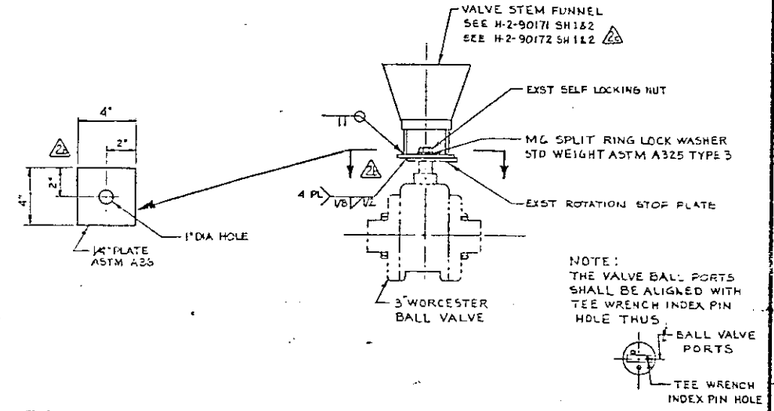

DETAIL A

SCALE: 3" = 1'-0 1c

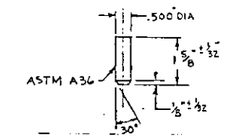

DETAIL F

TEE WRENCH PIN

SCALE: ½" = 1'-0 1c

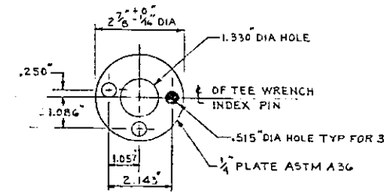

DETAIL E

TEE WRENCH BOTTOM PLATE

SCALE: ½" = 1'-0 1c

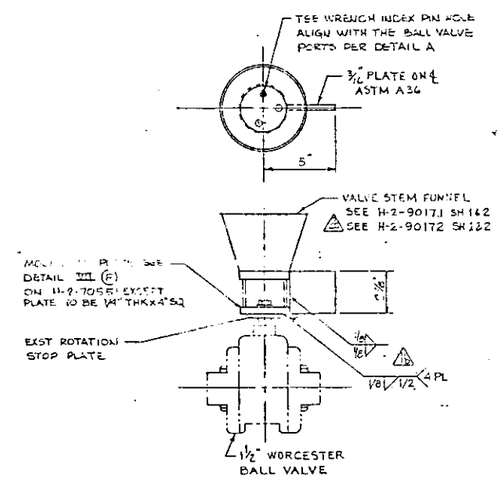

DETAIL B

SCALE: 3" = 1'-0 1c

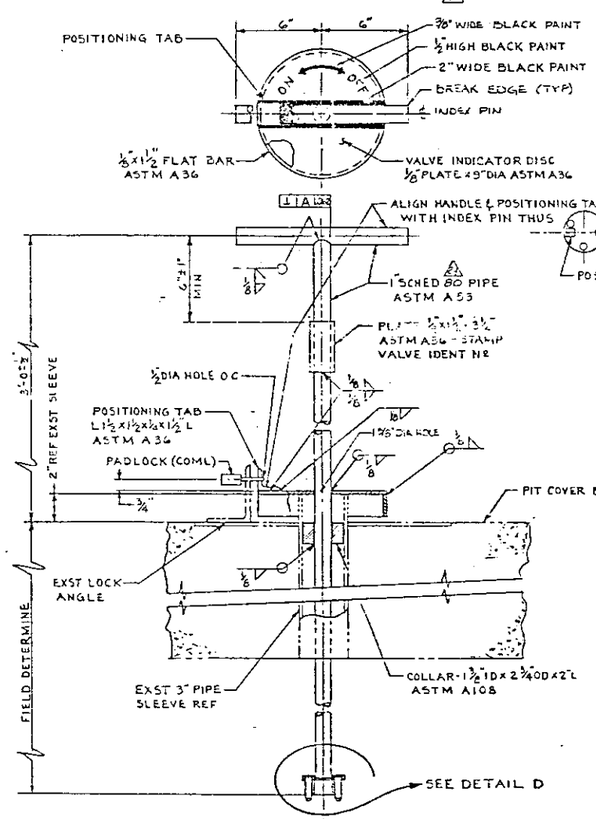

DETAIL C

TEE WRENCH ASSEMBLY

SCALE: 3" = 1'-0 1c

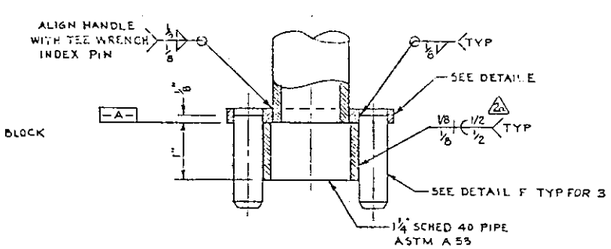

DETAIL D

TEE WRENCH SUB ASSEMBLY

SCALE: FULL SIZE 1c

NOTES:

1. FOR GENERAL NOTES SEE H-2-90281
2. PAINT PIT COVER FLOW DIAGRAMS PER SPEC B-281-CI AND DWG H-2-70426 EXCEPT AS OTHERWISE NOTED
3. EXTEND FLOW IDENTIFICATION LINES TO THE VALVE ACCESS HOLES
4. PAINT VALVE INDICATOR DISCS YELLOW WITH BLACK FOR PRODUCT FLOW & GREEN FOR FLUSH
5. VALVE EXTENSION HANDLE ASSYS WITH VALVE INDICATOR DISCS ARE REFERENCED ON INDIVIDUAL PIT JUMPER ARRGT DRAWINGS

1c TOLERANCES UNLESS OTHERWISE SPECIFIED SHALL BE:
FRACTIONAL = $\pm\frac{1}{16}$
DECIMAL = ±.005"
ANGULAR = ±0°30'

H-2-70426	PAINTING DIAGRAMS
H-2-90274	DRAWING LIST
NUMBER	TITLE
REFERENCES	
NEXT USED ON H-2-90274	

REV	DATE	BY	DESCRIPTION
2	7/11/93	N/A	AS-BUILT FOR PROJ B-281 B281-77E ZN C8 B281-52 ZN G2, C11, d) DFC B281-70 ZN E6-2 3 4 5, c) DFC a) DFC B281-73 ZN C4, b) DFC
1	7-7-93	CKS	a) ADDED DETAILS A THRU F b) ADDED NOTE 6 c) GEM PRINTING REV ZONE E6-C2

MICROFILMED: RNO APPROVAL — BY-DATE; SEH APPROVAL — BY-DATE

REVISIONS

COMMENT REVIEW LLA 12/21/90 [illegible]

REV 1 DOE GS Rell DATE 7/10/92

RELEASED FOR CONSTRUCTION BY K K Owens DATE 7/6/92 DOE

U. S. DEPARTMENT OF ENERGY
Richland Operations Office
VITRO ENGINEERING CORPORATION

PIPING MISCELLANEOUS DETAILS

PROJECT TITLE ADDITIONAL WASTE LINES 202-A TO 241-AW

WELDING N/A			
PROJ B-281	WO X25102	JOB R219A2	
SCALE SHOWN	BLDG 241-AW	PAGES 0402	
CLASSIFICATION NONE	DRAWING NUMBER H-2-90295		REV 2

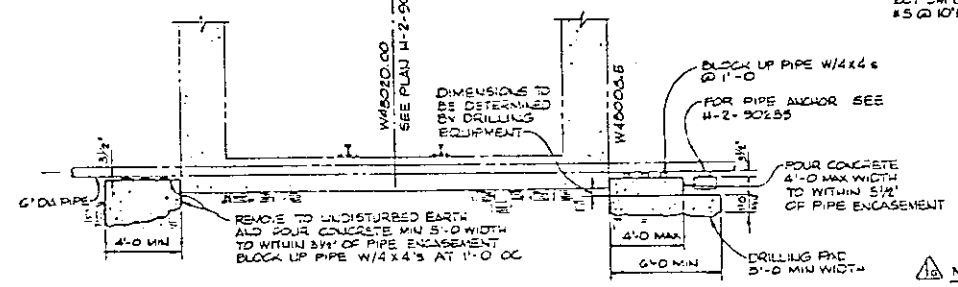

CROSS SECTION THRU TUNNEL AT 6" DIA PIPE PENETRATION

SCALE: 1/4" = 1'-0

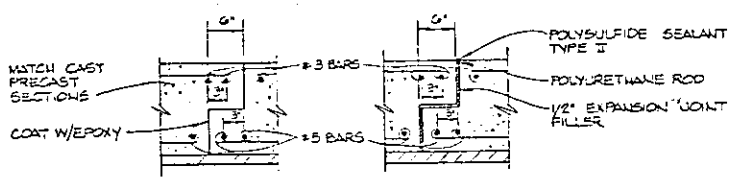

TYP JOINT (C) SCALE: 1" = 1'-0

EXPANSION JOINT (CC) (TYP TWO PLACES) SCALE: 1" = 1'-0

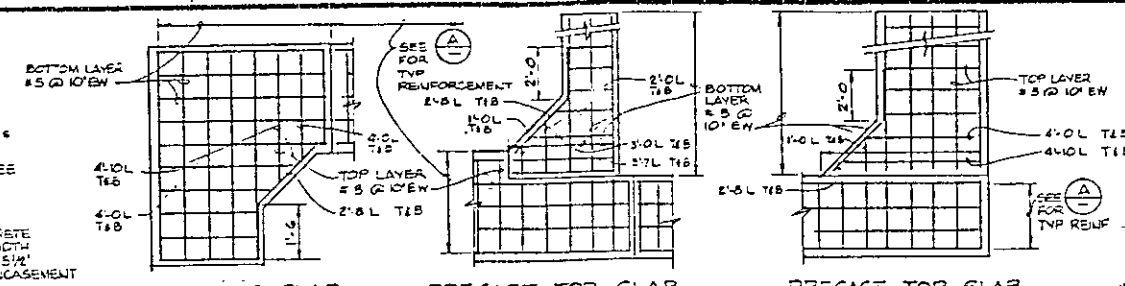

PRECAST TOP SLAB REINFORCEMENT (1A) NORM WT & HIGH DENSITY CONCRETE SCALE: 3/8" = 1'-0

PRECAST TOP SLAB REINFORCEMENT (2A) (HIGH DENSITY CONCRETE) SCALE: 3/8" = 1'-0

PRECAST TOP SLAB REINFORCEMENT (3A) (HIGH DENSITY CONCRETE) SCALE: 3/8" = 1'-0

GENERAL NOTES

1) APPLICABLE CODES:
AASHTO - 1977
ACI 301-75, 318-77

2) DESIGN LOADS:
WHEEL LOAD = 16,000 LB
SOIL BEARING PRESSURE 4000 PSF

3) DESIGN STRESSES:
ALL CONCRETE f'c = 3000 PSI AT 28 DAYS
BAR REINFORCEMENT fy = 60,000 PSI

4) LAP BAR REINFORCEMENT 30 DIAMETERS UNLESS SHOWN OTHERWISE ON DRAWINGS.

5) IN PLACE DENSITY FOR HIGH DENSITY CONCRETE EQUALS 215 LB / FT.³

6) BACKFILL W/LOAD BEARING BACKFILL.

7) FOR CONSTRUCTION SPECIFICATION SEE B-281-C1.

8) GALVANIZE ACCORDING TO ASTM A-123 AFTER FAB. COATING NOT LESS THAN 2.8 OUNCES PER SQ FT OF SURFACE. REPAIR BREAKS IN ZINC COATING W/ GALVICON, BY GALVICON CORP. OR ZRC BY THE SEALUBE CO.

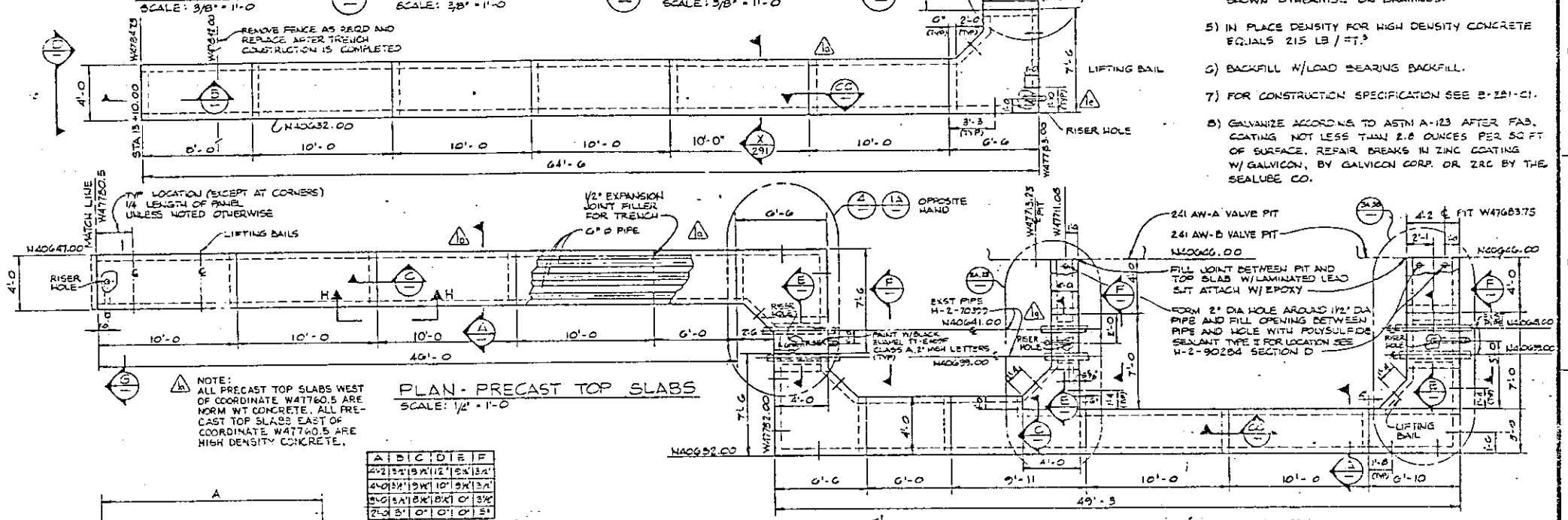

NOTE: ALL PRECAST TOP SLABS WEST OF COORDINATE W47760.5 ARE NORM WT CONCRETE. ALL PRECAST TOP SLABS EAST OF COORDINATE W47760.5 ARE HIGH DENSITY CONCRETE.

PLAN - PRECAST TOP SLABS

SCALE: 1/4" = 1'-0

A	B	C	D	E	F
4'-2	5'-2	1'-9	9'-1	1'-2	5'-2	3'-1
4'-0	5'-1	1'-9	9'-1	1'-0	5'-1	3'-1
8'-0	5'-1	8'-1	8'-1	8'-1	0'	3'-1
7'-0	5'	0'	0'	0'	0'	5'

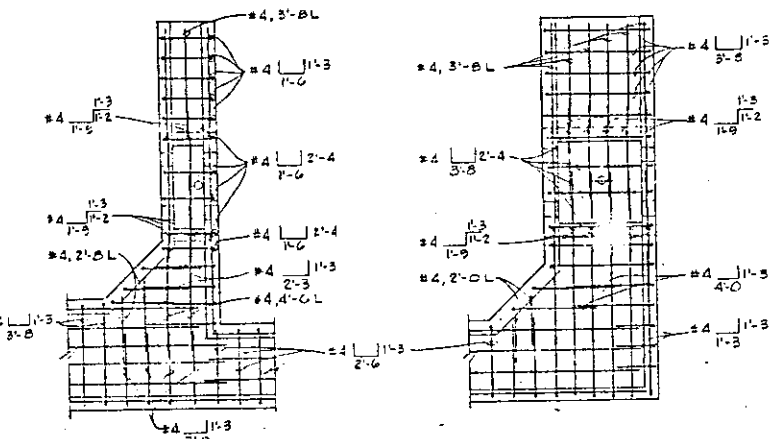

BOTTOM OF TRENCH REINFORCEMENT (NORMAL WT CONCRETE) (2B) SCALE: 3/8" = 1'-0

BOTTOM OF TRENCH REINFORCEMENT (NORMAL WT CONCRETE) (3B) SCALE: 3/8" = 1'-0

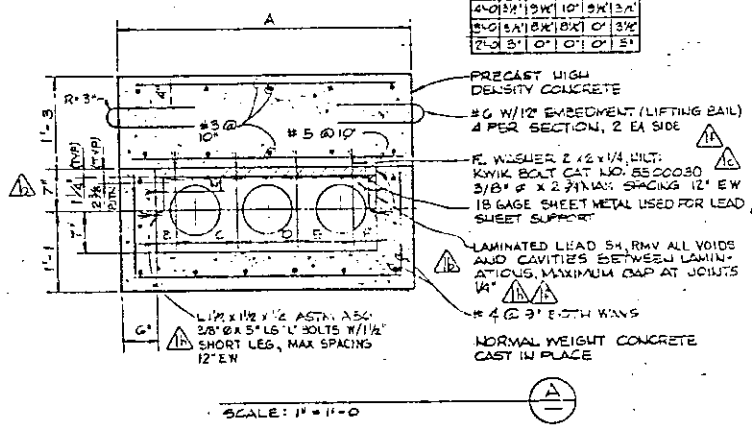

SCALE: 1" = 1'-0

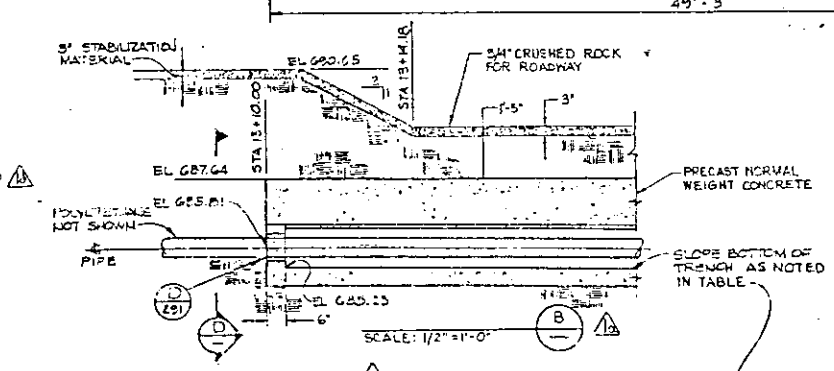

SCALE: 1/2" = 1'-0

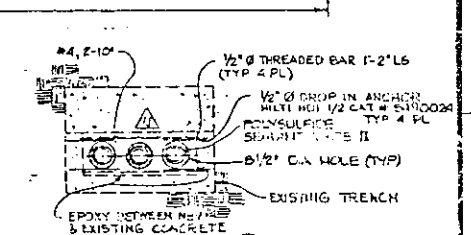

SCALE: 1/2" = 1'-0

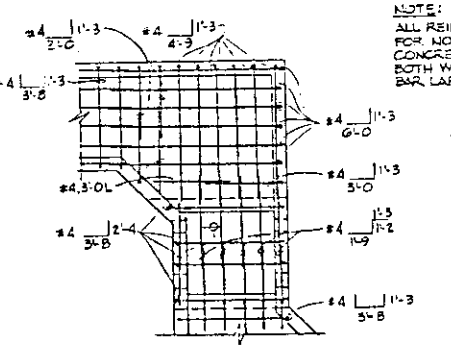

BOTTOM OF TRENCH REINFORCEMENT (NORMAL WT CONCRETE) (4) SCALE: 3/8" = 1'-0

NOTE: ALL REINFORCEMENT FOR NORMAL WT CONCRETE IS 9" OC BOTH WAYS BAR LAPS 1'-0

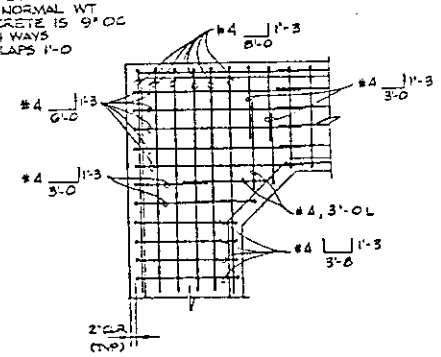

BOTTOM OF TRENCH REINFORCEMENT (NORMAL WT CONCRETE) (1B) SCALE: 3/8" = 1'-0

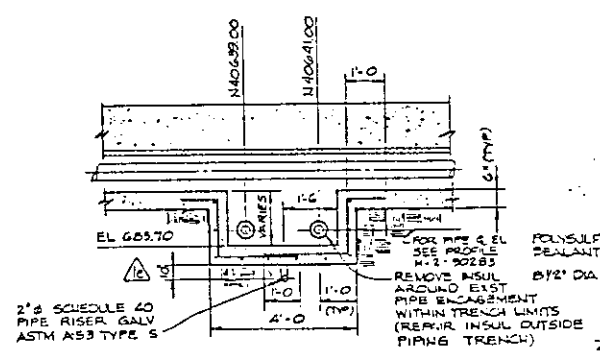

SCALE: 1/2" = 1'-0

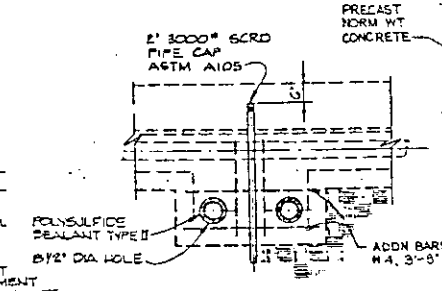

SCALE: 1/2" = 1'-0

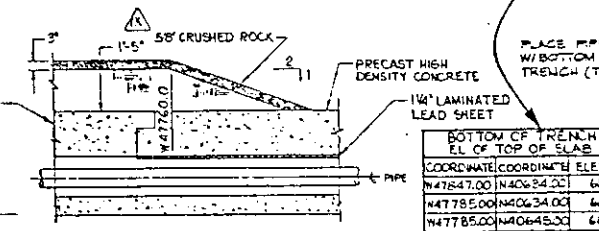

LONGITUDINAL SECT AT COORDINATE W47760.0

SCALE: 1/2" = 1'-0

BOTTOM OF TRENCH EL OF TOP OF SLAB		
COORDINATE	COORDINATE	ELEVATION
W47847.00	N40634.00	685.23
W47785.00	N40634.00	685.07
W47785.00	N40645.00	685.05
W47750.00	N40645.00	684.91
W47750.00	N40634.00	684.88
W47711.08	N40634.00	684.85
W47711.08	N40646.00	684.74
W47684.85	N40634.00	684.77
W47684.85	N40646.00	684.74

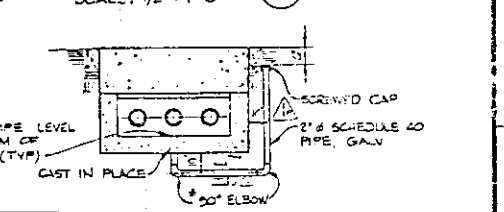

SCALE: 1/2" = 1'-0

FOR ALTERNATIVE BENDS SEE (G1) 2/2 (1A)

RELEASED FOR CONSTRUCTION BY [illegible] DATE [illegible] COE

H-2-70399	PIPING PLAN 241-AW TANK FARM					
H-2-90274	DRAWING LIST					
NUMBER	TITLE					
REFERENCES						
NEXT USED ON	H-2-90274					

MICROFILMED

	BY-DATE	BY-DATE	REV BY DATE	DESCRIPTION	REV
DRAWN	RHO				
APPROVAL	KEN APPROVAL				

REVISIONS

AS-BUILT FOR PROJ B281 K) RECKNG ZN CS WAS 3/4" 19 58" ZN C9. J) NCR B281-7 ZN C2, ZN E-34. h) DFC B281-33 ZN C-7, 3 ZN C7, F4 g) DFC B281-24 ZN E9 B1; ZN B1. f) DFC B281 d) DFC 48 ZN C7. e) DFC B281-20 22 ZN C8. C) DFC 44 ZN C7. DE-8, E8, C-9, EC-345. b) DFC a) DFC B281-19 ZN G8, E6, F5.

COMMENT REVIEW [illegible]

ENGINEERING APPROVAL BY [illegible]	DATE 3/1/81	U. S. DEPARTMENT OF ENERGY Richland Operations Office	
PROJ ENGR [illegible]	3-4-81	VITRO ENGINEERING CORPORATION	
DESIGN [illegible]	3-4-81	STRUCTURAL PIPING TRENCH & TUNNEL SECTION	
MECH [illegible]	3/4/81		
CH [illegible]	3/4/81		
GROUP MGR D. LIEN	3/4/81		
CHIEF ENGR [illegible]	3/4/81	PROJECT TITLE ADDITIONAL WASTE LINES 202-A TO 241 AW	
WELDING —			
CHECKED D. LIEN	3/4/81	PROJ B-281	JOB RZ182C
DRAWN NOVES	12/4/80	SCALE SHOWN	BLDG 200-E
CLASSIFICATION NONE	ST NOT REQ'D	DRAWING NUMBER H-2-90305	SHEET — REV 1

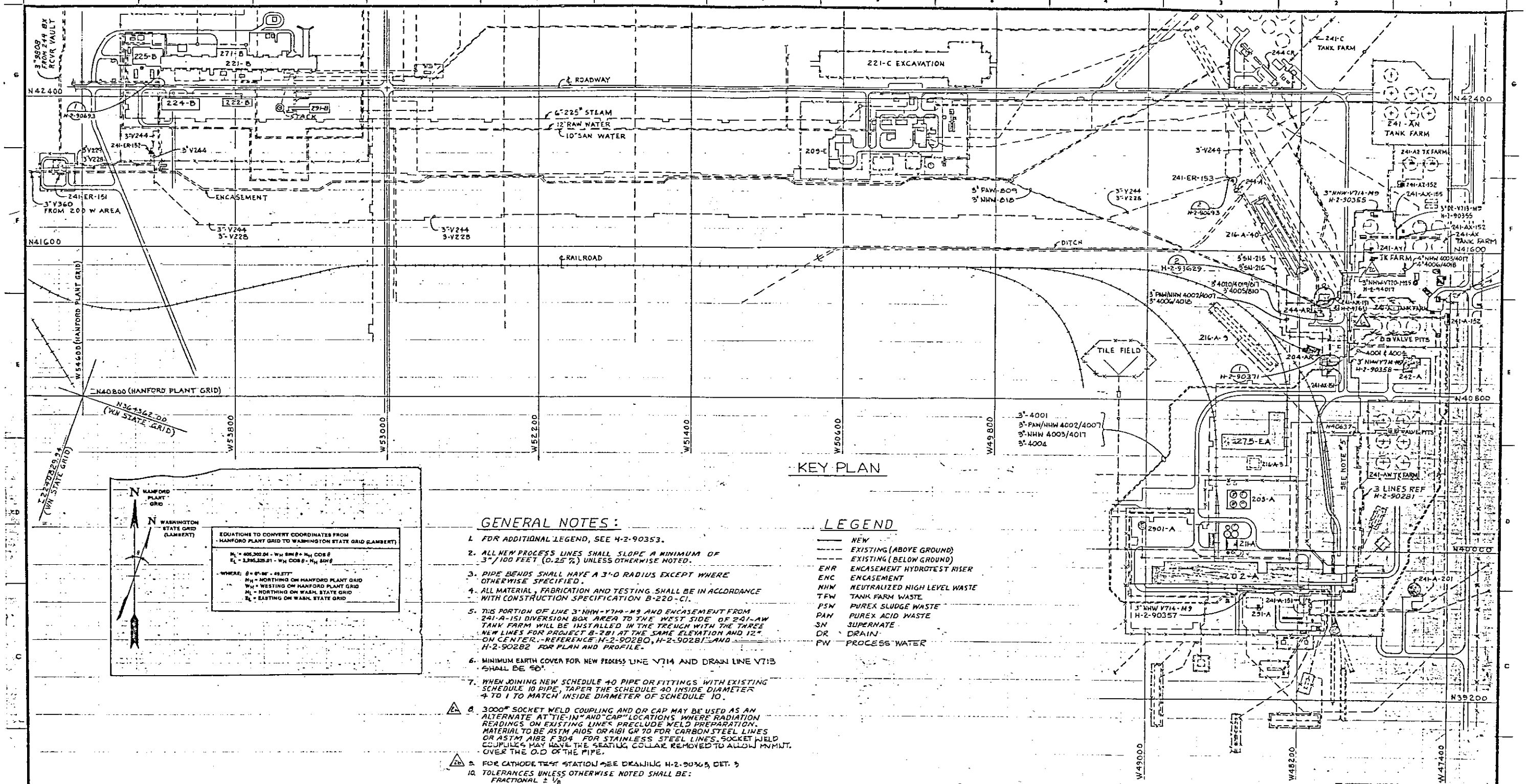

KEY PLAN

GENERAL NOTES:

1. FOR ADDITIONAL LEGEND, SEE H-2-90353.
2. ALL NEW PROCESS LINES SHALL SLOPE A MINIMUM OF 3"/100 FEET (0.25 %) UNLESS OTHERWISE NOTED.
3. PIPE BENDS SHALL HAVE A 3'-0 RADIUS EXCEPT WHERE OTHERWISE SPECIFIED.
4. ALL MATERIAL, FABRICATION AND TESTING SHALL BE IN ACCORDANCE WITH CONSTRUCTION SPECIFICATION B-220-C1.
5. THIS PORTION OF LINE 3" NHW-V714-M9 AND ENCASEMENT FROM 241-A-151 DIVERSION BOX AREA TO THE WEST SIDE OF 241-AW TANK FARM WILL BE INSTALLED IN THE TRENCH WITH THE THREE NEW LINES FOR PROJECT B-281 AT THE SAME ELEVATION AND 12" ON CENTER. REFERENCE H-2-90280, H-2-90281 AND H-2-90282 FOR PLAN AND PROFILE.
6. MINIMUM EARTH COVER FOR NEW PROCESS LINE V714 AND DRAIN LINE V713 SHALL BE 50".
7. WHEN JOINING NEW SCHEDULE 40 PIPE OR FITTINGS WITH EXISTING SCHEDULE 10 PIPE, TAPER THE SCHEDULE 40 INSIDE DIAMETER 4 TO 1 TO MATCH INSIDE DIAMETER OF SCHEDULE 10.
8. 3000# SOCKET WELD COUPLING AND OR CAP MAY BE USED AS AN ALTERNATE AT "TIE-IN" AND "CAP" LOCATIONS WHERE RADIATION READINGS ON EXISTING LINES PRECLUDE WELD PREPARATION. MATERIAL TO BE ASTM A105 OR A181 GR 70 FOR CARBON STEEL LINES OR ASTM A182 F304 FOR STAINLESS STEEL LINES. SOCKET WELD COUPLINGS MAY HAVE THE SEATING COLLAR REMOVED TO ALLOW MMJT. OVER THE O.D OF THE PIPE.
9. FOR CATHODE TEST STATION SEE DRAWING H-2-90363, DET. 3
10. TOLERANCES UNLESS OTHERWISE NOTED SHALL BE:
    FRACTIONAL ± 1/8"
    ± 1/4" ON PIPE LINE ELEVATIONS
    ± 1" ON PIPE LINE PLAN LOCATIONS
    ANGULAR ± 1°
    DECIMAL ± .010"

LEGEND

———	NEW
-----	EXISTING (ABOVE GROUND)
-----	EXISTING (BELOW GROUND)
ENR	ENCASEMENT HYDROTEST RISER
ENC	ENCASEMENT
NHW	NEUTRALIZED HIGH LEVEL WASTE
TFW	TANK FARM WASTE
PSW	PUREX SLUDGE WASTE
PAW	PUREX ACID WASTE
SN	SUPERNATE
DR	DRAIN
PW	PROCESS WATER

REV 1 DOE G.L. Robbins DATE 1/4/83

REV 2 DOE [illegible] DATE [illegible]

RELEASED FOR CONSTRUCTION BY G.L. Robbins DOE DATE 1-11-83

M	DRAWING LIST						
	NUMBER	TITLE					
	REFERENCES						
	NEXT USED ON H-2-90351						

M					AS-BUILT FOR PROJ B-220	3	
M	3-10-83				PER DFC B-220-119 ADDED LINE V720 ZN-E2 PER DFC B220-46 ZUC10 PER DFC B220-85 ZUC10	2	
M	7-13-82				AS NEEDED	1	
	BY DATE	FOR	BY DATE	FOR	DESCRIPTION	REV	
	CLIENT APPROVAL		KEH APPROVAL		REVISIONS	LAST REV 3	
	COMMENT REVIEW						

KEH JOB NO. R099AZ	
U.S. Department of Energy, Richland Operations Office	
KAISER ENGINEERS HANFORD COMPANY	
PIPING KEY PLAN	
PROJECT NO. B-220	PROJECT TITLE WASTE TRANSFER FACILITIES
DWG NO. F22082	
SCALE 1" = 200'	BLDG NO. 200-E
DWG NO. 0110	
CLASSIFICATION NONE	NOT REQD
DRAWING NUMBER H-2-90352	

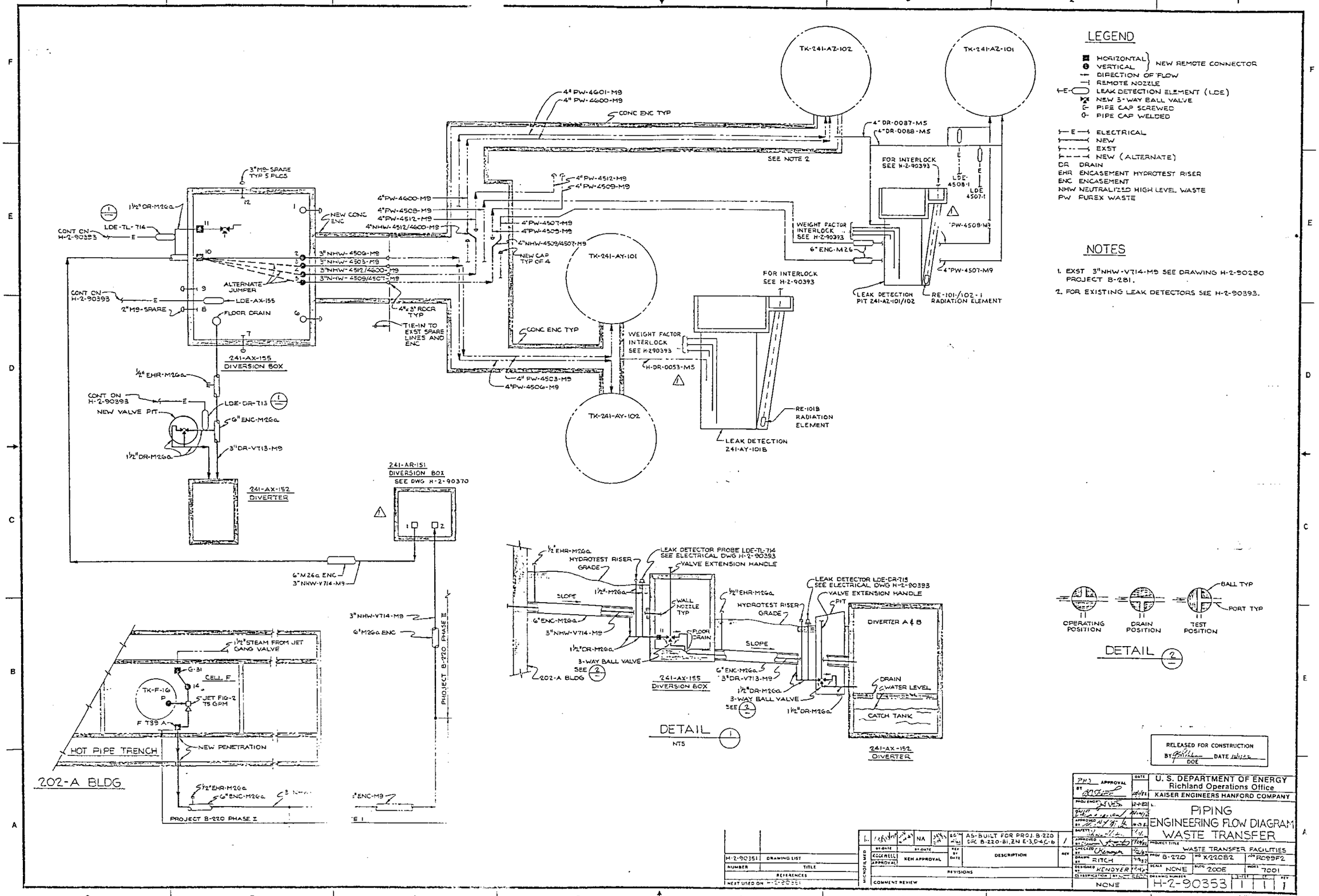

LEGEND
HORIZONTAL
VERTICAL
NEW REMOTE CONNECTOR
DIRECTION OF FLOW
REMOTE NOZZLE
LEAK DETECTION ELEMENT (LDE)
NEW 3-WAY BALL VALVE
PIPE CAP SCREWED
PIPE CAP WELDED
ELECTRICAL
NEW
EXST
NEW (ALTERNATE)
DR DRAIN
EHR ENCASEMENT HYDROTEST RISER
ENC ENCASEMENT
NHW NEUTRALIZED HIGH LEVEL WASTE
PW PUREX WASTE
NOTES
1. EXST 3"NHW-V714-M9 SEE DRAWING H-2-90280 PROJECT B-281.
2. FOR EXISTING LEAK DETECTORS SEE H-2-90393.
TK-241-AZ-102
TK-241-AZ-101
TK-241-AY-101
TK-241-AY-102
4" PW-4601-M9
4" PW-4600-M9
CONC ENC TYP
SEE NOTE 2
4" DR-0087-M5
4" DR-0088-M5
FOR INTERLOCK SEE H-2-90393
LDE-4508-1
LDE-4507-1
WEIGHT FACTOR INTERLOCK SEE H-2-90393
6" ENC-M26
4" PW-4507-M9
LEAK DETECTION PIT 241-AZ-101/102
RE-101-/102-1 RADIATION ELEMENT
3" M9-SPARE TYP 5 PLCS
1½" DR-M26a
LDE-TL-714
CONT ON H-2-90393
NEW CONC ENC
4" PW-4600-M9
4" PW-4508-M9
4" PW-4512-M9
4" NHW-4512/4600-M9
4" PW-4512-M9
4" PW-4509-M9
4" PW-4507-M9
4" PW-4509-M9
4" NHW-4509/4507-M9
NEW CAP TYP OF 4
3" NHW-4506-M9
3" NHW-4503-M9
3" NHW-4512/4600-M9
3" NHW-4509/4507-M9
ALTERNATE JUMPER
LDE-AX-155
2" M9-SPARE
FLOOR DRAIN
4"x3" RDCR TYP
TIE-IN TO EXST SPARE LINES AND ENC
241-AX-155 DIVERSION BOX
½" EHR-M26a
LDE-DR-713
NEW VALVE PIT
6" ENC-M26a
3" DR-V713-M9
1½" DR-M26a
241-AX-152 DIVERTER
241-AR-151 DIVERSION BOX SEE DWG H-2-90370
6" M26a ENC
3" NHW-V714-M9
3" NHW-V714-M9
6" M26a ENC
PROJECT B-220 PHASE II
1½" STEAM FROM JET GANG VALVE
G-31
CELL F
TK-F-16
JET F16-2 75 GPM
F 739 A
HOT PIPE TRENCH
NEW PENETRATION
202-A BLDG
½" EHR-M26a
6" ENC-M26a
PROJECT B-220 PHASE I
½" EHR-M26a
HYDROTEST RISER GRADE
LEAK DETECTOR PROBE LDE-TL-714 SEE ELECTRICAL DWG H-2-90393
VALVE EXTENSION HANDLE
SLOPE
1½" M26a
WALL NOZZLE TYP
FLOOR DRAIN
6" ENC-M26a
3" NHW-V714-M9
1½" DR-M26a
3-WAY BALL VALVE SEE 2
202-A BLDG
241-AX-155 DIVERSION BOX
½" EHR-M26a
HYDROTEST RISER GRADE
LEAK DETECTOR LDE-DR-715 SEE ELECTRICAL DWG H-2-90393
VALVE EXTENSION HANDLE
PIT
DIVERTER A & B
SLOPE
6" ENC-M26a
3" DR-V713-M9
1½" DR-M26a
3-WAY BALL VALVE SEE 2
1½" DR-M26a
DRAIN
WATER LEVEL
CATCH TANK
241-AX-152 DIVERTER
DETAIL 1
NTS
BALL TYP
PORT TYP
OPERATING POSITION
DRAIN POSITION
TEST POSITION
DETAIL 2
RELEASED FOR CONSTRUCTION
BY DATE
DOE
U. S. DEPARTMENT OF ENERGY
Richland Operations Office
KAISER ENGINEERS HANFORD COMPANY
PIPING
ENGINEERING FLOW DIAGRAM
WASTE TRANSFER
PROJECT TITLE WASTE TRANSFER FACILITIES
PROJ B-220
WO X22082
JOB R099F2
SCALE NONE
BLDG 200E
PHOTO 7001
DRAWING NUMBER H-2-90353
SHEET 1 OF 1
REV 1
DRAWN BY RITCH
DESIGNED BY KENOYER
CLASSIFICATION NONE
AS-BUILT FOR PROJ. B-220 DFC B-220-B1, ZN E-3, D-4, C-6
DESCRIPTION
REVISIONS
COMMENT REVIEW
KEH APPROVAL
H-2-90351 DRAWING LIST
NUMBER TITLE
REFERENCES
NEXT USED ON H-2-90351

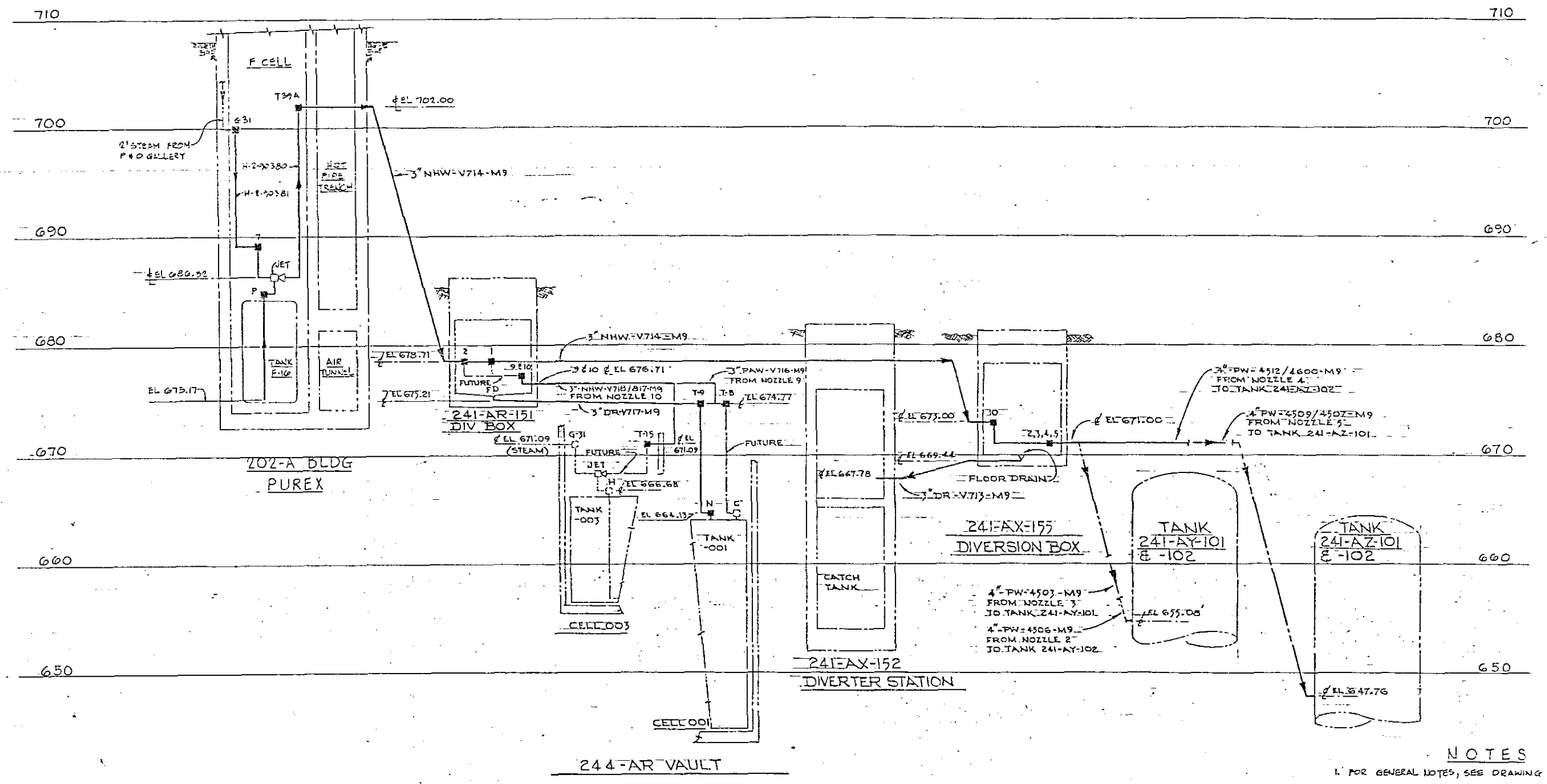

NOTES

1. FOR GENERAL NOTES, SEE DRAWING H-2-90352.
2. FOR LEGEND, SEE DRAWING H-2-90353

REV 1 DOE DATE 6/12/93

RELEASED FOR CONSTRUCTION
BY DOE DATE 6-12-93

IMPACT LEVEL 2

H-2-90351	DRAWING LIST				
NUMBER	TITLE				
REFERENCES					
NEXT USED ON H-2-90351					

REV	BY-DATE	BY-DATE	BY-DATE	REV BY DATE	DESCRIPTION	REV
3				ACE 5/26/93	REVISION PER ECN 200097	3
2					AS-BUILT FOR PROJECT B-220	2
1					VAULT, Z-88, BOX, Z-159, & (5) 244-AR (2) ADDED 241-AR-151 DIV	1

MICROFILMED — CONTROLLED APPROVAL — TECH APPROVAL — COMMENT REVIEW — REVISIONS

PHD APPROVAL BY — DATE 7/6/93

U.S. DEPARTMENT OF ENERGY
Richland Operations Office
KAISER ENGINEERS HANFORD COMPANY

PIPING HYDRAULIC DIAGRAM

PROJECT TITLE: WASTE TRANSFER FACILITIES

PROJ B-220 — WO X 22082 — JOB R09962

DRAWING TYPE H-2 — AREA 200E — PROC 7001

CLASSIFICATION NONE — ST NOT REQD — DRAWING NUMBER H-2-90354 — SHEET — — REV 3

IV

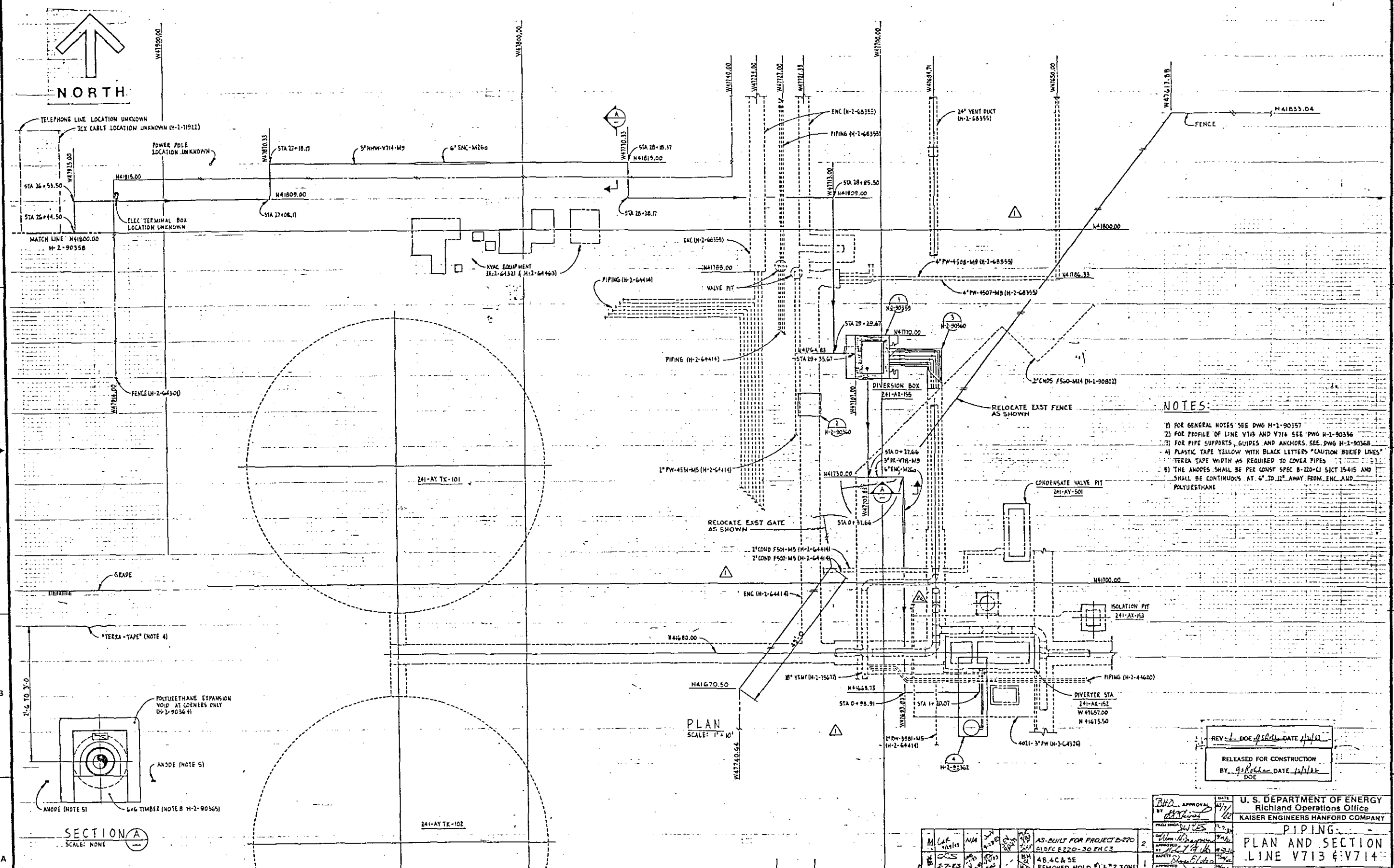

NOTES:

1) FOR GENERAL NOTES SEE DWG H-2-90357
2) FOR PROFILE OF LINE V713 AND V714 SEE DWG H-2-90356
3) FOR PIPE SUPPORTS, GUIDES AND ANCHORS SEE DWG H-2-90368
4) PLASTIC TAPE YELLOW WITH BLACK LETTERS "CAUTION BURIED LINES" TERRA TAPE WIDTH AS REQUIRED TO COVER PIPES
5) THE ANODES SHALL BE PER CONST SPEC B-220-C1 SECT 15415 AND SHALL BE CONTINUOUS AT 6" TO 12" AWAY FROM ENC AND POLYURETHANE

REV 1 DOE DATE 1/2/82
RELEASED FOR CONSTRUCTION
BY DOE DATE 1/2/82

M				AS-BUILT FOR PROJECT B-220 (1) DFC B220-30 ENC3	2	
BK				48,4C & 5E REMOVED HOLD #1 & #2, ZONE	1	
	BY-DATE	BY-DATE		DESCRIPTION	REV	
	ECKWELL	KEH APPROVAL				
	APPROVAL					

REVISIONS

COMMENT REVIEW

H-2-90351	DRAWING LIST
NUMBER	TITLE
REFERENCES	
NEXT USED ON H-2-90351	

BHD APPROVAL BY — DATE 12/7/82

U. S. DEPARTMENT OF ENERGY
Richland Operations Office
KAISER ENGINEERS HANFORD COMPANY

PIPING
PLAN AND SECTION
LINE V713 & V714

PROJECT TITLE: WASTE TRANSFER FACILITIES

PROJ B220	WO X220B2	JOB R099F2	
SCALE SHOWN	BLDG 241-AY/AX	INDEX 0403, 8409	
CLASSIFICATION NONE	BY NOT REQD	DRAWING NUMBER H-2-90355	SHEET - / REV 2

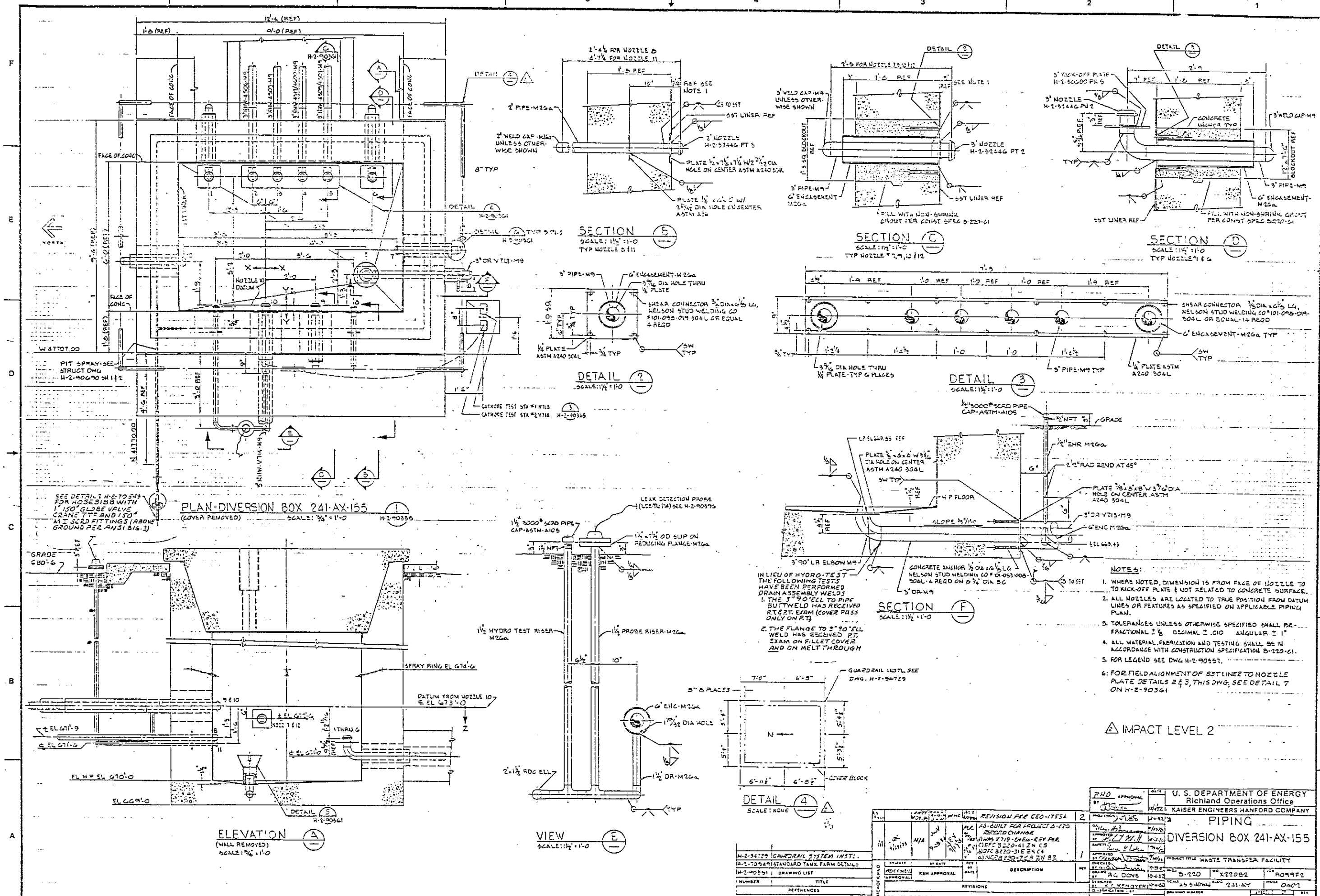
PLAN-DIVERSION BOX 241-AX-155
(COVER REMOVED)
SCALE: 3/4" = 1'-0
H-2-90355
ELEVATION A
(WALL REMOVED)
SCALE: 3/4" = 1'-0
VIEW E
SCALE: 1 1/2" = 1'-0
DETAIL 4
SCALE: NONE
SECTION B
SCALE: 1 1/2" = 1'-0
SECTION C
SCALE: 1 1/2" = 1'-0
SECTION D
SCALE: 1 1/2" = 1'-0
DETAIL 2
SCALE: 1 1/2" = 1'-0
DETAIL 3
SCALE: 1 1/2" = 1'-0
SECTION F
SCALE: 1 1/2" = 1'-0
NOTES:
1. WHERE NOTED, DIMENSION IS FROM FACE OF NOZZLE TO TO KICK-OFF PLATE & NOT RELATED TO CONCRETE SURFACE.
2. ALL NOZZLES ARE LOCATED TO TRUE POSITION FROM DATUM LINES OR FEATURES AS SPECIFIED ON APPLICABLE PIPING PLAN.
3. TOLERANCES UNLESS OTHERWISE SPECIFIED SHALL BE- FRACTIONAL ± 1/8 DECIMAL ± .010 ANGULAR ± 1°
4. ALL MATERIAL, FABRICATION AND TESTING SHALL BE IN ACCORDANCE WITH CONSTRUCTION SPECIFICATION B-220-61.
5. FOR LEGEND SEE DWG H-2-90357.
6: FOR FIELD ALIGNMENT OF SST LINER TO NOZZLE PLATE DETAILS 2 & 3, THIS DWG, SEE DETAIL 7 ON H-2-90361
IMPACT LEVEL 2
U. S. DEPARTMENT OF ENERGY
Richland Operations Office
KAISER ENGINEERS HANFORD COMPANY
PIPING
DIVERSION BOX 241-AX-155
WASTE TRANSFER FACILITY
H-2-90359

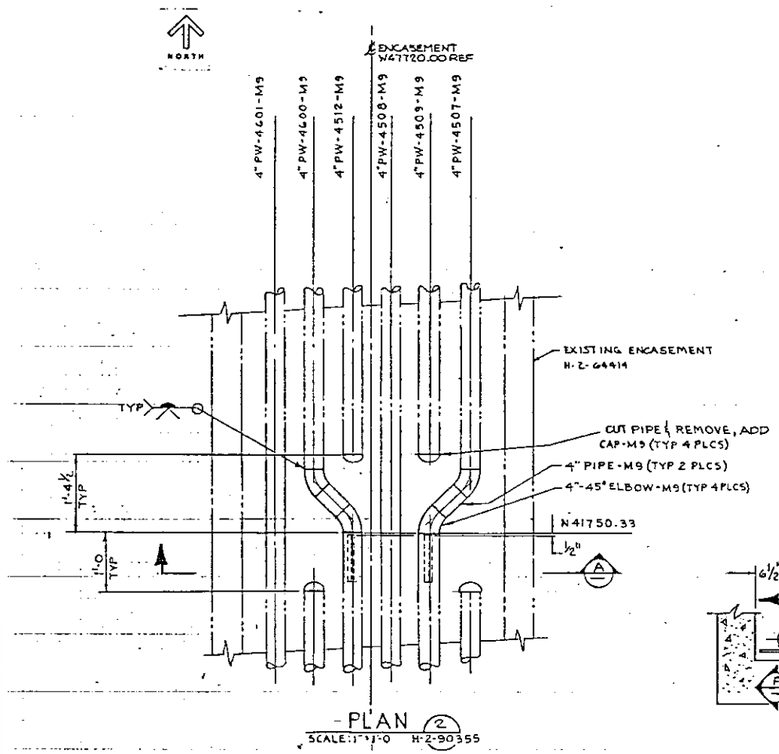

PLAN (2)
SCALE: 1" = 1'-0 H-2-90355

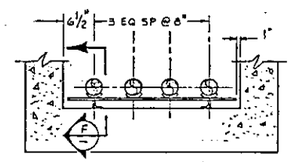

SECTION (D)
SCALE: 1" = 1'-0

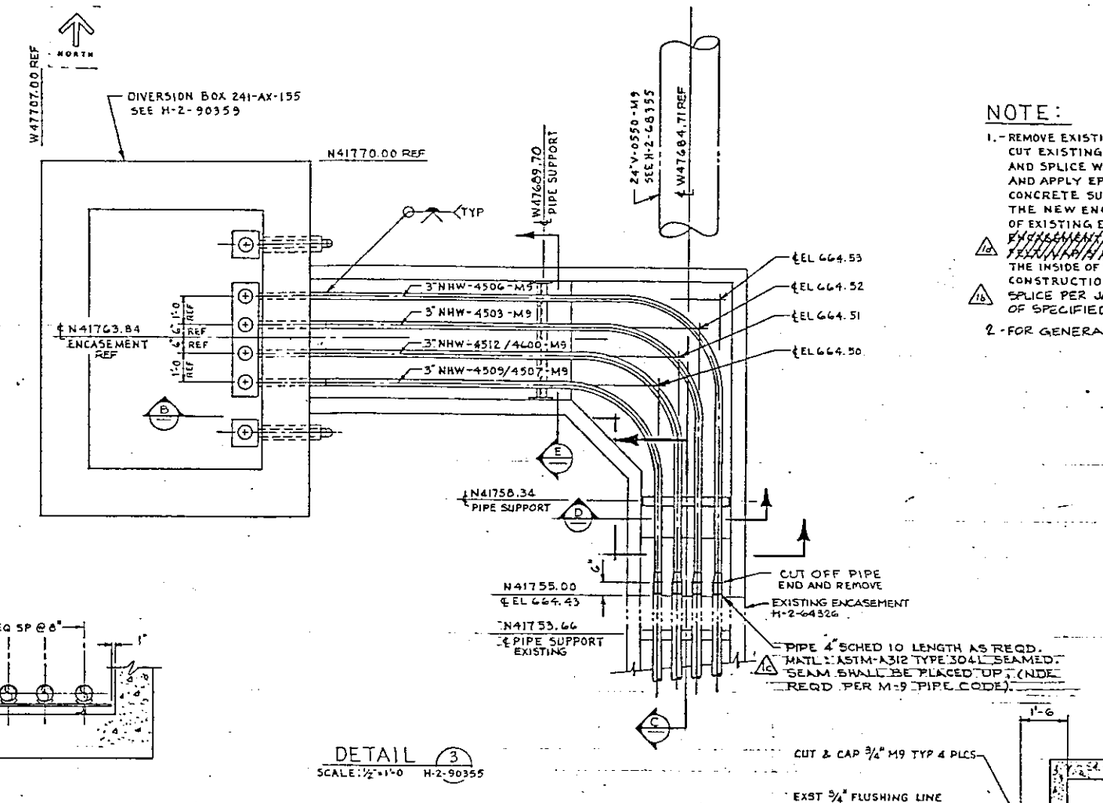

DETAIL (3)
SCALE: ½" = 1'-0 H-2-90355

NOTE:

1. - REMOVE EXISTING ENCASEMENT CONCRETE AS REQ'D ON PLAN 2 CUT EXISTING REINFORCING BAR LEAVING 30 D LAP, CLEAN AND SPLICE WITH NEW REINFORCING. ROUGHEN SURFACE AND APPLY EPOXY BONDING COMPOUND TO EXISTING CONCRETE SURFACES PRIOR TO PLACING NEW CONCRETE. THE NEW ENCASEMENT DIMENSIONS TO MATCH THAT OF EXISTING ENCASEMENT. ~~[illegible]~~ 16 THE INSIDE OF THE NEW ENCASEMENT WITH SPC PER CONSTRUCTION SPECIFICATION B-220-C1. WELDED REBAR 16 SPLICE PER JAJ PROCEDURES, MAY BE USED IN LIEU OF SPECIFIED SPLICING PROCEDURES.
2. - FOR GENERAL NOTES SEE DWG H-2-90352

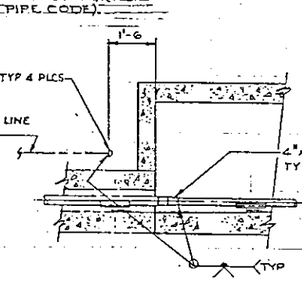

SECTION (C)
SCALE ½" = 1'-0

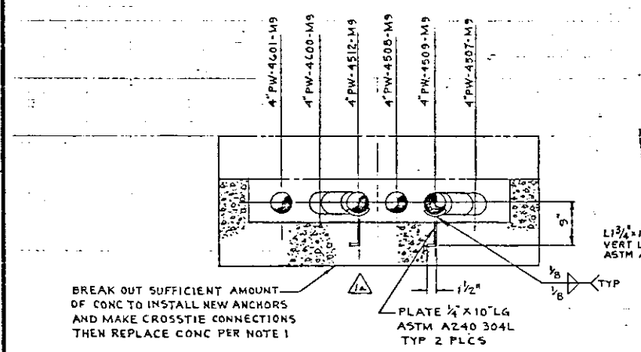

SECTION (A)
SCALE 1" = 1'-0

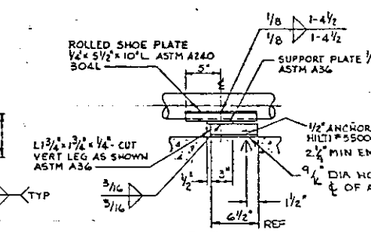

SECTION (F)
SCALE 1½" = 1'-0

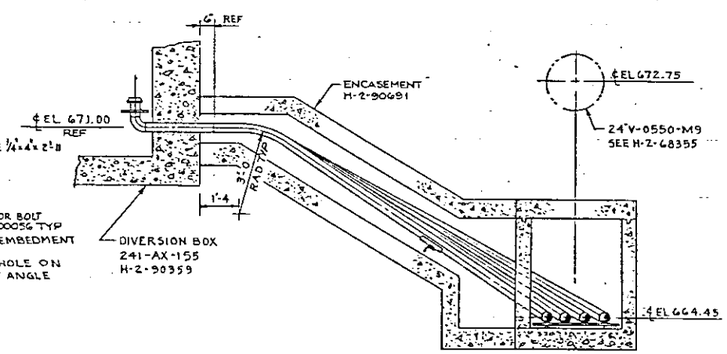

SECTION (B)
SCALE: ½" = 1'-0

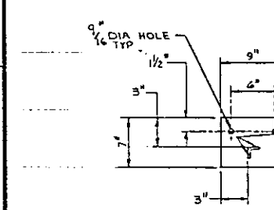

DETAIL (1)
SCALE NONE

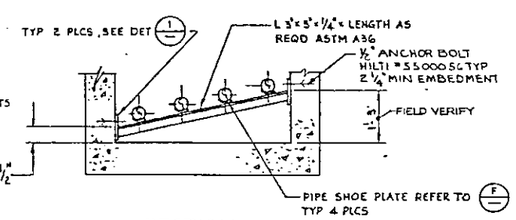

SECTION (E)
SCALE ¾" = 1'-0

RELEASED FOR CONSTRUCTION
BY G S Rider DATE 1-10-13
DOE

M	Cat 8/28/13	N/A	Cat 9-28-87	JCV 8/9/93	RL 8/9/93	AS-BUILT FOR PROJECT B-220 d) NCR B-220-11-ZNEI-2 c) DEC-B-220-44E-ZD3 b) DFC-B-220-45E-ZE1 a) DFC-B-220-45E-ZB7	1
	BY-DATE	BY-DATE		REV BY DATE			REV
	ROCKWELL APPROVAL	KEN APPROVAL				REVISIONS	

H-2-64144	
H-2-64326	
H-2-90351	DRAWING LIST
NUMBER	TITLE
REFERENCES	
NEXT USED ON H-2-90351	

MICROFILMED
COMMENT REVIEW

RHO APPROVAL BY — DATE 1/11/93
PROJ ENGR LWS 1-10-93
DA — 1/14/93
APPROVED BY — 1/14/93
DA/ES — 1/14/93
APPROVED BY — 1/14/93
CHK DA/ES — 1/14/93
BY G. CLEVELAND
DRAWN BY P.T. POREDA 1/13/93
DESIGNED BY C. KENOYER 1/13/93
CLASSIFICATION — BY

U. S. DEPARTMENT OF ENERGY
Richland Operations Office
KAISER ENGINEERS HANFORD COMPANY

PIPING
MISCELLANOUS PLANS AND DETAILS

PROJECT TITLE WASTE TRANSFER FACILITIES

PROJ B-220	WO X220B2	JOB R055F2	
SCALE SHOWN	BLDG 241-AX	WORK 8407	
CLASSIFICATION NONE	NOT REQD	DRAWING NUMBER H-2-90360	SHEET — / — SHT / 1 REV

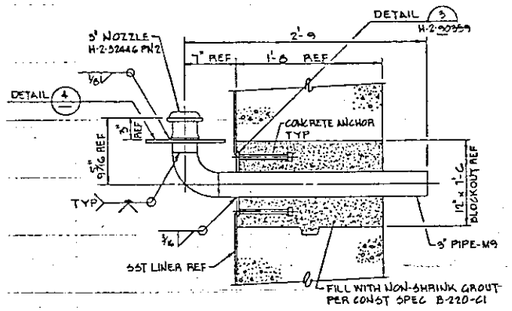

SECTION G
SCALE: 1½" = 1'-0 H-2-90359
TYP NOZZLE #2,3,4,5 & 6

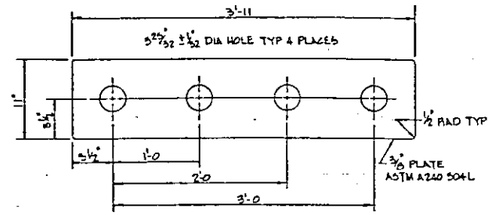

DETAIL 4
SCALE: 1½" = 1'-0 H-2-90359

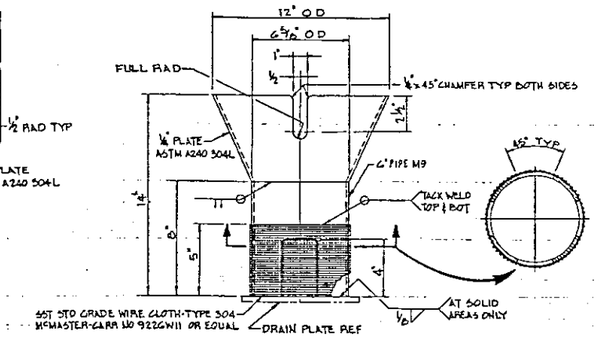

DETAIL 5
SCALE: 3" = 1'-0 H-2-90359

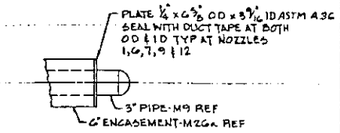

DETAIL 6
SCALE: 1½" = 1'-0 H-2-90359

NOZZLE AS-BUILT LOCATIONS												
	NOZZLE NO											
COORDS	1	2	3	4	5	6	7	8	9	10	11	12
X	2'-2 39/64"	0'-6 1/64"	0'-5 61/64"	1'-5 37/64"	2'-5 57/64"	4'-2 53/64"	3'-3 1/64"	3'-6 9/64"	2'-0 7/64"	-0-	2'-0 1/64"	3'-3 5/64"
Y	5'-1 61/64"	5'-2 4/64"	5'-1 63/64"	5'-1 6/64"	5'-1 59/64"	5'-1 63/64"	2'-3 6/64"	0'-0 46/64"	-0-	-0-	0'-0 46/64"	1'-8 61/64"
Z	671'-9 13/64"	671'-9 17/64"	671'-9 13/64"	671'-9 17/64"	671'-9 15/64"	671'-9 22/64"	672'-6 3/64"	671'-8 59/64"	672'-11 63/64"	673'-0"	671'-5 17/64"	672'-6"

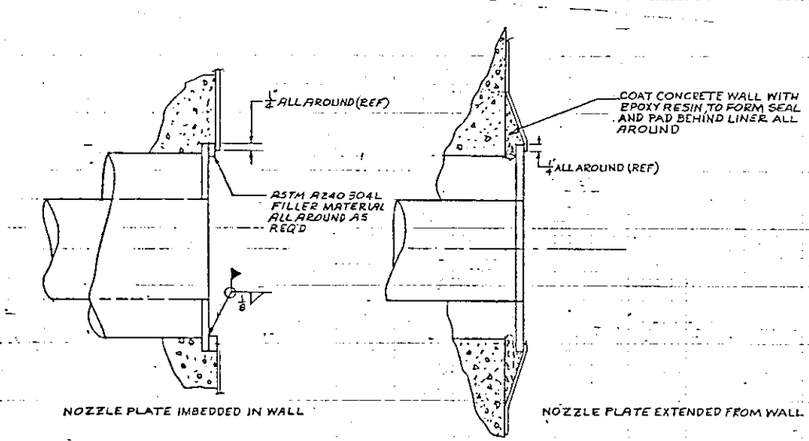

DETAIL 7
SCALE: HALF H-2-90359

NOTE:
1. FOR GENERAL NOTES SEE DWG H-2-90359.

RELEASED FOR CONSTRUCTION
BY [signature] DATE 10/1/82
DOE

H-2-90359	PIPING-DIVERSION BOX 241-AX-155
H-2-90351	DRAWING LIST
NUMBER	TITLE
REFERENCES	
NEXT USED ON H-2-90351	

MICROFILMED	BY-DATE	BY-DATE	REV BY DATE	DESCRIPTION	REV
	ROCKNELL	KEN APPROVAL		AS-BUILT FOR PROJECT B-220 D6-8 WREV. PER DFC B-220-86-DNS C&D 2-5 WREV. PER NCR B-220-7-8-DNS	1
	APPROVAL				
REVISIONS					
COMMENT REVIEW					

RHO APPROVAL BY [signature] DATE 10/1/82

U. S. DEPARTMENT OF ENERGY
Richland Operations Office
KAISER ENGINEERS HANFORD COMPANY

PIPING
DIVERSION BOX 241-AX-155
SECTION AND DETAILS

PROJECT TITLE WASTE TRANSFER FACILITY

PROJ B-220	WO X22082	JOB R099F2	
SCALE AS SHOWN	BLDG 241-AY	INDEX 0402	
DRAWING NUMBER H-2-90361	SHEET —	OF —	REV 1

CLASSIFICATION NONE NOT REQD

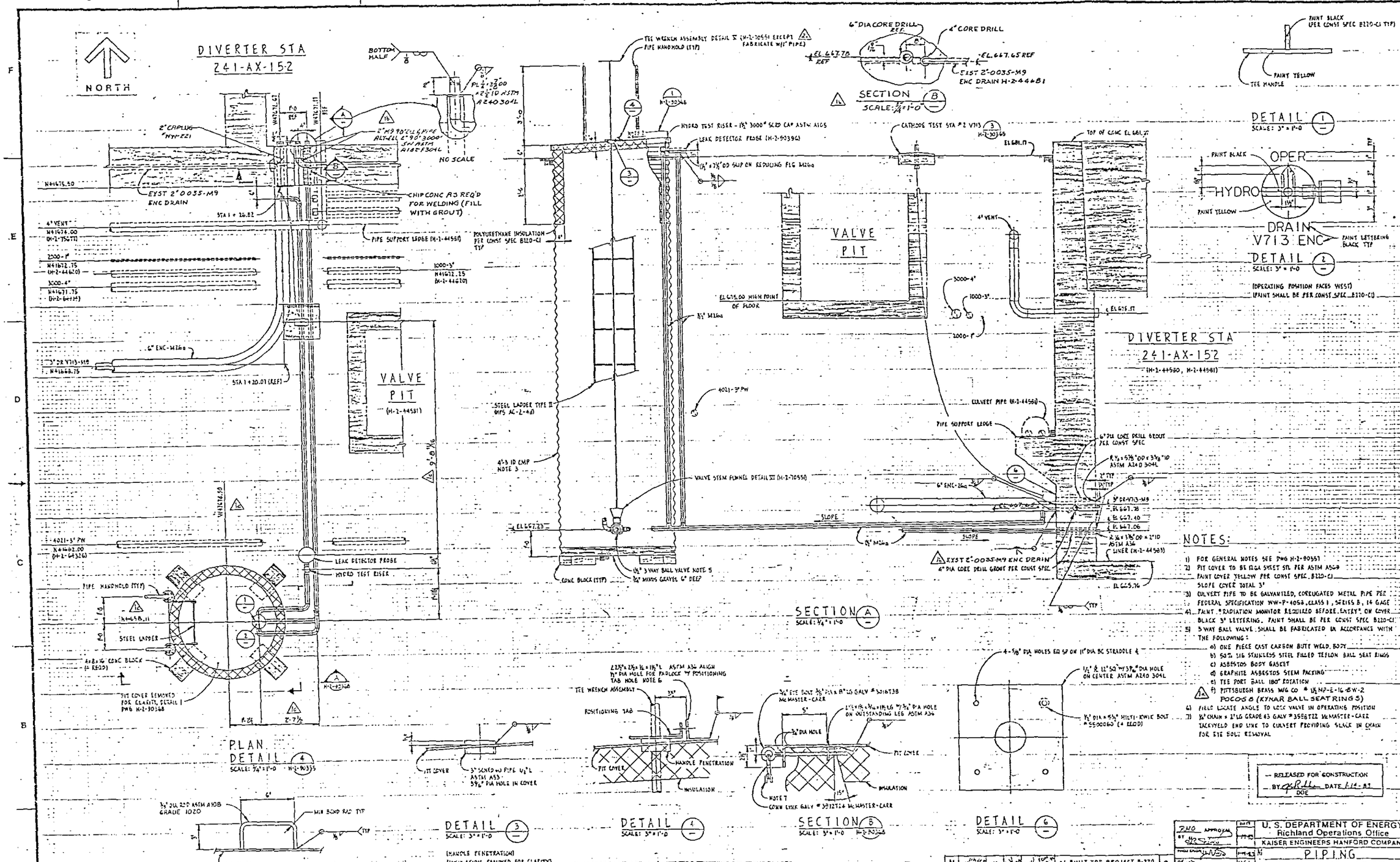

NOTES:

1) FOR GENERAL NOTES SEE DWG H-2-90357
2) PIT COVER TO BE 12GA SHEET STL PER ASTM A569
PAINT COVER YELLOW PER CONST SPEC B220-C1
SLOPE COVER TOTAL 3"
3) CULVERT PIPE TO BE GALVANIZED, CORRUGATED METAL PIPE PER FEDERAL SPECIFICATION WW-P-405B, CLASS I, SERIES B, 14 GAGE
4) PAINT "RADIATION MONITOR REQUIRED BEFORE ENTRY" ON COVER BLACK 3" LETTERING. PAINT SHALL BE PER CONST SPEC B220-C1
5) 3 WAY BALL VALVE SHALL BE FABRICATED IN ACCORDANCE WITH THE FOLLOWING:
   a) ONE PIECE CAST CARBON BUTT WELD BODY
   b) 50% 316 STAINLESS STEEL FILLED TEFLON BALL SEAT RINGS
   c) ASBESTOS BODY GASKET
   d) GRAPHITE ASBESTOS STEM PACKING
   e) TEE PORT BALL 180° ROTATION
   f) PITTSBURGH BRASS MFG CO # 1½ NP-E-16-BW-2 POCOS 8 (KYNAR BALL SEAT RINGS)
6) FIELD LOCATE ANGLE TO LOCK VALVE IN OPERATING POSITION
7) ¼" CHAIN x 2" LG GRADE 43 GALV #3558T22 McMASTER-CARR TACKWELD END LINK TO CULVERT PROVIDING SLACK IN CHAIN FOR EYE BOLT REMOVAL

RELEASED FOR CONSTRUCTION
BY [signature] DATE 1-14-87
DOE

H-2-70551	STANDARD TK FARM DETAILS
AC-2-46	HANFORD PLANT STANDARD
H-2-90351	DRAWING LIST
NUMBER	TITLE
REFERENCES	
NEXT USED ON	H-2-90351

M				AS BUILT FOR PROJECT B-220	2
M				AS-BUILT FOR PROJECT DTED	1
MICROFILMED	SYNDATE	SYNDATE	REV BY DATE	DESCRIPTION	REV
	ROCK WELL	KEN APPROVAL			
	APPROVAL			REVISIONS	
	COMMENT REVIEW				

U. S. DEPARTMENT OF ENERGY
Richland Operations Office
KAISER ENGINEERS HANFORD COMPANY

PIPING
DETAIL AND SECTION
LINE V713

PROJECT TITLE: WASTE TRANSFER FACILITIES
PROJ. B220 | WO X22052 | JOB R09972
SCALE: SHOWN | BLDG 241-AX | NOTE 0403, 8409
DRAWN BY R L PASCUA
DESIGNED BY R L PASCUA
CLASSIFICATION: NONE | NOT REQD
DRAWING NUMBER H-2-90362 | SHEET - 1 - | REV 2

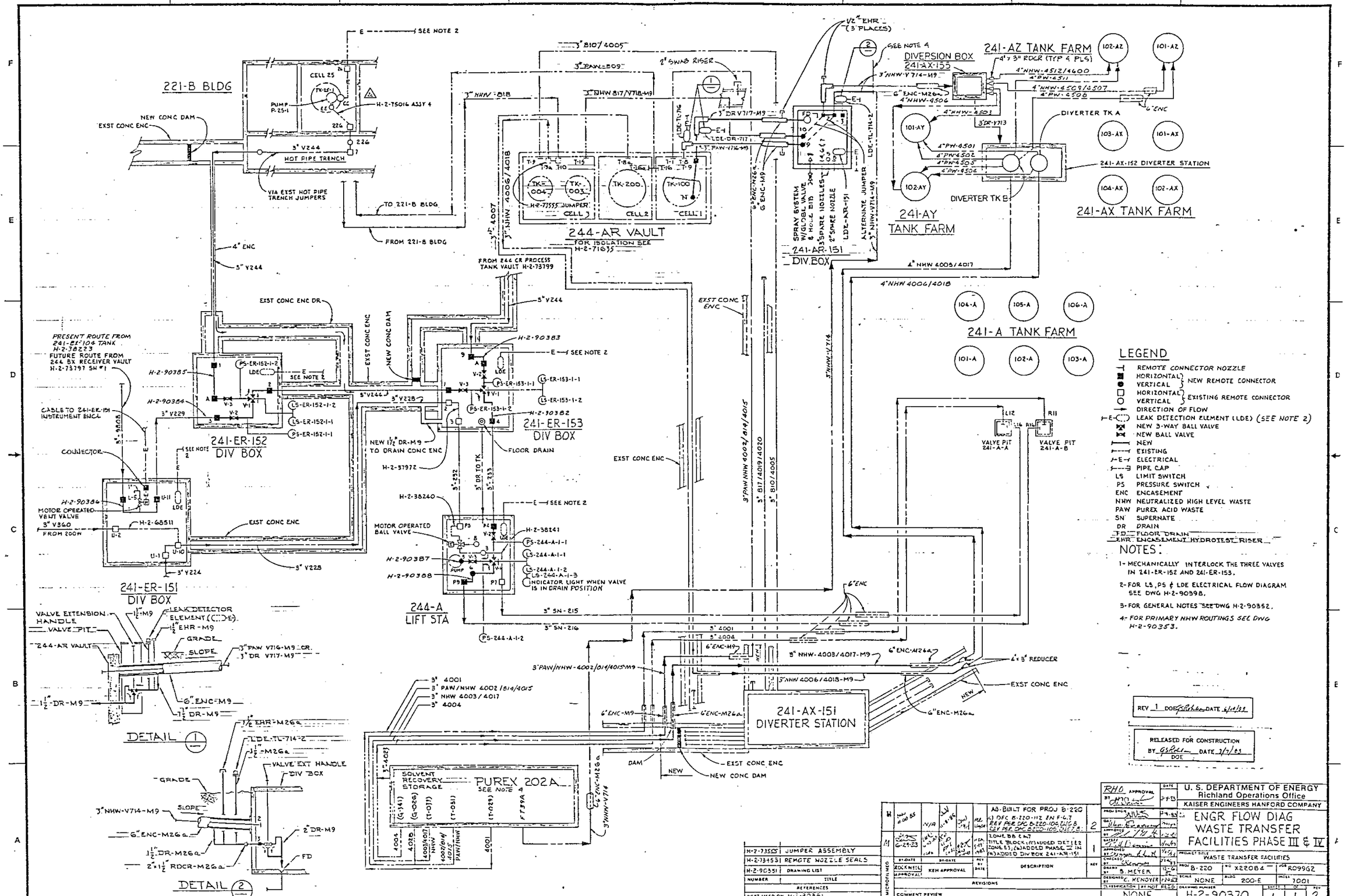

221-B BLDG
NEW CONC DAM
EXST CONC ENC
HOT PIPE TRENCH
VIA EXST HOT PIPE TRENCH JUMPERS
TO 221-B BLDG
FROM 221-B BLDG
244-AR VAULT
FOR ISOLATION SEE H-2-71635
FROM 244 CR PROCESS TANK VAULT H-2-73799
241-AR-151 DIV BOX
241-AZ TANK FARM
DIVERSION BOX 241-AX-155
241-AY TANK FARM
241-AX TANK FARM
241-AX-152 DIVERTER STATION
DIVERTER TK A
DIVERTER TK B
241-A TANK FARM
241-ER-152 DIV BOX
241-ER-153 DIV BOX
241-ER-151 DIV BOX
244-A LIFT STA
241-AX-151 DIVERTER STATION
PUREX 202A
SOLVENT RECOVERY STORAGE
DETAIL 1
DETAIL 2
LEGEND
REMOTE CONNECTOR NOZZLE
HORIZONTAL
VERTICAL
NEW REMOTE CONNECTOR
HORIZONTAL
VERTICAL
EXISTING REMOTE CONNECTOR
DIRECTION OF FLOW
LEAK DETECTION ELEMENT (LDE) (SEE NOTE 2)
NEW 3-WAY BALL VALVE
NEW BALL VALVE
NEW
EXISTING
ELECTRICAL
PIPE CAP
LS LIMIT SWITCH
PS PRESSURE SWITCH
ENC ENCASEMENT
NHW NEUTRALIZED HIGH LEVEL WASTE
PAW PUREX ACID WASTE
SN SUPERNATE
DR DRAIN
FD FLOOR DRAIN
EHR ENCASEMENT HYDROTEST RISER
NOTES:
1- MECHANICALLY INTERLOCK THE THREE VALVES IN 241-ER-152 AND 241-ER-153.
2- FOR LS, PS & LDE ELECTRICAL FLOW DIAGRAM SEE DWG H-2-90398.
3- FOR GENERAL NOTES SEE DWG H-2-90352.
4- FOR PRIMARY NHW ROUTINGS SEE DWG H-2-90353.
REV 1 DOE DATE 6/14/83
RELEASED FOR CONSTRUCTION
BY DOE DATE 3/7/83
H-2-73555 JUMPER ASSEMBLY
H-2-73453 REMOTE NOZZLE SEALS
H-2-90351 DRAWING LIST
NUMBER TITLE
REFERENCES
NEXT USED ON H-2-90351
AS-BUILT FOR PROJ B-220
REVISIONS
COMMENT REVIEW
U. S. DEPARTMENT OF ENERGY
Richland Operations Office
KAISER ENGINEERS HANFORD COMPANY
ENGR FLOW DIAG
WASTE TRANSFER
FACILITIES PHASE III & IV
WASTE TRANSFER FACILITIES
PROJ B-220
X22084
R099G2
SCALE NONE
BLDG 200-E
INDEX 7001
DRAWN BY S. MEYER
DESIGNED BY C. KENOYER
CLASSIFICATION BY NOT REQD
NONE
H-2-90370
REV 2

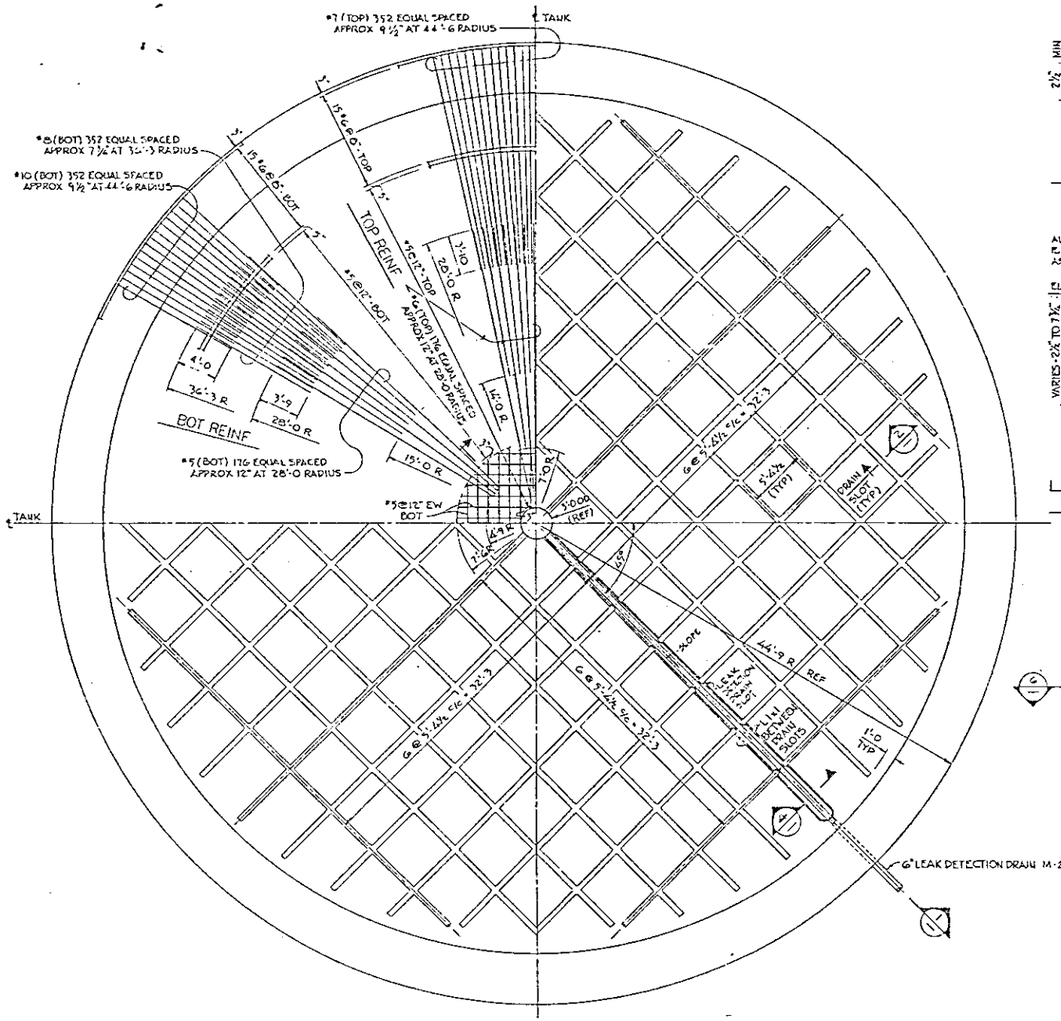

PLAN-STRUCTURAL SLAB-DRAIN SLOTS

SCALE: 3/16" = 1'-0

TANKS 106 & 108, AS SHOWN - FOR ORIENTATION OF OTHER TANKS, SEE KEY PLAN

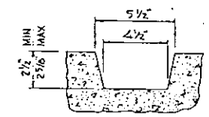

TYPICAL DRAIN SLOT (2)

SCALE: 3" = 1'-0

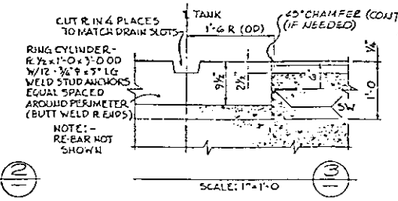

SCALE: 1" = 1'-0 (3)

GENERAL NOTES

1. FOR SPECIFICATIONS SEE B-340-C3.
2. DESIGN UNIT STRESSES
   a - STRUCTURAL CONCRETE $F_c' = 4500$ PSI.
   b - REINFORCING STEEL $F_y = 60{,}000$ PSI.
3. LEGEND -
   NIC ——— NOT IN CONTRACT
4. LAP SPLICE LENGTH FOR CIRCUMFERENTIAL REINFORCEMENT IS A MIN OF 48 BAR DIAMETERS.

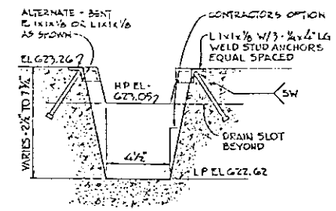

LEAK DETECTION DRAIN SLOT (4)

SCALE: 3" = 1'-0

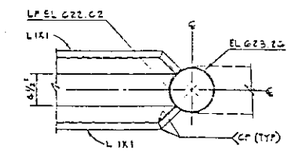

SCALE: 1½" = 1'-0 (6)

TOLERANCES

TOLERANCES FOR FORMED SURFACES AND LOCATION OF EMBEDDED ITEMS SHALL BE AS FOLLOWS UNLESS NOTED OTHERWISE: -

1. ANGULAR ——— ± 0°15'
2. LINEAR
   LESS THAN OR EQUAL TO 2'-0 ——— ± 1/8"
   2'-0 TO 5'-0 ——— ± 1/4"
   5'-0 TO 10'-0 ——— ± 1/2"
   10'-0 TO 20'-0 ——— ± 1"
   GREATER THAN 20' ——— ± 2"
3. FOUNDATION SLAB CONCRETE THICKNESS ——— - 0" + 3"
4. SEE SPEC FOR SLAB ELEVATION TOLERANCE AND FLATNESS TOLERANCE FOR UNFORMED SURFACES.

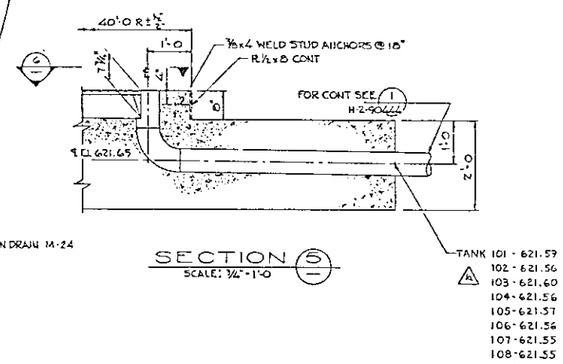

SECTION (5)

SCALE: ½" = 1'-0

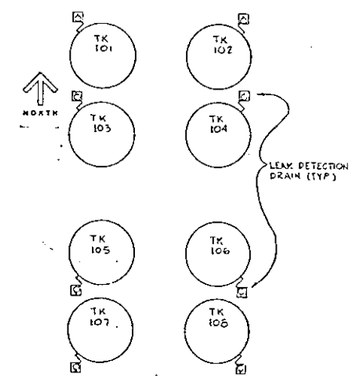

KEY PLAN

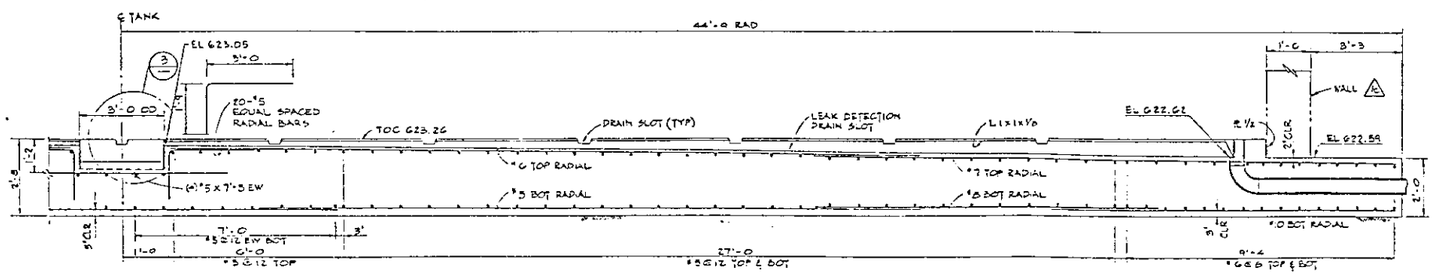

SECTION WITH LEAK DETECTION SLOT (1)

SCALE: ½" = 1'-0

RELEASED FOR CONSTRUCTION
BY G. Gilchrist DATE 7/4/83
DOE

L-2-90455	DRAWING LIST	
NUMBER	TITLE	
REFERENCES		
NEXT USED ON	H-2-90435	

M		NA		AS-BUILT FOR PROJ B-340 (d) DFC B-340-26, ZN G3 (e) SC JA 1-1520 ZN B5 (f) RC V4 45° CHAMFER, ZN G4 (g) RC ADDED ELEV, ZN C4	1
MICROFILMED	BY-DATE	REVIEWED	REV BY DATE	DESCRIPTION	REV
	APPROVAL	KEH APPROVAL			
REVISIONS					
COMMENT REVIEW					

APPROVAL BY	DATE 7/1/83	U. S. DEPARTMENT OF ENERGY Richland Operations Office	
PROJ ENGR		KAISER ENGINEERS HANFORD COMPANY	
DESIGN		STRUCTURAL CONCRETE TANK FOUNDATION PLAN AND DETAILS	
SAFETY			
QA			
GROUP MGR			
LEAD ENGR		PROJECT TITLE 241-AP TANK FARM	
DESIGN BY			
CHECKED		PROJ B-340 / NO X34002 / JOB R295A2	
DRAWN		SCALE SHOWN / BLDG 241-AP / SHEET 0900	
CLASSIFICATION NONE	AT NOT REQUIRED	DRAWING NUMBER H-2-90439 / SHEET — / 12 — / REV 1	

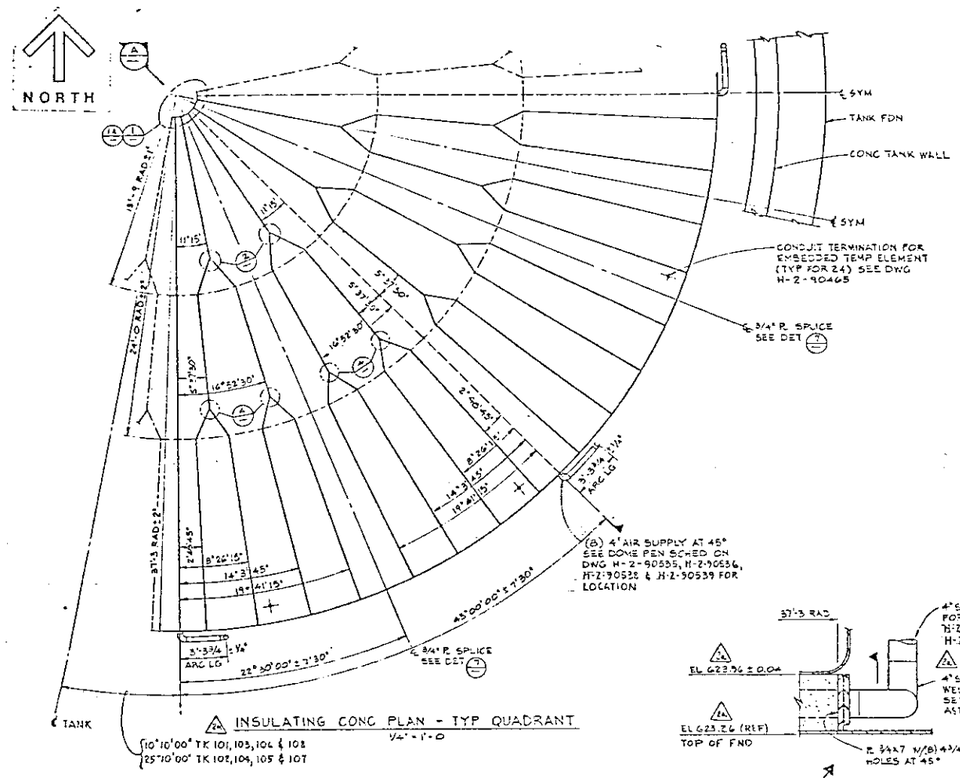

INSULATING CONC PLAN - TYP QUADRANT
1/4" = 1'-0

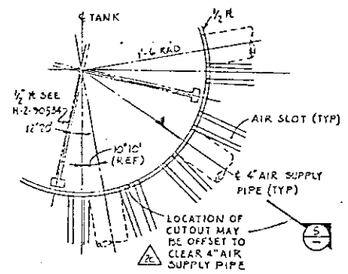

AIR DISTRIBUTOR CHAMBER
PLAN
TANK 101, 103, 106 & 108

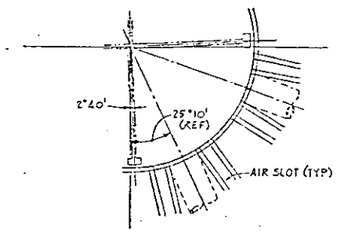

AIR DISTRIBUTOR CHAMBER
PLAN
TANK 102, 104, 105 & 107

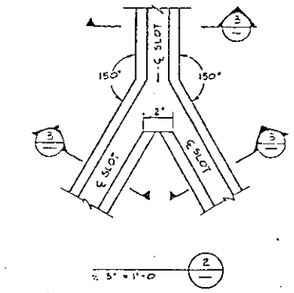

GENERAL NOTES

1. MATERIALS SHALL BE IN ACCORDANCE WITH CONSTR SPEC B-340-C4 UNLESS OTHERWISE NOTED
2. ALL WELDING OF CARBON STEEL SHALL BE IN ACCORDANCE WITH SPEC B-340-C4
3. DIMENSIONAL TOLERANCES SHALL BE AS FOLLOWS UNLESS OTHERWISE SPECIFIED: LINEAR ± 1/8" ANGULAR ± 0°15'

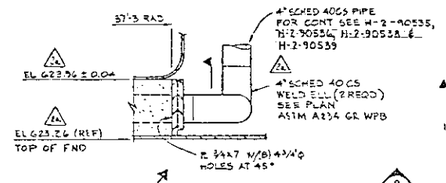

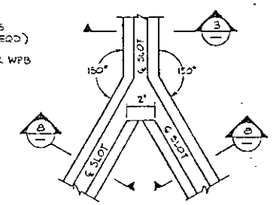

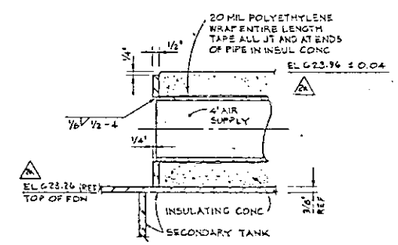

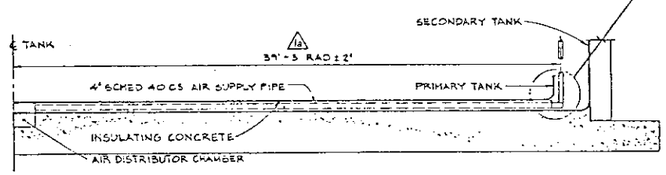

1/4" = 1'-0

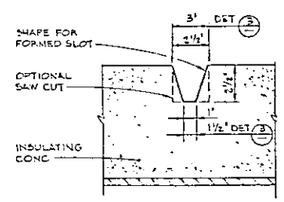

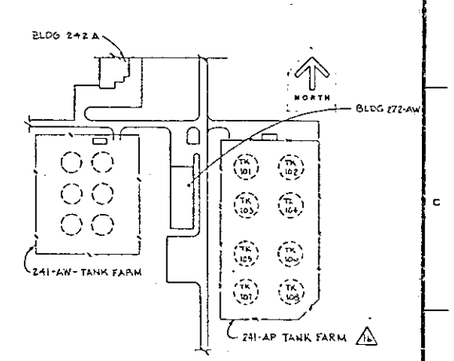

KEY PLAN
NO SCALE

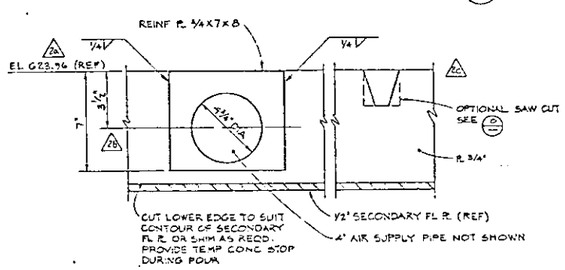

3" = 1'-0

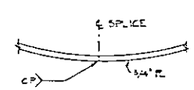

8 SPLICES AT 45° SEE PLAN FOR ORIENT
1/2" = 1'-0

3" = 1'-0

AS NOTED
NTS

RELEASED FOR CONSTRUCTION
BY ____ DATE 11/3/91
DOE

REV 1 DOE ____ DATE 7/1/92

H-2-90537	TANK RISER DETAILS					
B-340-C4	CONSTRUCTION SPEC					
H-2-90534	TANK PENETRATIONS					
H-2-90535	TANK PENETRATIONS					
H-2-90534	TANK CROSS SECTION					
H-2-90465	ELEC/INSTR - INSUL CONC PLAN					
H-2-90465	DRAWING LIST					
NUMBER	TITLE					
REFERENCES						
NEXT USED ON						

MICROFILMED

BY	DATE	BY-DATE	REV BY DATE	DESCRIPTION	REV
LKS	7/11/91	NA	DCW 10/30/91	AS-BUILT FOR PROJ B-340 1) B-340-152 & FG4, 5, 6 & 7 2) B-340-157 & FG 6 & 6A-D DFC	2
			DM 7/1/92	3) DIM WAS 4" & SIEWER 4" & 6 DFC 4) DFC B-340-282 & D-SEE 4, 812, 0519	
				1) TK FARM WAS 6 TANKS, 2N B-1 2) DIM WAS 37'-11, 2N C-10	1
PRO APPROVAL		REH APPROVAL			

REVISIONS

COMMENT REVIEW

APPROVAL BY	DATE	U. S. DEPARTMENT OF ENERGY Richland Operations Office
PROJ ENGR		BRAUN HANFORD CO
		STRUCTURAL INSULATING CONCRETE PLAN AND DETAILS
		241-AP TANK FARM
LIMITED COMPANY/DIVISION		PROJ B 340 · WO X 34002 · JOB R 295A2
DRAWN E. HAYES 1984	SCALE 3/4=1N	SCALE 1/4=1N · PROJ 241-SP · INDEX DOOC
CLASSIFICATION U	DRAWING NUMBER	SHEET · OF · REV
NONE · NOT REQD	H-2-90440	— · — · 2

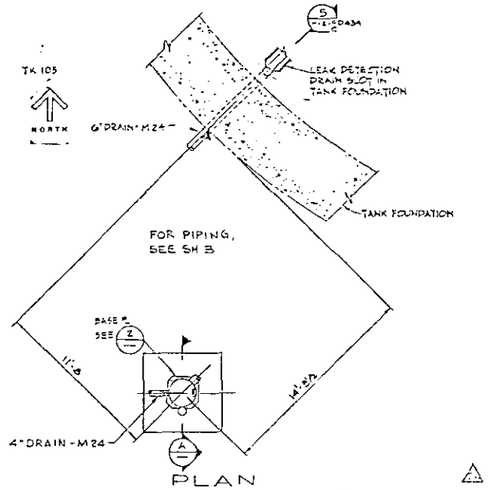

PLAN
LEAK DETECTION DRAIN - 05C
SCALE: 1/4" = 1'-0

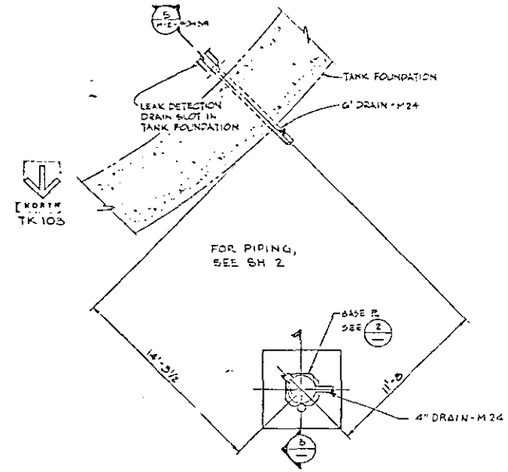

PLAN
LEAK DETECTION DRAIN - 03C
SCALE: 1/4" = 1'-0

NOTES:

1. ALL PIPING MATERIAL, FABRICATION, WELDING WELD INSPECTION, CLEANING, AND TESTING SHALL BE IN ACCORDANCE WITH SPECIFICATION B-340-C3
2. FOR GENERAL NOTES SEE DRAWING H-2-90543 AND H-2-90544.
3. 8" ENCASEMENT TO USE M5 PIPE CODE ; EXCEPT SEAMLESS PIPE IS NOT REQUIRED.
4. FOR SYMBOLS :
   - SEE DETAIL 4, SH 3
   - SEE DETAIL 3, SH 3

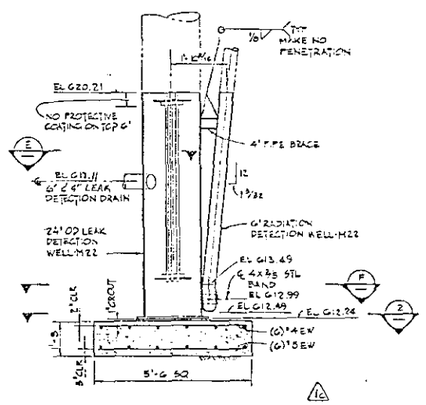

AS SHOWN - DRAIN 05C (A)
OPP HAND - DRAIN 03C (B)
SCALE: 1/2" = 1'-0

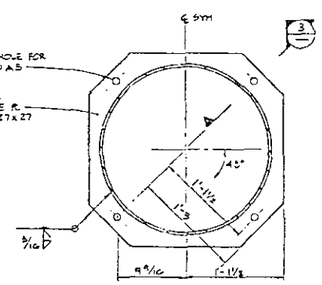

TYPICAL - DRAIN 03C & 05C (2)
SCALE: 1½" = 1'-0

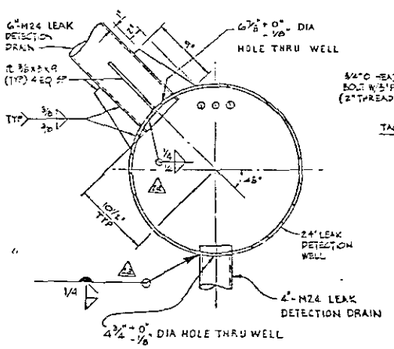

AS SHOWN - DRAIN 05C (E)
OPP HAND - DRAIN 03C
SCALE: 1½" = 1'-0"

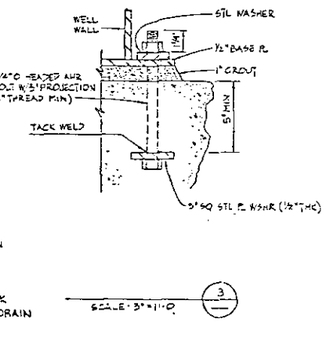

SCALE: 3" = 1'-0 (3)

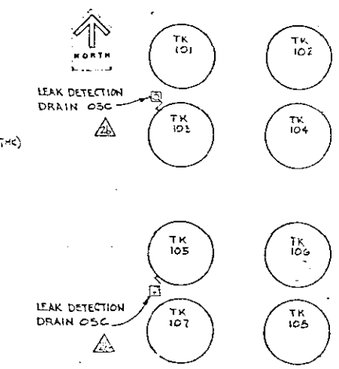

KEY PLAN
SCALE: NONE

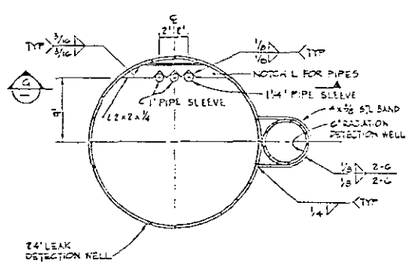

AS SHOWN - DRAIN 05C (F)
OPP HAND - DRAIN 03C
SCALE: 1½" = 1'-0

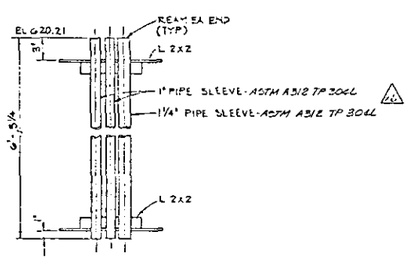

AS SHOWN - DRAIN 05C (G)
OPP HAND - DRAIN 03C
SCALE: 1½" = 1'-0

REV 1 DOE DATE 10/1/92

RELEASED FOR CONSTRUCTION
BY DOE DATE 7/15/

M1	LLJ 9/9/80	NA		UDE 3-3-80			1) AS-BUILT FOR PROJ B-340 2) DFC B-340-247 GLJ REV 2) DFC B-340-231 ZCD-6	2
M1	GJW 11/1/84						1) SEUL REV PER DFC B-340-229 2) REV PER DFC B-340-50, 2, 188 F3 3) REV PER DFC B-340-123 ZM	1

REV	BY	DATE	DESCRIPTION

REVISIONS

H-2-90445	DRAWING LIST	
NUMBER	TITLE	
REFERENCES		
INTERLINKED ON		

MICROFILMED: BY/DATE; APPROVAL BY/DATE; KEH APPROVAL; COMMENT REVIEW

U. S. DEPARTMENT OF ENERGY
Richland Operations Office
KAISER ENGINEERS HANFORD COMPANY

PIPING
LEAK DETECTION DRAIN PLANS AND SECTIONS

PROJECT TITLE: 241-AP TANK FARM

PROJ B-340	WO X-34002	JOB R295A2	
SCALE 5-DAN	BLDG 241 AP	INDEX DACS 0900	
CLASSIFICATION NONE	DRAWING NUMBER H2-90444	SHEET 1	OF 3	REV 2

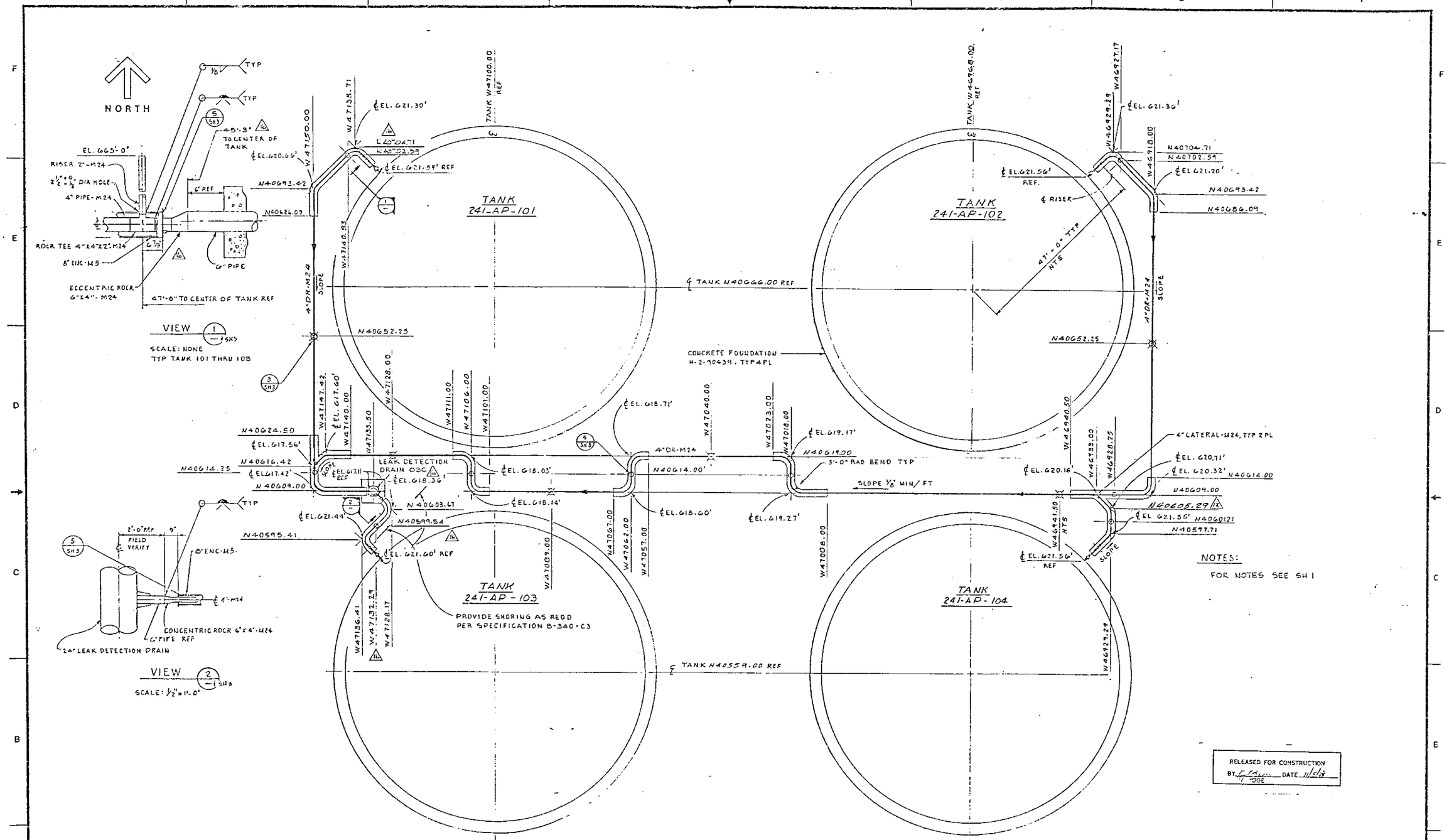

RELEASED FOR CONSTRUCTION
BY [signature] DATE 11/5/86
DOE

N-230425	DRAWING LIST
NUMBER	TITLE
REFERENCES	
NEXT USED ON H-2-90435	

N	4-9-86	NA	JDC	AS-BUILT FOR PROJ B-340		1
				b) DFC B-340-242 & C4, D4, 7, 86		
				2) DFC B-340-247 & C-2		
MICROFILMED	BY-DATE	KEH APPROVAL		DESCRIPTION		REV
	APPROVAL					
				REVISIONS		
	COMMENT REVIEW					

RHO APPROVAL BY [signature] DATE 11/5/86

U. S. DEPARTMENT OF ENERGY
Richland Operations Office
KAISER ENGINEERS HANFORD COMPANY

PIPING
LEAK DETECTION DRAIN
PLAN AND SECTIONS

PROJECT TITLE 241-AP TANK FARM

PROJ B340	NO X34002	JOB R235 32	
SCALE AS SHOWN	BLDG 241-AP	SHEET 04.02	
CLASSIFICATION NONE	HOT REQD	DRAWING NUMBER H-2-90444	SHEET 2 OF 3 REV 1

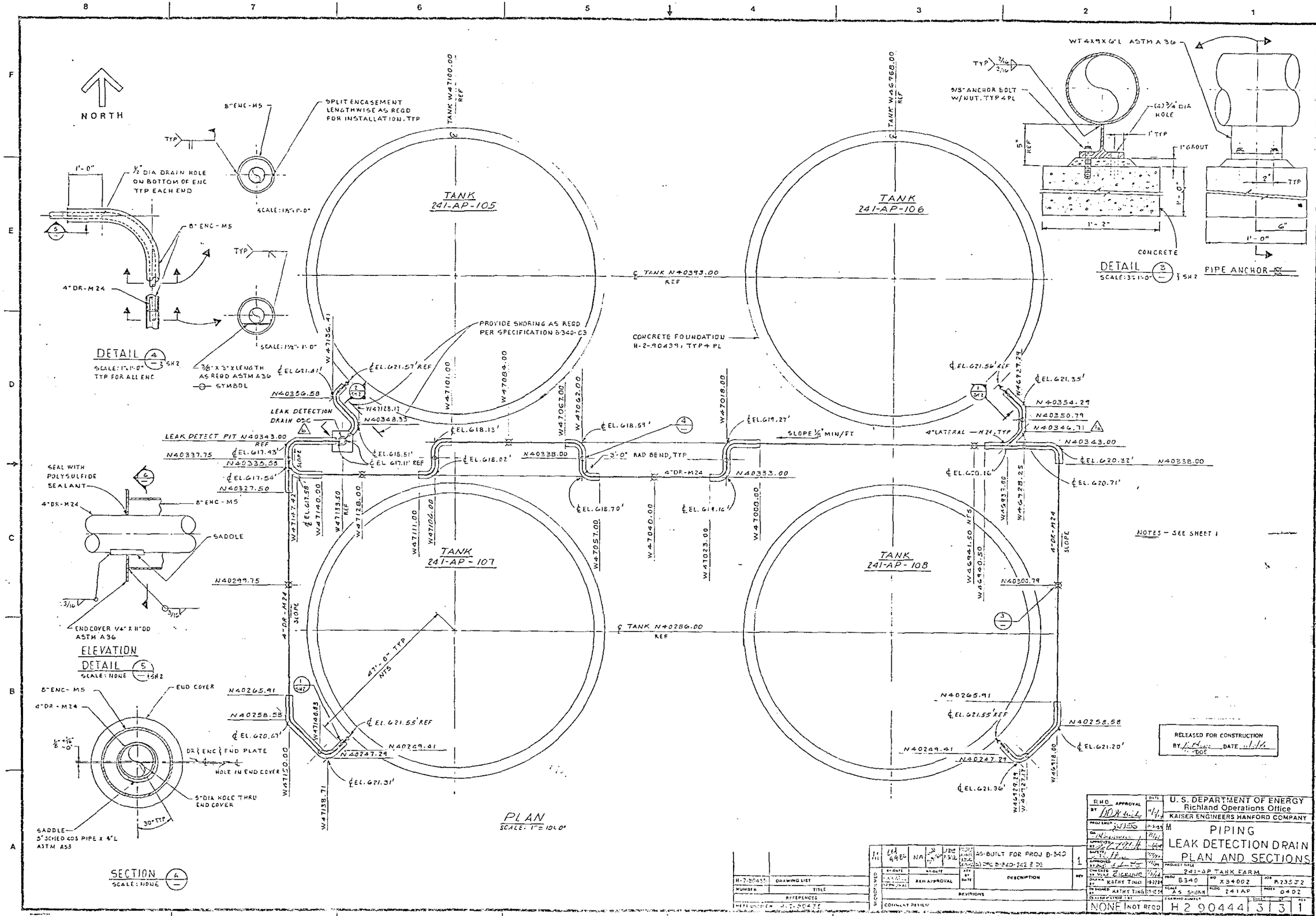
NORTH
TANK 241-AP-105
TANK 241-AP-106
TANK 241-AP-107
TANK 241-AP-108
PLAN
SCALE: 1" = 10'-0"
DETAIL 4
SCALE: 1"=1'-0"
TYP FOR ALL ENC
SPLIT ENCASEMENT LENGTHWISE AS REQD FOR INSTALLATION, TYP
1/2" DIA DRAIN HOLE ON BOTTOM OF ENC TYP EACH END
8" ENC-M5
4" DR-M24
3/8" X 3" X LENGTH AS REQD ASTM A36
SYMBOL
PROVIDE SHORING AS REQD PER SPECIFICATION B-340-C3
CONCRETE FOUNDATION H-2-90439, TYP 4 PL
LEAK DETECTION DRAIN OSC
LEAK DETECT PIT N40343.00 REF
SLOPE 1/8" MIN/FT
3'-0" RAD BEND, TYP
4" LATERAL — M24, TYP
SEAL WITH POLYSULFIDE SEALANT
SADDLE
END COVER 1/4" X 11" OD ASTM A36
ELEVATION
DETAIL 5
SCALE: NONE
END COVER
DR & ENC & END PLATE
HOLE IN END COVER
5" DIA HOLE THRU END COVER
SADDLE 5" SCHED 40S PIPE X 4" L ASTM A53
SECTION 6
SCALE: NONE
WT 4X9X6" L ASTM A36
5/8" ANCHOR BOLT W/NUT, TYP 4 PL
(4) 3/4" DIA HOLE
1" GROUT
CONCRETE
DETAIL 3
SCALE: 3"=1'-0"
PIPE ANCHOR
NOTES - SEE SHEET 1
RELEASED FOR CONSTRUCTION
BY DOE DATE
U. S. DEPARTMENT OF ENERGY
Richland Operations Office
KAISER ENGINEERS HANFORD COMPANY
PIPING
LEAK DETECTION DRAIN
PLAN AND SECTIONS
241-AP TANK FARM
B340
X34002
R235J2
AS SHOWN
241AP
0402
NONE
NOT REQD
H 2 90444
3
3
1
AS-BUILT FOR PROJ B-340
DESCRIPTION
REVISIONS
DRAWING LIST
REFERENCES
COMMENT REVIEW

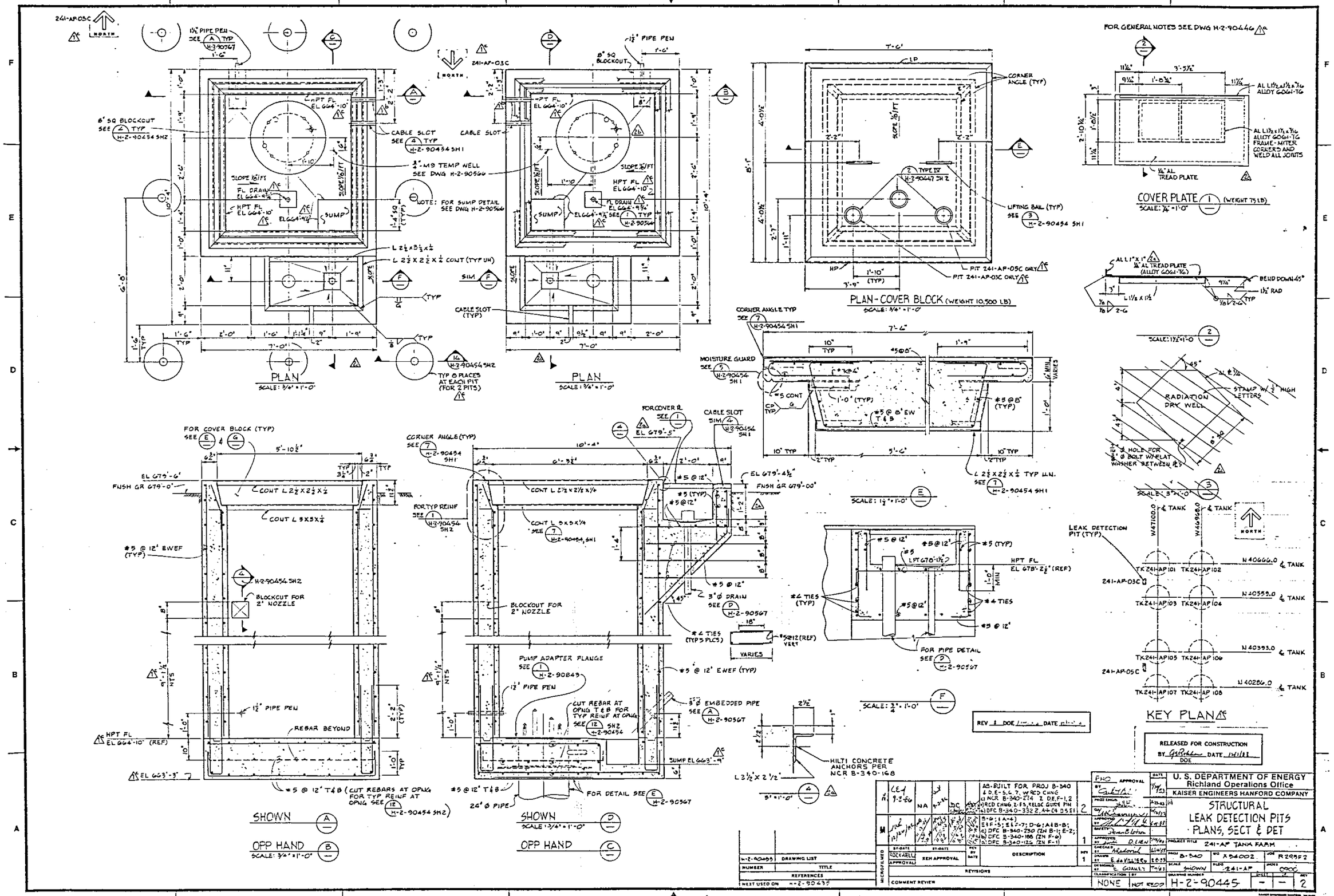
FOR GENERAL NOTES SEE DWG H-2-90446
PLAN
SCALE: 3/4" = 1'-0"
PLAN
SCALE: 3/4" = 1'-0"
PLAN - COVER BLOCK (WEIGHT 10,500 LB)
SCALE: 3/4" = 1'-0"
COVER PLATE (WEIGHT 75 LB)
SCALE: 3/4" = 1'-0"
SCALE: 1 1/2" = 1'-0"
SCALE: 1 1/2" = 1'-0"
SCALE: 3/4" = 1'-0"
SCALE: 3/4" = 1'-0"
SCALE: 3/4" = 1'-0"
SCALE: 3/4" = 1'-0"
SHOWN
OPP HAND
SCALE: 3/4" = 1'-0"
SHOWN
SCALE: 3/4" = 1'-0"
OPP HAND
KEY PLAN
RADIATION DRY WELL
STAMP W/ 1/2" HIGH LETTERS
LEAK DETECTION PIT (TYP)
NORTH
RELEASED FOR CONSTRUCTION
U. S. DEPARTMENT OF ENERGY
Richland Operations Office
KAISER ENGINEERS HANFORD COMPANY
STRUCTURAL
LEAK DETECTION PITS
PLANS, SECT & DET
241-AP TANK FARM
H-2-90445

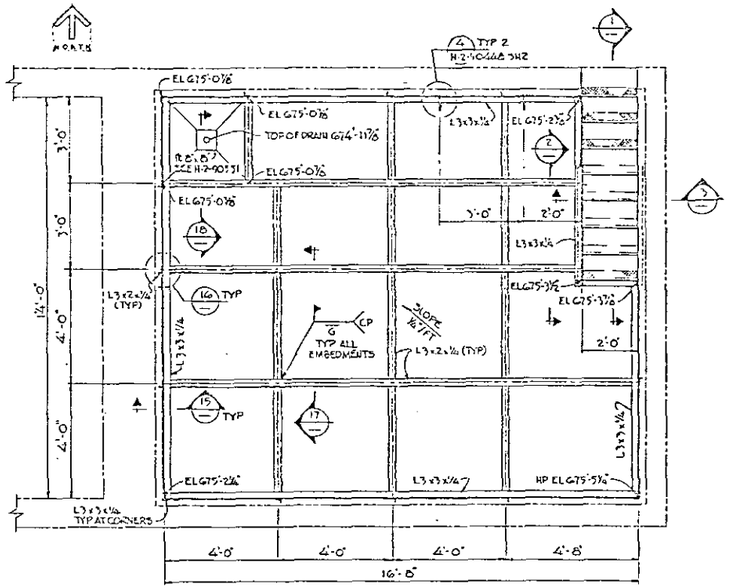

PLAN (D)
SCALE: 1/2"=1'-0" (H-2-90446 SH1)

NOTE - ELEVATIONS SHOWN ARE TO TOP OF 10 GA STAINLESS STEEL FLOOR LINER
ALL ANGLE EMBEDMENTS ARE STAINLESS STEEL

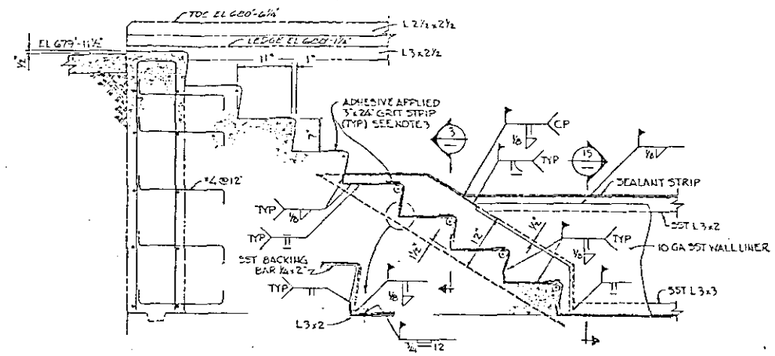

SECTION (1)
SCALE: 1"=1'-0"

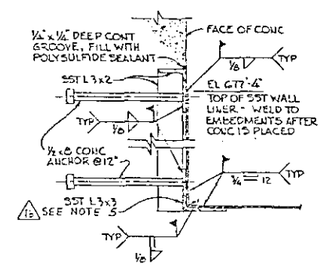

DETAIL (15)
SCALE: 3"=1'-0"

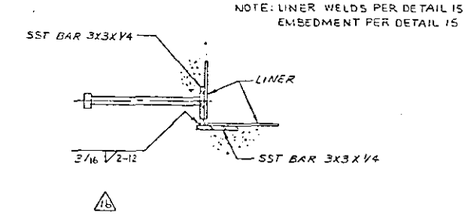

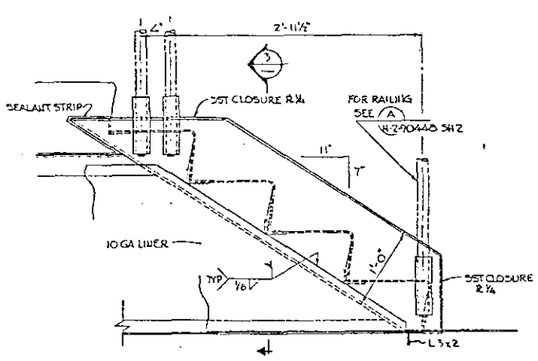

SECTION (2)
SCALE: 1 1/2"=1'-0"

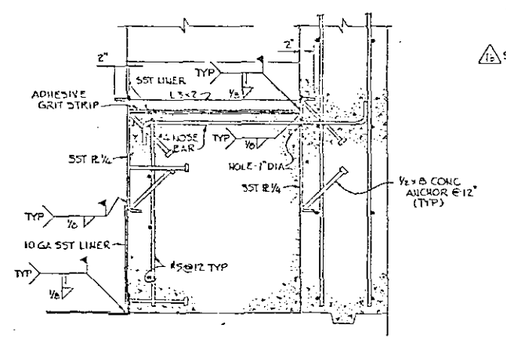

SECTION (3)
SCALE: 1 1/2"=1'-0"

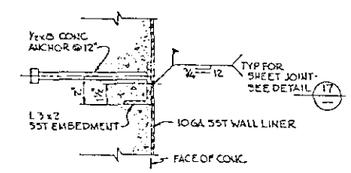

DETAIL (16)
SCALE: 3"=1'-0"

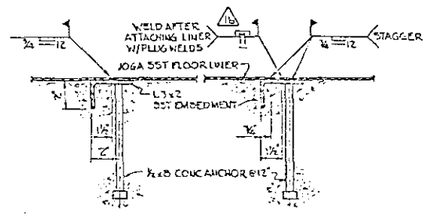

DETAIL (17)
SCALE: 3"=1'-0"

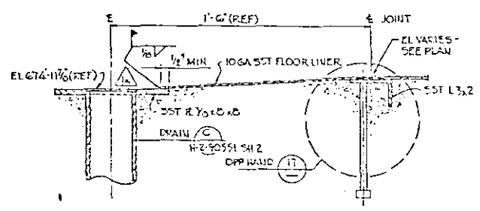

DETAIL (18)
SCALE: 3"=1'-0"

NOTES

1. FOR GENERAL NOTES SEE H-2-90446.
2. STAINLESS STEEL LINER
   a) THE STAINLESS STEEL LINER SHALL BE WELDED TO THE EMBEDMENTS AFTER CONCRETE IS PLACED.
   b) ATTACH LINER WITH PLUG WELDS PRIOR TO PLACEMENT OF CONTINUOUS FULL PENETRATION WELDS.
   c) ATTACH THE WALL LINER TO EMBEDMENTS PRIOR TO ATTACHING THE FLOOR LINER. PROTECT THE STAINLESS STEEL FLOOR LINER FROM DAMAGE WITH THE PLACEMENT OF SHEETS OF 1/2" PLYWOOD OVER SURFACE FOR THE DURATION OF CONSTRUCTION.
   d) ANY SHEET JOINTS WITHOUT BACKING ANGLES SHALL BE SHOP WELDED WITH FULL PENETRATION WELDS.
   e) ALL EMBEDDED ANGLES SHALL BE CONNECTED TOGETHER WITH CONTINUOUS WELDS TO PROVIDE A RIGID FRAME.
3. GRIT STRIPS ARE AN ADHESIVE APPLIED NON-SLIP SURFACING APPLIED TO STAIR TREADS; "SAFE-WALK" BY AMERICAN MASON SAFETY TREAD CO OR "FLEX-TRED" BY WOOSTER PRODUCTS INC. INSTALL GRIT STRIPS TO STAIR TREADS IN ACCORDANCE WITH MANUFACTURERS INSTRUCTIONS.
4. FOR SPECIAL PROTECTIVE PAINTING SEE GENERAL NOTE 7 ON H-2-90446.
5. (15) MACHINE INTERIOR CORNER OF EMBEDDED ANGLES SQUARE. TO ALLOW INSTALLATION AND WELDING OF LINER PLATE TO EMBEDMENTS.

(15) ALTERNATE: FABRICATE EMBEDDED CORNER ANGLES AS SHOWN BELOW. TOLERANCE SHALL BE EQUAL TO STANDARD MILL PRACTICE FOR ROLLED ANGLES.

RELEASED FOR CONSTRUCTION
BY [illegible] DATE [illegible]
DOE

A1	9-2-86	NA			AS-BUILT FOR PROJ B-340 F/C B-330-2592, C2.4, D(2)1.2, F/C B-330-2812 E		1
REVISIONS							REV
		KEH APPROVAL			DESCRIPTION		REV
				REVISIONS			
		COMMENT REVIEW				NOT REQUIRED	

H-2-90449	DRAWING LIST	
NUMBER	TITLE	
	REFERENCES	
INTERLISTED ON	H-2-90445	

U. S. DEPARTMENT OF ENERGY
Richland Operations Office
KAISER ENGINEERS HANFORD COMPANY

STRUCTURAL
241-AP VALVE PIT
LINER DETAILS

PROJECT TITLE: 241-AP TANK FARM

PROJ B-340	NO X34002	A/E R295 FZ	
SCALE 10" =	REF 241-AP	SHEET 0900	
DRAWING NUMBER H-2-90448	SHEET 4	REV 4	1

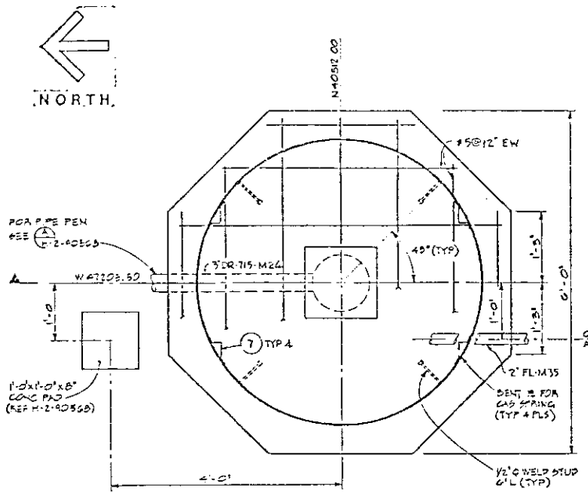

PLAN
SCALE: 1" = 1'-0"

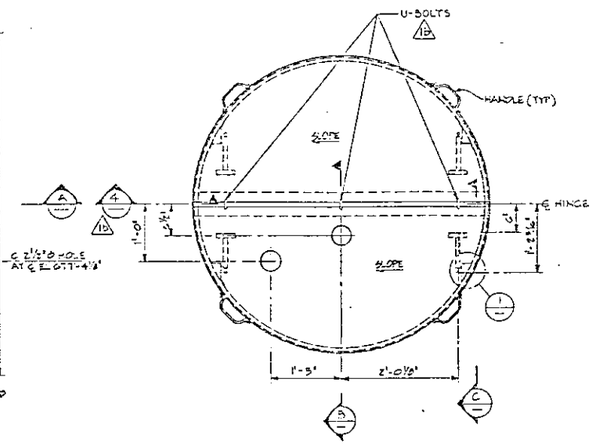

PLAN - COVER
SCALE: 1" = 1'-0"

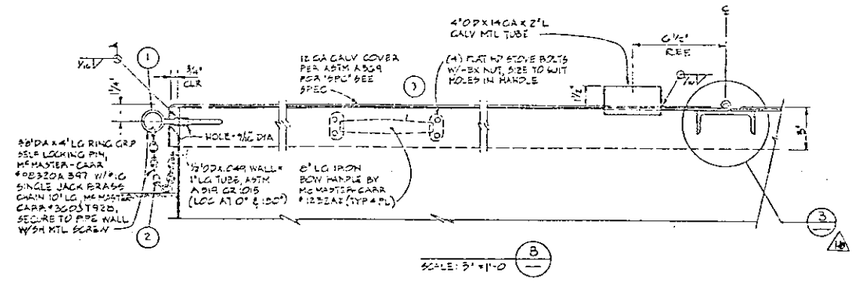

SCALE: 3" = 1'-0"

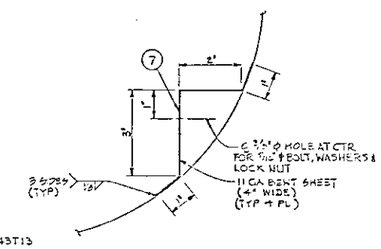

1/2 SCALE

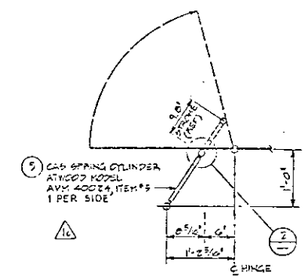

SCALE: 1" = 1'-0"

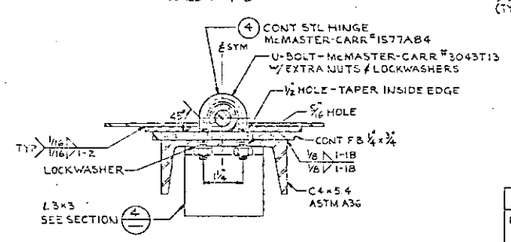

DETAIL 3
SCALE: NONE

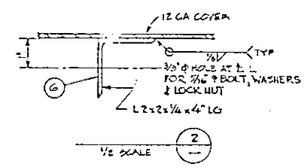

1/2 SCALE

PARTS LIST		
PART No	QTY	DESCRIPTION
1	2	RING GRIP SELF-LOCKING 9"W-7/8" Ø x 4" LONG
2	2	BRASS JACK CHAIN - 10" LONG
3	4	6' LONG IRON BOW HANDLE
4	1	CONT STEEL HINGE - 5'-2 1/2" LONG
5	2	GAS SPRING CYLINDER
6	4	MOUNTING BRACKET (LID TYPE)
7	4	MOUNTING BRACKET (WALL TYPE)

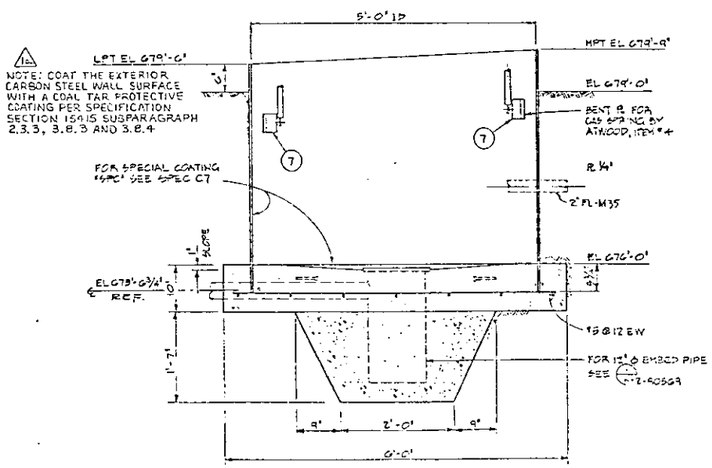

SCALE: 1" = 1'-0"

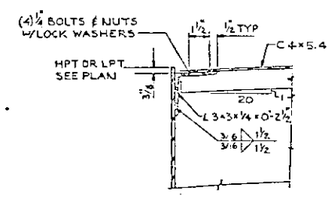

SECTION 4
SCALE: 3" = 1'-0"

FOR GENERAL NOTES SEE DRAWING No. H-2-50146

RELEASED FOR CONSTRUCTION
BY [signature] DATE 11/1/93
DOE

11	LEJ 9-86	NA	11/3/86	JJC	AS-BUILT FOR FROJ B-340 1 C-3 WAS 4 2 C-3 CHNG 2 D-2 ADDED NOTE 3 GFC H-340-50117 & GFC H-340-50146 4 D-7C H-340-34527 B7	1

REVISIONS	BY-DATE	BY-DATE	REV BY-DATE	DESCRIPTION	REV
	DRAWN	FEH APPROVAL			
	APPROVAL				
REVISION IS					
COMMENT REVIEW					

DRAWING LIST	
NUMBER	TITLE
REFERENCES	
NEXT USED ON H-2-90449	

U. S. DEPARTMENT OF ENERGY
Richland Operations Office
KAISER ENGINEERS HANFORD COMPANY

STRUCTURAL
FLUSH PIT
PLAN, SECT & DET

241-AP TANK FARM

PROJ B-340	WO X 54002	DWG R 29502	
SCALE NONE	ACCT 241-AP	CODE 0900	
CONTRACT NUMBER NONE	H-2-90449	SHEET 1	REV 1

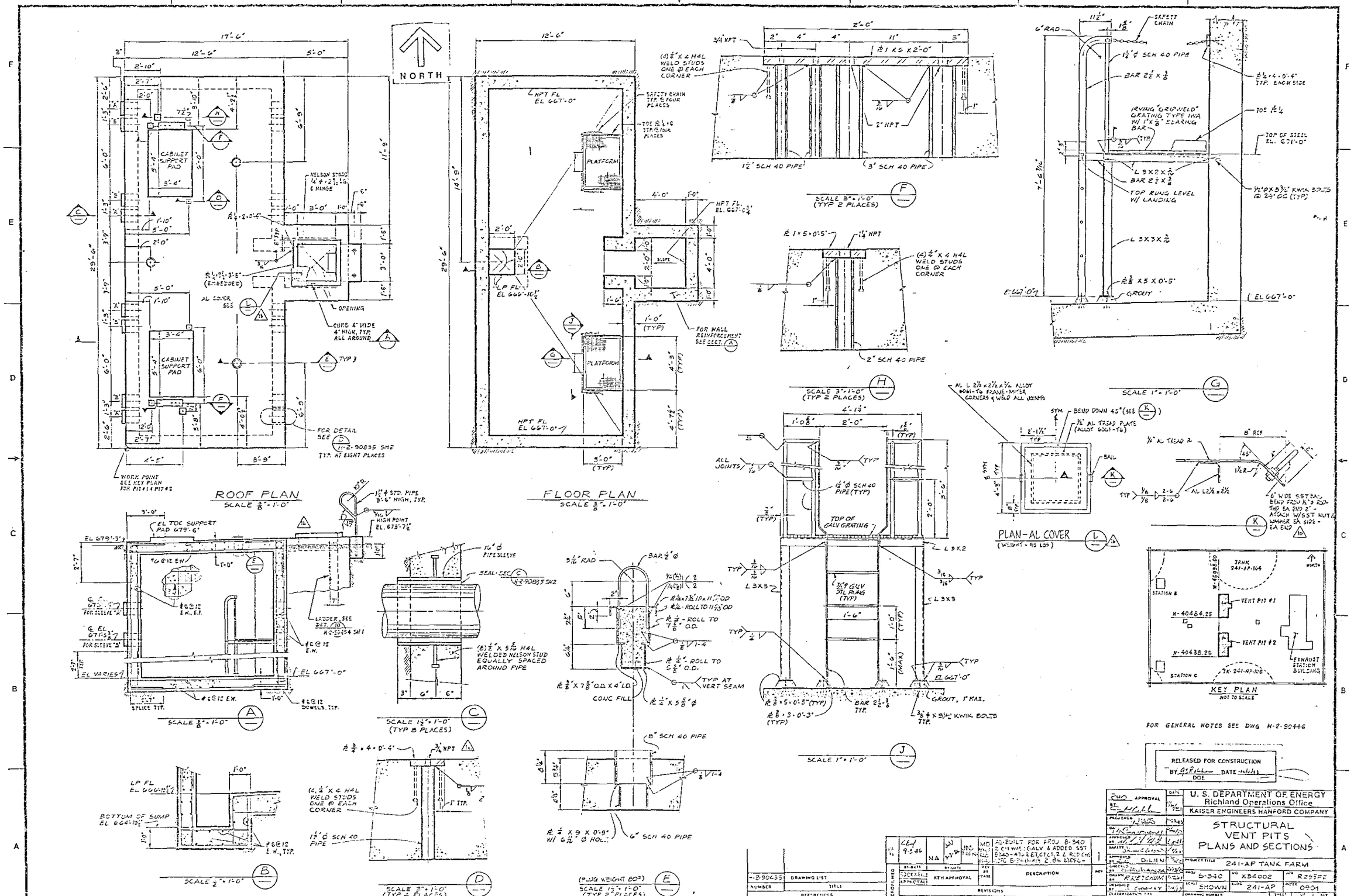
NORTH
ROOF PLAN
SCALE 3/8" = 1'-0"
FLOOR PLAN
SCALE 3/8" = 1'-0"
SCALE 3/8" = 1'-0"
SCALE 1/2" = 1'-0"
SCALE 1 1/2" = 1'-0"
(TYP 8 PLACES)
SCALE 3" = 1'-0"
(TYP 4 PLACES)
SCALE 3" = 1'-0"
(TYP 2 PLACES)
SCALE 3" = 1'-0"
(TYP 2 PLACES)
SCALE 1" = 1'-0"
SCALE 1" = 1'-0"
PLAN-AL COVER
KEY PLAN
NOT TO SCALE
FOR GENERAL NOTES SEE DWG H-2-90446
RELEASED FOR CONSTRUCTION
U. S. DEPARTMENT OF ENERGY
Richland Operations Office
KAISER ENGINEERS HANFORD COMPANY
STRUCTURAL
VENT PITS
PLANS AND SECTIONS
241-AP TANK FARM
H-2-90450

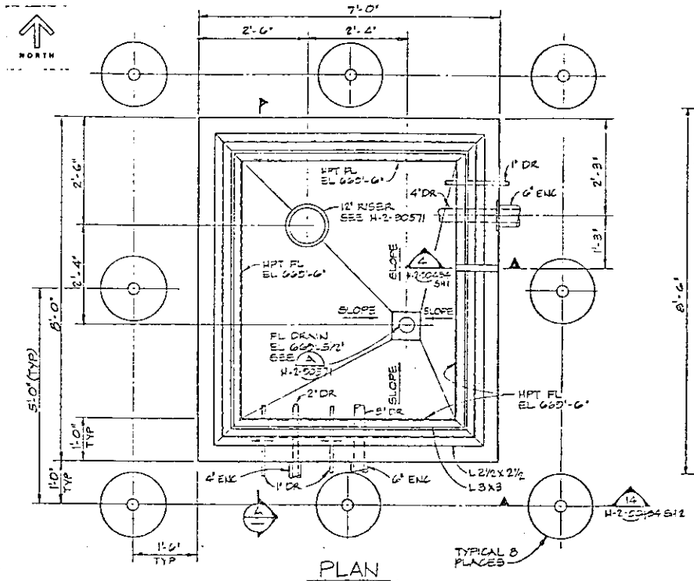

PLAN
SCALE: 3/8" = 1'-0"

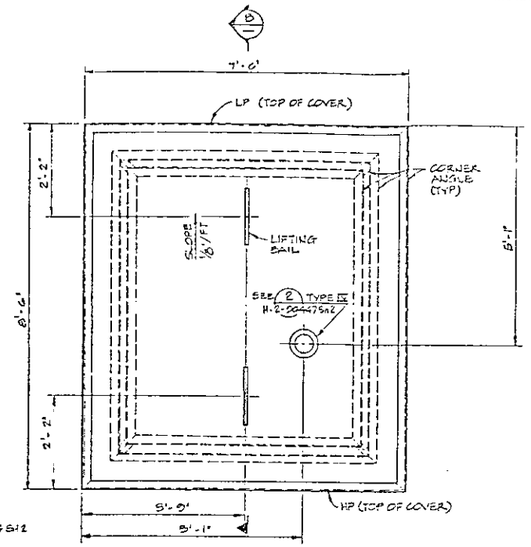

PLAN - COVER BLOCK (WEIGHT 11,700 LBS)
3/4" = 1'-0"

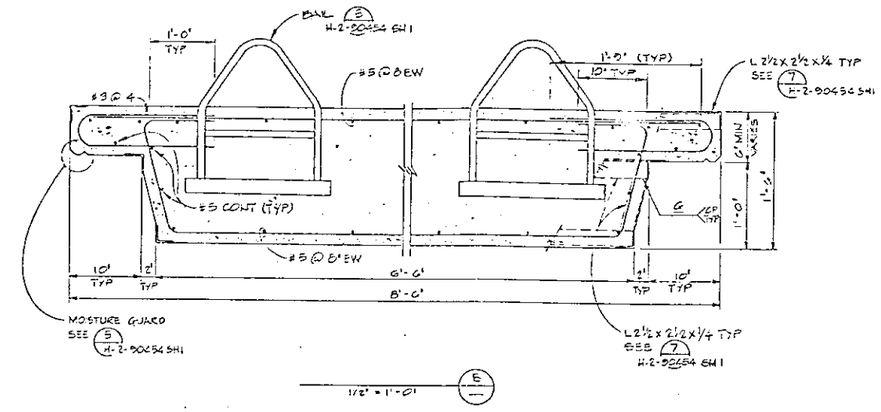

1/2" = 1'-0"

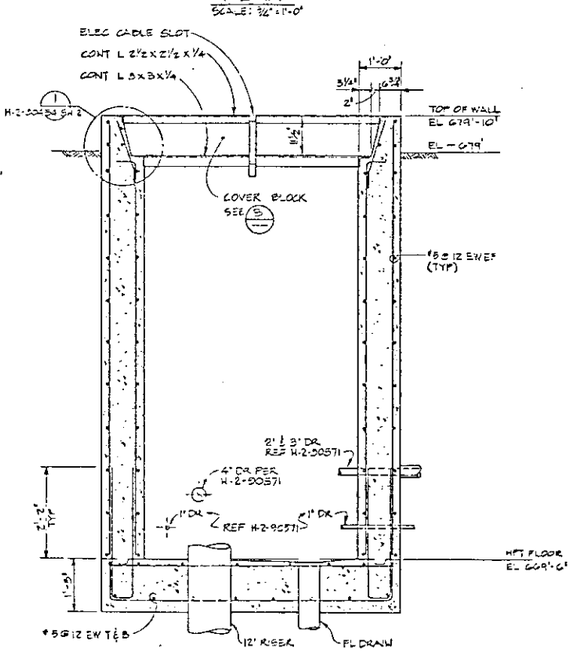

1/2" = 1'-0"

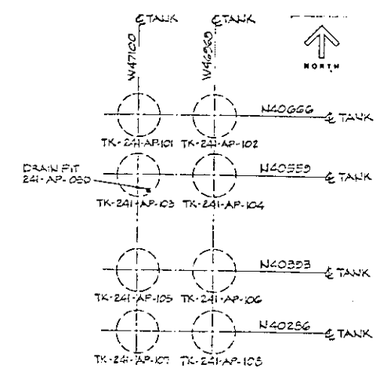

KEY PLAN

NOTES

1 FOR GENERAL NOTES SEE DWG H-2-90446.

RELEASED FOR CONSTRUCTION
BY GSR DATE 11/1/89
DOE

RCO APPROVAL	DATE	U. S. DEPARTMENT OF ENERGY Richland Operations Office	
		KAISER ENGINEERS HANFORD COMPANY	
PROJ ENGR		STRUCTURAL DRAIN PIT PLAN, SECT & DET	
DR			
APPROVE			
SAFETY			
APPROVED		PROJECT TITLE: 241-AP TANK FARM	
CHECKED		PROJ B-340	WO X34000	FOR R 295 F2
DRAWN		SCALE 1/2-1/4	BLDG 241-AP	PROJ 0400
REVIEWED				
CONTROL		DRAWING NUMBER H-2-90451	SHEET 1	REV 1

1				AS-BUILT FOR PROJ B-340	1
REV-DATE		REV-DATE	REV BY DATE	DESCRIPTION	REV
REVISIONS					
COMMENT REVIEW					

H-2-50446	DRAWING LIST
NUMBER	TITLE
REFERENCES	

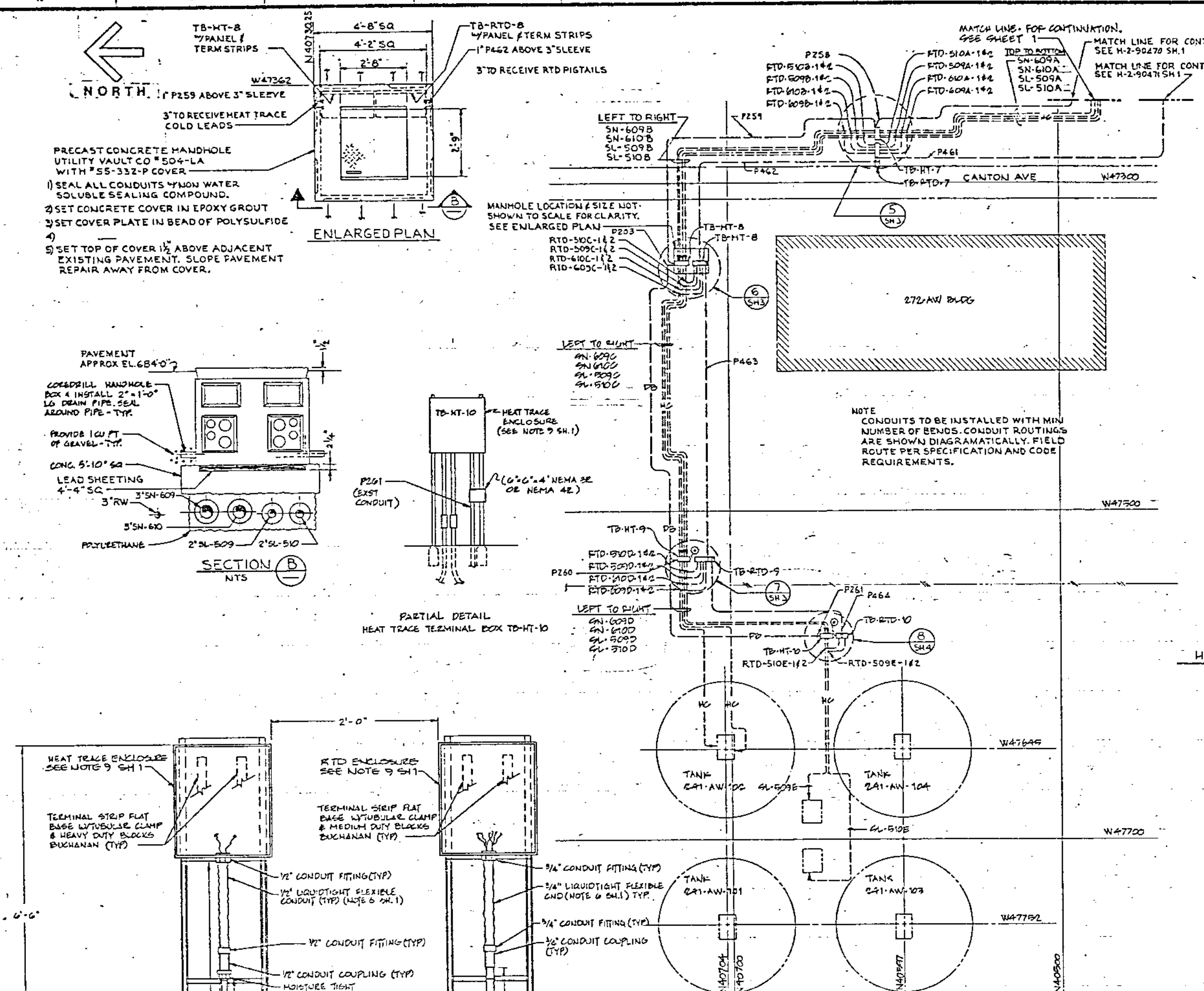

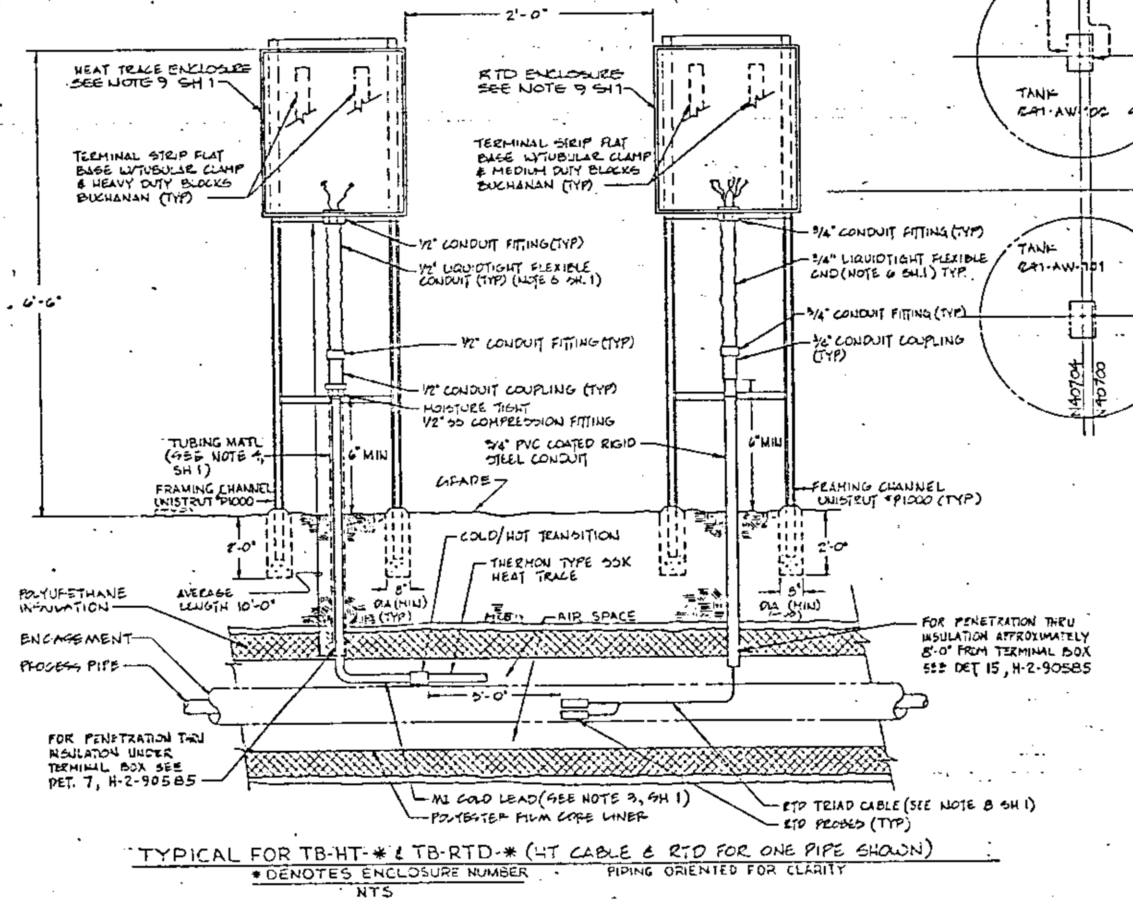

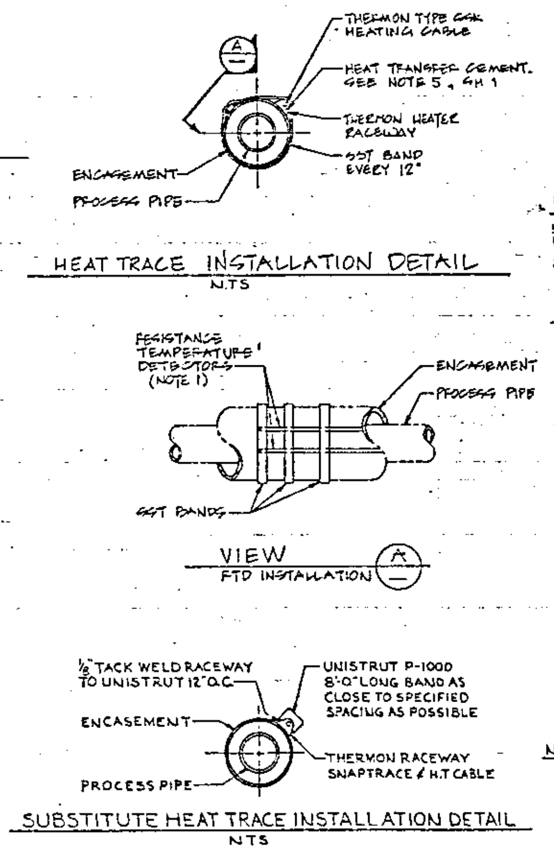

HEAT TRACE CABLE SCHEDULE (CONT. FROM 2 C2)

PROCESS PIPE NO.	LENGTH FEET	HTR CABLE THERMON TYPE SSK	(R) OHMS PER FT.	V VOLTS	I AMPS	P WATTS	WATTS PER FT
SN-609A	194	2850	0.148	230	8.01	1842	9.50
SN-609B	200	2850	0.148	230	7.77	1787	8.94
SN-609C	200	2850	0.148	230	7.77	1787	8.94
SN-609D	135	2840	0.245	230	6.95	1599	11.85
SN-610A	196	2850	0.148	230	7.93	1824	9.30
SN-610B	198	2850	0.148	230	7.85	1805	9.12
SN-610C	200	2850	0.148	230	7.77	1787	8.94
SN-610D	152	2840	0.245	230	6.18	1421	9.34
SL-509A	198	2850	0.148	230	7.85	1805	9.12
SL-509B	196	2850	0.148	230	7.93	1824	9.30
SL-509C	200	2850	0.148	230	7.77	1787	8.94
SL-509D	131	2840	0.245	230	7.17	1648	12.58
SL-509E	110	2840	0.245	230	8.53	1963	17.84
SL-510A	200	2850	0.148	230	7.77	1787	8.94
SL-510B	194	2850	0.148	230	8.01	1842	9.50
SL-510C	200	2850	0.148	230	7.77	1787	8.94
SL-510D	131	2840	0.245	230	7.17	1648	12.58
SL-510E	191	2850	0.148	230	8.14	1871	9.80
			TOTAL PWR REQD 109.483 KW				

HEAT TRACE CABLE SCHEDULE

PROCESS PIPE NO.	LENGTH FEET	HTR CABLE THERMON TYPE SSK	(R) OHMS PER FT.	V VOLTS	I AMPS	P WATTS	WATTS PER FT
SN-611A	110	2840	0.245	230	8.53	1963	17.84
SN-611B	115	2840	0.245	230	8.17	1878	16.33
SN-611C	165	2850	0.148	230	9.42	2166	13.13
SN-612A	110	2840	0.245	230	8.53	1963	17.84
SN-612B	133	2840	0.245	230	7.06	1624	12.21
SN-612C	163	2850	0.148	230	9.53	2192	13.45
SN-613A	115	2840	0.245	230	8.17	1878	16.33
SN-613B	171	2850	0.148	230	9.09	2090	12.22
SN-614A	137	2840	0.245	230	6.85	1576	11.50
SN-614B	150	2850	0.148	230	10.36	2384	15.89
SN-615A	115	2840	0.245	230	8.17	1878	16.33
SN-615B	169	2850	0.148	230	9.19	2114	12.51
SN-616A	137	2840	0.245	230	6.85	1576	11.50
SN-616B	185	2850	0.148	230	8.40	1931	10.44
SN-617A	110	2840	0.245	230	8.53	1963	17.84
SN-617B	115	2840	0.245	230	8.17	1878	16.33
SN-617C	173	2850	0.148	230	8.98	2066	11.94
SN-618A	110	2840	0.245	230	8.53	1963	17.84
SN-618B	133	2840	0.245	230	7.06	1624	12.21
SN-618C	179	2850	0.148	230	8.69	1998	11.16
SL-511A	107	2840	0.245	230	8.77	2018	18.86
SL-511B	114	2840	0.245	230	8.23	1894	16.61
SL-511C	180	2850	0.148	230	8.63	1985	11.03
SL-512A	107	2840	0.245	230	8.77	2018	18.86
SL-512B	128	2840	0.245	230	7.33	1687	13.18
SL-512C	185	2850	0.148	230	8.40	1931	10.44
SL-513A	110	2840	0.245	230	8.53	1963	17.84
SL-513B	176	2850	0.148	230	8.83	2031	11.54
SL-514A	128	2840	0.245	230	7.33	1687	13.18
SL-514B	189	2850	0.148	230	8.23	1892	10.01
SL-515A	110	2840	0.245	230	8.53	1962	17.84
SL-515B	176	2850	0.148	230	8.83	2031	11.54
SL-516A	128	2840	0.245	230	7.33	1687	13.13
SL-516B	160	2850	0.148	230	9.71	2234	13.96
SL-517A	107	2840	0.245	230	8.77	2018	18.86
SL-517B	114	2840	0.245	230	8.23	1894	16.61
SL-517C	169	2850	0.148	230	9.19	2114	12.51
SL-518A	107	2840	0.245	230	8.77	2018	18.86
SL-518B	128	2840	0.245	230	7.33	1687	13.18
SL-518C	166	2850	0.148	230	9.36	2153	12.97

CONTINUED AT ZONE G4

HEAT TRACE TERMINAL BOX LOCATION SCHEDULE

TERMINAL BOX NO	COORDINATES @ ℄ NORTH	WEST
TB-HT-1	40606.00	47052.00
TB-HT-2	40606.00	47016.00
TB-HT-3	40508.00	47047.00
TB-HT-4	40444.00	47047.00
TB-HT-5	40346.00	47052.00
TB-HT-6	40346.00	47016.00
TB-HT-7	40615.00	47271.00
TB-HT-8	40728.00	47285.00
TB-HT-9	40728.00	47534.00
TB-HT-10	40642.00	47580.50

NOTES:
1. RTD'S ARE TO BE INSTALLED MINIMUM OF 5FT. FROM COLD/HOT TRANSITION.
2. FOR GENERAL NOTES & LEGEND SEE SH.1
3. INSTALL A 20 POINT TERMINAL STRIP IN TB-HT-7 PER CONSTRUCTION SPEC B-340-C9, 16100, FOR TERMINATION OF WIRE RUN 450A, 450B, 450C, 450D, & 450E.

NUMBER	TITLE
H-2-90435	DRAWING LIST

REFERENCES

NEXT USED ON H-2-90435

REVISIONS

REV	DESCRIPTION
2	REVISION PER ED 41674
1	AS-BUILT FOR PROJ B-340. 3) DEV REV TO CONDUITS 2,5,7,9; 2 B-1,2,3 ADD NOTE. JIRED CHNG MOVED FENCE FROM ...

RELEASED FOR CONSTRUCTION

IMPACT LEVEL 3

U. S. DEPARTMENT OF ENERGY
Richland Operations Office
KAISER ENGINEERS HANFORD COMPANY

ELECTRICAL
HEAT TRACE DISTRIBUTION
PLAN & DETAILS

241-AP TANK FARM

B-340 | SCALE NONE | H-2-90472 | SHEET 2 OF 4 | REV 2

WIRE RUN NO.	NO. OF WIRES	SIZE OF WIRE	TYPE OF WIRE	FROM	VIA	TO	WIRE NUMBERS
1	[illegible]	[illegible]	2	SUBSTATION SWGR	P3,TRENCH	MCC-241-AP-271	A,B,C,N,GND
2	[illegible]	[illegible]	2	SUBSTATION SWGR	P4,TRENCH	MCC-241-AP-271	A,B,C,N,GND
3	[illegible]	[illegible]	2	SUBSTATION SWGR	P5,TRENCH	MCC-241-AP-271	A,B,C,N,GND
4	[illegible]	[illegible]	2	SUBSTATION SWGR	P6,TRENCH	MCC-241-AP-271	A,B,C,N,GND
5	4	10	2	MCC-241-AP-271	TRENCH, P601	RECTIFIER R1	R1-L1,-L2,-L3,-G
6	4	10	2	MCC-241-AP-271	TRENCH, P602	RECTIFIER R2	R2-L1,-L2,-L3,-G
7	[illegible]	[illegible]	2	MCC-241-AP-271	TRENCH,P7	AIR COMPRESSOR BLDG WIREWAY	ACBWW-L1,-L2,-L3;GND
8	3	12	2	AIR COMPRESSOR BLDG WIREWAY	P214	AIR COMP CONTROL FEEDER BRKR	ACC-L1,-L2,GND
9	[illegible]	[illegible]	2	AIR COMPRESSOR BLDG WIREWAY	P244	AIR COMPRESSOR AC-1 FOR BRKR	AC-1-L1,-L2,-L3;GND
10	[illegible]	[illegible]	2	AIR COMPRESSOR BLDG WIREWAY	P245	AIR COMPRESSOR AC-2 FOR BRKR	AC-2-L1,-L2,-L3;GND
11	[illegible]	[illegible]	2	AIR COMPRESSOR AC-1 FOR BRKR	P247,ACBWW,P248	AIR COMPRESSOR AC-1 CONTROLLER	AC-1-T1,-T2,-T3;GND
12	[illegible]	[illegible]	2	AIR COMPRESSOR AC-2 FOR BRKR	P249,ACBWW,P250	AIR COMPRESSOR AC-2 CONTROLLER	AC-2-T1,-T2,-T3;GND
13	3	12	2	AIR COMPRESSOR BLDG WIREWAY	P246	MINI POWER CENTER MPC-6	ACBMPC-L1,-L2;GND
14	4	12	2	AIR COMPRESSOR BLDG WIREWAY	P266	AIR DRYER FEEDER BRKR	AD-L1,-L2,-L3,GND
15	4	12	2	AIR DRYER FOR BRKR	P269,WW,P272	AIR DRYER CONTROLLER	AD-H1,-H2,-H3,GND
16	[illegible]	[illegible]	2	MCC-241-AP-271	P11,H-1,P31,H-2,P41,H-3,P105,H-11,P111	MCC-241-AP	MCC-241-AP-A,-B,-C,-A,-B,-C,GND
17	[illegible]	[illegible]	2	MCC-241-AP-271	TRENCH,P17,H-1,P118	SUPERNATANT PUMP P-101 RECEPTACLE	101-T1,-T2,-T3;GND
18	[illegible]	[illegible]	2	MCC-241-AP-271	TRENCH,P17,H-1,P130,H-7,P141	SUPERNATANT PUMP P-102 RECEPTACLE	102-T1,-T2,-T3;GND
19	[illegible]	[illegible]	2	MCC-241-AP-271	TRENCH,P18,H-1,P28,H-2,P154	SUPERNATANT PUMP P-103 RECEPTACLE	103-T1,-T2,-T3;GND
20	[illegible]	[illegible]	2	MCC-241-AP-271	TRENCH,P18,H-1,P28,H-2,P166,H-9,P178	SUPERNATANT PUMP P-104 RECEPTACLE	104-T1,-T2,-T3;GND
21	[illegible]	[illegible]	2	MCC-241-AP-271	TRENCH,P19,H-1,P29,H-2,P43,H-3,P49,H-4,P9,H-2,P193	SUPERNATANT PUMP P-105 RECEPTACLE	105-T1,-T2,-T3;GND
22	[illegible]	[illegible]	2	MCC-241-AP-271	TRENCH,P19,H-1,P29,H-2,P43,H-3,P49,H-4,P205	SUPERNATANT PUMP P-106 RECEPTACLE	106-T1,-T2,-T3;GND
23	[illegible]	[illegible]	2	MCC-241-AP-271	TRENCH,P20,H-1,P33,H-2,P44,H-3,P50,H-4,P61,H-5,P221,H-14,P217	SUPERNATANT PUMP P-107 RECEPTACLE	107-T1,-T2,-T3;GND
24	[illegible]	[illegible]	2	MCC-241-AP-271	TRENCH,P20,H-1,P33,H-2,P44,H-3,P50,H-4,P68	SUPERNATANT PUMP P-108 RECEPTACLE	108-T1,-T2,-T3;GND
25	3	12	2	AIR COMPRESSOR CONTROL FEEDER BRKR	P226,WW,P237	AIR COMPRESSOR CONTROLLER	ACC-H1,-H2,GND
26	8 14 PR	16	6	MCC-241-AP-271	P393,WW,TBX-A,P430,CB,P479,TBX-DC,P419	INSTR PNL H (BLDG 242-A)	101-13,-14;102-13,-14;103-13,-14;104-13,-14;105-13,-14;106-13,-14;107-13,-14;108-13,-14
27	4	12	2	RELAY ENCLOSURE #1	P291,JB,P292	RAT-47 IN BLDG 241-AP-271	A-13-H,-N,-60;GND
28	10	16	2	HEAT PUMP, BLDG 241-AP-271	P177	THERMOSTAT, BLDG 241-AP-271	R,X2,C,Y,G,T,W,B,2 SP
29	[illegible]	[illegible]	2	MCC-241-AP	P112,H-11,P106,H-3,P43,H-2,P147	AIR INTAKE STA A HTR CONTROLLER	K2-2-1-L1,-L2,-L3;GND
30	[illegible]	[illegible]	2	MCC-241-AP	P112,H-11,P105,H-3,P58	AIR INTAKE STA B HTR CONTROLLER	K2-2-2-L1,-L2,-L3;GND
31	[illegible]	[illegible]	2	MCC-241-AP	P112,H-11,P108,H-3,P69	AIR INTAKE STA C HTR CONTROLLER	K2-2-3-L1,-L2,-L3;GND
32	[illegible]	[illegible]	2	MCC-241-AP	P112,H-11,P108,H-3,P49,H-4,P55	AIR INTAKE STA D HTR CONTROLLER	K2-2-4-L1,-L2,-L3;GND
33	3	10	2	MCC-241-AP	P108,H-11,P107,PULL BOX,NIPPLE	MINI POWER CENTER MPC-5	C5-L1,-L2;GND
34	4	12	2	RELAY ENCLOSURE #1	P291,JB,P293	LOT-48 IN BLDG 241-AP-271	A-13-H,-N,-74;GND
35	2	12	2	RELAY ENCLOSURE #1	P294	LIGHT ON ROOF OF BLDG 241-AP-271	A-13-80,-N
36	5/C	12	3	PANELBOARD D	TRENCH,P17,H-1,P120,H-6,P125	FLOOD LIGHTS FP-1	D-1-H1,-H2;D-2-H1,-H2;GND
37	5/C	12	3	PANELBOARD D	TRENCH,P17,H-1,P130,H-7,P142	FLOOD LIGHTS FP-2	D-5-H1,-H2;D-6-H1,-H2;GND
38	5/C	12	3	PANELBOARD D	TRENCH,P18,H-1,P28,H-2,P152,H-8,P163	FLOOD LIGHTS FP-3	D-9-H1,-H2;D-10-H1,-H2;GND
39	5/C	12	3	PANELBOARD D	TRENCH,P18,H-1,P28,H-2,P166,H-9,P152	FLOOD LIGHTS FP-4	D-13-H1,-H2;D-14-H1,-H2;GND
40	5/C	12	3	PANELBOARD D	TRENCH,P19,H-1,P29,H-2,P43,H-3,P72,H-10,P93	FLOOD LIGHTS FP-5	D-17-H1,-H2;D-18-H1,-H2;GND
41	5/C	12	3	PANELBOARD D	TRENCH,P19,H-1,P29,H-2,P43,H-3,P103,H-11,P114	FLOOD LIGHTS FP-6	D-21-H1,-H2;D-22-H1,-H2;GND
42	5/C	12	3	PANELBOARD D	TRENCH,P20,H-1,P33,H-2,P44,H-3,P50,H-4,P61,H-5,P221,H-14,P225	FLOOD LIGHTS FP-7	D-25-H1,-H2;D-26-H1,-H2;GND
43	5/C	12	3	PANELBOARD D	TRENCH,P20,H-1,P33,H-2,P44,H-3,P50,H-4,P61,H-5,P232,H-15,P236	FLOOD LIGHTS FP-8	D-29-H1,-H2;D-30-H1,-H2;GND
44	5/C	12	3	FIRE ALARM MS-1-2 BLDG 241-AP-271	P8	FIRE ALARM MS-2-1 COMPRESSOR BLDG	EE-300-S(+),-S(-),-L1(+),-L2(-);GND
45	5/C	12	3	PANELBOARD D	TRENCH,P19,H-1,P29,H-2,P43,H-3,P72,H-10,P99	FLOOD LIGHTS FP-9	D-33-H1,-H2;D-34-H1,-H2;GND
46	12/C	12	3	RELAY ENCLOSURE #1	TRENCH,P290,CB,P273	TBX-AC,EXTERIOR BLDG 242-A	A-13-H,-75A,-76D,-76K,-77,-79A;C-8-H,C-6-21,108,10C,25P
47	2/C	12	3	INSTR PNL TK-AP-101	TRENCH,RLY CAB #1,241-AP-271 BLDG,TB-1,P290,CB,P273	TBX-AC, EXTERIOR BLDG 242-A	ANN-SIL-1,-2
48	[illegible]	[illegible]	2	MCC-241-AP-271	TRENCH,P252	PANELBOARD B	A,B,C;GND
49	4	12	2	HEAT PUMP SHUT DOWN CONTACTOR-HPSC	P298,TRENCH,P257	HEAT PUMP HP-1 OS EXT BLDG 241-AP-271	HP-1-T1,-T2,-T3;GND
50	[illegible]	[illegible]	2	PANELBOARD B	P253,TRENCH,P15,H-1,P136	WELDING RCPT #1	B-1-H1,-H2,-H3;GND
51	[illegible]	[illegible]	2	PANELBOARD B	P253,TRENCH,P15,H-1,P28,H-2,P173	WELDING RCPT #2	B-7-H1,-H2,-H3;GND
52	[illegible]	[illegible]	2	PANELBOARD B	P253,TRENCH,P15,H-1,P29,H-2,P43,H-3,P49,H-4,P54	WELDING RCPT #3	B-13-H1,-H2,-H3;GND
53	[illegible]	[illegible]	2	PANELBOARD B	P253,TRENCH,P15,H-1,P33,H-2,P44,H-3,P50,H-4,P61,H-5,P65	WELDING RCPT #4	B-19-H1,-H2,-H3;GND
54	4/C	10	3	PANELBOARD B	P253,TRENCH,P15,H-1,P133	IMPACT WRENCH STATION #1	B-2-H1,-H2,-H3;GND
55	4/C	10	3	PANELBOARD B	P253,TRENCH,P15,H-1,P29,H-2,P169	IMPACT WRENCH STATION #2	B-8-H1,-H2,-H3;GND
56	4/C	10	3	PANELBOARD B	P253,TRENCH,P15,H-1,P29,H-2,P43,H-3,P49,H-4,P53	IMPACT WRENCH STATION #3	B-14-H1,-H2,-H3;GND
57	4/C	10	3	PANELBOARD B	P253,TRENCH,P15,H-1,P33,H-2,P44,H-3,P50,H-4,P61,H-5,P66	IMPACT WRENCH STATION #4	B-20-H1,-H2,-H3;GND
58	4	12	2	PANELBOARD B	3/4" NIPPLE	HEAT PUMP SHUTDOWN CONTACTOR-HPSC	B-25-H1,-H2,-H3;GND
59	[illegible]	[illegible]	2	PANELBOARD B	P253,TRENCH,P15,H-1,P29,H-2,P43,H-3,P73,H-10,P81	WELDING RCPT #5	B-31-H1,-H2,-H3;GND
60	4/C	10	3	PANELBOARD B	P253,TRENCH,P15,H-1,P29,H-2,P43,H-3,P73,H-10,P100	IMPACT WRENCH STATION #5	B-26-H1,-H2,-H3;GND
61	3	12	2	LEAK DETECTION RELAY ENCLOSURE	TRENCH	INSTR PNL AUX	A-13-4,-5,-6,-17,-N,-4,-5,-6,-7,-8,-9,-10,-11
62	[illegible]	[illegible]	2	MCC-241-AP-271	TRENCH,P256	TRANSFORMER T4	F1-L1,-L2,-L3;GND
63	[illegible]	[illegible]	2	TRANSFORMER T4 DISTRIBUTION PNL	P257,TRENCH	HEAT TRACE ENCLOSURE	T4-H1,-H2;GND,T4-H2,-H3;GND,T4-H3,-H1;GND
64	4	12	2	LEAK DETECTION RELAY ENCLOSURE	TRENCH	INSTR PNL TK-AP-101	A-1-101-2,A-11-101-3,A-11-101-4,A-11-N
65	4	12	2	LEAK DETECTION RELAY ENCLOSURE	TRENCH	INSTR PNL TK-AP-102	A-1-102-2,A-11-102-3,A-11-102-4,A-11-N
66	8	12	2	HEAT TRACE ENCLOSURE	TRENCH,P14,H-1,P30,H-2,P150	HEAT TRACE TERMINAL BOX TB-HT-1	SL511A-H1,-H2;SL511B-H1,-H2;SN611A-H1,-H2;SN611B-H1,-H2
67	8	12	2	HEAT TRACE ENCLOSURE	TRENCH,P14,H-1,P30,H-2,P168	HEAT TRACE TERMINAL BOX TB-HT-2	SL512A-H1,-H2;SL512B-H1,-H2;SN612A-H1,-H2;SN612B-H1,-H2
68	24	10	2	HEAT TRACE ENCLOSURE	TRENCH,P14,H-1,P30,H-2,P40,H-3,P67	HEAT TRACE TERMINAL BOX TB-HT-3	SL513C-H1,-H2;SL512C-H1,-H2;SL513A-H1,-H2;SL513B-H1,-H2;SL514A-H1,-H2;SL514B-H1,-H2;SN611C-H1,-H2;SN612C-H1,-H2;SN613A-H1,-H2; SN613B-H1,-H2;SN614A-H1,-H2;SN514B-H1,-H2
69	24	10	2	HEAT TRACE ENCLOSURE	TRENCH,P14,H-1,P30,H-2,P40,H-3,P70	HEAT TRACE TERMINAL BOX TB-HT-4	SL515A-H1,-H2;SL515B-H1,-H2;SL516A-H1,-H2;SL516B-H1,-H2;SL517C-H1,-H2;SL518C-H1,-H2;SN615A-H1,-H2;SN615B-H1,-H2;SN616A-H1,-H2; SN616B-H1,-H2;SN617C-H1,-H2;SN618C-H1,-H2
70	8	8	2	HEAT TRACE ENCLOSURE	TRENCH,P14,H-1,P30,H-2,P40,H-3,P48,H-4,P165	HEAT TRACE TERMINAL BOX TB-HT-5	SL517A-H1,-H2;SL517B-H1,-H2;SN617A-H1,-H2;SN617B-H1,-H2
71	8	8	2	HEAT TRACE ENCLOSURE	TRENCH,P14,H-1,P30,H-2,P40,H-3,P48,H-4,P20	HEAT TRACE TERMINAL BOX TB-HT-6	SL518A-H1,-H2;SL518B-H1,-H2;SN618A-H1,-H2;SN618B-H1,-H2
72							
73							
74							
75							
76	4	12	2	LEAK DETECTION RELAY ENCLOSURE	TRENCH	INSTR PNL TK-AP-103	A-11-103-2,A-11-103-3,A-11-103-4,A-11-N
77	4	12	2	LEAK DETECTION RELAY ENCLOSURE	TRENCH	INSTR PNL TK-AP-104	A-11-104-2,A-11-104-3,A-11-104-4,A-11-N
78	4/C	12	3	JUNCTION BOX VALVE PIT JBVP-2	P271,JB-FP,P-96	FLUSH PIT ELEVENTS LS-FP/PS-FP	LS-FP-1,C-8-H,PS-FP-1,GND
79	4/C	12	3	LEAK DETECTION RELAY ENCLOSURE	TRENCH,P21,H-1,P32,H-2,P42,H-3,P74,H-10,P80,JB-FP,P95	LEVEL ELEMENT LE-FP	SD1-FP-LL,SD2-FP-LL,2 SP
80	4/C	12	3	LEAK DETECTION RELAY ENCLOSURE	TRENCH,P21,H-1,P32,H-2,P42,H-3,P74,H-10,P80,JB-FP,P98	LEVEL ELEMENT LE-SP1 TBX-LD-SP	SD1-SP-LL,SD2-SP-LL,2 SP
81	4/C	12	3	LEAK DETECTION RELAY ENCLOSURE	TRENCH,P16,H-1,P119,H-6,P123	LEVEL ELEMENT LE-101-2	SD1-101-2,S1A-101-2,SD2-101-2,S2A-101-2
82	4/C	12	3	LEAK DETECTION RELAY ENCLOSURE	TRENCH,P16,H-1,P134,H-7,P139	LEVEL ELEMENT LE-102-2	SD1-102-2,S1A-102-2,SD2-102-2,S2A-102-2
83	4/C	12	3	LEAK DETECTION RELAY ENCLOSURE	TRENCH,P22,H-1,P34,H-2,P151,H-8,P157	LEVEL ELEMENT LE-103-2	SD1-103-2,S1A-103-2,SD2-103-2,S2A-103-2
84	4/C	12	3	LEAK DETECTION RELAY ENCLOSURE	TRENCH,P22,H-1,P34,H-2,P170,H-9,P175	LEVEL ELEMENT LE-104-2	SD1-104-2,S1A-104-2,SD2-104-2,S2A-104-2
85	4/C	12	3	LEAK DETECTION RELAY ENCLOSURE	TRENCH,P23,H-1,P35,H-2,P45,H-3,P51,H-4,P192,H-12,P194	LEVEL ELEMENT LE-105-2	SD1-105-2,S1A-105-2,SD2-105-2,S2A-105-2
86	4/C	12	3	LEAK DETECTION RELAY ENCLOSURE	TRENCH,P23,H-1,P35,H-2,P45,H-3,P51,H-4,P205,H-13,P209	LEVEL ELEMENT LE-106-2	SD1-106-2,S1A-106-2,SD2-106-2,S2A-106-2
87	4/C	12	3	LEAK DETECTION RELAY ENCLOSURE	TRENCH,P24,H-1,P36,H-2,P46,H-3,P52,H-4,P62,H-5,P222,H-14,P218	LEVEL ELEMENT LE-107-2	SD1-107-2,S1A-107-2,SD2-107-2,S2A-107-2
88	4/C	12	3	LEAK DETECTION RELAY ENCLOSURE	TRENCH,P24,H-1,P36,H-2,P46,H-3,P52,H-4,P62,H-5,P233,H-15,P229	LEVEL ELEMENT LE-108-2	SD1-108-2,S1A-108-2,SD2-108-2,S2A-108-2

CONDUIT SCHEDULE

CND NO.	CND SIZE	WIRE RUN NUMBERS
P1	4	SPARE
P2	4	SPARE
P3	4	1
P4	4	2
P5	4	3
P6	4	4
P7	2	7
P8	1	44
P9	4	SPARE (INST BLDG TRENCH TO H-1)
P10	4	SPARE (INST BLDG TRENCH TO H-1)
P11	4	16
P12	4	SPARE (INST BLDG TRENCH TO H-1)
P13	4	SPARE (INST BLDG TRENCH TO H-1)
P14	4	66 THRU 71, 450A
P15	4	50 THRU 57,59,60
P16	4	81,82,100,101,103,104,125,128,129,129
P17	4	17,18,36,37,151,182
P18	4	19,20,38,39,54,172,184
P19	4	21,22,40,41,186 45
P20	4	23,24,42,43,188,295,296,297,298
P21	4 ½	79,80,89 THRU 93, 96, THRU 99
P22	4 ½	83,84,108 THRU 110,124,127,131,132,134,135
P23	4 ½	95,86,112 THRU 116,130,133,136 THRU 141
P24	4 ½	87,88,118,119,121,122,142 THRU 147
P25	4	SPARE (H-1 TO H-2)
P26	4	SPARE (H-1 TO H-2)
P27	4	SPARE (H-1 TO H-2)
P28	4	19,20,38,39,51,55,154,161,174,184
P29	4	21,22,40,41,52,56,186,45,59,60
P30	4	66 THRU 71,450A
P31	4	16
P32	4 ½	79,80,89 THRU 93,96 THRU 99
P33	4	23,24,42,43,53,57,188,295,296,297,298
P34	4 ½	83,84,108 THRU 110,124,127,131,132,134,135
P35	4 ½	95,86,112 THRU 116,130,133,136 THRU 141
P36	4 ½	87,88,118,119,121,122,142 THRU 147
P37	4	SPARE (H-2 TO H-3)
P38	4	SPARE (H-2 TO H-3)
P39	4	SPARE (H-2 TO H-3)
P40	4	66 THRU 71,450A
P41	4	16
P42	4	79,80,89 THRU 93,96 THRU 99
P43	4	21,22,29,40,41,52,56,176,186,45,59,60,161
P44	4	23,24,42,43,53,57,188,295,296,297,298
P45	4 ½	85,86,112 THRU 116,130,133,136 THRU 141
P46	4 ½	87,88,118,119,121,122,142 THRU 147
P47	4	SPARE (H-3 TO H-4)
P48	1 ½	70,71
P49	4	21,22,32,52,56,176,186,161
P50	4	23,24,42,43,53,57,189
P51	4 ½	85,86,112 THRU 116,137,138,140,141
P52	4 ½	87,88,118,119,121,122,142 THRU 147
P53	1	56
P54	1 ½	52
P55	1	32
P56	1 ½	169
P57	1 ½	189
P58	1	24
P59	1	118
P60	4	SPARE (H-4 TO H-5)
P61	4	23,42,43,53,57,178,189
P62	4	87,88,119,120,122,143,144,146,147
P63		NOT USED
P64	1	147
P65	1 ½	53
P66	1	57
P67	1 ½	68
P68	1	30
P69	1	31
P70	1 ½	69
P71	2	SPARE (H-3 TO H-10)
P72	1 ½	40,45
P73	4	59,60,450B
P74	4	79,80,89 THRU 93,130,136,96,97,98
P75	1 ½	287
P76	1	93
P77	2	98
P78	1	130
P79	2	89,90,91,92
P80	2 ½	79,80,96,97
P81	4	450B
P82	½	289
P83	1	40
P84	1	136
P85	1 ½	254

CONDUIT SCHEDULE

CND NO.	CND SIZE	WIRE RUN NUMBERS
P86	2	255,265,266
P87	2	256
P88	1 ½	257
P89	2	258
P90	1 ½	259
P91	1 ½	260
P92	2	261
P93	1 ½	262
P94	2	263
P95	1	250
P96	2	79,96,78
P97	1	250
P98	1 ½	80,97
P99	1	45
P100	1	60
P101	2	SPARE (H-11 TO H-3)
P102	2	99,133,139
P103	1	41
P104	2	SPARE (H-11 TO H-18)
P105	4	16
P106	2 ½	29,30,31,32,295,296,297,298
P107	2	33,295,296,297,298
P108	2	33
P109	1	99
P110	2	SPARE (MCC-241-AP TO H-11)
P111	4	16
P112	2	29,30,31,32
P113	1	133
P114	1	41
P115	1	139
P116	2	SPARE (H-1 TO H-6)
P117	1	128
P118	1	17
P119	3	81,100,101,125
P120	2	36,182,183
P121	1 ½	172,173
P122	1 ½	162
P123	1	81
P124		NOT USED
P125	1	36
P126	1 ½	162,183
P127		NOT USED
P128	1	125
P129	1 ½	101
P130	2 ½	18,37,173,174,183
P131	2	SPARE (H-1 TO H-7)
P132	1	103
P133	1	54
P134	3	82,104,128,129
P135	1 ½	183
P136	1 ½	50
P137	1 ½	173,174
P138	1	82
P139	1	129
P140		NOT USED
P141	1	18
P142	1	37
P143	1	183
P144		NOT USED
P145	1	128
P146	1 ½	104
P147	1	29
P148	1	132
P149	1 ½	164
P150	1	66
P151	3	83,106,107,108,124,131,184,185
P152	2	38,154,174,175,
P153	1	85
P154	1	19
P155	1 ½	174,175
P156	1	108
P157	1	83
P158	1	124
P159	1 ½	184,185
P160	1	154
P161	1 ½	59
P162	1 ½	108
P163	1	38
P164	1	131
P165	1 ½	107
P166	2 ½	20,39,175,176,185
P167	2	SPARE (H-2 TO H-9)
P168	1	67
P169	1	55
P170	3	84,110,127,134,135

CABLE TYPES

FOR TYPE OF WIRE FOR EACH WIRE RUN SEE CORRESPONDING NUMBER IN "TYPE OF WIRE" COLUMN.

1. COAXIAL CABLE SHALL BE TYPE RG-59/U.
2. 600V SINGLE CONDUCTOR CABLE SHALL BE PER SECTION 16100 OF SPECIFICATION B-340-C7.
2a. 600V SINGLE CONDUCTOR CABLE SHALL BE X-LINKED PLYETHYLENE TYPE RHH-RHW PER UL44-1968 AND UL854, AND IPCEA PUBLICATION NO. S-66-524 (NEMA WC7).
3. 600V MULTICONDUCTOR CABLE SHALL BE SUITABLE FOR CONDUIT, CABLE TRAY OR DIRECT BURIAL PER SECTION 16300 OF SPECIFICATION B-340-C7.
4. 300 V. MULTICONDUCTOR CABLE WITH PVC INSULATION AND AN OVERALL JACKET PER PROCUREMENT SPECIFICATIONS B-340-P1.
5. 300V OVERALL SHIELDED TRIAD CABLE SHALL BE MANHATTAN INSTRUMENTATION CABLE TYPE MVIC.
6. 300 V. MULTITRIAD CABLE W/EACH TRIAD INDIVIDUALLY SHIELDED & AN OVERALL JACKET SUITABLE FOR CABLE TRAY, CONDUIT MANHATTAN INSTRUMENTATION CABLE TYPE MVITS.
7. THERMOCOUPLE EXTENSION CABLE SHALL BE ISA TYPE "EX" W/INDIVIDUALLY SHIELDED PAIRS, MANHATTAN INSTRUMENTATION CABLE, TYPE VTES & VMTES.
8. 600 V. MULTICONDUCTOR CABLE SHALL HAVE AN OVERALL SHIELD & A JACKET SUITABLE FOR CABLE TRAY, CONDUIT & DIRECT BURIAL.
9. 300 V. MULTIPAIR CABLE SHALL HAVE EACH PAIR INDIVIDUALLY SHIELDED. JACKET SHALL BE SUITABLE FOR CONDUIT, CABLE TRAY INSTALLATIONS, MANHATTAN INSTRUMENTATION CABLE TYPE MVICS.
10. 300V SINGLE OR MULTIPAIR CABLE, OVERALL SHIELDED CABLE SHALL HAVE A JACKET SUITABLE FOR CABLE TRAY, CONDUIT & DIRECT BURIAL. MANHATTAN M8706080 OR BELDEN 9512.
11. MULTICONDUCTOR CABLE WITH AN OVERALL SHIELD & A JACKET SUITABLE FOR CABLE TRAY, CONDUIT & DIRECT BURIAL, OLYMPIA TYPE #9136.

4a THIS DRAWING MODIFIED BY DRAWING H-2-78521 SHEETS 1 & 2

4 AS-BUILT FOR PROJ B-3405 ECN B-3405-9 Z A4-3

H-2-90439 DRAWING LIST — REFERENCES

NEXT USED ON H-2-90435

CONT Z A4-5

REV	BY-DATE					DESCRIPTION
M 3	LEJ 9-23-86	NA	JHV 9-23-86	JDC 9-11-86	MD 7-96 MW 5-86 SMB B-B 1986	AS-BUILT FOR PROJ B-340 L168,0A Z E-8,A-4 L85,0A Z A-5,6 KIOT B-340 RUN NO. GEN REV IOT B-340 THRU B-8 NRCD CHNG WIRE 6,7,8 aINCR B-340-252 Z B-3 A6 f)DFC B-340-216,Z,F4,5, 6,7,8,E6 e)DFC B-340-239,Z, 7,8, d)DFC B-340-253 Z A5, c)DFC B-340-375,Z,E5,6,7,8,F5,6, b)DFC B-340-392,Z C5 a)DFC B-340-437,Z,C1,2,D1,2,E2
M 2	LWR 1-15-85					PER DFC B-340-238 INCORPORATED CHANGES
1	LW ROBERTS 7-10-84					b) MODIFY PER DFC B-340-154; a) MODIFY PER DFC B-340-161
	ROCKWELL APPROVAL	KEH APPROVAL			REV BY DATE	REVISIONS

RELEASED FOR CONSTRUCTION BY G ROKKAN DATE 12/1/83 DOE

REV 2 DOE KK LUCAS DATE 1-6-85

REV 1 DOE KK LUCAS DATE 7-10-84

RHO APPROVAL BY J SELCHER 11/18/83
PROJ ENGR J VIITA 11/22/83
DA W BRAYMEN 11/22/83
APPROVED BY R ITEN 11/21/83
SAFETY D PARTHREE 11/21/83
APPROVED BY L SUBLETT 11/21/83
CHECKED BY L PACHECO 11/21/83
DRAWN BY K.L.EWER 9/16/83
DESIGNED BY B HAQ 11/21/83

U.S. DEPARTMENT OF ENERGY
RICHLAND OPERATIONS OFFICE
KAISER ENGINEERS HANFORD COMPANY

ELECTRICAL WIRE RUN LIST

PROJECT TITLE 241-AP TANK FARM

PROJ B-340 | WO X34002 | JOB R295F2
SCALE NONE | BLDG 241-AP | INDEX 7305/7505
CLASSIFICATION NONE | NOT REQD
DRAWING NUMBER H-2-90477 | SHEET 1 OF 10 | REV 4

KEHCAD H290477A1 B 08/20/86

WIRE RUN NO.	NO. OF WIRES	SIZE OF WIRE	TYPE OF WIRE	FROM	VIA	TO	WIRE NUMBERS
89	4/C	12	3	LEAK DETECTION RELAY ENCLOSURE	TRENCH,P2,H-1,P32,H-2,P42,H-3,P74,H-10,P79,JBVP-12	LEAK DETECTOR LDE-609	SIA-609,S2A-609,SDI-609,SD2-609
90	4/C	12	3	LEAK DETECTION RELAY ENCLOSURE	TRENCH,P2,H-1,P32,H-2,P42,H-3,P74,H-10,P79,JBVP-12	LEAK DETECTOR LDE-610	SIA-610,S2A-610,SDI-610,SD2-610
91	4/C	12	3	LEAK DETECTION RELAY ENCLOSURE	TRENCH,P2,H-1,P32,H-2,P42,H-3,P74,H-10,P79,JBVP-12	LEAK DETECTOR LDE-509	SIA-509,S2A-509,SDI-509,SD2-509
92	4/C	12	3	LEAK DETECTION RELAY ENCLOSURE	TRENCH,P2,H-1,P32,H-2,P42,H-3,P74,H-10,P79,JBVP-12	LEAK DETECTOR LDE-510	SIA-510,S2A-510,SDI-510,SD2-510
93	4/C	12	3	LEAK DETECTION RELAY ENCLOSURE	TRENCH,P2,H-1,P32,H-2,P42,H-3,P74,H-10,P76	LEAK DETECTOR LDE-030	SIA-030-LD,S2A-030-LD,SDI-030-LD,SD2-030-LD
94							
95	4	12	2	DISC SWITCH EXTERIOR BLDG 241-AP-271	P153	HEAT PUMP HP-1	HP-1-T1,-T2,-T3;GND
96	4/C	12	3	LEAK DETECTION RELAY ENCLOSURE	TRENCH,P2,H-1,P32,H-2,P42,H-3,P74,H-10,P80,JB-FP,P98	LEAK DETECTOR LDE-FP	SIA-FP-LD,S2A-FP-LD,SDI-FP-LD,SD2-FP-LD
97	4/C	12	3	LEAK DETECTION RELAY ENCLOSURE	TRENCH,P2,H-1,P32,H-2,P42,H-3,P74,H-10,P80,JB-FP,P98	LEAK DETECTOR SYS TBX-LD-SP	SIA-SP-LD,S2A-SP-LD,SDI-SP-LD,SD2-SP-LD
98	4/C	12	3	LEAK DETECTION RELAY ENCLOSURE	TRENCH,P2,H-1,P32,H-2,P42,H-3,P74,H-10,P77,JBVP-3	LEAK DETECTOR LDE-VP	SIA-VP-LD,S2A-VP-LD,SDI-VP-LD,SD2-VP-LD
99	4/C	12	3	LEAK DETECTION RELAY ENCLOSURE	TRENCH,P2,H-1,P32,H-2,P42,H-3,P102,H-11,P109	LEAK DETECTOR SYS TBX-KI-1	SIA-KI-LD,S2A-KI-LD,SDI-KI-LD,SD2-KI-LD
100	4/C	12	3	LEAK DETECTION RELAY ENCLOSURE	TRENCH,P16,H-1,P119,H-6,P251	LEAK DETECTOR LDE-01A	SIA-01A-LD,S2A-01A-LD,SDI-01A-LD,SD2-01A-LD
101	2-4/C	12	3	LEAK DETECTION RELAY ENCLOSURE	TRENCH,P16,H-1,P119,H-6,P129	LEAK DETECTORS LDE-01B/LE-01B	SIA-01B-LD,S2A-01B-LD,SDI-01B-LD,SD2-01B-LD/SIA-01B-HL,S2A-01B-HL,SDI-01B-HL,SD2-01B-HL
102							
103	4/C	12	3	LEAK DETECTION RELAY ENCLOSURE	TRENCH,P16,H-1,P132	LEAK DETECTOR LDE-02A	SIA-02A-LD,S2A-02A-LD,SDI-02A-LD,SD2-02A-LD
104	2-4/C	12	3	LEAK DETECTION RELAY ENCLOSURE	TRENCH,P16,H-1,P134,H-7,P146	LEAK DETECTORS LDE-02B/LE-02B	SIA-02B-LD,S2A-02B-LD,SDI-02B-LD,SD2-02B-LD/SIA-02B-HL,S2A-02B-HL,SDI-02B-HL,SD2-02B-HL
105							
106	4/C	12	3	LEAK DETECTION RELAY ENCLOSURE	TRENCH,P22,H-1,P34,H-2,P151,H-8,P156	LEAK DETECTOR LDE-03A	SIA-03A-LD,S2A-03A-LD,SDI-03A-LD,SD2-03A-LD
107	2-4/C	12	3	LEAK DETECTION RELAY ENCLOSURE	TRENCH,P22,H-1,P34,H-2,P151,H-8,P165	LEAK DETECTORS LDE-03B/LE-03B	SIA-03B-LD,S2A-03B-LD,SDI-03B-LD,SD2-03B-LD/SIA-03B-HL,S2A-03B-HL,SDI-03B-HL,SD2-03B-HL
108	2-4/C	12	3	LEAK DETECTION RELAY ENCLOSURE	TRENCH,P22,H-1,P34,H-2,P151,H-8,P162	LEAK DETECTORS LDE-03C/LE-03C	SIA-03C-LD,S2A-03C-LD,SDI-03C-LD,SD2-03C-LD/SIA-03C-HL,S2A-03C-HL,SDI-03C-HL,SD2-03C-HL
109	4/C	12	3	LEAK DETECTION RELAY ENCLOSURE	TRENCH,P22,H-1,P34,H-2,P172	LEAK DETECTOR LDE-04A	SIA-04A-LD,S2A-04A-LD,SDI-04A-LD,SD2-04A-LD
110	2-4/C	12	3	LEAK DETECTION RELAY ENCLOSURE	TRENCH,P22,H-1,P34,H-2,P170,H-9,P184	LEAK DETECTORS LDE-04B/LE-04B	SIA-04B-LD,S2A-04B-LD,SDI-04B-LD,SD2-04B-LD/SIA-04B-HL,S2A-04B-HL,SDI-04B-HL,SD2-04B-HL
111							
112	4/C	12	3	LEAK DETECTION RELAY ENCLOSURE	TRENCH,P23,H-1,P36,H-2,P45,H-3,P51,H-4,P189	LEAK DETECTOR LDE-05A	SIA-05A-LD,S2A-05A-LD,SDI-05A-LD,SD2-05A-LD
113	2-4/C	12	3	LEAK DETECTION RELAY ENCLOSURE	TRENCH,P23,H-1,P35,H-2,P45,H-3,P51,H-4,P192,H-12,P196	LEAK DETECTORS LDE-05B/LE-05B	SIA-05B-LD,S2A-05B-LD,SDI-05B-LD,SD2-05B-LD/SIA-05B-HL,S2A-05B-HL,SDI-05B-HL,SD2-05B-HL
114	2-4/C	12	3	LEAK DETECTION RELAY ENCLOSURE	TRENCH,P23,H-1,P35,H-2,P45,H-3,P51,H-4,P192,H-12,P198	LEAK DETECTORS LDE-05C/LE-05C	SIA-05C-LD,S2A-05C-LD,SDI-05C-LD,SD2-05C-LD/SIA-05C-HL,S2A-05C-HL,SDI-05C-HL,SD2-05C-HL
115	4/C	12	3	LEAK DETECTION RELAY ENCLOSURE	TRENCH,P23,H-1,P35,H-2,P45,H-3,P51,H-4,P208,H-13,P210	LEAK DETECTOR LDE-06A	SIA-06A-LD,S2A-06A-LD,SDI-06A-LD,SD2-06A-LD
116	2-4/C	12	3	LEAK DETECTION RELAY ENCLOSURE	TRENCH,P23,H-1,P35,H-2,P45,H-3,P51,H-4,P208,H-13,P212	LEAK DETECTORS LDE-06B/LE-06B	SIA-06B-LD,S2A-06B-LD,SDI-06B-LD,SD2-06B-LD/SIA-06B-HL,S2A-06B-HL,SDI-06B-HL,SD2-06B-HL
117							
118	4/C	12	3	LEAK DETECTION RELAY ENCLOSURE	TRENCH,P24,H-1,P36,H-2,P46,H-3,P52,H-4,P59	LEAK DETECTOR LDE-07A	SIA-07A-LD,S2A-07A-LD,SDI-07A-LD,SD2-07A-LD
119	2-4/C	12	3	LEAK DETECTION RELAY ENCLOSURE	TRENCH,P24,H-1,P36,H-2,P46,H-3,P52,H-4,P62,H-5,P222,H-14,P223	LEAK DETECTORS LDE-07B/LE-07B	SIA-07B-LD,S2A-07B-LD,SDI-07B-LD,SD2-07B-LD/SIA-07B-HL,S2A-07B-HL,SDI-07B-HL,SD2-07B-HL
120							
121	4/C	12	3	LEAK DETECTION RELAY ENCLOSURE	TRENCH,P24,H-1,P36,H-2,P46,H-3,P52,H-4,P62,H-5,P233,H-15,P229	LEAK DETECTOR LDE-08A	SIA-08A-LD,S2A-08A-LD,SDI-08A-LD,SD2-08A-LD
122	2-4/C	12	3	LEAK DETECTION RELAY ENCLOSURE	TRENCH,P24,H-1,P36,H-2,P46,H-3,P52,H-4,P62,H-5,P233,H-15,P234	LEAK DETECTORS LDE-08B/LE-08B	SIA-08B-LD,S2A-08B-LD,SDI-08B-LD,SD2-08B-LD/SIA-08B-HL,S2A-08B-HL,SDI-08B-HL,SD2-08B-HL
123							
124	4/C	12	3	LEAK DETECTION RELAY ENCLOSURE	TRENCH,P22,H-1,P34,H-2,P151,H-8,P158	LEAK DETECTOR INDICATOR LDI-101-2	SDI-101-2A,SD2-101-2A,2 SP
125	4/C	12	3	LEAK DETECTION RELAY ENCLOSURE	TRENCH,P16,H-1,P119,H-6,P128	LEAK DETECTOR INDICATOR LDI-101-3	SDI-101-3A,SD2-101-3A,2 SP
126	4/C	12	3	LEAK DETECTION RELAY ENCLOSURE	TRENCH,P16,H-1,P87	LEAK DETECTOR INDICATOR LDI-101-4	SDI-101-4A,SD2-101-4A,2 SP
127	4/C	12	3	LEAK DETECTION RELAY ENCLOSURE	TRENCH,P22,H-1,P34,H-2,P170,H-9,P179	LEAK DETECTOR INDICATOR LDI-102-2	SDI-102-2A,SD2-102-2A,2 SP
128	4/C	12	3	LEAK DETECTION RELAY ENCLOSURE	TRENCH,P16,H-1,P134,H-7,P145	LEAK DETECTOR INDICATOR LDI-102-3	SDI-102-3A,SD2-102-3A,2 SP
129	4/C	12	3	LEAK DETECTION RELAY ENCLOSURE	TRENCH,P16,H-1,P134,H-7,P139	LEAK DETECTOR INDICATOR LDI-102-4	SDI-102-4A,SD2-102-4A,2 SP
130	4/C	12	3	LEAK DETECTION RELAY ENCLOSURE	TRENCH,P23,H-1,P35,H-2,P45,H-3,P74,H-10,P78	LEAK DETECTOR INDICATOR LDI-103-2	SDI-103-2A,SD2-103-2A,2 SP
131	4/C	12	3	LEAK DETECTION RELAY ENCLOSURE	TRENCH,P22,H-1,P34,H-2,P151,H-8,P164	LEAK DETECTOR INDICATOR LDI-103-3	SDI-103-3A,SD2-103-3A,2 SP
132	4/C	12	3	LEAK DETECTION RELAY ENCLOSURE	TRENCH,P22,H-1,P34,H-2,P148	LEAK DETECTOR INDICATOR LDI-103-4	SDI-103-4A,SD2-103-4A,2 SP
133	4/C	12	3	LEAK DETECTION RELAY ENCLOSURE	TRENCH,P23,H-1,P35,H-2,P45,H-3,P102,H-11,P113	LEAK DETECTOR INDICATOR LDI-104-2	SDI-104-2A,SD2-104-2A,2 SP
134	4/C	12	3	LEAK DETECTION RELAY ENCLOSURE	TRENCH,P22,H-1,P34,H-2,P170,H-9,P183	LEAK DETECTOR INDICATOR LDI-104-3	SDI-104-3A,SD2-104-3A,2 SP
135	4/C	12	3	LEAK DETECTION RELAY ENCLOSURE	TRENCH,P22,H-1,P34,H-2,P170,H-9,P176	LEAK DETECTOR INDICATOR LDI-104-4	SDI-104-4A,SD2-104-4A,2 SP
136	4/C	12	3	LEAK DETECTION RELAY ENCLOSURE	TRENCH,P23,H-1,P35,H-2,P45,H-3,P74,H-10,P84	LEAK DETECTOR INDICATOR LDI-105-2	SDI-105-2A,SD2-105-2A,2 SP
137	4/C	12	3	LEAK DETECTION RELAY ENCLOSURE	TRENCH,P23,H-1,P35,H-2,P45,H-3,P51,H-4,P192,H-12,P197	LEAK DETECTOR INDICATOR LDI-105-3	SDI-105-3A,SD2-105-3A,2 SP
138	4/C	12	3	LEAK DETECTION RELAY ENCLOSURE	TRENCH,P23,H-1,P35,H-2,P45,H-3,P51,H-4,P186	LEAK DETECTOR INDICATOR LDI-105-4	SDI-105-4A,SD2-105-4A,2 SP
139	4/C	12	3	LEAK DETECTION RELAY ENCLOSURE	TRENCH,P23,H-1,P35,H-2,P45,H-3,P102,H-11,P115	LEAK DETECTOR INDICATOR LDI-106-2	SDI-106-2A,SD2-106-2A,2 SP
140	4/C	12	3	LEAK DETECTION RELAY ENCLOSURE	TRENCH,P23,H-1,P35,H-2,P45,H-3,P51,H-4,P208,H-13,P213	LEAK DETECTOR INDICATOR LDI-106-3	SDI-106-3A,SD2-106-3A,2 SP
141	4/C	12	3	LEAK DETECTION RELAY ENCLOSURE	TRENCH,P23,H-1,P35,H-2,P45,H-3,P51,H-4,P202	LEAK DETECTOR INDICATOR LDI-106-4	SDI-106-4A,SD2-106-4A,2 SP
142	4/C	12	3	LEAK DETECTION RELAY ENCLOSURE	TRENCH,P24,H-1,P36,H-2,P46,H-3,P52,H-4,P192,H-12,P200	LEAK DETECTOR INDICATOR LDI-107-2	SDI-107-2A,SD2-107-2A,2 SP
143	4/C	12	3	LEAK DETECTION RELAY ENCLOSURE	TRENCH,P24,H-1,P36,H-2,P46,H-3,P52,H-4,P62,H-5,P222,H-14,P224	LEAK DETECTOR INDICATOR LDI-107-3	SDI-107-3A,SD2-107-3A,2 SP
144	4/C	12	3	LEAK DETECTION RELAY ENCLOSURE	TRENCH,P24,H-1,P36,H-2,P46,H-3,P52,H-4,P62,H-5,P239	LEAK DETECTOR INDICATOR LDI-107-4	SDI-107-4A,SD2-107-4A,2 SP
145	4/C	12	3	LEAK DETECTION RELAY ENCLOSURE	TRENCH,P24,H-1,P36,H-2,P46,H-3,P52,H-4,P62,H-5,P208,H-13,P216	LEAK DETECTOR INDICATOR LDI-108-2	SDI-108-2A,SD2-108-2A,2 SP
146	4/C	12	3	LEAK DETECTION RELAY ENCLOSURE	TRENCH,P24,H-1,P36,H-2,P46,H-3,P52,H-4,P62,H-5,P233,H-15,P235	LEAK DETECTOR INDICATOR LDI-108-3	SDI-108-3A,SD2-108-3A,2 SP
147	4/C	12	3	LEAK DETECTION RELAY ENCLOSURE	TRENCH,P24,H-1,P36,H-2,P46,H-3,P52,H-4,P62,H-5,P64	LEAK DETECTOR INDICATOR LDI-108-4	SDI-108-4A,SD2-108-4A,2 SP
148	4	12	2	LEAK DETECTION RELAY ENCLOSURE	TRENCH	INSTR PNL TK-AP-105	A-11-105-2,A-11-105-3,A-11-105-4,A-11-N
149	4	12	2	LEAK DETECTION RELAY ENCLOSURE	TRENCH	INSTR PNL TK-AP-106	A-11-106-2,A-11-106-3,A-11-106-4,A-11-N
150	4	12	2	LEAK DETECTION RELAY ENCLOSURE	TRENCH	INSTR PNL TK-AP-107	A-11-107-2,A-11-107-3,A-11-107-4,A-11-N
151	4	12	2	LEAK DETECTION RELAY ENCLOSURE	TRENCH	INSTR PNL TK-AP-108	A-11-108-2,A-11-108-3,A-11-108-4,A-11-N
152	2 / 6	8	2	WCC-241-AP-271	TRENCH,P265	ESR-L1,-L2;GND	
153	3 / 1	8	2	TRANSFORMER T2	P266,TRENCH,P255	PANELBOARD A	T2-L1,-L2,-N;GND
154	4/C	6	3	PANELBOARD A	P254,TRENCH,P18,H-1,P28,H-2,P152,H-8,P160	PANELBOARD "SP" IN SERVICE BLDG	A-6-H,-H2,-N;GND
155	3	12	2	PANELBOARD A	P262	RADIATION MONITOR RCPT	A-9-H,-N;GND
156	3	12	2	PANELBOARD A	P254,TRENCH	INSTRUMENT PNL, BLDG 241-AP-271	A-10-H,-N;GND
157	3	12	2	PANELBOARD A	P254,TRENCH	LEAK DETECTION RELAY ENCLOSURE	A-11-H,-N;GND
158	3	12	2	PANELBOARD A	P254,TRENCH	INSTRUMENT PNL, BLDG 241-AP-271	A-12-H,-N;GND
159	7	12	2	PANELBOARD A	P254,TRENCH	RELAY ENCLOSURE #1, BLDG 241-AP-271	A-13-H,-N;GND;A-10-H,-N;A-12-H,-N
160	3	12	2	PANELBOARD A	P254,TRENCH,P263	TBX-CASS-241-AP-3,BLDG 241-AP-271	A-14-H,-N;GND
161	2/1	2/10	2	PANELBOARD A	P254,TRENCH,P17,H-1,P28,H-2,P43,H-3,P49	H-4	A-15-H,-N;GND
162	2-3/C	10	3	HANDHOLE # H-1	P122	DUPLEX RCPT AT TK-101-1	A-15-H,-N;GND;A-15-H;-N;ISP
163	2-3/C	10	3	HANDHOLE # H-1	P135	DUPLEX RCPT AT TK-102-1	A-15-H,-N;GND;A-15-H;-N;ISP
164	2-3/C	10	3	HANDHOLE # H-2	P149	DUPLEX RCPT AT TK-103-1	A-15-H,-N;GND;A-15-H;-N;ISP
165	2-3/C	10	3	HANDHOLE # H-2	P171	DUPLEX RCPT AT TK-104-1	A-15-H,-N;GND;A-15-H;-N;ISP
166	2-3/C	10	3	HANDHOLE # H-4	P190	DUPLEX RCPT AT TK-105-1	A-15-H,-N;GND;A-15-H;-N;ISP
167	2-3/C	10	3	HANDHOLE # H-4	P206	DUPLEX RCPT AT TK-106-1	A-15-H,-N;GND;A-15-H;-N;ISP
168	2-3/C	10	3	HANDHOLE # H-4	P56	DUPLEX RCPT AT TK-107-1	A-15-H,-N;GND;A-15-H;-N;ISP
169	2-3/C	10	3	HANDHOLE # H-4	P57	DUPLEX RCPT AT TK-108-1	A-15-H,-N;GND;A-15-H;-N;ISP
170							
171							
172	3/C	10	3	TBX-CASS-241-AP-3, BLDG 241-AP-271	P263,TRENCH,P18,H-1,P121	LEVEL INDICATING XMTR LIT-101-1	A-14-H,-N;GND
173	3/C	10	3	LEVEL INDICATING XMTR LIT-101-1	P121,H-1,P130,H-7,P137	LEVEL INDICATING XMTR LIT-102-1	A-14-H,-N;GND
174	3/C	10	3	LEVEL INDICATING XMTR LIT-102-1	P137,H-7,P130,H-1,P28,H-2,P152,H-8,P155	LEVEL INDICATING XMTR LIT-103-1	A-14-H,-N;GND
175	3/C	10	3	LEVEL INDICATING XMTR LIT-103-1	P155,H-8,P152,H-2,P166,H-9,P174	LEVEL INDICATING XMTR LIT-104-1	A-14-H,-N;GND
176	3/C	10	3	LEVEL INDICATING XMTR LIT-104-1	P174,H-9,P166,H-2,P43,H-3,P49,H-4,P191,H-12,P195	LEVEL INDICATING XMTR LIT-105-1	A-14-H,-N;GND
177	3/C	10	3	LEVEL INDICATING XMTR LIT-105-1	P195,H-12,P191,H-4,P207,H-13,P28	LEVEL INDICATING XMTR LIT-106-1	A-14-H,-N;GND
178	3/C	10	3	LEVEL INDICATING XMTR LIT-106-1	P211,H-13,P207,H-4,P51,H-5,P221,H-14,P220	LEVEL INDICATING XMTR LIT-107-1	A-14-H,-N;GND

CONDUIT SCHEDULE

CND NO.	CND SIZE	WIRE RUN NUMBERS
P171	1 1/2	165
P172	1	109
P173	1 1/2	51
P174	1 1/2	175,176
P175	1	84
P176	1	135
P177	3/4	28
P178	1	20
P179	1	127
P180	1	185
P181	1/2	94
P182	1	39
P183	1	134
P184	1 1/2	110
P185	1	70
P186	1	138
P187	1/2	235
P188	2	SPARE (H-4 TO H-12)
P189	1	82
P190	1 1/2	166
P191	2	21,176,177,186,187
P192	3	83,85,114,137,142
P193	1	21
P194	1	85
P195	1 1/2	176,177
P196	1 1/2	83
P197	1	137
P198	1 1/2	84
P199	1 1/4	186,187
P200	1	142
P201	1	71
P202	1	141
P203	2	4500,4500E
P204	2	SPARE (H-4 TO H-13)
P205	1	22
P206	1 1/2	167
P207	1 1/2	177,178,187
P208	3	85,115,116,140,145
P209	1	86
P210	1	115
P211	1 1/2	177,178
P212	1 1/2	116
P213	1	140
P214	1/2	8
P215	1	187
P216	1	145
P217	1	23
P218	1	89
P219	2	SPARE (H-5 TO H-14)
P220	1 1/2	178,179
P221	2 1/2	23,42,178,179,188,189
P222	2 1/2	87,119,143
P223	1 1/2	119
P224	1	143
P225	1	42
P226	1/2	25
P227	1 1/4	188,189
P228	1	189
P229	1	121
P230	2	SPARE (H-5 TO H-15)
P231	1 1/2	179
P232	1 1/2	43,179,189
P233	3	88,121,122,146
P234	1 1/2	122
P235	1	146
P236	1	143
P237	1/2	25
P238	1	189
P239	1	144
P240	2	221,295
P241	2	223,296
P242	2	225,297
P243	2	227,298
P244	1 1/4	9
P245	1 1/4	10
P246	1 1/4	13
P247	1 1/4	11
P248	1 1/4	12
P249	1 1/4	12
P250	1 1/4	12
P251	1	100
P252	2	48
P253	3	50 THRU 60
P254	3	154,156 THRU 161,182,184,186, 189,246

CONDUIT SCHEDULE

CND NO.	CND SIZE	WIRE RUN NUMBERS
P255	1 1/2	153
P256	2	62
P257	3	63
P258	3	4508
P259	2	4500
P260	1 1/2	4500
P261	1 1/2	4500E
P262	1/2	155
P263	3/4	160,172
P264	2	SPARE (RELAY ENC #3 TO H-8)
P265	1	152
P266	1 1/2	153
P267	1	49
P268	1/2	14
P269	1/2	15
P270	1/2	251
P271	1	78
P272	1/2	15
P273	5	254 THRU 260 ,47,46
P274	1 1/2	264
P275	1 1/2	265
P276	1/2	269
P277	1/2	270
P278	1/2	271
P279	1/2	272
P280	1/2	273
P281	1/2	274
P282	1/2	275
P283	1/2	276
P284	1/2	277
P285	1/2	278
P286	1/2	279
P287	1/2	280
P288	1	49
P289	1/2	245
P290	2	47,46
P291	3/4	27,34, 180
P292	1/2	27
P293	1/2	34
P294	1/2	35
P295	4	SPARE (H-18 TO H-31)
P296	4	SPARE (WCC-241-AP TO H-1)
P297	2	285
P298	1/2	288
P299	1	287
P300	1/2	286
P301	4	SPARE (TBX-A TO H-16)
P302	4	(SEE DWG H-2-76521)
P303	4	365,373,407,415
P304	4	367,375,399,408
P305	4	376
P306	4	374,385
P307	4	359,377,401,409,447,449,451,453, 455,457,459,461,463,465
P308	4	371,379,412,471,472,473,474
P309	4	380,44
P310	4	378,393,394,395,396,410,433,434,535
P311	4	SPARE (H-16 TO H-17)
P312	4	367,375,399,408
P313	4	376,387
P314	4	SPARE (H-16 TO H-17)
P315	4	369,377,401,409,415,447,449,454, 453,455,457,459,461,463,465
P316	4	371,379,412,472,473,474
P317	4	380,44
P318	4	378,393,394,395,396,410,433,434,535
P319	4	SPARE (H-17 TO H-18)
P320	4	369,377,401,409,451,453,455,457, 459,461,463,465
P321	4	371,379,412,472,473,474
P322	4	380,44
P323	4	378,389,393,394,395,396,410,433,434,535
P324	4	SPARE (H-18 TO H-19)
P325	4	369,377,401,409,455,457
P326	4	371,379,474
P327	4	380,389
P328	4	378,410
P329	4	371,379
P330	4	380,391,410,474
P331	1 1/2	365,366,373
P332	2	385,386
P333	1 1/2	385,386
P334	1	301
P335	1 1/2	373
P336	2 1/2	301,302,365,366

*NOTE:

(30) SPLICE 2-#10 (IN PARALLEL) TO EACH #2 IN HANDHOLE SHOWN. (A-15-H,-N) SPLICE H-#10 TO #10 GND IN EACH HANDHOLE.

(CONTINUED Z A-5)

REV 2 DOE KK LUCAS DATE 1-15-85

REV 1 DOE KK LUCAS DATE 7-10-84

RELEASED FOR CONSTRUCTION BY ROKKAN DATE 12-1-83 DOE

REV	BY-DATE	BY-DATE	BY-DATE	DESCRIPTION
5				AS-BUILT FOR PROJ ER4303
4	EK CARTER 5-19 1987	WHB 4-9-87	DCA 4-8 1987	ORDER ER-4303 B-492 DWG Z D-1 PER WORK ADDED REFERENCE TO PROJECT
3				(a) MODIFY PER DFC B-340-238 (b) MODIFY PER DFC B-340-187
2	LVB 1-15-85			(a) MODIFY PER DFC B-340-161 (b) MODIFY PER DFC B-340-154
1	LVB 7-10-84			(a) MODIFY PER DFC B-340-133 (b) MODIFY PER DFC B-340-127

MICROFILMED: ROCKWELL APPROVAL KEH APPROVAL

NUMBER	TITLE
H-2-76521	ELEC WIRE RUN LIST
H-2-90439	DRAWING LIST

NEXT USED ON H-2-90435

AS-BUILT FOR PROJ B-340 REFD DWG Z D-1-D-2 (DFC B-340-476,2 D-2-2 (DFC B-340-417,2 F8 (393 THRU 396 (MCD DWG Z,3 ADDED WIRE RUN NOS (DFC B-340-367,522 (DFC B-340-371,372,373,513 (DFC B-340-437,354,2A,7,8,D2,E2,F2 (DFC B-340-47 Z E2,F1

DATE	APPROVAL		
RHO			
BY J BELCHER			
PROJ ENGR	J VIITA	9/23/83	
DR	W BRAYMEN	9/23/83	
APPROVED	R ITEN	9/23/83	
SAFETY	D PARTHREE	9/23/83	
APPROVED BY	L SUBLLET	9/23/83	
SUPERV	L PACHECO	9/23/83	
DRAWN BY	K.L.EWER	9/26/83	
DESIGNED BY	B HAQ	9/23/83	

U.S. DEPARTMENT OF ENERGY
RICHLAND OPERATIONS OFFICE
KAISER ENGINEERS HANFORD COMPANY

ELECTRICAL WIRE RUN LIST

PROJECT TITLE: 241-AP TANK FARM

PROJ B-340 | NO X34002 | JOB R2957 2

SCALE NONE | BLDG 241-AP | SHEET 305/7505

CLASSIFICATION BY NONE | NOT RECD

DRAWING NUMBER H-2-90477 | SHEET 2 | OF 10 | REV 5

H290477F2 C 11/23/87

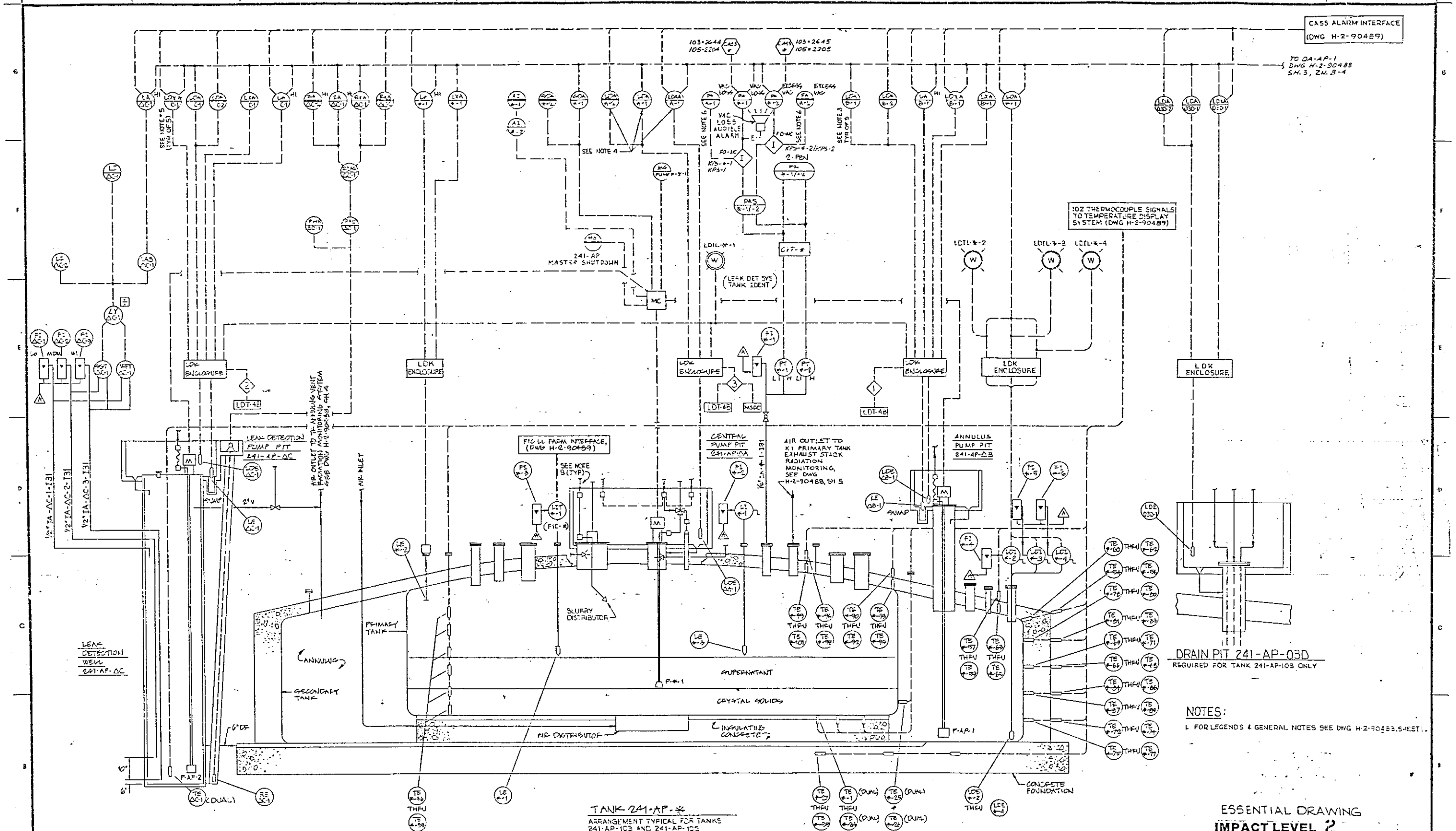

NOTES:

1. FOR LEGENDS & GENERAL NOTES SEE DWG H-2-90483, SHEET 1.

ESSENTIAL DRAWING

IMPACT LEVEL 2

			INCORP. ECN 103816	5	
			PER ESR 117814 ECN 101277, INCORPORATED ECN 101693	4	
BY-DATE	BY-DATE	REV BY DATE	DESCRIPTION	REV	
RHO APPROVAL	KEH APPROVAL		REVISIONS		

COMMENT REVIEW

H-2-90485	DRAWING LIST
NUMBER	TITLE
REFERENCES	
NEXT USED ON	H-2-90483

U. S. DEPARTMENT OF ENERGY
Richland Operations Office
KAISER ENGINEERS HANFORD COMPANY

IEFD
TANKS 241-AP-103 AND 241-AP-105

PROJECT TITLE: 241-AP TANK FARM

PROJ B-340 | NO X-340092 | JOB F29-1372
SCALE NONE | BLDG 241-AP | SHEET 7.26

CLASSIFICATION: NONE | DRAWING NUMBER: H-2-90487 | SHEET 1 OF 2 | REV 5

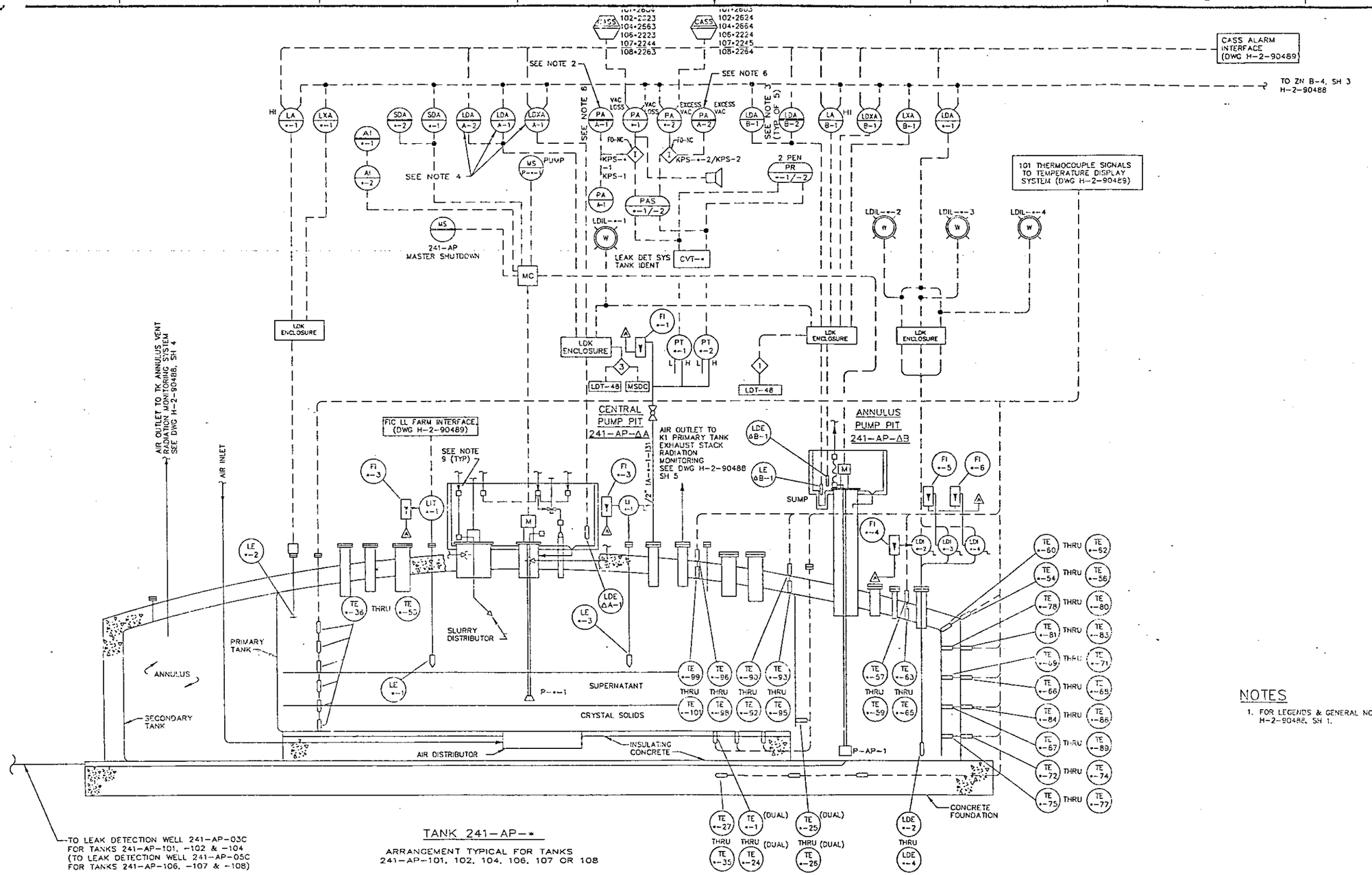

TANK 241-AP-*

ARRANGEMENT TYPICAL FOR TANKS 241-AP-101, 102, 104, 106, 107 OR 108

* - USED IN LIEU OF TANK NUMBER (101, 102, 104, 106, 107 OR 108)

Δ - USED IN LIEU OF PIT NUMBER (01, 02, 04, 06, 07 OR 08)

NOTES

1. FOR LEGENDS & GENERAL NOTES SEE DWG H-2-90488, SH 1.

ESSENTIAL DRAWING

IMPACT LEVEL 2

M			KC 11/29	INCORP ECN 103816	3
M		GWS 10/17/88	DC 10/17/88	KRB ESR 11781 INCORP. ECN 101663 PER	2
M	LEJ 9-23-86	JWV 9-23-87	JDC 9-11-86	MW 5-9-1986 MD 5-9-1986 BMB 5-16-1986 AS-BUILT FOR PROJ B-340 a) DFC B-340-296 Z E-5	1
		NA			

BY-DATE	BY-DATE	REV BY DATE	DESCRIPTION	REV
ROCKWELL	KEH APPROVAL			
APPROVAL				

REVISIONS

H-2-90435	DRAWING LIST
NUMBER	TITLE
REFERENCES	

RHO APPROVAL BY LW ROBERTS

U.S. DEPARTMENT OF ENERGY
RICHLAND OPERATIONS OFFICE
KAISER ENGINEERS HANFORD COMPANY

M IEFD
TANK 241-AP-101, -102, -104, -106, -107, -108

PROJECT TITLE: 241-AP TANK FARM

PROJ B-340	WO X34002	JOB R295J2	
SCALE NONE	BLDG 241-AP	INDEX 7002	
CLASSIFICATION TBY NONE	DRAWING NUMBER H-2-90487	SHEET 2	OF 2 REV 3

B:IBM:ACD:10.0:SS
B0904879

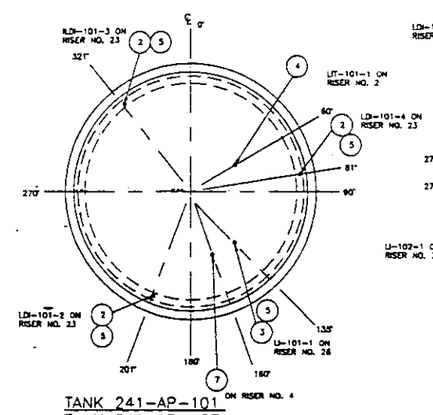

TANK 241-AP-101
TANK 241-AP-103
SAME AS TANK 101 EXCEPT USE 103 IN LIEU OF REF. DWG. H-2-90538 FOR RISERS

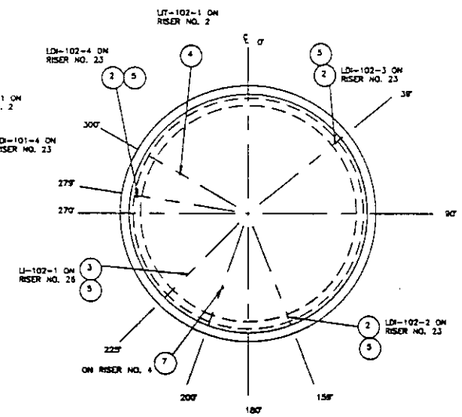

TANK 241-AP-102
TANK 241-AP-104
SAME AS TANK 102 EXCEPT USE 104 IN LIEU 102 REF. DWG. H-2-90539 FOR RISERS

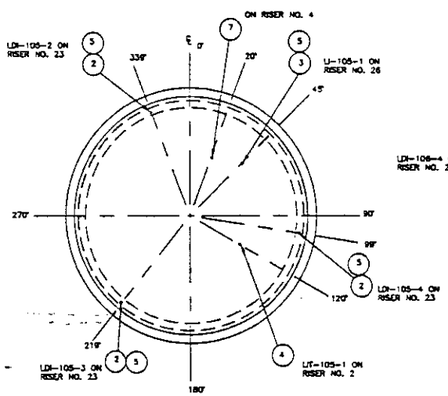

TANK 241-AP-105
TANK 241-AP-107
SAME AS TANK 105 EXCEPT USE 107 IN LIEU OF 105 REF. DWG. H-2-90535 FOR RISERS

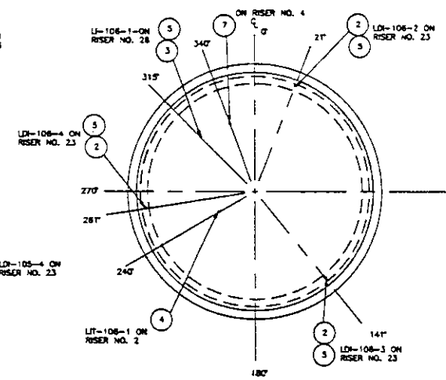

TANK 241-AP-106
TANK 241-AP-108
SAME AS TANK 106 EXCEPT USE 108 IN LIEU OF 106 REF. DWG. H-2-90534 FOR RISERS

1 ASSEMBLY ARRANGEMENT PLAN
SCALE: 1" = 15'-0"

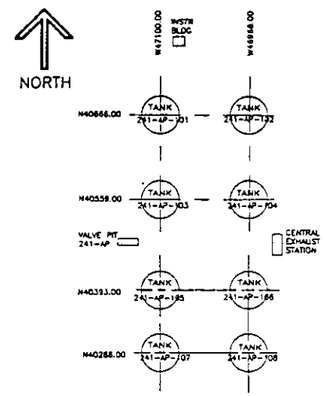

KEY PLAN
SCALE: 1" = 80'-0"

GENERAL NOTES:

1. FOR THE LEAK DETECTION INDICATOR ASSEMBLY. A HOLE IN THE RISER FLANGE SHALL BE DRILLED AND TAPPED #10-24 UNC-2B X 1/2" DEEP FOR THE GROUND CABLE RETAINING SCREW (PN 19). THIS SCREW SHALL THEN USED TO PERMANENTLY SECURE THE GROUND CABLE (PN 18 & 31) TO THE RISER FLANGE.
2. THE LEVEL INDICATOR TRANSMITTER (LIT) (PN 4) SHALL BE MODIFIED PER DRAWING H-2-71803 AND AND FCN 50893. FOR INSTALLATION OF THE LIT. SEE DRAWING H-2-36382. ASSEMBLY #1.
3. THE INNER DIAGMETER OF THE NARROW END OF THE FUNNEL (PN 27) SHALL BE THE SAME AS THE INNER DIAMETER OF THE 1" SCHEDULE 40 PIPE (PN 12).
4. WELDING OF KYNAR PARTS SHALL BE PER MANUFACTURER INSTRUCTIONS.
5. WELDING PERSONNEL SHALL HAVE BEEN QUALIFIED PER AMERICAN WELDING SOCIETY D1.1 OR AMERICAN SOCIETY OF MECHANICAL ENGINEERS SECTION IX. WELDING PROCEDURES SHALL BE PER AWS. D1.1 FOR METAL MATERIALS. INSPECTION OF WELDS SHALL BE VISUAL.
6. THE FOLLOWING TWO STAGE EXPOXY SHALL BE USED TO BOND THE CONCRETE TO THE KYNAR PIPE IN THE SHIELDING PLUG ASSEMBLY (PN 5). COAT ONLY THE AREA TO BE BONDED JUST PRIOR TO POURING THE CONCRETE. ALLOW FOUR TO EIGHT HOURS FOR THE EPOXY TO SET. TWENTY-FOUR HOURS TO CURE.

EPOXY: MIX SIXTY-FIVE PARTS ARALDITE #6010 (PN 28) WITH THIRTY-FIVE PARTS VERSAMID #125 (PN 29)

ACCELERATE: MIX THREE PARTS VERSAMID #125 (PN 29)

7. FOR DESCRIPTION OF INSTRUMENT PIPE CODES AND PIPE CODES. SEE CONSTRUCTION SPECIFICATION 8-340-C7.
8. LEAK DETECTOR TAPES (ANNULUS INSTALLATION) SHALL BE INSTALLED AS FOLLOWS:
   1. THE 100 FOOT TAPE (PN34) SHALL BE CUT AT THE 65 FOOT MARK.
   2. (2) THE PLUMMET (PN14) SHALL BE ATTACHED TO THE ZERO END OF THE TAPE IN SUCH FASHION TO MAINTAIN A LENGTH OF 65 FEET FROM THE BOTTOM TIP OF THE PLUMMET TO THE 65 FOOT MARK.
   3. THE PLUMMET AND TAPE SHALL BE ASSEMBLED AS SHOWN IN PARTIAL ELEVATION A ON THIS DRAWING.
   4. THE TOP OF THE TAPE SHALL BE ASSEMBLED TO THE PULLEY (PN8 ON H-2-95260, SHT. 1) AS SHOWN IN PARTIAL ELEVATION "B" THIS DRAWING.
9. LEVEL INDICATOR TAPES (TANK INSTALLATION) SHALL BE INSTALLED AS FOLLOWS:
   1. (2) DETERMINE THE DEPTH OF THE TANK BOTTOM BY MEASURING THE DISTANCE FROM THE TOP OF THE RISER FLANGE TO THE BOTTOM OF THE TANK. ADD 17 INCHES TO THIS MEASUREMENT AND CUT TAPE (PN 34).
   2. THE PLUMMET (PN14) SHALL BE ATTACHED TO THE HIGH END OF THE TAPE IN SUCH FASHION TO MAINTAIN THE CUT LENGTH FROM STEP 1 WITH THE 0 INCH MARK ON THE PULLEY END OF THE TAPE.
   3. THE PLUMMET AND TAPE SHALL BE ASSEMBLED AS SHOWN IN PARTIAL ELEVATION A ON THIS DRAWING.
   4. CUT A 2 FOOT SECTION OF TAPE FROM THE DISCARDED PORTION. ATTACH 2 FOOT SECTION, BLANK SIDE UP, TO THE ZERO END OF THE TAPE USING 3 OR MORE SST RIVETS.
   5. THE ZERO END OF THE TAPE SHALL BE ASSEMBLED TO THE PULLEY (PN 8 ON H-2-95260, SHT. 1) AS SHOWN IN PARTIAL ELEVATION "B" ON THIS DRAWING.

	QTY					PART NUMBER	DESCRIPTION	
					X	1	ASSEMBLY ARRANGEMENT PLAN	
				X	24	2	LEAK DETECTION INDICATOR (LDI) ASSEMBLY	SEE SHEET 2
			X		8	3	LEVEL INDICATOR (L1) ASSY	
		X			8	4	LEVEL INDICATOR TRANSMITTER (LIT) ASSEMBLY	FIC INDUSTRIES #1032-312 -23589 (SEE NOTE 2)
	X		1	1		5	SHEILDING PLUG ASSEMBLY	SEE SHEET 2
				1		6	LEAK DET. INDICATOR TAPE AND DRUM SUB-ASSY	H-2-90512 SHT 1, 2, 3 (PN 1)
					8	7	MULTI-THERMOCOUPLE PROBE	H-2-90492
			1	1		8	FLOW INDICATOR, TUBE SIZE 6, AIR, 10-90 CFH AT 100 PSI, 1/4" NPT CONNECTIONS WITH INTERGRAL NEEDLE VALVE ON INLET, SST	EMERSON ELECTRIC BROOKS INSTR DIV MOD 1350
	AR					9	PIPE, 3" SCHED 40, BLACK STEEL	ASTM A53
	1					10	FLANGE, BLIND, 4" 150#, STEEL	ASTM A181
	1					11	PLATE, 3" OD X 1/4" THK, CS	ASTM A36
	AR					12	PIPE, 1" SCHED 40, TOE, KYNAR	RESITOFLEX CORP
	1					13	ROD, 3 1/2" OD X 2'L, KYNAR	FLUROCARBON CO
			1	1		14	ROD, 5/8" OD X 3'-0 L, SST	ASTM A276
			1	1		15	VALVE, SHUT-OFF, 1/2" NPT, SST BODY WITH KEL-F STEM	WHITEY #SS-25KFB
			AR	AR		16	TUBING, 1/4" ODT X 0.030" WALL, SST	INSTR PIPE CODE I-31 *
			AR	AR		17	MISC TUBE FITTING, SST	
(2)				~~AR~~		~~18~~	~~BRAID GROUND CABLE, FLAT 1/2" WIDE, COPPER~~	ASTM B-33
			1	1		19	SCREW, BINDING HEAD #10-24 UNC-2A X 5/8" L, SST	
(2)				AR		20	SILICONE SEALANT	GE RTV 162
				AR		21	MISC CONDUIT FITTINGS	
			8	8		22	BOLT, HEX HD, 5/8"-11 UNC, CS	ASTM A307 GR B
			8	8		23	NUT, HEX HD, 5/8"-11 UNC, CS	ASTM A563, GR A
		2	2			24	GASKET, FOR 4" RF & FF FLANGED, 1/8" THK, NEOPRENE	PIPE CODE M-9*
		1				25	LEVEL INDICATOR TAPE AND DRUM SUB-ASSY	H-2-90512 SHT 1, 2, 3, (PN 2)
(2)		~~1~~	~~1~~			~~26~~	~~NIPPLE, HEX, 1/4" NPT X 2 1/2" LONG, SST~~	~~GAUGE 80 #SS-4-HLN-2-50~~
	1					27	FUNNEL, 2 1/2" X 1" NOMINAL PIPE SIZE, 3" L, 1.049" ID X 2.234" ID, KYNAR (SEE NOTE 3)	THERMECH ENGINEERING CORP
	AR					28	EPOXY, 1ST STAGE	CIBA-GEIGY ARALDITE #6010
	AR					29	EPOXY, 2ND STAGE	POLY-MIDE CROSSLINGER VERSAMID #125
	AR					30	ACCELERATE, DIMETHYLAMINO-ETHANOL	
(2)				~~2~~		~~31~~	~~LUG, RING SOLDERLESS TYPE, SIZE AS REQUIRED~~	
			2			32	PLUG, SIZE, TYPE AS REQUIRED	ASTM A105

*—SEE NOTE 7

DWG NO	TITLE
H-2-71803	FIC LIQ LVL GAUGE WRG DIAG
H-2-36382	INSTM WASTE TANK LIQ LVL GAUGE INSTL & RISER SCHED
H-2-90435	DRAWING LIST

DRAWING TRACEABILITY LIST — REFERENCES — NEXT USED ON H-2-90492

REV NO	DESCRIPTION	DWN BY DATE	CHK BY DATE	APVD BY DATE	CUST APVD DATE
2	121233 REV. PER ECN 126852.	NMA 2/91			

REVISIONS — CADFILE 3090490A — CADCODE 1:BHBMIACCL.1.0.0.SS

DRAWN	P.O. CROWDER	5/82
CHECKED	RM SHAW	6/83
APVD REF	BARROWS	9/83
DES SUPV	W VITA	2/83
DR	WH BRAYMEN	6/83
CHECK	RM ITEN	6/83
CHECK	RH DENNIS	6/83
APVD	PC BARROWS	9/83
APVD PROJ SUPERVISOR	JT SELCHER	12/8

U.S. DEPARTMENT OF ENERGY
Richland Operations Office
Westinghouse Hanford Company

ISTM LDI & LI ASSEMBLY & DETAIL

SIZE F | ALSO NO 241-AP | MODEL NO 5901 | DWG NO H-2-90490 | REV 2
SCALE SHOWN | SHEET 1 OF 3

34-6000-027(5/89)

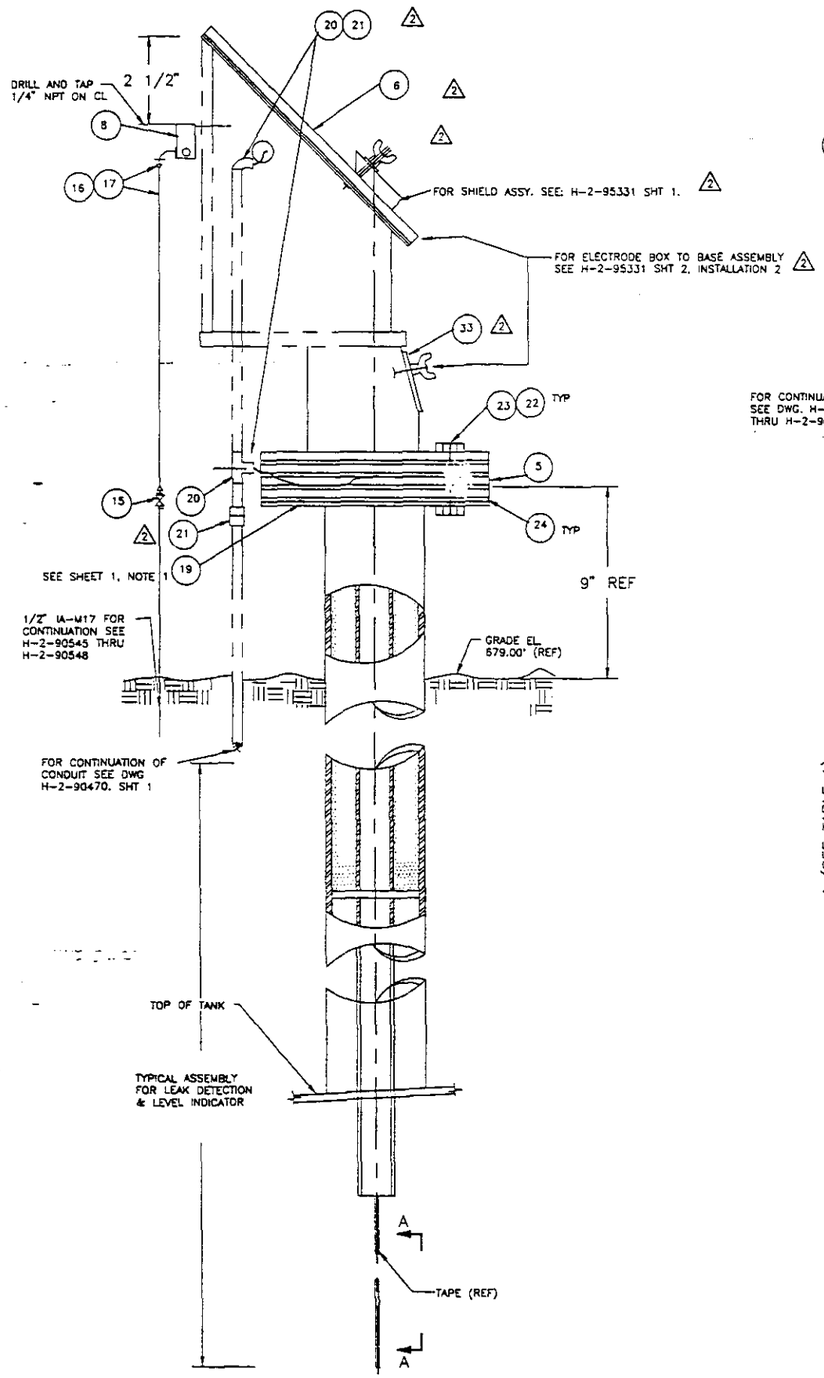

2 LEAK DETECTION INDICATOR ASSEMBLY

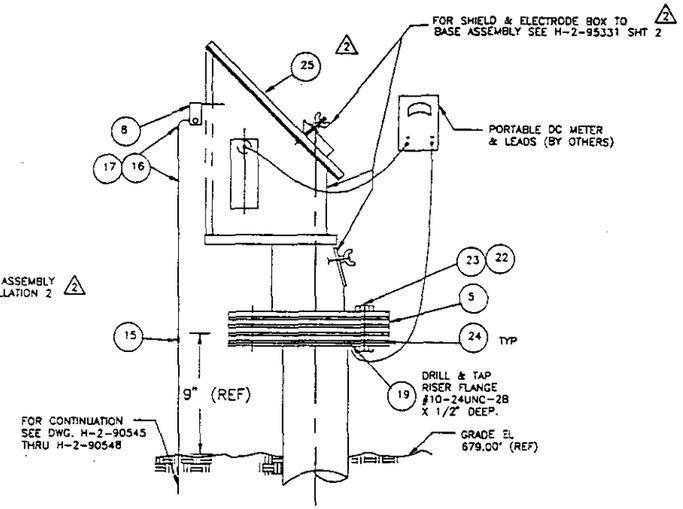

3 LEVEL INDICATOR ASSEMBLY

SCALE: 2"=1'-0"

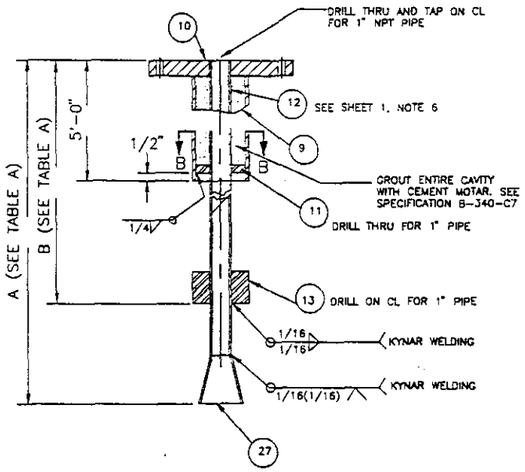

5 SHIELDING PLUG ASSEMBLY

SEE SHEET 1 NOTES 4 & 5
SCALE 3"=1'-0"

NOTE: ADD A THREADED COUPLING TO EXTEND KYNAR PIPE (PN12) TO THE REQUIRED LENGTH

TABLE A

ASSEMBLY	A	B
LEAK DETECTOR INDICATOR	25'-0"	18'-0"
LEVEL INDICATOR	16'-0"	9'-0"

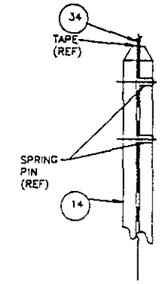

PLUMMET
(H-2-95365 SHT 1 REV 0)

A PARTIAL ELEVATION

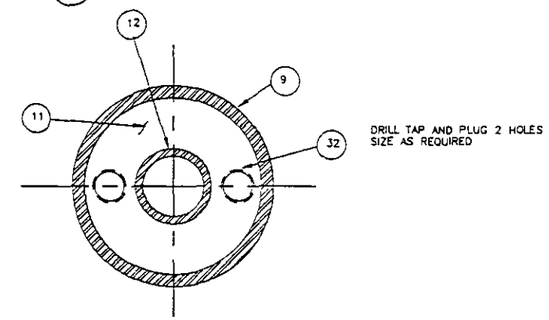

B SECTION

SCALE: FULL

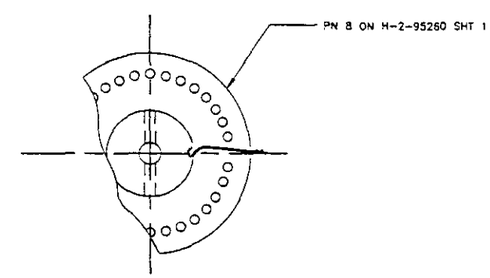

PULLEY AND TAPE ASSEMBLY

C PARTIAL ELEVATION

DWG NO	TITLE	REF NUMBER	TITLE
		H-2-90435	DRAWING LIST

DRAWING TRACEABILITY LIST — REFERENCES — NEXT USED ON H-2-90435

REV	DESCRIPTION	REV BY DATE	CHK BY DATE	APPROVALS BY/DATE
2	REV PER ECN 121233	NMA 3/91		

REVISIONS

CADFILE [illegible] — CADCODE 1B:IBM:ACD:10.0:SS

DRAWN	PQ CROWDER 5/82
CHECKED	RC SWAN 6/83
APPD	R ITEN 6/83
CDS CHKD	JW VITTA 12/83
DR	WH BRAYMEN 6/83
CHECK	RM DENNIS 6/83
APPD	RJ MERRIMAN 6/83
APPD	PC BARROWS 9/83
APPD FOR IMPLEMENTATION BY	JT BELCHER 12/83

U.S. DEPARTMENT OF ENERGY
Richland Operations Office
Westinghouse Hanford Company

INSTM
LDI & LI
ASSEMBLY & DETAILS

SIZE F | CODE IDENT NO 241-AP | SCALE NONE | DWG NO H-2-90490 | REV 2 | SHEET 2 of 3

54-6000-027(5/89)

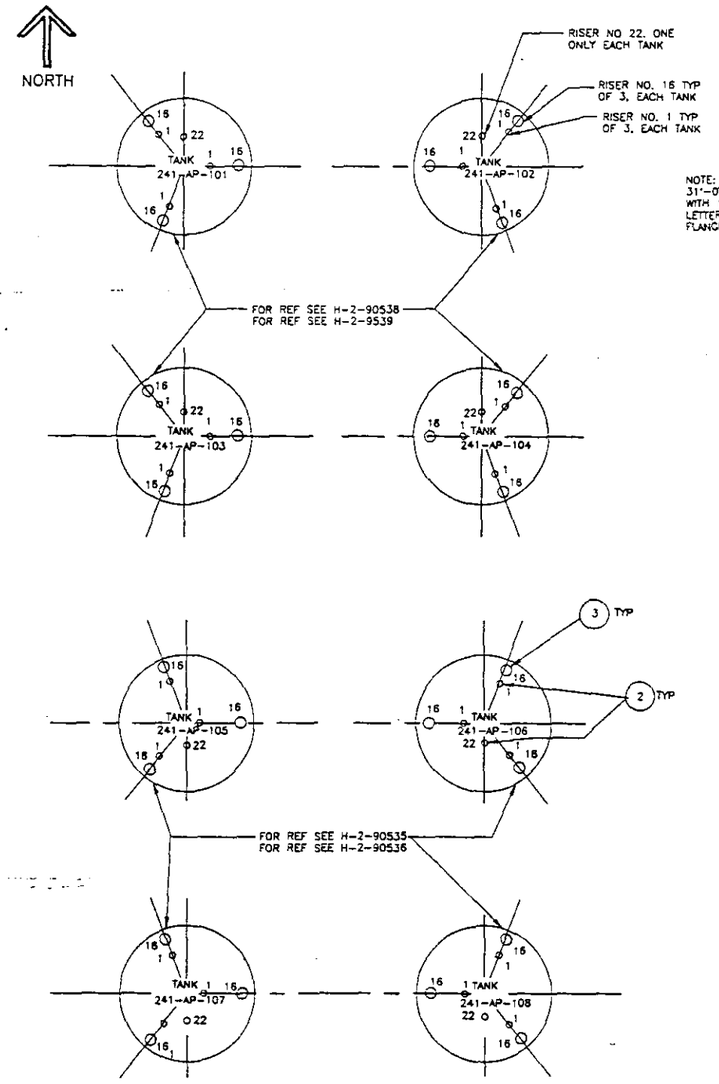

1 ARRANGEMENT PLAN
241-AP TANK FARM

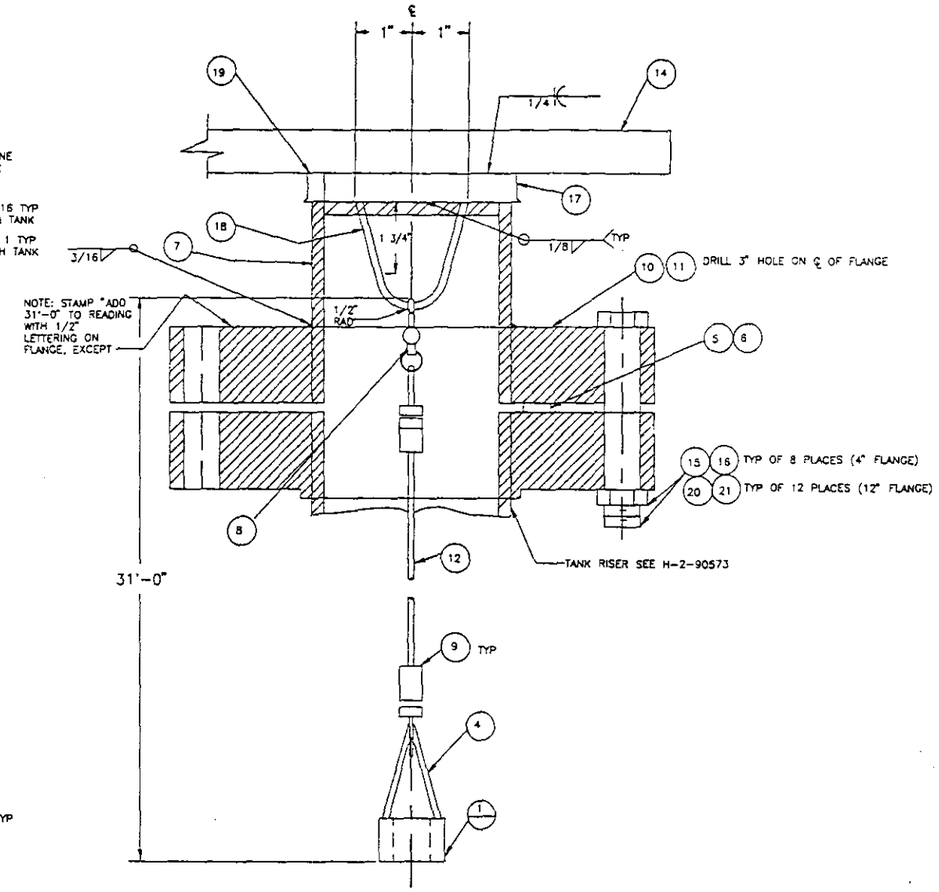

2 TANK SLUDGE LEVEL ASSEMBLY FOR 4" RISER

3 TANK SLUDGE LEVEL ASSEMBLY FOR 12" RISER

TYPICAL ASSEMBLY FOR TANKS 241-AP-101, 102, 103, 104, 105, 106, 107 & 108

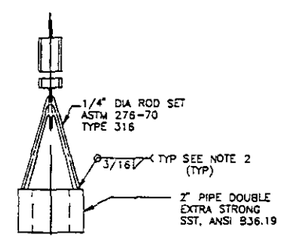

1 DETAIL
SLUDGE WEIGHT

	QTY		PN	DESCRIPTION	
		X	1	ARRANGEMENT PLAN	
	X	32	2	TANK SLUDGE LEVEL ASSEMBLY FOR 4" RISER	
X		24	3	TANK SLUDGE LEVEL ASSEMBLY FOR 12" RISER	
• 1	1		4	SLUDGE WEIGHT	SEE DETAIL 1
	1		5	GASKET, ASBESTOS, 1/3" THICK FOR 4" FLANGE	
1			6	GASKET, ASBESTOS, 1/8" THICK FOR 12" FLANGE	
1	1		7	PIPE, 3" SCHED 40, 3" LONG W/ONE END NPT, CS	ASTM-A53
• 1	1		8	BOLT SNAP, SWIVEL EYE, 5/8" EYE, 3/8" SNAP OPENING, CHROME PLATED	MCMASTER-CARR NO3913T16
• 2	2		9	CLAMP & THIMBLE COMBINATION FOR 1/8" DIA WIRE ROPE	MCMASTER-CASS NO3467T
	1		10	FLANGE, BLIND, 4" 150#, RF, CS	ASTM-A105
1			11	FLANGE, BLIND, 12" 150# RF, CS	ASTM 105
• AR	AR		12	WIRE ROPE, 1/8" DIA X LENGTH AS REQUIRED 7X19 CONSTR, TYPE 316SS OR TYPE 304SS	MCMASTER-CARR NO8908W44
			13		
1	1		14	HOT ROLL BAR, CS 3/4" DIA X 12" LONG	ASTM-36
	8		15	BOLT, 5/8"-11 UNC-2A X 2 3/4" L, CS	ASTM-A307, GRB
	8		16	NUT, TO FIT PN 15, HEAVY HEX, CS	ASTM-A563, GRB
1	1		17	PIPE CAP, SCREWED, 3", 150# FORGED STEEL	ANSI-B16.3
1	1		18	HOT ROLL BAR, CD, 1/8" DIA	ASTM-A575
AR	AR		19	LEAD	SEE NOTE 1
	12		20	BOLT, 7/8"-9 UNC-2A X 4" L, CS	ASTM-A307, GRB
	12		21	NUT, TO FIT PN 20, HEAVY HEX CS	ASTM-A563, GRB

GENERAL NOTES:

1. POUR 1" OF LEAD ON TO THE PIPE CAP AS SHOWN LEAVING A SPACE OF 1/16" BETWEEN THE LEAD CAP PN19 AND AND THE PIPE PN7.
2. PERFORM VISUAL INSPECTION OF FINISHED WELDS IN ACCORDANCE WITH AWS D1.1, SECTION 8, 1985.
3. WELDING PROCEDURES PER NOTE 4, DWG H-2-90492.
4. DO NOT INSTALL THOSE PN'S WITH THE • ADJACENT TO THE B/M ABOVE ON RISER NO. 1 (24 PLACES).

DWG NO	TITLE
H-2-90435	DRAWING LIST

DRAWING TRACEABILITY LIST — REFERENCES — NEXT USED ON H-2-90435

REV NO	DESCRIPTION	ORIG	CHKD	APPROVALS
2	REV PER ECN 121233	NMA 3/9	JHN	

REVISIONS — CADFILE R0904900 — CADCODE 1R1RU-ACD2-10.0-SS

DRAWN	CL AUSTIN	1/86
CHECKED	J SISK	1/86
DES APPR	RM ITEN	1/86
DES ENGR	JW VITA	1/86
CA	WM BRAYMEN	1/86
CHECK	B BACKER	1/86
OTHER	C SUBLETT	1/86
OTHER	HJ STEFFENS	1/86
APPR FOR RELEASE	LW ROBERTS	2/86

U.S. DEPARTMENT OF ENERGY
Richland Operations Office
Westinghouse Hanford Company

INSTM
TANK SLUDGE LEVEL ASSY & DET

SIZE	FILE NO	PROJ NO	DWG NO	REV
F	241-AP	5901	H-2-90490	2

SCALE NONE — SHEET 3 OF 3

54-6000-027(5/89)

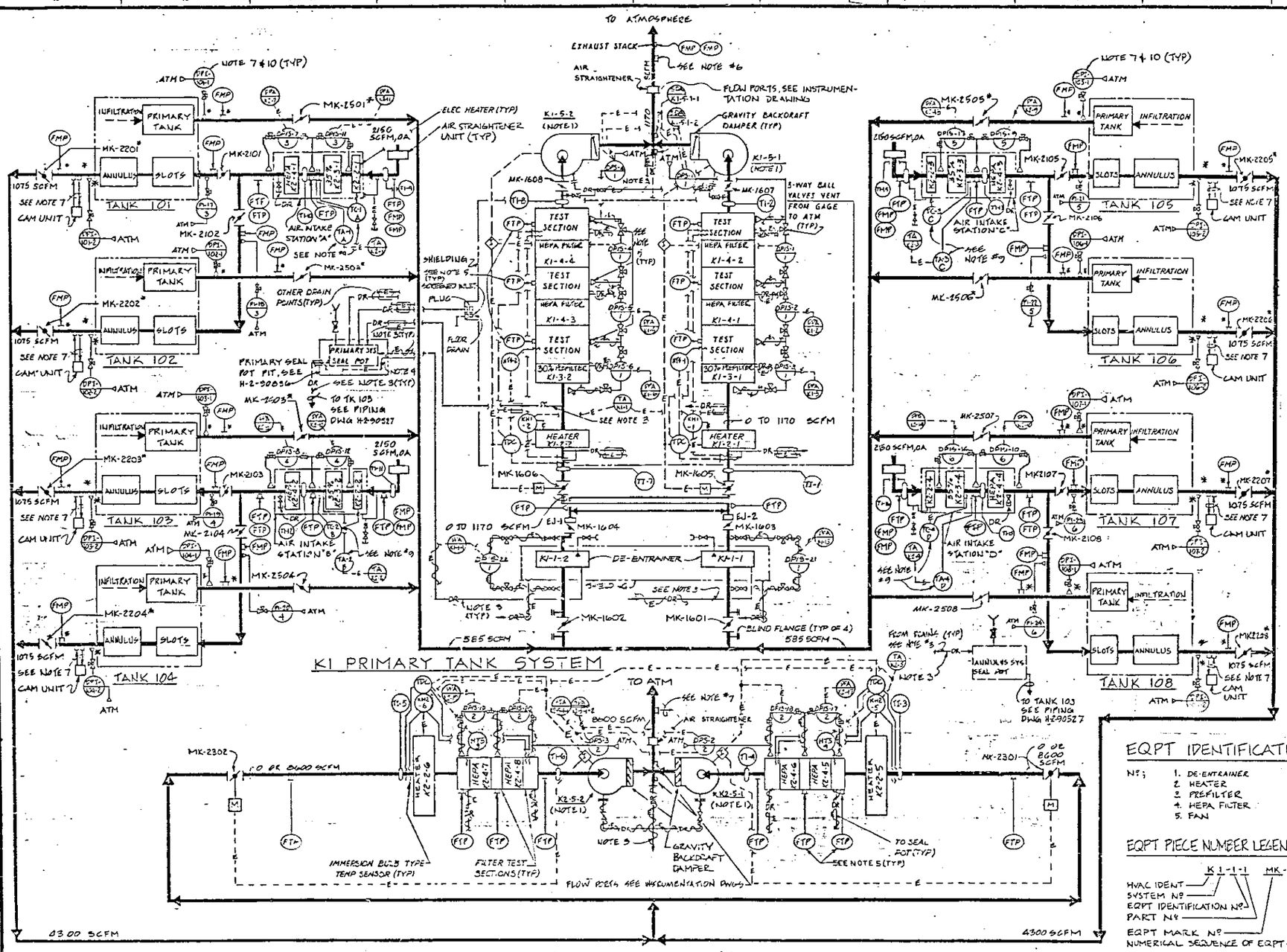

K1 SYSTEM DESCRIPTION

THE PRIMARY TANK VENTILATION SYSTEM MAINTAINS A NEGATIVE PRESSURE IN THE TANKS NOT TO EXCEED 6" WG (FAN SHUT-OFF PRESSURE). THE ALTERNATE UNIT DUPLICATES THE FAN, FILTERS, HEATER. EITHER DE-ENTRAINER MAY BE VALVED OFF FOR SERVICE BECAUSE ONLY ONE DE-ENTRAINER IS USED AT A TIME. THE HEATERS K1-2-1 AND K1-2-2 ARE CONTROLLED BY DIFFERENTIAL TEMPERATURE CONTROLLERS TO ENSURE A CONSTANT TEMPERATURE RISE. FAILURE OF HEATERS (K1-2-1) OR (K1-2-2) WILL ACTIVATE AN ALARM INITIATED BY LOSS OF TEMPERATURE DIFFERENTIAL. LOSS OF AIRFLOW DUE TO FAN FAILURE AND OVER TEMPERATURE OF HEATER ELEMENTS WILL ALSO DEACTIVATE HEATERS.

DIFFERENTIAL PRESSURE INDICATOR SWITCHES DPIS 2, 3, 5 OR 6 ACTIVATE AN ALARM ON HIGH PRESSURE DROP ACROSS PREFILTER OR FIRST HEPA FILTER SECTIONS INDICATING SERVICE IS REQUIRED. DIFFERENTIAL PRESSURE SWITCHES DPS-1 OR DPS-4 ACTIVATE AN ALARM ON LOW DP ACROSS FANS K1-5-1 OR K1-5-2 TO INDICATE FAN FAILURE. DIFFERENTIAL PRESSURE INDICATOR SWITCH DPIS 1 SHUTS DOWN FAN K1-5-1 UPON LOW DP ACROSS THE FINAL HEPA FILTER SECTION. THIS ACTIVATES ALTERNATE SYSTEM FAN K1-5-2 AND AN ALARM. AUTOMATIC VALVE MK 1605 CLOSES AND AUTOMATIC VALVE MK 1606 OPENS BYPASSING THE AIR INTO THE K1-2 ALTERNATE SYSTEM. WITH THE ALTERNATE SYSTEM IN OPERATION. DIFFERENTIAL PRESSURE INDICATOR SWITCH (DPIS-4) SHUTS DOWN FAN K1-5-2 UPON LOW DP ACROSS FINAL HEPA FILTER SECTION. THIS ACTIVATES FAN K1-5-1 AND AN ALARM. MK 1606 CLOSES AND MK 1605 OPENS.

K2 SYSTEM DESCRIPTION

THE ANNULUS VENTILATION SYSTEM MAINTAINS A NEGATIVE PRESSURE IN THE SECONDARY TANKS. THE ALTERNATE UNIT DUPLICATES THE FAN, FILTERS, HEATER AND DE-ENTRAINER. THE HEATER K2-2-6 AND K2-2-5 ARE CONTROLLED BY DIFFERENTIAL TEMPERATURE CONTROLLERS, TO ENSURE A CONSTANT TEMPERATURE RISE. FAILURE OF HEATERS (K2-2-6 OR K2-2-5) WILL ACTIVATE AN ALARM INITIATED BY LOSS OF TEMPERATURE DIFFERENTIAL. LOSS OF AIRFLOW DUE TO FAN FAILURE ALSO DEACTIVATES HEATERS.

DIFFERENTIAL PRESSURE INDICATOR SWITCHES DPIS 17 OF 19 ACTIVATE AN ALARM ON HIGH PRESSURE DROP ACROSS FIRST HEPA FILTER SECTIONS INDICATING SERVICE IS REQUIRED. DIFFERENTIAL PRESSURE SWITCHES DPS-2 OR DPS-3 ACTIVATE AN ALARM ON LOW DP ACROSS FANS K2-5-1 OR K2-5-2 TO INDICATE FAN FAILURE. DIFFERENTIAL PRESSURE INDICATOR SWITCH DPIS-18 SHUTS DOWN FAN K2-5-1 UPON LOW DP ACROSS THE FINAL HEPA FILTER SECTION. THIS ACTIVATES ALTERNATE SYSTEM FAN K2-5-2 AND AN ALARM. AUTOMATIC VALVE MK-2301 CLOSES AND AUTOMATIC VALVE MK-2302 OPENS. BYPASSING THE AIR INTO THE K2 ALTERNATE SYSTEM. WITH THE ALTERNATE SYSTEM IN OPERATION. DIFFERENTIAL PRESSURE INDICATOR SWITCH (DPIS-20) SHUTS DOWN FAN K2-5-2 UPON LOW DP ACROSS FINAL HEPA FILTER SECTION. THIS ACTIVATES FAN K2-5-1 AND AN ALARM. MK 2302 CLOSES AND MK 2301 OPENS.

AIR INTAKE HEATERS (K2-2-1) (K2-2-2) (K2-2-3) AND (K2-2-4) WARM OUTSIDE AIR TO ABOVE 32F. (TC-1) (TC-2) (TC-3) AND (TC-4) SWITCH ON HEATERS WHEN AIR TEMP IS BELOW SET POINT. TEMP SENSOR (TS) AND TEMP ALARM (TA) WILL ACTIVATE AN ALARM WHEN AIR TEMP IS BELOW SET POINT (SEE NOTE 8).

REMOTE ANUNCIATORS ARE ACTUATED BY:

FAILURE OF THE FOLLOWING EQUIPMENT:

FANS K1-5-1, K1-5-2, K2-5-1, AND K2-5-2, HEATERS K1-2-1, K1-2-2, K2-2-1, K2-2-2, K2-2-3, K2-2-4, K2-2-5 AND K2-2-6.

HIGH DIFFERENTIAL PRESSURE ACROSS:

FILTERS K1-3-1, K1-3-2, K1-4-1, K1-4-3, K2-3-1, K2-3-2, K2-3-3, K2-3-4, K2-4-1, K2-4-2, K2-4-3, K2-4-4, K2-4-5, K2-4-7, DE-ENTRAINERS K1-1-1, K1-1-2.

INSTRUMENTATION

INSTRUMENTATION WILL MEASURE AND RECORD:

A) EACH PRIMARY TANK STATIC PRESSURE.

B) AIRFLOW AND RADIATION FROM EACH TANK ANNULUS.

C) TOTAL PRIMARY TANK AIRFLOW AND RADIATION.

D) TOTAL ANNULUS AIRFLOW AND RADIATION.

NOTES

1) ALTERNATE FAN TO START AUTOMATICALLY UPON FAILURE OF OTHER FAN.

2) NOT USED.

3) SEE DRAWING H-2-90527, H-2-90515 AND H-2-90516 FOR CONDENSATE DRAIN PIPING.

4) HEAT TRACE PRIMARY SEAL POT ONLY.

5) FILTER TEST PORT AND GAUGE PORT HALF COUPLINGS ARE BUILT INTO THE PLENUMS AT THE FACTORY.

6) TO RADIATION MONITOR CABINET SEE DWG H-2-90509 SHT. 2.

7) SAMPLE LINES TO AND FROM RADIATION MONITOR CABINET, SEE INSTRUMENTATION DRAWING H-2-90509, SHT 2.

8) FOR ELECTRICAL CONTROLS AND ANNUCIATION, SEE DRAWING H-2-90476.

9) HEATER CONTROL SET POINT 40F, ALARM SET POINT 35 F.

10) SEE NAMEPLATE LEGEND ON DRAWING H-2-90510 SHT. 2 FOR THE CABINET NUMBER EACH DPI IS MOUNTED IN.

EQPT IDENTIFICATION

Nº;
1. DE-ENTRAINER
2. HEATER
3. PREFILTER
4. HEPA FILTER
5. FAN

EQPT PIECE NUMBER LEGEND

K 1 - 1 - 1 MK - 2301

HVAC IDENT
SYSTEM Nº
EQPT IDENTIFICATION Nº
PART Nº
EQPT MARK Nº
NUMERICAL SEQUENCE OF EQPT

SUPPLEMENTAL LEGEND

ABBREVIATIONS

CAM	CONTINUOUS AIR MONITOR
DR	DRAIN, PIPE CODE M-24
EJ	EXPANSION JOINT
FMP	FLOW MEASURING PORT (3) H-2-90519
FTP	FILTER TEST PORT (2) H-2-90519
DPS	DIFFERENTIAL PRESSURE SWITCH
M	MOTOR OPERATOR FOR VALVES (PART OF VALVE PKG)
HTS	HIGH TEMP SWITCH
TC	TEMPERATURE CONTROLLER
*	LOCATED IN VENT/INSTR PIT
TS	TEMPERATURE SENSOR
DPIS	DIFFERENTIAL PRESSURE INDICATOR/SWITCH
FM&IS	FLOW MEASURING & ISOKINETIC SAMPLING UNIT
PI	PRESSURE INDICATOR
TA	TEMPERATURE ALARM
TI	TEMPERATURE INDICATOR
TPA	TEMP DIFFERENTIAL ALARM } PART OF HEATER PACKAGE
TDC	TEMP DIFFERENTIAL CONTROLLER } PART OF HEATER PACKAGE
SDA	SHUTDOWN ALARM
DPA	DIFFERENTIAL PRESSURE ALARM
UH	UNIT HEATER
HP	HEAT PUMP
MK	VALVE Nº
———	REFERENCED EQUIP. OUTLINE

LOCALLY MOUNTED INSTRUMENT
INTERLOCKING CONTROL
SPRAY NOZZLE GATE VALVE & HOSE CONNECTION
HEAT TRACED & INSULATED LINE
HEAT TRACED & ENCASED LINE PIPE = M-24 CODE ENC = M-26A CODE
PANEL MOUNTED, SEE PNL IDENT SCHED, DWG H-2-90522
PANEL MOUNTED IN 241A BUILDING CONTROL ROOM

REFERENCES	
H-7-1274	HVAC AND PIPING SYMBOLS
H-2-90526	ENER FLOW DIAGRAM
H-2-9935	DRAWING LIST
NUMBER	TITLE

NEXT USED ON

REVISIONS			
4	AND ECN 103782 INCORP. ECN 103858		
3	PER ECN 101210. ADD DIRECT DRAWING CHANGE INCORPORATED ECN 101662.		
2	AS-BUILT FOR PROJ B-340 a) DFC B-340-281 Z C-3 b) DFC B-340-419, GEN REV c) DFC B-340-376 Z D-7, D-10, E-7, d) DFC B-340 379 Z G-8, 9 e) DFC B-340-310 Z D-8		
1	PER ECN 101210 INCORP. ECN 101662		
REV	DESCRIPTION	BY	DATE

ESSENTIAL DRAWING

IMPACT LEVEL 4

U. S. DEPARTMENT OF ENERGY
Richland Operations Office
KAISER ENGINEERS HANFORD COMPANY

HVAC
FLOW & CONTROL DIAGRAM

PROJECT TITLE 241-AP TANK FARM

PROJ B-340 WO X34002 JOB R23522
SCALE NONE BLDG 241-AP-A SHEET 8906
CLASSIFICATION UNCLASSIFIED
DRAWING NUMBER H-2-90514 SHEET 1 REV 4

FAN SCHEDULE

UNIT NO	AIRFLOW SCFM	EXTERNAL SP	AIR TEMP °F	CLASS	ARRGT	DISCH	ROTATION	MOTOR HP	RPM	V	PH	HZ	ENCLOSURE	ADDL NOTES	REMARKS
K1-5-1, 2	1170	12"(1)	70	INDL	9	BAU	SEE PLANS	5	3450	460	3	60	TEFC	(2)(3)(5)	PACE FAN, MODEL PS-12
K2-5-1, 2	8600	15"	70	INDL	1&8-3 / 1&3-1 (6)	BAU	SEE PLANS	50	1765	460	3	60	TEFC	(2)(3)(5)	PACE FAN, MODEL PS-2"
K1-5-3,4/K2-5-3,4,5	100	0	70	INDL	—	—	—	—	3000	115	1	60	—	—	HOFFMAN FAN PACKAGE A-PA4AXFN
RF-1	970	.25	—	—	—	—	—	1/6	1140	115	1	60	—	(7)	PENN DOMEX CENT ROOF EXHAUSTER AT-24

(1) MAX FAN DEVELOPED SP SHALL NOT EXCEED 6 IN WG AT OPERATING RPM AT ANY FLOW RATE.
(2) DRIVE MUST BE FURNISHED WITH ONE BELT MORE THAN NUMBER REQD FOR SATISFACTORY FAN OPERATING CONDITIONS. SHEAVES: FIXED PITCH ±10% OF DESIGN RPM
(3) FANS SHALL BE FURNISHED WITH WEATHERPROOF HOUSING FOR BEARINGS, MOTOR AND DRIVE.
(4) NOT USED
(5) FANS SHALL BE FURNISHED WITH GRAVITY OUTLET DAMPERS, WITH HEAVY GAGE BLADES, FRAMES AND AXLES, 10" DEEP SUPPLIED BY FAN MANUF. (CONTINUED Z C-6)

FILTER AND FILTER HOUSING SCHEDULE

UNIT NO	AIRFLOW CFM/FILTER	FILTER SIZE	INITIAL RESIST WG	FINAL RESIST WG	EFFICIENCY RATING	ARRANGEMENT HIGH	WIDE	NO	FILTER MFGR & MODEL NO.	FRAME MFGR & MODEL	REMARKS
K1-3-1, K1-3-2	1170	24×24×2	0.10	0.25	30-35 AVE ASHRAE 52-76	1	1	1	FARR; 30/30 Nº 055280	FLANDERS E-4 PREFILTER	SIZE PREFILTER HOUSING AS ; GGF-6 WITH A SPECIAL 4" SPACER PROVIDED BY FLANDERS FOR CONVERSION LATER.
K1-4-1, K1-4-3, K1-4-2, K1-4-4	1170	GG-F 24×24×11½	1.0	1.25 / 1.00	99.97 % BY DOP	1	1	1	FLANDERS 007-0-02-05-NU-GF	FLANDERS E-5	PER HPS 151-M
K2-4-8, K2-4-6, K2-4-5, K2-4-7	956	GG-F 24×24×11½	1.0	1.50 / 2.30	99.97 % BY DOP	3	3	9	FLANDERS 007-0-02-05-NU-GF	CSC MODEL 3H3W-612-3NA-35 (SP)	PER HPS 151-M
K2-3-1, K2-3-2, K2-3-3, K2-3-4	717	24×24×2	0.10	0.25	30-35 AVE ASHRAE 52-76	1	3	3	FARR; 30/30 Nº 055280	CSC MODEL = 1H3W-612-3NA-35(SP)	4" SPACER PROVIDED BY CSC FOR CONVERSION LATER.
K2-4-1, K2-4-2, K2-4-3, K2-4-4	717	GG-F 24×24×11½	1.0	3.00	99.97 % BY DOP	1	3	3	FLANDERS 007-0-02-05-NU-GF	CSC MODEL = 1H3W-612-3NA-35(SP)	PER HPS 151-M
FLTR-1, 2	1575	24×24×2	0.20	0.70	30-35 AVE ASHRAE 52-76	1	1	1	FARR; 30/30 Nº 055280	FARR CB (1) #C 50028-1	PROVIDE (4) C70 FILTER FASTENERS

(1) 1"×4"×1" FORMED AND WELDED SH. METAL CHANNEL AS REQ'D

CONTROL & INDICATOR SCHEDULE

UNIT NO	MFR & MODEL	RANGE	SWITCHING	SET POINT	ELEC RATING	NAMEPLATE NOMENCLATURE	REMARKS
DPS-1 & 4	DWYER CONTROLS SERIES 1626-5	0.5-6.0 IN WG	1-SPDT	4.0 IN WG	120 V 15A	K1 SYSTEM EXHAUST FAN DIFFERENTIAL PRESSURE SWITCH	(4)(7)
DPIS-3 & 6, 11, 12, 13 & 14	DWYER CONTROLS SERIES 3000	0-4.0 IN WG	2-DPDT	0.5 IN WG / 1.0 IN WG	120 V 10A	K2 SYSTEM ANNULUS AIR INTAKE PREFILTER DIFF PRESS SWITCH	(2)(3)(4)(5)
DPIS-21 & 22	DWYER CONTROLS SERIES 3000	0-4.0 IN WG	2-DPDT	2.0 IN WG	120V 10A	K1 SYSTEM DE-ENTRAINER DIFFERENTIAL PRESSURE SWITCH	(2)(3)(4)(5)
DPIS-2, 5	DWYER CONTROLS SERIES 3000	0-4.0 IN WG	2-DPDT	1.5 IN WG	120V 10A	K1 SYSTEM EXHAUST AIR FIRST STAGE HEPA FILTER DIFF PRESS SWITCH	(2)(3)(4)(5)
DPIS-7, 8, 9 & 10	DWYER CONTROLS SERIES 3000	0-6.0 IN WG	2-DPDT	3.0 IN WG	120V 10A	K2 SYSTEM ANNULUS AIR INTAKE HEPA FILTER DIFF PRESS SWITCH	(2)(3)(4)(5)
DPIS-17 & 19	DWYER CONTROLS SERIES 3000	0-5.0 IN WG	2-DPDT	2.5 IN WG	120V 10A	K2 SYSTEM EXHAUST SECONDARY HEPA DIFF PRESS SWITCH	(2)(3)(4)(5)
DPI-101-1, 102-1, 103-1, 104-1, 105-1, 106-1, 107-1 & 108-1	DWYER CONTROLS SERIES 2000	0-6.0 IN WG	—	—	—	K1 SYSTEM-STATIC PRESS IN PRIMARY TANK	(6)(3)
DPI-101-2, 102-2, 103-2, 104-2, 105-2, 106-2, 107-2 & 108-2	DWYER CONTROLS SERIES 2000	0-6.0 IN WG	—	—	—	K2 SYSTEM-STATIC PRESS IN ANNULUS TANK	(6)(3)
DPS-2 & 3	DWYER CONTROLS SERIES 1626-10	2.0-11 IN WG	1-SPDT	9.5 IN WG	120V 15A	K2 SYSTEM EXHAUST FAN DIFFERENTIAL PRESSURE SWITCH	(4)(7)
TI-1 THRU TI-16	WESTON 4303	-20-240°F	—	—	—	K1 & K2 SYSTEMS HEATER DIFF TEMPS	12" STEM LENGTH, WESTON TEMP WELL #172757-124, SEE DETAIL 10
TC-1, 2, 3 & 4	HONEYWELL T6734-1508	0-100°F	1-SPDT	40°F	120 V	K2 SYSTEM HEATER TEMP CONTROL AT AIR INTAKE STATIONS	MOUNT NEAR IMMERSION WELL. CONTACTS OPEN ON A RISE IN TEMP. PROVIDE 1/2" IMMERSION WELLS, HONEYWELL NO 112622AA AND HONEYWELL GUARD WEATHERPROOF COVER.
TA-1, 2, 3, 4	HONEYWELL T6734-1508	0-100°F	1-SPDT	35°F	120V	K2 SYSTEM HEATER TEMP ALARM SENSOR AT AIR INTAKE STATION	MOUNT NEAR IMMERSION WELL. CONTACTS CLOSE ON A RISE IN TEMP. PROVIDE 1/2" IMMERSION WELLS, HONEYWELL NO 112622AA AND HONEYWELL COVER WEATHERPROOF COVER.
TS-1 THRU 8 / TS-9 THRU 10		—	—	40°F	—	K1 SYSTEM TEMP SENSOR PRIMARY EXHAUST AIR / K2 SYSTEM TEMP SENSOR ANNULUS EXHAUST AIR	PART OF K1-2-1, K1-2-2, K2-2-5 & K2-2-6 HEATER CONTROL CIRCUITS.
HTS 1 & 2 / HTS 3 & 4	UNITED ELEC MODEL 120A TYPE 12	0-250°F	2 SPDT	200°F	110 V 15 A	K1 SYSTEM EXHAUST HIGH TEMP SWITCH / K2 SYSTEM EXHAUST HIGH TEMP SWITCH	SEE DRWG H-2-90519 DET 6 . PROVIDE WELL FOR PROBE MOUNT ON FILTER PLENUM
DPIS 1 & 4 / DPIS 18 & 20	DWYER CONTROLS SERIES 3000	0-4.0 IN WG	2-SPDT	1.0 IN WG / 1.5 IN WG	120 V 10 A	K1 SYSTEM EXHAUST SECONDARY HEPA DIFF PRESS SW / K-2 SYSTEM EXHAUST SECONDARY HEPA DIFF PRESS SW	(1)(3)(4)(5)
PI-17 THRU PI-24	DWYER CONTROLS SERIES 2000	0-20.0 IN WG	—	—	—	K2 SYSTEM-STATIC PRESS-IN ANNULUS-TANK	(9)(3)

(1) 1 RELAY SHALL BE ENERGIZED WHEN GAGE POINTER IS TO THE RIGHT OF SET POINT AND DE-ENERGIZED AS POINTER PASSES TO THE LEFT OF THE SET POINT.
(2) 1 RELAY SHALL BE ENERGIZED WHEN GAGE POINTER IS TO THE LEFT OF SET POINT AND DE-ENERGIZED AS POINTER PASSES TO THE RIGHT OF THE SET POINT.
(3) PROVIDE SHUT-OFF VALVES, WHITEY 3-WAY BALL VALVE MODEL #SS-43X54 SST, 5000 PSI RATING, TEFLON SEATS & WASHERS, 1/4" SWAGELOK FITTINGS.
(4) PROVIDE LOW TEMPERATURE OPTION, -20°F OPERATION. (5) PHOTOHELIC, ILLUMINATED DIAL
(6) MOUNT UNIT IN CONTROL CABINET, SEE DWG H-2-90510 SH 2.
(7) SEE DWG H2-90495 FOR SPEC & MOUNTING OF THESE UNITS.
(8) MOUNT UNIT IN INSTRUMENT CABINET, SEE DRWG H-2-90521
(9) MOUNT UNIT IN CABINET SEE DRWG H-2-90521
(10) CLEARLY MARK UNIT NO ON COVER, FOR USE BY OTHERS.

ELECTRIC HEATER SCHEDULE

EQUIPMENT NO.	SCFM	KW	STAGES	SIZE W	H	ELEC V	PH	HZ	MFR & MODEL	CONTROL VOLTAGE	REMARKS
K1-2-1 & 2	1170	10.35	PROPNL	24	24	480	3	60	ELEMENTS - CHROMALOX CONTROL PKG = INDEECO	120	SEE DETAIL 3 / H-2-90748 FOR SPECIAL FLANGE ARRANGEMENT (1) (2)
K2-2-5 & 6	8600	32	PROPNL	36	24	480	3	60	ELEMENTS - CHROMALOX CONTROL PKG = INDEECO	120	SEE DETAIL 7 / H-2-90517 FOR SPECIAL FLANGED ARRANGEMENT (1) (2)
K2-2-1, 2, 3 & 4	2150	20	1	72	24	480	3	60	INDEECO, SLIP-IN FINNED TUBULAR	120	SEE DETAIL 2 / H-2-90521 FOR SPECIAL FLANGED ARRANGEMENT (3) (4)
K1-2-3 / K2-2-7, 8, 9, 10, 11	—	.5	—	15½	2⅓	240	1	60	BERKO PHT-500 ELEC UTILITY HEATER	120	COMPLETE WITH THERMOSTAT CONTROL — 40°-75°F RANGE SEE DRWG H-2-90750 DET 1 & 8, AND H-2-90521 DET 5 FOR HEATER LOCATION
K3-2-1	—	1.5	—	72	6⅔	240	1	60	BERKO M586-1524-M BASEBOARD HEATER	—	COMPLETE WITH BUILT-IN 240 V-1 POLE THERMOSTAT CAT NO T-4A 45-135 RANGE SEE H-2-90453 FOR LOCATION

(1) SEE EQUIPMENT DATA ON DWG H-2-90748
(2) SEE DWG H-2-90476 SH 13 FOR CONTROL DIAGRAM.
(3) SEE DWG H-2-90476 SH 2 FOR CONTROL DIAGRAM.
(4) PROVIDE A WEATHERPROOF CONTROL CABINET, NEMA 4 RATING, WITH A HINGED AND GASKETED ACCESS DOOR. DOOR LATCH SHALL DISCONNECT ELECTRICAL POWER TO HEATER.

BUTTERFLY VALVE SCHEDULE

MARK NO. (MK-)	SCFM	SIZE	AIR TEMP	OPERATOR	MFR & MODEL CENTERLINE VALVE	REMARKS
2501, 2502, 2503, 2504, 2505, 2506, 2507, 2508	167	12"⌀	212 F	MANUAL	SERIES 'A' DG-11	(1)
1601, 1602, 1603, 1604	1170	12"⌀	160 F	MANUAL		(1)
1605, 1606				MOTORIZED		(2)(4)
1607, 1608	1170	10"⌀	160 F	MANUAL		(1)
2101, 2102, 2103, 2104, 2105, 2106, 2107, 2108	1075	10"⌀	OUTSIDE AIR	MANUAL		(1)
2201, 2202, 2203, 2204, 2205, 2206, 2207, 2208	1075	12"⌀	160 F	MANUAL		(1)
2301, 2302	8600	20"⌀	160 F	MOTORIZED		(3)(4)

(1) FURNISH WITH HEAVY-DUTY WEATHERPROOF GEAR OPERATOR WITH POSITION LOCKING CAPABILITY, CENTERLINE DG GEAR OPERATOR.
(2) FURNISH WITH CENTERLINE SENTRY 22,000 ELECTRIC ACTUATOR, MODEL #22A24, 120 VAC, 60 HZ, 1 PH WITH MANUAL OVERRIDE AND NEMA 4 ENCLOSURE.
(3) FURNISH WITH CENTERLINE SENTRY 22,000 ELECTRIC ACTUATOR, MODEL #22B64, 20 VAC, 60 HZ, 1 PH WITH MANUAL OVERRIDE AND NEMA 4 ENCLOSURE
(4) VALVE OPERATORS SHALL BE SUITABLE FOR INDEFINATELY LONG OPERATING FREQUENCIES AND A NON-LUBRICATING MEDIA.

PANEL IDENTIFICATION SCHEDULE

PANEL	DESCRIPTION	LOCATION	REFERENCE
1	INSTRUMENT CABINET	PRIMARY SYSTEM CENTRAL EXHAUST STATION PAD	H-2-90516, H-2-90750
2	INSTRUMENT CABINET	ANNULUS SYSTEM CENTRAL EXHAUST STATION PAD	H-2-90515, H-2-90750
3	INSTRUMENT RACK	AIR INTAKE STATION 'A'	H-2-90521
4	INSTRUMENT RACK	AIR INTAKE STATION 'B'	H-2-90521
5	INSTRUMENT RACK	AIR INTAKE STATION 'C'	H-2-90521
6	INSTRUMENT RACK	AIR INTAKE STATION 'D'	H-2-90521
7	DELETED	—	

GENERAL NOTES

1. SEE CONSTRUCTION SPEC B-340-C7 FOR ADDITIONAL REQTS.
2. 3-WAY GAGE VALVES ARE TO BE INSTALLED SO VENT TO ATM IS THRU GAGE. AT NO TIME SHALL THE PROCESS SIDE BE OPEN TO ATM.

BELLOWS SCHEDULE

EQPT NO.	SIZE	OPR/TEST PRESS (PSIG)	OPR/INSTL TEMP °F	FLANGES	REMARKS
EJ 1 & 2	12"⌀	5/5	200/70	150# RAISED FACE	PATHWAY "FLEXWAY" NO. 12-5-FN-50-4-L-X-M1-X2 304 SST SINGLE UNRESTRAINED STYLE (1)

(1) BELLOWS SHALL BE FABRICATED OF 304L OR 316L ASTM-A240, A36, A312, A182 STAINLESS STEEL INCLUDING THE CONVOLUTIONS, LINER, FLANGE AND WELD END.
BELLOWS SHALL WITHSTAND THE FOLLOWING MOVEMENT: AXIAL COMPRESSION 0.1 INCH FOR 5000 CYCLES.
BELLOWS SHALL WITHSTAND THE FOLLOWING INSTALLATION TOLERANCE: 1/4" AXIAL EXTENSION, 1/4" AXIAL COMPRESSION, 1/16" LATERAL MOVEMENT AND 2° ANGULAR MOVEMENT.
OVERALL LENGTH 8-1/16".
MAXIMUM AXIAL SPRING RATE 2200 LB/INCH.
X2 = 304L STAINLESS STEEL CONSTRUCTION.

FAN SCHEDULE NOTES: (CONTINUED)
(6) FAN SHALL HAVE A STEPPED MOTOR BASE AS SHOWN ON DWGS.
(7) ROOF EXHAUSTER SHALL BE MOUNTED ON A 6" SELF FLASHING ALUM. SOLOTROL CURB.
(8) EXTEND FAN BEARING GREASE FITTING LINE TO THE OUTSIDE OF THE WEATHERPROOF HOUSING TO A POINT OF EASY SERVICEABILITY FOR FANS K1-5-1, K1-5-2, K2-5-1 AND K2-5-2. GREASE LINES SHALL BE RIGIDLY SECURED TO THE FAN HOUSING AT THE TERMINATION POINT.

THRU-WALL HEAT PUMP SCHEDULE

EQPT NO.	CAPACITY MBH COOLING AT	HEATING AT (9F MB)	AIRFLOW CFM	EXTERNAL SP	POWER	MFR & MODEL	REMARKS	
HP-1	30.4 SH	19.6	1575	0.7" WG	460/3/60	TRANE BWC042C900	(1)(2)	COP 1.80 EER 1.5

(1) PROVIDE INDOOR THERMOSTAT, TRANE CAT NO. BAY 28X155 WITH AUTO SWITCHOVER AND EVAP DEFROST CONTROL.
(2) COMPRESSOR: RL AMPS: 7.0, LR AMPS: 47; EVAPORATOR FAN; ¾ HP, CONDENSOR FAN ⅙ + ¼

UNIT HEATER SCHEDULE

EQUIP NO.	BTU	WATTS	ELEC VOLTS	PH	AMPS	MANUF & MODEL	REMARKS
UH-1	8900	2600	240	1	11.1	CHROMALOX LUH-02-21	(1, 2) W/ CONTACTOR

(1) SEE DRAWING ON H-2-90520 FOR DETAILS
(2) PROVIDE OPTIONAL THERMOSTAT "LUH-TK" (BUILT-IN TO UNIT) (REVISIONS LIST CONT Z 12C)

AS-BUILT FOR PROJ B-340
v) DT B-340-R62.2, Z G10
u) DT B-340-R49.5, Z G5
t) DT B-340-R49.9, Z C12
s) DT B-340-R49.3 Z B4.5
r) DT B-340-R47A Z A,B12
q) DT B-340-R64.0 Z B10-12
p) DT B-340-L44.0 Z F5
n) DT B-340-R46.0 Z F3-6
m) DT B-340-R49.1 Z G3,9
l) DFC B-340-224 Z E12
k) DFC B-340-282 Z F9
j) DFC B-340-285 Z A7-B;C12
h) DFC B-340-292 Z D12
g) DFC B-340-314 Z C-5, 3-6
f) DFC B-340-376 GEN REV
e) DFC B-340-381 Z B8-10
d) DFC B-340-415 Z D9
c) DFC B-340-419 Z D3, 4, 5; B11
b) DFC B-340-434 Z C3-6
a) DFC B-340-446 Z C12 B

2,3 & 4 PER DFC B340-M45 & 173. SCHED NOTE. IN E7 CHNG K1-5-1, SCHED NOTES 2&3. IN B6 ADD K2-2-5, -6, K2-2-1, 2, 3 & 4. IN A1 ADD TS1-8. IN A6 CHNG K1-2-1&2, IN C6 CHNG TC1-4 TS1-4 ADD

DRAWING LIST	H-2-90435
NEXT USED ON	H-2-90435

REV 1 DOE DATE

RELEASED FOR CONSTRUCTION BY DOE DATE

U. S. DEPARTMENT OF ENERGY
Richland Operations Office
KAISER ENGINEERS HANFORD COMPANY

HVAC EQUIPMENT SCHEDULES & NOTES

PROJECT TITLE: 241-AP TANK FARMS
PROJ B-340 | WO XS4002 | JOB R295A2
SCALE NONE | BLDG 241-AP | INDEX 6900
CHECKED H. TAN
CLASSIFICATION NONE | BY NOT-RECA
DRAWING NUMBER H 2-90522 | SHEET 1 OF 1 | REV 2

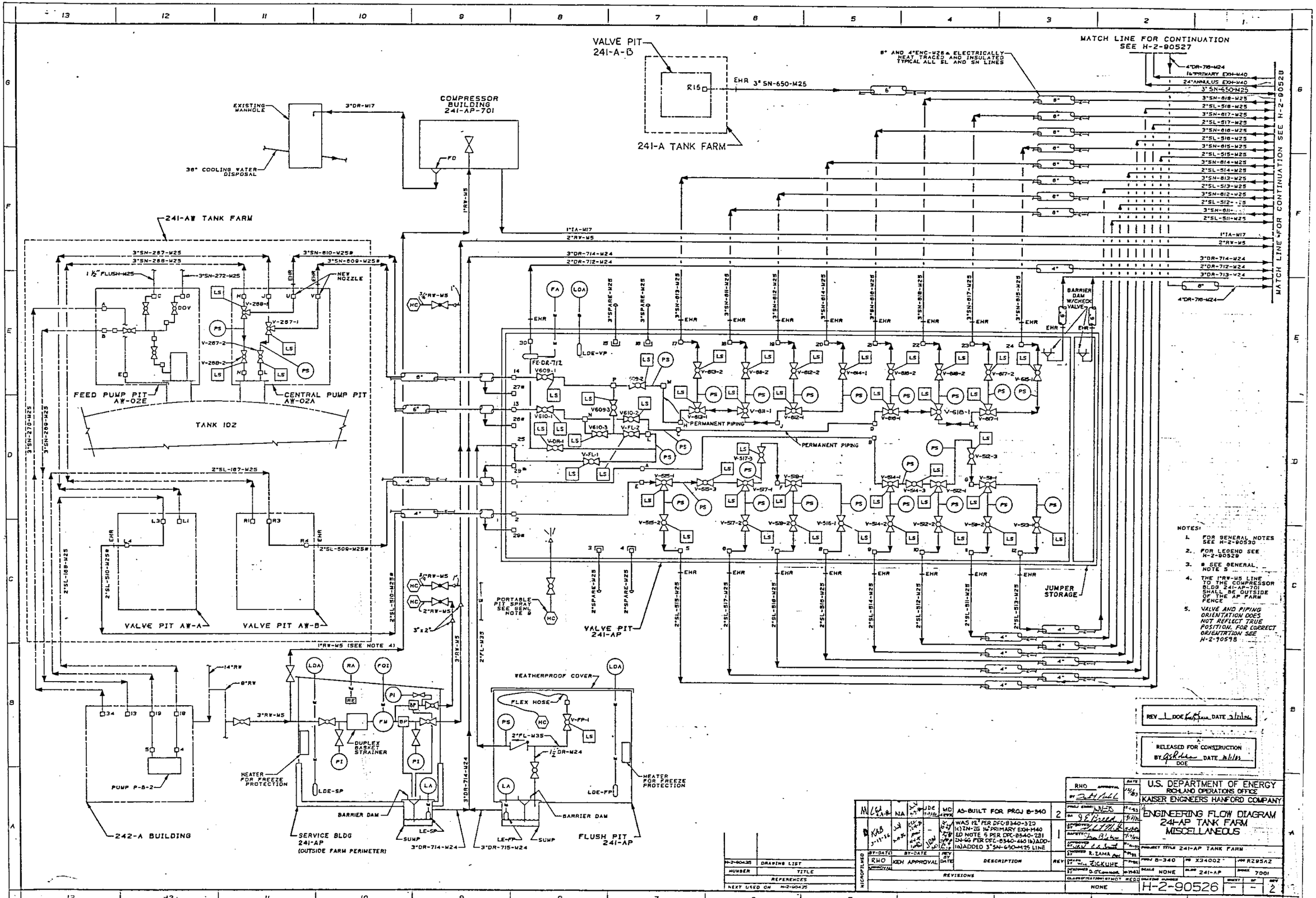
VALVE PIT 241-A-B
241-A TANK FARM
COMPRESSOR BUILDING 241-AP-701
EXISTING MANHOLE
36" COOLING WATER DISPOSAL
241-AW TANK FARM
FEED PUMP PIT AW-02E
CENTRAL PUMP PIT AW-02A
TANK 102
VALVE PIT AW-A
VALVE PIT AW-B
PUMP P-8-2
242-A BUILDING
SERVICE BLDG 241-AP (OUTSIDE FARM PERIMETER)
HEATER FOR FREEZE PROTECTION
DUPLEX BASKET STRAINER
BARRIER DAM
SUMP
PORTABLE PIT SPRAY SEE GENL NOTE 8
VALVE PIT 241-AP
WEATHERPROOF COVER
FLEX HOSE
FLUSH PIT 241-AP
PERMANENT PIPING
BARRIER DAM W/CHECK VALVE
JUMPER STORAGE
MATCH LINE FOR CONTINUATION SEE H-2-90527
MATCH LINE FOR CONTINUATION SEE H-2-90528
NOTES:
1. FOR GENERAL NOTES SEE H-2-90530
2. FOR LEGEND SEE H-2-90528
3. # SEE GENERAL NOTE 5
4. THE 1"RW-M5 LINE TO THE COMPRESSOR BLDG 241-AP-701 SHALL BE OUTSIDE OF THE AP FARM FENCE
5. VALVE AND PIPING ORIENTATION DOES NOT REFLECT TRUE POSITION. FOR CORRECT ORIENTATION SEE H-2-90598
RELEASED FOR CONSTRUCTION
U.S. DEPARTMENT OF ENERGY
RICHLAND OPERATIONS OFFICE
KAISER ENGINEERS HANFORD COMPANY
ENGINEERING FLOW DIAGRAM
241-AP TANK FARM
MISCELLANEOUS
AS-BUILT FOR PROJ B-340
REVISIONS
DESCRIPTION
NONE
H-2-90526

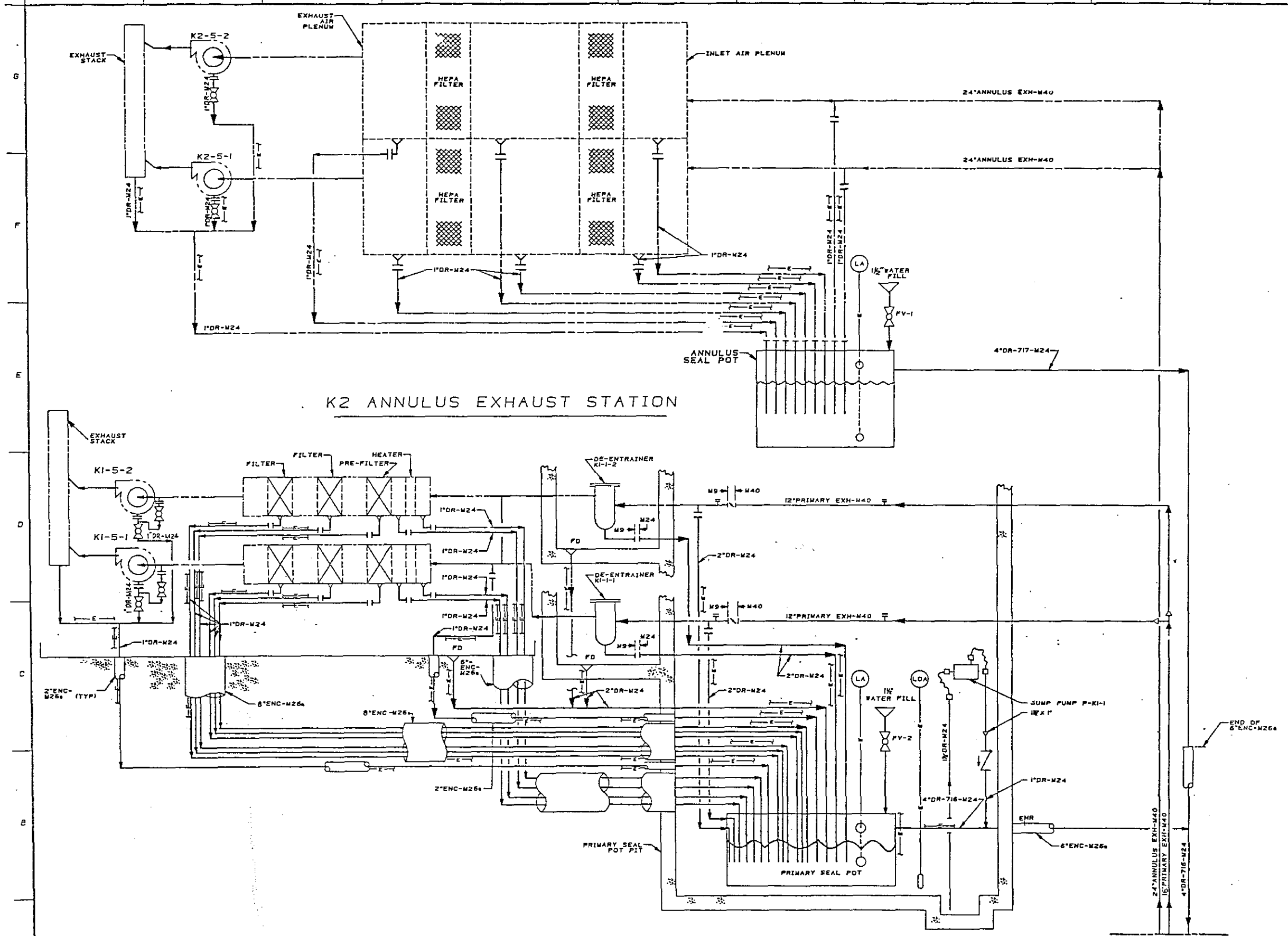

NOTES:

1. FOR GENERAL NOTES SEE H-2-90530
2. FOR LEGEND SEE H-2-90529
3. THIS DRAWING SHOWS THE DRAIN LINES FOR THE HVAC SYSTEM; FOR COMPONENTS IN PHANTOM SEE DWG H-2-90514

RELEASED FOR CONSTRUCTION
BY. [illegible] DATE 12/1/83
DOE

M	LEH 9-9-86	NA	LW 12-2-86	JDE 7-1-86	MD 7-1-86	AS-BUILT FOR PROJ B-340 132 3N B4 B340-281 2N F12 4G12 4) DFC-B340-B340-320 2N B4 C4 (OR C) DFC-B340-339 2N C D15 D) DFC-	1
MICROFILMED	BY-DATE	BY-DATE		REV BY DATE		DESCRIPTION	REV
	ROCKWELL APPROVAL	KEH APPROVAL				REVISIONS	

H-2-90435	DRAWING LIST
NUMBER	TITLE
REFERENCES	
NEXT USED ON	H-2-90435

RHO APPROVAL 11/1/83

U.S. DEPARTMENT OF ENERGY
RICHLAND OPERATIONS OFFICE
KAISER ENGINEERS HANFORD COMPANY

ENGINEERING FLOW DIAGRAM
DRAIN LINES
241-AP TANK FARM

PROJECT TITLE	241-AP TANK FARM
PROJ	B-340
PO	X34002
JOB	R295A2
SCALE	NONE
PLANT	241-AP
SHEET	7001
CLASSIFICATION BY DOT REG	NONE
DRAWING NUMBER	H-2-90527
SHEET	-
OF	-
REV	1

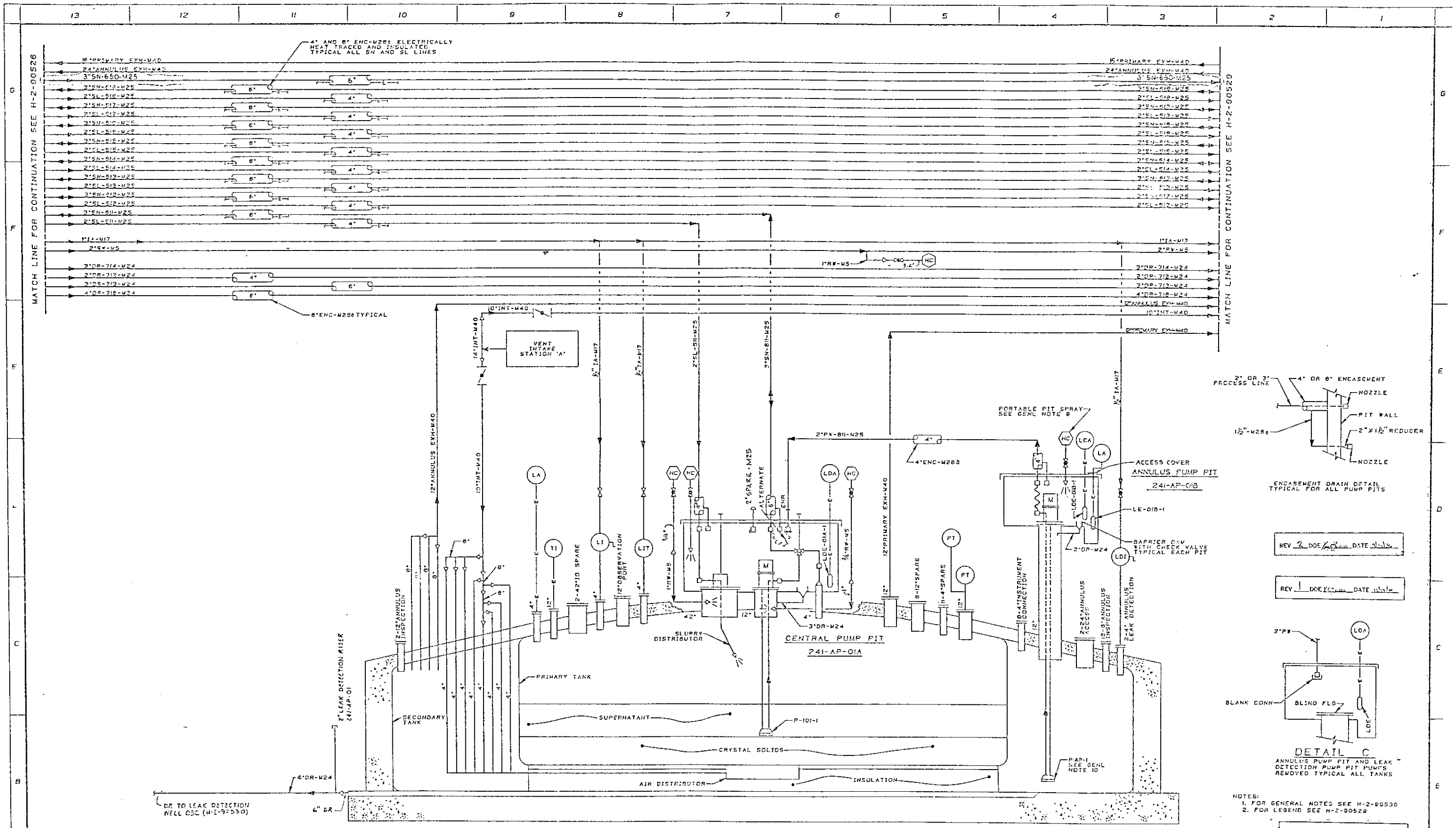

NOTES:
1. FOR GENERAL NOTES SEE H-2-90530
2. FOR LEGEND SEE H-2-90529

REV 2 DOE DATE

REV 1 DOE DATE

RELEASED FOR CONSTRUCTION BY DOE DATE

REVISIONS								
M		NA				AS-BUILT FOR PROJ B-340	5
M						(1) PER CPC-B340-320 (2) SS 1" PRIMARY EXH-M40 WAS 1" SN-25 (3) PER CPC-B340-340 (4) SN-65 (5) ADD 1" SN-650-M25 LINE	2
M						2 B W LEAK DET WELL OSC DPC-B340-316 ADDED 2" LEAK DET RISER & DPC 10 DPC-B340-219 2 B,C,D,E,H O (1) BI REMOVED LEAK DET WELL OSC REMOVED OIL SUBSYSTEM-B340-115	1

MISCELLANEOUS	BY-PARTS	BY-DATE	REV CK	DESCRIPTION	REV
	FMO	KEH APPROVAL	DATE		

H-2-90453 DRAWING LIST

NUMBER	TITLE
	DRAWINGS
NEXT USE	

RHO APPROVAL DATE

PROJ ENGR

DR

APPROVED

APPROVED

SAFETY

APPROVED

CHECKED R. TANG

DRAWN BY

DESIGNED

DESIGNED

NONE

U.S. DEPARTMENT OF ENERGY
RICHLAND OPERATIONS OFFICE
KAISER ENGINEERS HANFORD COMPANY

ENGINEERING FLOW DIAGRAM
241-AP-101 TANK

PROJECT TITLE 241-AP TANK FARM

PROJ	PO	JOB
B-340	X34005	B295A2

SCALE	SYSTEM	INDEX
NONE	241-AP	7001

DRAWING NUMBER H-2-90528 SHEET — OF — REV 3

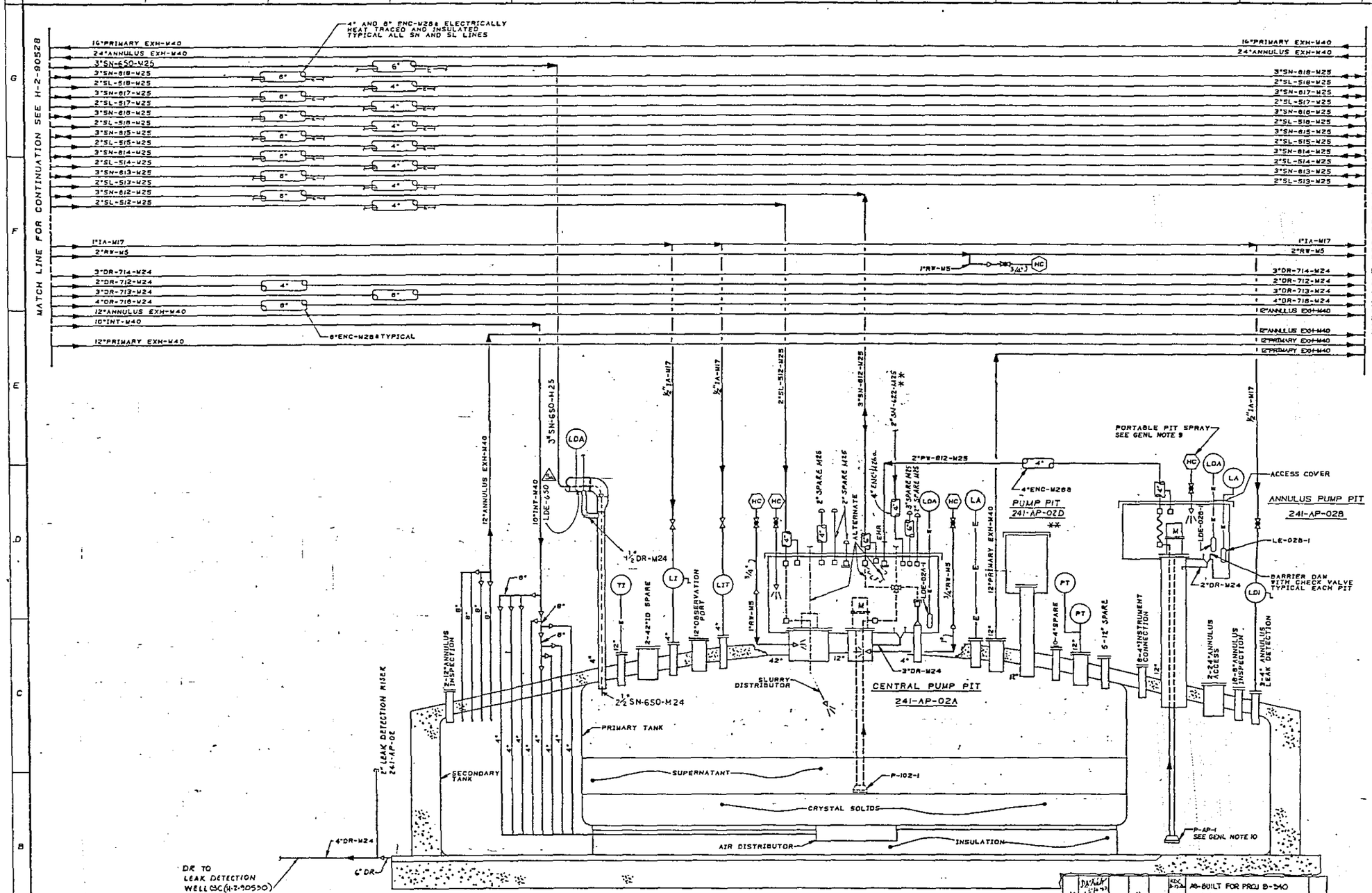

LEGEND

PIPING

- DR — DRAIN
- EHR — ENCASEMENT HYDROTEST RISER
- ENC — ENCASEMENT
- EXH — EXHAUST
- FL — FLUSH
- IA — INSTRUMENT AIR
- INT — INTAKE
- NC — NORMALLY CLOSED
- P — PUMP
- PW — PROCESS WASTE
- RW — RAW WATER
- V — VENT
- SL — SLURRY
- SN — SUPERNATANT
- ELECTRICAL
- EXISTING
- NEW
- BUTTERFLY VALVE
- GATE VALVE
- GLOBE VALVE
- BALL VALVE
- 3-WAY BALL VALVE
- HC — HOSE CONNECTION
- FD — FLOOR DRAIN
- BP — BACKFLOW PREVENTER
- S — SOLENOID OPERATED VALVE (SOV)
- INSTRUMENT
- CHECK VALVE
- REDUCER
- WELD CAP
- SCREWED CAP
- SPRAY NOZZLE
- REMOTE CONNECTOR/NOZZLE
- BLANK CONNECTOR
- EXTENTION HANDLE
- BLIND FLANGE
- ISOKINETIC SAMPLING AND FLOW MEASUREMENT
- ELEMENT
- FLANGE CONNECTION
- RELIEF VALVE

ELECTRICAL & INSTRUMENTATION

- M — MOTOR
- LS — LIMIT SWITCH
- FQI — FLOW TOTALIZER INDICATOR
- LI — LEVEL INDICATOR-MANUAL
- LA — LEVEL ALARM
- LE — LEVEL ELEMENT
- LDA — LEAK DETECTOR ALARM
- LDE — LEAK DETECTOR ELEMENT
- LDI — LEAK DETECTOR INDICATOR
- LIT — LEVEL INDICATOR TRANSMITTER
- FM — FLOW METER
- PI — PRESSURE INDICATOR
- PT — PRESSURE TRANSMITTER
- PS — PRESSURE SWITCH
- RA — RADIATION ALARM
- RE — RADIATION ELEMENT
- SBT — SPECIFIC GRAVITY TRANSMITTER
- TE — TEMPERATURE ELEMENT
- TI — TEMPERATURE INDICATOR
- WFT — WEIGHT FACTOR TRANSMITTER
- FA — FLOW ALARM
- FE — FLOW ELEMENT

NOTES:
1. FOR GENERAL NOTES SEE H-2-90530

RELEASED FOR CONSTRUCTION BY DSRichards DATE 12/1/93 DOE

** NOTE — FOR PIPING & PUMP PIT D2D SEE DWG H-2-76471

TANK 241-AP-102

REV 2 DOE DATE 3/10/94

REV 1 DOE DATE 11/10/93

H-2-80435	DRAWING LIST
NUMBER	TITLE
REFERENCES	
NEXT USED ON H-2-80435	

REV	BY-DATE	BY-DATE	REV BY DATE	DESCRIPTION
3	MD	NA		AS-BUILT FOR PROJ B-340 a) DFC B-340-4094F Z D9
2				WAS 12" PER DFC-B340-320 b) Z24-13 & Z 3G 16"PRIMARY EXH-M40 Z24-16 DFC-B340-460 c) ADDED 2" SN-650-M25 LINE
1				03C DFC-B340-Z19 Z B11 RISER & DR TO LEAK DET WELL WELL 02C & ADDED 2" LEAK DET Z17 Z C5 b) REMOVED LEAK DET SPARE WAS 6-12" SPARE DFC-B340-& 2" SN 6Z2-M25 Z D5 & 6 d) 5-12" Z12 Z D4 & Z C) ADDED PUMP PIT D2D EQUIP IN PUMP PIT D2A DFC-B340 & (4) 2" SPARES & ALTERNATE TO B340-162 Z D7 b) ADDED (1) 3" SPARE a) REMOVED OIL LUBE SYS DFC-

MICROFILMED — RHO APPROVAL — KEN APPROVAL — REVISIONS

RHO APPROVAL — DATE 4/1/93

U.S. DEPARTMENT OF ENERGY
RICHLAND OPERATIONS OFFICE
KAISER ENGINEERS HANFORD COMPANY

ENGINEERING FLOW DIAGRAM
241-AP-102 TANK

PROJECT TITLE 241-AP TANK FARM

DRAWN Z. Zickuhr — PROJ B-340 — JOB X34002 — JOB R295A2
DESIGNED D. DeCoursey — SCALE NONE — PLAN 241-AP — SHEET 7001
CLASSIFICATION BY NOT REQD — DRAWING NUMBER H-2-90529 — SHEET — OF — REV 3

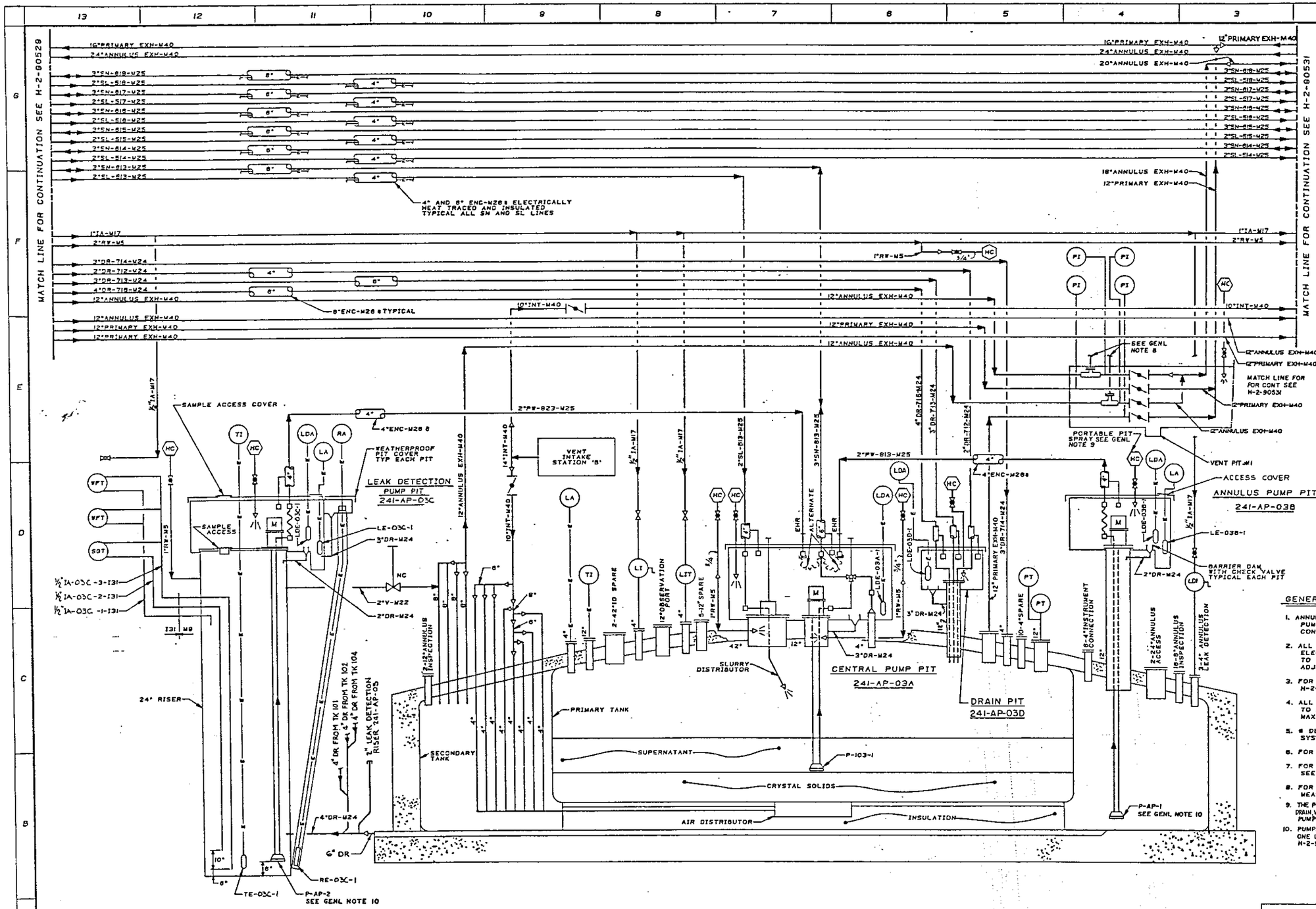

REV 1 DOE X-[illegible] DATE [illegible]

GENERAL NOTES

1. ANNULUS, LEAK DETECTION AND SUPERNATANT PUMPS WILL BE FURNISHED BY OPERATING CONTRACTOR
2. ALL SN AND SL LINE ENCASEMENTS ARE TO BE ELECTRICALLY HEAT TRACED AND INSULATED TO MAINTAIN A TEMPERATURE UP TO 200 F.(NO FLOW) ADJUSTABLE CONTROL 120 F - 200 F
3. FOR SUPERNATANT FLUSH LINE INTERLOCK SEE H-2-90488, SH 1
4. ALL SUPERNATANT AND SLURRY LINES ARE SUBJECT TO 100# SATURATED STEAM FLUSH FOR ONE HOUR MAXIMUM
5. # DENOTES ENCASEMENT WITH LEAK DETECTION SYSTEM PER DETAIL B ON H-2-90532
6. FOR LEGEND SEE H-2-90529
7. FOR INSTRUMENTATION; LIT, LA, TI, LI, ETC SEE H-2-90487
8. FOR RADIATION MONITORING AND FLOW MEASUREMENT, SEE H-2-90488, SH 4
9. THE PORTABLE PIT SPRAY WILL BE USED IN THE VENT, DRAIN VALVE, CENTRAL PUMP, ANNULUS PUMP & LEAK DETECTION PUMP PITS. TOTAL TWO UNITS FOR ENTIRE FARM.
10. PUMPS P-AP-1 & P-AP-2 WILL BE USED AS REQUIRED. TOTAL ONE UNIT OF EACH PUMP FOR ENTIRE FARM. SEE DETAIL C, H-2-90528 FOR PIT WHEN PUMP IS NOT INSTALLED.

RELEASED FOR CONSTRUCTION
BY [signature] DATE [illegible]
DOE

M	LEH 9-4-86	NA	JDC 1-31-86	AS-BUILT FOR PROJ B-340 DFC B-340-320 Z G3,4,13	2	
M	[illegible]	[illegible]	[illegible]	DFC-B340-219 & 2" LEAK DET RISER Z 811 PER DR LINES FR TK101, TK102, TK104, DFC-B340-162, Z E1 b) ADDED a) REMOVED OIL LUBE SYS PER	1	
MICROFILMED	BY-DATE	BY-DATE		DESCRIPTION	REV	
	RHO APPROVAL	KEH APPROVAL		REVISIONS		

H-2-90435	DRAWING LIST
NUMBER	TITLE
REFERENCES	
NEXT USED ON	H-2-90435

RHO APPROVAL		DATE
PROJ ENGR	[signature]	2-1-83
RA	[signature]	7/11/83
APPROVED BY	[signature]	11/11/83
SAFETY	[signature]	11/11/83
APPROVED BY	[signature]	11-11-83
CHECKED BY	R. ZAMA	11-11-83
DRAWN BY	[signature]	11-11-83
DESIGNER	D. O'CONNOR	10-21-83
CLASSIFICATION	BY NOT REQD	
NONE		

U.S. DEPARTMENT OF ENERGY
RICHLAND OPERATIONS OFFICE
KAISER ENGINEERS HANFORD COMPANY

ENGINEERING FLOW DIAGRAM
241-AP-103 TANK

PROJECT TITLE: 241-AP TANK FARM

PROJ	DWG	JOB	
B-340	X34002	R295A2	
SCALE NONE	BLDG 241-AP	INDEX 7001	
DRAWING NUMBER H-2-90530	SHEET —	OF —	REV 2

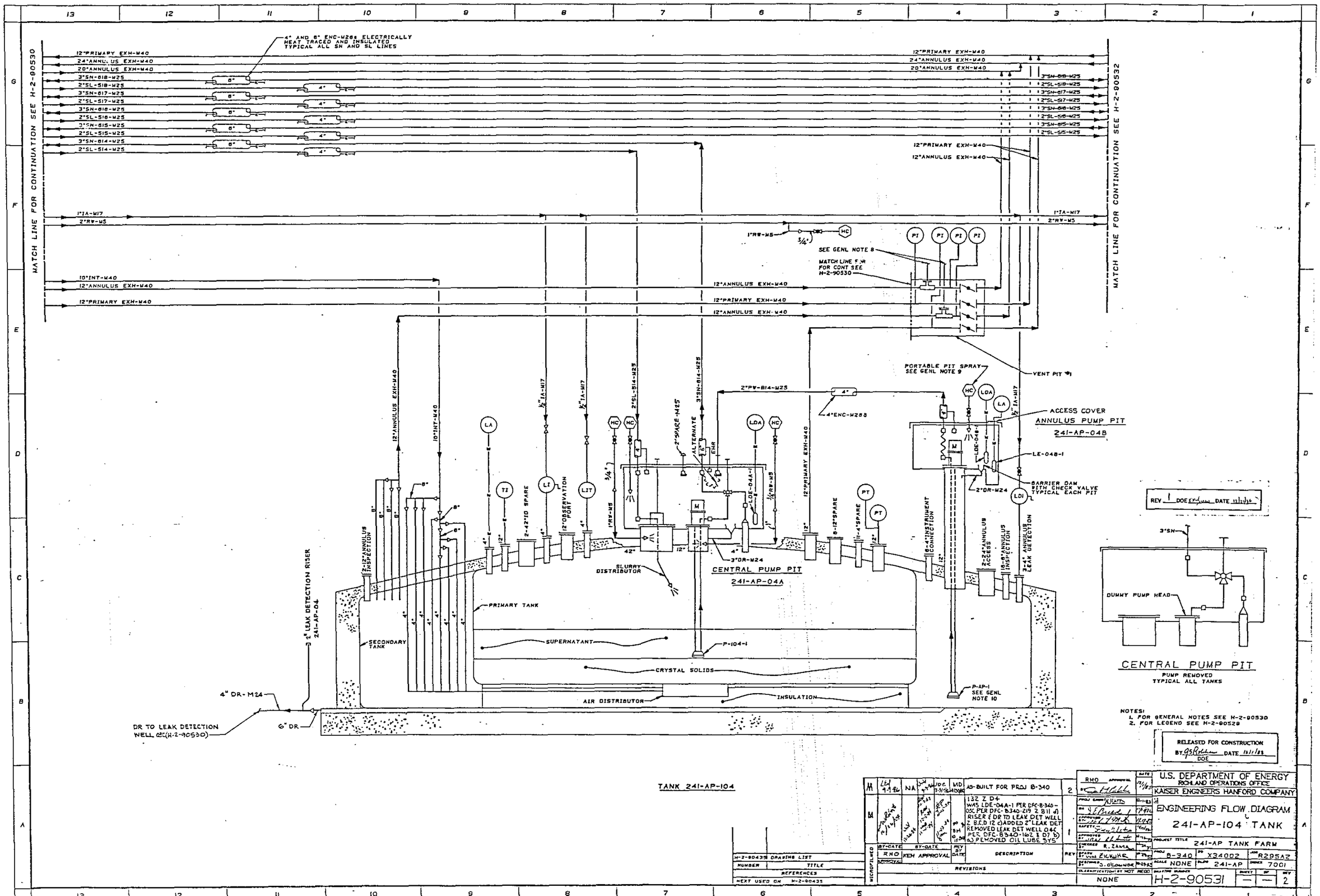

MATCH LINE FOR CONTINUATION SEE H-2-90530
MATCH LINE FOR CONTINUATION SEE H-2-90532
4" AND 6" ENC-M26a ELECTRICALLY HEAT TRACED AND INSULATED TYPICAL ALL SN AND SL LINES
12"PRIMARY EXH-M40
24"ANNULUS EXH-M40
20"ANNULUS EXH-M40
3"SN-618-M25
2"SL-518-M25
3"SN-617-M25
2"SL-517-M25
3"SN-616-M25
2"SL-516-M25
3"SN-615-M25
2"SL-515-M25
3"SN-614-M25
2"SL-514-M25
1"IA-M17
2"RW-M5
10"INT-M40
12"ANNULUS EXH-M40
SEE GENL NOTE 8
MATCH LINE FOR FOR CONT SEE H-2-90530
PORTABLE PIT SPRAY SEE GENL NOTE 9
VENT PIT #1
ACCESS COVER
ANNULUS PUMP PIT
241-AP-04B
LE-048-1
BARRIER DAM WITH CHECK VALVE TYPICAL EACH PIT
2"DR-M24
2"PW-814-M25
4"ENC-M26B
2"SPARE-M25
ALTERNATE
EHR
LDE-04A-1
3"DR-M24
CENTRAL PUMP PIT
241-AP-04A
SLURRY DISTRIBUTOR
PRIMARY TANK
SECONDARY TANK
SUPERNATANT
P-104-1
CRYSTAL SOLIDS
AIR DISTRIBUTOR
INSULATION
P-AP-1 SEE GENL NOTE 10
2-12"ANNULUS INSPECTION
2-42"ID SPARE
12"OBSERVATION PORT
8-12"SPARE
11-4"SPARE
6-4"INSTRUMENT CONNECTION
2-24"ANNULUS ACCESS
18-6"ANNULUS INSPECTION
3-4" ANNULUS LEAK DETECTION
3 2" LEAK DETECTION RISER 241-AP-04
4" DR-M24
DR TO LEAK DETECTION WELL 03C(H-2-90530)
6" DR
TANK 241-AP-104
REV 1 DOE DATE
3"SN
DUMMY PUMP HEAD
CENTRAL PUMP PIT
PUMP REMOVED TYPICAL ALL TANKS
NOTES:
1. FOR GENERAL NOTES SEE H-2-90530
2. FOR LEGEND SEE H-2-90529
RELEASED FOR CONSTRUCTION
BY DOE DATE
H-2-90435 DRAWING LIST
NUMBER TITLE
REFERENCES
NEXT USED ON H-2-90435
M LEH 9-9-86 NA DOE 7-31-86 MD AS-BUILT FOR PROJ B-340 2
M 132 Z D4 WAS LDE-04A-1 PER DFC-B-340-03C PER DFC-B340-219 Z B11 d) RISER & DR TO LEAK DET WELL Z B.C.D 12 c) ADDED 2" LEAK DET REMOVED LEAK DET WELL 04C PER DFC-B340-162 Z D7 b) a) REMOVED OIL LUBE SYS 1
BY-DATE RHO APPROVAL
BY-DATE KEH APPROVAL
REV BY DATE
DESCRIPTION
REV
REVISIONS
RHO APPROVAL
DATE
PROJ ENGR
DR
APPROVED
SAFETY
APPROVED
CHECKED R. ZAMA
DRAWN ZICKUHR
DESIGNED S. O'CONNOR
CLASSIFICATION BY HOT REQD
NONE
U.S. DEPARTMENT OF ENERGY
RICHLAND OPERATIONS OFFICE
KAISER ENGINEERS HANFORD COMPANY
ENGINEERING FLOW DIAGRAM
241-AP-104 TANK
PROJECT TITLE 241-AP TANK FARM
PROJ B-340
ID X34002
JOB R295A2
SCALE NONE
BLDG 241-AP
INDEX 7001
DRAWING NUMBER H-2-90531
SHEET — OF — REV 2

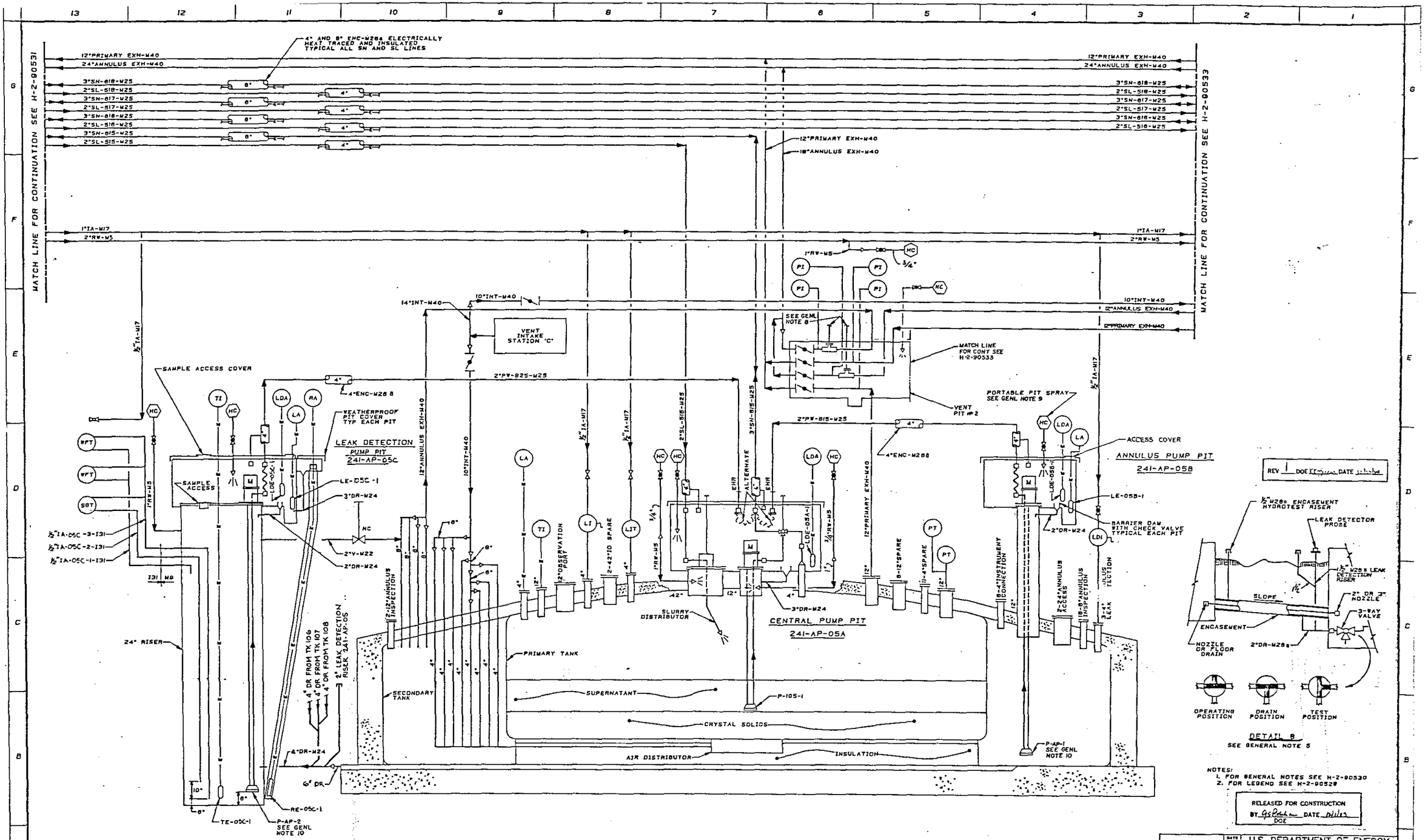

NOTES:
1. FOR GENERAL NOTES SEE H-2-90530
2. FOR LEGEND SEE H-2-90529

RELEASED FOR CONSTRUCTION
BY DOE DATE

REV	BY-DATE	BY-DATE	REV BY DATE	DESCRIPTION	REV
M	9-9-86	NA		AS-BUILT FOR PROJ B-340	2
M				DET RISER Z B11 PER DFC-8340-FR TK106, TK107, TK108 & 2" LEAK -162 Z D7 c) ADDED DR LINES OIL LUBE SYS PER DFC-8340-8340-152 Z D4 b) REMOVED 4) WAS LDE-05A-1 PER DFC	1

MICROFILMED — REVISIONS

RHO APPROVAL	
KEH APPROVAL	

H-2-90435 DRAWING LIST

NUMBER	TITLE
REFERENCES	
NEXT USED ON H-2-90435	

U.S. DEPARTMENT OF ENERGY
RICHLAND OPERATIONS OFFICE
KAISER ENGINEERS HANFORD COMPANY

ENGINEERING FLOW DIAGRAM
241-AP-105 TANK

PROJECT TITLE: 241-AP TANK FARM
PROJ: B-340 | WO: X34002 | JOB: R295A2
SCALE: NONE | BLDG: 241-AP | INDEX: 7001
CLASSIFICATION BY NOT REQD: NONE
DRAWING NUMBER: H-2-90532 | SHEET 1 OF 1 | REV 2

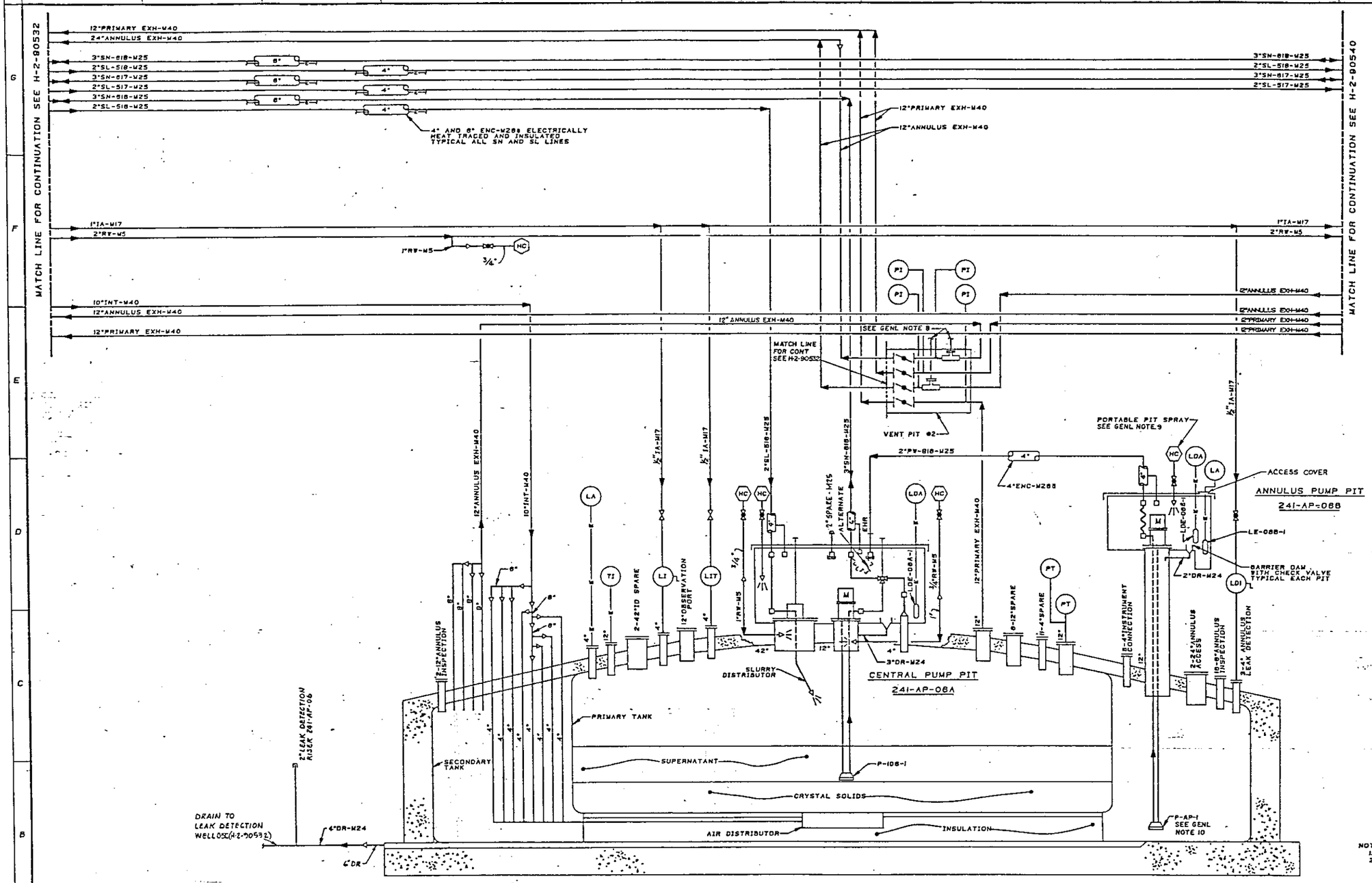

TANK 241-AP-106

REV 1 DOE DATE 11/16/94

NOTES:
1. FOR GENERAL NOTES SEE H-2-90530
2. FOR LEGEND SEE H-2-90529

RELEASED FOR CONSTRUCTION
BY DOE DATE 11/16/93

REV	BY	DATE	BY	DATE	REV BY DATE	DESCRIPTION	REV
1A	LH 9-9-94	N/A	LW 11-30-94	UDC 7-3-96	PROJ 4/29/96 ENG 4/29/96	AS-BUILT FOR PROJ B-340	2
1	[illegible] 12/14/94		LW 11-30-94	[illegible] 11-4-94	[illegible] 11-4-94	DFC-B340-219 Z B.11 (DR TO LEAK DET WELL 05C PER 2.12 a) ADDED 2" LEAK DET RISER LEAK DET WELL 06C Z B.C.D 11 DFC-B340-162 Z 01 b) REMOVED REMOVED OIL LUBE SYS PER LUBE SYS/DET D Z B.CD 162 c) B340-132 Z D4 b) REMOVED OIL c) WAS LDE-06A-1 PER DFC-	1

MICROFILMED: BY-DATE RHO; BY-DATE KEH APPROVAL; APPROVAL

REVISIONS

H-2-90435 DRAWING LIST	
NUMBER	TITLE
REFERENCES	
NEXT USED ON H-2-90435	

RHO APPROVAL — DATE 12/16/93

U.S. DEPARTMENT OF ENERGY
RICHLAND OPERATIONS OFFICE
KAISER ENGINEERS HANFORD COMPANY

ENGINEERING FLOW DIAGRAM
241-AP-106 TANK

PROJECT TITLE: 241-AP TANK FARM

PROJ	B-340	JOB	X24002
SCALE	NONE	DRAWING	241-AP
			7001

CLASSIFICATION (IF NOT PROD): NONE

DRAWING NUMBER: H-2-90533 — SHEET — REV 2

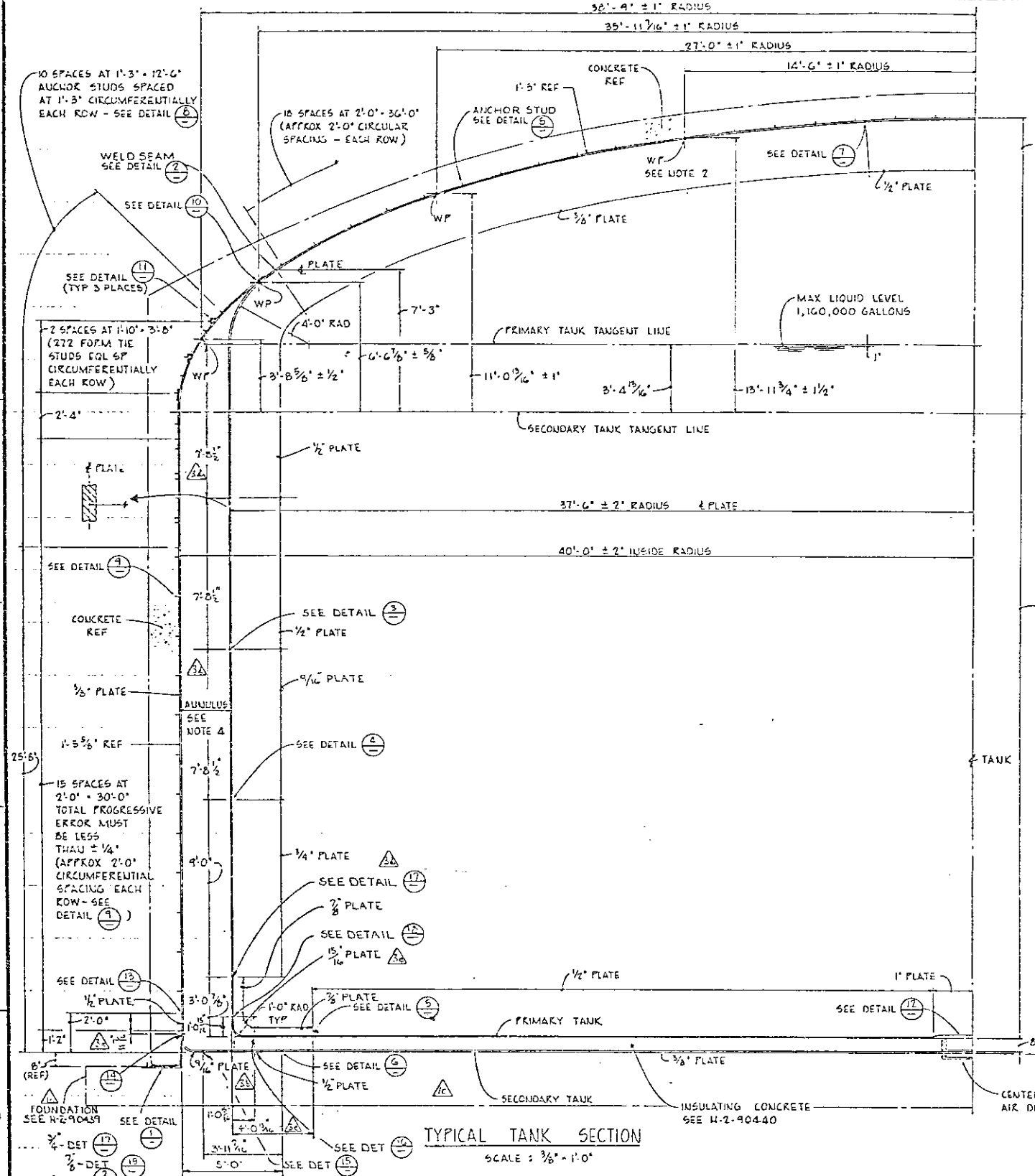

TYPICAL TANK SECTION
SCALE : 3/8" = 1'-0"

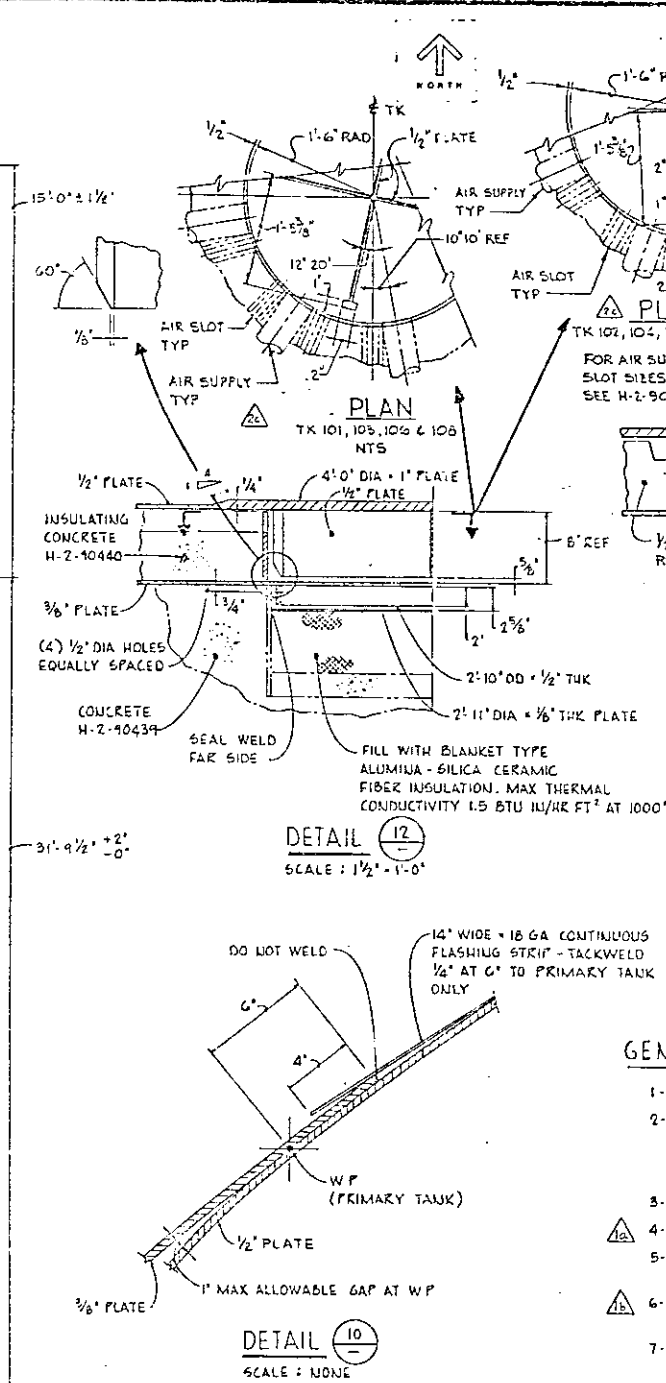

DETAIL 12
SCALE : 1 1/2" = 1'-0"

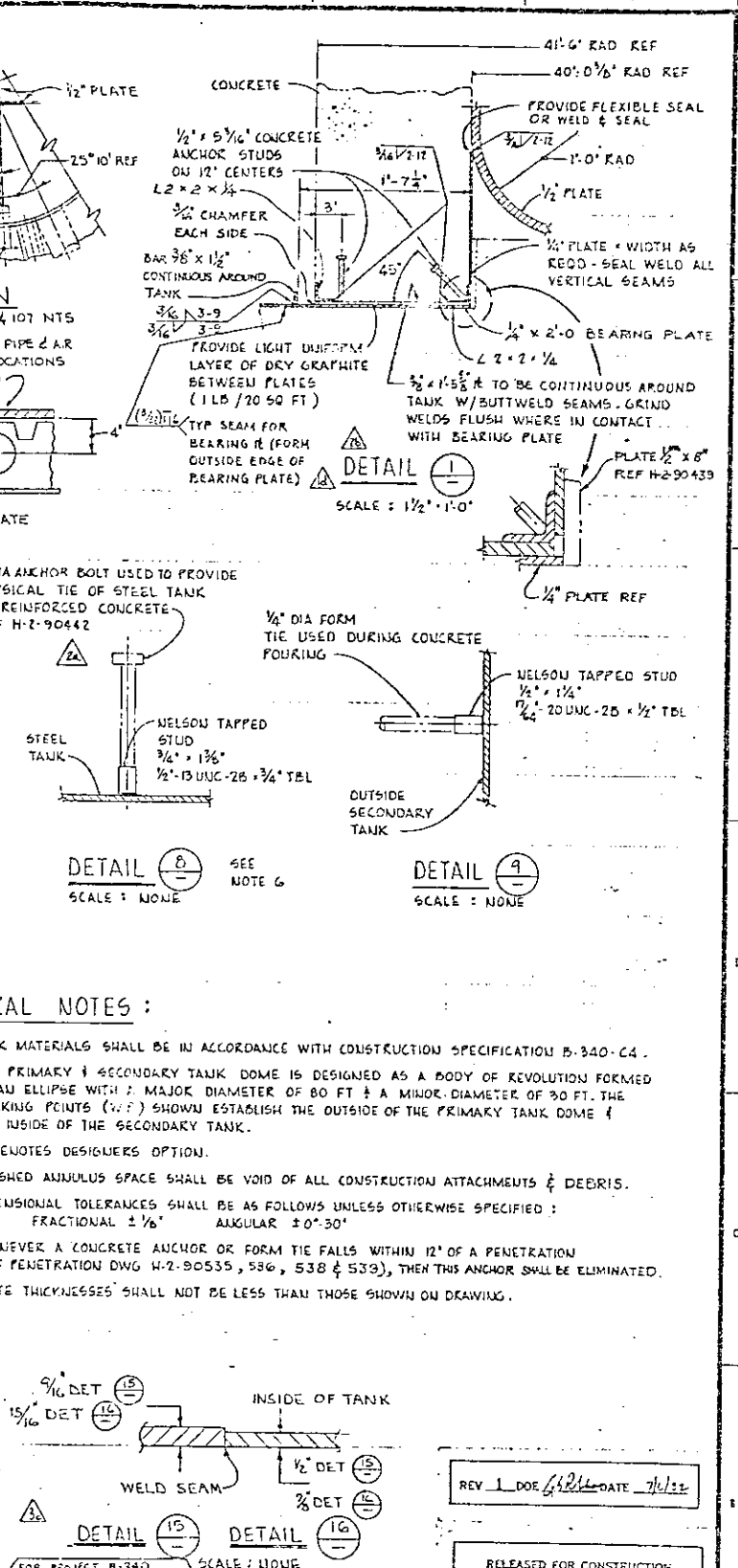

DETAIL 1
SCALE : 1 1/2" = 1'-0"

DETAIL 8
SCALE : NONE
SEE NOTE 6

DETAIL 9
SCALE : NONE

DETAIL 10
SCALE : NONE

GENERAL NOTES :

1. TANK MATERIALS SHALL BE IN ACCORDANCE WITH CONSTRUCTION SPECIFICATION B-340-C4.
2. THE PRIMARY & SECONDARY TANK DOME IS DESIGNED AS A BODY OF REVOLUTION FORMED BY AN ELLIPSE WITH A MAJOR DIAMETER OF 80 FT & A MINOR DIAMETER OF 30 FT. THE WORKING POINTS (WP) SHOWN ESTABLISH THE OUTSIDE OF THE PRIMARY TANK DOME & THE INSIDE OF THE SECONDARY TANK.
3. * DENOTES DESIGNERS OPTION.
4. FINISHED ANNULUS SPACE SHALL BE VOID OF ALL CONSTRUCTION ATTACHMENTS & DEBRIS.
5. DIMENSIONAL TOLERANCES SHALL BE AS FOLLOWS UNLESS OTHERWISE SPECIFIED : FRACTIONAL ± 1/8" ANGULAR ± 0°-30'
6. WHENEVER A CONCRETE ANCHOR OR FORM TIE FALLS WITHIN 12" OF A PENETRATION (REF PENETRATION DWG H-2-90535, 536, 538 & 539), THEN THIS ANCHOR SHALL BE ELIMINATED.
7. PLATE THICKNESSES SHALL NOT BE LESS THAN THOSE SHOWN ON DRAWING.

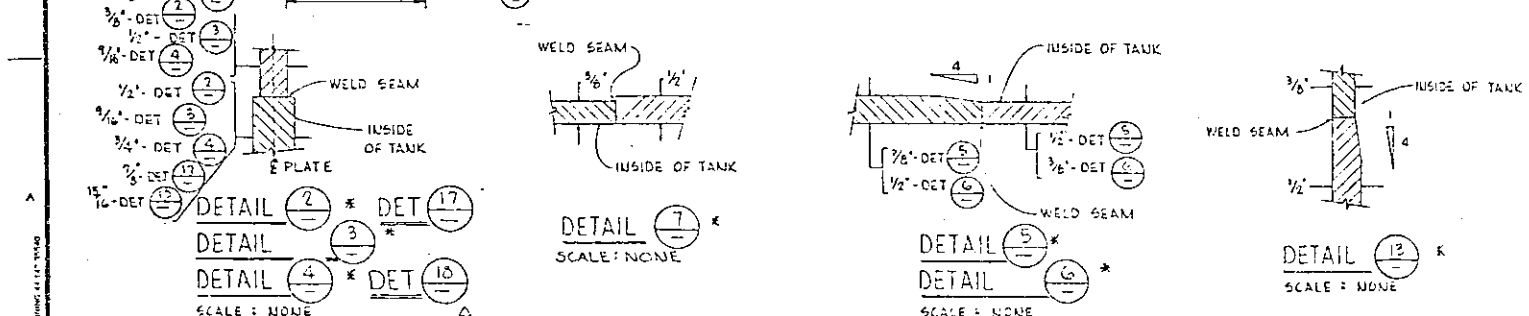

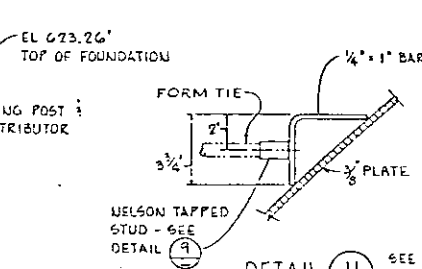

DETAIL 11
SCALE : NONE
SEE NOTE 6

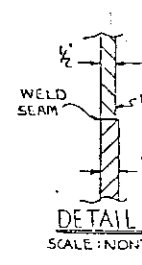

DETAIL 14
SCALE : NONE

DETAIL 15 DETAIL 16
SCALE : NONE

H-2-90539	TANK PENETRATIONS
H-2-90538	TANK PENETRATIONS
H-2-90535	TANK PENETRATIONS
H-2-90537	RISER DETAILS
H-2-90536	TANK PENETRATIONS
H-2-90439	STRUCTURAL CONCRETE
H-2-90440	INSULATING CONCRETE
H-2-90435	DRAWING LIST
NUMBER	TITLE

REFERENCES
NEXT USED ON H-2-90435

REV	DESCRIPTION	BY	DATE	CHK	APPR
3	FOR PROJECT B-340 DT B340 1010-H310 65-0027 1) ADDED DET (3) 18-CNG DET 3 & 7 ALA TT 9/16" 17, 2) 0.1/2" WAS 4'-0 3/4" 20 ST 3) ADDED (3) 11-0 13/16" DIM. DET 16 11 5) DIM. ADDED 7/16" & DET (3) 7/16" 11-0 13/16" 14, 15, 16 2) 18 A, 4) ADDED (3) 7'-0 1/2" DIM. DET 13, 2) DET 4) ADDED DET 2) 18 B 5) ADDED 3/16" & 3'-0 7/16" 6) ADDED 10" & 11 1/16" DIM. DET M.	RHO	7-19-84	KEH	
2	AS-BUILT FOR PROJ B-340 DFC C-60-102 & F4 & F6 B-340-199 & E4, E2 & 3 C) 4) DFC B-340-15 & E3 & 4 5) DFC	NA	1-18-85	UNC	
1	1) REMOVE DETAIL 1, ON F2 & B12 2) CNG FOUNDATION OUTLINE ON B13 3) ADDED CNG NGS, ON AG, C4 4) NOTE 4, ADDED "DEBRIS" ON C4			KEH	

REVISIONS
COMMENT REVIEW

D. FECK	7/1/82	PROJECT TITLE 241-AP TANK FARM
D. OKONUK		
SCALE SHOWN	PROJ NO. 241-AP	0402
NONE	H-2-90534	REV 3

REV 1 DOE DATE 7/1/82

RELEASED FOR CONSTRUCTION BY DOE DATE 12/3/81

BRAUN JOB NO R295A1
U. S. Department of Energy
Richland Operations Office
BRAUN HANFORD CO

TANK CROSS SECTION 241-AP TANKS

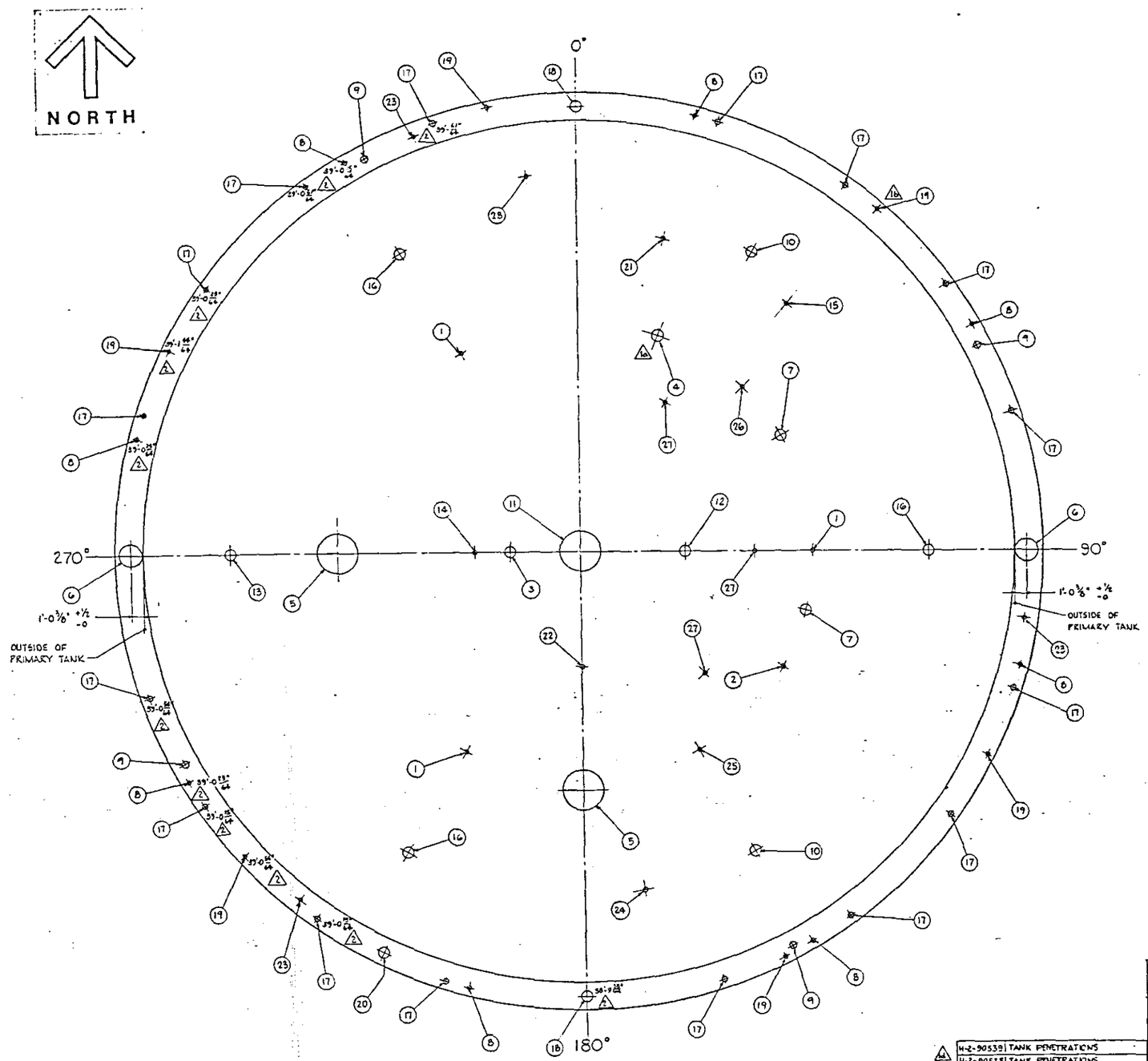

PLAN

TANK 105 - 107 (1c)

SCALE : 1/4" = 1'-0"

DOME PENETRATION SCHEDULE

	RISER NO	QTY	SIZE	FUNCTION (REFERENCE ONLY)	REFERENCE DETAIL H-2-90537	ANGLE (FROM 0°)	RADIUS
	1	3	4" SCHED 40	SLUDGE MEASUREMENT	I	30°, 210°, 330°	20'-0"
	2	1	4" SCHED 40	LIQUID LEVEL (LIT)	I	120°	20'-0"
	3	1	12" SCHED 40	SUPERNATANT PUMP, PUMP PIT DRAIN	V	270°	6'-0"
(1a)	4	1	12" SCHED 40	THERMOCOUPLE PROBE	II (1a)	20°	20'-0"
	5	2	42" I.D. + 1/2" WALL	CONSTRUCTION OPENING	VII	180°, 270°	20'-9"
	6	2	24" SCHED 20	ANNULUS ACCESS	IX	90°, 270°	38'-6 3/8" REF
	7	2	12" SCHED 40	PRIMARY EXHAUST OR SPARE	II	60°, 105°	20'-0"
	8	8	4" SCHED 40	AIR INLET TO TANK INSULATION	XIV (2)	15°, 60°, 105°, 150°, 195°, 240°, 285°, 330°	39'-3"
	9	4	8" SCHED 40	ANNULUS EXHAUST	X	62°-30', 152°-30', 242°-30', 332°-30'	38'-9"
	10	2	12" SCHED 40	SPARE	III	30°, 150°	30'-0"
	11	1	42" I.D. + 1/2" WALL	SLURRY DISTRIBUTOR	VIII	—	—
	12	1	12" SCHED 40	OBSERVATION PORT	V	90°	9'-0"
	13	1	12" SCHED 40	TANK PRESSURE	III	270°	30'-0"
	14	1	4" SCHED 40	SUPERNATANT RETURN	VI	270°	9'-0"
	15	1	4" SCHED 40	SPARE	IV	40°	28'-0"
	16	3	12" SCHED 40	SLUDGE MEASUREMENT	III	90°, 210°, 330°	30'-0"
	17	16	6" SCHED 40	ANNULUS INSPECTION	II (2)	18°, 36°, 54°, 72°, 108°, 126°, 144°, 162°, 198°, 216°, 234°, 252°, 288°, 306°, 324°, 342°	39'-3"
	18	2	12" SCHED 40	ANNULUS INSPECTION	XII (2)	0°, 180°	39'-0"
	19	6	4" SCHED 40	ANNULUS INSTRUMENTATION	XIII (1b) (2)	41°, 117°, 154°, 226°, 297°, 349°	39'-4"
	20	1	12" SCHED 40	ANNULUS PUMP OUT	XII	206°-30'	38'-9"
(1a)	21	1	4" SCHED 40	SPARE	IV	15°	28'-0"
	22	1	4" SCHED 40	SLUDGE MEASUREMENT	VI	180°	10'-0"
	23	3	4" SCHED 40	ANNULUS LEAK DETECTION	XIII	99°, 219°, 339°	38'-9"
(1a)	24	1	4" SCHED 40	SPARE	IV	170°	30'-0"
	25	1	4" SCHED 40	LIQUID LEVEL (HIGH LE)	I	150°	20'-0"
	26	1	4" SCHED 40	LIQUID LEVEL (LI)	I	45°	20'-0"
	27	3	4" SCHED 40	SPARE	I	30°, 90°, 135°	15'-0"
(1a)	28	1	4" SCHED 40	SPARE	I	353°	33'-0"

*NOZZLE LOCATIONS NOT WITHIN ±2" TOLERANCE. ACTUAL RADIUS AS SHOWN ON PLAN FOR TANK 107.

GENERAL NOTES:

1 - ALL DIMENSIONS ARE IN A HORIZONTAL PLANE -

2 - TOLERANCES :
ANGULAR ± 0°-15'
LINEAR ± 1/4" FROM 0 TO 10' RADIUS
± 1/2" FROM 10' TO 20' RADIUS
± 1" FROM 20' TO 30' RADIUS
± 2" FROM 30' TO 40' RADIUS EXCEPT ON RISER NO G (SEE PLAN)

REV 1 DOE DATE 9/6/02

RELEASED FOR CONSTRUCTION BY DATE 11/13/81 DOE

H-2-90539	TANK PENETRATIONS
H-2-90538	TANK PENETRATIONS
H-2-90536	TANK PENETRATIONS
B-340-C21	CONSTRUCTION SPEC
H-2-90534	TANK CROSS SECTION
H-2-90537	RISER DETAILS
H-2-90436	DRAWING LIST
NUMBER	TITLE
REFERENCES	
NEXT USED ON	H-2-90435

REV	DESCRIPTION
2	AS-BUILT FOR PROJ B-340 E2,12,F2,9,10 & 11 SHOWN ON TK 107 & 511,C12 NCR 93 ADDED ACTUAL RADII AS
1	DR ZN 03 a) RISER #28 WAS SERVICE & FL PIT DR ZN E3 f) RISER #24 WAS CENT EXH STA ZN E3 e) RISER #21 WAS VALVE PIT DR d) ADDED DWG NES ZN AG 105 ZN A1 A9 c) TITLE WAS 241-AP-101 103 & b) RISER #19 WAS 49° ZN E1 & F7 REF DET WAS I ZN G2 a) RISER #4 WAS 4" ZN G4 & E8

MICROFILMED

COMMENT REVIEW

RELEASE APPROVAL BY — DATE 2/14/91

PROJ ENGR — DATE 2-26-91

SAFETY — DATE 3-19-91

DESIGN ENGR J.L. NICHOLSON — DATE 2/14/91

CHECKED D. PECK — DATE 2/8/91

DRAWN D. O'CONNOR — DATE 4-7-81

CLASSIFICATION NONE — BY NOT REQUIRED

U. S. DEPARTMENT OF ENERGY
Richland Operations Office
BRAUN HANFORD CO

PLAN
TANK PENETRATIONS
241-AP-105 & 107 (1c)

PROJECT TITLE 241-AP TANK FARM

PROJ B-340 WO 134001 JOB R295A1

SCALE 1/4"=1'-0" BLDG 241-AP PAGES 0407

DRAWING NUMBER H-2-90535 SHEET — REV 2

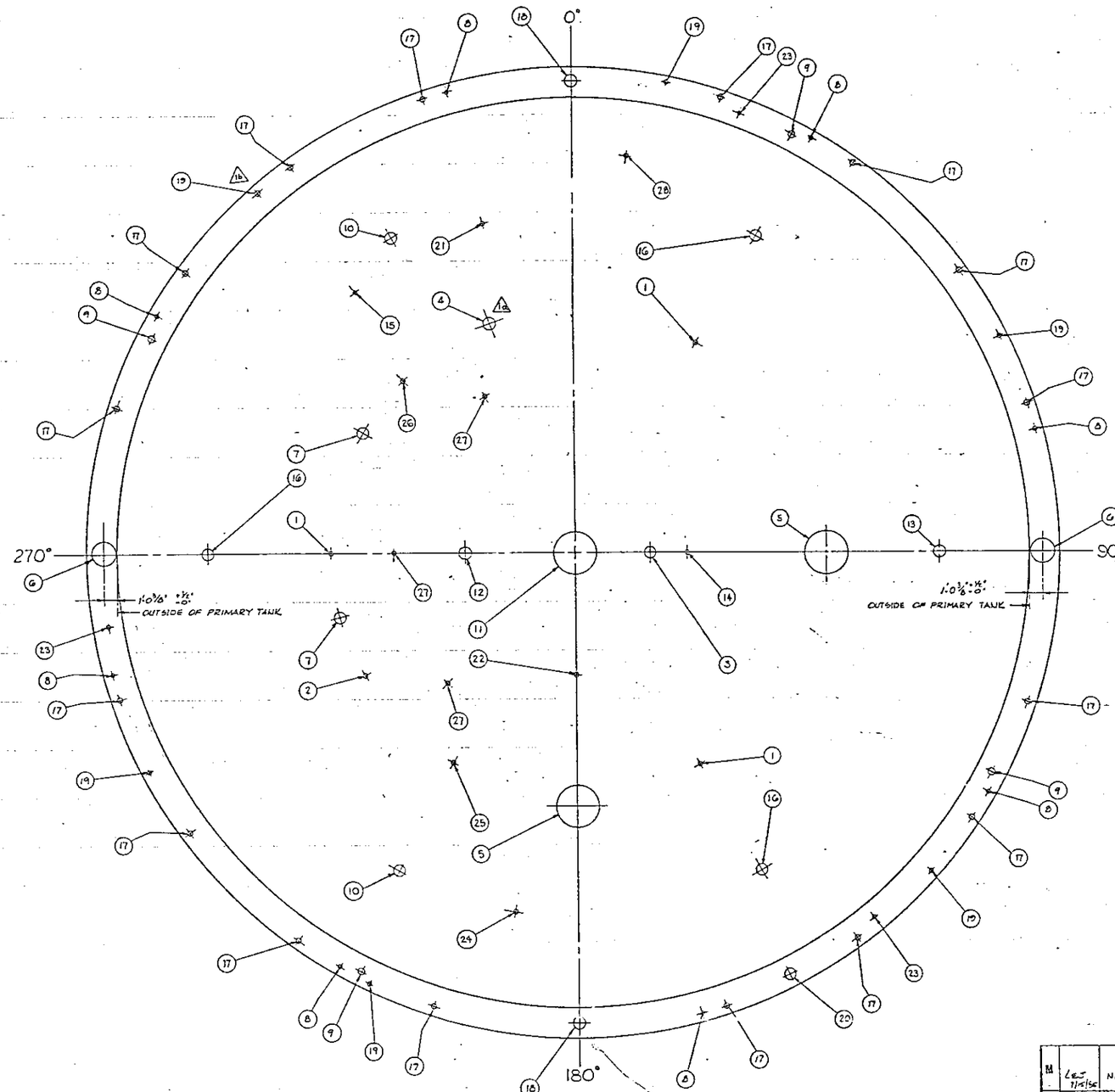

PLAN

TANK 106 - 108 (1a)

SCALE : 1/4" = 1'-0"

DOME PENETRATION SCHEDULE

RISER Nº	QTY	SIZE	FUNCTION (REFERENCE ONLY)	REFERENCE DETAIL H-2-90537	ANGLE (FROM 0°)	RADIUS
1	3	4" SCHED 40	SLUDGE MEASUREMENT	I	30°, 150°, 270°	20'-0"
2	1	4" SCHED 40	LIQUID LEVEL (LIT)	I	240°	20'-0"
3	1	12" SCHED 40	SUPERNATANT PUMP, PUMP PIT DRAIN	V	90°	6'-0"
4	1	12" SCHED 40	THERMOCOUPLE PROBE	II (1a)	340°	20'-0"
5	2	42" I.D. × 1/2" WALL	CONSTRUCTION OPENING	VII	90°, 180°	20'-9"
6	2	24" SCHED 20	ANNULUS ACCESS	IX	90°, 270°	38'-6 3/8" REF
7	2	12" SCHED 40	PRIMARY EXHAUST, SPECIFIC GRAVITY OR SPARE	II	255°, 300°	20'-0"
8	8	4" SCHED 40	AIR INLET TO TANK INSULATION	XIV	30°, 75°, 120°, 165° 210°, 255°, 300°, 345°	39'-3"
9	4	8" SCHED 40	ANNULUS EXHAUST	X	27°-30', 117°-30', 207°-30', 297°-30'	38'-9"
10	2	12" SCHED 40	SPARE	III	210°, 330°	30'-0"
11	1	42" I.D. × 1/2" WALL	SLURRY DISTRIBUTOR	VIII	—	—
12	1	12" SCHED 40	OBSERVATION PORT	V	270°	9'-0"
13	1	12" SCHED 40	TANK PRESSURE	III	90°	30'-0"
14	1	4" SCHED 40	SUPERNATANT RETURN	VI	90°	9'-0"
15	1	4" SCHED 40	SPARE	IV	320°	28'-0"
16	3	12" SCHED 40	SLUDGE MEASUREMENT	III	30°, 150°, 270°	30'-0"
17	16	6" SCHED 40	ANNULUS INSPECTION	XI	18°, 36°, 54°, 72°, 108°, 124°, 144°, 162°, 198°, 216°, 234°, 252°, 288°, 306°, 324°, 342°	39'-3"
18	2	12" SCHED 40	ANNULUS INSPECTION	XI	0°, 180°	39'-0"
19	6	4" SCHED 40	ANNULUS INSTRUMENTATION	XIII	11°, 63°, 132°, 206°, 243°, 319°	39'-4"
20	1	12" SCHED 40	ANNULUS PUMP OUT	XII	153°-30'	38'-9"
21	1	4" SCHED 40	SPARE	IV	345°	28'-0"
22	1	4" SCHED 40	SLUDGE MEASUREMENT	VI	180°	10'-0"
23	3	4" SCHED 40	ANNULUS LEAK DETECTION	XIII	21°, 141°, 261°	38'-9"
24	1	4" SCHED 40	SPARE	IV	190°	30'-0"
25	1	4" SCHED 40	LIQUID LEVEL (HIGH LE)	I	210°	20'-0"
26	1	4" SCHED 40	LIQUID LEVEL (LI)	I	315°	20'-0"
27	3	4" SCHED 40	SPARE	I	225°, 270°, 330°	15'-0"
28	1	4" SCHED 40	SPARE	I	7°	33'-0"

NOTES :

1. SEE GENERAL NOTES ON DRAWING H-2-90535.

H-2-90539	TANK PENETRATIONS
H-2-90538	TANK PENETRATIONS
H-2-90535	TANK PENETRATIONS
B-340-C4	CONSTRUCTION SPEC
H-2-90534	TANK CROSS SECTION
H-2-90537	RISER DETAILS
H-2-40435	DRAWING LIST
NUMBER	TITLE
REFERENCES	
NEXT USED ON	H-2-90425

REV	DATE	BY	DESCRIPTION
M	LET 7/14/56	NA	AS-BUILT FOR PROJ B-340
1	8/8/61	KEN	NO. 106 ZN A1 & A8 d) ADDED CN6 NO3 ZN A6 c) TITLE WAS 241-AP-102 104 & WAS 311° ZN E4 & F11 b) RISER #19 WAS INSPECTION & REF DET WAS I ZN G2 a) RISER #4 WAS 4" ZN G4 & E9

REVISIONS

COMMENT REVIEW

MICROFILMED

APPROVAL

RELEASED FOR CONSTRUCTION BY DOE DATE 12/3/81

REV 1 DOE DATE 9/6/82

U. S. DEPARTMENT OF ENERGY
Richland Operations Office
BRAUN HANFORD CO

PLAN
TANK PENETRATIONS
241-AP-106 & 108 (1a)

PROJECT TITLE 241-AP TANK FARM

PROJ B-340 | NO X34001 | JOB E205A1

SCALE SHOWN | BLDG 241-AP | SHEET 0402

CLASSIFICATION NONE | DRAWING NUMBER H-2-90536 | REV 2

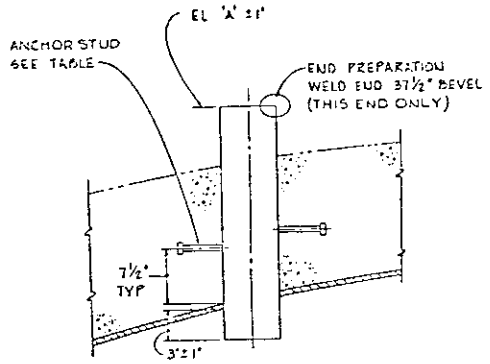

DETAIL I-II-III-IV-V-VI-XV-XVI-XVII

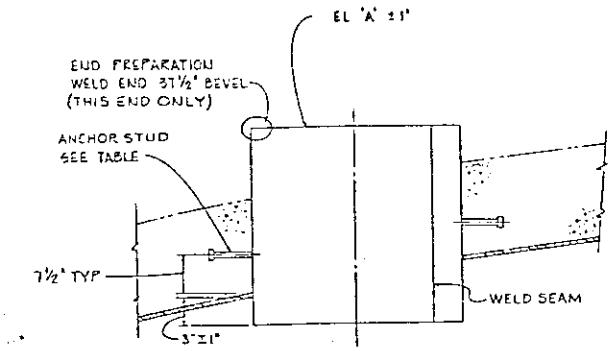

DETAIL VII - VIII

DETAIL Nº	RISER Nº #	PIPE SIZE	EL 'A'	ANCHOR STUDS (NELSON H&L)	STUD SPACING
I	1,2,25,26	4" SCHED 40	671'-0"	(2) ⅜" x 4⅛" # 101-053-043	180°
II	4, 7	12" SCHED 40	671'-0"	(4) ½" x 6⅛" # 101-053-008	90°
III	10,13,16	12" SCHED 40	668'-0"	(4) ½" x 6⅛" # 101-053-008	90°
IV	15,21	4" SCHED 40	669'-0"	(2) ⅜" x 4⅛" # 101-053-043	180°
V	3,12	12" SCHED 40	672'-9"	(4) ½" x 6⅛" # 101-053-008	90°
VI	14,22	4" SCHED 40	672'-9"	(2) ⅜" x 4⅛" # 101-053-043	180°
VII	5	42" ID-½" WALL	671'-0"	(8) ⅝" x 6 5/16" # 101-053-019	45°
VIII	11	42" ID-½" WALL	673'-0"	(8) ⅝" x 6 5/16" # 101-053-019	45°
IX	6	24" SCHED 20	664'-3"	(4) ½" x 6⅛" # 101-053-008	90°
X	9	8" SCHED 40	664'-3"	(4) ½" x 6⅛" # 101-053-008	90°
XI	17	6" SCHED 40	664'-0"	(2) ⅜" x 4⅛" # 101-053-043	180°
XII	18,20	12" SCHED 40	664'-3"	(4) ½" x 6⅛" # 101-053-008	90°
XIII	19,23	4" SCHED 40	664'-3"	(2) ⅜" x 4⅛" # 101-053-043	180°
XIV	8	4" SCHED 40	664'-0"	(2) ⅜" x 4⅛" # 101-053-043	180°
XV	27	4" SCHED 40	671'-9"	(2) ⅜" x 4⅛" # 101-053-043	180°
XVI	28	4" SCHED 40	667'-0"	(2) ⅜" x 4⅛" # 101-053-043	180°
XVII	24	4" SCHED 40	668'-0"	(2) ⅜" x 4⅛" # 101-053-043	180°

* SEE DWG H-2-90535, H-2-90536, H-2-90538 & H-2-90539

** RISER NO. 13 FOR TANK 102, EL 'A' = 668'-4"

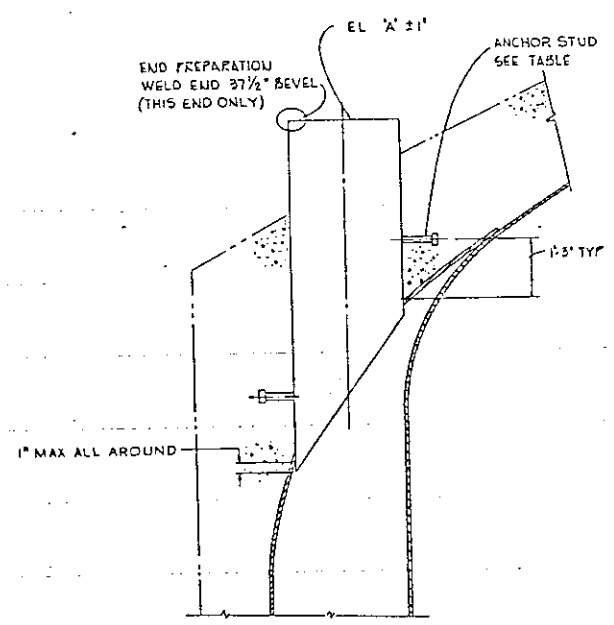

DETAIL IV-X-XI-XII-XIII

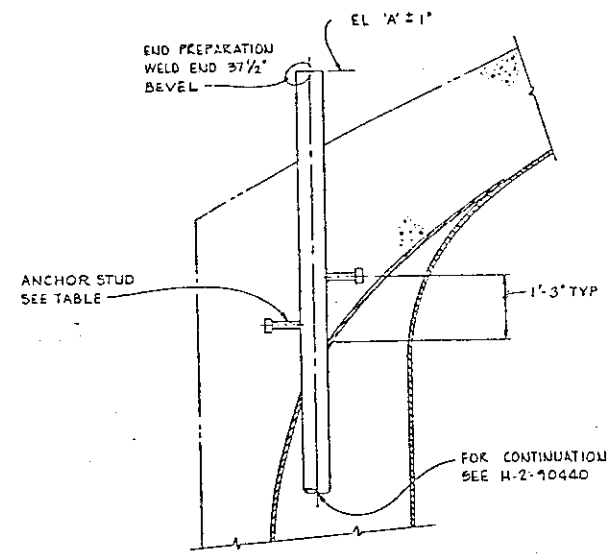

DETAIL XIV

GENERAL NOTES :

1. ALL MATERIAL SHALL BE CARBON STEEL PER B-340-C4 UNLESS OTHERWISE NOTED.
2. LINEAR TOLERANCE SHALL BE ± ⅛" UNLESS OTHERWISE NOTED
3. IF ADDITIONAL TANK DOME PENETRATIONS ARE NECESSARY FOR STRESS RELIEVING WORK, THEY MAY BE LOCATED WITHIN A 28'-0" RADIUS OF THE CENTER OF THE TANK DOME & SHALL CONFORM TO DETAIL VII. WHEN NO LONGER REQUIRED EACH SUCH PENETRATION SHALL BE CAPPED WITH A PLATE NOT LESS THAN ⅜" THICK, WELDED ALL AROUND.
4. DRAWING SHOWS DETAIL OF PENETRATION PIPING REQUIRED UPON COMPLETION BY THE TANK MANUFACTURER. TEMPORARY CLOSURES ARE REQUIRED FOR STRESS RELIEVING & HYDROSTATIC TESTING.

REV 1 DOE GRW DATE 7/6/86

RELEASED FOR CONSTRUCTION
BY GRW DATE 7/16/86
DOE

REFERENCES	
NUMBER	TITLE
H-2-90440	INSULATING CONCRETE
H-2-90435	DRAWING LIST
H-2-90539	TANK PENETRATIONS
H-2-90538	TANK PENETRATIONS
H-2-90535	TANK PENETRATIONS
D-340-C4	CONSTRUCTION SPEC
H-2-90534	TANK CROSS SECTION
H-2-90536	TANK PENETRATIONS

NEXT USE ON H-2-90435

REV	DATE	DESCRIPTION
2		AS-BUILT FOR PROJ B-340
		3) DFC D-340-122 Z G1-5 & E2-4
		4) DFC D-340-15 Z F0 1,2,5 & F12
1		2) ADDED DWG NOS 2N F3 & AG
		1) RISER #4 WAS PER DET I 2N G3

REVISIONS

COMMENT REVIEW

UNIT REV 2

CLIENT APPROVAL APPROVED

CLIENT DOCUMENTATION NONE

REQD

BRAUN JOB Nº R295AI

U.S. Department of Energy
Richland Operations Office

BRAUN HANFORD CO

TANK PENETRATION & RISER DETAILS 241-AP TANKS

DRAWN D. PECK

DRAWN D. O'CONNOR

PROJ NO B-340
SUB NO 293001

PROJECT TITLE 241-AP TANK FARM

SCALE NONE

BLDG NO 241-AP

SHEET NO 0402

DRAWING NUMBER H-2-90537

SHEET –

REV –

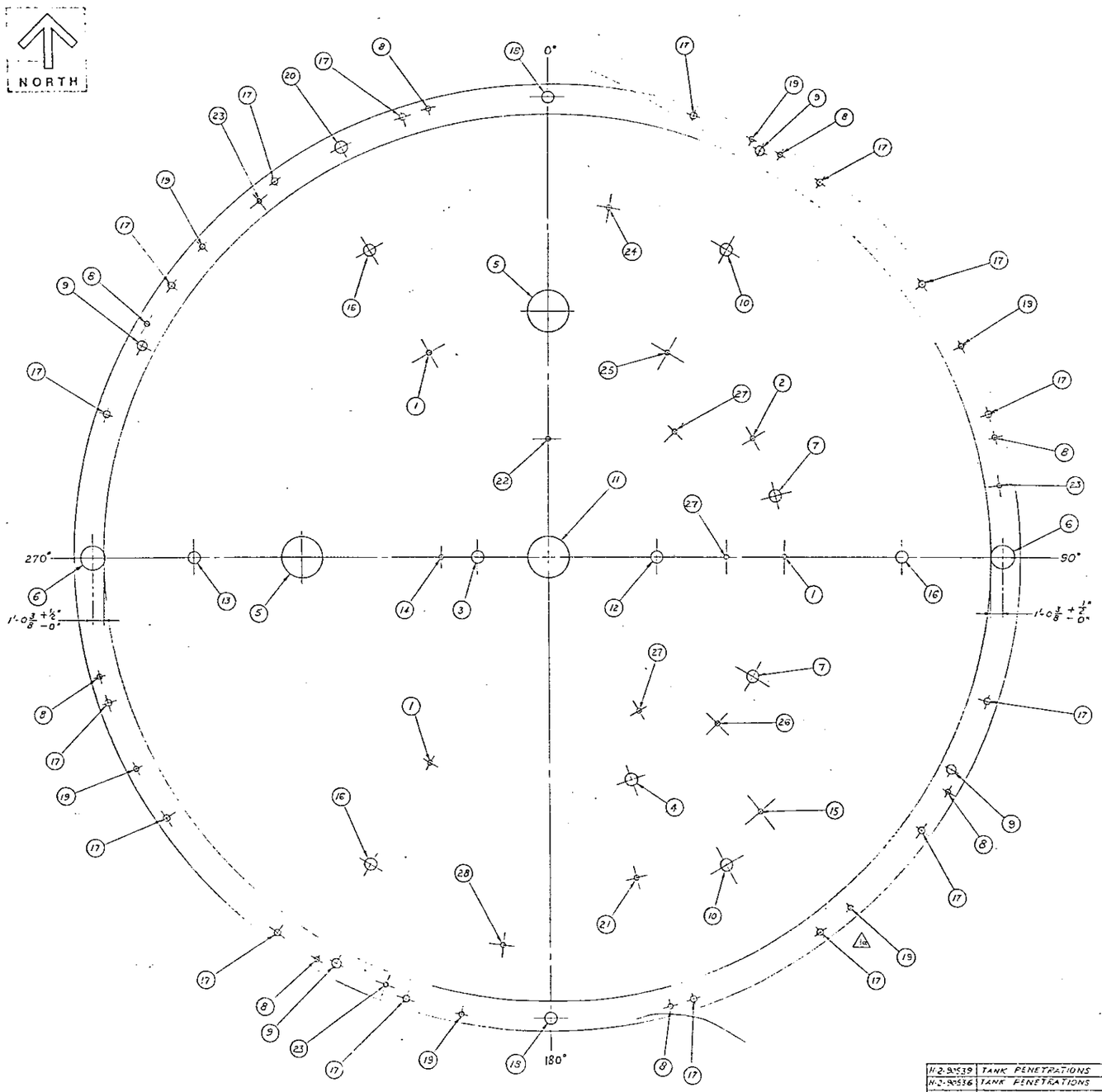

PLAN

TANK 101-103

SCALE: 1/4" = 1'-0

DOME PENETRATION SCHEDULE

	RISER NO.	QTY	SIZE	FUNCTION (REFERENCE ONLY)	REFERNCE DETAIL H-2-90537	ANGLE (FROM 0°)	RADIUS
	1	3	4" SCHED 40	SLUDGE MEASUREMENT	I	90°, 210°, 330°	20'-0
	2	1	4" SCHED 40	LIQUID LEVEL (LIT)	I	60°	20'-0
	3	1	12" SCHED 40	SUPERNATANT PUMP, PUMP PIT DRAIN	V	270°	6'-0
	4	1	12" SCHED 40	THERMOCOUPLE PROBE	II	160°	20'-0
	5	2	42" I.D. x 1/2" WALL	CONSTRUCTION OPENING	VII	0°, 270°	20'-9
	6	2	24" SCHED 20	ANNULUS ACCESS	IX	90°, 270°	[illegible]
	7	2	12" SCHED 40	PRIMARY EXHAUST OR SPARE	II	75°, 120°	20'-0
	8	8	4" SCHED 40	AIR INLET TO TANK INSULATION	XIV	30°, 75°, 120°, 165° 210°, 255°, 300°, 345°	35'-3
	9	4	6" SCHED 40	ANNULUS EXHAUST	X	27°-30', 117°-30' 207°-30', 297°-30'	35'-9
15	10	2	12" SCHED 40	CENTRAL EXHAUSTION DRAIN VALVE PIT DRAIN VALVE PIT FLOOR DRAIN OR SPARE	III	30°, 150°	30'-0
	11	1	42" ID x 1/2" WALL	SLURRY DISTRIBUTOR	VIII	—	—
	12	1	12" SCHED 40	OBSERVATION PORT	V	90°	9'-0
	13	1	12" SCHED 40	TANK PRESSURE	III	270°	30'-0
	14	1	4" SCHED 40	SUPERNATANT RETURN	VI	270°	9'-0
16	15	1	4" SCHED 40	SPARE	IV	140°	28'-0
	16	3	12" SCHED 40	SLUDGE MEASUREMENT	III	90°, 210°, 330°	30'-0
	17	16	6" SCHED 40	ANNULUS INSPECTION	XI	18°, 36°, 54°, 72° 108°, 126°, 144°, 162° 198°, 216°, 236°, 252° 288°, 306°, 324°, 342°	39'-3
	18	2	12" SCHED 40	ANNULUS INSPECTION	XII	0°, 180°	33'-0
12	19	6	4" SCHED 40	ANNULUS INSTRUMENTATION	XIII	24°, 63°, 139° 191°, 243°, 312°	39'-4
	20	1	12" SCHED 40	ANNULUS PUMP OUT	VII	333°-30'	38'-9
16	21	1	4" SCHED 40	SPARE	IV	165°	28'-0
	22	1	4" SCHED 40	SLUDGE MEASUREMENT	VI	0°	10'-0
	23	3	4" SCHED 40	ANNULUS LEAK DETECTION	VIII	81°, 201°, 321°	38'-9
	24	1	4" SCHED 40	SERVICE & FLUSH PIT DRAIN OR SPARE	IV	10°	30'-0
	25	1	4" SCHED 40	LIQUID LEVEL (HIGH LE)	I	30°	20'-0
	26	1	4" SCHED 40	LIQUID LEVEL (LI)	I	135°	20'-0
	27	3	4" SCHED 40	SPARE	I	45°, 90°, 150°	15'-0
16	28	1	4" SCHED 40	SPARE	I	187°	33'-0

NOTES:

SEE GENERAL NOTES ON DRAWING H-2-90535

RELEASED FOR CONSTRUCTION
BY [illegible] DATE 7/1/92
DOE

H-2-90539	TANK PENETRATIONS
H-2-90536	TANK PENETRATIONS
H-2-90535	TANK PENETRATIONS
B-340-C4	CONSTRUCTION SPEC
H-2-90534	TANK CROSS SECTION
H-2-90537	RISER DETAILS
H-2-90535	DRAWING LIST
NUMBER	TITLE
REFERENCES	
SHEET USED ON H-2-90535	

REV	BY	DATE	DESCRIPTION
1			AS-BUILT FOR PROJ B-340 b) DFC-B-340-280 2 DEF 4 c) DFC B-340 16 2 87 & 56

REVISIONS

COMMENT REVIEW

RLO APPROVAL	DATE	U. S. DEPARTMENT OF ENERGY Richland Operations Office	
		KAISER ENGINEERS HANFORD COMPANY	
PLAN TANK PENETRATIONS 241 AP-101 & 103			
PROJECT TITLE	241AP TANK FARM		
PROJ	B-340	NO. X34002	JOB R295A2
SCALE	SHOWN	BLDG. 241-AP	SHEET 0-02
CLASSIFICATION	NONE	DRAWING NUMBER	H-2-90538
REV	2		

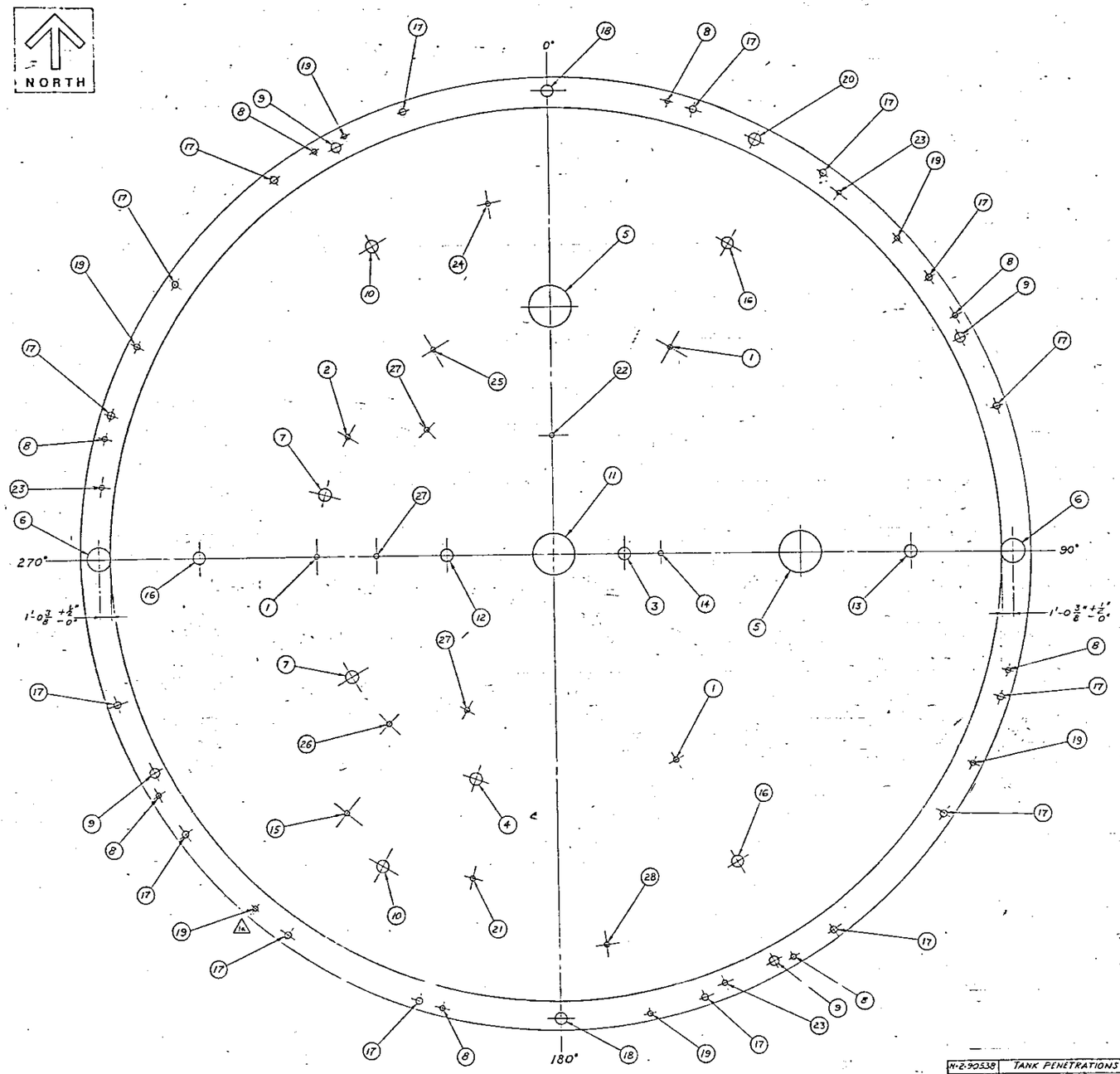

PLAN

TANK 102 - 104

SCALE: 1/4" = 1'-0

DOME PENETRATION SCHEDULE

RISER NO.	QTY	SIZE	FUNCTION (REFERENCE ONLY)	REFERENCE DETAIL H-2-90537	ANGLE (FROM 0°)	RADIUS
1	3	4" SCHED 40	SLUDGE MEASUREMENT	I	30°, 150°, 270°	20'-0
2	1	4" SCHED 40	LIQUID LEVEL (LIT)	I	300°	20'-0
3	1	12" SCHED 40	SUPERNATANT PUMP, PUMP PIT DRAIN	V	90°	6'-0
4	1	12" SCHED 40	THERMOCOUPLE PROBE	II	200°	20'-0
5	2	42" I.D. x 1/2" WALL	CONSTRUCTION OPENING	VII	0°, 90°	20'-9
6	2	24" SCHED 20	ANNULUS ACCESS	IX	90°, 270°	38'-6 3/8 REF
7	2	12" SCHED 40	PRIMARY EXHAUST OR SPARE	II	240°, 285°	20'-0
8	8	4" SCHED 40	AIR INLET TO TANK INSULATION	XIV	15°, 60°, 105°, 150° 195°, 240°, 285°, 330°	39'-3
9	4	8" SCHED 40	ANNULUS EXHAUST	X	62°-30', 152°-30' 242°-30', 332°-30'	38'-9
10	2	12" SCHED 40	*	III	210°, 330°	30'-0
11	1	42" ID x 1/2" WALL	SLURRY DISTRIBUTOR	VIII	—	—
12	1	12" SCHED 40	OBSERVATION PORT	V	270°	9'-0
13	1	12" SCHED 40	**	III	90°	30'-0
14	1	4" SCHED 40	SUPERNATANT RETURN	VI	90°	9'-0
15	1	4" SCHED 40	SPARE	IV	220°	28'-0
16	3	12" SCHED 40	SLUDGE MEASUREMENT	III	30°, 150°, 270°	30'-0
17	16	6" SCHED 40	ANNULUS INSPECTION	XI	18°, 36°, 54°, 72° 108°, 126°, 144°, 162° 198°, 216°, 236°, 252° 288°, 306°, 324°, 342°	39'-3
18	2	12" SCHED 40	ANNULUS INSPECTION	VII	0°, 180°	39'-0
19	6	4" SCHED 40	ANNULUS INSTRUMENTATION	XIII	48°, 117°, 169° 221°, 297°, 334°	39'-4
20	1	12" SCHED 40	ANNULUS PUMP OUT	XII	26°-30'	38'-9
21	1	4" SCHED 40	SPARE	IV	195°	28'-0
22	1	4" SCHED 40	SLUDGE MEASUREMENT	VI	0°	10'-0
23	3	4" SCHED 40	ANNULUS LEAK DETECTION	XIII	39°, 159°, 279°	38'-9
24	1	4" SCHED 40	SPARE	IV	350°	30'-0
25	1	4" SCHED 40	LIQUID LEVEL (HIGH LE)	I	330°	20'-0
26	1	4" SCHED 40	LIQUID LEVEL (LI)	I	225°	20'-0
27	3	4" SCHED 40	SPARE	I	210°, 270°, 315°	15'-0
28	1	4" SCHED 40	SPARE	I	173°	33'-0

* TK 102-SPARE @ 210°, TANK PRESSURE @ 330°
TK 104-SPARE
** TK 102-GROUT PUMP
TK 104-TANK PRESSURE

NOTES:

SEE GENERAL NOTES ON DRAWING H-2-90535

RELEASED FOR CONSTRUCTION
BY [signature] DATE 7/6/82
DOE

NUMBER	TITLE
H-2-90538	TANK PENETRATIONS
H-2-90536	TANK PENETRATIONS
H-2-90535	TANK PENETRATIONS
B-340-C4	CONSTRUCTION SPEC
H-2-90534	TANK CROSS SECTION
H-2-90537	RISER DETAILS
H-2-90435	DRAWING LIST

REFERENCES

NEXT USED ON H-2-90435

MICROFILMED

BY-DATE	BY-DATE	REV BY DATE	DESCRIPTION	REV
LEJ	NA		AS-BUILT FOR PROJ B-340 B-340-178 Z DF4 c) B-340-217 ZF4 4) DFC B-340-14 Z E1 & B11 b) DFC	1

APPROVAL: KEH APPROVAL

REVISIONS

COMMENT REVIEW

PUO APPROVAL BY [signature] DATE 7/1/82

PROJ ENGR [signature] 7-1-82
DESIGN [signature] 7-2-82
SAFETY [signature] 6-2-82
DR [signature] 7/2/82
GROUP MGR [signature] 7/1/82
DSGN ENGR [signature] 6/1/82
DSGNO BY [signature] 7/6/82
CHECKED [signature] 7/1/82
DRAWN C.A. Keller 6/1/82

CLASSIFICATION NONE | BY NOT REQ'D

U. S. DEPARTMENT OF ENERGY
Richland Operations Office
KAISER ENGINEERS HANFORD COMPANY

PLAN
TANK PENETRATIONS
241 AP - 102 - 104

PROJECT TITLE 241 AP TANK FARM

PROJ B-340 | WO X34002 | JOB R295A2
SCALE SHOWN | BLDG 241-AP | MODEL 0402
DRAWING NUMBER H-2-90539 | SHEET — | OF — | REV 2

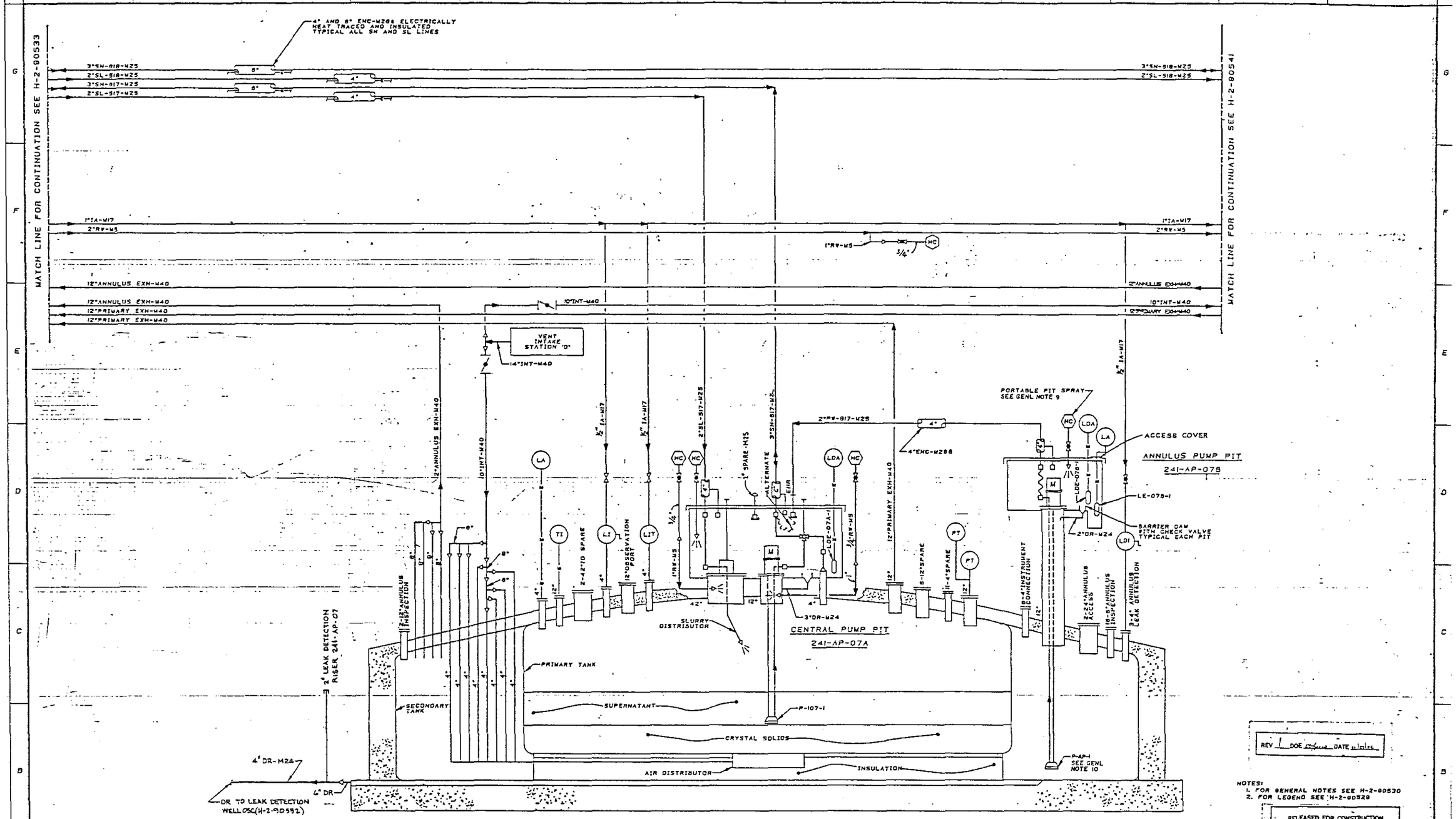

REV 1 DOE DATE

NOTES:
1. FOR GENERAL NOTES SEE H-2-90530
2. FOR LEGEND SEE H-2-90529

RELEASED FOR CONSTRUCTION
BY DATE
DOE

REV	BY	DATE	DESCRIPTION	REV
2			AS-BUILT FOR PROJ B-340	
1			OSC PER DFC-8340-219 Z B11 DET RISER & DR TO LEAK DET WELL 07C Z B,C & D 12 c) ADDED LEAK b) REMOVED LEAK DET WELL PER DFC-8340-162 & 07 a) REMOVED OIL LUBE SYS	

MICROFILMED	BY-DATE	BY-DATE	REV BY DATE
	RHO	KEN APPROVAL	

REVISIONS

H-2-90435 DRAWING LIST

NUMBER	TITLE
REFERENCES	
NEXT USED ON	H-2-90435

U.S. DEPARTMENT OF ENERGY
RICHLAND OPERATIONS OFFICE
KAISER ENGINEERS HANFORD COMPANY

ENGINEERING FLOW DIAGRAM
241-AP-107 TANK

PROJECT TITLE: 241-AP TANK FARM

PROJ: B-340 | TO: X34002 | JOB: R295A2
SCALE: NONE | BLDG: 241-AP | SHEET: 7001
CLASSIFICATION: NONE
DRAWING NUMBER: H-2-90540 | SHEET — OF — | REV 2

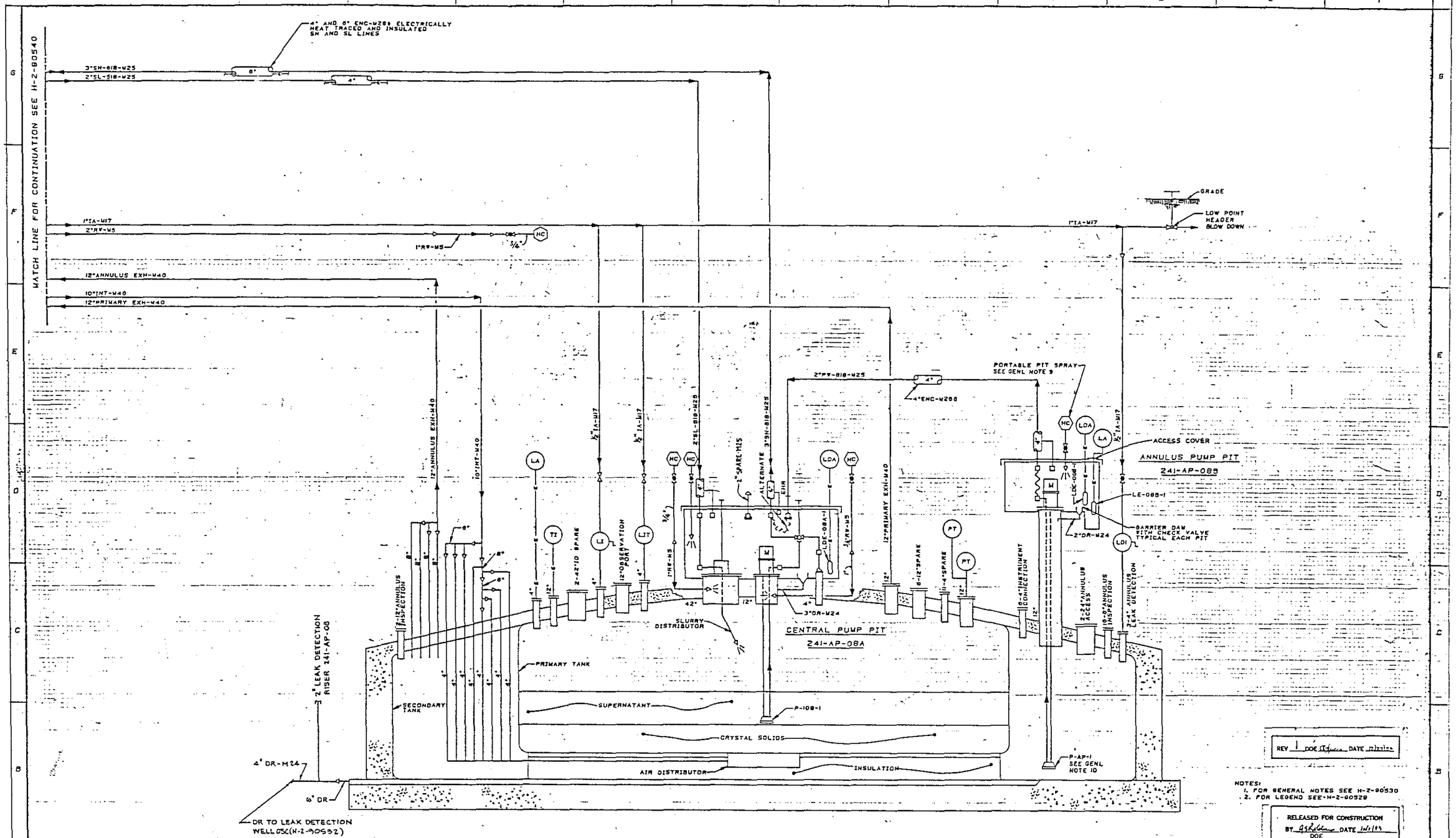

NOTES:
1. FOR GENERAL NOTES SEE H-2-90530
2. FOR LEGEND SEE H-2-90529

RELEASED FOR CONSTRUCTION
BY DATE
DOE

TANK 241-AP-108

REV	BY-DATE	BY-DATE	REV BY DATE	DESCRIPTION	REV
M	LEA 8-9-94	NA	UDE	AS-BUILT FOR PROJ B-340	2
M				8340-219 Z 8 11 TO LEAK DET WELL 05C PER DFC ADDED 2"LEAK DET RISER (DR DET WELL 08C 2 8 C.D 12 a) -162 Z DT c) REMOVED LEAK OIL LUBE SYS PER DFC-8340 -8340-192 Z D4 b) REMOVED a) WAS LDE-08A-1 PER DFC	1

RHO KEN APPROVAL

REVISIONS

H-2-80435 DRAWING LIST

NUMBER	TITLE
REFERENCES	
NEXT USED ON	H-2-80435

MICROFILMED

U.S. DEPARTMENT OF ENERGY
RICHLAND OPERATIONS OFFICE
KAISER ENGINEERS HANFORD COMPANY

ENGINEERING FLOW DIAGRAM
241-AP-108 TANK

PROJECT TITLE 241-AP TANK FARM

PROJ B-340	DWG X34002	SHEET 229582	
SCALE NONE	SYSTEM 241-AP	SERIES 7001	
SUBMITTED FOR NOT REQD		DRAWING NUMBER H-2-90541	SHEET — OF — REV 2

NONE

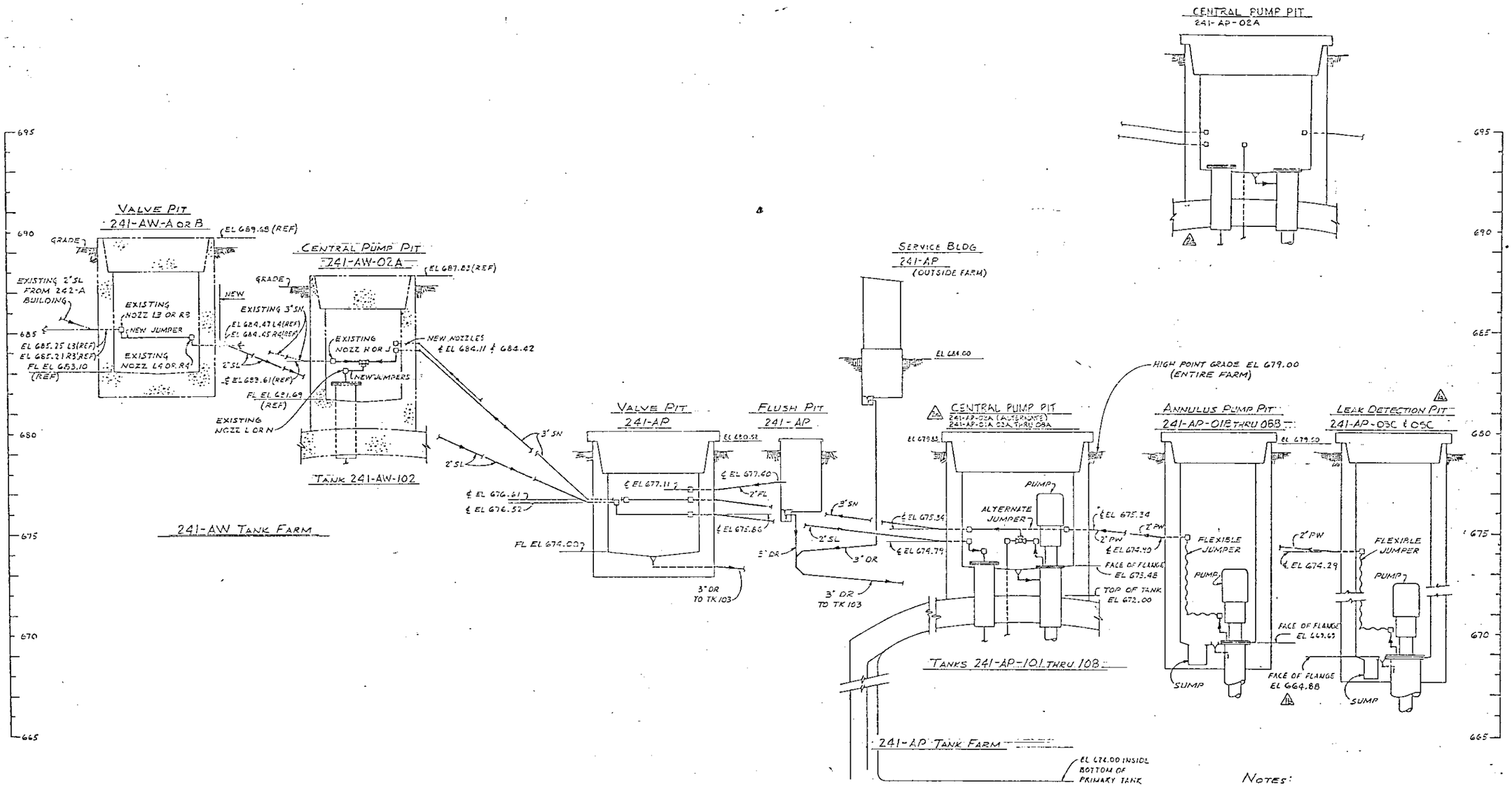

HYDRAULIC DIAGRAM

SCALE • VERTICAL — 1/8" = 1'-0
HORIZONTAL — NONE

NOTES:

1. FOR GENERAL NOTES SEE H-2-90530
2. FOR LEGEND SEE H-2-90529
3. MIN SOIL COVER —— 6.5 FT
   MAX SOIL COVER —— 7.0 FT

REV 1 DOE DATE

RELEASED FOR CONSTRUCTION
BY DATE
DOE

2	AS BUILT FOR PROJ B-340 REVISED PER ECN 2A1				NA	9-96
1	ENG CC, DFC 83-0-024 (2U E1 6) EL WAS 679.08 (2U E1 6) WAS 241-AP-01C THRU 08C					
REV	DESCRIPTION	BY DATE	BY DATE	BY DATE		

RECORDED: NUCLEAR SAFETY APPROVAL — KEH APPROVAL — REVISIONS — COMMENT REVIEW

H-2-90435	DRAWING LIST
NUMBER	TITLE
REFERENCES	
NEXT USED ON	H-2-90535

RHO APPROVAL — DATE

U. S. DEPARTMENT OF ENERGY
Richland Operations Office
KAISER ENGINEERS HANFORD COMPANY

PIPING
HYDRAULIC DIAGRAM
241-AP TANK FARM

PROJECT TITLE 241-AP TANK FARM

PROJ B-340	NO X34002		X29540
SCALE SHOWN	BLDG 241-AP		MODEL 7001
CLASSIFICATION NONE	NOT REQD	DRAWING NUMBER H-2-90542	REV 1 2 2

U.S. GOVT. PRINTING OFFICE

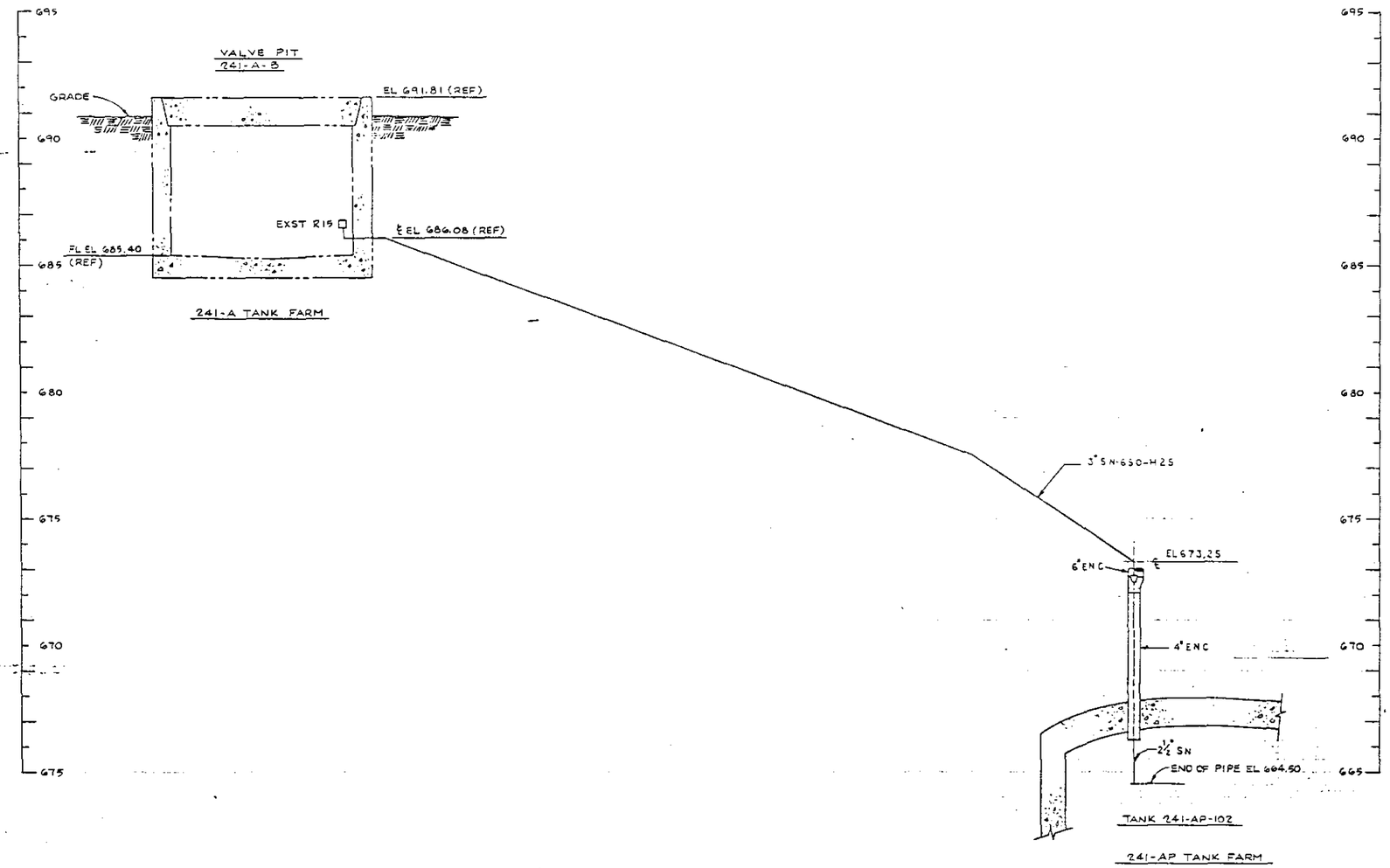

FOR NOTES SEE SHEET 1 OF THIS DWG

RELEASED FOR CONSTRUCTION
BY [signature] DATE [illegible]
DOE

RHO APPROVAL	DATE	U. S. DEPARTMENT OF ENERGY Richland Operations Office KAISER ENGINEERS HANFORD COMPANY	
BY [signature]	3-17-86		
PROJ ENGR [signature]	3-17-86	PIPING HYDRAULIC DIAGRAM 3" SN-650-M25	
QA [signature]	4/4/85		
APPROVED BY [signature]	4-4-85		
SAFETY [signature]	4/4/85	PROJECT TITLE 241-AP TANK FARM	
APPROVED BY [signature]	4/4/85	PROJ B-340 / WO X340GF / JOB R295K2	
CHECKED BY D. PECK	4/10/85	SCALE SHOWN / BLDG 241-AP / SHEET 7001	
DRAWN BY FG RITCH	4/30/85	DRAWING NUMBER H-2-90542 / SHEET 2 / OF 2 / REV 1	
DESIGNED BY FG RITCH	4/30/85		

MICROFILMED	BY-DATE	NA	JLV 1-26-87	JDE 1-31-86	MJG 4-25-86
	ROCKWELL APPROVAL	KEH APPROVAL			
	REVISIONS				
	COMMENT REVIEW				

NUMBER	TITLE	REFERENCES	
		H-2-90435	DRAWING LIST
		NUMBER	TITLE
DRAWING TRACEABILITY LIST		NEXT USED ON H-2-90435	

REV	DESCRIPTION	REV
	AS-BUILT FOR PROJ B-340	1

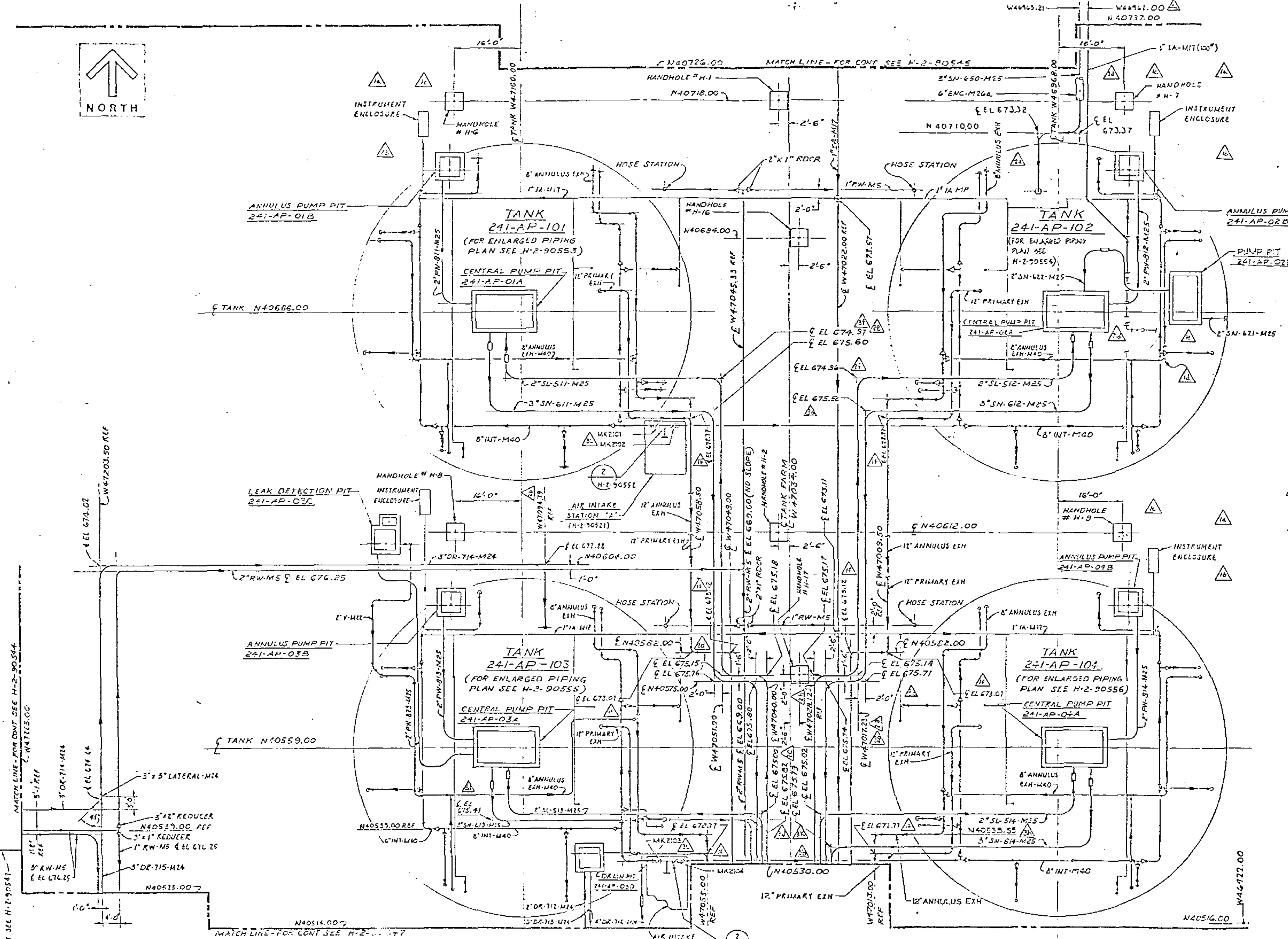

NOTES:

1. FOR GENERAL NOTES SEE DRAWING H-2-90543 & H-2-90544
2. FARM GRADE EL 679'-0" (REF)
3. HANDHOLES SHOWN ON H-2-90546, H-2-90547 & H-2-90548 ARE LOCATED BY THESE DRAWINGS ONLY - FOR ELECTRICAL & INSTRUMENTATION SEE H-2-90470 SH 1 & H-2-90471-SH 1
4. FOR 3" SN-650 LINE — SEE H-2-76984 FOR NOTES SEE H-2-74995 FOR PIPE SUPPORTS

REV 1 DOE [signature] DATE [illegible]

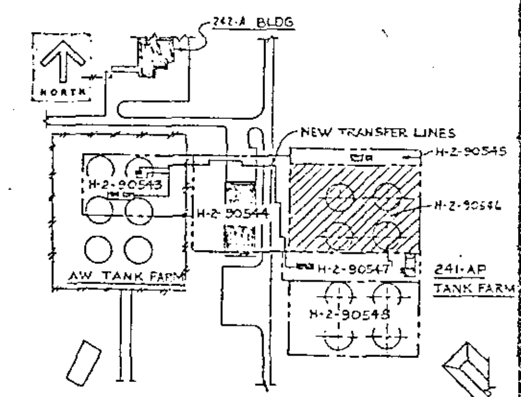

KEY PLAN
SCALE: NONE

RELEASED FOR CONSTRUCTION
BY [signature] DOE DATE [illegible]

REV 2 DOE [signature] DATE [illegible]

RHO APPROVAL BY [signature]	U. S. DEPARTMENT OF ENERGY Richland Operations Office
	KAISER ENGINEERS HANFORD COMPANY
DESIGN / SAFETY / QA / GROUP MGR / LEAD ENGR	PIPING PLAN #4
DSGN BY D. O'CONNOR	PROJECT TITLE 241-AP TANK FARM
CHECKED G. CLEVELAND	PROJ B-340 / NO X34002 / R295A2
DRAWN C.A. KELLER	SCALE AS SHOWN / BLDG 241-AP / INDEX 0402
CLASSIFICATION NONE / BY NOT REQD	DRAWING NUMBER H-2-90546 / SHEET 1 / OF 1 / REV 3

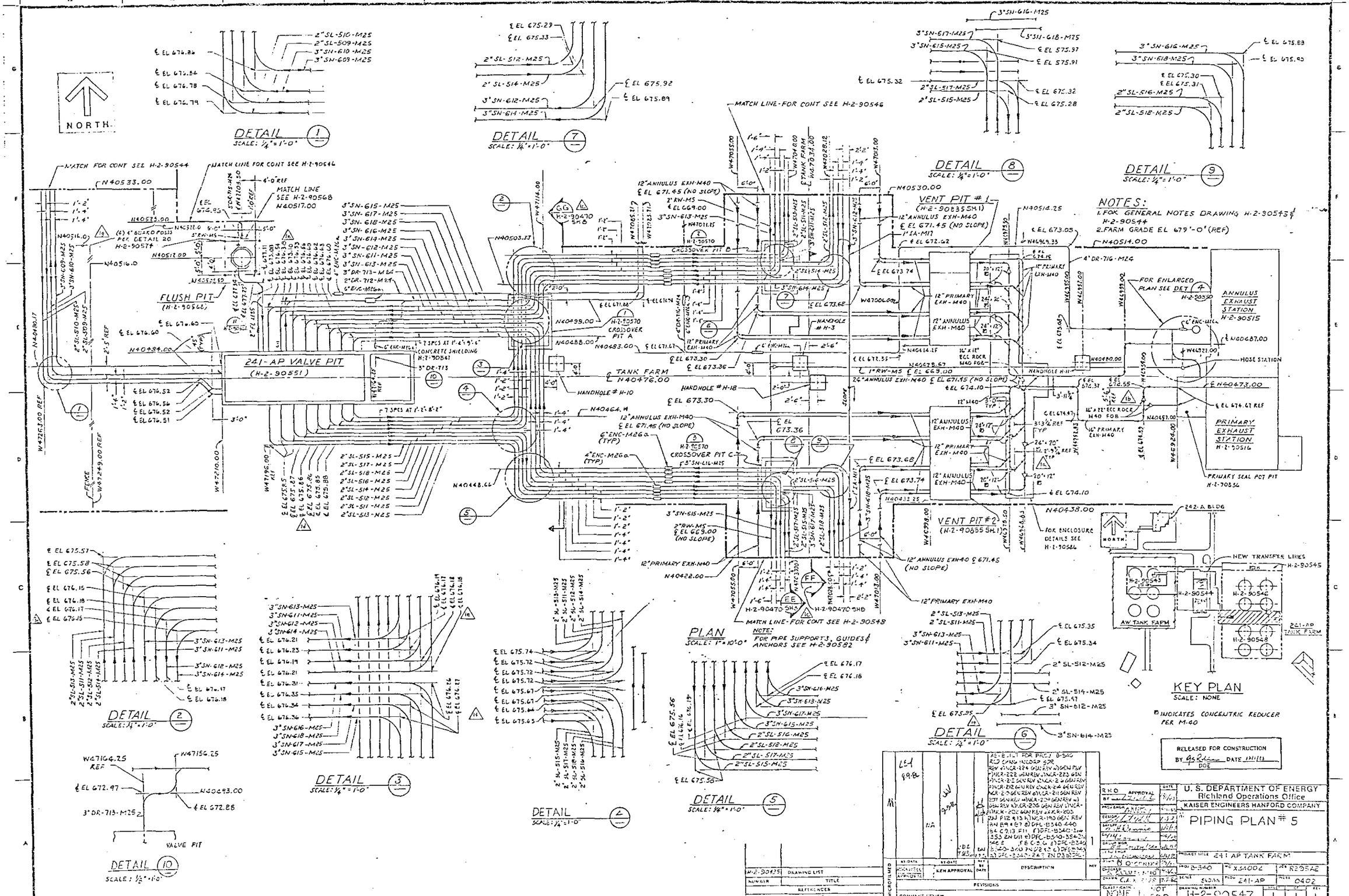

NORTH
DETAIL 1
SCALE: 1/4" = 1'-0"
DETAIL 7
SCALE: 1/4" = 1'-0"
DETAIL 8
SCALE: 1/4" = 1'-0"
DETAIL 9
SCALE: 1/4" = 1'-0"
NOTES:
1. FOR GENERAL NOTES DRAWING H-2-90543 & H-2-90544
2. FARM GRADE EL 679'-0" (REF)
MATCH FOR CONT SEE H-2-90544
MATCH LINE FOR CONT SEE H-2-90546
MATCH LINE SEE H-2-90568
FLUSH PIT
(H-2-90568)
241-AP VALVE PIT
(H-2-90551)
TANK FARM
N40476.00
CROSSOVER PIT A
CROSSOVER PIT B
CROSSOVER PIT C
VENT PIT #1
(H-2-90835 SH.1)
VENT PIT #2
(H-2-90835 SH.1)
ANNULUS EXHAUST STATION
H-2-90515
PRIMARY EXHAUST STATION
H-2-90516
PRIMARY SEAL POT PIT
H-2-90836
HOSE STATION
FOR ENLARGED PLAN SEE DET 4
FOR ENCLOSURE DETAILS SEE H-2-90586
MATCH LINE-FOR CONT SEE H-2-90548
NOTE: FOR PIPE SUPPORTS, GUIDES & ANCHORS SEE H-2-90582
PLAN
SCALE: 1" = 10'-0"
DETAIL 2
SCALE: 1/4" = 1'-0"
DETAIL 3
SCALE: 1/4" = 1'-0"
DETAIL 4
SCALE: 1/4" = 1'-0"
DETAIL 5
SCALE: 1/4" = 1'-0"
DETAIL 6
SCALE: 1/4" = 1'-0"
DETAIL 10
SCALE: 1/2" = 1'-0"
VALVE PIT
KEY PLAN
SCALE: NONE
NEW TRANSFER LINES
AW TANK FARM
241-AP TANK FARM
INDICATES CONCENTRIC REDUCER PER M-40
RELEASED FOR CONSTRUCTION
U. S. DEPARTMENT OF ENERGY
Richland Operations Office
KAISER ENGINEERS HANFORD COMPANY
PIPING PLAN # 5
241 AP TANK FARM
H-2-90547

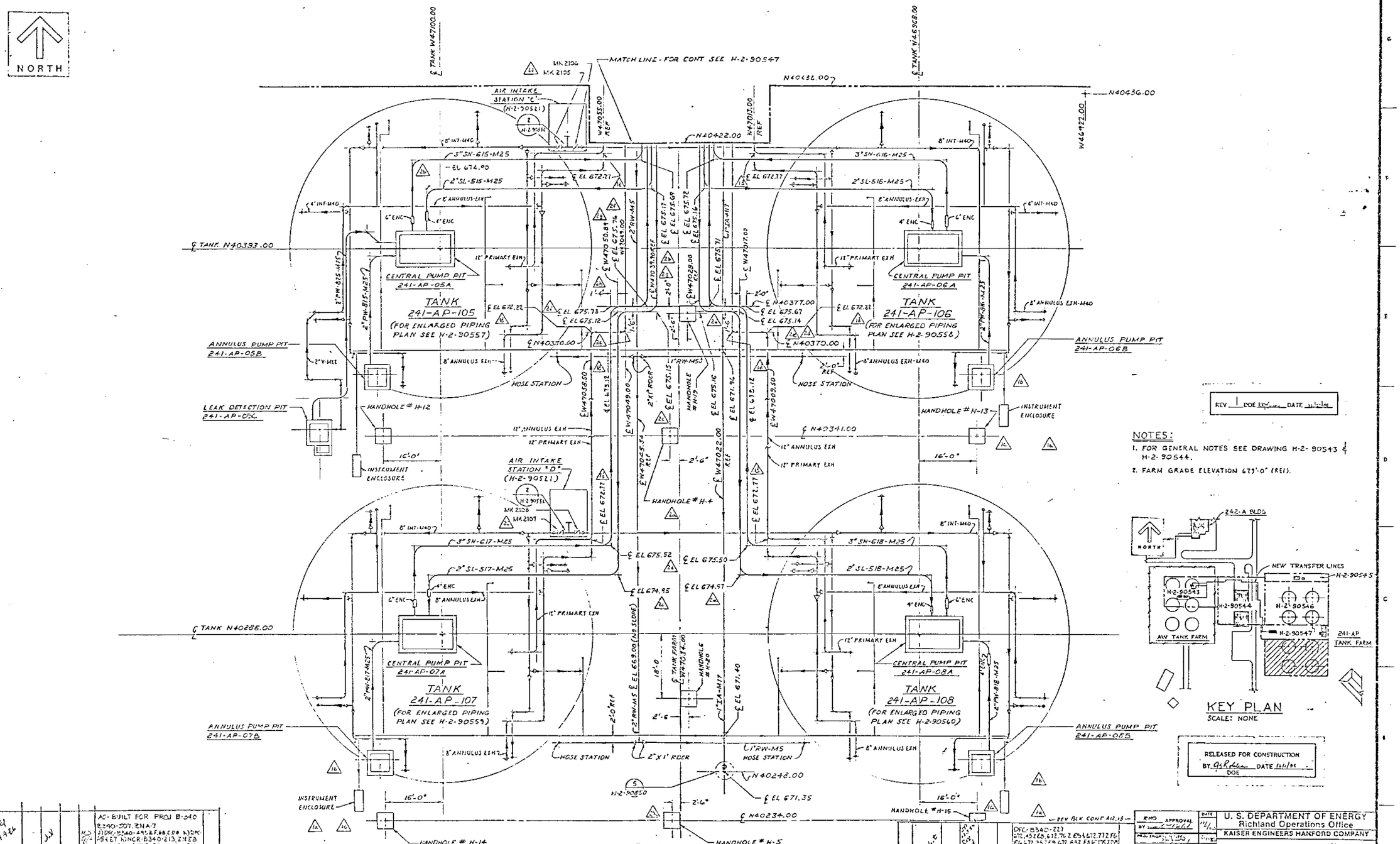
NORTH
MATCH LINE - FOR CONT SEE H-2-90547
TANK 241-AP-105
(FOR ENLARGED PIPING PLAN SEE H-2-90557)
TANK 241-AP-106
(FOR ENLARGED PIPING PLAN SEE H-2-90558)
TANK 241-AP-107
(FOR ENLARGED PIPING PLAN SEE H-2-90559)
TANK 241-AP-108
(FOR ENLARGED PIPING PLAN SEE H-2-90560)
CENTRAL PUMP PIT 241-AP-05A
CENTRAL PUMP PIT 241-AP-06A
CENTRAL PUMP PIT 241-AP-07A
CENTRAL PUMP PIT 241-AP-08A
ANNULUS PUMP PIT 241-AP-05B
ANNULUS PUMP PIT 241-AP-06B
ANNULUS PUMP PIT 241-AP-07B
ANNULUS PUMP PIT 241-AP-08B
LEAK DETECTION PIT 241-AP-07C
AIR INTAKE STATION "C" (H-2-90521)
AIR INTAKE STATION "D" (H-2-90521)
HOSE STATION
HANDHOLE # H-12
HANDHOLE # H-13
HANDHOLE # H-14
HANDHOLE # H-15
HANDHOLE # H-4
HANDHOLE # H-5
INSTRUMENT ENCLOSURE
PLAN
SCALE: 1"=10'-0"
NOTES:
FOR PIPE SUPPORT, GUIDE & ANCHORS SEE H-2-90583
NOTES:
1. FOR GENERAL NOTES SEE DRAWING H-2-90543 & H-2-90544.
2. FARM GRADE ELEVATION 673'-0" (REF).
242-A BLDG
NEW TRANSFER LINES
H-2-90545
H-2-90543
H-2-90544
H-2-90546
H-2-90547
AW TANK FARM
241-AP TANK FARM
KEY PLAN
SCALE: NONE
RELEASED FOR CONSTRUCTION
BY DOE DATE 5/1/01
REV 1 DOE DATE 11/1/00
U. S. DEPARTMENT OF ENERGY
Richland Operations Office
KAISER ENGINEERS HANFORD COMPANY
PIPING PLAN # 6
241-AP TANK FARM
B-340
X54002
R295A2
AS SHOWN
241-AP
0402
NONE
NOT REQD
H-2-90548
AC-BUILT FOR PROJ B-340
KEH APPROVAL
DESCRIPTION
REVISIONS
COMMENT REVIEW
DRAWING LIST
TITLE
REFERENCES
NEXT USED ON H-2-90455

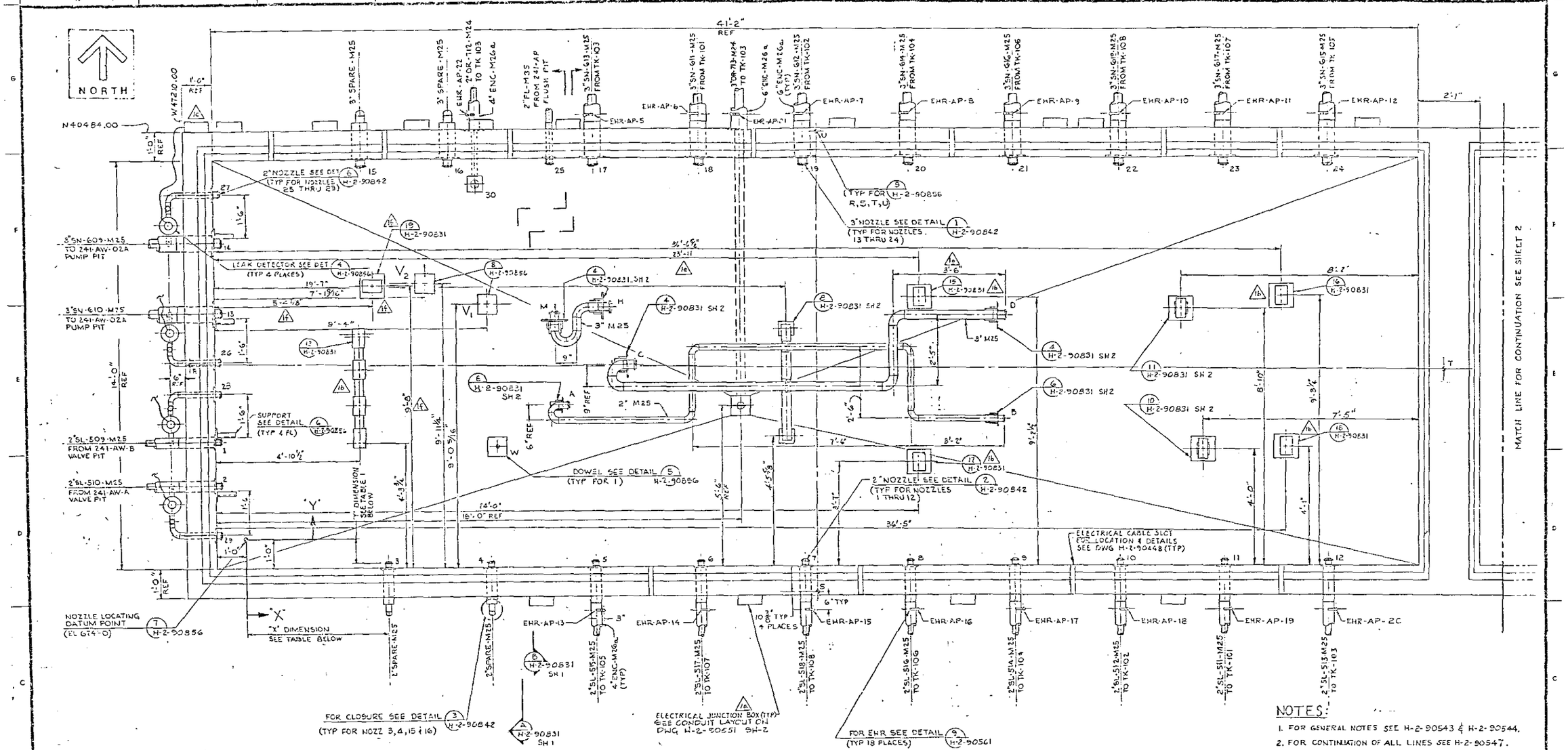

PLAN (SHOWN WITH COVER BLOCKS REMOVED)
SCALE 3/4" = 1'-0"

NOTES:

1. FOR GENERAL NOTES SEE H-2-90543 & H-2-90544.
2. FOR CONTINUATION OF ALL LINES SEE H-2-90547.

NOZZLE LOCATION TABLE

WALL NOZZLE IDENT. No	"X" DIMENSION DESIGN	"X" DIMENSION AS-BUILT	"Y" DIMENSION DESIGN	"Y" DIMENSION AS-BUILT	"Z" DIMENSION DESIGN	"Z" DIMENSION AS-BUILT
1	0'-9 3/8"	0'-9 41/64"	3'-4"	3'-2 63/64"	2'-6 1/4"	2'-6 17/64"
2	0'-9 3/8"	0'-9 31/64"	1'-10"	1'-10"	2'-6 1/4"	2'-6 21/64"
3	4'-10"	4'-10"	0'-9 3/8"	0'-9 31/64"	1'-10 3/8"	1'-10 3/8"
4	8'-5"	8'-5"	0'-9 3/8"	0'-9 31/64"	1'-10 3/8"	1'-10 3/8"
5	12'-0"	12'-0 3/8"	0'-9 3/8"	0'-9 3/8"	1'-10 3/8"	1'-10 31/64"
6	15'-7"	15'-7 31/64"	0'-9 3/8"	0'-9 31/64"	1'-10 3/8"	1'-10 3/8"
7	19'-2"	19'-1 15/16"	0'-9 3/8"	0'-9 3/8"	1'-10 3/8"	1'-10 3/8"
8	22'-9"	22'-8 63/64"	0'-9 3/8"	0'-9 31/64"	1'-10 3/8"	1'-10 33/64"
9	26'-4"	26'-3 61/64"	0'-9 3/8"	0'-9 31/64"	1'-10 3/8"	1'-10 33/64"
10	29'-11"	29'-10 31/64"	0'-9 3/8"	0'-9 33/64"	1'-10 3/8"	1'-10 31/64"
11	33'-6"	33'-5 33/64"	0'-9 3/8"	0'-9 31/64"	1'-10 3/8"	1'-10 33/64"
12	37'-1"	37'-1 33/64"	0'-9 3/8"	0'-9 3/8"	1'-10 3/8"	1'-10 3/8"
13	0'-5 3/16"	0'-5 21/64"	7'-9"	7'-9"	2'-7 3/8"	2'-7 21/64"
14	0'-5 3/16"	0'-5 21/64"	10'-2"	10'-2"	2'-7 3/8"	2'-7 21/64"
15	4'-0"	4'-0"	12'-5 1/16"	12'-5 1/64"	2'-7 3/8"	2'-7 21/64"

NOZZLE LOCATION TABLE (CONT)

WALL NOZZLE IDENT. No	"X" DIMENSION DESIGN	"X" DIMENSION AS-BUILT	"Y" DIMENSION DESIGN	"Y" DIMENSION AS-BUILT	"Z" DIMENSION DESIGN	"Z" DIMENSION AS-BUILT
16	7'-0"	6'-11 31/64"	12'-5 1/16"	12'-5 63/64"	2'-7 3/8"	2'-7 21/64"
17	12'-0"	11'-11 33/64"	12'-5 1/16"	12'-5 33/64"	2'-7 3/8"	2'-7 11/64"
18	15'-7"	15'-7"	12'-5 1/16"	12'-5 33/64"	2'-7 3/8"	2'-7 3/8"
19	19'-2"	19'-2 1/32"	12'-5 1/16"	12'-5 7/64"	2'-7 3/8"	2'-7 11/64"
20	22'-9"	22'-9 3/32"	12'-5 1/16"	12'-5 33/64"	2'-7 3/8"	2'-7 11/64"
21	26'-4"	26'-4 1/64"	12'-5 1/16"	12'-5 25/64"	2'-7 3/8"	2'-7 11/64"
22	29'-11"	29'-11"	12'-5 1/16"	12'-5 25/64"	2'-7 3/8"	2'-7 11/64"
23	33'-6"	33'-6"	12'-5 1/16"	12'-5 7/64"	2'-7 3/8"	2'-7 11/64"
24	37'-1"	37'-1"	12'-5 1/16"	12'-5 1/64"	2'-7 3/8"	2'-7 11/64"
25	10'-6"	10'-6"	12'-5 3/16"	12'-4 9/32"	2'-7 3/8"	2'-7 21/64"
26	[illegible]	[illegible]	6'-1"	6'-1 1/64"	1'-0"	1'-0 1/64"
27	[illegible]	[illegible]	11'-10"	11'-9 31/64"	1'-0"	1'-0 31/64"
28	[illegible]	[illegible]	5'-6"	5'-6 1/64"	1'-0"	0'-11 33/64"
29	[illegible]	[illegible]	0'-2"	0'-2"	1'-0"	0'-11 33/64"
30	7'-11"	7'-11 1/32"	[illegible]	[illegible]	[illegible]	0'-6 31/64"

NOZZLE LOCATION TABLE (CONT)

IDENT LETTER	"X" DIMENSION DESIGN	"X" DIMENSION AS-BUILT	"Y" DIMENSION DESIGN	"Y" DIMENSION AS-BUILT	"Z" DIMENSION DESIGN	"Z" DIMENSION AS-BUILT
A	11'-1 1/2"	11'-1 3/8"	4'-6 1/2"	4'-6 25/64"	1'-10 3/8"	1'-10 3/8"
B	25'-11 7/16"	25'-11 31/64"	4'-0 1/2"	4'-0 25/64"	1'-10 3/8"	1'-10 27/64"
C	13'-4 1/2"	13'-4 1/2"	5'-11"	5'-11"	2'-7 1/2"	2'-7 13/64"
D	26'-0 7/16"	25'-11 31/64"	7'-7"	7'-6 31/64"	2'-7 1/2"	2'-7 13/64"
DOWEL W	6'-7 3/64"	6'-7 15/32"	8'-3 3/64"	8'-3 1/64"	0'-0"	0'-0 1/32"
H	12'-7 1/2"	12'-7 25/32"	7'-11"	7'-10 1/2"	2'-7 1/2"	2'-7 13/64"
M	10'-6 1/2"	10'-6 25/64"	7'-7 7/8"	7'-7 7/64"	2'-7 7/8"	2'-7 21/64"
R	—	—	6'-0"	6'-0"	6'-0"	6'-6 1/64"
T					6'-6"	6'-5 31/64"
S	15'-7"	15'-7"	—	—	6'-6"	6'-6 1/64"
U					6'-6"	6'-6 1/64"

NOTE: "Z" DIMENSION IS TAKEN IN VERTICAL PLANE - REF H-2-90531 SH1

RELEASED FOR CONSTRUCTION
BY GGR DATE 10/1/93
DOE

REV	DESCRIPTION
A	AS-BUILT FOR PROJ. B-240 1) DFC B-340-425 & F6
B	1) DFC B-340-420 & E1,12 F10,11 6) FCD CHNG DIM WAS 24'-1" & F5 & A3,16 6) NCR NO. B-340-146 7A,12
C	4) NCR Z 340-149 (1420-1812 E11,12 5) DFC B-340-385 & E12 6) DFC B-340-397 & E8,11 & F23,5 7) DFC B-340-132 & C7 & 8

RHO APPROVAL
DESIGN ENGINEER
DRAWING LIST
TITLE
REFERENCES
KEM APPROVAL
REVISIONS
COMMENT REVIEW

U. S. DEPARTMENT OF ENERGY
Richland Operations Office
KAISER ENGINEERS HANFORD COMPANY

PIPING PLAN
241-AP VALVE PIT

PROJECT TITLE 241-AP TANK FARM
PROJ B-340 NO X34002 JOB R2952
SCALE 1/4 SHOWN BLDG 241-AP SHEET 04
DESIGNATION NONE BY NOT DEP
DRAWING NUMBER H-2-90551 1 2 1

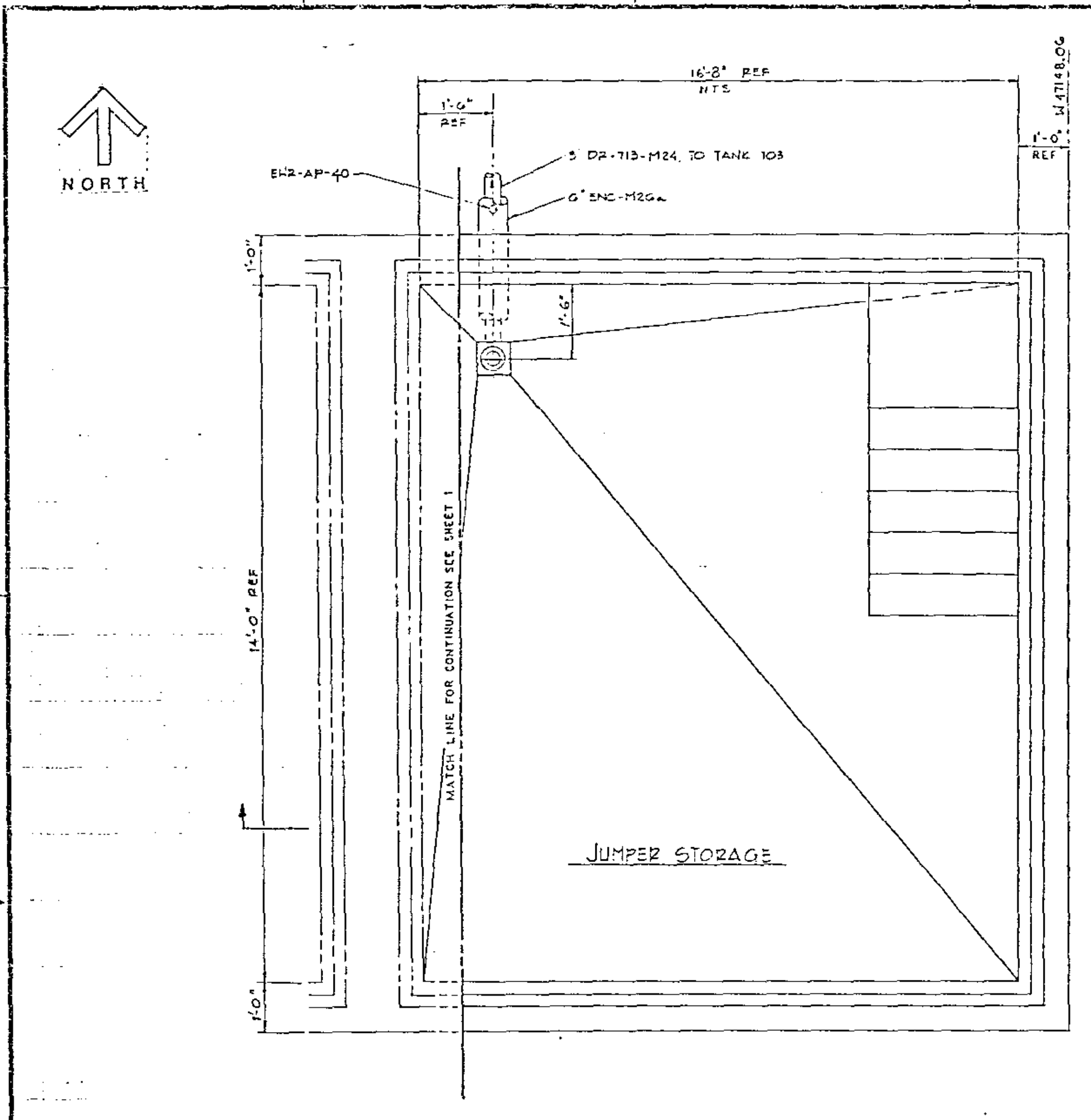

PLAN (SHOWN WITH COVER BLOCKS REMOVED)
SCALE : 3/4" = 1'-0"

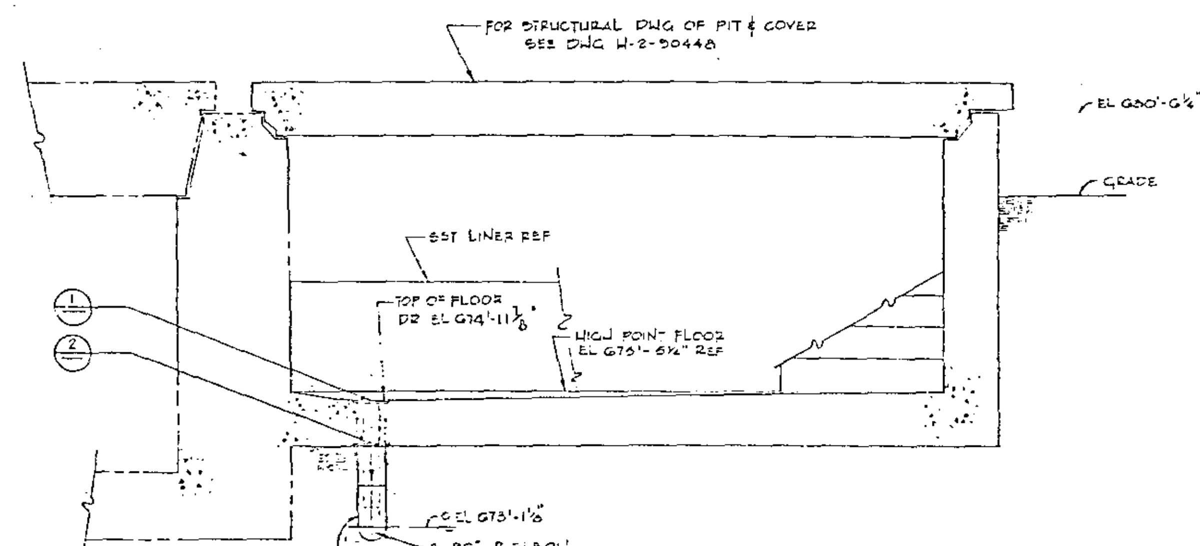

SECTION C
SCALE : ¾" = 1'-0"

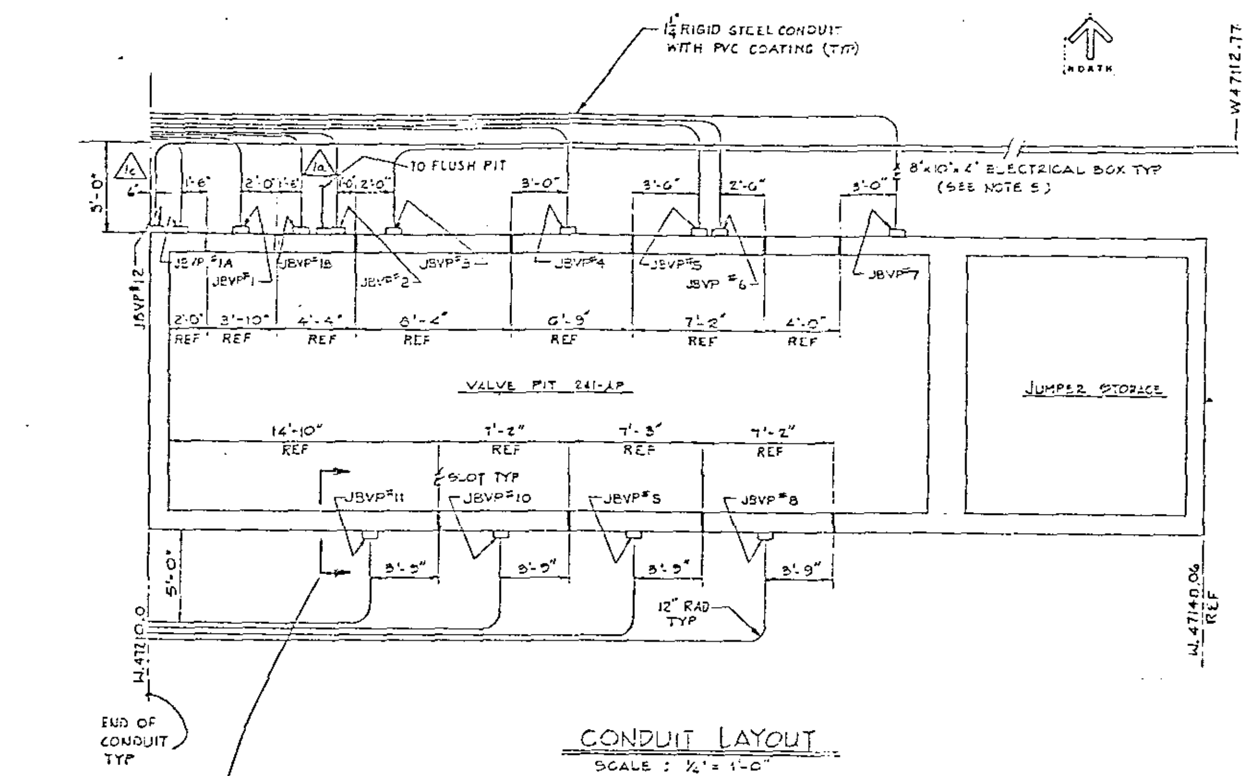

CONDUIT LAYOUT
SCALE : ½" = 1'-0"

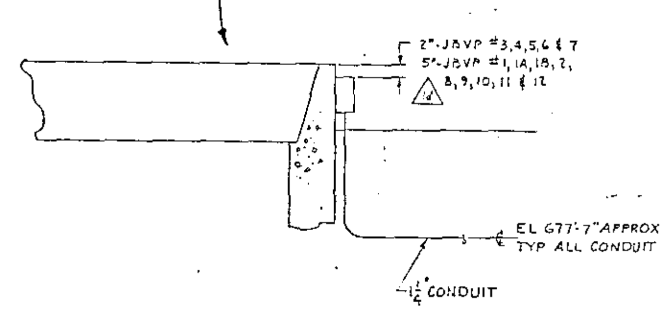

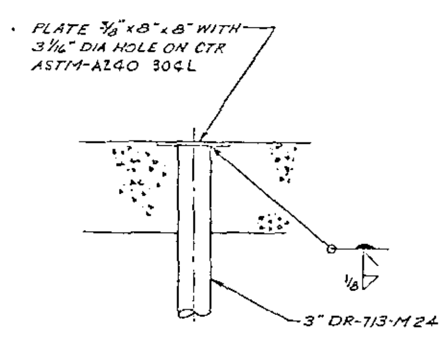

DETAIL 1

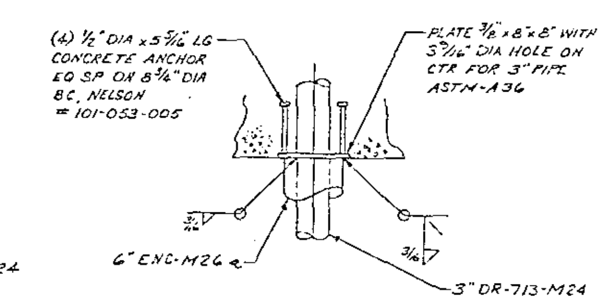

DETAIL 2

NOTES :

1. FOR GENERAL NOTES SEE DRAWINGS H-2-90543 & H-2-90544.
2. FOR CONTINUATION OF ALL PIPING SEE DWG H-2-90547.
3. ALL ELECTRICAL BOXES WILL BE NEMA TYPE #4 HOFFMAN ENGRG CO #A-1008NF W/ PANEL #A-10P8 & TERMINAL STRIPS & MOUNTED W/ (4) ¼" x 1⅝" HILTI KWIK-BOLTS # 5500004

RELEASED FOR CONSTRUCTION
BY ____ DOE DATE ____

REV	DESCRIPTION
1	AS BUILT FOR PROJ B-340; DFC B-340-418 Z D3; DFC B-340-383 Z F4; DFC B-340-281 Z A7; DFC B-340-[illegible] Z 3F

REVISIONS

U. S. DEPARTMENT OF ENERGY
Richland Operations Office
KAISER ENGINEERS HANFORD COMPANY

PIPING PLAN
241-AP VALVE PIT
& JUMPER STORAGE

PROJECT TITLE: 241-AP TANK FARM
PROJ: B-340 | X34002 | R2956A2
SCALE: AS SHOWN | 241-AP | INDEX: C402
CLASSIFICATION: NONE
DRAWING NUMBER: H-2-90551 | SHEET 2 OF 2 | REV 1

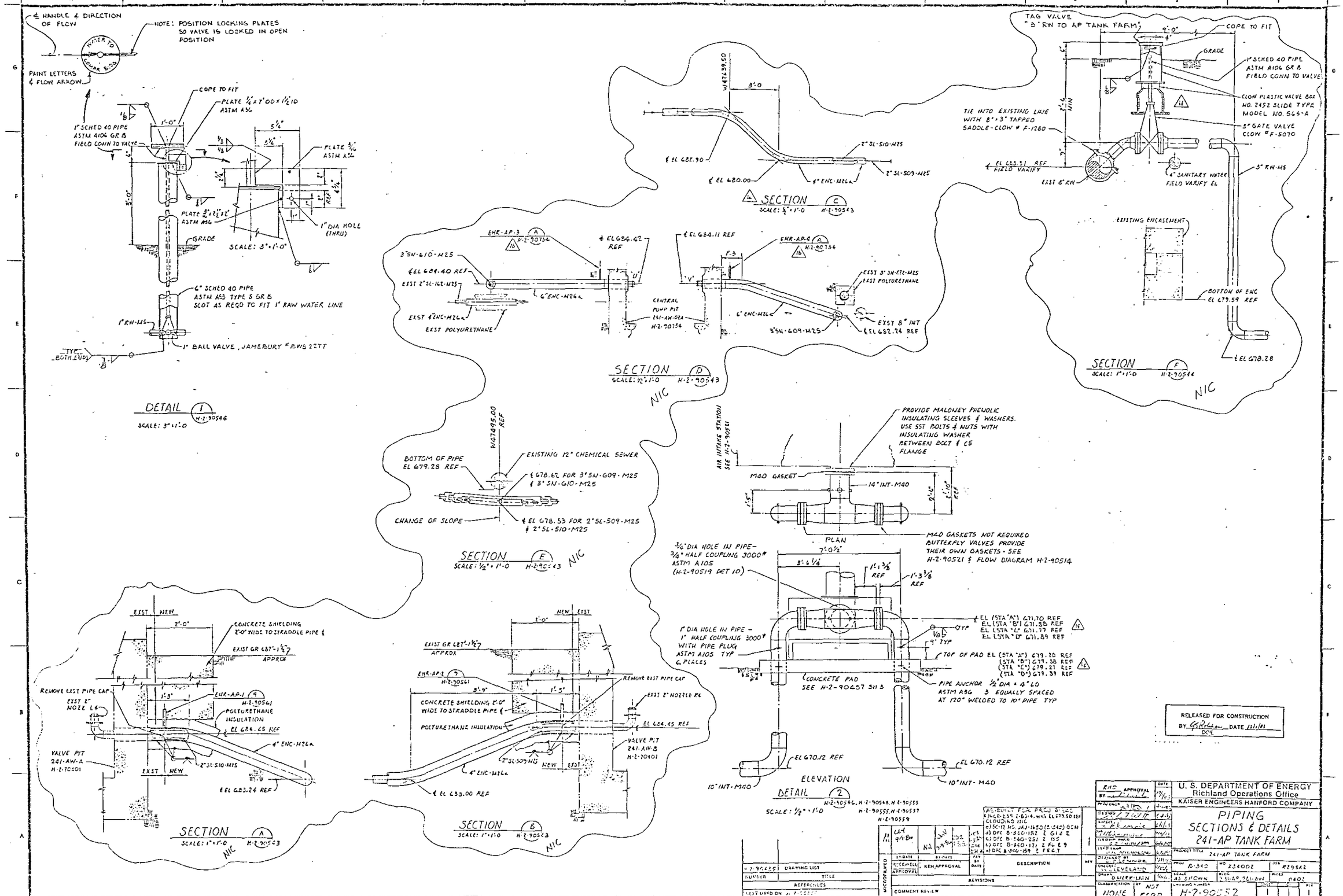
℄ HANDLE & DIRECTION OF FLOW
NOTE: POSITION LOCKING PLATES SO VALVE IS LOCKED IN OPEN POSITION
WATER TO COMPR BLDG
PAINT LETTERS & FLOW ARROW
COPE TO FIT
PLATE 1/4 x 7'-0 x 1 1/2 ID ASTM A36
1" SCHED 40 PIPE ASTM A106 GR B FIELD CONN TO VALVE
PLATE 3/8 ASTM A36
PLATE 3/8 x 2 1/2 x 22 ASTM A36
1" DIA HOLE (THRU)
SCALE: 3" = 1'-0"
GRADE
6" SCHED 40 PIPE ASTM A53 TYPE S GR B SLOT AS REQD TO FIT 1" RAW WATER LINE
1" RW-M5
1" BALL VALVE, JAMESBURY # BWS 22TT
TYP BOTH ENDS
DETAIL 1 H-2-90544
SCALE: 3" = 1'-0
W47139.50
3'-0
℄ EL 682.90
℄ EL 680.00
2" SL-510-M25
2" SL-509-M25
4" ENC-M26
SECTION A C H-2-90543
SCALE: 1/2" = 1'-0
TAG VALVE "B" RW TO AP TANK FARM
COPE TO FIT
1" SCHED 40 PIPE ASTM A106 GR B FIELD CONN TO VALVE
CLOW PLASTIC VALVE BOX NO. 2452 SLIDE TYPE MODEL NO. 564-A
2" GATE VALVE CLOW # F-5070
TIE INTO EXISTING LINE WITH 8" x 3" TAPPED SADDLE-CLOW # F-1280
℄ EL 683.51 REF FIELD VARIFY
EXST 8" RW
4" SANITARY WATER FIELD VARIFY EL
3" RW-M5
EXISTING ENCASEMENT
BOTTOM OF ENC EL 679.59 REF
℄ EL 678.28
SECTION F H-2-90544
SCALE: 1" = 1'-0
NIC
EHR-AP-3 A H-2-90734
℄ EL 684.42 REF
3" SN-610-M25
℄ EL 684.40 REF
EXST 2" SL-162-M25
6" ENC-M26
EXST 4" ENC-M26
EXST POLYURETHANE
CENTRAL PUMP PIT 241-AW-02A H-2-90734
℄ EL 684.11 REF
EHR-AP-4 A H-2-90734
EXST 3" SN-ETZ-M25
EXST POLYURETHANE
EXST 8" INT
℄ EL 682.74 REF
3" SN-609-M25
SECTION D H-2-90543
SCALE: 1/2" = 1'-0
NIC
W47495.00 REF
BOTTOM OF PIPE EL 679.28 REF
EXISTING 12" CHEMICAL SEWER
℄ 678.62 FOR 3" SN-609-M25
℄ 3" SN-610-M25
CHANGE OF SLOPE
℄ EL 678.53 FOR 2" SL-509-M25
℄ 2" SL-510-M25
SECTION E H-2-90543
SCALE: 1/2" = 1'-0
NIC
AIR INTAKE STATION SEE H-2-90511
PROVIDE MALONEY PHENOLIC INSULATING SLEEVES & WASHERS. USE SST BOLTS & NUTS WITH INSULATING WASHER BETWEEN BOLT & CS FLANGE
M40 GASKET
14" INT-M40
PLAN
M40 GASKETS NOT REQUIRED BUTTERFLY VALVES PROVIDE THEIR OWN GASKETS - SEE H-2-90521 & FLOW DIAGRAM H-2-90514
3/4" DIA HOLE IN PIPE - 3/4" HALF COUPLING 3000# ASTM A105 (H-2-90519 DET 10)
1" DIA HOLE IN PIPE - 1" HALF COUPLING 3000# WITH PIPE PLUG ASTM A105 TYP 6 PLACES
℄ EL (STA "A") 671.70 REF
EL (STA "B") 671.58 REF
EL (STA "C") 671.77 REF
EL (STA "D") 671.89 REF
TOP OF PAD EL (STA "A") 679.20 REF
(STA "B") 679.38 REF
(STA "C") 679.21 REF
(STA "D") 679.39 REF
CONCRETE PAD SEE H-2-90657 SH 3
PIPE ANCHOR 1/2" DIA x 4" LG ASTM A36 3 EQUALLY SPACED AT 120° WELDED TO 10" PIPE TYP
EL 670.12 REF
10" INT-M40
ELEVATION
DETAIL 2 H-2-90546, H-2-90548, H-2-90555 H-2-90557 H-2-90559
SCALE: 1/2" = 1'-0
EXIST NEW
CONCRETE SHIELDING 2'-0" WIDE TO STRADDLE PIPE ℄
EXIST GR 687'-1 1/2" APPROX
REMOVE EXST PIPE CAP
EXST 2" NOZZ L6
EHR-AP-1 4 H-2-90561
POLYURETHANE INSULATION
EL 684.45 REF
4" ENC-M26
VALVE PIT 241-AW-A H-2-70401
2" SL-510-M25
℄ EL 683.24 REF
SECTION A H-2-90543
SCALE: 1" = 1'-0
NIC
EHR-AP-2 3 H-2-90561
REMOVE EXST PIPE CAP
EXST 2" NOZZLE R6
CONCRETE SHIELDING 2'-0" WIDE TO STRADDLE PIPE ℄
POLYURETHANE INSULATION
EL 684.45 REF
VALVE PIT 241-AW-B H-2-70401
2" SL-509-M25
4" ENC-M26
℄ EL 683.00 REF
SECTION B H-2-90543
SCALE: 1" = 1'-0
NIC
RELEASED FOR CONSTRUCTION BY DATE 12/1/93 DOE
DRAWING LIST
NUMBER TITLE
REFERENCES
NOT USED ON
MICROFILMED
RECEIVED APPROVAL
KEN APPROVAL
COMMENT REVIEW
REVISIONS
DESCRIPTION
AS-BUILT FOR FRCU BY SWG
CLOUDING 11/C
U. S. DEPARTMENT OF ENERGY
Richland Operations Office
KAISER ENGINEERS HANFORD COMPANY
PIPING
SECTIONS & DETAILS
241-AP TANK FARM
PROJECT TITLE 241-AP TANK FARM
DESIGNED BY
CHECKED LEVELAND
DRAWN DAVERMANN
CLASSIFICATION NONE
BY NOT REQD
DRAWING NUMBER H-2-90552
SCALE AS SHOWN
BLDG 241-AP, 241-AW-1
PROJECT 0402
REV 1

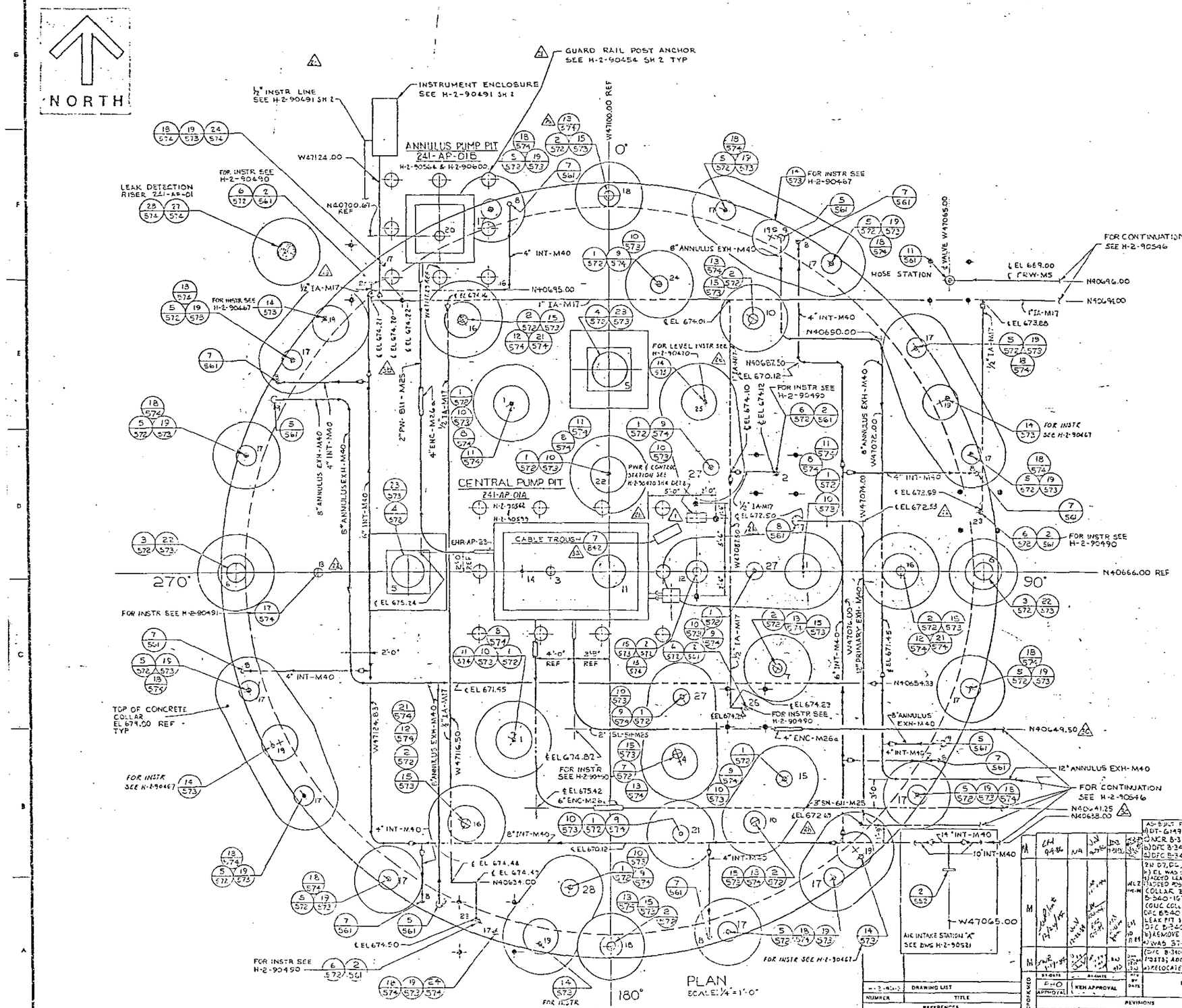

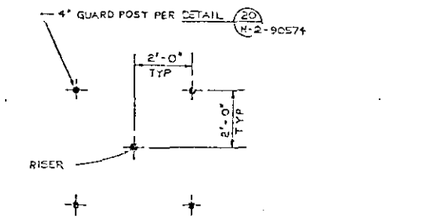

TYPICAL RISER/GUARD POST DETAIL UNLESS OTHERWISE SHOWN

NOTES:

1. FOR GENERAL NOTES SEE H-2-90543 & H-2-90544
2. FOR RISER IDENTIFICATION & LOCATION SEE H-2-90528
3. DUE TO CONFINEMENT OF DETAIL INDICATOR BUBBLES, ONLY THE LAST THREE DIGITS OF THE DRAWING ARE CALLED OUT (H-2-90XXX)

REV 2 DOE DATE

REV 1 DOE DATE

RELEASED FOR CONSTRUCTION BY DOE DATE

M						3
M						2
						1

AS-BUILT FOR PROJ. B-340
a) DT-6149.0A GEN REV
b) NCR B-340-193 Z B4,C5
b) DFC B-340-292 Z E10
d) DFC B-340-343 Z D9
2N D7, DC, B7/DFC B340-227
h) EL WAS 672.16, 672.21, 672.54
3) ADDED LEAK FIELD & PIT/DFC B340-2
4) ADDED POST NOTE Z E19/DFC B340-2
COLLAR 2N E8, DFC B340-194
B-340-162 1, 6) ADD CONC
CONC COLLAR 2N D11 DFC
DFC B-340-219 ; 4) REMOVE
LEAK PIT & PIPING 2N G11
DFC B-340-162 2, 6) DELETE
5) REMOVE OIL LUBE 2N D8,
6) WAS 572 2N F9, DFC B340-1
(DFC B-340-131)
7) 03/13/; ADDED PWR STA 2N F8
8) RELOCATED LUBE OIL & GUARD

DESCRIPTION

REVISIONS

DRAWING LIST	
NUMBER	TITLE
REFERENCES	

COMMENT REVIEW

U. S. DEPARTMENT OF ENERGY
Richland Operations Office
KAISER ENGINEERS HANFORD COMPANY

PIPING PLAN TANK 101

PROJECT TITLE 241-AP TANK FARM

PROJ	B-340	NO. 73W002	JOB R235 A2
SCALE	AS SHOWN	BLDG 241-AP	INDEX 0407
DRAWING NUMBER	H-2-90553	SHEET 1	REV E

CLASSIFICATION NONE

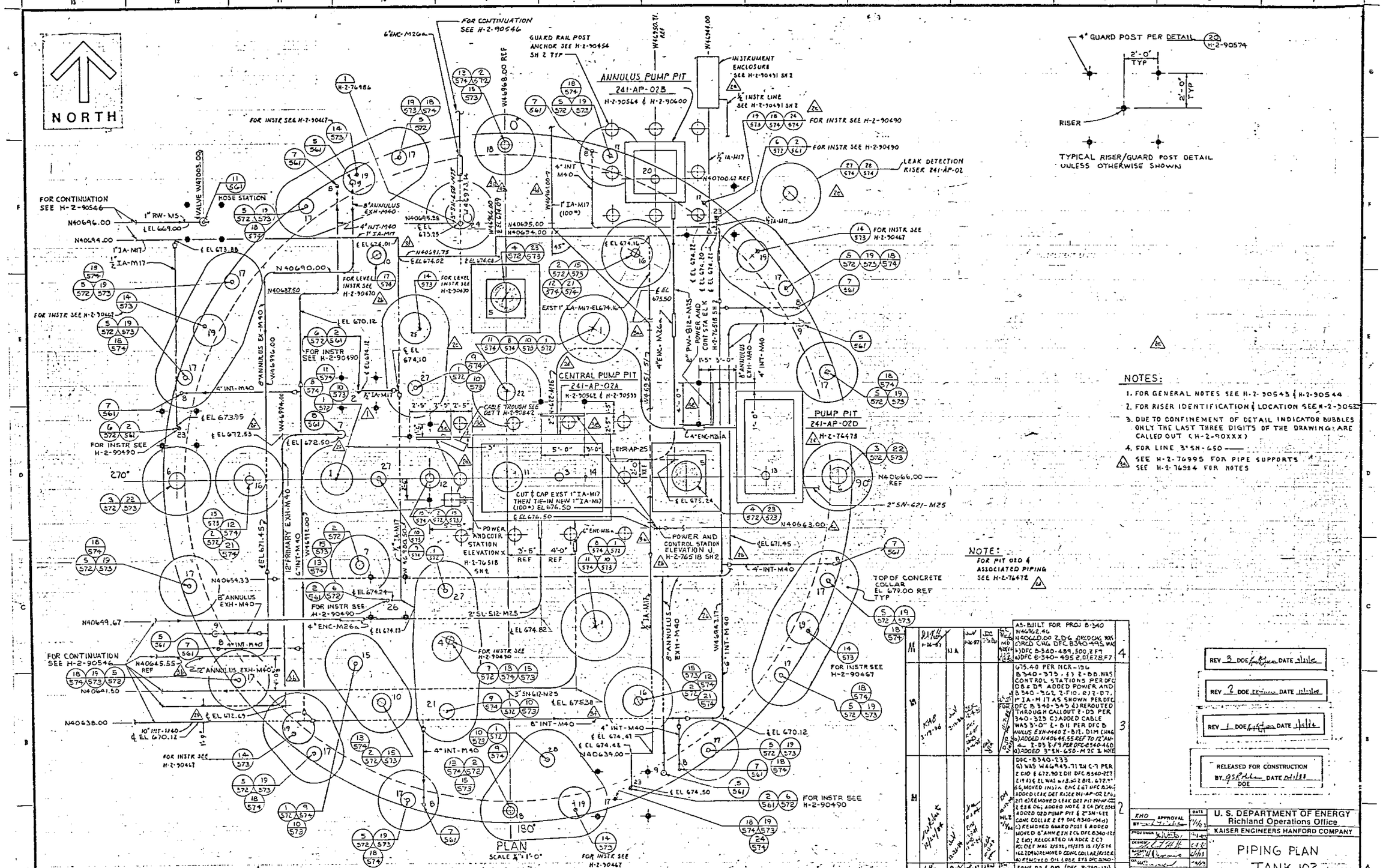

NOTES:

1. FOR GENERAL NOTES SEE H-2-90543 & H-2-90544
2. FOR RISER IDENTIFICATION & LOCATION SEE H-2-90552
3. DUE TO CONFINEMENT OF DETAIL INDICATOR BUBBLES ONLY THE LAST THREE DIGITS OF THE DRAWING ARE CALLED OUT (H-2-90XXX)
4. FOR LINE 3"SN-650 —
5. SEE H-2-76995 FOR PIPE SUPPORTS SEE H-2-76984 FOR NOTES

NOTE:
FOR PIT 02D & ASSOCIATED PIPING SEE H-2-76472

REV	DESCRIPTION
4	AS-BUILT FOR PROJ B-340 W46962.46 N40660.00 Z.DG. a) RED CAG 305 CIRCD CHG. DFC B340-443. WAS b) DFC B-340-489, 500, Z F9 c) DFC B-340-495 Z, D7, E7, E8, F7
3	675.40 PER NCR-136 B340-373, 83 Z-B8 WAS CONTROL STATIONS PER DFC D8 & D9. ADDED POWER AND B340-361 Z-F10, E7 Z-D7. 1" IA-M17 AS SHOWN PER DFC DFC B 340-345 b) REROUTED THROUGH CALLOUT Z-D5 PER 340-325 c) ADDED CABLE WAS 3'-0" Z-B11 PER DFC B WULUS EXH-M40 Z-B12. DIM CHNG d) ADDED W40645.55 REF TO 12" ANNULUS EXH-M40 Z-D5 & F9 PER DFC-B340-460 e) ADDED 3"SN-650-M25 & NOTE
2	DFC-B340-233 a) WAS W46945.71 Z4 C-7 PER Z EIO & 672.90 Z D11 DFC B340-227 Z19 f) & EL WAS 673.50 Z B12, 672.25 b) MOVED INSTR ENC Z G7 DFC B340-443 c) ADDED LEAK DET RISER N1-AP-02 Z F4, Z17 d) REMOVED LEAK DET PIT N1-AP-02 Z E8 & D4; ADDED NOTE Z E4 DFC B340-443 e) ADDED 02D PUMP PIT & 2"SN-621 CONC COLLAR Z E9 DFC B340-444 f) REMOVED GUARD POST & ADDED MOVED 6" ANN EXH EL DFC B340-123 Z E10; RELOCATED IA RISER Z C7 R1: DET WAS 3/STL, 11/STS IS 11/STL 16 Z D4 g) REMOVED CONC COLLAR/RISER h) REMOVED OIL LUBE EYE DFC B340-
1	ZONE D3 & D10 (DFC B-340-131) POSTS; ADDED PWC STATION j) RELOCATED LUBE OIL & GUARD

REV 3 DOE DATE
REV 2 DOE DATE
REV 1 DOE DATE

RELEASED FOR CONSTRUCTION
BY DOE DATE

U. S. DEPARTMENT OF ENERGY	Richland Operations Office
KAISER ENGINEERS HANFORD COMPANY	
PIPING PLAN	TANK 102
PROJECT TITLE	241-AP TANK FARM
PROJ B-340	WO X34002 JOB RZ95A2
SCALE AS SHOWN	BLDG 241-AP INDEX 060B
CLASSIFICATION NONE	DRAWING NUMBER H-2-90554 SHEET 1 OF 1 REV 4

H-2-90435 DRAWING LIST
NUMBER TITLE
REFERENCES
NEXT USED ON H-2-90455

MICROFILMED RHO APPROVAL BY-DATE KEH APPROVAL BY-DATE

COMMENT REVIEW

REVISIONS

RHO APPROVAL DATE 7/16/85
PROJ ENGR 7/16/85
DESIGN 7/16/85
SAFETY 7/16/85
QA 7/16/85
GROUP MGR 7/16/85
LEAD PROJ 7/16/85
DRFT BY O'CONNOR 7/16/85
CHECKED G. G. CLEVELAND 7/16/85
DRAWN J. C. BREED 7/16/85

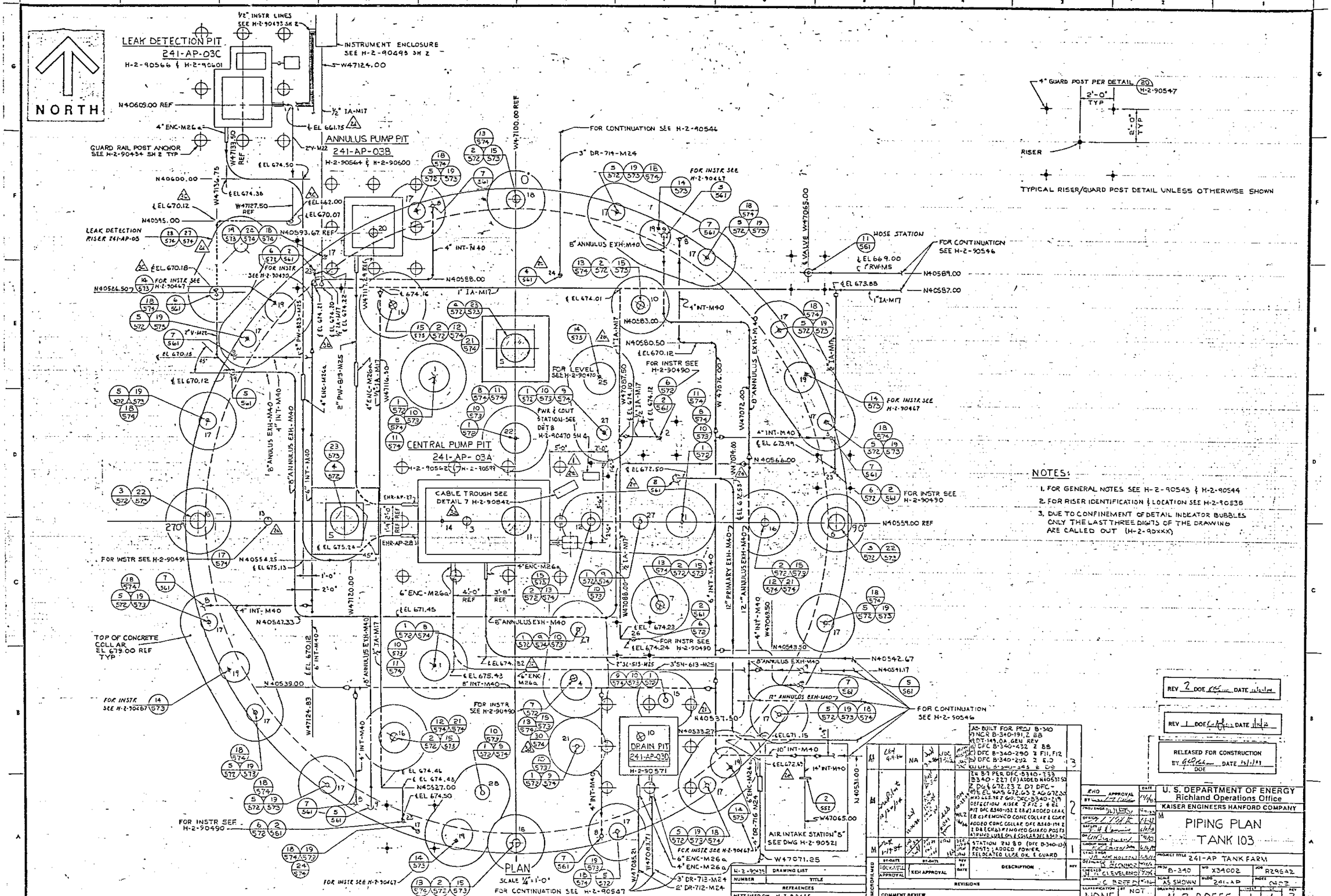

NOTES:

1. FOR GENERAL NOTES SEE H-2-90543 & H-2-90544
2. FOR RISER IDENTIFICATION & LOCATION SEE H-2-90538
3. DUE TO CONFINEMENT OF DETAIL INDICATOR BUBBLES ONLY THE LAST THREE DIGITS OF THE DRAWING ARE CALLED OUT (H-2-90xxx)

REV 2 DOE DATE

REV 1 DOE DATE

RELEASED FOR CONSTRUCTION BY DATE DOE

AS-BUILT FOR PROJ B-340
1) NCR B-340-191, Z BB
2) DT-149.0A GEN REV
3) DFC B-340-432 Z BB
4) DFC B-340-290 Z F11, F12
5) DFC B-340-292 Z E.0
6) DFC B-340-343 Z D8
7) Z4 B-7 PER DFC B340-233 B340-227 (F) ADDED N40531.50 Z D6 & 672.23 Z D7 DFC-
8) EL WAS 672.63 Z 4G 672.23 WAS ELS.95 Z G0. DFC-B340-219 DETECTION RISER Z F12, & EL PER DFC B340-192 Z E8 & 9) ADDED LEAK E8 c) REMOVED CONC COLLAR & CORE ADDED CONC COLLAR DFC B340-194 Z 1 D8 Z (d) REMOVED GUARD POSTS & PLUG LOBELOW & SCHEDULE B340-W
10) STATION 2N 8D (DFC B-340-13) POSTS (ADDED POWER RELOCATED LEAK DR. & GUARD

REV	DESCRIPTION	BY	DATE
2			
1			

RHO APPROVAL BY
PROJ ENGR
DESIGN
ENGRG
CHIEF ENGR
CHIEF DESIGN
DRAWN BY
DESIGNED BY
CHECKED BY
DRAWN

U. S. DEPARTMENT OF ENERGY
Richland Operations Office
KAISER ENGINEERS HANFORD COMPANY

PIPING PLAN
TANK 103

PROJECT TITLE 241-AP TANK FARM
PROJ B-340 WO X34002 JOB R29542
SCALE AS SHOWN BLDG 241-AP NOTE
CLASSIFICATION NONE BY NOT REQ'D
DRAWING NUMBER H-2-90555 SHEET 1 OF 1 REV 3

DRAWING LIST	
NUMBER	TITLE
REFERENCES	
NEXT USED ON H-2-90555	

COMMENT REVIEW
REVISIONS

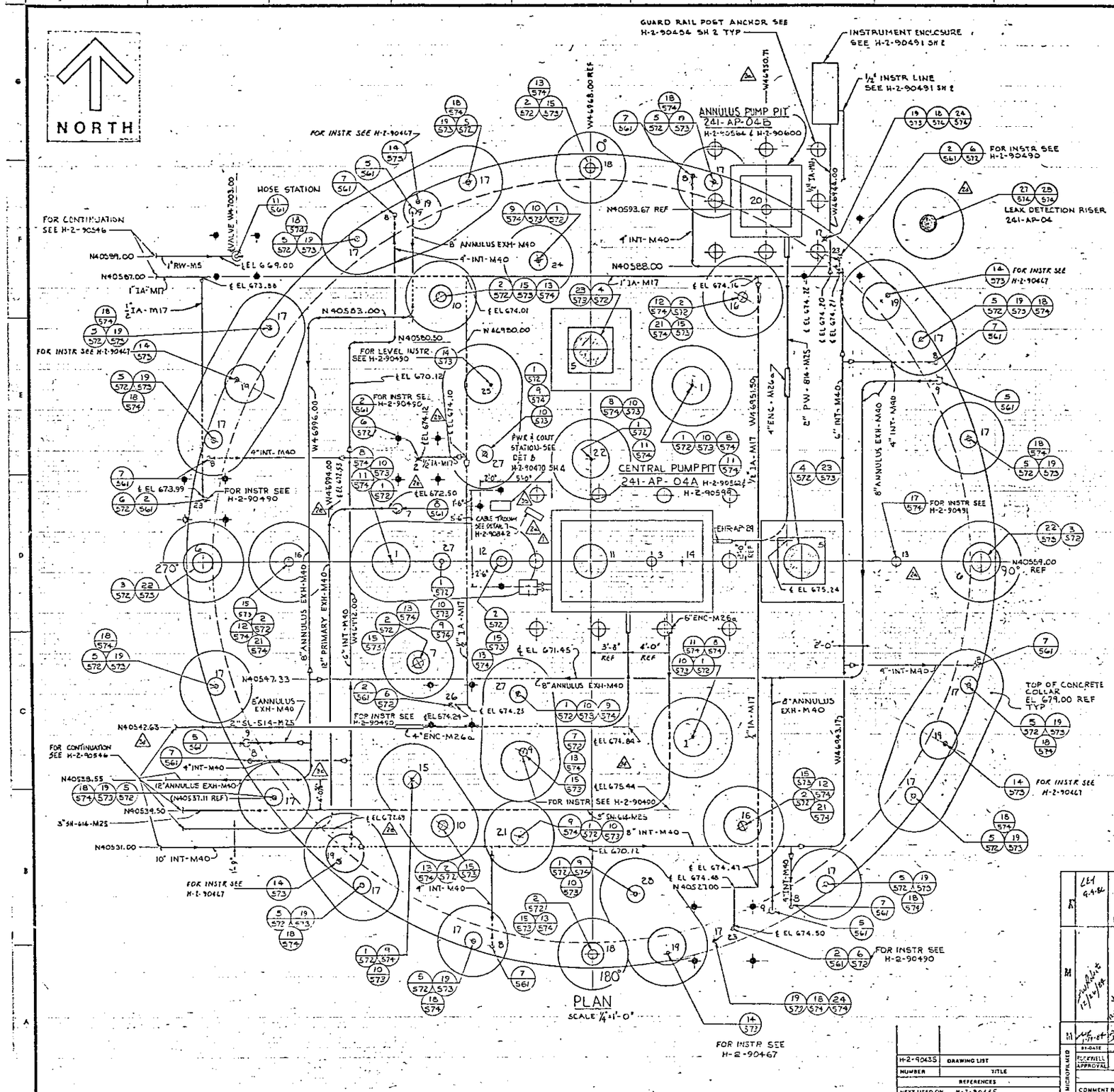

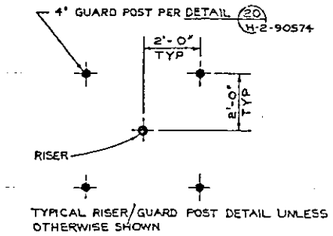

TYPICAL RISER/GUARD POST DETAIL UNLESS OTHERWISE SHOWN

NOTES:

1. FOR GENERAL NOTES SEE H-2-90543 & H-2-90544
2. FOR RISER IDENTIFICATION & LOCATION SEE H-2-90539
3. DUE TO CONFINEMENT OF DETAIL INDICATOR BUBBLES ONLY THE LAST THREE DIGITS OF THE DRAWING ARE CALLED OUT (H-2-90XXX)

REV 2 DOE DATE

REV 1 DOE DATE

RELEASED FOR CONSTRUCTION BY DOE DATE

REV	BY-DATE	BY-DATE	REV BY DATE	DESCRIPTION	REV
3	LEY 9-4-86	NA	JDE 7-3-86	AS-BUILT FOR PROJ B-340 & .40 CHNG PER SDR Z C-9 WAS .82 a) DT-6149.0A GEN REV F) RCD 323 ZN B11 d) NCR-B340-184 ZN C13 B340-343 ZN D9 c) DFC-B340-a) DFC-B340-292 ZN G9 b) DFC-	3
2				B340-227 672.90 Z D10 & 672.97 Z D11 DFC -219 e) & EL WAS 673.30 Z B11, 241-AP-04 Z F6 PER DFC-B340 d) ADDED LEAK DET RISER DET PIT 241-AP-04C Z E4, -194 Z E10 c) REMOVED LEAK CONC COLLAR PER DFC-B340 GUARD POST & ADDED PIT & DFC B340-162 Z D6 & D7 b) REMOVED a) REMOVED LUBE OIL & COLLAR	2
1				(DFC B340-101) POSTS; ADDED PWR STA. ZU 90 RELOCATED LUBE OIL & GUARD	1

MICROFILMED — BY-DATE: RICKWELL APPROVAL — KEN APPROVAL — REV BY DATE — REVISIONS — COMMENT REVIEW

NUMBER	TITLE
H-2-90435	DRAWING LIST

REFERENCES

NEXT USED ON H-2-90455

U. S. DEPARTMENT OF ENERGY
Richland Operations Office
KAISER ENGINEERS HANFORD COMPANY

PIPING PLAN
TANK 104

PROJECT TITLE 241-AP TANK FARM

PROJ B-340 | WO X34002 | JOB R295A2
SCALE AS SHOWN | BLDG 241-AP | PIDES C402
CLASSIFICATION NONE | BY NOT REQ'D | DRAWING NUMBER H-2-90556 | SHEET 1 | OF 1 | REV 3

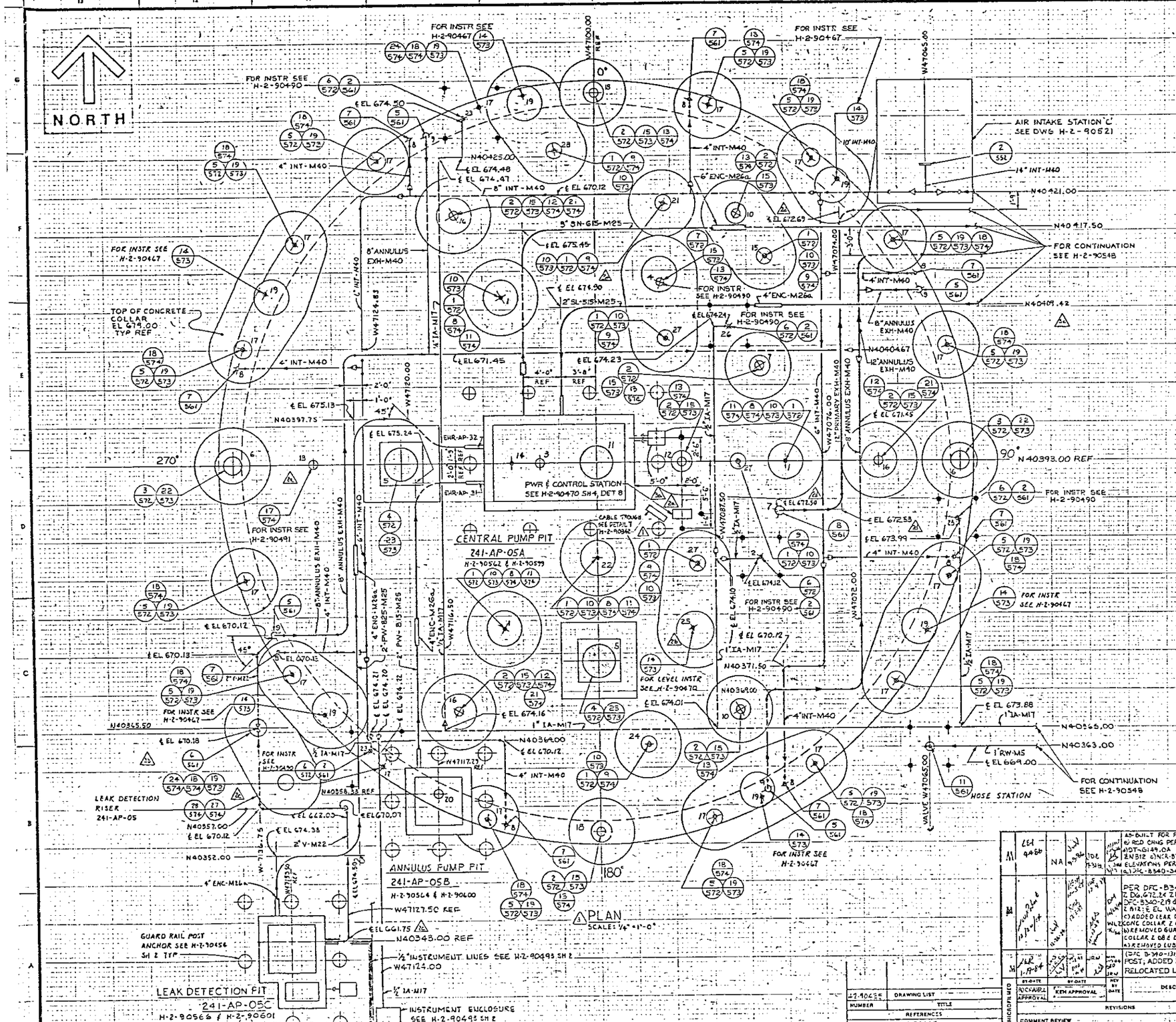

NOTES:

1. FOR GENERAL NOTES SEE H-2-90543 & H-2-90544
2. FOR RISER IDENTIFICATION & LOCATION SEE H-2-90535
3. DUE TO CONFINEMENT OF DETAIL INDICATOR BUBBLES, ONLY THE LAST THREE DIGITS OF THE DRAWING ARE CALLED OUT (H-2-90XXX)

REV 2 DOE DATE

REV 1 DOE DATE

RELEASED FOR CONSTRUCTION BY DOE DATE

REV	DESCRIPTION	BY	DATE
3	AS-BUILT FOR PROJ B-340 & RED CHNG PER EDR Z F-9 a) DT-G149.0A GEN REV ZN312 c) NCR-B340-217 ZN24 ELEVATIONS PER DFC-B340-290 a) DFC-B340-343 ZN03 BLDG		
2	PER DFC-B340-227 Z D6, 672.24 Z D7 (672.64 Z F7 DFC-B340-219 d) & EL WAS 672.31 Z B12; & EL WAS 665.95 Z A10 c) ADDED LEAK DET RISER 241-AP-05 CONC COLLAR Z C8 DFC-B340-194 b) REMOVED GUARD POSTS & ADDED COLLAR Z D8 & D11 DFC-B340-162 a) REMOVED LUBE OIL SYS & CONC (DFC B-340-131)		
1	POST, ADDED PWR STA, ZN 5 D RELOCATED LUBE OIL & GUARD		

REVISIONS

COMMENT REVIEW

NUMBER	TITLE
H-2-90435	DRAWING LIST
	REFERENCES

NEXT USED ON H-2-90435

U. S. DEPARTMENT OF ENERGY
Richland Operations Office
KAISER ENGINEERS HANFORD COMPANY

PIPING PLAN
TANK 105

PROJECT TITLE 241-AP TANK FARM

PROJ B-340	WO X34002	JOB R295A2	
SCALE AS SHOWN	BLDG 241-AP	SHEET 0402-	
CLASSIFICATION NONE	BY NOT REQD	DRAWING NUMBER H-2-90557	SHEET 1 OF 1 REV 3

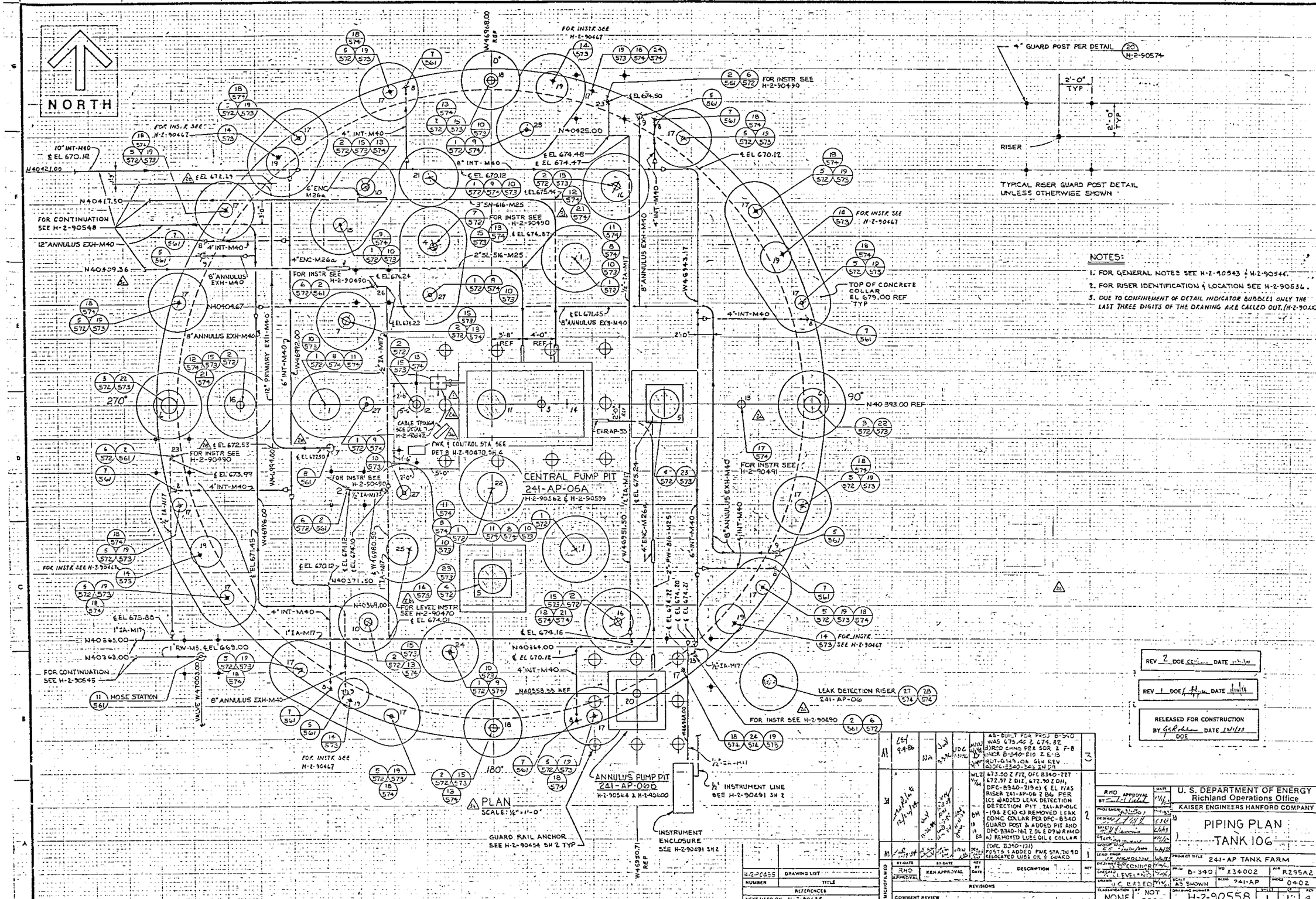

NOTES:

1. FOR GENERAL NOTES SEE H-2-90543 & H-2-90544.
2. FOR RISER IDENTIFICATION & LOCATION SEE H-2-90536.
3. DUE TO CONFINEMENT OF DETAIL INDICATOR BUBBLES ONLY THE LAST THREE DIGITS OF THE DRAWING ARE CALLED OUT. (H-2-90XXX)

REV 2 DOE DATE

REV 1 DOE DATE

RELEASED FOR CONSTRUCTION
BY DOE DATE

REV	DESCRIPTION
3	AS-BUILT FOR PROJ B-340 WAS 675.45 & 674.82 JORCO CHNG PER SDR 2 F-8 WCR B-340-810 & E-13 MUT-G149-08 GEN REV 03 DFC-B340-262 2N D9
2	672.50 & FIT, DFC B340-227 672.57 & DIT, 672.70 & DIT, DFC-B340-219e) & EL FIAS RISER 241-AP-06 & B4 PER ICE 4) ADDED LEAK DETECTION DETECTION PIT 241-AP-06C -194 & C10 c) REMOVED LEAK CONC COLLAR PER DFC-B340 GUARD POST & ADDED PIT AND DFC-B340-182 & D6 & D9 & R4 & D a) REMOVED LUBE OIL & COLLAR
1	(DFC B340-131) POSTS & ADDED FWK STA. 2N 90 RELOCATED LUBE OIL & GUARD

REVISIONS

COMMENT REVIEW

H-2-90455	DRAWING LIST
NUMBER	TITLE
REFERENCES	
NEXT USED ON	H-2-90491 SH 2

U. S. DEPARTMENT OF ENERGY
Richland Operations Office
KAISER ENGINEERS HANFORD COMPANY

PIPING PLAN
TANK 106

PROJECT TITLE: 241-AP TANK FARM

PROJ B-340 WO X34002 JOB R295A2
SCALE AS SHOWN BLDG 241-AP PROJ 0402
CLASSIFICATION NONE BY NOT REQD
DRAWING NUMBER H-2-90558 SHEET 1 OF 1 REV 3

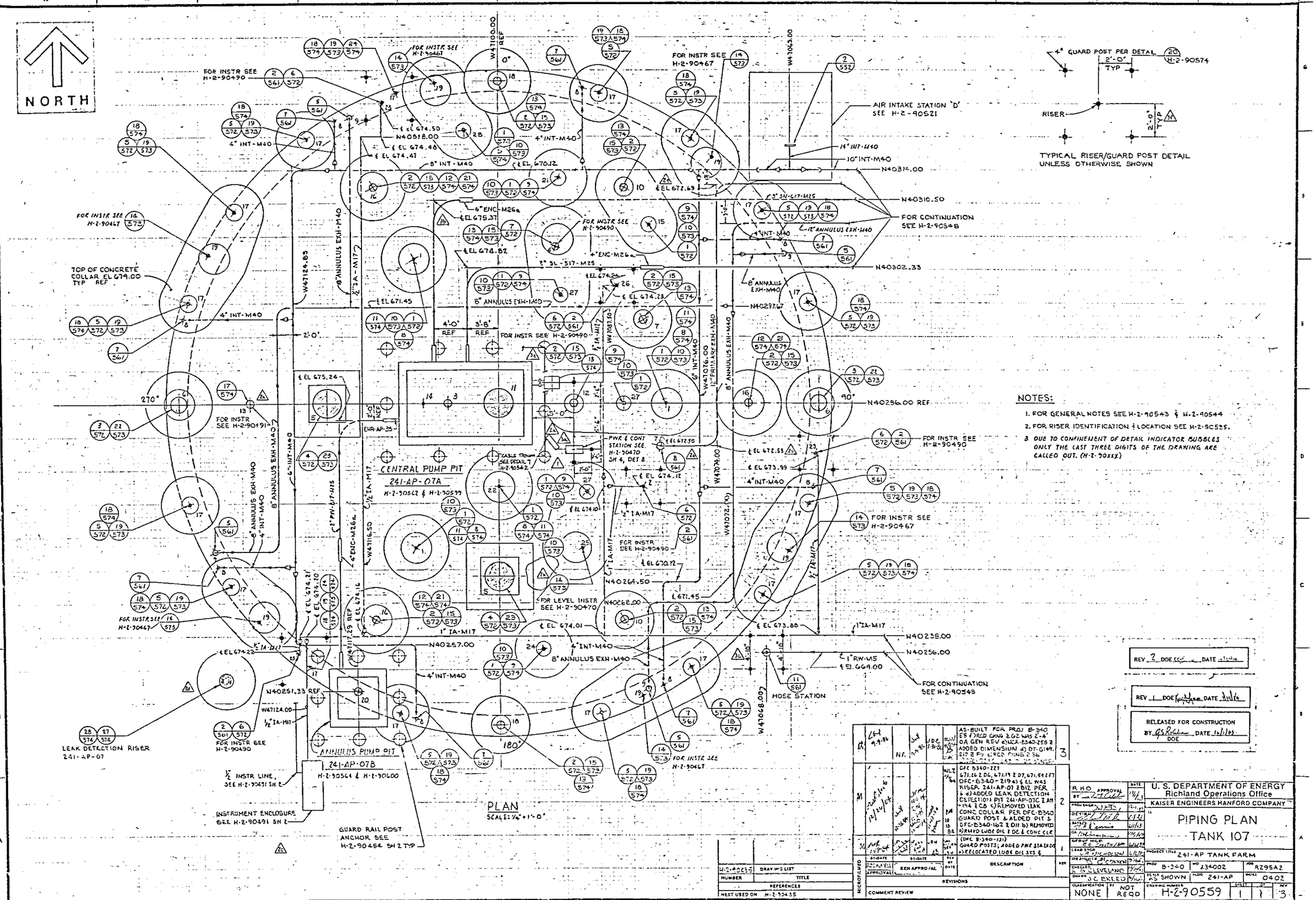
NORTH
CENTRAL PUMP PIT
241-AP-07A
H-2-90562 & H-2-90599
ANNULUS PUMP PIT
241-AP-07B
H-2-90564 & H-2-90600
PLAN
SCALE: 1/4" = 1'-0"
TYPICAL RISER/GUARD POST DETAIL
UNLESS OTHERWISE SHOWN
AIR INTAKE STATION 'D'
SEE H-2-90521
FOR CONTINUATION
SEE H-2-90548
FOR CONTINUATION
SEE H-2-90549
HOSE STATION
LEAK DETECTION RISER
241-AP-07
TOP OF CONCRETE
COLLAR EL 679.00
TYP REF
PWR & CONT
STATION SEE
H-2-90470
SH 4, DET 8
GUARD RAIL POST
ANCHOR SEE
H-2-90464 SH 2 TYP
INSTRUMENT ENCLOSURE
SEE H-2-90491 SH 2
FOR LEVEL INSTR
SEE H-2-90470
N40316.00
N40310.50
N40302.33
N40297.67
N40286.00 REF
N40264.50
N40262.00
N40257.00
N40251.23 REF
N40256.00
N40258.00
W47100.00 REF
W47065.00
W47124.83
W47124.00
W47116.50
W47081.50
W47076.00
W47074.00
W47072.00
W47068.00
W47117.29 REF
W47117.83 REF
NOTES:
1. FOR GENERAL NOTES SEE H-2-90543 & H-2-90544
2. FOR RISER IDENTIFICATION & LOCATION SEE H-2-90535.
3. DUE TO CONFINEMENT OF DETAIL INDICATOR BUBBLES ONLY THE LAST THREE DIGITS OF THE DRAWING ARE CALLED OUT. (H-2-90xxx)
REV 2 DOE DATE
REV 1 DOE DATE
RELEASED FOR CONSTRUCTION
BY DATE
DOE
AS-BUILT FOR PROJ B-340
REVISIONS
COMMENT REVIEW
DESCRIPTION
U. S. DEPARTMENT OF ENERGY
Richland Operations Office
KAISER ENGINEERS HANFORD COMPANY
PIPING PLAN
TANK 107
241-AP TANK FARM
PROJ B-340
WO A34002
JOB R295A2
SCALE AS SHOWN
FLDG 241-AP
SHEET 0402
CLASSIFICATION NONE
DRAWING NUMBER H-2-90559
SHEET 1
REV 3

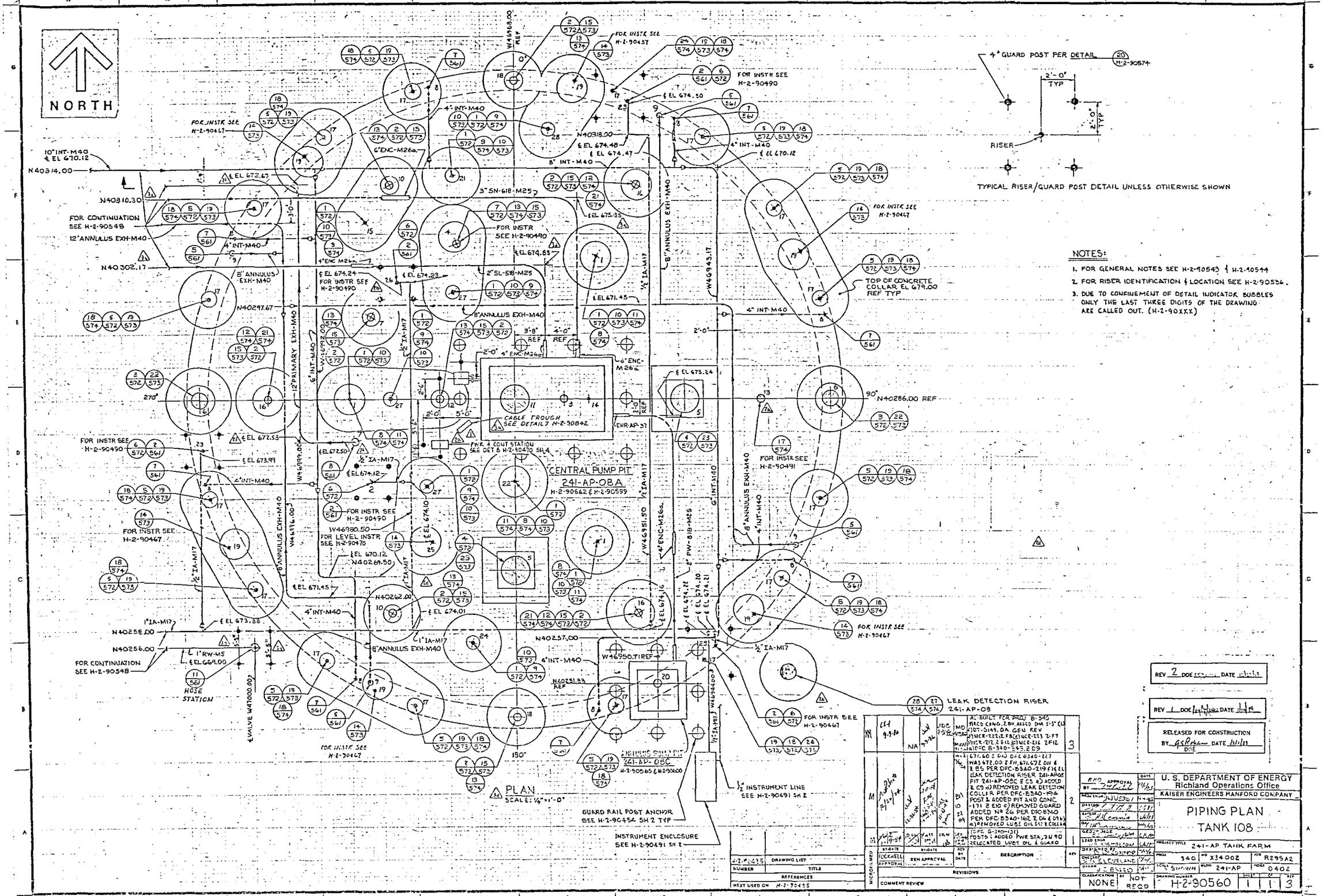

NOTES:

1. FOR GENERAL NOTES SEE H-2-90543 & H-2-90544
2. FOR RISER IDENTIFICATION & LOCATION SEE H-2-90536.
3. DUE TO CONFINEMENT OF DETAIL INDICATOR BUBBLES ONLY THE LAST THREE DIGITS OF THE DRAWING ARE CALLED OUT. (H-2-90XXX)

REV 2 DOE DATE

REV 1 DOE DATE

RELEASED FOR CONSTRUCTION BY DATE

REV	BY-DATE	BY-DATE	BY-DATE	REV BY DATE	DESCRIPTION	REV
3	CSF 9-9-86	NA	UDC 7-3-86	MD 7/14/86	AS-BUILT FOR PMU B-340 a) RED CHNG. Z BH ADED DIM 5'-5" (b) DT-5149, DA GEN REV c) NCR-222, Z F8 (e) NCR-223 Z-F7 d) NCR-212, Z E1 (g) NCR-216 Z F12 (h) DFC B-340-345 Z D9	3
2				11/14/86	671.60 Z DIO DFC 6340-227 WAS 672.00 Z F11, 671.67 Z D11 & Z B5 PER DFC-B340-219 F) & (L) LEAK DETECTION RISER 241-AP08 PIT 241-AP-08C & C5 b) ADDED & C9 d) REMOVED LEAK DETECTION COLLER PER DFC-B340-194 POST & ADDED PIT AND CONC -171 & E10 c) REMOVED GUARD ADDED Nº 26 PER DFC-B340 PER DFC-B340-162 Z D6 & D9 (b) a) REMOVED LUBE OIL SYS & COLLAR	2
1	1-19-84			10 22 84	DFC B-340-131 TO STS 1 ADDED PWR STA, Z N 90 RELOCATED LUBE OIL & GUARD	1

MICROFILMED BY-DATE ROCKWELL APPROVAL BY-DATE KEN APPROVAL

REVISIONS

COMMENT REVIEW

NUMBER	TITLE
H-2-90435	DRAWING LIST

REFERENCES

NEXT USED ON H-2-90455

RNO APPROVAL BY DATE

PROJ ENGR J. NUVES

DESIGN

DRAFTER

DY

GROUP MGR

LEAD ENGR

DESIGNER BY

CHECKED BY

CHECKED J. CLEVELAND

DRAWN J. BASSED

U. S. DEPARTMENT OF ENERGY
Richland Operations Office
KAISER ENGINEERS HANFORD COMPANY

PIPING PLAN
TANK 108

PROJECT TITLE 241-AP TANK FARM

PROJ 340 WO X34002 JOB R295A2

SCALE SHOWN BLDG 241-AP MODEL 0402

CLASSIFICATION NONE BY NOT REQD

DRAWING NUMBER H-2-90560 SHEET 1 OF 1 REV 3

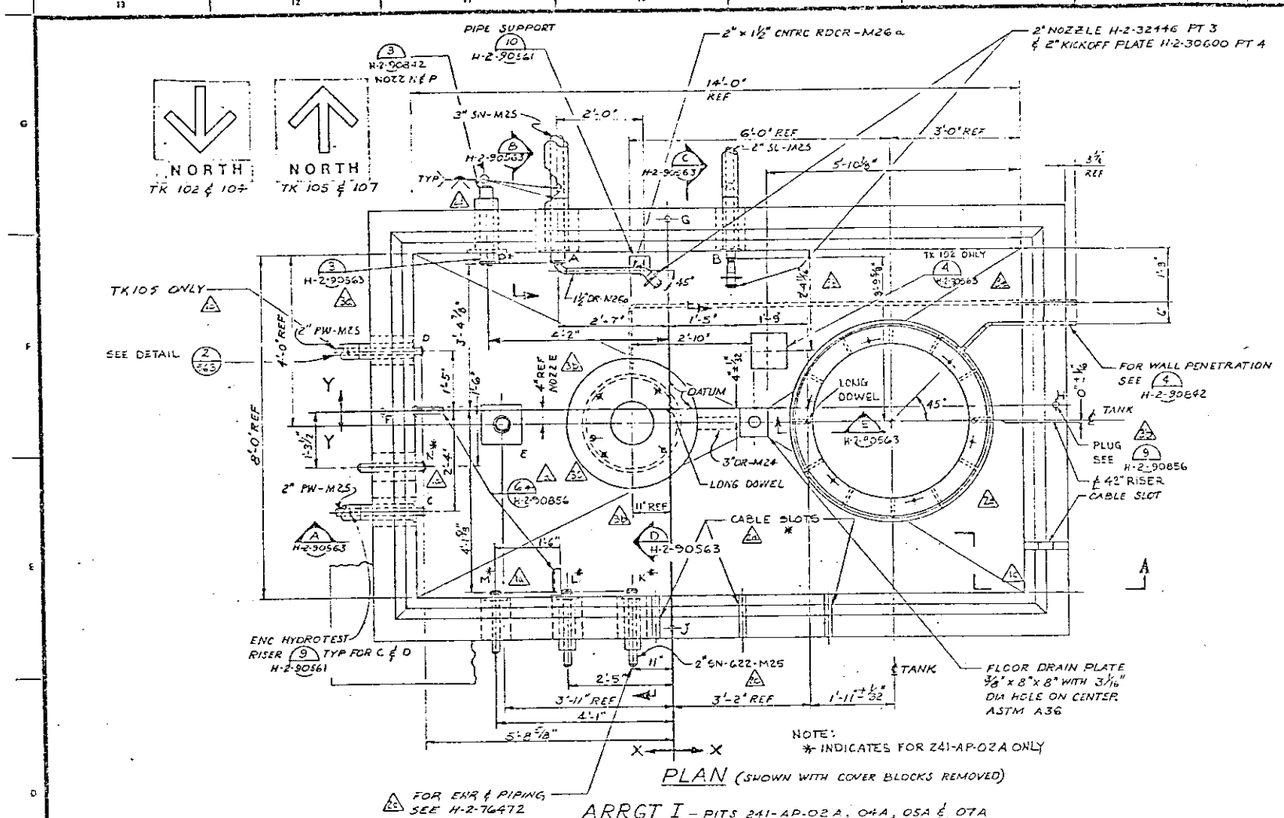

NOTE:
* INDICATES FOR Z41-AP-02A ONLY

PLAN (SHOWN WITH COVER BLOCKS REMOVED)

ARRGT I - PITS 241-AP-02A, 04A, 05A & 07A

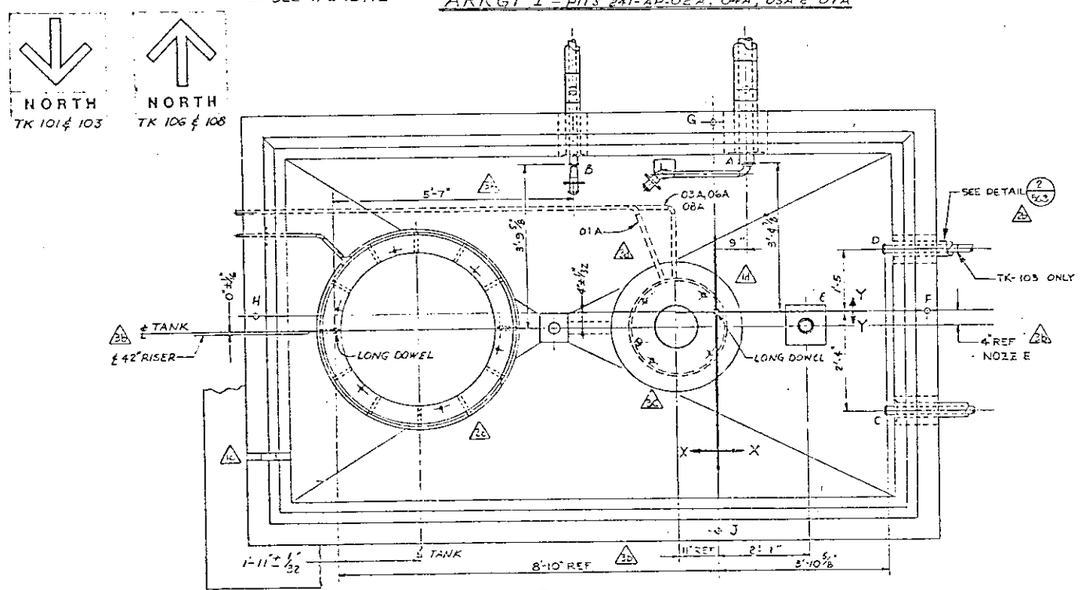

PLAN (SHOWN WITH COVER BLOCKS REMOVED)

ARRGT II - PITS 241-AP-01A, 03A, 06A & 08A

(ALL DIMENSIONS NOT SPECIFIED TO BE SIMILAR TO ARRANGEMENT I)

NOZZLE & FLANGE LOCATIONS IN 12' PLANE TO BE SAME AS ARRANGEMENT I

AS BUILT DIMENSIONS

		X	Y	Z
01A	A	0'-9 3/64"	3'-4 5/64"	1'-10 1/64"
	B	3'-3 3/64"	3'-5 3/64"	1'-3 9/64"
	C	3'-10 45/64"	2'-4 5/64"	1'-10 15/64"
	D	3'-10 45/64"	1'-5 9/64"	1'-10 1/64"
	E	2'-0 53/64"	0'-3 5/64"	1'-1 3/64"
	F	—	0	6'-4 53/64"
	G	0	—	6'-4 53/64"
	H	—	0	6'-4 1/64"
	J	0	—	6'-4 3/64"
	LG DOWEL 42" RISER	8'-3 53/64"	0'-4 5/64"	—
	* FLANGE 42" RISER	—	—	0'-9 33/64"
	* FLANGE 12" RISER	EL 673'-5 45/64"		
02A	A	2'-6 63/64"	3'-4 53/64"	1'-10 1/64"
	B	1'-4 53/64"	3'-5 9/64"	1'-3 53/64"
	C	5'-6 53/64"	2'-4 9/64"	1'-10 15/64"
	D	5'-8 45/64"	1'-4 53/64"	1'-10 1/64"
	E	3'-10 53/64"	0'-4 1/64"	1'-1 3/64"
	F	—	0	6'-4 15/64"
	G	0	—	6'-4 1/64"
	H	—	0	6'-4 13/64"
	J	0	—	6'-4 15/64"
	K	0'-11 5/64"	4'-1 5/64"	2'-6 15/64"
	L	2'-5 1/64"	4'-1 35/64"	1'-10 15/64"
	M	4'-0 53/64"	4'-1 33/64"	0'-5 63/64"
	N	5'-8 53/64"	1'-3 33/64"	0'-6 1/64"
	P	4'-2 1/64"	3'-4 53/64"	1'-10 15/64"
	LG DOWEL 42" RISER	3'-2 3/64"	0'-3 53/64"	—
	* FLANGE 42" RISER	—	—	0'-9 27/64"
	* FLANGE 12" RISER	EL 673'-5 43/64"		
03A	A	0'-9 53/64"	3'-4 53/64"	1'-10 15/64"
	B	3'-2 53/64"	3'-5 33/64"	1'-3 47/64"
	C	3'-10 45/64"	2'-4 53/64"	1'-10 15/64"
	D	3'-10 45/64"	1'-4 53/64"	1'-10 15/64"
	E	2'-1 53/64"	0'-3 53/64"	1'-1 37/64"
	F	—	0	6'-4 33/64"
	G	0	—	6'-4 53/64"
	H	—	0	6'-4 33/64"
	J	0	—	6'-4 53/64"
	LG DOWEL 42" RISER	8'-9 53/64"	0'-4 15/64"	—
	* FLANGE 42" RISER	—	—	0'-9 23/64"
	* FLANGE 12" RISER	EL 673'-5 45/64"		
06A	A	2'-6 53/64"	3'-4 53/64"	1'-10 15/64"
	B	1'-4 45/64"	3'-5 53/64"	1'-3 53/64"
	C	5'-8 45/64"	2'-4 3/64"	1'-10 15/64"
	D	5'-8 49/64"	1'-5 53/64"	1'-10 15/64"
	E	3'-11 15/64"	0'-4 33/64"	1'-1 33/64"
	F	—	0	6'-4 1/64"
	G	0	—	6'-4 53/64"
	H	—	0	6'-4 7/64"
	J	0	—	6'-4 11/64"
	LG DOWEL 42" RISER	3'-1 53/64"	0'-3 53/64"	—
	* FLANGE 42" RISER	—	—	0'-9 33/64"
	* FLANGE 12" RISER	EL 673'-5 45/64"		

AS BUILT DIMENSIONS

		X	Y	Z
05A	A	2'-6 53/64"	3'-4 53/64"	1'-10 15/64"
	B	1'-4 53/64"	3'-5 15/64"	1'-3 53/64"
	C	6'-8 33/64"	2'-4 3/64"	1'-10 15/64"
	D	6'-8 33/64"	1'-5 9/64"	1'-10 15/64"
	E	3'-10 53/64"	0'-3 53/64"	1'-1 33/64"
	F	—	0	6'-4 53/64"
	G	0	—	6'-4 53/64"
	H	—	0	6'-4 15/64"
	J	0	—	6'-4 33/64"
	LG DOWEL 42" RISER	3'-2 3/64"	0'-2 5/64"	—
	* FLANGE 42" RISER	—	—	0'-9 33/64"
	* FLANGE 12" RISER	EL 673'-5 53/64"		
06A	A	0'-8 53/64"	3'-4 53/64"	1'-10 15/64"
	B	3'-3 15/64"	3'-5 33/64"	1'-3 33/64"
	C	3'-10 53/64"	2'-4 53/64"	1'-10 15/64"
	D	3'-10 53/64"	1'-5 53/64"	1'-10 1/64"
	E	2'-1 17/64"	0'-3 53/64"	1'-1 33/64"
	F	—	0	6'-4 13/64"
	G	0	—	6'-4 33/64"
	H	—	0	6'-4 53/64"
	J	0	—	6'-4 53/64"
	LG DOWEL 42" RISER	8'-10 15/64"	0'-4 3/64"	—
	* FLANGE 42" RISER	—	—	0'-9 33/64"
	* FLANGE 12" RISER	EL 673'-5 53/64"		
07A	A	2'-7 53/64"	3'-4 53/64"	1'-10 15/64"
	B	1'-5 15/64"	3'-5 53/64"	1'-3 53/64"
	C	5'-8 53/64"	2'-3 53/64"	1'-10 15/64"
	D	5'-8 49/64"	1'-4 53/64"	1'-10 15/64"
	E	3'-10 53/64"	0'-3 53/64"	1'-1 33/64"
	F	—	0	6'-4 15/64"
	G	0	—	6'-4 9/64"
	H	—	0	6'-4 53/64"
	J	0	—	6'-4 53/64"
	LG DOWEL 42" RISER	3'-1 15/64"	0'-3 53/64"	—
	* FLANGE 42" RISER	—	—	0'-9 33/64"
	* FLANGE 12" RISER	EL 673'-5 53/64"		
08A	A	0'-8 53/64"	3'-4 53/64"	1'-10 15/64"
	B	3'-2 53/64"	3'-5 33/64"	1'-3 53/64"
	C	3'-10 45/64"	2'-3 53/64"	1'-10 15/64"
	D	3'-10 53/64"	1'-4 53/64"	1'-10 15/64"
	E	2'-1 3/64"	0'-3 53/64"	1'-1 33/64"
	F	—	0	6'-4 15/64"
	G	0	—	6'-4 53/64"
	H	—	0	6'-4 15/64"
	J	0	—	6'-4 53/64"
	LG DOWEL 42" RISER	8'-9 53/64"	0'-4 15/64"	—
	* FLANGE 42" RISER	—	—	0'-9 33/64"
	* FLANGE 12" RISER	EL 673'-5 53/64"		

* 12" RISER EL & 42" RISER DIM ARE TAKEN AT BASE OF LONG DOWEL

NOTES:

1. FOR GENERAL NOTES SEE H-2-90543 & H-2-90544
2. FOR TANK PENETRATIONS SEE DWGS H-2-90535 H-2-90536 H-2-90538 & H-2-90539.
3. FOR CONTINUATION OF PIPING SEE DWGS H-2-90553 THRU H-2-90560

H-2-32446	MALE CONN NOZZLE
H-2-70600	STD SQUARE KICK-OFF PLATE
H-2-90435	DRAWING LIST
NUMBER	TITLE
REFERENCES	

NEXT USED ON H-2-90135

MICROFILMED

BY-DATE	BY-DATE	REV BY DATE	DESCRIPTION	REV
RHO APPROVAL	KEH APPROVAL		REVISIONS	
COMMENT REVIEW				

REV	DESCRIPTION	BY	DATE
3	AS-BUILT FOR PROJ B-340 a) NCR B-340-148 Z C-9 b) DFC B-340-428 Z F-7,8 ADDED AS-BUILT DIM d) RCD CHNG Z C,D,E,F,G-3,4,5,6 c) DFC E-340-265, Z F10,E9 A/O B7 C5,E7,C,E,F4 d) DFC B-340-313 Z F11,E10,E7,B12 g) NCR B-340-170 Z F12	CEH 9-9-86	NA
2	FLG ZN 3E,10B PER DFC B340-245 B340-207 Z 11G, c) CHG LNG NOZZ P & ADDED NOTE PER DFC B340-212 ZN 10D, d) RELOCATE NOTE & 2" SN-G22-M25 PER DFC B340-219 ZN 7C,13F, e) ADDED & ADDED NOTES PER DFC-B PER DFC-B-340-251 ZN 4E a) ADDED CABLE SLOTS		
1	SLOTS ON SE & NE PER DFC-B340-122 b) LINE ON NE & NW d) REMOVED FLG PER DFC-B-340-128 c) REMOVED CUTOUTS & NOTE FOR 02A ONLY, f) NO SUPPORT ZONE, b) ADDED TABS NUMBERED NOTES FROM 1 TO 7 AUTOCAD		

REV 2 DOE [illegible] DATE [illegible]

REV 1 DOE [illegible] DATE [illegible]

RELEASED FOR CONSTRUCTION BY [illegible] DATE [illegible] DOE

FMO APPROVAL	DATE	U. S. DEPARTMENT OF ENERGY Richland Operations Office
		KAISER ENGINEERS HANFORD COMPANY
		PIPING PLAN CENTRAL PUMP PIT 241-AP-01A THRU 08A
		PROJECT TITLE 241-AP TANK FARM
		PROJ B 340 · PO X24002 · A/E R2954A2
		SCALE 1/4" = 1'-0" · BLDG 241-AP · SHEET 0402
CLASSIFICATION NONE · CAT NOT REQD		DRAWING NUMBER H-2-90562 · SHEET 1 · REV 3

PUBLISHED BY GOVERNMENT PRINTING OFFICE (REV. 4-81)

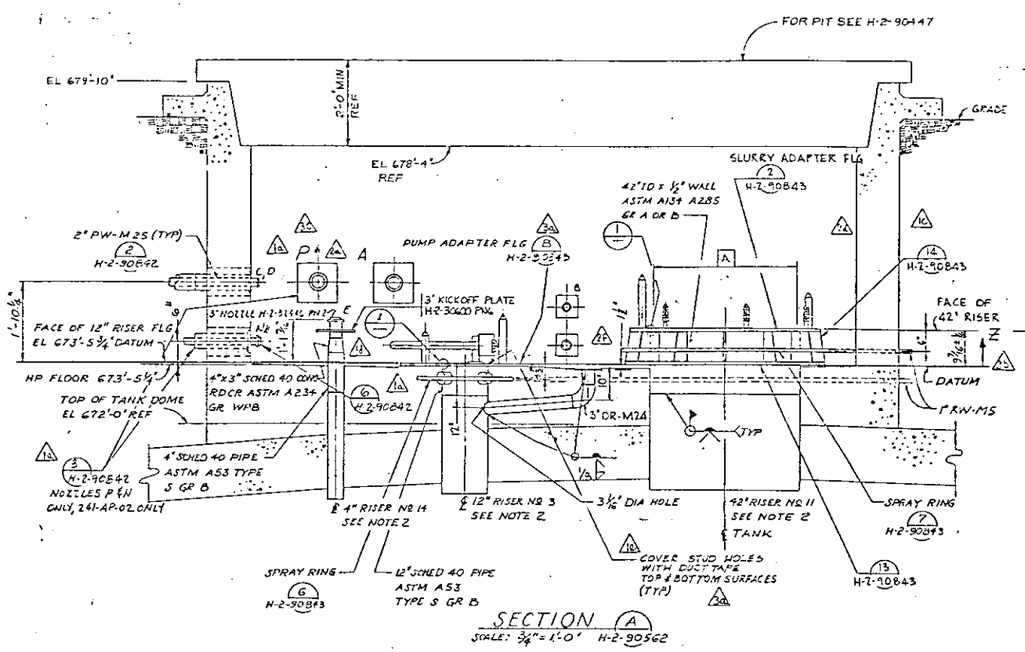

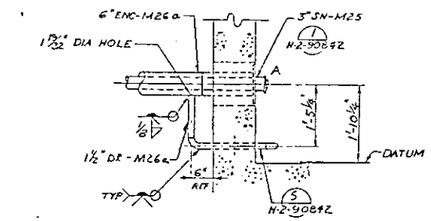

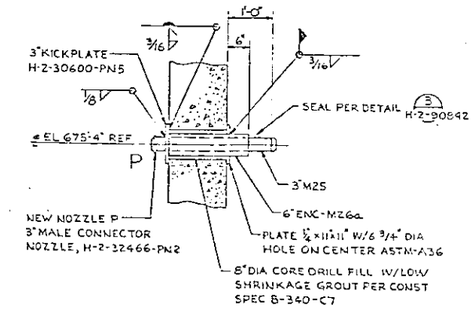

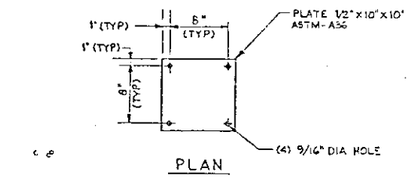

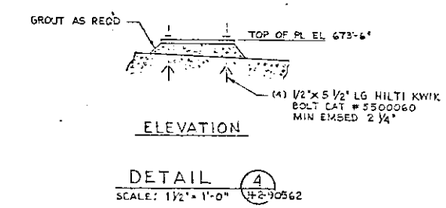

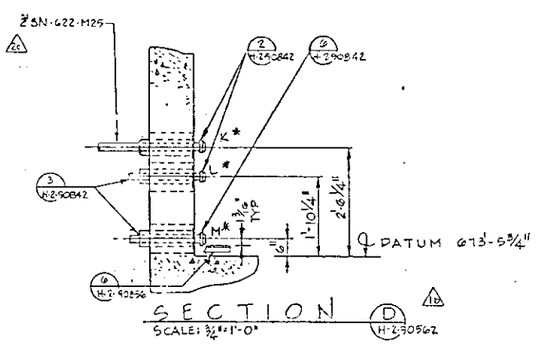

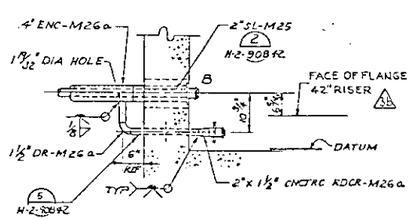

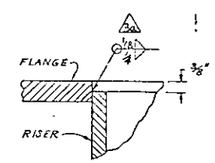

NOTE:

FOR NOTES SEE DWG H-2-90562

NOTE:

* INDICATES FOR 241-AP-02A ONLY

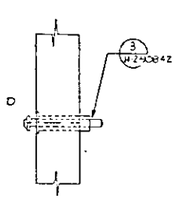

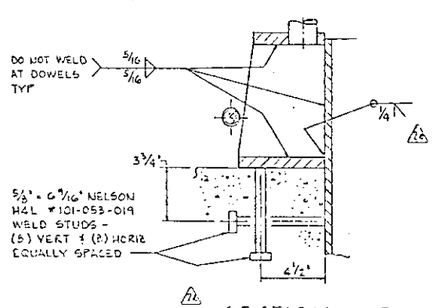

REV	BY-DATE	BY-DATE	REV BY DATE	DESCRIPTION	REV
3	UH 9-9-86	NA	MJW 4-8-86	AS-BUILT FOR PROJ B-340 a) DFC B-340-428 Z D,E-1,2 b) NCR B-340-170 Z F2,F11 c) DFC B-340-313 Z C7,E7 d) DFC B-340-288 Z D59 F10	3
2	2-11-85	2-11-85	MLZ 2-14-85	DFC B-340-242 a) RELOCATED 3" DR, IN 10E PER IN 7B PER DFC B340-256 DFC B340-245 b) ADDED WELD IN 5 F, ADDED SECT E IN 5A PER B-340-217, R1D 4.) ADDED CALLOUT 6-22-M25 TO NOZZ K PER DFC c 12A c) ADDED LINE 2" SN-DETAIL 2 PER DFC-B-340-219 DFC-B-340-207 Z 11F, d) ADDED d) RELOCATED NOZZ P PER	2
1	9-5-84	7-27-84	10-5-84	PER DFC-B-340-162 a) ADDED DUCT TAPE NOTE IN-8F b) ADAPTER FLG CALLOUT IN-11F c) STUDS, CHANGED NOZZLE E FROM 6" TO 3" IN 5-5 IN-8F d) REMOVED PER DFC-B-340-175 e) REMOVED HANDED SECTION D IN-11C, f) ADDED NOZZLES P & N IN 2N-1E	1

CHECKED	BY-DATE	
APPROVAL	ETH APPROVAL	
COMMENT REVIEW		

REVISIONS

H-2-90435	DRAWING LIST
NUMBER	337LF
ALTERNATES	
NEXT USED ON H-2-90465	

REV 2 DOE DATE

REV 1 DOE DATE

RELEASED FOR CONSTRUCTION BY DOE DATE 12/3/85

		DATE
RMD	APPROVAL	
PROJ ENGR		
DES ENGR		
DRAFTING		
CHECKING		
DESIGN VERIFICATION		
U.S. DATE		
CHIEF ENGR		
DRAWN		

U. S. DEPARTMENT OF ENERGY
Richland Operations Office
KAISER ENGINEERS HANFORD COMPANY

PIPING SECTIONS & DETAIL
CENTRAL PUMP PIT
241-AP-01A THRU 08A

PROJECT TITLE: 241-AP TANK FARM

PROJ	NO	SUB
B340	X 3-4002	R295A2

SCALE: AS SHOWN | BLDG: 241-AP | INDEX: 0402

DRAWING NUMBER: H-2-90563 | SHEET 1 | OF 1 | REV 3

CLASSIFICATION: NONE | NOT REQD

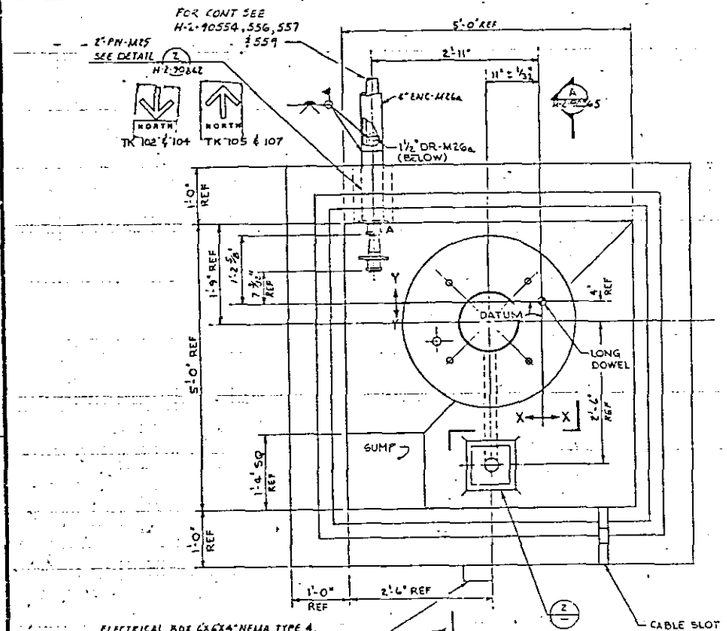

ELECTRICAL BOX 6"x6"x4" NEMA TYPE 4, HOFFMAN ENG CO #A-606 NF W/PANEL #A-6P6 AND 4 TERMINAL STRIP MOUNTED WITH (4) HILTI KWIK-BOLT #500004 ½"x1⅝" 1a 1b

PLAN (SHOWN WITH COVER BLOCK REMOVED)
SCALE: 1" = 1'-0"

ARRANGEMENT I PITS 241-AP-02B, 04B, 05B & 07B

1a

AS-BUILT DIMENSIONS					
		X	Y	Z	FACE OF FLANGE ELEVATION *
01B	A	1'-1 9/64"	1'-2 49/64"	5'-2 35/64"	669'-8 25/64"
02B	A	2'-11 3/64"	1'-2 39/64"	5'-2 31/64"	669'-8 29/64"
03B	A	1'-1 1/64"	1'-2 59/64"	5'-2 35/64"	669'-7 53/64"
04B	A	2'-11 1/64"	1'-2 33/64"	5'-2 33/64"	669'-8 13/64"
05B	A	2'-10 53/64"	1'-2 55/64"	5'-2 35/64"	669'-8 15/64"
06B	A	1'-0 53/64"	1'-2 55/64"	5'-2 33/64"	669'-8 17/64"
07B	A	2'-11 9/64"	1'-2 59/64"	5'-2 33/64"	669'-8 33/64"
08B	A	1'-1 9/64"	1'-2 59/64"	5'-2 33/64"	669'-8 15/64"

1b * FLANGE EL IS TAKEN AT BASE OF LONG DOWELL

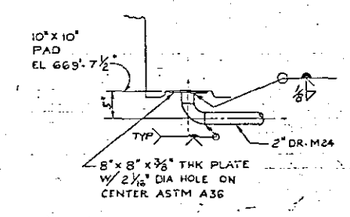

DETAIL 2
SCALE: 1" = 1'-0"

NOTES:

1. FOR GENERAL NOTES SEE H-2-90543 & H-2-90544
2. FOR TANK PENETRATIONS SEE DWGS H-2-90535, H-2-90534, H-2-90538 & H-2-90539.
3. FOR CONTINUATION OF PIPING SEE DWG'S H-2-90553 THRU H-2-90560

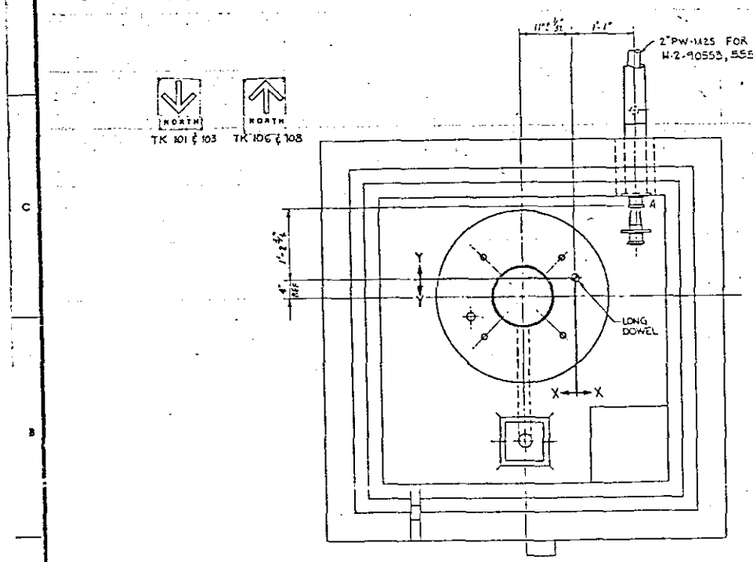

PLAN (SHOWN WITH COVER BLOCK REMOVED)
SCALE: 1" = 1'-0"

ARRANGEMENT II PITS 241-AP-01B, 03B, 06B & 08B
(ALL DIMENSIONS NOT SPECIFIED TO BE SIMILAR TO ARRANGEMENT I)

NOZZLE & FLANGE LOCATIONS IN 'Z' PLANE TO BE SAME AS ARRANGEMENT I

RELEASED FOR CONSTRUCTION
BY ____ DATE ____
COE

1	1/1	LSJ 9-9-86	N A	JJL 9-9-86		AS-BUILT FOR PROJ B-340 AS-BUILT DIMENSIONS a) RDB CHNG Z F.G. 3,4,5 ADDED c) DFC B-340-198 Z D12 b) DFC B-340-313 Z F5 d) DFC B-340-388 Z D12

MICROFILMED	BY-DATE	BY-DATE	REV BY DATE	DESCRIPTION	REV
	TECH EDIT				
	APPROVAL	KEH APPROVAL			

REVISIONS

COMMENT REVIEW

H-2-90435	DRAWING LIST	
NUMBER	TITLE	
REFERENCES		
NEXT USED ON H-2-90455		

RHO APPROVAL BY ____ DATE 11/1/83

U. S. DEPARTMENT OF ENERGY
Richland Operations Office
KAISER ENGINEERS HANFORD COMPANY

PIPING PLAN
ANNULUS PUMP PIT
241-AP-01B THRU 08B

PROJECT TITLE 241-AP TANK FARM

DESIGNED		PROJ B-340	WO X34002
CHECKED			
DRAWN D. PECK	7/10/86	SCALE AS SHOWN	BLDG 241-AP
CLASSIFICATION NONE	BY NOT REQD	DRAWING NUMBER H-2-90564	PROJECT R295A2 / WBS 0402 / SEQ 1 / REV 1

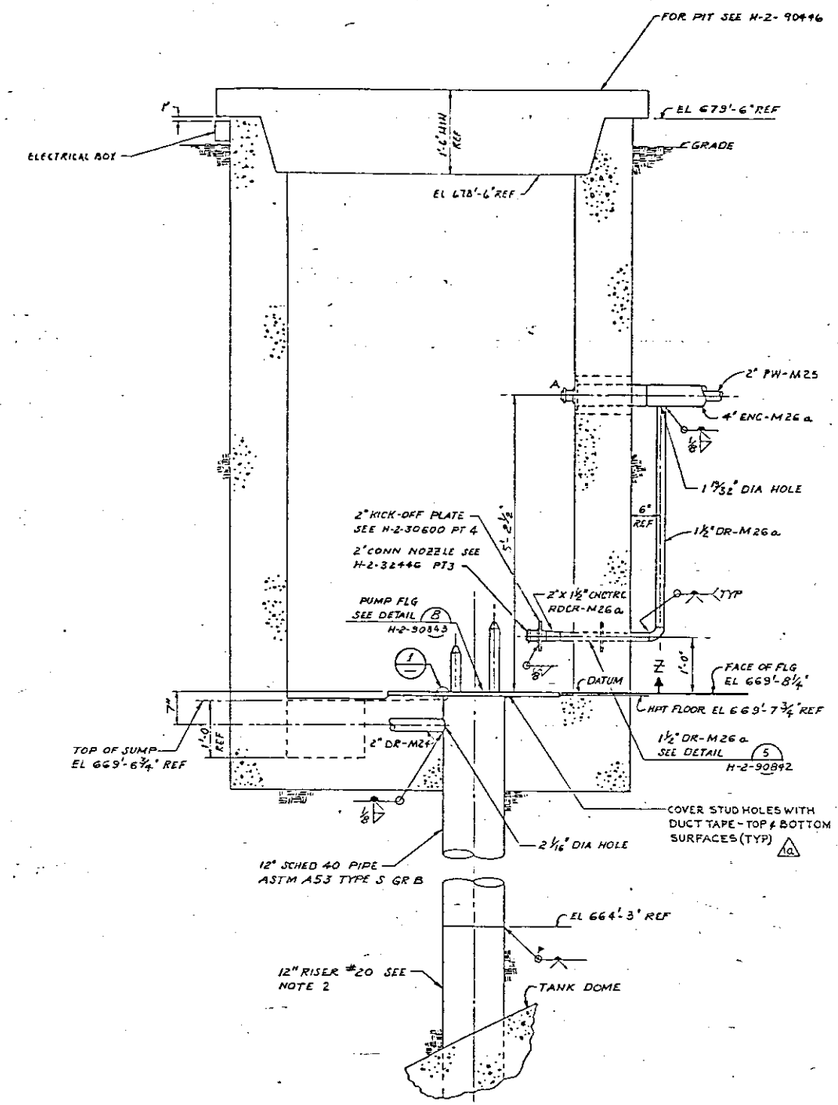

SECTION A
SCALE: 1"=1'-0" H-2-90564

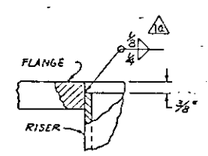

DETAIL 1
SCALE: 6"=1'-0

NOTE:

1. FOR NOTES SEE H-2-90564

RELEASED FOR CONSTRUCTION
BY DATE
DOE

H-2-32446	MALE CONNECTOR NOZZLE
H-2-30600	STD SQUARE KICK-OFF PLATE
H-2-90435	DRAWING LIST
NUMBER	TITLE
REFERENCES	
NEXT USED ON H-2-90435	

REV	BY-DATE	BY-DATE	REV BY DATE	DESCRIPTION	REV
1	LEL 9-9-80	NA	JJ 9-9-80	JOE 12-12-80	AS-BUILT FOR PROJ B-340 & DFC B-340-299 Z C7
MICROFILMED	MICROFILM APPROVAL	REH APPROVAL			
	COMMENT REVIEW				

REVISIONS

RHO APPROVAL BY DATE 7/1/83

U. S. DEPARTMENT OF ENERGY
Richland Operations Office

KAISER ENGINEERS HANFORD COMPANY

PROJECT TITLE 241-AP TANK FARM

PIPING SECTIONS & DET.
ANNULUS PUMP PIT
241-AP-01B THRU 08B

PROJ B-340 WO X34002 JOB R295A2
SCALE AS SHOWN BLDG 241-AP INDEX 0402

CLASSIFICATION NONE BY NOT REQD

DRAWING NO NUMBER H-2-90565 SHEET 1 OF 1 REV 1

U.S. GOVERNMENT PRINTING OFFICE: 1983-683-025

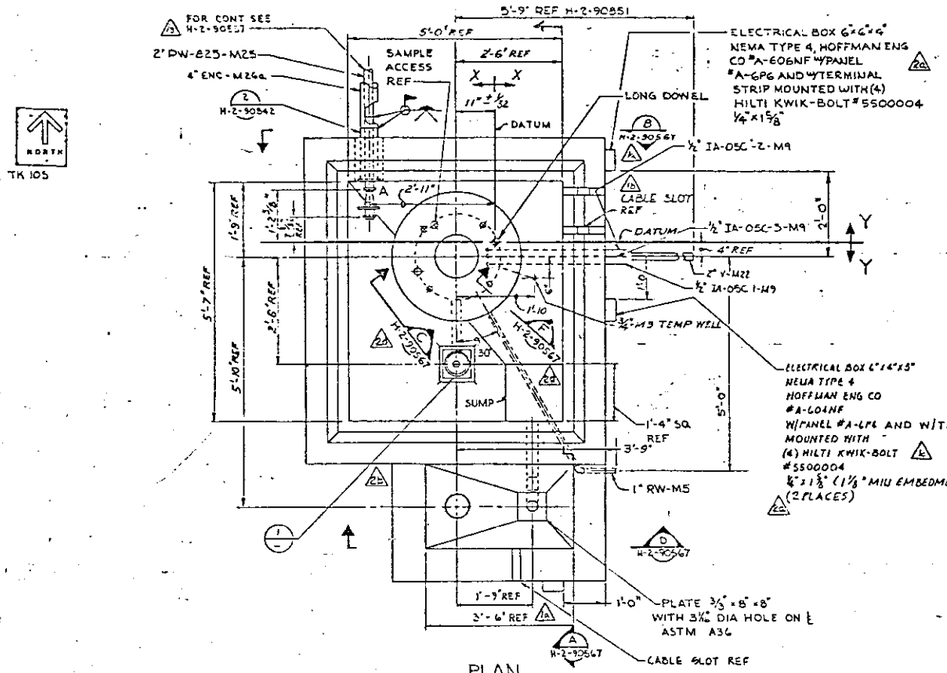

PLAN
(SHOWN WITH COVER BLOCKS REMOVED)
ARRGT I - PIT 241-AP-05C

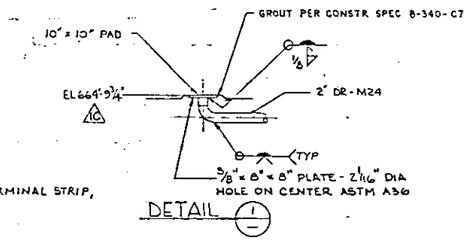

DETAIL 1

AS BUILT DIMENSIONS		X	Y	Z	FACE OF FLANGE ELEVATION
03C	A	1'-0 47/64"	1'-2 47/64"	9'-4 43/64"	664'-10 37/64"
05C	A	2'-10 49/64"	1'-2 37/64"	9'-5 1/64"	664'-10 15/64"

NOTES:

1. FOR GENERAL NOTES SEE H-2-90543 & H-2-90544
2. FOR CONTINUATION OF PIPING SEE DWG'S H-2-90555 & H-2-90557

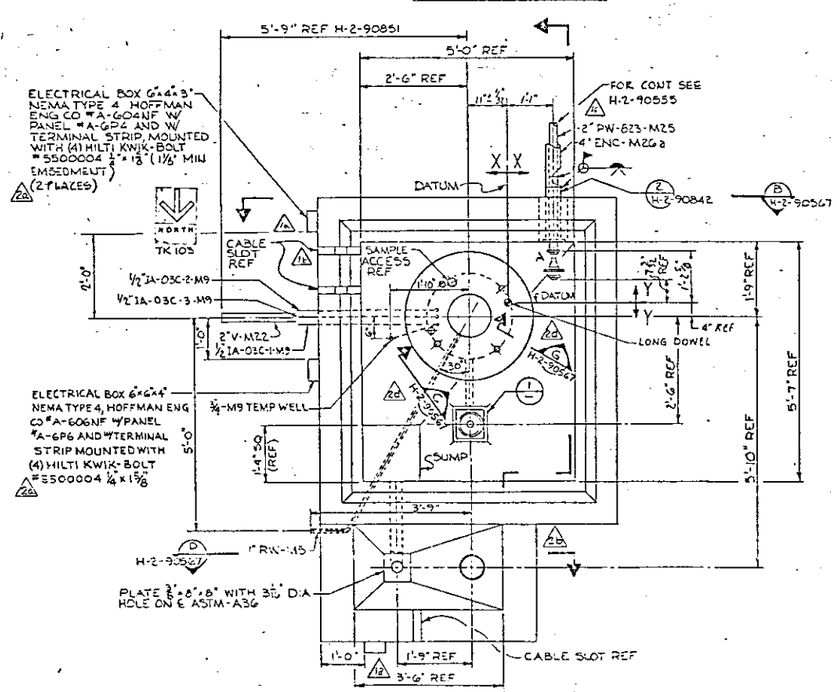

PLAN
(SHOWN WITH COVER BLOCKS REMOVED)
ARRGT II PIT 241-AP-03C

H-2-90435	DRAWING LIST		
NUMBER	TITLE		
REFERENCES			
NEXT USED ON	H-2-92435		

REV	BY	DATE	DESCRIPTION
2			AS-BUILT FOR PROJ B-340 a) DFC B-340-285 Z B11, C10, F10, J1 b) DFC B-340-292 Z F7 c) DFC B-340-[illegible] d) DFC B-340-389 Z GB29 B13
1			H-2-90543 THRU H-2-90555 REF DIM CALOUTS TO ARRGT I, SWAS A9 & A16 ADDED DIMENSIONS & 03C & A1 MODELED NOTES & TITLE WAS 241-AP-03C THRU 03C & 05 PER DFC-B340-219 556 & 559 Z G12 h) WAS DIC, THRU 558 & 560 B DIO B) REMOVED 554, 04C, 05C & 07C B DIO B) REMOVED 553, 03C, 06C & 08C B A10 c) WAS DIC 013/E8 DFC B340-155 d) WAS DIC, MINAL STRIP ("C" 5 PLACES) Z E8 & C12 & G10 c) ADDED "AND WITH" & E10 & G10 b) ADDED CABLE SLOT a) ADDED ELECT BOX B A11 C12

MICROFILMED: RMO APPROVAL BY/DATE; KEH APPROVAL BY/DATE; REV BY/DATE; REVISIONS; COMMENT REVIEW

REV 1 DOE RM DATE 9/16/92

RELEASED FOR CONSTRUCTION BY [illegible] DOE DATE 10/16/92

U. S. DEPARTMENT OF ENERGY
Richland Operations Office
KAISER ENGINEERS HANFORD COMPANY

PIPING PLAN
LEAK DETECTION PIT
241-AP-03C AND 05C

PROJECT TITLE: 241-AP TANK FARM
PROJ B-340 WO 234002 JOB 22952A2
SCALE 3/8"=1'-0" BLDG 241-AP MODEL 0402
CLASSIFICATION NONE; SAFETY NOT REQUIRED; DRAWING NUMBER H-2-90566; SHEET 1; TOTAL 1; REV 2

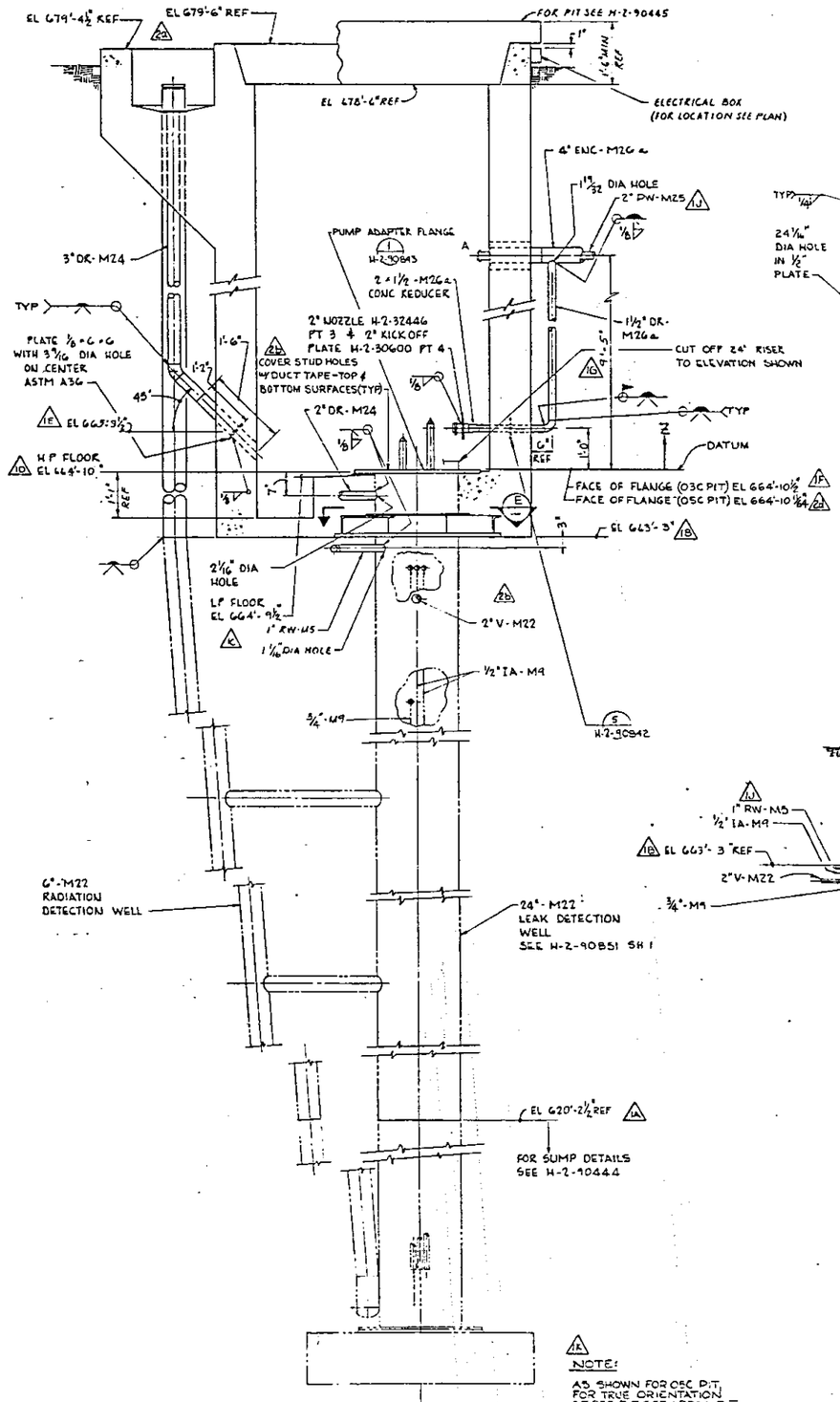

SECTION A
H-2-90566

NOTE:
AS SHOWN FOR 05C PIT. FOR TRUE ORIENTATION OF 05C PIT SEE ARRGMT II PLAN

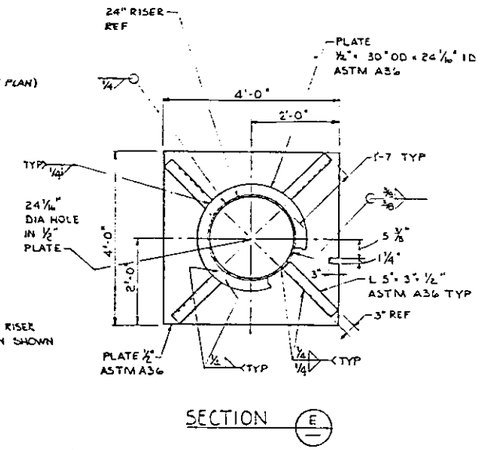

SECTION E

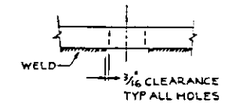

VIEW C
H-2-90566

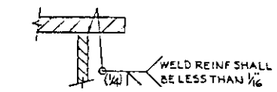

SECTION G
H-2-90566 (03C)

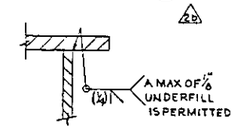

SECTION F
H-2-90566 (05C)

NOTES:
1. FOR NOTES SEE DWG H-2-90566

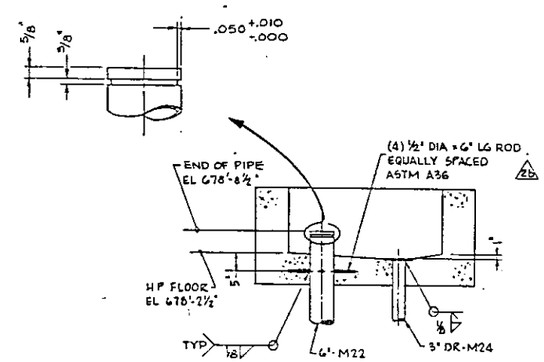

SECTION D
H-2-90566

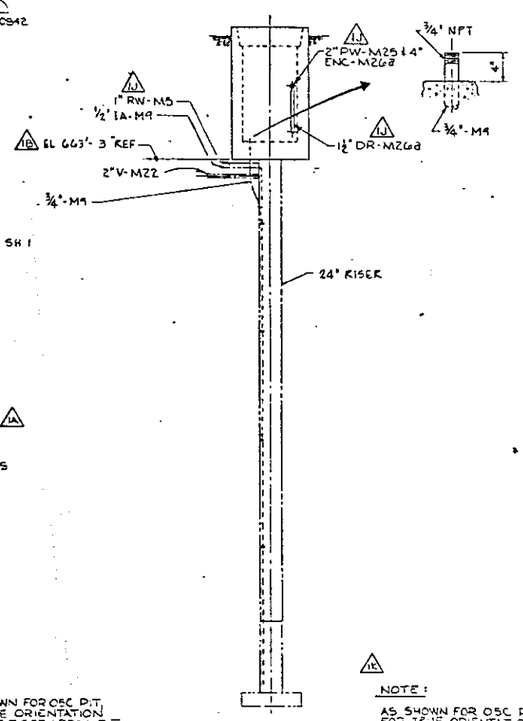

ELEVATION B
SCALE: 3/16" = 1'-0"
H-2-90566

NOTE:
AS SHOWN FOR 05C PIT. FOR TRUE ORIENTATION OF 05C PIT SEE ARRGT II PLAN

H-2-32446	MALE CONNECTOR NOZZLE
H-2-30600	STD SQUARE KICK-OFF PLATE
H-2-90435	DRAWING LIST
NUMBER	TITLE
REFERENCES	
NEXT USED ON H-2-90455	

REV	BY	DATE	DESCRIPTION
N	LH 9-9-94	N/A	AS-BUILT FOR PROJ B-340 1) NCR B-340-144 Z E9 2) DFC B-340-292 Z D12 F5,12 E11 C3 B5 3) DFC B-340-288 Z G4,5,12 4) DFC B-340-332 Z G12
M	NLZ 2/16/94		PER DFC-B340-219 1) ADDED NOTE ZN A-7 (A-10 2) LINE IDENT ZN D-8 D-9 & F-9 THRU 05C ZN A-1 (2) ADDED 3) DWG TITLE WAS 241-AP-01C 4) DIM WAS 5'-2½" ZN F-10 5) WAS EL 669'-1" ZN E-9 6) WAS EL 670'-0" ZN E-13 7) WAS EL 669'-0½" ZN E-13 8) WAS EL 668'-11½" ZN D-12 9) WAS EL 667'-5½" ZN (9)E9 10) WAS EL 664'-5" ZN B-10

MICROFILMED: BY-DATE / BY-DATE / REV BY DATE

RHO APPROVAL / KEH APPROVAL

REVISIONS

COMMENT REVIEW

RHO APPROVAL — DATE 11/1/93

U. S. DEPARTMENT OF ENERGY
Richland Operations Office

KAISER ENGINEERS HANFORD COMPANY

PIPING SECTIONS & DETAILS
LEAK DETECTION PIT
241-AP-03C AND 05C

PROJECT TITLE: 241-AP TANK FARM

PROJ	B-340	WO	X34002
JOB	K295A2	SCALE	AS SHOWN
BLDG	241-AP	NOTES	0402
CLASSIFICATION	NONE	PE NOT REQUIRED	
DRAWING NUMBER	H-2-90567	SHEET 1	OF 1
REV	2		

REV 1 DOE XX DATE

RELEASED FOR CONSTRUCTION
BY DOE DATE 11/9/93

SCALE: 3/4" = 1'-0" & NOTED

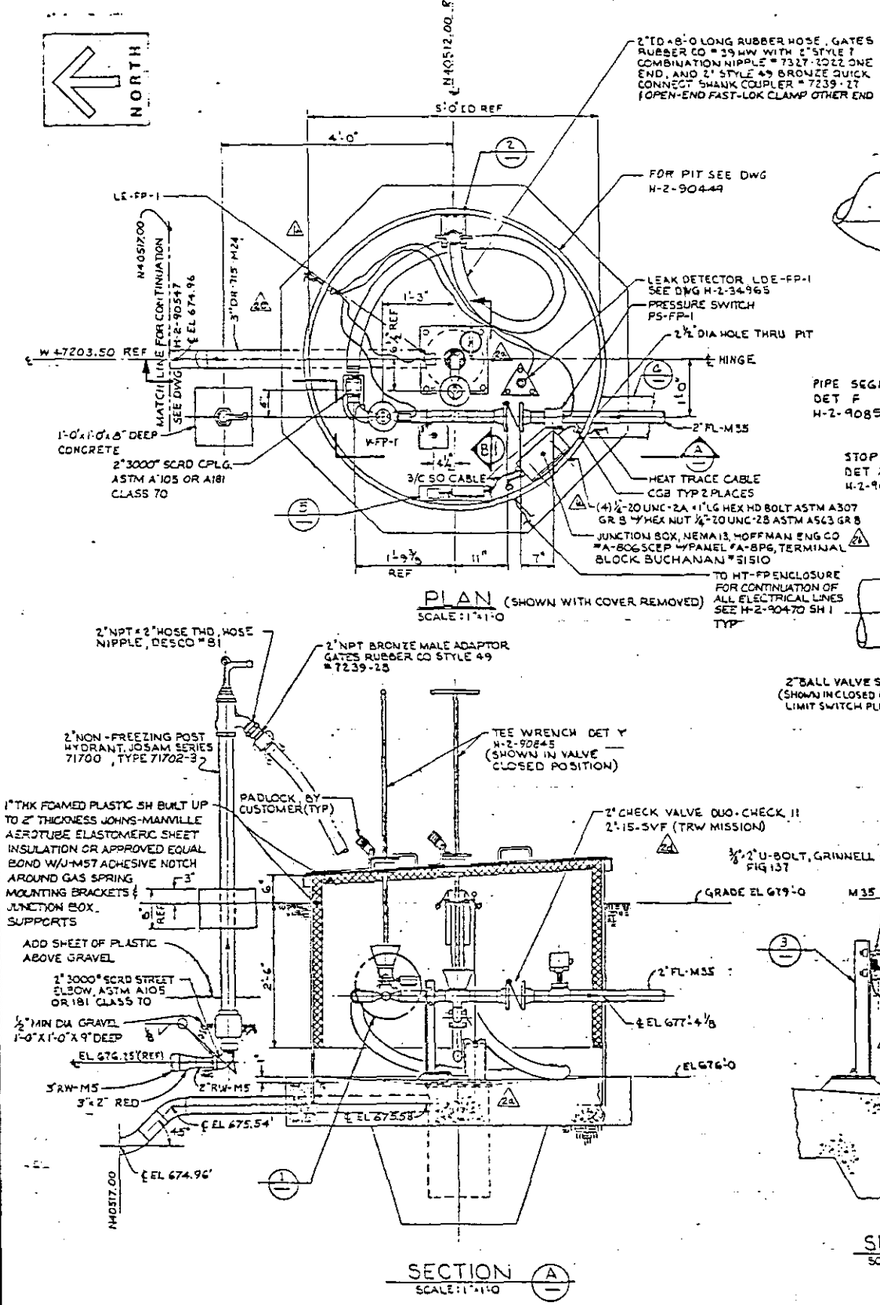

PLAN (SHOWN WITH COVER REMOVED)
SCALE: 1" = 1'-0"

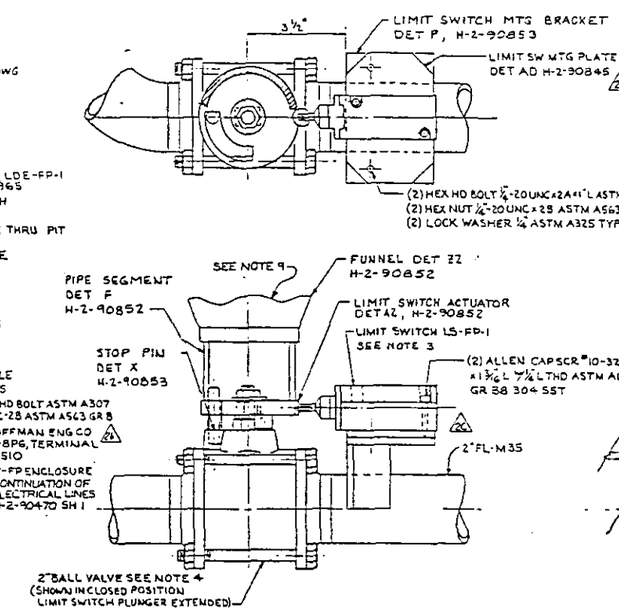

DETAIL 1
SCALE: 6" = 1'-0"

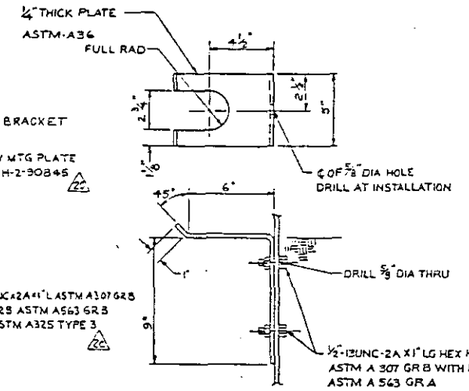

DETAIL 2
SCALE: 3" = 1'-0"

NOTES:

1. FOR GENERAL NOTES SEE DWG H-2-90543 & H-2-90544.
2. SEAL AROUND ALL PENETRATIONS THRU METAL PIT WITH POLYSULFIDE SEALANT PER CONSTRUCTION SPEC S-340-C7.
3. LIMIT SWITCH SHALL BE SQUARE-D TYPE C, 1 NO 1 NC WITH TYPE 9007-C54 D TOP ROLLER PLUNGER.
4. BALL VALVE - PITTSBURG BRASS CO. "2"-SP-E-17-BW-4-FO VALVE SHALL CONFORM TO THE FOLLOWING SPECIFICATIONS.
   a) CARBON STEEL BODY
   b) BUTTWELD ONE PIECE CASTING CARBON STEEL END FITTINGS, INTEGRALLY CAST AND MACHINED.
   c) 50 PERCENT 316 STAINLESS STEEL FILLED TEFLON BALL SEAT RINGS
   d) ASBESTOS BODY GASKET (BONDED)
   e) GRAPHITED ASBESTOS STEM PACKING
   f) OMIT HANDLE
   g) GLASS FILLED TEFLON BODY FILLER
5. SEE H-2-90596 & H-2-90597 FOR COVER PAINTING DIAGRAM
7. THERMOSTAT TO BE THERMON E4-35235 MOUNT AS REQ'D.
8. MOUNT THERMOSTAT & HEATER BRACKET 1'-6" ABOVE SLAB.
9. FOR VALVE FUNNEL ASSEMBLY INSTRUCTIONS SEE DETAIL U H-2-90533

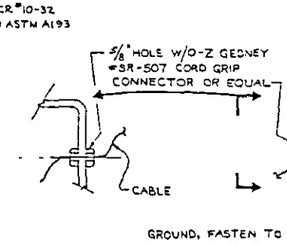

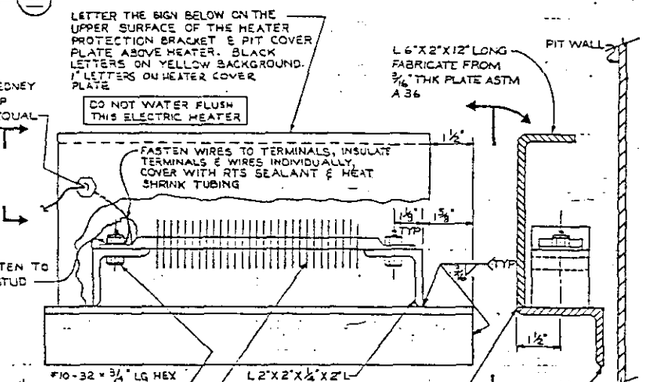

DETAIL 5
SCALE: NONE

SECTION A
SCALE: 1" = 1'-0"

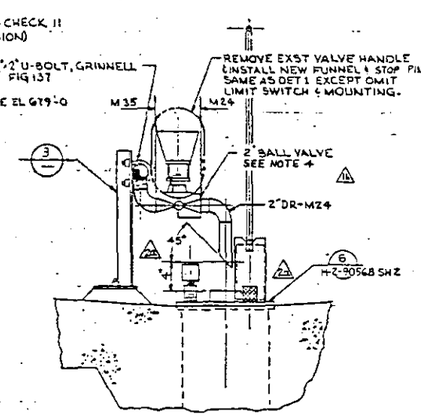

SECTION B
SCALE: 1 1/2" = 1'-0"

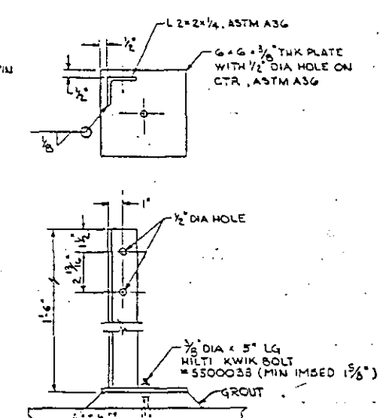

DETAIL 3
SCALE: 3" = 1'-0"

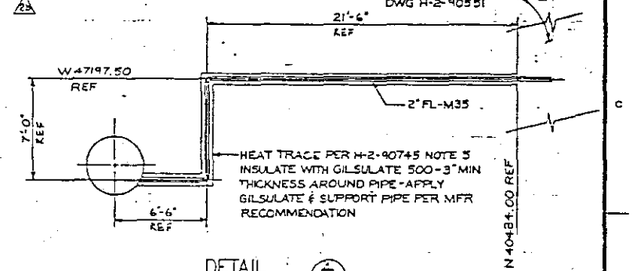

DETAIL 4
SCALE: 1/4" = 1'-0"

REV 1 DOE DATE 1/14
RELEASED FOR CONSTRUCTION BY DOE DATE 1/16/96

H-2-90435	DRAWING LIST						
NUMBER	TITLE						
REFERENCES							
NEXT USED ON	H-2-90335						

REV	DATE	DESCRIPTION
2		AS-BUILT FOR PROJ B-340 (1) RCD CHNG Z FIZ RMV INSUL NOTE (2) DFC B-340-281 Z D9 (3) DFC B-340-329 Z E6, F6, G6 (4) DFC B-340-369 Z F3, D4, E5-10 (5) DFC B-340-400 Z F11, C8, C11
1		(DFC B-340-131) ADDED "FO" TO VALVE (T U0, 1 SEE NOTE 5) 2) NOTE C) NOTE 4, SUPPORTS, 3) 12 F & 10E 5) WAS 4) REMOVED JUNCTION BOXES &

MICROFILMED — BY/DATE — KEH APPROVAL — COMMENT REVIEW

U. S. DEPARTMENT OF ENERGY
Richland Operations Office
KAISER ENGINEERS HANFORD COMPANY

PIPING. PLAN & DETAILS FLUSH PIT

PROJECT TITLE 241-AP TANK FARM

PROJ	B-340	WO	X34002
SCALE	AS SHOWN	SCALE	241-AP
CLASSIFICATION	NONE	BY	NOT REQD
DRAWING NUMBER	H-2-90568	1	2	2

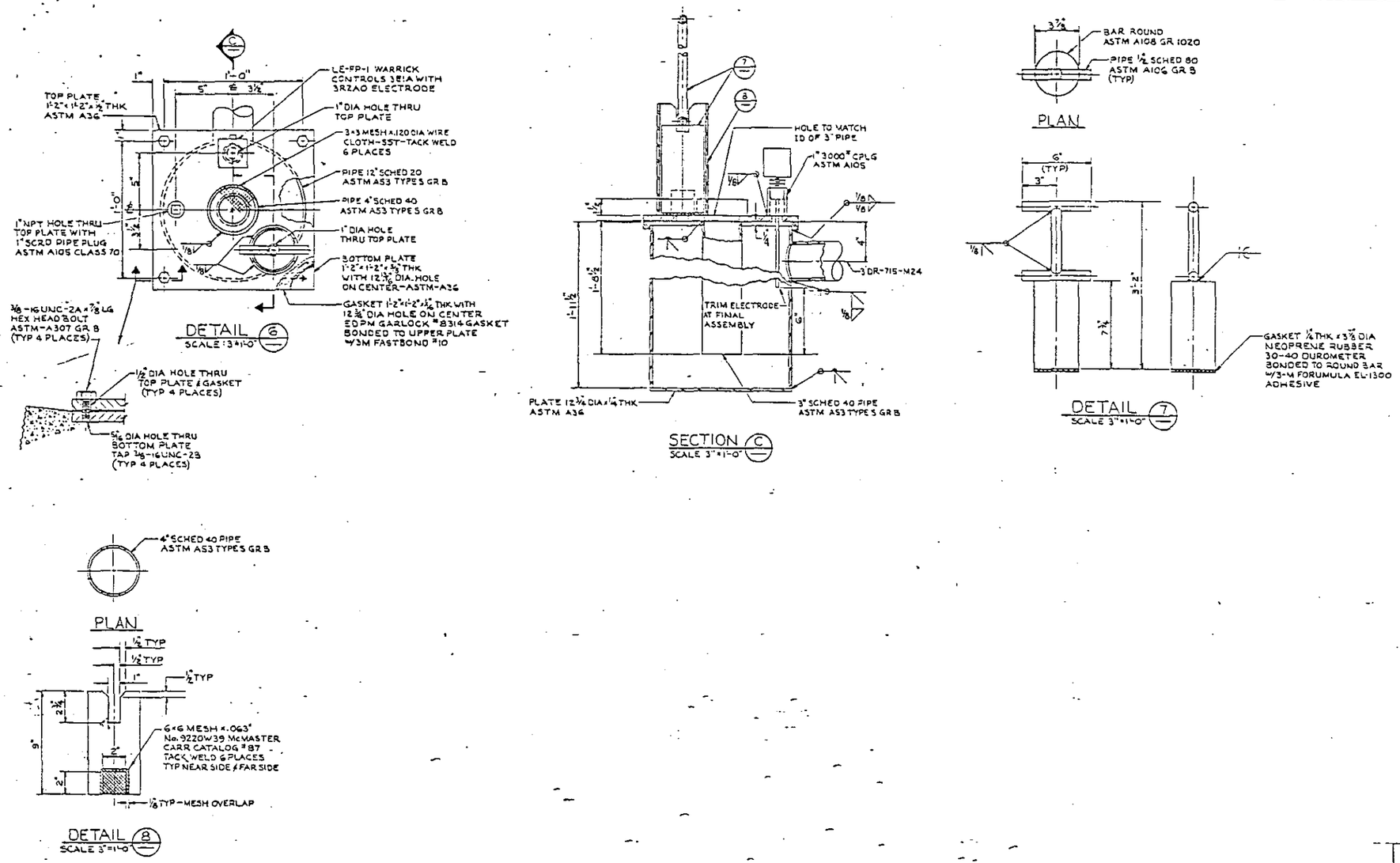

NEW SHEET ADDED TO REFLECT AS-BUILT CONDITIONS PER DFC 8-340-400

U. S. DEPARTMENT OF ENERGY Richland Operations Office	
KAISER ENGINEERS HANFORD COMPANY	
PIPING PLAN & DETAILS FLUSH PIT	
PROJECT TITLE	241-AP TANK FARM
PROJ	3-340
WO	X34002
JOB	R295A2
SCALE	AS SHOWN
BLDG	241-AP
HOLE	0402
DRAWING NUMBER	H-2-90568
SHEET	2
SHEET	2
REV	0

NUMBER	TITLE
H-2-90435	DRAWING LIST

DRAWING TRACEABILITY LIST

REFERENCES

NEXT USED ON H-2-90435

REVISIONS

COMMENT REVIEW

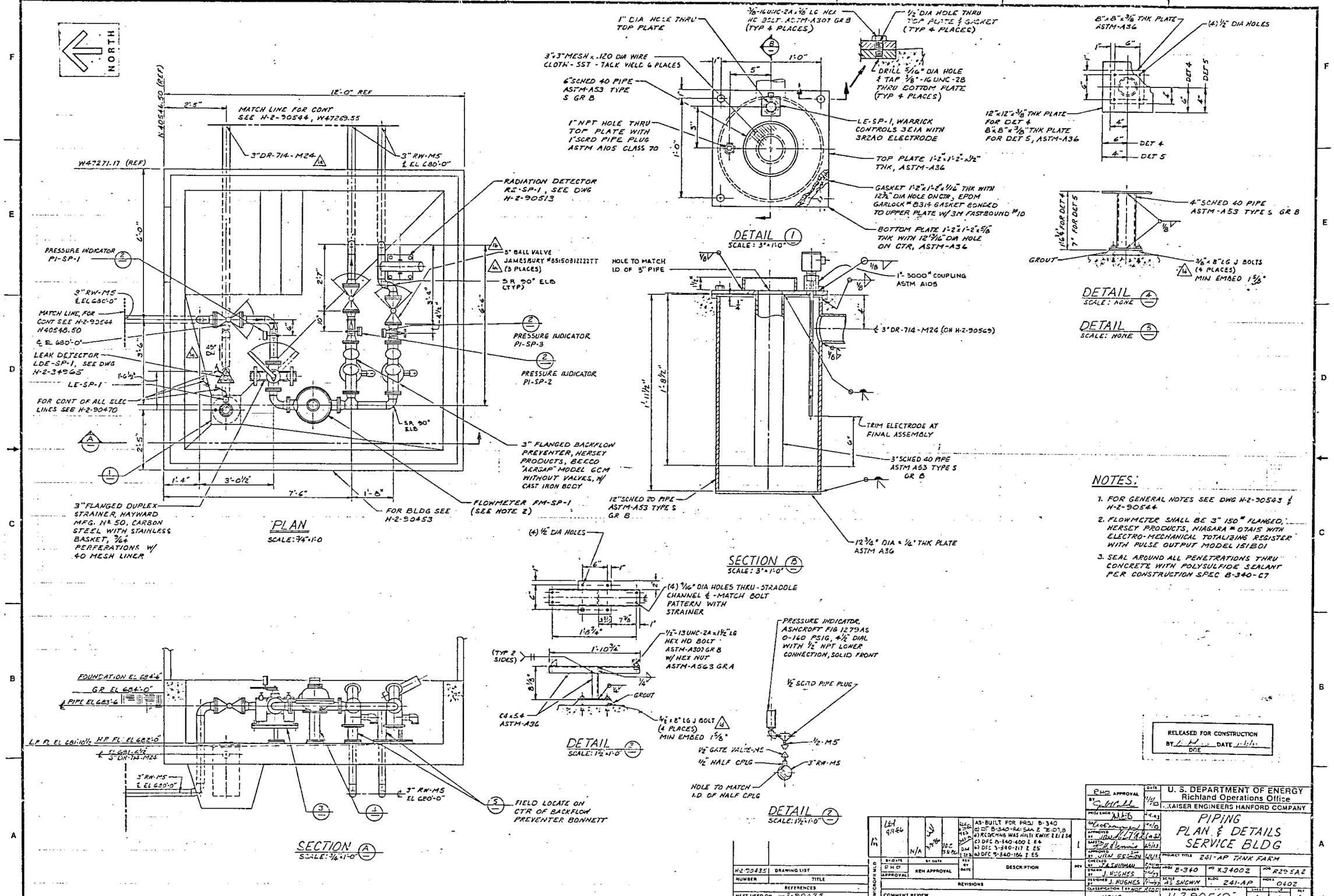
NORTH
PLAN
SCALE: 3/4"=1'-0"
MATCH LINE FOR CONT SEE H-2-90544, W47269.55
3" DR-714-M24
3" RW-M5 ℄ EL 680'-0"
RADIATION DETECTOR RE-SP-1, SEE DWG H-2-90513
PRESSURE INDICATOR PI-SP-1
3" BALL VALVE JAMESBURY #851503122222TT (3 PLACES)
SR 90° ELB (TYP)
PRESSURE INDICATOR PI-SP-3
PRESSURE INDICATOR PI-SP-2
LEAK DETECTOR LDE-SP-1, SEE DWG H-2-34965
LE-SP-1
FOR CONT OF ALL ELEC LINES SEE H-2-90470
3" FLANGED BACKFLOW PREVENTER, HERSEY PRODUCTS, BECCO "AIRGAP" MODEL GCM WITHOUT VALVES, W/ CAST IRON BODY
FLOWMETER FM-SP-1 (SEE NOTE 2)
FOR BLDG SEE H-2-90453
3" FLANGED DUPLEX STRAINER, HAYWARD MFG. No. 50, CARBON STEEL WITH STAINLESS BASKET, 3/64 PERFERATIONS W/ 40 MESH LINER
DETAIL 1
SCALE: 3"=1'-0"
1" DIA HOLE THRU TOP PLATE
3/8"-16UNC-2A x 3/8" LG HEX HD BOLT, ASTM-A307 GR B (TYP 4 PLACES)
1/2" DIA HOLE THRU TOP PLATE & GASKET (TYP 4 PLACES)
3"x3" MESH x .120 DIA WIRE CLOTH - SST - TACK WELD 6 PLACES
6" SCHED 40 PIPE ASTM-A53 TYPE S GR B
1" NPT HOLE THRU TOP PLATE WITH 1" SCRD PIPE PLUG ASTM A105 CLASS 70
DRILL 5/16" DIA HOLE & TAP 3/8"-16 UNC-2B THRU BOTTOM PLATE (TYP 4 PLACES)
LE-SP-1, WARRICK CONTROLS 3E1A WITH 3R2A0 ELECTRODE
TOP PLATE 1'-2"x1'-2"x1/2" THK, ASTM-A36
GASKET 1'-2"x1'-2"x1/16" THK WITH 12 3/4" DIA HOLE ON CTR, EPDM GARLOCK #8314 GASKET BONDED TO UPPER PLATE W/ 3M FASTBOUND #10
BOTTOM PLATE 1'-2"x1'-2"x5/8" THK WITH 12 13/16" DIA HOLE ON CTR, ASTM-A36
8"x8"x3/8" THK PLATE ASTM-A36
(4) 1/2" DIA HOLES
12"x12"x3/8" THK PLATE FOR DET 4
8"x8"x3/8" THK PLATE FOR DET 5, ASTM-A36
DET 4
DET 5
4" SCHED 40 PIPE ASTM-A53 TYPE S GR B
GROUT
3/8"x8" LG J BOLTS (4 PLACES) MIN EMBED 1 5/8"
DETAIL 4
SCALE: NONE
DETAIL 5
SCALE: NONE
HOLE TO MATCH I.D. OF 3" PIPE
1" 3000# COUPLING ASTM A105
℄ 3" DR-714-M24 (ON H-2-90569)
TRIM ELECTRODE AT FINAL ASSEMBLY
3" SCHED 40 PIPE ASTM A53 TYPE S GR B
12" SCHED 20 PIPE ASTM-A53 TYPE S GR B
12 3/4" DIA x 1/2" THK PLATE ASTM A36
SECTION B
SCALE: 3"=1'-0"
(4) 1/2" DIA HOLES
(4) 9/16" DIA HOLES THRU - STRADDLE CHANNEL ℄ - MATCH BOLT PATTERN WITH STRAINER
1/2"-13UNC-2A x 1 1/2" LG HEX HD BOLT ASTM-A307 GR B W/ HEX NUT ASTM-A563 GR A
(TYP 2 SIDES)
GROUT
C4x5.4 ASTM-A36
3/8"x8" LG J BOLT (4 PLACES) MIN EMBED 1 5/8"
DETAIL 3
SCALE: 1 1/2"=1'-0"
PRESSURE INDICATOR, ASHCROFT FIG 1279AS 0-160 PSIG, 4 1/2" DIAL WITH 1/2" NPT LOWER CONNECTION, SOLID FRONT
1/2" SCRD PIPE PLUG
1/2-M5
1/2" GATE VALVE-M5
1/2" HALF CPLG
3" RW-M5
HOLE TO MATCH I.D. OF HALF CPLG
DETAIL 2
SCALE: 1 1/2"=1'-0"
FOUNDATION EL 684'-6"
GR EL 684'-0"
PIPE EL 683'-6"
L.P. FL EL 681'-10 1/2"
H.P. FL EL 682'-0"
FL 681'-4 1/2"
3" DR-714-M24
3" RW-M5 ℄ EL 680'-0"
3" RW-M5 EL 680'-0"
FIELD LOCATE ON CTR OF BACKFLOW PREVENTER BONNETT
SECTION A
SCALE: 3/4"=1'-0"
NOTES:
1. FOR GENERAL NOTES SEE DWG H-2-90543 & H-2-90544
2. FLOWMETER SHALL BE 3" 150# FLANGED, HERSEY PRODUCTS, NIAGARA # 07A15 WITH ELECTRO-MECHANICAL TOTALIZING REGISTER WITH PULSE OUTPUT MODEL 151B01
3. SEAL AROUND ALL PENETRATIONS THRU CONCRETE WITH POLYSULFIDE SEALANT PER CONSTRUCTION SPEC B-340-C7
RELEASED FOR CONSTRUCTION
BY DATE
DOE
U. S. DEPARTMENT OF ENERGY
Richland Operations Office
KAISER ENGINEERS HANFORD COMPANY
PIPING
PLAN & DETAILS
SERVICE BLDG
241-AP TANK FARM
B-340
X34002
R25SA2
AS SHOWN
241-AP
0402
NONE
H-2-90569
1
DRAWING LIST
TITLE
REFERENCES
NEXT USED ON H-2-90435
AS-BUILT FOR PROJ B-340
DESCRIPTION
REVISIONS
COMMENT REVIEW
KEH APPROVAL

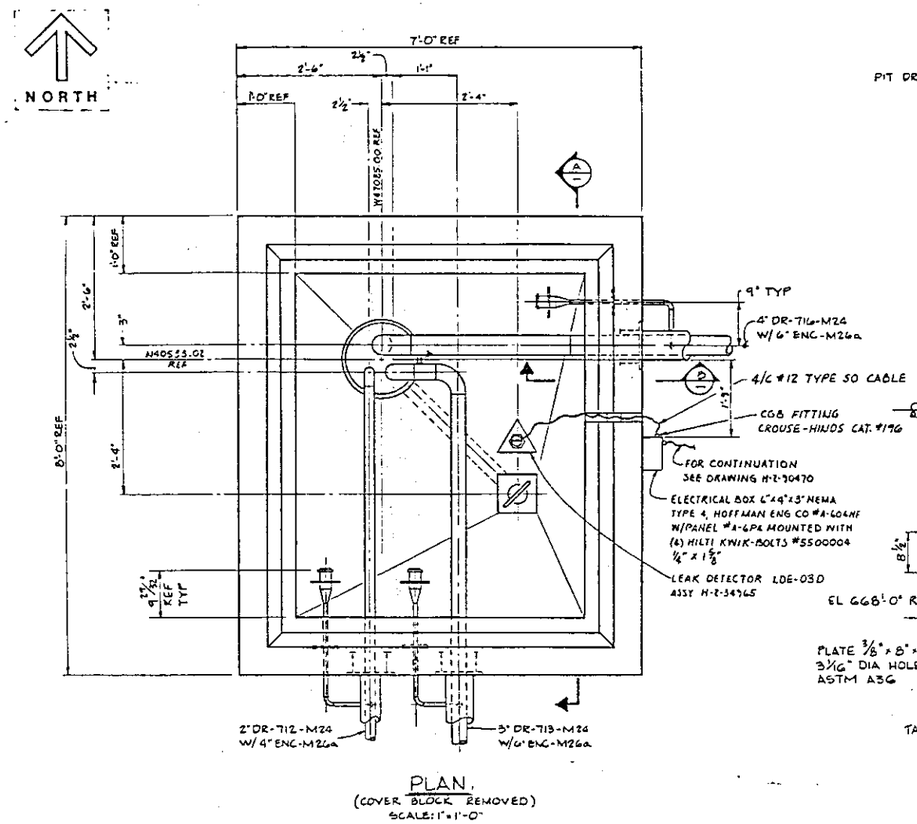

PLAN.
(COVER BLOCK REMOVED)
SCALE: 1" = 1'-0"

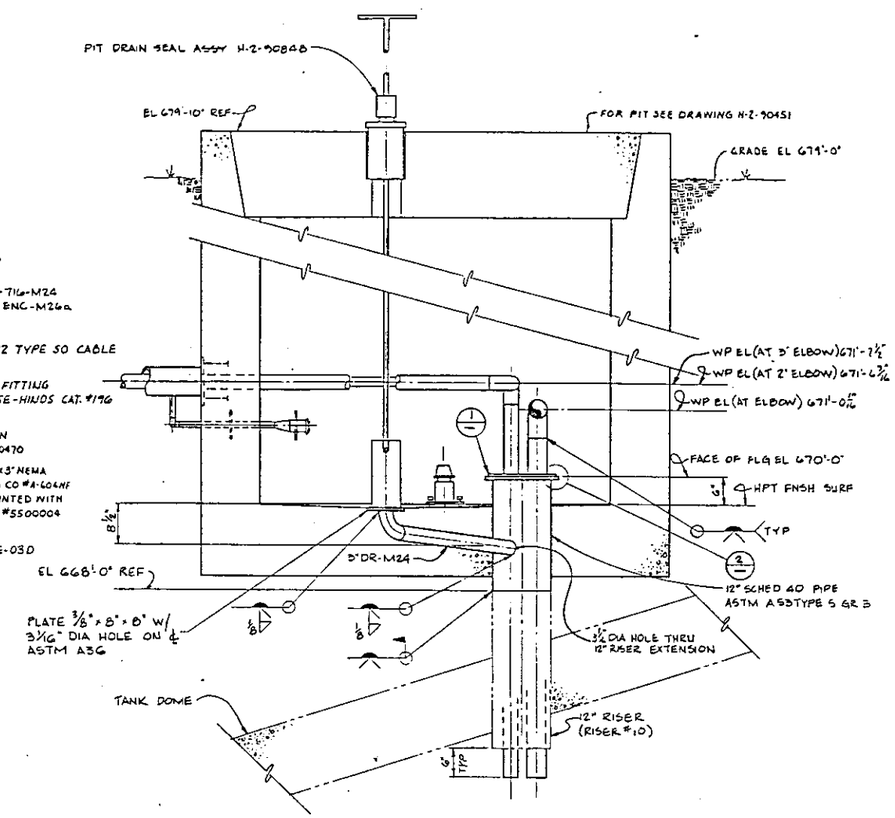

SECTION A
SCALE: 1" = 1'-0"

NOTES:

1) FOR GENERAL NOTES SEE H-2-90543 & H-2-90544.
2) HYDROSTATIC TEST NOT REQD FOR 2", 3" & 4" LINES EXTENDING BELOW FLANGE COVER.

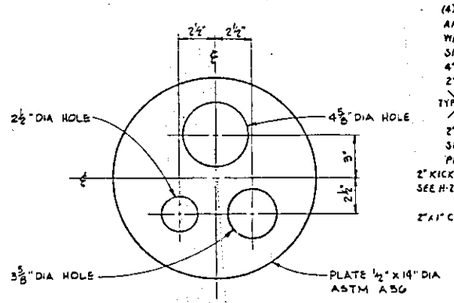

DETAIL 1
SCALE: 3" = 1'-0"

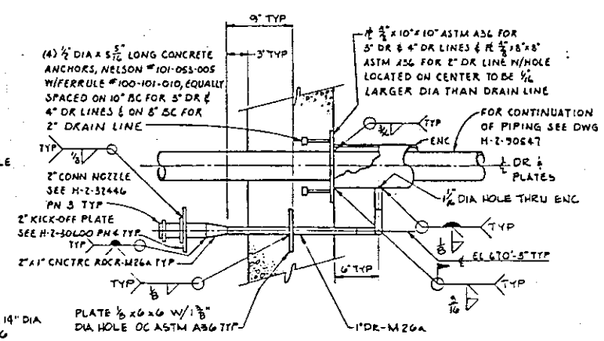

SECTION B
SCALE: NONE

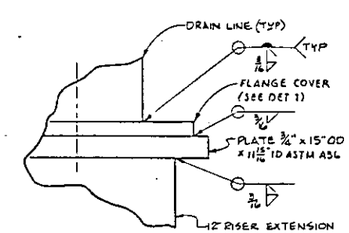

DETAIL 2
SCALE: 6" = 1'-0"

RELEASED FOR CONSTRUCTION
BY [illegible] DATE 12/6/93
DOE

1.	LEF 9-9-94	N/A	[illegible]	[illegible]	AS-BUILT FOR PROJ B-340		1
	BY-DATE	BY-DATE			DESCRIPTION		REV
	RXEWELL APPROVAL	REM APPROVAL		REV BY DATE			
	REVISIONS						
	COMMENT REVIEW						

H-2-90435	DRAWING LIST
NUMBER	TITLE
REFERENCES	
NEXT USED ON	H-2-90432

MICROFILMED

RHO APPROVAL BY [illegible]	DATE 11/1/93	U. S. DEPARTMENT OF ENERGY Richland Operations Office	
PROJ ENGR [illegible]		KAISER ENGINEERS HANFORD COMPANY	
DR [illegible]		PIPING ARRGT AND DETAILS DRAIN PIT 241-AP-03D	
APPROVED BY [illegible]			
SAFETY [illegible]			
APPROVED BY [illegible]		PROJECT TITLE 241-AP TANK FARM	
CHECKED BY [illegible]			
DRAWN BY WJW ZICKUHR		PROJ B-340	WO X34002	JOB R2952
DESIGNED BY WJW ZICKUHR		SCALE AS SHOWN	BLDG 241-AP	PHASE 0402
CLASSIFICATION UT		DRAWING NUMBER H-2-90571	SHEET 1	OF 1	REV 1
NONE	NOT REQD				

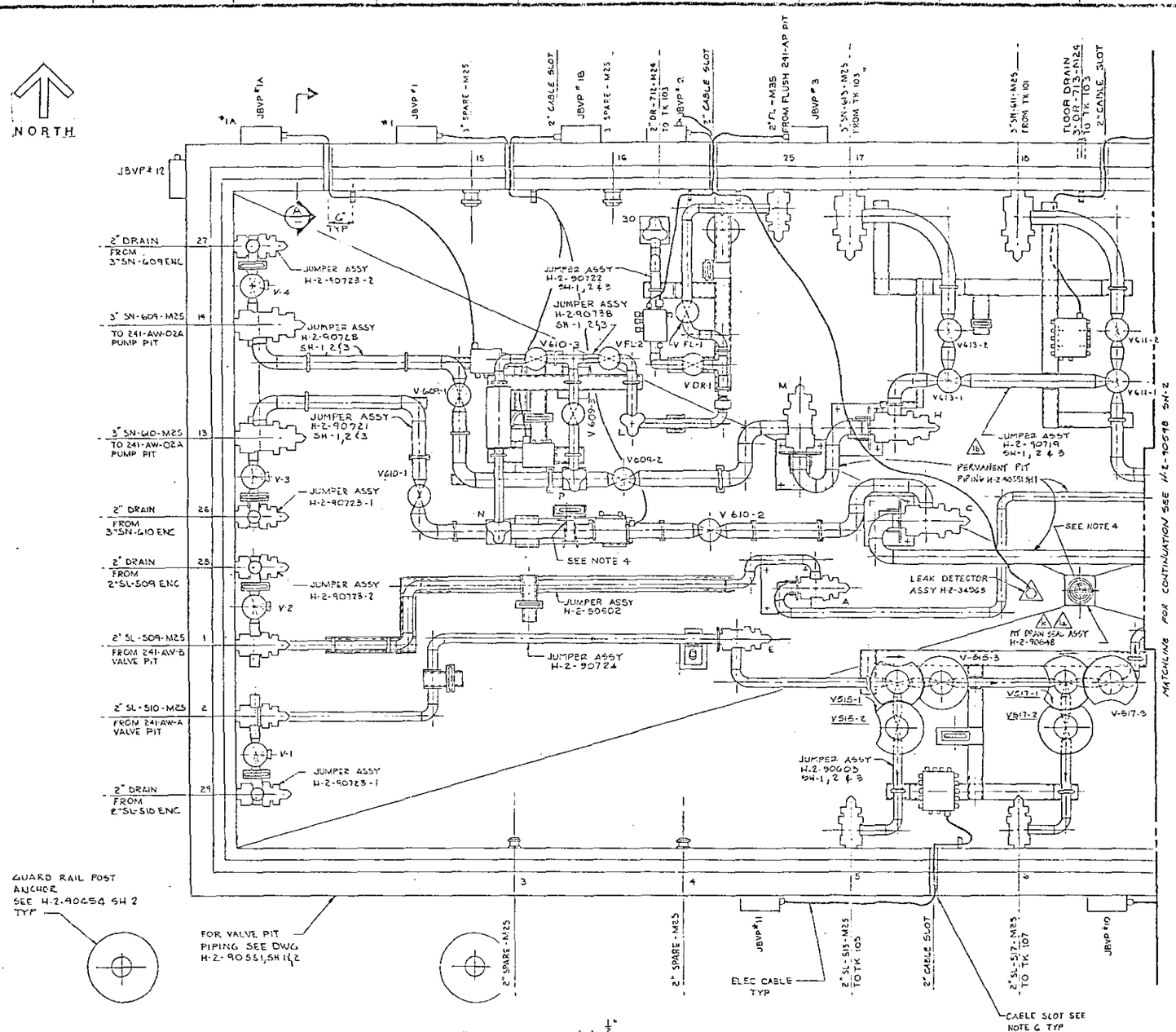

PLAN
SCALE: 1"=1'-0"

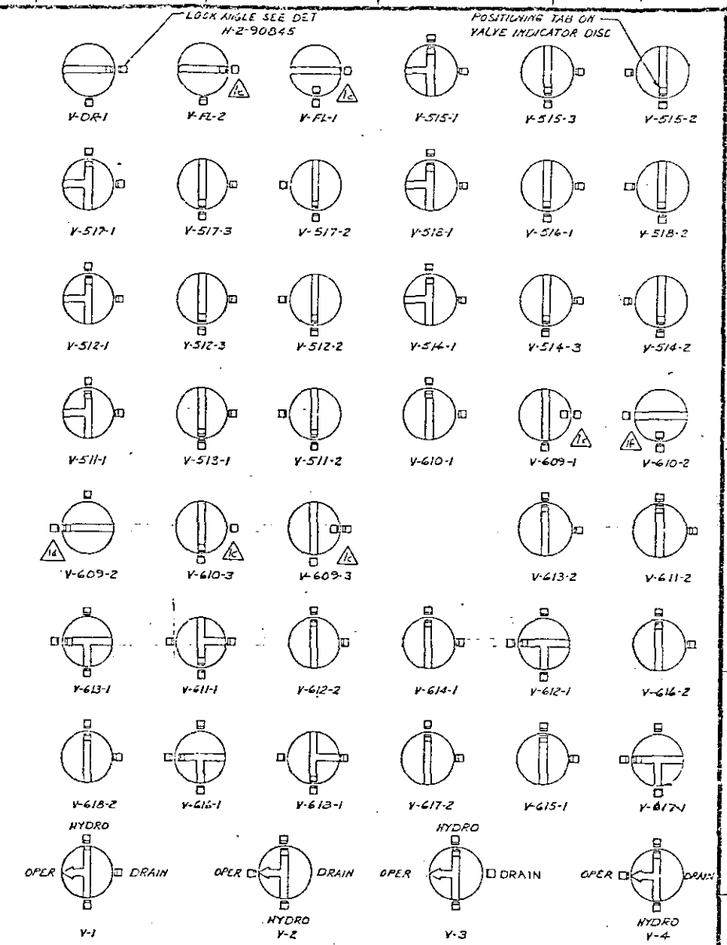

VALVE LOCK ANGLE LOCATION DIAGRAM

NOTES:

1. FOR GENERAL NOTES SEE DRAWING H-2-90543 & H-2-90544
2. V613-1 ETC INDICATES VALVE IDENTIFICATION NUMBERS
3. USE VALVE EXTENSION HANDLE PER DETAIL Y ON H-2-90845
4. INDICATES LOCATION THRU COVER BLOCK FOR SPRAY WAND ASSY (H-2-90846) SEE STRUCTURAL DRAWING H-2-90448
5. SEE H-2-90596 & H-2-90597 FOR COVER PAINTING DIAGRAM
6. PACK LEAD WOOL AROUND CABLES IN CABLE SLOT & CAULK OUTSIDE END WITH POLYSULFIDE SEALANT
7. FOR CONTINUATION OF ALL LINES SEE H-2-90547

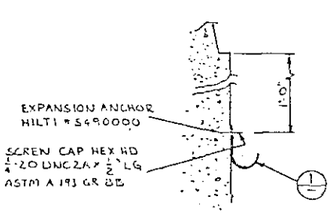

SECTION A-A
SCALE: NONE

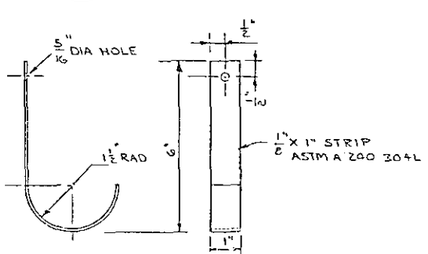

DETAIL 1
SCALE 1 1/2" = 1'-0"

RELEASED FOR CONSTRUCTION
BY G. R. Rhodes DATE 11/1/85
DOE

RHO APPROVAL	U. S. DEPARTMENT OF ENERGY Richland Operations Office
	KAISER ENGINEERS HANFORD COMPANY
	PIPING JUMPER ARRGT 241-AP VALVE PIT
	PROJECT TITLE 241-AP TANK FARM
	PROJ B-340 · NO X34002 · NO 8295A2
	SCALE AS SHOWN · FLOW 241-AP · NOTE 8404
CLASSIFICATION NONE · BY REQD	DRAWING NUMBER H-2-90598 · SHEET 1 · 2 · REV 1

AS-BUILT FOR PROJ B-340 (1) EC/OFC H-340-450, 2 F1 (2 EA - e) OFC H-340-102, 2 D-6 (2 C3, F1, (C3, J4) OFC H-340-499 (3) 0-701 & H-54 (4) EC 340-450 (5) OFC-340-152 (6) OFC-340-152 (7) OFC

REV	DESCRIPTION
	REVISIONS

H-2-90835	DRAWING LIST
NUMBER	TITLE
	REFERENCES

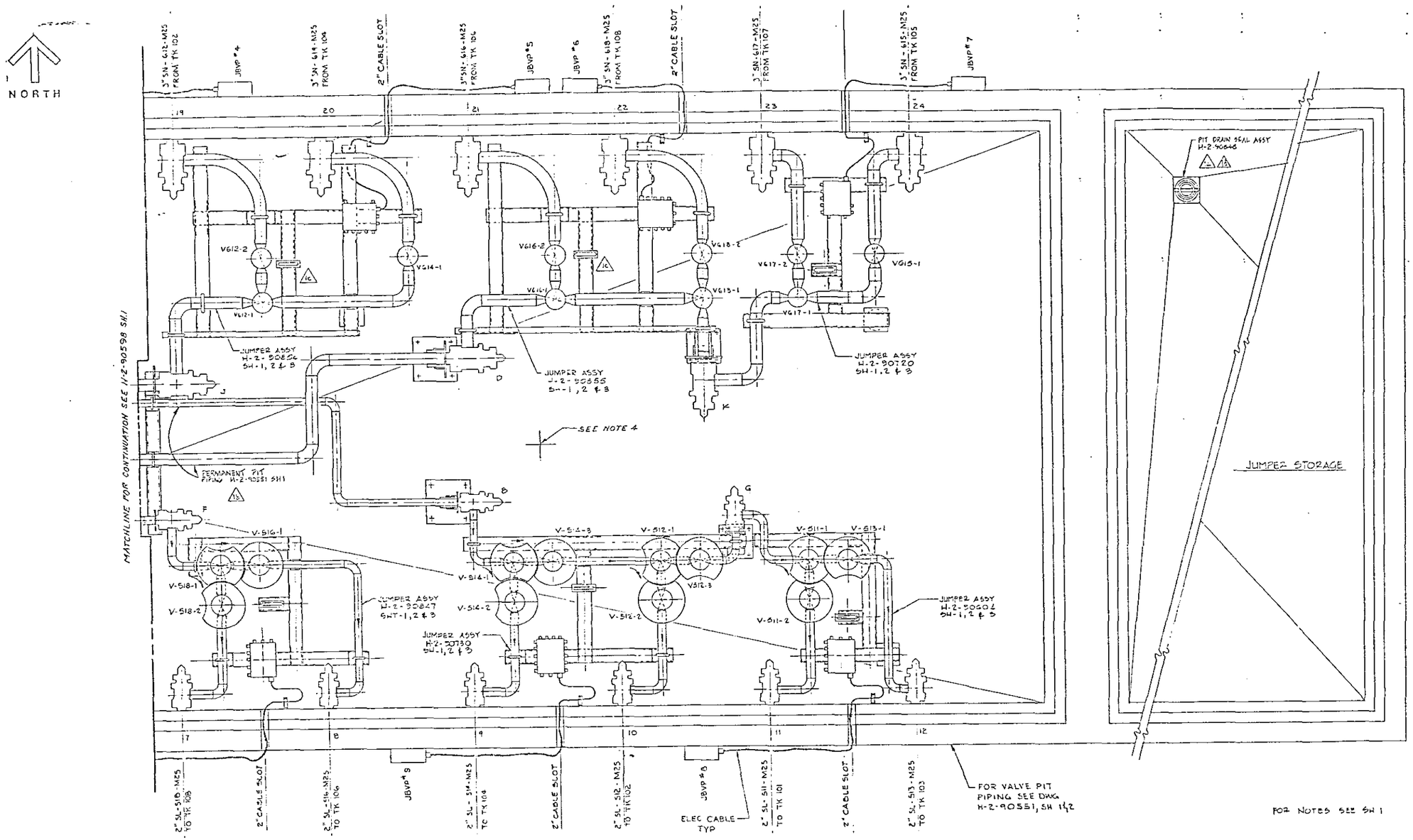

PLAN
SCALE: 1"=1'-0

RELEASED FOR CONSTRUCTION
BY [illegible] DATE [illegible]
DOE

	CEJ 9-2-86	NA	JW	JDC 9-2-86		AS-BUILT FOR FRCU BY SAD ZES LG I EE & II (DDRC-8343-502 LG OF CHAN INCREASED UNDER 0540-281-2ND 011 (C) RCO CHNG DDRC-8330-132 2ND F3 (C)
	BY-DATE	BY-DATE		PIT BY DATE		DESCRIPTION
	PROJECT ENGINEER	RCO APPROVAL				REVISIONS
	CONSTRUCTION					
	COMMENT REVIEW					

H-2-90-251	DRAWING LIST
NUMBER	TITLE
REFERENCES	
NEXT USE ON H-2-90598	

PIIO APPROVAL BY	DATE	U. S. DEPARTMENT OF ENERGY Richland Operations Office	
PROJ ENGR	DATE	KAISER ENGINEERS HANFORD COMPANY	
DESIGN		PIPING JUMPER ARRGT 241-AP VALVE PIT	
CHIEF PROJ			
CHIEF PROJ			
LEAD ENGR		PROJECT TITLE 241-AP TANK FARM	
PROJECT ENGINEER		PROJ E-240	WO X34002	AFE R29542
CHIEF ENGINEER		SCALE AS SHOWN	BLDG 241-AP	PROJ 8404
DRAWN		CONTRACT NUMBER NONE	ST INCT REQD	DRAWING NUMBER H-2-90598	SHEET 2	OF 2	REV 1

RELEASED FOR CONSTRUCTION

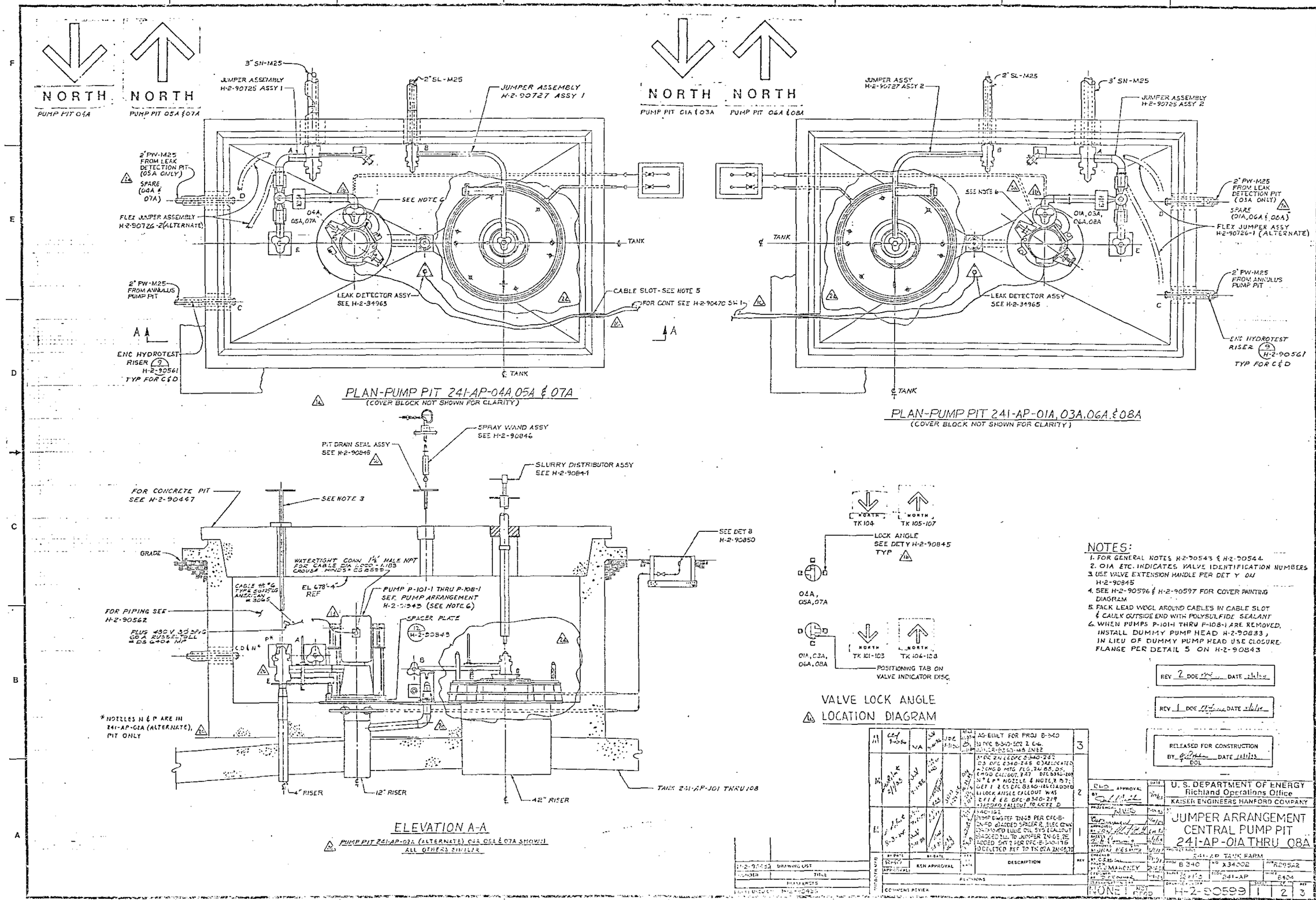

NOTES:

1. FOR GENERAL NOTES H-2-90543 & H-2-90544.
2. 01A ETC. INDICATES VALVE IDENTIFICATION NUMBERS
3. USE VALVE EXTENSION HANDLE PER DET Y ON H-2-90845
4. SEE H-2-90596 & H-2-90597 FOR COVER PAINTING DIAGRAM
5. PACK LEAD WOOL AROUND CABLES IN CABLE SLOT & CAULK OUTSIDE END WITH POLYSULFIDE SEALANT
6. WHEN PUMPS P-101-1 THRU P-108-1 ARE REMOVED, INSTALL DUMMY PUMP HEAD H-2-90833, IN LIEU OF DUMMY PUMP HEAD USE CLOSURE FLANGE PER DETAIL 5 ON H-2-90843

REV 2 DOE DATE

REV 1 DOE DATE

RELEASED FOR CONSTRUCTION BY DOE DATE

REV	BY	DATE	REV	BY	DATE	REV	DESCRIPTION	REV
3							AS-BUILT FOR PROJ B-340	3
2								2
1								1

REVISIONS

COMMENT REVIEW

H-2-90455	DRAWING LIST
NUMBER	TITLE
REFERENCES	
DATE DISCOVER	H-2-90455

U. S. DEPARTMENT OF ENERGY
Richland Operations Office
KAISER ENGINEERS HANFORD COMPANY

JUMPER ARRANGEMENT
CENTRAL PUMP PIT
241-AP-01A THRU 08A

PROJECT TITLE: 241-AP TANK FARM

PROJ B 340	NO X34002	NO R295A2	
SCALE 2" = 1'-0"	CODE 241-AP	SHEET 8404	
DRAWING NUMBER H-2-90599	SHEET 1	OF 2	REV 3

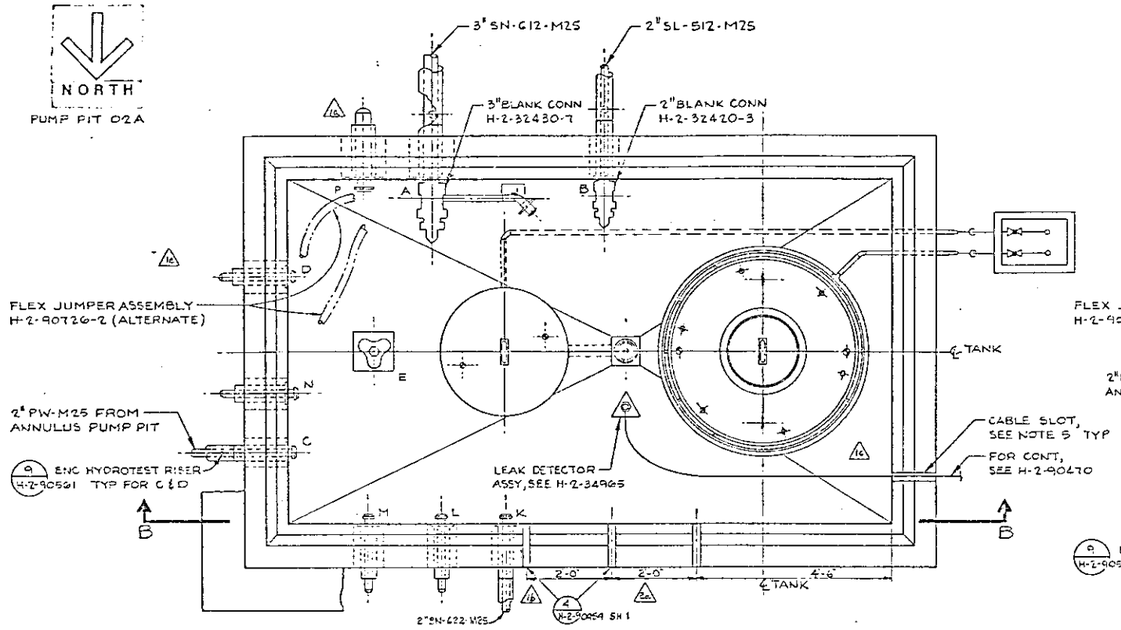

PLAN-PUMP PIT 241-AP-02A
(COVER BLOCK NOT SHOWN FOR CLARITY)

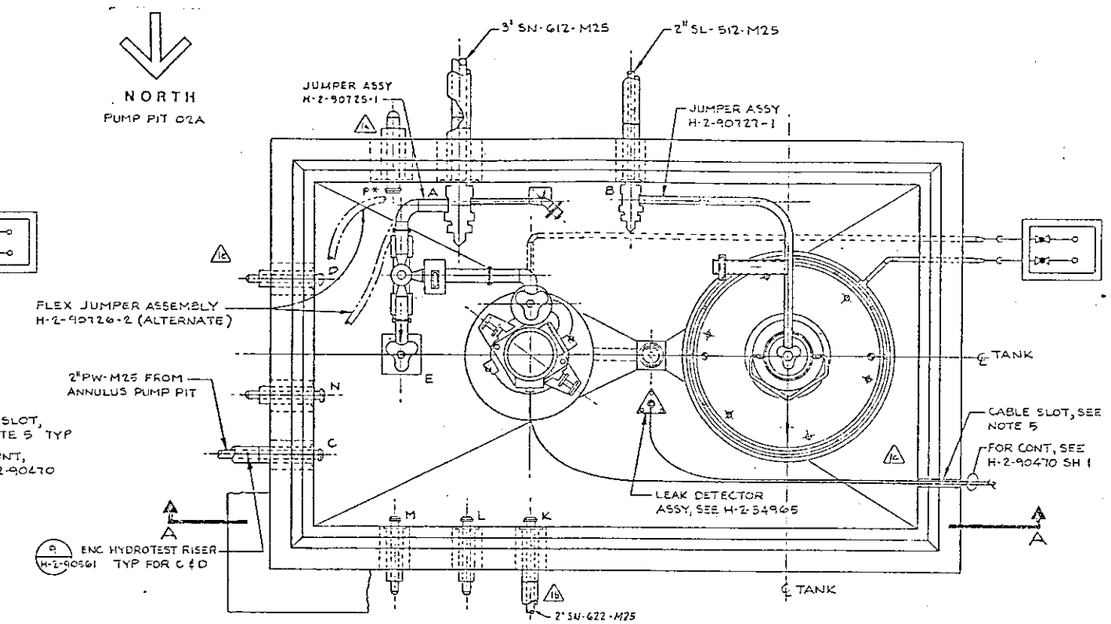

PLAN-PUMP PIT 241-AP-02A - ALTERNATE (WITH PUMP AND SLURRY DISTRIBUTOR INSTALLED)
(COVER BLOCK NOT SHOWN FOR CLARITY)

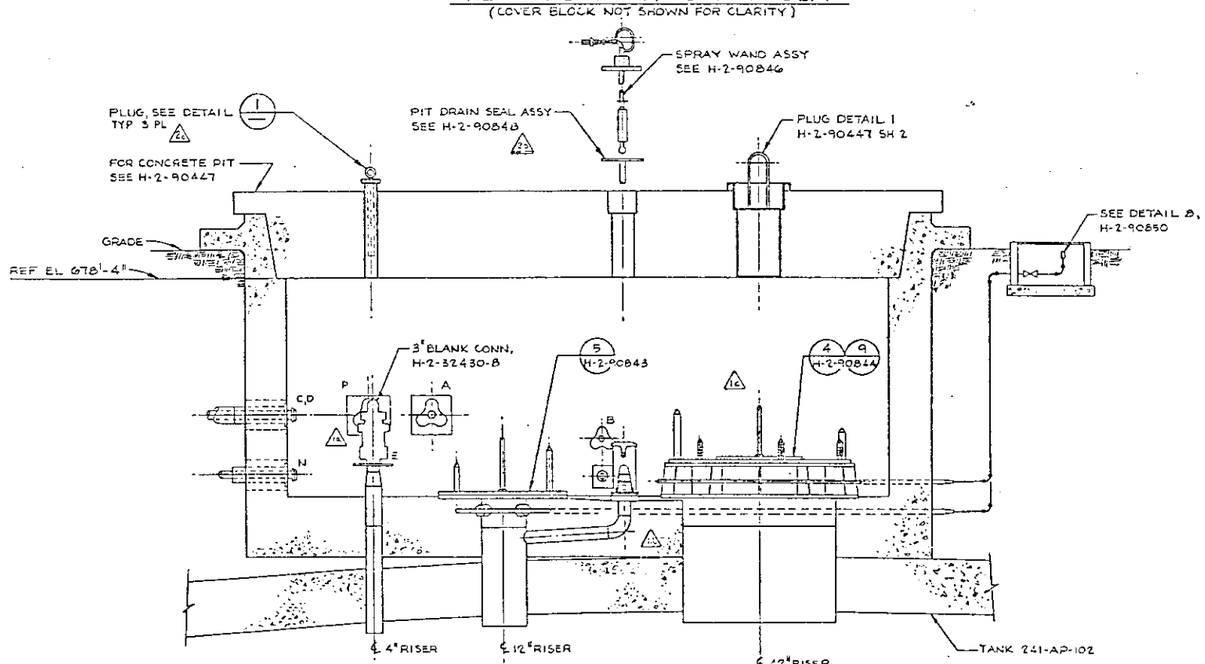

ELEVATION B-B
PUMP PIT 241-AP-02A

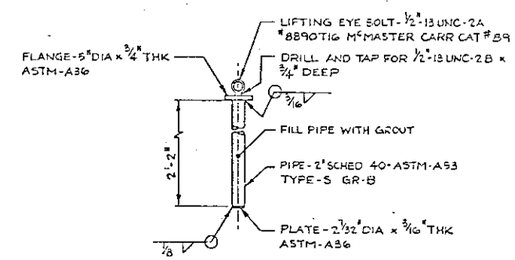

DETAIL 1
NTS

FOR NOTES, SEE SHEET 1.

REV 1 DOE DATE

RELEASED FOR CONSTRUCTION
BY DOE DATE

REV	BY	DATE	CHKD	APPR	DESCRIPTION
2					AS BUILT FOR PROJ B-340 (1) DFC B-340-507 Z C-7 (5) DFC B-340-502 Z C-6 (2) DFC-B340-231 ZN06
1					ZU E6, E7 DFC B 340-219 (1) DELETE PIPING TO NOZ D DR ZU E6 DFC B-340-242 D2 DFC B-340-248 (4) RELOCATE (2) CHGD MTG FLG. ZU B6, D5, ZU D5, D6 PER DFC B340-217 (3) ADDED 2" SN-622 TO NOZZ 'K', PER DFC B 340-207 (4) RELOCATED NOZZ 'P' ZU B7 C5 E7

H-2-90425	DRAWING LIST		
NUMBER	TITLE		
REFERENCES			
H-2-90425			

MICROFILMED: BY DATE; NOTIFIED: BY DATE; APPROVAL: KEH APPROVAL; REV BY DATE

REVISIONS

COMMENT REVIEW

RHO APPROVAL BY — DATE

U. S. DEPARTMENT OF ENERGY
Richland Operations Office
KAISER ENGINEERS HANFORD COMPANY

JUMPER ARRANGEMENT
CENTRAL PUMP PIT
241 AP 01A THRU 08A

PROJECT TITLE: 241-AP TANK

PROJ B340 | SO X 34002 | NO R295A2

SCALE 3/8"=1'-0" | BLDG 241-AP | NOTE 8404

DRAWING NUMBER H-2-90599 | SHEET 2 | SH 2 | REV 2

NONE NOT REQD

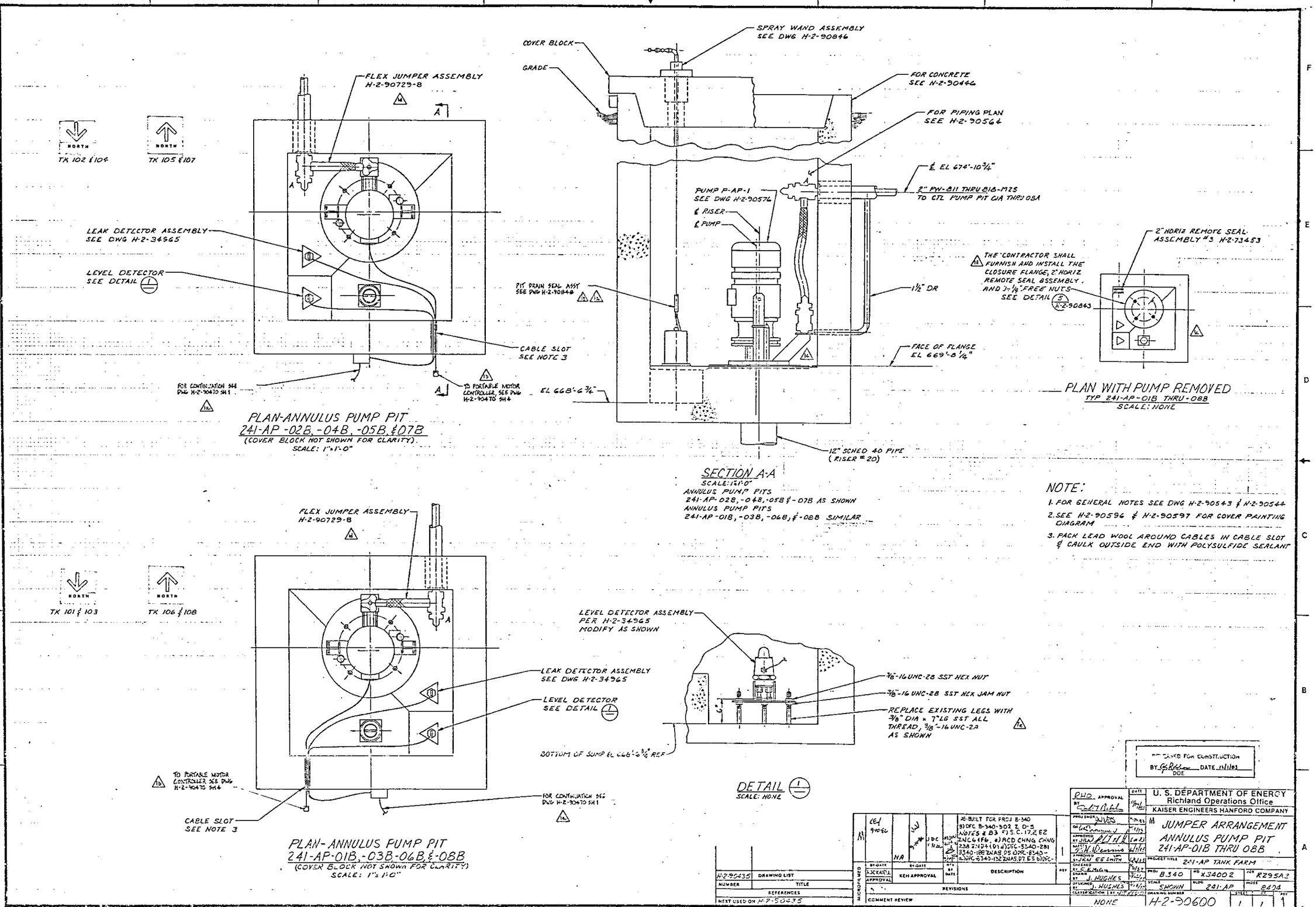

NORTH
TK 102 & 104
NORTH
TK 105 & 107
FLEX JUMPER ASSEMBLY H-2-90729-8
LEAK DETECTOR ASSEMBLY SEE DWG H-2-34965
LEVEL DETECTOR SEE DETAIL 1
CABLE SLOT SEE NOTE 3
FOR CONTINUATION SEE DWG H-2-90470 SH 1
TO PORTABLE MOTOR CONTROLLER, SEE DWG H-2-90470 SH 4
PLAN-ANNULUS PUMP PIT
241-AP-02B, -04B, -05B, & 07B
(COVER BLOCK NOT SHOWN FOR CLARITY)
SCALE: 1"=1'-0"
COVER BLOCK
GRADE
SPRAY WAND ASSEMBLY SEE DWG H-2-90846
FOR CONCRETE SEE H-2-90446
FOR PIPING PLAN SEE H-2-90564
℄ EL 674'-10 3/4"
2" PW-811 THRU 818-M25 TO CTL PUMP PIT C1A THRU 08A
PUMP P-AP-1 SEE DWG H-2-90576
℄ RISER
℄ PUMP
PIT DRAIN SEAL ASSY SEE DWG H-2-90848
1 1/2" DR
FACE OF FLANGE EL 669'-8 1/4"
EL 668'-6 3/4"
12" SCHED 40 PIPE (RISER # 20)
SECTION A-A
SCALE: 1"=1'-0"
ANNULUS PUMP PITS
241-AP-02B, -04B, -05B & -07B AS SHOWN
ANNULUS PUMP PITS
241-AP-01B, -03B, -06B, & -08B SIMILAR
THE CONTRACTOR SHALL FURNISH AND INSTALL THE CLOSURE FLANGE, 2" HORIZ REMOTE SEAL ASSEMBLY, AND 3-1/4" FREE NUTS SEE DETAIL 5 H-2-90843
2" HORIZ REMOTE SEAL ASSEMBLY #3 H-2-73453
PLAN WITH PUMP REMOVED
TYP 241-AP-01B THRU -08B
SCALE: NONE
NOTE:
1. FOR GENERAL NOTES SEE DWG H-2-90543 & H-2-90544
2. SEE H-2-90596 & H-2-90597 FOR COVER PAINTING DIAGRAM
3. PACK LEAD WOOL AROUND CABLES IN CABLE SLOT & CAULK OUTSIDE END WITH POLYSULFIDE SEALANT
NORTH
TK 101 & 103
NORTH
TK 106 & 108
FLEX JUMPER ASSEMBLY H-2-90729-8
LEAK DETECTOR ASSEMBLY SEE DWG H-2-34965
LEVEL DETECTOR SEE DETAIL 1
TO PORTABLE MOTOR CONTROLLER SEE DWG H-2-90470 SH 4
CABLE SLOT SEE NOTE 3
FOR CONTINUATION SEE DWG H-2-90470 SH 1
PLAN-ANNULUS PUMP PIT
241-AP-01B, -03B, -06B, & -08B
(COVER BLOCK NOT SHOWN FOR CLARITY)
SCALE: 1"=1'-0"
LEVEL DETECTOR ASSEMBLY PER H-2-34965 MODIFY AS SHOWN
3/8"-16 UNC-2B SST HEX NUT
3/8"-16 UNC-2B SST HEX JAM NUT
REPLACE EXISTING LEGS WITH 3/8" DIA x 7" LG SST ALL THREAD, 3/8"-16 UNC-2A AS SHOWN
BOTTOM OF SUMP EL 668'-6 3/4" REF
DETAIL 1
SCALE: NONE
RELEASED FOR CONSTRUCTION
BY DOE DATE 11/1/83
U. S. DEPARTMENT OF ENERGY
Richland Operations Office
KAISER ENGINEERS HANFORD COMPANY
JUMPER ARRANGEMENT
ANNULUS PUMP PIT
241-AP-01B THRU 08B
PROJECT TITLE 241-AP TANK FARM
PROJ B340
WO X34002
JOB R295A2
SCALE SHOWN
BLDG 241-AP
MODEL 8404
DRAWING NUMBER H-2-90600
SHEET 1 OF 1
REV 1
H-2-90435 DRAWING LIST
NUMBER TITLE
REFERENCES
NEXT USED ON H-2-90435
AS-BUILT FOR PROJ B-340
REVISIONS
COMMENT REVIEW
NONE

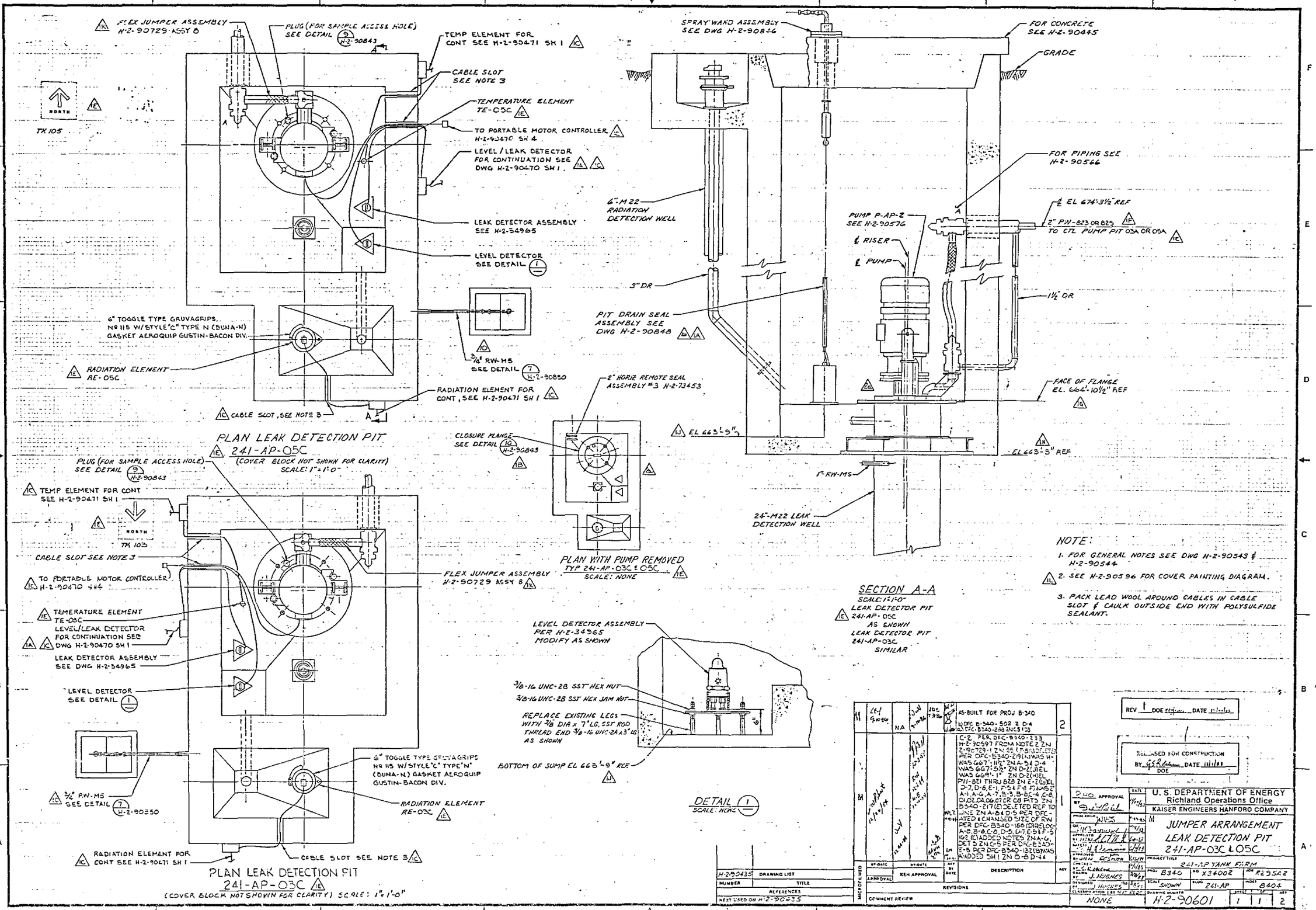

FLEX JUMPER ASSEMBLY H-2-90729 ASSY 8
PLUG (FOR SAMPLE ACCESS HOLE) SEE DETAIL 9 H-2-90843
TEMP ELEMENT FOR CONT SEE H-2-90471 SH 1
CABLE SLOT SEE NOTE 3
TEMPERATURE ELEMENT TE-05C
TO PORTABLE MOTOR CONTROLLER H-2-90470 SH 4
LEVEL/LEAK DETECTOR FOR CONTINUATION SEE DWG H-2-90470 SH 1
LEAK DETECTOR ASSEMBLY SEE H-2-34965
LEVEL DETECTOR SEE DETAIL 1
NORTH
TK 105
6" TOGGLE TYPE GRUVAGRIPS, Nº 115 W/STYLE "C" TYPE N (BUNA-N) GASKET AEROQUIP GUSTIN-BACON DIV.
RADIATION ELEMENT RE-05C
3/4" RW-MS SEE DETAIL 7 H-2-90850
RADIATION ELEMENT FOR CONT, SEE H-2-90471 SH 1
CABLE SLOT, SEE NOTE 3
PLAN LEAK DETECTION PIT 241-AP-05C
(COVER BLOCK NOT SHOWN FOR CLARITY) SCALE: 1"=1'-0"
SPRAY WAND ASSEMBLY SEE DWG H-2-90846
FOR CONCRETE SEE H-2-90445
GRADE
FOR PIPING SEE H-2-90566
6"-M22 RADIATION DETECTION WELL
PUMP P-AP-2 SEE H-2-90576
℄ EL 674'-3½" REF
2" PW-823 OR 825 TO CTL PUMP PIT 03A OR 05A
℄ RISER
℄ PUMP
3" DR
1½" DR
PIT DRAIN SEAL ASSEMBLY SEE DWG H-2-90848
FACE OF FLANGE EL. 664'-10½" REF
EL 663'-9"
EL 663'-5" REF
1"-RW-MS
24"-M22 LEAK DETECTION WELL
2" HORIZ REMOTE SEAL ASSEMBLY #3 H-2-73453
CLOSURE FLANGE SEE DETAIL 10 H-2-90843
PLAN WITH PUMP REMOVED TYP 241-AP-03C & 05C
SCALE: NONE
SECTION A-A
SCALE: 1"=1'-0"
LEAK DETECTOR PIT 241-AP-05C AS SHOWN
LEAK DETECTOR PIT 241-AP-03C SIMILAR
NOTE:
1. FOR GENERAL NOTES SEE DWG H-2-90543 & H-2-90544
2. SEE H-2-90596 FOR COVER PAINTING DIAGRAM.
3. PACK LEAD WOOL AROUND CABLES IN CABLE SLOT & CAULK OUTSIDE END WITH POLYSULFIDE SEALANT.
PLUG (FOR SAMPLE ACCESS HOLE) SEE DETAIL 9 H-2-90843
TEMP ELEMENT FOR CONT SEE H-2-90471 SH 1
NORTH
TK 103
CABLE SLOT SEE NOTE 3
TO PORTABLE MOTOR CONTROLLER H-2-90470 SH4
FLEX JUMPER ASSEMBLY H-2-90729 ASSY 8
TEMERATURE ELEMENT TE-03C
LEVEL/LEAK DETECTOR FOR CONTINUATION SEE DWG H-2-90470 SH 1
LEAK DETECTOR ASSEMBLY SEE DWG H-2-34965
LEVEL DETECTOR SEE DETAIL 1
3/4" RW-MS SEE DETAIL 7 H-2-90850
6" TOGGLE TYPE GRUVAGRIPS Nº 115 W/STYLE "C" TYPE "N" (BUNA-N) GASKET AEROQUIP GUSTIN-BACON DIV.
RADIATION ELEMENT RE-03C
RADIATION ELEMENT FOR CONT SEE H-2-90471 SH 1
CABLE SLOT SEE NOTE 3
PLAN LEAK DETECTION PIT 241-AP-03C
(COVER BLOCK NOT SHOWN FOR CLARITY) SCALE: 1"=1'-0"
LEVEL DETECTOR ASSEMBLY PER H-2-34965 MODIFY AS SHOWN
3/8-16 UNC-2B SST HEX NUT
3/8-16 UNC-2B SST HEX JAM NUT
REPLACE EXISTING LEGS WITH 3/8 DIA x 7" LG, SST ROD THREAD END 3/8-16 UNC-2A x 3" LG AS SHOWN
BOTTOM OF SUMP EL 663'-9" REF
DETAIL 1
SCALE: NONE
AS-BUILT FOR PROJ B-340
DFC B-340-502 Z D-4
DFC-B340-288 ZNC5 1-3
C-2 PER DFC-B340-233 H-2-90597 FROM NOTE 2 ZN 2-90729-1 ZN 65 (F-8 (1) DELETED PER DFC-B340-219 (N) WAS H-WAS 667'-11½" ZN A-5 & D-4 WAS 667'-5½" ZN D-2 (J) EL WAS 669'-1" ZN D-2 (H) EL PW-821 THRU 828 ZN E-2 (G) EL D-7, D-6, E-1, F-5 & F-8 (F) WAS 2 A-1, A-6, A-7, B-3, B-8, C-4, C-8, D1, D2, D4, D6, D7 OR D8 PITS ZN B340-217 (E) DELETED REF TO LINE ZN A-8 & D-5 PER DFC-ATED & CHANGED SIZE OF RW PER DFC-B340-186 (D) RELOC A-8, B-8, C-8, D-5, D-7, E-5 & F-5 162 (C) ADDED NOTES ZN A-6, DET 5 ZN C-5 PER DFC-B340-E-5 PER DFC-B340-132 (B) WAS ADDED SH 1 ZN B-8 D-4
REV 1 DOE DATE
RELEASED FOR CONSTRUCTION BY DATE DOE
U.S. DEPARTMENT OF ENERGY
Richland Operations Office
KAISER ENGINEERS HANFORD COMPANY
JUMPER ARRANGEMENT
LEAK DETECTION PIT
241-AP-03C & 05C
PROJECT TITLE 241-AP TANK FARM
PROJ B340 WO X34002 JOB R295A2
SCALE SHOWN BLDG 241-AP MODEL B404
DRAWING NUMBER H-2-90601 SHEET 1 OF 1 REV 2
NONE
H-2-90435 DRAWING LIST
NUMBER TITLE
REFERENCES
NEXT USED ON H-2-90435
MICROFILMED
APPROVAL KEN APPROVAL
REVISIONS
COMMENT REVIEW

QTY	PN	DESCRIPTION	MATERIAL
X	1	ASSEMBLY	
2	2	2" HORIZ CONN ASSY #1 GASKET TYPE II	H-2-32420
1	3	LIFTING BAIL ASSY 5	H-2-30161
1	4	SUPPORT BRACKET DETAIL XIV	H-2-63804
AR	5	PIPE - 2" SCHED 40	ASTM A53 TYPE S GR B
6	6	ELBOW - 2" SCHED 40, 90° LR BUTT WELD	ASTM A234 GR WPB
AR	7	CHANNEL C4 x 5.4	ASTM A36
4	8	U-BOLT 3/8" DIA FOR 2" PIPE	ASTM A36

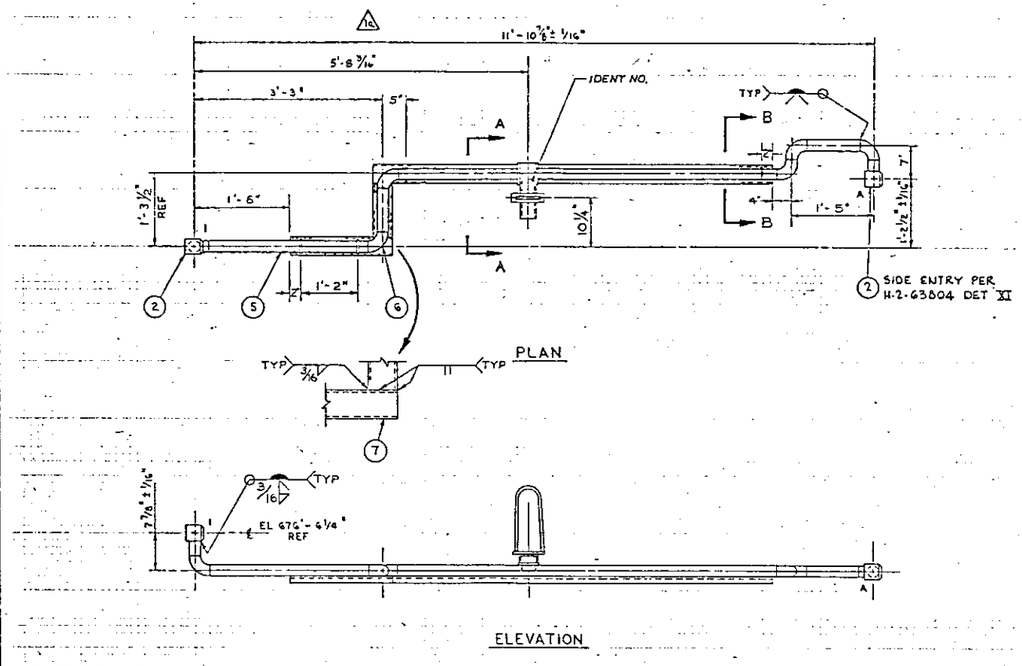

ELEVATION

1 ASSEMBLY
SCALE : 1" = 1'-0"

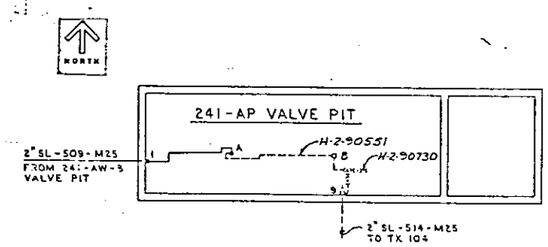

KEY PLAN
SCALE : NONE

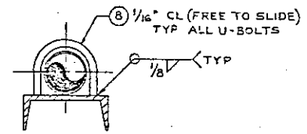

SECTION B-B
SCALE: NONE

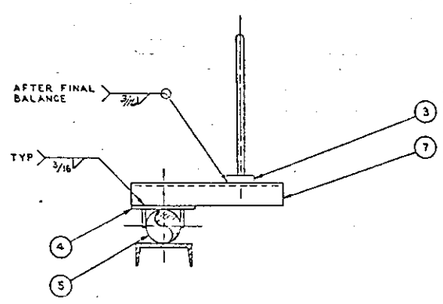

SECTION A-A
SCALE : 3" = 1'-0"

GENERAL NOTES

1. FABRICATION AND TESTING SHALL BE IN ACCORDANCE WITH HANFORD SPECIFICATION HW5-5786, REV 12 OR CURRENT REVISION.
2. HYDROSTATIC TEST AT 600 PSIG.

H-2-50435	DRAWING LIST
NUMBER	TITLE
REFERENCES	
NEXT USED ON	H-2-50598

REV	BY-DATE	BY-DATE	REV BY DATE	DESCRIPTION	REV
1	LEH 9-16-83	NA	JDE 7-18-83	AS-BUILT FOR PROJ B-340 DFL-B340-2472NFT	1
	KX EXCELL APPROVAL	RCH APPROVAL			

REVISIONS

MICROFILMED
COMMENT REVIEW

RELEASED FOR CONSTRUCTION
BY GS Robertson DATE 11/1/83
DOE

RHO APPROVAL BY	DATE 11/9/83	U. S. DEPARTMENT OF ENERGY Richland Operations Office
PROJ ENGR.		KAISER ENGINEERS HANFORD COMPANY
APPROVED BY		M JUMPER ASSEMBLY I-A VALVE PIT
SAFETY		
APPROVED BY		
CHECKED BY		PROJECT TITLE 241-AP TANK FARM
DRAWN BY G. VINCENT		PROJ B-340 · WO X24002 · FUN R295A2
DESIGNED BY S. O'CONNOR		SCALE SHOWN · BLDG 241-AP · PROJ B405
CLASSIFICATION NONE	BY NOT REQD	DRAWING NUMBER H-2-90602 · SHEET 1 · OF 1 · REV 1

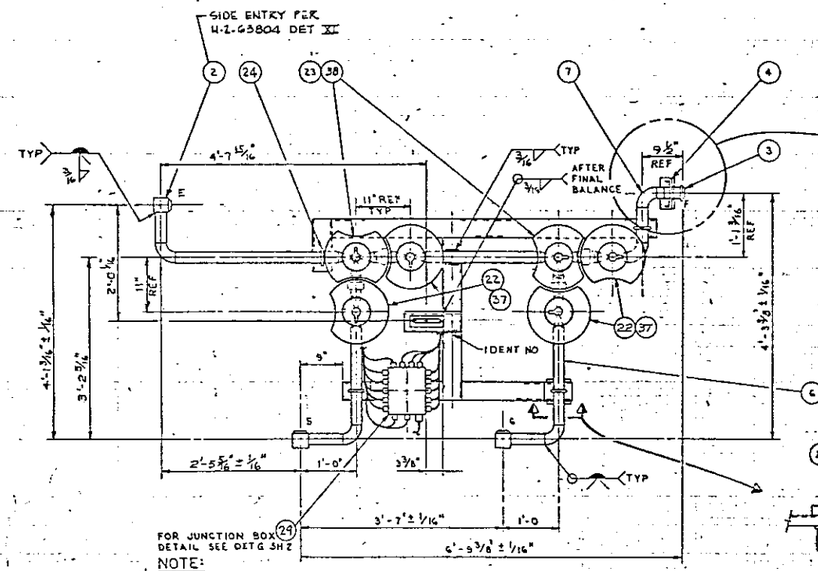

NOTE:
ROUTE CABLES APPROXIMATELY AS SHOWN AND SECURE TO PIPE OR SUPPORT STEEL WITH PN 42. AVOID IMPACT WRENCH & BAIL LIFT AREAS

PLAN

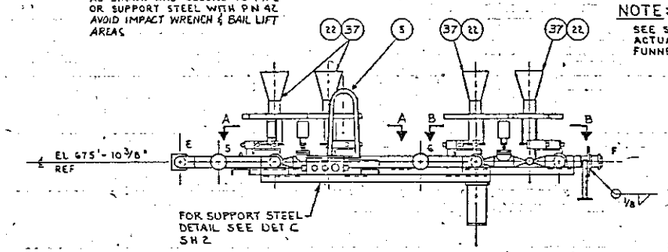

ELEVATION

1 ASSEMBLY
SCALE : 1" = 1'-0"

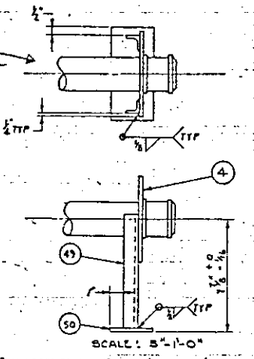

NOTE:
SEE SHEET 3 FOR VALVE, ACTUATOR PLATE, AND FUNNEL ORIENTATION

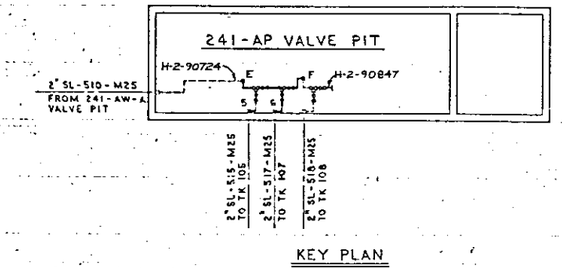

KEY PLAN
SCALE : NONE

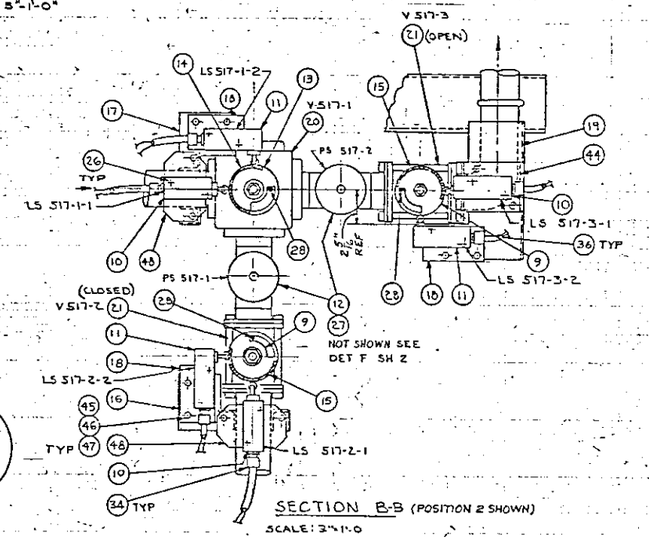

SECTION B-B (POSITION 2 SHOWN)
SCALE: 3"=1'-0

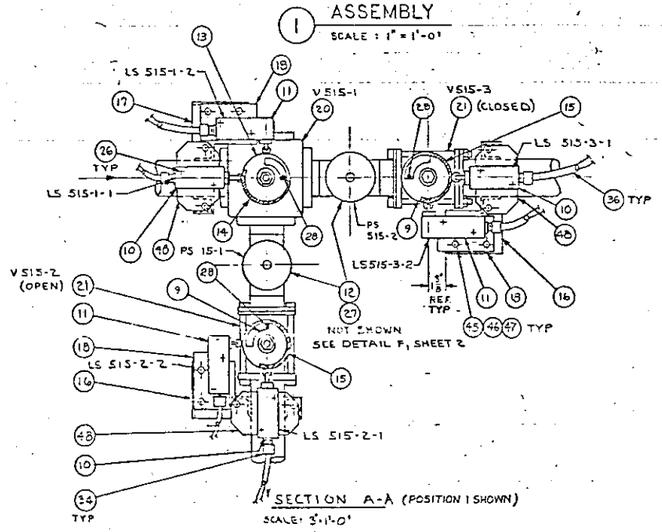

SECTION A-A (POSITION 1 SHOWN)
SCALE: 3"=1'-0"

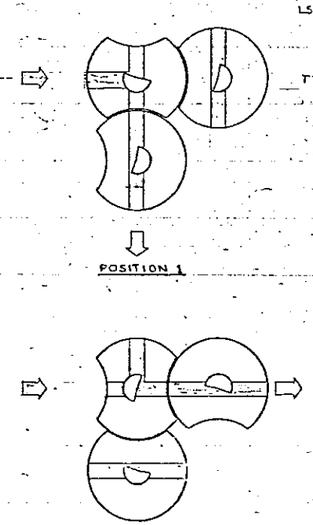

VALVE DISC OPERATION

QTY	PART NO	DESCRIPTION	MATERIAL
	1	ASSEMBLY	—
3	2	2" HORIZ CONN ASSY #1 GASKET TYPE III	H-2-32420
1	3	2" MALE CONN NOZZLE PN 3	H-2-32446
1	4	2" KICK PLATE PN 4	H-2-30600
1	5	LIFTING BAIL ASSY 5	H-2-90161
AR	6	PIPE - 2" SCHED 40	ASTM A53 TYPE S GR B
5	7	ELBOW - 2" SCHED 40 90° LR BUTT WELD	ASTM A234 GR WPB
AR	8	CHANNEL - C4x5.4	ASTM A 36
4	9	LIMIT SWITCH ACTUATOR "A2"	H-2-90852
6	10	LIMIT SWITCH	SEE NOTE 3 & 8
6	11	LIMIT SWITCH	SEE NOTE 3 & 8
4	12	PRESSURE SWITCH ASSEMBLY	SEE PROCUREMENT SPEC B 340-P1
2	13	LIMIT SWITCH ACTUATOR, DET "A1"	H-2-90852
2	14	PIPE SEGMENT DET E	H-2-90852
4	15	PIPE SEGMENT DET F	H-2-90852
3	16	LIMIT SWITCH MTG BRKT, DET G	H-2-90852
2	17	LIMIT SWITCH MTG BRKT, DET H	H-2-90852
6	18	LIMIT SWITCH MTG PLATE, DET L	H-2-90852
1	19	LIMIT SWITCH MTG BRKT, DET S	H-2-90853
2	20	2" 3 WAY BALL VALVE SEE NOTE 4	PITTSBURGH BRASS #2-WP-F-F-1-2W-4-MG
4	21	2" 2 WAY BALL VALVE SEE NOTE 4	PITTSBURGH BRASS #2-WP-F-F-1-2W-4-FO-MG
4	22	INTERLOCK PLATE DET M	H-2-90853
2	23	INTERLOCK PLATE, DET N	H-2-90853
4	24	U-BOLT 3/8" DIA FOR 2" PIPE	ASTM A36
2	25	PLATE 1/4" x 1 1/4" x 3"	ASTM A36
24	26	ALLEN CAP SCREW #10-32 UNC 2A-1 1/4" LG WITH 1/4" THD LG	ASTM-4193 GR F-304 SST
4	27	CGE FITTING	CROUSE-HINDS # CGE 292
6	28	STOP PIN SEE DETAIL "X"	H-2-90853

CONTINUED ON SHEET 2

GENERAL NOTES:

1. FABRICATION & TESTING SHALL BE IN ACCORDANCE WITH HANFORD SPEC HWS-5786 REV 12 OR CURRENT REVISION
2. HYDROSTATIC TEST AT 600 PSIG
3. LIMIT SWITCH PN 10 SHALL BE SQUARE-D TYPE C, 1 NO & 1 NC WITH TYPE 9007-C54D TOP ROLLER PLUNGER, LIMIT SWITCH PN 11 TO BE SAME AS ABOVE EXCEPT WITH TYPE 9007-C54F, SIDE ROLLER PLUNGER
4. 2 WAY AND 3 WAY BALL VALVES PN 20 & 21 SHALL CONFORM TO THE FOLLOWING SPECIFICATIONS
   a) CARBON STEEL BODY
   b) BUTTWELD ONE PIECE CASTING CARBON STEEL END FITTINGS INTEGRALLY CAST AND MACHINED
   c) 50 PERCENT 316 STAINLESS STEEL FILLED TEFLON BALL SEAT RINGS
   d) ASBESTOS BODY GASKET (BONDED)
   e) GRAPHITED ASBESTOS STEM PACKING
   f) OMIT HANDLE
   g) GLASS FILLED TEFLON BODY FILLER (PN 21 ONLY)
   h) DRILL AND TAP VALVES TO ACCEPT FUTURE MOTOR ACTUATORS
5. FOR VALVE FUNNEL ASSEMBLY INSTRUCTIONS SEE DETAIL U H-2-90853

CONTINUED ON SHEET 2

RELEASED FOR CONSTRUCTION
BY GSR DATE 10/1/87
DOE

M	LCF 9-2-86	NA	JJD 7-9-85	AS-BUILT FOR PROJ B-340 (a) DRC-B340-180 ZV 85 FES	1	
	BY-DATE	BY-DATE		DESCRIPTION	REV	
	ROCKWELL APPROVAL	RKH APPROVAL		REVISIONS		
				COMMENT REVIEW		

H-2-90853	DRAWING LIST
NUMBER	TITLE
REFERENCES	
NEXT USED ON H-2-90598	

RHO APPROVAL BY — DATE
PROJ ENGR — DATE
DESIGN — DATE
CAD/CAM — DATE
DRAFTING — DATE
GROUP MGR — DATE
LEAD ENGR — DATE

U. S. DEPARTMENT OF ENERGY
Richland Operations Office
KAISER ENGINEERS HANFORD COMPANY

JUMPER ASSEMBLY 5-6-E-F VALVE PIT

PROJECT TITLE: 241-AP TANK FARM

DRAWN: CLEVELAND 7/24/86
SPECIFICATION: 2-24-86
PROJ: B340
NO: X 34002
JOB: R295AZ
DRAWN: 2 CLEVELAND 1-23-86
SCALE: SHOWN
BLDG: 241-AP
MODEL: 8905 1
CLASSIFICATION: NONE
PROJECT NUMBER: NOT REQD
DRAWING NUMBER: H-2-90603
SHEET 1 OF 3
REV 1

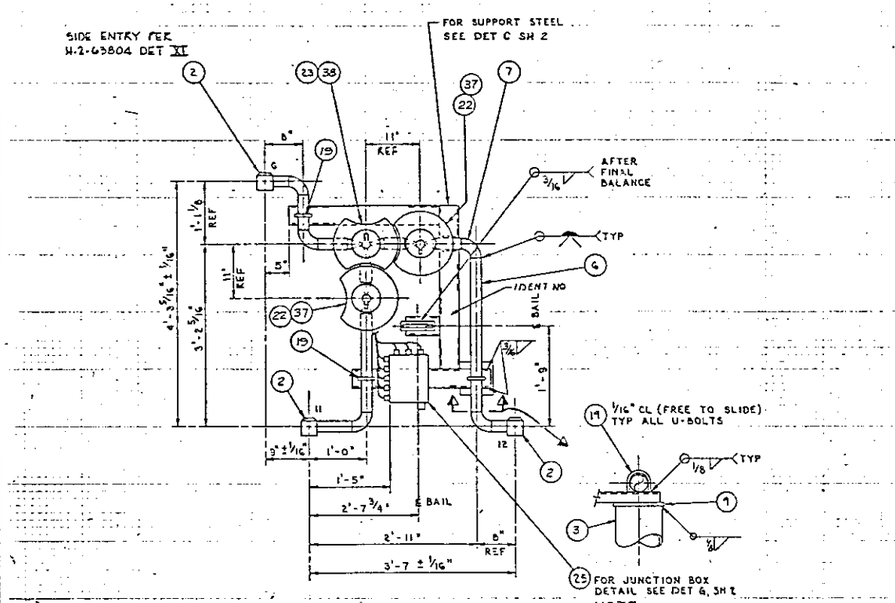

PLAN

NOTE:
1. ROUTE CABLES APPROXIMATELY AS SHOWN AND SECURE TO PIPE OR SUPPORT STEEL WITH PN 39 - AVOID IMPACT WRENCH & BAIL LIFT AREAS

NOTE:
SEE SHEET 3 FOR VALVE, ACTUATOR PLATE, AND FUNNEL ORIENTATION

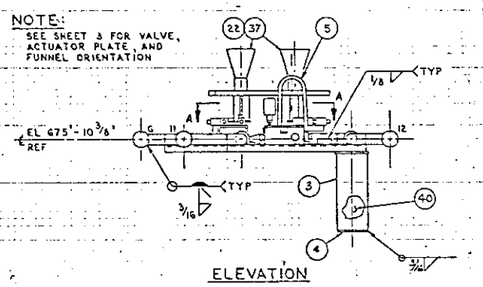

ELEVATION

1 ASSEMBLY
SCALE : 1" = 1'-0"

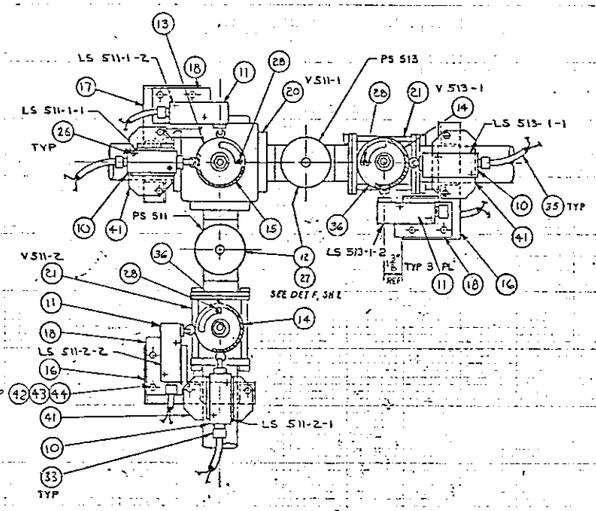

SECTION A-A (POSITION 1 SHOWN)
SCALE : 3" = 1'-0"

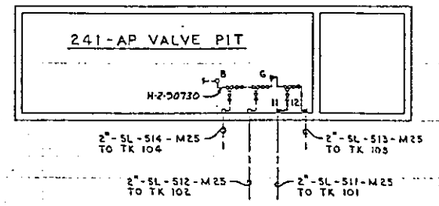

KEY PLAN
SCALE : NONE

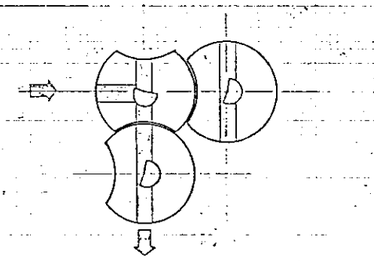

POSITION 1

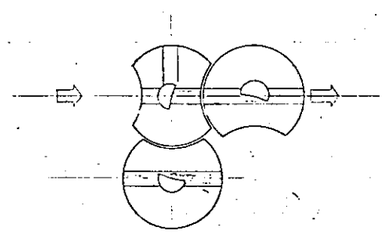

POSITION 2

VALVE DISC OPERATION

QTY	PART NO	DESCRIPTION	MATERIAL
X	1	ASSEMBLY	—
3	2	2" HORIZ CONN ASSY #1 GASKET TYPE II	H-2-32420
1	3	PIPE 6" SCHED 40 1'-4" LG	ASTM A53 TYPE S GR B
1	4	PLATE 1/4" x 6 5/8" DIA	ASTM A36
1	5	LIFTING BAIL ASSY 5	H-2-90161
AR	6	PIPE - 2" SCHED 40	ASTM A53 TYPE S GR B
5	7	ELBOW-2" SCHED 40 90° LR BUTT WELD	ASTM A234 GR WPB
AR	8	CHANNEL - C9 x 5.4	ASTM A 36
1	9	PLATE 1/2" x 7" x 7"	ASTM A36
3	10	LIMIT SWITCH	SEE NOTE 3 & 5
3	11	LIMIT SWITCH	SEE NOTE 3 & 5
2	12	PRESSURE SWITCH ASSEMBLY	SEE PROCUREMENT SPEC 8340-P1
1	13	LIMIT SWITCH ACTUATOR DET A 1	H-2-90852
2	14	PIPE SEGMENT DET F	H-2-90852
1	15	PIPE SEGMENT DET E	H-2-90852
2	16	LIMIT SWITCH MTG BRKT DET G	H-2-90852
1	17	LIMIT SWITCH MTG BRKT DET H	H-2-90852
3	18	LIMIT SWITCH MTG PLATE DET L	H-2-90852
3	19	U-BOLT 3/8" DIA FOR 2" PIPE	ASTM A36
1	20	2" 3 WAY BALL VALVE SEE NOTE 4	PITTSBURGH BRASS #2-MP-S-17-BW-4-HG
2	21	2" 2 WAY BALL VALVE SEE NOTE 4	PITTSBURGH BRASS #2-SP-S-17-BW-4-10-HG
2	22	INTERLOCK PLATE DET M	H-2-90853
1	23	INTERLOCK PLATE DET N	H-2-90853
2	24	PLATE 1/4" x 1 1/4" x 3"	ASTM A36
1	25	ELECTRICAL BOX NEMA 13	HOFFMAN ENG CO A-1008SCEP
12	26	ALLEN CAP SCREW #10-32 UNC-2A x 3/4 LG W/1/4 HD	ASTM-A193 GR B8 304 SST
2	27	CGE FITTING	CROUSE-HINDS # CGE-292
3	28	STOP PIN DET X	H-2-90853

CONTINUED ON SHEET 2

GENERAL NOTES:

1. FABRICATION & TESTING SHALL BE IN ACCORDANCE WITH HANFORD SPEC HWS-5786 REV 12 OR CURRENT REVISION
2. HYDROSTATIC TEST AT 600 PSIG
3. LIMIT SWITCH PN 10 SHALL BE SQUARE-D TYPE C, NO & NC WITH TYPE 9007-C540 TOP ROLLER PLUNGER, LIMIT SWITCH PN 11 TO BE SAME AS ABOVE EXCEPT WITH TYPE 9007-C54F SIDE ROLLER PLUNGER
4. 2-WAY & 3-WAY BALL VALVES PN 20 & 21 SHALL CONFORM TO THE FOLLOWING SPECIFICATIONS:
   a) CARBON STEEL BODY
   b) BUTTWELD ONE PIECE CASTING CARBON STEEL END FITTINGS INTEGRALLY CAST AND MACHINED
   c) 50 PERCENT 316 STAINLESS STEEL FILLED TEFLON BALL SEAT RINGS
   d) ASBESTOS BODY GASKET (BONDED)
   e) GRAPHITED ASBESTOS STEM PACKING
   f) OMIT HANDLE
   g) GLASS FILLED TEFLON BODY FILLER (PN 21 ONLY)
   h) DRILL AND TAP VALVES TO ACCEPT FUTURE MOTOR ACTUATORS.
5. FOR VALVE FUNNEL ASSEMBLY INSTRUCTIONS SEE DETAIL U H-2-40853

CONTINUED ON SHEET 2

RELEASED FOR CONSTRUCTION
BY: [illegible] DATE 1/6/82
DOE

NUMBER	TITLE
H-2-90625	DRAWING LIST
REFERENCES	
NEXT USED ON	H-2-90598

REV	BY-DATE	BY-DATE	REV BY DATE	DESCRIPTION
A1	LEL 9-1-82	NA	JDC 7-3-82	AS-BUILT FOR PROJ B-340
				a) DEC-8340-180 ENG 7432

MICROFILMED: PROJ ENGR APPROVAL — KEN APPROVAL
REVISIONS
COMMENT REVIEW

RHO APPROVAL BY [illegible] DATE 1/6/82

U. S. DEPARTMENT OF ENERGY
Richland Operations Office
KAISER ENGINEERS HANFORD COMPANY

JUMPER ASSEMBLY
11-12-G
VALVE PIT

PROJECT TITLE: 241-AP TANK FARM

PROJ E 340	NO X24002	JOB R2953A2
SCALE SHOWN	BLDG 241AP	MODEL B405
DRAWING NUMBER H-2-90604	SHT 1	OF 3	REV 1

CLASSIFICATION: NONE NOT RFOD

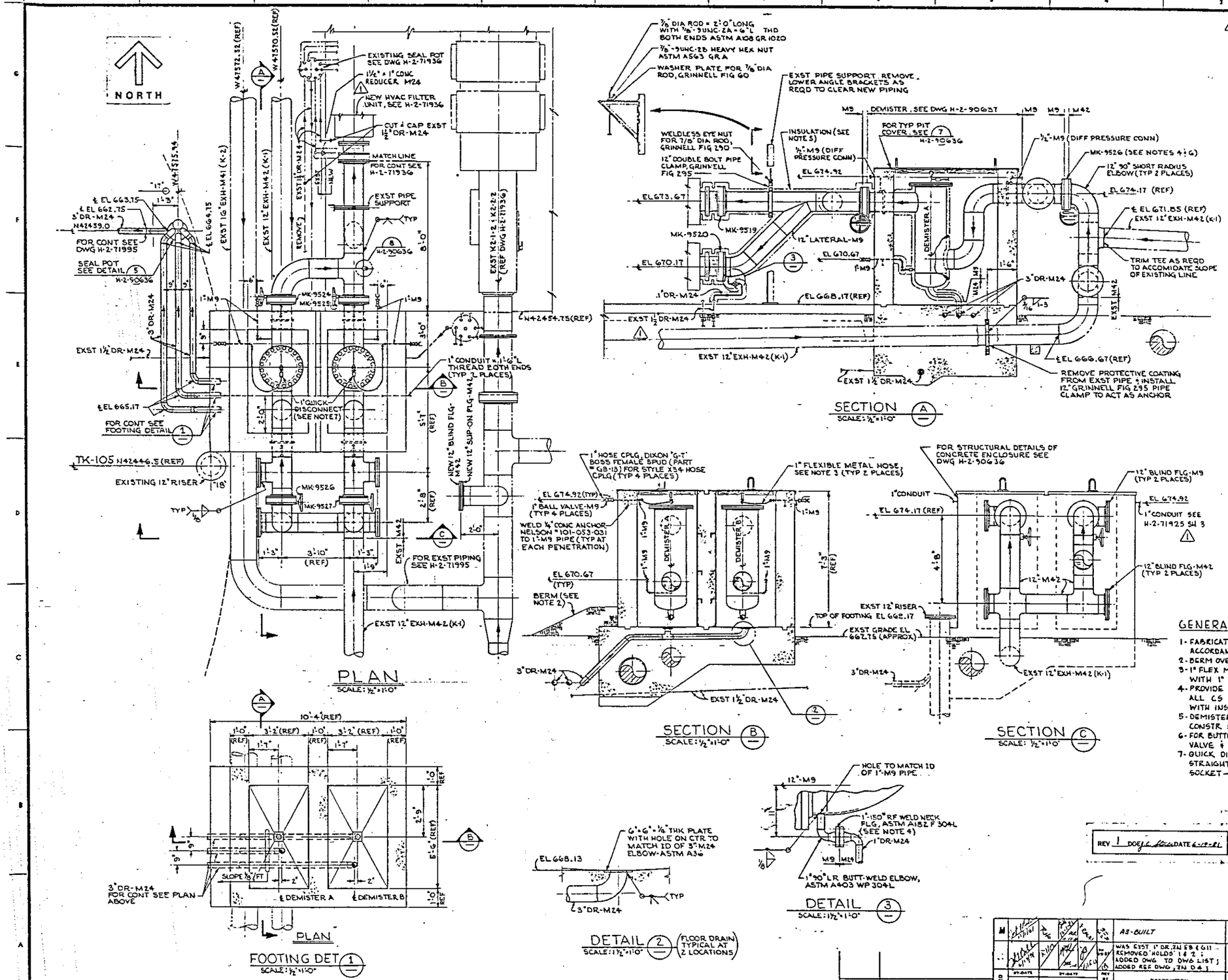

DRAWING LIST

DRAWING Nº	INDEX Nº	TITLE
H-2-90635	0402,0000	PIPING - PRIMARY EXHAUST SYSTEM MODIFICATION
H-2-90636	0402,0900	STRUCTURAL & PIPING DETAILS
H-2-90637	2500	VESSEL ASSEMBLY, DEMISTER A & B
H-2-90638 SH 1 & 2	0402	PIT DRAIN & SEAL-ASSY & DETAILS
H-2-90639	8900	HVAC EQUIPMENT ASSY
H-2-90640		SPARE
H-2-90641	8900	HVAC SUPPORT STRUCTURE DETAILS
H-2-90642	8900	HVAC PLENUM #1 DETAILS & ASSY
H-2-90643	8900	HVAC PLENUM #2 DETAILS & ASSY
H-2-90644	8900	HVAC END PANEL #1 DETS & ASSY
H-2-90645	8900	HVAC END PANEL #2 DETS & ASSY
H-2-90646	8900	HVAC EQPT PLAN, ELEVS & DETAILS
H-2-71935 (REV 2)	8900	HVAC FLOW & CONTROL DIAGRAM
H-2-71936 SH 1 (REV 1)	8900	HVAC EQUIPMENT PLAN
H-2-71936 SH 2 (REV 1)	8900	HVAC EQPT PLAN ELEVS & DETAILS
H-2-71936, SH 3	8900	HVAC EQPT PLAN ELEVS & DETAILS
H-2-71937, (REV 2)	8900	HVAC EQUIPMENT SCHEDULES
H-2-71978, (REV 3)	7001	EFD 241-AN TANK FARM
H-2-71979, (DFC Nº 307)	7001	EFD TANK 241-AN-101
H-2-71986 (REV 3)	0402	PIPING PLAN 241-AN TANK FARM
H-2-71987 (DFC Nº 307)	0402	PIPING PLAN 241-AN TANK FARM
H-2-71991 (DFC Nº 307)	0402	PIPING PLAN TANK 101
H-2-71993 (REV 6)	0402	PIPING PLAN TANK 105
H-2-72031 (DFC Nº 307)	0900	PIPING MISC DETAILS
H-2-72034 (DFC Nº 307)	8511	PIPING SUPPORT PLAN TANK 105
B-130-C7	—	CONSTRUCTION SPECIFICATION
B-130-C7-A	—	CONSTRUCTION SPEC ADDENDUM
H-2-71925 SH 3	7301, 7501, 7701	ELECTRICAL POWER & CONTROL PLANS & DETAILS
H-2-71959 SH 2	5903	INSTR ANNUNCIATOR ELEM DIAGRAM
H-2-71925 SH 1 (DFC Nº 310)	7301, 7502	ELECTRICAL POWER & CONTROL PLANS & DETAILS
H-2-71925 SH 2 (DFC Nº 310)	7301, 7501, 7701	ELECTRICAL POWER & CONTROL PLANS & DETAILS
H-2-71959 SH 1 (REV 4)	5903	INSTR ANNUNCIATOR ELEM DIAGRAM
H-2-71933 (DFC Nº 310)	7502	ELEC INSTR ELEM DIAGRAM
H-2-71927 SH 2 (REV 4)	7302, 7502	ELECTRICAL POWER & CONTROL ELEM DIAGRAMS
H-2-71924 (REV 2)	7201	ELEC ONE-LINE DIAGRAM
H-2-71934 SH 3 (REV 3)	7305, 7505	ELEC POWER & CONTROL WIRE RUN LIST
H-2-71934 SH 1 (REV 4)	7305, 7505	ELEC POWER & CONTROL WIRE RUN LIST
H-2-71934 SH 2 (REV 4)	7305, 7505	ELEC POWER & CONTROL WIRE RUN LIST
H-2-71926 (REV 4)	7404, 7501	ELEC PANELBOARD SCHEDULE & DETAILS

GENERAL NOTES:

1. FABRICATION, MATERIALS, CLEANING & TESTING SHALL BE IN ACCORDANCE WITH CONSTR SPEC B-130-C7-A.
2. BERM OVER NEW 3" DR LINES AS REQD TO PROVIDE 36" OF EARTH COVER.
3. 1" FLEX METAL HOSE TO BE 4'-0" L FLEXONICS TYPE 401L WITH 1" STD WT NIPPLE TYPE (7) BOTH ENDS.
4. PROVIDE MALONEY PHENOLIC INSULATING SLEEVES & WASHERS AT ALL CS TO SST FLANGED CONNECTIONS. USE CS BOLTS & NUTS WITH INSULATING WASHER BETWEEN BOLT & SST FLANGE.
5. DEMISTER & PIPING INSULATION TO BE 2" THICK PER CONSTR SPEC B-130-C7-A.
6. FOR BUTTERFLY VALVES MK-9524 THRU MK-9527, SEE BUTTERFLY VALVE & DAMPER SCHEDULE ON DWG H-2-71937.
7. QUICK DISCONNECTS TO BE HANSEN QUICK CONNECT COUPLINGS, STRAIGHT THRU SERIES ST: PLUG - 1" NPT MALE SST # LLB-T35; SOCKET - 1" NPT FEMALE SST # LLB-S36.

REV 1 DOE DATE 6-10-81

RELEASED FOR CONSTRUCTION BY DOE DATE 5/21/81

	DRAWING LIST
NUMBER	TITLE
REFERENCES	
NEXT USED ON	

REV	BY-DATE	BY-DATE	REV BY DATES	DESCRIPTION	REV
M				AS-BUILT	2
				WAS EXST 1" DR, 2N EB & G11 - REMOVED HOLDS 1 & 2; ADDED DWG TO DWG LIST; ADDED REF DWG, 2N D4	1

MICROFILMED — APPROVAL — VITRO APPROVAL — REVISIONS — COMMENT REVIEW

RLO APPROVAL BY: DATE 5/14/81

U. S. DEPARTMENT OF ENERGY
Richland Operations Office
VITRO ENGINEERING CORPORATION

PIPING/DWG LIST
PRIMARY EXHAUST SYSTEM MODIFICATION

PROJECT TITLE: 241-AN TANK FARM

PROJ ENGR	
DESIGN	
SAFETY	
QAC	
GROUP MGR	
DRAW ENGR	VICK H. NEROLSON
WELDING	
CHECKER	
DRAFTER	D. PECK
CLASSIFICATION	NONE
NOT REQD	

MAIN B-130 WO B13002 JOB R341AD
SCALE SHOWN BLDG 241-AN PACKET 0402,0000
DRAWING NUMBER H-2-90635 REV 2

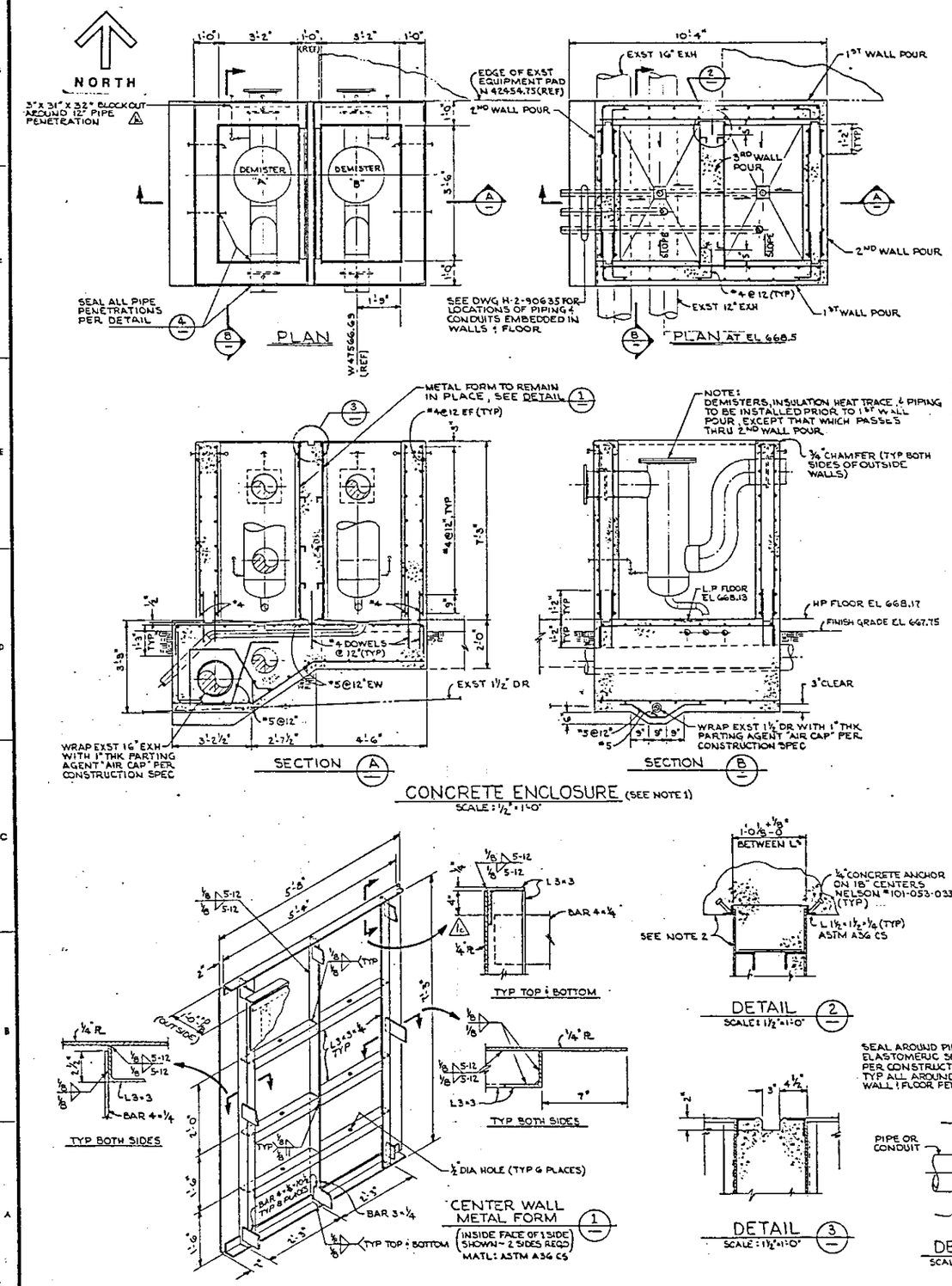

CONCRETE ENCLOSURE (SEE NOTE 1)
SCALE: ½" = 1'-0"

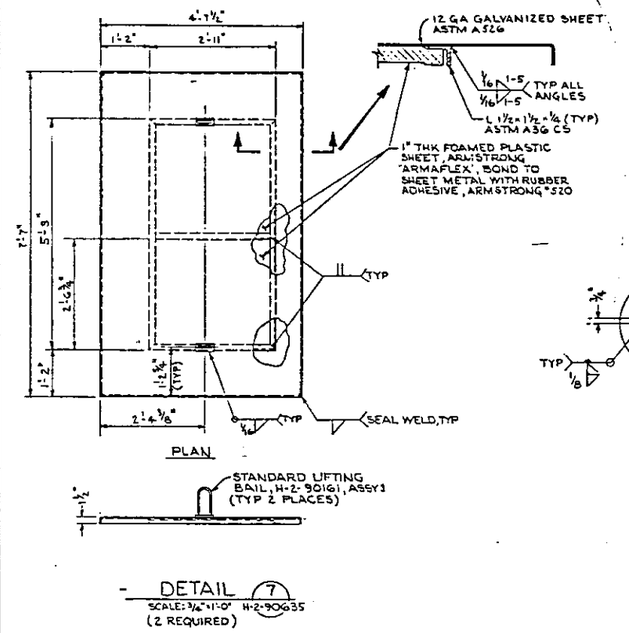

DETAIL 7
SCALE: ¾" = 1'-0" H-2-90635
(2 REQUIRED)

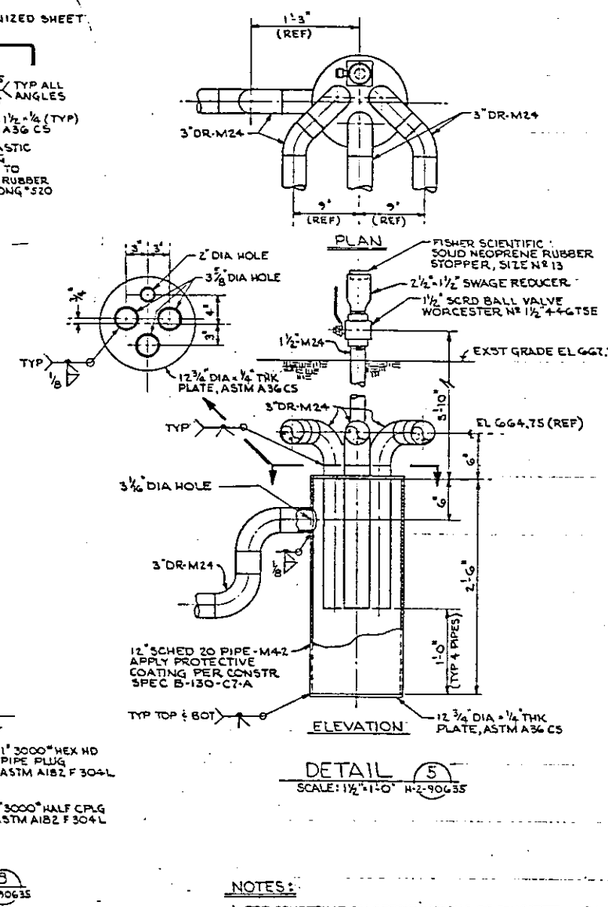

DETAIL 5
SCALE: 1½" = 1'-0" H-2-90635

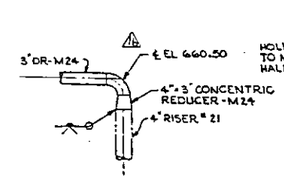

DETAIL 6
SCALE: ¾" = 1'-0" H-2-71991

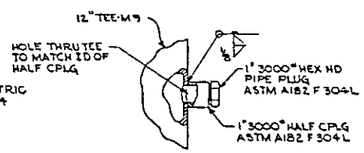

DETAIL 8
SCALE: 3" = 1'-0" H-2-90635

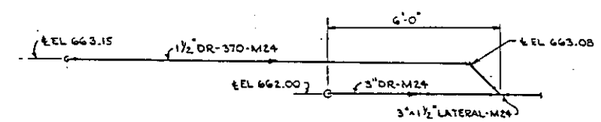

ELEVATION B-B (H-2-71995)
SCALE: ½" = 1'-0"

NOTES:

1. FOR CONSTRUCTION SPECIFICATIONS OF CONCRETE ENCLOSURE SEE B-130-C7, FOR SPECIFICATION OF OTHER ITEMS SHOWN ON THIS DWG SEE NOTE 3 BELOW.
2. PAINT INTERIOR & FLOOR OF ENCLOSURE PRIOR TO INSTALLING CENTER WALL FORM. ALSO PAINT OUTSIDE FACES OF FORM BEFORE INSTALLING. DO NOT PAINT BETWEEN 1½" ANGLES IN NORTH & SOUTH WALLS.
3. FOR FABRICATION, MATERIALS, CLEANING & TESTING OF ITEMS SHOWN IN DETAILS 5 THRU 8 & SECTION B-B SEE CONSTRUCTION SPEC B-130-C7-A
4. TOLERANCES FOR DIMENSIONS SHOWN IN DETAILS 5 THRU 8 TO BE ± ⅛" UNLESS OTHERWISE NOTED.

CENTER WALL METAL FORM 1
(INSIDE FACE OF 1 SIDE SHOWN - 2 SIDES REQD)
MATL: ASTM A36 CS

DETAIL 2
SCALE: 1½" = 1'-0"

DETAIL 3
SCALE: 1½" = 1'-0"

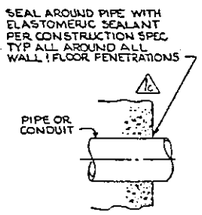

DETAIL 4
SCALE: NONE

RELEASED FOR CONSTRUCTION
BY [illegible] DATE 12/29/81
DOE

H-2-90635	DRAWING LIST	
NUMBER	TITLE	
REFERENCES		
NEXT USED ON	H-2-90636	

REV	BY	DATE	DESCRIPTION
1	[illegible]	12/29/81	A-S BUILT. a) GROOVE & DIM ZU A-7 661.00 ZU D6. b) DELETED ¼" 11-12 & E-10 b) USED ELEV FROM 1) ADDED 3" OUT & NOTE ZU G

REVISIONS

MICROFILMED: BY-DATE / RWO APPROVAL / BY-DATE / VITRO APPROVAL / COMMENT REVIEW

RWO APPROVAL BY [illegible] DATE 1/4/82
PROJ ENGR [illegible] 1/4/82
DESIGN [illegible] 12/29/81
CHECKED [illegible] 12/29/81
DRAFTING [illegible] 12/29/81
DESIGN VER [illegible] 12/29/81
DRAWING VER [illegible] 12/29/81
WELDING [illegible] 12/29/81
STRESS [illegible] 12/29/81
DRAWN D. PECK 12/29/81
CLASSIFICATION NONE | BY NOT REQD

U. S. DEPARTMENT OF ENERGY
Richland Operations Office
VITRO ENGINEERING CORPORATION

STRUCTURAL/PIPING DETAILS

PROJECT TITLE 241-AN TANK FARM
PROJ B-130 | WO B13002 | JOB R341AD
SCALE SHOWN | BLDG 241-AN | SHEET 0902, 0900
DRAWING NUMBER H-2-90636 | SHEET – | SV – | REV 1

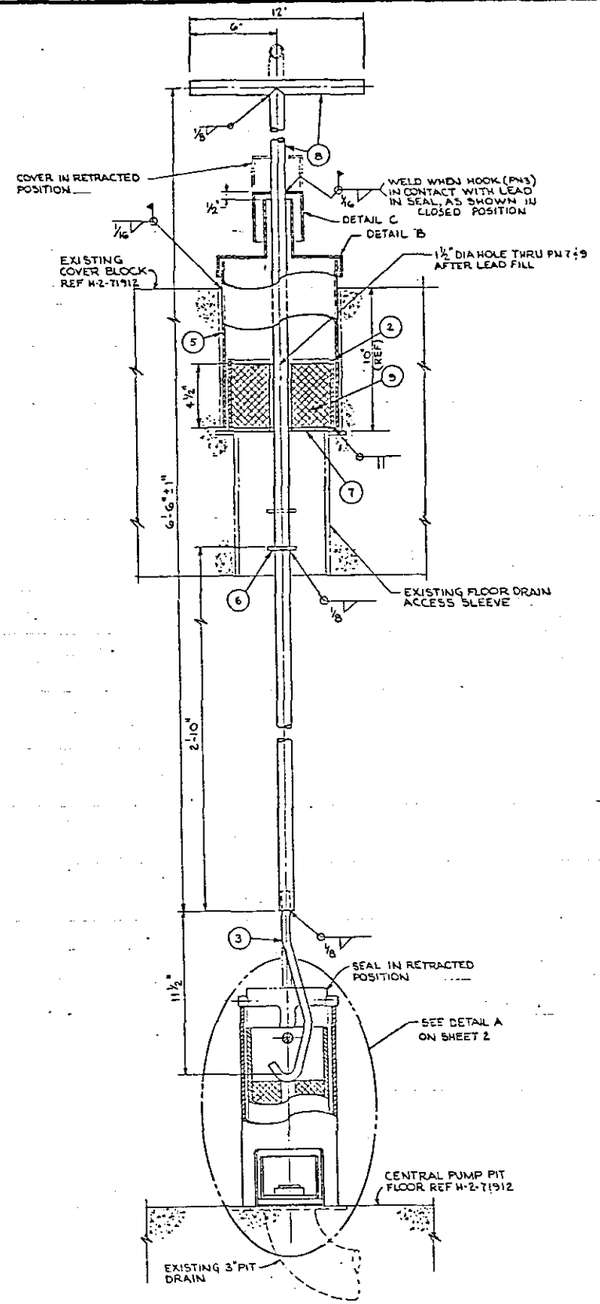

1 ASSEMBLY
SCALE: 3" = 1'-0"

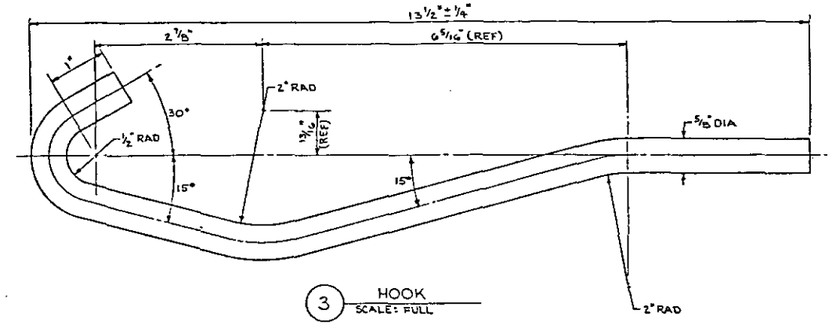

3 HOOK
SCALE: FULL

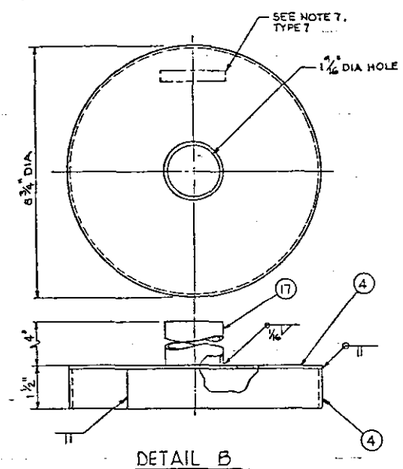

DETAIL B
SCALE: 6" = 1'-0"

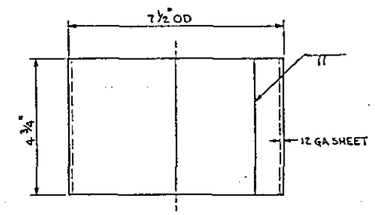

2 RING
SCALE: 6" = 1'-0"

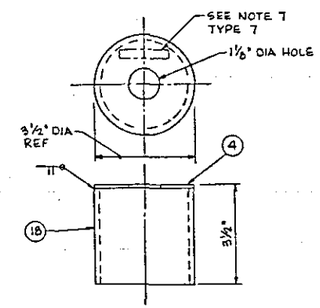

DETAIL C
SCALE: 6" = 1'-0"

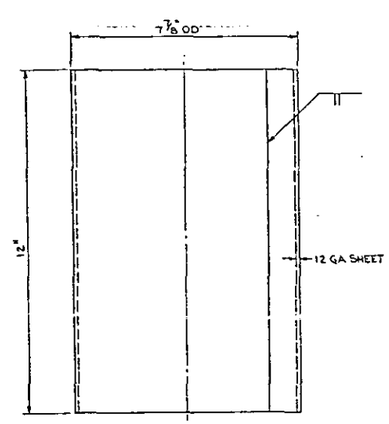

5 SLEEVE
SCALE: 6" = 1'-0"

QTY	PN	DESCRIPTION	MATERIAL
X	1	ASSEMBLY	
1	2	RING	ASTM A569
1	3	HOOK	ASTM A108 GR 1020
AR	4	12 GA SHEET	ASTM A569
1	5	SLEEVE	ASTM A569
1	6	PLATE - ¼" THK × 2" OD × 1⅛" ID	ASTM A36
1	7	PLATE - ¼" THK × 7½" DIA	ASTM A36
AR	8	PIPE - ¾" SCHED 80	ASTM A106 GR B
AR	9	LEAD FILL	LEAD
1	10	GASKET - ⅛" THK × 5" OD × 3" ID	NEOPRENE RUBBER 35-45 DUROMETER
1	11	TUBE	ASTM A53 TYPE S GR B
1	12	PLATE - ¼" THK × 5" DIA	ASTM A36
1	13	GUIDE	ASTM A53 TYPE S GR B
1	14	PLATE - ⅜" THK × 5 9/16" OD × 2" ID	ASTM A36
1	15	CHECK VALVE - 2" 150 (½ PSIG CRACKING PRESS)	CHECK-ALL MFG CO STYLE FIV-SS
1	16	ROD - ¾" DIA × 7" LONG	ASTM A108 GR 1020
AR	17	PIPE - 1½" SCHED 40	ASTM A106 GR B
AR	18	PIPE - 3" SCHED 40	ASTM A53 TYS GR B

GENERAL NOTES:

1. FABRICATION, MATERIALS, CLEANING & TESTING SHALL BE IN ACCORDANCE WITH CONSTRUCTION SPEC B-130-C7-A.
2. TOLERANCES (UNLESS OTHERWISE INDICATED): FRACTIONAL - ± 1/16" ANGULAR ± ½°.
3. BOND GASKET (PN 10) TO PLATE (PN 14) WITH 3M FORMULA 1300 ADHESIVE.
4. BREAK ALL SHARP EDGES & CORNERS TO .010" MINIMUM.
5. ESTIMATED WEIGHT OF DRAIN SEAL, LESS GUIDE (PN 13) - 60 LB
6. ESTIMATED FORCE REQD TO LIFT PLUG INTO FREE DRAIN POSITION - 74 LB
7. MARK PER HWS-10227 WITH DWG Nº AND DWG REV Nº IN LOCATIONS INDICATED, ¼" HIGH LETTERS.

RELEASED FOR CONSTRUCTION
BY WSRegis DATE 7/6/61
WVE

H-2-90635	DRAWING LIST	
NUMBER	TITLE	
REFERENCES		
NEXT USED ON	H-2-90638	

					AS BUILT	1
BY-DATE		BY-DATE		REV BY DATE	DESCRIPTION	REV
APPROVAL	RHO	VITRO APPROVAL			REVISIONS	
COMMENT REVIEW						

MICROFILMED

RHO APPROVAL BY 7/6/61
PROJENGR 6-22-61
DESIGN 6-22-61
SAFETY 6-22-61
DR 6-21-61
GROUP HDS 7-7-61
ENGINEER 6-22-61
WELDING 6-22-61
CHECKED 7-19-61
DRAWN D. PECK 7-6-61

U. S. DEPARTMENT OF ENERGY
Richland Operations Office
VITRO ENGINEERING CORPORATION

PIPING PIT DRAIN SEAL ASSY AND DETAILS

PROJECT TITLE 241-AN TANK FARM
PROJ B-130 WO B13002 JOB R341A0
SCALE AS SHOWN BLDG 241-AN PROJ 0402
CLASSIFICATION NONE BY NOT REQD
DRAWING NUMBER H-2-90638 SHEET 1 OF 2 REV 1

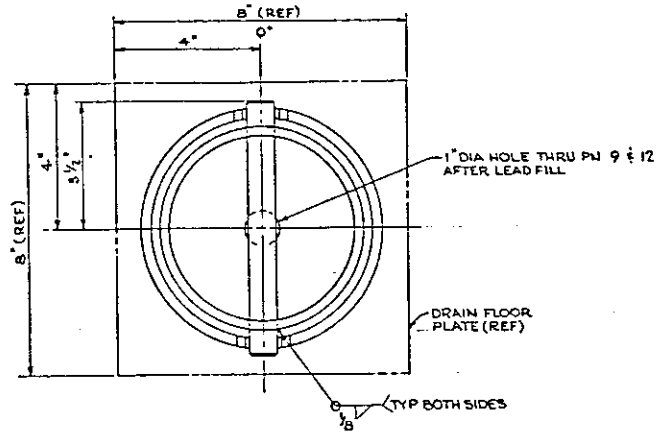

PLAN

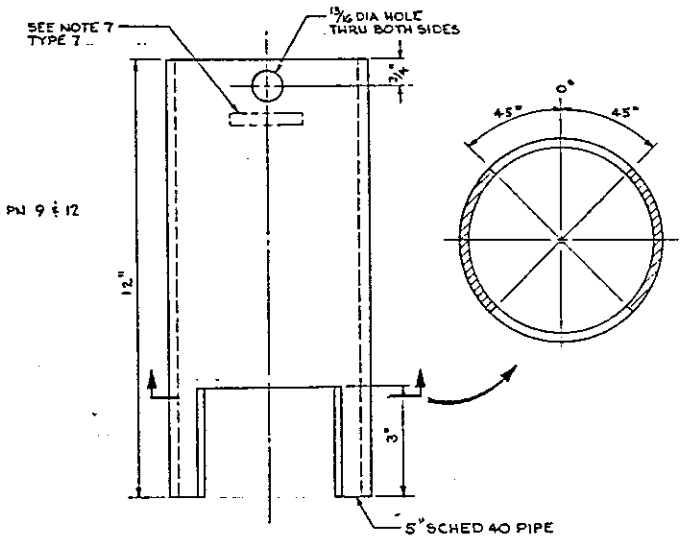

11 TUBE
SCALE: 6"=1'-0"

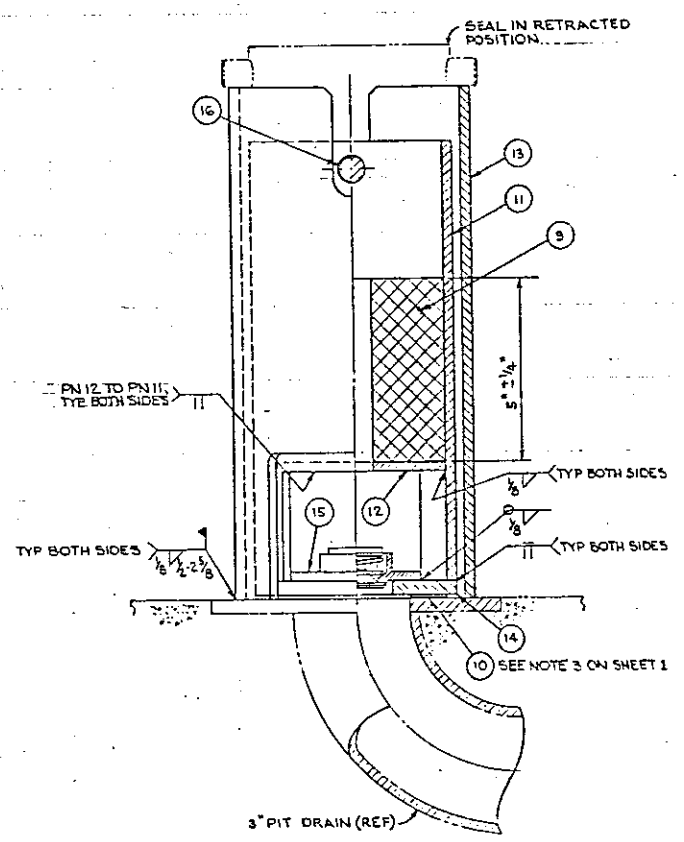

DETAIL A
SCALE: 6"=1'-0"

NOTE: HOOK (PN 3) NOT SHOWN

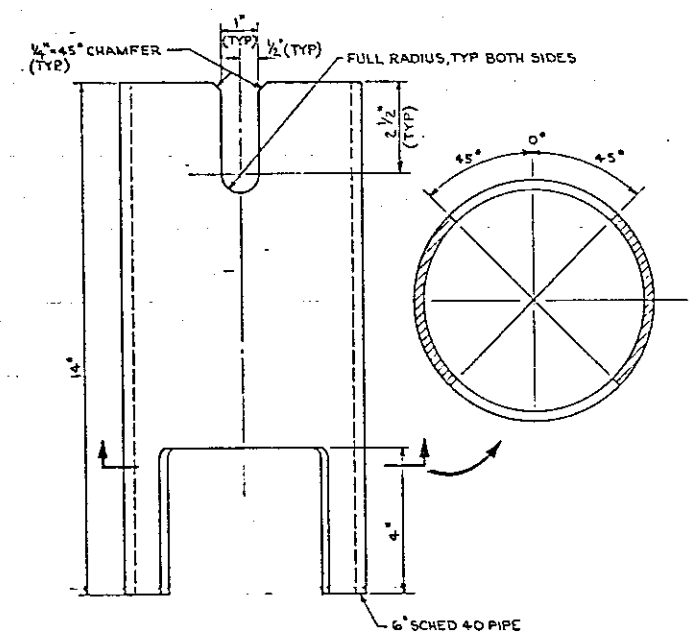

13 GUIDE
SCALE: 6"=1'-0"

FOR GENERAL NOTES & MATERIALS LIST SEE SHEET 1

RELEASED FOR CONSTRUCTION
DOE

H-2-90635	DRAWING LIST
NUMBER	TITLE
REFERENCES	
NEXT USED ON	H-2-90638

MICROFILMED

BY-DATE	BY-DATE	REV BY DATE	DESCRIPTION	REV
RHO APPROVAL	VITRO APPROVAL		AS BUILT	1

REVISIONS

COMMENT REVIEW

RHO APPROVAL BY	DATE	U. S. DEPARTMENT OF ENERGY Richland Operations Office
PROJ ENGR		VITRO ENGINEERING CORPORATION
DESIGN		PIPING PIT DRAIN SEAL ASSY AND DETAILS
SAFETY		
DA		
GROUP MGR		PROJECT TITLE 241-AN TANK FARM
DISCIP ENGR		
WELDING		PROJ B-130 · WO B13002 · JOB R341A0
CHECKED		
DRAWN D. PECK		SCALE SHOWN · BLDG 241-AN · INDEX 0402
CLASSIFICATION NONE	BY NOT REQD	DRAWING NUMBER H-2-90638 · SHEET 2 · OF 2 · REV 1

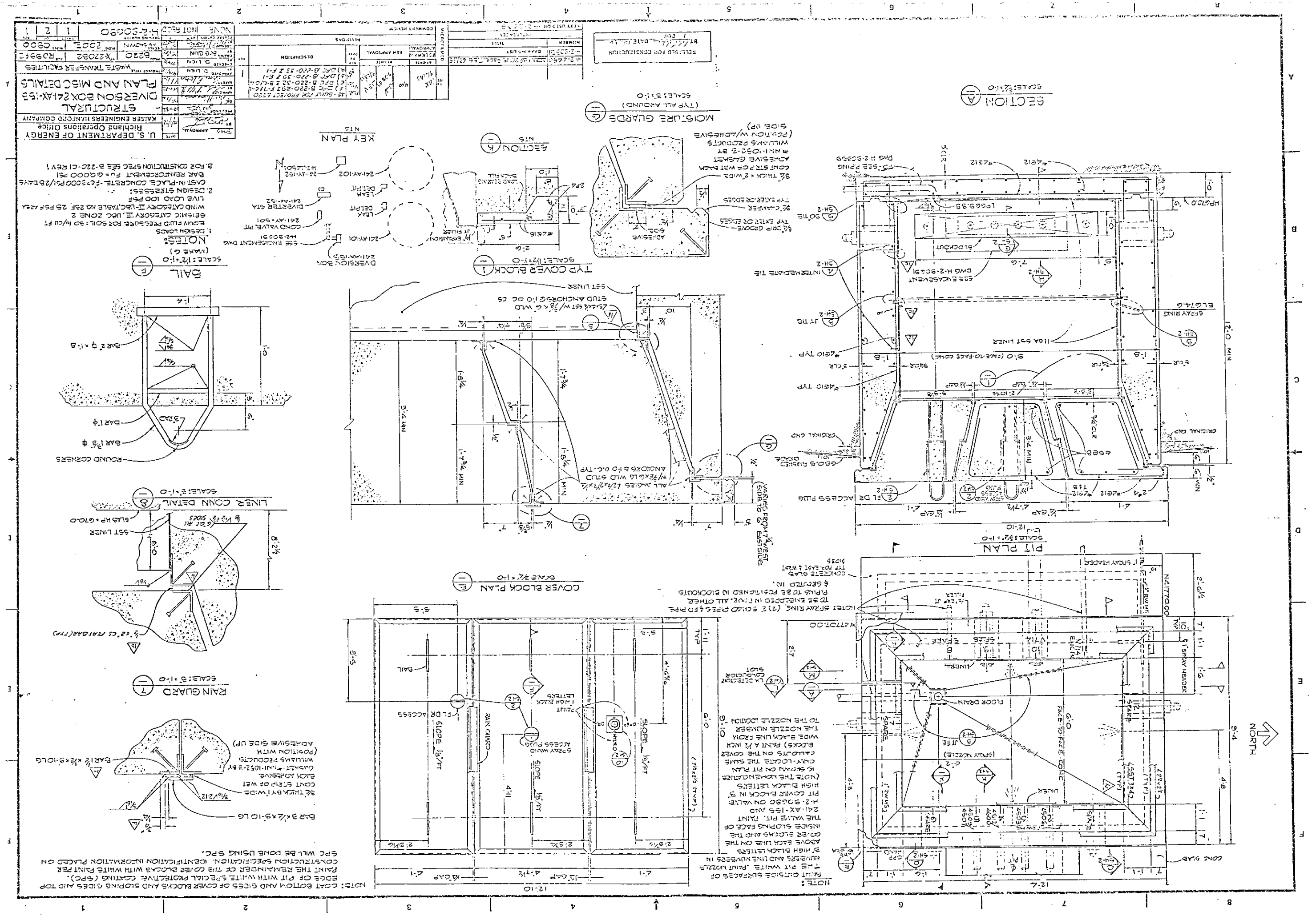

U. S. DEPARTMENT OF ENERGY
Richland Operations Office
KAISER ENGINEERS HANFORD COMPANY
STRUCTURAL
DIVERSION BOX 241-AX-153
PLAN AND MISC DETAILS
WASTE TRANSFER FACILITIES
NOTES:
1. DESIGN LOADS
EQUIV FLUID PRESSURE FOR SOIL = 30 lb/cu ft
SEISMIC CATEGORY III, UBC ZONE 2
WIND CATEGORY II-UBC, TABLE NO. 23F, 25 PSF AREA
LIVE LOAD 100 PSF
2. DESIGN STRESSES:
CAST-IN-PLACE CONCRETE-f'c=3000 PSI/28 DAYS
BAR REINFORCEMENT Fu = 60,000 PSI
3. FOR CONSTRUCTION SPEC SEE B-220-C1 REV 1
NOTE: COAT BOTTOM AND SIDES OF COVER BLOCKS AND SLOPING SIDES AND TOP EDGE OF PIT WITH WHITE SPECIAL PROTECTIVE COATING (SPC). PAINT THE REMAINDER OF THE COVER BLOCKS WITH WHITE PAINT PER CONSTRUCTION SPECIFICATION. IDENTIFICATION INFORMATION PLACED ON SPC WILL BE DONE USING SPC.
NOTE: PAINT OUTSIDE SURFACES OF THE PIT WHITE. PAINT NOZZLE NUMBERS AND LINE NUMBERS IN 3" HIGH BLACK LETTERS ABOVE EACH LINE ON THE COVER BLOCKS AND THE INSIDE SLOPING FACE OF THE VALVE PIT. PAINT 241-AX-153 AND H-2-90690 ON VALVE PIT COVER BLOCK IN 3" HIGH BLACK LETTERS (NOTE THE NOMENCLATURE IS SHOWN ON PIT PLAN ONLY-LOCATE THE SAME CALLOUTS ON THE COVER BLOCKS) PAINT A 1/2 INCH WIDE BLACK LINE FROM THE NOZZLE NUMBER TO THE NOZZLE LOCATION
NOTE: SPRAY RING (2) 2" SCHED PIPES & FD PIPE TO BE EMBEDDED IN FLOOR. ALL OTHER PIPING TO BE POSITIONED IN BLOCKOUTS & GROUTED IN.
CONCRETE SLAB TYP FOR EAST & WEST SIDES
NORTH
PIT PLAN
COVER BLOCK PLAN
TYP COVER BLOCK
SECTION
MOISTURE GUARDS
KEY PLAN
BAIL
LINER CONN DETAIL
RAIN GUARD

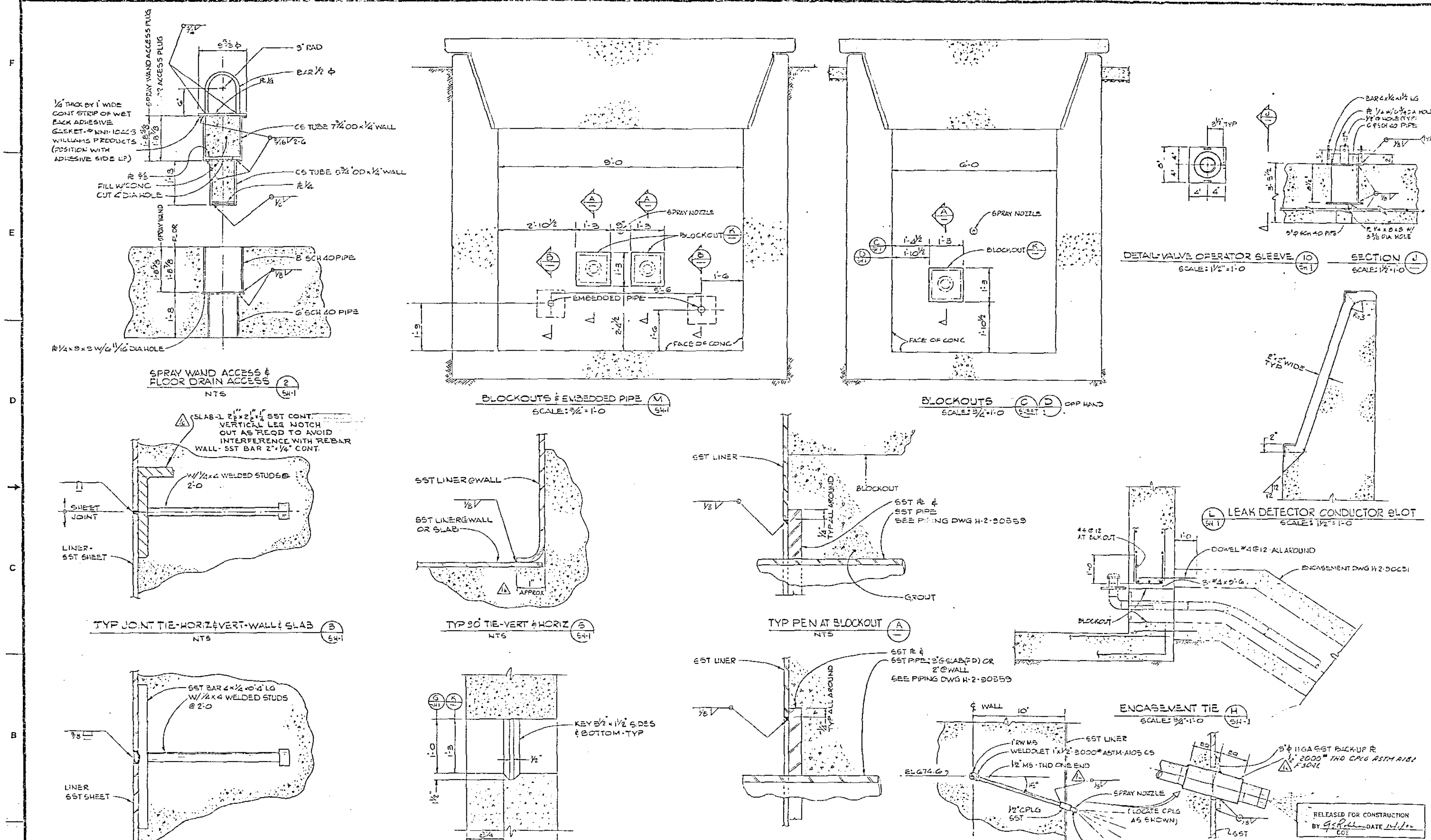

U. S. DEPARTMENT OF ENERGY	Richland Operations Office
KAISER ENGINEERS HANFORD COMPANY	
STRUCTURAL DIVERSION BOX 241-AX-155 MISC DETAILS	
PROJECT TITLE	WASTE TRANSFER FACILITIES
PROJ	B220
WO	X-27032
JOB	R0SSF2
SCALE	SHOWN
BLDG	200E
INDEX	C900
CLASSIFICATION	NONE
	NOT REQD
DRAWING NUMBER	H-2-90650
SHEET	2
OF	2
REV	1

REVISIONS: 1 — AS-BUILT FOR PROJECT B220 1) DFC B-220-32 W/RC, ZN D-7 2) DFC B-220-... ZN C6. 3) DFC B-220-6, ZN B3.

APPROVED D LIEN · CHECKED D LIEN · DRAWN BOB CNN

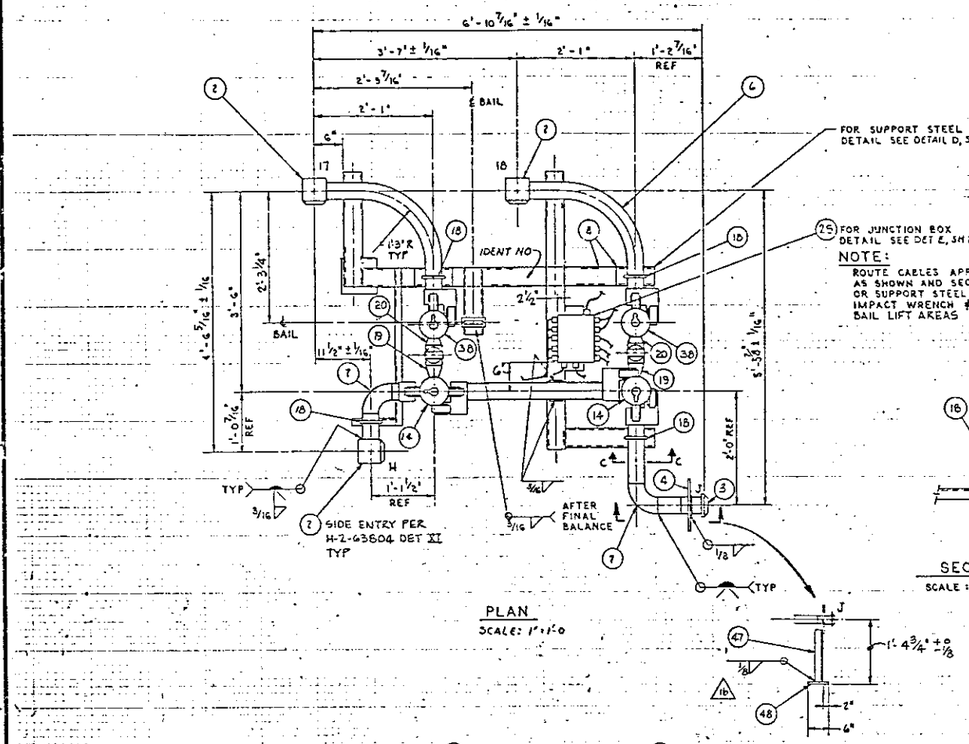

PLAN
SCALE: 1" = 1'-0

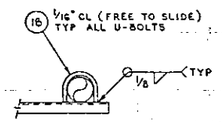

SECTION C-C
SCALE: 1 1/2" = 1'-0

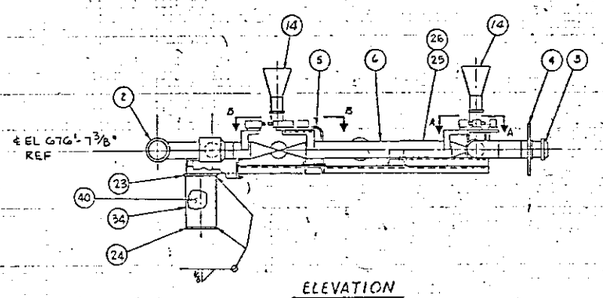

ELEVATION

(1) ASSEMBLY
SCALE: 1" = 1'-0

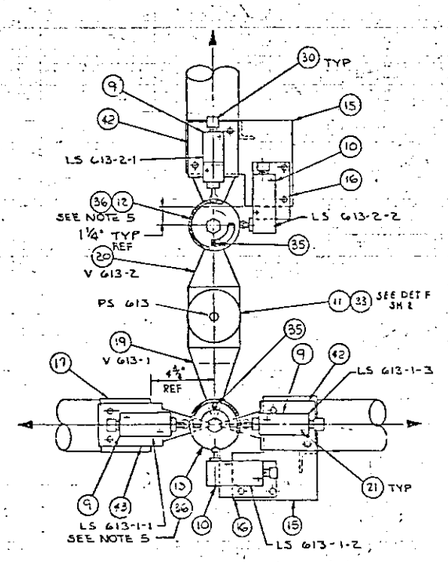

SECTION B-B
SCALE: 3" = 1'-0

FOR VALVE ORIENTATION SEE DET SH 3

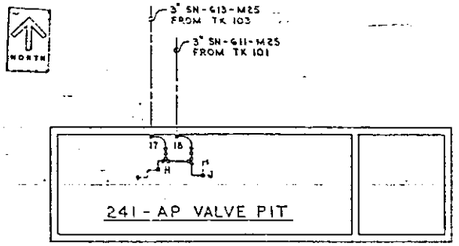

KEY PLAN
SCALE: NONE

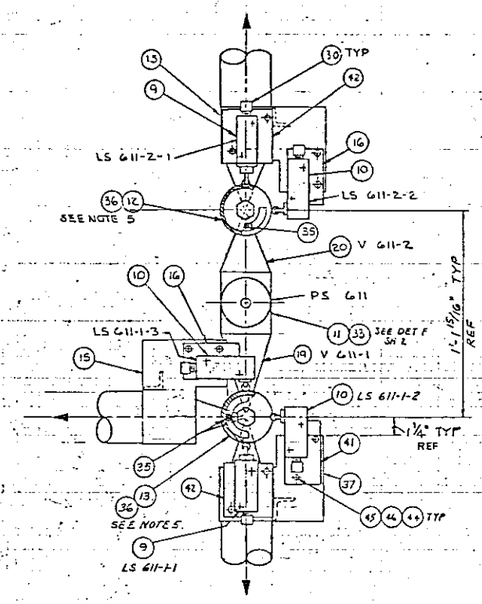

SECTION A-A
SCALE: 3" = 1'-0

FOR VALVE ORIENTATION SEE DET SH 3

QTY	FIG & NO	DESCRIPTION	MATERIAL
X	1	ASSEMBLY	—
3	2	3" HORIZ CONN ASSY #1 GASKET TYPE III	H-2-32430
1	3	3" MALE CONN NOZZLE PN 2	H-2-32446
1	4	3" KICK PLATE PN 6	H-2-30600
1	5	LIFTING BAIL ASSY #5	H-2-90161
AR	6	PIPE 3" SCHED 40	ASTM A 53 TYPE S GR B
2	7	ELBOW 3" SCHED 40 90° LR BUTT WELD	ASTM A 234 GR WPB
AR	8	CHANNEL C 4 x 5.4	ASTM A 36
5	9	LIMIT SWITCH	SEE NOTE 3 & 8
5	10	LIMIT SWITCH	SEE NOTE 3 & 8
2	11	PRESSURE SWITCH ASSEMBLY	SEE PROCUREMENT SPEC 8340-P1
2	12	LIMIT SWITCH ACTUATOR DET B	H-2-90852
2	13	LIMIT SWITCH ACTUATOR DET C	H-2-90852
2	14	VALVE FUNNEL DET Z1	H-2-90852
4	15	LIMIT SWITCH MTG BRKT DET J	H-2-90852
4	16	LIMIT SWITCH MTG PLATE DET L	H-2-90852
1	17	LIMIT SWITCH MTG BRKT DET T	H-2-90853
4	18	U-BOLT 1/2" DIA FOR 3" PIPE	ASTM A36
(16) 2	19	3" 3 WAY BALL VALVE SEE NOTE 4	PITTSBURGH BRASS #S3-MP-E-19-BW-4-H6
(16) 2	20	3" 2 WAY BALL VALVE SEE NOTE 4	PITTSBURGH BRASS #S3-SP-E-19-BW-4-FO-H6
20	21	ALLEN CAP SCREW #10-32 x 1 3/16" LG W/1/4" THD	ASTM A 193 GR B8 304 SST
2	22	PLATE 1/4" x 1 3/4" x 3"	ASTM A36
1	23	PLATE 1/2" x 7" x 7"	ASTM A36
1	24	PLATE 1/4" x 6 3/8" OD	ASTM A36

CONTINUED ON SHEET 2

GENERAL NOTES:

1. FABRICATION & TESTING SHALL BE IN ACCORDANCE WITH HANFORD SPEC HWS-57186 REV 12 OR CURRENT REVISION
2. HYDROSTATIC TEST AT 600 PSIG
3. LIMIT SWITCH PN 9 SHALL BE SQUARE-D TYPE C, 1 NO 1 NC WITH TYPE 9007-C54D TOP ROLLER PLUNGER, LIMIT SWITCH PN 10 TO BE SAME AS ABOVE EXCEPT WITH TYPE 9007-C54F SIDE ROLLER PLUNGER
4. 2-WAY AND 3-WAY BALL VALVES PN 19 & 20 SHALL CONFORM TO THE FOLLOWING SPECIFICATIONS:
   a) CARBON STEEL BODY
   b) BUTTWELD ONE PIECE CASTING CARBON STEEL END FITTINGS, INTEGRALLY CAST AND MACHINED.
   c) 50 PERCENT 316 STAINLESS STEEL FILLED TEFLON BALL SEAT RINGS
   d) ASBESTOS BODY GASKET (BONDED)
   e) GRAPHITED ASBESTOS STEM PACKING
   f) OMIT HANDLE
   g) GLASS FILLED TEFLON BODY FILLER (PN 20 ONLY)
   (16) h) DRILL AND TAP VALVES TO ACCEPT FUTURE MOTOR ACTUATOR.
5. FOR VALVE FUNNEL ASSEMBLY INSTRUCTIONS SEE DETAIL U H-2-93553

CONTINUED ON SHEET 2

RELEASED FOR CONSTRUCTION
BY GHHall DATE 6/11/83
DOE

1	LEJ 9/6/83	NA	JDC 7-7-83	(16) DFC B-340-397 & D6 (15) DFC B-340-180 & BE1 & 2	AS-BUILT FOR PROJ B-340

REV	DESCRIPTION
1	

REVISIONS

MICROFILMED: BY-DATE; ROLF WELL APPROVAL; BY-DATE; KEN APPROVAL; COMMENT REVIEW

H-2-90415	DRAWING LIST
NUMBER	TITLE
REFERENCES	
NEXT USED ON H-2-90596	

RHO APPROVAL BY GHHall 6/11/83

U. S. DEPARTMENT OF ENERGY
Richland Operations Office
KAISER ENGINEERS HANFORD COMPANY

JUMPER ASSEMBLY 17-18-H-J VALVE PIT

PROJECT TITLE: 241-AP TANK FARM

PROJ	B-340	X 34002	R 295A2
SCALE	SHOWN	BLDG 241-AP	MODEL 6905
DRAWING NUMBER	H-2-90719	SHEET 1	OF 3	REV 1

CLASSIFICATION: NONE

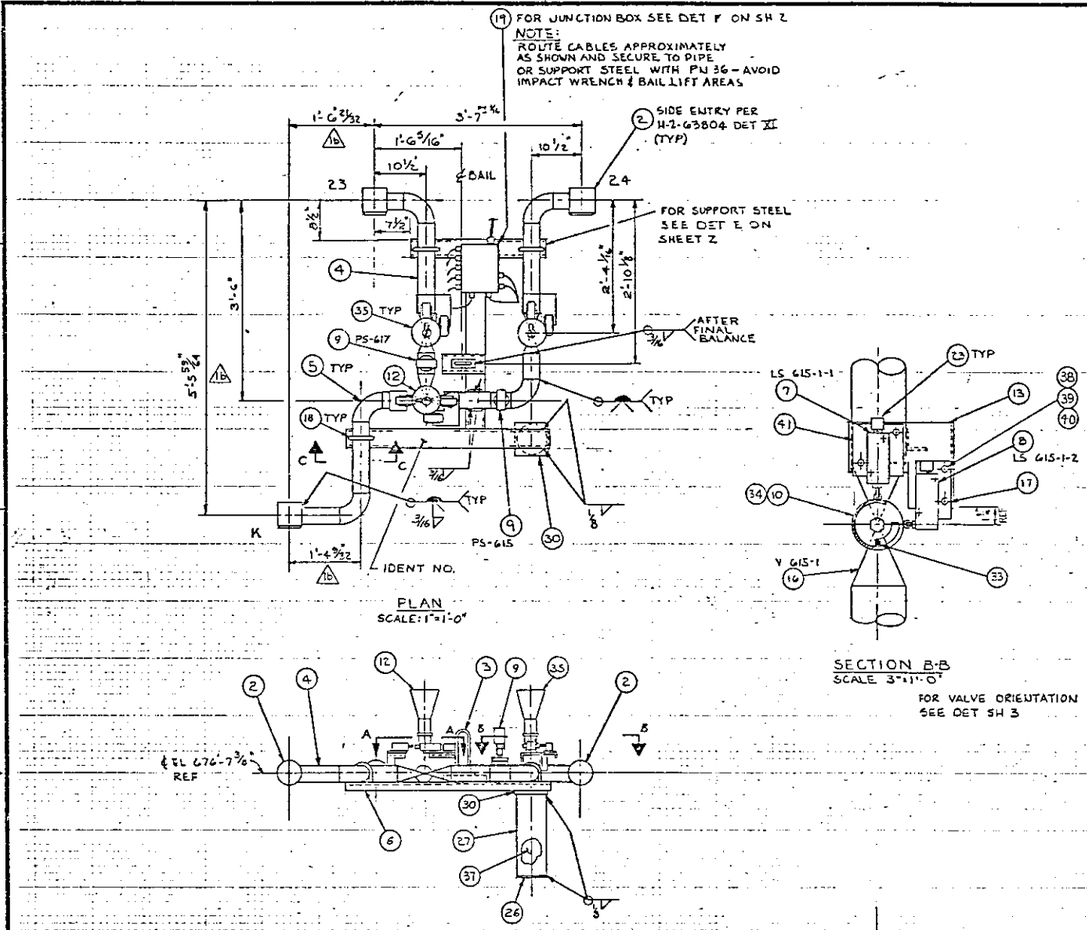

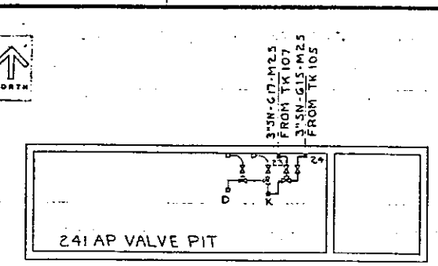

KEY PLAN
SCALE NONE

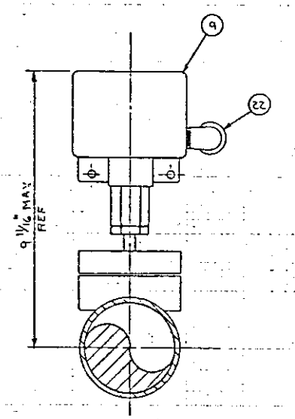

DETAIL D
SCALE: NONE

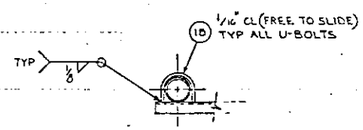

SECTION C-C
SCALE 1/2"=1'-0"

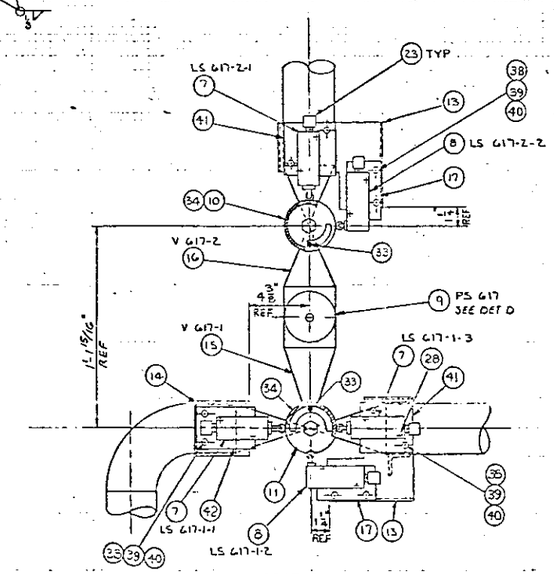

QTY	FAN NO	DESCRIPTION	MATERIAL
X	1	ASSEMBLY	
3	2	3" HORIZ CONN ASSY #1 GASKET TYPE III	H-2-32430
1	3	LIFTING BAIL ASSY #5	H-2-90161
AR	4	PIPE 3" SCHED 40	ASTM A53 TYPE S GRB
5	5	ELBOW 3" SCHED 40 90° LR BUTT WELD	ASTM A234 GR WPB
AR	6	CHANNEL C4x5.4 SEE DETAIL D SH 2	ASTM A 36
4	7	LIMIT SWITCH	SEE NOTE 3 & 8
3	8	LIMIT SWITCH	SEE NOTE 3 & 8
2	9	PRESSURE SWITCH ASSEMBLY	SEE PROCUREMENT SPEC 5340-P1
2	10	LIMIT SWITCH ACTUATOR DET B	H-2-90852
1	11	LIMIT SWITCH ACTUATOR DET C	H-2-90852
1	12	VALVE FUNNEL DET Z1	H-2-90852
3	13	LIMIT SWITCH MTG BRKT DET J	H-2-90852
1	14	LIMIT SWITCH MTG BRKT DET T	H-2-90853
1	15	3" 3WAY BALL VALVE SEE NOTE 4	PITTSBURGH BRASS #3-3-P-E-19-BW-4-H6
2	16	3" 2WAY BALL VALVE SEE NOTE 4	PITTSBURGH BRASS #3-3-P-E-19-BW-4-F0-H6
3	17	LIMIT SWITCH MTG PLATE DET L	H-2-90852
3	18	U-BOLT 1/4" FOR 3" PIPE	ASTM A36
1	19	ELECTRICAL BOX NEMA 13	HOFFMAN ENG CO #A1008 SCEP
9	20	CGB FITTING WITH LOCKNUT AND SEALING GASKET	CROUSE-HINDS #CGB 192 SG
1	21	CGB FITTING WITH LOCKNUT AND SEALING GASKET	CROUSE-HINDS #CGB 499-SG
2	22	CGE FITTING	CROUSE-HINDS #CGE 292
7	23	CGB FITTING	CROUSE-HINDS #CGB 192
1	24	PANEL 8 3/4" x 6 1/8"	HOFFMAN ENG CO #A 1088
3	25	TERMINAL BLOCK 10 POINT	BUCHANAN #-5110
1	26	PLATE 1/4" THK x 6 3/8" OD	ASTM A36
1	27	PIPE 6" SCHED 40 1'-5" LG	ASTM A53 TYPE S GRB
14	28	ALLEN CAP SCREW #10-32 x 1 3/16" LG WITH 1/4" THD LG	ASTM A 193 GR B8 304 SST
2	29	PLATE 1/4" x 1 1/4" x 3" L	ASTM A-36
1	30	PLATE 1/2" x 7" x 7"	ASTM A 36
1	31	TYPE SO CABLE 14/C #12 x 20' LONG	STD WIRE & CABLE #4556-14
AR	32	CABLE 2/C #14 KAPTON COVERED	STD WIRE & CABLE #D3147
3	33	STOP PIN DET X	H-2-90353
3	34	PIPE SEGMENT DET D	H-2-90852
2	35	VALVE FUNNEL DET Z3	H-2-90852
AR	36	WORM SCREW CLAMP	SST
AR	37	LEAD APPROX WT 201 #	ASTM B29

CONTINUED ON SHEET 2

GENERAL NOTES:

1. FABRICATION & TESTING SHALL BE IN ACCORDANCE WITH HANFORD SPEC HWS-5786 REV 12 OR CURRENT REVISION
2. HYDROSTATIC TEST AT 600 PSIG
3. LIMIT SWITCH PN 7 SHALL BE SQUARE-D TYPE C.1 NO 1 NC WITH TYPE 9007-C54D TOP ROLLER PLUNGER, LIMIT SWITCH PN 8 TO BE SAME AS ABOVE EXCEPT WITH TYPE 9007-C54F SIDE ROLLER PLUNGER
4. 2WAY AND 3 WAY BALL VALVES PN15 & 16 SHALL CONFORM TO THE FOLLOWING SPECIFICATIONS
   a) CARBON STEEL BODY
   b) BUTTWELD ONE PIECE CASTING CARBON STEEL END FITTINGS, INTEGRALLY CAST AND MACHINED
   c) 50 PERCENT 316 STAINLESS STEEL FILLED TEFLON BALL SEAT RINGS
   d) ASBESTOS BODY GASKET (BONDED)
   e) GRAPHITED ASBESTOS STEM PACKING
   f) OMIT HANDLE
   g) GLASS FILLED TEFLON BODY FILLER (PN 16 ONLY).
   h) DRILL AND TAP VALVES TO ACCEPT FUTURE MOTOR ACTUATORS.
5. FOR VALVE FUNNEL ASSEMBLY INSTRUCTIONS SEE DETAIL U H-2-90853

CONTINUED ON SHEET 2

RELEASED FOR CONSTRUCTION
BY [illegible] DATE 12/11/83
DOE

RHO APPROVAL	DATE 11/1/83	U. S. DEPARTMENT OF ENERGY Richland Operations Office
		KAISER ENGINEERS HANFORD COMPANY
PROJ ENGR		JUMPER ASSEMBLY 23-24-K VALVE PIT
PROJECT TITLE		241 AP TANK FARM
PROJ		83-340
SCALE		SHOWN
BLDG		241-AP
DRAWING NUMBER		H-2-90720
SHEET		1
OF		3
REV		1

1					AS-BUILT FOR PROJ 83-340 SEE SERIES DATA PACKAGE SDFC 83-340-446 & F1, E3, D7 & SDFC 83-340-180 & E1, E2 & B1, 2	1
					DESCRIPTION	REV
REVISIONS						
COMMENT REVIEW						
MICROFILMED						
ROCKWELL APPROVAL		KEH APPROVAL				

H-2-90435	DRAWING LIST
NUMBER	TITLE
REFERENCES	
NEXT USED ON	H-2-90699

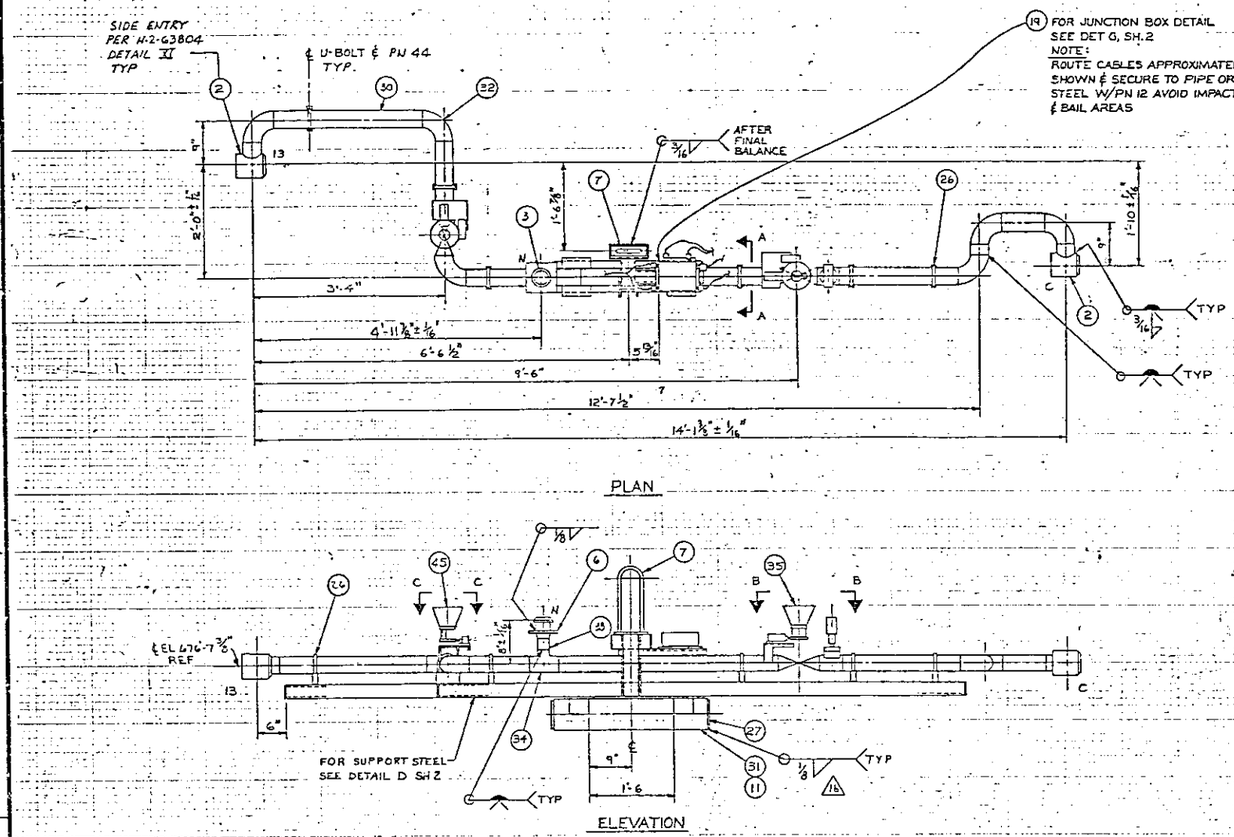

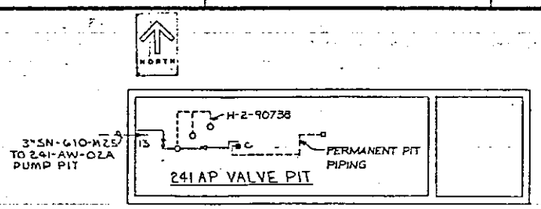

KEY PLAN
SCALE: NONE

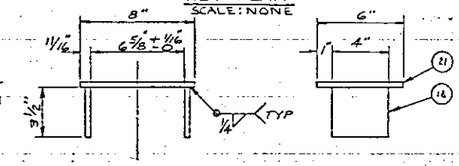

DETAIL H
SCALE: 3"=1'-0"

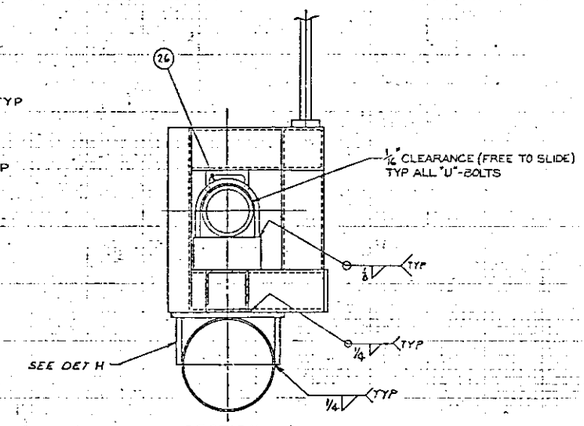

SECTION A-A (PN 19-ELECTRICAL BOX OMITTED FOR CLARITY)
SCALE: NONE

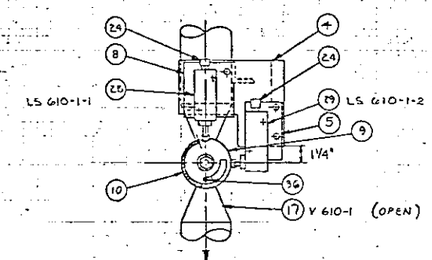

SECTION C-C
SCALE 3"=1'-0"
POSITION 1 SHOWN

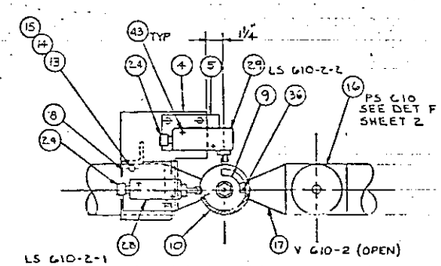

SECTION B-B
SCALE 3"=1'-0"
POSITION 1 SHOWN

QTY	PART NO	DESCRIPTION	MATERIAL
X	1	ASSEMBLY	———
2	2	3" HORIZ CONN ASSY #1 GASKET TYPE SEE	H-2-32430
1	3	2" MALE CONN NOZZLE PN 3	H-2-32446
2	4	LIMIT SWITCH MTG BRKT DET J	H-2-90852
2	5	LIMIT SWITCH MTG PLATE DET L	H-2-90852
1	6	2" NICK PLATE PN 4	H-2-30600
1	7	LIFTING BAIL ASSY # 5	H-2-90161
2	8	LIMIT SWITCH MTG PLATE DET W	H-2-90853
2	9	LIMIT SWITCH ACTUATOR DET B	H-2-90852
2	10	PIPE SEGMENT DET D	H-2-90852
AR	11	LEAD WEIGHT APPROX 398 LBS	ASTM B 29
AR	12	WORM SCREW CLAMP	SST
8	13	HEX HD BOLT 1/4"-20 UNC-2A X 1" LG	ASTM A 307 GR B
8	14	LOCK WASHER 1/4"	ASTM A 325 TYPE 3
8	15	HEX NUT 1/4"-20 UNC 2B	ASTM A 563 GRA
1	16	PRESSURE SWITCH ASSEMBLY	SEE PROCUREMENT SPEC B340-P1
2	17	3" 2 WAY BALL VALVE SEE NOTE 4	PITTSBURGH FORGE #3"-SPE-19-BW-4-70-HW
4	18	PLATE 3/8" X 3 1/2" X 4"	ASTM A 36
1	19	ELECTRICAL BOX NEMA 13	HOFFMAN ENG. CO ARDESCER
1	20	PANEL 6 3/4" X 4 3/8"	HOFFMAN ENG. CO #A-8P6
2	21	PLATE 3/8" X 6" X 8"	ASTM A 36
5	22	CGB FITTING WITH LOCKNUT AND SEALING GASKET	CROUSE-HINDS #CGB 192-SG
1	23	CGB FITTING WITH LOCKNUT AND SEALING GASKET	CROUSE-HINDS #CGB 498-SG
4	24	CGB FITTING	CROUSE-HINDS #CGB 192
1	25	CGE FITTING	CROUSE-HINDS #CGE 282
6	26	U-BOLT 1/2" FOR 3" PIPE	ASTM A 36
2	27	PLATE 1/4" X 6 3/8" DIA	ASTM A36
2	28	LIMIT SWITCH	SEE NOTE 3 & 8
2	29	LIMIT SWITCH	SEE NOTE 3 & 8
AR	30	PIPE 3" SCHED 40	ASTM A53 TYPE S GR B
1	31	6" SCHED 40 PIPE X 33 5/8" L	ASTM A53 TYPE S GR B
6	32	ELBOW 3" SCHED 40 90° LR BUTT WELD	ASTM A234 GR WPB
AR	33	2" SCHED 40 PIPE	ASTM A53 TYPE S GR B
1	34	TEE REDUCING SCHED 40 3"x3"x2" BUTTWELD	ASTM A234 GR WPB
1	35	VALVE FUNNEL DET Z1	H-2-90852
2	36	STOP PIN SEE DETAIL X	H-2-90853

CONTINUED ON SH 2

GENERAL NOTES:

1 FABRICATION & TESTING SHALL BE IN ACCORDANCE WITH HANFORD SPEC HWS-5786 REV 12 OR CURRENT REVISION.

2 HYDROSTATIC TEST AT 600 PSIG

3 LIMIT SWITCH PN 28 SHALL BE SQUARE-D TYPE C 1 N.O. & 1 N.C. WITH 9007-C54D TOP ROLLER PLUNGER, LIMIT SWITCH PN 29 TO BE SAME AS ABOVE EXCEPT WITH TYPE 9007-C54F 3102 ROLLER PLUNGER.

4 BALL VALVE PN 17 SHALL CONFORM TO THE FOLLOWING SPECIFICATIONS
a) CARBON STEEL BODY
b) BUTTWELD ONE PIECE CASTING CARBON STEEL END FITTINGS INTEGRALLY CAST AND MACHINED
c) 50 PERCENT 316 STAINLESS STEEL FILLED TEFLON BALL SEAT RINGS
d) ASBESTOS BODY GASKET (BONDED)
e) GRAPHITED ASBESTOS STEM PACKING
f) OMIT HANDLE
g) GLASS FILLED TEFLON BODY FILLER
h) DRILL AND TAP VALVES TO ACCEPT FUTURE MOTOR ACTUATORS. (16)

5 FOR VALVE FUNNEL ASSY INSTRUCTIONS SEE DET U H-2-90853

CONTINUED ON SHEET 2

RELEASED FOR CONSTRUCTION
BY [illegible] DATE [illegible]
DOE

H-2-90835	DRAWING LIST
NUMBER	TITLE
REFERENCES	
NEXT USED ON H-2-90590	

11	LEI 9-10-92	NA	JDS 7-31-92	AS-BUILT FOR PROJ B-340 (1) DFC-B-340-281 Z-C4 (2) DFC-B-340-180 Z-E1 (B2)	1
BY-DATE		BY-DATE		DESCRIPTION	REV
CHECKED					
APPROVAL		KEH APPROVAL		REVISIONS	
COMMENT REVIEW					

MICROFILMED

R H O APPROVAL BY [illegible] DATE 11/16/93

U. S. DEPARTMENT OF ENERGY
Richland Operations Office
KAISER ENGINEERS HANFORD COMPANY

PROJ. ENGR. WJES 2-11-93
OP. ENGR. [illegible] 2-11-93
APPROVED [illegible] 2-11-93
DATE [illegible]
APPROVED BY [illegible] 2/11/93
CHECKED BY [illegible] 2/11/93
DRAWN BY G. CLEVELAND 2-22-93
DESIGNED BY [illegible] 2-22-93
CLASSIFICATION BY NONE NOT REQ'D

JUMPER ASSEMBLY 13 7C-N 241-AP VALVE PIT

PROJECT TITLE 241 AP TANK FARM

PROJ. B-340 NO. 734002 SET R295A2
SCALE AS SHOWN SUBJ. 241 AP PORT 8405
DRAWING NUMBER H-2-90721 SHEET 1 OF 3 REV 1

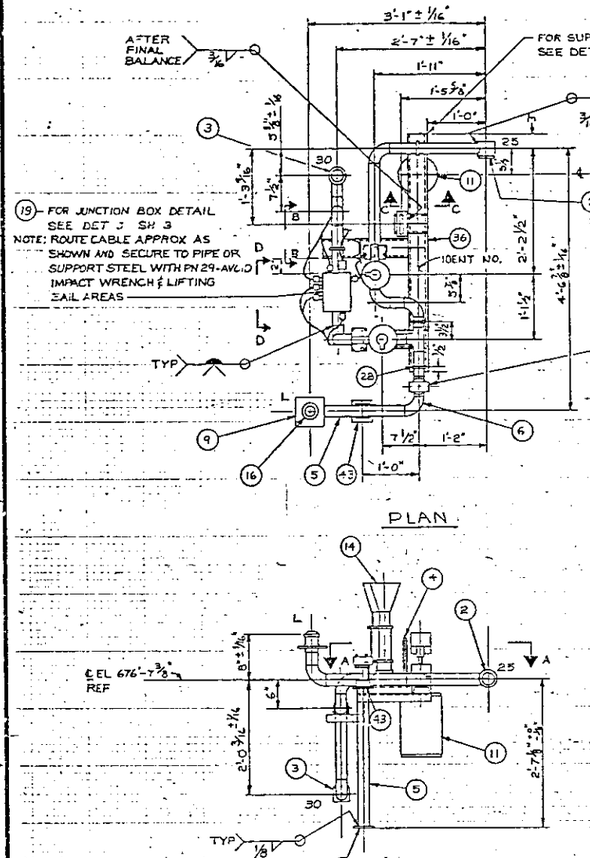

PLAN

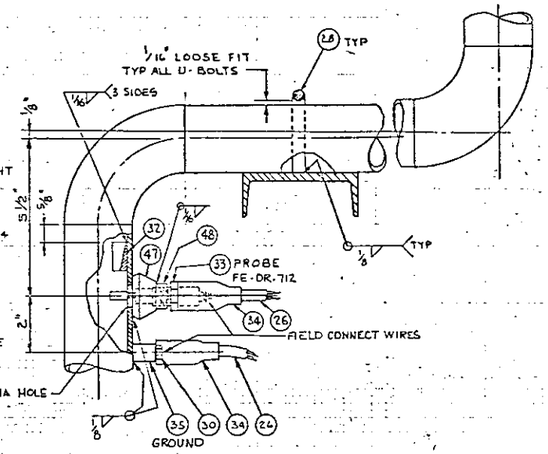

VIEW B-B

SCALE: 1/2

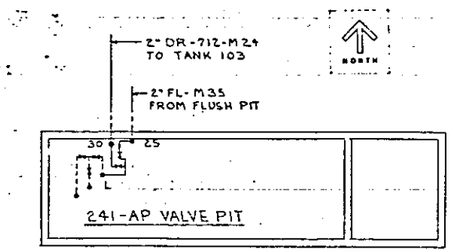

KEY PLAN

SCALE - NONE

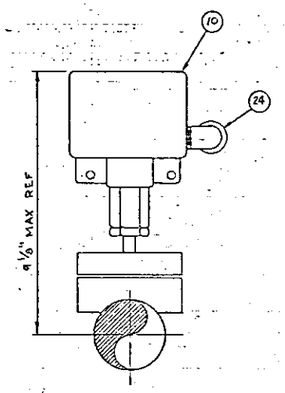

DETAIL E

SCALE: NONE

ELEVATION

(1) ASSEMBLY

SCALE 1" = 1'-0"

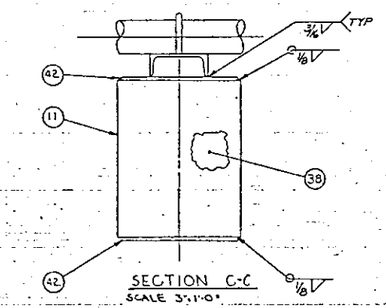

SECTION C-C

SCALE 3" = 1'-0"

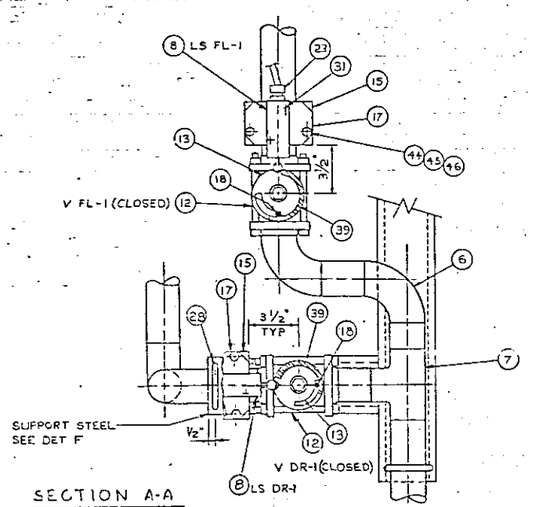

SECTION A-A

SCALE: NONE

(CLOSED POSITIONS SHOWN)

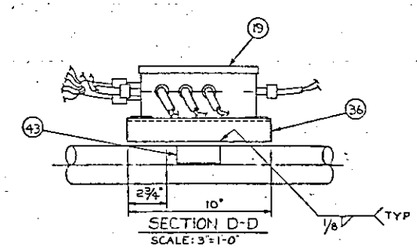

SECTION D-D

SCALE: 3" = 1'-0"

QTY	PART NO.	DESCRIPTION	MATERIAL
	1	ASSEMBLY	
1	2	2" HORIZ CONN ASSY #1 GASKET TYPE III	H-2-32420
1	3	2" VERT CONN ASSY #2 GASKET TYPE III	H-2-32420
1	4	LIFTING BAIL ASSY #3	H-2-90161
AR	5	PIPE - 2" SCHED 40	ASTM A53 TYPE S GR B
9	6	ELBOW - 2" SCHED 40, 90° LR BUTT WELD	ASTM A234 GR WPB
1	7	TEE - 2" SCHED 40, BUTT WELD	ASTM A234 GR WPB
2	8	LIMIT SWITCH	SEE NOTE 3 & 6
1	9	SQUARE KICK-OFF PLATE #4	H-2-30600
1	10	PRESSURE SWITCH ASSY	SEE PROCUREMENT SPEC B-140 P1
1	11	PIPE 8" SCHED 40 PIPE X 11" L	ASTM A53 TYPE GR B
2	12	2" 2-WAY BALL VALVE SEE NOTE 4	PITTSBURGH BRASS 2-2-SR-E-12-2-N-R-14
2	13	LIMIT SWITCH ACTUATOR PLATE DET AF	H-2-60852
2	14	VALVE FUNNEL DET Z2	H-2-90852
2	15	LIMIT SWITCH MTG BRKT DET P	H-2-90853
1	16	MALE CONNECTOR NOZZLE #3	H-2-32446
2	17	LIMIT SWITCH MTG PLATE DET AD	H-2-90845
2	18	STOP PIN DET X	H-2-90853
1	19	ELECTRICAL BOX NEMA 13	HOFFMAN ENG CO #A-806 SCED
2	20	TERMINAL BLOCK, 10 POINT	BUCHANAN # 51510
5	21	CGB FITTING WITH LOCKNUT & SEALING GASKET	CROUSE-HINDS #CGB 192-SG
1	22	CGB FITTING WITH LOCKNUT & SEALING GASKET	CROUSE-HINDS #CGB 499-SG
2	23	CGB FITTING	CROUSE-HINDS #CGB 192
1	24	CGE FITTING	CROUSE-HINDS #CGE 792
1	25	TYPE SO CABLE 12/C #12 x 20' L	STD WIRE & CABLE #1338-12'
AR	26	CABLE 2/C #14 KAPTON COVERED	STD WIRE CABLE CAT # D 3167
1	27	MTG PANEL 6 3/4" x 4 3/8"	HOFFMAN ENG CO #A-896
5	28	U-BOLT - 3/8" DIA FOR 2" PIPE	ASTM A 36
AR	29	WORM SCREW CLAMP	SST
1	30	SCREW MACH HEX HD #8-32 x 11/16" L	ASTM A 193 GR B8 304 SST
4	31	ALLEN CAP SCREW 10-32 x 1 3/4" L W/ 1/4" L THD	ASTM A 193 GR B8 304 SST
1	32	LEAK DETECTOR BLOCK (SEE SHEET 2)	ASTM A 36
1	33	LEAK DETECTOR ELECTRODE	WARRICK CONTROLS # 2518
2	34	TERMINAL COVER	WARRICK CONTROLS # 3772A
1	35	GROUND ELECTRODE (SEE SH 2)	ASTM A-102 GR 1020
AR	36	CHANNEL - C 4 x 5.4	ASTM A 36
1	37	TYPE SO CABLE 4/C #12 x 20' L	STD WIRE & CABLE #703-24
AR	38	LEAD WEIGHT APPROX 225 LB	ASTM B29
2	39	PIPE SEGMENT DET F	H-2-90852
1	40	CGB FITTING WITH LOCKNUT & SEALING GASKET	CROUSE-HINDS #CGB 396-SG
1	41	PLATE 1/4" x 4 1/2 x 4 1/2"	ASTM A36
2	42	PLATE 3/16" THK x 8 1/2" OD	ASTM A36
2	43	SUPPORT DETAIL XIV	H-2-63804
4	44	HEX HD BOLT 1/4"-20 UNC-2A x 1" LG	ASTM A307 GRB
4	45	HEX NUT 1/4"-20 UNC-2B	ASTM A563 GRA
4	46	LOCK WASHER 1/4"	ASTM A325 TYPE 3
1	47	WELDOLET SCH 40 2"-3/8"	CARBON STEEL
1	48	3/8"-3000# HALF COUPLING - CUT TO 3/8" LG	ASTM A105

GENERAL NOTES:—

1. FABRICATION & TESTING SHALL BE IN ACCORDANCE WITH HANFORD SPEC HW5-5166 REV 12 OR CURRENT REV
2. HYDROSTATIC TEST AT 600 PSIG
3. LIMIT SWITCH PN 8 SHALL BE SQUARE-D TYPE C, IND & INC WITH TYPE 9007-C54-D TOP ROLLER PLUNGER

FOR CONTINUATION OF NOTES SEE SHEET 2

RELEASED FOR CONSTRUCTION
BY GSK DATE 11/1/91
DOE

H-2-90835	DRAWING LIST
NUMBER	TITLE
REFERENCES	
NEXT USED ON H-2-90598	

REV	DATE	BY	DESCRIPTION
11	6-6-90	NA	AS-BUILT FOR PROJ B-340 4) DFC-B-340-180 Z-E1

MICROFILMED — APPROVAL: KEH APPROVAL — REVISIONS — COMMENT REVIEW

R H O APPROVAL

U. S. DEPARTMENT OF ENERGY
Richland Operations Office
KAISER ENGINEERS HANFORD COMPANY

JUMPER ASSEMBLY
25-30-L
VALVE PIT

PROJECT TITLE: 241 AP TANK FARM

PROJ	B-340	NO.	X34002
SCALE	SHOWN	BLDG.	241AP
DRAWING NUMBER	NONE	NOT REQD	H-2-90722
SHEET	1	OF	3
REV	1		

QT	QT	PN	DESCRIPTION	MATERIAL
	X	1	ASSEMBLY 241-AP-26, 241-AP-29	—
X		2	ASSEMBLY 241-AP-27, 241-AP-28	—
1	1	3	2" HORIZ CONN ASSY #1 GASKET TYPE III	H-2-52420
2	2	4	2" SCHED 40 90° LR BUTT WELD ELBOW	ASTM-A234 GR-WPB
1	1	5	2" 3-WAY BALL VALVE SEE NOTE 3	PITTSBURG BRASS CO #CMP-E-11-RN-4-66
1	1	6	VALVE FUNNEL DET AB	H-2-90845
AR	AR	7	2" SCHED 40 PIPE	ASTM-A53 TYPE S GR B
1	1	8	4" SCHED 40 4½" LG	ASTM-A53 TYPE S GR B
1	1	9	FLAT BAR ⅛" x 2"	ASTM A36
2	2	10	PLATE 4⅛" OD x ½"	ASTM A36
1	1	11	½" SCHED 80 PIPE x 3" LONG	ASTM A53 TYPE S GR B
1	1	12	LIFTING BAIL ASSY 3	H-2-90141
AR	AR	13	LEAD APPROX WT 23#	ASTM B29

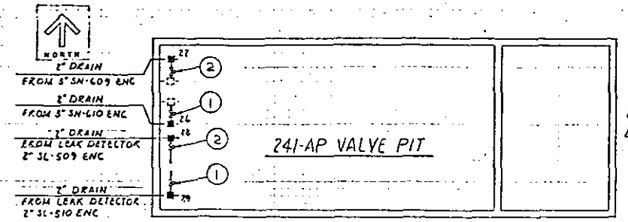

KEY PLAN

SCALE: NONE

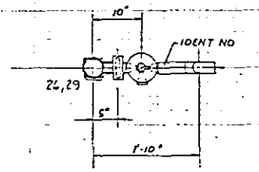

PLAN

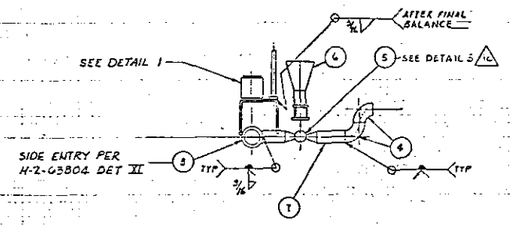

ELEVATION

1 ASSEMBLY

SCALE: 1" = 1'-0"

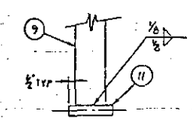

ELEVATION A-A

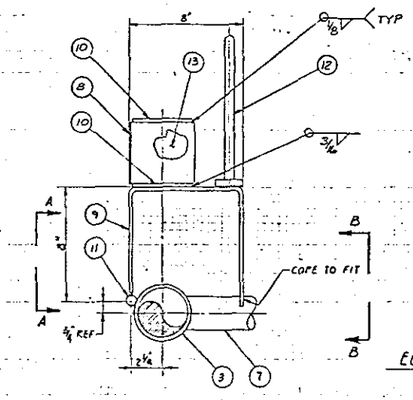

DETAIL 1

SCALE: 3" = 1'-0"

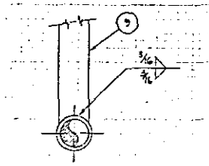

ELEVATION B-B

GENERAL NOTES:

1. FABRICATION AND TESTING SHALL BE IN ACCORDANCE WITH HANFORD SPECIFICATION HWS-5706, REV. 12 OR CURRENT REVISION
2. HYDROSTATIC TEST AT 90 PSIG.
3. 3-WAY BALL VALVE, PN 5 SHALL CONFORM TO THE FOLLOWING SPECIFICATIONS:
   a) CARBON STEEL BODY
   b) BUTTWELD ONE PIECE CASTING CARBON STEEL END FITTINGS, INTEGRALLY CAST AND MACHINED
   c) 50 PERCENT 316 STAINLESS STEEL FILLED TEFLON BALL SEAT RINGS
   d) ASBESTOS BODY GASKET (BONDED)
   e) GRAPHITED ASBESTOS STEM PACKING
   f) OMIT HANDLE
   g) DRILL AND TAP VALVES TO ACCEPT FUTURE MOTOR ACTUATORS.
4. FIELD VERIFY VALVE CLEARANCES, CONFIGURATIONS AND LOCATION PRIOR TO FUTURE ACTUATOR PROCUREMENT AND INSTALLATION.

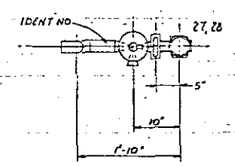

PLAN

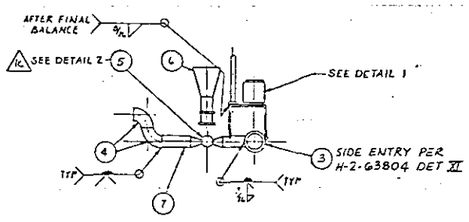

ELEVATION

2 ASSEMBLY

SCALE: 1" = 1'-0"

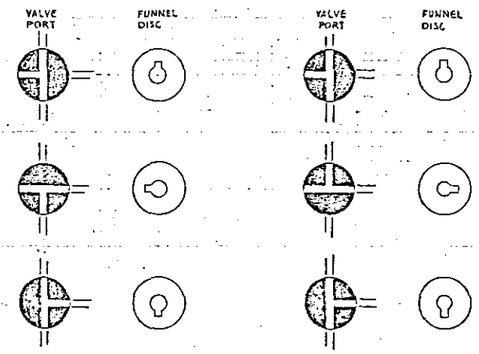

DETAIL 2

DETAIL 3

RELEASED FOR CONSTRUCTION
BY G. Gerkin DATE 12/11/93
DOE

N-2-90455	DRAWING LIST				
NUMBER	TITLE				
REFERENCES					
NEXT USED ON N-2-90578					

MICROFILMED

BY-DATE	BY-DATE	REV BY DATE	DESCRIPTION	REV
LL 9-10-86	NA	W 9-10-86	AS-BUILT FOR PROJ B-340 & DC A.A. C) DFC B-340-479 & B64,5,B7 B) RCD CHNG .2, F1, F2 WAS DET D) DFC B-340-180,2, B1,2, C1,2 & F1.	1
APPROVAL KEH APPROVAL			REVISIONS	
COMMENT REVIEW				

RMC APPROVAL BY G. H. Gerkin DATE 12/11/93

U. S. DEPARTMENT OF ENERGY
Richland Operations Office
KAISER ENGINEERS HANFORD COMPANY

JUMPER ASSEMBLY
26, 27, 28, 29
VALVE PIT

PROJECT TITLE: 241-AP TANK FARM

DRAWN BY D. HEERMAN	PROJ B-340	WO X34002	JOB R195A2
CHECKED BY J. OSBORNE	SCALE SHOWN	PLOT 241-AP	INDEX 8405
CLASSIFICATION NONE	NOT REQD	DRAWING NUMBER H-2-90723	SHEET 1 OF 1 REV 1

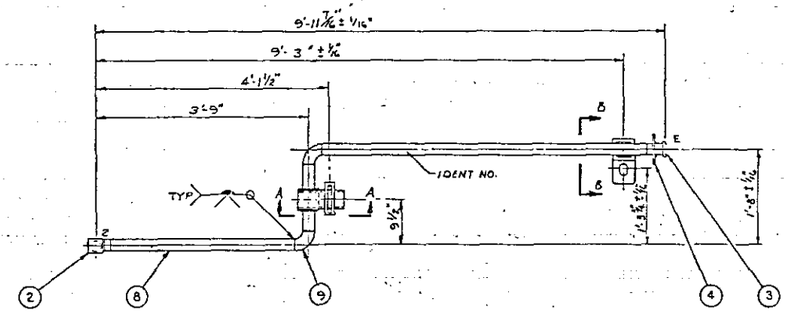

PLAN

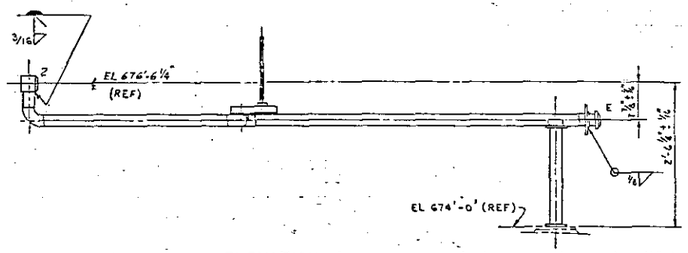

ELEVATION

1 ASSEMBLY
SCALE : 1" = 1'-0"

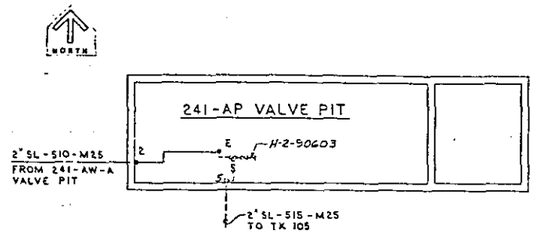

KEY PLAN
SCALE : NONE

QTY	PN	DESCRIPTION	MATERIAL
	1	ASSEMBLY	———
1	2	2" HORIZ CONN ASSY # 1 GASKET TYPE III	H-2-32420
1	3	2" MALE CONN NOZZLE PN 3	H-2-32446
1	4	2" KICK-OFF PLATE PN 4	H-2-30600
2	5	SUPPORT BRACKET DETAIL XIV	H-2-63804
1	6	DOWEL PLATE DETAIL R	H-2-90853
1	7	LIFTING BAIL ASSY 5	H-2-90161
AR	8	PIPE - 2" SCHED 40	ASTM A53 TYPE S GR B
3	9	ELBOW - 2" SCHED 40, 90° LR BUTT WELD	ASTM A234 GR WPB
1	10	CHANNEL - C4 x 5.4 x 10" LG	ASTM A36

GENERAL NOTES

1. FABRICATION AND TESTING SHALL BE IN ACCORDANCE WITH HANFORD SPECIFICATION HWS-5786, REV 12 OR CURRENT REVISION
2. HYDROSTATIC TEST AT 600 PSIG.

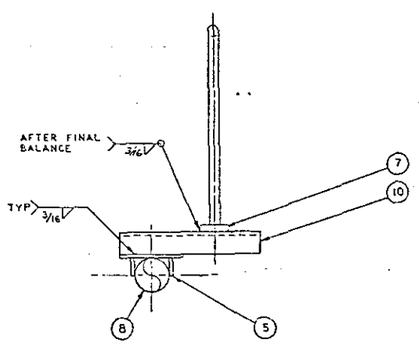

SECTION A-A
SCALE : 3" = 1'-0"

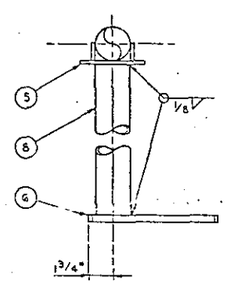

SECTION B-B
SCALE : 3" = 1'-0"

RELEASED FOR CONSTRUCTION
BY [signature] DATE 12/1/83
DOE

H-2-90435	DRAWING LIST
NUMBER	TITLE
REFERENCES	
NEXT USED ON	H-2-90593

	LEH 9-10-86	NA	JDC 9-10-86	JDC 9-10-86	AS-BUILT FOR PROJ B-340	1
MICROFILMED	BY-DATE		BY-DATE		DESCRIPTION	REV
	ROCKWELL APPROVAL		KEH APPROVAL		REVISIONS	
	COMMENT REVIEW					

RHO APPROVAL BY [signature] DATE 12/1/83
PROJ ENGR [signature] 12-1-83
DR [signature] 12/1/83
APPROVED BY [signature] 5-5-83
DATE [signature] 5/5/83
APPROVED BY [signature] 4/21/83
CHECKED BY J.A. SHIPMAN 4/21/83
DRAWN BY G. VINCENT 11/4/83
DESIGNED BY D. O'CONNOR 4-22-83
CLASSIFICATION | BY
NONE | NOT PROD

U. S. DEPARTMENT OF ENERGY
Richland Operations Office
KAISER ENGINEERS HANFORD COMPANY

JUMPER ASSEMBLY
2-E
VALVE PIT

PROJECT TITLE 241-AP TANK FARM
PROJ B-340 | WO X34002 | JOB R25EA2
SCALE SHOWN | BLDG 241-AP | NOTE 8405
DRAWING NUMBER H-2-90724 | SHEET 1 | OF 1 | REV 1

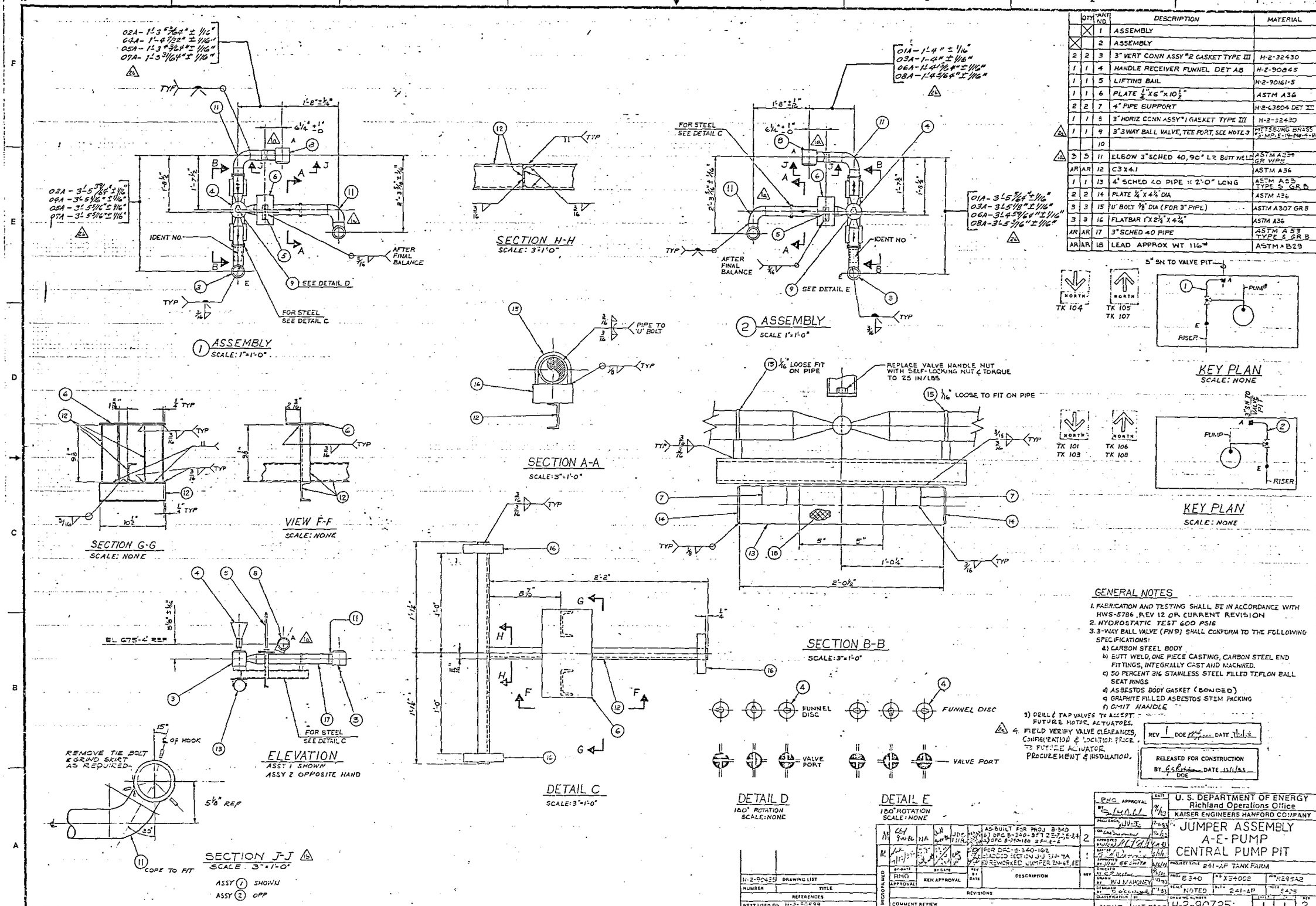

	QTY		PART NO	DESCRIPTION	MATERIAL
		X	1	ASSEMBLY	
X			2	ASSEMBLY	
	2	2	3	3" VERT CONN ASSY #2 GASKET TYPE III	H-2-32430
	1	1	4	HANDLE RECEIVER FUNNEL DET AB	H-2-90845
	1	1	5	LIFTING BAIL	H-2-90161-5
	1	1	6	PLATE 1/4" X 6" X 10 1/2"	ASTM A36
	2	2	7	4" PIPE SUPPORT	H-2-63804 DET II
	1	1	8	3" HORIZ CONN ASSY #1 GASKET TYPE III	H-2-32430
2a	1	1	9	3" 3 WAY BALL VALVE, TEE PORT, SEE NOTE 3	PITTSBURG BRASS #3-MP-E-19-PN-4-HG
			10		
1a	3	3	11	ELBOW 3" SCHED 40, 90° LR BUTT WELD	ASTM A234 GR WPB
	AR	AR	12	C3 X 4.1	ASTM A36
	1	1	13	4" SCHED 40 PIPE ≈ 2'-0" LONG	ASTM A53 TYPE S GR B
	2	2	14	PLATE 1/4" X 4 1/4" DIA	ASTM A36
	3	3	15	'U' BOLT 3/8" DIA (FOR 3" PIPE)	ASTM A307 GR B
	3	3	16	FLATBAR 1" X 2 1/2" X 4 3/4"	ASTM A36
	AR	AR	17	3" SCHED 40 PIPE	ASTM A53 TYPE S GR B
	AR	AR	18	LEAD APPROX WT 1 1/16#	ASTM B29

GENERAL NOTES

1. FABRICATION AND TESTING SHALL BE IN ACCORDANCE WITH HWS-5786, REV 12 OR CURRENT REVISION
2. HYDROSTATIC TEST 600 PSIG
3. 3-WAY BALL VALVE (PN9) SHALL CONFORM TO THE FOLLOWING SPECIFICATIONS:
   a) CARBON STEEL BODY
   b) BUTT WELD, ONE PIECE CASTING, CARBON STEEL END FITTINGS, INTEGRALLY CAST AND MACHINED.
   c) 50 PERCENT 316 STAINLESS STEEL FILLED TEFLON BALL SEAT RINGS
   d) ASBESTOS BODY GASKET (BONDED)
   e) GRAPHITE FILLED ASBESTOS STEM PACKING
   f) OMIT HANDLE
4. FIELD VERIFY VALVE CLEARANCES, CONFIGURATION & LOCATION PRIOR TO FUTURE ACTUATOR PROCUREMENT & INSTALLATION.
5) DRILL & TAP VALVES TO ACCEPT FUTURE MOTOR ACTUATORS.

REV 1 DOE DATE

RELEASED FOR CONSTRUCTION
BY DOE DATE

H-2-90435	DRAWING LIST		
NUMBER	TITLE		
REFERENCES			
NEXT USED ON	H-2-90599		

M					AS-BUILT FOR PROJ B-340 6) DFC B-340-357 2E-7, E-24 7) DFC B-340-180 2H, E-2	2
M					PER DFC-B-340-192 (5) ADDED SECTION J-J SH 7A (3) REWORKED JUMPER EN-65, EE	1
MICROFILMED	BY-DATE	BY-DATE		REV BY DATE	DESCRIPTION	REV
	RHO APPROVAL	KEH APPROVAL			REVISIONS	
	COMMENT REVIEW					

RHO APPROVAL BY DATE 9/1/83

U. S. DEPARTMENT OF ENERGY
Richland Operations Office
KAISER ENGINEERS HANFORD COMPANY

JUMPER ASSEMBLY A-E-PUMP CENTRAL PUMP PIT

PROJECT TITLE 241-AP TANK FARM

PROJ E340	WO X34002	DWG R29342	
SCALE NOTED	241-AP		
CLASSIFICATION NONE	NOT REQD	DRAWING NUMBER H-2-90725	REV 2

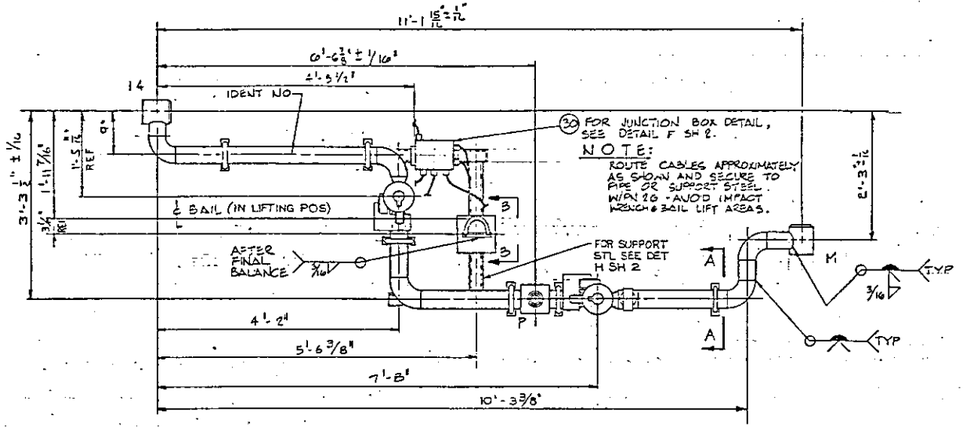

PLAN

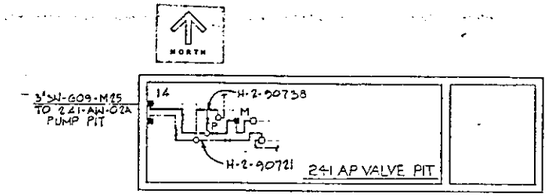

KEY PLAN
SCALE: NONE

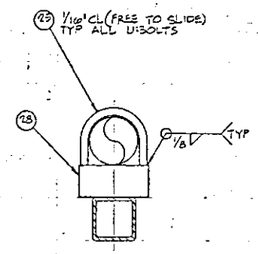

SECTION A-A
SCALE: 3"=1'-0"

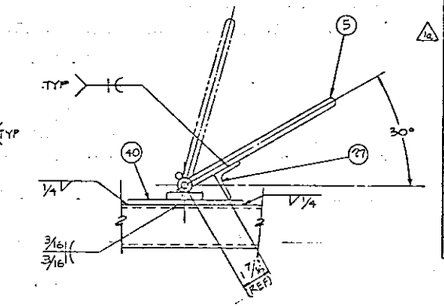

SECTION B-B
SCALE: 3"=1'-0"

QTY	ITEM NO	DESCRIPTION	MATERIAL
X	1	ASSEMBLY	——
2	2	3" HORIZ CONN ASSY #1, GASKET TYPE III	H-2-32430
1	3	2" MALE CONN NOZZLE PN 3	H-2-32446
1	4	2" KICK PLATE PN 4	H-2-30600
1	5	LIFTING BAIL ASSY 4	H-2-30160
AR	6	PIPE, 3" SCHED 40	ASTM A53, TYPE S GR B
AR	7	PIPE, 2" SCHED 40	ASTM A53, TYPE S GR B
5	8	ELBOW, 3" SCHED 40 90° L R BUTT WELD	ASTM A234 GR WPB
1	9	TEE, 3"x3"x2" SCHED 40 BUTT WELD	ASTM A234 GR WPB
2	10	VALVE FUNNEL DETAIL Ø 3	H-2-90852
2	11	PIPE SEGMENT DETAIL D	H-2-90852
2	12	LIMIT SWITCH ACTUATOR DETAIL B	H-2-90852
2	13	3" 2 WAY BALL VALVE SEE NOTE 4	PITTSBURG GRADE No 3-5-7-8-9-10-11-12-14-16
2	14	LIMIT SWITCH	SEE NOTE 3 & 8
2	15	LIMIT SWITCH	SEE NOTE 3 & 8
2	16	LIMIT SWITCH MTG BRKT DET J	H-2-90852
2	17	LIMIT SWITCH MTG PLATE DET L	H-2-90852
2	18	LIMIT SWITCH MTG PLATE DET W	H-2-90853
2	19	STOP PIN DET X	H-2-90853
8	20	HEX HD BOLT 1/4"-20 UNC-2A x 1" L	ASTM A307 GR B
8	21	HEX NUT 1/4"-20 UNC-2B	ASTM A563 GR A
8	22	LOCK WASHER 1/4"	ASTM A325 TYPE 3
8	23	ALLEN CAP SCREW 0.312-18 UNC-2A x 1 1/4" LG W/1/4" HD LG	ASTM A-193 GR B8 304 SST
1	24	PRESSURE SWITCH	SEE PROCUREMENT SPEC 3-340-191
6	25	U-BOLT 1/2" DIA FOR 3" PIPE	ASTM A36
AR	26	WORM SCREW CLAMP	SST
1	27	L 2"x2"x3/8" x 6" L	ASTM A36

CONTINUED ON SHEET 2

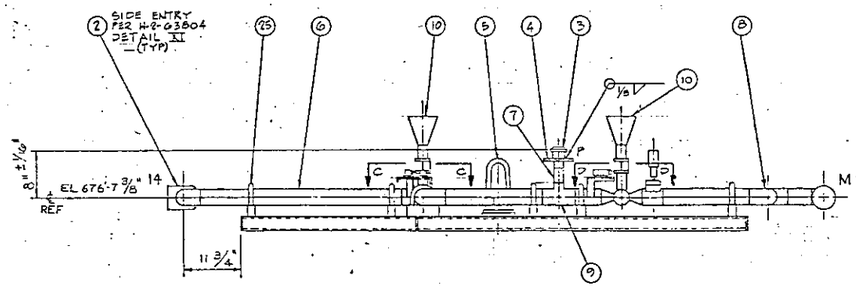

ELEVATION

1 ASSEMBLY
SCALE: 1"=1'-0"

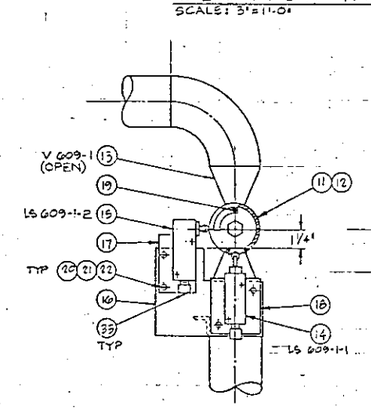

SECTION C-C
SCALE: 3"=1'-0"
POSITION 1 SHOWN

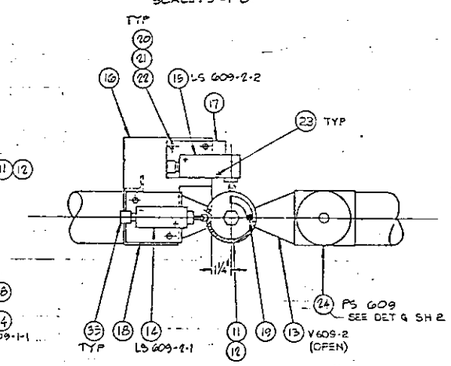

SECTION D-D
SCALE: 3"=1'-0"
POSITION 1 SHOWN

GENERAL NOTES

1. FABRICATION AND TESTING SHALL BE IN ACCORDANCE WITH HANFORD SPEC HWS-5786 REV 12 OR CURRENT REVISION.
2. HYDROSTATIC TEST AT 600 PSIG.
3. LIMIT SWITCH, PN 14, SHALL BE SQUARE D, TYPE C, 1 NO, 1 NC, WITH TYPE 9007-C54D TOP ROLLER PLUNGER, LIMIT SWITCH PN 15 TO BE SAME AS ABOVE EXCEPT WITH TYPE 9007-C54F SIDE ROLLER PLUNGER.
4. 2 WAY BALL VALVE, PN 13, SHALL CONFORM TO THE FOLLOWING SPECIFICATIONS:
   a) CARBON STEEL BODY.
   b) BUTTWELD ONE PIECE CASTING CARBON STEEL END FITTINGS, INTEGRALLY CAST AND MACHINED.
   c) 50 PERCENT 316 STAINLESS STEEL FILLED TEFLON BALL SEAT RINGS.
   d) ASBESTOS BODY GASKET (BONDED).
   e) GRAPHITED ASBESTOS STEM PACKING
   f) OMIT HANDLE
   g) GLASS FILLED TEFLON BODY FILLER
   h) DRILL AND TAP VALVES TO ACCEPT FUTURE MOTOR ACTUATORS
5. FOR VALVE FUNNEL ASSEMBLY INSTRUCTIONS SEE DETAIL V H-2-90853.
6. LIMIT SWITCHES ARE SHOWN WITH LIMIT SWITCH IN NON-ACTUATED POSITION.
7. PRESSURE SWITCHES ARE SHOWN WITH NO PRESSURE ON ELEMENT.
8. PAINT LIMIT SWITCH IDENT NO. ON TOP OF EACH SWITCH.
9. FIELD VERIFY VALVE CLEARANCES, CONFIGURATION & LOCATION PRIOR TO FUTURE ACTUATOR PROCUREMENT & INSTALLATION.

RELEASED FOR CONSTRUCTION
BY G.S. Rice DATE 11/1/83
DOE

11	LEJ 9-12-86	N/A					AS BUILT FOR PROJ B340	1
1							2) DFC E-390-180 ZE-1-2-1-2	
MICROFILMED	BY-DATE		BY-GATE		REV BY DATE		DESCRIPTION	REV
	R.E. SAWELL APPROVAL		KEM APPROVAL					
	REVISIONS							
	COMMENT REVIEW							

H-2-90435	DRAWING LIST
NUMBER	TITLE
REFERENCES	
NEXT USED ON H-2-90598	

RHO APPROVAL BY [signature] DATE 11/1/83
PROJ ENGR. JWES 9-1-83
DS [signature] 9/1/83
APPROVED BY JWW [signature] 9/1/83
SAFETY [signature] 9/1/83
APPROVED BY [signature] 9/12/83
CHECKED BY J. JONES 9/1/83
DRAWN BY G.C. CLEVELAND 9/1/83
DESIGNED BY J.S. BANNER 9/1/83
CLASSIFICATION BY NONE | NOT REQD

U. S. DEPARTMENT OF ENERGY
Richland Operations Office
KAISER ENGINEERS HANFORD COMPANY

JUMPER ASSEMBLY 14-M-(P) VALVE PIT

PROJECT TITLE 241-AP TANK FARM

PROJ	NO	PAGE
B 340	X 34002	R 295A2
SCALE SHOWN	BLDG 241-AP	PAGES 8405
DRAWING NUMBER H-2-90728	SHEET 1	OF 3	REV 1

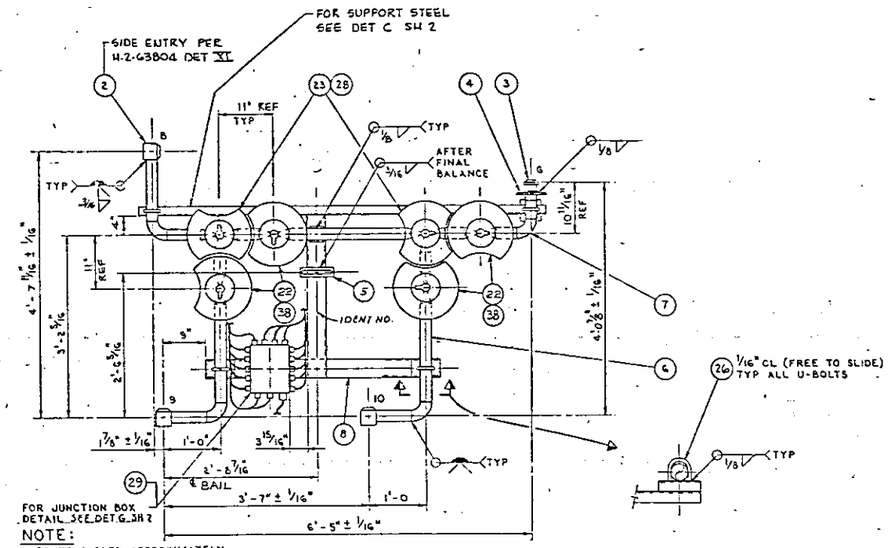

NOTE:
ROUTE CABLES APPROXIMATELY AS SHOWN AND SECURE TO PIPE OR SUPPORT STEEL W/PN 39 - AVOID IMPACT WRENCH & LIFTING BAIL AREAS

PLAN

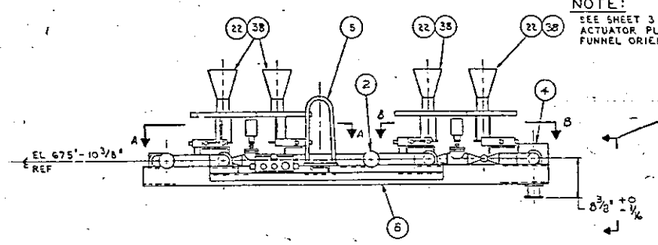

ELEVATION

1 ASSEMBLY
SCALE: 1" = 1'-0"

NOTE:
SEE SHEET 3 FOR VALVE, ACTUATOR PLATE, AND FUNNEL ORIENTATION

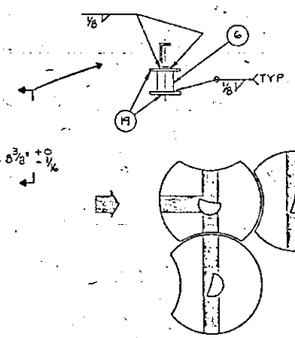

POSITION 1

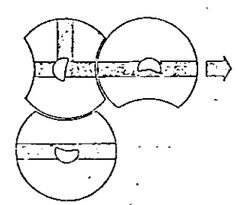

POSITION 2

VALVE DISC OPERATION

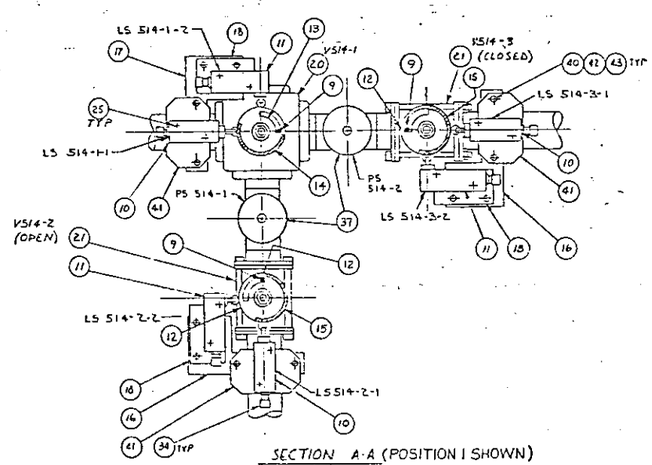

SECTION A-A (POSITION 1 SHOWN)
SCALE: 3" = 1'-0

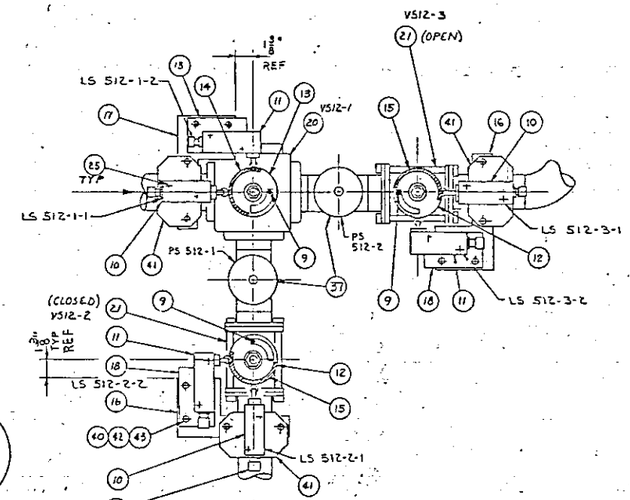

SECTION B-B (POSITION 2 SHOWN)
SCALE: 3" = 1'-0

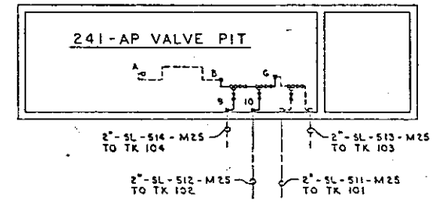

KEY PLAN
SCALE: NONE

QTY	PART NO	DESCRIPTION	MATERIAL
X	1	ASSEMBLY	———
3	2	2" HORIZ CONN ASSY #1 GASKET TYPE III	H-2-32420
1	3	2" MALE CONN NOZZLE PN 3	H-2-32446
1	4	2" KICK PLATE PN 4	H-2-30600
1	5	LIFTING BAIL ASSY 5	H-2-90161
AR	6	PIPE - 2" SCHED 40	ASTM A53 TYPE S GR B
4	7	ELBOW - 2" SCHED 40 90° LR BUTT WELD	ASTM A234 GR WPB
AR	8	CHANNEL - C4 x 5.4	ASTM A36
6	9	STOP PIN SEE DETAIL X	H-2-90853
6	10	LIMIT SWITCH	SEE NOTE 3 & 8
6	11	LIMIT SWITCH	SEE NOTE 3 & 8
4	12	LIMIT SWITCH ACTUATOR DET A2	H-2-90852
2	13	LIMIT SWITCH ACTUATOR, DET A1	H-2-90852
2	14	PIPE SEGMENT DET E	H-2-90852
4	15	PIPE SEGMENT DET F	H-2-90852
4	16	LIMIT SWITCH MTG BRKT, DET G	H-2-90852
2	17	LIMIT SWITCH MTG BRKT, DET H	H-2-90852
6	18	LIMIT SWITCH MTG PLATE, DET L	H-2-90852
2	19	PLATE 1/4" x 4 1/2" x 4 1/2"	ASTM A36
2	20	2" 3 WAY BALL VALVE SEE NOTE 4	PITTSBURGH BRASS #2-3-P-E-17-BW-S-NG
4	21	2" 2 WAY BALL VALVE SEE NOTE 4	PITTSBURGH BRASS #2-3-P-E-17-BW-S-PNG
4	22	INTERLOCK PLATE DET M	H-2-90853
2	23	INTERLOCK PLATE, DET N	H-2-90853
2	24	PLATE 1/8" x 1 3/16" x 3"	ASTM A36
24	25	ALLEN CAP SCREW #10-32 X 1 3/4" LG W/ 1/4 THD LG	ASTM-A-193-GR B8 304 SST
4	26	U-BOLT 3/8" DIA FOR 2" PIPE	ASTM A36
4	27	CGE FITTING	CROUSE-HINDS #CGE 292
2	28	VALVE FUNNEL DETAIL Z2	H-2-90852

CONTINUED ON SHEET 2

GENERAL NOTES:

1. FABRICATION & TESTING SHALL BE IN ACCORDANCE WITH HANFORD SPEC HWS-5706 REV 12 OR CURRENT REVISION
2. HYDROSTATIC TEST AT 600 PSIG.
3. LIMIT SWITCH PN 10 SHALL BE SQUARE-D TYPE C, IND & INC WITH TYPE 9007-C54D TOP ROLLER PLUNGER, LIMIT SWITCH PN 11 TO BE SAME AS ABOVE EXCEPT WITH TYPE 9007-C54F SIDE ROLLER PLUNGER.
4. 2-WAY AND 3-WAY BALL VALVES PN 20 & 21 SHALL CONFORM TO THE FOLLOWING SPECIFICATIONS:
   a) CARBON STEEL BODY
   b) BUTTWELD ONE PIECE CASTING CARBON STEEL END FITTINGS INTEGRALLY CAST AND MACHINED.
   c) 50 PERCENT 316 STAINLESS STEEL FILLED TEFLON BALL SEAT RINGS
   d) ASBESTOS BODY GASKET (BONDED)
   e) GRAPHITED ASBESTOS STEM PACKING
   f) OMIT HANDLE
   g) GLASS FILLED TEFLON BODY FILLER (PN 21 ONLY)
   h) DRILL & TAP VALVES TO ACCEPT FUTURE MOTOR ACTUATORS.
5. FOR VALVE FUNNEL ASSEMBLY INSTRUCTIONS SEE DETAIL U H-2-90853

CONTINUED ON SHEET 2

RELEASED FOR CONSTRUCTION
BY GSRiley DATE 12/11/83
DOE

H-2-90835	DRAWING LIST
NUMBER	TITLE
REFERENCES	
NEXT USED ON	H-2-90835

REV	DESCRIPTION	BY	DATE	APPROVAL
1	AS-BUILT FOR PROJ. B-340 & PROJ 540-100 ZE-1, E4, E3	JEC	12/12/83	KEH

REVISIONS

COMMENT REVIEW

RHO APPROVAL BY — DATE 12/6/83

U. S. DEPARTMENT OF ENERGY
Richland Operations Office
KAISER ENGINEERS HANFORD COMPANY

JUMPER ASSEMBLY
9-10-B-G
VALVE PIT

PROJECT TITLE 241-AP TANK FARM
PROJ B-340 WO 234602 JOB R29SA2
SCALE AS SHOWN BLDG 241-AP MODEL 8405
CLASSIFICATION NONE BY NOT REQ'D
DRAWING NUMBER H-2-90730 SHEET 1 OF 3 REV 1

DRAWN J. BREED

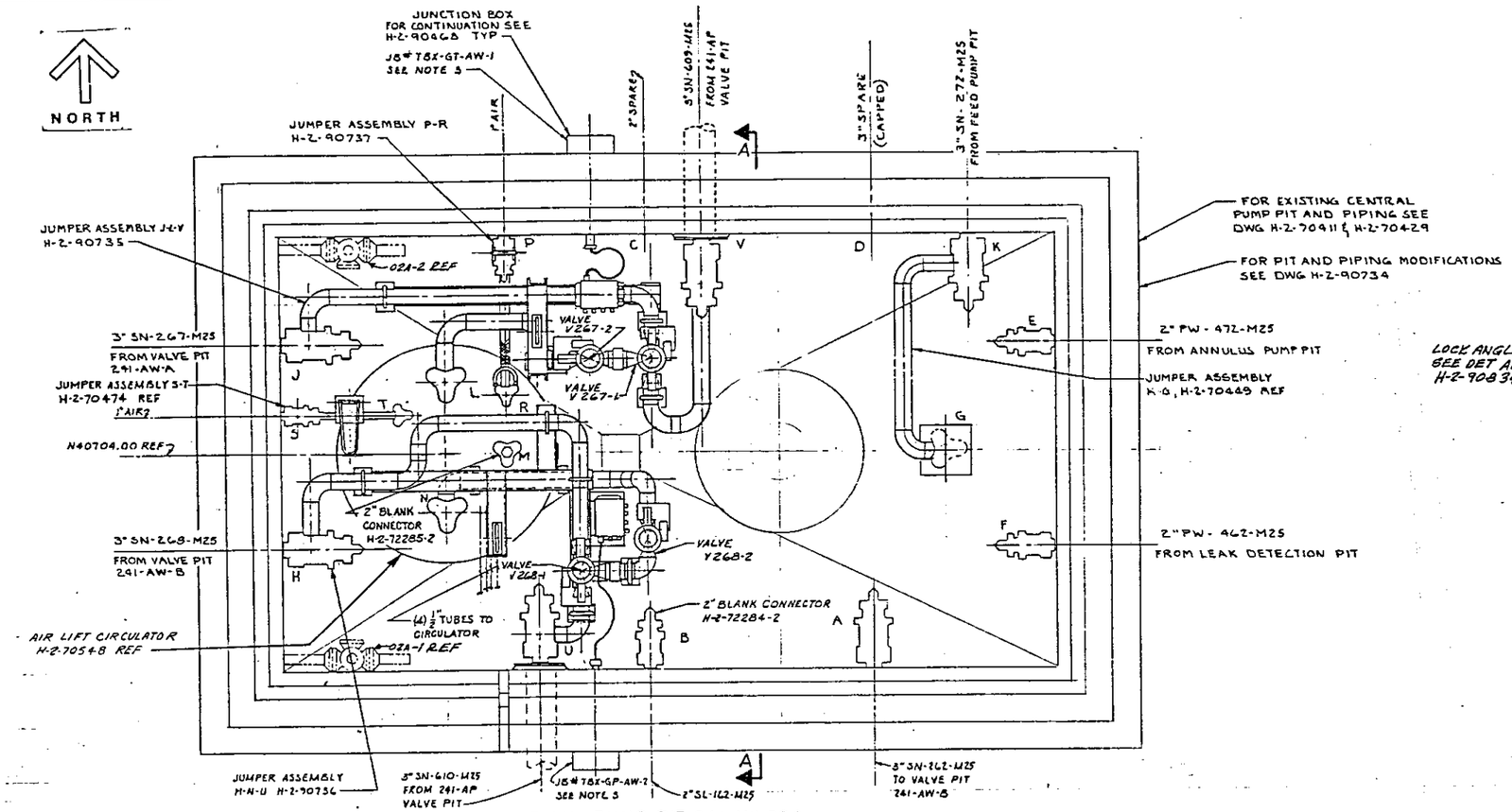

PLAN - PUMP PIT 241-AW-02A
COVER BLOCKS REMOVED FOR CLARITY

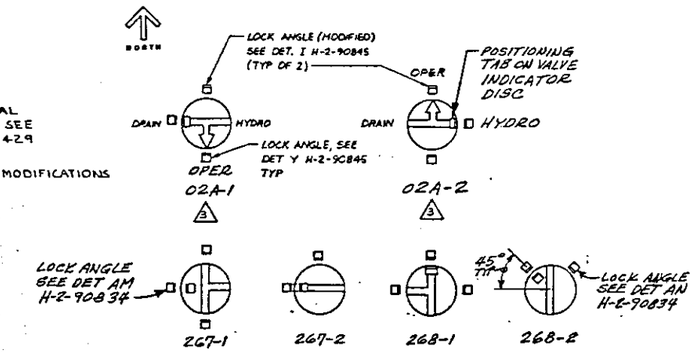

VALVE LOCK ANGLE LOCATION DIAGRAM

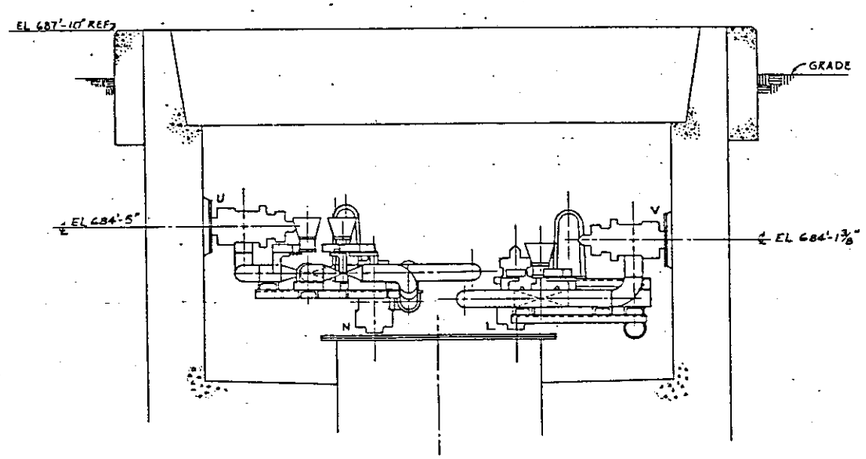

SECTION A-A

NOTES:

1. FOR GENERAL NOTES SEE DWG H-2-90543 & H-2-90544
2. FOR EXISTING PIPING SEE DWG H-2-70429
3. ALL ELECTRICAL JUNCTION BOXES WILL BE NEMA TYPE #4 HOFFMAN ENGRG CO #A-1008 NF W/PANEL #A-10PB & TERMINAL STRIPS & MOUNTED W/(4) 5/8" x 1 5/8" HILTI KWIK-BOLTS #5500004.
4. USE VALVE EXTENSION HANDLES PER DETAIL Y. ON H-2-90845 FOR ALL VALVES EXCEPT: VALVE 267-1 SHALL BE PER DETAIL AM ON H-2-90834 & VALVE 268-2 SHALL BE PER DETAIL AN ON H-2-90834.

REV 1 DOE [illegible] DATE [illegible]

RELEASED FOR CONSTRUCTION BY [illegible] DATE 12/1/89 DOE

RS M			[illegible] 12/1/89	J.H.W. 12/1/89	REVISION PER CEO 40204	3
M	[illegible] 9-10-86	NA	[illegible]	JDC 7-3-86	AS-BUILT FOR PROJ B-340 a) B-340-411, E D-G F1,2 e) UCR B-340-255/DFC c) DFC B-304-2042, B1,2, E1,2, h) DFC B-340-161 Z B12, D7, E7 m) DFC B-340-221 Z D7.	2
M	[illegible] 2-27-86	[illegible]	[illegible]	[illegible]	PER DFC # B-340-112 F. PIT PLAN & SECTION BN C9 & C5 a) ADDED CONC COLLAR AROUND. b) ADDED NOTE 3 ZONE C2; c) ADDED JB NO'S ZONES C6 & F7;	1
	BY-DATE	BY-DATE			DESCRIPTION	REV 3
MICROFILMED	ROC KWELL	KEN APPROVAL			REVISIONS	
	APPROVAL				COMMENT REVIEW	

NUMBER	TITLE	NUMBER	TITLE
H-2-70429	JUMPER ARRANGEMENT CENTRAL PUMP PIT 241-AW-01A THRU 06A	H-2-70449	JUMPER ASSEMBLY
H-2-70411	PIPING PLAN CENTRAL PUMP PIT 241-AW-01A THRU 06A	H-2-90435	DRAWING LIST
		REFERENCES	
		NEXT USED ON H-2-90435	

DRAWING TRACEABILITY LIST

IMPACT LEVEL 2

RHO APPROVAL BY [illegible] DATE 12/1/89

U. S. DEPARTMENT OF ENERGY
Richland Operations Office
KAISER ENGINEERS HANFORD COMPANY

JUMPER ARRANGEMENT
CENTRAL PUMP PIT
241-AW-02A

PROJECT TITLE 241 AP TANK FARM

PROJ	B-340	WO	X3400Z
JOB	R295&E	SCALE	1" = 1'-0"
MODEL	8404	REQ'D	241AW
CLASSIFICATION (BY NO)	NONE	DRAWING NUMBER	H-2-90731
SHEET	1	OF	1
REV	3		

DRAWN BY C.R. [illegible] 6/8/89
DESIGNED BY G. CLEVELAND 3/14/89
CHECKED BY D. CANNEL 7-1-89

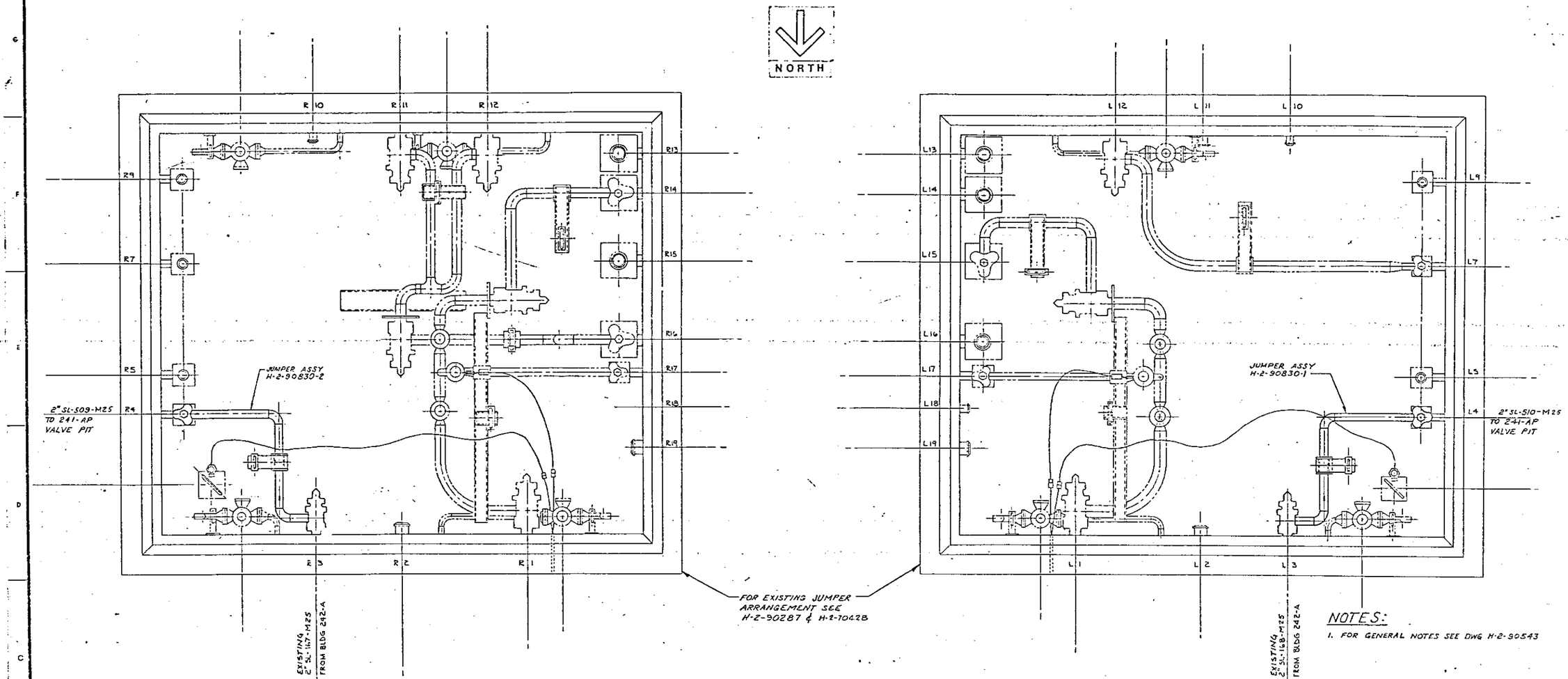

PLAN
VALVE PIT 241-AW-B
SCALE: 1"=1'-0

PLAN
VALVE PIT 241-AW-A
SCALE: 1"=1'-0

NOTES:

1. FOR GENERAL NOTES SEE DWG H-2-90543

RELEASED FOR CONSTRUCTION
BY [signature] DATE 1-1-83
DOE

NAME	TITLE	NUMBER	TITLE
H-2-90287	JUMPER ARRANGEMENT VALVE PITS	H-2-90435	DRAWING LIST
DRAWING TRACEBILITY LIST		NEXT USED ON	H-2-90435

REV	BY-DATE	BY-DATE	REV BY DATE	DESCRIPTION	REV
	RHO APPROVAL	KEH APPROVAL		AS BUILT FOR PROJ 8540	

REVISIONS

COMMENT REVIEW

U. S. DEPARTMENT OF ENERGY
Richland Operations Office
KAISER ENGINEERS HANFORD COMPANY

PIPING
JUMPER ARRANGEMENT
VALVE PITS 241-AW-A & B

PROJECT TITLE: 241-AP TANK FARM

PROJ	WO	JOB
8-340	X34002	R295A2

SCALE	BLDG	PHASE
AS SHOWN	241-AW	8404

CLASSIFICATION	BY	DRAWING NUMBER	SHEET	OF	REV
NONE	NOT REQD	H-2-90732	1	1	1

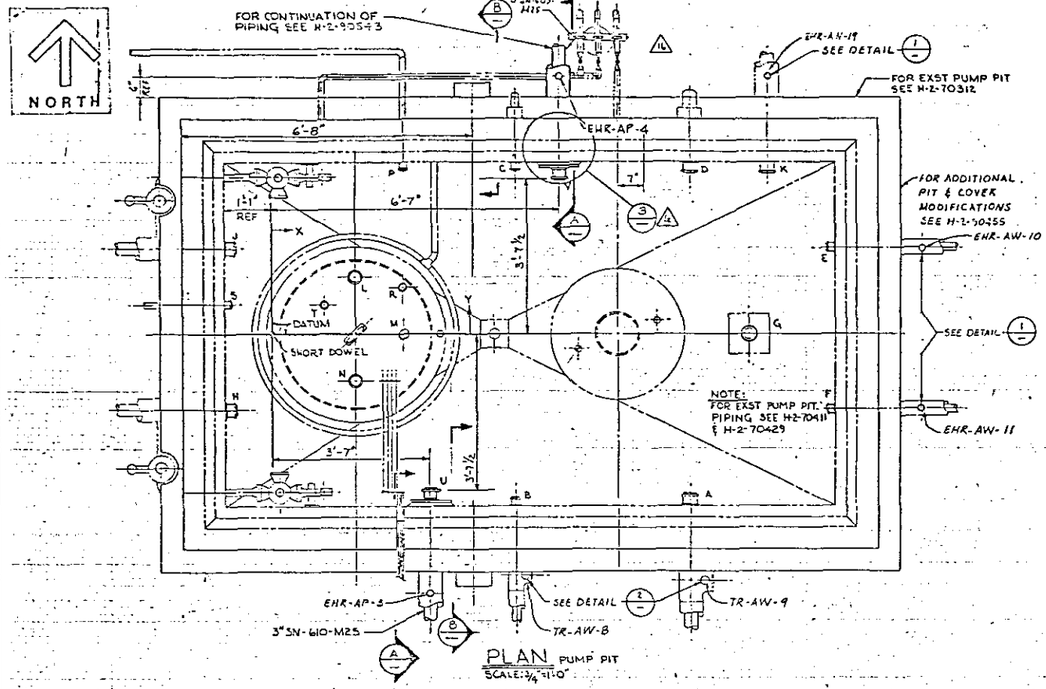

PLAN PUMP PIT
SCALE: 3/4"=1'-0"

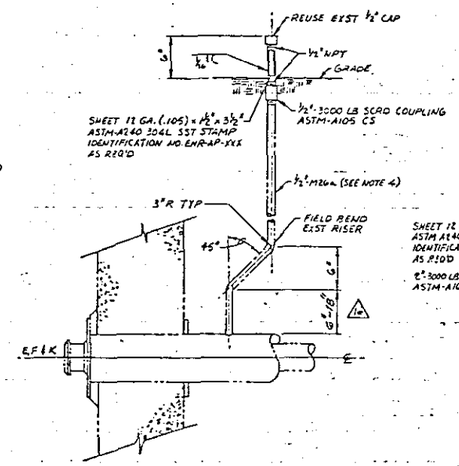

DETAIL 1
SCALE: 1 1/2"=1'-0"

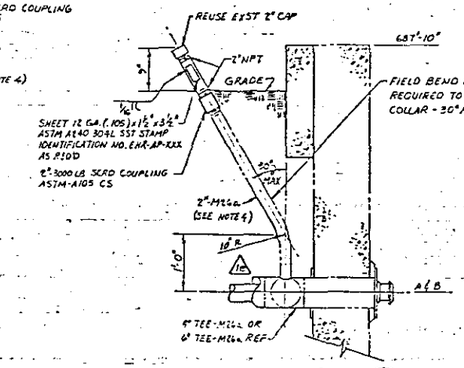

DETAIL 2
SCALE: 1"=1'-0"

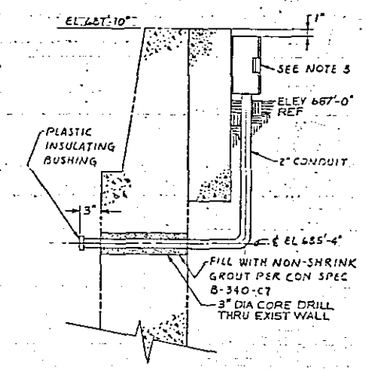

AS-BUILT DATA			
NOZZLE	X	Y	Z
U	3'-7"	3'-7 23/64"	1'-11 3/64"
V	6'-6 37/64"	3'-7 23/64"	1'-7 3/64"

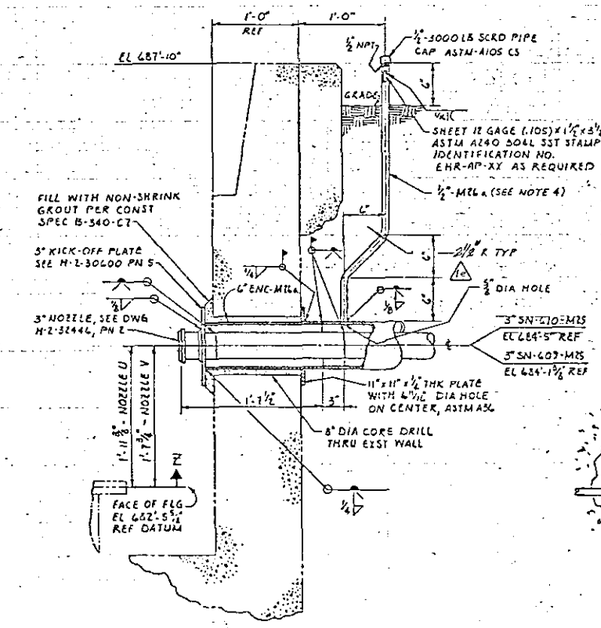

SECTION A
SCALE: 1 1/2"=1'-0"

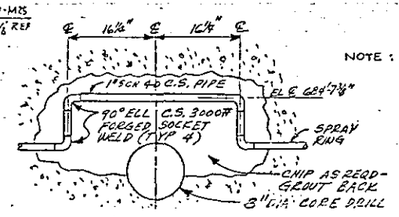

DETAIL 3
SCALE: NONE

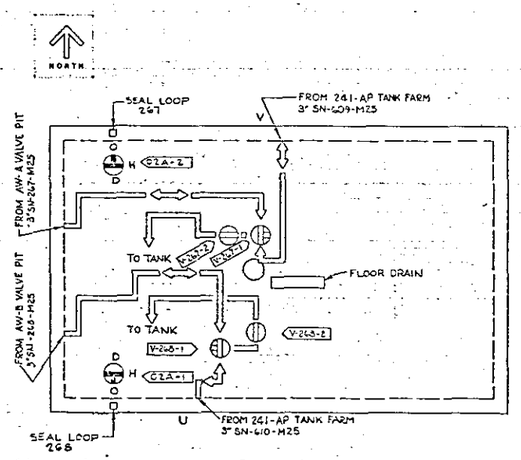

PLAN PAINTING DIAGRAM
SCALE: 1/2"=1'-0"

SECTION B
SCALE: 1 1/2"=1'-0"

NOTES:

1. FOR GENERAL NOTES SEE DRAWING H-2-90543.
2.
3. ALL ELECTRICAL BOXES WILL BE NEMA TYPE #4 HOFFMAN ENERG CO #A-1008NF W/PANEL #A-10PB, MOUNTED W/(4) 1/4" X 1 7/8" HILTI KWIK-BOLTS #5500004.
4. PAINT ABOVE GRADE PORTION OF PIPING WITH A HIGH VISIBILITY YELLOW.
5. MAKE (2) NEW SEAL LOOP VALVE HANDLES PER DETAIL (V) ON DWG H-2-70551 TO ACCOMODATE NEW COVER BLOCKS (H-2-90455)

NOTE: FOR "SEAL LOOP" AND "FLOOR DRAIN" PAINTING INSTRUCTIONS SEE H-2-70426.

FOR ALL OTHER PAINTING INSTRUCTIONS SEE H-2-90596.

RELEASED FOR CONSTRUCTION
DATE 9-90 BY DOE

NUMBER	TITLE
H-2-70429	JUMPER ARRANGEMENT CENTRAL PUMP PIT 241-AW-01A THRU 06A
H-2-70411	PIPING PLAN CENTAL PUMP PIT 241-AW-01A THRU 06A
H-2-70312	STRUCTURAL CENTRAL PUMP PITS PLANS, SECTION & DETAILS 241-AW-01A THRU 06A

REFERENCES	
H-2-70426	PAINTING DIA. 241-AW
H-2-32446	MALE CONN NOZZLE
H-2-30600	STD SQUARE KICK-OFF PLATE

DRAWING LIST	
NUMBER	TITLE
H-2-90435	

DRAWING TRACEABILITY LIST — NEXT USED ON H-2-90455

MICROFILMED

REVISIONS					
REV	DESCRIPTION	BY	DATE	BY-DATE	REVIEW APPROVAL
1	AS-BUILT FOR PROJ B-340 a) RED CANS Z-E5, F4, C10 b) NCR B-340-09 Z-G2 c) DFC B-340-151 Z-B,12 d) DFC B-340-170 Z-G-10, C-12 e) DFC B-340-175 Z-G-10, E-8,9				KEN APPROVAL

COMMENT REVIEW

RHD APPROVAL BY [illegible] DATE 9/11/90

U. S. DEPARTMENT OF ENERGY
Richland Operations Office
KAISER ENGINEERS HANFORD COMPANY

PIPING MODIFICATIONS CENTRAL PUMP PIT 241-AW-02A

PROJECT TITLE 241-AP TANK FARM

PROJ B-340 NO X34002 ATC R295A2
DRAWN D. PECK SCALE AS SHOWN BLDG 241-AW SHEET 0402
CLASSIFICATION NONE | DRAWING NUMBER NOT REQD | H-2-90734 | SHEET 1 | REV 1

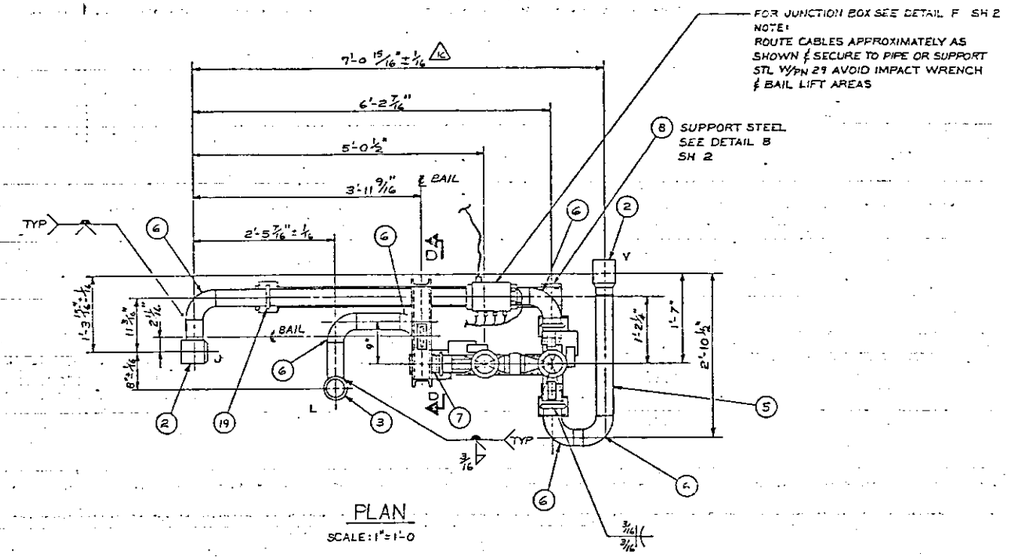

PLAN

SCALE: 1" = 1'-0

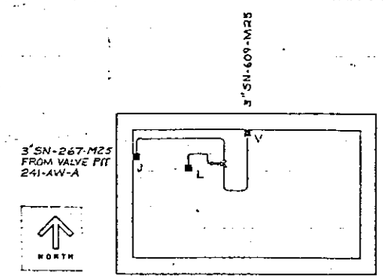

241 AW-02A
CENTRAL PUMP PIT

KEY PLAN

SCALE: NONE

QTY	PN	DECRIPTION	MATERIAL
X	1	ASSEMBLY	———
2	2	3" HORIZ CONN ASS #1 GASKET TYPE III	H-2-32430
1	3	3" VERT CONN ASS #2 GASKET TYPE III	H-2-32430
1	4	LIFTING BAIL ASSEMBLY PT #5	H-2-90161
AR	5	PIPE 3" SCHED 40	ASTM A53 TYPE S GR B
7	6	ELBOW 3" SCHED 40 90° LR BUTT WELD	ASTM A234 GR WPB
2	7	ELBOW 3" SCHED 40 90° SR BUTT WELD	ASTM A234 GR WPB
AR	8	CHANNEL C4 X 5.4	ASTM A36
3	9	LIMIT SWITCH	SEE NOTE 3 & 1
2	10	LIMIT SWITCH	SEE NOTE 3 & 8
1	11	PRESSURE SWITCH ASSEMBLY	SEE PROCUREMENT SPEC B 340-P1
1	12	LIMIT SWITCH ACTUATOR DET B	H-2-90852
1	13	LIMIT SWITCH ACTUATOR DET C	H-2-90852
1	14	VALVE FUNNEL DET Z1	H-2-90852
2	15	LIMIT SWITCH MTG BRKT DET J	H-2-90852
1	16	LIMIT SWITCH MTG BRKT DET T	H-2-90853
1	17	3" 3-WAY BALL VALVE, SEE NOTE #4	PITTSBURGH BRASS #3-MP-E-19-BW-4-BG
1	18	3" 2-WAY BALL VALVE, SEE NOTE #4	PITTSBURGH BRASS #3-SP-E-19-BW-4-BO-WG
4	19	U-BOLT 1/2" DIA FOR 3" PIPE	ASTM A36
5	20	LIMIT SWITCH MTG PLATE DET L	H-2-90852
2	21	STOP PIN DET X	H-2-90853
10	22	ALLEN CAP SCREW #10-32 X 1 3/16" LG W/ 1/4" THD LG	ASTM-A193 GR B8 304 SST
1	23	SUPPORT DETAIL XII	H-2-63304
1	24	COUNTERWEIGHT 4" SCHED 40 PIPE X 11 3/8 LONG FILLED W/LEAD APPROX WT 72 LBS	ASTM A53 TYPE S GR B / ASTM B29
2	25	PLATE 1/4" X 4 1/2" DIA	ASTM A36
2	26	PIPE SEGMENT DET D	H-2-90852
1	27	CGE FITTING	CROUSE-HINDS #CGE-292
1	28	VALVE FUNNEL DET Z3	H-2-90852
AR	29	WORM SCREW CLAMP	SST
5	30	CGB FITTING	CROUSE-HINDS #CGB 192

CONTINUTED ON SHT 2

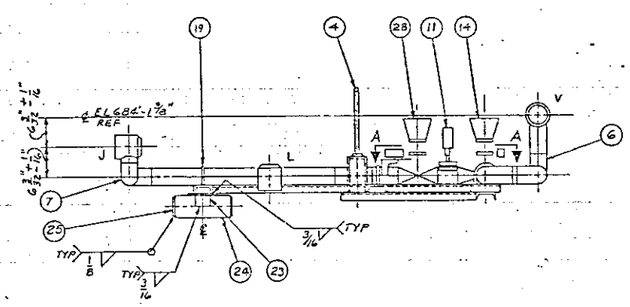

ELEVATION

1 ASSEMBLY

SCALE: 1" = 1'-0"

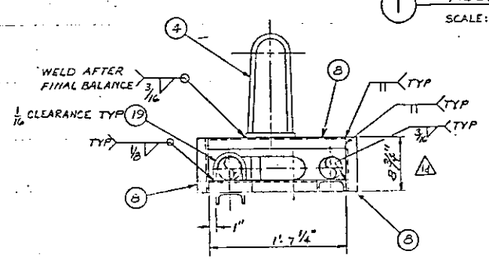

SECTION D-D

SCALE: 1 1/2" = 1'-0"

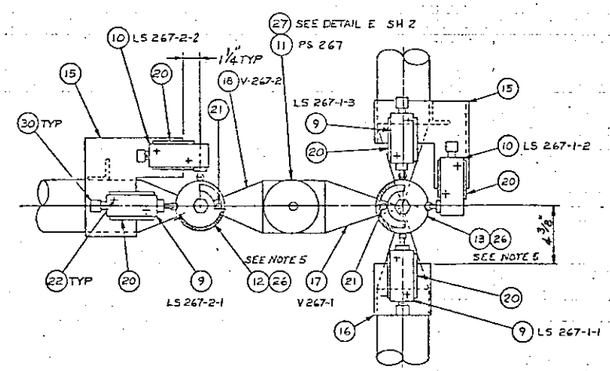

SECTION A-A

SCALE: NONE

GENERAL NOTES:

1. FABRICATION & TESTING SHALL BE IN ACCORDANCE WITH HANFORD SPECIFICATION HWS-5786 REV 12, OR CURRENT REVISION
2. HYDROSTATIC TEST AT 600 PSIG.
3. LIMIT SWITCH PN 9 SHALL BE SQUARE-D TYPE C IND INC WITH TYPE 9007 C54D TOP ROLLER PLUNGER, LIMIT SWITCH PN 10 TO BE SAME AS ABOVE EXCEPT WITH TYPE 9007 C54F SIDE ROLLER PLUNGER.
4. 2-WAY AND 3-WAY BALL VALVES PN 17 & 18 SHALL CONFORM TO THE FOLLOWING SPECIFICATIONS.
   a) CARBON STEEL BODY
   b) BUTTWELD ONE PIECE CASTING CARBON STEEL END FITTINGS
   c) 50 PERCENT, 316 STAINLESS STEEL FILLED TEFLON BALL SEAT RINGS
   d) ASBESTOS BODY GASKET (BONDED)
   e) GRAPHITED ASBESTOS STEM PACKING
   f) OMIT HANDLE
   g) GLASS FILLED TEFLON BODY FILLER - PT 18 ONLY
   h) DRILL & TAP VALVES TO ACCEPT FUTURE MOTOR ACTUATORS.
5. FOR VALVE FUNNEL ASSEMBLY INSTRUCTIONS SEE DETAIL U H-2-90853

CONTINUTED ON SHEET 2

RELEASED FOR CONSTRUCTION
BY G.A. Rosler DATE 12/1/83
DOE

H-2-90435	DRAWING LIST				
NUMBER	TITLE				
REFERENCES					
NEXT USED ON	H-2-90731				

REV	BY-DATE	BY-DATE	REV BY DATE	DESCRIPTION	NO
	CEJ 9-10-86	NA	JBC 12/2/86	AS BUILT FOR PROJ B-340 a) RCD CHG'S Z B-7 WAS 7 1/2 CTS-E-340-185 Z F-6 b) SRC D-340-130 Z E-1, E-1, 2 c) RCS-340-156 Z F-1, 2	1
2HD APPROVAL	KEM APPROVAL			REVISIONS	
COMMENT REVIEW					

RHO APPROVAL BY [signature] DATE 9/1/83

U. S. DEPARTMENT OF ENERGY
Richland Operations Office
KAISER ENGINEERS HANFORD COMPANY

JUMPER ASSEMBLY
J-L-V
241-AW-02A

PROJECT TITLE 241-AP TANK FARM

PROJ B-340 #X34002 #R295A2
SCALE SHOWN BLDG 241-AW DATE 8-05
CLASSIFICATION NONE NOT EXCT
DRAWING NUMBER H-2-90735 SHEET 1 OF 3 REV 1

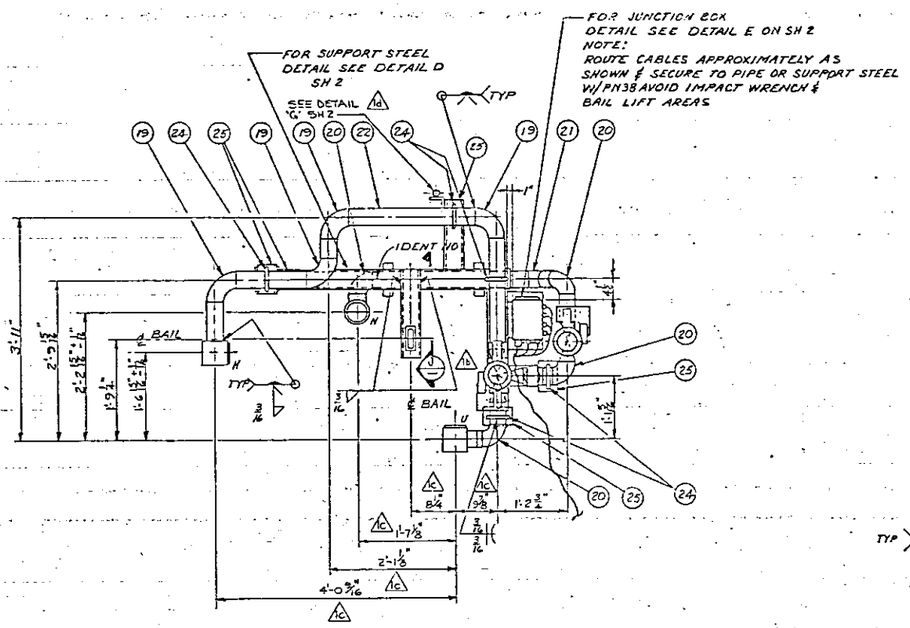

PLAN
SCALE: 1"=1'-0"

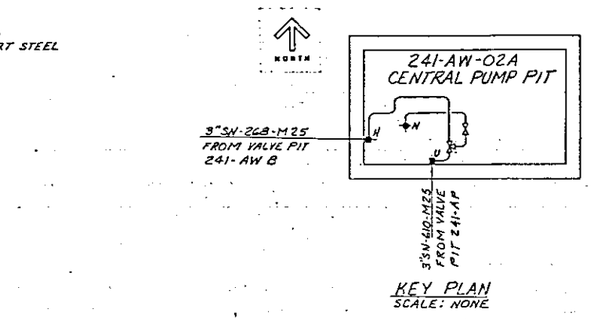

KEY PLAN
SCALE: NONE

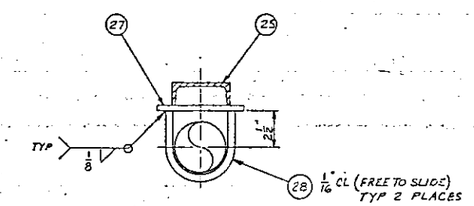

SECTION G-G
SCALE: 3"=1'-0"

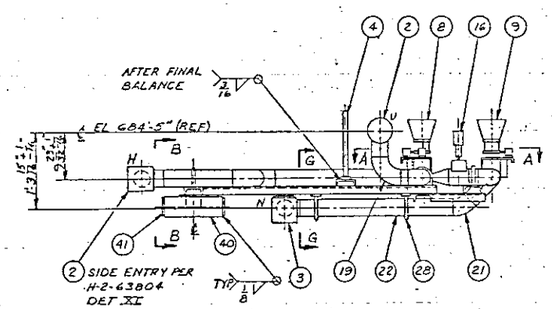

ELEVATION
SCALE: 1"=1'-0"

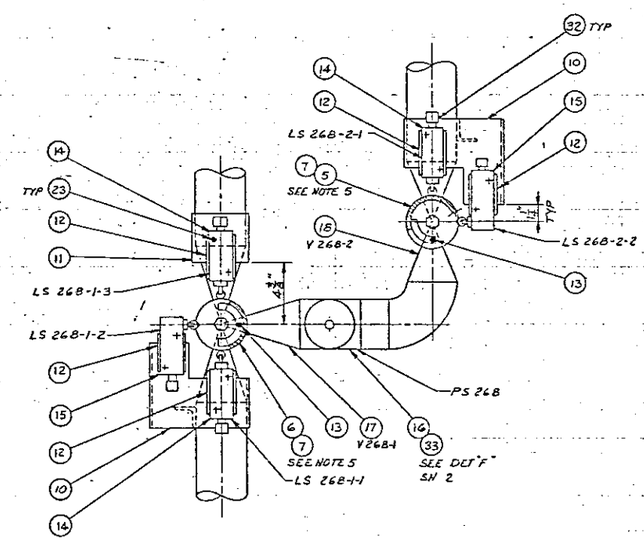

SECTION A-A
SCALE 3"=1'-0"
FOR VALVE ORIENTATION SEE DET SH 3

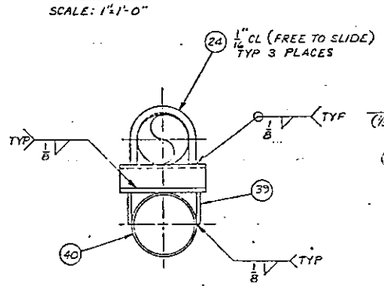

SECTION B-B
SCALE: 2"=1'-0"

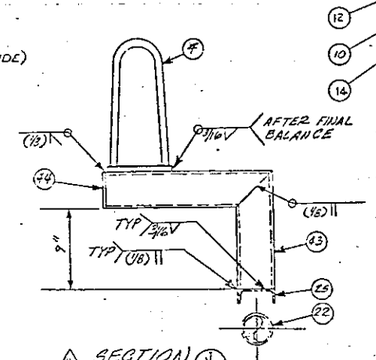

SECTION J
SCALE: NONE

QTY	PART NO	DESCRIPTION	MATERIAL
	1	ASSEMBLY	———
2	2	3" HORIZ CONN ASSY #1 GASKET TYPE III	H-2-32430
1	3	3" VERT CONN ASSY #2 GASKET TYPE III	H-2-32430
1	4	LIFTING BAIL ASSY S	H-2-90161
1	5	LIMIT SWITCH ACTUATOR DET B	H-2-90852
1	6	LIMIT SWITCH ACTUATOR DET C	H-2-90852
2	7	PIPE SEGMENT DET D	H-2-90852
1	8	VALVE FUNNEL DET Z1	H-2-90852
1	9	VALVE FUNNEL DET B3	H-2-90852
2	10	LIMIT SWITCH MTG BRACKET DET J	H-2-90852
1	11	LIMIT SWITCH MTG BRACKET DET T	H-2-90853
5	12	LIMIT SWITCH MTG PLATE DET L	H-2-90852
2	13	STOP PIN DET X	H-2-90853
3	14	LIMIT SWITCH	SEE NOTE 3 & 6
2	15	LIMIT SWITCH	SEE NOTE 3 & 6
1	16	PRESSURE SWITCH ASSEMBLY	SEE PROCUREMENT SPEC 0-340-21
1	17	3"-3 WAY BALL VALVE SEE NOTE 4	PITTSBURGH BRASS #3"-HP-C-M-SN-4-HG
1	18	3"-2 WAY BALL VALVE SEE NOTE 4	PITTSBURGH BRASS #3"-P-C-M-SN-4-K-HG
5	19	ELBOW 3" SCHED 40 90° LR BUTTWELD	ASTM A 234 GR WPB
4	20	ELBOW 3" SCHED 40 90° SR BUTTWELD	ASTM A 234 GR WPB
1	21	ELBOW 3" SCHED 40 45° BUTTWELD	ASTM A 234 GR WPB
AR	22	PIPE 3" SCHED 40	ASTM A 53 TYPE S OR B
10	23	ALLEN CAP SCREW #10-32 x 1 3/4" LG W/ 1/4" THD LG	ASTM A 193 GR B8 304 SST
5	24	U-BOLT 1/8" DIA FOR 3" PIPE	ASTM A 36
AR	25	CHANNEL C4 x 5.4	ASTM A 36
2	26	L 2 x 1 1/2" x 1/4" x 7" LG	ASTM A 36
2	27	BAR FLAT 2" x 3/8" x 6" LG	ASTM A 36
2	28	U-BOLT 1/2" DIA FOR 3" PIPE SEE SECT G-G	ASTM A 36
1	29	PANEL 6 3/4" x 4 3/4"	HOFFMAN ENG CO A 8 P 6
6	30	CGB FITTING W/ LOCKNUT & SEALING GASKET	CROUSE-HINDS #CGB 192-SG
1	31	CGB FITTING W/ LOCKNUT & SEALING GASKET	CROUSE-HINDS #CGB 499-SG
5	32	CGB FITTING	CROUSE-HINDS #CGB 192
1	33	CGE FITTING	CROUSE-HINDS #CGE 292
1	34	TYPE SO CABLE 10/C #12 x 20' LG	STD WIRE & CABLE #1338-10
AR	35	CABLE 2/C #14 KAPTON COVERED	STD WIRE & CABLE #D3167
1	36	ELECTRICAL BOX NEMA 13	HOFFMA ENG CO A 806SCEP
1	37	TERMINAL BLOCK 10 POINT	BUCHANAN #51510
AR	38	WORM SCREW CLAMP	SST

CONT ON SH 2

NOTES:

1. FABRICATION & TESTING SHALL BE IN ACCORDANCE WITH HANFORD SPEC HWS-5786 REV 12, OR CURRENT REVISION.
2. HYDROSTATIC TEST AT 600 PSIG
3. LIMIT SWITCH PN 14 SHALL BE SQUARE-D TYPE C, 1 NO & 1 NC WITH TYPE 9007-CS4D TOP ROLLER PLUNGER, LIMIT SWITCH PN 15 TO BE SAME AS ABOVE EXCEPT WITH 9007-CS4F SIDE ROLLER PLUNGER.
4. 2-WAY & 3-WAY BALL VALVES PN 17 & 18 SHALL CONFORM TO THE FOLLOWING SPECIFICATIONS.
   a) CARBON STEEL BODY
   b) BUTTWELD ONE PIECE CASTING CARBON STEEL END FITTINGS, INTEGRALLY CAST & MACHINED.
   c) 50 PERCENT 316 STAINLESS STEEL FILLED TEFLON BALL SEAT RINGS
   d) ASBESTOS BODY GASKET (BONDED)
   e) GRAPHITED ASBESTOS STEM PACKING
   f) OMIT HANDLE
   g) GLASS FILLED TEFLON BODY FILLER – PN 18 ONLY
   h) DRILL & TAP VALVES TO ACCEPT FUTURE MOTOR ACTUATORS
5. FOR VALVE FUNNEL ASSEMBLY INSTRUCTIONS SEE DETAIL U H-2-32853

CONTINUED ON SHEET 2

RELEASED FOR CONSTRUCTION
BY [illegible] DATE [illegible]
DOE

NUMBER	TITLE
H-2-20435	DRAWING LIST
REFERENCES	
NEXT USED ON H-2-30721	

REV	DESCRIPTION
1	AS BUILT FOR PROJ 8340 a) DFC 8340-522.2 E-6 b) DFC 8340-496 & DG7 EG c) DFC 8340-47 2E-6, 2E-5, 2E-2 d) DCF 32-47 2E-6, 2E-5, 2E-2 e) DCF 8-31-490 2E-1, 2E-1, E

REVISIONS

	BY-DATE	BY-DATE
MICROFILMED		
APPROVAL	XEH APPROVAL	
COMMENT REVIEW		

PNO APPROVAL BY [illegible] DATE 1/1/85

U. S. DEPARTMENT OF ENERGY
Richland Operations Office
KAISER ENGINEERS HANFORD COMPANY

PROJ ENGR [illegible]
QA [illegible]
APPROVED BY [illegible]
SAFETY [illegible]
APPROVED BY [illegible]
CHECKED BY [illegible]
DRAWN BY J. HAGLES
DESIGNED BY J. L. CLEVELAND
CLASSIFICATION (B) NONE NOT REQD

JUMPER ASSEMBLY H-N-U 241-AW-02A

PROJECT TITLE 241 AP TANK FARM

PROJ	WO	JOB
8340	X34002	R29SA2

SCALE	BLDG	SHEET
SHOWN	241 AW	8405

DRAWING NUMBER H-2-90736 — SHEET 1 OF 3 — REV 1

QTY	KEY	DESCRIPTION	MATERIAL
X	1	ASSEMBLY	—
3	2	2" VERT CONN ASSY #2, GASKET TYPE III	H-2-362220
1	3	LIFTING BAIL ASSY #5	H-2-90101
AR	4	PIPE, 2" SCHED 40	ASTM A 53 TYPE S, GR B
2	5	ELBOW, 2" SCHED 40 90° LR BTWLD	ASTM A234 GR WPB
1	6	TEE, 2" SCHED 40	ASTM A234 GR WPB
3	7	VALVE FUNNEL DET E3	H-2-90852
3	8	PIPE SEGMENT DET AC	H-2-90845
3	9	LIMIT SWITCH ACTUATOR DET A2	H-2-90852
3	10	2" 2WAY BALL VALVE, SEE NOTE 6	PITTSBURGH PACKS #7745-5-17-2W-4-F304-G
3	11	LIMIT SWITCH	SEE NOTE 3 & 8
3	12	LIMIT SWITCH	SEE NOTE 3 & 8
3	13	LIMIT SWITCH MOUNTING BRACKET DET G	H-2-90852
3	14	LIMIT SWITCH MOUNTING PLATE DET L	H-2-90852
3	15	LIMIT SWITCH MOUNTING PLATE DET AD	H-2-90845
3	16	STOP PIN, DET X	H-2-90853
12	17	HEX HD BOLT 1/4-20 UNC-2A X 1" LG	ASTM A307 GR B
12	18	HEX NUT 1/4-20 UNC-2B	ASTM A563 GR A
12	19	LOCK WASHER 1/4"	ASTM A325 TYPE 3
12	20	ALLEN CAP SCREW #10-32 X 13/16" LG W 1/4" THD	ASTM A193 GR B8 302 SST
6	21	U-BOLT 3/8" DIA FOR 2" PIPE	ASTM A 36
AR	22	WORM SCREW CLAMP	SST
AR	23	C 4 X 3.4	ASTM A 36
1	24	PIPE 6" SCHED 40 X 1'-4 1/2" LG	ASTM A 53 TYPE S, GR B
2	25	PLATE, 3/16" THK X 6 3/8" OD	ASTM A 36
AR	26	LEAD, APPROX WT - 155#	ASTM B 29
2	27	PLATE, 1/4" THK X 11" X 5 1/2"	ASTM A 36

CONTINUED ON SHEET 2

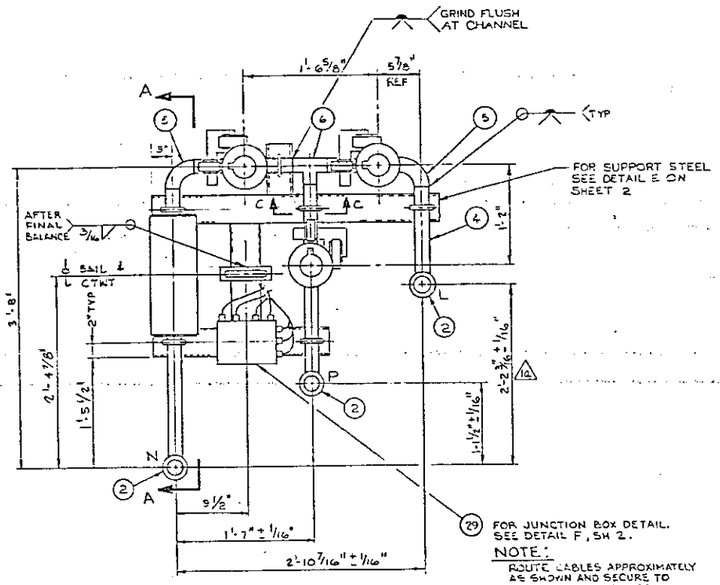

PLAN

NOTE:
ROUTE CABLES APPROXIMATELY AS SHOWN AND SECURE TO PIPE OR SUPPORT STEEL W/ PN 22 - AVOID IMPACT WRENCH & LIFTING BAIL AREAS

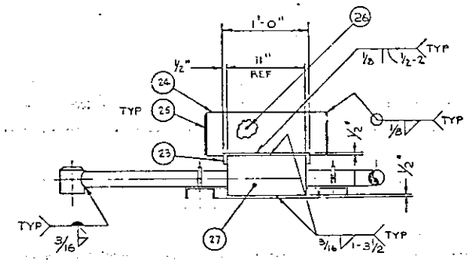

SECTION A-A
SCALE: 1"=2"=1'-0"

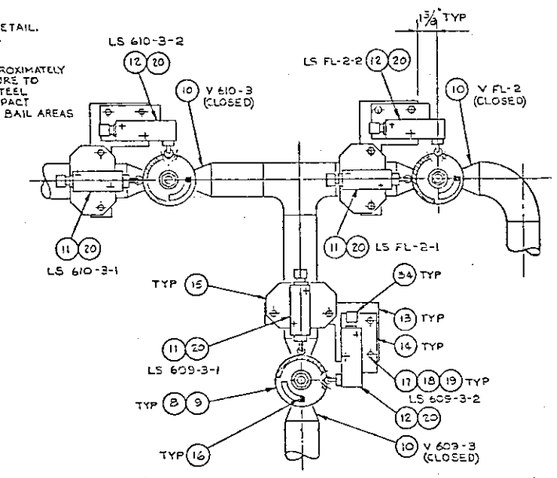

SECTION B-B
SCALE: 3"=1'-0"
POSITION 2 SHOWN

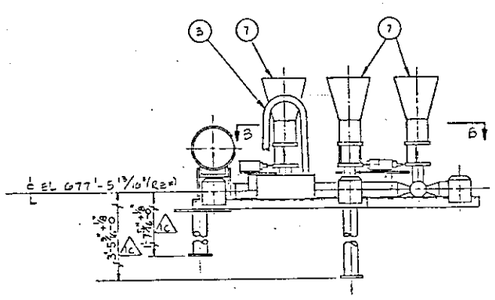

ELEVATION

1 ASSEMBLY
SCALE: 1/2"=1'-0"

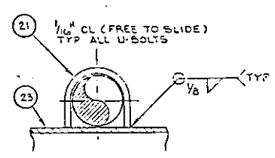

SECTION C-C
SCALE: NONE

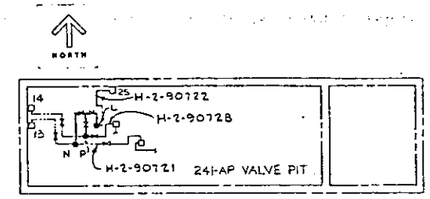

KEY PLAN
SCALE: NONE

GENERAL NOTES

1. FABRICATION AND TESTING SHALL BE IN ACCORDANCE WITH HANFORD SPEC HWS-5786 REV 12 OR CURRENT REVISION.
2. HYDROSTATIC TEST AT 600 PSIG.
3. LIMIT SWITCH, PN 11, SHALL BE SQUARE D, TYPE C, 1 NO, 1 NC, WITH TYPE 9007-C54D TOP ROLLER PLUNGER. LIMIT SWITCH PN 12 TO BE SAME AS ABOVE EXCEPT WITH TYPE 9007-C54F SIDE ROLLER PLUNGER.
4. 2 WAY BALL VALVE, PN 10, SHALL CONFORM TO THE FOLLOWING SPECIFICATIONS:
   a) CARBON STEEL BODY.
   b) BUTTWELD ONE PIECE CASTING CARBON STEEL END FITTINGS, INTEGRALLY CAST AND MACHINED.
   c) 50 PERCENT 316 STAINLESS STEEL FILLED TEFLON BALL SEAT RINGS.
   d) ASBESTOS BODY GASKET (BONDED).
   e) GRAPHITED ASBESTOS STEM PACKING.
   f) OMIT HANDLE.
   g) GLASS FILLED TEFLON BODY FILLER.
   h) DRILL AND TAP VALVES TO ACCEPT FUTURE MOTOR ACTUATORS.
5. FOR VALVE FUNNEL ASSEMBLY INSTRUCTIONS SEE DETAIL U H-2-90853
6. LIMIT SWITCHES ARE SHOWN WITH LIMIT SWITCH IN NON-ACTUATED POSITION.
7. PRESSURE SWITCHES ARE SHOWN WITH NO PRESSURE ON ELEMENT.
8. PAINT LIMIT SWITCH IDENT NO. ON TOP OF EACH SWITCH.
9. FIELD VERIFY VALVE CLEARANCES, CONFIGURATION AND LOCATION PRIOR TO FUTURE ACTUATOR PROCUREMENT AND INSTALLATION.

RELEASED FOR CONSTRUCTION
BY [illegible] DATE [illegible]
DOE

NUMBER	TITLE
H-2-90855	DRAWING LIST

REFERENCES
NEXT USED ON H-2-90898

REV	BY-DATE	BY-DATE			DESCRIPTION	REV
1	CGI 9-2-86	NA	JW	JDC 1-3-86	AS-BUILT FOR PROJ D340 c) DFC B-340-420 Z 88 b) DFC B-340-180 Z F1, C1, 2 B1, 2 a) DFC B-340-380 Z DG	1

MICROFILMED: RHO APPROVAL — KEH APPROVAL
REVISIONS
COMMENT REVIEW

RHO APPROVAL BY [illegible] DATE 7/1/85

U. S. DEPARTMENT OF ENERGY
Richland Operations Office
KAISER ENGINEERS HANFORD COMPANY

PROJ ENGR [illegible] 2-1-83
DR [illegible] 1/31/83
APPROVED BY [illegible] 2-7-83
SAFETY [illegible] 2-16-83
APPROVED BY [illegible] 4/27/83
CHECKED BY [illegible] 7/1/83
DRAWN BY B. MEYER 9-8-83
DESIGNED BY D. O'CONNOR 7/1/83
CLASSIFICATION BY NONE NOT REQD

JUMPER ASSEMBLY
N-P-L
VALVE PIT

PROJECT TITLE 241-AP TANK FARM

PROJ	NO	FOR
B340	X84002	R29542
SCALE SHOWN	BLDG 241-AP	INDEX 8006

DRAW NO NUMBER H-2-90738 — SHEET 1 — OF 3 — REV 1

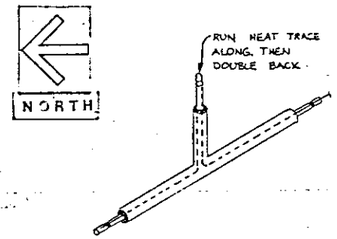

TYP BRANCH DET (4)

PRIMARY SYS SEAL POT (2)
SCALE: NONE

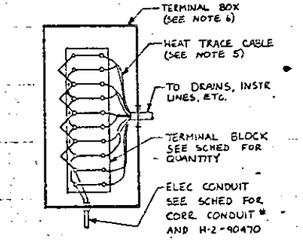

TERM BOX EQUIP NO.	POWER FROM CODE #	NO. OF HT TRACE CABLES	TOTAL OF TERMINAL
TBX-K1-3	P574	17	40
TBX-K1-4	P575	6	16
TBX-K1-5	P576	4	12
TBX-K1-6	P577	7	18
TBX-K1-7	P578	5	14
TBX-K2-1	P584	2	8
TBX-K2-2	P583	2	8
TBX-K2-3	P582	2	8
TBX-K2-4	P581	4	12
TBX-K2-5	P585	1	6

TERMINAL BOX ROUTING

TBX-K1-3 TO HEAT TRACE SEAL POT AND ALL DRAIN LINES, EXCEPT FILL PIPE, TERM # CONC EDGE AND POWER TBX-K1-4

TBX-K1-4 TO HEAT TRACE BOTH DE-ENTRAINERS, DRAIN LINE TO VALVE MK-1606, AND 6" ENCASED LINE TO PLENUMS, INSTR LINES, AND POWER TBX-K1-5

TBX-K1-5 TO HEAT TRACE 4 DRAIN LINES TO PLENUMS AND POWER TBX-K1-6

TBX-K1-6 TO HEAT TRACE 6 DRAIN LINES TO FILTER PLENUMS AND 6" ENCASED LINE TO EDGE OF CONCRETE AT SEAL POT PIT AND POWER TBX-K1-7

TBX-K1-7 TO HEAT TRACE DRAIN LINES TO BOTH FANS EXH STACK, AND 2" ENCASED LINE TO EDGE OF CONC AT SEAL POT PIT.

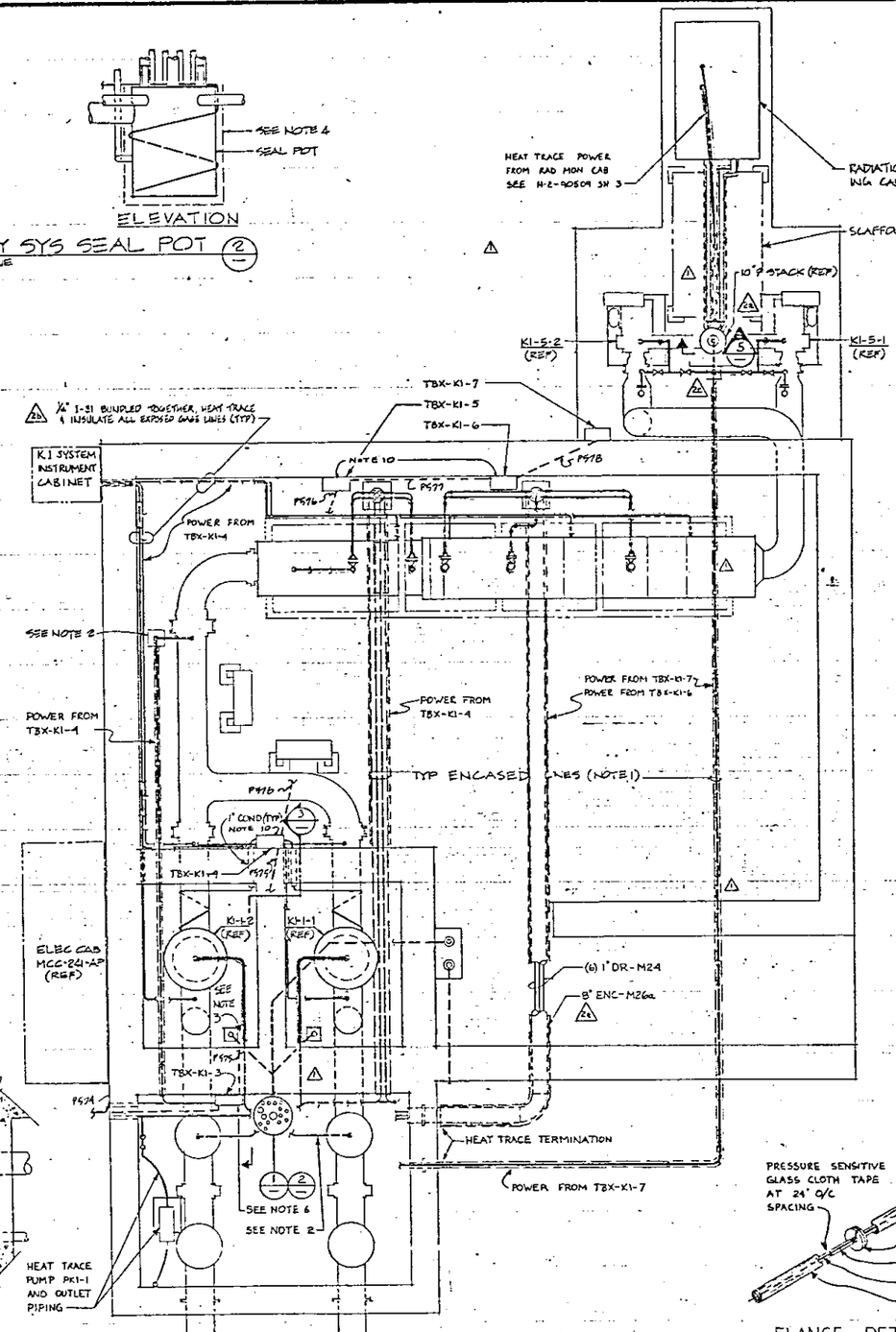

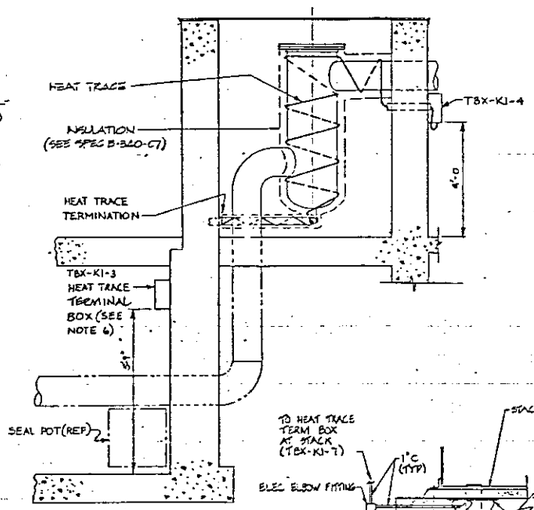

TYP DE-ENTRAINER DETAIL (3)
SCALE: 1/2" = 1'-0"

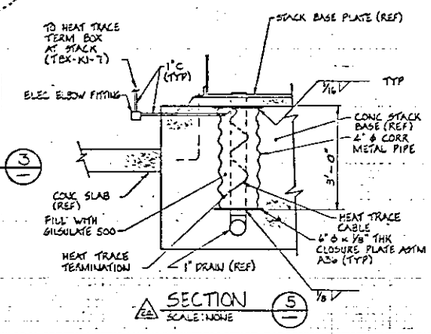

SECTION (5)
SCALE: NONE

NOTES:

1. INSULATE HEAT TRACED ENCASEMENT LINES BELOW GRADE WITH GILSULATE PER DWG H-2-90839, SHT 2. DO NOT COAL TAR WRAP PIPES TO BE INSULATED WITH GILSULATE.
2. PORTIONS OF HEAT TRACED LINES THAT ARE EXPOSED SHALL HAVE HEAT TAPE EXTENDED TO THE CONCRETE WALL, INSULATED PER CONSTRUCTION SPEC B-340-C7 & COVERED PER SAME SPECIFICATION.
3. NON-ENCASED LINE TO BE HEAT TRACED & INSULATED PER CONSTRUCTION SPEC B-340-C7.
4. WRAP PRIMARY SEAL POT WITH 7 LINEAR FT OF HEAT TAPE, INSULATE & COVER PER CONSTRUCTION SPEC B-340-C7
5. HEAT TRACE CABLE SHALL BE CHEMELEX AUTO-TRACE SELF LIMITING HEATER TAPE CATALOG NO. 5BTV1, & NO. PVA CONNECTION KIT. LEAD WIRE (2) #12 TYPE SO.
6. TERMINAL BOXES SHALL BE HOFFMAN ENGINEERING CO #A-12R10GHCR NEMA 3R (12"x10"x6").
7. NOT USED
8. HEAT TRACE ALL INSTRUMENT LINES POWERED FROM NEAREST JUNCTION BOX PER DRAWING.
9. HEAT TRACE AND INSULATED LINES INDICATED BY SHADING.
10. MOUNT HEAT TRACE TERMINAL BOXES TBX-K1-4,5,6 & 7 2'-0" OFF CONCRETE SLAB.
11. HEAT TRACE CABLE SHALL BE INSTALLED LINEAR WITH RESPECT TO PIPE & UNLESS OTHERWISE SPECIFIED.

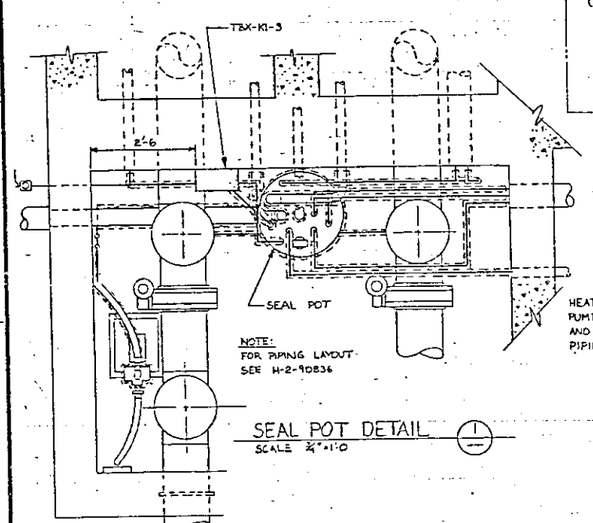

SEAL POT DETAIL (1)
SCALE: 1/4" = 1'-0

HEAT TRACE PLAN
SCALE: 1/2" = 1'-0

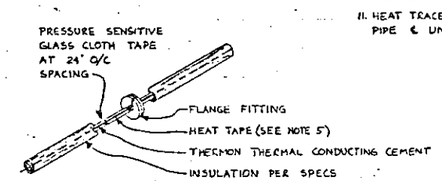

FLANGE DETAIL (5)

M	AS-BUILT FROM PROJ B-340 1) 20-R4L 106 ENC7 1RG 2) NCL6 2) DFC-B340-2) 3) 2N F6 2) NCL6-B340-2N F10 6) DFC-B340-2) 2, F6 6) DFC-B340-2D7 2) 4) DFC-B340-2B1 2N D14	9-9-86				MAT CWN	PER DFC-B340-2D7 & 2B1 TUBING IS IN RELOCATE OF PIPE HEAT TRACE IS FOR RELOCATE DETAIL CALLOUT 7 ON SH 6, & ADD IN SH 6 DELETE NOTE 7 ON SH 7 ADD	1
	BY-DATE	BY-DATE				REV BY DATE	DESCRIPTION	REV
MICROFILMED	RHO APPROVAL	RHO APPROVAL					REVISIONS	
	COMMENT REVIEW							

H-2-90635	DRAWING LIST	
NUMBER	TITLE	
REFERENCES		
NEXT USED ON H-2-90635		

REV 1 DOE [illegible] DATE 3/1/88

RELEASED FOR CONSTRUCTION
BY [illegible] DATE 11/19/87
DOE

RHO APPROVAL BY [illegible] DATE 1/4/88

U. S. DEPARTMENT OF ENERGY
Richland Operations Office
KAISER ENGINEERS HANFORD COMPANY

HVAC HEAT TRACE PLAN AND DETAILS

PROJECT TITLE: 241-AP TANK FARM

PROJ B-340	WO X86002	JOB 220582	
SCALE SHOWN	BLDG 241-AP	MODEL 7501/8900	
CLASSIFICATION NONE	NOT REQ'D	DRAWING NUMBER H-2-90745	SHEET 1 / 1 / REV 2

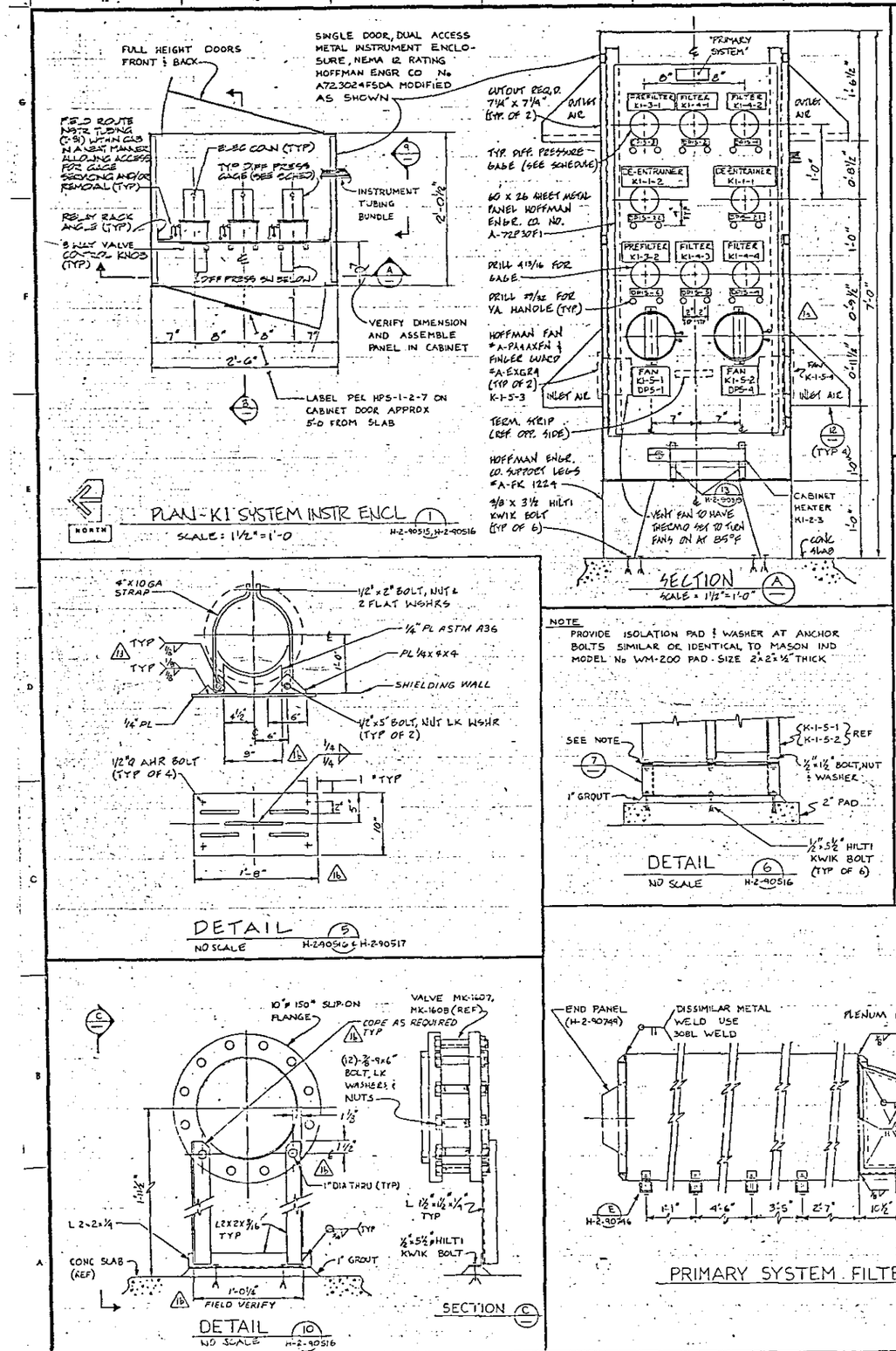

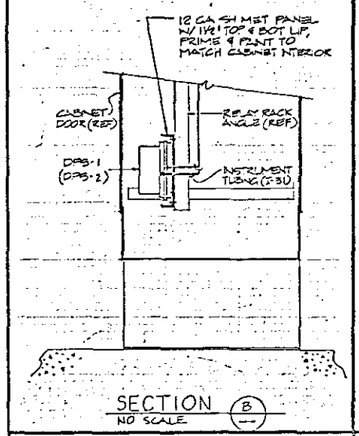

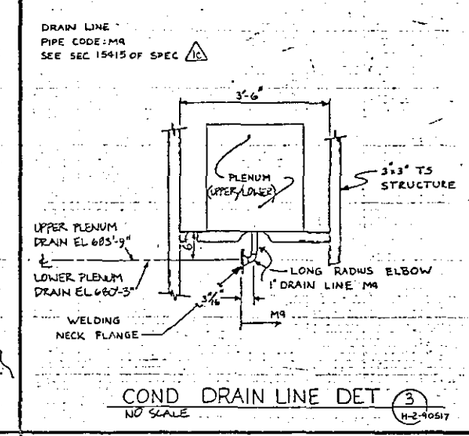

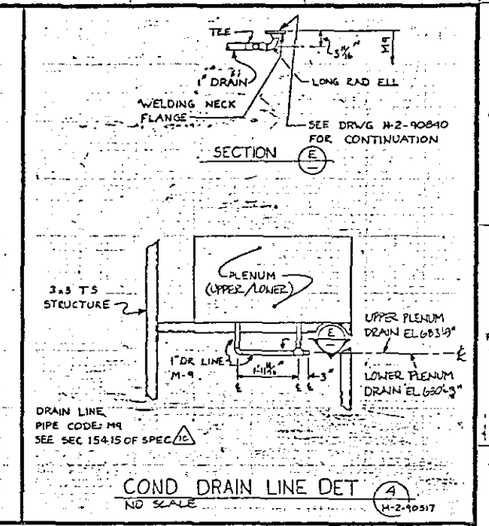

NOTE

PROVIDE ISOLATION PAD & WASHER AT ANCHOR BOLTS SIMILAR OR IDENTICAL TO MASON IND MODEL No WM-200 PAD. SIZE 2"x2"x½" THICK

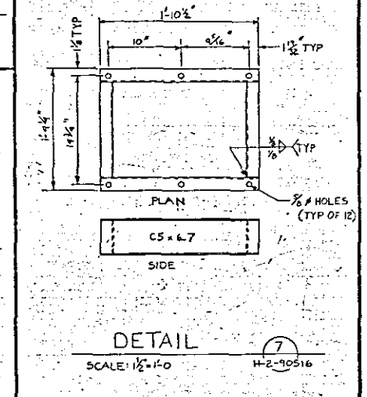

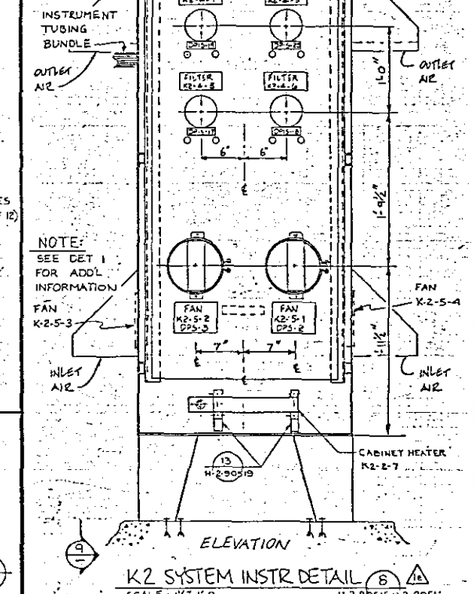

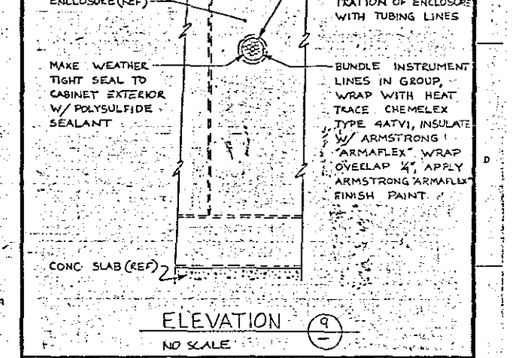

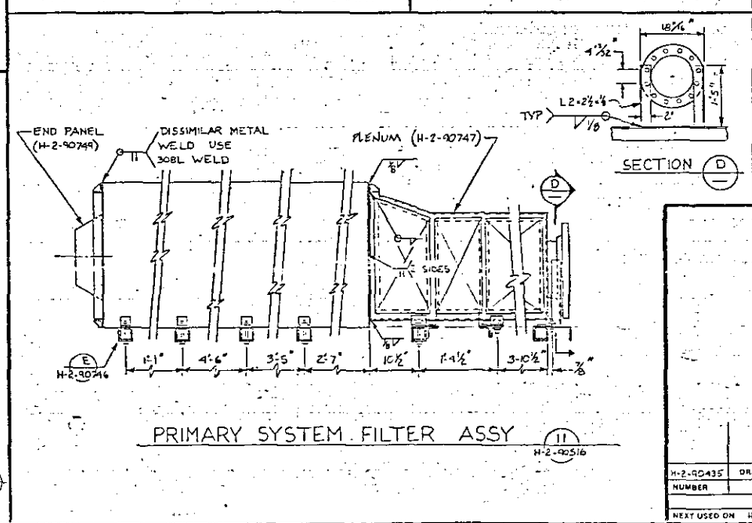

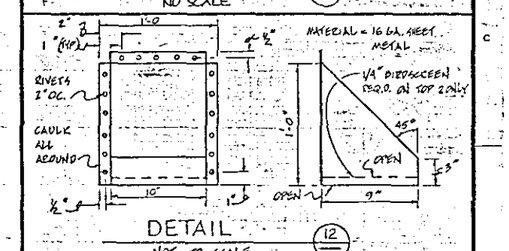

RELEASED FOR CONSTRUCTION
DOE

H-2-90435	DRAWING LIST		
NUMBER	TITLE		
	REFERENCES		
NEXT USED ON	H-2-90435		

REV	DATE	DESCRIPTION
1	6-4-93	AS-BUILT FOR PROJ B-340

MICROFILMED: BY-DATE / BY-DATE; ROCKWELL APPROVAL; KEN APPROVAL; COMMENT REVIEW

REVISIONS

U. S. DEPARTMENT OF ENERGY
Richland Operations Office
KAISER ENGINEERS HANFORD COMPANY

HVAC DETAILS

PROJECT TITLE: 241-AP TANK FARM

PROJ	B-340	WO	X34002
SCALE	SHOWN	BLDG	241-AP
CLASSIFICATION	NONE	AT	NOT RELD
DRAWING NUMBER	H-2-90750	SHEET 1	OF 1
REV	1		

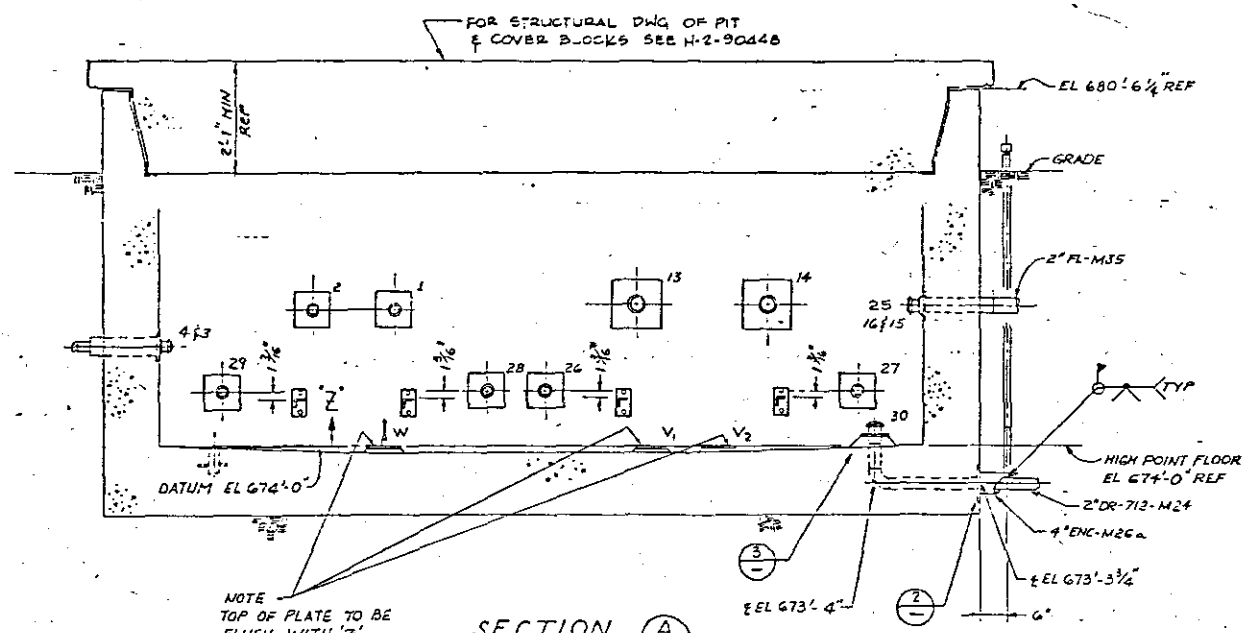

SECTION (A) H-2-90551 SH 1
SCALE: ¾" = 1'-0"

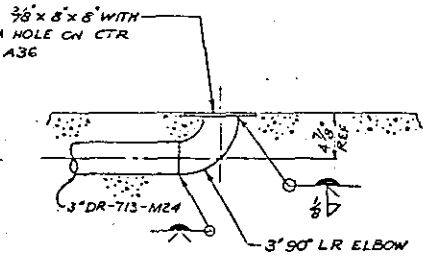

DETAIL (1)
SCALE: 1½" = 1'-0"

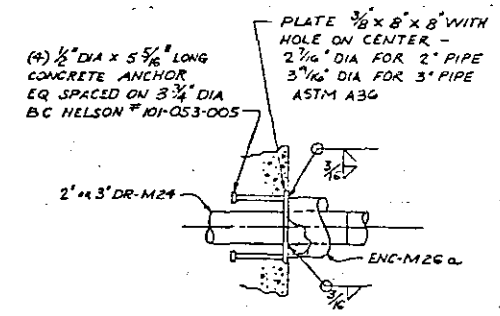

DETAIL (2)
SCALE: NONE

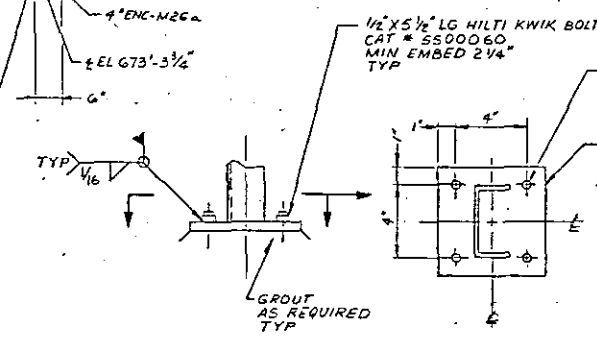

DETAIL (14) △1
SCALE: 3" = 1'-0"

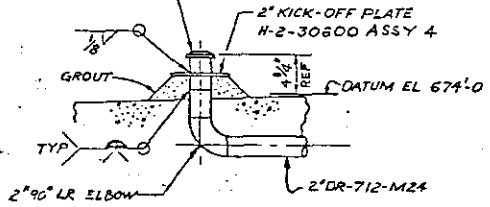

DETAIL (3)
SCALE: 1½" = 1'-0"

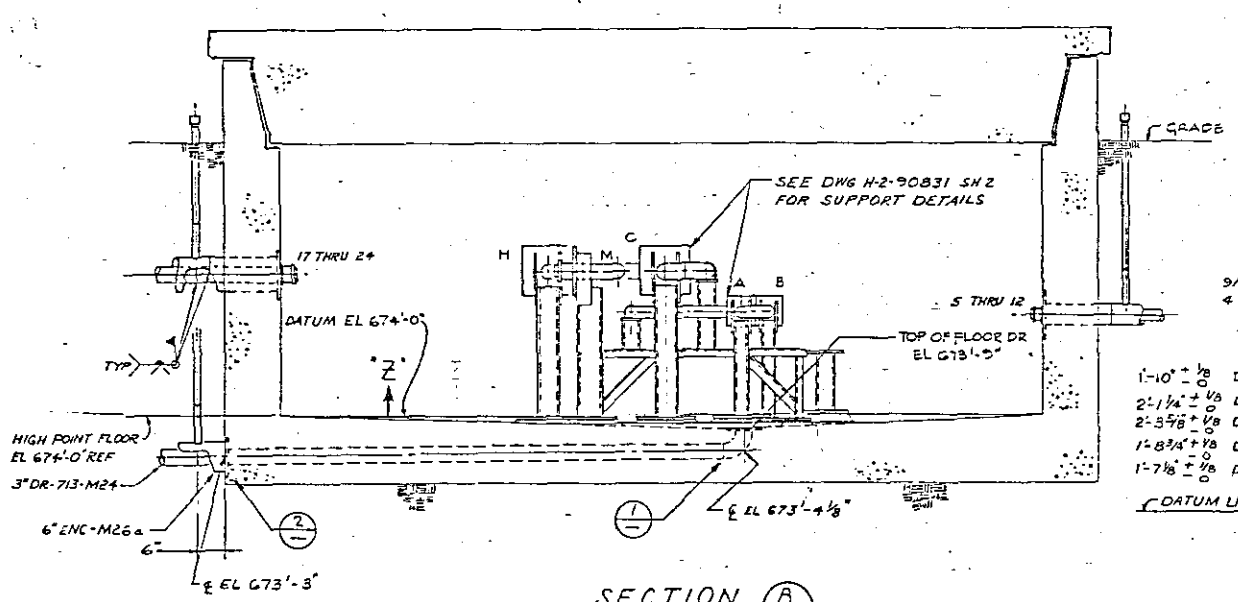

SECTION (B) H-2-90551 SH 1
SCALE: ¾" = 1'-0"

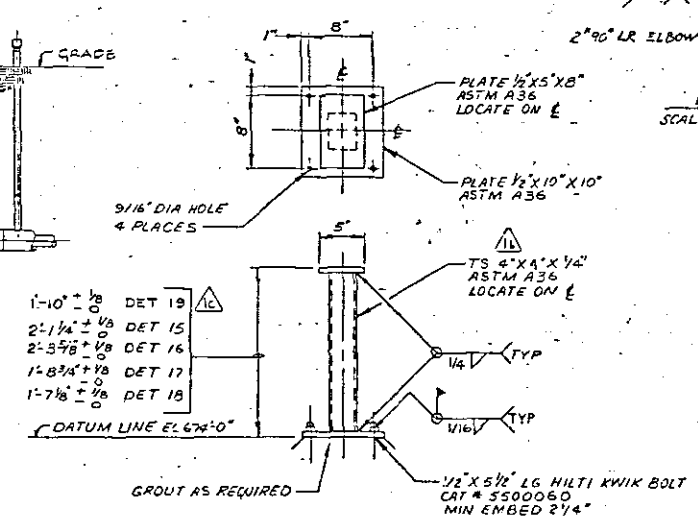

DETAIL (15) (16) (17) (18) (19) H-2-90551 SH 1
SCALE 1½" = 1'-0"

NOTE: ORIENT TOP PLATE PER H-2-90551 SH 1

NOTES:

1. FOR GENERAL NOTES SEE DWGS H-2-90543 & H-2-90544.

RELEASED FOR CONSTRUCTION
BY [illegible] DATE 11/5/93
DOE

PHO APPROVAL			U. S. DEPARTMENT OF ENERGY Richland Operations Office
			KAISER ENGINEERS HANFORD COMPANY
			PIPING SECTIONS & DETAILS 241-AP VALVE PIT
			PROJECT TITLE 241-AP TANK FARM
			PROJ B-340 WO X34002 JOB R295A2
			SCALE AS SHOWN DWG 241-AP NOTE 0402
CLASSIFICATION NONE	BY NOT RQD		DRAWING NUMBER H-2-90831 SHEET 1 OF 2 REV 1

NUMBER	TITLE
H-2-30800	STD SQUARE KICK-OFF PLATE
H-2-32446	MALE CONNECTOR NOZZLE
H-2-90435	DRAWING LIST

REFERENCES
NEXT USED ON H-2-90435

REV	DESCRIPTION	BY	DATE
1	AS-BUILT FOR PROJ S-340 C) DFC B-340-429 & C7,8 B5,6,7 D) RCD CHNG 2 Cm WAS TS 8" C6/,D6,7,E6,7 DFC B-340-3972 H4 B5,6,7		

REVISIONS
COMMENT REVIEW
MICROFILMED

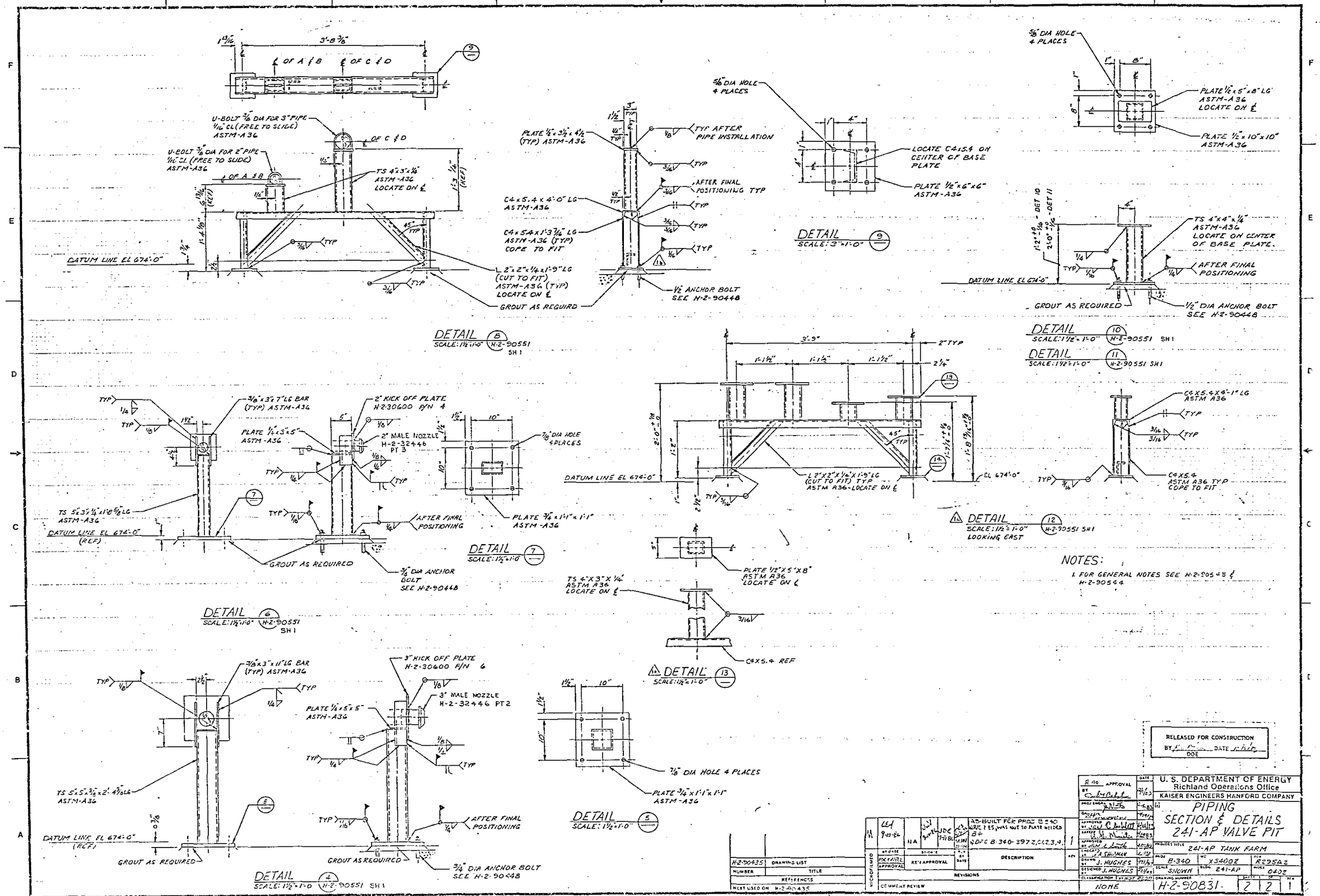

DETAIL 8 SCALE: 1½"=1'-0" H-2-90551 SH 1
DETAIL 9 SCALE: 3"=1'-0"
DETAIL 10 SCALE: 1½"=1'-0" H-2-90551 SH 1
DETAIL 11 SCALE: 1½"=1'-0" H-2-90551 SH 1
DETAIL 12 SCALE: 1½"=1'-0" LOOKING EAST H-2-90551 SH 1
DETAIL 6 SCALE: 1½"=1'-0" H-2-90551 SH 1
DETAIL 7 SCALE: 1½"=1'-0"
DETAIL 13 SCALE: 1½"=1'-0"
DETAIL 4 SCALE: 1½"=1'-0" H-2-90551 SH 1
DETAIL 5 SCALE: 1½"=1'-0"
NOTES:
1. FOR GENERAL NOTES SEE H-2-90543 & H-2-90544
RELEASED FOR CONSTRUCTION
U. S. DEPARTMENT OF ENERGY
Richland Operations Office
KAISER ENGINEERS HANFORD COMPANY
PIPING
SECTION & DETAILS
241-AP VALVE PIT
241-AP TANK FARM
B-340
X34002
R295A2
SHOWN
241-AP
0402
J. HUGHES
NONE
H-2-90831
2
2
1

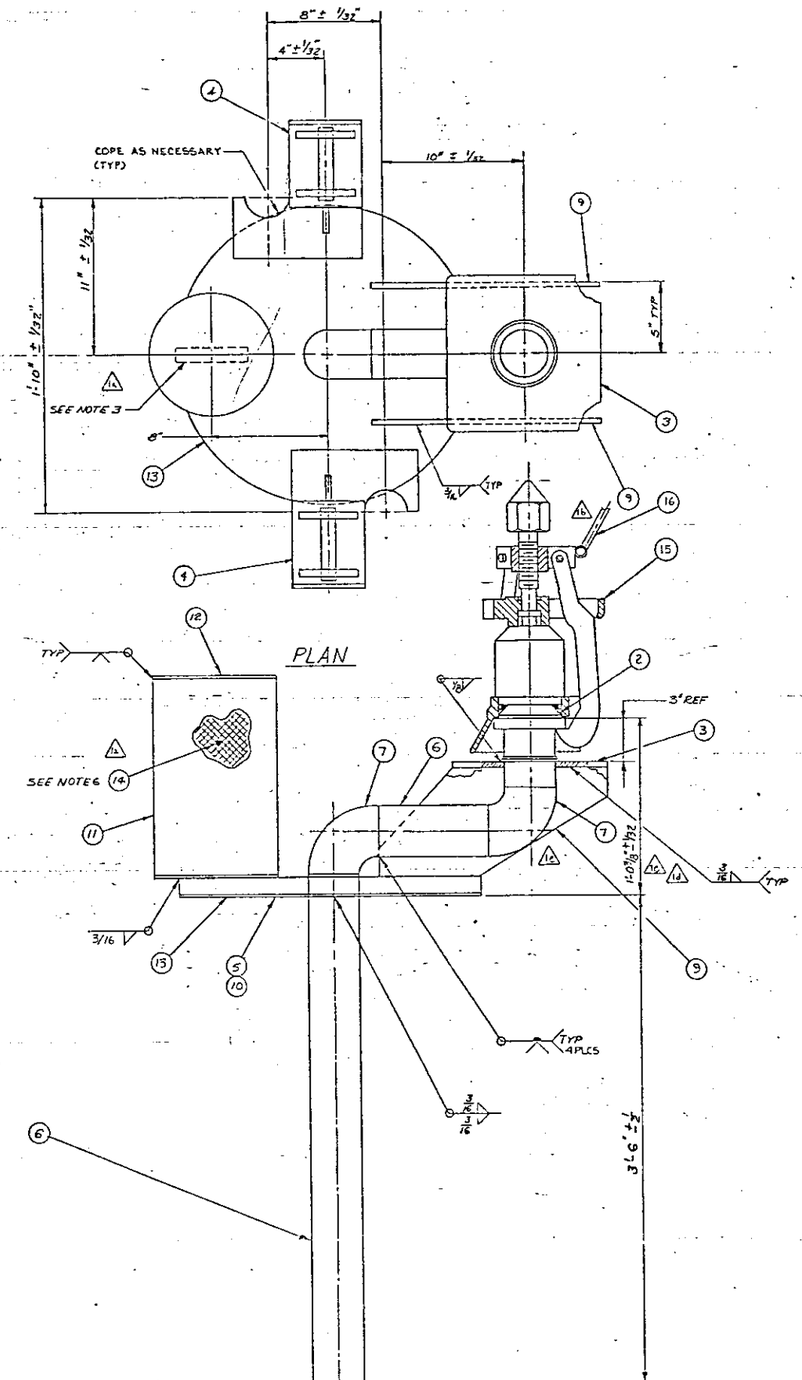

ELEVATION - (BAILS NOT SHOWN FOR CLARITY)

1 ASSEMBLY
SCALE: 3" = 1'-0"

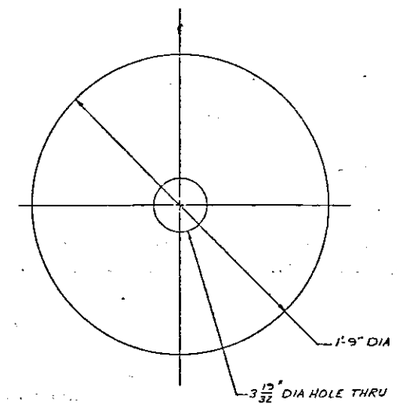

13 FLANGE
SCALE: 3" = 1'-0"

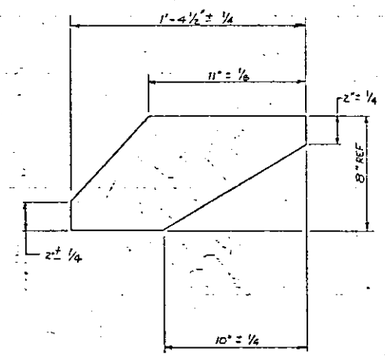

9 GUSSET
SCALE: 3" = 1'-0"

QTY	PT NO.	DESCRIPTION	MATL/REF
X	1	ASSEMBLY	
1	2	CONNECTOR NOZZLE 3"	H-2-32446-2
1	3	KICK-OFF PLATE 3"	H-2-30600-6
2	4	LIFTING BAIL	H-2-70001 ASSY 2
1	5	GASKET 1/8" THK 21" ODX 4" ID	EDPM GARLOCK #8314
AR	6	3" PIPE SCHED 40	ASTM A53 TYPE S GR B
2	7	ELBOW-90° SR 3" SCHED 40 BUTTWELD	ASTM A234 GR WPB
~~1~~	~~8~~	~~ELBOW 90° LR 3" SCHED 40 BUTTWELD~~	~~ASTM A234 GR WPB~~
2	9	GUSSET 3/8" THK PLATE	ASTM A36
AR	10	ADHESIVE	3M FASTBOUND No 10
1	11	8" SCHED 40 PIPE x 10 1/2" LG	ASTM A53 TYPE S GR B
2	12	PLATE 1/4" THK x 8 5/8" DIA	ASTM A36
1	13	1" THK PLATE	ASTM A36
AR	14	LEAD APPROX WT 213 #	ASTM B29
1	15	BLANK CONN 3" VERT	BY OTHERS
1	16	FOLDING BAIL	H-2-90160 ASSY 3

GENERAL NOTES:

1. REMOVE BURRS AND BREAK SHARP EDGES.
2. PAINT ALL EXPOSED CS SURFACES W/ONE COAT OF AMERCOAT #38 PRIMER AND TWO COATS OF AMERCOAT #33 VINYL PER MFG INSTRUCTIONS. COLOR SHALL BE GRAY. EXCEPT AS NOTED.
3. IDENTIFY ASSEMBLY W/DRAWING NUMBER, PART NUMBER, AND DWG REV NUMBER W/1/2" HIGH LETTERS. COLOR SHALL BE BLACK, AMERCOAT #33 PER MFRS INSTRUCTION. NO PRIMER COAT IS NEEDED ON CS.
4. HYDRO TEST PIPING AT 600 PSIG.
5. UNLESS OTHERWISE NOTED TOLERANCE ON ALL DIMENSIONS SHALL BE ± 1/16".
6. COUNTER WEIGHT BASED ON 3" BLANK CONN PT 15, MOUNTED ON NOZZLE.
7. LIQUID PENETRANT EXAMINATION MAY BE PERFORMED IN LIEU OF MAGNETIC PARTICLE EXAMINATION SPECIFIED ON DRAWING H-2-70001.
8. FABRICATION & TESTING SHALL BE IN ACCORDANCE WITH HANFORD SPEC HWS-5726 REV 12 OR CURRENT REVISION.

RELEASED FOR CONSTRUCTION
BY K. ... DATE ...
DOE

M	CGA 9-16-86	NA	JW	JDE 7-31-86	AS-BUILT FOR PROJ B-340 h) DFC B340-502, ZC3 ADDED NOTE 7 & D1, 2, 3 f) SC-17 Z F12, 3 g) RCD CHNG B-340-1672, C9, C16 i) DFC B-340-1072, D10 e) DFC c) DFC B-340-2472, G12 3 D10 E12 b) DFC C-340-2932 E10 F12 3 d) DFC B-340-2892 T12 3, 12 D12

REV	DESCRIPTION
1	

REVISIONS

H-2-32446	CONNECTOR NOZZLE	
H-2-30600	KICK-OFF PLATE	
H-2-70001	LIFTING BAILS	
H-2-90455	DRAWING LIST	
NUMBER	TITLE	
REFERENCES		
NEXT USED ON	H-2-90455	

MICROFILMED — BY-DATE — BY-DATE
LOCKHEED APPROVAL — RSH APPROVAL
COMMENT REVIEW

RHO APPROVAL BY ... DATE 7/16/86

PROJ ENGR		7-25-86
DESIGNER		6-4-86
DATA MGT		6/4/86
QA		7/21/86
CHGW MGR		6/25/86
S & S ENGR		6/23/86
DRAWN		7/21/86
CHECKED		7/21/86
DRAFTS	D. MERRIMAN	7/21/86

U. S. DEPARTMENT OF ENERGY
Richland Operations Office
KAISER ENGINEERS HANFORD COMPANY

PIPING DUMMY PUMP HEAD

PROJECT TITLE 241-AP TANK FARM

PROJ B-340	NO X2-002	JOB K295A2	
SCALE AS SHOWN	BLDG 241-AP	INDEX 0403	
CLASSIFICATION NONE	BY NOT REQD	DRAWING NUMBER H-2-90833	SHEET 1 / SH 1 / REV 1

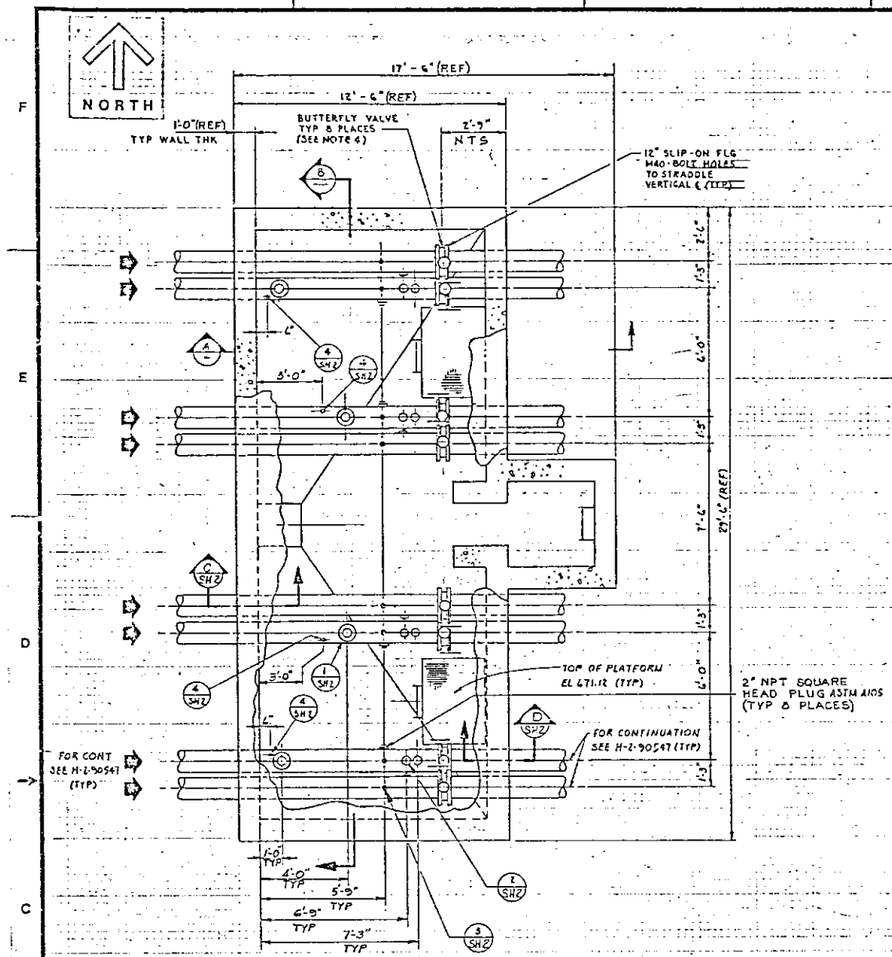

VENT PIT #1 & VENT PIT #2
PLAN (INSIDE PIT)
SCALE: 3/8" = 1'-0"

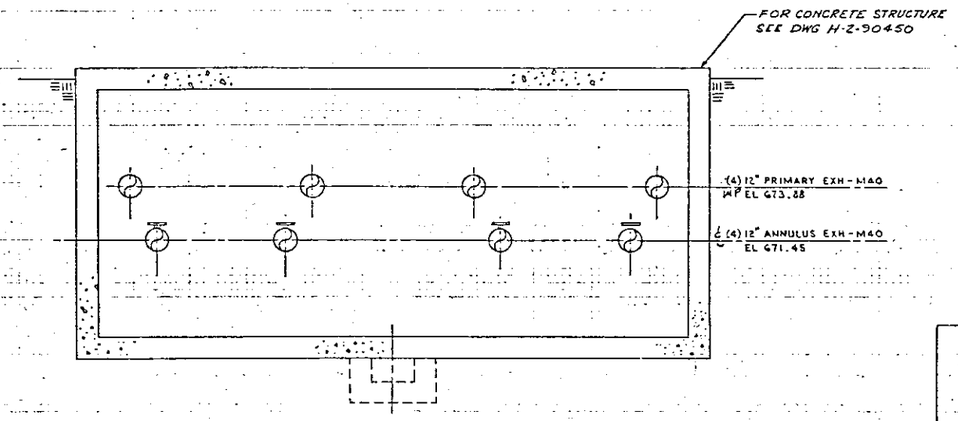

SECTION B
SCALE: 3/8" = 1'-0"

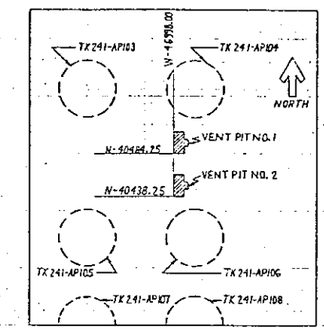

KEY PLAN
SCALE: NONE

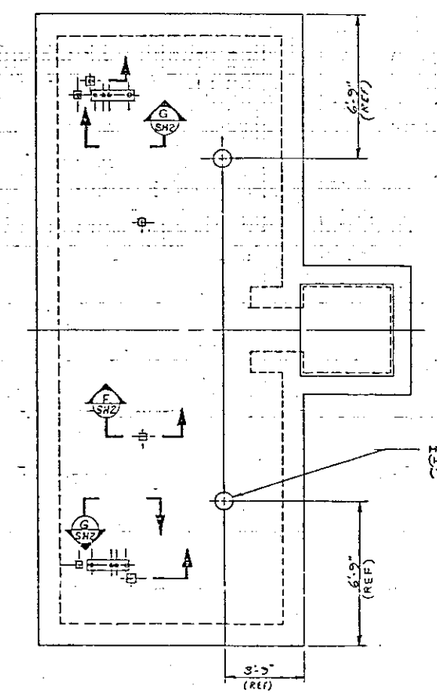

ROOF PLAN
SCALE: 3/8" = 1'-0"

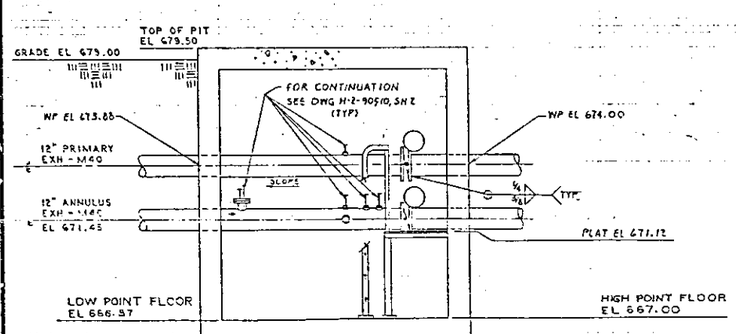

SECTION A
SCALE: 3/8" = 1'-0"

NOTES:

1. FOR GENERAL NOTES SEE DWG H-2-90543 & H-2-90544
2. PACK LEAD WOOL AROUND CABLES & TUBING INSIDE PIPE SLEEVE & CAULK LOWER END WITH POLYSULFIDE SEALANT
3. PAINT PIPING IDENTIFICATION AS SHOWN WITH 1" HIGH BLACK LETTERING ON YELLOW BACKGROUND
4. FOR BUTTERFLY VALVE IDENTIFICATION (MARK NO.) SEE SH 2. FOR BUTTERFLY VALVE SCHEDULE, SEE DWG H-2-90522.

REV 1 DOE DATE

RELEASED FOR CONSTRUCTION
BY DOE DATE

REV	DESCRIPTION	BY	DATE
3	REVISION PER EO 45513		
2	AS-BUILT FOR PROJ B-340 DFC B-340-233 & F6		
1	DFC # B-340-159 EN E1 & DE (5) ADDED (4) INSTR TAPS PER		

H-2-90435	DRAWING LIST
NUMBER	TITLE
REFERENCES	
NEXT USED ON	H-2-90435

U. S. DEPARTMENT OF ENERGY
Richland Operations Office
KAISER ENGINEERS HANFORD COMPANY

PIPING
VENT PIT #1 AND #2

PROJECT TITLE: 241-AP TANK FARM

PROJ	B340	JO	X34002
SCALE	SHOWN	BLDG	241-AP
DRAWING NUMBER	H-2-90835	SHEET 1	REV 2 3

RHO APPROVAL BY — DATE 12/1/93
PROJ ENGR — DATE 12-8-93
DR — DATE 12/1/93
APPROVED BY — DATE 12/6/93
BAS EST — DATE 12/1/93
APPROVED BY — DATE 12/8/93
CHECKED BY P. ROGGETS — DATE 12/8/93
DRAWN BY G. VINCENT — DATE 12/1/93
DESIGNED BY — DATE 12-8-93
CLASSIFICATION NONE — BY — NOT REQD

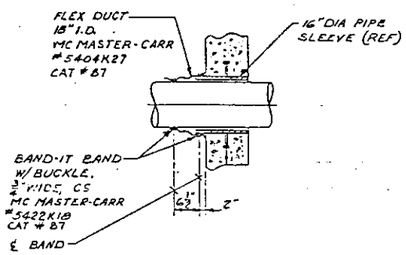

SECTION C
SCALE: 3/4" = 1'-0" SH 1
(TYP 8 PLACES)

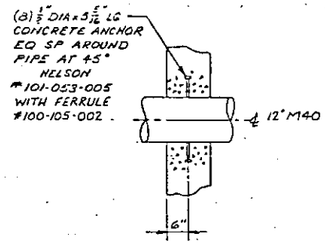

SECTION D
SCALE: 3/4" = 1'-0" SH 1
(TYP 8 PLACES)

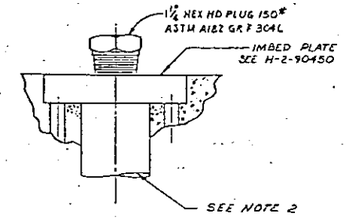

SECTION E
SCALE: HALF
(TYP 2 PLACES)

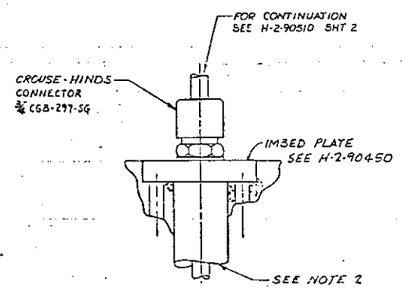

SECTION F
SCALE: HALF
(TYP 4 PLACES)

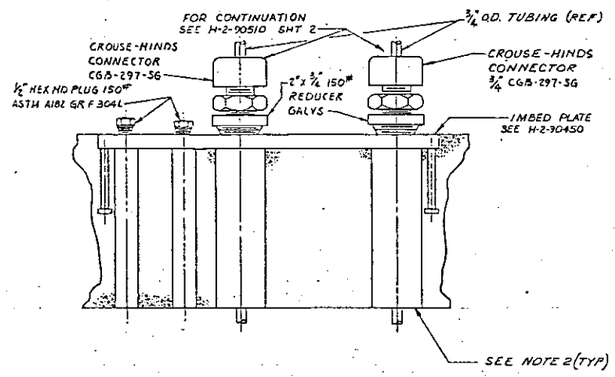

SECTION G
SCALE: 3/4" = 1'-0" SH 1
(TYP 2 PLACES)

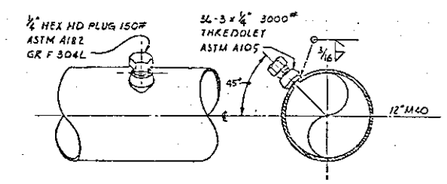

DETAIL 4
(TYP 4 PLACES)
SCALE: NONE

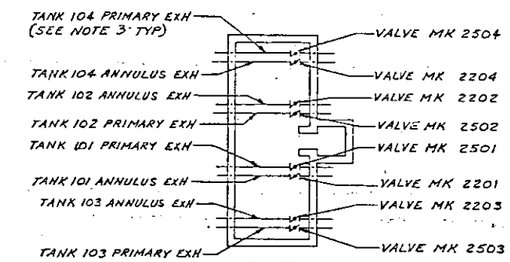

KEY PLAN
VENT PIT #1
SCALE: NONE

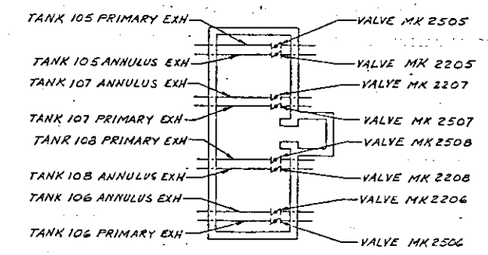

KEY PLAN
VENT PIT #2
SCALE: NONE

NOTES

1. FOR NOTES SEE SHT #1
2. DETAIL CALLOUTS ARE FOR ONE VENT PIT ONLY.
3. PROVIDE MALONEY PHENOLIC INSULATING SLEEVES & WASHERS. USE CS BOLTS & NUTS WITH INSULATING WASHER BETWEEN BOLT & SST FLANGE - WELD NUTS TO CS FLANGE - USE 1/16" THK GASKET, GARLOCK 930 OR 7705 OR ANCHOR 443

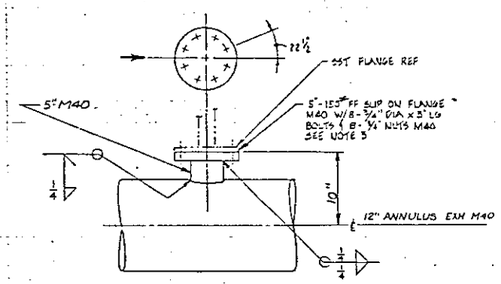

DETAIL 1
SCALE: 1 1/2" = 1'-0" SH 1
(TYP 4 PLACES)

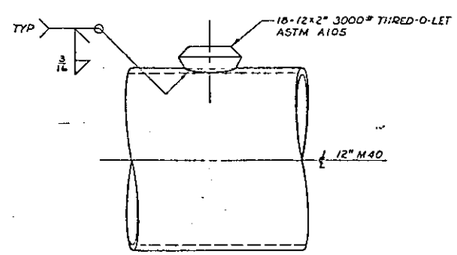

DETAIL 2
SCALE: NONE
(TYP 18 PLACES)

NOTE - REDUCE TWO OF THE REMAINING EIGHT UNPLUGGED 2" THRED-O-LETS TO 3/4" NPT FOR SAMPLE RETURN SST FITTINGS. PLUG THE REMAINING SIX THRED-O-LETS WITH SST PIPE PLUGS. REFER TO DWG H-2-90510 SH 2 FOR THOSE INVOLVED.

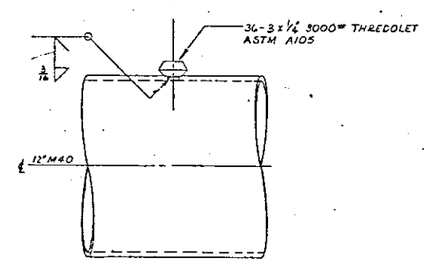

DETAIL 3
SCALE: NONE
(TYP 6 PLACES)

REV 1 DOE [illegible] DATE [illegible]

RELEASED FOR CONSTRUCTION
BY [illegible] DATE [illegible]
DOE

1						REVISION PER EO 45513	3
11	6-9-66	NA		JDC 7-19-66		AS-BUILT FOR PROJ B-340 a) DFC B-340-502 & 503 & (7) RED CWG b) DFC B-340-419 GENERAL REV c) DFC B-340-193 & C7 & 8	2
10	2-28-64				DM 2-28-64	REF DFC B-340-139 c) WAS 4" PIPE & 4" FLG ; b) ADDED NOTE 2, IN C2 ; a) ADDED DETAIL 4, IN D3 ;	1
MICROFILMED	BY-DATE		BY-DATE CHK		REV BY DATE	DESCRIPTION	REV
	APPROVAL		APPROVAL			REVISIONS	
			COMMENT REVIEW				

H-290435	DRAWING LIST
NUMBER	TITLE
REFERENCES	
NEXT USED ON	H-2-90435

PHC APPROVAL BY [illegible] DATE 12/4/63

PROJ ENGR [illegible] DATE [illegible]
DR [illegible] DATE [illegible]
APPROVED BY [illegible] DATE [illegible]
APPROVED BY [illegible] DATE [illegible]
APPROVED BY [illegible] DATE [illegible]
CHECKED BY R. [illegible] DATE 6-5-63
DR-DRN BY J. HUGHES DATE 9-7-62
DESIGNED BY [illegible] DATE 7-7-63
CLASSIFICATION [illegible]
NONE NOT REQD

IMPACT LEVEL

U. S. DEPARTMENT OF ENERGY
Richland Operations Office
KAISER ENGINEERS HANFORD COMPANY

PIPING
VENT PIT #1 AND #2

PROJECT TITLE 241-AP TANK FARM

PROJ	WO	PO
B 340	X 34002	R295A2

SCALE	BLDG	AREA	CODE
SHOWN	241-AP	0402	0900

DRAWING NUMBER	SHEET	SHEETS	REV
H-2-90835	2	2	3

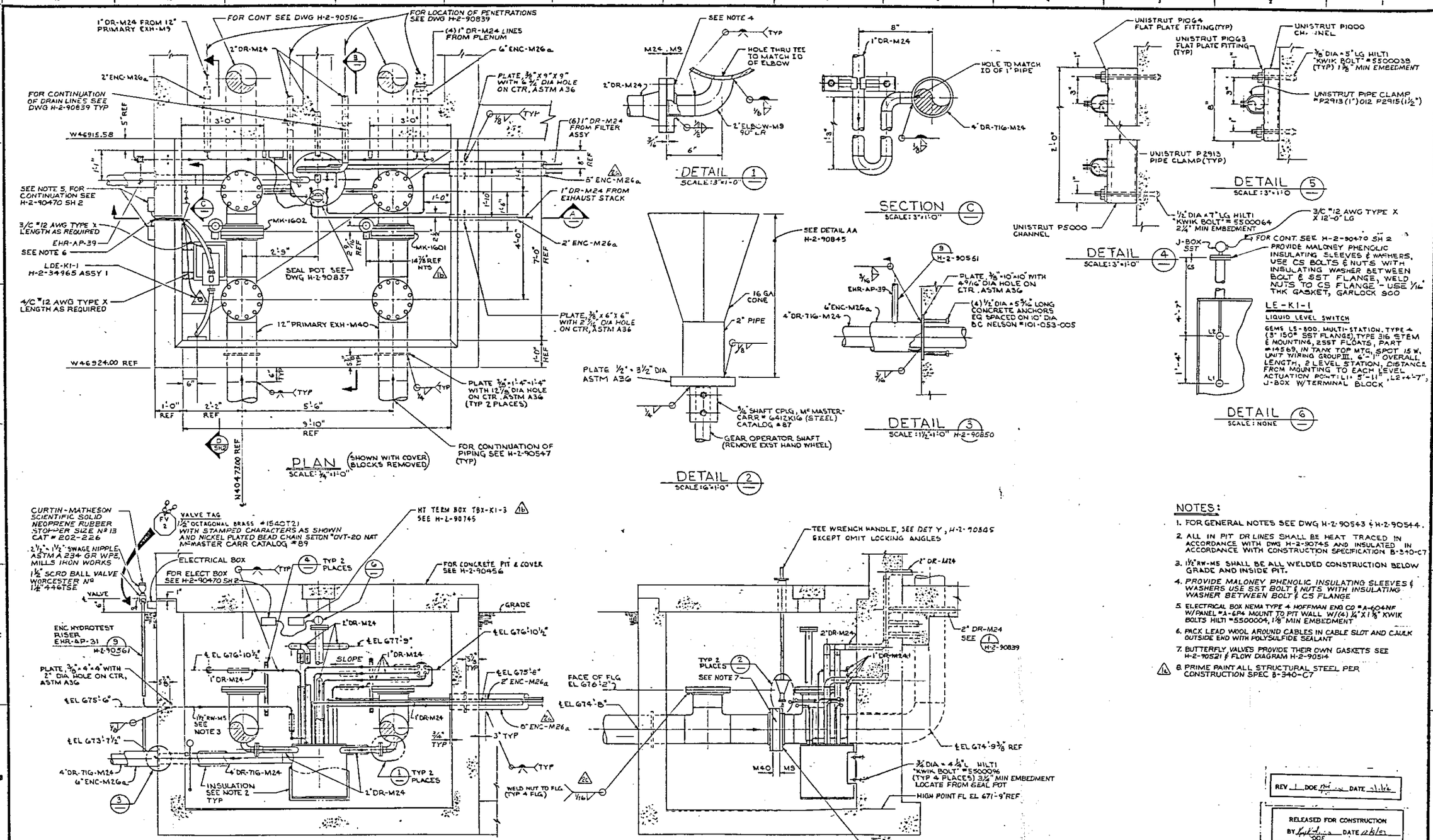

NOTES:

1. FOR GENERAL NOTES SEE DWG H-2-90543 & H-2-90544.
2. ALL IN PIT DR LINES SHALL BE HEAT TRACED IN ACCORDANCE WITH DWG H-2-90745 AND INSULATED IN ACCORDANCE WITH CONSTRUCTION SPECIFICATION B-340-C7
3. 1 1/2" RW-MS SHALL BE ALL WELDED CONSTRUCTION BELOW GRADE AND INSIDE PIT.
4. PROVIDE MALONEY PHENOLIC INSULATING SLEEVES & WASHERS USE SST BOLT & NUTS WITH INSULATING WASHER BETWEEN BOLT & CS FLANGE
5. ELECTRICAL BOX NEMA TYPE 4 HOFFMAN ENG CO # A-604NF W/PANEL # A-6P4 MOUNT TO PIT WALL W/(4) 1/4" X 1 3/8" KWIK BOLTS HILTI # 5500004, 1 7/8" MIN EMBEDMENT
6. PACK LEAD WOOL AROUND CABLES IN CABLE SLOT AND CAULK OUTSIDE END WITH POLYSULFIDE SEALANT
7. BUTTERFLY VALVES PROVIDE THEIR OWN GASKETS SEE H-2-90521 & FLOW DIAGRAM H-2-90514
8. (1a) PRIME PAINT ALL STRUCTURAL STEEL PER CONSTRUCTION SPEC B-340-C7

REV 1 DOE DATE

RELEASED FOR CONSTRUCTION
BY DOE DATE 12/6/93

H-2-90435	DRAWING LIST	
NUMBER	TITLE	
REFERENCES		
NEXT USED ON H-2-90455		

REV	BY-DATE	BY-DATE	REV BY DATE	DESCRIPTION	REV
2	NA	JDC 7/31/91		AS-BUILT FOR PROJ B-340 c) DFC-B-340-163, 2 d) DT-B-340-R96.0, 2 e) DT-B-340-106, 2, F, P, R-9	2
1	JRW	RLP		DFC # B-340-132 BOX (ZN 2C) ; b) ADDED HT TERM a) NOTE 9, SPEC WAS 13340-C7	1

MICROFILMED: WELL APPROVAL; KEM APPROVAL; REVISIONS; COMMENT REVIEW

APPROVAL BY	RHO	DATE 1/29/93
PROJ ENGR	JWJS	1-29-93
DESIGN	DWLETT	1/29/93
SAFETY		1/29/93
QA		1/29/93
GROUP ENGR		1/29/93
LEAD ENGR	J.R. NICHOLSON	1/29/93
DRAWN BY	D.C. LEWIS	1-29-93
CHECKED	J. CLEVELAND	1/29/93
DRAWN	D. BECK	1/29/93
CLASSIFICATION	NONE	BY NOT REQD

U. S. DEPARTMENT OF ENERGY
Richland Operations Office
KAISER ENGINEERS HANFORD COMPANY

PIPING
PRIMARY SEAL POT
PIT

PROJECT TITLE 241-AP TANK FARM

PROJ	B-340	WO	X34002
AREA	241-AP	BLDG	0402
SCALE	AS SHOWN		
DRAWING NUMBER	H-2-90836	SHEET 1	REV 2

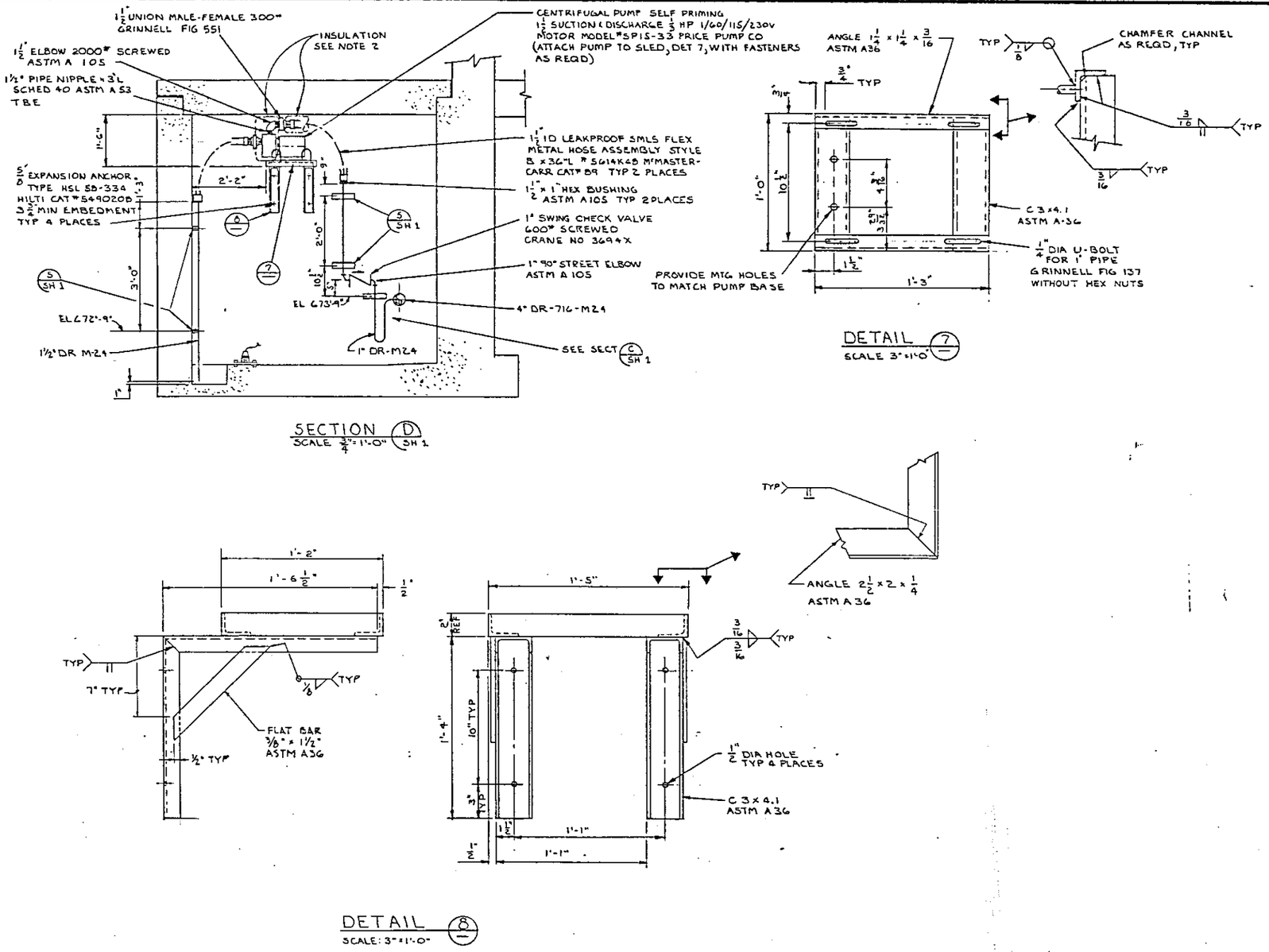

FOR NOTES SEE SHEET 1 OF 2

RELEASED FOR CONSTRUCTION BY [signature] DATE [illegible] DOE

M	[illegible]	NA	[illegible]	JDC	MD	AS-BUILT FOR PROJ B340	1
	BY-DATE		BY-DATE		REV BY DATE	DESCRIPTION	REV
	RDCKWELL		KEN APPROVAL				
	APPROVAL						

REVISIONS

COMMENT REVIEW

H-2-90435	DRAWING LIST
NUMBER	TITLE
REFERENCES	
NEXT USED ON H-2-90435	

RHO APPROVAL BY [signature] DATE [illegible]

PROJ ENGR [signature] 12-6-83

APPROVED BY [signature] 12-11-83

SAFETY [signature] 12/20/83

APPROVED BY [signature] 12/20/83

CHECKED BY WM RICKUHR 12/21/83

DRAWN BY G CLEVELAND 12/29/83

DESIGNED BY B. O'CONNOR 12/20/83

CLASSIFICATION NONE BY NOT REQD

U. S. DEPARTMENT OF ENERGY
Richland Operations Office
KAISER ENGINEERS HANFORD COMPANY

PIPING
PRIMARY SEAL POT PIT

PROJECT TITLE 241-AP TANK FARM

PROJ B-340 | NO X34002 | JOB R295A2

SCALE SHOWN | BLDG 241-AP | INDEX 0402

DRAWING NUMBER H-2-90836 | SHEET 2 | OF 2 | REV 1

		NOZZLE LEGEND	QTY	PN	DESCRIPTION	MATERIAL
A	1"	DRAIN FROM STACK, K2-5-1 & 2	X	1	ASSEMBLY	—
B	1"	DRAIN FROM EXHAUST AIR PLENUM	AR	2	PIPE 18" STD WEIGHT	ASTM A53 TYPE S GR B
C	1"	DRAIN FROM EXHAUST AIR PLENUM	AR	3	PIPE 4" SCHED 40	ASTM A53 TYPE S GR B
D	1"	DRAIN FROM FILTER TEST SECTION	AR	4	PIPE 1½" SCHED 40	ASTM A106 GR B
E	1"	DRAIN FROM FILTER TEST SECTION	AR	5	PIPE 1" SCHED 40	ASTM A106 GR B
F	1"	DRAIN FROM INLET AIR PLENUM	1	6	PIPE 3" SCHED 40	ASTM A53 TYPE S GR B
G	1"	DRAIN FROM INLET AIR PLENUM	1	7	BOTTOM PLATE 3/8" THICK x 18" DIA	ASTM A36
H	1"	DRAIN FROM K2-2-6 TRANSITION	1	8	TOP PLATE	ASTM A36
J	1"	DRAIN FROM K2-2-5 TRANSITION	1	9	SWAGE NIPPLE, 2½" x 1½" MILLS IRON WORKS	ASTM A234 GR WPB
K	3"	INSTRUMENT CONNECTION	1	10	RUBBER STOPPER, SIZE NO. 15 CURTIN-MATHESON SCIENTIFIC CAT # 202-226	SOLID NEOPRENE
L	1½"	WATER FILL	1	11	SCRD BALL VALVE 1½"	WORCESTER NO 1½" 446TSE
M	4"	OVERFLOW TO TK-103	1	12	SLIP-ON FLANGE 3" 150# RF	ASTM A106

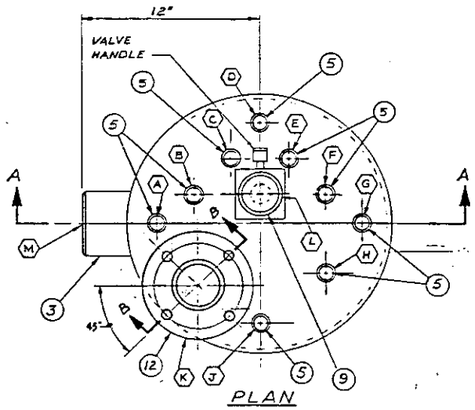

PLAN

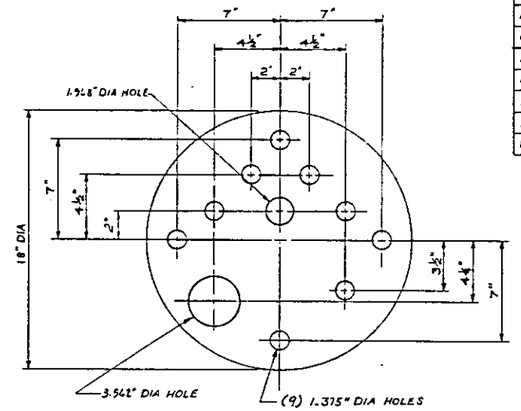

8 TOP PLATE
3/8" THICK

VALVE TAG
1½" OCTAGONAL BRASS #1540T21
W/STAMPED CHARACTERS AS SHOWN & NICKEL PLATED
BEAD CHAIN SETON
#OVT-20NAT
McMASTER CARR
CATALOG # 89

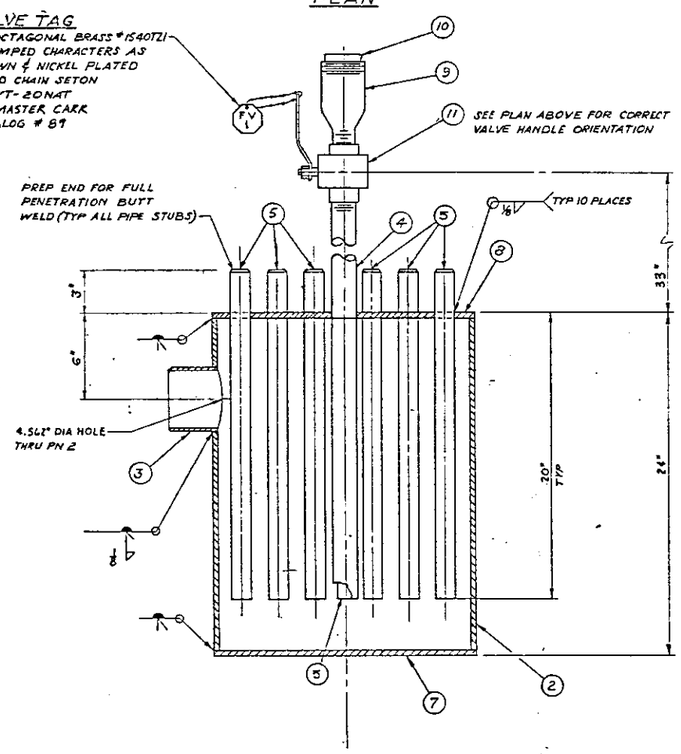

SECTION A-A

1 ASSEMBLY

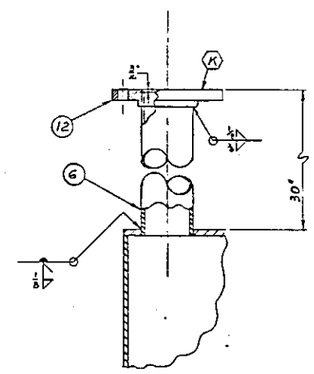

SECTION B-B

GENERAL NOTES:

1. FABRICATION, CLEANING & TESTING SHALL BE IN ACCORDANCE WITH CONSTRUCTION SPEC B340-C1
2. TOLERANCES: (UNLESS OTHERWISE NOTED) FRACTIONAL - ±1/8" DECIMAL ±.030" ANGULAR ±1°
3. REMOVE ALL BURRS & BREAK ALL SHARP EDGES TO .030" CHAMFER MIN.
4. VESSEL SHALL BE HYDROSTATICALLY TESTED AT 30 PSIG FOR 10 MINUTES WITH NO VISIBLE LEAKS OR DROP IN TEST PRESSURE.

RELEASED FOR CONSTRUCTION
BY [signature] DATE 11/6/83
DOE

H-2-90435	DRAWING LIST
NUMBER	TITLE
REFERENCES	
NEXT USED ON H-2-90435	

11	LEJ 9-21-84	NA	JDC 7-31-84	MD	AS-BUILT FOR PROJ B340	1
	BY-DATE	BY-DATE		REV BY DATE	DESCRIPTION	REV
MICROFILMED	BY-DATE	BY-DATE				
	APPROVAL	KEN APPROVAL				
	REVISIONS					
	COMMENT REVIEW					

RHO APPROVAL BY [signature]	DATE 12/6/83
PROJ ENGR [signature]	2-5-83
DESIGN [signature]	4/24/83
SAFETY [signature]	7/20/83
DA [signature]	7/20/83
GROUP ENGR [signature]	7/17/83
DSGN ENGR J.R. NICHOLSON	4/27/83
CHECKED BY [signature]	7/20/83
CHECKED A. CLEVELAND	7/20/83
DRAWN C.A. KEELER	6-4-83
CLASSIFICATION NONE	BY NOT REQD

U. S. DEPARTMENT OF ENERGY
Richland Operations Office
KAISER ENGINEERS HANFORD COMPANY

PIPING
VESSEL ASSEMBLY
ANNULUS SEAL POT

PROJECT TITLE: 241-AP TANK FARM

PROJ B-340	WO X34002	JOB R295A2	
SCALE 3" = 1'-0	BLDG 241-AP	INDEX 2500	
DRAWING NUMBER H-2-90838	SHEET —	OF —	REV 1

U.S. GOVERNMENT PRINTING OFFICE

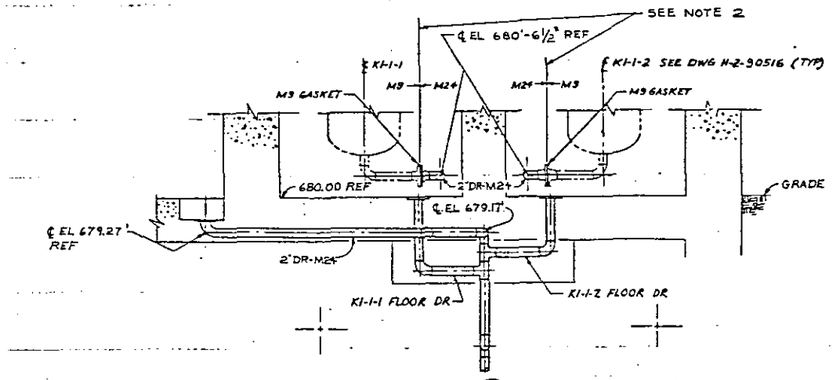

SECTION (A) H-2-90839
SCALE: 3/4"=1'-0"

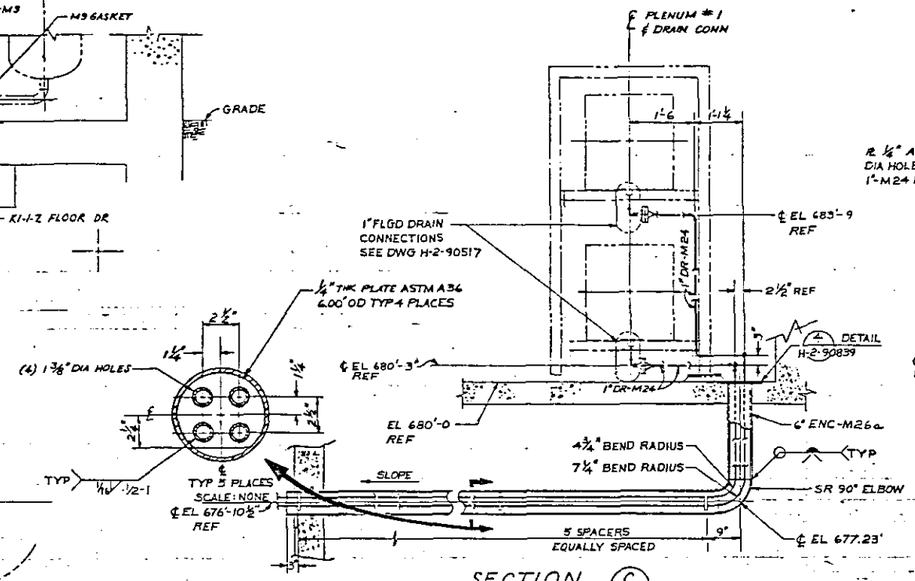

SECTION (C) H-2-90839
SCALE: 3/4"=1'-0

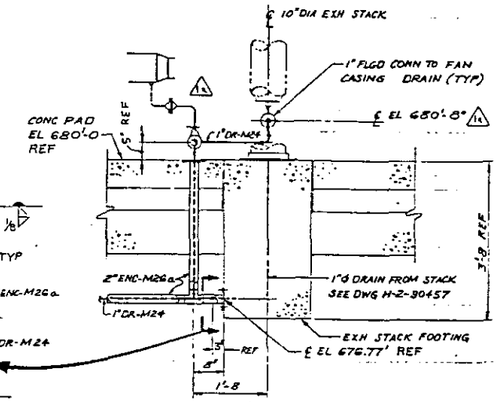

SECTION (E) H-2-90839
SCALE: 3/4"=1'-0

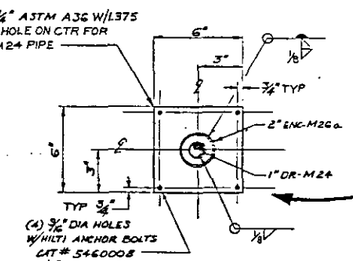

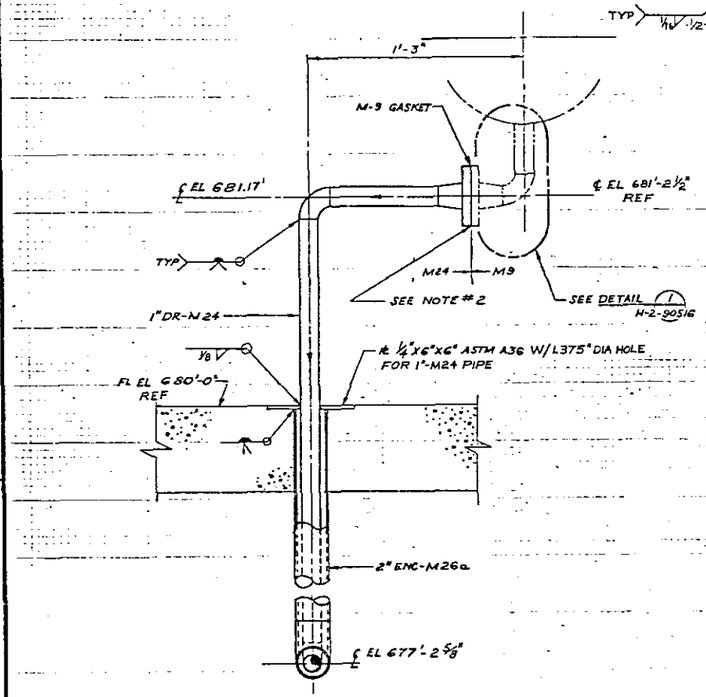

SECTION (B) H-2-90839
SCALE: 3"=1'-0"

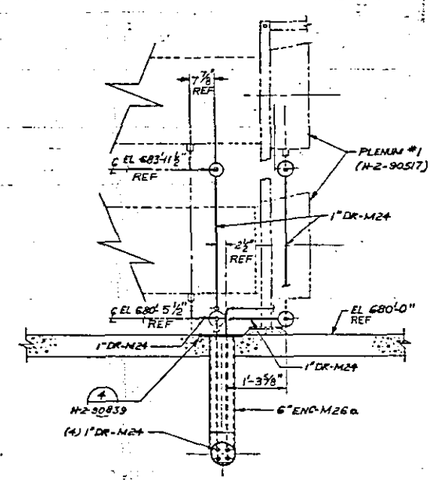

SECTION (D) H-2-90839
SCALE: 3/4"=1'-0"

NOTES:

1. FOR GENERAL NOTES SEE DWG H-2-90543 & H-2-90544
2. PROVIDE MALONEY PHENOLIC INSULATING SLEEVES & WASHERS USE SST BOLTS & NUTS WITH INSULATING WASHER BETWEEN BOLT & CS FLANGE FOR ALL M-24 TO M-9 PIPE CODE TRANSITIONS. (1c)

RELEASED FOR CONSTRUCTION
BY [signature] DOE DATE 11/6/90

NUMBER	TITLE
H-2-90835	DRAWING LIST

REFERENCES
NEXT USED ON H-2-90835

REV	BY-DATE	BY-DATE	BY-DATE	DESCRIPTION
M	LCJ 9-10-90	NA	JW 9-10-90	JDC 7-2-90	M D (W/JW) (W/JW)	AS-BUILT FOR PROJ B-340 (1) DFC B-340-1452 C1,2 (2) DFC B-340-3278 A1 (3) DFC B-340-3392 B1,2
1						

MICROFILMED: ROCKWELL APPROVAL — KEH APPROVAL — REVISIONS — COMMENT REVIEW

RHO APPROVAL	BY [signature]	DATE 4/7/93
PROJ ENGR	J.W. ENS	7-2-93
DAY	[signature]	7/14/93
APPROVED BY	[signature]	7/14/93
SAFETY	[signature]	7/15/93
APPROVED BY	[signature]	7/15/93
CHECKED BY	G. CLEVELAND	8-24-92
DRAWN BY	C.A. KEELER	8-24-92
DESIGNED BY	J. CONNOR	8-24-92
CLASSIFICATION	BY	
NONE	NOT REQD	

U. S. DEPARTMENT OF ENERGY
Richland Operations Office
KAISER ENGINEERS HANFORD COMPANY

PIPING SECTIONS SEAL POT DRAIN LINES

PROJECT TITLE: 241 AP TANK FARM

PROJ	WO	JOB
B-340	X34002	R295A2

SCALE	BLDG	ROOM
AS SHOWN	241-AP	0402

DRAWING NUMBER: H-2-90840 — SHEET 1 — OF 3 — REV 1

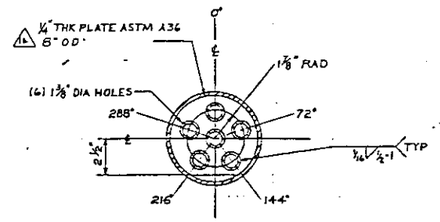

SECTION H
SCALE: NONE

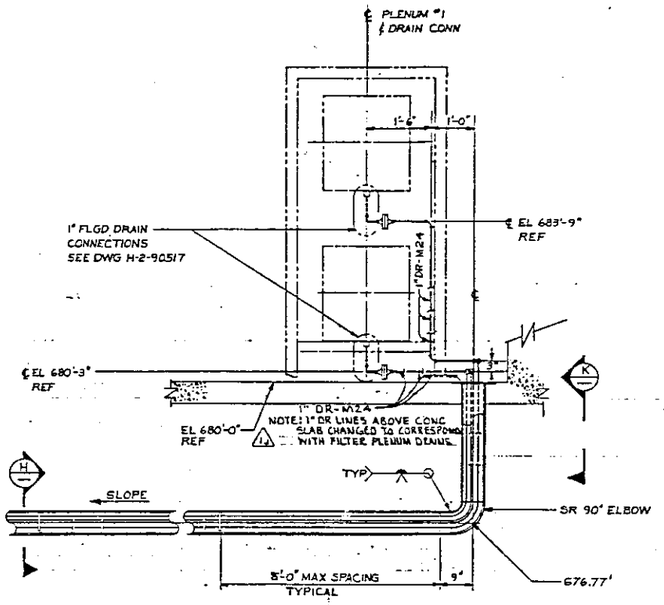

SECTION G
SCALE: 3/4" = 1'-0"
H-2-90839

NOTE:
1" DRAIN LINES ABOVE CONCRETE SLAB CHANGED TO CORRESPOND WITH FILTER PLENUM DRAINS.

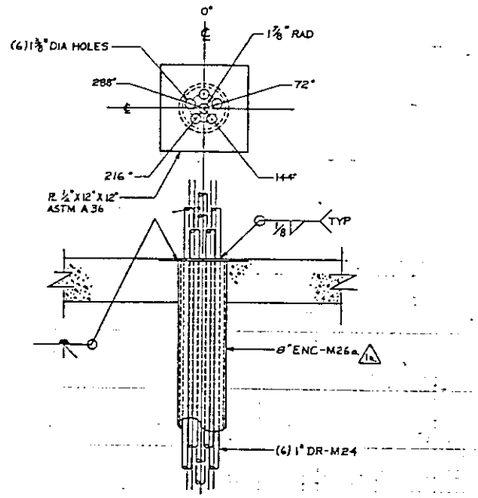

SECTION K
SCALE: NONE

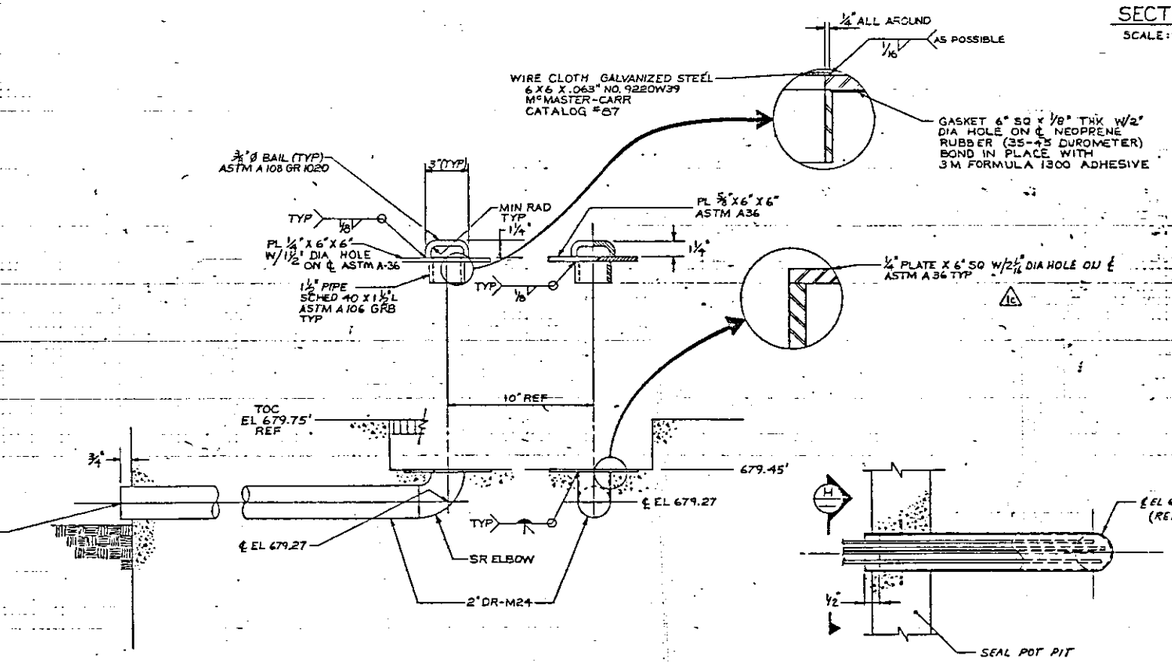

SECTION F
SCALE: NONE
H-2-90839

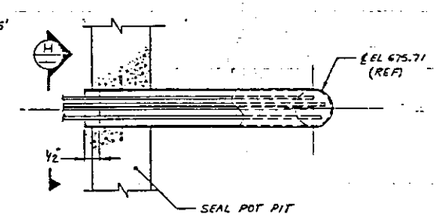

VIEW L
SCALE: NONE

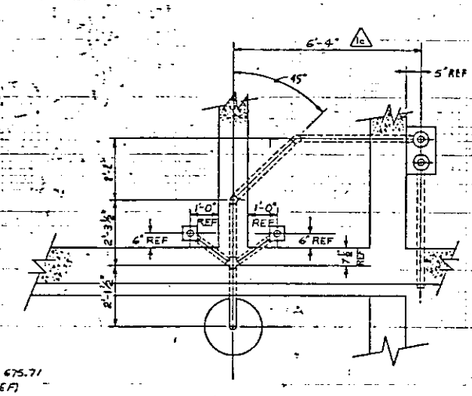

DETAIL J
SCALE: 1/2" = 1'-0"
H-2-90839

NOTES:

1. FOR GENERAL NOTES SEE DWG H-2-90543 & H-2-90544

RELEASED FOR CONSTRUCTION
BY DOE DATE

M	LEF 9-10-86	NA	JW 9-10-86	JDE 7-31-86	AS-BUILT FOR PROJ B-340 W/RCD CHNG. 2-E3, ADDED NOTE W/DFC B-340-322 BC2,3,5 W/DFC B-340-327,2845.05 W/DFC B-340-365 2E1,7	1	
	BY-DATE		BY-DATE		REV BY DATE	DESCRIPTION	REV
MICROFILMED	R.OCKWELL APPROVAL		KEH APPROVAL			REVISIONS	
						COMMENT REVIEW	

NUMBER	TITLE
H-2-90435	DRAWING LIST
REFERENCES	
NEXT USED ON H-2-90435	

RHO APPROVAL BY — DATE 7/1/86
PROJ ENGR — 2-5-86
CHIEF ENGR — 7/11/86
APPROVED BY — 7/14/86
MANAGER — 7/15/86
APPROVED BY — 7/23/86
CHECKED BY CLEVELAND — 7/11/86
DRAWN BY WJ MAHONEY — 7/11/86
DESIGNED BY — 7/14/86
CLASSIFICATION NONE — BY NOT REQD

U. S. DEPARTMENT OF ENERGY
Richland Operations Office
KAISER ENGINEERS HANFORD CORPORATION

PIPING
SECTIONS
SEAL POT DRAIN LINES

PROJECT TITLE 241 AP TANK FARM

PROJ B-340 — NO X 34002 — ACCT R295A2
SCALE AS SHOWN — BLDG 241-AP — SHEET 0402
DRAWING NUMBER H-2-90840 — SHEET 2 — OF 3 — REV 1

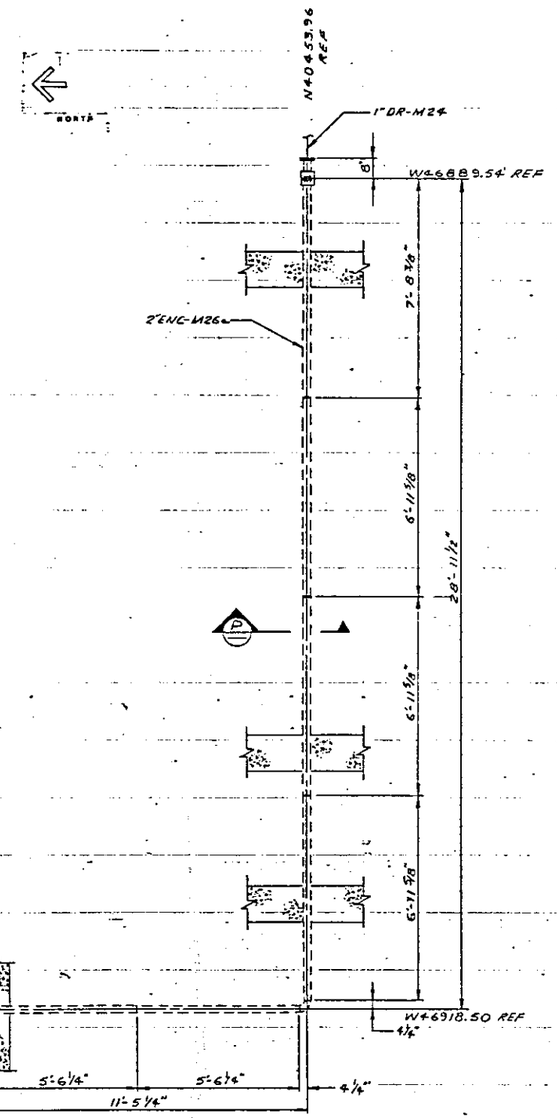

PLAN (M) H-2-90839 SH1

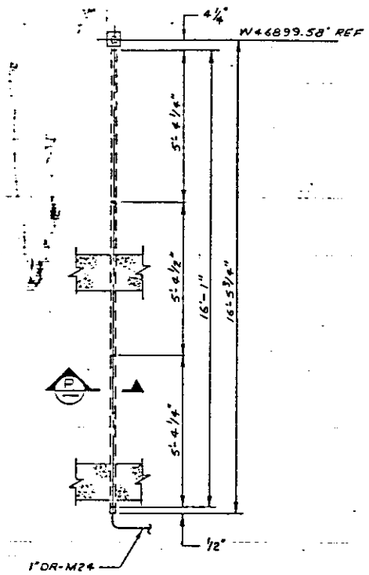

PLAN (N) H-2-90839 SH1

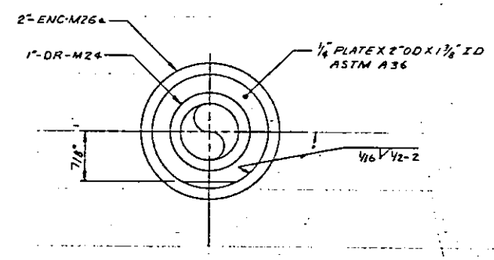

SECTION (P)

NEW SHEET ADDED TO REFLECT AS-BUILT CONDITIONS PER DFC B-340-327

NUMBER	TITLE
	DRAWING TRACEABILITY LIST

NUMBER	TITLE
H-2-90435	DRAWING LIST
	REFERENCES
NEXT USED ON	H-2-90435

MICROFILMED

BY-DATE	BY-DATE	REV BY DATE	DESCRIPTION	REV
APPROVAL	KEH APPROVAL		REVISIONS	
			COMMENT REVIEW	

RHO APPROVAL BY — DATE 6/11/96

U. S. DEPARTMENT OF ENERGY
Richland Operations Office
KAISER ENGINEERS HANFORD COMPANY

PROJ ENGR JONES 2-8-96
CA NA
APPROVED BY NA
SAFETY NA
APPROVED BY J.D. CUMMINGS 7-31-96
CHECKED BY MARY DUNNIGAN 7/22/96
DRAWN BY MJ WILLIAMS 7/11/96
DESIGNED BY NA

M PIPING SECTIONS SEAL POT DRAIN LINES

PROJECT TITLE 241 AP TANK FARM

PROJ	WO	JOB
B-340	X34002	R295A2

SCALE	BLDG	SHEET
NONE	241-AP	0402

DRAWING NUMBER H-2-90840 — DIST 3 — V 3 — REV 0

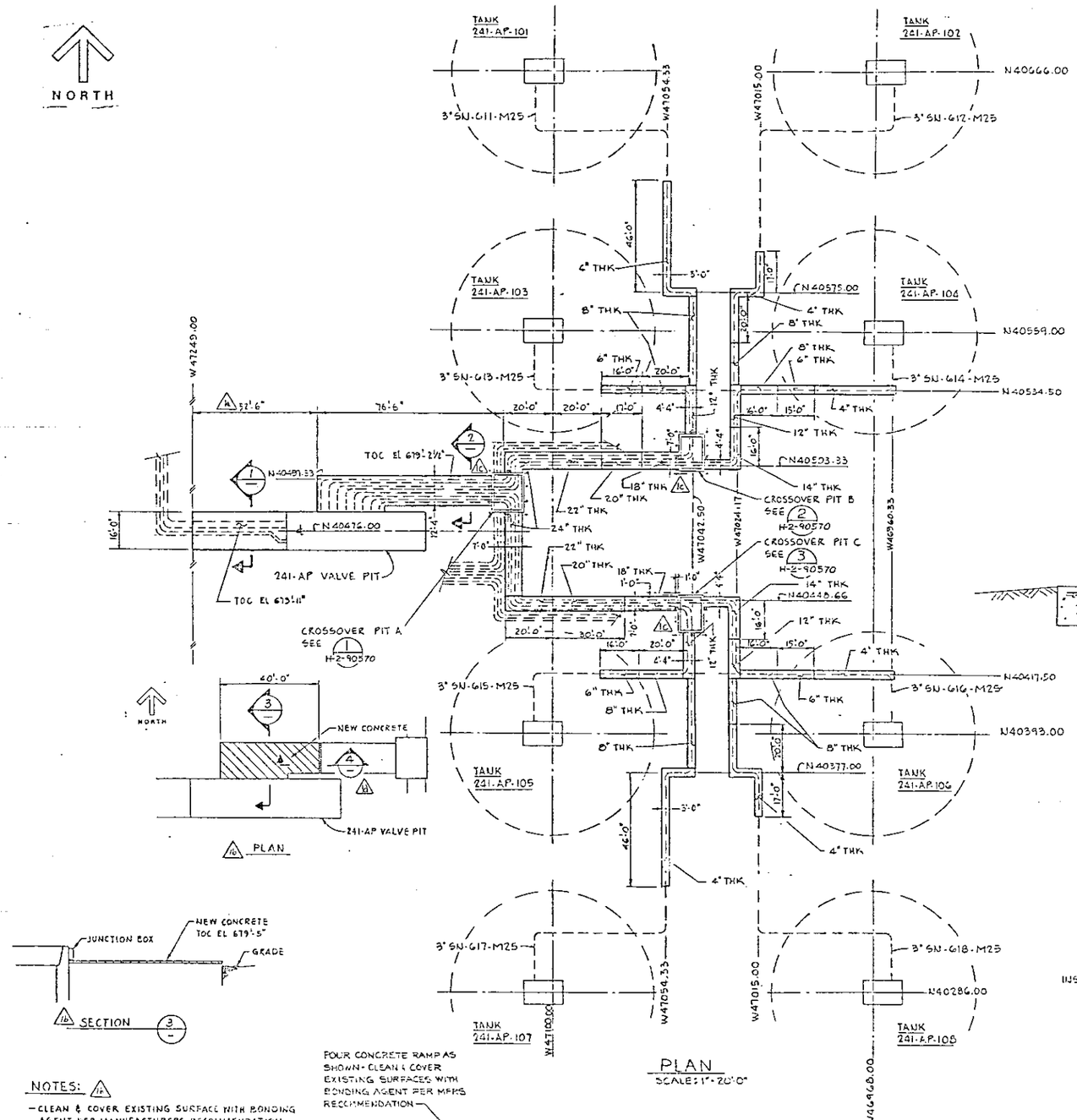

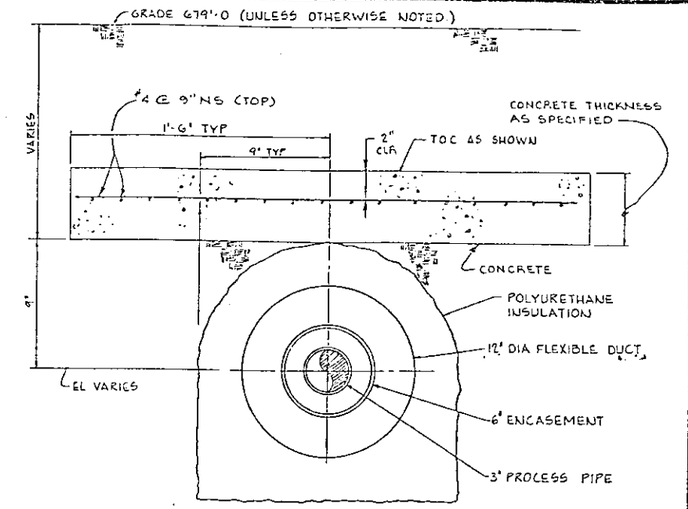

TYPICAL SECTION
SCALE: 3" = 1'-0

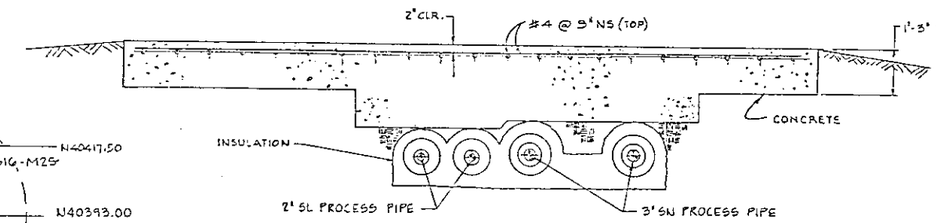

SECTION 1
SCALE: 3/4" = 1'-0"

NOTES:-
1 FOR GENERAL NOTES SEE H-2-90543
2 FOR FLEX DUCT & INSULATION SEE H-2-90562
3 • INDICATES GUARD POST PER DET 20, H-2-90574
12 ⊙ INDICATES GUARD POST PER DET 31, H-2-90574 SH 2. TYP CROSSOVER PIT A, B & C

SECTION 3

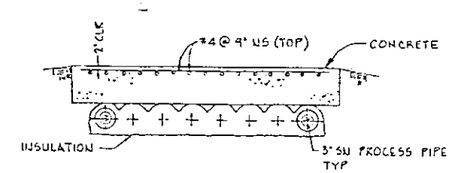

SECTION 2
SCALE: 3/8" = 1'-0"

NOTES: 12
- CLEAN & COVER EXISTING SURFACE WITH BONDING AGENT PER MANUFACTURERS RECOMMENDATION
- REINFORCE WITH WIRE MESH WWF 6 x 6 W2.9 x W2.9
- ABANDON BOTTOM LATCH ON JUNCTION BOXES
- POUR CONCRETE TOPPING 2½" THK MIN
- STAMP "EHR" IDENTIFICATION ON SHEET 12 GA (.105) x 2" x 2" ASTM A240 304L SST - WELD TO EXISTING LABEL ABOVE CONCRETE LEVEL

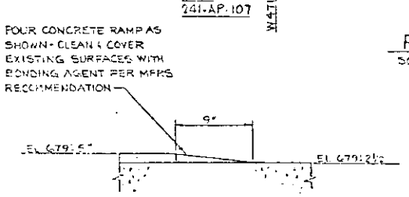

SECTION 4
NTS

RELEASED FOR CONSTRUCTION
BY ____ DATE ____
DOE

H-2-90455	DRAWING LIST				
NUMBER	TITLE				
REFERENCES					
PORTRAYED ON	H-2-90455				

LEJ 11-9-86	KHO 3-10-87	W	DC 11-3-86	KEH	AS BUILT FOR PROJ B 340 (1) DFC-B-340-509 & C-7, A-6 (2) DFC-B-340-498 & B1,2 C5 D5,6 (3) DFC-B-340-455 & ABCT & B (4) DFC-B-340-232 & D7
BY DATE	BY DATE		BY DATE	BY DATE	REV BY DATE / DESCRIPTION / REV
KEH APPROVAL					REVISIONS
COMMENT REVIEW					

EHR APPROVAL BY	DATE 7/16/87	U. S. DEPARTMENT OF ENERGY Richland Operations Office	
		KAISER ENGINEERS HANFORD COMPANY	
PROJ ENGR JNES	7-16-87	PIPING CONCRETE SHIELDING	
DR LEJ	7/16/87		
APPROVED	7-16-87		
DATE APPROVED	7/16/87		
APPROVED BY	7/16/87	PROJECT TITLE 241-AP TANK FARM	
CHECKED BY	7-16-87		
DRAWN BY D O'CONNOR	12-8-86	PROJ B-340	WO X34002	JOB R295A2
DESIGNED BY	7-16-87	SCALE AS SHOWN	BLDG 241-AP	INDEX 0402
CLASSIFICATION	BY	DRAWING NUMBER H-2-90841	SHEET 1	OF 1	REV 1
NONE					

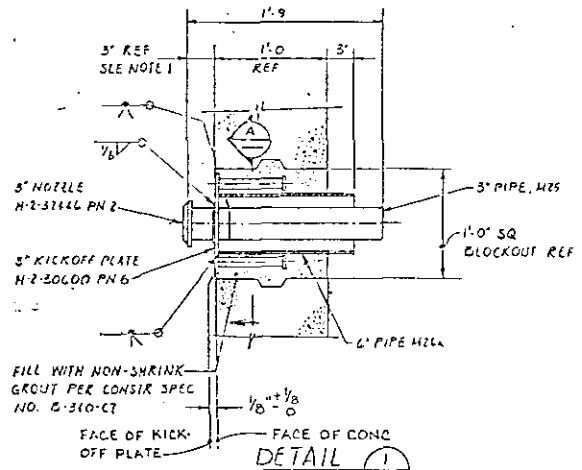

DETAIL 1 (H-2-90551, H-2-90563)

SCALE: 1½" = 1'-0

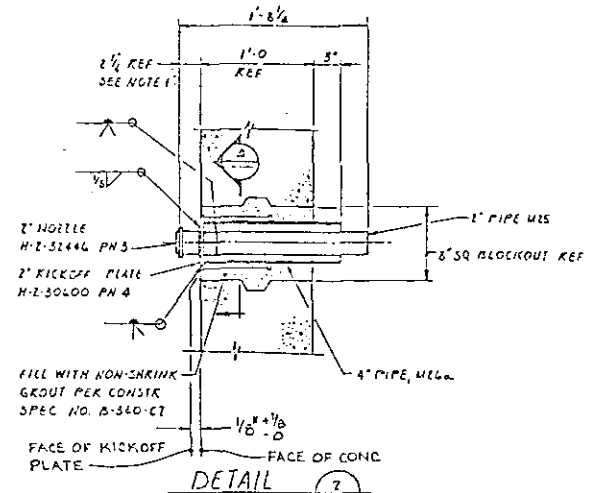

DETAIL 2 (H-2-90551, 90563, H-2-90564, 90566)

SCALE: 1½" = 1'-0

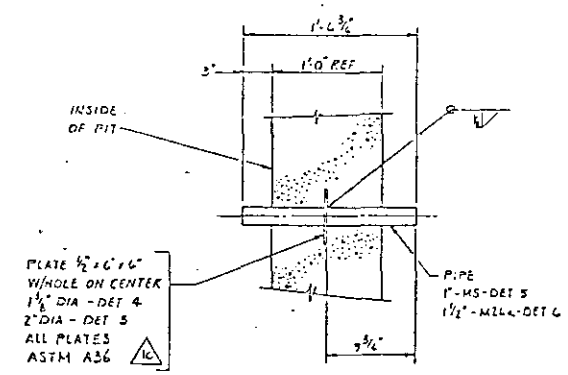

DETAIL 1" PIPE 4 (H-2-90562)

DETAIL 1½" PIPE 5 (H-2-90563, H-2-90565, H-2-90567)

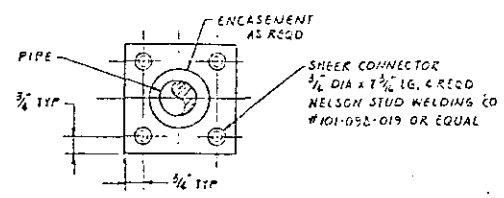

SECTION A

SCALE: NONE

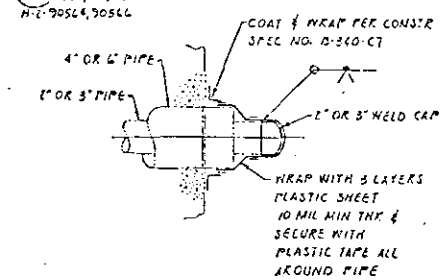

DETAIL 3 (H-2-90561, H-2-90563)

SCALE: NONE

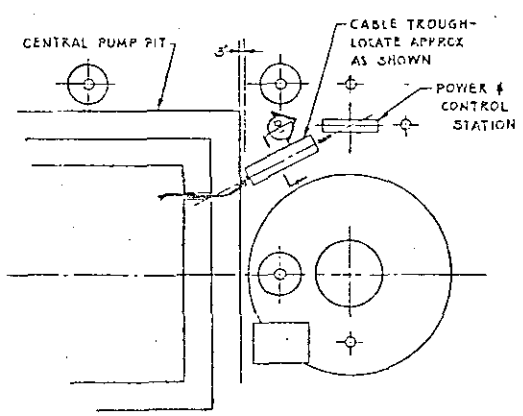

DETAIL 7

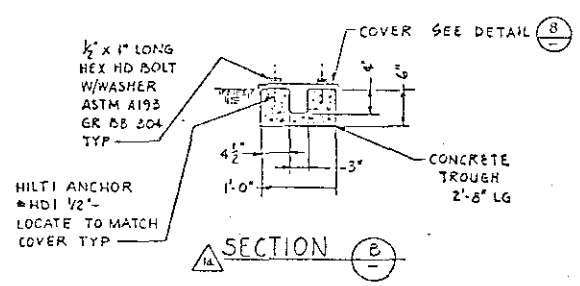

SECTION E

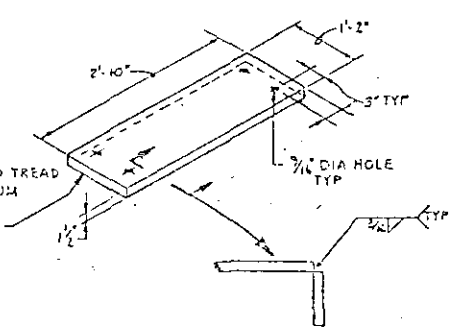

DETAIL 5

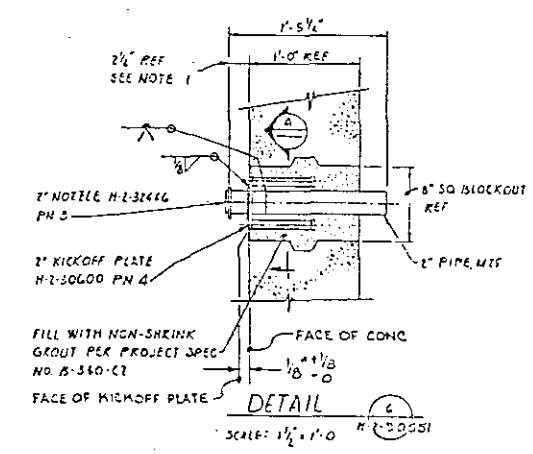

DETAIL 6 (H-2-90551)

SCALE: 1½" = 1'-0

NOTES:

1- WHERE NOTED, DIMENSION IS FROM FACE OF NOZZLE TO KICK OFF PLATE & NOT RELATED TO CONCRETE SURFACE.

2- BLOCKOUTS SHALL BE LOCATED ABOUT CENTERLINE OF PIPE PENETRATIONS.

3- ALL NOZZLES ARE LOCATED TO TRUE POSITION FROM DATUM LINES OR FEATURES AS SPECIFIED ON APPLICABLE PIPING PLAN.

4- TOLERANCES, UNLESS OTHERWISE SPECIFIED, SHALL BE - FRACTIONAL ± ⅛"

5- ALL PIPING MATERIAL, FABRICATION, WELDING, WELD INSPECTION, CLEANING & TESTING SHALL BE PER SPECIFICATION NO. B-340-C7.

RELEASED FOR CONSTRUCTION
BY [illegible] DATE [illegible]
CCE

1	2-4-90	NA		ADD DETAILS 4 & 5 ADD DETAIL 6 ADD SPEC B-340-C7 & CD & ES ADD SPEC B-340-178 & CD ADD SPEC B-340-345 & CORTHELITE	
REV	DATE	REF APPROVAL		DESCRIPTION	REV

REVISIONS

RMC APPROVAL BY [illegible] DATE 9/14/89

U. S. DEPARTMENT OF ENERGY
Richland Operations Office
KAISER ENGINEERS HANFORD COMPANY

PIPING
MISC DETAILS
II

PROJECT TITLE 241-AP TANK FARM

BLDG B-340 NO 236002 PLAN K195A2

SCALE AS SHOWN BLDG 241-AP SHEET 7001

DRAWING NUMBER H-2-90842 SHEET 1 OF 1 REV 1

DRAWN BY R. KOT
CHECKED BY FEDD
NONE

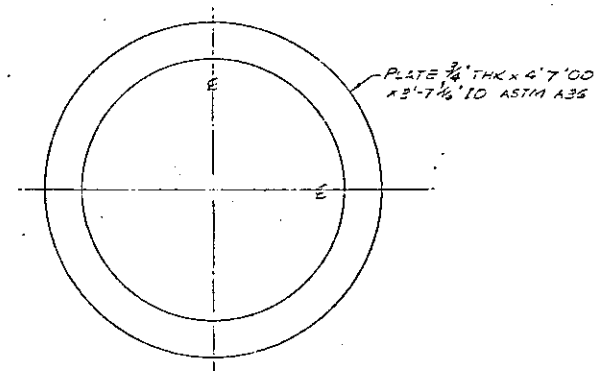

DETAIL 13
SCALE: NONE H-2-90563

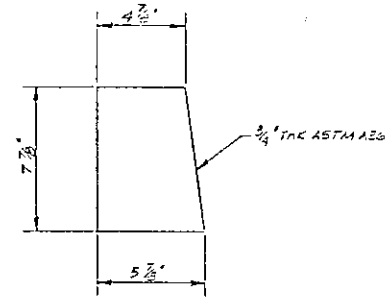

DETAIL 14
12 REQD
EQ SPACED
H-2-90563

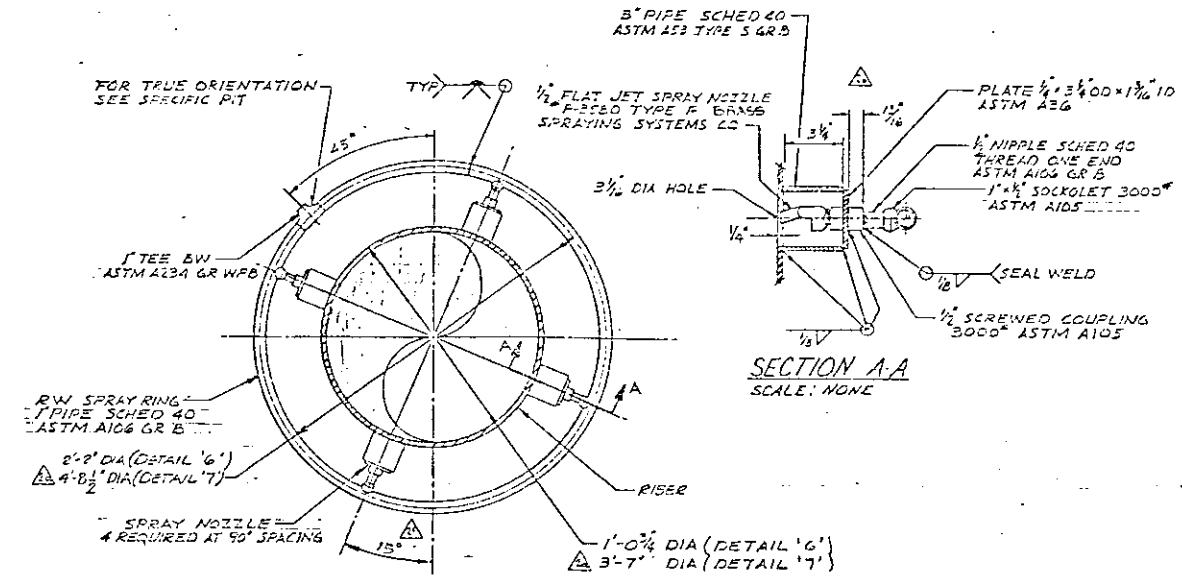

SECTION A-A
SCALE: NONE

72" RISER DETAIL 6
SCALE: NONE H-2-90563

42" RISER DETAIL 7
SCALE: NONE H-2-90563

NOTES:

1. TOLERANCE UNLESS OTHERWISE SPECIFIED SHALL CONFORM TO THE FOLLOWING:
   FRACTIONAL ± 1/16"
   DECMAL ± .005"
   ANGULAR ± 0° - 30'
2. ALL PIPING MATERIAL, FABRICATION, WELDING, WELD INSPECTION, CLEANING & TESTING SHALL BE PER SPECIFICATION B-340-C7

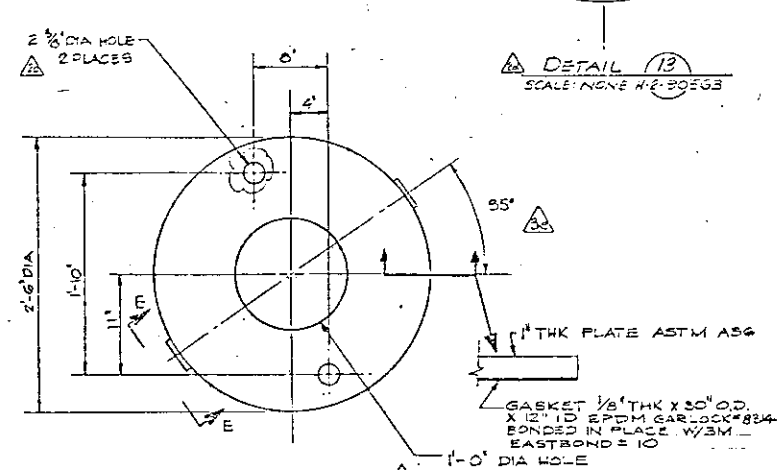

DETAIL 12
SCALE: NONE H-2-90563

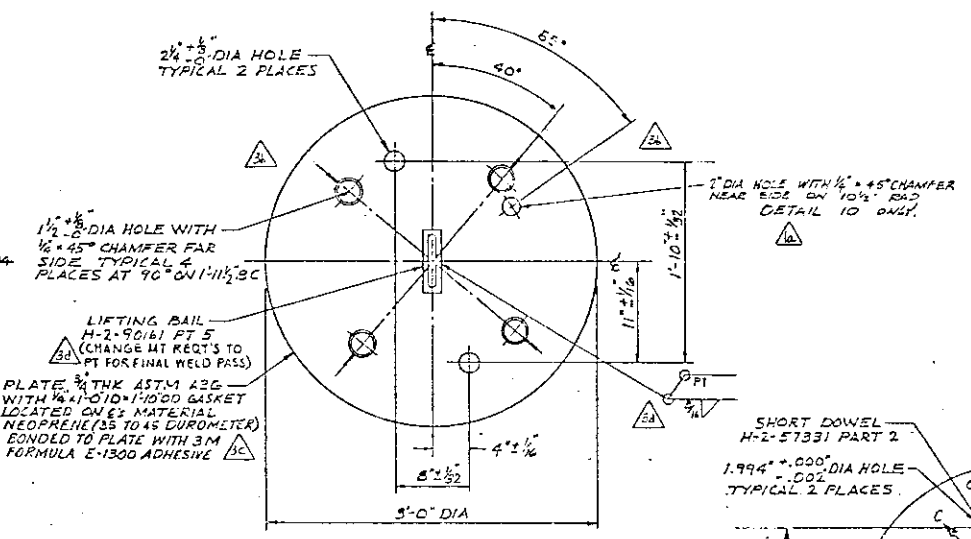

DETAIL 5
SCALE 1 1/2" = 1'-0" H-2-90600

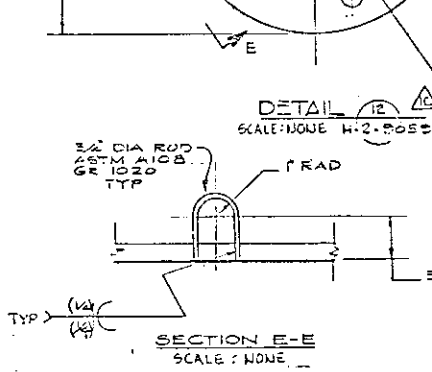

SECTION E-E
SCALE: NONE

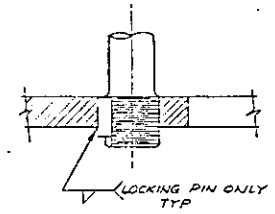

SECTION F-F
SCALE: NONE

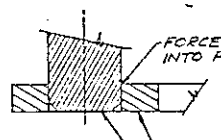

SECTION D-D
SCALE: NONE

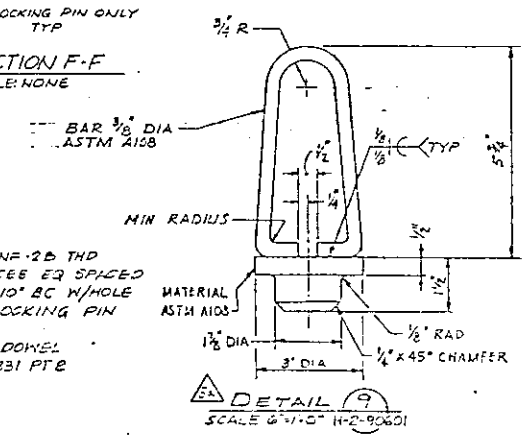

DETAIL 9
SCALE 6" = 1'-0" H-2-90601

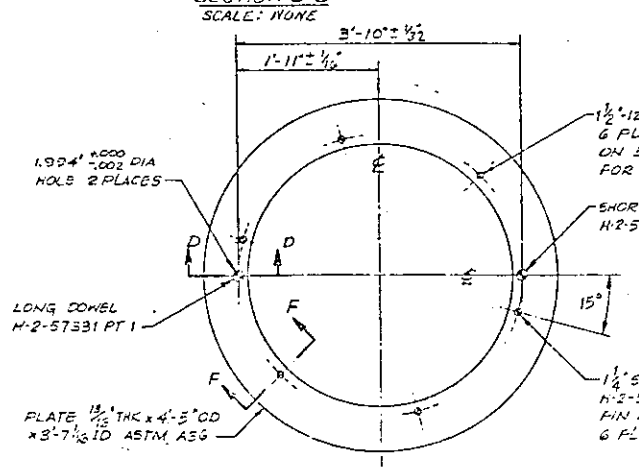

DETAIL 2
SCALE 1" = 1'-0" H-2-90563

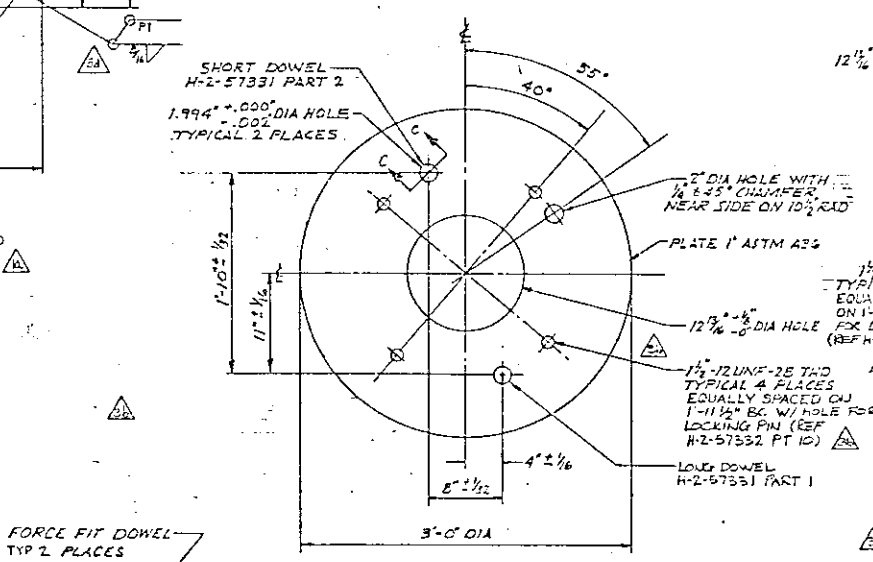

DETAIL 1
SCALE 1 1/2" = 1'-0" H-2-90563

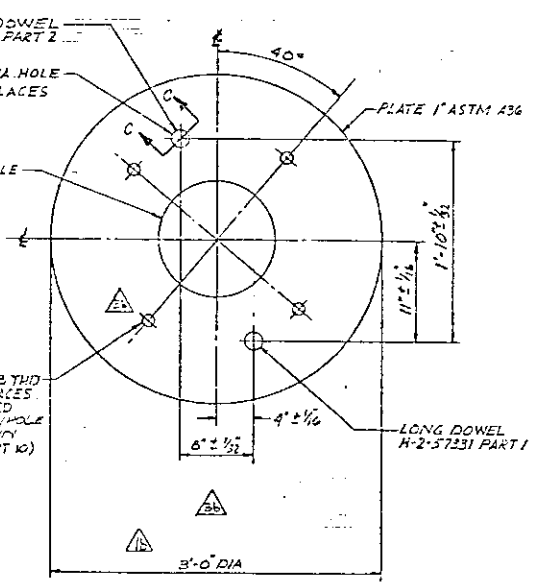

DETAIL 8
SCALE 1 1/2" = 1'-0" H-2-90563

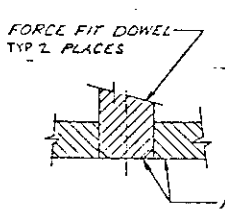

SECTION C-C
SCALE: NONE

REV 1 DOE DATE

RELEASED FOR CONSTRUCTION
BY DOE DATE

REV 2 DOE DATE

NUMBER	TITLE
REFERENCES	
H-2-90161	STD RIGID LIFTING BAIL
H-2-57331	MECH EQUIP DETAIL STUDS
H-2-57331	SHORT & LONG DOWELS
H-2-5146	PIPE NUT RETAINER
H-2-90255	DRAWING LIST

NOT USED ON H-2-90255

REV	DATE	BY	DESCRIPTION
3	12/90	LCJ	AS-BUILT FOR PRS: B-340 (a) DFC B-340-511 & E11 (b) DFC B-340-515 & D7 & D8 — OMER B-340-144 & D5 (c) DFC B-340-235 & D3-4, D27, D14 & D15 (d) DFC B-340-781 & A8 & E9
2	2/11/93	DJW	(a) AS PER DFC B-340-240, 340-486; (b) CHANGE LOCATION OF NOTE 13 & ADDED HOLE & ZN 155 PER DFC B-340-112, B-F, FCC DFC B-340-244; (c) ZN 7F; (d) ADDED SECT F-F DET 18 & 14 PER ISM CUT 2, ZN 1C & 1E-1F; (e) DET 9A REMOVE & ADD DEP. DIV. ZN 2E; (f) CHANGE WAS 4 1/2" & 5" & ZN 2E & 2F (10)
1	8/90		(a) ADD PER DFC B-340-102 (b) ADDED DETAIL 12, & SECT E-E (c) ADDED DET 11 & NOTES ZN 1E & 2E (d) REMOVED DETAIL 10 ZN 1F, 1G

CONCURRENCE: BY-DATE — NEM APPROVAL — BY-DATE

COMMENT REVIEW

REVISIONS

RHC APPROVAL BY — DATE 11/4/92

U. S. DEPARTMENT OF ENERGY
Richland Operations Office
KAISER ENGINEERS HANFORD COMPANY

PIPING
MISCELLANEOUS DETAILS
III

PROJECT TITLE 241-AP TANK FARM

PROJ B-340	NO X34002		R29542
SCALE AS NOTED		241-AP	NOTE 0402
CLASSIFICATION NONE	NOT USED	DRAWING NUMBER H-2-60543	SHEET 1 / 1 REV 3

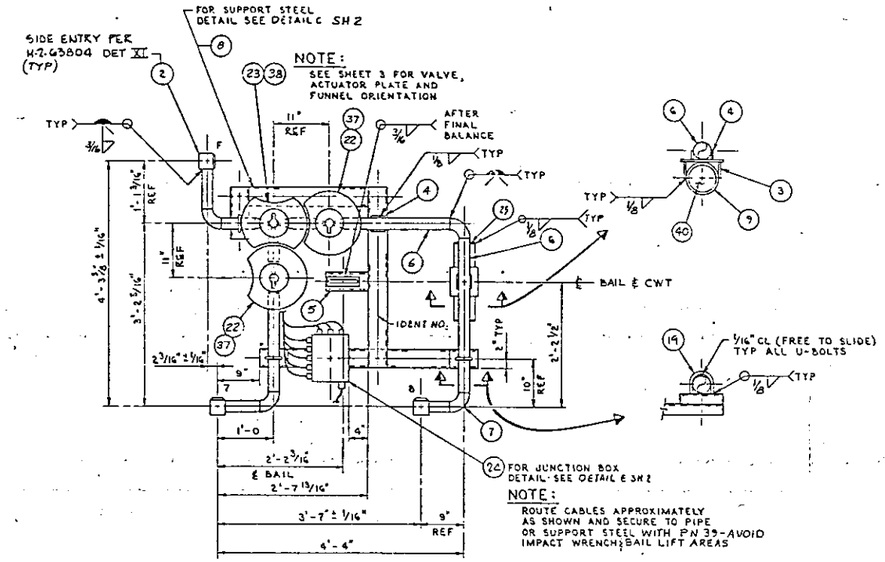

PLAN

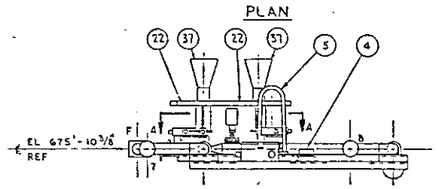

ELEVATION

1 ASSEMBLY
SCALE : 1" = 1'-0

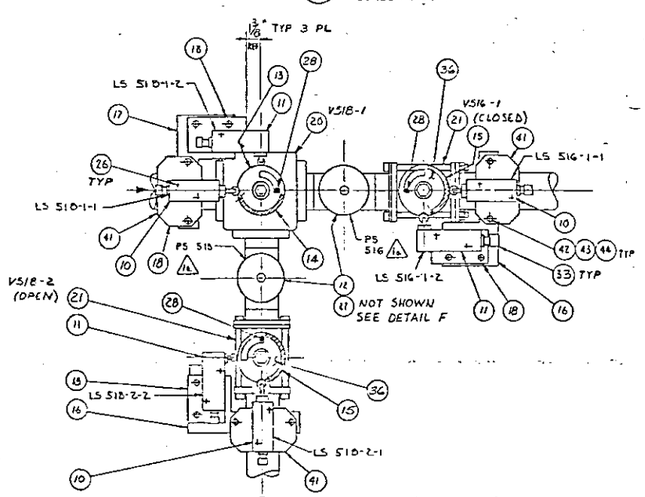

SECTION A-A (POSITION 1 SHOWN)
SCALE : NONE

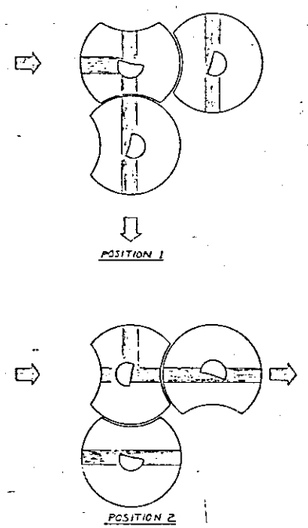

VALVE DISC OPERATION

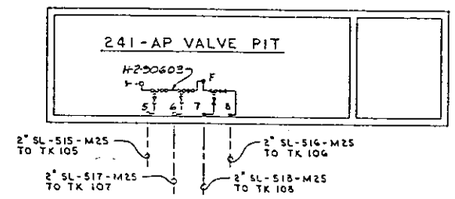

KEY PLAN
SCALE : NONE

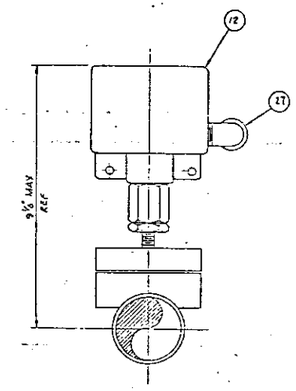

DETAIL F
SCALE : NONE

QTY	PART NO	DESCRIPTION	MATERIAL
	1	ASSEMBLY	
3	2	2" HORIZ CONN ASSY #1 GASKET TYPE III	H-2-32420
1	3	SUPPORT BRACKET DET XIV	H-2-63804
4	4	PLATE 1/4" x 1 3/16" x 3"	ASTM A36
1	5	LIFTING BAIL ASSY-5	H-2-90161
AR	6	PIPE-2" SCHED 40	ASTM A53 TYPE S GR B
4	7	ELBOW-2" SCHED 40 90° LR BUTT WELD	ASTM A234 GR WPB
AR	8	CHANNEL - C4 x 5.4	ASTM A36
1	9	PIPE 4" SCHED 40 1'-4" LG	ASTM A53 TYPE S GR B
2	10	LIMIT SWITCH	SEE NOTE 3 & 5
3	11	LIMIT SWITCH	SEE NOTE 3 & 8
2	12	PRESSURE SWITCH	SEE PROCUREMENT SPEC B-340-P1
1	13	LIMIT SWITCH ACTUATOR, DET A1	H-2-90852
1	14	PIPE SEGMENT DET E	H-2-90852
2	15	PIPE SEGMENT DET F	H-2-90852
2	16	LIMIT SWITCH MTG BRKT, DET G	H-2-90852
1	17	LIMIT SWITCH MTG BRKT, DET H	H-2-90852
3	18	LIMIT SWITCH MTG PLATE, DET L	H-2-90852
3	19	U-BOLT 3/8" DIA FOR 2" PIPE	ASTM A36
1	20	2" 3 WAY BALL VALVE SEE NOTE 4	PITTSBURGH BRASS #E-4-19-BW-RK
2	21	2" 2 WAY BALL VALVE SEE NOTE 4	PITTSBURGH BRASS #E-2-SR-E-19-BW-RK
2	22	INTERLOCK PLATE DET M	H-2-90853
1	23	INTERLOCK PLATE, DET N	H-2-90853
1	24	ELECTRICAL BOX NEMA 13	HOFFMAN ENG CO A-1008 SCEP
2	25	PLATE 1/8" x 4 1/4" DIA	ASTM A36
12	26	ALLEN CAP SCREW #10-32 x 1 3/16" LG W/ 1/4" THD LG	ASTM A193 GR B8 304 SST
2	27	CGE FITTING	CROUSE-HINDS #CGE 292
2	28	STOP PIN SEE DET X	H-2-90853

CONTINUED ON SHEET 2

GENERAL NOTES:

1. FABRICATION & TESTING SHALL BE IN ACCORDANCE WITH HANFORD SPEC HWS-3786 REV 12 OR CURRENT REVISION.
2. HYDROSTATIC TEST AT 600 PSIG.
3. LIMIT SWITCH PN 10 SHALL BE SQUARE-D TYPE C, INO & INC WITH TYPE 9007-C54D TOP ROLLER PLUNGER, LIMIT SWITCH PN 11 TO BE SAME AS ABOVE EXCEPT WITH TYPE 9007-C54F, SIDE ROLLER PLUNGER.
4. 2-WAY AND 3-WAY BALL VALVES PN 20 & 21 SHALL CONFORM TO THE FOLLOWING SPECIFICATIONS:
   a) CARBON STEEL BODY
   b) BUTTWELD ONE PIECE CASTING CARBON STEEL END FITTINGS INTEGRALLY CAST AND MACHINED
   c) 50 PERCENT 316 STAINLESS STEEL FILLED TEFLON BALL SEAT RINGS
   d) ASBESTOS BODY GASKET (BONDED)
   e) GRAPHITED ASBESTOS STEM PACKING
   f) OMIT HANDLE
   g) GLASS FILLED TEFLON BODY FILLER (PN 21 ONLY)
   h) DRILL AND TAP VALVES TO ACCEPT FUTURE MOTOR ACTUATORS
5. FOR VALVE FUNNEL ASSEMBLY INSTRUCTIONS SEE DETAIL U H-2-30853

CONTINUED ON SHEET 2

RELEASED FOR CONSTRUCTION
BY ____ DATE ____
DOE

1	11-4 9-10-86	NA		JDC 2-20-86	AS-BUILT FOR PROJ E-340 b) DFC B-340-150 2 C-1, E-4,3 2) RFC B-340-112 E-42, B-10	1
REV	DATE	BY	DATE	REV BY DATE	DESCRIPTION	REV

REVISIONS

H-2-90435	DRAWING LIST	
NUMBER	TITLE	
REFERENCES		
NEXT USED ON	H-2-90598	

MICROFILMED
COMMENT REVIEW

RHO APPROVAL BY ____ DATE ____
PROJ ENGR ____
DESIGN ____
DRAFTING ____
GROUP MGR ____
LEAD ENGR ____
DATE ____
CHECKED ____
DRAWN J. BREED 8/13/86

U. S. DEPARTMENT OF ENERGY
Richland Operations Office
KAISER ENGINEERS HANFORD COMPANY

JUMPER ASSEMBLY
7-8-F
VALVE PIT

PROJECT TITLE 241-AP TANK FARM
PROJ E-340 WO X 54602 AE R295AP
SCALE AS SHOWN BLDG 241-AP MODEL 5605
CLASSIFICATION NONE BY NOT REQ'D
DRAWING NUMBER H-2-90847 SHEET 1 OF 3 REV 1

U.S. GOVERNMENT PRINTING OFFICE 1986-655-525

QTY	PN	DESCRIPTION	MATERIAL
3	29	TERMINAL BLOCK 10 POINT	BUCHANAN # 51510
1	30	PANEL 8 3/4" x 6 7/8"	HOFFMAN ENG CO # A10P8
8	31	CGB FITTING WITH LOCKNUT AND SEALING GASKET	CROUSE - HINDS # CGB 192 - SG
1	32	CGB FITTING WITH LOCKNUT AND SEALING GASKET	CROUSE - HINDS # CGB 499 - SG
6	33	CGB FITTING	CROUSE - HINDS # CGB 192
1	34	TYPE SO CABLE 12/C # 12 x 20' LG	STD WIRE & CABLE # 1338 - 12
AR	35	CABLE 2/C # 14 KAPTON COVERED	STD WIRE & CABLE # D3162
2	36	LIMIT SWITCH ACTUATOR DET A2	H-2-90852
2	37	VALVE FUNNEL DET Z3	H-2-90852
1	38	VALVE FUNNEL DET Z2	H-2-90852
AR	39	WORM SCREW CLAMP	SST
AR	40	LEAD APPROX WT 84 #	ASTM B29
3	41	LIMIT SWITCH MTG PLATE DET AD	H-2-90845
12	42	HEX HD BOLT 1/4 - 20 UNC-2A x 1" LG	ASTM A307 GR B
12	43	HEX NUT 1/4 - 20 UNC - 2B	ASTM A563 GR A
12	44	LOCK WASHER 1/4"	ASTM A325 TYPE 3

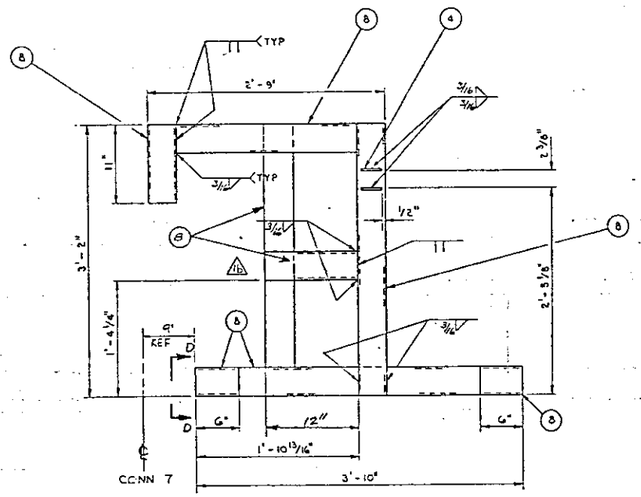

DETAIL C
SCALE : 1 1/2" = 1'-0"

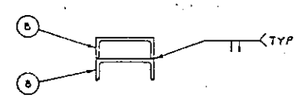

VIEW D-D TYPICAL
SCALE : 3" = 1'-0

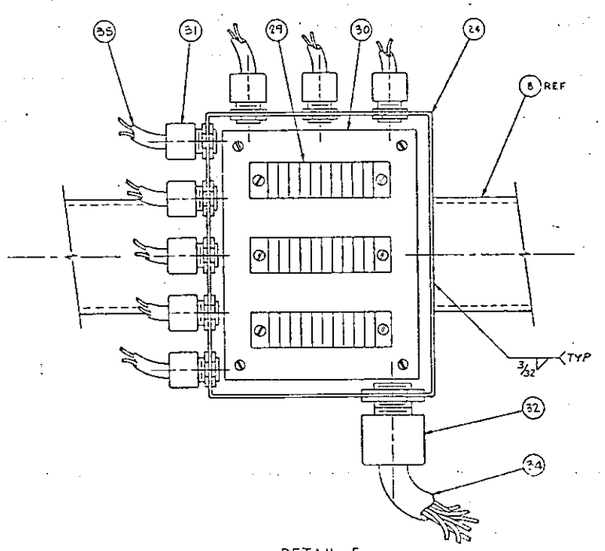

DETAIL E
SCALE : NONE

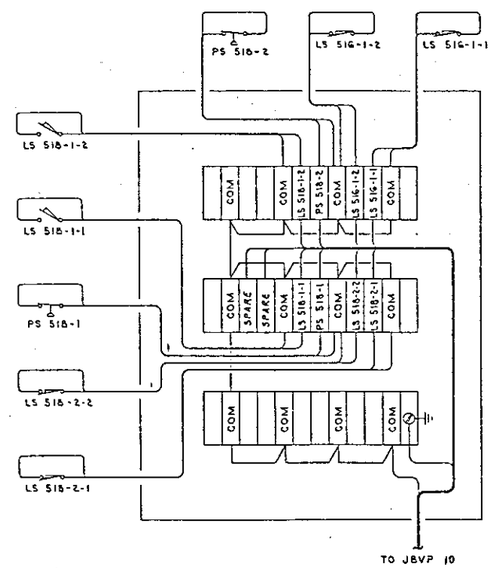

WIRING DIAGRAM
SEE NOTES 6 & 7

NOTES: (CONT)

6. LIMIT SWITCHES ARE SHOWN WITH LIMIT SWITCH IN NON-ACTUATED POSITION
7. PRESSURE SWITCHES ARE SHOWN WITH NO PRESSURE ON ELEMENT
8. PAINT LIMIT SWITCH IDENT NO. ON TOP OF EACH SWITCH.
9. FIELD VERIFY VALVE CLEARANCES, CONFIGURATION AND LOCATION PRIOR TO FUTURE ACTUATOR PROCUREMENT AND INSTALLATION.

RELEASED FOR CONSTRUCTION
BY ____ DOE

NUMBER	TITLE
H-2-90435	DRAWING LIST

REFERENCES
NEXT USED ON H-2-90535

REV	BY/DATE	BY/DATE	REV BY DATE	DESCRIPTION	REV
A	LE-1 9-10-86	NA	JDC	AS-BUILT FOR PROJ B-340 b) RCD CHNG Z E-7 c) DFC B-340-180 Z C-1,2	1

MICROFILMED
APPROVAL: KEH APPROVAL
REVISIONS
COMMENT REVIEW

RHO APPROVAL BY C. M. Bell
DATE 7/1/83
PROJ ENGR
DATE
APPROVED BY
SAFETY
APPROVED BY
CHECKED BY
DRAWN BY G. VINCENT
DESIGNED BY D. O'Connor
CLASSIFICATION BY NONE NOT REQD

U. S. DEPARTMENT OF ENERGY
Richland Operations Office
KAISER ENGINEERS HANFORD COMPANY

JUMPER ASSEMBLY
7-8-F
VALVE PIT

PROJECT TITLE 241-AP TANK FARM
PROJ B-340 | WO X34002 | JOB R295A2
SCALE SHOWN | BLDG 241-AP | INDEX 8405
DRAWING NUMBER H-2-90847 | SHEET 2 | OF 3 | REV 1

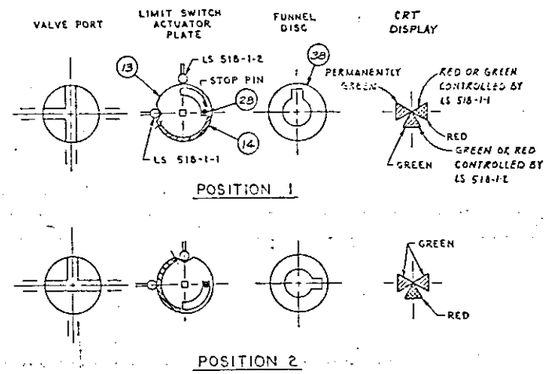

VALVE V 518-1

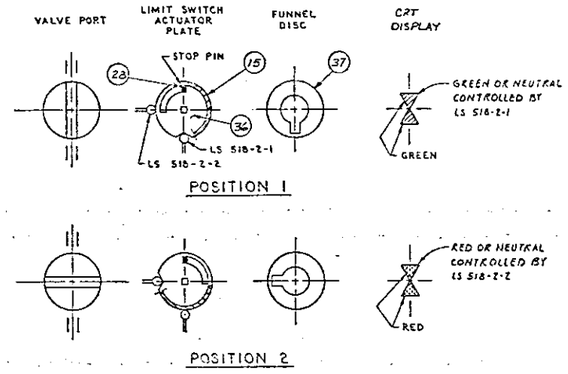

VALVE V 518-2

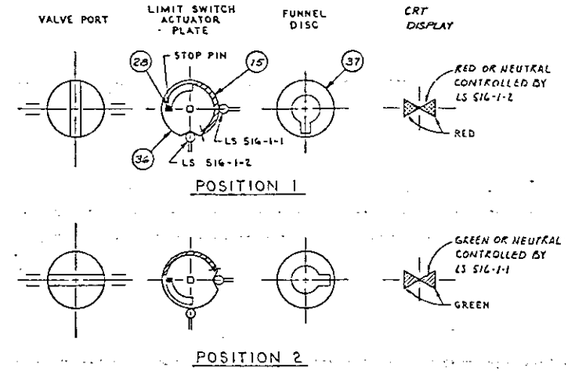

VALVE V 516-1

NOTE:

SEE DWG H-2-90476 SH 7 FOR CRT LOGIC ELEMENTARY DIAGRAM.

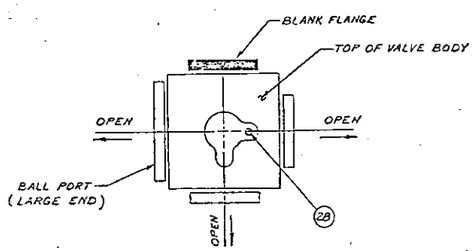

DETAIL
VALVE ORIENTATION
V 518-1
SCALE: NONE

RELEASED FOR CONSTRUCTION
BY ____ DATE ____
DOE

11	CRT 9-20-83	NA	JW	UDC	5-24-84	AS-BUILT FOR PROJ B-340	1
	BY-DATE		BY-DATE		REV BY DATE	DESCRIPTION	REV
	APPROVAL		KEH APPROVAL			REVISIONS	
	COMMENT REVIEW						

MICROFILMED

H-2-90435	DRAWING LIST
NUMBER	TITLE
REFERENCES	
NEXT USED ON H-2-90570	

PHO APPROVAL BY ____ DATE 11/1/83

PROJ ENGR ____ 11-1-83
QA ____ 11/1/83
APPROVED BY ____ 11-2-83
APPROVED BY ____ 11/2/83
APPROVED BY ____ 11-15-83
APPROVED BY ____ 11-15-83
CHECKED BY ____ 11-15-83
DRAWN BY G. VINCENT 11/1/83
DESIGNED BY D. STOMMEL 11/1/83
CLASSIFICATION BY NONE NOT REQD

U. S. DEPARTMENT OF ENERGY
Richland Operations Office
KAISER ENGINEERS HANFORD COMPANY

JUMPER ASSEMBLY
7-8-F
VALVE PIT

PROJECT TITLE 241-AP TANK FARM

PROJ B-340	WO X34002	JOB R255A2	
SCALE NONE	BLDG 241-AP	MODEL 8405	
DRAWING NUMBER H-2-90847	SHEET 3	OF 3	REV 1

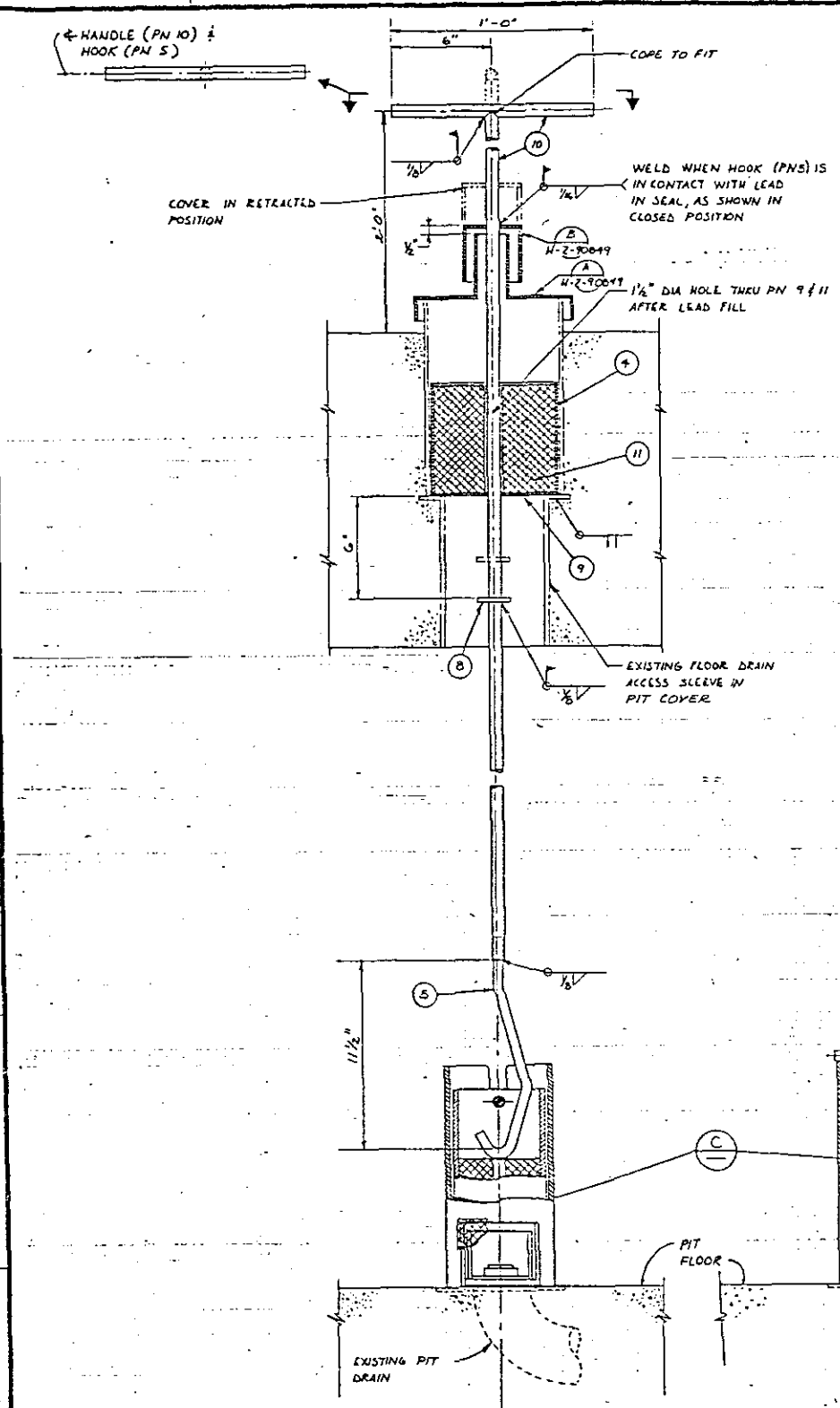

1 ASSEMBLY
SCALE : 3" = 1'-0"

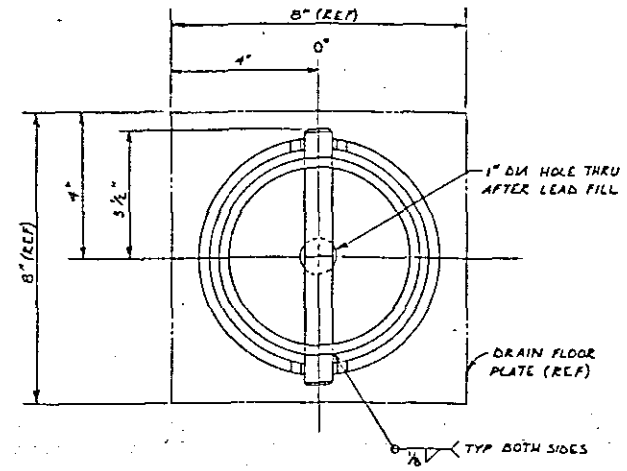

PLAN

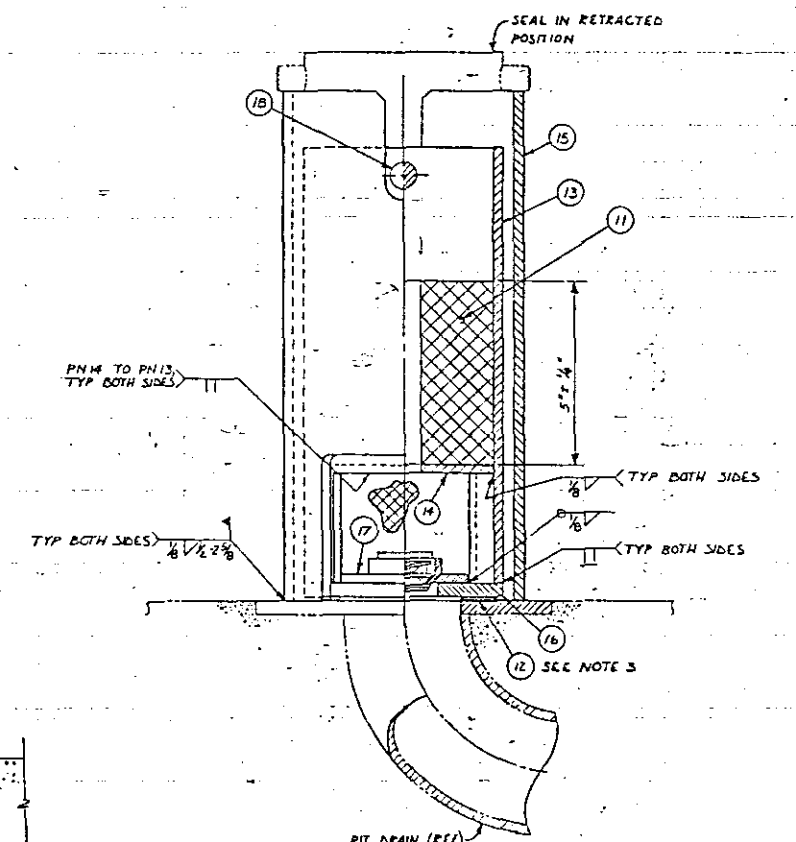

DETAIL C
SCALE: 6" = 1'-0"

NOTE: HOOK (PN5) NOT SHOWN

QTY	PN	DESCRIPTION	MATERIAL
	1	ASSEMBLY	
AR	2	PIPE - 1½" SCHED 40	ASTM A106 GR B
AR	3	PIPE - 3" SCHED 40 TYPE S	ASTM A53 TYPE S GR B
1	4	RING	ASTM A570
1	5	HOOK	ASTM A108 GR 1020
AR	6	11 GA - SHEET	ASTM A570
AR	7	WIRE CLOTH 6 x 6 x .063" NO. 32W0N59 MCMASTER CARR CATALOG #87	GALVANIZED STEEL
1	8	PLATE - ¼" THK x 2" OD x 1⅛" ID	ASTM A36
1	9	PLATE - ¼" THK x 7½" DIA	ASTM A36
AR	10	PIPE - ¾" SCHED 80	ASTM A106 GR B
AR	11	LEAD FILL	LEAD
1	12	GASKET - ¼" THK x 5" OD x 3" ID	NEOPRENE RUBBER 35-45 DUROMETER
1	13	TUBE	ASTM A53 TYPE S GR B
1	14	PLATE - ¼" THK x 5" DIA	ASTM A36
1	15	GUIDE	ASTM A53 TYPE S GR B
1	16	PLATE - ⅜" THK x 5 7/16" OD x 2" ID	ASTM A36
1	17	CHECK VALVE - 2" - 150# 3.5 IN H_2O CRACKING PRESS	CHECK - UL MFG CO. 2" FIV - S - T - 1/2
1	18	ROD - ¾" DIA x 7" LONG	ASTM A108 GR 1020

GENERAL NOTES:

1. FABRICATION, MATERIALS & CLEANING SHALL BE IN ACCORDANCE WITH CONSTRUCTION SPEC B-340-C7.
2. TOLLERANCES (UNLESS OTHERWISE INDICATED): FRACTIONAL - ± 1/16" ANGULAR - ± ½°.
3. BOND GASKET (PN 12) TO PLATE (PN 16) WITH 3M FORMULA 1300 ADHESIVE.
4. BREAK ALL SHARP EDGES & CORNERS TO .010" MINIMUM.
5. ESTIMATED WEIGHT OF DRAIN SEAL, LESS GUIDE (PN15) - 60 LB.
6. ESTIMATED FORCE REQD TO LIFT PLUG INTO FREE DRAIN POSITION - 74 LB.
7. MARK PER HS-B1-0015 TYPE 1 OR TYPE 2 WITH DWG NO AND REV NO IN LOCATIONS INDICATED, ¼" HIGH LETTERS.
8. FOR DETAILS OF ITEMS # 3, 4, 5, 6, 7, 13 & 15, SEE DWG H-2-90849

RELEASED FOR CONSTRUCTION
BY [illegible] BOE DATE [illegible]

H-2-90435	DRAWING LIST
NUMBER	TITLE
REFERENCES	
NEXT USED ON H-2-90435	

BY	DATE	DESCRIPTION	REV
M	7/10/86	AS-BUILT FOR PROJ B-340 (5) DFC-B340-502 ECS & A1 ASSY, RING WAS ASTM A569 (2) DT M30-239.37 SH WAS 12 GA ASTM	1

MICROFILMED: BY-DATE; ROCKWELL APPROVAL; KEH APPROVAL; REVISIONS; COMMENT REVIEW

RHO APPROVAL — DATE 7/3/86
PROJ ENGR [illegible]
DESIGN [illegible]
MAT'L ENGR [illegible]
QA [illegible]
GROUP MGR [illegible]
LEAD ENGR J.R. WILKINSON
DRAWN B. O'CONNOR
CHK'D G. CLEVELAND
DRAW'N J.C. BEELD 7-7-86

U. S. DEPARTMENT OF ENERGY
Richland Operations Office
KAISER ENGINEERS HANFORD COMPANY

PIPING
PIT DRAIN SEAL
ASSEMBLY

PROJECT TITLE: 241-AP TANK FARM
PROJ B-340 | WO X34002 | JOB F295A2
SCALE AS SHOWN | BLDG 241-AP | SHEET 0902
CLASSIFICATION NONE | ST NOT REQD | DRAWING NUMBER H-2-90848 | SHEET 1 | OF 1 | REV 1

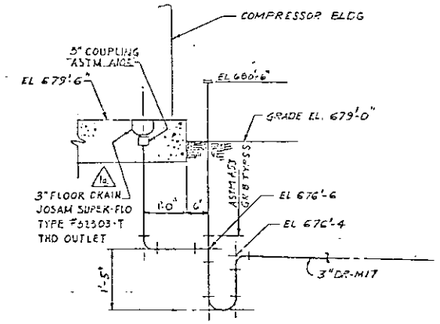

DETAIL 1
SCALE: NONE H-2-90545

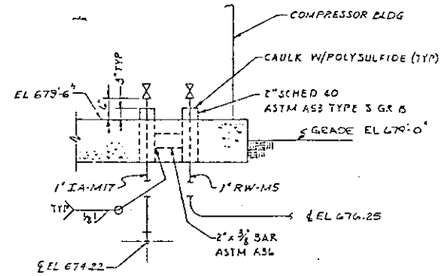

DETAIL 2
SCALE: NONE H-2-90545
LOOKING SOUTH

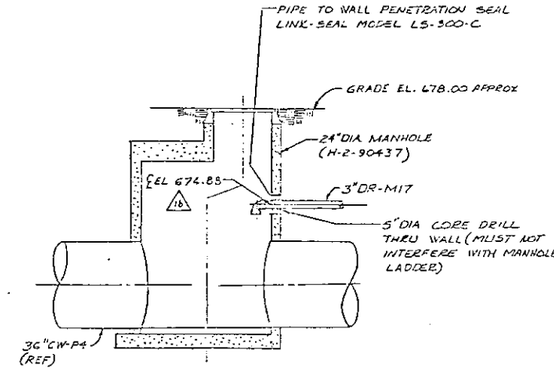

DETAIL 3
SCALE: NONE H-2-90545

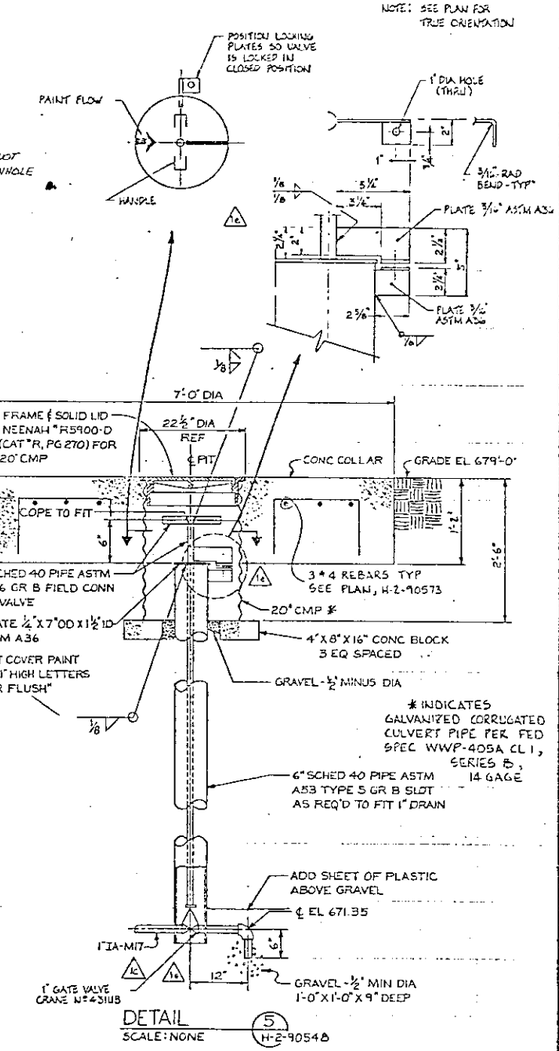

DETAIL 5
SCALE: NONE H-2-90548

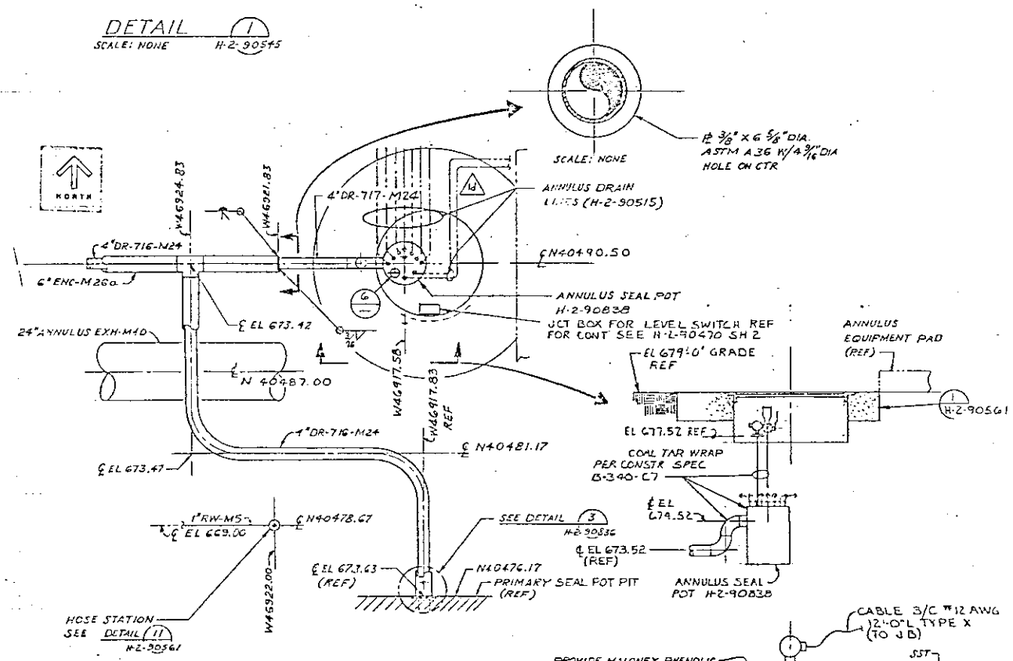

DETAIL 4
SCALE: 1/2" = 1'-0" H-2-90547

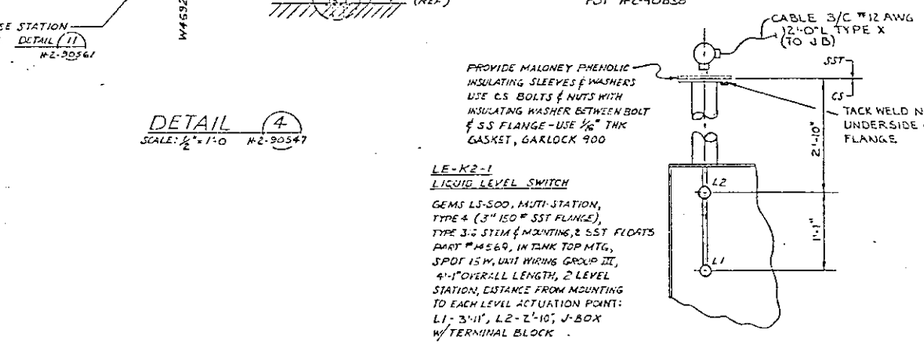

DETAIL 6
SCALE: NONE

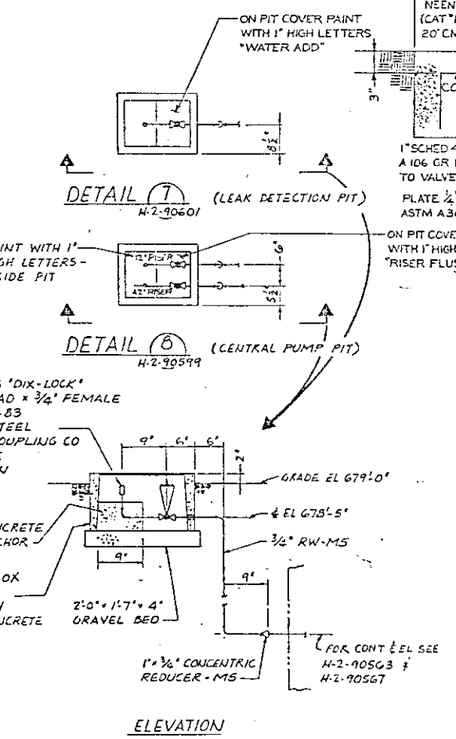

ELEVATION

RELEASED FOR CONSTRUCTION
BY DATE
DOE

H-2-90-551	DRAWING LIST				
NUMBER	TITLE				
	REFERENCES				
ENT USED ON H-2-90545					

MICROFILMED: BY-DATE / BY-DATE; ROCKWELL APPROVAL; KEN APPROVAL; COMMENT REVIEW

REV	DESCRIPTION
1	AS BUILT FOR FROJ B-340 1) DFC-B340-501, 2 C-3 B340-471 IN E2, D2 (B2 2) DFC B-340-355 2 D7 4) DFC-B340-471 IN E2, D2 (B2 3) DFC B-340-599 2 B2 4) DFC B-340-374 2 E4 5) DFC B-340-290 2 EF8 & F5.6

REVISIONS

RHO APPROVAL BY C. MILL	DATE 11/14/83	U. S. DEPARTMENT OF ENERGY Richland Operations Office	
		KAISER ENGINEERS HANFORD COMPANY	
PROJ ENGR		PIPING MISCELLANEOUS DETAILS IV	
CHK APPROVED			
DES APPROVED			
APPROVED		PROJECT TITLE 241 AP TANK FARM	
CHECKED C. CLEVELAND			
DRAWN C. A. KELLER		PROJ B-340	NO X34002
CHECKED		SCALE AS SHOWN	BLDG 241 AP
CLASSIFICATION		CLASSIFICATION EST NONE NOT REQD	DRAWING NUMBER H-2-90850

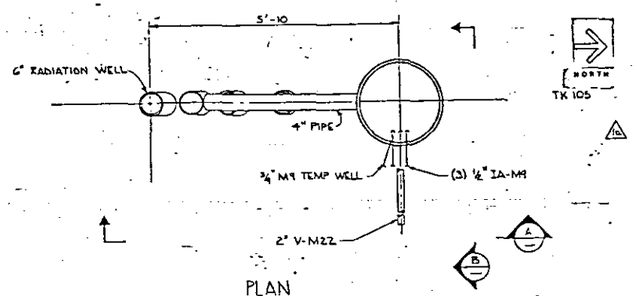

PLAN
ARRANGEMENT I 241-AP-05C

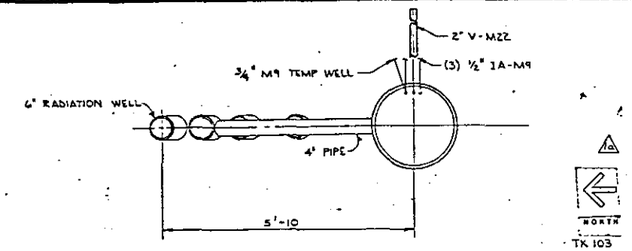

PLAN
ARRANGEMENT II 241-AP-03C
ALL DIMENSIONS SIMILAR TO ARRANGEMENT I

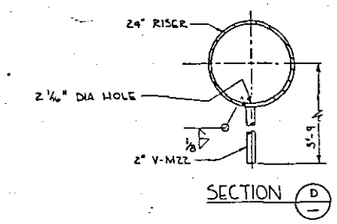

SECTION D

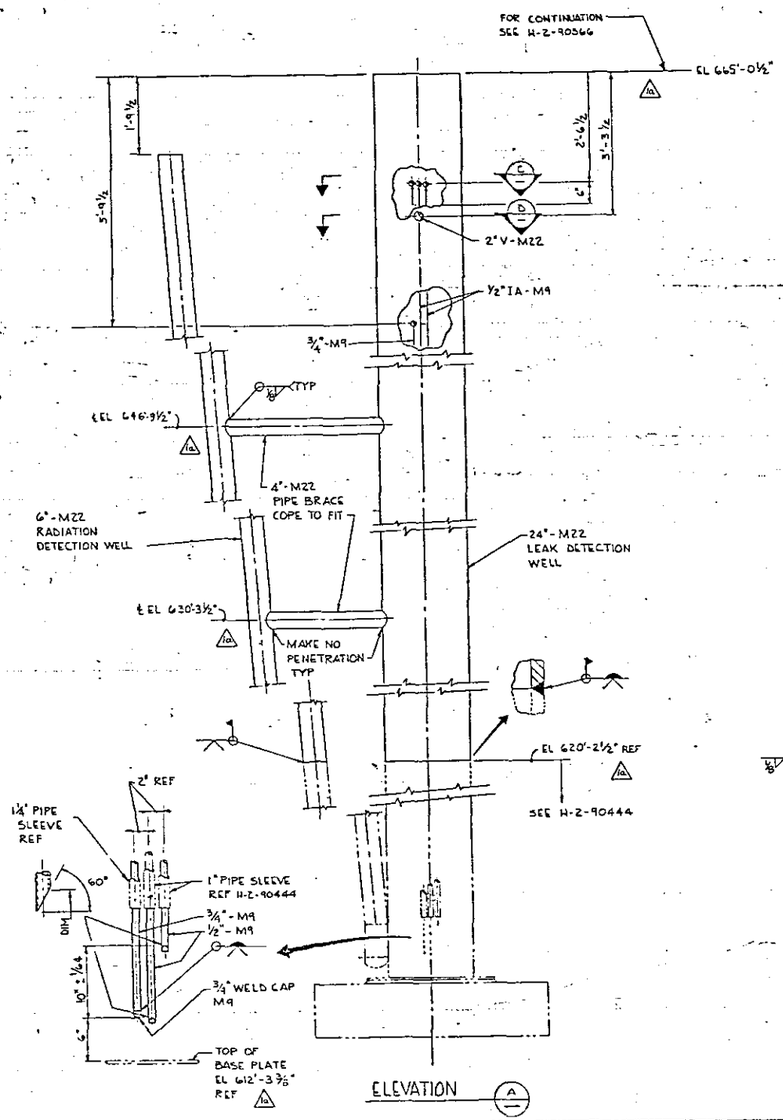

ELEVATION A

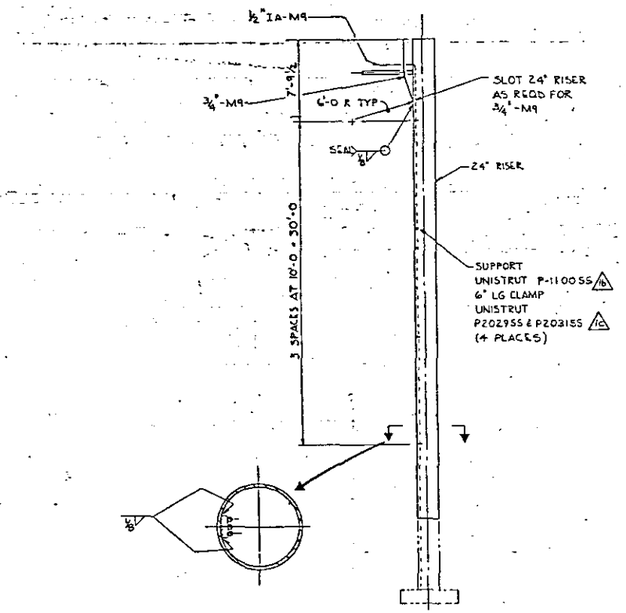

ELEVATION B
SCALE: 3/16" = 1'-0

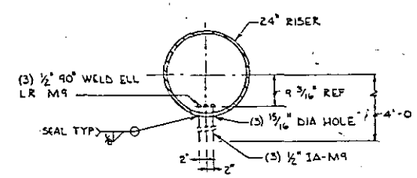

SECTION C

NOTES:

1. PIPING MATERIAL, FABRICATION, WELDING, WELD INSPECTION, CLEANING, TESTING & PROTECTIVE COATINGS SHALL BE IN ACCORDANCE WITH SPEC B-340-C5

RELEASED FOR CONSTRUCTION
BY S/L Wilson DATE 8/30/82
DOE

SCALE: ¾" = 1'-0 & NOTED

H-2-90435	DRAWING LIST		
NUMBER	TITLE		
REFERENCES			
NEXT USED ON	H-2-90435		

BY	DATE	BY	DATE			REV BY DATE	DESCRIPTION	REV
				LET 4/5/85	NA		AS BUILT FOR PROJ B-340 a) DFC B-340-219, Z A1 c) DFC B-340-30, Z C6 F) J, G6 b) DFC B-340-44, Z C6 (2 Bal) g) DFC B-340-220, Z A6, DF/2, B E G/D	1
		PHO APPROVAL	KEN APPROVAL					
MICROFILMED				REVISIONS				
COMMENT REVIEW								

PHO APPROVAL BY	DATE 9/13/82	U. S. DEPARTMENT OF ENERGY Richland Operations Office	
PROJ ENGR		KAISER ENGINEERS HANFORD COMPANY	
DESIGN		PIPING SECTIONS & DETAILS LEAK DETECTION WELL 241-AP-03C & -05C	
GROUP MGR			
LEAD ENGR J.H. NICHOLSON		PROJECT TITLE 241-AP TANK FARM	
MECHANICAL J. O'CONNOR		PROJ B-340	NO X34002
CHECKED R. ZAMA			
DRAWN J. C. BREED		SCALE AS SHOWN	BLDG 241-AP
CLASSIFICATION NONE	BY NOT REQD	DRAWING NUMBER H-2-90851	SHEET —

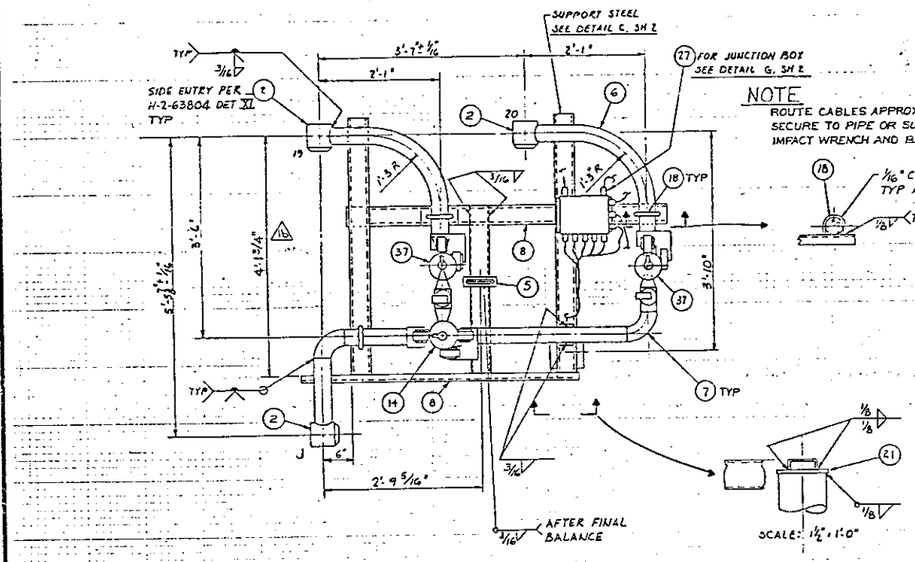

PLAN

SCALE 1" = 1'-0

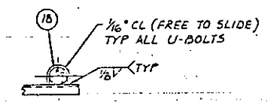

NOTE

ROUTE CABLES APPROXIMATELY AS SHOWN AND SECURE TO PIPE OR SUPPORT STEEL WITH PN 38- AVOID IMPACT WRENCH AND BAIL LIFT AREAS

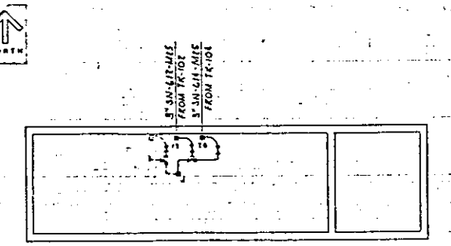

KEY PLAN

SCALE: NONE

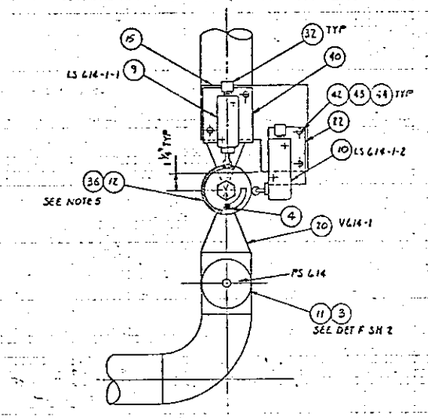

SECTION B-B

SCALE: 3" = 1'-0"

FOR VALVE ORIENTATION SEE DET SH 3

QTY	PN	DESCRIPTION	MATERIAL
X	1	ASSEMBLY	—
3	2	3" HORIZ CONN ASSY #1 GASKET TYPE III	H-2-32450
2	3	CGE FITTING	CROUSE-HINDS #CGE-292
3	4	STOP PIN DETAIL X	H-2-90853
1	5	LIFTING BAIL ASSY 5	H-2-90161
AR	6	PIPE 3" SCHED 40	ASTM A53 TYPE S GR B
2	7	ELBOW 3" SCHED 40 90° LR BUTT WELD	ASTM A234 GR WP B
AR	8	CHANNEL C4 x 5.4	ASTM A36
4	9	LIMIT SWITCH	SEE NOTE 3 & 8
3	10	LIMIT SWITCH	SEE NOTE 3 & 8
2	11	PRESSURE SWITCH ASSEMBLY	SEE PROCUREMENT SPEC 6-240-P1
2	12	LIMIT SWITCH ACTUATOR DET B	H-2-90852
1	13	LIMIT SWITCH ACTUATOR DET C	H-2-90852
1	14	VALVE FUNNEL DET "2"	H-2-90852
3	15	LIMIT SWITCH MTG BRACKET DET J	H-2-90852
1	16	PLATE 1/4" X 6 3/8" DIA	ASTM A36
1	17	LIMIT SWITCH MTG BRACKET DET T	H-2-90853
3	18	U-BOLT 1/2" DIA FOR 3" PIPE	ASTM A36
1	19	3" 3-WAY BALL VALVE SEE NOTE 4	PITTSBURGH BRASS #3"MP-E-17-BM-G-NC
2	20	3" 2-WAY BALL VALVE SEE NOTE 4	PITTSBURGH BRASS #3"SP-E-4-BN-4-50-NC
1	21	PLATE 1/2" X 7" X 7"	ASTM A36
3	22	LIMIT SWITCH MTG PLATE DET L	H-2-90852
14	23	ALLEN CAP SCREW #10-32 X 1 3/4" LG W/ 1/4 THD LG	ASTM-A-193 GR-B8-304 SST
1	24	PIPE 6" SCHED 40 1'-4" LG	ASTM A53 TYPE S GR B

CONTINUED ON SHEET 2

GENERAL NOTES:

1. FABRICATION & TESTING SHALL BE IN ACCORDANCE WITH HANFORD SPEC HW1-516L REV 12 OR CURRENT REVISION
2. HYDROSTATIC TEST AT 600 PSIG.
3. LIMIT SWITCH PN 9 SHALL BE SQUARE-D TYPE C, 1NO 1NC Y TYPE 9007-C54D TOP ROLLER PLUNGER, LIMIT SWITCH PN 10 TO BE SAME AS ABOVE EXCEPT WITH TYPE 9007-C54F SIDE ROLLER PLUNGER.
4. 2-WAY & 3-WAY BALL VALVES PN 19 & 20 SHALL CONFORM TO THE FOLLOWING SPECIFICATIONS:
   a) CARBON STEEL BODY
   b) BUTTWELD ONE PIECE CASTING CARBON STEEL END FITTINGS INTEGRALLY CAST AND MACHINED
   c) 50 PERCENT 316 STAINLESS STEEL FILLED TEFLON BALL SEAT RINGS
   d) ASBESTOS BODY GASKET (BONDED)
   e) GRAPHITED ASBESTOS STEM PACKING
   f) OMIT HANDLE
   g) GLASS FILLED TEFLON BODY FILLER (PN 20 ONLY)
   h) DRILL AND TAP VALVES TO ACCEPT FUTURE MOTOR ACTUATORS.
5. FOR VALVE FUNNEL ASSEMBLY INSTRUCTIONS SEE DETAIL U H-2-90853

CONTINUED ON SHEET 2

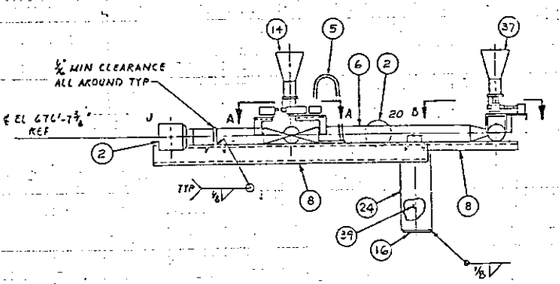

ELEVATION

1 ASSEMBLY

SCALE: 1" = 1'-0"

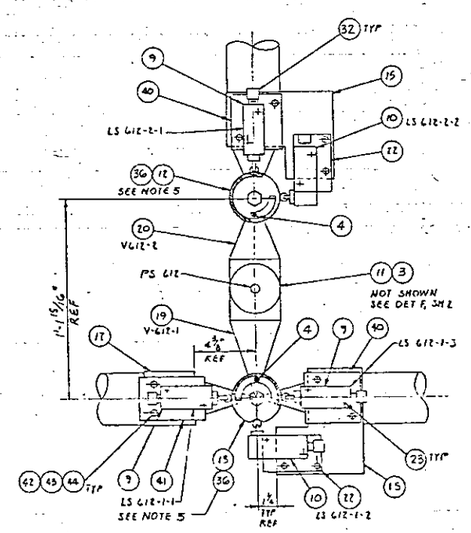

SECTION A-A

SCALE: 3" = 1'-0"

FOR VALVE ORIENTATION SEE DET SH 3

RELEASED FOR CONSTRUCTION
BY DOE DATE

H-2-90455	DRAWING LIST				
NUMBER	TITLE				
REFERENCES					
NEXT USED ON H-2-90556					

MICROFILMED

REV	BY/DATE	BY/DATE	BY/DATE	DESCRIPTION
A	LEJ 9/9/86	NA	JWJ 7/31/86	AS BUILT FOR PROJ E 340
			UDC 7/31/86	b) RED CHNG Z E-7 WAS 217°
				c) DFC-340-180 Z E1, C1, Z
	CONSTR. APPROVAL	KEII APPROVAL		REVISIONS
				COMMENT REVIEW

KHO APPROVAL BY — DATE 7/7/86

U. S. DEPARTMENT OF ENERGY
Richland Operations Office
KAISER ENGINEERS HANFORD COMPANY

JUMPER ASSEMBLY
19-20-J
VALVE PIT

PROJ ENGR — DATE 7/2/86
DR — DATE 7/2/86
APPROVED — DATE 5-5-87
DESIGN — DATE 5/5/86
APPROVED — DATE 7/2/86
CHECKED — DATE 5-5-87
DRAWN D NEKKIMEN DATE 7/2/86
DESIGNED J D CRUNDER DATE 7-15-83
CLASSIFICATION TAY

PROJECT TITLE 241-AP TANK FARM
PROJ B-340 WO E34002 FOR R79542
SCALE SHOWN BLDG 241-AP MODE 8405
DRAWING NUMBER H-2-90854 SHEET 1 OF 3 REV 1
NONE

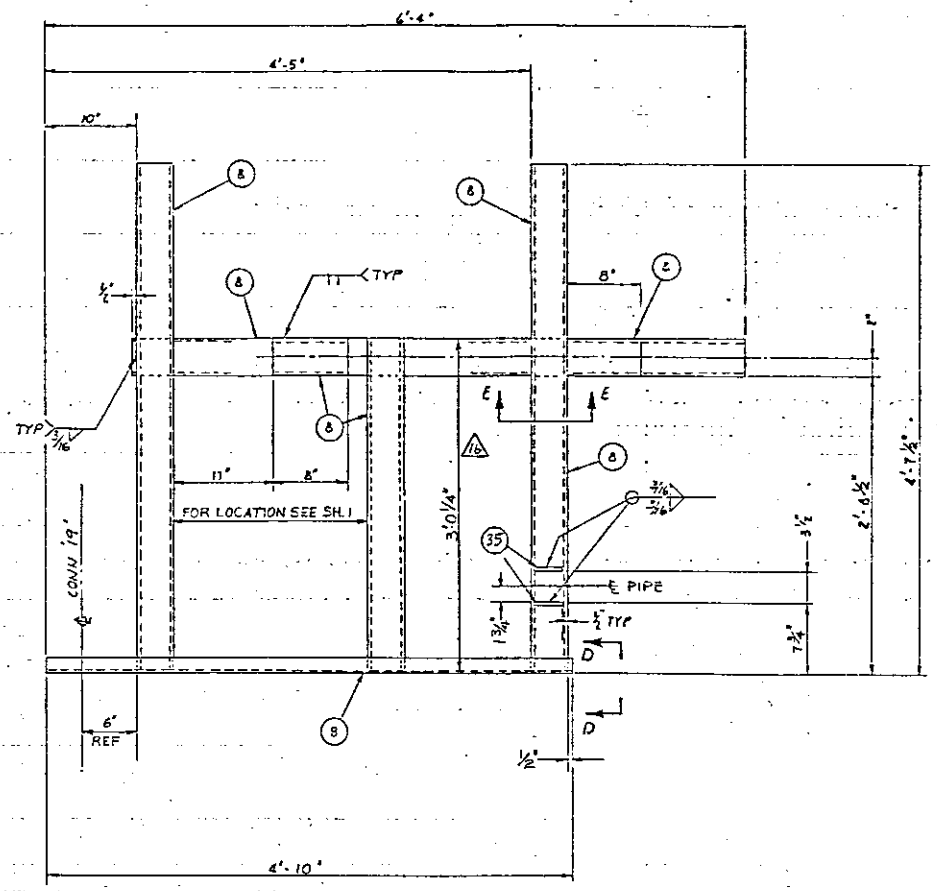

DETAIL C
SCALE: 1 1/2" = 1'-0"

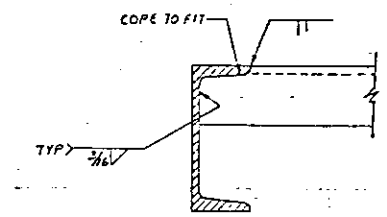

SECTION D-D
SCALE: 1/2

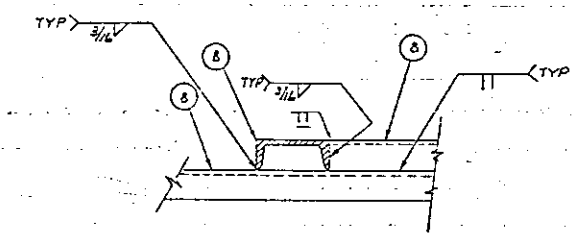

SECTION E-E
SCALE: 3" = 1'-0"

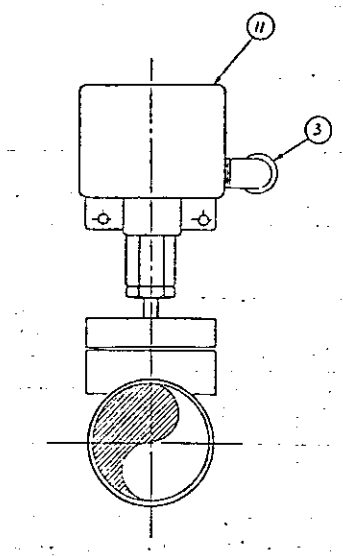

DETAIL F
SCALE: NONE

QTY	PN	DESCRIPTION	MATERIAL
1	27	ELECTRICAL BOX NEMA 13	HOFFMAN ENG CO #A-1608 SCEP
3	28	TERMINAL BLOCK 10 POINT	BUCHANAN #51510
1	29	PANEL 8 3/4" x 6 1/4"	HOFFMAN ENG CO #A10P8
9	30	CGB FITTING WITH LOCKNUT AND SEALING GASKET	CROUSE-HINDS #CGB 192-SG
1	31	CGB FITTING WITH LOCKNUT AND SEALING GASKET	CROUSE-HINDS #CGS 249-SG
7	32	CGB FITTING	CROUSE-HINDS #CGB 192
1	33	TYPE SO CABLE 14/C #12 x 20' LONG	STD WIRE CABLE #1323-14
AR	34	CABLE 2/C #14 KAPTON COVERED	STD WIRE CABLE D3167
1	35	PLATE 1/4" x 1 3/4" x 5"	ASTM A36
3	36	PIPE SEGMENT DET "D"	H-2-90852
2	37	VALVE FUNNEL DET "Z3"	H-2-90852
AR	38	WORM SCREW CLAMP	SST
AR	39	LEAD APPROX WT 190#	ASTM B29
3	40	LIMIT SWITCH MOUNTING PLATE DET W	H-2-90853
1	41	LIMIT SWITCH MOUNTING PLATE DET AE	H-2-90845
14	42	HEX HD BOLT 1/4-20 UNC-2A x 1" LG	ASTM A307 GR B
14	43	HEX NUT 1/4-20 UNC-2B	ASTM A563 GR A
14	44	LOCK WASHER 1/4"	ASTM A325 TYPE 3

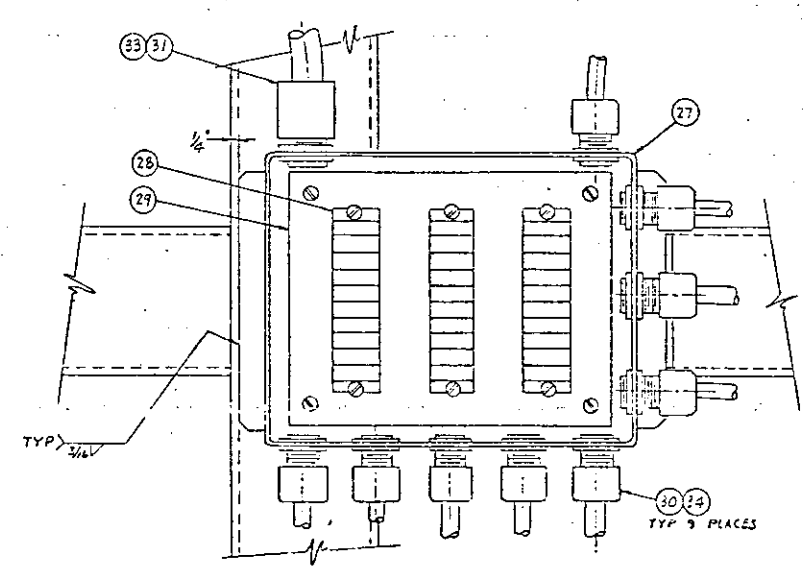

DETAIL G
SCALE: NONE

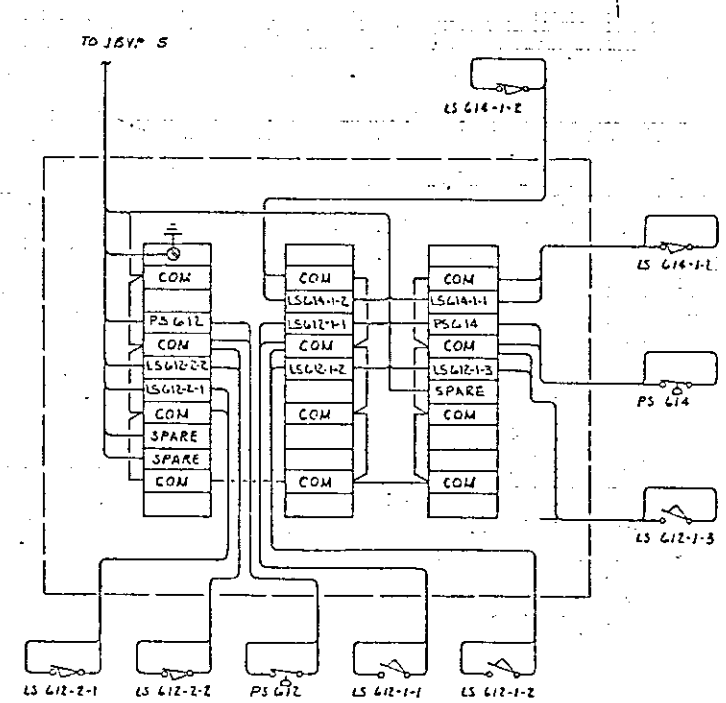

WIRING DIAGRAM
SCALE: NONE
(SEE NOTES 6 & 7)

NOTES: (CONT)

6 LIMIT SWITCHES ARE SHOWN WITH LIMIT SWITCHES IN NON-ACTIVATED POSITION

7 PRESSURE SWITCHES ARE SHOWN WITH NO PRESSURE ON ELEMENT

8 PAINT LIMIT SWITCH IDENT NO. ON TOP OF EACH SWITCH.

9- FIELD VERIFY VALVE CLEARANCES, CONFIGURATION & LOCATION PRIOR TO FUTURE ACTUATOR PROCUREMENT & INSTALLATION.

RELEASED FOR CONSTRUCTION
BY DOE DATE

H-2-90455	DRAWING LIST						
NUMBER	TITLE						
REFERENCES							
NEXT USED ON H-2-90556							

1	7-10-86	N/A		7-11-86		AS BUILT FOR PROJ B340 b) ECO CHNG 2 E-G d) PCO-590-180 2 C-1,2	1
	BY/DATE		BY/DATE			DESCRIPTION	REV
	CHEMELL APPROVAL		KEM APPROVAL			REVISIONS	
	COMMENT REVIEW						

RHO APPROVAL BY	DATE 7/9/87	U. S. DEPARTMENT OF ENERGY Richland Operations Office KAISER ENGINEERS HANFORD COMPANY
PROJ ENGR	7-6-87	JUMPER ASSEMBLY 19-20-J VALVE PIT
CHECKED	7/9/87	
APPROVED	7-7-87	
APPROVED	7-7-87	
APPROVED	7/7/87	
LINCHED	4-13-87	PROJECT TITLE 241-AP TANK FARM
CHECKED	4-13-87	
DRAWN D. WESTON	4/13/87	PROJ B-340 PID X340002 JOB R29542
DESIGNED	4-15-87	SCALE SHOWN BLDG 241-AP MOD B405
CLASSIFICATION BY NONE		DRAWING NUMBER H-2-90854 SHEET 2 OF 3 REV 1

RANGE ENGINEERING HANFORD INC.

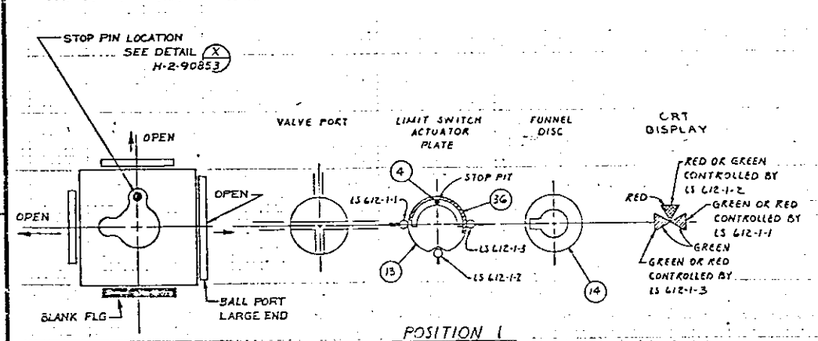

POSITION 1

DETAIL
VALVE ORIENTATION
V-612-1

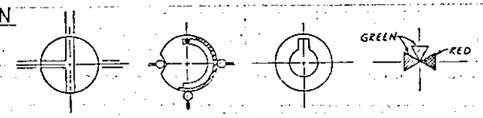

POSITION 2

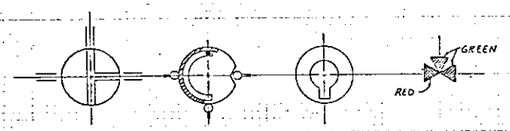

POSITION 3

VALVE V612-1

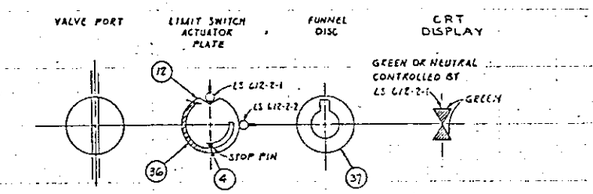

POSITION 1

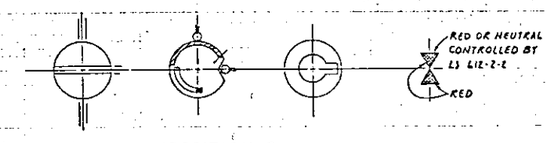

POSITION 2

VALVE V612-2

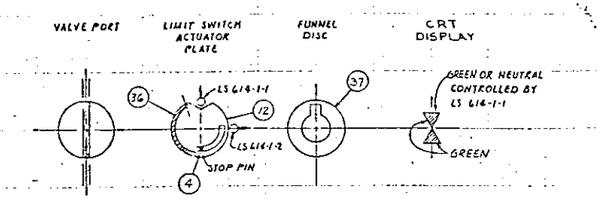

POSITION 1

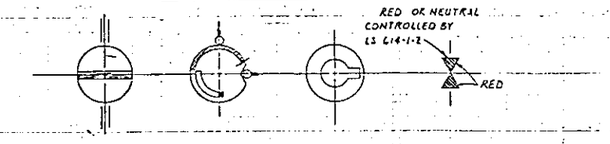

POSITION 2

VALVE V614-1

NOTE -
SEE DWG H-2-90476, SH 7 FOR CRT LOGIC ELEMENTARY DIAGRAM

RELEASED FOR CONSTRUCTION
BY DATE

11	CEJ JOEG	NA	VDE	7-31-73	AS-BUILT FOR PROJ B340	1
	BY-DATE	BY-DATE		REV BY DATE	DESCRIPTION	REV
	CHECKED	KEM APPROVAL				
	APPROVAL					
	REVISIONS					
	COMMENT REVIEW					

MICROFILMED

H-2-90435	DRAWING LIST
NUMBER	TITLE
REFERENCES	
NEXT USED ON	H-2-90596

RHO APPROVAL BY — DATE 11/1/73
PROJ ENGR — DATE
CK — DATE
APPROVED BY — DATE
SAFETY — DATE
APPROVED BY — DATE
CHECKED BY — DATE
DRAWN BY D HERRIMAN — DATE
DESIGNED BY — DATE
CLASSIFICATION — BY
NONE — NOT REQD

U. S. DEPARTMENT OF ENERGY
Richland Operations Office
KAISER ENGINEERS HANFORD COMPANY

JUMPER ASSEMBLY
19-20-J
VALVE PIT

PROJECT TITLE: 241-AP TANK FARM
PROJ: B-340 — NO: 734002 — JOB: R295A2
SCALE: NONE — BLDG: 241-AP — PLANT: 8405
DRAWING NUMBER: H-2-90854 — UNIT 3 — SH 3 — REV 1

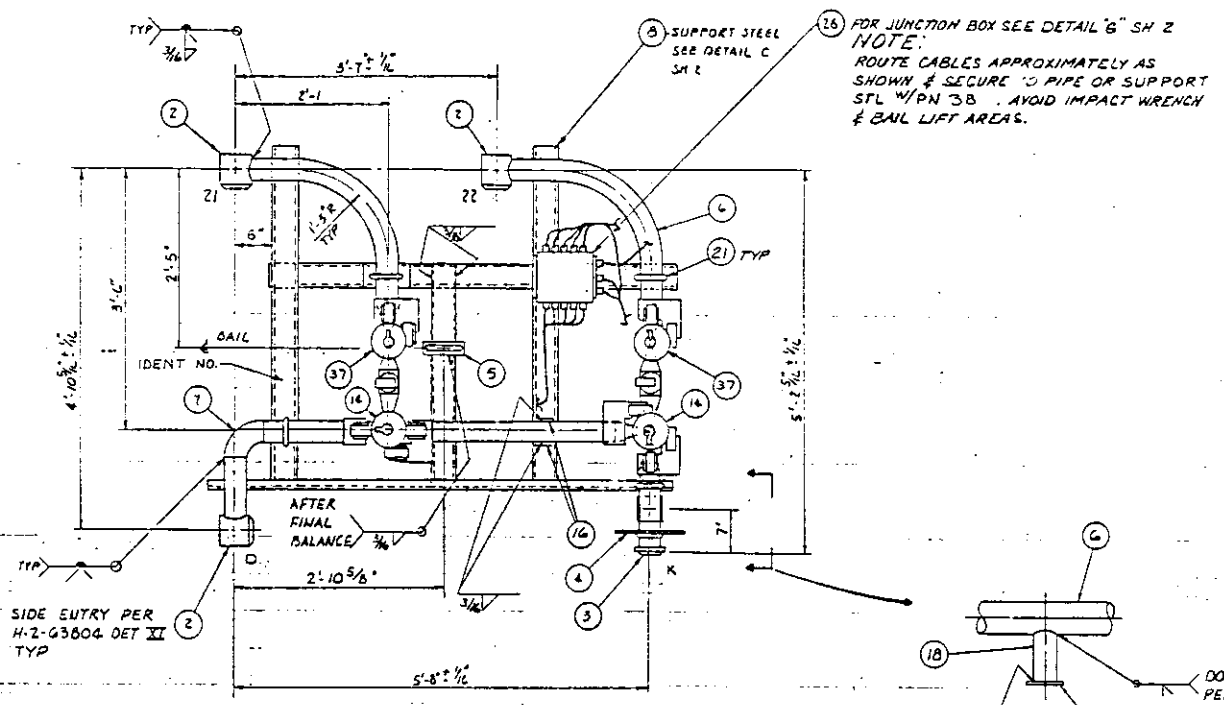

PLAN

SCALE: 1" = 1'-0"

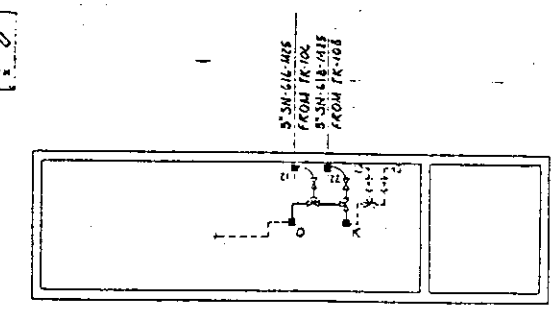

241-AP VALVE PIT

KEY PLAN

SCALE: NONE

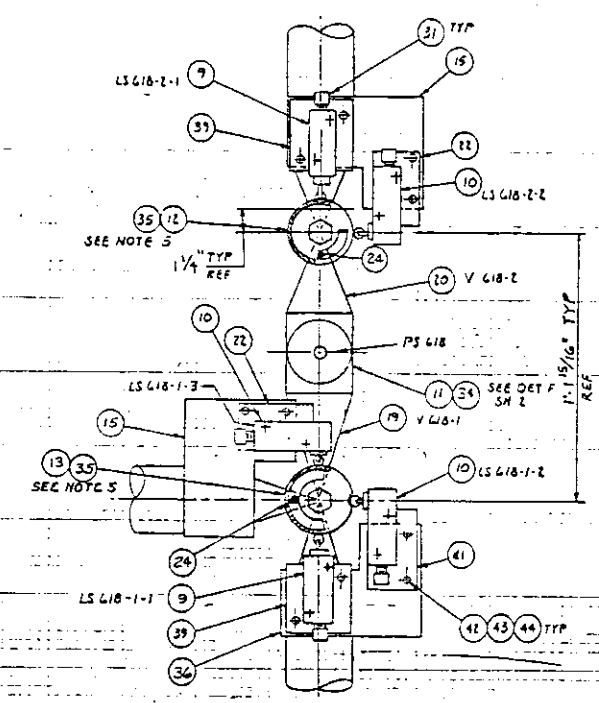

SECTION B-B

SCALE: NONE

FOR VALVE ORIENTATION SEE DETAIL SH 3

QTY	PN	DESCRIPTION	MATERIAL
X	1	ASSEMBLY	—
3	2	3" HORIZ CONN ASSY #1 GASKET TYPE III	H-2-32430
1	3	3" MALE CONN NOZZLE PN 2	H-2-32446
1	4	3" KICKPLATE PN 6	H-2-30600
1	5	LIFTING BAIL ASSY 5	H-2-90161
AR	6	PIPE 3" SCHED 40	ASTM A53 TYPE S GR B
1	7	ELBOW 3" SCHED 40 90° LR BUTT WELD	ASTM A234 GR WPB
AR	8	CHANNEL C4 x 5.4	ASTM A36
5	9	LIMIT SWITCH	SEE NOTE 5 & 6
5	10	LIMIT SWITCH	SEE NOTE 5 & 6
2	11	PRESSURE SWITCH ASSEMBLY	SEE PROCUREMENT SPEC B-340-P1
2	12	LIMIT SWITCH ACTUATOR DET B	H-2-90852
2	13	LIMIT SWITCH ACTUATOR DET C	H-2-90852
2	14	VALVE FUNNEL DET Z1	H-2-90852
4	15	LIMIT SWITCH MTG BRKT DET J	H-2-90852
2	16	PLATE 1/4" x 1 3/4" x 3"	ASTM-A36
1	17	LIMIT SWITCH MTG BRKT DET T	H-2-90853
AR	18	PIPE 2" SCHED 40	ASTM A53 TYPE S GR B
2	19	3" 3-WAY BALL VALVE FLOW PATTERN #5 SEE NOTE #4	PITTSBURGH BRASS 33-MPE-14-3W-4-NG
2	20	3" 2-WAY BALL VALVE SEE NOTE #4	PITTSBURGH BRASS 32-SPE-14-2W-NO-NG
4	21	U-BOLT 1/2" DIA FOR 3" PIPE	ASTM A36
4	22	LIMIT SWITCH MTG PLATE DET L	H-2-90852
1	23	PLATE 1/4" x 4" x 4"	ASTM A36
4	24	STOP PIN DET X	H-2-90853
20	25	ALLEN CAP SCREW #10-32 x 1 3/16" LG W/ 1/16" THD LG	ASTM-A193 GR B8 304 SST

CONTINUED ON SHEET 2

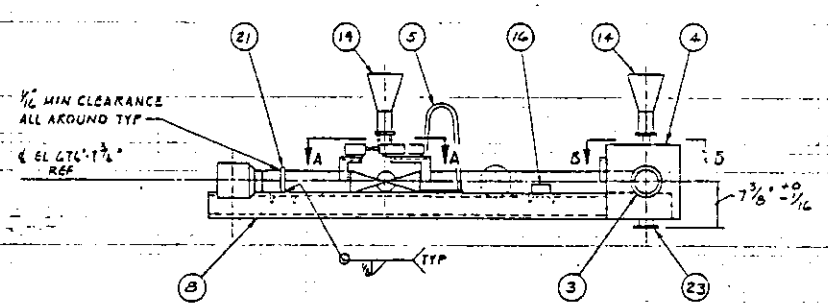

ELEVATION

1 ASSEMBLY

SCALE: 1" = 1'-0"

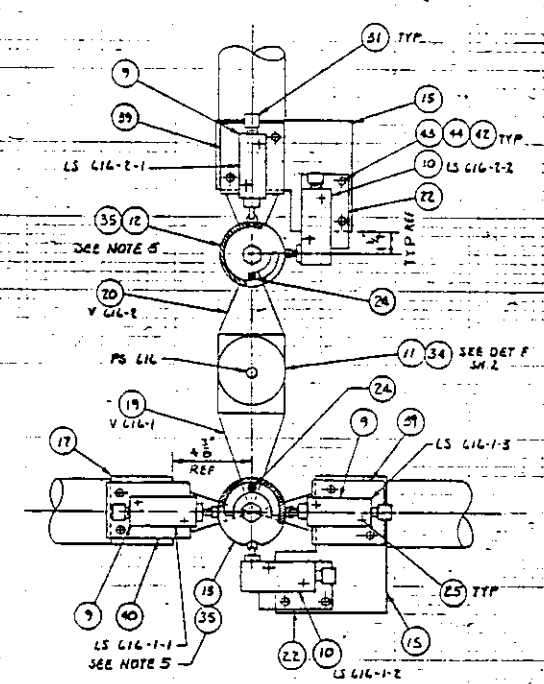

SECTION A-A

SCALE: 3" = 1'-0

FOR VALVE ORIENTATION SEE DETAIL SH 3

GENERAL NOTES:

1. FABRICATION & TESTING SHALL BE IN ACCORDANCE WITH HANFORD SPECIFICATION HWS-5786 REV 12 OR CURRENT REVISION.
2. HYDROSTATIC TEST AT 600 PSIG.
3. LIMIT SWITCH PN 9 SHALL BE SQUARE-D TYPE C 1 N.O. 1 N.C. WITH TYPE 9007-C54D TOP ROLLER PLUNGER, LIMIT SWITCH PN 10 TO BE SAME AS ABOVE EXCEPT WITH TYPE 9007-C54F SIDE ROLLER PLUNGER.
4. 2-WAY AND 3-WAY BALL VALVES PN 19 & 20 SHALL CONFORM TO THE FOLLOWING SPECIFICATIONS:
   a) CARBON STEEL BODY
   b) BUTTWELD ONE PIECE CASTING CARBON STEEL END FITTINGS, INTEGRALLY CAST AND MACHINED
   c) 50 PERCENT, 316 STAINLESS STEEL FILLED TEFLON BALL SEAT RINGS
   d) ASBESTOS BODY GASKET (BONDED)
   e) GRAPHITED ASBESTOS STEM PACKING
   f) OMIT HANDLE
   g) GLASS FILLED TEFLON BODY FILLER (PN 20 ONLY).
   h) DRILL & TAP VALVES TO ACCEPT FUTURE MOTOR ACTUATORS.
5. FOR VALVE FUNNEL ASSEMBLY INSTRUCTIONS SEE DETAIL U H-2-90853

CONTINUED ON SHEET 2

RELEASED FOR CONSTRUCTION
BY K. Kirkus DATE 11/6/92
DOE

M	LE-1 9-10-86	N/A	W 9-10-86	JDC 7-31-92	PLAN PLOT PER CONC 92-0	AS-BUILT FOR PROJ B-340 DFC B-340-180 ZE-1,8-1,2	1

MICROFILMED	BY-DATE	BY-DATE	REV BY DATE	DESCRIPTION	REV
	ROCKWELL APPROVAL	KEM APPROVAL		REVISIONS	
	COMMENT REVIEW				

H-2-90855	DRAWING LIST
NUMBER	TITLE
REFERENCES	
NEXT USED ON	H-2-90516

KHO APPROVAL BY — DATE 4/6/93

U. S. DEPARTMENT OF ENERGY
Richland Operations Office
KAISER ENGINEERS HANFORD COMPANY

JUMPER ASSEMBLY
21-22-D-K
VALVE PIT

PROJECT TITLE: 241-AP TANK FARM

PROJ	B-340	WO	136002
JOB	R2958A2	SCALE	3 NOTED
PLOG	241-AP	INDEX	8405

CLASSIFICATION | DT: NONE

DRAWING NUMBER: H-2-90855 — SHEET 1 OF 3 — REV 1

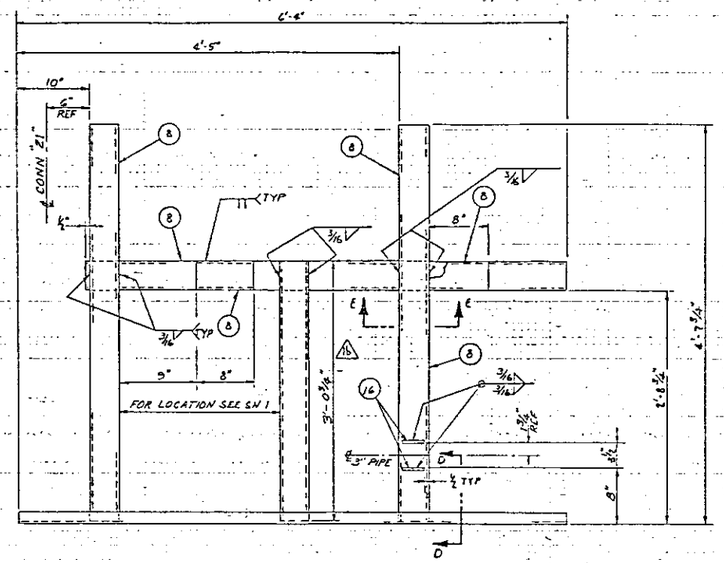

DETAIL C

SCALE: 1 1/2" = 1'-0"

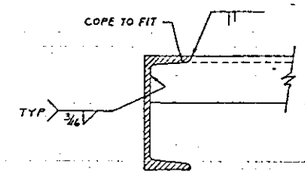

SECTION D-D

SCALE: 1/2

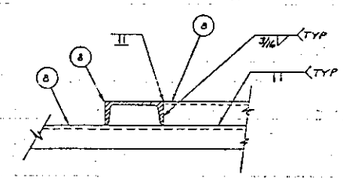

SECTION E-E

SCALE: 3" = 1'-0

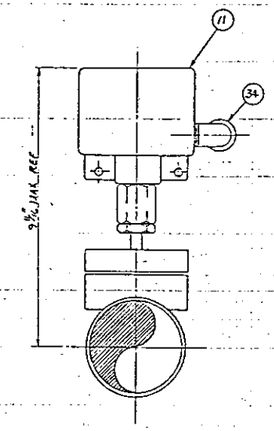

DETAIL F

SCALE: NONE

QTY	PN	DESCRIPTION	MATERIAL
1	25	ELECTRICAL BOX NEMA 13	HOFFMAN ENG CO. #A-1008SCFP
3	27	TERMINAL BLOCK 10 POINTS	BUCHANAN #51510
1	28	PANEL 8 3/4" x 6 3/4"	HOFFMAN ENG CO. #A10P8
12	29	CGB FITTING W/LOCKNUT & SEALING GASKET	CROUSE-HINDS #CGB 192-SG
1	30	CGB FITTING W/LOCKNUT & SEALING GASKET	CROUSE-HINDS #CSA 499-SG
10	31	CGB FITTING	CROUSE-HINDS #CGB 191
1	32	TYPE SO CABLE 14/C #12 x 10' LONG	STD WIRE & CABLE #1238-14
AR	33	CABLE 2/c #14 KAPTON COVERED	STD WIRE & CABLE #05167
2	34	CGE FITTING	CROUSE-HINDS #CGE-292
4	35	PIPE SEGMENT DET D	H-2-90852
1	36	LIMIT SWITCH MTG BRKT K	H-2-90845
2	37	VALVE FUNNEL DET Z3	H-2-90852
AR	38	WORM SCREW CLAMP	SST
4	39	LIMIT SWITCH MTG PLATE DET W	H-2-90853
1	40	LIMIT SWITCH MTG PLATE DET AE	H-2-90845
1	41	LIMIT SWITCH MTG PLATE DET V	H-2-90845
20	42	LOCK WASHER 1/4"	ASTM A325 TYPE B
20	43	HEX HD BOLT 1/4-20 UNC-2A x 1" LG	ASTM A307 GR B
20	44	HEX NUT 1/4-20 UNC-2B	ASTM A563 GR A

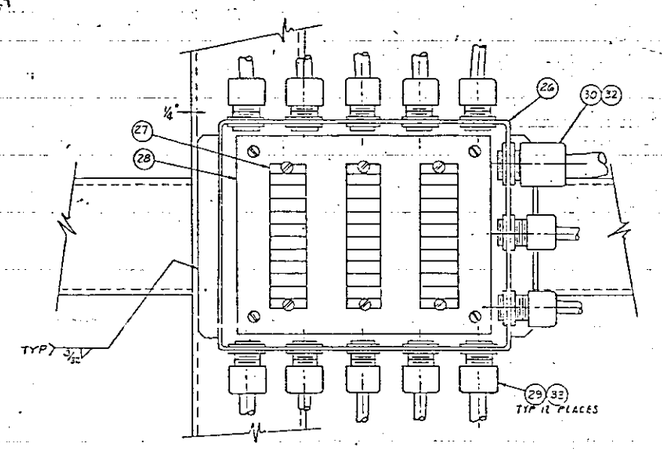

DETAIL G

SCALE: NONE

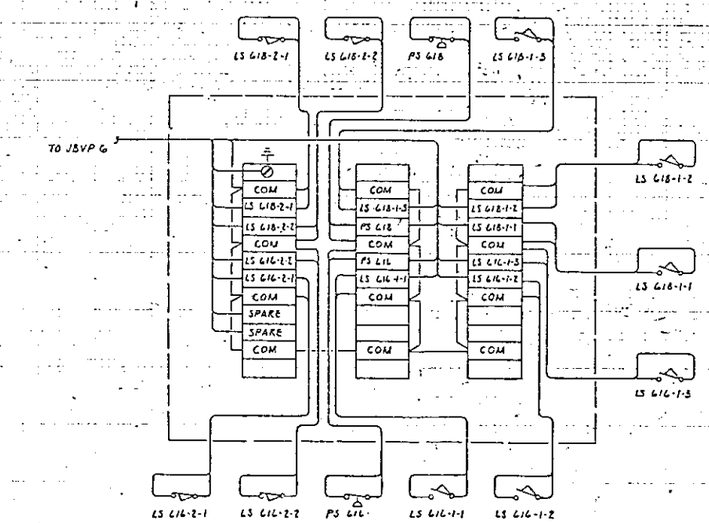

WIRING DIAGRAM

SCALE: NONE

(SEE NOTES 6 & 7)

NOTES: (CONT)

6. LIMIT SWITCHES ARE SHOWN WITH LIMIT SWITCHES IN NON-ACTIVATED POSITION.
7. PRESSURE SWITCHES ARE SHOWN WITH NO PRESSURE ON ELEMENT
8. PAINT LIMIT SWITCH IDENT NO. ON TOP OF EACH SWITCH.
9. FIELD VERIFY VALVE CLEARANCES, CONFIGURATION AND LOCATION PRIOR TO FUTURE ACTUATOR PROCUREMENT AND INSTALLATION.
10. AS-BUILT INFO: 1/8" OF METAL HAS BEEN REMOVED FROM CONNECTOR NOZZLE CLAMP CASTINGS (BY GRINDING, TO PROVIDE ADDITIONAL CLEARANCE WITH KICKPLATES)
AS FOLLOWS: # 21 NOZZLE CONNECTOR-ALL 3 CASTINGS
22 NOZZLE CONNECTOR-ALL 3 CASTINGS
"D" NOZZLE CONNECTOR-ALL 3 CASTINGS

RELEASED FOR CONSTRUCTION
BY DOE DATE 12/6/83

H-2-90835	DRAWING LIST	
NUMBER	TITLE	
REFERENCES		
NEXT USED ON	H-2-90833	

REV	BY-DATE	BY-DATE	REV BY DATE	DESCRIPTION	REV
1	LJ 9-06-83	NA	JW 9-15-83	AS BUILT FOR PROJ B-340 10. R 27 DIM WAS 1-3 1/2" 13. REQ CHG 28 & 29 ADDED NOTE 20 FC B-340-180 & C42	1

MICROFILMED: KOCKNELL APPROVAL BY-DATE; REM APPROVAL BY-DATE; REVISIONS; COMMENT REVIEW

RNO APPROVAL BY — DATE 11/16/83

U. S. DEPARTMENT OF ENERGY
Richland Operations Office
KAISER ENGINEERS HANFORD COMPANY

JUMPER ASSEMBLY
21-22-D-K
VALVE PIT

PROJECT TITLE: 241-AP TANK FARM

PROJ B-340	BLDG X340002	JOB K29582	
SCALE SHOWN	BLDG 241-AP	PROJ 2405	
DRAWING NUMBER H-2-90865	SHEET 2	OF 3	REV 1

NONE

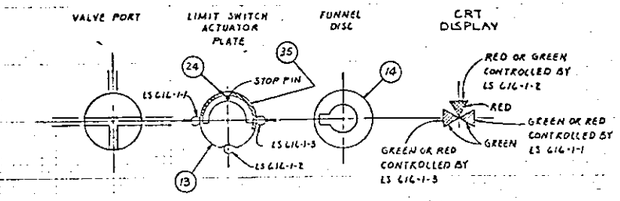

POSITION 1

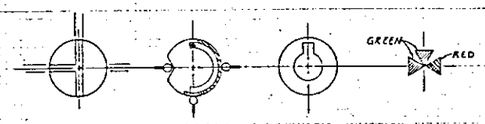

POSITION 2

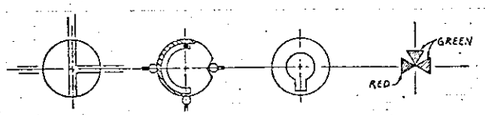

POSITION 3

VALVE V616-1

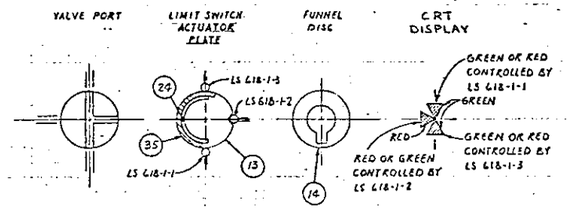

POSITION 1

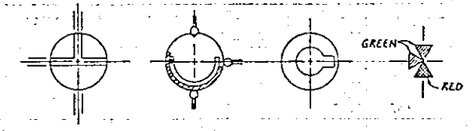

POSITION 2

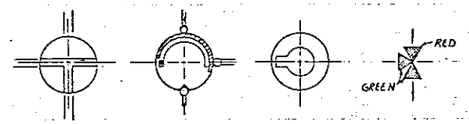

POSITION 3

VALVE V618-1

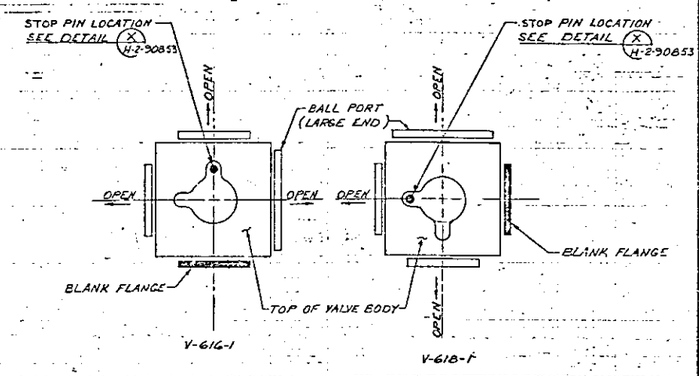

DETAIL
VALVE ORIENTATION
SCALE: NONE

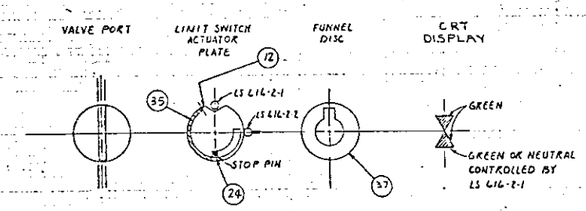

POSITION 1

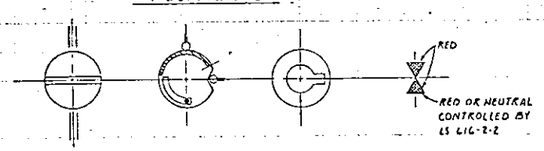

POSITION 2

VALVE V616-2

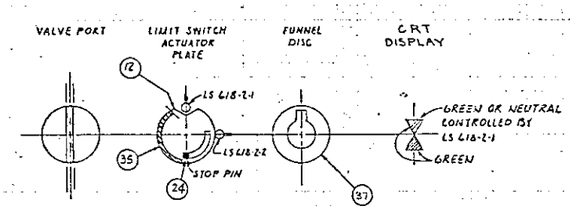

POSITION 1

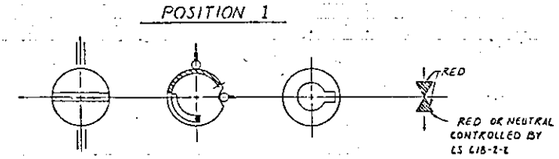

POSITION 2

VALVE V618-2

NOTE -

SEE DWG H-2-90476, SH 7 FOR CRT LOGIC ELEMENTARY DIAGRAM.

RELEASED FOR CONSTRUCTION
BY [illegible] DATE [illegible]
DOE

H-2-90455	DRAWING LIST						
NUMBER	TITLE						
REFERENCES							
NEXT USED ON H-2-90555							

	CEI 9-10-86	-	NA	JW	JDE		AS BUILT FOR PROJ 3540	1
MICROFILMED	BY-DATE	BY DATE			REV BY DATE	DESCRIPTION	REV
	APPROVAL	XEM APPROVAL					
REVISIONS							
COMMENT REVIEW							

RHO APPROVAL BY [illegible]	DATE 12/6/83	U. S. DEPARTMENT OF ENERGY Richland Operations Office
PROJ ENGR [illegible]	12-5-83	KAISER ENGINEERS HANFORD COMPANY
DR [illegible]	12/14/83	JUMPER ASSEMBLY 21-22-D-K VALVE PIT
APPROVED BY [illegible]	12/14/83	
REVIEWED BY [illegible]	12/14/83	
REVIEWED BY [illegible]	12/14/83	PROJECT TITLE 241-AP TANK FARM
CHECKED BY [illegible]	12/14/83	
DRAWN BY D. LIEKKINEN	12/14/83	PROJ B-340 / WO F34002 / JOB R29582
DESIGNED BY J. O'CONNOR	12/14/83	SCALE NONE / BLDG 241-AP / INDEX 8405
CLASSIFICATION BY NONE / NOT FOUO		DRAWING NUMBER H-2-90855 / SHEET 3 / OF 3 / REV 1

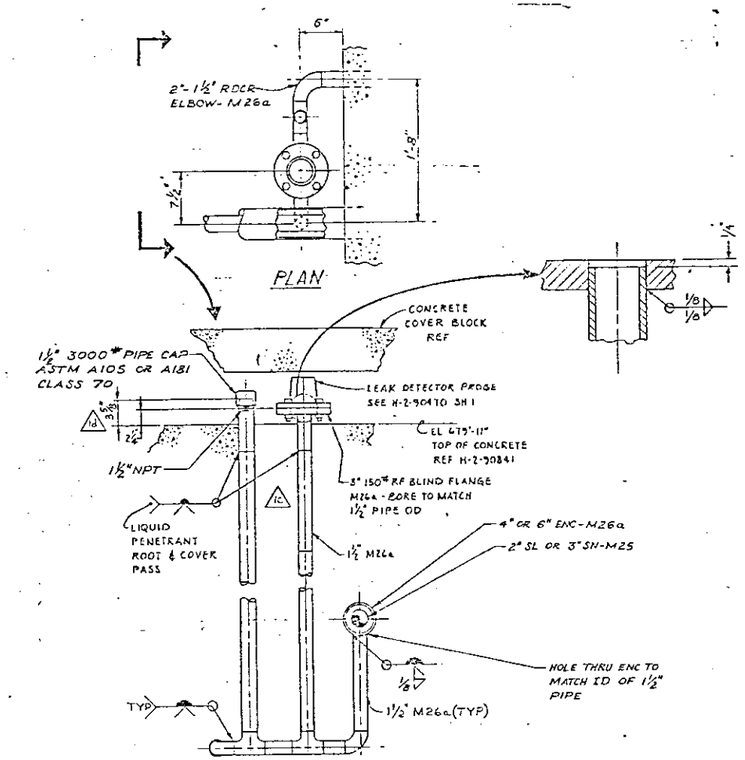

DETAIL 4 H-2-90551 SH 1
SCALE: 1½" = 1'-0"
SEE PLAN ON H-2-90551 SH 1 FOR ORIENTATION

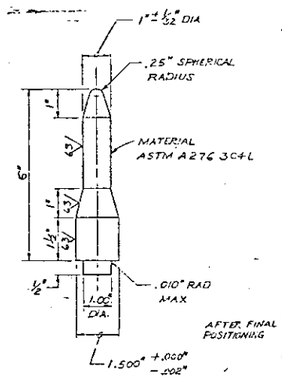

DOWEL
SCALE: 6" = 1'-0"

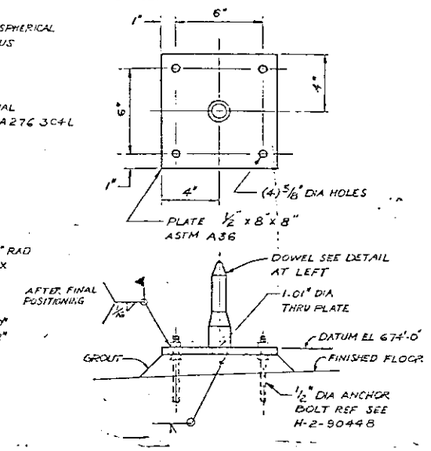

DETAIL 5 H-2-90551 SH 1 DOWEL PLATE
SCALE: 3" = 1'-0"

DETAIL 8 H-2-90551 SH 1 OMIT DOWEL & DOWEL HOLE

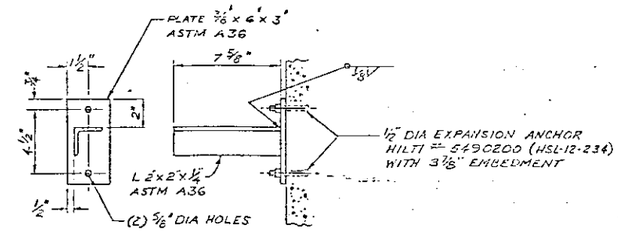

DETAIL 6 H-2-90551 SH 1, H-2-90542
SCALE: 3" = 1'-0"

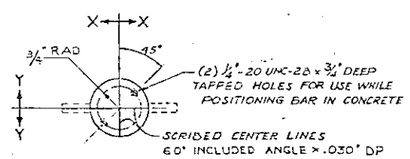

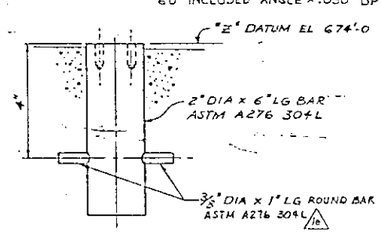

DETAIL 7 H-2-90551 SH 1
SCALE: 6" = 1'-0"

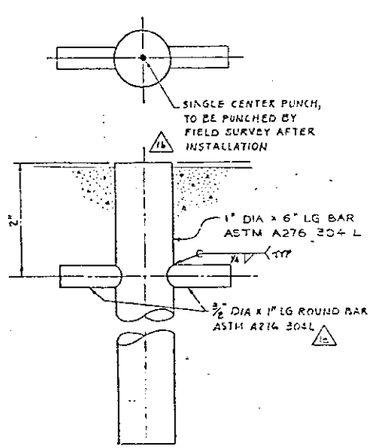

DETAIL 9 H-2-90551 SH 1
H-2-90562
SCALE: FULL

NOTES:

1. FOR GENERAL NOTES SEE DWGS H-2-90593 & H-2-90599.

RELEASED FOR CONSTRUCTION
BY ____ DATE ____
DOE

2	Rev				AS BUILT FOR PROJ E&HO	
1						
REV	BY-DATE	BY-DATE			DESCRIPTION	REV
	KEY APPROVAL	KEY APPROVAL				
	COMMENT REVIEW				REVISIONS	

H-2-90535 DRAWING LIST
NUMBER TITLE
REFERENCES
NEXT USED ON

RHO APPROVAL BY ____ DATE ____
PROJ ENGR ____ DATE ____
DESIGN ____ DATE ____
DRAFTING ____ DATE ____
QA ____ DATE ____
DRAWING MGR ____ DATE ____
DATE ____
CHECKED ____ DATE ____
CHECKED ____ DATE ____
ENGRG ____ DATE ____

U. S. DEPARTMENT OF ENERGY
Richland Operations Office
KAISER ENGINEERS HANFORD COMPANY

241-AP VALVE PIT
PIPING DETAILS

PROJECT TITLE 241 AP TANK FARM

PROJ D-340	FG X34002		JOB R285A2
SCALE AS SHOWN	SHEET 241-AP		INDEX 04-02
CLASSIFICATION NONE	NOT REQD	DRAWING NUMBER H-2-90256	REV 1

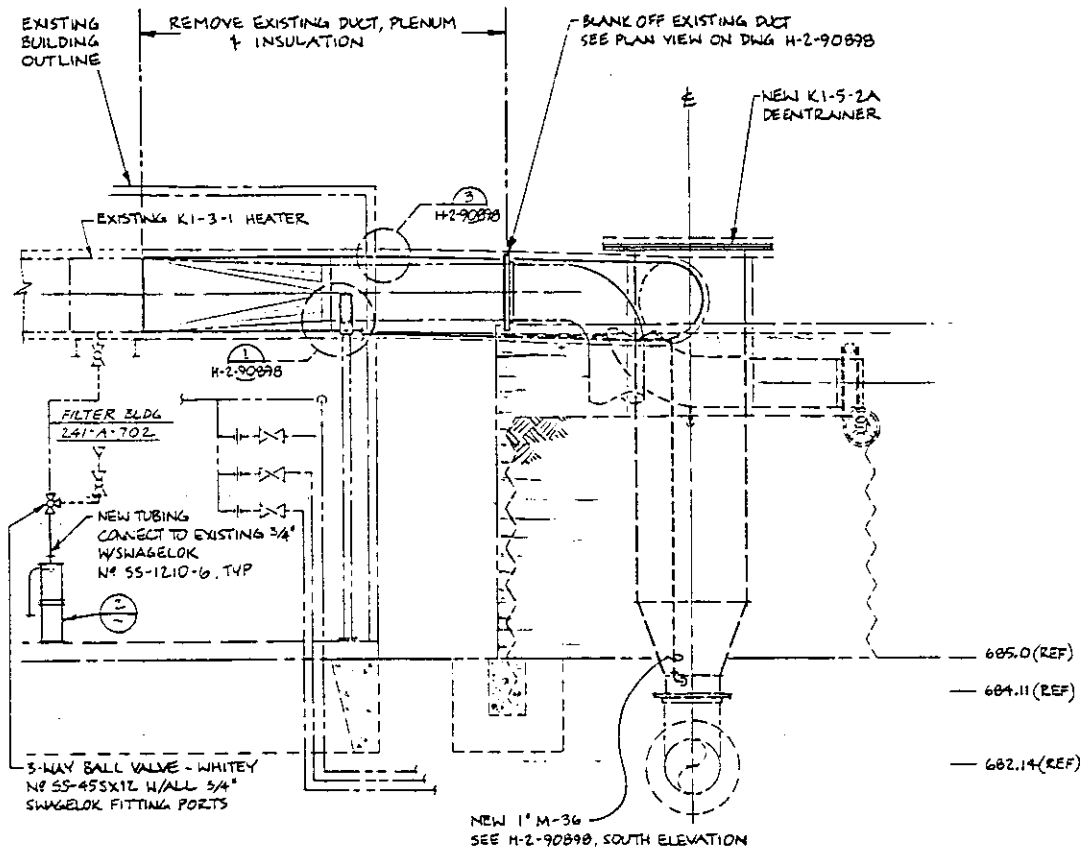

WEST ELEVATION

SCALE: 1/2" = 1'-0
REF DWG H-2-90898

AIRFLOW VALVES

UNIT NO	AIRFLOW CFM	SIZE HIGH	SIZE WIDE	SIZE Φ	OPERATOR	REMARKS
V1	4,000	–	–	18"	GEAR DRIVEN MANUAL	CRANE - MONARCH INDUSTRIAL BUTTERFLY VALVE - 18" # NPS W/GEAR OPERATOR, # 21F-SS8.-G94
V2	4,000	–	–	18"		

DRAWING LIST

INDEX		
8900/000	H-2-90897	HVAC/DWG LIST, SCHEDULE + INSTALLATION
8900	H-2-90898	HVAC INSTALLATION PLAN + ELEVATIONS
8900	H-2-90899	HVAC DEENTRAINER K1-5-2A ASSEMBLY
8900	H-2-90900	HVAC DEENTRAINER SHELL - K1-5-2A
0110/0900	H-2-90901	CIVIL/STR SITE PLAN + DETAILS
5901/7501	H-2-90902	ELEC/INSTR PLANS + DETAILS
0402	H-2-90903	VALVE DRIVE ASSEMBLY
6015	H-2-90904	INSTR K1-5-2A DEENTRAINER DP1 GAUGES
8900	H-2-68578	HEATER K1-3-1 SEAL POT

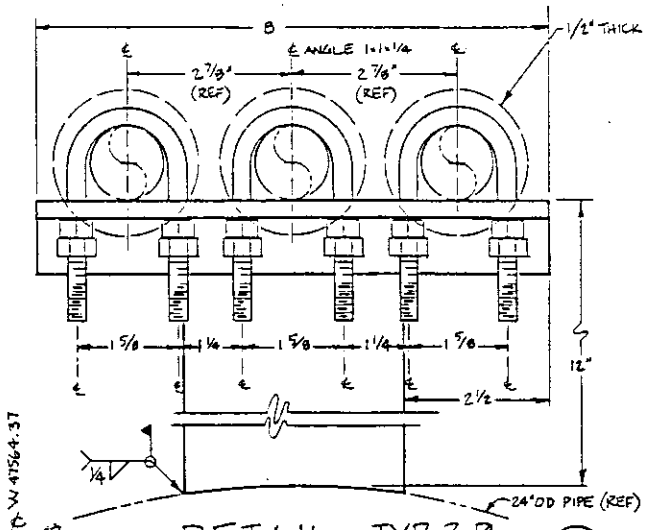

DETAIL - TYP 3 PL

4 H-2-90898

SCALE: NONE

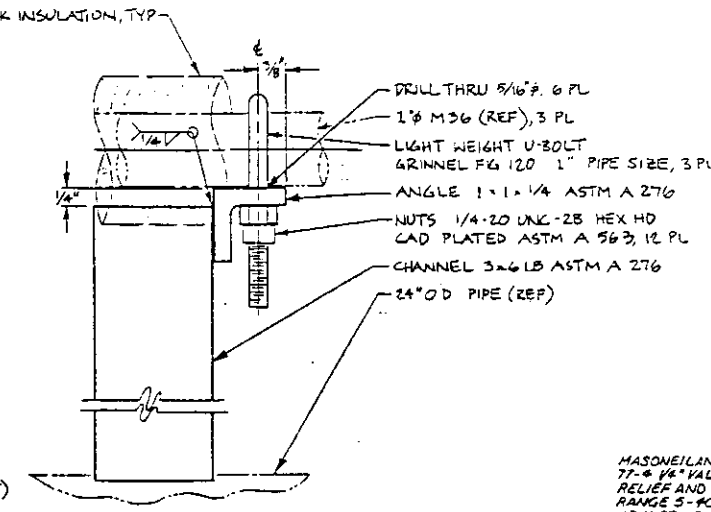

SET APPROPRIATE CONTROLS PER ATP FOR TEMPERATURE RISE

MASONEILAN 77 SERIES MODEL NO. 77-Φ 1/4" VALVE AIR LOADING WITH RELIER AND FILTER-PRESSURE RANGE 5-80 PSI WITH STANDARD ADJUSTING SCH-SW WITH INTEGRAL MOUNTED 0-30 PSI GAUGE

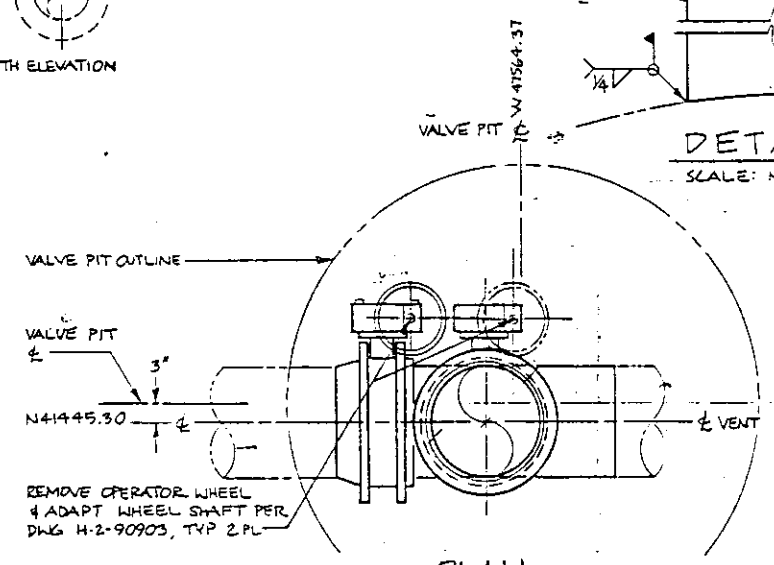

PLAN

SCALE: 1" = 1'-0

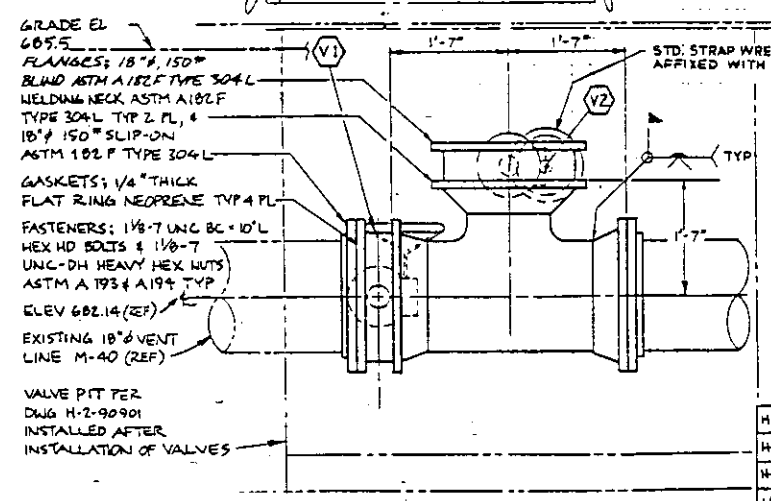

SECTION

A H-2-90898

SCALE: 1" = 1'-0

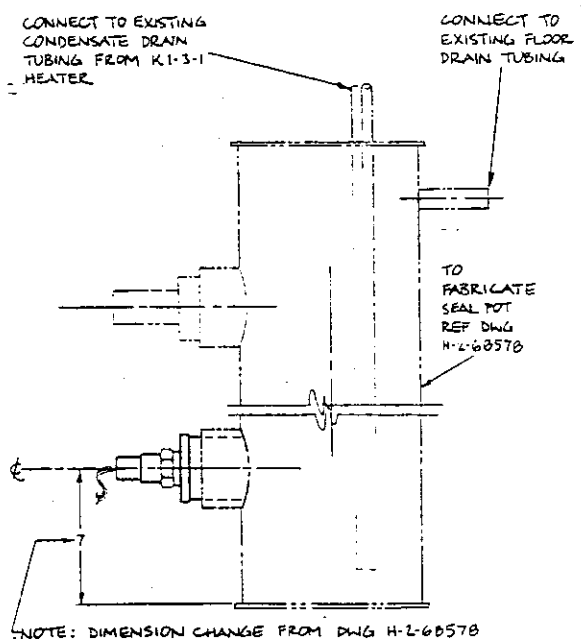

NOTE: DIMENSION CHANGE FROM DWG H-2-68578

NDE FOR SEAL POT SHALL BE LIQUID PENETRANT EXAMINATION RATHER THAN MAGNETIC PARTICLE EXAMINATION AS SPECIFIED.

DETAIL

2

SCALE: HALF

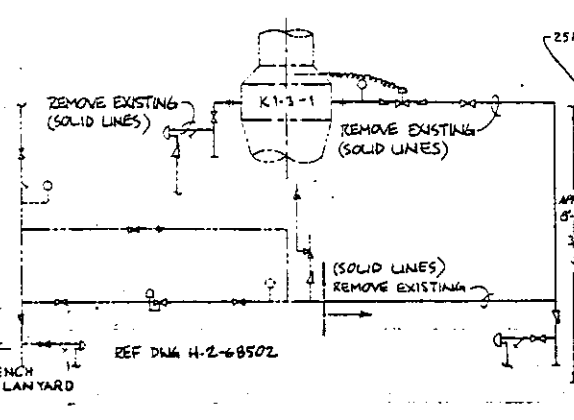

EXISTING STEAM SUPPLY DEMOLITION

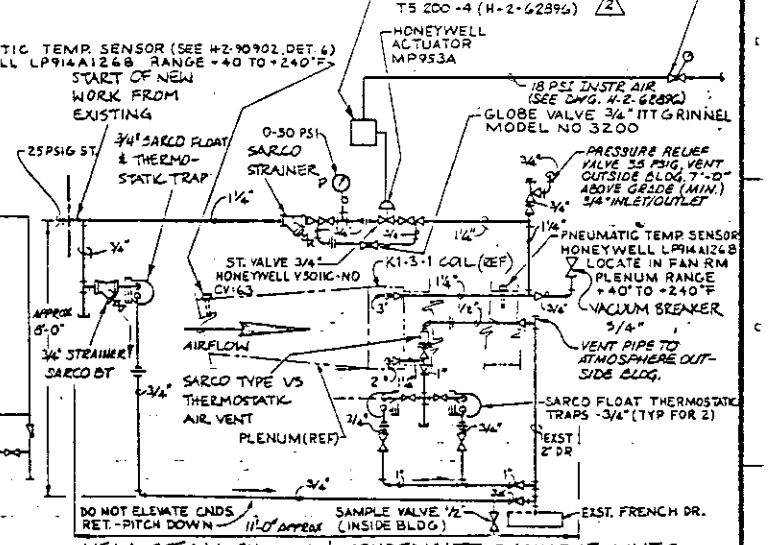

NEW STEAM SUPPLY + CONDENSATE DISCHARGE LINES

PREHEATER K1-3-1 MODIFICATIONS

NO SCALE

CONTROL SETTING
SET CONTROLS TO PROVIDE 10°F RISE ACROSS COIL

NOTE
PIPE FITTINGS TO BE 150# MINIMUM, FORGED STEEL; PIPE CODE M-2

CVI LIST

EPN ID.	DESCRIPTION	REF. DWG.	CVI NO.
	DEMISTER PADS	H-2-90899	
V1 V2	BUTTERFLY VALVES	H-E-90897	

H-2-62896	VENT SYSTEM EXPANSION
H-2-68502	VENT HEATING STEAM PROOF
H-2-62898	HVAC/PIPING CONSTR. DWG
H-7-1214	HVAC SYMBOLS LIST
H-2-90897	DRAWING LIST
NUMBER	TITLE
REFERENCES	
NEXT USED ON	H-2-90897

REV	DESCRIPTION
2	ECN 101657, AND ECN 103776 REVISION PER CED 22383.
1	AS-BUILT FOR PROJ. B-399 (1) NCR B-399-5, Z B-7, G-5 (2) DFC B-399-48-INS C, D1-3 CHANGE ZN A12 (3) ADDED NOTE PER RECORD (a) DFC B-399-42, ZN D-1, C-2 (b) DFC B-399-3, ZN A-7 (c) DFC B-399-18, ZN C-2 (d) RC ADDED CVI LIST ZN B-4

MICROFILMED — RHO APPROVAL — KEEN APPROVAL — COMMENT REVIEW

U. S. DEPARTMENT OF ENERGY
Richland Operations Office
KAISER ENGINEERS HANFORD COMPANY

HVAC / DWG LIST SCHEDULE, INSTALLATION ELEVATIONS + DETAILS

PROJECT TITLE: 702A VENTILATION SYSTEM UPGRADE

DESIGNED	P. D. RYE	PROJ.	B-399
DRAWN	RODERICK J. SMITH	SCALE	SHOWN
CLASSIFICATION	NOT REQD	BLDG.	241-A-702
		DRAWING NUMBER	H-2-90897
		SHEET	2

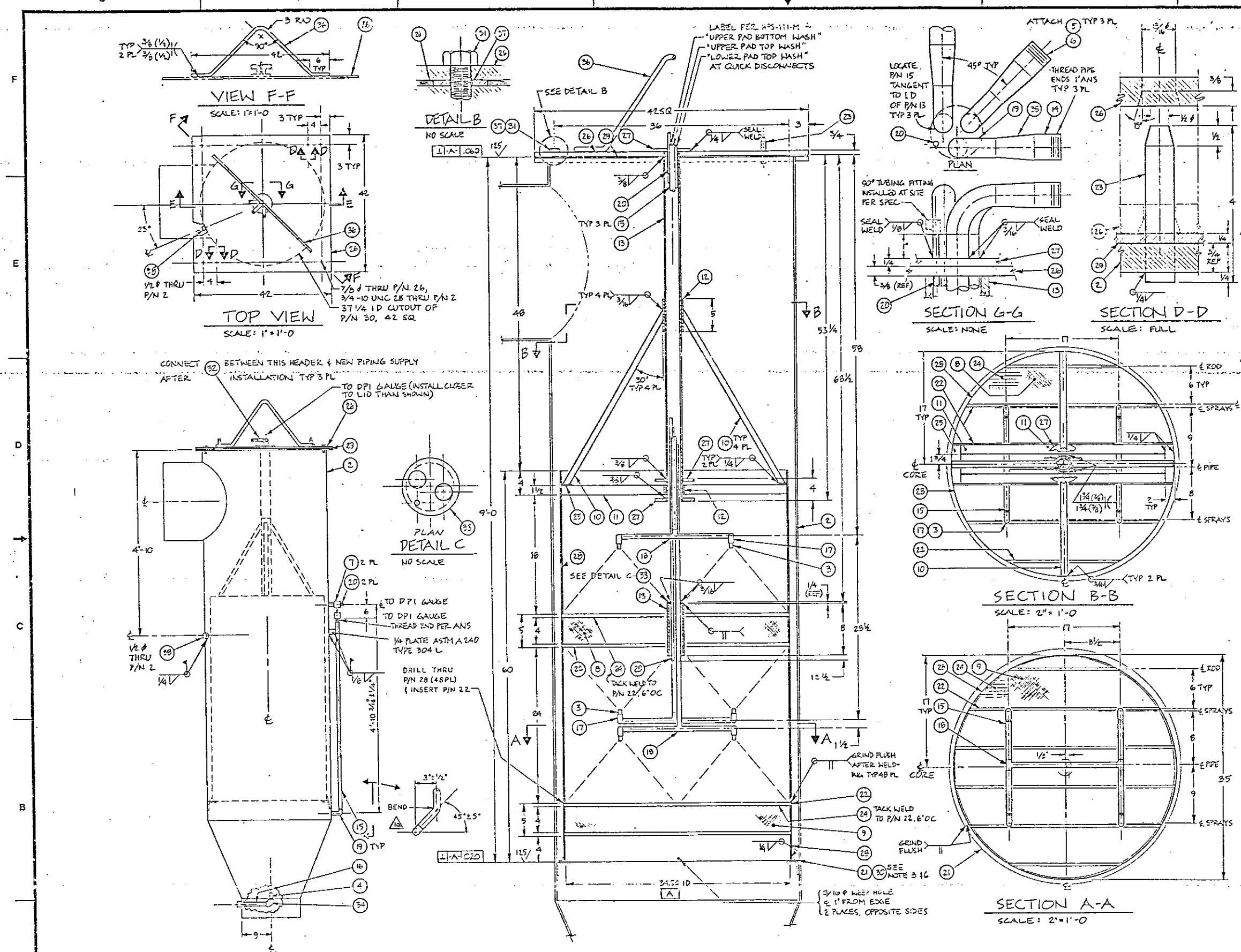

QTY	Nº	DESCRIPTION	REFERENCE
X	1	ASSEMBLY K1-5-2A	—
1	2	DEENTRAINER, K1-5-2A SHELL	H-2-90900
12	3	NOZZLE, WIDE ANGLE, SQUARE SPRAY (4.4 GPM @ 40 PSI) MALE PIPE CONN, TYPE 316 SST SET HEAD PER MFG INSTRUCTION	SPRAYING SYSTEMS CO. FULL CONE WIDE ANGLE SQUARE SPRAY Nº 3/8 HH24WSQ
1	4	NOZZLE, FULL CONE (17.8 GPM @ 40 PSI) TYPE 316 SST	SPRAYING SYSTEMS CO. FULL CONE, Nº 1HH8
3	5	SWAGELOCK "QF" SERIES QUICK DISCONNECT	Nº QF 12-B-12PM
3	6	SWAGELOCK "QF" SERIES QUICK DISCONNECT	Nº QF 12-S-12PF
2	7	SWAGELOCK MALE CONN (1/4" TUBE & 1/2" MALE NPT)	Nº SS-400-1-8
1	8	DEMISTER PAD, 34 1/2" OD × 4" THK W/2 3/8" ø CENTER HOLE, NOTE 5	OTTO H. YORK CO. Nº 421, 304L SST
1	9	DEMISTER PAD, 35 1/2" OD × 4" THK. SEE NOTE 5	KOCH ENG., NEW JERSEY Nº 4310, 304L SST
AR	10	1" SQUARE TUBING (.125 WALL)	ASTM A572 304 L
AR	11	1 1/2" SQUARE TUBING (.125 WALL)	ASTM A572 304 L
AR	12	PIPE 3" SCHED 40S	ASTM A312 304
AR	13	PIPE 2 1/2" SCHED 40S	↓
AR	14	PIPE 1" SCHED 40S	↓
AR	15	PIPE 1/2" SCHED 40S	↓
1	16	NIPPLE 1" × 9" L SCHED 40 S	ASTM A182 304
12	17	1/2" 90° ELBOW (SCREWED) W/ 1/2" × 3/8" MALE TO FEMALE HEX. BUSHING	↓
9	18	TEE, 1/2" SCHED 40S	↓
5	19	ELBOW, 1/2" SCHED 40S	↓
AR	20	TUBING, 1/4" OD, .028 WALL	ASTM A 269 316
AR	21	BAR, 3/4 × 3/4	ASTM A 276 304L
AR	22	ROD, 1/2" ø	↓
2	23	ROD, 3/4" ø × 4 L	↓
AR	24	SCREEN, 1" MESH × 14 GAUGE (.074 WIRE)	ASTM A478 304L
2	25	PLATE 1/4" THK, 2×6 1/2	ASTM A 240 304L
1	26	PLATE 3/4" THK, 42×42	↓
3	27	PLATE 1/2" THK, 6" ø	↓
1	28	PIPE 35" OD × 60" L, .250 WALL	ASTM A358 304L
1	29	GASKET, 1/4" THK, 42×42, W/37 1/4 ID CUT OUT	NEOPRENE 40 DUROMETER
1	30	RING GASKET, 1/8" THK, 36 1/2 OD, 34 1/2 ID	NEOPRENE 40 DUROMETER
4	31	BOLT, 3/4-10 UNC-2A × 2 L	ASTM A 320 304
3	32	HOSE 1" × 3' L, POLYMER, BRAIDED	McMASTER-CARR Nº 5514K52
1	33	PLATE, 1/4" THK × 2 7/8" ø	ASTM A 240 304 L
1	34	ELBOW, 1" SCHED 40S, (SCREWED)	ASTM A 182 304
3	35	REDUCER, 1 1/2" × 1" SCH 40S	ASTM A182 304
AR	36	LIFTING BAIL, ROD 3/4" ø	ASTM A276 304L
4	37	SPACER, 3/16" THK, 1 3/16" ID, 1 1/4" ø	ASTM A 240 304 L
1	38	COUPLING, 1 1/2" ø SCHED 40S	ASTM A 182 304 L

NOTES

1) TOLERANCES (UNLESS OTHERWISE NOTED) FRACTIONAL ± 1/16" ANGULAR ± 1°
2) BREAK ALL SHARP EDGES & CORNERS TO .010" MIN
3) BOND SEAL P/N 30 TO P/N 21 WITH G E RTV511 (OR RTV577)
4) ALL DIMENSIONS IN INCHES (UNLESS OTHERWISE SHOWN)
5) DEMISTER PAD SIZES ARE INSTALLED DIMENSIONS. MFG TO PROVIDE SIZE TO ALLOW FOR SNUG FIT.
6) COAT P/N 30 W/SILICONE GREASE BEFORE INSERTION.

HPS-111-M	SPEC FOR IDENT OF PIPING
H-2-90900	DEENTRAINER K1-5-2A SHELL
H-2-90697	DRAWING LIST
NUMBER	TITLE
REFERENCES	
NEXT USED ON	H-2-90697

MICROFILMED

1	2R 6-14-93	NA			AS-BUILT FOR PROJ. B-399 1) WAS 304 1-2W01-8 2) P/N 21 WAS AN ANGLE, P/N a) DT B-399-1, ZN E-2 b) DFC B-399-12, ZN D-2 c) DFC B-399-10, ZN B-6,7
REV	BY/DATE	BY/DATE	REV BY DATE		DESCRIPTION
APPROVAL		KEY APPROVAL			
REVISIONS					
COMMENT REVIEW					

SUPV-ENG APPROVAL BY	DATE	U. S. DEPARTMENT OF ENERGY Richland Operations Office
		KAISER ENGINEERS HANFORD COMPANY
PROJ ENGR		HVAC DEENTRAINER K1-5-2A ASSEMBLY
DR		
APPROVED		
APPROVED BY		PROJECT TITLE 105A VENTILATION SYSTEM UPGRADE
CHECKED BY		
DRAWN BY		
DESIGNED BY		PROJ 2-399 · Nº CK 2171 · Nº R590A2
CLASSIFICATION TBP		SCALE SHOWN · B-D 241-A-702 · NOTE 8900
		DRAWING NUMBER H-2-90699 · SHEET — · OF — · REV 1
		NONE - REQD

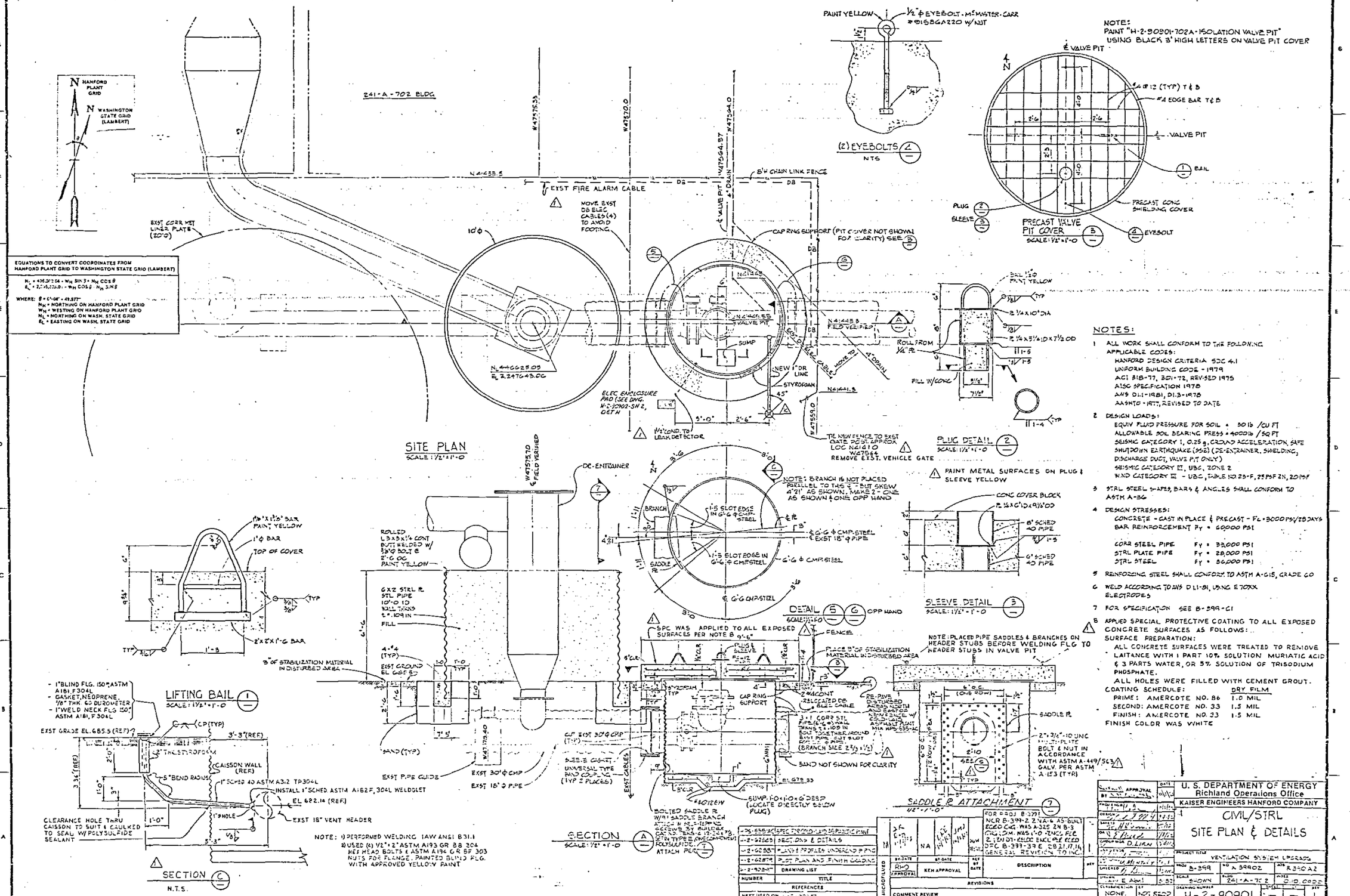
SITE PLAN
SCALE: 1/2"=1'-0
241-A-702 BLDG
HANFORD PLANT GRID
WASHINGTON STATE GRID (LAMBERT)
EXST FIRE ALARM CABLE
MOVE EXST DB ELEC CABLES(4) TO AVOID FOOTING
B'H CHAIN LINK FENCE
CAP RING SUPPORT (PIT COVER NOT SHOWN FOR CLARITY) SEE
VALVE PIT
SUMP
NEW 1" DR LINE
STYROFOAM
ELEC ENCLOSURE PAD (SEE DWG. H-C-30902-SH 2, DET H)
1/2" COND. TO LEAK DETECTOR
TIE NEW FENCE TO EXST GATE POST. APPROX LOC N41410 W47564
REMOVE EXST. VEHICLE GATE
PAINT METAL SURFACES ON PLUG & SLEEVE YELLOW
PAINT YELLOW
1/2"ϕ EYEBOLT - McMASTER-CARR #9158GA220 W/NUT
(2) EYEBOLTS
NTS
NOTE: PAINT "H-2-30901-702A-ISOLATION VALVE PIT" USING BLACK 3" HIGH LETTERS ON VALVE PIT COVER
VALVE PIT
#4 @ 12 (TYP) T & B
#4 EDGE BAR T & B
BAIL
PRECAST CONC SHIELDING COVER
PLUG
SLEEVE
EYEBOLT
PRECAST VALVE PIT COVER
SCALE: 1/2"=1'-0
BAIL 1/2"ϕ PAINT YELLOW
2 1/4 x 10" DIA
2 1/4 x 5 1/2 ID x 7 1/2 OD
ROLL FROM 1/2" PL
FILL W/CONC
PLUG DETAIL
SCALE: 1/2"=1'-0
DE-ENTRAINER
NOTE: 1 BRANCH IS NOT PLACED PARALLEL TO THIS ℄ - BUT SKEW 4°21' AS SHOWN, MAKE 2 - ONE AS SHOWN & ONE OPP HAND
BRANCH
SADDLE PL
DETAIL
SCALE: 1/2"=1'-0
OPP HAND
SLEEVE DETAIL
SCALE: 1/2"=1'-0
CONC COVER BLOCK
8" SCHED 40 PIPE
6" SCHED 40 PIPE
1/4" x 1 1/2" BAR PAINT YELLOW
1"ϕ BAR
TOP OF COVER
LIFTING BAIL
SCALE: 1/2"=1'-0
ROLLED L 3x3x1/4 CONT BUTT WELDED W/ 5/8"ϕ BOLT @ 2'-6 OC PAINT YELLOW
6X2 STRL PL STL PIPE 10'-0 TO WALL TRANS t=.109 IN
FILL
4-#4 (TYP)
EXST GROUND EL 685.5
3" OF STABILIZATION MATERIAL IN DISTURBED AREA
SAND (TYP)
EXST PIPE GUIDE
EXST 30" ϕ CMP
EXST 18" ϕ PIPE
EXST CABLES
SPC WAS APPLIED TO ALL EXPOSED SURFACES PER NOTE 8
FENCE
PLACE 3" OF STABILIZATION MATERIAL IN DISTURBED AREA
CAP RING SUPPORT
2" ϕ CONT
RE-PIPE DISCHARGE PIPE WITH SAME SIZE W/ 300# LONG ASTM A53 GALV PLANT MIX ASTM-535-AC
BAND NOT SHOWN FOR CLARITY
SUMP: 1'-0 x 1'-0 x 6" DEEP (LOCATE DIRECTLY BELOW PLUG)
BOLTED SADDLE PL W/#1 SADDLE BRANCH
NOTE: PLACED PIPE SADDLES & BRANCHES ON HEADER STUBS BEFORE WELDING FLG TO HEADER STUBS IN VALVE PIT
SADDLE PL
2"-3 1/4"-10 UNC BOLT & NUT IN ACCORDANCE WITH ASTM A-449/563 GALV PER ASTM A-153 (TYP)
SADDLE & ATTACHMENT
SCALE: 1/2"=1'-0
- 1" BLIND FLG. 150# ASTM A181, F304L
- GASKET, NEOPRENE, 1/8" THK 60 DUROMETER
- 1" WELD NECK FLG 150# ASTM A181, F304L
EXST GRADE EL. 685.5 (REF)
3" THK STYROFOAM
CAISSON WALL (REF)
5" BEND RADIUS
1" SCHED 40 ASTM A312 TP304L
INSTALL 1" SCHED ASTM A182 F, 304L WELDOLET
EL 682.14 (REF)
1" HOLE
EXST 18" VENT HEADER
CLEARANCE HOLE THRU CAISSON TO SUIT & CAULKED TO SEAL W/ POLYSULFIDE SEALANT
SECTION
N.T.S.
NOTE: 1) PERFORMED WELDING IAW ANSI B31.1
2) USED (6) 1/2" x 2" ASTM A193 GR B8 304 HEX HEAD BOLTS & ASTM A194 GR 8F 303 NUTS FOR FLANGE. PAINTED BLIND FLG. WITH APPROVED YELLOW PAINT
SECTION
SCALE: 1/2"=1'-0
NOTES:
1 ALL WORK SHALL CONFORM TO THE FOLLOWING APPLICABLE CODES:
HANFORD DESIGN CRITERIA SDC 4.1
UNIFORM BUILDING CODE - 1979
ACI 318-77, 301-72, REVISED 1975
AISC SPECIFICATION 1978
ANSI D1.1-1981, D1.3-1978
AASHTO - 1977, REVISED TO DATE
2 DESIGN LOADS:
EQUIV FLUID PRESSURE FOR SOIL = 50 lb /CU FT
ALLOWABLE SOIL BEARING PRESS = 4000 lb /SQ FT
SEISMIC CATEGORY 1, 0.25 g, GROUND ACCELERATION, SAFE SHUTDOWN EARTHQUAKE (SSE) (DE-ENTRAINER, SHIELDING, DISCHARGE DUCT, VALVE PIT ONLY)
SEISMIC CATEGORY III, UBC, ZONE 2
WIND CATEGORY III - UBC, TABLE NO 23-F, 25 PSF IN, 20 PSF
3 STRL STEEL SHAPES, BARS & ANGLES SHALL CONFORM TO ASTM A-36
4 DESIGN STRESSES:
CONCRETE - CAST IN PLACE & PRECAST - F'c = 3000 PSI/28 DAYS
BAR REINFORCEMENT Fy = 60000 PSI
CORR STEEL PIPE Fy = 33,000 PSI
STRL PLATE PIPE Fy = 28,000 PSI
STRL STEEL Fy = 36,000 PSI
5 REINFORCING STEEL SHALL CONFORM TO ASTM A-615, GRADE 60
6 WELD ACCORDING TO AWS D1.1-81, USING E70XX ELECTRODES
7 FOR SPECIFICATION SEE B-399-C1
8 APPLIED SPECIAL PROTECTIVE COATING TO ALL EXPOSED CONCRETE SURFACES AS FOLLOWS:
SURFACE PREPARATION:
ALL CONCRETE SURFACES WERE TREATED TO REMOVE LAITANCE WITH 1 PART 10% SOLUTION MURIATIC ACID & 3 PARTS WATER, OR 5% SOLUTION OF TRISODIUM PHOSPHATE.
ALL HOLES WERE FILLED WITH CEMENT GROUT.
COATING SCHEDULE: DRY FILM
PRIME: AMERCOTE NO. 86 1.0 MIL
SECOND: AMERCOTE NO. 33 1.5 MIL
FINISH: AMERCOTE NO. 23 1.5 MIL
FINISH COLOR WAS WHITE
U. S. DEPARTMENT OF ENERGY
Richland Operations Office
KAISER ENGINEERS HANFORD COMPANY
CIVIL/STRL
SITE PLAN & DETAILS
VENTILATION SYSTEM UPGRADES
NONE
NOT REQD
H-2-90901

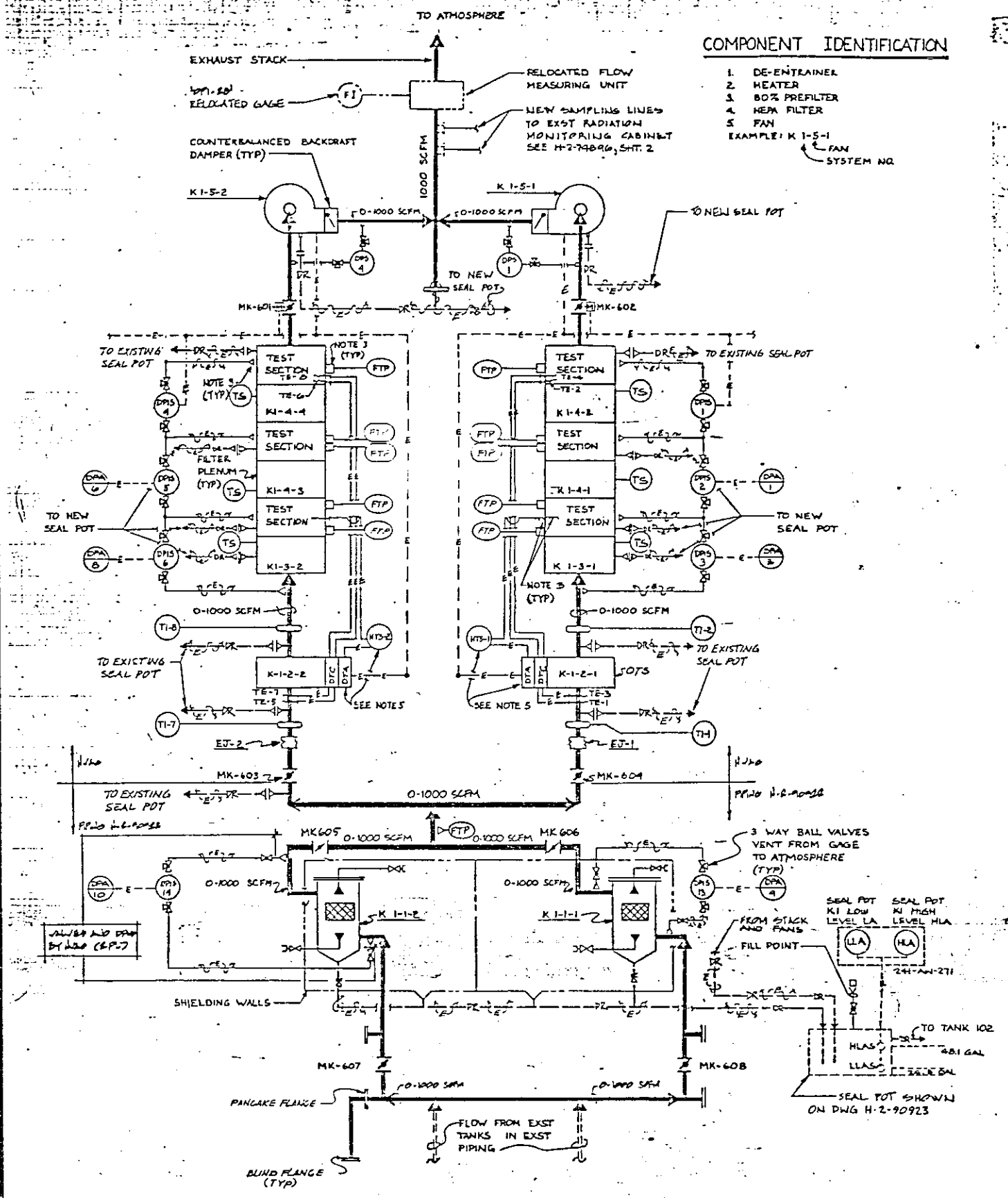

K I SYSTEM FLOW & CONTROL DIAGRAM

COMPONENT IDENTIFICATION

1. DE-ENTRAINER
2. HEATER
3. 80% PREFILTER
4. HEPA FILTER
5. FAN

EXAMPLE: K 1-5-1
FAN
SYSTEM NO.

SEQUENCE OF OPERATION

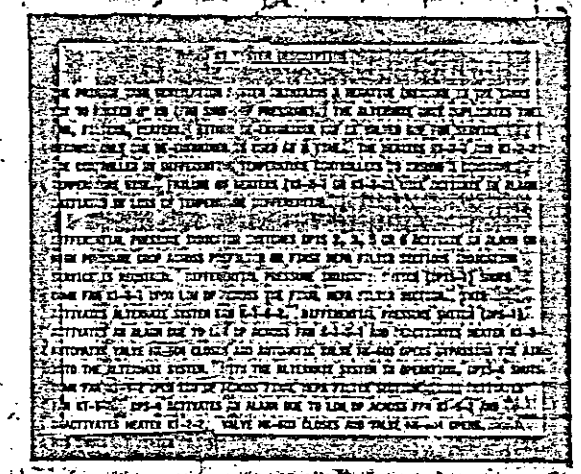

GENERAL NOTE

1. FABRICATION, MATERIALS, CLEANING & TESTING SHALL BE IN ACCORDANCE WITH CONSTRUCTION SPEC. B-402-C1.
2. REFER TO H-2-70300 FOR CONFIGURATION OF EXST. FACILITIES AT WORKSITE.

CONTROL DIAGRAM NOTES

1. ALTERNATE FAN TO START AUTOMATICALLY UPON OPERATING FAN FAILURE.
2. ON LOW TEMPERATURE DIFFERENTIAL (10°F), (DTA) SOUNDS ALARM IN BUILDING 241-AW-271.
3. FILTER TEST PORTS, GAGE PORT HALF COUPLING & HEATER TEMPERATURE CONTROLLER HALF COUPLINGS ARE PROVIDED WITH THE FILTER PLENUMS.
4. SEE DWG H-2-90923 FOR CONDENSATE DRAIN PIPING AND INSULATION. SEE H-2-90917 FOR HEAT TRACING. SEE H-2-90930 & H-2-90931 FOR ALARM & CONTROL WIRING.
5. DTA & DTC ARE IN CONTROL CABINET. SEE DETAIL 7 ON H-2-90908.

LEGEND

EJ	EXPANSION JOINT
HTS	HIGH TEMPERATURE SWITCH
DPIS	DIFFERENTIAL PRESS INDICATING SWITCH
DR	DRAIN
FTP	FILTER TEST PORT
LL	LIQUID LEVEL
	3 WAY & 2 WAY BALL VALVES (REMOTE-OPER)
	SPRAY NOZZLE, GATE VALVE & HOSE CONN
M	MOTOR OPERATOR FOR VALVES
DTC	DIFF TEMP CONTROLLER } PART OF HEATER PKG
DTA	DIFF TEMP ALARM } PART OF HEATER PKG
	HEAT TRACED & INSULATED LINE
E	ELECTRICAL WIRING
DPS	DIFF PRESSURE SWITCH
	PRESSURE SENSING TAP
FS	FLOW SWITCH
TS	TEMPERATURE SWITCH
R/M	RADIATION MONITORING
OTS	OVERTEMPERATURE SWITCH
	PANEL MOUNTED

DRAWING LIST

NUMBER	INDEX No.	TITLE
H-2-90905	8900,0000	DWG LIST/HVAC-FLOW CONTROL DIAG & NOTES
H-2-90906	8900	HVAC-EQUIPMENT PLAN & ELEVATIONS
H-2-90907	8900	HVAC-DEMOLITION PLAN, CEN EXH STA
H-2-90908	8900	HVAC-MISC DETAILS
H-2-90909	8900	HVAC-EQUIPMENT SCHEDULES & NOTES
H-2-90910	8900	HVAC DETAILS
H-2-90911	8900	HVAC-SUPPORT STRUCTURE ASSEMBLY
H-2-90912 SHT 1	8900	HVAC-PLENUM ASSEMBLY
H-2-90912 SHT 2	8900	HVAC-PLENUM DETAILS
H-2-90913	—	NOT USED
H-2-90914	8900	HVAC-END PANEL ASSEMBLY
H-2-90915	8900	HVAC-PLENUM EQPT ASSY DRWG
H-2-90916	8900	HVAC-FAN TO PLENUM ASSY & INSTALLATION
H-2-90917	8900,7301	HVAC/ELEC-HEAT TRACE PLAN, DETAILS & NOTES
H-2-90920	0400,0901	STRL-CONC FDN PLAN & DETAILS
H-2-90921 SHT 1	0901	STRL-CONC SHLD WALL, PLAN & DETAILS
H-2-90922	0402	PIPING-PRIMARY EXH SYS MODIF
H-2-90923	0402, 8409	PIPING-PRIMARY SYSTEM SEAL POT & DET
H-2-90924	2500, 8400	VESSEL ASSY-DE-ENTRAINER K1-1-1 & K1-1-2
H-2-90925	8409	PIPING-PORT EXHAUSTER, PLAN, SECT, & DETS
H-2-90926	8409	PIPING-PORT EXHAUSTER, PLAN, SECT & DETS
H-2-74897 SH 1,2,3	5901	276-A-28 ANNEUS TANK EXH. STK. MON. INSTL
H-2-74896 SH 1,2,3	5901	276-A-27 PRIMARY TANK STK. MON. INSTL
H-2-90927	7201, 7303	ELECTRICAL-ONE LINE DIAGRAM & DET
H-2-90928	7302	ELECTRICAL-ELEMENTARY DIAGRAMS
H-2-90929	7502	ELECTRICAL-CONNECTION DIAGRAM
H-2-90930 SH 1&2	7301	ELECTRICAL-PLANS & DETAILS
H-2-90931	7305, 7505	ELECTRICAL-WIRE RUN LIST
B-402-C1		CONSTRUCTION SPEC

CVI LIST

EPN	DESCRIPTION	REF. DWG	CVI NO.
DPS	DIFFERENTIAL PRESSURE SWITCHES	H-2-90909	
DPIS	DIFFERENTIAL PRESSURE INDICATING SWITCHES		
TI	TEMPERATURE INDICATORS		
TS	TEMPERATURE SWITCH		
K1-5-1 & 2	EXHAUST FANS (CENTRIFUGAL)		
K1-2-1 & 2	ELECTRICAL DUCT HEATER W/CONTROL PACKAGE		
—	FILTERS AND FILTER PLENUMS		
	MOTOR STARTER UNIT	H-2-90907	
	ANNUNCIATOR	H-2-90930, SH 2	
	FILTERS & HOUSINGS	H-2-90906	#21387
	COMPRESSION BELLOWS	H-2-90906	#21325
EJ-1 & EJ-2	12" BUTTERFLY VALVES (VALVE & OPERATORS)	H-2-90906	
	MIST ELIMINATOR	H-2-90924	
	WORK PLATFORM	H-2-90906	
	HEATING ELEMENTS	H-2-90908	

IMPACT LEVEL III

U. S. DEPARTMENT OF ENERGY
Richland Operations Office
KAISER ENGINEERS HANFORD COMPANY

DWG LIST/HVAC FLOW CONTROL DIAGRAM & NOTES

PROJECT TITLE: 241-AW VENTILATION SYSTEM UPGRADE

B-402 | X402C2 | 2341AW
NONE | 241-AW | 2600/8900

NONE | H-2-90905 | 1 | 1 | 5

REVISIONS				
H	RDS 4/87	RED LINES ADDED IMPACT LVL PER ESR 8511, INCORPORATED DIRECT DRAWING CHANGE	5
H		D.I.-E529, REF. DWG. LIST DIRECT DWG CHANGE PER	4
		DESCRIPTION	5

H-7-12741 HVAC & PIPING SYMBOLS
DRAWING LIST
NUMBER | TITLE
REFERENCES
NEXT USED ON

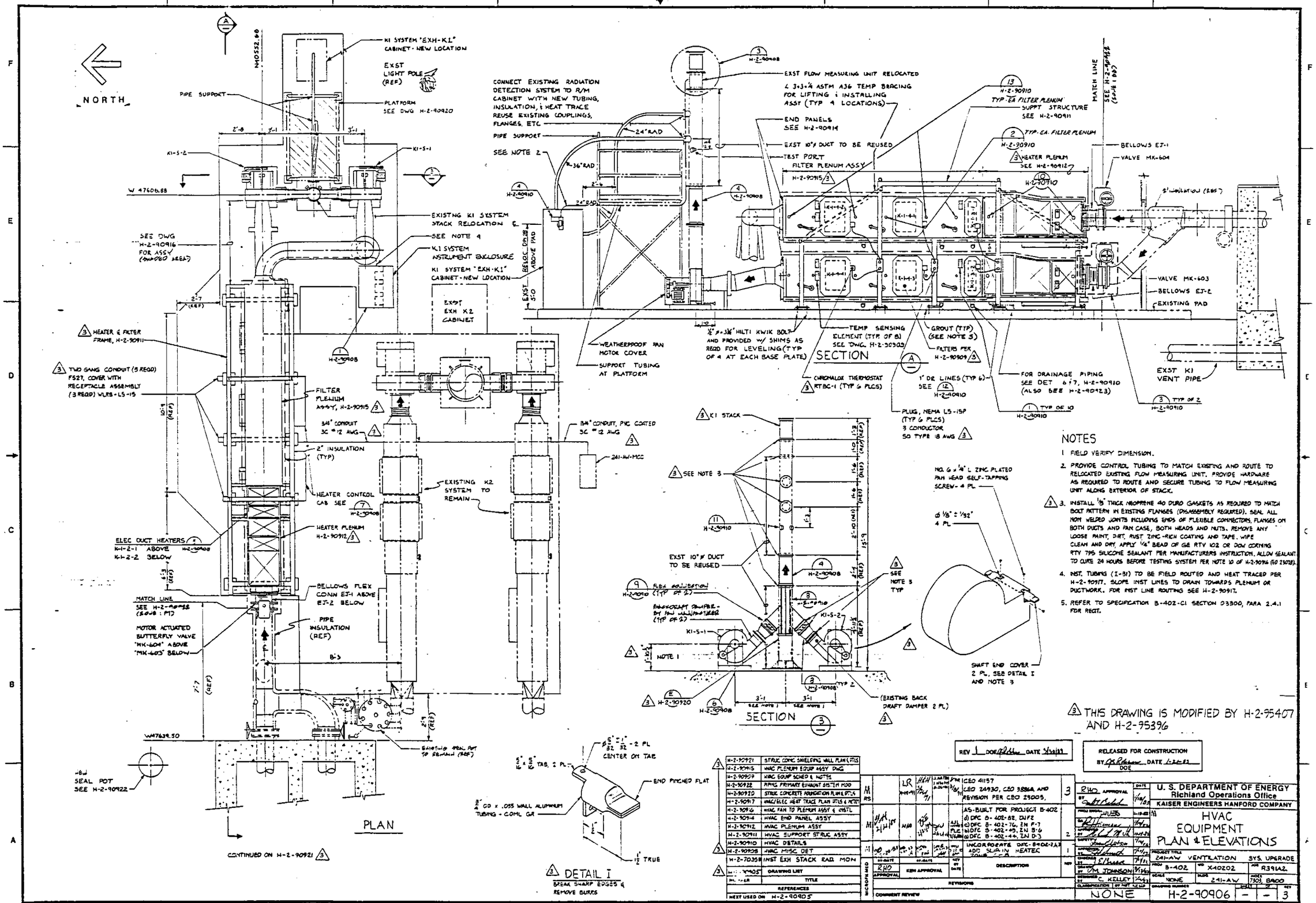

NOTES

1. FIELD VERIFY DIMENSION.
2. PROVIDE CONTROL TUBING TO MATCH EXISTING AND ROUTE TO RELOCATED EXISTING FLOW MEASURING UNIT. PROVIDE HARDWARE AS REQUIRED TO ROUTE AND SECURE TUBING TO FLOW MEASURING UNIT ALONG EXTERIOR OF STACK.
3. INSTALL 1/8" THICK NEOPRENE 40 DURO GASKETS AS REQUIRED TO MATCH BOLT PATTERN IN EXISTING FLANGES (DISASSEMBLY REQUIRED). SEAL ALL NON WELDED JOINTS INCLUDING ENDS OF FLEXIBLE CONNECTORS, FLANGES ON BOTH DUCTS AND FAN CASE, BOTH HEADS AND NUTS. REMOVE ANY LOOSE PAINT, DIRT, RUST. ZINC-RICH COATING AND TAPE. WIPE CLEAN AND DRY. APPLY ¼" BEAD OF GE RTV 102 OR DOW CORNING RTV 795 SILICONE SEALANT PER MANUFACTURERS INSTRUCTION. ALLOW SEALANT TO CURE 24 HOURS BEFORE TESTING SYSTEM PER NOTE 10 OF H-2-90916 (ED 23078).
4. INST. TUBING (I-31) TO BE FIELD ROUTED AND HEAT TRACED PER H-2-90917. SLOPE INST LINES TO DRAIN TOWARDS PLENUM OR DUCTWORK. FOR INST LINE ROUTING SEE H-2-90917.
5. REFER TO SPECIFICATION B-402-C1 SECTION 03300, PARA 2.4.1 FOR RECT.

THIS DRAWING IS MODIFIED BY H-2-95407 AND H-2-95396

H-2-90921	STRUC CONC SHIELDING WALL PLAN & STLS
H-2-90915	HVAC PLENUM EQUIP ASSY DWG
H-2-90919	HVAC EQUIP SCHED & NOTES
H-2-90922	PIPING PRIMARY EXHAUST SYSTEM MOD
H-2-90920	STRUC CONCRETE FOUNDATION PLAN & DTLS
H-2-90917	HVAC/ELEC HEAT TRACE PLAN STLS & NOTES
H-2-90916	HVAC FAN TO PLENUM ASSY & ASSTL
H-2-90914	HVAC END PANEL ASSY
H-2-90912	HVAC PLENUM ASSY
H-2-90911	HVAC SUPPORT STRUC ASSY
H-2-90910	HVAC DETAILS
H-2-90908	HVAC MISC DET
H-2-70358	INST EXH STACK RAD MON
H-2-90905	DRAWING LIST

REV	DATE	DESCRIPTION
3	3/6/91	ICEO 41157 CEO 24930, CEO 38868, AND REVISION PER CEO 29005,
2	11/4/91	AS-BUILT FOR PROJECT B-402 a) DFC B-402-82, DWF2 b) DFC B-402-76, EN F-7 c) DFC B-402-49, EN B-6 d) DFC B-402-44, EN D-3
1	11/8/91	INCORPORATE DFC-B402-2A3 ADD SLAB IN HEATER ZONE C-8

REV 1 DOE/RL DATE 5/20/93

RELEASED FOR CONSTRUCTION BY DOE DATE 1-24-83

U. S. DEPARTMENT OF ENERGY
Richland Operations Office
KAISER ENGINEERS HANFORD COMPANY

HVAC EQUIPMENT PLAN & ELEVATIONS

PROJECT TITLE: 241-AW VENTILATION SYS. UPGRADE

NONE

H-2-90906 - - 3

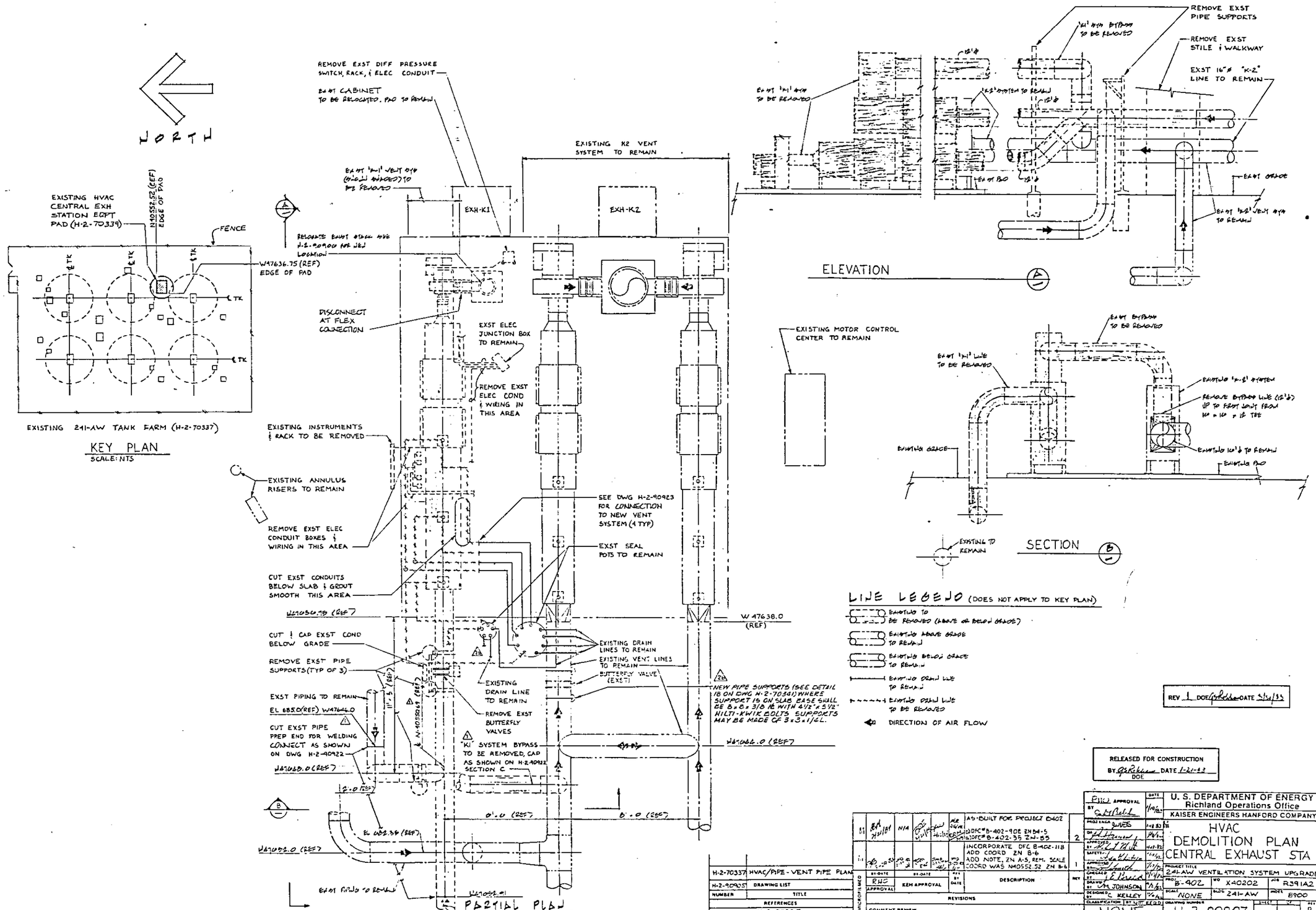
NORTH
EXISTING HVAC CENTRAL EXH STATION EQPT PAD (H-2-70339)
N40552.52 (REF) EDGE OF PAD
FENCE
W47636.75 (REF) EDGE OF PAD
EXISTING 241-AW TANK FARM (H-2-70337)
KEY PLAN
SCALE: NTS
REMOVE EXST DIFF PRESSURE SWITCH, RACK, & ELEC CONDUIT
EXST CABINET TO BE RELOCATED. PAD TO REMAIN
EXISTING K2 VENT SYSTEM TO REMAIN
EXH-K1
EXH-K2
DISCONNECT AT FLEX CONNECTION
EXST ELEC JUNCTION BOX TO REMAIN
REMOVE EXST ELEC COND & WIRING IN THIS AREA
EXISTING INSTRUMENTS & RACK TO BE REMOVED
EXISTING ANNULUS RISERS TO REMAIN
REMOVE EXST ELEC CONDUIT BOXES & WIRING IN THIS AREA
CUT EXST CONDUITS BELOW SLAB & GROUT SMOOTH THIS AREA
SEE DWG H-2-90923 FOR CONNECTION TO NEW VENT SYSTEM (4 TYP)
EXST SEAL POTS TO REMAIN
W 47638.0 (REF)
CUT & CAP EXST COND BELOW GRADE
REMOVE EXST PIPE SUPPORTS (TYP OF 3)
EXISTING DRAIN LINES TO REMAIN
EXISTING VENT LINES TO REMAIN
BUTTERFLY VALVE (EXST)
EXISTING DRAIN LINE TO REMAIN
REMOVE EXST BUTTERFLY VALVES
EXST PIPING TO REMAIN
EL 685.0 (REF) W47646.0
CUT EXST PIPE PREP END FOR WELDING CONNECT AS SHOWN ON DWG H-2-90922
"K1" SYSTEM BYPASS TO BE REMOVED, CAP AS SHOWN ON H-2-90922 SECTION C
NEW PIPE SUPPORTS (SEE DETAIL 18 ON DWG H-2-70341) WHERE SUPPORT IS ON SLAB BASE SHALL BE 8x8x3/8 PL WITH 4 1/2"x5 1/2" HILTI-KWIK BOLTS SUPPORTS MAY BE MADE OF 3x3x1/4L.
PARTIAL PLAN
REMOVE EXST PIPE SUPPORTS
REMOVE EXST STILE & WALKWAY
EXST 16"Ø "K-2" LINE TO REMAIN
ELEVATION
EXISTING MOTOR CONTROL CENTER TO REMAIN
EXISTING TO REMAIN
SECTION
LINE LEGEND (DOES NOT APPLY TO KEY PLAN)
EXISTING TO BE REMOVED (ABOVE OR BELOW GRADE)
EXISTING ABOVE GRADE TO REMAIN
EXISTING BELOW GRADE TO REMAIN
EXISTING DRAIN LINE TO REMAIN
EXISTING DRAIN LINE TO BE REMOVED
DIRECTION OF AIR FLOW
REV 1 DOE DATE 5/21/83
RELEASED FOR CONSTRUCTION
BY DOE DATE 1-21-83
H-2-70337 HVAC/PIPE - VENT PIPE PLAN
H-2-90905 DRAWING LIST
NUMBER TITLE
REFERENCES
NEXT USED ON H-2-90905
AS-BUILT FOR PROJECT B402
INCORPORATE DFC B-402-118 ADD COORD ZN B-6 ADD NOTE, ZN A-5, REM. SCALE COORD WAS N40552.52 ZN B-6
REVISIONS
COMMENT REVIEW
U. S. DEPARTMENT OF ENERGY
Richland Operations Office
KAISER ENGINEERS HANFORD COMPANY
HVAC
DEMOLITION PLAN
CENTRAL EXHAUST STA
241-AW VENTILATION SYSTEM UPGRADE
B-402
X40202
R391A2
NONE
241-AW
8900
NONE
H-2-90907
2

FAN SCHEDULE

UNIT	AIRFLOW SCFM	EXTERNAL SP	AIR TEMP F°	CLASS	ARR	DISCH	ROTATION	MOTOR HP	RPM	V	PH	HZ	ENCLOSURE	NOTES	REMARKS SEE H-2-90905
K1-5-1 & 2	1000	±.75"	70	II	9	RAD	NOTE 4	3	3600	480	3	60	TEFC	1,2,3	ALADDIN 25000, TYPE MR, SIZE 15, ADJUSTABLE V-BELT DRIVE

1 MAX FAN DEVELOPED SP SHALL NOT EXCEED ±.75" WG AT OPERATING RPM AT ANY FLOW RATE.
2 FANS SHALL BE FURNISHED W/GRAVITY OUTLET BACKDRAFT DAMPERS. HEAVY GAGE BLADES, FRAMES, AND [illegible].
3 PROVIDE ADJUSTABLE SHEAVES TO ACCOMMODATE A ±15% FAN RPM DIFFERENTIAL.
4 FAN ROTATION FOR K1-5-1 IS CLOCKWISE AND K1-5-2 IS COUNTERCLOCKWISE.

FILTER AND FILTER HOUSING SCHEDULE

UNIT	AIRFLOW CFM/FILTER	FILTER SIZE	AVG INITIAL RESIST. WG	MAX INITIAL RESIST. WG	EFFICIENCY % RATING	ARRANGEMENT HIGH	WIDE	NO.	FILTER MFR & MODEL NO.	FRAME MFGR & MODEL	REMARKS SEE H-2-90906, H-2-90910
K1-3-1 K1-3-2	1000	24x24x6	0.35"	0.50"	80 AVE ASHRAE 52-76	1	1	1	FLANDERS ECONO-CELL UL CLASS 1	FLANDERS GG-F6 (24) PRE-FLTR	LEFT HAND FILTER ACCESS FILTER SEALS ON UPSTREAM SIDE
K1-4-1, K1-4-3 K1-4-2, K1-4-4	1000	24x24x11½ GG-F	0.83" 0.83"	1.00" 1.00"	99.97 BY DOP	1	1	1	FLANDERS 7025-NL-GGF	FLANDERS E-4	LEFT HAND FILTER ACCESS FILTER SEALS ON UPSTREAM SIDE IN "LIQUID SEAL"
[illegible]	1000	SEE T1, T2 [illegible] T7, [illegible]	—	—	—	1	1	1	—	FLANDERS T1, T2, T7	SEE PLANS FOR DETAIL ARRANGEMENT

CONTROL & INDICATOR SCHEDULE

UNIT	MFR & MODEL	RANGE	SWITCHING	SET POINT	ELEC RATING	NAMEPLATE NOMENCLATURE	REMARKS SEE H-2-90908
DPS-1 & 4	DWYER CONTROLS SERIES 1823-10	2.0-10.0" WG	1-SPDT	4.0" WG	120 V 15 A	SEE DWG H-2-90908	SEE NOTES 3, 4 & 6
DPS-3 & 6	DWYER CONTROLS SERIES 3000	0-2.0" WG	2-SPDT	1.0" WG	120 V 10 A		SEE NOTES 2, 3, 4, 5 & 6
DPIS-13 & 14	DWYER CONTROLS SERIES 3000	0-4.0" WG	2-SPDT	2.0" WG	120 V 10 A		SEE NOTES 2, 3, 4, 5 & 6
DPIS-1 & 4	DWYER CONTROLS SERIES 3000	0-6.0" WG	2-SPDT	0.5" WG	120 V 10 A		SEE NOTES 1, 3, 4, 5 & 6
DPIS-2 & 5	DWYER CONTROLS SERIES 3000	0-6.0" WG	2-SPDT	3.0" WG	120 V 10 A		SEE NOTES 2, 3, 4, 5 & 6
TI-1 & 7	WESTON 4303	20°-240° F	—	—	—	TI-1 & 7 HEATER ENTERING AIR TEMPERATURE	12" STEM LENGTH, WESTON TEMP WELL #172757-124, SEE DETAIL 10, H-2-90910
TI-2 & 8	WESTON 4303	20°-240° F	—	—	—	TI-2 & 8 HEATER EXITING AIR TEMPERATURE	12" STEM LENGTH, WESTON TEMP WELL #172757-124 SEE SEE DETAIL 10, H-2-90910
HTS 1 & 2	UNITED ELEC MODEL 5110A-102	0-225° F	2-SPDT	200° F	110 V 15 A	—	SEE DWG H-2-90910 DETAIL 1. PROVIDE WELL FOR PROBE, SEE NOTE 8. MOUNT ON FILTER PLENUM.
TS-1,2,3,4,5,6,7,8	BARBER-COLEMAN TS-8201	—	—	—	—	—	USE AT-215 STAINLESS STEEL BULB WELL

1. PHOTOCELL TO BE ILLUMINATED & RELAY ENERGIZED WHEN GAGE POINTER IS TO THE RIGHT OF SET POINT AND DE-ENERGIZED AS POINTER PASSES TO THE LEFT OF THE SET POINT.
2. PHOTOCELL TO BE ILLUMINATED & RELAY ENERGIZED WHEN GAGE POINTER IS TO THE LEFT OF SET POINT AND DE-ENERGIZED AS POINTER PASSES TO THE RIGHT OF THE SET POINT.
3. PROVIDE SHUT-OFF VALVES, PARKER 3-WAY BALL VALVES MODEL # 12-VGXJ-3 , 500 PSI RATING, BRASS, TEFLON SEATS & WASHERS, ⅛" GYROLOK FITTINGS.
4. PROVIDE LOW TEMPERATURE OPTION, -20°F OPERATION THRU BALSTON IN-LINE FILTERS
5. PHOTOHELIC, ILLUMINATED DIAL.
6. SEE DWG H-2-90908 FOR SPEC & MOUNTING OF THESE UNITS.
7. NOT USED
8. TO BE PROVIDED BY HEATER MANUFACTURER.

ELECTRIC HEATER SCHEDULE

UNIT	SCFM	KW	STAGES	SIZE W	SIZE H	ELEC V	ELEC PH	ELEC HZ	MFR & MODEL	CONTROL VOLTAGE	REMARKS SEE H-2-90906
K1-2-1 & 2 W/OTA & DTC	1000	10	N.A.	24	24	480	3	60	INDEECO, FINNED, TUBULAR, FLANGED	120	SEE DETAIL 5, DWG H-2-90908 FOR SPECIAL FLANGE ARRT. WIRING DIAG IAW DWG H-2-90929 WITH MODULATING SOLID STATE CONTROL. PROVISION FOR HIGH LIMIT CUTOUT. INF TEMP SENSORS.
K1-2-3	~	0.5	1	—	—	240	1	60	BRASCO DHT-500 ELECTRIC UTILITY HEATER	120	INTEGRAL THERMOSTAT 40-75°F RANGE: SEE DWG H-2-90908 SECTION C FOR LOCATION

BUTTERFLY VALVE SCHEDULE

MARK (MK-)	SCFM	SIZE	AIR TEMP	OPERATOR	MFR & MODEL KEYSTONE VALVE	REMARKS SEE H-2-90903, H-2-90906
601, 602	1000	12" ø	160° F	MANUAL	072-703-120-100-051	(1,4)
605, 606	1000	12" ø	160° F	MANUAL	072-703-120-100-051	(1,4)
603, 604	1000	12" ø	160° F	MOTORIZED	072-703-120-100-051	(2,3,4)
607, 608	1000	12" ø	160° F	MANUAL	072-703-120-100-051	(1,4)

1 FURNISH WITH HEAVY-DUTY WEATHERPROOF GEAR OPERATOR WITH POSITION LOCKING CAPABILITY. KEYSTONE # 398-819-120-420-000
2 FURNISH WITH KEYSTONE FIGURE 777 ELECTRIC ACTUATOR, SIZE EPI-50 INT, 120 VOLT 60 HZ, 1 PH WITH MANUAL OVERRIDE AND NEMA 4 ENCLOSURE.
3 VALVE OPERATORS SHALL BE SUITABLE FOR INDEFINATELY LONG OPERATING FREQUENCIES AND A NON-LUBRICATING MEDIA.
4 VERIFY KEYWAYS OF BOTH VALVES AND ACTUATORS TO RESULT IN HANDWHEEL ORIENTATION AS SHOWN IN PLANS AND DETAILS.
5 FOR DEENTRANNER PARTS SEE H-2-90924

BELLOWS SCHEDULE

EQPT	SIZE	OPR/TEST OPR/INSTL TEMP F°	PRESS	FLANGES	REMARKS SEE H-2-90906
E7-1 & 2	12" ø	5" ø	200/70	150# RAISED FACE	PATHWAY FLEXWAY NO. 12-5-FF-50-4-L-X-M1 304 SST SINGLE UNRESTRAINED STYLE

REV 1 DOE [illegible] DATE 3/4/93

QA LEVEL I

RELEASED FOR CONSTRUCTION
BY [illegible] DATE 1-14-93
DOE

M			4/24/90	JMM	5/2/90	INCORPORATED ECN NO. 230002. 3
M	[illegible]	7/21/89	N/A	[illegible]	[illegible]	AS-BUILT FOR PROJECT 3402 1) POT # B-402-41, ZN C-6-7 2) POT # B-402-40, ZN C-6 3) DTC # B-402-29, ZN C-5-3 4) DTC # B-402-34, ZN C-5 5) DTC # B-402-34, ZN D-8 6) DTC # B-402-17, ZN C-6 2
M	[illegible]	[illegible]	[illegible]	[illegible]	[illegible]	INCORPORATE DPC-B402-4 CHANGE DPS 1 & 4 ZN D-8 1

SYMBOL	BY-DATE	BY-DATE	REV BY DATE	DESCRIPTION	REV
MICROFILMED	RHO APPROVAL	KEM APPROVAL		REVISIONS	
	COMMENT REVIEW				

H-2-90905	DRAWING LIST
NUMBER	TITLE
REFERENCES	
NEXT USED ON	H-2-90905

RHO APPROVAL BY [illegible] DATE 7/8/93

U. S. DEPARTMENT OF ENERGY
Richland Operations Office
KAISER ENGINEERS HANFORD COMPANY

HVAC EQUIPMENT SCHEDULES & NOTES

PROJECT TITLE: 241-AW VENTILATION SYSTEM UPGRADE

PROJ 3-402 WO X40202 JOB R391AZ

DESIGNED BY J. Breed
DRAWN BY DM. JOHNSON
DESIGNER BY C. KELLEY
CLASSIFICATION BY [illegible]

SCALE NONE BLDG 241-AW PROJ 8900

DRAWING NUMBER H-2-90909 SHEET — REV 3

NONE

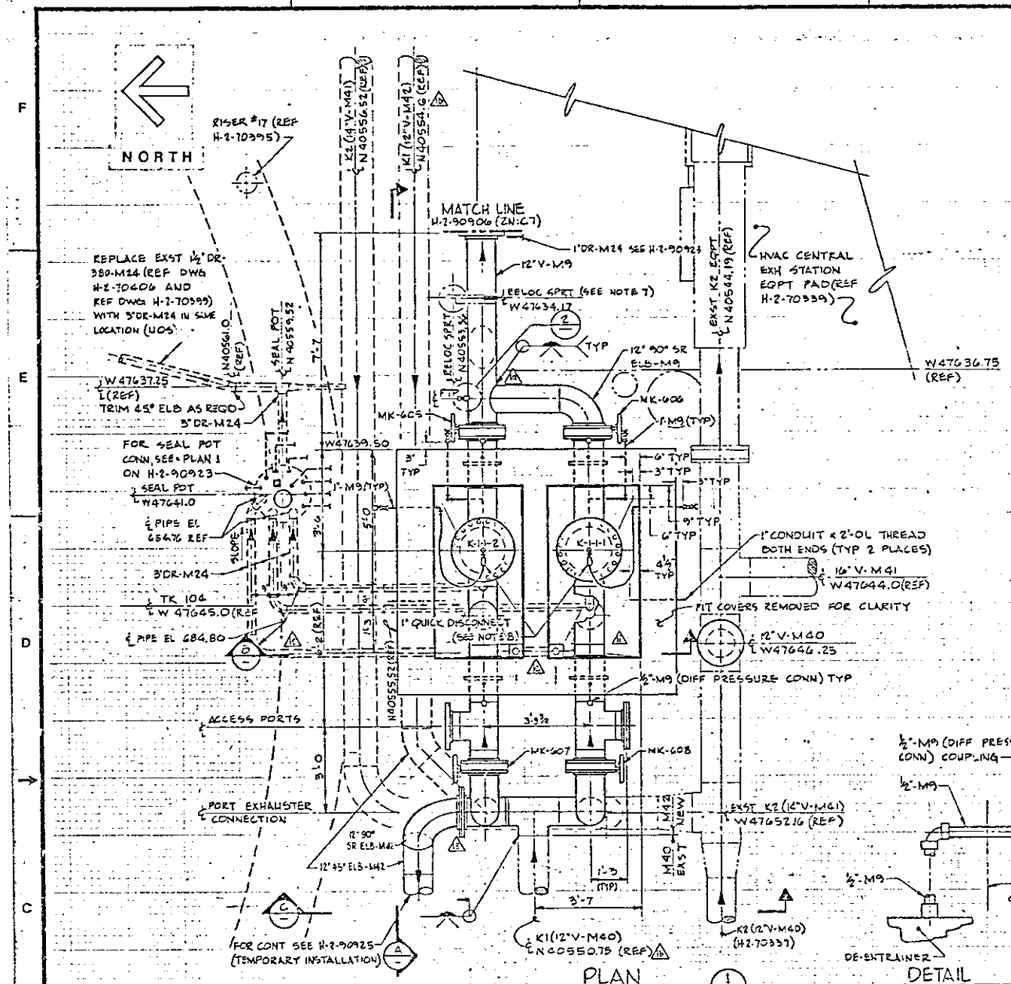

PLAN
SCALE: ½"=1'-0

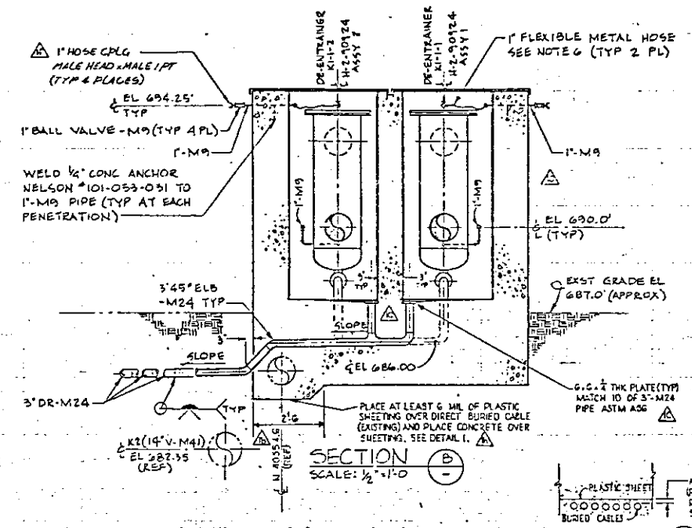

SECTION
SCALE: ½"=1'-0

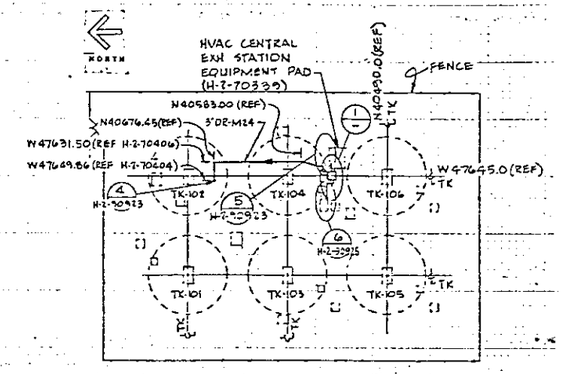

241-AW TANK FARM (H-2-70302)

PLOT PLAN
SCALE: NTS

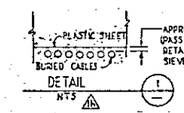

DETAIL
NTS

LEGEND

- EXISTING EQUIPMENT
- UNDER GROUND OR HIDDEN EQUIPMENT
- NEW EQUIPMENT

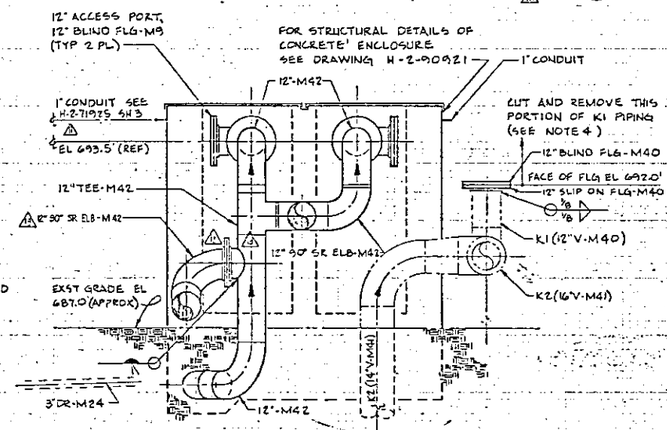

SECTION
SCALE: ½"=1'-0

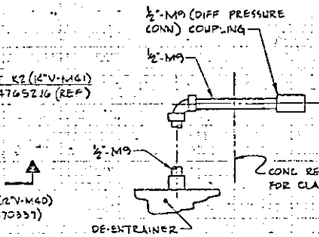

DETAIL
SCALE: 3"=1'-0

DETAIL
SCALE: 3"=1'-0 (OPP HAND)

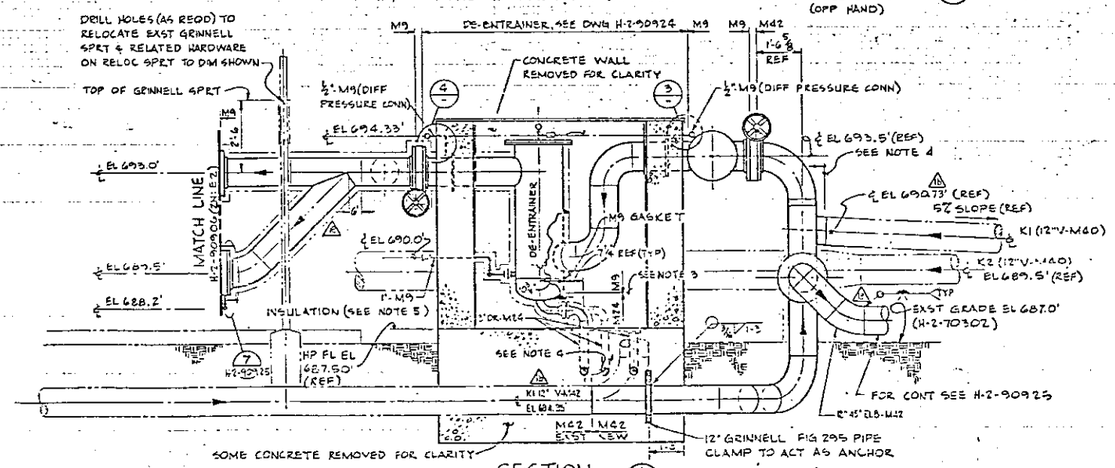

SECTION
SCALE: ½"=1'-0

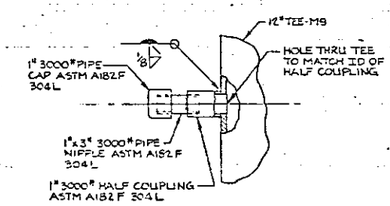

DETAIL
SCALE: 3"=1'-0

GENERAL NOTES:

1. FABRICATION, MATERIALS, CLEANING & TESTING SHALL BE IN ACCORDANCE WITH CONSTR SPEC B-402-C1.
2. TOLERANCES: UNLESS OTHERWISE SPECIFIED (UOS)
   FRACTIONAL = ± ⅛"
   DECIMAL = ± .010"
   ANGULAR = ± 1°
3. PROVIDE MALONEY PHENOLIC INSULATING SLEEVES & WASHERS AT ALL CS TO SST. FLANGED CONNECTIONS. USE CS BOLTS & NUTS WITH INSULATING WASHER BETWEEN BOLT & SST FLG.
4. PORTION OF EXST K1 (12"V-M42) TO BE REMOVED:
   FROM START OF ELBOW (ZN: A6),
   FROM NEW TEE (ZN: B5)
   FROM NEW FLANGE CONNECTION (ZN: C5)
   TO K1 SYSTEM EXHAUST STACK (DWG H-2-90906, ZN: E6)
5. DE-ENTRAINER AND ABOVE GROUND PIPING INSULATION PER CONSTR SPEC B-402-C1. HEAT TRACE DE-ENTRAINER.
6. 1' FLEX METAL HOSE TO BE 4'-0L FLEXONICS TYPE 401L WITH 1" STD WT NIPPLE TYPE (T) BOTH ENDS.
7. 2 EXST K1 PIPING SUPPORTS, AT APPROX COORD N40551.5 W47640.0 AND W47642.0, ARE TO BE REMOVED. 1 EXST K1 PIPING SUPPORT, AT APPROX COORD N40549.0 W47644.0, IS TO BE RELOCATED AND MODIFIED AS REQD (SEE ZN: E7) REF DWG H-2-70341, ZN: D6. RESET BY COMPACTING BACK FILL TO 95% OF MAX DENSITY OR SET IN CONCRETE.
8. QUICK DISCONNECTS TO BE HANSEN QUICK CONNECT COUPLINGS, STRAIGHT THRU SERIES ST: PLUG - 1" NPT MALE SST # LLB-T35; SOCKET - 1" NPT FEMALE SST # LLB-S36.
9. DR. LINES TO MAINTAIN MIN SLOPE OF .25% (UOS).
10. PAINT ALL EXPOSED CARBON STEEL PARTS PER CONSTR SPEC B-402-C1.
11. DO NOT COAL TAR WRAP ANY BURIED DRAIN LINES THAT REQUIRE HEAT TRACING.

RELEASED FOR CONSTRUCTION
BY ____ DATE ____
DOE

NUMBER	TITLE
H-2-70339	PIPING PLAN - 241-AW TK FARM
H-2-70406	PIPING PLAN - TANK 104
H-2-90925	DRAWING LIST

REFERENCES
NEXT USED ON H-2-90905

REV	DESCRIPTION
1	45% CULT FOR PROJECT E-402
2	(1) REVISED PER DFC # B-402-4, ZN: D-E4
3	(2) REVISED PER DFC # B-402-4, ZN: E-E3
4	(3) REVISED PER DFC # B-402-15, ZN: E & G7
5	(4) REVISED PER DFC # B-402-15, ZN: E & G7
6	(5) REVISED PER DFC # B-402-35, ZN: F5
7	(6) REVISED PER DFC # B-402-35, ZN: B7
8	(7) REVISED PER DFC # B-402-17, ZN: G4
9	(8) REVISED PER DFC # B-402-22, ZN: D-E, F-G6
10	(9) REVISED PER DFC # B-402-24, ZN: A, F & G
11	(10) REVISED PER DFC # B-402-9, ZN: E7

MICROFILMED — BY-DATE — BY-CAGE — APPROVAL — REM APPROVAL — COMMENT REVIEW

RHO APPROVAL BY Cott Miller DATE 7/6/92

U. S. DEPARTMENT OF ENERGY
Richland Operations Office
KAISER ENGINEERS HANFORD COMPANY

PROJ. ENGR. 7/6/92
DES. ENGINEER 7/6/92
APPROVED 7/6/92
SAFETY 7/6/92
APPROVED 7/6/92

PIPING PRIMARY EXHAUST SYSTEM MODIFICATION

PROJECT TITLE 241-AW VENTILATION SYSTEM UPGRADE
CHECKED BY CLEVELAND 7/6/92
DRAWN BY ZICKUHR 7/6/92
DESIGNED BY ZICKUHR 7/6/92
CLASSIFICATION UNCLASSIFIED
PROJ 3-702 WO X40202 JOB 8591A2
SCALE SHOWN BLDG 241-AW PROT 0402
DRAWING NUMBER H-2-90922 SHEET — OF — REV 1

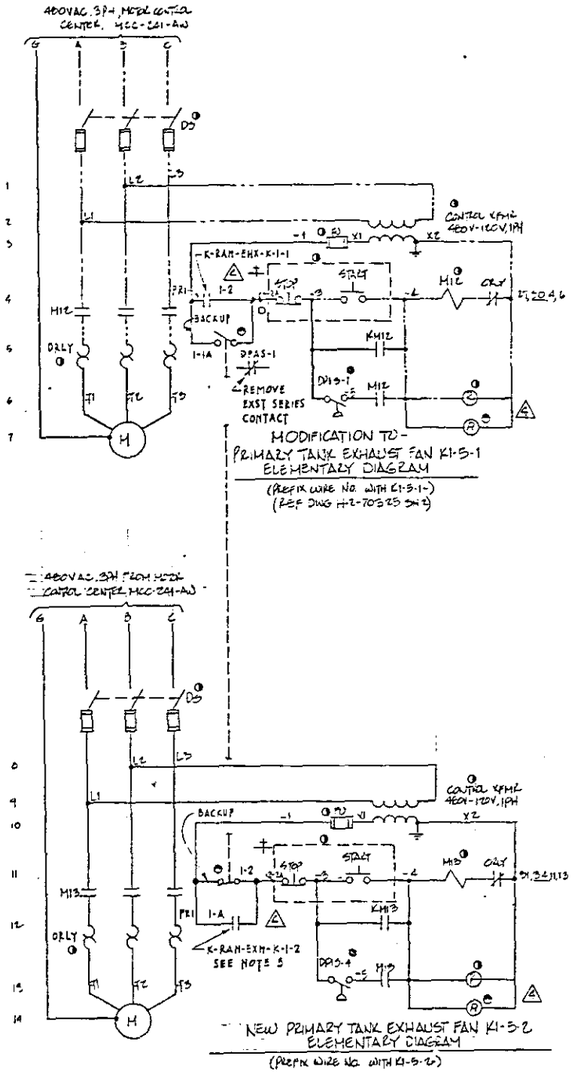

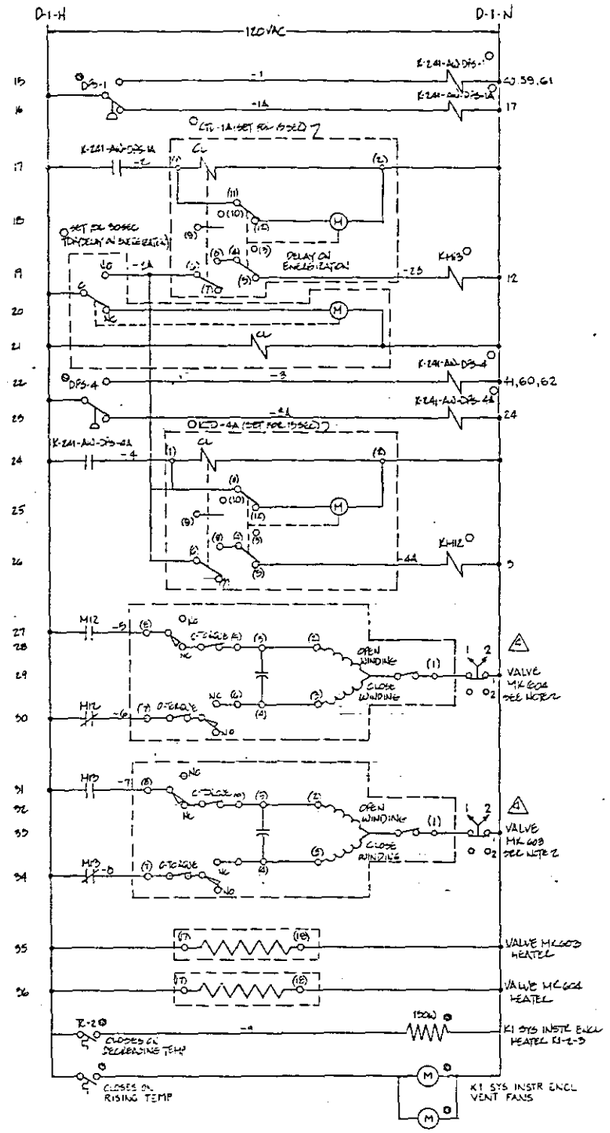

CENTRAL EXHAUST STATION VENTILATION
ELEMENTARY DIAGRAM
(PREFIX WIRE NUMBER WITH D-1)

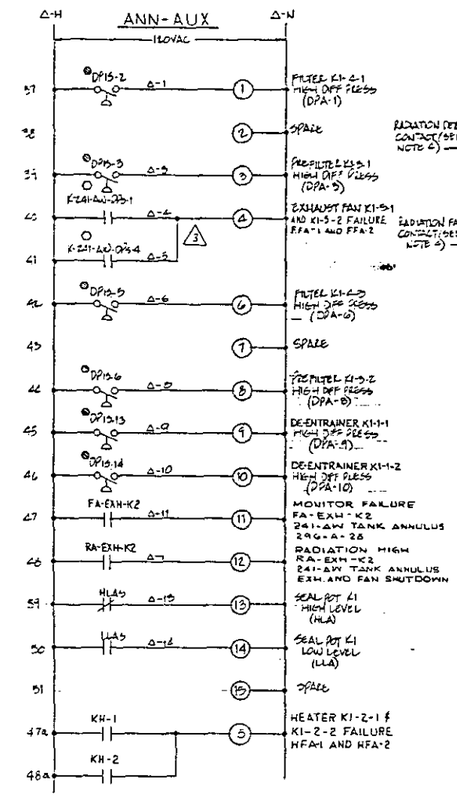

ANNUNCIATOR ELEMENTARY
DIAGRAM
Δ - PREFIX WIRE NUMBER WITH ANN-AUX

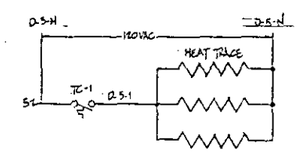

SEAL POTS, DE-ENTRAINERS & CONDENSATE PIPES HEAT TRACE
ELEMENTARY DIAGRAM

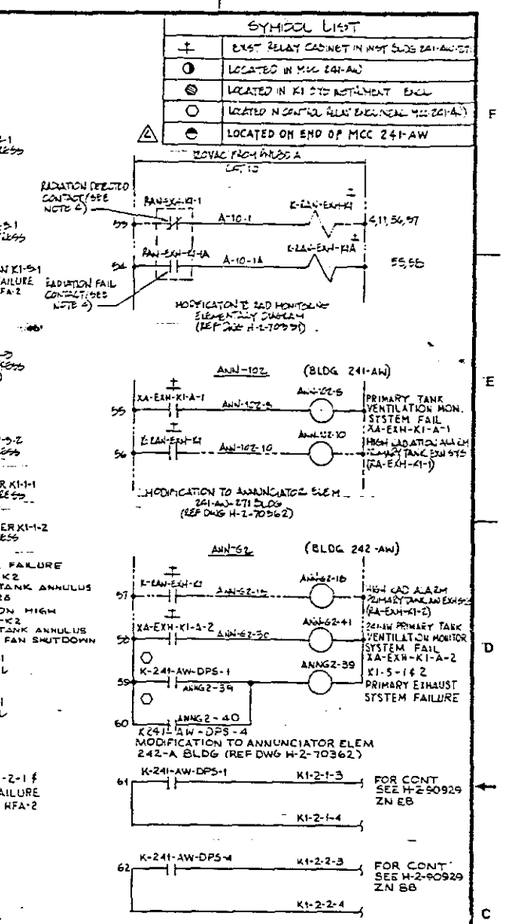

NOTES:

1. SEE DWG H-2-50927 FOR GENERAL NOTES.
2. MOTORIZED VALVES MK603 & MK604 ARE SHOWN IN CLOSED POSITION.
3. USE SPARE CONTACT ON EXISTING RELAY K-RAN-EXH-K1.
4. REWIRE EXST RADIATION CONTACTS AS SHOWN.
5. TWO POSITION KEY SWITCH FOR VALVES MK 603 AND MK 604 TO BE G.E. CR2940 UN 200C OR ENGINEERING APPROVED EQUAL. FIELD LOCATE SWITCHES FOR MAINTENANCE OPERATIONS.

PANEL	EXISTING NAMEPLATE	NEW NAMEPLATE	ACTION
ANN-103	DIFF PRESSURE HIGH (DPA-1) FAN K1-5-1 FILTERS K1-5-1 & K1-4-1	SPARE	FOR ALL 1) REMOVE EXISTING NAMEPLATE 2) REMOVE BOTH LAMPS 3) INSTALL NEW NAMEPLATE
ANN-103	DIFF PRESSURE HIGH (DPA-2) K1 BY-PASS SYSTEM FILTERS	SPARE	
ANN-104	CURRENT FAILURE CA1-2-1 K-1-2-1 HEATER UNIT	SPARE	
ANN-104	CURRENT FAILURE CA1-2-1 K1-2-2 HEATER UNIT	SPARE	
ANN-106	DIFF PRESSURE-L DPA-1 TEMPORARY EXHAUST FAN K1-5-1 FAIL	SPARE	

ANNUNCIATOR WINDOW
REPLACEMENT SCHEDULE

NUMBER	TITLE
H-2-50929	ELECT. CONNECTION DIAGRAM
H-2-74897	296-A-28 ANN. TK. EXH. STK. MON.
IDNG NO. 1	TITLE

TRACEABILITY

NUMBER	TITLE
H-2-70331	ANNUNCIATOR ELEM. 241-AW-ST
H-2-70351	EXHAUST ELEM. DIAGRAM
H-2-70352	DRAWING LIST

REFERENCES

SHEET USED ON H-2-70400

REV	DESCRIPTION	BY	DATE
M	INCORPORATED CEO'S 026084 & 021600.		
M	CEO-10998, CEO-14189 ADDED TRACEABILITY, INCORP. ANNUN. WINDOW LEGEND, PER D.I.-E 529. CHANGED DIRECT DWG CHANGE		
L	AS-BUILT FOR PROJECT D-802 ⊠ DFC-8402-86, ZN A-3 & 4-5 ⊠ DFC-8402-55, ZN C-7, E-7, E-1 ⊠ DFC-8402-32, ZN D-1 ⊠ DFC-8402-23, ZN D-4-5		
K	DE-ENTRAINERS, Z 36 & 20 CHANGED DEMISTERS TO		

REVISIONS

COMMENT REVIEW

REV 1 DOE DATE 9/3/92

RELEASED FOR CONSTRUCTION BY DOE DATE 1-11-93

IMPACT LEVEL II

PHO APPROVAL BY 1/14/93

U. S. DEPARTMENT OF ENERGY
Richland Operations Office
KAISER ENGINEERS HANFORD COMPANY

ELECTRICAL
ELEMENTARY DIAGRAMS

241-AW VENTILATION SYS UPGRADE

PROJ D-802 WO 60002 JOB 6594AC
SCALE NONE ACCT 7600
CLASSIFICATION BY NONE NOT REQ'D
DRAWING NUMBER H-2-90920 SHEET 1 OF 1 REV 4

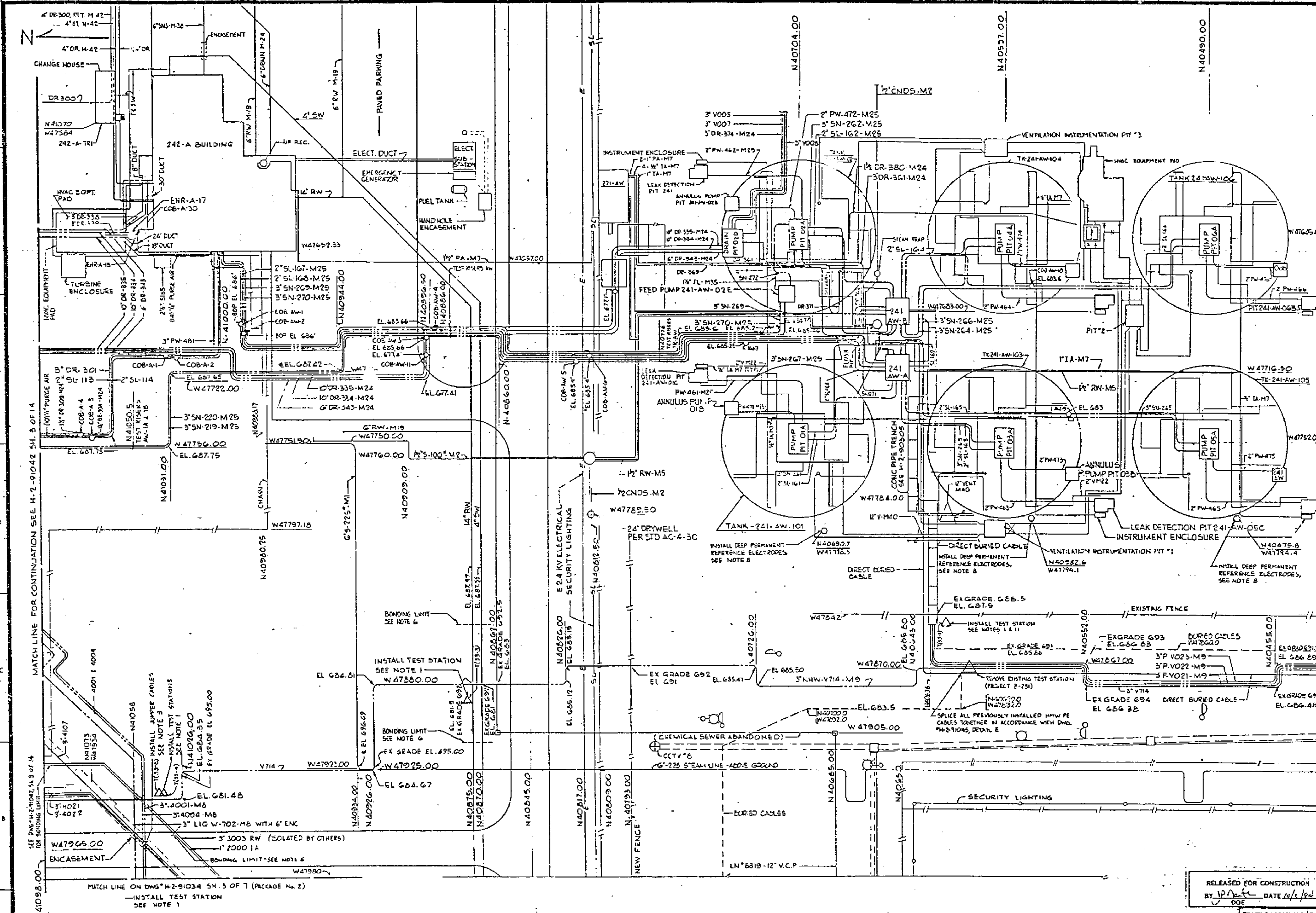

① TEST STATIONS (T)

Station	Coordinates	Station	Coordinates
*(33-1)	N40623 / W47640	(33-21)	N40650 / W47693
(33-2)	N40730 / W47643	(33-22)	N40664 / W47664
*(33-3)	N40877 / W47875	(33-23)	N40509 / W47669
*(33-4)	N41044 / W47934	(33-24)	N40532 / W47674
(33-5)	N40494 / W47764	(33-25)	N40696 / W47745
*(33-6)	N41044 / W47934	(33-26)	N40696 / W47745
(33-7)	N40495 / W47653	(33-27)	N40721 / W47657
(33-8)	N40498 / W47653	(33-28)	N40635 / W47735
(33-9)	N40605 / W47760	(33-29)	N40706 / W47661
(33-10)	N40605 / W47760	(33-30)	N40678 / W47657
(33-11)	N40579 / W47735	(33-31)	N40689 / W47641
(33-12)	N40730 / W47643	(33-32)	N40703 / W47657
(33-13)	N40613 / W47661	(33-33)	N40599 / W47737
(33-14)	N40605 / W47653	(33-34)	N40793 / W47713
(33-15)	N40605 / W47653	(33-35)	N40793 / W47713
(33-16)	N40660 / W47719	(33-36)	N40790 / W47657
(33-17)	N40660 / W47719	(33-37)	[illegible]
(33-18)	N40651 / W47704	(33-38)	N40881 / W47694
(33-19)	N40651 / W47704	(33-39)	N40881 / W47694
(33-20)	N40650 / W47693	(33-40)	N41054 / W47620
		(33-41)	N40048 / W47621
		(33-42)	N40526 / W47742
		(33-43)	N40505 / W47742
		(33-44)	N40529 / W47653
		(33-45)	N40539 / W47634
		(33-46)	N40689 / W47641
		(33-47)	N40678 / W47655
		(33-48)	N40715 / W47655

NOTE: *DENOTES PIPELINES & TEST STATIONS ASSOCIATED WITH CONSTRUCTION PACKAGE NO. 1.

PIPELINES IDENTIFIED FOR PROTECTION: *V714, 702, *V021, *V022 *V023, SN-220, SN-219, DR-335, DR-334, DR-343, SL-167, SL-168, SN-269, SN-270, SL-113, SL 166, SN-266, SL-164, SN 264, SL-165, SN 265, SL-163, SN-263, SN-271, SL-161, SN-261, SL-162, SN-262, SN-268, SN-267 4001, 4004 AND TANK FARM AW

NOTE: THIS DRAWING IS ASSOCIATED WITH PROJECT B-234 CONSTRUCTION PACKAGE NO. 1.

RELEASED FOR CONSTRUCTION
BY [signature] DOE DATE 10/3/84

QA LEVEL III

REFERENCE DRAWINGS	
SD-WM-TI-230	WIRE-TO-PIPE CONNECTIONS
H-2-91034 S2	CP PLOT PLAN
H-2-91042 S3	CP PLOT PLAN
H-2-91044	CP INSTALLATION DETAILS
H-2-91045	CP INSTALLATION DETAILS
H-2-91046	CP TEST STATION DETAILS
H-2-91050 S1&2	TRACEABILITY DWGS, SYMBOLS & NOTES
H-2-91051	CP INSTALLATION DETAILS
NEXT USED ON	H-2-91017

REVISIONS: ① AS-BUILT. INCORPORATED DFC NUMBERS: B-234-25,34,39,52,58

U. S. Department of Energy
Richland Operations Office

EBASCO SERVICES INCORPORATED

CATHODIC PROTECTION PLOT PLAN TEST STATIONS AND JUMPERS

Drawn: P BERTOLINO | Scale: 1"=20' | 202-A | 7801
Classification: NONE | B-234 | H-2-91033 | Sheet 3 of 14

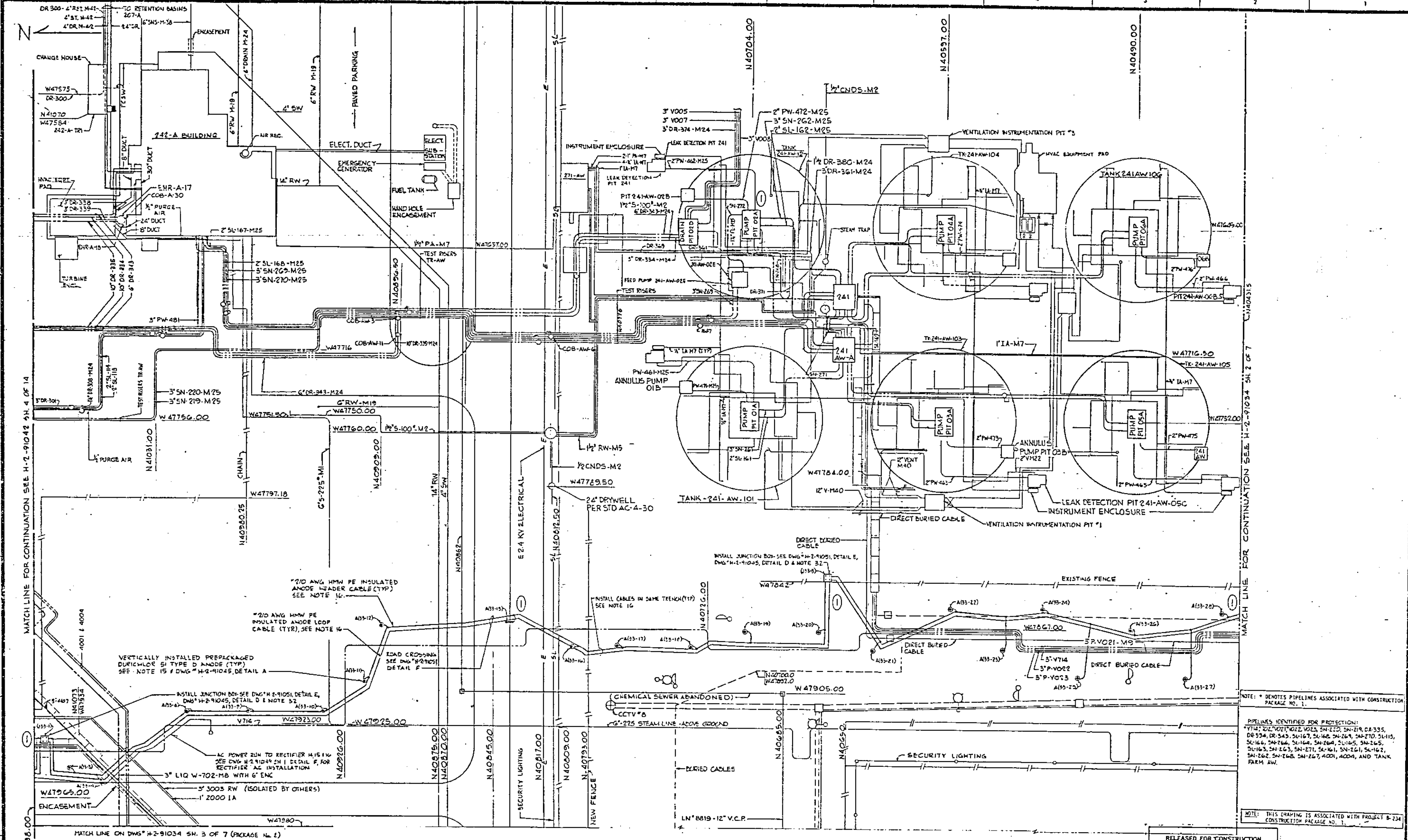

NOTE: * DENOTES PIPELINES ASSOCIATED WITH CONSTRUCTION PACKAGE NO. 1.

PIPELINES IDENTIFIED FOR PROTECTION:
*V714, *702, *V021, *V022, V023, SN-220, SN-219, DR-335, DR-334, DR-343, SL-167, SL-168, SN-269, SN-270, SL-115, SL-166, SN-266, SL-164, SN-264, SL-165, SN-265, SL-163, SN-263, SN-271, SL-161, SN-261, SL-162, SN-262, SN-268, SN-267, 4001, 4004, AND TANK FARM AW.

NOTE: THIS DRAWING IS ASSOCIATED WITH PROJECT B-234 CONSTRUCTION PACKAGE NO. 1.

Dwg No.	Drawing Title
SD-WM-TI-230	WIRE-TO-PIPE CONNECTIONS
H-2-91034 S2	C.P. PLOT PLAN
H-2-91042 S4	C.P. PLOT PLAN
H-2-91044	C.P. INSTALLATION DETAILS
H-2-91045	C.P. INSTALLATION DETAILS
H-2-91046	C.P. TEST STATION DETAILS
H-2-91049 S1	A.C. FEED DETAILS
H-2-91050 S1&2	TRACEABILITY DWGS. SYMBOLS & NOTES
H-2-91051	C.P. INSTALLATION DETAILS
H-2-91052 S2	C.P. ANODE LOCATIONS

REFERENCE DRAWINGS

NEXT USED ON H-2-91017

REVISIONS: 1 — AS-BUILT. INCORPORATED DFC NUMBERS: B-234-15, 23, 25, 34, 39, 51, 52, 58

RELEASED FOR CONSTRUCTION BY [signature] DOE DATE 10/3/94

QA LEVEL III

U. S. Department of Energy

EBASCO SERVICES INCORPORATED

CATHODIC PROTECTION PLOT PLAN ANODE INSTALLATION

Scale	Bldg No.	Index No.
1"=20'	202-A	7801

Drawn: P. BERTOLINO
Classification: NONE
Project: B-234
Drawing No. H-2-91033
Sheet 4 of 14

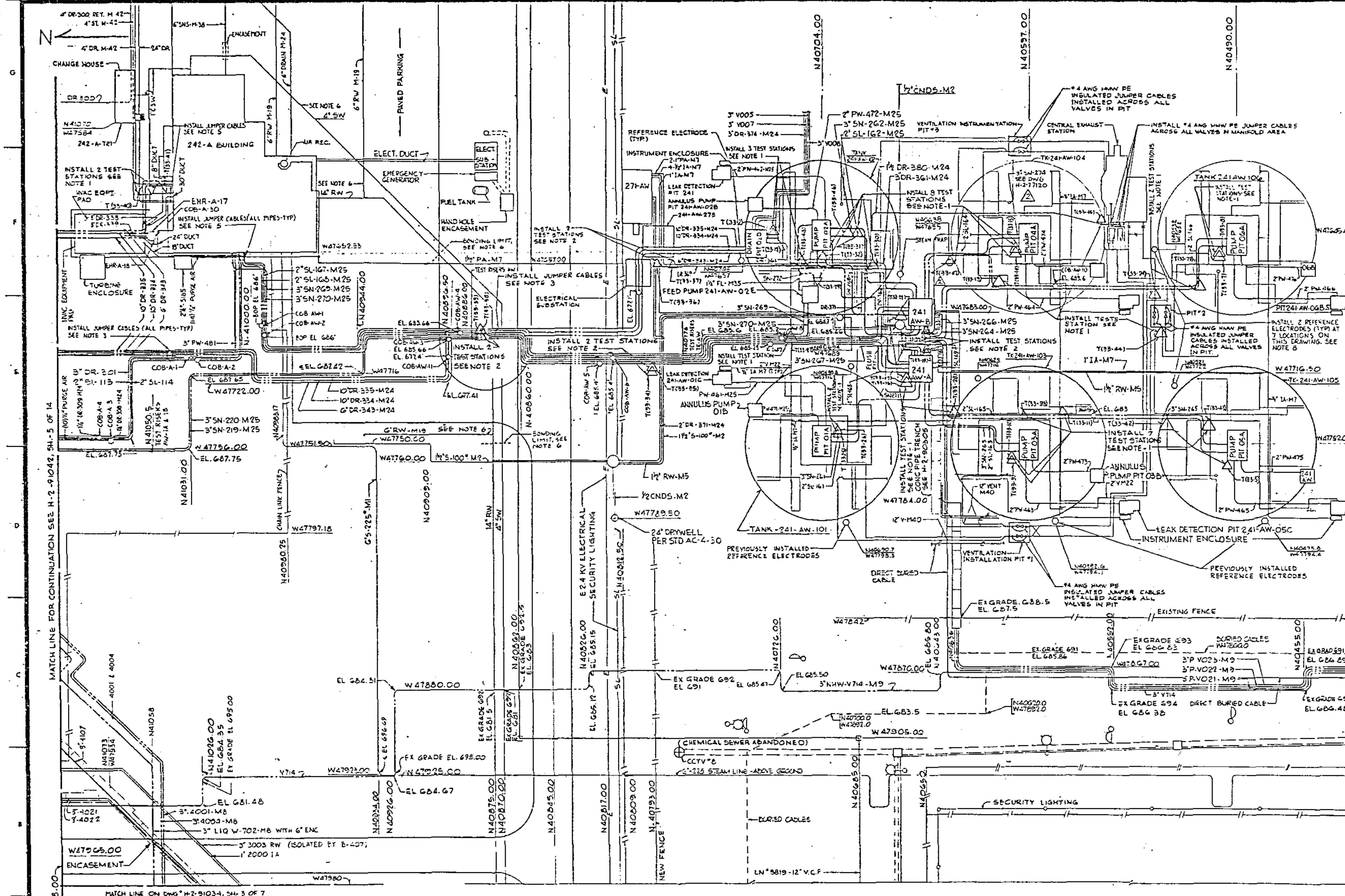

① TEST STATIONS (T)

Station	Coordinates	Station	Coordinates
(33-1)	N40628 / W47840	*(33-21)	N40650 / W47693
*(33-2)	N40730 / W47643	*(33-22)	N40644 / W47684
(33-3)	N40877 / W47875	*(33-23)	N40509 / W47669
(33-4)	N41050 / W47939	*(33-24)	N40532 / W47674
*(33-5)	N40494 / W47764	*(33-25)	N40595 / W47745
(33-6)	N41044 / W47934	*(33-26)	N40696 / W47745
*(33-7)	N40498 / W47653	*(33-27)	N40721 / W47697
*(33-8)	N40498 / W47653	*(33-28)	N40635 / W47735
*(33-9)	N40605 / W47760	*(33-29)	N40706 / W47661
*(33-10)	N40605 / W47760	*(33-30)	N40678 / W47657
*(33-11)	N40579 / W47735	*(33-31)	N40689 / W47641
*(33-12)	N40730 / W47643	*(33-32)	N40703 / W47657
*(33-13)	N40613 / W47661	*(33-33)	N40599 / W47737
*(33-14)	N40605 / W47653	*(33-34)	N40793 / W47713
*(33-15)	N40605 / W47653	*(33-35)	N40793 / W47713
*(33-16)	N40560 / W47719	*(33-36)	N40790 / W47657
*(33-17)	N40660 / W47719	*(33-37)	N40782 / W47658
*(33-18)	N40651 / W47704	*(33-38)	N40681 / W47694
*(33-19)	N40651 / W47704	*(33-39)	N40881 / W47694
*(33-20)	N40650 / W47693	*(33-40)	N41054 / W47620
*(33-44)	N40529 / W47693	*(33-41)	N40548 / W47621
*(33-45)	N40559 / W47634	*(33-42)	N40426 / W47742
*(33-46)	N40589 / W47641	*(33-43)	N40505 / W47742
*(33-47)	N40638 / W47655		
*(33-48)	N40715 / W47555		

RELEASED FOR CONSTRUCTION
BY [signature] DATE 11/24/86
DOE

NOTE:
*DENOTES PIPELINES & TEST STATIONS ASSOCIATED WITH CONSTRUCTION PACKAGE NO. 2.

*PIPELINES IDENTIFIED FOR PROTECTION V714, V702, V021, V022, V023, 3"SN-220, 3"SN-219, 10"DR-335, 10"DR-334, *DR-343, *SL-167, *SL-168, *SN-269, *SN-270, *SL-113, *SL-166, *SN-266, *SL-164, *SN-264, *SL-165, *SN-265, *SL-163, *SN-263, *SN-271, *SL-161, *SN-261, *SL-162, *SN-262, *SN-263, *SN-267, *4001, *4004 AND *TANK FARM AW

NOTE: THIS DRAWING IS ASSOCIATED WITH CONSTRUCTION PACKAGE NO. 2.

QA LEVEL III

Reference Drawings	
H-2-77120	ELEC CATHODIC PROTECTION PLANS & DETAILS
50-WM-TI-220	WIRE-TO-PIPE CONNECTIONS
	C.P. TEST STATION DETAILS
H-2-91034 S3	C.P. PLOT PLAN
H-2-91042 S5	C.P. PLOT PLAN
H-2-91044	C.P. INSTALLATION DETAILS
H-2-91045	C.P. INSTALLATION DETAILS
H-2-91046	C.P. TEST STATION DETAILS
H-2-91050 S1&2	TYPICAL DWGS, SYMBOLS & NOTES
H-2-91051	C.P. INSTALLATION DETAILS

Rev	Description
2	FOR KEH AND REF DWG H2-77120 ADDED LINE 3"SN-274 2556
①	AS BUILT, INCORPORATED DFC NUMBERS: B-234-21,25,27,29,31,33,34,35,39,58,59

U.S. Department of Energy
Richland Operations Office

EBASCO SERVICES INCORPORATED

CATHODIC PROTECTION
PLOT PLAN
TEST STATIONS AND JUMPERS

Scale	Building	
1"=20'	202-A	7801

DRAWN: P. BERTOUNG
CLASSIFICATION: NONE
B-234
H-2-91033
SHEET 5 OF 14

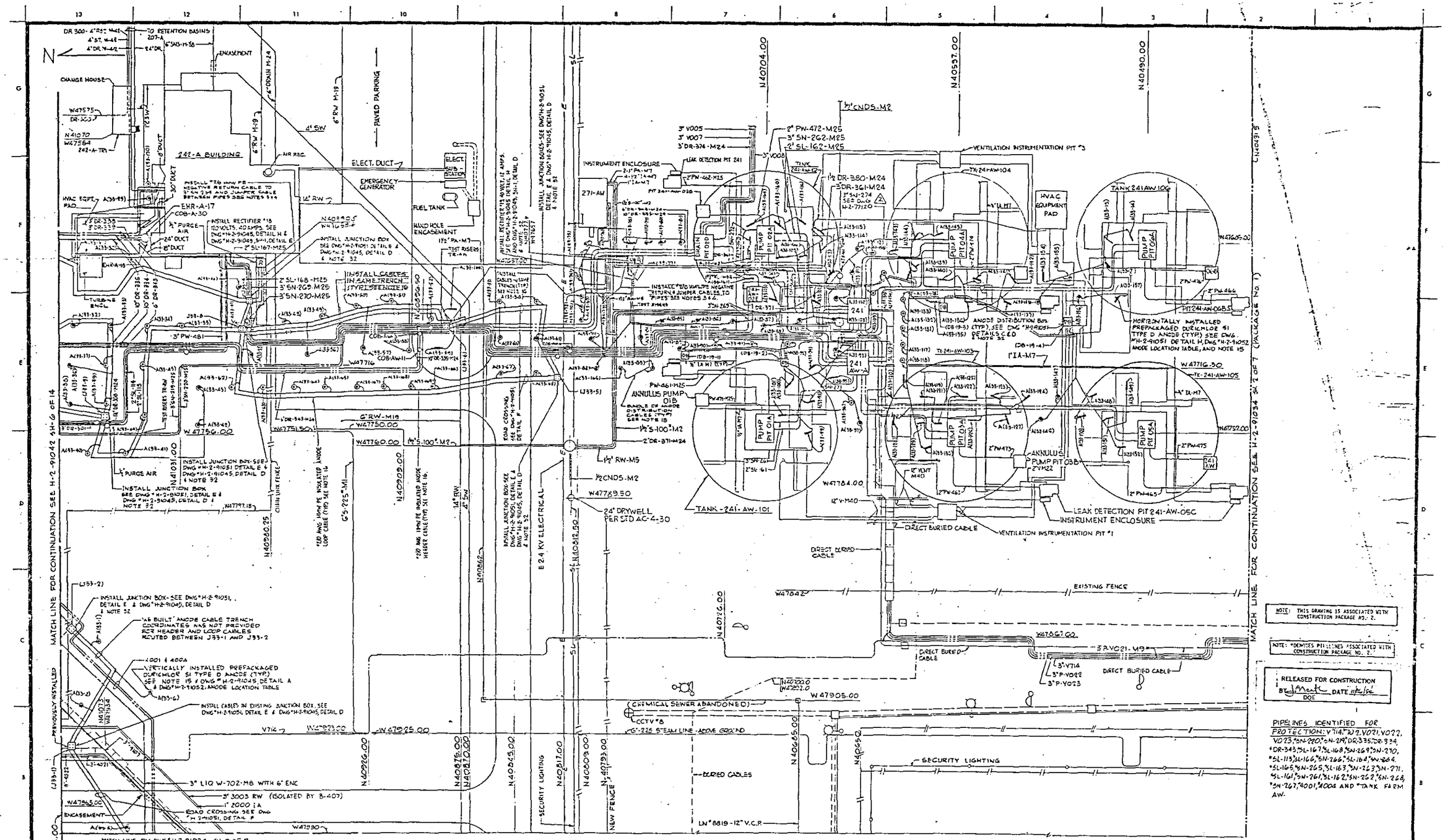

NOTE: THIS DRAWING IS ASSOCIATED WITH CONSTRUCTION PACKAGE NO. 2.

NOTE: *DENOTES PIPELINES ASSOCIATED WITH CONSTRUCTION PACKAGE NO. 2.

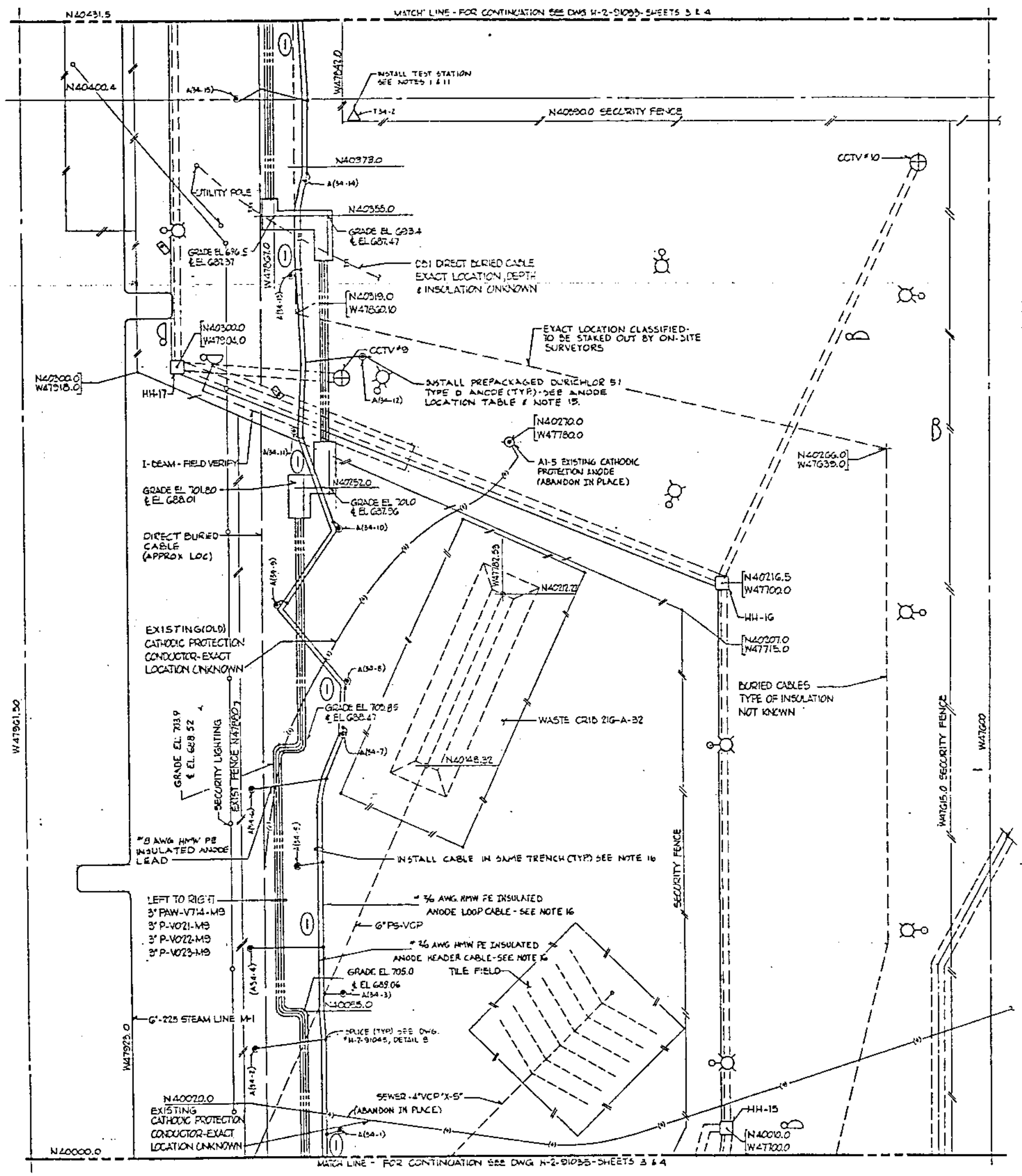

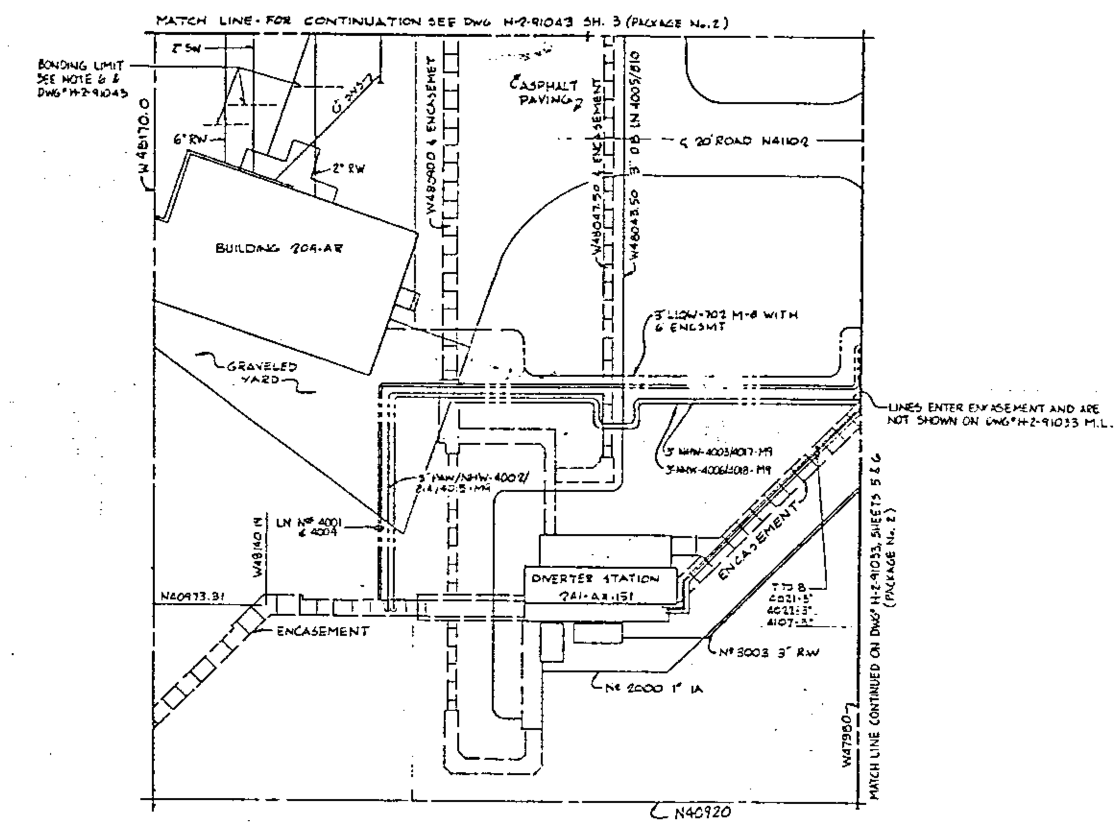

ANODE LOCATIONS (A)

*(A34-1)	N40009 / W47845	*(A34-12)	N40302 / W47835
*(A34-2)	N40041 / W47877	*(A34-13)	N40333 / W47881
*(A34-3)	N40051 / W47945	*(A34-14)	N40369 / W47856
*(A34-4)	N40079 / W47878	*(A34-15)	N40400 / W47881
*(A34-5)	N40110 / W47861	(A34-16)	N40998 / W48100
*(A34-6)	N40139 / W47879	(A34-17)	N41028 / W48099
*(A34-7)	N40160 / W47845	(A34-18)	N41028 / W48084
*(A34-8)	N40179 / W47843	(A34-19)	N41050 / W48076
*(A34-9)	N40208 / W47868	(A34-20)	N41047 / W48057
*(A34-10)	N40237 / W47846	(A34-21)	N41022 / W48034
*(A34-11)	N40274 / W47860	(A34-22)	N41047 / W48014
		(A34-23)	N41022 / W48004

NOTE: ANODE (34-1) TO (34-13) SHALL BE INSTALLED AT A DEPTH OF 20-FEET, ANODES (34-14) TO (34-23) SHALL BE INSTALLED AT 12-FEET - SEE DWG# H-2-91051, DETAIL G & DWG# H-2-91045, DETAIL A

TEST STATIONS (T) (1)

*(T34-2)	N40294.7 / W47836.4
(T34-3)	N40984.9 / W48113
(T34-4)	N41041.2 / W48046.6
(T34-5)	N41041.2 / W48046.6

NOTE: * DENOTES PIPELINES, ANODES & TEST STATIONS ASSOCIATED WITH CONSTRUCTION PACKAGE NO. 1.

PIPELINES IDENTIFIED FOR PROTECTION:
*V021, V022, V023, V714, 702, 4001, 4004, 4003/4017, 4006/4016, 4002/814/4015

NOTE: THIS DRAWING IS ASSOCIATED WITH PROJECT B-234 CONSTRUCTION PACKAGE NO. 1.

RELEASED FOR CONSTRUCTION BY [signature] DOE DATE 10/3/84

QA LEVEL III

REFERENCE DRAWINGS

DWG NO.	DRAWING TITLE
SD-WM-TI-230	WIRE-TO-PIPE CONNECTIONS
H-2-91043	C.P. PLOT PLAN
H-2-91033 SS 3 & 4	C.P. PLOT PLAN
H-2-91035 SS 3 & 4	C.P. PLOT PLAN
H-2-91034	C.P. INSTALLATION DETAILS
H-2-91045	C.P. INSTALLATION DETAILS
H-2-91046	C.P. TEST STATION DETAILS
H-2-91050 & 82	TRACEABILITY DWG'S SYMBOLS & NOTES
H-2-91051	CP INSTALLATION DETAILS

NEXT USED ON H-2-91017

REVISIONS

REV. NO.	DESCRIPTION	DATE	E.O.	DRAFTING	RESPONSIBLE ENGINEER	QUALITY ASSURANCE
(1)	AS-BUILT. INCORPORATED DFC NUMBERS: B234-13, 15, 25, 39, 58, 59		E.O.			

COMMENT PRT ISSUE NO. | CHECK PRT ISSUE NO.

DRAWING STATUS

U. S. Department of Energy
Richland Operations Office

EBASCO SERVICES INCORPORATED

CATHODIC PROTECTION
PLOT PLAN
TEST STATIONS-JUMPERS-ANODES

SCALE	BLDG NO.	INDEX NO.
1"=20'	202-A	7801

CLASSIFICATION	PROJECT	DRAWING NO.	SHEET NO.	SHEETS
NONE	B-234	H-2-91034	2	7

DRAWN: JAMES COLLETTI

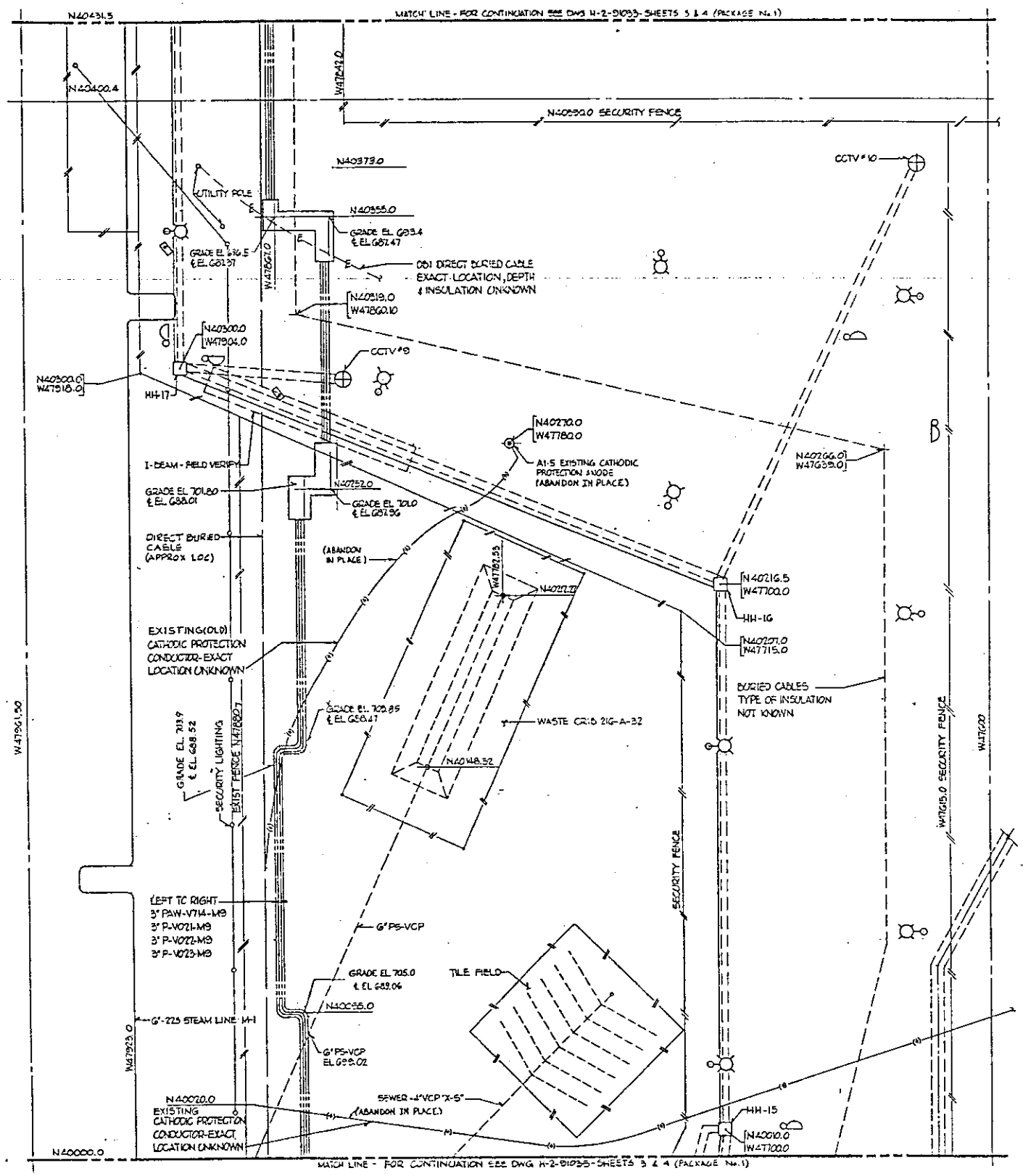

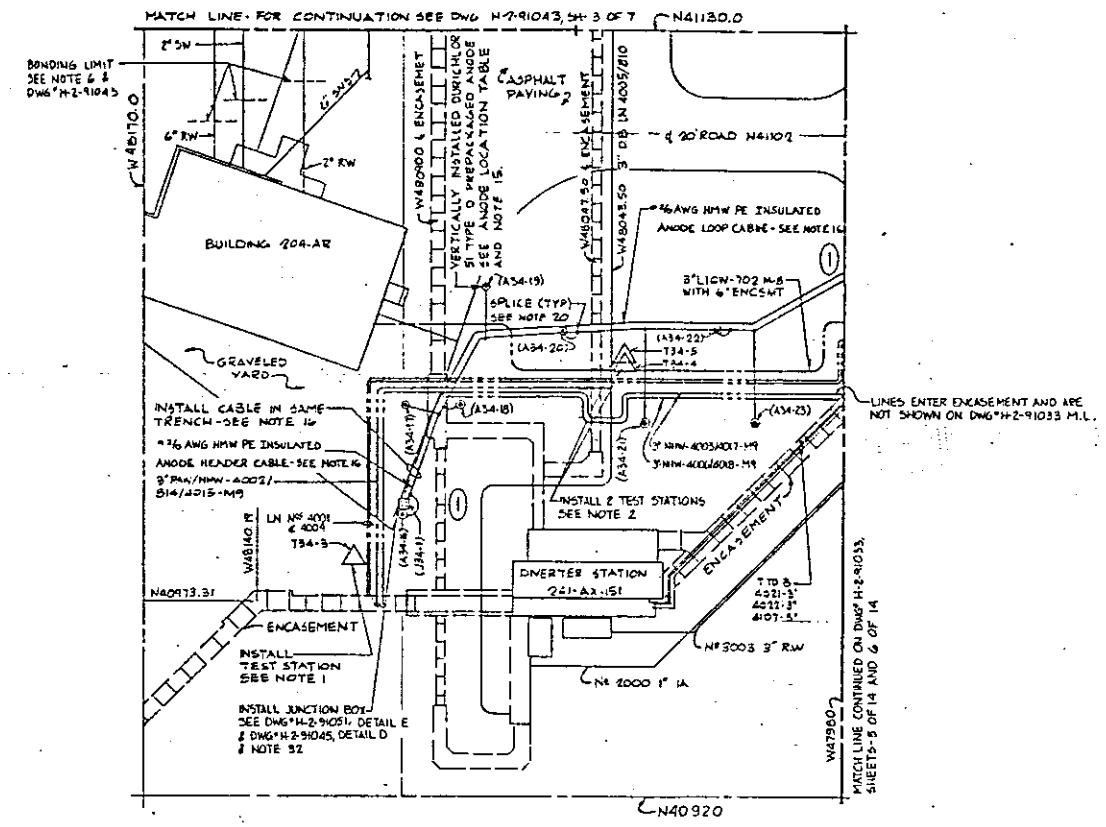

ANODE LOCATIONS (A)

(A34-1)	N40068 W47546	(A34-12)	N40302 W47835
(A34-2)	N40041 W47877	(A34-13)	N40333 W47561
(A34-3)	N40061 W47848	(A34-14)	N40369 W47876
(A34-4)	N40079 W47878	(A34-15)	N40400 W47881
(A34-5)	N40110 W47861	*(A34-16)	N40998 W48100
(A34-6)	N40139 W47874	*(A34-17)	N41028 W48099
(A34-7)	N40160 W47845	*(A34-18)	N41028 W48084
(A34-8)	N40179 W47846	*(A34-19)	N41060 W48078
(A34-9)	N40208 W47868	*(A34-20)	N41047 W48057
(A34-10)	N40237 W47845	*(A34-21)	N41022 W48034
(A34-11)	N40274 W47860	*(A34-22)	N41047 W48014
		*(A34-23)	N41022 W48004

NOTE: ANODE (34-1) TO (34-15) SHALL BE INSTALLED AT A DEPTH OF 20-FEET. ANODES (34-16) TO (34-23) SHALL BE INSTALLED AT 12-FEET - SEE DWG H-2-91051, DETAIL G & DWG H-2-91045, DETAIL A

TEST STATIONS (T) (1)

(T34-2)	N40394.7 W47838.4	
*(T34-3)	N40884.9 W48113	
*(T34-4)	N41041.2 W48041.6	
*(T34-5)	N41041.2 W48041.6	

NOTE: *DENOTES PIPELINES, ANODES & TEST STATIONS ASSOCIATED WITH CONSTRUCTION PACKAGE NO. 2.

PIPELINES IDENTIFIED FOR PROTECTION: V021, V022, V023, V714 *702, *4001, *4004, *4008/4017, *4006/4019, *4002/814/4015

NOTE: THIS DRAWING IS ASSOCIATED WITH CONSTRUCTION PACKAGE NO. 2.

RELEASED FOR CONSTRUCTION
BY [illegible] DATE 11/26/84
DOE

QA LEVEL III

SD-WM-TI-230	WIRE-TO-PIPE CONNECTIONS
H-2-91028	C.P. TEST STATION DETAILS
H-2-91033 SSS6	C.P. PLOT PLAN
H-2-91034	C.P. PLOT PLAN
H-2-91037	C.P. PLOT PLAN
H-2-91041	C.P. PLOT PLAN
H-2-91042	C.P. INSTALLATION DETAILS
H-2-91043	C.P. INSTALLATION DETAILS
H-2-91044	C.P. TEST STATION DETAILS
H-2-91050 SH2	TROBLIT DWG. SAMPLES & NOTES
H-2-91051	C.P. INSTALLATION DETAILS

REFERENCE DRAWINGS

NEXT USED ON H-2-91035

REV.								AS BUILT, INCORPORATED OFC NUMBERS: B-234-13.15.39.58.59	(1)
REVISION APPROVALS								DESCRIPTION	

REVISIONS

COMMENT PRT ISSUE NO | CHECK PRT ISSUE NO

DRAWING STATUS

DRAWING APPROVALS	DATE
CLIENT APPROVAL DOE	11/26/84
REVISION QUALITY ASSURANCE	11/26/84
	11/26/84
	11/26/84
	11/26/84
DRAWN BY JAMES CALLETT	11/26/84

U. S. Department of Energy
Richland Operations Office

EBASCO SERVICES INCORPORATED

CATHODIC PROTECTION PLOT PLAN
TEST STATIONS-JUMPERS-ANODES

SCALE 1"=20'	PLOT NO. 202-A	PLOT NO. 7601	
CLASSIFICATION NONE	PROJECT B-234	DRAWING NO. H-2-91034	SHEET NO. 3 / SHEETS NO. 7

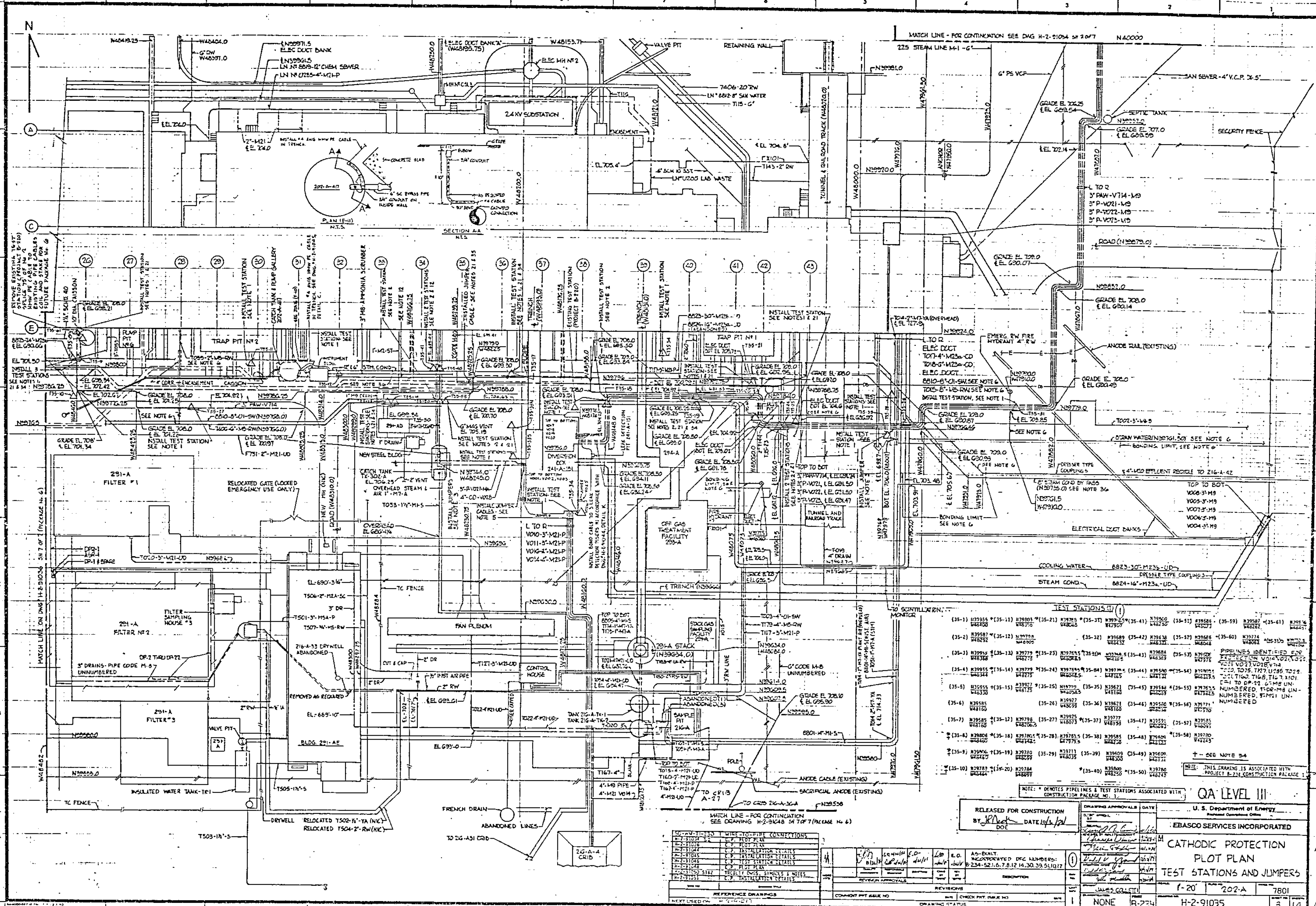
QA LEVEL III
U. S. Department of Energy
EBASCO SERVICES INCORPORATED
CATHODIC PROTECTION
PLOT PLAN
TEST STATIONS AND JUMPERS
RELEASED FOR CONSTRUCTION
1"=20'
202-A
7801
NONE
B-234
H-2-91035
3
14
AS-BUILT. INCORPORATED DFC NUMBERS: B-234-52.1.6.7.8.12.14.30.39.51.ID.17
MATCH LINE - FOR CONTINUATION SEE DWG H-2-91034 SH 2 OF 7
TEST STATIONS

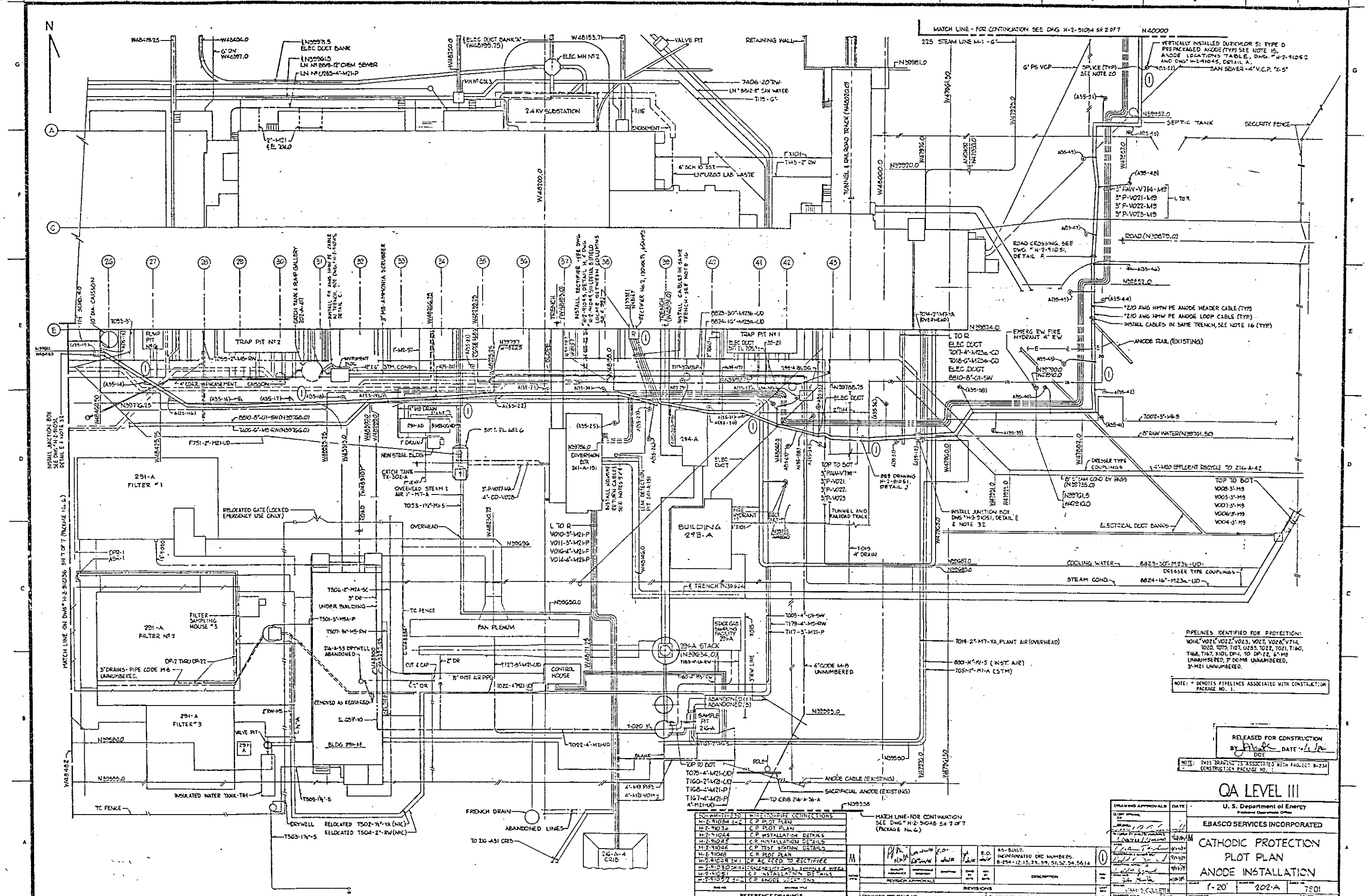
MATCH LINE - FOR CONTINUATION SEE DWG H-2-91084 SH 2 OF 7
225 STEAM LINE M-1-G
VERTICALLY INSTALLED DURICHLOR 51 TYPE D PREPACKAGED ANODE (TYP) SEE NOTE 15, ANODE LOCATIONS TABLE, DWG. H-2-91092 AND DWG H-2-91045, DETAIL A.
SAN SEWER - 4" V.C.P. "X-5"
SPLICE (TYP) SEE NOTE 20
6" PS VCP
SEPTIC TANK
SECURITY FENCE
ELEC DUCT BANK
LN M 8869-12" CHEM SEWER
LN M 0285-4"-M21-P
2.4 KV SUBSTATION
VALVE PIT
RETAINING WALL
7406-20" RW
LN M 8512-8" SAW WATER
6" SCH 10 SST
LN M 0285 LAB WASTE
TUNNEL & RAILROAD TRACK
3"-FAW-V714-M9
3"-P-V021-M9
3"-P-V022-M9
3"-P-V023-M9
L TO R
ROAD CROSSING, SEE DWG H-2-91051, DETAIL F.
ROAD (N39879.0)
*2/0 AWG HMW PE ANODE HEADER CABLE (TYP)
*2/0 AWG HMW PE ANODE LOOP CABLE (TYP)
INSTALL CABLES IN SAME TRENCH, SEE NOTE 16 (TYP)
ANODE RAIL (EXISTING)
EMERG RW FIRE HYDRANT 4" RW
L TO R
ELEC DUCT
T017-4"-M23a-CO
T018-6"-M23a-CO
ELEC DUCT
8810-8"-U1-SW
TRAP PIT N°2
TRAP PIT N°1
CATCH TANK & RAMP GALLERY 202-A-471
3" MB-AMMONIA SCRUBBER
INSTALL RECTIFIER - FIRE DWG H-2-91045, DETAIL H, & DWG H-2-91084, SH 1, FIELD LOCATE BETWEEN COLUMNS 36 & 37
RECEIVER No 2, 1500 GAL, 65 PSIG
INSTALL CABLES IN SAME TRENCH - SEE NOTE 16
8823-30"-M23a-UD
8824-16"-M23a-UD
T014-2"-M7-YA (OVERHEAD)
CORR. ENCASEMENT CAISSON
291-A FILTER N°1
291-A FILTER N°2
291-A FILTER N°3
RELOCATED GATE (LOCKED EMERGENCY USE ONLY)
NEW STEEL BLDG
CATCH TANK TX-302-A
OVERHEAD STEAM & AIR 1"-M7-A
3"-P-V017-MA
4"-CD-V028
DIVERSION BOX 241-A-151
INSTALL NEW DRAIN & RETURN CABLES SEE NOTES 5 & 6
LEAK DETECTION PIT 241-A-151
BUILDING 293-A
TOP TO BOT
3"-FAW-V714
3"-P-V021
3"-P-V022
3"-P-V023
SEE DRAWING H-2-91051, DETAIL J
TUNNEL AND RAILROAD TRACK
INSTALL JUNCTION BOX DWG H-2-91051, DETAIL E & NOTE 32
DRESSER TYPE COUPLINGS
4"-M20 EFFLUENT RECYCLE TO 216-A-42
TOP TO BOT
V008-3"-M9
V005-3"-M9
V007-3"-M9
V006-3"-M9
V004-3"-M9
ELECTRICAL DUCT BANKS
COOLING WATER
STEAM COND
8823-30"-M23a-UD
8824-16"-M23a-UD
DRESSER TYPE COUPLINGS
FAN PLENUM
291-A STACK (N39634.0)
STACK GAS SAMPLING FACILITY 29-A
CONTROL HOUSE
BLDG 291-AE
SAMPLE PIT 216-A
ANODE CABLE (EXISTING)
SACRIFICIAL ANODE (EXISTING)
TO CRIB 216-A-36-A
FRENCH DRAIN
ABANDONED LINES
TO 216-A51 CRIB
216-A-4 CRIB
DRYWELL
RELOCATED T502-1½"-YA (NIC)
RELOCATED T504-2"-RW (NIC)
INSULATED WATER TANK-TR1
TC FENCE
MATCH LINE ON DWG H-2-91036 SH 1 OF 7 (PACKAGE No. 6)
MATCH LINE - FOR CONTINUATION SEE DWG H-2-91048 SH 7 OF 7 (PACKAGE No. 6)
PIPELINES IDENTIFIED FOR PROTECTION:
V014, V021, V022, V023, V027, V028, V714, T020, T075, T127, U285, T022, T021, T160, T168, T167, X101, DP-1, TO DP-22, 6" M8 UNNUMBERED, 3" DR-M8 UNNUMBERED, 3"-M21 UNNUMBERED.
NOTE: * DENOTES PIPELINES ASSOCIATED WITH CONSTRUCTION PACKAGE NO. 1.
RELEASED FOR CONSTRUCTION
DATE 10/1/92
DOE
NOTE: THIS DRAWING IS ASSOCIATED WITH PROJECT B-234 CONSTRUCTION PACKAGE NO. 1
QA LEVEL III
U. S. Department of Energy
Richland Operations Office
EBASCO SERVICES INCORPORATED
CATHODIC PROTECTION PLOT PLAN ANODE INSTALLATION
1"-20'
202-A
7801
NONE
B-234
H-2-91035
4
14
NO-PW-11-230 WITH CTH-PIPE CONNECTIONS
H-2-91034 SH 2 C.P. PLOT PLAN
H-2-91036 C.P. PLOT PLAN
H-2-91044 C.P. INSTALLATION DETAILS
H-2-91045 C.P. INSTALLATION DETAILS
H-2-91046 C.P. TEST STATION DETAILS
H-2-91048 C.P. PLOT PLAN
H-2-91048 SH 1 CP AC FEED TO RECTIFIER
H-2-91050 SHEET 1 CASCADE UTILITY DWG. SCHEDULE & NOTES
H-2-91051 C.P. INSTALLATION DETAILS
H-2-91052 SH 2 C.P. ANODE LOCATIONS
REFERENCE DRAWINGS
NEXT USED ON H-2-91017
AS-BUILT. INCORPORATED DFC NUMBERS. B-234-12, 15, 23, 39, 51, 52, 54, 56, 14
REVISIONS
COMMENT PRT ISSUE NO
CHECK PRT ISSUE NO
DRAWING STATUS

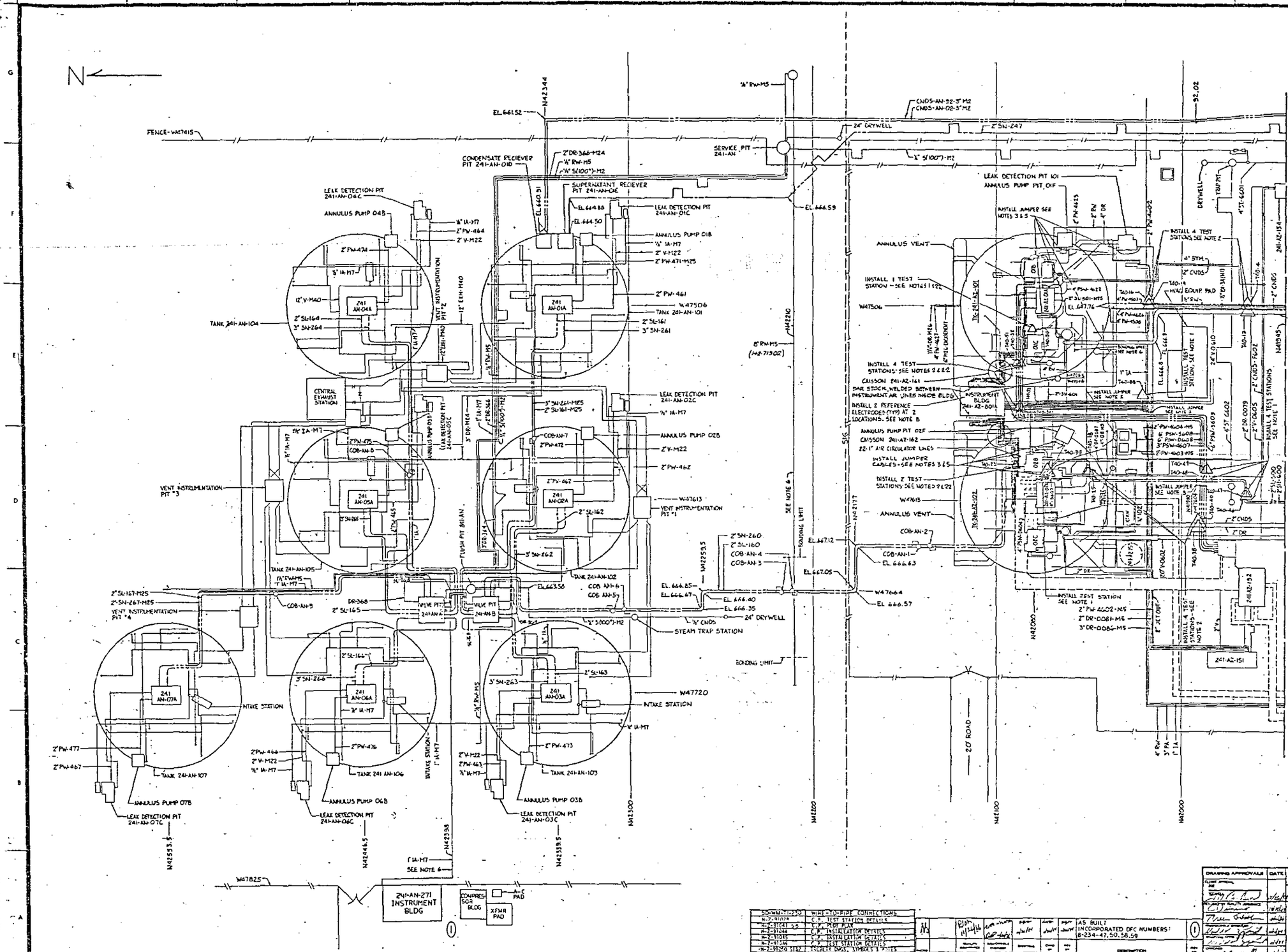
N
FENCE-W47415
EL 661.52
N42344
CONDENSATE RECIEVER PIT 241-AN-01D
SUPERNATANT RECIEVER PIT 241-AN-01E
SERVICE PIT 241-AN
24" DRYWELL
EL 666.59
LEAK DETECTION PIT 241-AN-04C
ANNULUS PUMP 04B
LEAK DETECTION PIT 241-AN-01C
ANNULUS PUMP 01B
TANK 241-AN-104
TANK 241-AN-101
CENTRAL EXHAUST STATION
LEAK DETECTION PIT 241-AN-02C
ANNULUS PUMP 02B
VENT INSTRUMENTATION PIT #3
VENT INSTRUMENTATION PIT #1
VENT INSTRUMENTATION PIT #4
TANK 241-AN-105
TANK 241-AN-102
FLUSH PIT 241-AN
VALVE PIT 241-AN-A
VALVE PIT 241-AN-B
STEAM TRAP STATION
INTAKE STATION
TANK 241-AN-107
ANNULUS PUMP 07B
LEAK DETECTION PIT 241-AN-07C
TANK 241 AN-106
ANNULUS PUMP 06B
LEAK DETECTION PIT 241-AN-06C
TANK 241-AN-103
ANNULUS PUMP 03B
LEAK DETECTION PIT 241-AN-03C
W47825
241-AN-271 INSTRUMENT BLDG
COMPRESSOR BLDG
A/C PAD
X/FMR PAD
BOUNDING LIMIT
20' ROAD
LEAK DETECTION PIT 101
ANNULUS PUMP PIT 01F
ANNULUS VENT
INSTALL 1 TEST STATION - SEE NOTES 1 & 2
INSTALL 4 TEST STATIONS - SEE NOTES 2 & 2
CAISSON 241-A2-161
BAR STOCK WELDED BETWEEN INSTRUMENT AIR LINES INSIDE BLDG
INSTALL 2 REFERENCE ELECTRODES (TYP) AT 2 LOCATIONS. SEE NOTE 8
INSTRUMENT BLDG 241-A2-B014
ANNULUS PUMP PIT 02F
CAISSON 241-A2-162
22-1" AIR CIRCULATOR LINES
INSTALL JUMPER CABLES - SEE NOTES 3 & 5
INSTALL 2 TEST STATIONS SEE NOTES 2 & 2
ANNULUS VENT
INSTALL 4 TEST STATIONS SEE NOTE 2
HVAC EQUIP PAD
DRYWELL
TEST STATIONS (7)
(40-1) N42540 W47704
(40-2) N42430 W47703
(40-3) N42513 W47864
*(40-4) N41964 W47505
(40-5) N42499 W47664
(40-6) N42355 W47573
(40-7) N42433 W47646
(40-8) N42411 W47659
(40-9) N42091 W47613
(40-10) N42394 W47665
(40-11) N42397 W47877
(40-12) N42091 W47611
*(40-13) N41964 W47505
*(40-14) N42018 W47502
(40-15) N42364 W47657
*(40-16) N42016 W47502
(40-17) N42252 W47708
*(40-18) N42050 W47596
(40-19) N42289 W47673
(40-20) N42210 W47664
(40-21) N42443 W47619
*(40-23) N42094 W47600
(40-24) N42419 W47532
*(40-25) N42050 W47595
(40-26) N42312 W47591
(40-27) N42097 W47635
(40-28) N42352 W47593
(40-29) N42352 W47614
(40-30) N42065 W47592
(40-31) N42026 W47607
(40-32) N42419 W47545
*(40-33) N42021 W47595
(40-34) N42427 W47527
*(40-35) N42022 W47596
(40-36) N42444 W47527
(40-37) N42351 W47351
*(40-38) N41985 W47625
(40-39) N42351 W47538
*(40-40) N41985 W47625
(40-41) N42344 W47434
(40-42) N42210 W47441
(40-43) N42212 W47424
(40-44) N42187 W47420
(40-45) N42020 W47405
*(40-46) N41966 W47610
*(40-47) N41966 W47610
*(40-48) N41987 W47595
*(40-49) N41987 W47597
*(40-50) N42082 W47316
*(40-51) N42088 W47539
*(40-52) N42088 W47539
*(40-53) N42086 W47557
*(40-54) N42086 W47557
RELEASED FOR CONSTRUCTION
BY DOE DATE 2/22/94
NOTE: *DENOTES PIPELINES & TEST STATIONS ASSOCIATED WITH CONSTRUCTION PACKAGE NO. 2.
PIPELINES IDENTIFIED FOR PROTECTION: 5N-264, 5L-164, 5N-261, 5L-161, 5N-262, 5L-162, 5N-263, 5L-163, 5N-266, 5L-166, 5N-267, 5L-167, 5N-265, 5L-165, 5N-260, 5L-160, 5L-500, 5N-500, 5N-247, 92, 02 AND TANK FARMS AN 4"A2, *5507 *4509, *4508
NOTE: THIS DRAWING IS ASSOCIATED WITH CONSTRUCTION PACKAGE NO. 2.
QA LEVEL III
U. S. Department of Energy
EBASCO SERVICES INCORPORATED
CATHODIC PROTECTION PLOT PLAN
TEST STATIONS AND JUMPERS
1-20
202-A
7801
NONE
3-234
H-2-91040
5 14
AS BUILT INCORPORATED DFC NUMBERS: 8-234-47, 50, 58, 59
REVISIONS
DRAWING STATUS
REFERENCE DRAWINGS
SD-WM-TI-220 WIRE-TO-PIPE CONNECTIONS
H-2-91028 C.P. TEST STATION DETAILS
H-2-91041 C.P. PLOT PLAN
H-2-91044 C.P. INSTALLATION DETAILS
H-2-91045 C.P. INSTALLATION DETAILS
H-2-91046 C.P. TEST STATION DETAILS
H-2-91050 SHT 2 FACILITY DWGS, SYMBOLS & NOTES
H-2-91051 C.P. INSTALLATION DETAILS
NEXT USED ON H-2-91017

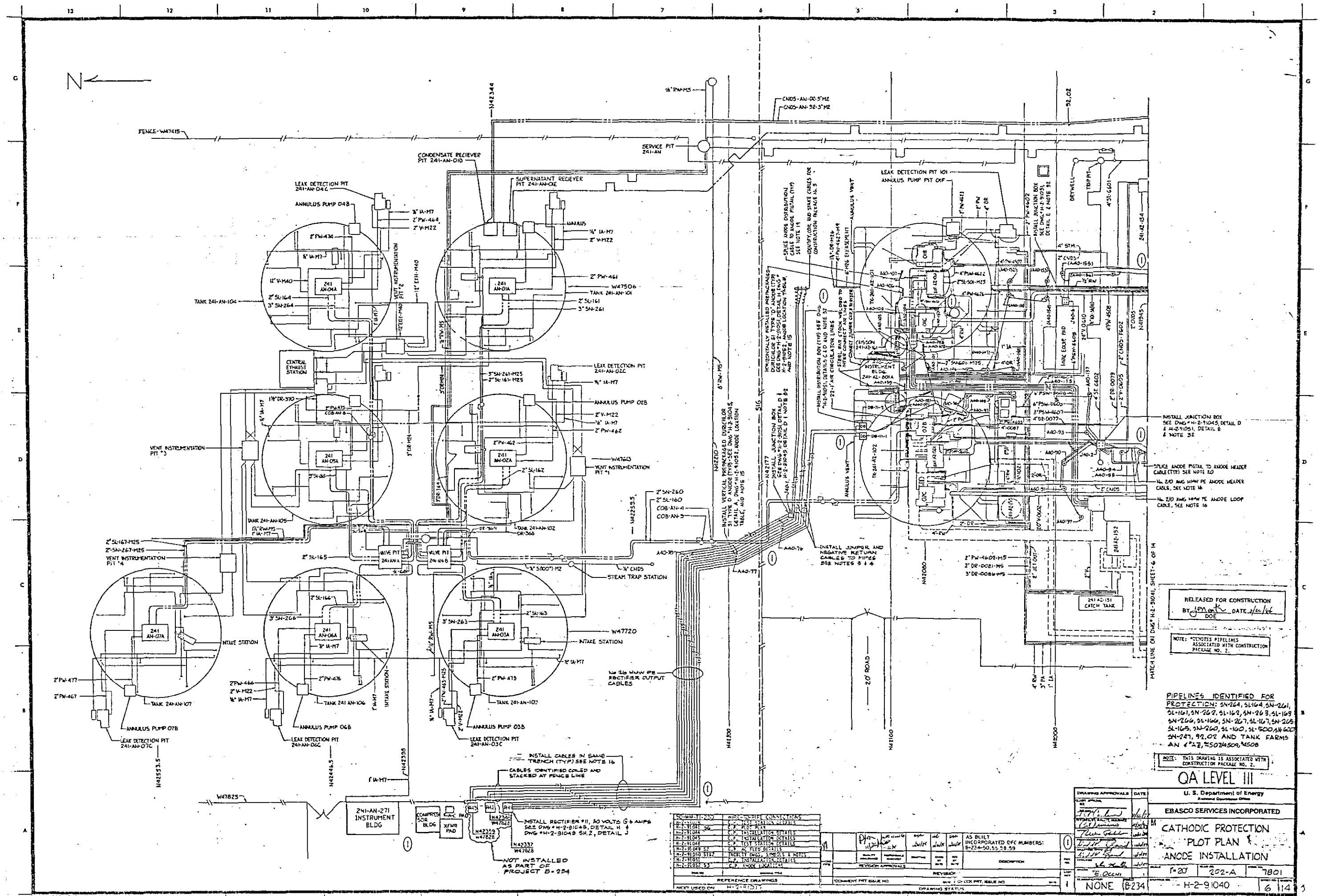
N
FENCE-W47415
SERVICE PIT 241-AN
CONDENSATE RECIEVER PIT 241-AN-010
SUPERNATANT RECIEVER PIT 241-AN-01E
LEAK DETECTION PIT 241-AN-04C
ANNULUS PUMP 04B
TANK 241-AN-104
CENTRAL EXHAUST STATION
VENT INSTRUMENTATION PIT #2
VENT INSTRUMENTATION PIT #3
VENT INSTRUMENTATION PIT #4
VENT INSTRUMENTATION PIT #1
LEAK DETECTION PIT 241-AN-02C
ANNULUS PUMP 02B
W47613
W47506
TANK 241-AN-101
TANK 241-AN-105
TANK 241-AN-102
VALVE PIT 241-AN-A
VALVE PIT 241-AN-B
STEAM TRAP STATION
W47720
INTAKE STATION
TANK 241-AN-107
TANK 241 AN-106
TANK 241-AN-103
ANNULUS PUMP 07B
ANNULUS PUMP 06B
ANNULUS PUMP 03B
LEAK DETECTION PIT 241-AN-07C
LEAK DETECTION PIT 241-AN-06C
LEAK DETECTION PIT 241-AN-03C
No 26 HMW PE RECTIFIER OUTPUT CABLES
INSTALL CABLES IN SAME TRENCH (TYP) SEE NOTE 16
CABLES IDENTIFIED COILED AND STACKED AT FENCE LINE
241-AN-271 INSTRUMENT BLDG
COMPRESSOR BLDG
XFMR PAD
INSTALL RECTIFIER #11, 50 VOLTS @ 6 AMPS SEE DWG # H-2-91049, DETAIL H & DWG #H-2-91049 SH.2, DETAIL J
NOT INSTALLED AS PART OF PROJECT B-234
LEAK DETECTION PIT 101
ANNULUS PUMP PIT 01F
INSTRUMENT BLDG 241-AZ-001A
CATCH TANK 241-AZ-151
DRYWELL
TBP PIT
INSTALL JUNCTION BOX SEE DWG # H-2-91045, DETAIL D & H-2-91051, DETAIL E & NOTE 32
SPLICE ANODE PIGTAIL TO ANODE HEADER CABLE (TYP) SEE NOTE 20
No. 2/0 AWG HMW PE ANODE HEADER CABLE, SEE NOTE 16
No. 2/0 AWG HMW PE ANODE LOOP CABLE, SEE NOTE 16
INSTALL JUMPER AND NEGATIVE RETURN CABLES TO PIPES SEE NOTES 3 & 4
20' ROAD
MATCH LINE ON DWG # H-2-91041, SHEET-6 OF 14
RELEASED FOR CONSTRUCTION BY DOE DATE 2/22/96
NOTE: * DENOTES PIPELINES ASSOCIATED WITH CONSTRUCTION PACKAGE NO. 2.
PIPELINES IDENTIFIED FOR PROTECTION: SN-264, SL-164, SN-261, SL-161, SN-262, SL-162, SN-263, SL-163, SN-266, SL-166, SN-267, SL-167, SN-265, SL-165, SN-260, SL-160, SL-500, SN-500, SN-247, 92.02 AND TANK FARMS AN 6"AZ, 2"50, 74509, 4508
NOTE: THIS DRAWING IS ASSOCIATED WITH CONSTRUCTION PACKAGE NO. 2.
QA LEVEL III
U. S. Department of Energy
EBASCO SERVICES INCORPORATED
CATHODIC PROTECTION PLOT PLAN ANODE INSTALLATION
1" = 20'
202-A
7801
NONE
B-234
H-2-91040
6 14
AS BUILT INCORPORATED DFC NUMBERS: B-234-50, 55, 58, 59
REFERENCE DRAWINGS
DRAWING STATUS

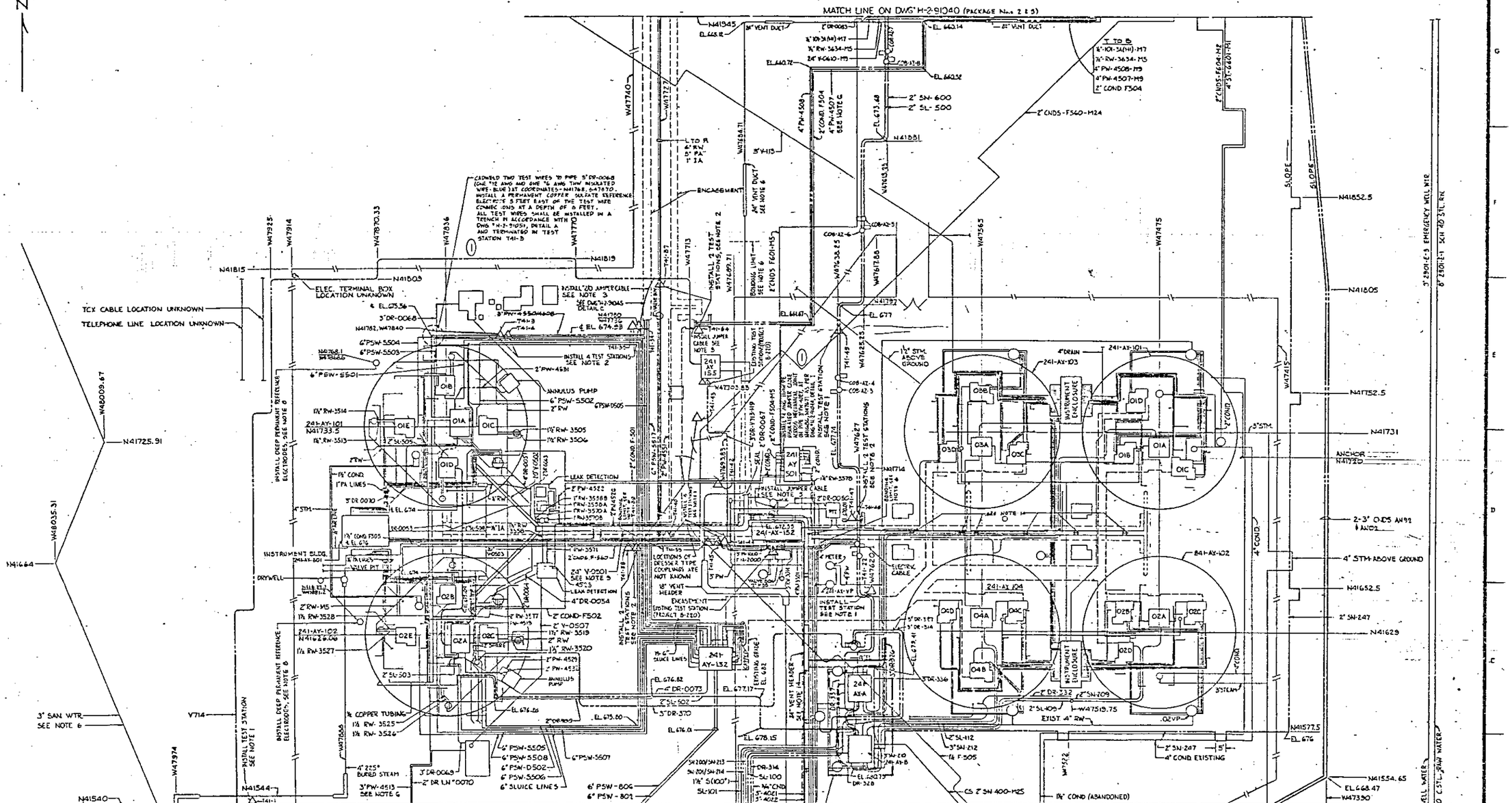

NOTE: * DENOTES PIPELINES & TEST STATIONS ASSOCIATED WITH CONSTRUCTION PACKAGE NO. 1.

NOTE: THIS DRAWING IS ASSOCIATED WITH PROJECT B-234 CONSTRUCTION PACKAGE NO. 1.

PIPELINES IDENTIFIED FOR PROTECTION:
AN-92, AN-02, DR-314, DR-326, DR-327, DR-356, DR-357, DR-370, V713, V714, SN-247, SN-600, SL-100, SL-101, SL-500, SL-502, SL-503, SL-504, SL-505, PW-4522, PW-4523, PW-4526, PW-4532, PW-4550/4608, 4507/4509, 4508

RELEASED FOR CONSTRUCTION
BY J. L. Nagel DATE 10/5/84
DOE

QA LEVEL III

DRAWING APPROVALS	DATE
CLIENT APPROVAL	
PROJECT ENGINEER	9/26/84
PROJECT MANAGER	9/26/84
	9/26/84
	9/26/84
	9/26/84
	9/26/84
	9/26/84
	9/26/84

U. S. Department of Energy
Richland Operations Office

EBASCO SERVICES INCORPORATED

CATHODIC PROTECTION PLOT PLAN TEST STATIONS AND JUMPERS

SCALE 1"=20'	202-A		7801
NONE	8-234	H-2-91041	3 / 14

SN-WU-11-2343	WIRE-TO-PIPE CONNECTIONS
H-2-91040	C.P. PLOT PLAN
H-2-91042 Sh. 3	C.P. PLOT PLAN
H-2-91044	C.P. DETAIL DRAWINGS
H-2-91045	C.P. DETAIL DRAWINGS
H-2-91046	C.P. TEST-STATION DETAILS
H-2-91050 Sh. 1&2	TRCBLTY DRAWINGS, SYMBOLS & NOTES
H-2-91051	C.P. INSTALLATION DETAILS

REFERENCE DRAWINGS

NEXT USED ON H-2-91019

AS-BUILT. INCORPORATED DCC NUMBERS: B-234-9,12,25,39,40,51,52,58,59,18

REVISIONS

COMMENT PRT ISSUE NO. | CHECK PRT ISSUE NO.

DRAWING STATUS

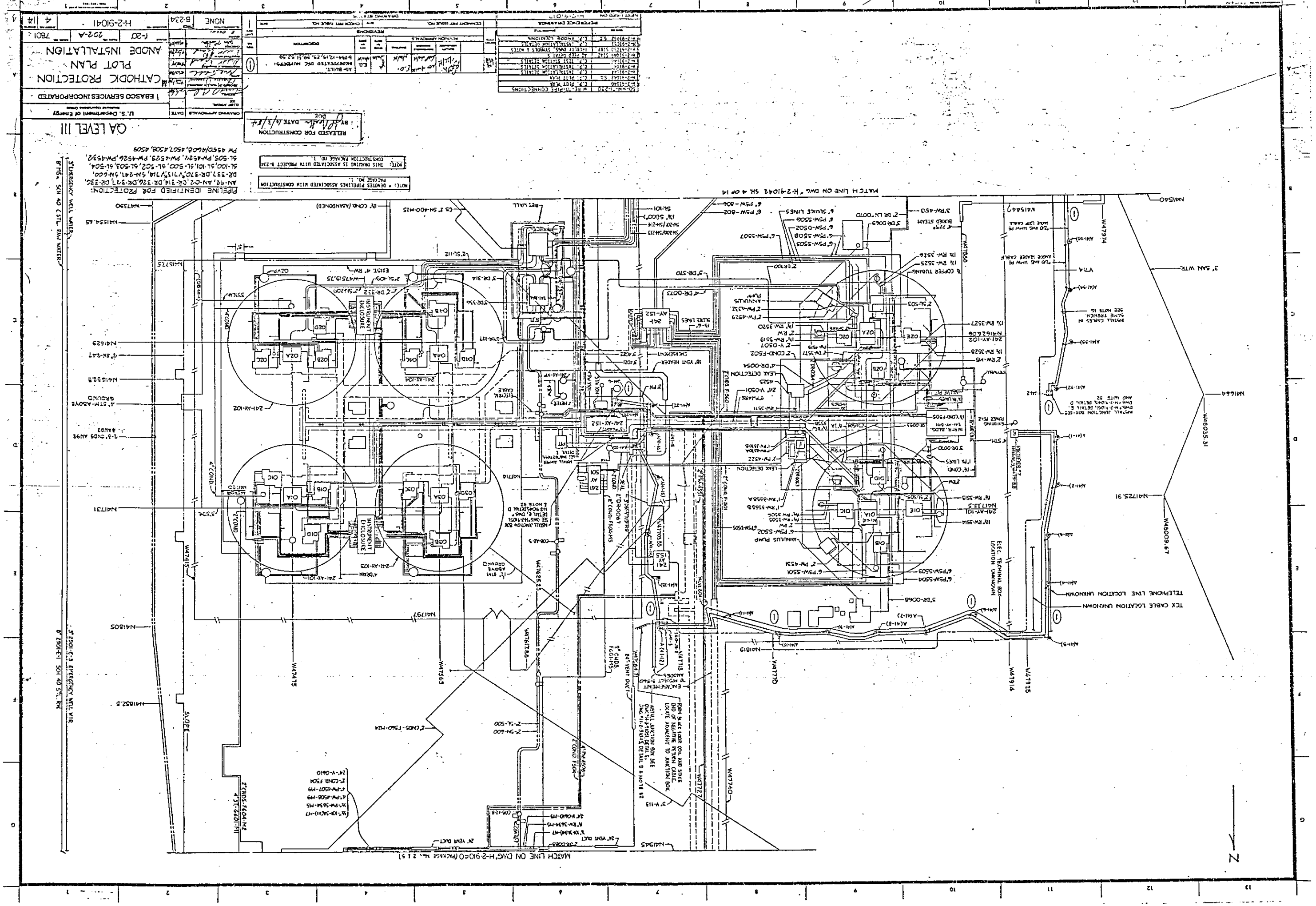

U.S. Department of Energy
EBASCO SERVICES INCORPORATED
CATHODIC PROTECTION
PLOT PLAN
ANODE INSTALLATION
QA LEVEL III
RELEASED FOR CONSTRUCTION
BY
DATE 6/3/84
DOE
NOTE: THIS DRAWING IS ASSOCIATED WITH PROJECT B-234 CONSTRUCTION PACKAGE NO. 1.
PIPELINE IDENTIFIED FOR PROTECTION:
AN-92, AN-02, DR-314, DR-326, DR-327, DR-336, DR-337, DR-370, 7/13, 7/14, SN-241, SN-600, SL-100, SL-101, SL-500, SL-502, SL-503, SL-504, SL-505, PW-4522, PW-4523, PW-4526, PW-4532, PW-4550/4608, 4507, 4508, 4509
MATCH LINE ON DWG. H-2-91040 (PACKAGE No. 2 & 5)
MATCH LINE ON DWG. H-2-91042 SH. 4 OF 14
INSTRUMENT ENCLOSURE
TCX CABLE LOCATION UNKNOWN
TELEPHONE LINE LOCATION UNKNOWN
ELEC. TERMINAL BOX LOCATION UNKNOWN
3" SAN WTR.
3" EMERGENCY WELL WATER
8" M5a SCH 40 C.S.T.L. RAW WATER
8" 2901-E-3 EMERGENCY WELL WTR.
8" 2901-E-1 SCH 40 STL. RW
SLOPE
N

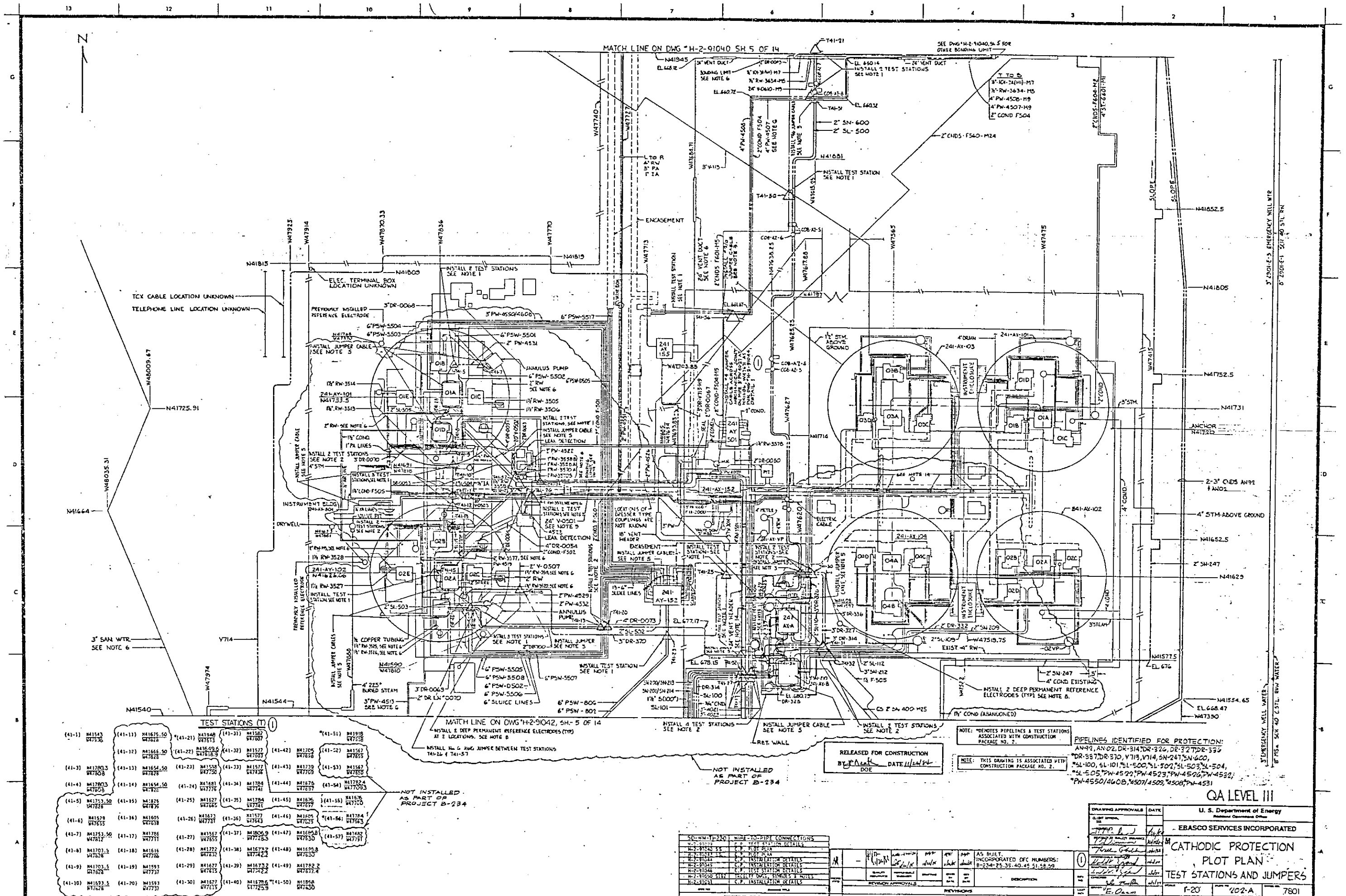
MATCH LINE ON DWG #H-2-91040 SH 5 OF 14
MATCH LINE ON DWG #H-2-91042, SH. 5 OF 14
TEST STATIONS (T) 1
NOT INSTALLED AS PART OF PROJECT B-234
NOT INSTALLED AS PART OF PROJECT B-234
RELEASED FOR CONSTRUCTION
BY DOE DATE 11/24/84
NOTE: *DENOTES PIPELINES & TEST STATIONS ASSOCIATED WITH CONSTRUCTION PACKAGE NO. 2.
NOTE: THIS DRAWING IS ASSOCIATED WITH CONSTRUCTION PACKAGE NO. 2.
PIPELINES IDENTIFIED FOR PROTECTION:
AN-92, AN-02, DR-314, DR-326, DR-327, DR-336
*DR-337, DR-370, V713, V714, SN-247, SN-600,
*SL-100, SL-101, *SL-500, *SL-502, *SL-503, *SL-504,
*SL-505, *PW-4522, *PW-4523, *PW-4526, *PW-4532,
*PW-4550/4608, *4507/4509, *4508, *PW-4531
QA LEVEL III
U. S. Department of Energy
EBASCO SERVICES INCORPORATED
CATHODIC PROTECTION
PLOT PLAN
TEST STATIONS AND JUMPERS
1-20
202-A
7801
NONE
B-234
H-2-91041
5
14
AS BUILT, INCORPORATED DFC NUMBERS: B-234-25.35-40.45 51.58.59
REVISIONS
DRAWING STATUS
REFERENCE DRAWINGS
NEXT USED ON H-2-91013

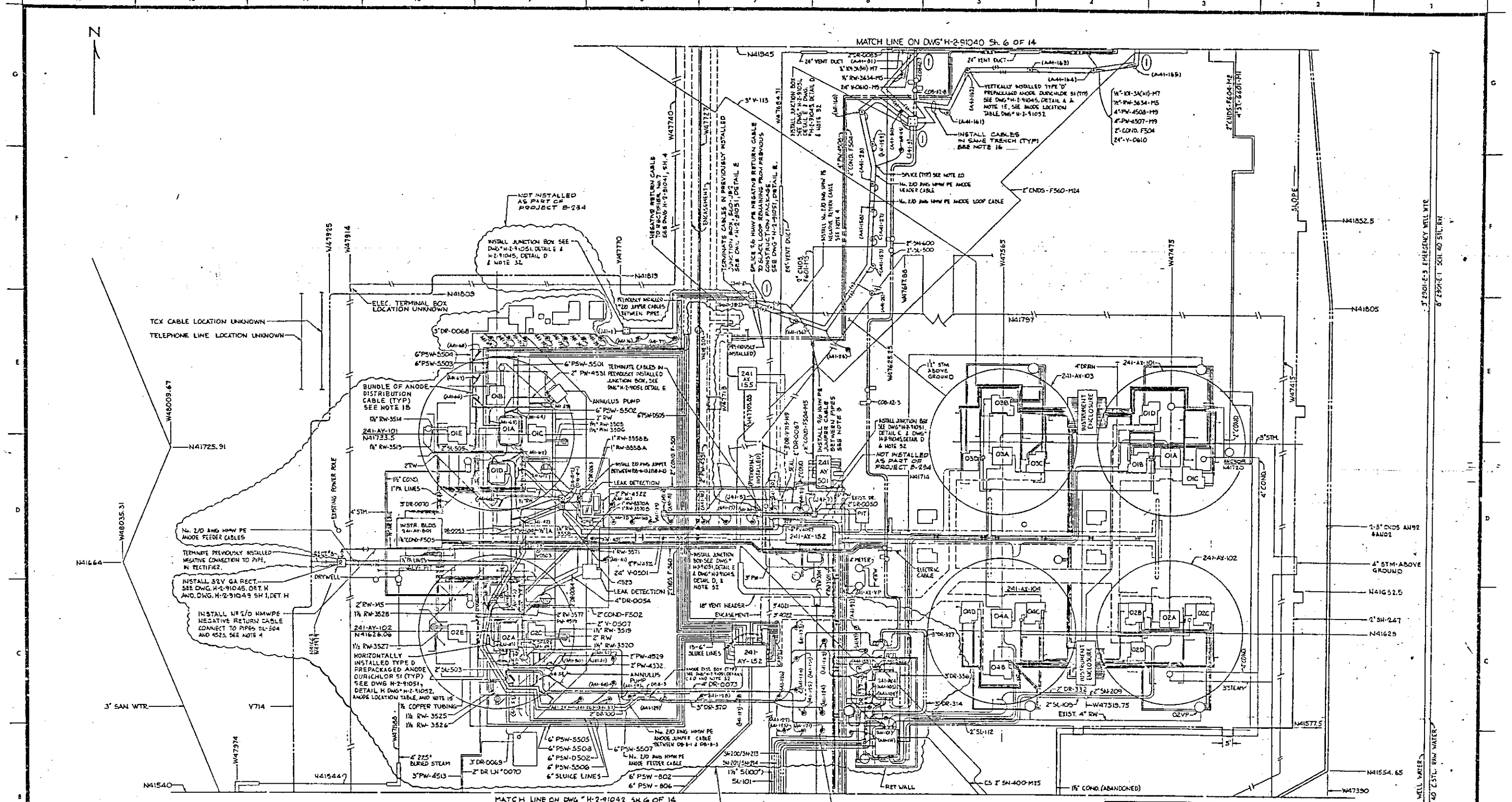

NOTE: *DENOTES PIPELINES ASSOCIATED WITH CONSTRUCTION PACKAGE NO. 2.

NOTE: THIS DRAWING IS ASSOCIATED WITH CONSTRUCTION PACKAGE NO. 2.

RELEASED FOR CONSTRUCTION
BY [signature] DATE [illegible]
DOE

PIPELINE IDENTIFIED FOR PROTECTION:
AN-92, AN-02, DR-314, DR-326, DR-327, DR-336, *DR-337, DR-370, V713, V714, SN-247, SN-600, *SL-100, SL-101, *SL-500, *SL-502, *SL-503, *SL-504, *SL-505, *PW-4527, *PW-4529, *PW-4526, *PW-4532, *PW-4550/4608, *4507, *4508, *4509, *PW-4531

QA LEVEL III

SD-WM-11-230	WIRE-TO-PIPE CONNECTIONS
H-2-91028	C.P. TEST STATION DETAILS
H-2-91040 SH.	C.P. PLOT PLAN
H-2-91042 SH.	C.P. PLOT PLAN
H-2-91044	C.P. INSTALLATION DETAILS
H-2-91045	C.P. INSTALLATION DETAILS
H-2-91046	C.P. TEST STATION DETAILS
H-2-91049 SH 2	AC FEED DETAILS
H-2-91050 SH 2	TROBLEY DWGS. SYMBOLS & NOTES
H-2-91051	C.P. INSTALLATION DETAILS
H-2-91052 SH 2	C.P. ANODE LOCATIONS

REFERENCE DRAWINGS
NEXT USED ON H-2-91017

AS BUILT, INCORPORATED DFC NUMBERS: B-234-39, 45, 51, 58, 59

REVISION APPROVALS
REVISIONS
COMMENT PRT. ISSUE NO.
CHECK PRT. ISSUE NO.
DRAWING STATUS

DRAWING APPROVALS | DATE
CLIENT APPROVAL
PROPERTY OF BALTIMORE ASSOCIATES
E. OCCHI

U. S. Department of Energy
Richland Operations Office
EBASCO SERVICES INCORPORATED

CATHODIC PROTECTION
PLOT PLAN
ANODE INSTALLATION

SCALE 1"=20' | DWG. NO. 202-A | 7801
CLASSIFICATION NONE | B-234 | H-2-91041 | SHEET 6 | 14

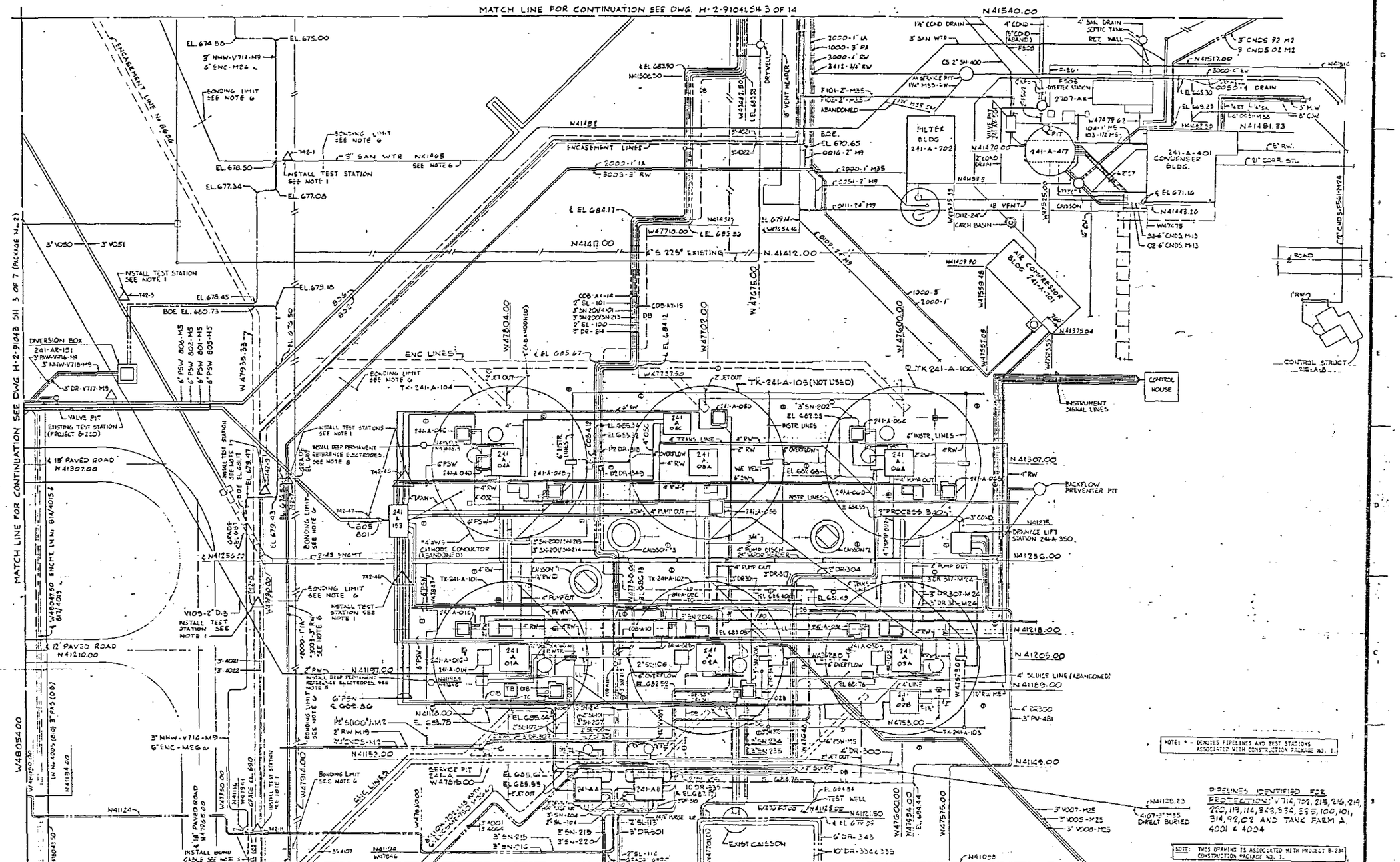
MATCH LINE FOR CONTINUATION SEE DWG. H-2-91041, SH 3 OF 14
MATCH LINE FOR CONTINUATION SEE DWG H-2-91043 SH 3 OF 7 (PACKAGE N.2)
MATCH LINE ON DWG H-2-91033 SH 3 OF 15
N
FILTER BLDG 241-A-702
241-A-477
241-A-401 CONDENSER BLDG.
AIR COMPRESSOR BLDG 241-A-701
CONTROL HOUSE
CONTROL STRUCT 216-A-8
DIVERSION BOX 241-AR-151
TK-241-A-105 (NOT USED)
TK 241-A-106
BACKFLOW PREVENTER PIT
DRAINAGE LIFT STATION 241-A-350
INSTALL TEST STATION SEE NOTE 1
BONDING LIMIT SEE NOTE 6
ENCASEMENT LINES
ENC LINES
EXIST CAISSON
BUNDLE OF (10) 4" PURGE AIR
NOTE: * - DENOTES PIPELINES AND TEST STATIONS ASSOCIATED WITH CONSTRUCTION PACKAGE NO. 1.
PIPELINES IDENTIFIED FOR PROTECTION: V714, 792, 215, 216, 219, 220, 113, 114, 343, 334, 335, 100, 101, 314, 92, 02 AND TANK FARM A, 4001 & 4004
NOTE: THIS DRAWING IS ASSOCIATED WITH PROJECT B-234 CONSTRUCTION PACKAGE NO. 1.
NOT INSTALLED AS PART OF PROJECT B-234
TEST STATIONS (T)
RELEASED FOR CONSTRUCTION BY DATE DOE
QA LEVEL III
U. S. Department of Energy
Richland Operations Office
EBASCO SERVICES INCORPORATED
CATHODIC PROTECTION PLOT PLAN
TEST STATIONS AND JUMPERS
1:20'
202-A
7801
NONE
B-234
H-2-91042
3
14
REFERENCE DRAWINGS
REVISIONS
DRAWING STATUS

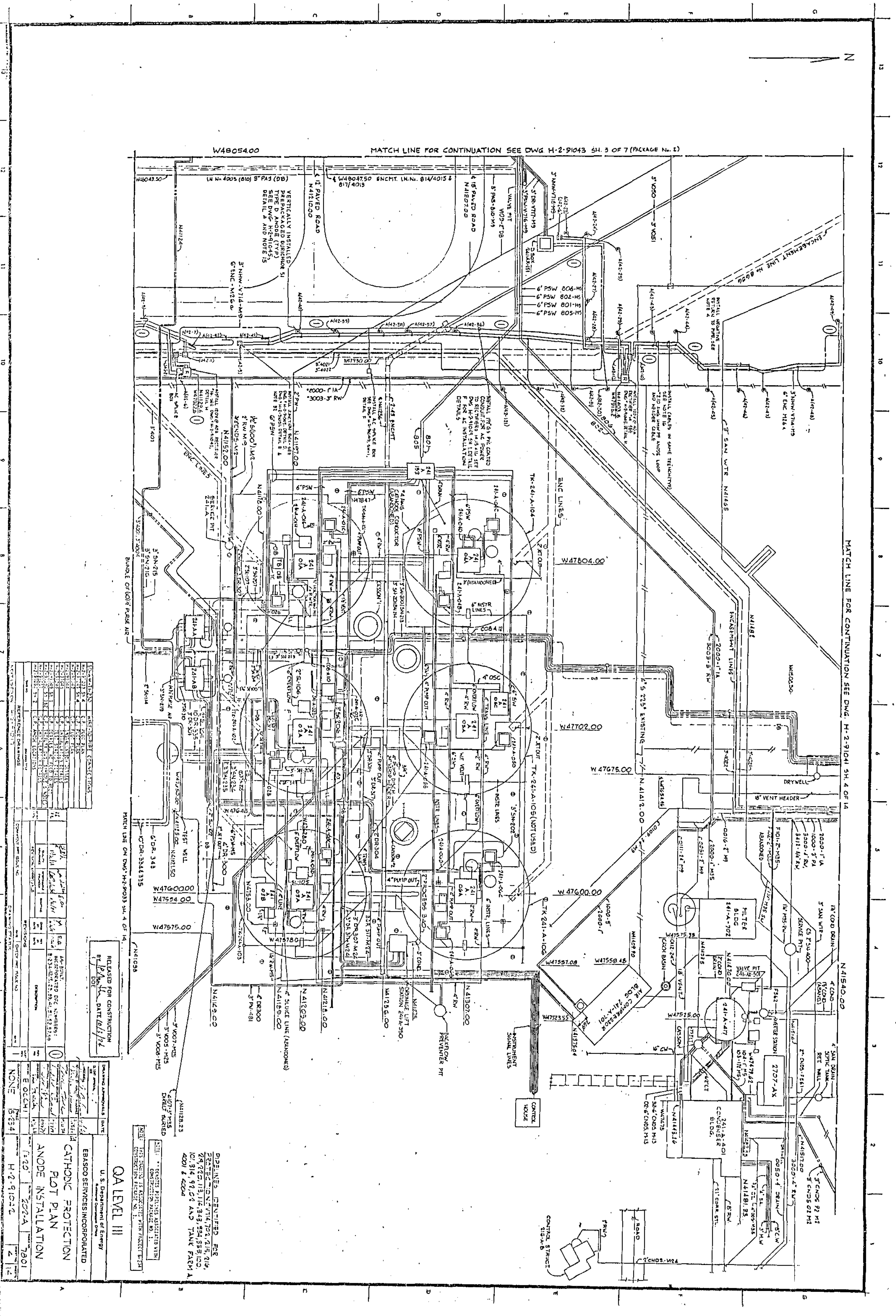

W48054.00
MATCH LINE FOR CONTINUATION SEE DWG. H-2-91043 SH. 3 OF 7 (PACKAGE No. 2)
MATCH LINE FOR CONTINUATION SEE DWG. H-2-91041 SH. 4 OF 14
MATCH LINE ON DWG H-2-91033 SH. 4 OF 14
W47804.00
W47702.00
W47675.00
W47600.00
W47575.00
N41540.00
ENC LINES
ENCASEMENT LINES
TK-241-A-104
TK-241-A-105 (NOT USED)
TK-241-A-106
DRYWELL
18" VENT HEADER
FILTER BLDG 241-A-702
AIR COMPRESSOR BLDG 241-A-701
241-A-401 CONDENSER BLDG.
2707-AX
CONTROL HOUSE
INSTRUMENT SIGNAL LINES
BACKFLOW PREVENTER PIT
TEST WELL
RELEASED FOR CONSTRUCTION
DOE
PIPELINES IDENTIFIED FOR PROTECTION: V714, 702, 215, 216, 24, 220, 113, 114, 343, 334, 335, 100, 101, 314, 92, 06 AND TANK FARM A, 4001 & 4004
NOTE: * - DENOTES PIPELINES ASSOCIATED WITH CONSTRUCTION PACKAGE NO. 1.
NOTE: THIS DRAWING IS ASSOCIATED WITH PROJECT B-234 CONSTRUCTION PACKAGE NO. 1.
QA LEVEL III
U.S. Department of Energy
EBASCO SERVICES INCORPORATED
CATHODIC PROTECTION
PLOT PLAN
ANODE INSTALLATION
E OCCHI
NONE
B-234
1"=20'
H-2-91032
202-A
7801
4
14
AS-BUILT. INCORPORATED DFC NUMBERS: B-234-1215, 23, 39, 41, 51, 52, 57, 59

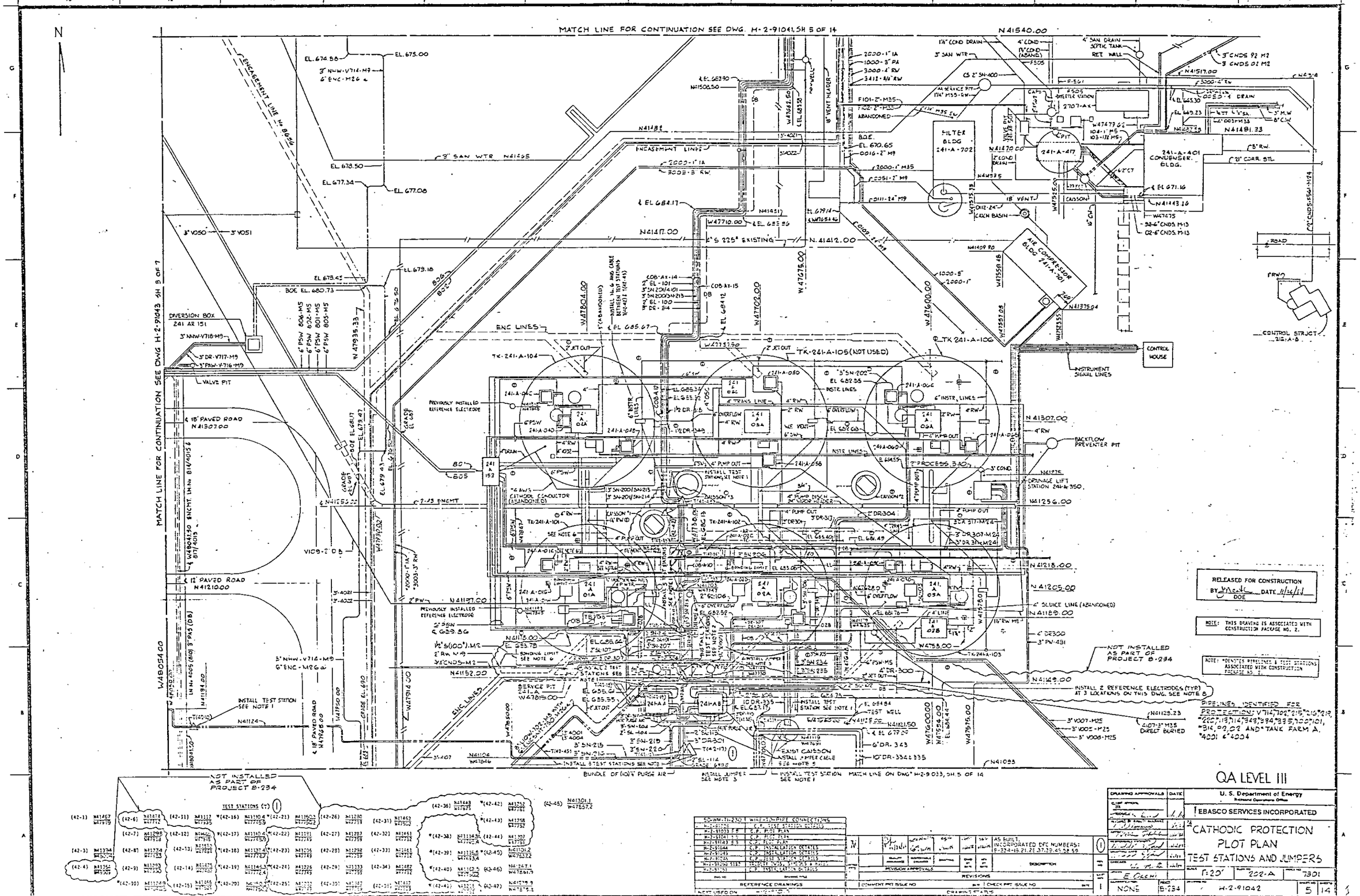

MATCH LINE FOR CONTINUATION SEE DWG. H-2-91041, SH 5 OF 14
MATCH LINE FOR CONTINUATION SEE DWG H-2-91043 SH 3 OF 7
N
N41540.00
N41412.00
N41307.00
N41256.00
N41218.00
N41205.00
N41189.00
N41149.00
N41152.00
N41197.00
N41117.00
N41481.33
W48054.00
W47675.00
W47600.00
W47702.00
W47804.00
W47935.33
FILTER BLDG 241-A-702
241-A-401 CONDENSER BLDG.
AIR COMPRESSOR BLDG 241-A-701
CONTROL HOUSE
CONTROL STRUCT 216-A-8
DIVERSION BOX 241 AR 151
ENCASEMENT LINE No 8656
ENCASEMENT LINES
ENC LINES
TK-241-A-104
TK-241-A-105 (NOT USED)
TK 241-A-106
BACKFLOW PREVENTER PIT
DRAINAGE LIFT STATION 241-A-350
PREVIOUSLY INSTALLED REFERENCE ELECTRODE
INSTALL TEST STATION SEE NOTE 1
INSTALL 2 REFERENCE ELECTRODES (TYP) AT 3 LOCATIONS ON THIS DWG. SEE NOTE 8
NOT INSTALLED AS PART OF PROJECT B-234
BUNDLE OF (10)½" PURGE AIR
INSTALL JUMPER SEE NOTE 3
INSTALL TEST STATION SEE NOTE 1
MATCH LINE ON DWG H-2-9033, SH 5 OF 14
PIPELINES IDENTIFIED FOR PROTECTION: V714, 702, 215, 216, 219, 220, 118, 114, 343, 334, 335, 100, 101, 314, 92, 02 AND TANK FARM A. 4001 & 4004
RELEASED FOR CONSTRUCTION
BY DOE DATE 11/26/84
NOTE: THIS DRAWING IS ASSOCIATED WITH CONSTRUCTION PACKAGE NO. 2.
NOTE: *DENOTES PIPELINES & TEST STATIONS ASSOCIATED WITH CONSTRUCTION PACKAGE NO. 2.
QA LEVEL III
U. S. Department of Energy
Richland Operations Office
EBASCO SERVICES INCORPORATED
CATHODIC PROTECTION
PLOT PLAN
TEST STATIONS AND JUMPERS
1"=20'
202-A
7301
NONE
B-234
H-2-91042
5
14
AS BUILT, INCORPORATED DFC NUMBERS: B-234-15,21,25,37,39,45,58,59
REVISIONS
REFERENCE DRAWINGS
DRAWING STATUS

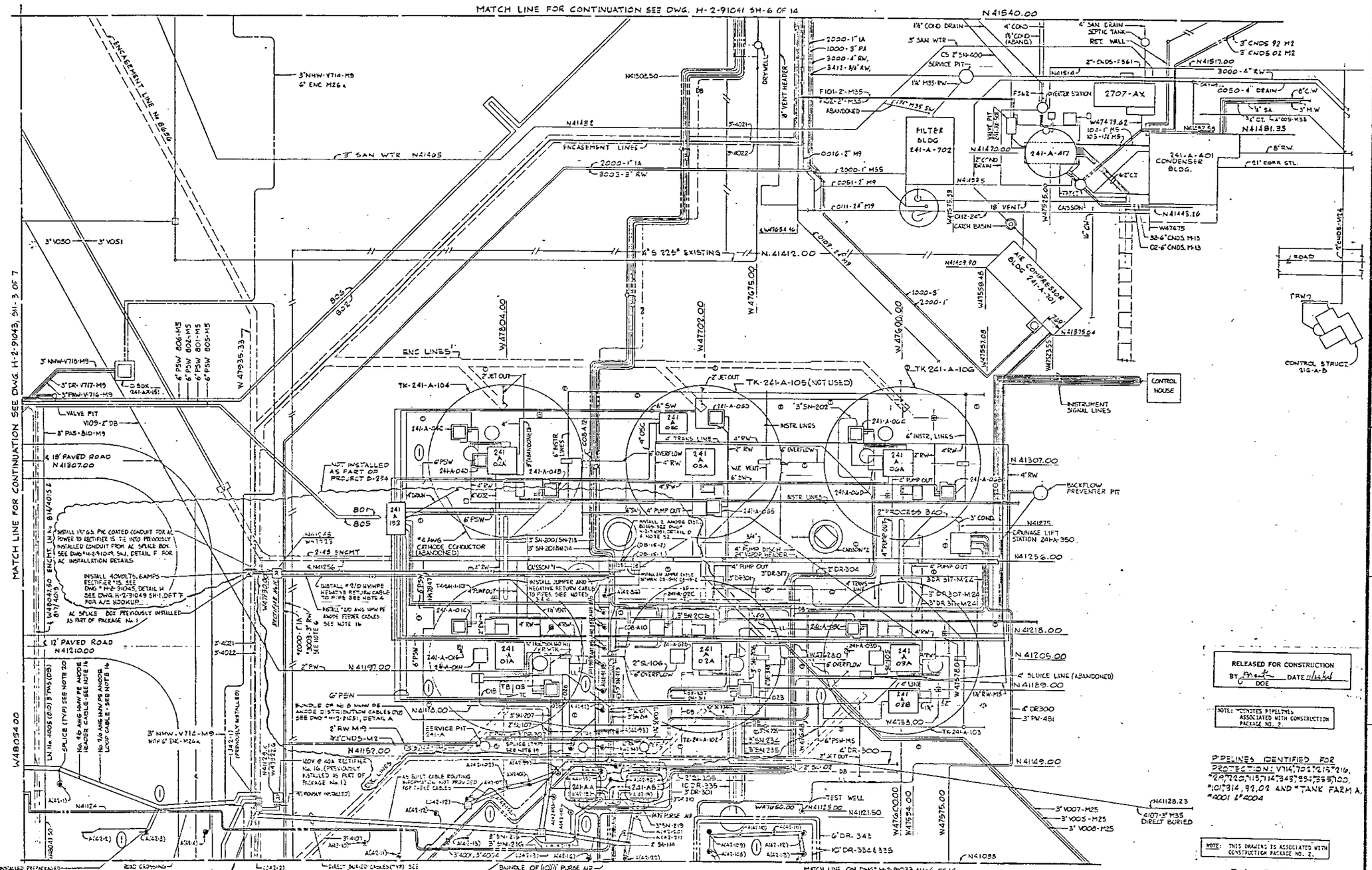
MATCH LINE FOR CONTINUATION SEE DWG. H-2-91041 SH-6 OF 14
MATCH LINE FOR CONTINUATION SEE DWG. H-2-91043, SH-3 OF 7
N
FILTER BLDG 241-A-702
241-A-417
2707-AX
241-A-401 CONDENSER BLDG.
AIR COMPRESSOR BLDG 241-A-701
CONTROL HOUSE
CONTROL STRUCT. 212-A-D
BACKFLOW PREVENTER PIT
DRAINAGE LIFT STATION 241-A-350
INSTRUMENT SIGNAL LINES
TK-241-A-104
TK-241-A-105 (NOT USED)
TK 241-A-106
TEST WELL
MATCH LINE ON DWG. H-2-91033 SH-6 OF 14
VERTICALLY INSTALLED PREPACKAGED DURACHLOR 51 TYPE "T" ANODE (TYP) SEE DWG. H-2-91045, DETAIL A, DWG. H-2-91052 ANODE LOCATION TABLE, AND NOTE 15
BEND CLOSINGS SEE DWG. H-2-91051, DETAIL F
TERMINATE CABLES IN JUNCTION BOXES (PREVIOUSLY INSTALLED AS PART OF PACKAGE NO. 1)
DIRECT BURIED CABLES (TYP) SEE DWG. H-2-91045 DETAIL C FOR TYPICAL DETAIL
BUNDLE OF (10) 1/2" PURGE AIR
INSTALL JUNCTION BOX - SEE DWG. H-2-91051, DETAIL B & DWG. H-2-91045, DETAIL D NOTE 32
4107-3" M35 DIRECT BURIED
RELEASED FOR CONSTRUCTION
BY DATE
DOE
NOTE: *DENOTES PIPELINES ASSOCIATED WITH CONSTRUCTION PACKAGE NO. 2.
PIPELINES IDENTIFIED FOR PROTECTION: V714, 702, 715, 716, *219, 720, 718, 714, 343, 334, 339, 700, *101, 314, 92, 02 AND *TANK FARM A, *4001 & *4004
NOTE: THIS DRAWING IS ASSOCIATED WITH CONSTRUCTION PACKAGE NO. 2.
QA LEVEL III
U. S. Department of Energy
EBASCO SERVICES INCORPORATED
CATHODIC PROTECTION
PLOT PLAN
ANODE INSTALLATION
1"=20'
202-A
7801
NONE
5-234
H-2-91042
6
14
REFERENCE DRAWINGS
REVISIONS
DRAWING STATUS
AS BUILT, INCORPORATED DFC NUMBERS: 5-234-21, 27, 36, 39, 42, 45, 52, 56, 59
DESCRIPTION

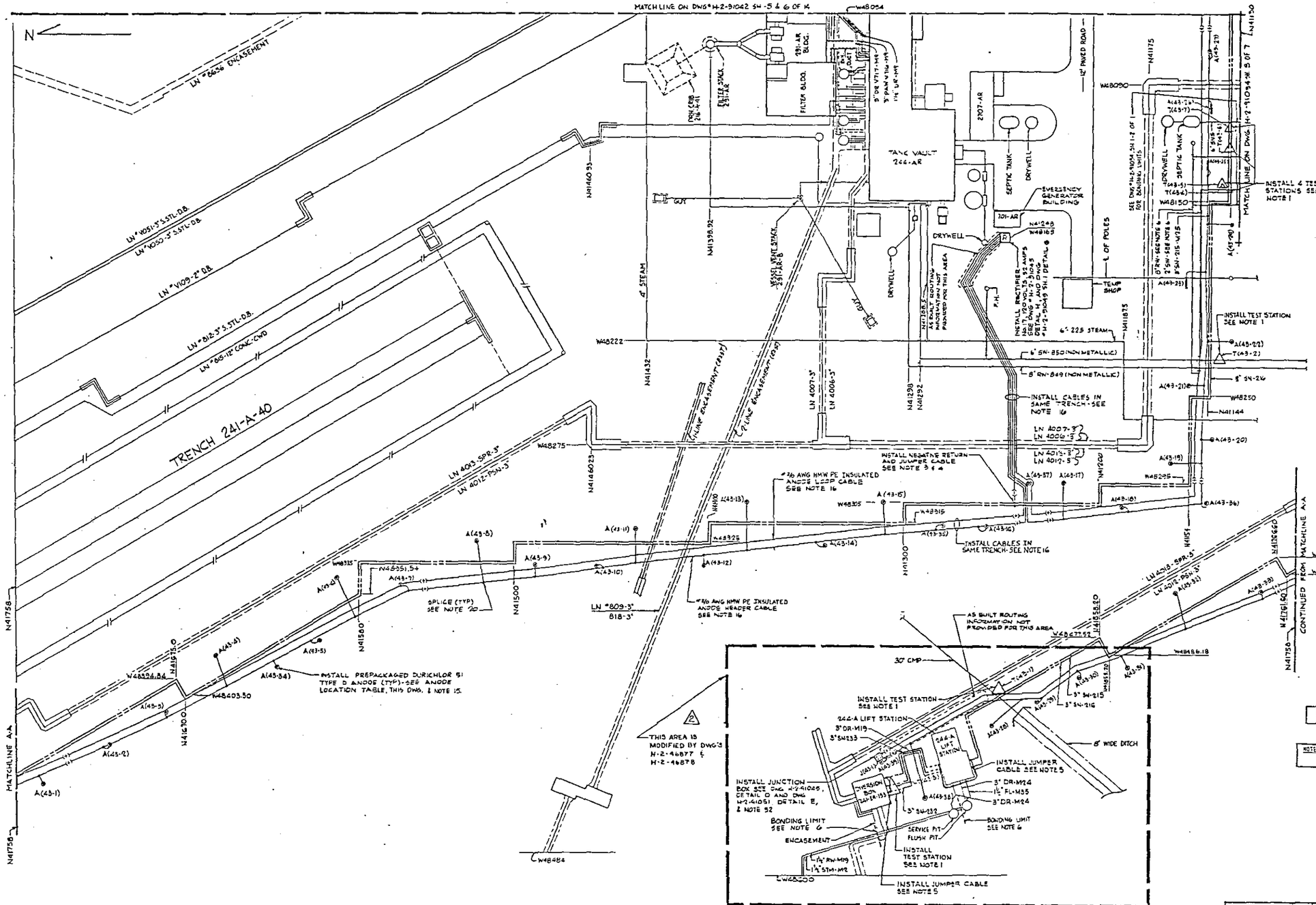

ANODE LOCATIONS (A)

*(43-1)	N41745 W48450	*(43-19)	N41362 W48785
*(43-2)	N41710 W48429	*(43-20)	N41142 W46272
*(43-3)	N41680 W48412	*(43-21)	N41154 W48745
*(43-4)	N41654 W48383	*(43-22)	N41132 W48722
*(43-5)	N41600 W48375	*(43-23)	N41115 W48192
*(43-6)	N41591 W48344	*(43-24)	N41132 W48162
*(43-7)	N41558 W48347	*(43-25)	N41144 W48132
*(43-8)	N41518 W48325	*(43-26)	N41164 W48103
*(43-9)	N41469 W48337	*(43-27)	N41164 W48073
*(43-10)	N41457 W48337	*(43-28)	N41163 W48513
*(43-11)	N41435 W48319	*(43-29)	N41150 W48510
*(43-12)	N41402 W48337	*(43-30)	N41159 W48498
*(43-13)	N41380 W48305	*(43-31)	N41144 W48491
*(43-14)	N41340 W48327	*(43-32)	N41120 W48155
*(43-15)	N41310 W48305	*(43-33)	N41176 W48154
*(43-16)	N41257 W48317	*(43-34)	N41123 W48188
*(43-17)	N41217 W48295	*(43-35)	N41120 W48347
*(43-18)	N41183 W48307	*(43-36)	N41144 W48305
*(43-37)	N41183 W48293	*(43-39)	N41170 W48542
*(43-38)	N41168 W48305		

NOTE: ANODES SHALL BE INSTALLED AS PER DWG H-2-91045, DETAIL A

ANODES A(43-23), A(43-28) AND A(43-29) INSTALLED AS PER DWG H-2-91045, DETAIL F

TEST STATIONS (T)

*(43-1)	N41610.4 W48504.3	(43-4)	N41133 W48144
*(43-2)	N41157.4 W48214.6	*(43-5)	N41150 W48144
*(43-3)	N41164.5 W48158	*(43-6)	N41156 W48119
		*(43-7)	N41164 W48115

NOTE: THIS DRAWING IS ASSOCIATED WITH CONSTRUCTION PACKAGE NO. 2.

NOTE: CATHODIC PROTECTION INSTALLATIONS SHOWN ON THIS DRAWING ARE ASSOCIATED WITH CONSTRUCTION PACKAGE NO. 2.

PIPELINES IDENTIFIED FOR PROTECTION: 6" & 8" SW, 3" & 4" DR-M19

RELEASED FOR CONSTRUCTION
BY DOE DATE 11/16/94

QA LEVEL III

N-2-91032 SH-2	WIRE-TO-PIPE CONNECTIONS						
N-2-91033	C.P. - ANODE LOCATION DETAILS						
N-2-91037	C.P. - ANODE PLAN						
N-2-91037 SH-2	C.P. - ANODE PLAN						
N-2-91044	C.P. - INSTALLATION DETAILS						
N-2-91045	C.P. - INSTALLATION DETAILS						
N-2-91046	C.P. - TEST STATION DETAILS						
N-2-91049 SH-2	AC FEED DETAILS						
N-2-91050 SH-2	TROBLEY DWG, STRESS & NOTES						
N-2-91051	C.P. - INSTALLATION DETAILS						
DWG NO	DESCRIPTION						
REFERENCE DRAWINGS		REVISION APPROVALS		REVISIONS			
		COMMENT PRT ISSUE NO		CHECK PRT ISSUE NO			2
		DRAWING STATUS					

						AS PER CEO-22110	2
						AS BUILT, INCORPORATED DFC NUMBERS: B-234-37, 57, 58, 59	1

DRAWING APPROVALS	DATE
CHIEF ENGINEER	
PROJECT ENGINEER	
SUPERVISING ENGINEER	
DESIGN ENGINEER	
DESIGNED BY	
DRAWN BY E. Occhi	

U. S. Department of Energy
Richland Operations Office

EBASCO SERVICES INCORPORATED

CATHODIC PROTECTION PLOT PLAN
TEST STATIONS - JUMPERS - ANODES

SCALE 1" = 20'	241-G	7801	
NONE	6-234	H-2-91043	3 / 7

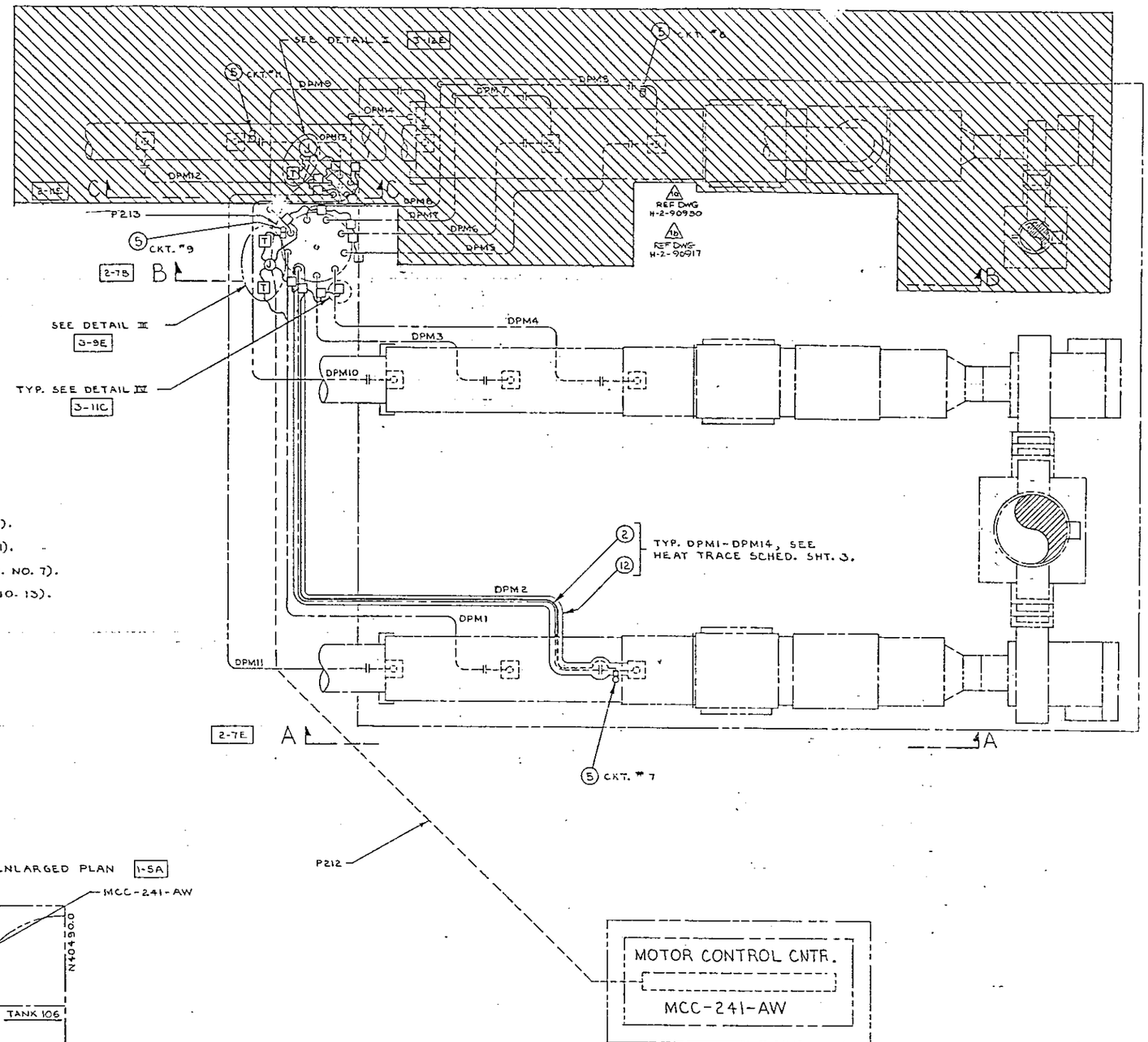

LEGEND:

8 - SIGNAL LIGHT (PT. NO. 5).

T - THERMOSTAT (PT. NO. 11).

□ - CONNECTION BOX (PT. NO. 7).

J - JUNCTION BOX (PT. NO. 13).

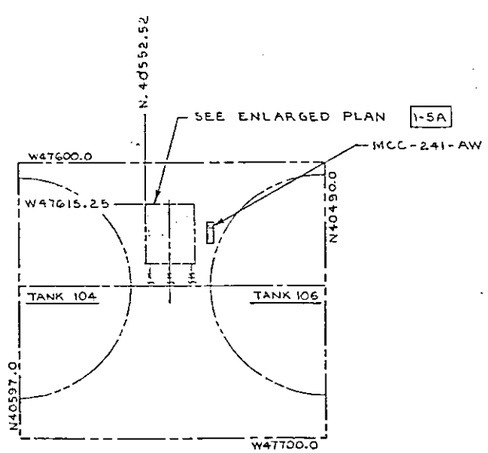

1 INSTALLATION

SCALE: 1" = 20'-0"

ENLARGED PLAN—CENTRAL EXHAUST STATION 1-11C

SCALE: 3/8" = 1'-0"

QTY.	PT. NO.	DESCRIPTION	MAT'L/REF.
X	1	INSTALLATION	
A/R	2	HEATING STRIP, SELF LIMITING, 120V, 4 W/FT. @ 50°F, RADIATION RESISTANCE >2 X 10⁸ RADS., 50°-150°F THERMO RATING.	CHEMELEX AUTO-TRACE, CABLE # 4ATV1
2	3	KIT, TANK ADAPTOR	CHEMELEX #AM-T
A/R	4	KIT, END SEAL, FOR "M" HEAT STRIPS.	CHEMELEX #AM-ES
4	5	LIGHT, SIGNAL, 120V, INCANDESCENT LAMP, WEATHER RESISTANT ENCLOSURE.	CHEMELEX #C77737
4	6	KIT, CONNECTION, FOR MOUNTING PT. NO. 5 TO 2½" DRAIN PIPE.	CHEMELEX # PVK
14	7	KIT, POWER CONNECTION, WITH MOUNTING BRACKET.	CHEMELEX # AM-BCS-10
A/R	8	TAPE, GLASS CLOTH, SILICON PRESSURE SENSITIVE ADHESIVE, ½" WIDE.	CHEMELEX #6554 PT. # C77221
A/R	9	TAPE, TANK APPLICATION, 2 mil THICK, HIGH TENSILE ALUMINUM FOIL COATED WITH HIGH SHEAR, FIRE RETARDANT, ACRYLIC PRESSURE-SENSITIVE ADHESIVE, 2½" WIDE	CHEMELEX CAT. # AT-150 PT. # C77731
2	10	KIT, BULB CLAMP, ADAPTABLE TO CONTOURED SURFACE, WITH DURABLE ADHESIVE FOR BONDING CLAMP STUDS.	CHEMELEX #35
3	11	THERMOSTAT, DOUBLE POLE, 35°-235°F, CALIBRATED DIAL, SINGLE THROW, PILOT DUTY: 125VA @ 125 VAC., 6' CAPILLARY, NEMA 4.	THERMON CAT. NO. 4-350235
A/R	12	INSULATION, PIPE, FIBERGLASS SELF-SEALING, VAPORPROOF, NONCOMBUSTIBLE, -60°-450°F. TO MEET GSA AND CORPS OF ENG'S SAFETY REQUIREMENTS AS WELL AS FEDERAL SEC: HH-I-558B. 2" THICK FOR 2½" PIPE.	McMASTER CARR CAT. # 5556K77 SEE GENERAL NOTES 2 & 3.
2	13	JUNCTION BOX, 4"X4"X4" JIC & OIL-TIGHT, NEMA 4.	COMMERCIAL
A/R	14	CONDUIT, ½" FLEX, LIQUID TIGHT & MISC. FITTINGS.	COMMERCIAL
A/R	15	CONDUIT, ¾" RIGID STL & MISC FITTINGS	COMMERCIAL
A/R	16	INSULATION, POLYURETHANE FOAM FROM ISOCYANATE FAMILY.	REICHOLD CHEM. INC. SEE GEN. NOTES 7 & 8.
4	17	CIRCUIT BREAKER; GROUND FAULT CIRCUIT INTERRUPTER, 20 Amp, SINGLE POLE, 120 VAC, 60 HZ.	SQ. "D" QO-120GFI
A/R	18	WIRE, #12 AWG, TYPE XHHW COPPER	
2	19	PLATE, ¼"	C.S. COMMERCIAL SEE NOTE 12.
4	20	ANGLE, 1"X1"X¼" X 20" LG.	C.S. COMMERCIAL
2	21	KIT, POWER CONNECTION, WITH MOUNTING BRACKET FOR PT. NO. 3	CHEMELEX # AM-BCS
A/R	22	CONCRETE	COMMERCIAL

FOR GENERAL NOTES SEE SHT. 2
QUALITY ASSURANCE LEVEL II

REFERENCE DRAWINGS	
H-2-90917	HVAC/ELEC HEAT TRACE PLAN
CVI-#20758	CHEMELEX HEAT TRACE
FCN-54706	IMPLEMENTING FCN.
H-2-90930 SH 1	ELEC PLANS & DETAILS
H-2-70339	HVAC EQUIP. PLANS
H-2-70333-(1-5)	ELEC. PWR. CONT. WIRE RUN
H-2-70324	ELEC. PLANS. SCHED & DET.
H-2-70358	INSTR. ELM. RAD. MONITOR
H-2-70325	ELEC. PWR. CNTRL. ELEC. DIA.

REVISIONS						
1	3/19	KSH	1 CHECK PRT ISSUE NO. 2	3/27/81	KSD	PER DCN-B-402-96 ZN F-7 DI ADDED REF DWG H-2-90917
1						PER DCN-B-402-96 ZN F-7 DJ ADDED REF DWG H-2-90930

DRAWING APPROVALS	DATE	U. S. Department of Energy, Richland Operations Office	
		Rockwell Hanford Operations, Richland, Washington 99352	
A. VALENZUELA	3-27-81	CENTRAL EXHAUST STATION. HEAT-TRACE INSTALLATION	
J. LOMAX	1/81	SCALE 3/8" = 1'-0" NOTED	241-AW / 5203
NONE	NOT REQ'D	H-2-91784	1 / 3

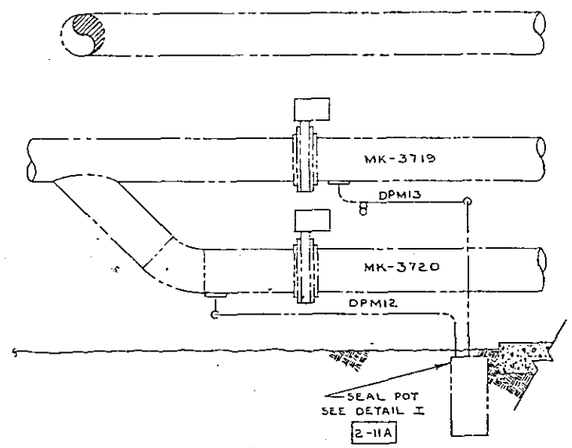

ELEVATION VIEW C-C 1-11F

SCALE: 3/4"=1'-0"

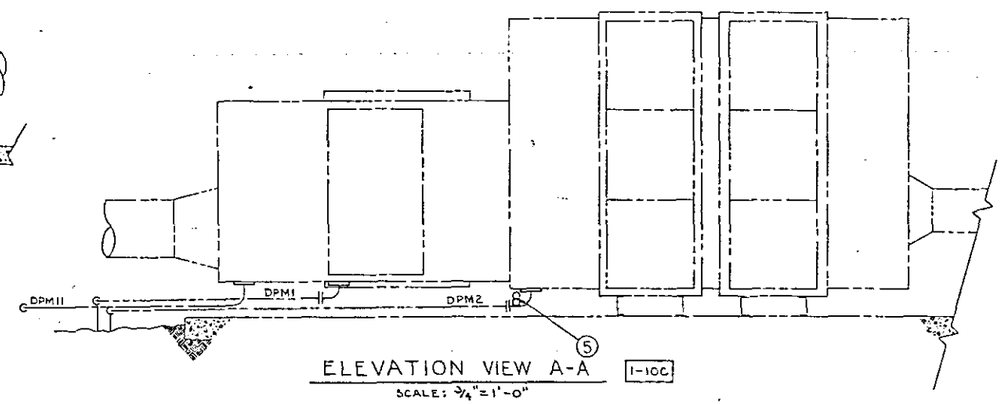

ELEVATION VIEW A-A 1-10C

SCALE: 3/4"=1'-0"

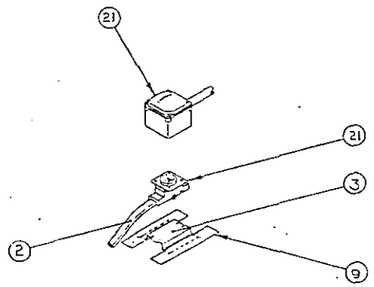

DETAIL VII 2-11B

SCALE: 1/8"

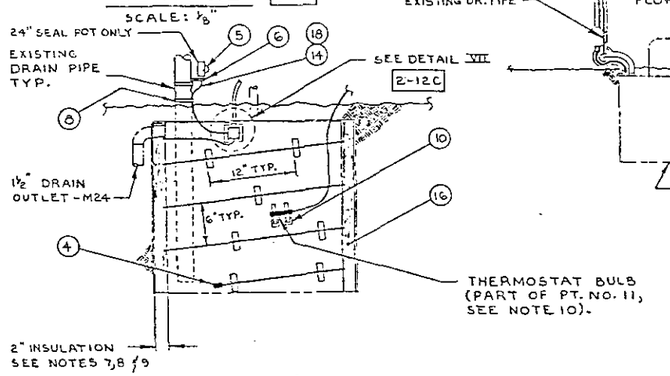

DETAIL I 2-11E 2-9B

SCALE: 1½"=1'-0"

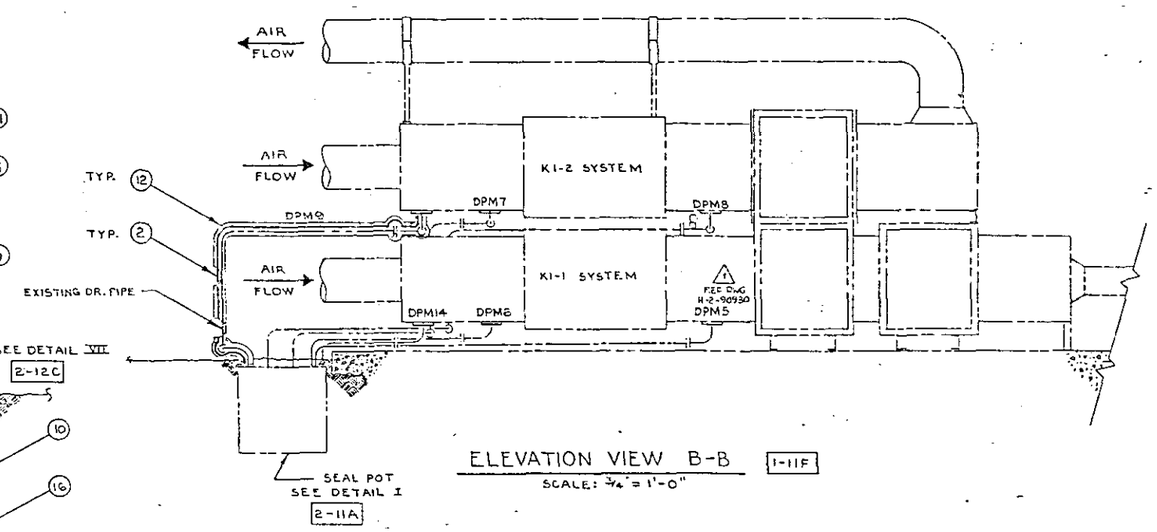

ELEVATION VIEW B-B 1-11F

SCALE: 3/4"=1'-0"

GENERAL NOTES

1. ALL CONDUIT TO BE FIELD ROUTED, SEE THIS DWG. FOR APPROXIMATE ROUTING.
2. THERMAL INSULATION FOR ABOVE-GRADE DRAIN PIPES SHALL BE 2" THICK MINERAL FIBER, INDUSTRIAL TYPE AND SHALL CONFORM TO F.S. HH-I-558, FORM D, TYPE III, CLASS 12, WITH A MINIMUM DENSITY OF 6.0 POUNDS PER SQUARE FOOT (LBS./FT²).
3. JACKETING FOR ABOVE-GRADE INSULATION SHALL BE PAPER LINED, EMBOSSED ALUMINUM NOT LESS THAN 0.016 INCH THICK, AND SHALL BE FURNISHED WITH ALUMINUM OR STAINLESS STEEL BANDS FOR FASTENING JACKET IN PLACE.

   JACKETING DESIGNED FOR FASTENING WITH POP-RIVETS OR SHEET METAL SCREWS IS NOT ACCEPTABLE. JACKETING SHALL BE FACTORY APPLIED AND SHALL HAVE OVERLAPPING ENDS THAT FORM A WEATHER-TIGHT SEAL BETWEEN INSULATION JOINTS.
4. ALL ELBOWS SHALL BE INSULATED AND HAVE JACKETING AS REQUIRED FOR ABOVE GRADE PIPING.
5. INSULATING CEMENT FOR FORMING INSULATION COVERING OVER FITTINGS AND VALVES SHALL BE A MINERAL-FIBER CEMENT CONFORMING TO ASTM-C449. CEMENTS THAT CONTAIN ASBESTOS ARE NOT ACCEPTABLE.
6. TAPE FOR COVERING INSULATION OVER FITTINGS SHALL BE THE SAME AS SUPPLIED TO COVER JOINTS ON PREMOLDED SECTIONS OF PIPE INSULATION.
7. POLYURETHANE INSULATION FOR BELOW-GRADE SEAL-POTS SHALL BE A SPRAYED URETHANE FOAM OF THE ISOCYANATE FAMILY. THE INSULATION SHALL HAVE A MAXIMUM "K" FACTOR OF 0.20 BTU-IN/HR-FT² °F AT 150°F WHEN TESTED PER ASTM-C177; A MINIMUM COMPRESSION STRENGTH OF 35 PSI AT 75°F WHEN LABORATORY TESTED PER ASTM-D1621; A MAXIMUM WATER ABSORPTION OF 0.10 LB/FT² OF SURFACE WHEN TESTED PER ASTM-D2842; AND A DENSITY OF 3 LB/FT².
8. THE URETHANE FOAM INSULATION IS A FIELD-SPRAYED COMBINATION OF TWO LIQUIDS. ONE CONSTITUENT IS A VOLATILE FLUOROCARBON, THE OTHER A LIQUID OF MINIMAL TOXICITY.
9. A PARTING AGENT, EQUAL TO AIRCAP TYPE "D" AS MANUFACTURED BY THE SEALED AIR CORPORATION SHALL BE USED TO PROVIDE THE VOID BETWEEN THE PIPE AND THE RIGID INSULATION. VOID WIDTH TOLERANCE IS PLUS OR MINUS ¼" FROM CONTOUR SHOWN ON DRAWINGS.
10. FOR PLACEMENT OF THERMOSTAT BULB (WITH AUTO-TRACE HEATING STRIP ON PIPE OR SEAL-POT), SEE CHEMELEX THERMOSTAT INSTALLATION INSTRUCTIONS.
11. FOR DETAILED INSTALLATION INSTRUCTIONS OF HEAT-TRACE COMPONENTS, SEE INSTRUCTIONS PROVIDED BY MANUFACTURER.
12. FIELD FABRICATE MOUNTING PLATE FOR JUNCTION BOXES AND THERMOSTATS. FOR ADDITIONAL MOUNTING INSTRUCTIONS, SEE VENDOR DATA SUPPLIED WITH COMPONENTS.
13. THE FOLLOWING PARTS SHALL BE PROCURED AS SPECIFIED WITHOUT SUBSTITUTION: PT. NO'S. 2, 3, 4, 5, 6, 7, 8, 9, 10, 11 & 21.
14. ALL ELECTRICAL EQUIPMENT SHALL BE U.L. LISTED OR F.M. APPROVED.

QUALITY ASSURANCE LEVEL II

DRAWING APPROVALS	DATE	U.S. Department of Energy Richland Operations Office
	7/11	Rockwell Hanford Operations Richland, Washington 99352
	1/4/91	CENTRAL EXHAUST STATION HEAT-TRACE INSTALLATION
A. VALENZUELA	1-3-91	
	1/1/91	
J. LOMAX	1/61	SHOWN 241-AW 6203
NONE	NOT REQ'D	H-2-91784 2 3

REV	DESCRIPTION	
1	PER DFC B-402-96 ZN 6-7 ADDED REF DWG H-2-90930	JWS 8-29-96 PSD 8-29-96

REVISION APPROVALS — REVISIONS

REFERENCE DRAWINGS: H-2-90930 SH-1 | ELECTRICAL PLANS & DETAILS

COMMENT PRT ISSUE NO 2 3/19/81 | CHECK PRT ISSUE NO 2 3/27/81

DRAWING STATUS: ISSUED

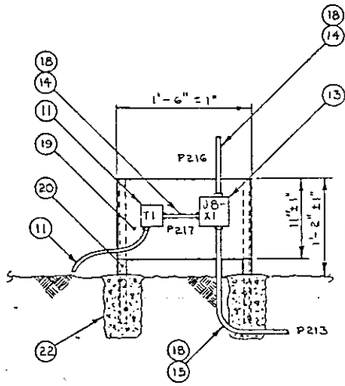

DETAIL II 1-9G
JUNCTION BOX & THERMOSTAT MOUNTING
SCALE: 1/8"

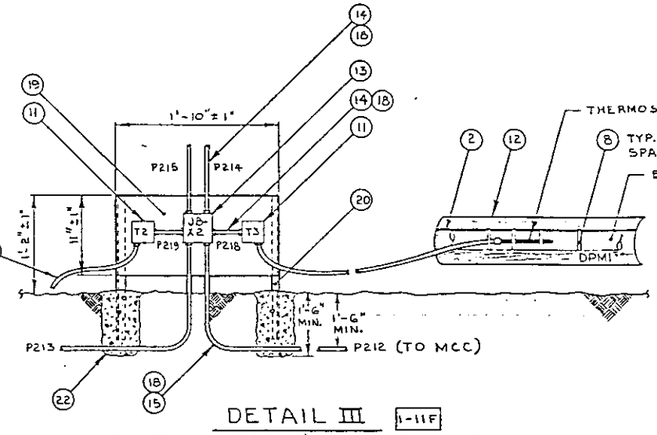

DETAIL III 1-11F
JUNCTION BOX & THERMOSTAT MOUNTING
SCALE: 1/8"

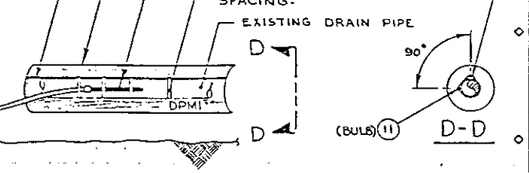

HEAT TRACE SCHEDULE

LINE NO.	FROM	DET.	TO	DET.
DPM1	24" SEAL POT	IV	K2-1 SYSTEM	VI
◇ DPM2	↑	IV	K2-1 SYSTEM	I, VI
DPM3		IV	K2-2 SYSTEM	VI
DPM4		IV	K2-2 SYSTEM	VI
DPM5		IV	K1-1 SYSTEM	VI
DPM6		IV	K1-1 SYSTEM	VI
DPM7		IV	K1-2 SYSTEM	VI
◇ DPM8	↓	IV	K1-2 SYSTEM	I, VI
DPM9	24" SEAL POT	IV	K1-2 SYSTEM	VI
DPM10	10" SEAL POT	IV	K2-2 SYSTEM	VI
DPM11	↑	IV	K2-1 SYSTEM	VI
DPM12		IV	MK-3720 TRAP	VI
◇ DPM13		IV	MK-3719 TRAP	I, VI
DPM14	10" SEAL POT	IV	K1-1 SYSTEM	VI

◇ NOTE: WHEN DETAILS V & VI ARE CALLED OUT TOGETHER, PART NOS 5 & 6 OF DETAIL V REPLACE PART NO. 4 OF DETAIL VI.

PANELBOARD "D"

MAIN CKT BRKR: 30A
BRANCH CKT BRKR: 10,000 AIC SYM
VOLTS: 120/240 VAC 1PH
LOCATION: MCC-241-AW
BUS: 100 AMP
S/N: AT BOTTOM

SERVICE	WATTS	A	P	Nº	A B	Nº	P	A	WATTS	SERVICE
CNTRL EXH STA. VENT. CONTROL	500	20	1	1		2	1	20	1040	EXH UNIT ENCL EXH-K2
EXH UNIT ENCL EXH-K1	1040	20	1	3		4	1	20	400	HVAC HEATER CONTROLLERS
SPARE	—	20	1	5		6	1	20	—	SPARE
DR. PIPE 24" SEAL-POT HEAT TRACE	—	20	1	7		8	1	20	—	DR. PIPE 24" SEAL-POT HEAT TRACE
24" SEAL POT HEAT TRACE	—	20	1	9		10	1	30	—	MAIN BREAKER
DR. PIPE 10" SEAL-POT HEAT TRACE	—	20	1	11		12				
RAD. MONIT. AIR VAC. PUMP	—	20	1	13		14	1	20	—	RAD. MONIT. AIR VAC. PUMP
SPACE	—	—	—	15		16	—	—	—	SPACE
SPACE	—	—	—	17		18	—	—	—	SPACE

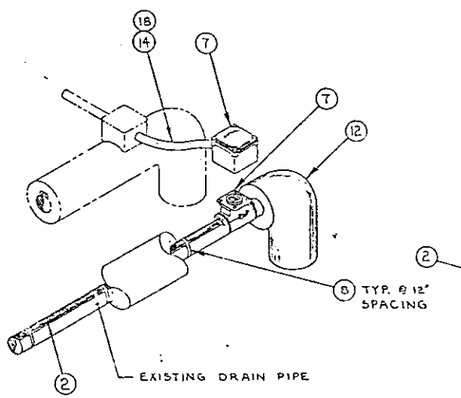

DETAIL IV ~ HEATING CABLE CONNECTION
SCALE: 1/8" 1-11E

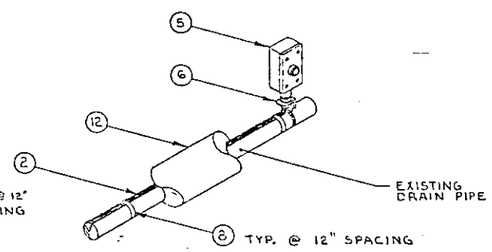

DETAIL V ~ SIGNAL LIGHT INSTALLATION
SCALE: 1/8"

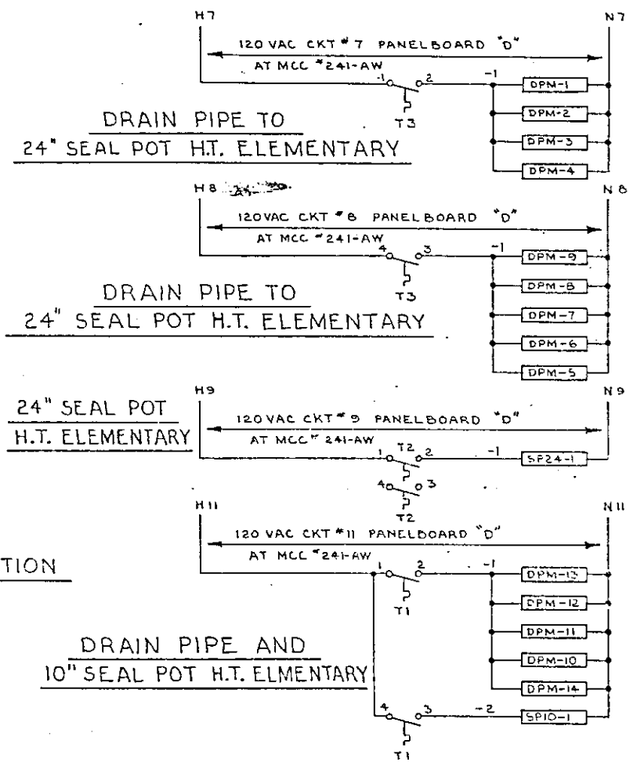

DRAIN PIPE TO 24" SEAL POT H.T. ELEMENTARY

DRAIN PIPE TO 24" SEAL POT H.T. ELEMENTARY

24" SEAL POT H.T. ELEMENTARY

DRAIN PIPE AND 10" SEAL POT H.T. ELMENTARY

WIRE RUN LIST

WIRE RUN #	# CK WIRE	AWG.	TYPE OF WIRE	FROM	VIA	TO	REMARKS
206	4	#12	XHHW	JB-X2	P218	T3	
207	2	#12	XHHW	JB-X2	P219	T2	
125	8	#12	XHHW	PNL BRD "D" AT MTR. CNTRL. CNTR. MCC-241-AW	P212	JB-[illegible]	
126	2	#12	XHHW	JB-X2	P213	JB-X1	
127	2	#12	XHHW	JB-X2	P214	HEATER STRIPS 241-AW-DPM1, DPM2, DPM3, & DPM4.	
128	2	#12	XHHW	JB-X2	P215	HEATER STRIPS 241-AW-DPM5, DPM6, DPM7, DPM8, DPM9	
129	2	#12	XHHW	JB-X1	P216	HEATER STRIPS 241-AW-DPM10, DPM11, DPM12, DPM13, DPM14	
208	3	#12	XHHW	JB-X1	P217	T1	

CONDUIT SCHEDULE

COND. NO.	COND. SIZE	WIRE RUN NUMBERS
P212	3/4"	125
P213	3/4"	126
P214	1/2"	127
P215	1/2"	128
P216	1/2"	129
P217	1/2"	208
P218	1/2"	206
P219	1/2"	207

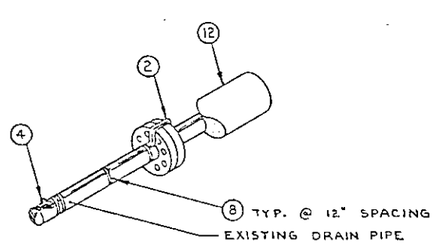

DETAIL VI ~ FLANGE AND TERMINATION
SCALE: 1/8"

QUALITY ASSURANCE LEVEL II

DRAWING APPROVALS	DATE
[illegible]	3/81
[illegible]	3/81
[illegible]	3/81
A. VALENZUELA	3/27/81
[illegible]	3/27/81
[illegible]	3/27/81

U. S. Department of Energy
Richland Operations Office
Rockwell Hanford Operations
Richland, Washington 99352

CENTRAL EXHAUST STATION HEAT-TRACE INSTALLATION

DRAWN BY	DATE	SCALE	DWG. NO.	SHEET NO.
J.A. LOMAX	1/81	1/8" = 1"	241-AW	8203

REVISION	DESCRIPTION
0	NONE

REFERENCE DRAWINGS	REVISION APPROVALS	REVISIONS
DESIGN SECTION N/A	COMMENT PRT ISSUE NO 2 3/19/81	CHECK PRT ISSUE NO 2 3/27/81
	DRAWING STATUS E.I.-EO316	

REVISION	NOT REQ'D
0	NOT REQ'D

DRAWING NO. H-2-91784 | SHEET 3 OF 3

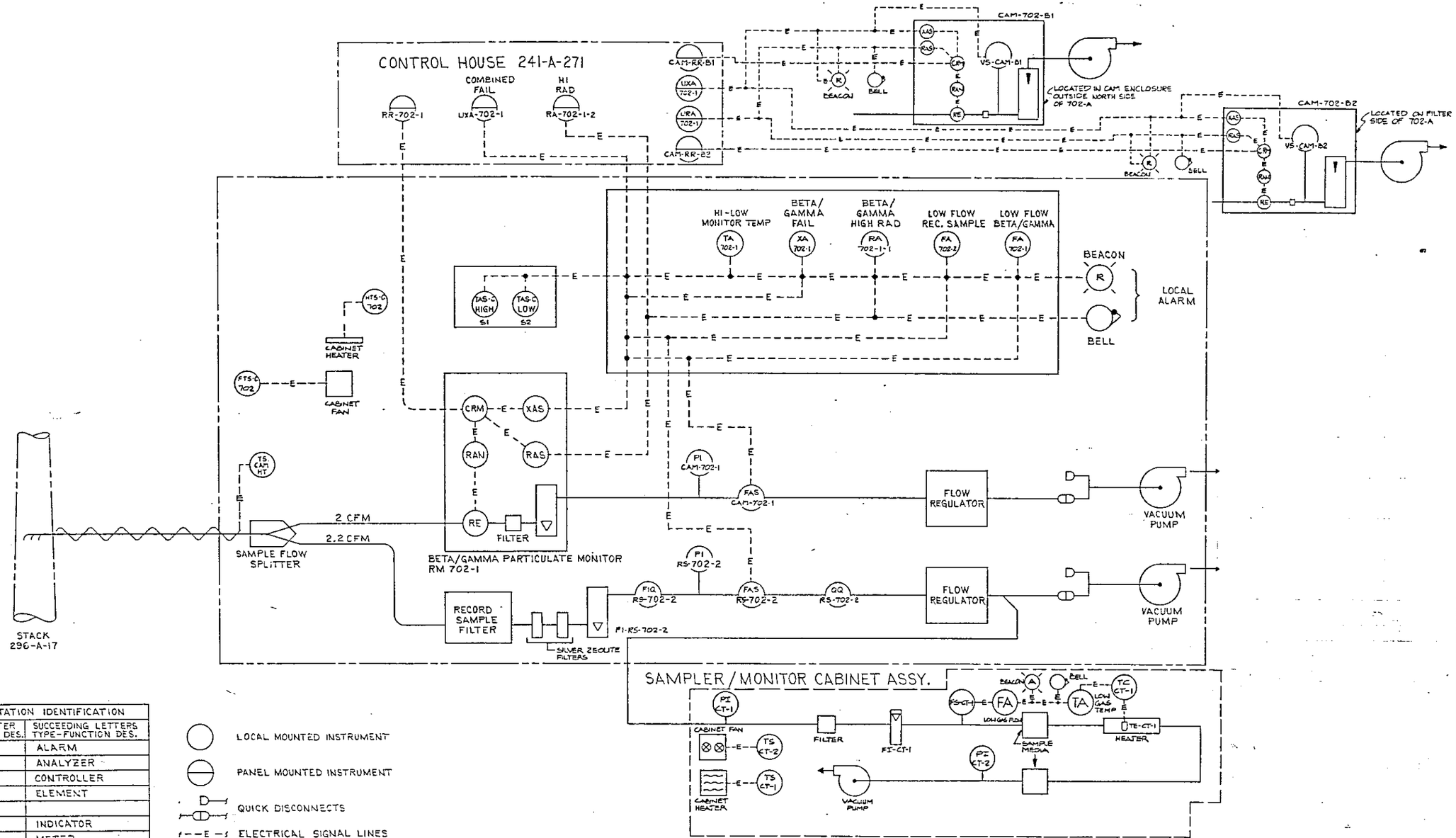

INSTRUMENTATION IDENTIFICATION		
	FIRST LETTER MEASURMENT DES.	SUCCEEDING LETTERS TYPE-FUNCTION DES.
A		ALARM
AN		ANALYZER
C		CONTROLLER
E		ELEMENT
F	FLOW	
I		INDICATOR
M	MANUAL	METER
Q	TIME	INTEGRATOR
R	RADIATION	RECORDER
S		SWITCH
T	TEMPERATURE	TRANSMITTER
CR	COUNT RATE	
X	UNCLASSIFIED	UNCLASSIFIED
P	PRESSURE	

LOCAL MOUNTED INSTRUMENT

PANEL MOUNTED INSTRUMENT

QUICK DISCONNECTS

ELECTRICAL SIGNAL LINES

PROCESS & EQUIPMENT LINES

EXISTING LINES, EQUIPMENT, OR BUILDING

PROCESS LINE, HEAT TRACED

FLOW METER

RS				INC. ECN 103628	5	ESSENTIAL DWG	IMPACT LEVEL 2
				INCORPORATE ECN 117180	4		
	RS			INC ECN 104152	3		
				INCORPORATED ECN 101788	2		
				IMPACT LEVEL RED LINES, ED 20270, ADDED PER ESR 8511, INCORPORATED DIRECT DRAWING CHANGE	1		

REVISIONS

COMMENT PRT ISSUE NO. 1 1-12-82 CHECK PRT. ISSUE NO. 1 1-25-82

DRAWING STATUS

DRAWING APPROVALS | DATE

J.E. DUNKS

U. S. Department of Energy
Richland Operations Office
Rockwell Hanford Operations
Richland, Washington 99352

FILTER BLDG, STACK MONITOR FLOW DIAGRAM 296-A-17

NONE | 241A | 5901

NONE | NOT REQD | H-2-92516 | 4 | 4

ELECTRIC HEAT COIL										
CVI NO.	EQUIP NO.	CFM	CAP KW	ELEC CHARACTERISTICS VOLTS	PH	HZ	CONTROL	SIZE (INCHES)	FACE VEL. MAX. FPM	MAX. AIR RESISTANCE IN WG
	K1-12-1	2000	20	480	3	60	SCR	$16\frac{1}{8} \times 18\frac{1}{4}$	975	0.05'
	K1-12-2	2000	20	480	3	60	SCR	$16\frac{1}{8} \times 18\frac{1}{4}$	975	0.05'
	K1-12-3	2000	20	480	3	60	SCR	$16\frac{5}{8} \times 18\frac{1}{4}$	975	0.05'
	K1-12-4	2000	20	480	3	60	SCR	$16\frac{1}{8} \times 18\frac{1}{4}$	975	0.05'

ELECTRIC HEATER CONTROLLERS								
CVI NO.	EQUIP. NO.	CAP KW	ELEC CHARACTERISTICS VOLTS	PH	HZ	CONTROL	TYPE	ENCLOSURE
	K1-13-1	42	480	3	60	RTD ΔT CONTROLLER	SCR	NEMA 4
	K1-13-2	42	480	3	60	RTD ΔT CONTROLLER	SCR	NEMA 4

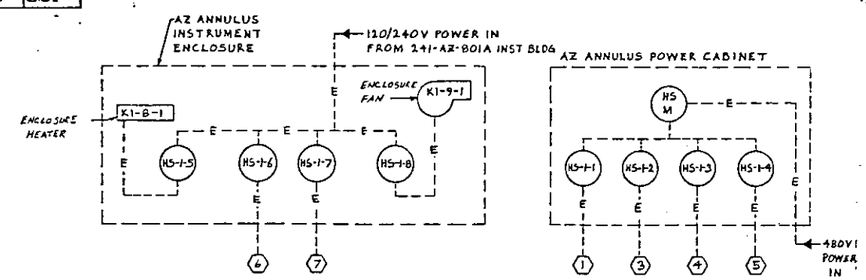

1. Legends and equipment schedules of existing equipment is shown on H-2-67283 and H-2-67284. Only existing equipment and instrumentation listed below shall be reused:

EXISTING EQUIPMENT	
K1-E-1	8.0 KW Heater
K1-E-2	8.0 KW Heater
MK-8501	42" x 54" Louver
MK-8502	42" x 54" Louver
FV-K1-1-1	10" Manual Butterfly Valve
FV-K1-1-2	8" Manual Butterfly Valve
FV-K1-1-3	10" Manual Butterfly Valve
FV-K1-1-4	8" Manual Butterfly Valve
FV-K1-2-1	16" Manual Butterfly Valve
FV-K1-2-2	16" Manual Butterfly Valve
HV-K1-2-1	16" Manual Butterfly Valve
HV-K1-2-2	16" Manual Butterfly Valve
K1-3-2	30 HP Centrifugal fan 7040 cfm Capacity at 11" wg
K1-1-1	Prefilter, 2 x 2, 85% NBS
K1-1-2	Prefilter, 2 x 2, 85% NBS
K1-2-1	Filter, 2 x 3, 80% DOP
K1-5-1	HEPA Filter, 2 x 2, 99.97% DOP
K1-5-2	HEPA Filter, 2 x 2, 99.97% DOP
K1-5-3	HEPA Filter, 2 x 2, 99.97% DOP
K1-5-4	HEPA Filter, 2 x 2, 99.97% DOP
K1-11-1	Prefilter, 2 x 1, 30% NBS
K1-11-2	Prefilter, 2 x 1, 30% NBS

EXISTING INSTRUMENTATION	
PT-K1-1-1	DIFFERENTIAL PRESSURE INDICATORS
PI-K1-2-1	
PI-K1-3-3	
PI-K1-3-4	
PI-K1-4-1	
PI-K1-4-2	
PI-K1-4-3	
PI-K1-4-4	
TC-K1-1-1	TEMPERATURE CONTROLLER (THERMOSTAT)

2. New equipment and instrumentation shall consist of:

NEW EQUIPMENT	
K1-12-1	20 KW HEATER
K1-12-2	20 KW HEATER
K1-12-3	20 KW HEATER
K1-12-4	20 KW HEATER
DTC-K1-1-1	DELTA T CONTROLLER
DTC-K1-1-2	DELTA T CONTROLLER
SCR-K1-1-1	SATURABLE CORE REACTOR
SCR-K1-1-2	SATURABLE CORE REACTOR
FI-K1-1-1	FLOW INDICATOR
TS-HFT-K1-1-1	HIGH FILTER TEMP. CONTROLLER
TS-HFT-K1-1-2	HIGH FILTER TEMP. CONTROLLER
TS-HST-K1-1-1	HIGH SHEATH TEMP. CONTROLLER
TS-HST-K1-1-2	HIGH SHEATH TEMP. CONTROLLER
CAM-101-AZ	CONTINUOUS AIR MONITOR
CAM-102-AZ	CONTINUOUS AIR MONITOR
RR-101-AZ	RADIATION RECORDER (ON CAM UNIT)
RR-102-AZ	RADIATION RECORDER (ON CAM UNIT)
QQ-CAM-101-AZ	TIME TOTALIZER
QQ-CAM-102-AZ	TIME TOTALIZER
QQ-RS-AZ	TIME TOTALIZER
CVT-K1-1-1	SIGNAL CONVERTER
CVT-K1-1-2	SIGNAL CONVERTER

NEW INSTRUMENTATION	
PS-K1-1-1	PRESSURE SWITCH
PS-K1-1-2	PRESSURE SWITCH
PS-K1-1-3	PRESSURE SWITCH
PS-K1-1-4	PRESSURE SWITCH
TE-K1-1-1	TEMP ELEMENT
TE-K1-1-2	TEMP ELEMENT
TE-K1-1-3	TEMP ELEMENT
TE-K1-1-4	TEMP ELEMENT
TI-K1-1-1	TEMP INDICATOR
TI-K1-1-2	TEMP INDICATOR
TI-K1-1-3	TEMP INDICATOR
TI-K1-1-4	TEMP INDICATOR
TI-K1-1-5	TEMP INDICATOR
RTD-K1-1-1	TEMP DETECTOR
RTD-K1-1-2	TEMP DETECTOR
RTD-K1-1-3	TEMP DETECTOR
RTD-K1-1-4	TEMP DETECTOR
PS-CAM-1-101-AZ	PRESSURE SWITCH
PS-CAM-1-102-AZ	PRESSURE SWITCH
FS-K1-1-1	AUXILARY SWITCH
DPI-RS-4-1	DIFFERENTIAL PRESSURE INDICATOR
FI-RS-AZ	FLOW INDICATOR
FIQ-RS-AZ	FLOW TOTALIZER
FS-RS-AZ	FLOW SWITCH
PI-RS-AZ	PRESSURE INDICATOR
HT-RS-AZ	HEAT TRACE
PI-K1-101-AZ	PRESSURE INDICATOR
PI-K1-102-AZ	PRESSURE INDICATOR

- INSTRUMENTS LOCATED IN AZ ANNULUS INSTRUMENT ENCLOSURE

3. ALARMS

FA-AZ-ANNULUS	AZ ANNULUS FAN FAIL ALARM
RA-101-AZ	HI RADIATION ALARM-101-AZ
RA-102-AZ	HI RADIATION ALARM-102-AZ
FA-101/102-AZ	CAM FAILURE ALARM 101 OR 102 AZ
FA-AZ-RS	AZ ANNULUS STACK RECORD SAMPLER FAIL ALARM

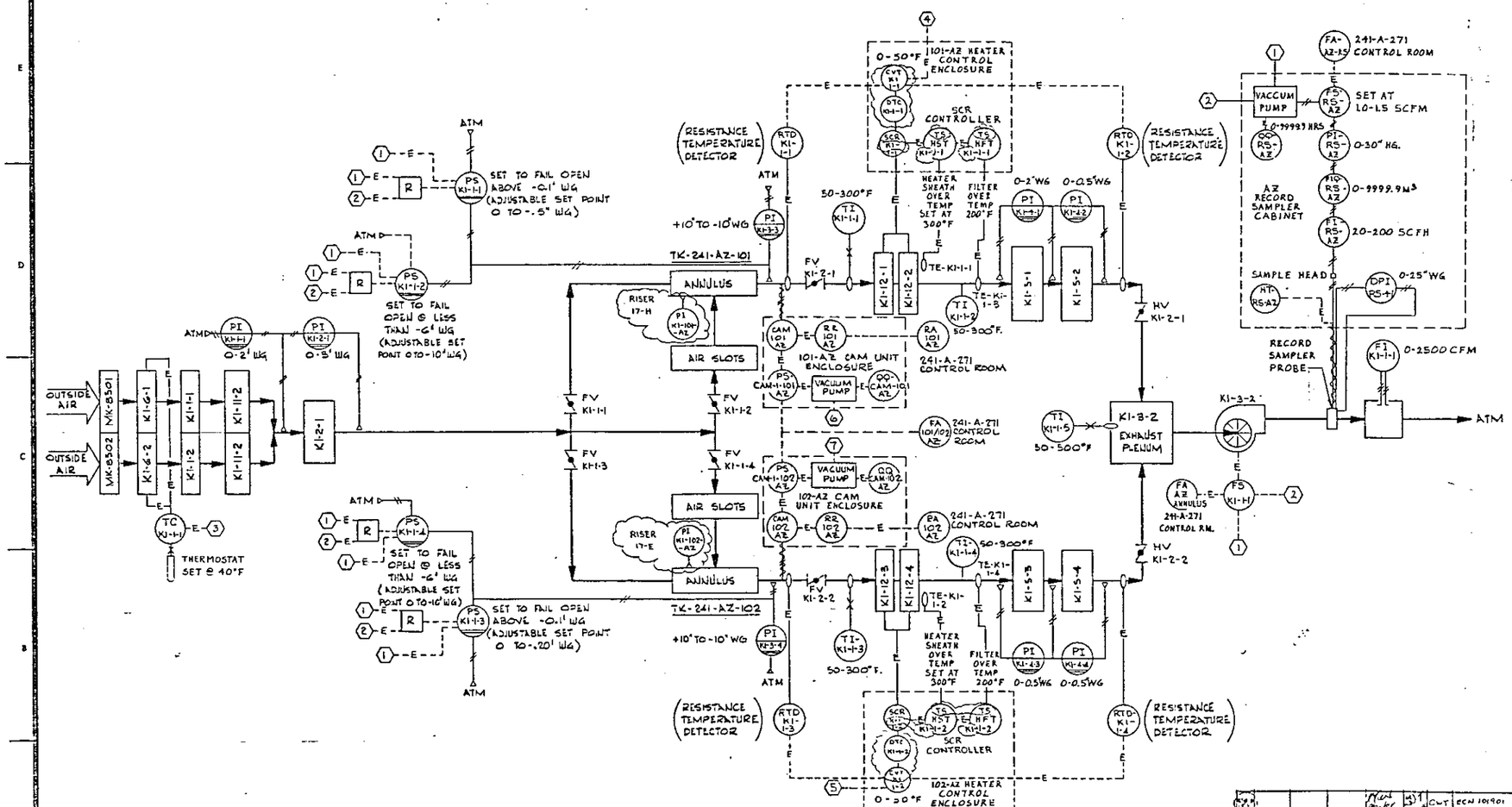

ANNULUS CONTROL DIAGRAM

H-2-95294	SAMPLER CABINET ASSEMBLY GENERIC STACK RECORD
H-2-92976	TANK FARM CAM ENCLOSURE
H-2-92366	ELECTRICAL
H-2-93240	HVAC MOD. HEATER ADD.
H-2-67284	VENT EQUIP SCHEDULE

REFERENCE DRAWINGS

REV NO								DESCRIPTION	REV NO
3							CWT	ECN 101901 INCORPORATED ECN 101781	3
2								RED LINES ADD NO IMPACT LVL PER ESR 8511, INCORPORATED DIRECT DRAWING CHANGE	2
1								D.I.-5-398 DIRECT DWG CHANGE PER	1

REVISION APPROVALS — REVISIONS

COMMENT PRT ISSUE NO — CHECK PRT ISSUE NO — 3

NEXT USED ON H-2-67582 — DRAWING STATUS DC 2503

THIS DWG MODIFIES DWG H-2-67283 & H-2-67284

ESSENTIAL DRAWING **IMPACT LEVEL 2**

DRAWING APPROVALS	DATE
N.A.	
	11/1/91
	11/1/91
	11/1/91
GA2UE2	9/26/91
	9/26/91
	11/1/91
	11/1/91

U. S. Department of Energy
Richland Operations Office

Rockwell Hanford Operations
Richland, Washington 99352

MODIFICATIONS - VENT. EQUIPMENT SCHEDULES & CONTROL DIAGRAM

SCALE	UNIT	DWG TYPE	SYSTEM	SEQUENCE
NONE	241 AZ	8900		

CLASSIFICATION	DWG NO	SHEET	REV
NONE	H-2-92964	1	1

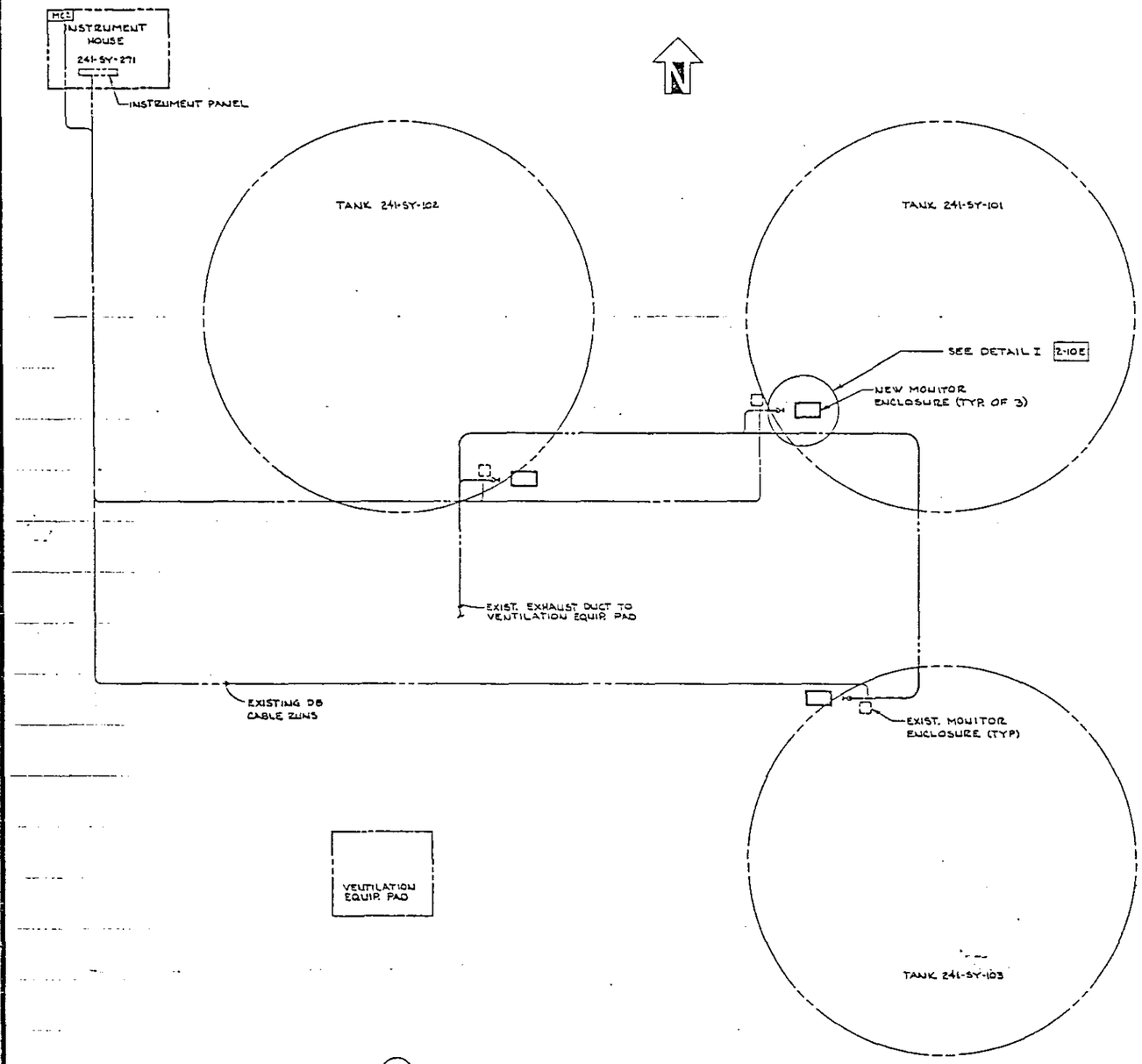

1 INSTALLATION
SCALE: 1"=10'

QTY	PT. NO.	REF. DES.	DESCRIPTION	MATL/REF.
X	1		INSTALLATION	
3	2		ASSEMBLY - ENCLOSURE	H-2-92976-1
X 3	3		ASSEMBLY - CONCRETE PAD	
AR	4		HEAT TRACE, SELF REGULATING 750 WATTS MAXIMUM	RAYCHEM 38TVI-CT
AR	5		CONCRETE	SEE NOTE 11
AR	6		WIRE FABRIC, WELDED SMOOTH, 6X6 - W8 X W8	ASTM A185CS
AR	7		INSULATION, 3/4" ELASTOMERIC CELLULAR, PER HPS-114M, TYPE E, CLASS I, INSTALL PER MANUFT'R INSTRUT.	COML
AR	8		TUBING, 3/4" O.D. TUBE X .035 WALL 304L SST. ASTM A-269	COML
AR	9		TUBING, 1/4" O.D., POLYETHYLENE, WITH FITTINGS	COML
12	10		ANCHOR BOLT, 3/8" X 2 3/4", WEDGE, W/NUT	COML, CS
AR	11		CONDUIT, FLEX, 3/4" W/FITTINGS, LIQUID TITE	COML
AR	12		CONDUIT, RIGID, 3/4", W/FITTINGS, PVC COATED	COML
AR	13		CONDUIT, RIGID, 3/4", W/FITTINGS	COML
AR	14		MISCELLANEOUS MOUNTING HDWR	COML, CS
AR	15		WIRE, #8 AWG, 600V, TYPE THWN	COML, CU
AR	16		WIRE, #12 AWG, 600V, TYPE THWN	COML, CU
AR	17		WIRE, #14 AWG, 600V, TYPE THWN	COML, CU
AR	18		PIPE, 1/2", SCHEDULE 40, ASTM A-312GRTP	COML, 304L SST
AR	19		PIPE, 3/8", SCHEDULE 40, ASTM A-312GRTP	COML, 304L SST
2	20		COUPLING, 1/2" NPT	COML, 304L SST
1	21		REDUCER, 1/2" NPT TO 3/8" NPT	COML, 304L SST
1	22		FLANGE, BLIND, 4", 150#, ASTM A-182 F	COML, 304L SST
12	23		FITTING, TUBE, 1/2" NPT TO 3/4" O.D. TUBING	SWAGELOK SS-810-1-12
1	24		GASKET, 4" RAISED FACE, NEOPRENE, 1/16" THICK, 40-50 OURO	COML

WELDING AND INSPECTION REQUIREMENTS

FABRICATION	1. WELDING STANDARD	☐ AWS ____ ■ ASME B 31.1 ■ AWS D1.1/D1.3 ■ HWS-10053 OPTIONAL (IN HOUSE)
	2. PROCEDURE SPEC. & PERFORMANCE QUAL.	■ ASME SECT IX ■ AWS D1.1/D1.3 ☐ ____
	3. FILLER MATERIAL	■ ASME SEC. II MATCH AS ____ ☐ ____
INSPECTION	4. VISUAL INTL	■ WELDING STD. IN PQ ■ SPP 2.5.08 (IN HOUSE) ☐ INTLP ☐ ROOT PASS ■ FINAL
	5. PENETRANT INTL	■ WELDING STD. IN PQ ■ SPP 2.6.0-A (IN HOUSE)
	6. MAGNETIC PARTS INTL	■ WELDING STD. IN PQ ■ SPP 2.2.0-A (IN HOUSE)
	7. ULTRASONIC INTL	☐ WELDING STD. IN PQ ☐ ____
	8. RADIOGRAPH INTL	☐ WELDING STD. IN PQ ☐ ____
	9. LEAK TEST INTL	☐ ____

■ OTHER POINTS PT AND MT ON FINAL PASS

FOR GENERAL NOTES SEE SH. 2

THIS DWG. SUPERSEDES H-2-37756

UNLESS OTHERWISE SPECIFIED DIMENSIONS ARE IN INCHES
TOLERANCES ON:
DECIMALS .X ± .1, .XX ± .06 ANGLES ± 3° FRACTIONS ±
DO NOT SCALE PRINT

FORMAL DOCUMENT REVIEW HAS BEEN WAIVED FOR REV. 0 IN ACCORDANCE WITH E.O. 03919 DATED 12/14/82.

QUALITY ASSURANCE LEVEL : I, II

HPS-512-AC	PLACING REINF. CONC.
HPS-510-AC	BATCHING & DEL. OF CONC.
HPS-1-2-7	EQUIPMENT NAMEPLATES
H-2-37847	ANNUN. WIRING DIAG.
H-2-37761	ANNUN. WIRING DIAG.
H-2-37760	INSTRUM. PNL. WIRING
H-2-37758	INSTRUM. PNL. ARRANG.
H-2-37757	ENG. FLOW DIAGRAM
H-2-37744	VENT. AIR FLOW DIAG.
H-2-37734	ELEC. ONE-LINE DIAG.
H-2-37732	ELEC. SITE PLAN
H-2-37700	DRAWING INDEX

REFERENCE DRAWINGS
NEXT USED ON H-2-37757 SH. 3

REV. NO.	REVISION APPROVALS	DESCRIPTION	REV. DATE
0	COMMENT PRT ISSUE NO. 2 12-15-82		

REVISIONS
CHECK PRT ISSUE NO. ____ DATE ____
DRAWING STATUS

DRAWING APPROVALS	DATE
R. R. BEVINS	

U. S. Department of Energy
Richland Operations Office
Received Hanford Operations
Richland, Washington 99352

ANNULUS EXHAUST RADIATION MONITOR MODIFICATIONS

SCALE	DRAWN BY	PLANT NO.	DRAWING NO.
AS NOTED	241-SY	7108	
NONE	NOT REQD	H-2-92999	1 / 2

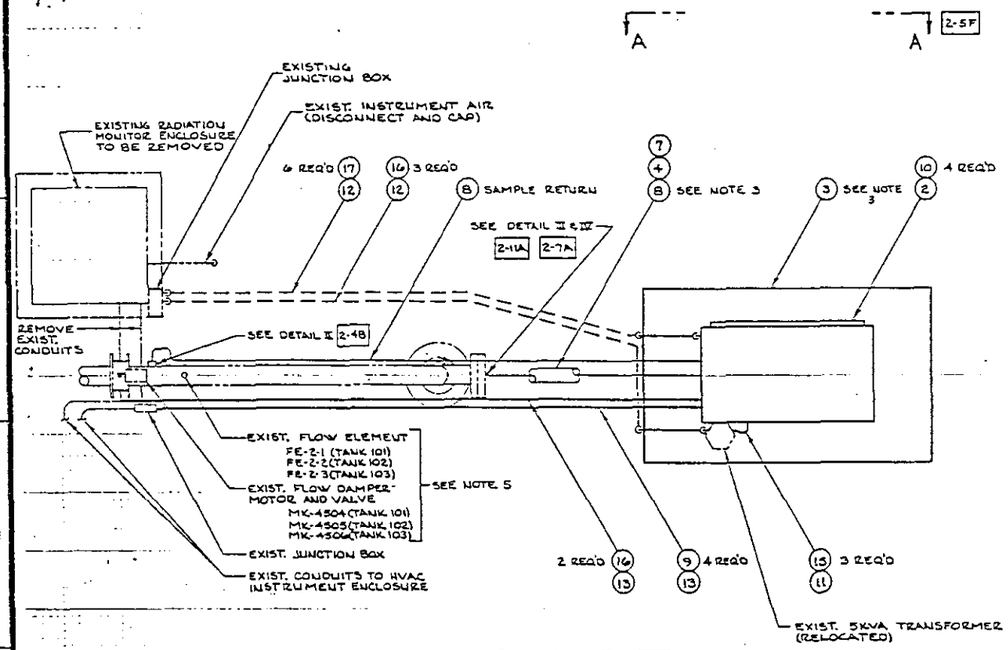

DETAIL I 1-7E

SCALE: 1" = 1'-0"

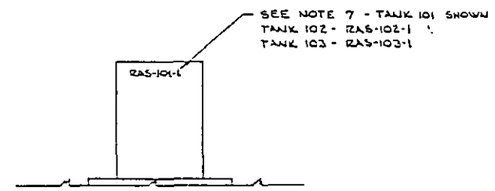

VIEW A-A 2-8G

SCALE: 1½" = 1'-0"

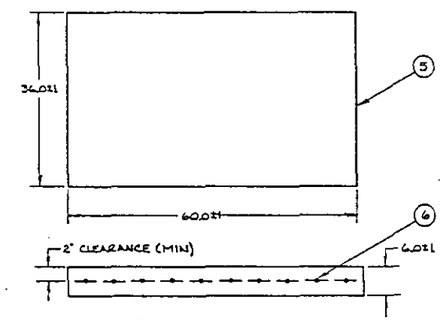

3 ASSEMBLY

SCALE: 1" = 1'-0"

GENERAL NOTES:

1. ELECTRICAL INSTALLATION SHALL CONFORM TO THE 1981 EDITION OF THE NATIONAL ELECTRICAL CODE.
2. CONDUIT RUNS ARE SHOWN DIAGRAMMATICALLY. FIELD ROUTE AND SUPPORT AS REQUIRED.
3. FIELD LOCATE CONCRETE PADS AND MONITOR ENCLOSURES APPROXIMATELY AS SHOWN TO FACILITATE SAMPLE LINE INSTALLATION. SAMPLE LINE TO HAVE A MAXIMUM OF 110° OF BENDS WITH A MINIMUM RADIUS BEND OF 8".
4. DETAILS AND DIAGRAMS SHOWN ARE FOR TANK 101, TANKS 102 & 103 ARE SIMILAR. REPLACE 101 DESIGNATOR WITH 102 & 103.
5. REMOVE ANNULUS EXHAUST PRESSURE SWITCH PS-1-2-101 AND AIR FLOW TRANSMITTER FROM EXISTING ENCLOSURE AND RELOCATE IN NEW ENCLOSURE. REROUTE WIRING AND AIR LINES AS SHOWN. REF. DWG. H-2-37744.
6. ONLY THE ASSEMBLIES SHOWN IN DETAILS III AND IV ARE QA LEVEL I. ALL PARTS ARE COMMERCIAL.
7. PERMANENTLY MARK INFORMATION SHOWN WITH 1.0" HIGH BLACK CHARACTERS. LOCATE APPROXIMATELY AS SHOWN.
8. ALL BURIED CONDUIT SHALL BE A MINIMUM OF 24" BELOW GRADE.
9. COAT ALL STAINLESS STEEL CONNECTIONS WITH "NICKLE NEVER SIEZE" PRIOR TO INSTALLATION
10. ENGRAVE NEW LEGEND PLATES FOR ANNUCIATOR PANEL (REF. DWG. H-2-37847) PER THE FOLLOWING:
    DROP NO 41 - ANNULUS SAMPLE SYSTEM FAILURE SY-101
    " " 42 - ANNULUS SAMPLE SYSTEM FAILURE SY-102
    " " 43 - ANNULUS SAMPLE SYSTEM FAILURE SY-103
    PER HPS I-2-7
11. CONCRETE SHALL CONFORM TO HPS-510-AC, HAVE A MINIMUM COMPRESSIVE STRENGTH OF 3000 PSI AT 28 DAYS, MAXIMUM AGGREGATE SIZE OF 1½". FORMING, PLACING, FINISHING AND CURING SHALL BE IN ACCORDANCE WITH HPS-512-AC.

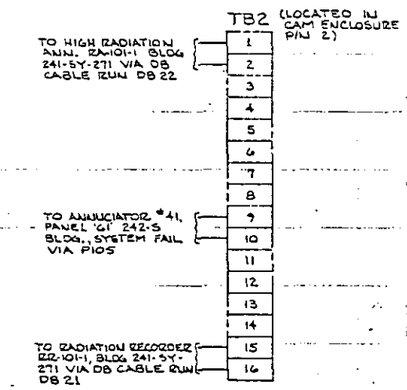

CONNECTION DIAGRAM
CAM ENCLOSURE

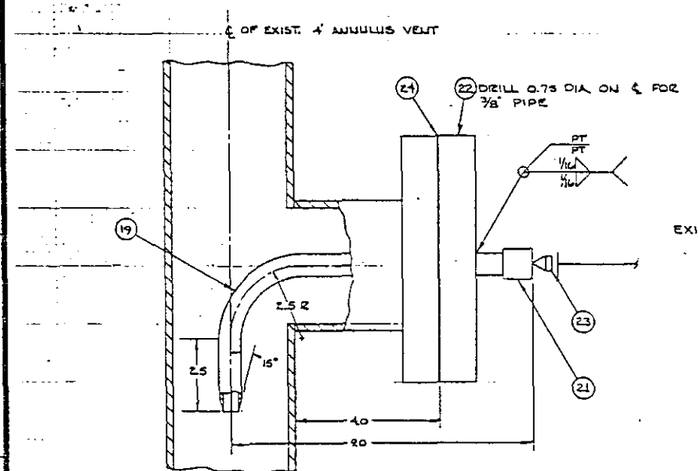

DETAIL III 2-11F

SCALE: ½" = 1'

TANK 102

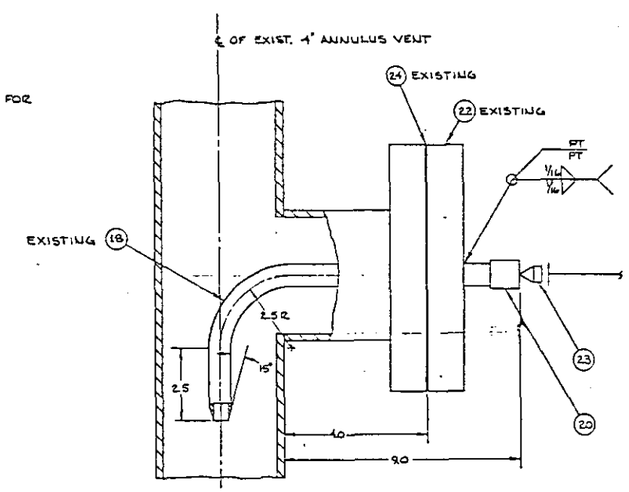

DETAIL IV 2-10F

SCALE: ½" = 1'

TANK 101, TANK 103

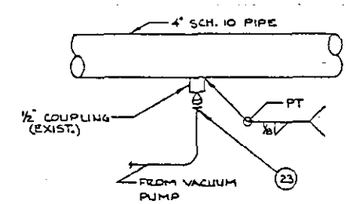

DETAIL II 2-11F

QUALITY ASSURANCE LEVEL I, II

DRAWING APPROVALS	DATE	U. S. Department of Energy, Richland Operations Office; Reclamation Hanford Operations, Richland, Washington 99352
		MANNULUS EXHAUST RADIATION MONITOR MODIFICATIONS
R. R. BEVINS		
		AS NOTED · 241-SY · 7901
		NONE · NOT REQ'D · H-2-92999 · 2 · 2

REVISIONS: 0 — COMMENT PKT BRUE NO. 2, 12-15-82

REFERENCE DRAWINGS: NEXT USED ON H-2-92964 SH. 1

DRAWING STATUS

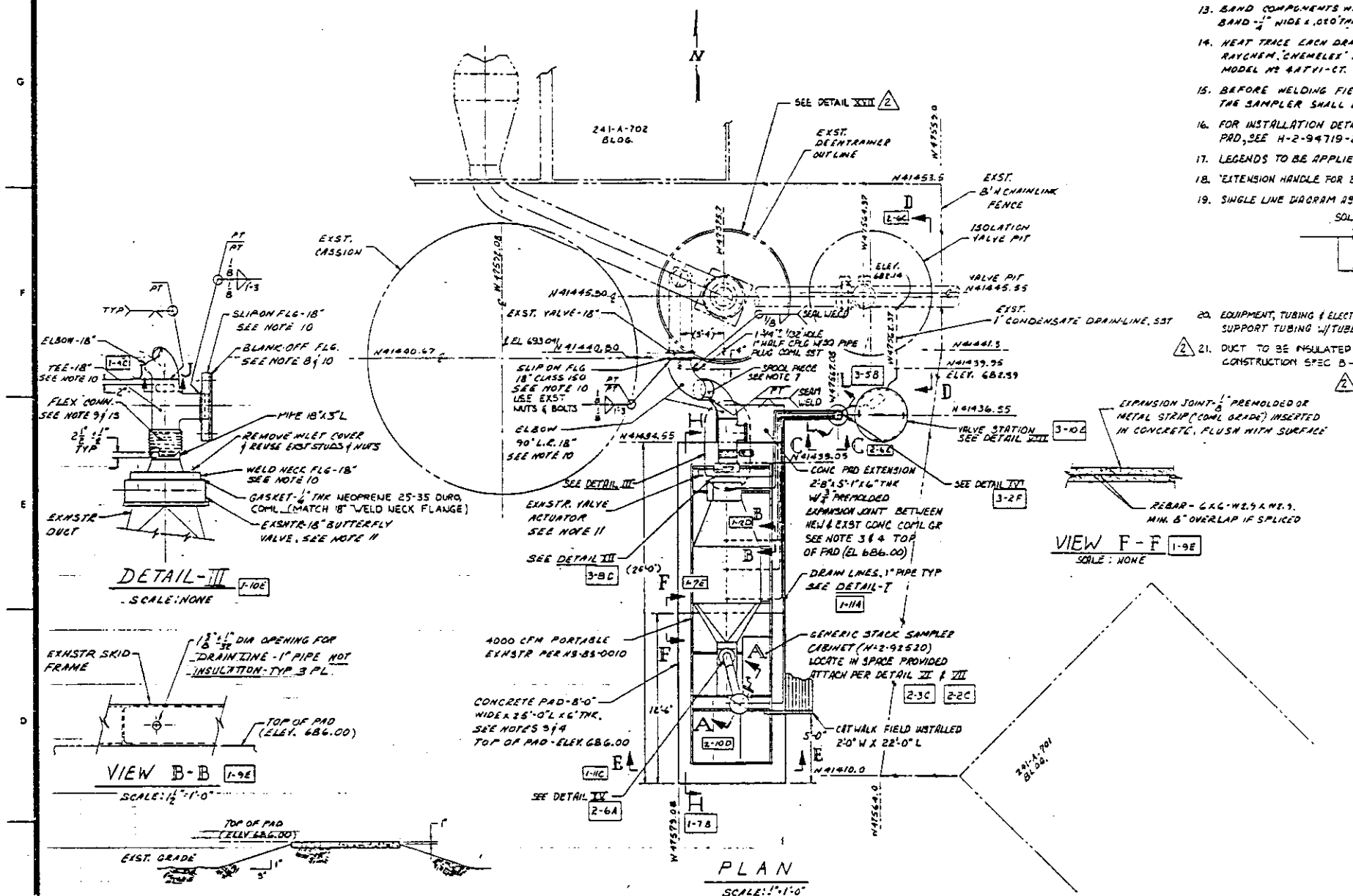

13. BAND COMPONENTS WITH BAND-IT CO., BUCKLE-1/4" S16E, N° C26T. BAND-1/4" WIDE x .020" THK, N° C20E - AS REQ'D.
14. HEAT TRACE EACH DRAINLINE, VALVES AND SEAL POT WITH RAYCHEM, "CHEMELEX" DIV. AUTO-TRACE SELF-REGULATING HEATER MODEL N° 4BTV1-CT.
15. BEFORE WELDING FIELD VERIFY THAT IN FINAL ASSEMBLY THAT THE SAMPLER SHALL BE POINTING DOWNWARD.
16. FOR INSTALLATION DETAIL OF CONDUIT BURRIED UNDER CONCRETE PAD, SEE H-2-94719-2 DETAIL I.
17. LEGENDS TO BE APPLIED PER HS-83-0015, TYPE B, YELLOW AMERCOAT 33.
18. "EXTENSION HANDLE FOR BYPASS VALVE (SEAL POT DRAIN LINE) UNDER THIS COVER".
19. SINGLE LINE DIAGRAM AS SHOWN, TO BE PLACED ON COVER -

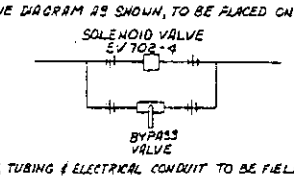

20. EQUIPMENT, TUBING & ELECTRICAL CONDUIT TO BE FIELD ROUTED & FIELD SUPPORTED. SUPPORT TUBING W/ TUBE CLAMPS & FASTENERS AS REQ'D.
2 21. DUCT TO BE INSULATED AFTER INSTALLATION OF HEAT TRACE WIRING (SEE EO 17942) CONSTRUCTION SPEC B-399-CI REV 0
2 22. DUCT INSULATION AND METAL JACKETING SHALL BE THE SAME AS THAT PROVIDED FOR FOR VENTILATION SYSTEM UPGRADE (MAKE SAME AS EXISTING).

GENERAL NOTES:

1. IDENTIFY PER HS-83-0015 TYPE 2 WITH DWG N°, DWG REV. N° IN LOCATION INDICATED WITH 1/4" HIGH CHARACTERS.
2. REMOVE ALL BURRS AND BREAK SHARP EDGES UNLESS OTHERWISE NOTED.
3. CONCRETE WORK SHALL CONFORM TO ALL REQUIREMENTS OF "SPECIFICATION FOR STRUCTURAL CONCRETE", ACI-301-72 (REV. 1981), EXCEPT AS MODIFIED BY THE SUPPLEMENTAL REQUIREMENTS BELOW:
   A.) MINIMUM CONCRETE COMPRESSIVE STRENGTH OF 3000 PSI AT 28 DAYS.
   B.) REINFORCE STEEL SHALL CONFORM TO ASTM A185.
   C.) CEMENT SHALL BE TYPE II OF ASTM C150
   D.) AIR-ENTRAINING ADMIXTURES SHALL BE USED IN CONCRETE CONFORMING TO "SPECIFICATION FOR AIR-ENTRAINING ADMIXTURES FOR CONCRETE", ASTM C260.
   E.) A MAXIMUM SLUMP OF 4 INCHES.
   F.) A MAXIMUM SIZE OF COARSE AGGREGATE OF 1 1/2".
   G.) FINISH OF SLAB SURFACES SHALL BE TROWELED FINISH.
4. EXCAVATION, BACKFILL, AND FINISH GRADING SHALL BE IN ACCORDANCE WITH HPS 150-4.C.
5. FIELD VERIFICATION OF DIMENSIONS SHALL BE DONE PRIOR TO FABRICATION/INSTALLATION.
6. FIELD ROUTE 3/8" O.D. TUBE x .035 WALL, ASTM A269 GR TP 304L SST AND SST SWAGELOK FITTING AS REQ'D; FROM SAMPLER PROBE TO CAN UNIT. CONNECT TO CAN UNIT WITH 3/8" BULKHEAD UNION, SWAGELOK N° SS-810-6-1. MIN. BEND R = 1 1/2", TOTAL BENDS NOT TO EXCEED 110°. TUBE SHALL BE LINED WITH RAYCHEM CO. "CHEMELEX" AUTOTRACE SELF REGULATING HEATER MODEL N° 3BTV-CT AND INSULATED WITH 1/2" ELASTOMERIC CELLULAR INSULATION, COML PER HPS-114-M TYPE E, CLASS-I.
7. AN APPROX 9" L EXTRA SECTION OF PIPE SHALL BE ALLOWED AT THIS JOINT TO PERMIT CUTTING TO DESIRED LENGTH AT JOB SITE.
8. BLANK OFF FLG WITH BLIND FLG., 1/2" THK PLATE, 304L SST, ASTM A240; WITH NEOPRENE GASKET, 1/8" THK, 25-35 DURO. FLG & GASKET TO MATCH 18" SLIP-ON FLG. USE 1 1/8"-7UNC-2A x 3 3/4" L BOLTS W/ MATCHING NUTS COML SST.
9. USE FLEXIBLE HOSE 18" I.D. x 12" LG FROM FLEXAUST, CALLAHAN MINING CORP., TYPE CM C4X, PLAIN CUT END, MATL-NEOPRENE.
10. ALL PIPING AND FITTINGS MATERIAL SHALL BE 304 SST. UNLESS OTHERWISE SPECIFIED. PIPING AND FITTING TO BE SCHEDULE 10S - CLASS-150" ASTM A312 AND ASTM A182 F, UNLESS OTHERWISE NOTED.
11. REMOVE EXISTING GEAR OPERATOR AND INSTALL DEMCO-SERIES "R" SPRING DIAPHRAGM ACTUATOR, NORMALLY OPEN, 15 PSI SUPPLY PRESSURE. OPEN/CLOSE OPERATION OF 18" BUTTERFLY VALVE AT 30" H_2O VACUUM.
12. INSULATE PER HPS-114-M, TYPE E, 3/4" THK FLEXIBLE ELASTOMERIC CELLULAR INSULATION, JACKET CLASS 4, COML.

WELDING AND INSPECTION REQUIREMENTS			
FABRICATION	1. WELDING STANDARD	☐ ASME _____	■ ANSI B31.0 ■ ANSI B31.1/B31.3
			■ HS-83-0013 OPTIONAL (IN-HOUSE)
	2. PROCEDURE SPEC. & PERFORMANCE QUAL.	■ ASME SECT. IX	■ ANSI B31.0 ☐ _____
	3. FILLER MATERIAL	■ ASME SECT. IX AND A5	☐ _____
INSPECTION	4. VISUAL (VT) PROCEDURE ONLY	■ WELDING STD. IN (1)	■ SPP-2.5.0 (IN-HOUSE)
		☐ FITUP	☐ ROOT PASS ■ FINAL
	5. PROCEDURE ONLY PT (PENETRANT)	■ WELDING STD. IN (1)	■ SPP-2.1.0 (IN-HOUSE)
	6. MAGNETIC PART. (MT)	☐ WELDING STD. IN (1)	☐ _____
	7. ULTRASONIC (UT)	☐ WELDING STD. IN (1)	☐ _____
	8. RADIOGRAPH (RT)	☐ WELDING STD. IN (1)	☐ _____
	9. LEAK TEST (LT)	☐ _____	☐ _____

■ OTHER REQTS. PT FINAL PASS
VT ACC CRITERIA B PER HS-83-0009 (IN-HOUSE)
PT ACC CRITERIA B PER HS-83-0009 (IN-HOUSE)

THIS DRAWING MODIFIES H-2-62879

UNLESS OTHERWISE SPECIFIED DIMENSIONS ARE IN INCHES
TOLERANCES ON:
DECIMALS ANGLES FRACTIONS
~ ± 2' ± 1/4
DO NOT SCALE PRINT

REVIEW NUMBER 227 | 1 | 2 | 3 | 4
THIS DRAWING HAS BEEN APPROVED BY A ROCKWELL DOCUMENT REVIEW BOARD.
REVISION NO. C
CHAIRMAN [signature] DATE 7-14-93

TRACEABILITY DRAWINGS	
H-2-93153	SEAL POT ASSY 4000 CFM EXHAUST
H-2-62879	CIVIL PLOT PLAN & FINISH GRADING
DWG NO	DRAWING TITLE

H-2-94719-2	4000 CFM EXHAUSTER MISC ELECT DETAILS	
H-2-90898	HVAC INSTALLATION PLAN AND ELEVATIONS	
H-2-92520	GENERIC STACK SAMPLER CABINET SPLIT ENTRY ASSY	
H-2-90901	CIVIL/STEEL SITE PLAN / DETAILS	
H-2-94719-1	4000 CFM EXHAUSTER MISC ELECT DETAILS	

REFERENCE DRAWINGS | COMMODITY PRT. ISSUE NO. 1 | 2/14/83 | CHECK PRT. ISSUE NO. 3 | 7/27/84
NEXT USED ON H-2-62879
DRAWING STATUS 27-3517

REVISIONS: 2 — AND CEO 24522 REVISION PER CEO 17941; 1 — FIELD INFO ADD CAN 2 & JB TABLE CS & 3 DWG SEET 1 H-4 TO 7-7 GAS-BUILT PER S-G TO H-H, G INC & MODIFY EO 19943 DWG & MODIFY EO 19648 DWG SECT 1 SHEET 4 & 31; 1-2 SEET, 6 & 10, NPT 3/4 & EO 20 14655, 9228, 9351/5 & 2-2 SEET 3

DRAWING APPROVALS	DATE
[signature]	7/6/83
[signature]	7/6/83
[signature]	7/6/83
[signature]	7/6/83
[signature]	7/6/83
[signature]	7/6/83
[signature]	7/6/83
[signature]	7/6/83
[signature]	7/6/83
[signature]	7/6/83

U. S. Department of Energy
Richland Operations Office
Rockwell Hanford Operations
Richland, Washington 99352

4000 CFM PORTABLE EXHAUSTER SITE SPECIFICS

SCALE: AS NOTED | PLANT NO. 241-A | PROJECT NO. 8901
SIZE: NONE | DWG NO. H-2-93100 | SHEET 1 OF 3

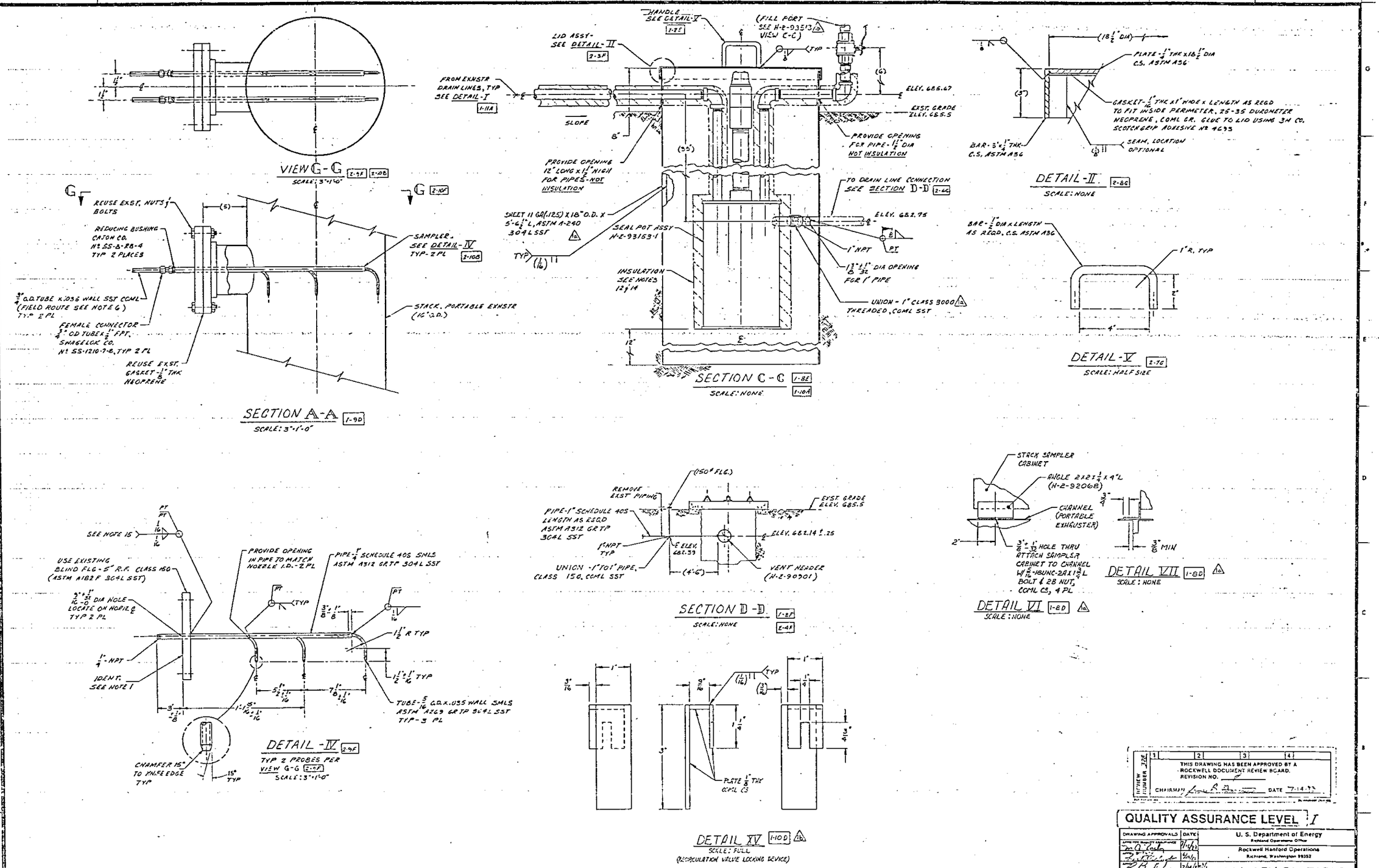
VIEW G-G 2-9F 2-10B
SCALE: 3"=1'-0"
SECTION A-A 1-9D
SCALE: 3"=1'-0"
REUSE EXST. NUTS & BOLTS
REDUCING BUSHING CAJON CO. Nº SS-B-RB-4 TYP 2 PLACES
3/8" O.D. TUBE X .035 WALL SST COML (FIELD ROUTE SEE NOTE 6) TYP 2 PL
FEMALE CONNECTOR 3/8" OD TUBE X 1/2" FPT, SWAGELOK CO. Nº SS-1210-7-8, TYP 2 PL
REUSE EXST. GASKET 1/8" THK NEOPRENE
SAMPLER, SEE DETAIL-IV TYP-2 PL 2-10B
STACK, PORTABLE EXHSTR (12" O.D.)
SECTION C-C 1-8E 1-10A
SCALE: NONE
HANDLE SEE DETAIL-V 1-7E
LID ASSY SEE DETAIL-II 2-3F
FROM EXHSTR DRAIN LINES, TYP SEE DETAIL-I 1-11A
SLOPE
PROVIDE OPENING 12" LONG X 1 1/2" HIGH FOR PIPES-NOT INSULATION
SHEET 11 GA (.125) X 18" O.D. X 5'-6 1/2" L, ASTM A-240 304L SST
SEAL POT ASSY H-2-93153-1
INSULATION SEE NOTES 12 & 14
(FILL PORT SEE H-2-93513 VIEW C-C)
ELEV. 685.67
EXST. GRADE ELEV. 685.5
PROVIDE OPENING FOR PIPE-1 1/2" DIA NOT INSULATION
TO DRAIN LINE CONNECTION SEE SECTION D-D 2-6C
ELEV. 682.75
1" NPT
1 3/8 1/32" DIA OPENING FOR 1" PIPE
UNION - 1" CLASS 3000 THREADED, COML SST
DETAIL-II 2-8C
SCALE: NONE
PLATE-1/4" THK X 18 1/2" DIA C.S. ASTM A36
GASKET-1/16" THK X 1" WIDE X LENGTH AS REQD TO FIT INSIDE PERIMETER, 25-35 DUROMETER NEOPRENE, COML GR. GLUE TO LID USING 3M CO. SCOTCHGRIP ADHESIVE Nº 4693
BAR-3/4 X 1/4" THK C.S. ASTM A36
SEAM, LOCATION OPTIONAL
DETAIL-V 2-7G
SCALE: HALF SIZE
BAR-1/2" DIA X LENGTH AS REQD. C.S. ASTM A36
1" R. TYP
DETAIL-IV 2-9F
TYP 2 PROBES PER VIEW G-G 2-10F
SCALE: 3"=1'-0"
SEE NOTE 15
USE EXISTING BLIND FLG-5" R.F. CLASS 150 (ASTM A182 F 304L SST)
3/16" DIA HOLE LOCATE ON HORIZ ℄ TYP 2 PL
1/4"-NPT
IDENT. SEE NOTE 1
PROVIDE OPENING IN PIPE TO MATCH NOZZLE I.D.-2 PL
PIPE-1" SCHEDULE 40S SMLS ASTM A312 GR TP 304L SST
1 1/2" R TYP
TUBE-5/16" O.D. X .035 WALL SMLS ASTM A269 GR TP 304L SST TYP-3 PL
CHAMFER 15° TO KNIFE EDGE TYP
15° TYP
SECTION D-D 1-8F 2-4F
SCALE: NONE
(150# FLG.)
REMOVE EXST PIPING
PIPE-1" SCHEDULE 40S LENGTH AS REQD ASTM A312 GR TP 304L SST
1" NPT TYP
UNION - 1" TO 1" PIPE, CLASS 150, COML SST
EXST GRADE ELEV. 685.5
ELEV. 682.14 ± .25
ELEV. 682.39
VENT HEADER (H-2-90301)
DETAIL VI 1-8D
SCALE: NONE
STACK SAMPLER CABINET
ANGLE 2 X 2 X 1/4 X 4" L (H-2-92068)
CHANNEL (PORTABLE EXHAUSTER)
3/8" - 1/2" HOLE THRU ATTACH SAMPLER CABINET TO CHANNEL W/ 3/8"-16UNC-2A X 1 3/4" L BOLT & 2B NUT, COML CS, 4 PL
DETAIL VII 1-8D
SCALE: NONE
DETAIL XV 1-10D
SCALE: FULL
(RECIRCULATION VALVE LOCKING DEVICE)
1/16" TYP
PLATE 1/8" THK COML CS
THIS DRAWING HAS BEEN APPROVED BY A ROCKWELL DOCUMENT REVIEW BOARD. REVISION NO.
CHAIRMAN
DATE 7-14-93
QUALITY ASSURANCE LEVEL I
DRAWING APPROVALS
DATE
U. S. Department of Energy
Richland Operations Office
Rockwell Hanford Operations
Richland, Washington 99352
4000 CFM PORTABLE EXHAUSTER SITE SPECIFICS
AS NOTED
241-A
8901
NONE
NOT REQ'D
H-2-93100
REFERENCE DRAWINGS
NEXT USED ON H-2-93100, SHEET 1
REVISIONS
COMMENT PRT ISSUE NO 1
CHECK PRT ISSUE NO 2
DRAWING STATUS
D.I.-3517

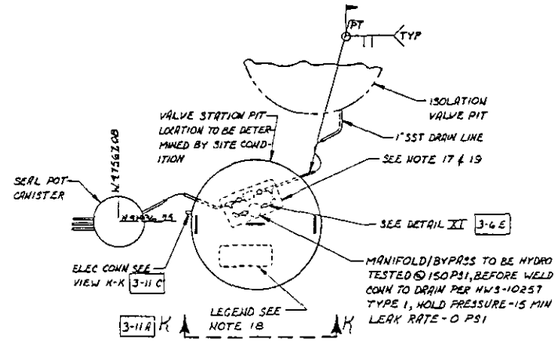

DETAIL VIII 1-7E
SCALE: NONE

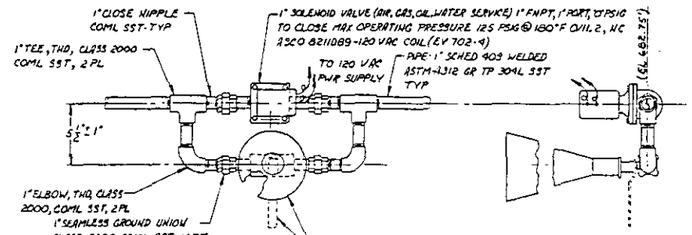

DETAIL XI 3-9F
SCALE: NONE

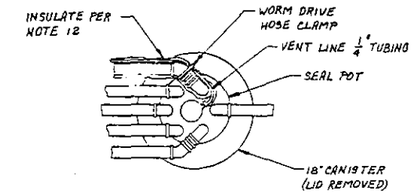

DETAIL XVI 1-7E 3-5C
SCALE: NONE

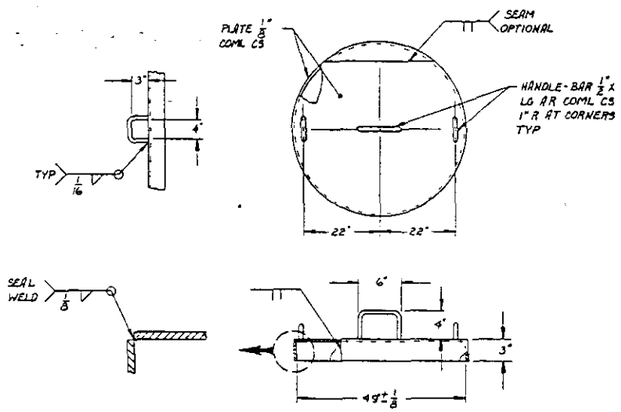

DETAIL IX 3-12C
SCALE: NONE

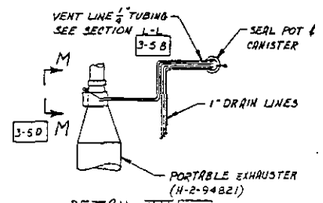

DETAIL XII 1-10D
SCALE: NONE

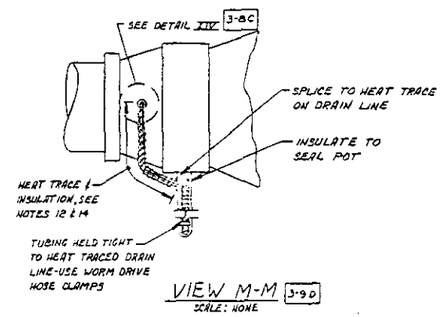

VIEW M-M 3-9D
SCALE: NONE

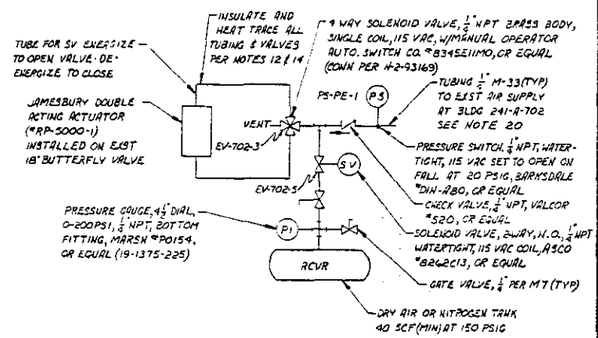

DETAIL XIII 1-10F
PIPING DIAGRAM
SCALE: NONE
(FOR DRY AIR NITROGEN TANK, PIPING SHALL BE FIELD RUN AS REQD.)

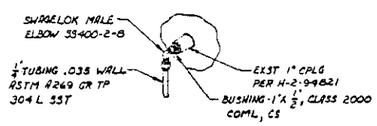

DETAIL XIV 3-5E
SCALE: NONE

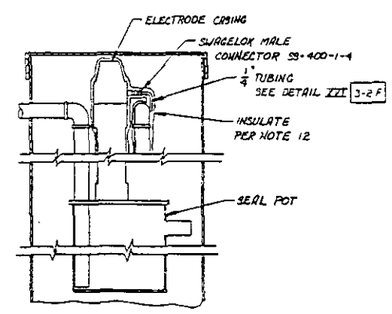

SECTION L-L 1-6F
SCALE: NONE

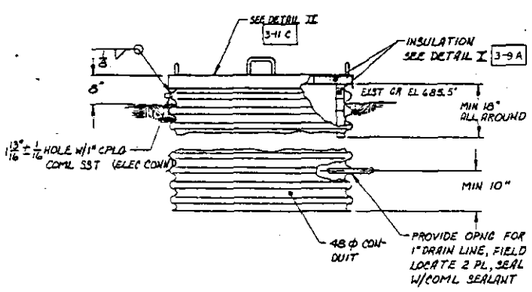

VIEW K-K 3-11F
SCALE: NONE

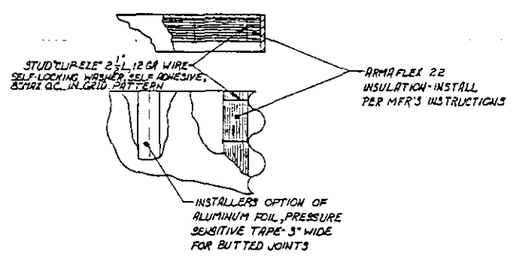

DETAIL X 3-10B
SCALE: NONE

FORMAL DOCUMENT REVIEW HAS BEEN WAIVED FOR REV 0 IN ACCORDANCE WITH E.O. 15352 DATED 5-7-84, 15387 DATED 5-18-84 AND 14631 DATED 5-21-84

QUALITY ASSURANCE LEVEL I

DRAWING APPROVALS	DATE
[illegible]	7/11/84
[illegible]	11-21-84
[illegible]	11-21-84
R.D. WILLIAMS	10-29-84
[illegible]	11/1/84
[illegible]	11/1/84
[illegible]	11/1/84

U. S. Department of Energy
Richland Operations Office
Rockwell Hanford Operations
Richland, Washington 99352

4000 CFM PORTABLE EXHAUSTER SITE SPECIFICS

AS NOTED	241-A	8901	
NONE	NOT REQD	H-2-93100	3 / 3

H-2-94821	WSSY 4000 CFM PORTABLE EXHAUSTER						
REFERENCE DRAWINGS		REVISION APPROVALS				REVISIONS	
NEXT USED ON H-2-93100		COMMENT PKT ISSUE NO. 1	9-6-84	CHECK PKT ISSUE NO. 1	9-7-84	DRAWING STATUS: 21 PAGE	0

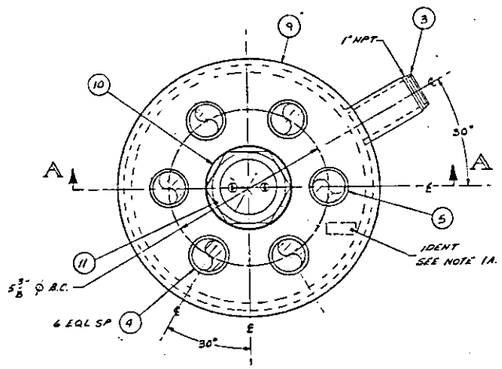

PLAN

DRAIN-LINES NOT SHOWN FOR CLARITY

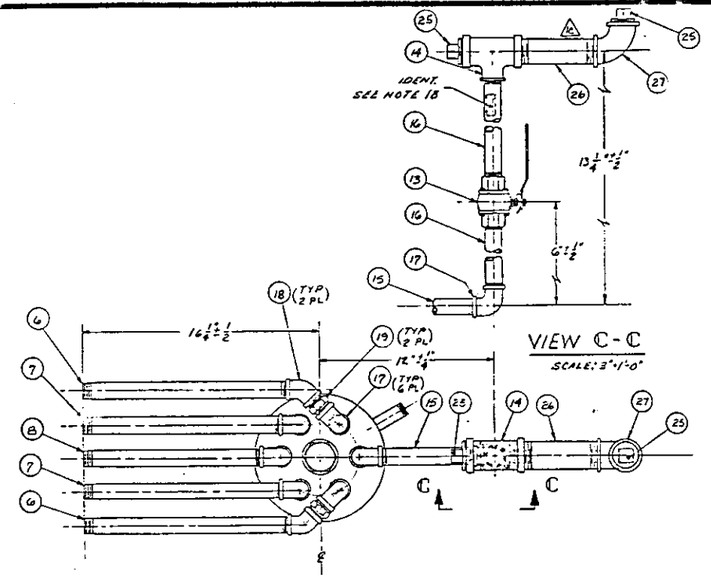

VIEW C-C

SCALE: 3"=1'-0"

VIEW B-B

SCALE: 3"=1'-0"

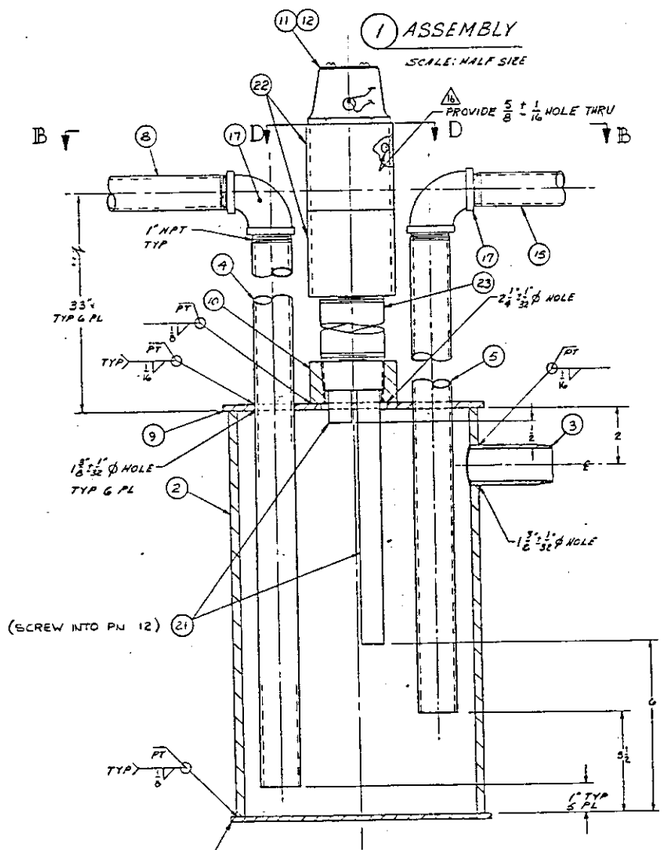

SECTION A-A

SEE PLAN FOR TRUE PIPING ORIENTATION
ALL DRAINS NOT SHOWN FOR CLARITY
SCALE: HALF SIZE

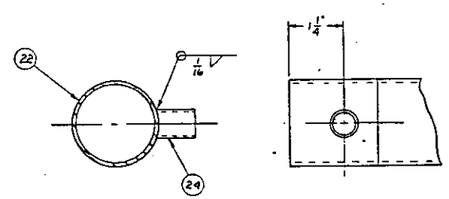

SECTION D-D

SCALE: NONE

	QTY	PN	DESCRIPTION	MATL/REF
	1	1	ASSEMBLY	
	1	2	PIPE-8" SCHEDULE 40S x 1'-2 1/2" WELDED	ASTM A 312 GR TP 304L SST
	1	3	PIPE-1" SCHEDULE 40S x .3" L T.O.E. WELDED	ASTM A312 GR TP 304L SST
	5	4	PIPE-1" SCHEDULE 40S x(3'-9 3/16"L) T.O.E. WELDED	ASTM A312 GR TP 304L SST
	1	5	PIPE-1" SCHEDULE 40S x(5'-6 3/16")L T.O.E. WELDED	ASTM A312 GR TP 304L SST
	2	6	PIPE-1" SCHEDULE 40S x(1'-2 1/4")L T.B.E. WELDED	ASTM A312 GR TP 304L SST
	2	7	PIPE-1" SCHEDULE 40S x(1'-2")L T.B.E. WELDED	ASTM A312 GR TP 304L SST
	1	8	PIPE-1" SCHEDULE 40S x(1'-1")L T.B.E. WELDED	ASTM A312 GR TP 304L SST
	2	9	PLATE-3/16" THK x 9" ± 1/16" O.D.	ASTM A240 304L SST
	1	10	HALF COUPLING-2" NPT CLASS 3000	ASTM A182 F 304L SST
	1	11	ELECTRODE HOLDERS-2" NPT TYPE E-2	B/W CONTROLS INC. NO 12-046600 (316 SST)
	2	12	ELECTRODE PLUG-3/8" NPT	B/W CONTROLS INC. NO 14-147500
1a	1	13	BALL VALVE-1" SIZE THREADED	COOPER FIG 4150
1a	1	14	TEE RDCR 1" x 1 1/2" CLASS 2000 THREADED	COML SST
	1	15	PIPE-1" SCHEDULE 40S x(6 1/2")L T.B.E. WELDED	ASTM A312 GR TP 304L SST
	2	16	PIPE-1" SCHEDULE 40S x(4")L T.B.E. WELDED	ASTM A312 GR TP 304L SST
	7	17	ELBOW-90° L.R., 1" CLASS 2000 THREADED	COML SST
	2	18	ELBOW-45°, 1" CLASS 2000 THREADED	COML SST
	2	19	CLOSE NIPPLE-1" NPT	CAJON CO. NO SS-16-CN
	AR	20	TAPE SEE NOTE 3	COML TEFLON
1a	2	21	BAR, 1/4" DIA x L AR T.O.E 1/4-20UNC-2A x 1/2" L	SST ANY 300 SERIES
1a	2	22	COUPLING 2" NPT CLASS 150	COML SST
1a	1	23	PIPE 2" SCHED 40S x 31 L TBE	ASTM-A312 GR TP 304L SST
1a	1	24	HALF COUPLING 1/4" NPT CLASS 150	COML SST
1a	2	25	PLUG SQ 1 1/2" CLASS 2000	COML SST
1a	1	26	PIPE 1 1/2" SCHED 40S x 6"L TBE WELDED	ASTM A312 GR TP 304L SST
1a	1	27	ELBOW-90° L.R. 1 1/2" CLASS 2000 THREADED	COML SST

GENERAL NOTES

1. IDENTIFY PER HS-85-001S USING 1/2" HIGH CHARACTERS-COLOR-BLACK IN LOCATION INDICATED.
   A) TYPE B-WITH DWG NO PART NO AND DWG REV. NO
   B) TYPE B-"FILL PORT"
2. REMOVE ALL BURRS AND BREAK SHARP EDGES.
3. TEFLON TAPE ALL THREADED JOINTS, USING PN 20.

WELDING AND INSPECTION REQUIREMENTS

FABRICATION	1. WELDING STANDARD	☐ ASME ■ ASME B31.0 ■ ASME QI-1/QI-2/QI-3/QI-5.0 ■ HS-85-001B OPTICAL (IN-HOUSE)	
	2. PROCEDURE SPEC. & PERFORMANCE CERT.	■ ASME SECT. IX ■ ASME B31.0 ☐	
	3. FILLER MATERIAL	■ ASME SECT. II ASME AS ☐	
INSPECTION	4. VISUAL (VT)	■ WELDING STD. IN (11) ■ SPP-2.5.0 C (IN-HOUSE) ☐ 1/TUP ☐ ROOT PASS ■ FINAL	
	5. PENETRANT (PT)	■ WELDING STD. IN (11) ■ SPP-2.10 A (IN-HOUSE)	
	6. MAGNETIC PART. (MT)	☐ WELDING STD. IN (11) ☐	
	7. ULTRASONIC (UT)	☐ WELDING STD. IN (11) ☐	
	8. RADIOGRAPHY (RT)	☐ WELDING STD. IN (11) ☐	
	9. LEAK TEST (LT)	☐	

■ OTHER REQTS. PT FINAL PASS

UNLESS OTHERWISE SPECIFIED DIMENSIONS ARE IN INCHES

TOLERANCES ON:

DECIMALS	ANGLES	FRACTIONS
~	±°2	± 1/8

DO NOT SCALE PRINT

REVIEW NUMBER 22F

THIS DRAWING HAS BEEN APPROVED BY A ROCKWELL DOCUMENT REVIEW BOARD. REVISION NO. 2

CHAIRMAN [signature] DATE 7-14-83

QUALITY ASSURANCE LEVEL I

DRAWING APPROVALS	DATE
[signature]	7/14/83
[signature]	7/14/83
[signature]	7/14/83
[signature]	7/14/83
[signature]	7/21/83
[signature]	7/6/83
[signature]	7/25/83
[signature]	7/21/83

U. S. Department of Energy
Richland Operations Office

Rockwell Hanford Operations
Richland, Washington 99352

SEAL POT ASSEMBLY
4000 CFM PORTABLE EXHAUSTER

SCALE: AS NOTED | PLAN NO. 241-A | 8409

DRAWING NO. H-2-93153 | SHEET 1 | SHEETS 1

REV.							DESCRIPTION	
H	[signature] 11-19-84	[signature] 7/14/84	[signature] 7/14/84	[signature] 7/14/84	DG 7/14/84	DWA 7/14/84	BUILT PER FIELD INFO PN 21 TO 22, 22 TO 23, 23 TO 24, 8 PC PKG OF FLES LTD. 146 SCF 2 16120 (CHANGE SHEAR CO 9223 & FOR 224 SINC)	1

REVISION APPROVALS | REVISIONS

REFERENCE DRAWINGS

COMMENT PRT ISSUE NO 2 6/14/83 | CHECK PRT. ISSUE NO 3 6-29-83

NEXT USED ON H-2-93100 | DRAWING STATUS DWG-9-8-17

1	NONE	NOT REQD

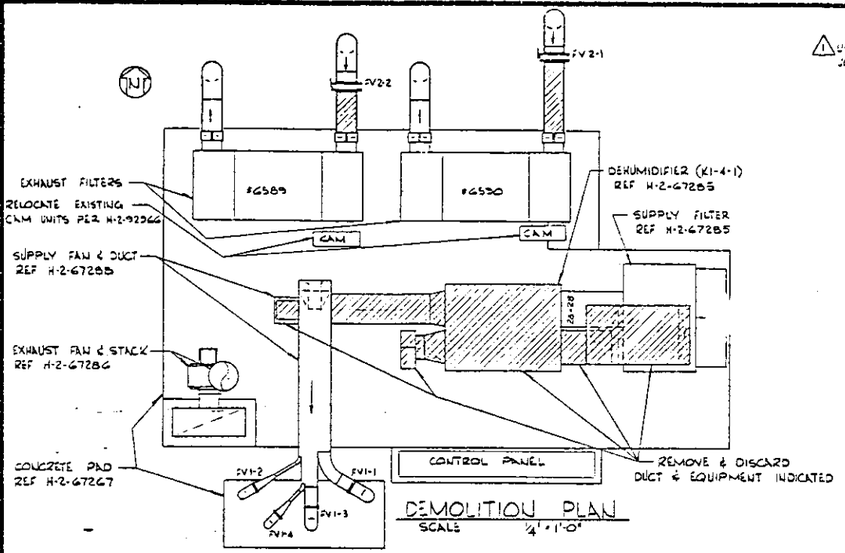

DEMOLITION PLAN
SCALE 1/4" = 1'-0"

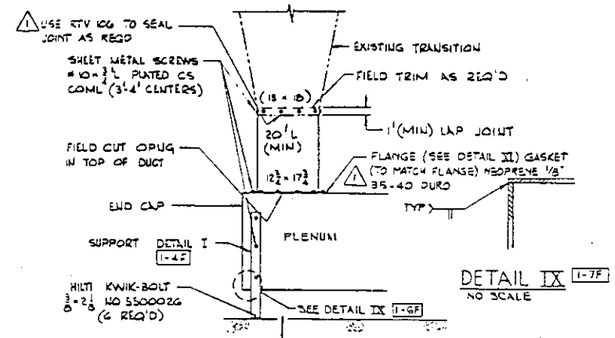

DETAIL IX 1-7F
NO SCALE

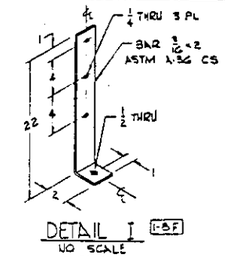

DETAIL I 1-8F
NO SCALE
2 REQ'D

GENERAL NOTES

1. DUCTWORK SHALL BE IN ACCORDANCE WITH SMACNA HIGH PRESSURE DUCT CONSTRUCTION STDS - 3RD EDITION 1975. DUCT SHALL BE CONSTRUCTED FOR 3" WG NEGATIVE STATIC PRESSURE. TRANSVERSE JOINTS AND SEAMS SHALL BE PER DETAIL I AND/OR PER TABLE 4-5 OF REF. SMACNA STDS. SHEET METAL MATERIAL SHALL BE CARBON STEEL ASTM A 569 - 16GA (.0598) MIN. REINFORCING MATERIAL SHALL BE CARBON STEEL A 36, COAT WITH "SPREYON 740" ZINC RICH COLD GALVANIZING COMPOUND PER MFR SPECS.
2. UNLESS SPECIFIED OTHERWISE PAINT ALL EXPOSED CARBON STEEL SURFACES PER NWS 10247. FINISH COAT GREY NO. 26293 PER FED-STD-595.
3. PAINT EXPOSED CARBON STEEL SURFACES W/AMERCOAT # 86 PRIMER & W/ 2 COATS OF AMERCOAT # 33, FINISH COLOR GREY, PER MANUFACTURERS INSTRUCTIONS.
4. IDENTIFY PER HS-BS-0015, TYPE B W/DWG NO. & DWG REV. NO IN LOCATION INDICATED USING 1" HIGH YELLOW CHARACTERS.
5. BREAK ALL SHARP EDGES & CORNERS.
6. ALL 90° BENDS SHALL HAVE MIN. BEND RADIUS
7. ALL PARTS & MATERIALS SHALL BE PROCURED AS QUALITY ASSURANCE LEVEL III.

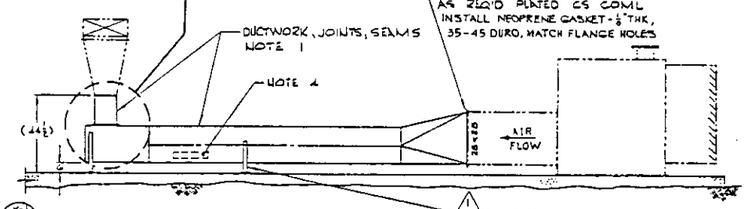

SECTION A-A 1-7B

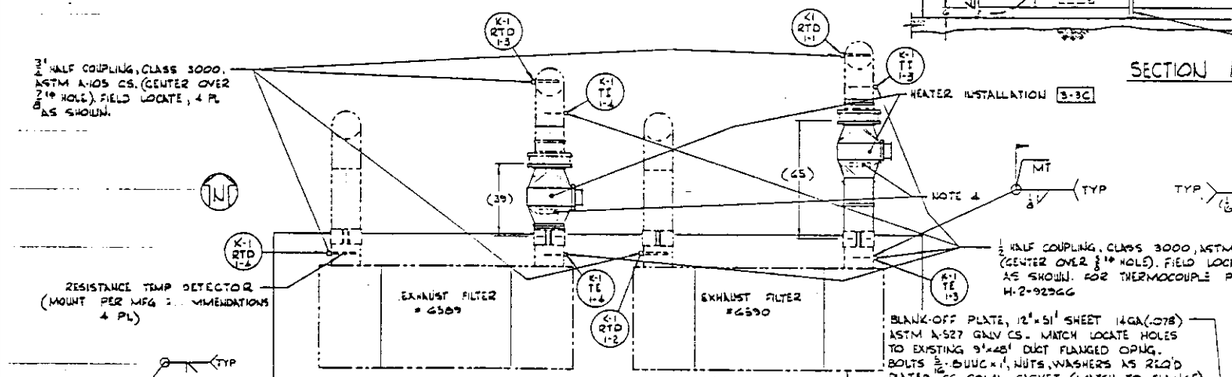

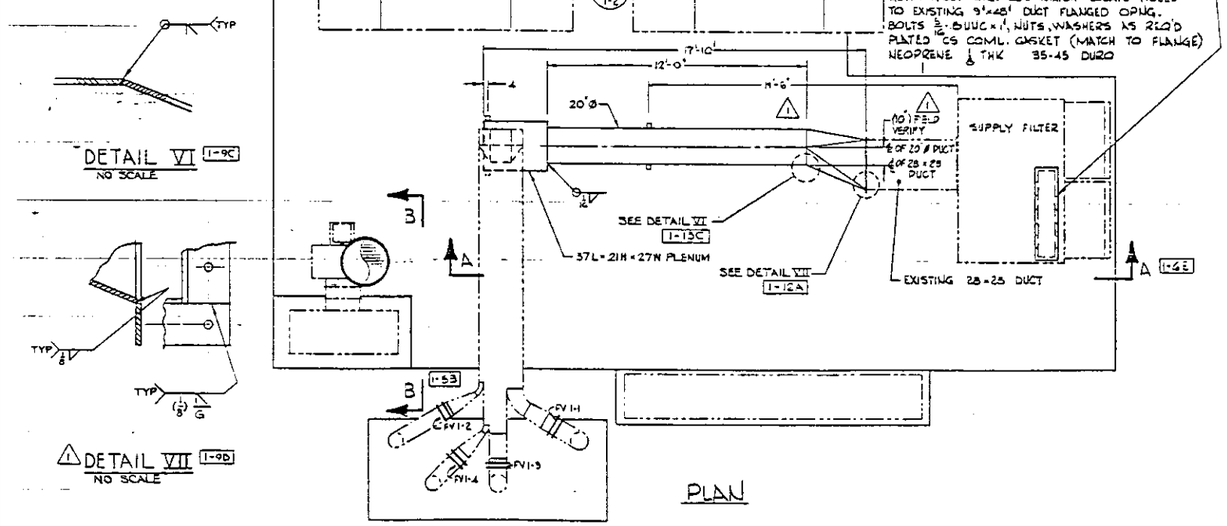

PLAN

DETAIL VI 1-9C
NO SCALE

DETAIL VII 1-9D
NO SCALE

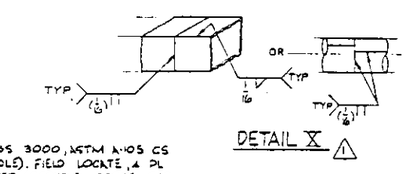

DETAIL X

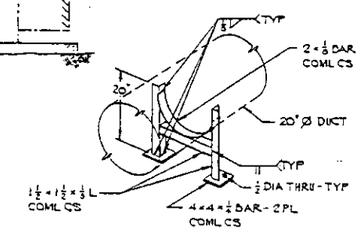

DETAIL VIII 1-5E
SCALE: NONE
2 REQ'D

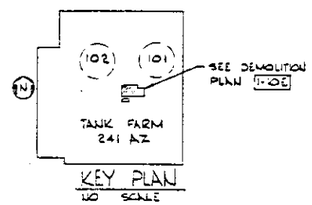

KEY PLAN
NO SCALE

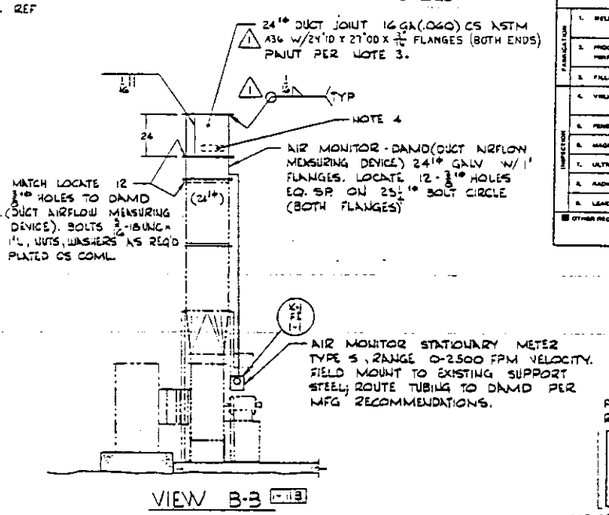

VIEW B-3 1-11B

WELDING AND INSPECTION REQUIREMENTS		
FABRICATION	1. WELDING STANDARD	☐ ASME ☐ AWS ☑ ANSI D1.1 / D1.3
		☑ NWS-10053 OPTIONAL (IN HOUSE)
	2. PROCEDURE SPEC. & PERFORMANCE QUAL.	☑ ASME SECT IX ☑ ANSI D1.1 ☐
	3. FILLER MATERIAL	☑ ASME SECT NAME AS ☐
INSPECTION	4. VISUAL (VT)	☑ WELDING STD IN (1) ☑ SPP 2.5.0 B (IN HOUSE)
		☐ FITUP ☐ ROOT PASS ☑ FINAL
	5. PENETRANT (PT)	☐ WELDING STD IN (1) ☐
	6. MAGNETIC PART. (MT)	☑ WELDING STD IN (1) ☑ SPP 2.2.0 A (IN HOUSE)
	7. ULTRASONIC (UT)	☐ WELDING STD IN (1) ☐
	8. RADIOGRAPH (RT)	☐ WELDING STD IN (1) ☐
	9. LEAK TEST (LT)	☐
☑ OTHER REQTS	MT FINAL PASS AS SPECIFIED	

UNLESS OTHERWISE SPECIFIED DIMENSIONS ARE IN INCHES
TOLERANCES ON:
DECIMALS ANGLES FRACTIONS
DO NOT SCALE PRINT

NOTE: TOLERANCES ON FASTENER HOLES +1/16 -0

FORMAL DOCUMENT REVIEW HAS BEEN WAIVED FOR REV. 0 IN ACCORDANCE WITH EO 3481

REVIEW NUMBER 1 2 3 4
THIS DRAWING HAS BEEN APPROVED BY A ROCKWELL DOCUMENT REVIEW BOARD. REVISION NO. 0
CHAIRMAN SEE ABOVE NOTE DATE 11-15-92

THIS DRAWING MODIFIES H-2-67285, H-2-67286, H-2-67288

REFERENCE DRAWINGS	
H-2-92964	VENT EQUIP SCHEDULE (CONTROL)
H-2-92966	ELECTRICAL
H-2-67267	STRUCTURAL CONCRETE PAD
H-2-67288	VENT DUCTWORK UPPER
H-2-67285	VENT SUPPLY ANNULUS
H-2-67286	VENT. EXHAUST ANNULUS

NEXT USED ON H-2-67285, H-2-67286, H-2-67288

REVISIONS			
KSI			REVISION PER CEO 4079
M			

REVISION APPROVALS
COMMENT PRT ISSUE NO. 4 10/10/92 CHECK PRT. ISSUE NO (2) 11-15-92
DRAWING STATUS 5-1-25-33

DRAWING APPROVALS	DATE
	7/8/92
	7/8/92
	7/8/92
GARLER	7/8/92
	7/8/92
	7/8/92
	7/8/92

U. S. Department of Energy
Richland Operations Office
Rockwell Hanford Operations
Richland, Washington 99352

-VAC MODIFICATIONS & HEATER ADDITION ANNULUS VENTILATION

SCALE 1/4" = 1'-0" & NOTED | 241 AZ | 8900
NONE | NOT REQ'D | H-2-93240 | 1-1 | 3

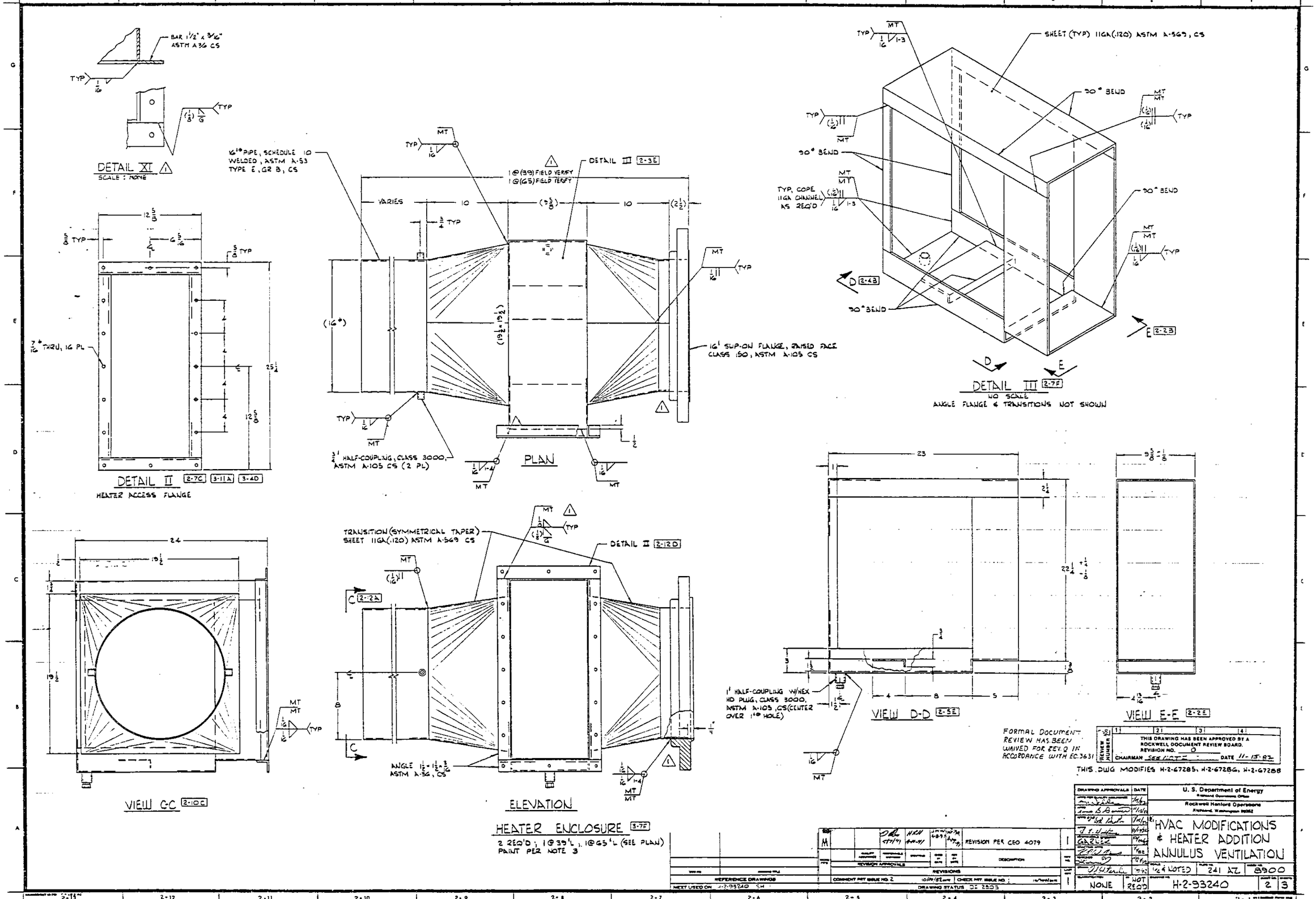

FORMAL DOCUMENT REVIEW HAS BEEN WAIVED FOR REV. 0 IN ACCORDANCE WITH EC 3631

THIS DRAWING HAS BEEN APPROVED BY A ROCKWELL DOCUMENT REVIEW BOARD. REVISION NO. 0
CHAIRMAN SEE NOTE DATE 11-15-82

THIS DWG MODIFIES H-2-67285, H-2-67286, H-2-67288

REVISION APPROVALS	DATE
	11/15/82
	11/15/82
	11/15/82
	11/15/82
	11/15/82
GARLEK	11/15/82
	11/15/82
	11/15/82

U. S. Department of Energy
Richland Operations Office
Rockwell Hanford Operations
Richland, Washington 99352

HVAC MODIFICATIONS & HEATER ADDITION ANNULUS VENTILATION

1/4 & NOTED	241 AZ	8900	
NONE	NOT REQ'D	H-2-93240	2 / 3

REVISION PER CEO 4079

REFERENCE DRAWINGS
NEXT USED ON H-2-93240 SH 1
COMMENT PRT ISSUE NO. 2 10/19/82
CHECK PRT ISSUE NO.
DRAWING STATUS DI 2803

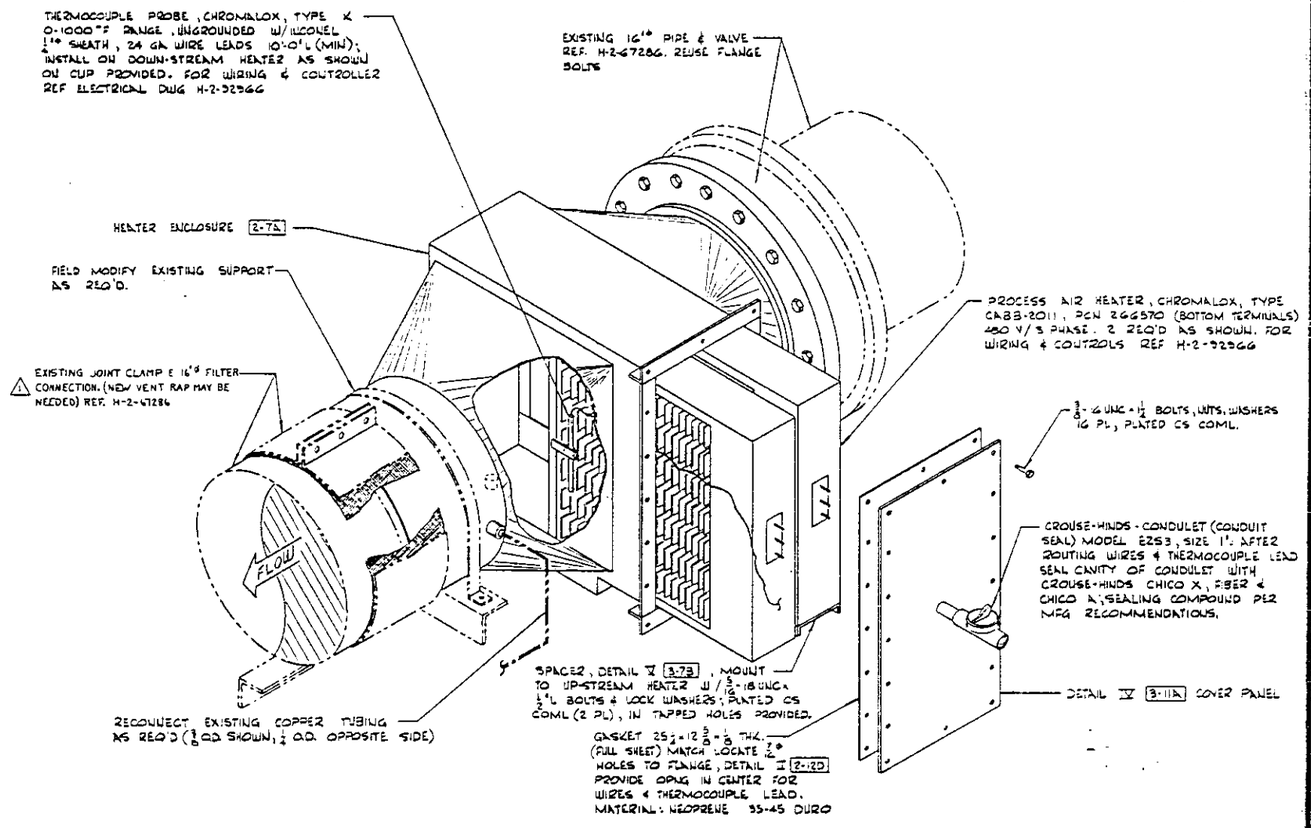

HEATER INSTALLATION 1-7E
NO SCALE

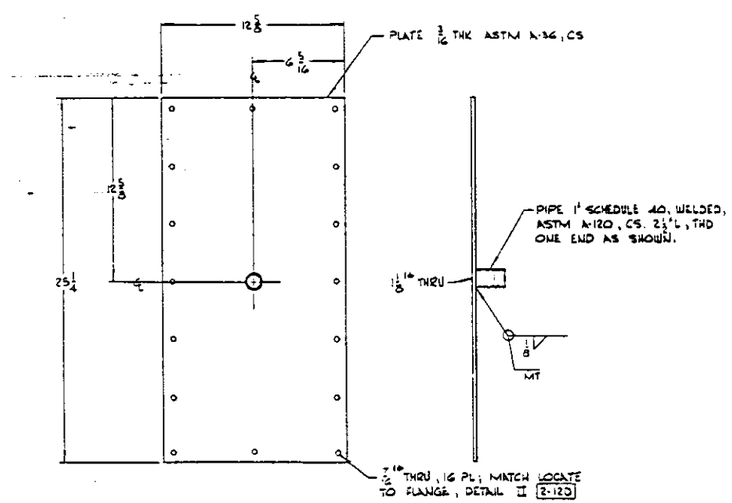

DETAIL IV 3-1D
COVER PANEL

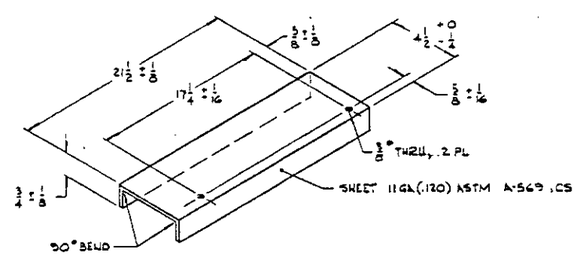

DETAIL V 3-4D
NO SCALE
SPACER FOR HEATER

FORMAL DOCUMENT REVIEW HAS BEEN WAIVED FOR REV. Q IN ACCORDANCE WITH E.O. 3631

REVIEW NUMBER	1	2	3	4
N/A	THIS DRAWING HAS BEEN APPROVED BY A ROCKWELL DOCUMENT REVIEW BOARD. REVISION NO. Q			
	CHAIRMAN SEE ABOVE NOTE		DATE 11-15-82	

THIS DWG MODIFIES H-2-67285, H-2-67286, H-2-67288

DRAWING APPROVALS	DATE
[signature]	11/15/82
[signature]	11/15/82
[signature]	11/15/82
[signature]	11/15/82
GARNER	11/15/82
[signature]	11/15/82
[signature]	11/15/82

U. S. Department of Energy
Richland Operations Office
Rockwell Hanford Operations
Richland, Washington 99352

HVAC MODIFICATIONS & HEATER ADDITION ANNULUS VENTILATION

SCALE	DWG NO.	SHEET NO.	REV NO.
1/2 & NOTED	241 AZ	8900	3

REVISION APPROVALS	DESCRIPTION	REV NO.
[signature]	REVISED PER ECN 129473	1

REVISIONS
COMMENT PRT ISSUE NO. 1 10/16/82 CHECK PRT ISSUE NO. 1
DRAWING STATUS DI 2503

REFERENCE DRAWINGS
NEXT USED ON H-2-93240 SH 1

CLASSIFICATION	BY	NOT REQ'D
NONE		

3-13 3-12 3-11 3-10 3-9 3-8 3-7 3-6 3-5 3-4 3-3 3-2 3-1

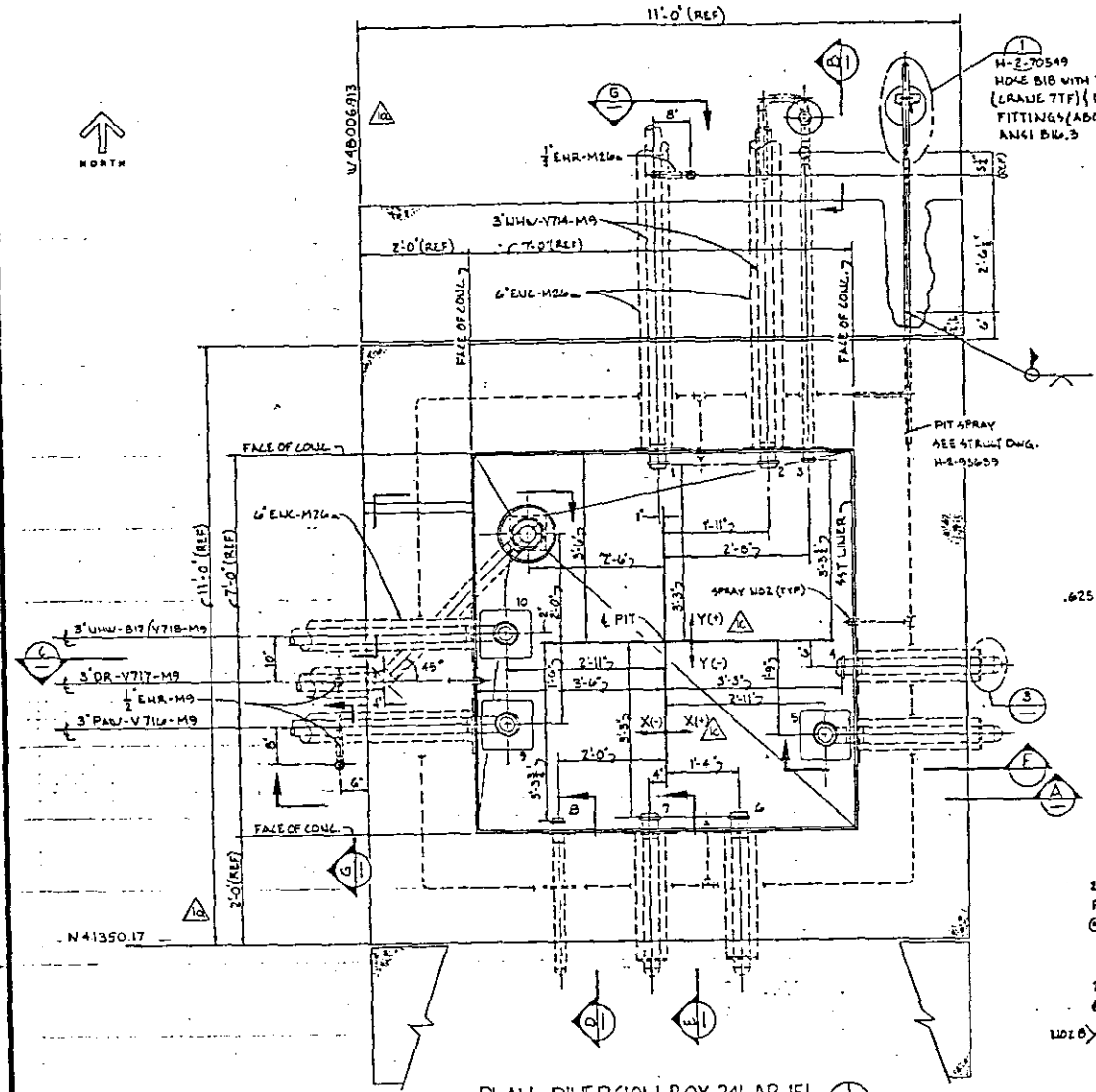

PLAN - DIVERSION BOX 241-AR-151 (1)
(COVER REMOVED) SCALE: 3/4" = 1'-0" H-2-90358

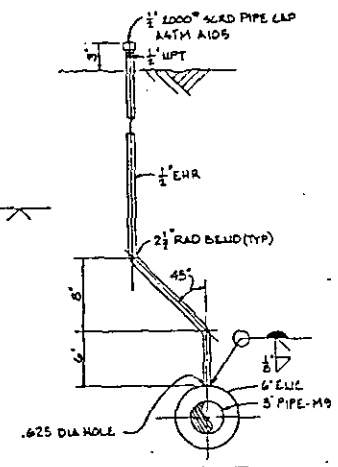

SECTION (G)
SCALE: 1 1/2" = 1'-0"

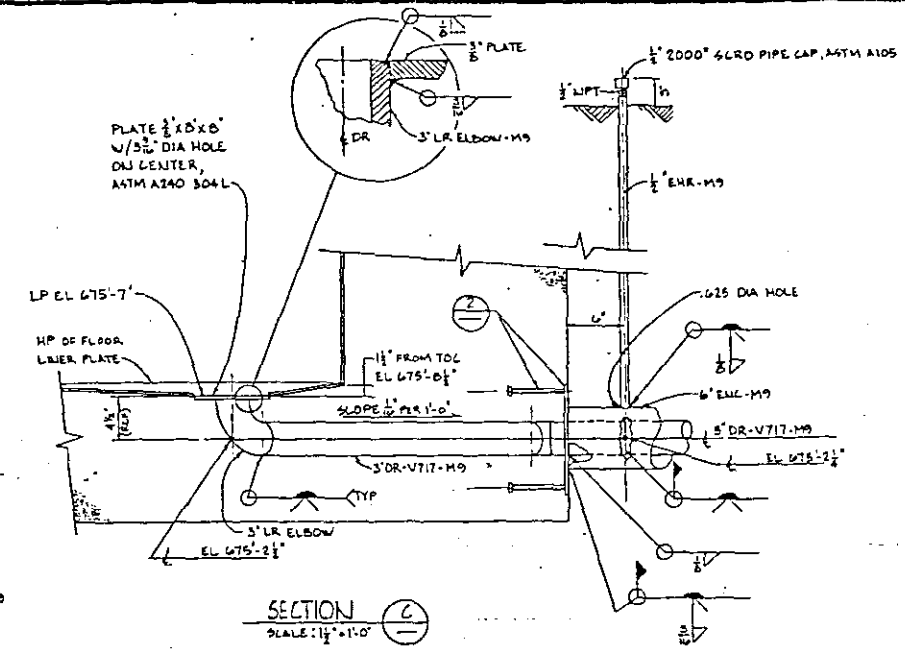

SECTION (C)
SCALE: 1 1/2" = 1'-0"

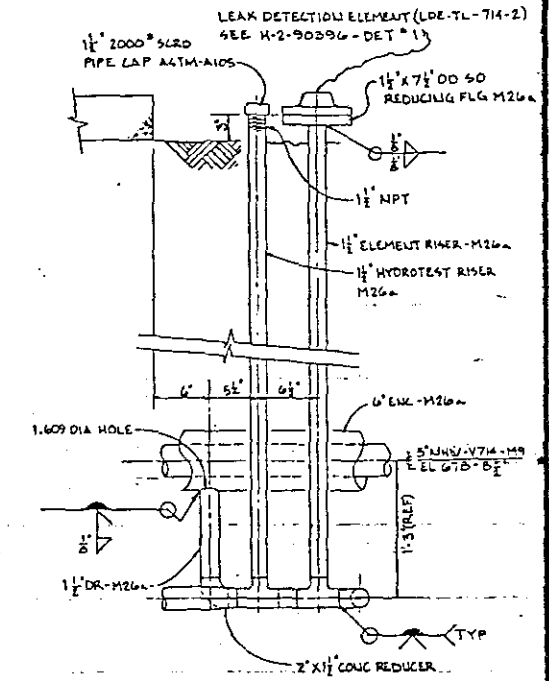

SECTION (B)
SCALE: 1 1/2" = 1'-0"

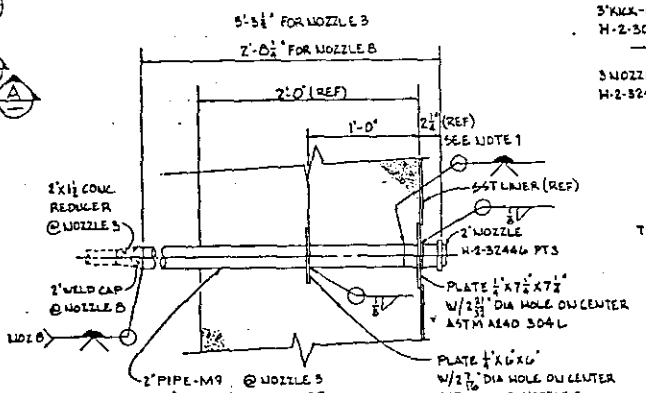

SECTION (D)
TYP @ NOZZLES 5 & 10
SCALE: 1 1/2" = 1'-0"

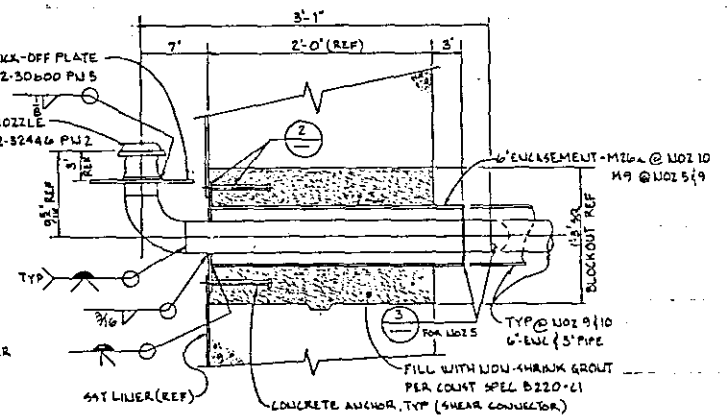

SECTION (F)
TYP @ NOZ 3, 9 & 10 EXCEPT AS SHOWN
SCALE: 1 1/2" = 1'-0"

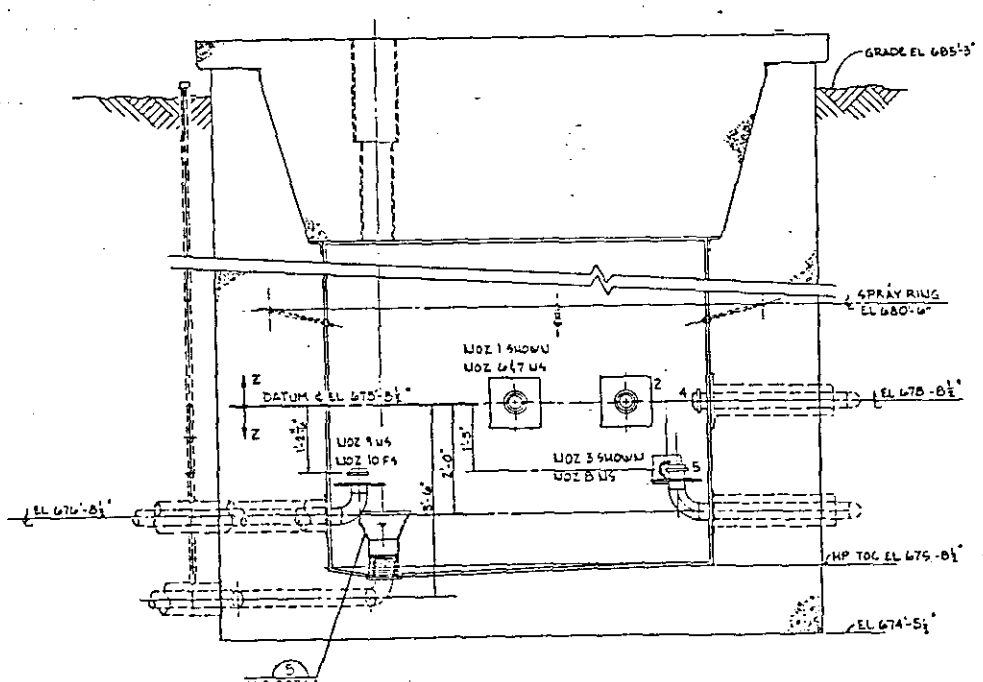

SECTION (A)
SCALE: 3/4" = 1'-0"

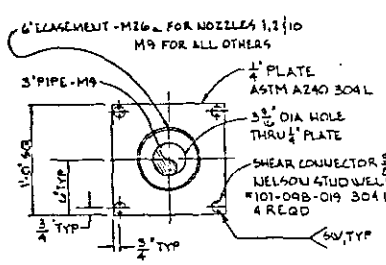

DETAIL (2)
SCALE: 1 1/2" = 1'-0"

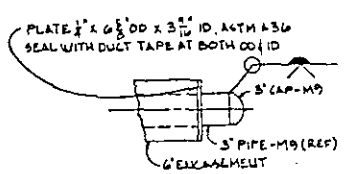

DETAIL (3)
TYP, FOR NOZ 4, 5, 6 & 7
SCALE: 1 1/2" = 1'-0"

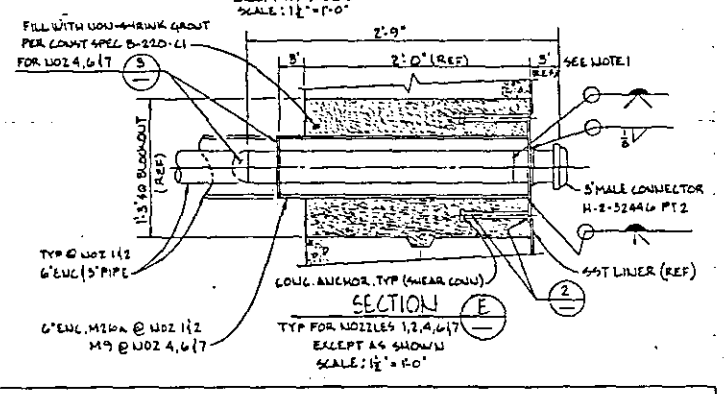

SECTION (E)
TYP FOR NOZZLES 1, 2, 4, 6 & 7 EXCEPT AS SHOWN
SCALE: 1 1/2" = 1'-0"

NOTES:

1. WHERE NOTED, DIMENSION IS FROM FACE OF NOZZLE TO KICK-OFF PLATE & NOT RELATED TO CONCRETE SURFACE.
2. TOLERANCES, UNLESS OTHERWISE SPECIFIED, SHALL BE: FRACTIONAL ± 1/8" DECIMAL ± .010 ANGULAR ± 1°
3. ALL MATERIAL, FABRICATION, AND TESTING SHALL BE IN ACCORDANCE WITH CONSTRUCTION SPECIFICATION B-220-C1.
4. FOR LEGEND SEE DWG H-2-90357.

RELEASED FOR CONSTRUCTION
BY GSRobbins DATE 6/13/83
DOE

AS-BUILT NOZZLE LOCATIONS

	NOZZLE NO									
COORDS	1	2	3	4	5	6	7	8	9	10
X	-0 42/64"	+1'-11"	+2'-7 15/64"	+3'-3 9/64"	+2'-11 2/64"	+1'-3 42/64"	-0'-3 42/64"	-2'-0 11/64"	-2'-11 1/64"	-2'-10 62/64"
Y	+3'-3"	+3'-3"	+3'-3 59/64"	-0'-6 3/64"	-1'-9 9/64"	-3'-3 9/64"	-3'-3 2/64"	-3'-3 4/64"	-1'-5 31/64"	+0'-1 35/64"
Z	678'-8 32/64"	678'-8 32/64"	677'-4 52/64"	678'-8 33/64"	677'-5 35/64"	678'-8 35/64"	678'-8 33/64"	677'-5 11/64"	677'-5 59/64"	677'-5 55/64"

NUMBER	TITLE
H-2-30600	KICK-OFF PLATE
H-2-32446	MALE CONNECTOR NOZZLE
H-2-70549	STANDARD TK FARM DETAILS
H-2-90351	DRAWING LIST

REFERENCES
NEXT USED ON H-2-90351

REV	BY	DATE	DESCRIPTION
M	CDR	10/14/83	AS-BUILT FOR B-220 DE-6,7 a) RC. ADDED LOCATIONS, 2 NA-3, b) NCR B-220-12, 2 NC-5 c) DFC B-220-70E, 2 ND-8, F-7
1	NA	10/14/83	

MICROFILMED: BY-DATE ROCKWELL APPROVAL; BY-DATE KEM APPROVAL

COMMENT REVIEW

RHO APPROVAL BY H.S. Shenk 6-29-83

U. S. DEPARTMENT OF ENERGY
Richland Operations Office
KAISER ENGINEERS HANFORD COMPANY

PROJ ENGR: C. Cu. 6/29/83
DR: W. Bergsmark 6/29/83
APPROVED: L. M. Hale 6/29/83
APPROVED: B. R. Wilson 6/29/83
APPROVED: D. C. Mc Donald 6/29/83
CHK DSGN: C. J. Mc Donald 6/29/83
DRAWN: L. A. Mc Kenzie 6-29-83
DR REVIEW: C. Kenoyer 6/29/83
CLASSIFICATION: NONE

M PIPING DIVERSION BOX 241-AR-151

PROJECT TITLE: WASTE TRANSFER FACILITIES

PROJ: B-220 WO: X-220BE JOB: R049H2
SCALE: AS SHOWN BLDG: 241-AR-151 INDEX: 0402
DRAWING NUMBER: H-2-93631 SHEET 1 OF 1 REV 1

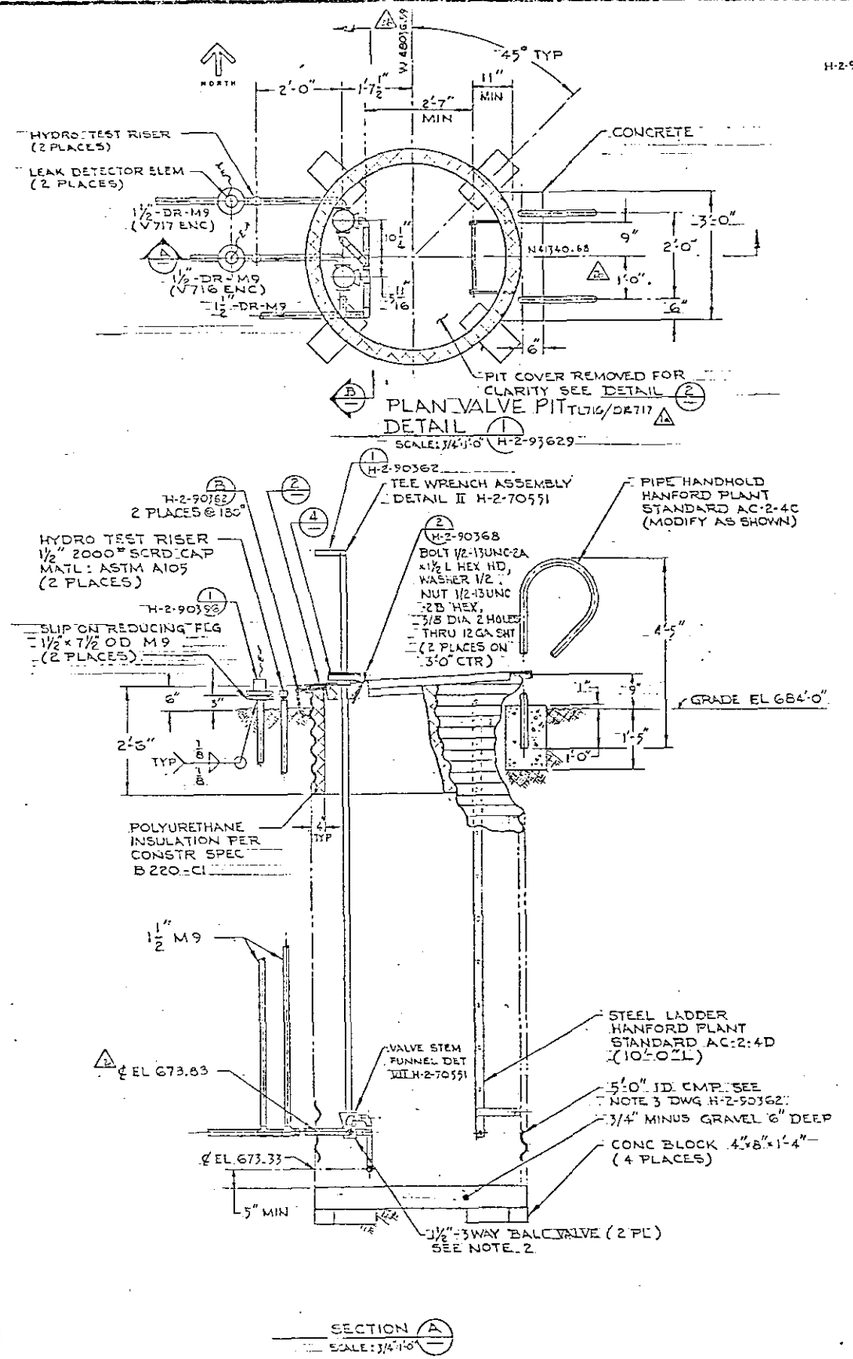

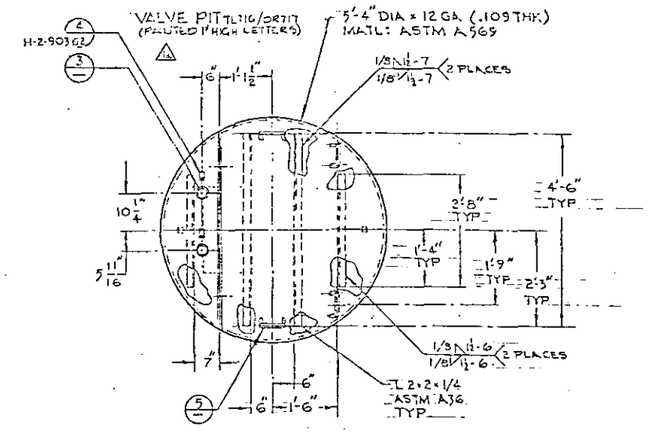

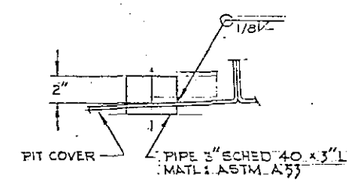

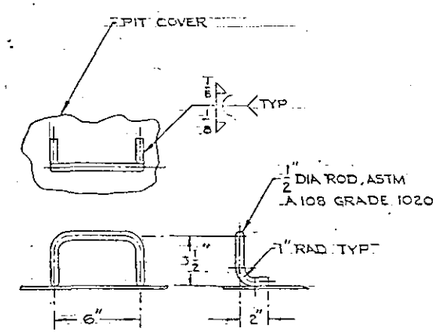

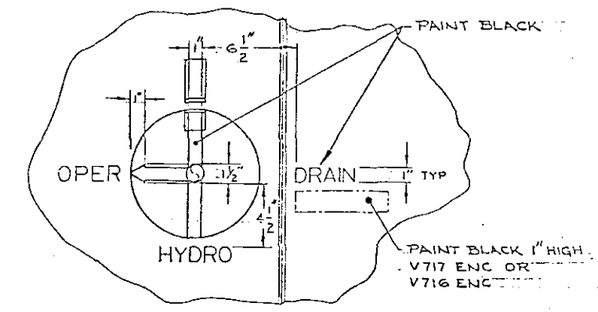

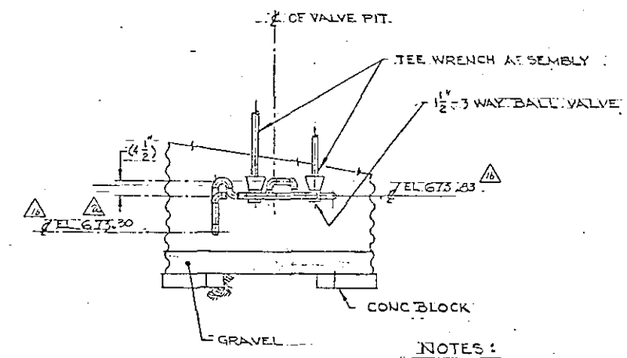

NOTES:

1. FOR NOTES SEE DWG H-2-90362
2. 3 WAY BALL VALVE SHALL BE FABRICATED IN ACCORDANCE WITH THE FOLLOWING:
   - (A) ONE PIECE CAST STAINLESS BUTT WELD BODY
   - (B) 50% 316 STAINLESS STEEL FILLED TEFLON BALL SEAT RINGS.
   - (C) ASBESTOS BODY GASKET (BONDED). ?
   - (D) GRAPHITE ASBESTOS STEM PACKING (BONDED).
   - (E) TEE PORT BALL 180° ROTATION.
   - (F) PITTSBURGH BRASS MFG CO # 1½ MP-H-16-BW-4 FLOW PATTERN # 8.

RELEASED FOR CONSTRUCTION
BY [signature] DOE DATE 6/15/83

REV 1 DOE [signature] DATE 11/4/83

AC-2-4D	STEEL LADDER						
AC-2-4C	PIPE HH FOR STL LADDER						
H-2-70551	STD TK FARM DETAILS						
H-2-90351	DRAWING LIST						
NUMBER	TITLE						
REFERENCES							
NEXT USED ON	H-2-90362						

REV	BY	DATE	DESCRIPTION	REV BY DATE
M	[illegible]	4-24-84	AS-BUILT FOR PROJECT B220 PT 1) REV PER DFC B-220-108, 110 & 1 DD 2) REV PER DFC B-220-106, 110 & 2	2
L	[illegible]	1-10-84	3) DFC B220-76 CND2 & D3 4) DFC B220-65 ZN EG & E3	1

MICROFILMED: BY DATE / ACCEPTED APPROVAL — KEM APPROVAL — REVISIONS — COMMENT REVIEW

RHO APPROVAL BY [signature] DATE 6/29/83 REV 1

U. S. DEPARTMENT OF ENERGY
Richland Operations Office
KAISER ENGINEERS HANFORD COMPANY

PIPING
VALVE PIT

PROJECT TITLE: WASTE TRANSFER FACILITIES

DESIGNED BY	H. G. DOVE	PROJ	B220
DRAWN BY	K. AUSTIN	NO	X220SE
REPORTED BY	[illegible]	FILE	R0S5H2
SCALE	3/4" = 1'-0"	BLDG	244 AR
DATE	1-10-84	DRAWING NUMBER	H-2-93632
SIZE	NONE	REV	2

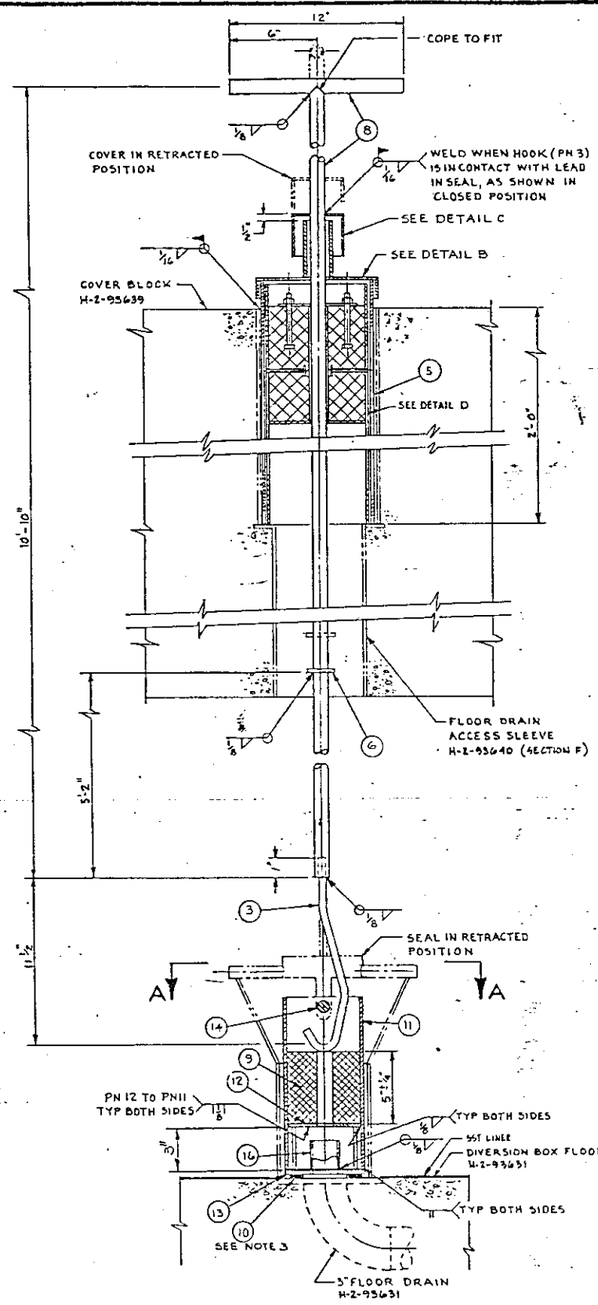

1 ASSEMBLY
SCALE: 3"=1'-0

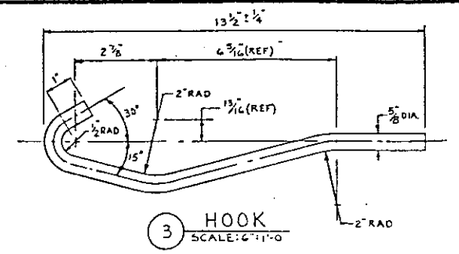

3 HOOK
SCALE: 6"=1'-0

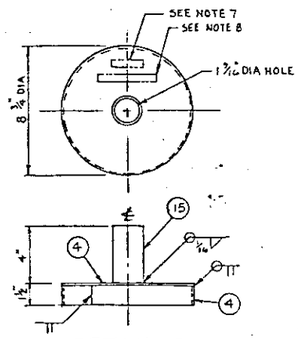

DETAIL B
SCALE: 3"=1'-0

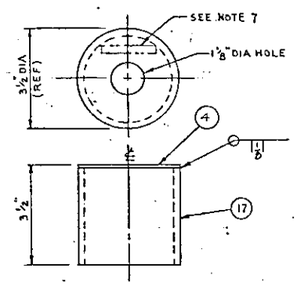

DETAIL C
SCALE: 6"=1'-0

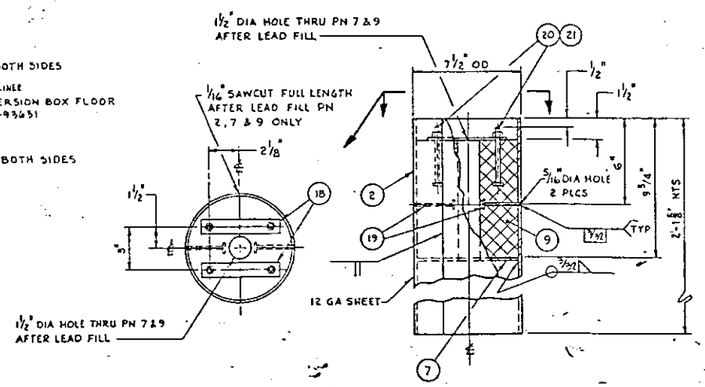

DETAIL D
SCALE: 3"=1'-0

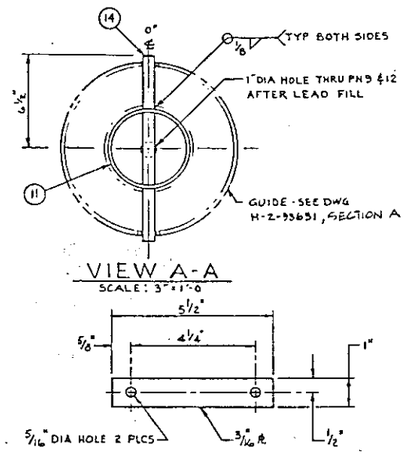

VIEW A-A
SCALE: 3"=1'-0

18 STRAP
SCALE 6"=1'-0

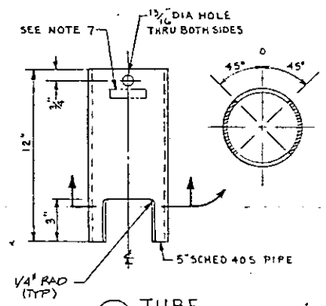

11 TUBE
SCALE 3"=1'-0

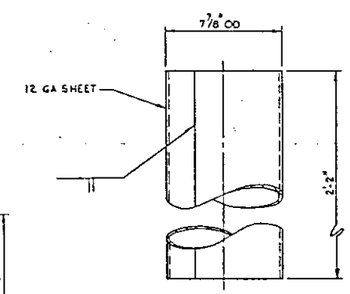

5 SLEEVE
SCALE 3"=1'-0

QTY	PN	DESCRIPTION	MATERIAL
	1	ASSEMBLY	
1	2	RING	ASTM A569
1	3	HOOK	ASTM A108 GR 1020
AR	4	12 GA SHEET	ASTM A569
1	5	SLEEVE	ASTM A569
1	6	PLATE - ¼" THK x 2" OD x 1⅛" ID	ASTM A36
1	7	PLATE - ¼" THK x 7¼" DIA	ASTM A36
AR	8	PIPE - ¾" SCHED 80	ASTM A106 GR B
AR	9	LEAD (165# TOTAL)	ASTM B 29
1	10	GASKET - ¼" THK x 5" OD x 3" ID SEE NOTE 3	GARLOCK #152 SBR DUROMETER 50
1	11	TUBE	ASTM A312 304L
1	12	PLATE - ¼" THK x 5" DIA	ASTM A240 304L
1	13	PLATE - ⅜" THK x 5 3/16" OD x 2" ID	ASTM A240 304L
1	14	ROD - ¾" DIA x 13" LONG	ASTM A108 GR 1020
AR	15	PIPE - 1½" SCHED 40	ASTM A106 GR B
1	16	PIPE - 2" SCHED 40 x 2" LONG	ASTM A53 TYPE S GR B
AR	17	PIPE - 3" SCHED 40	ASTM A53 TYPE S GR B
2	18	STRAP	ASTM A36
2	19	CONCRETE ANCHOR ¼" x 2 13/16"	NELSON # 103-053-031
4	20	BOLT ¼-20 NC 2A x 4" LONG	ASTM A193 GR B8 304
4	21	HEX NUT ¼-20 NC 2A	ASTM A194 GR 8F 303
AR	22	ADHESIVE	3M FORMULA 1300

GENERAL NOTES:

1. FABRICATION, MATERIALS, CLEANING & TESTING SHALL BE IN ACCORDANCE WITH CONSTRUCTION SPEC B220-C1
2. TOLERANCE (UNLESS OTHERWISE INDICATED): FRACTIONAL ±1/16 ANGULAR ±½°
3. BOND GASKET (PN10) TO PLATE (PN13) WITH 3M FORMULA 1300 ADHESIVE
4. BREAK ALL SHARP EDGES & CORNERS TO .010 MINIMUM
5. ESTIMATED WEIGHT OF DRAIN SEAL - 60 LBS
6. ESTIMATED FORCE REQD TO LIFT PLUG INTO FREE DRAIN POSITION - 74 LBS
7. MARK PER HS-B5-0015 WITH DWG NO AND DWG REV NO IN LOCATIONS INDICATED, ¼" HIGH LETTERS
8. MARK PER HS-B5-0015 WITH "PLUG ASSY 89L85" IN LOCATION INDICATED, ¼" HIGH LETTERS

RELEASED FOR CONSTRUCTION
BY GS Rhea DATE 6/29/83
DOE

H-2-90351	DRAWING LIST
NUMBER	TITLE
REFERENCES	
NEXT USED ON H-2-90351	

M	CAK 11/14/83	NA	DW 6-9-83	DEV 6-9-83	AS-BUILT FOR B-220	1
	BY-DATE	BY-DATE			DESCRIPTION	REV
MICROFILMED	EDGEWELL APPROVAL	KEN APPROVAL		REV BY DATE	REVISIONS	
COMMENT REVIEW						

RHO APPROVAL BY [illegible] DATE 6/29/83

U. S. DEPARTMENT OF ENERGY
Richland Operations Office
KAISER ENGINEERS HANFORD COMPANY

M RIPING
FLOOR DRAIN SEAL ASSY AND DETAILS

PROJECT TITLE WASTE TRANSER FACILITIES

PROJ B220	WO X-220BE	JOB R099H2	
SCALE SHOWN	BLDG 241-AX	PROJ 8407	
DRAWING NUMBER H-2-93633	SHEET 1	OF 1	REV 1

NONE | NOT REQD

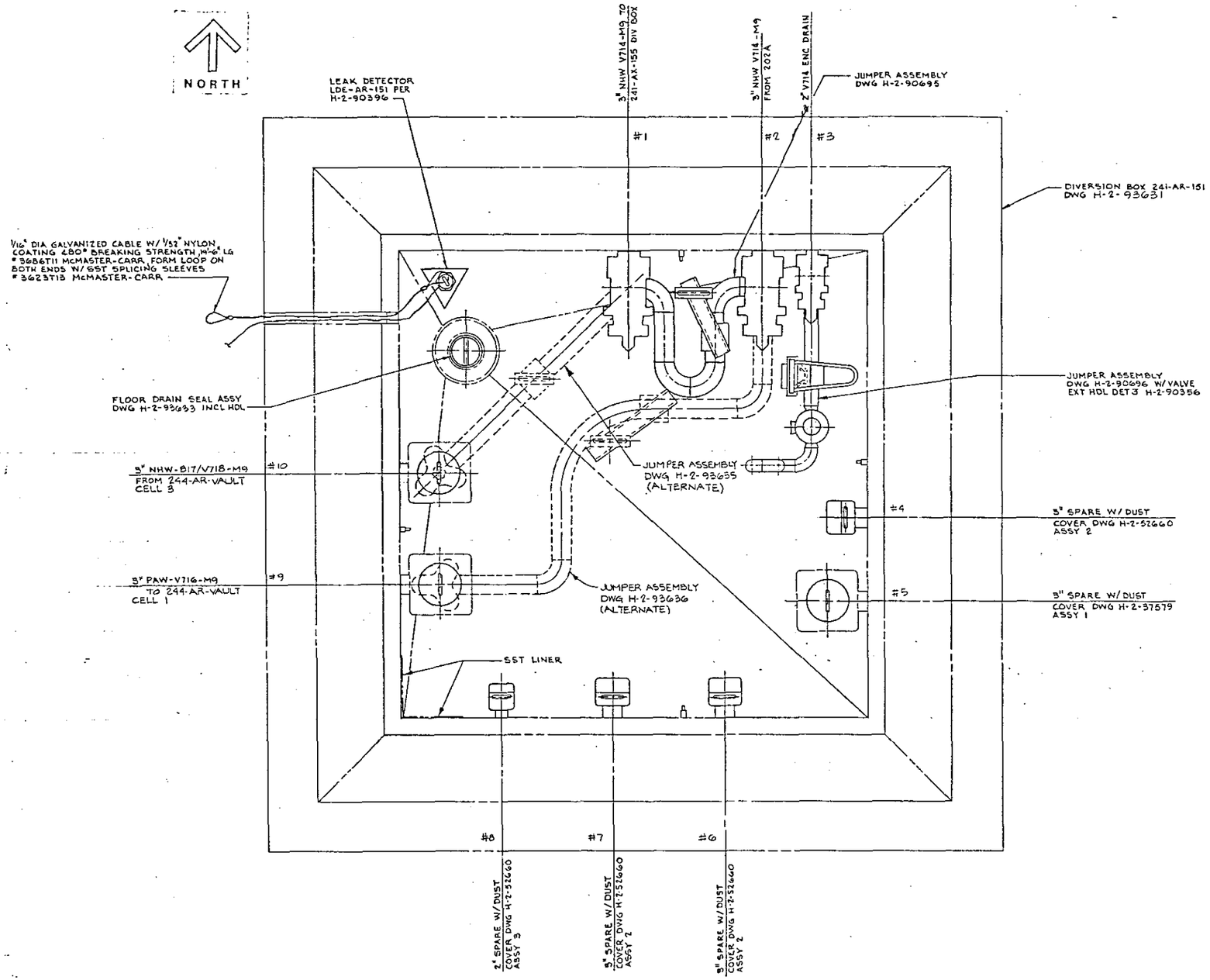

PLAN
241-AR-151
DIVERSION BOX

NOTE:
1. FOR GENERAL NOTES SEE H-2-90352.

RELEASED FOR CONSTRUCTION BY [signature] DATE 7/11/93 DOE

H-2-37519	VERT DUST COVERS	
H-2-52660	HORIZ DUST CAP	
H-2-90351	DRAWING LIST	
NUMBER	TITLE	
REFERENCES		
NEXT USED ON	H-2-90351	

REV	BY-DATE	BY-DATE	BY-DATE	DESCRIPTION	REV
1	LAR 11/4/93	NA	JWN 8-4 / JEV 10-14-93	AS-BUILT FOR B-220	1
MICROFILMED	ROCKWELL APPROVAL	KEN APPROVAL		REVISIONS	
COMMENT REVIEW					

RHO APPROVAL BY [signature] DATE 7/6/93

U. S. DEPARTMENT OF ENERGY
Richland Operations Office
KAISER ENGINEERS HANFORD COMPANY

PROJ ENGR [signature] 7-13-93
OP [signature] 7/6/93
APPROVED BY [signature] 6-7-93
SAFETY [signature] 7/1/93
APPROVED BY [signature] 7/1/93
CHECKED BY C. E. [signature] 5-14-93
DRAWN BY B. MEYER 5-26-93
DESIGNED BY B. MEYER 5-26-93
CLASSIFICATION NONE | BY NOT REQD

PIPING EQPT ARRANGEMENT 241-AR-151

PROJECT TITLE WASTE TRANSFER FACILITIES
PROJ B-220 | WO X220BE | ASK R099HZ
SCALE 1 1/2" = 1'-0" | BLDG 241-AR | SHEETS 8404
DRAWING NUMBER H-2-93631 | SHEET 1 | SI 1 | REV 1

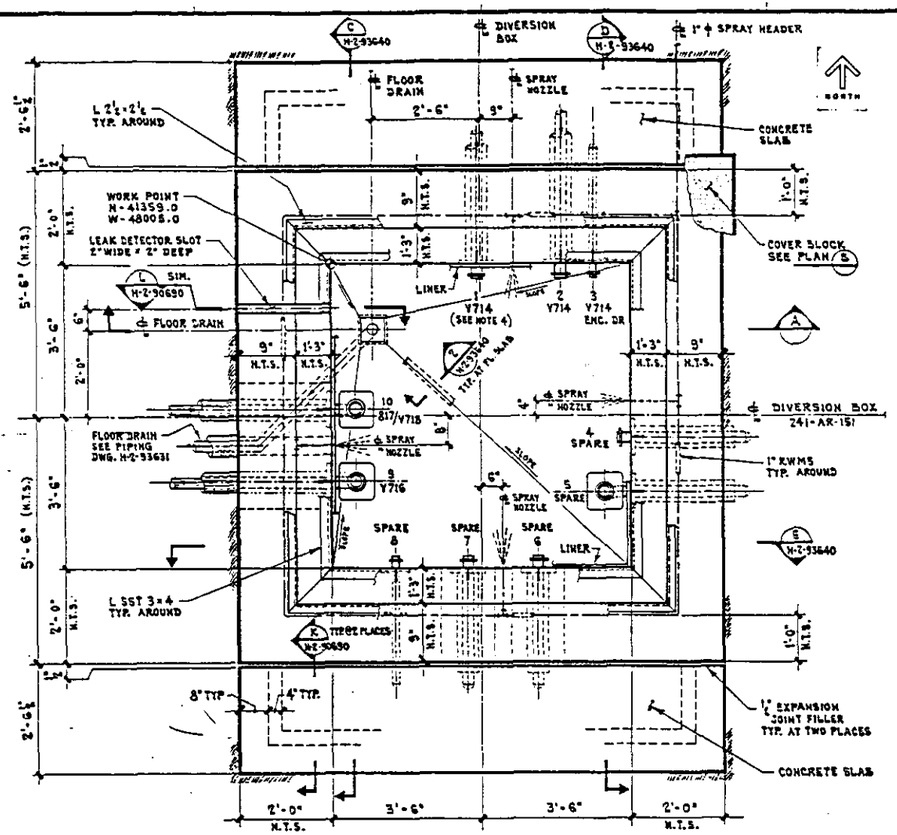

DIVERSION BOX - PIT PLAN

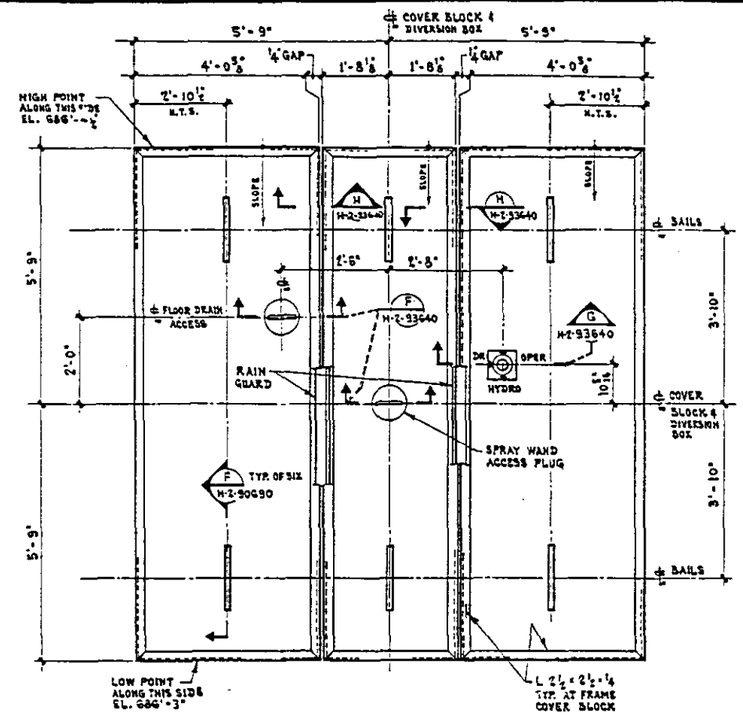

COVER BLOCK - PLAN (B)

GENERAL NOTES

1. DESIGN LOADS:
   EQUIVALENT FLUID PRESSURE FOR SOIL = 30 LB/CU FT
   SEISMIC CATEGORY II UBC ZONE 2
   LIVE LOAD 100 PSF
2. DESIGN STRESSES:
   CAST-IN PLACE CONCRETE $F'c$ = 3000 PSI / 28 DAYS
   BAR REINFORCEMENT F_y = 60000 PSI
3. FOR CONSTRUCTION SPECIFICATIONS SEE B-220-C1
4. – PAINT OUTSIDE SURFACES OF THE PIT WHITE
   – PAINT NOZZLE NUMBERS AND LINE NUMBERS IN 3" HIGH BLACK LETTERS ABOVE EACH PIPE LINE ON THE COVER BLOCKS AND THE INSIDE SLOPING FACE OF THE VALVE PIT
   – PAINT 241-AR-151 AND H-2-93639 ON VALVE PIT COVER BLOCK IN 3" HIGH BLACK LETTERS. (NOTE THE NOMENCLATURE IS SHOWN IN PIT PLAN ONLY LOCATE THE SAME CALLOUTS ON THE COVER BLOCKS)
   – PAINT A HALF INCH WIDE BLACK LINE FROM THE NOZZLE NUMBER TO THE NOZZLE LOCATION
5. – COAT BOTTOM, SIDES OF COVER BLOCKS, SLOPING SIDES AND TOP EDGE OF PIT WITH WHITE SPECIAL PROTECTIVE COATING (SPC)
   – PAINT THE REMAINDER OF THE COVER BLOCKS WITH WHITE PAINT PER CONSTRUCTION SPECIFICATIONS IDENTIFICATION INFORMATION PLACED ON SPC SHALL BE DONE USING SPC.
6. – FLOOR DRAIN PIPE, 1" ϕ SPRAY RING PIPE AND THE TWO 2" ϕ SCH. 40 PIPES TO BE EMBEDDED IN POUR.
   – ALL OTHER PIPES TO BE POSITIONED IN BLOCKOUTS AND GROUTED IN.
7. – ALL AROUND CONTINUOUS STRIP OF WET BACK ADHESIVE GASKET 3/4" THICK × 2" WIDE # HM1-1052-3 BY "WILLIAMS PRODUCTS" OR EQUAL.
   – POSITION WITH ADHESIVE SIDE UP

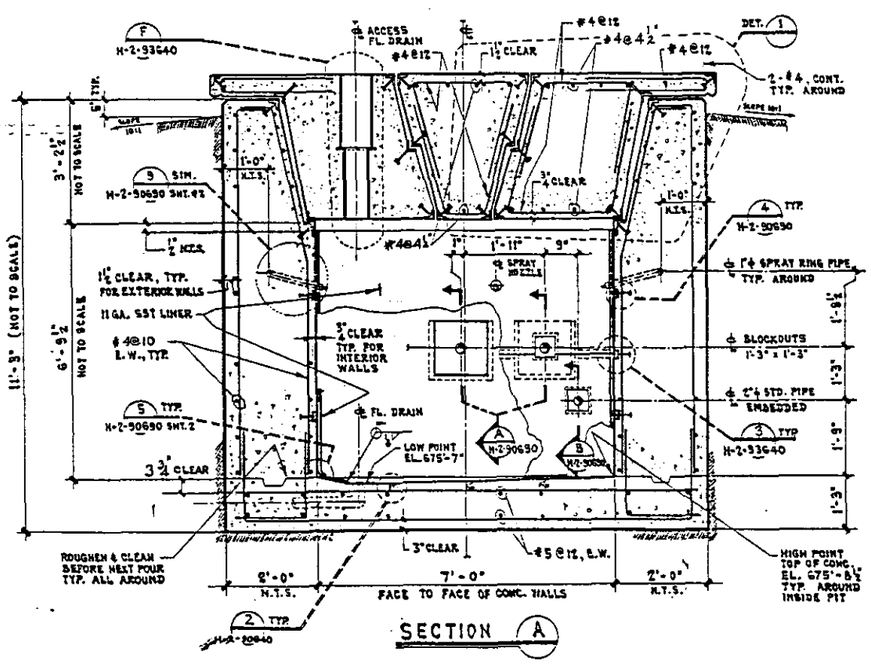

SECTION (A)

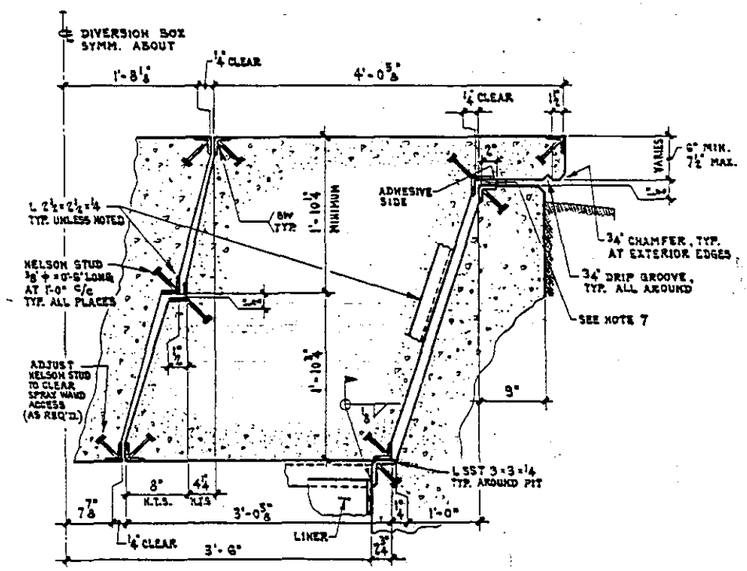

DETAIL (1)
SCALE: 1 1/2" = 1'-0"

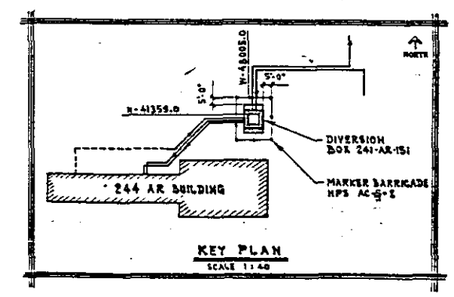

KEY PLAN
SCALE 1:40

RELEASED FOR CONSTRUCTION
BY GSRichen DATE 4/29/93
DOE

AC-5-2	MARKER BARRICADE
H-2-90351	DRAWING LIST
NUMBER	TITLE
REFERENCES	
NEXT USED ON	H-2-90351

REV	DESCRIPTION	REV BY DATE
2	EO 9054 AND 17550. REVISION PER ECN 129466.	
1	AS-BUILT FOR B-220	

MICROFILMED: RECEIVED BY DATE; APPROVAL BY DATE. ECN APPROVAL. COMMENT REVIEW.

RHO APPROVAL BY — DATE

U. S. DEPARTMENT OF ENERGY
Richland Operations Office
KAISER ENGINEERS HANFORD COMPANY

STRUCTURAL
DIVERSION BOX 241-AR-151
PLAN AND SECTIONS

PROJECT TITLE: WASTE TRANSFER FACILITIES

DRAWN BY	HUGO SOTO	6-4-93	
DESIGNED BY	M. Hong	6/4/93	
CHECKED BY	D. LIEN	5/19/93	
APPROVED BY	D. LIEN	5/19/93	
PROJ	B-220	WO	X-220 BE
SCALE	1/4"=1'-0"	BLDG	241-AR-151
CLASSIFICATION	NONE	HOT REQ'D.	
JOB	R093 HZ		
INDEX	0900		
DRAWING NUMBER	H-2-93639	REV	2

L-8

PARTS LIST				
QTY	PART	DESCRIPTION	MATERIAL/REFERENCE	REF LTR

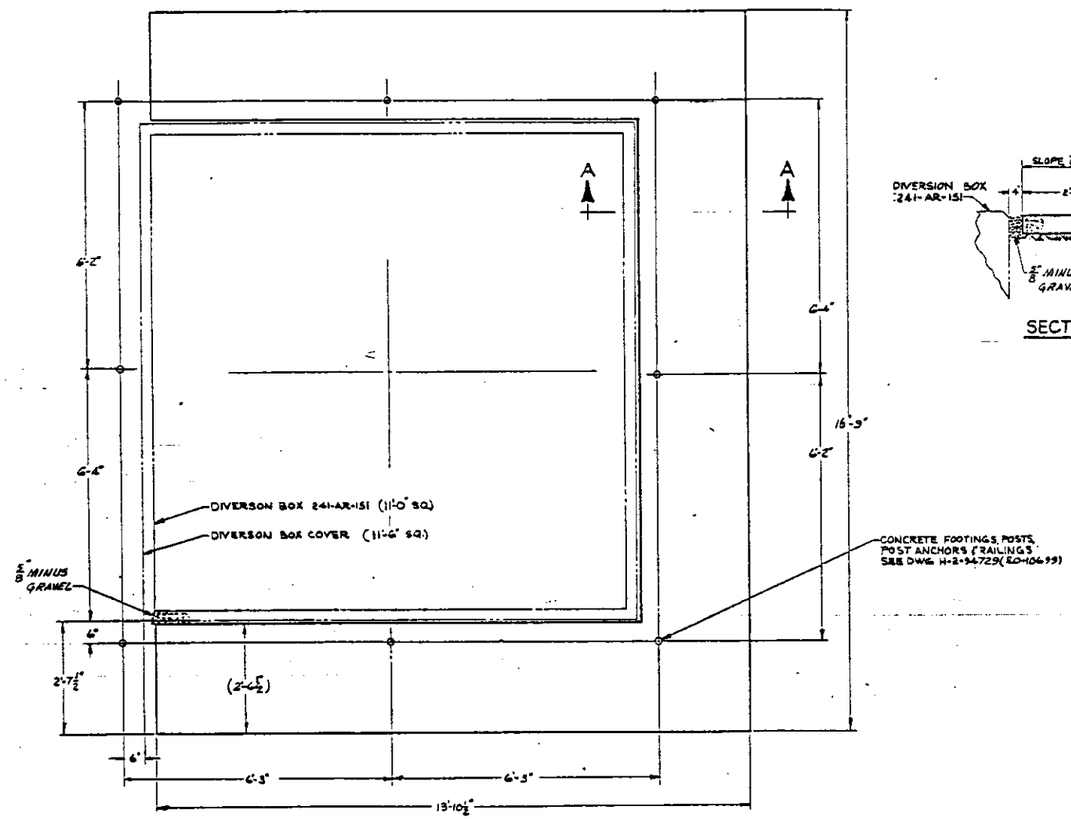

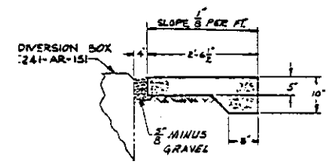

SECTION A-A

OFFICIAL RELEASE BY WHC
DATE APR 24 1991

DWG NO	TITLE	REFERENCES	
		H-2-94729	GUARDRAIL SYS. INSTALL.
		REF NUMBER	TITLE
DRAWING TRACEABILITY LIST		NEXT USED ON	H-2-93639-1

REV NO	REV BY DATE	CHK BY DATE	APVD BY DATE	CHK CHKR	OTHER	OTHER
REVISIONS				APPROVALS BY/DATE		

DRAWN NATARELLI 11-27-91
DESIGNED J.H. WHITE 3-29-91
SPEC
CHECKED
ES
OTHER
OTHER
OTHER
OTHER
APVD FOR IMPLEMENTATION
BY
TITLE
DATE

ECN 129466

U.S. DEPARTMENT OF ENERGY
Richland Operations Office
Westinghouse Hanford Company

STRUCTURAL
DIVERSION BOX 241-AR-151
PLAN AND SECTIONS

SIZE	BLDG NO	PROJECT NO	DWG NO	REV
F	2006	0900	H-2-93639	0

SCALE 3/16"=1'-0" SHEET 2 OF 2

H-2-93639 SHEET 2 OF 2

54-6000-02713/89

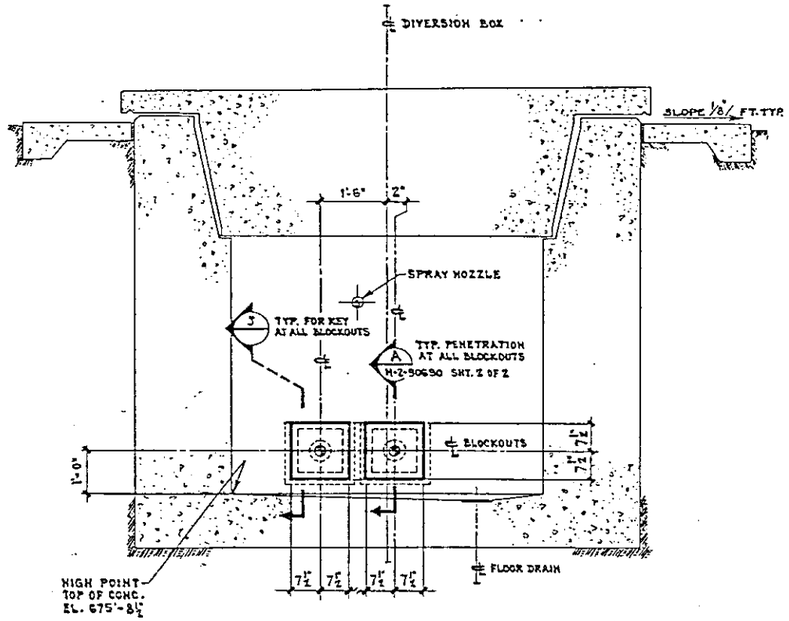

SECTION C
H-2-93639

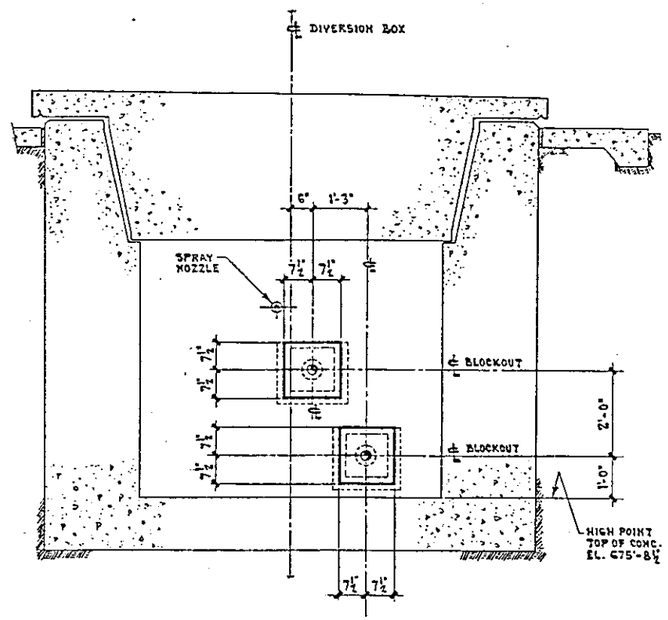

SECTION D
H-2-93639

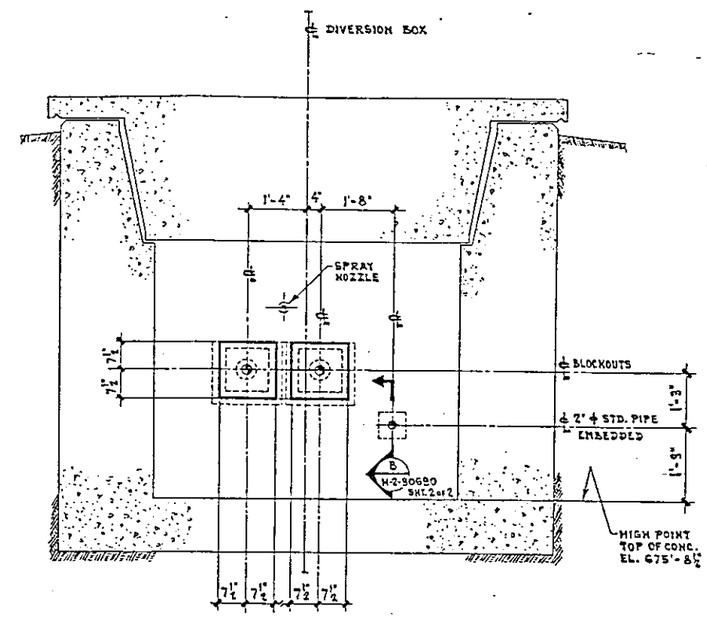

SECTION E
H-2-93639

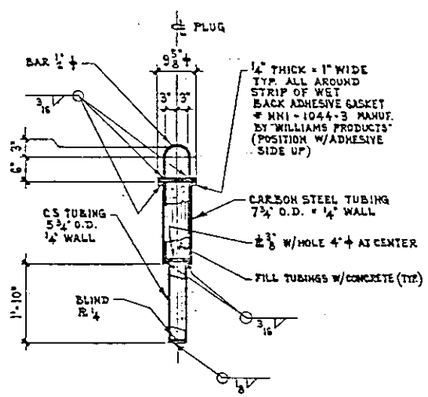

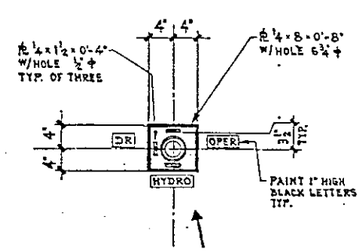

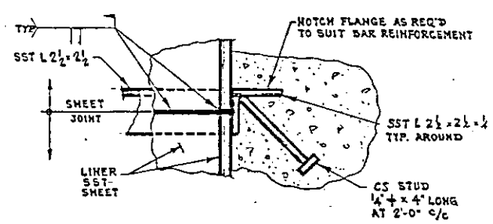

JOINT TIE AT SLAB

DETAIL 2
NOT TO SCALE H-2-93639

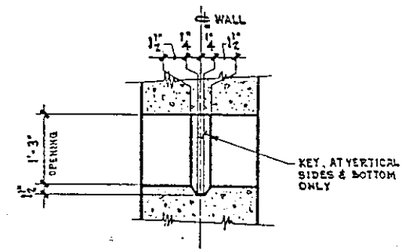

KEY AT BLOCKOUT

SECTION J

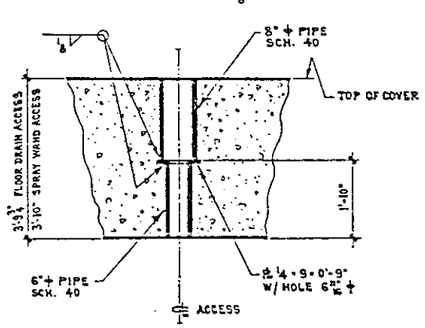

SPRAY WAND AND FLOOR DRAIN

SECTION F
H-2-93639

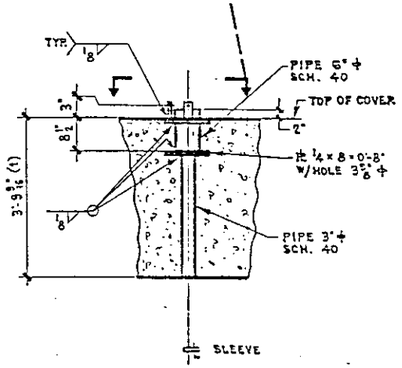

VALVE OPERATOR SLEEVE

SECTION G
H-2-93639

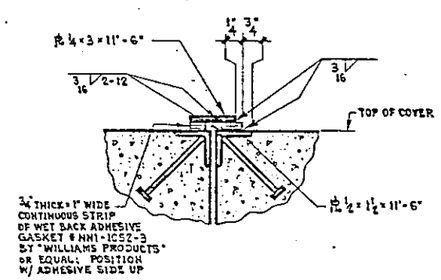

RAIN GUARD

SECTION H
SCALE: 3" = 1'-0" H-2-93639

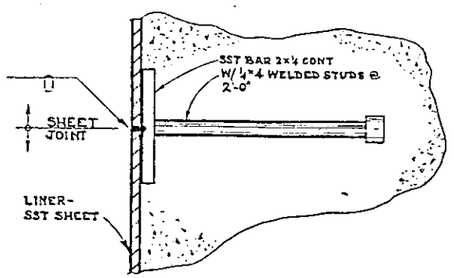

TYP JOINT TIE-VERT-WALL

DETAIL 3
NTS H-2-93639

H-2-90351	DRAWING LIST						
NUMBER	TITLE						
REFERENCES							
NEXT USED ON	H-2-90351						

MICROFILMED

M	12/10/85	NA			AS-BUILT FOR B-220	1
	BY-DATE		BY-DATE			
ROCKWELL APPROVAL		REN APPROVAL		REV BY DATE	DESCRIPTION	REV
REVISIONS						
COMMENT REVIEW						

RELEASED FOR CONSTRUCTION
BY DATE 6/20/83
DOE

RHO APPROVAL	DATE	U. S. DEPARTMENT OF ENERGY Richland Operations Office
		KAISER ENGINEERS HANFORD COMPANY
PROJ ENGR		STRUCTURAL DIVERSION BOX 241-AR-151 SECTIONS AND DETAILS
DR		
APPROVED		
SAFETY		
APPROVED D LIEN		PROJECT TITLE WASTE TRANSFER FACILITIES
CHECKED D LIEN		PROJ B-220 / WO X-220 BE / JOB R099 H2
DRAWN HUGO SOTO		SCALE 3/4" = 1'-0" B.N. / BLDG 241-AR-151 / SHEET 0900
DESIGNED		
CLASSIFICATION NONE	BY NOT REQ'D.	DRAWING NUMBER H-2-93640 / SHEET 1 / OF 1 / REV 1

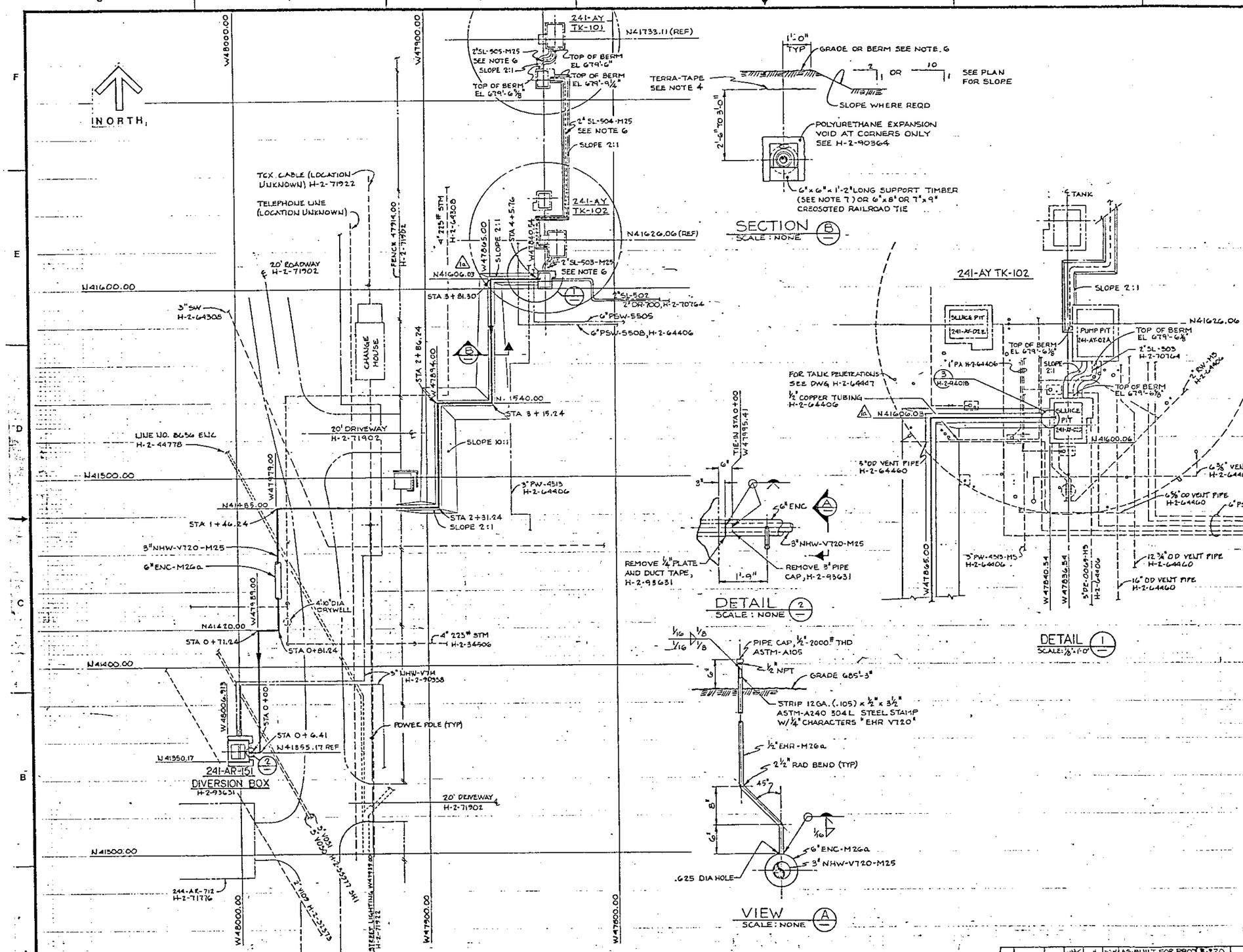

SECTION B
SCALE: NONE

DETAIL 2
SCALE: NONE

DETAIL 1
SCALE: 1/8" = 1'-0"

VIEW A
SCALE: NONE

PLAN
SCALE: 1" = 20'-0"

NOTES

1. FOR GENERAL NOTES SEE DWG H-2-90352.
2. FOR PROFILE OF LINE V720 SEE DWG H-2-94018.
3. FOR PIPE SUPPORTS, GUIDES AND ANCHORS SEE DWG H-2-94019.
4. PLASTIC TAPE YELLOW WITH BLACK LETTERS "CAUTION BURIED LINES" TERRA TAPE WIDTH AS REQUIRED TO COVER PIPES.
5. DIRECT BURIED PIPING SHALL HAVE PROTECTIVE COATING PER CONSTRUCTION SPEC B-220-C1 AND H-2-90364.
6. THE CENTER LINE OF PIPE ON LINE 3"NHW-V720-M25, 2"SL-503-M25, 2"SL-504-M25 AND 2"SL-505-M25 SHALL BE 4'-6" MINIMUM BELOW GRADE, BERM AS REQUIRED. BERM TO SLOPE 2 TO 1 EXCEPT AS NOTED.
7. ALL PLYWOOD AND LUMBER SHALL BE WOLMANIZED (CCA) PRESSURE-TREATED, WOOD MEETING AWPA STANDARD P-5 AND FEDERAL STANDARD TT-W-550 (QTY TO BE 0.25 LB/CUBIC FOOT OF WOOD IN ACCORDANCE WITH AWPA STD C-2).
8. FOR CATHODIC PROTECTION SEE H-2-94033

RELEASED FOR CONSTRUCTION
BY [illegible] DATE [illegible]
DOE

H-2-64314	STRUCTURAL - SLUICE PIT PLAN & SECTION	H-2-90351	DRAWING LIST
H-2-64406	PIPING PLAN TK 102 241-AY TK FARM	NUMBER	TITLE
NUMBER	TITLE	REFERENCES	
DRAWING TRACEABILITY LIST		NEXT USED ON H-2-90351	

M	AS-BUILT FOR PROJ B-220 DFC B-220-128 Z E6;D4	1	
BY-DATE	BY-DATE	REV BY DATE	DESCRIPTION
ROCKWELL APPROVAL	KEN APPROVAL		REVISIONS
COMMENT REVIEW			

MICROFILMED

RHO APPROVAL BY [illegible] DATE 3-9-95

U. S. DEPARTMENT OF ENERGY
Richland Operations Office
KAISER ENGINEERS HANFORD COMPANY

M PIPING
PLAN AND SECTION
LINE V720

PROJECT TITLE: WASTE TRANSFER FACILITIES

PROJ ENGR [illegible]			
DESIGN [illegible]			
APPROVED BY [illegible]			
SAFETY [illegible]			
APPROVED BY [illegible]			
CHECKED BY J. SHIPMAN			
DRAWN BY RG RITCH			
DESIGNED BY RITCH			
CLASSIFICATION NONE	BY NOT REQD		

PROJ B-220 | WO X220B1 | JOB R099K2
SCALE SHOWN | SYS 241-AR, 241-AY | PAGE 0403/8409
DRAWING NUMBER H-2-94017 | SHEET | OF | REV

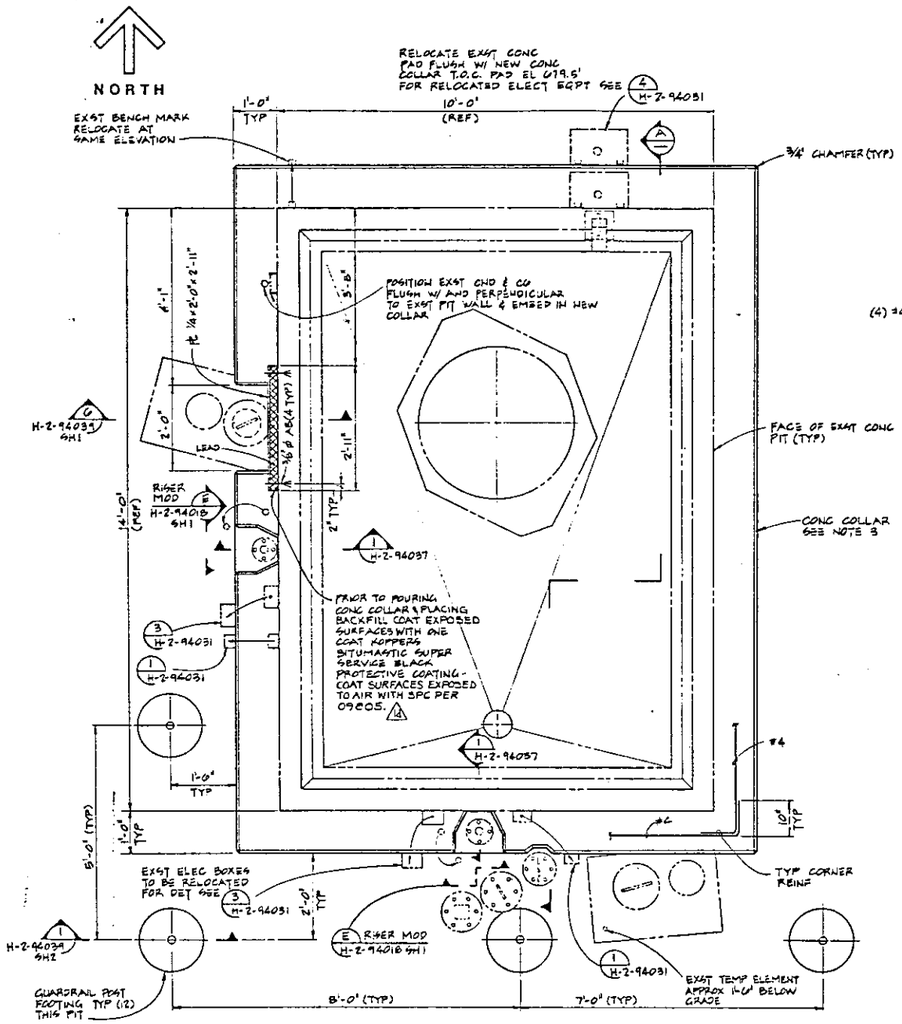

PLAN - PUMP PIT 241-AY-02A
SCALE: 3/4" = 1'-0" (COVER BLOCKS REMOVED)

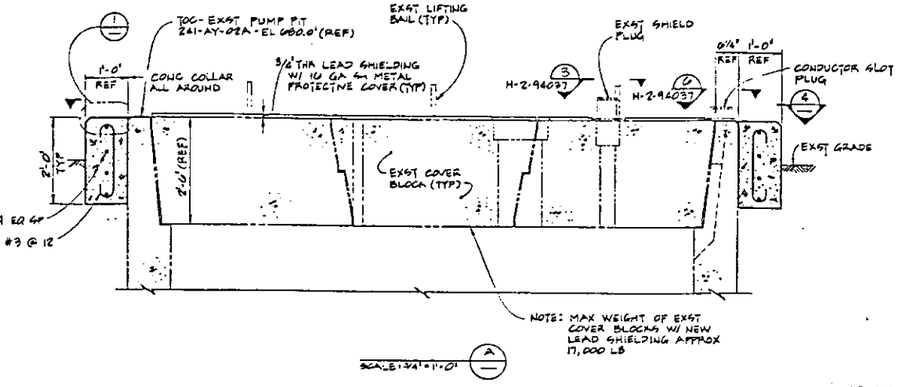

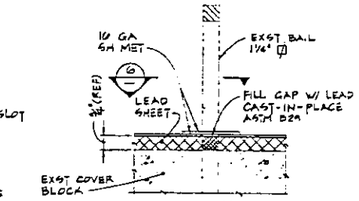

TYP ALL PUMP PIT BAILS 2 H-2-94038
SCALE: 1 1/2" = 1'-0"

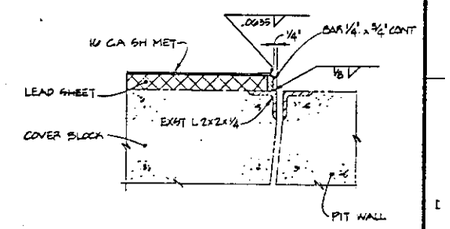

SCALE: 3" = 1'-0" 3 H-2-94037

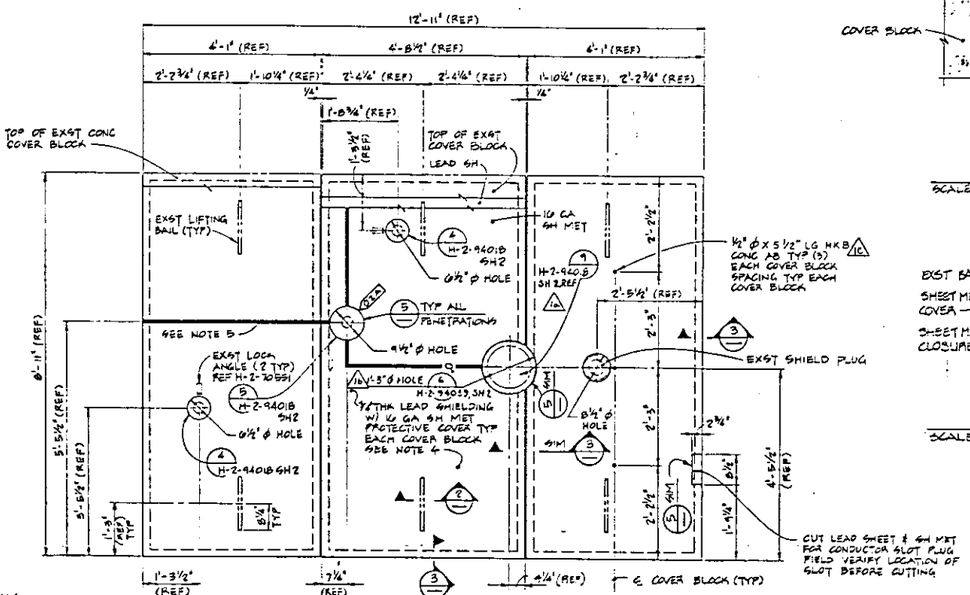

NOTE: FIELD VERIFY ALL "REF" DIMENSIONS BEFORE CUTTING LEAD SHEET.

PLAN - EXST COVER BLOCKS W/ NEW LEAD SHIELDING 4
SCALE: 3/4" = 1'-0"

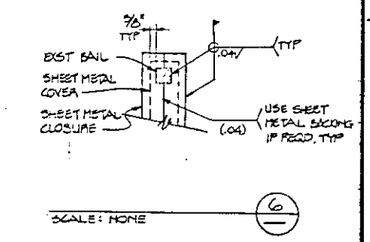

SCALE: NONE 6

FOR GENERAL NOTES SEE DWG H-2-94039 SH1

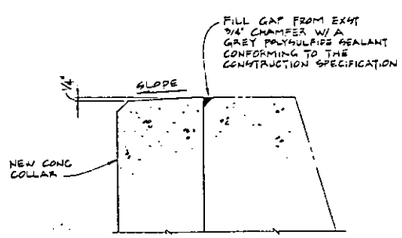

NOTE: SLOPE PUMP PIT COLLARS ONLY

NOT TO SCALE 1 H-2-94035 H-2-94036 H-2-94037

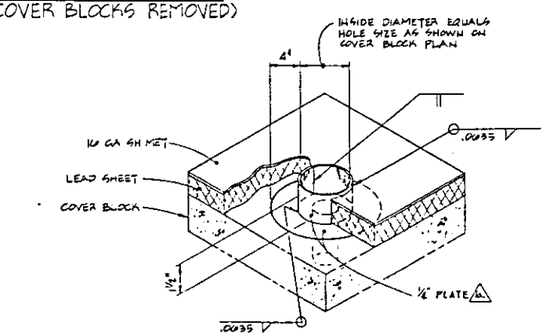

TYP COLD FLOW RESTRAINT AROUND PENETRATIONS 5 H-2-94037
NOT TO SCALE

H-2-56331	STR_ CONC PUMP PIT PLANS AND SECTIONS
NUMBER	TITLE
DRAWING TRACEABILITY LIST	

H-2-70551	STANDARD TANK FARM SET	
H-2-56331	STR_ CONC PUMP PIT PLANS AND SECTIONS	
H-2-70551	DRAWING LIST	-
NUMBER	TITLE	
REFERENCES		
NEXT USED ON	H-2-56331	

REV	DATE	BY	DESCRIPTION
M	10-9-86		AS-BUILT FOR PROJ B-220
			a) NCD CHNG. ED-67 ADDED TO NOTE
			b) DFC B-220-131 & C2
			c) DFC B-220-151 & C4
			d) DFC B-220-129 & A5 & C5

	BY	DATE
COCKWELL APPROVAL	KEK APPROVAL	
COMMENT REVIEW	REVISIONS	

MICROFILMED

		DATE
R-0 APPROVAL	BY	3/6/86
PROJ ENGR		2-26-86
QC		3/6/86
APPROVAL	BY	3/6/86
SAFETY		3/6/86
APPROVED BY DOE		3/6/86
CHECKED BY		3/6/86
DRAWN BY	E. deVillers	9-9-85
DESIGNED BY	K. KETCHUM	9-13-84
CLASSIFICATION	BY	
NONE	NOT REQD	

U. S. DEPARTMENT OF ENERGY
Richland Operations Office
KAISER ENGINEERS HANFORD COMPANY

STRL MODIFICATIONS PUMP PIT 241-AY-02A

PROJECT TITLE WASTE TRANSFER FACILITIES

PROJ	WO	JOB
B-220	X220BK	R099K2
SCALE SHOWN	BLDG 241 AY	SHEET 0900
DRAWING NUMBER H-2-94038	SHEET 1	OF 1	REV 1

RELEASED FOR CONSTRUCTION
BY DOE DATE 3/6/87

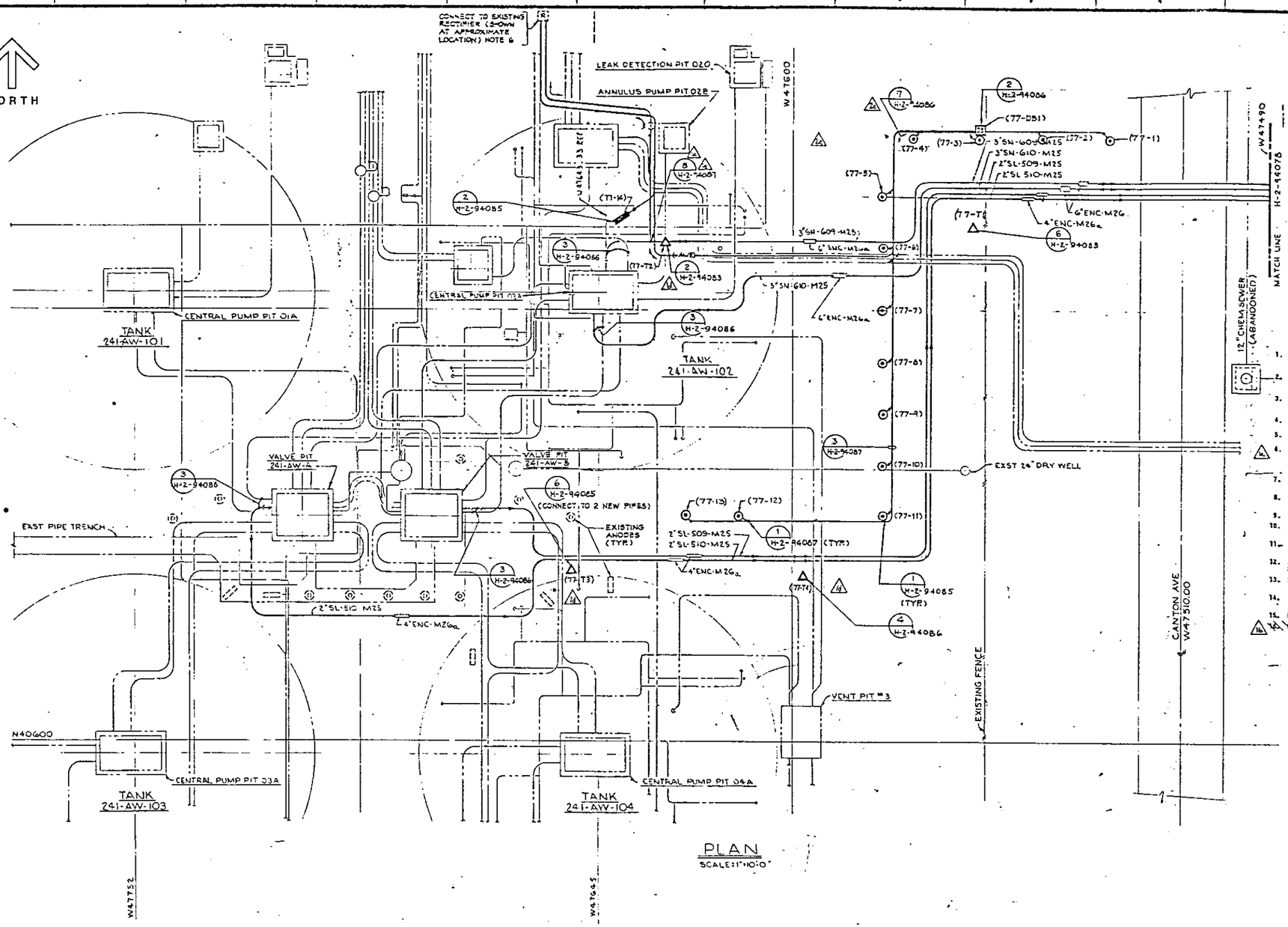

PLAN

SCALE: 1" = 10'-0"

SYMBOLS

- VERTICAL PREPACKAGED ANODE
- HORIZONTAL PREPACKAGED ANODE
- CATHODIC PROTECTION TEST STATION
- DEEP PERMANENT REFERENCE ELECTRODE
- ANODE DISTRIBUTION BOX
- ANODE JUNCTION BOX
- RECTIFIER
- CABLE MARKER
- (+E) ANODE HEADER CABLE NO. 2 AWG MMW PE INSULATED — E: EAST
- (+EL) ANODE LOOP CABLE NO. 2 AWG MMW PE INSULATED — EL: EAST LOOP
- (−) NEGATIVE RETURN CABLE NO. 2 AWG MMW PE INSULATED
- ANODE DISTRIBUTION CABLE NO. 8 AWG MMW PE INSULATED

NOTES

1. ANODE DISTRIBUTION BOXES & ANODE JUNCTION BOXES ARE SHOWN IN APPROXIMATE LOCATIONS. FINAL LOCATION SHALL BE DECIDED IN THE FIELD SO THAT THEY ARE AWAY FROM TRAFFIC.
2. ALL PREPACKAGED ANODES SHALL BE PLACED AT THE SURVEY STAKES. ANODES MAY BE MOVED 1-FOOT IN ANY DIRECTION, SUBJECT TO PRIOR APPROVAL BY A/E INSPECTOR.
3. CABLE SEPARATION AND SEPARATION FROM ANODES ARE SHOWN SCHEMATICALLY. CABLE RUNS SHALL BE ROUTED DIRECTLY OVER ANODE LOCATIONS.
4. CABLE MARKERS SHALL BE AS SHOWN ON DRAWINGS DIRECTLY OVER THE CABLES.
5. TEST STATION LOCATIONS ARE APPROXIMATE. LOCATE IN FIELD AWAY FROM TRAFFIC.
6. RECTIFIER WITHIN THE 241-AW TANK FARM BOUNDARY SHALL BE INSTALLED UNDER PROJECT B-234. ALL OTHER RECTIFIERS SHOWN SHALL BE INSTALLED BY THE B-340 PROJECT.
7. DEEP REFERENCE ELECTRODES SHALL BE PLACED 3-FEET AWAY FROM STORAGE TANK CONCRETE WALLS AS SHOWN ON DWG. H-2-94087, DET. 5.
8. CONNECTION OF NEGATIVE RETURN CABLE TO PIPE AND REPAIR OF COATING, IF REQUIRED, SHALL BE MADE IN ACCORDANCE WITH DWG. H-2-94087, DET. 6.
9. CONNECTION TO HEAT TRACE PIPES SHALL BE MADE IN ACCORDANCE WITH DWG. H-2-94087, DET. 6.
10. ANODE DISTRIBUTION CABLES SHALL BE BUNDLED TOGETHER AND ROUTED IN SAME TRENCH. ANODE DISTRIBUTION CABLES SHALL BE NO. 8 AWG MMW PE INSULATED. SEE DWG. H-2-94087, DET. 4.
11. SPLICE BETWEEN NO. 8 AWG ANODE DISTRIBUTION CABLES AND ANODE LEAD CABLES SHALL BE MADE IN ACCORDANCE WITH DWG. H-2-94087, DET. 1.
12. SPLICE BETWEEN NO. 2 AWG ANODE HEADER CABLE AND ANODE LEAD CABLE SHALL BE MADE IN ACCORDANCE WITH DWG. H-2-94087, DET'S. 1 AND 2.
13. REFERENCE ELECTRODES PLACED BETWEEN TWO PARALLEL PIPES SHALL BE INSTALLED EQUIDISTANT FROM THE TWO PIPES.
14. PLASTIC MARKER PLATES SHALL BE USED TO IDENTIFY EACH WIRE. USE IDEAL INDUSTRIES PLATE #41-693, CABLE TIE #41-809 AND MARKING PEN BLACK #41-697.
15. LEAVE SUFFICIENT SLACK IN ALL WIRES TO PERMIT CONNECTION OF ANY WIRE TO ANY TERMINAL.
16. [illegible]

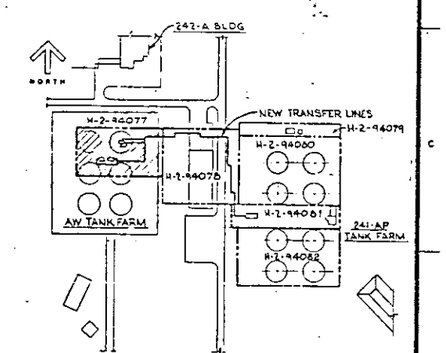

KEY PLAN

SCALE: NONE

N HANFORD PLANT GRID

N WASHINGTON STATE GRID (LAMBERT)

EQUATIONS TO CONVERT COORDINATES FROM HANFORD PLANT GRID TO WASHINGTON STATE GRID (LAMBERT)

$N_L = 408,202.84 - W_H \sin\theta + N_H \cos\theta$

$E_L = 2,295,525.81 - W_H \cos\theta - N_H \sin\theta$

WHERE: $\theta = 1^\circ\,06'\,49.577''$

N_H = NORTHING ON HANFORD PLANT GRID

W_H = WESTING ON HANFORD PLANT GRID

N_L = NORTHING ON WASH. STATE GRID

E_L = EASTING ON WASH. STATE GRID

ANODE LOCATIONS

(77-1)	N40756 W47528	(77-2)	N40740 W47543
(77-3)	N40740 W47558	(77-4)	N40740 W47573
(77-5)	N40726 W47579	(77-6)	N40734 W47581
(77-7)	N40700 W47579	(77-8)	N40658 W47581
(77-9)	N40676 W47579	(77-10)	N40665 W47578
(77-11)	N40653 W47579	(77-12)	N40653 W47540
(77-13)	N40653 W47615	(77-14)	N40721 W47644

H-2-40435	DRAWING LIST
NUMBER	TITLE
REFERENCES	
NEXT USED ON	H-2-40433

REV	BY	DATE	DESCRIPTION
M	LEJ	9-10-86	AS-BUILT FOR PRO: B-340 WIRES TO THE SOUTH 1 DET 8 a) MOD CHG F,G6-8, MOVED 2 D9 b) DFC B-340-404 Z A10,D7, c) DFC-B-340-385 E-G6 d) DFC B-340-272 Z-D3 e) DFC B-340-260 WIRE E-E3

MICROFILMED: PRINTS/CELLS APPROVAL BY/DATE — KEN APPROVAL BY/DATE — REVISIONS — COMMENT REVIEW

RELEASED FOR CONSTRUCTION BY [illegible] DATE [illegible] BOE

DOE APPROVAL BY [illegible] DATE [illegible]

U. S. DEPARTMENT OF ENERGY
Richland Operations Office
KAISER ENGINEERS HANFORD COMPANY

CATHODIC PROTECTION PIPING PLAN #1: 241-AW TANK FARM

PROJECT TITLE: 241-AP TANK FARM

DRAWN	Y.KRYMSKAYA	FROM	B-340
CHECKED	W. CASSIDY	WO	X 34002
DRAWN	Y.KRYMSKAYA	BLDG	241-AP
SCALE	AS SHOWN	PROJ	2795AZ
		INDEX	7801
CLASSIFICATION	NONE	DRAWING NUMBER	H-2-94077
SHEET	1	OF	1
REV	1		

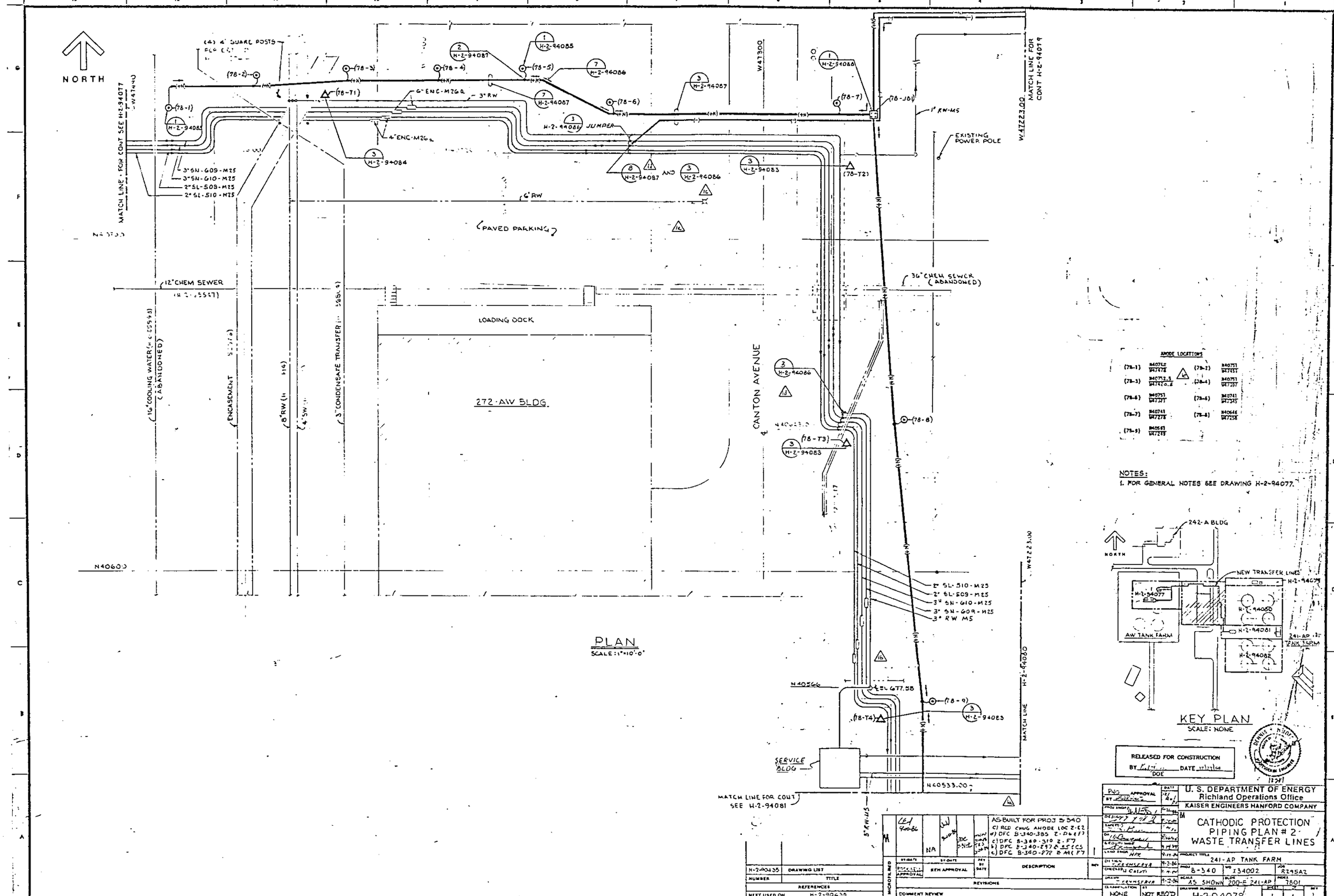

ANODE LOCATIONS

(78-1)	N40762 W47478	△ 1a	(78-7)	N40751 W47451	
(78-3)	N40753.5 W47470.5		(78-4)	N40751 W47397	
(78-5)	N40751 W47371		(78-6)	N40741 W47345	
(78-7)	N40741 W47278		(78-8)	N40646 W47258	
(78-9)	N40541 W47249				

NOTES:

1. FOR GENERAL NOTES SEE DRAWING H-2-94077.

KEY PLAN
SCALE: NONE

RELEASED FOR CONSTRUCTION
BY DOE DATE

H-2-90435	DRAWING LIST		
NUMBER	TITLE		
REFERENCES			
NEXT USED ON	H-2-90430		

				AS-BUILT FOR PROJ B-340 c) RCD CHNG ANODE LOC 2-82 d) DFC B-340-385 2-04-87 e) DFC B-340-319 2-87 b) DFC B-340-297 & 55 (CS) c) DFC B-340-278 8-86 (F7)
BY-DATE	BY-DATE		REV BY DATE	DESCRIPTION
PROJECT APPROVAL	SEH APPROVAL			REVISIONS
COMMENT REVIEW				

U. S. DEPARTMENT OF ENERGY
Richland Operations Office
KAISER ENGINEERS HANFORD COMPANY

CATHODIC PROTECTION PIPING PLAN # 2 WASTE TRANSFER LINES

PROJECT TITLE: 241-AP TANK FARM

DESIGN		PROJ	B-340
CHECKED		NO	X34002
DRAWN		SCALE	AS SHOWN
CLASSIFICATION	NONE	BY	NOT REQ'D
DRAWING NUMBER	H-2-94078		

PROJ B-340 — NO X34002 — SEQ R29542 — PAGE 7801 — SHEET 1 — REV 1

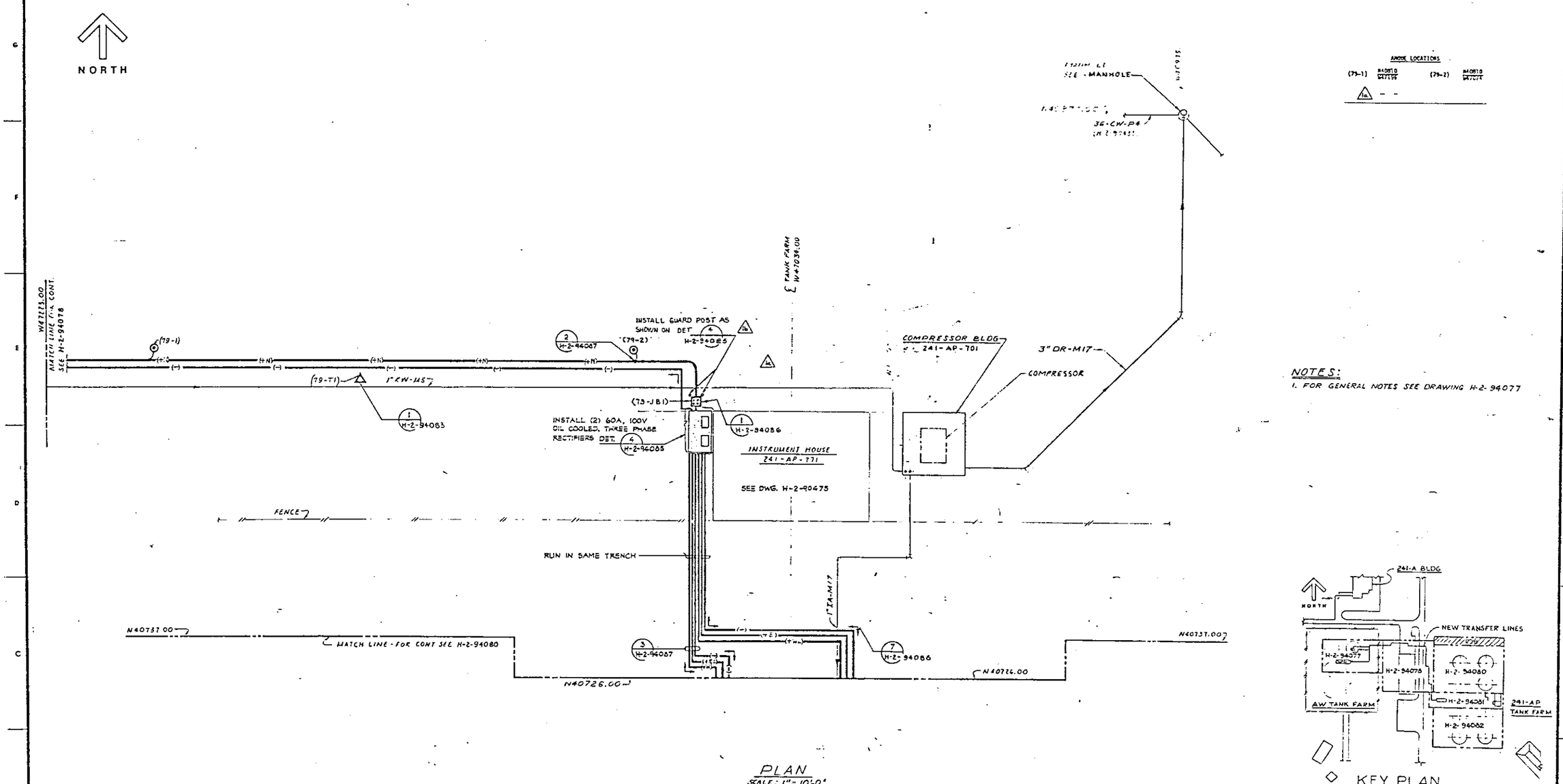

RELEASED FOR CONSTRUCTION
BY ____ DATE ____
DOE

M	CC-1-9-086	NA	DW 3-31-86	NEW DWG. REV. 0	AS-BUILT FOR PROJ B-340 b) DFC B-340-3032 E8 c) DFC B-340-391 2-17-92
MICROFILMED	BY-DATE		BY-DATE	REV BY DATE	DESCRIPTION
	RWK REVIEW APPROVAL		REM APPROVAL		REVISIONS
	COMMENT REVIEW				

H-2-90435	DRAWING LIST
NUMBER	TITLE
REFERENCES	
NEXT USED ON	H-2-90435

RHO APPROVAL BY Ed Miles	DATE 12/2/91	U.S. DEPARTMENT OF ENERGY Richland Operations Office	
PROJ ENGR Miles		KAISER ENGINEERS HANFORD COMPANY	
DESIGN		CATHODIC PROTECTION PIPING PLAN # 3	
SURVEY			
DFT			
GROUP HDR			
DESIGN ENGR HRC		PROJECT TITLE 241-AP TANK FARM	
DR BY T. KRYMSKAYA		PROJ B-340	WO X34002
CHECKED H. CASATI		SCALE	BLDG 241-AP
DRAWN T. KRYMSKAYA			
CLASSIFICATION NONE	BY NOT REQ'D	DRAWING NUMBER H-2-94079	SHEET 1 OF 1 REV 1

© U.S. GOVERNMENT PRINTING OFFICE (1986)-646-421

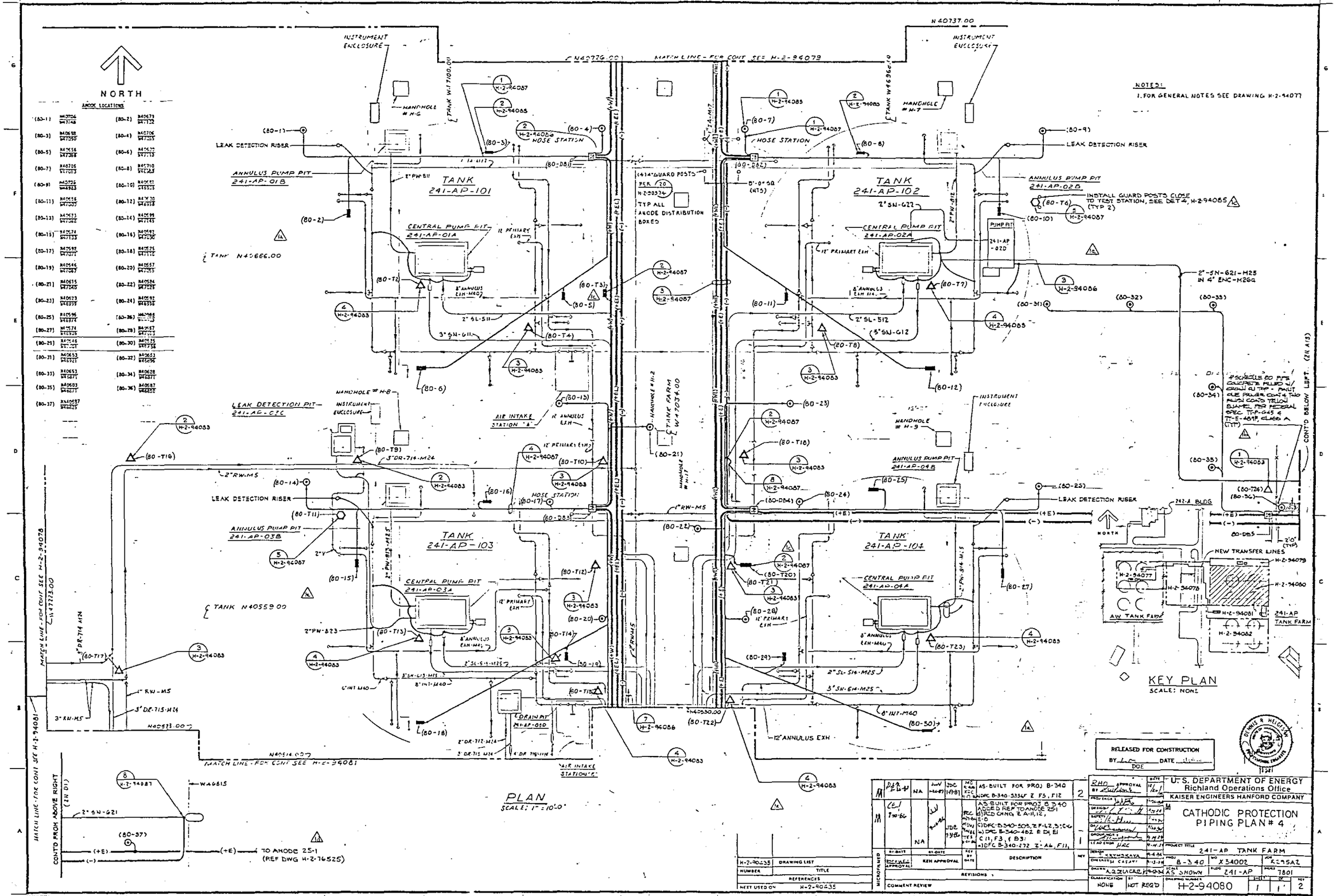
NORTH
ANODE LOCATIONS
NOTES:
1. FOR GENERAL NOTES SEE DRAWING H-2-94077
TANK 241-AP-101
TANK 241-AP-102
TANK 241-AP-103
TANK 241-AP-104
CENTRAL PUMP PIT 241-AP-01A
CENTRAL PUMP PIT 241-AP-02A
CENTRAL PUMP PIT 241-AP-03A
CENTRAL PUMP PIT 241-AP-04A
ANNULUS PUMP PIT 241-AP-01B
ANNULUS PUMP PIT 241-AP-02B
ANNULUS PUMP PIT 241-AP-03B
ANNULUS PUMP PIT 241-AP-04B
LEAK DETECTION RISER
HOSE STATION
INSTRUMENT ENCLOSURE
MATCH LINE - FOR CONT SEE H-2-94079
MATCH LINE - FOR CONT SEE H-2-94081
MATCH LINE - FOR CONT SEE H-2-94078
MATCH LINE - FOR CONT SEE H-2-94081
CONT'D FROM ABOVE RIGHT
CONT'D BELOW LEFT
AIR INTAKE STATION "A"
AIR INTAKE STATION "B"
DRAIN PIT 241-AP-03D
PUMP PIT 241-AP-02D
INSTALL GUARD POSTS CLOSE TO TEST STATION, SEE DET 4, H-2-94085
TYP ALL ANODE DISTRIBUTION BOXES
TO ANODE 25-1 (REF DWG H-2-76525)
NEW TRANSFER LINES
AW TANK FARM
241-AP TANK FARM
KEY PLAN
SCALE: NONE
PLAN
SCALE: 1" = 10'-0"
RELEASED FOR CONSTRUCTION
BY DOE DATE
U.S. DEPARTMENT OF ENERGY
Richland Operations Office
KAISER ENGINEERS HANFORD COMPANY
CATHODIC PROTECTION PIPING PLAN # 4
241-AP TANK FARM
B-340
X34002
R295A2
AS SHOWN
241-AP
7801
H-2-94080
NONE
NOT REQ'D
H-2-90435
DRAWING LIST
REFERENCES
NEXT USED ON H-2-90435
REVISIONS
COMMENT REVIEW
DESCRIPTION
AS-BUILT FOR PROJ B-340
AS-BUILT FOR PROJ B-340 ADDED REF TO ANODE 25-1
DFC B-340-503, Z F-12, 3; C-6
DFC B-340-482 & D1, E1
C11, F3, & B3
DFC B-340-272 Z-A6, F11

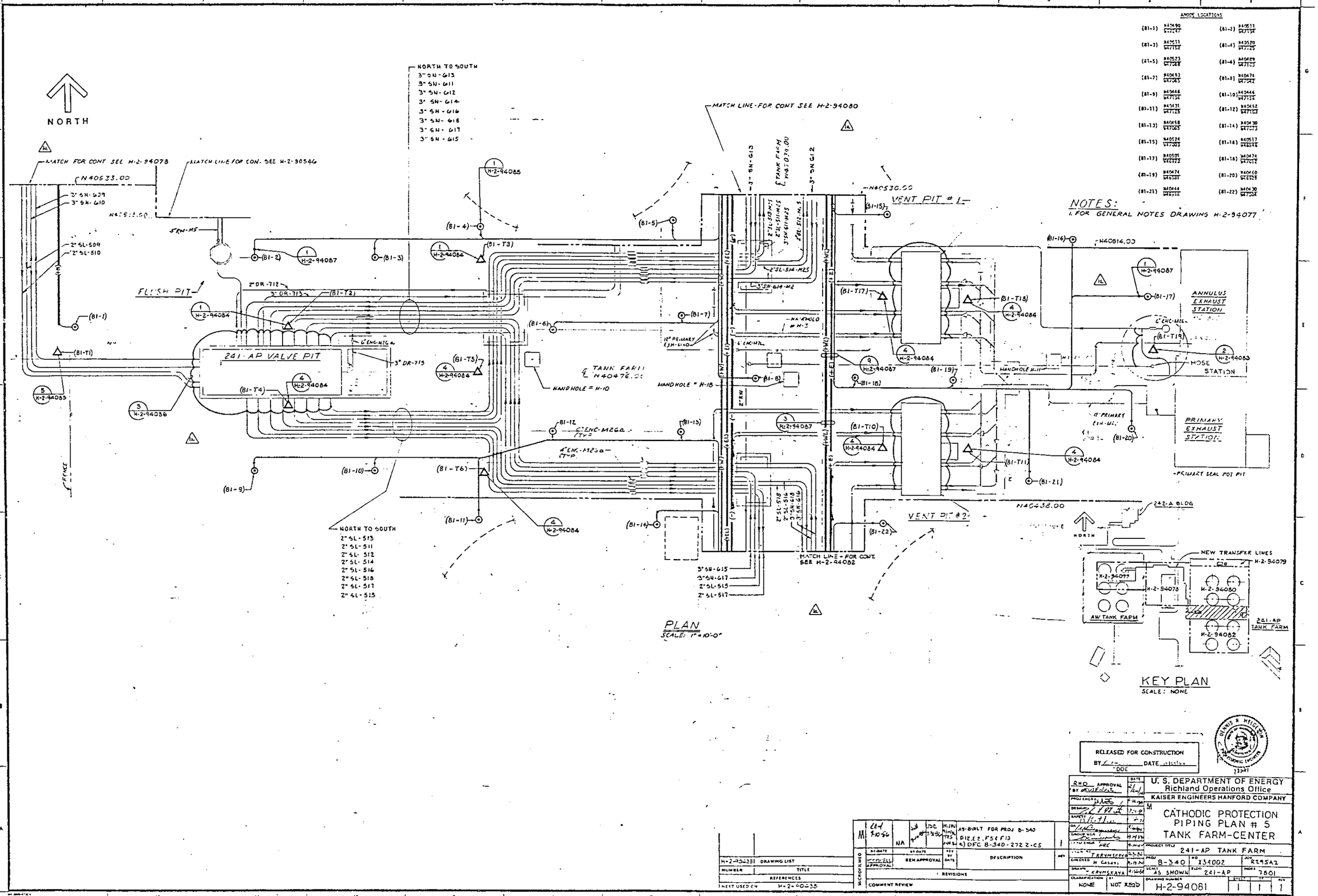
NORTH
MATCH FOR CONT SEE H-2-94078
MATCH LINE FOR CON. SEE H-2-90546
N40533.00
FLUSH PIT
241-AP VALVE PIT
NORTH TO SOUTH
3" SN-613
3" SN-611
3" SN-612
3" SN-614
3" SN-616
3" SN-618
3" SN-617
3" SN-615
MATCH LINE-FOR CONT SEE H-2-94080
TANK FARM
HANDHOLE # H-10
HANDHOLE # H-18
VENT PIT # 1
VENT PIT # 2
N40530.00
N40514.00
N40438.00
ANNULUS EXHAUST STATION
HOSE STATION
PRIMARY EXHAUST STATION
PRIMARY SEAL POT PIT
242-A BLDG
NORTH TO SOUTH
2" SL-513
2" SL-511
2" SL-512
2" SL-514
2" SL-516
2" SL-518
2" SL-517
2" SL-515
MATCH LINE - FOR CONT. SEE H-2-94082
3" SN-615
3" SN-617
2" SL-515
2" SL-517
FENCE
PLAN
SCALE: 1" = 10'-0"
NOTES:
1. FOR GENERAL NOTES DRAWING H-2-94077
NEW TRANSFER LINES
H-2-94079
H-2-94077
H-2-94078
H-2-94080
H-2-94082
AW TANK FARM
241-AP TANK FARM
KEY PLAN
SCALE: NONE
RELEASED FOR CONSTRUCTION
BY DOE DATE
U. S. DEPARTMENT OF ENERGY
Richland Operations Office
KAISER ENGINEERS HANFORD COMPANY
CATHODIC PROTECTION
PIPING PLAN # 5
TANK FARM-CENTER
241-AP TANK FARM
B-340
X34002
R295A2
AS SHOWN
241-AP
7801
NONE
NOT REQ'D
H-2-94081
1
1
1
AS-BUILT FOR PROJ B-340
DESCRIPTION
REVISIONS
COMMENT REVIEW
H-2-90435
DRAWING LIST
NUMBER
TITLE
REFERENCES
NEXT USED ON
H-2-90435

NORTH

MATCH LINE - FOR CONT. SEE H-2-94081

TANK W47101.00

TANK W47034.00

N40433.00

℄ TANK N40393.00

℄ TANK N40286.00

℄ N40341.00

CENTRAL PUMP PIT 241-AP-05A
TANK 241-AP-105

CENTRAL PUMP PIT 241-AP-06A
TANK 241-AP-106

CENTRAL PUMP PIT 241-AP-07A
TANK 241-AP-107

CENTRAL PUMP PIT 241-AP-08A
TANK 241-AP-108

ANNULUS PUMP PIT 241-AP-05B

LEAK DETECTION PIT 241-AP-05C

ANNULUS PUMP PIT 241-AP-06B

ANNULUS PUMP PIT 241-AP-07B

ANNULUS PUMP PIT 241-AP-08B

LEAK DETECTION RISER

HOSE STATION

HANDHOLE # H-12

HANDHOLE # H-13

HANDHOLE # H-14

HANDHOLE # H-15

HANDHOLE # H-4

HANDHOLE # H-5

HANDHOLE # H-19

HANDHOLE # H-20

INSTRUMENT ENCLOSURE

INSTALL GUARD POSTS AS CLOSE AS POSSIBLE TO TEST STATION. SEE DET 4, H-2-94085 (TYP 2)

MOVE DB EAST AS CLOSE TO EXST GUARD POST AS POSSIBLE. SPLICE CABLES, IF NECESSARY, USINT THE SCOTCHCAST MOLD SEE DET 1, DWG H-2-94087.

PLAN
SCALE: 1" = 10'-0"

NOTES:

1. FOR GENERAL NOTES SEE DWG. H-2-94077

ANCHOR LOCATIONS

(82-1)	N40425 / W47110	(82-2)	N40404 / W47024
(82-3)	N40413 / W47058	(82-4)	N40378 / W47130
(82-5)	N40353 / W47143	(82-6)	N40362 / W47058
(82-7)	N40353 / W47089	(82-8)	N40345 / W47040
(82-9)	N40328 / W47068	(82-10)	N40413 / W47010
(82-11)	N40405 / W47009	(82-12)	N40425 / W46954
(82-13)	N40371 / W47027	(82-14)	N40354 / W47000
(82-15)	N40362 / W46900	(82-16)	N40378 / W46927
(82-17)	N40354 / W46923	(82-18)	N40328 / W47000
(82-19)	N40317 / W47110	(82-20)	N40297 / W47068
(82-21)	N40277 / W47130	(82-22)	N40247 / W47143
(82-23)	N40258 / W47089	(82-24)	N40237 / W47000
(82-25)	N40318 / W46958	(82-26)	N40256 / W46962
(82-27)	N40277 / W46930	(82-28)	N40247 / W46923

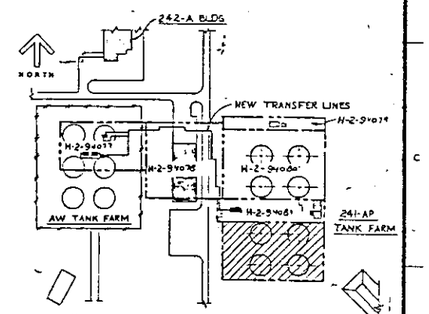

KEY PLAN
SCALE: NONE

RELEASED FOR CONSTRUCTION
BY DOE DATE

U.S. DEPARTMENT OF ENERGY
Richland Operations Office
KAISER ENGINEERS HANFORD COMPANY

CATHODIC PROTECTION PIPING PLAN # 6

241-AP TANK FARM

PROJ	8-340	WO	X34002
JOB	R295A2	SCALE	AS SHOWN
BLDG	241-AP	INDEX	7801
DRAWING NUMBER	H-2-94082	SHEET 1 OF 1	REV 1

DRAWING LIST			
NUMBER	TITLE		
REFERENCES			
NEXT USED ON H-2-90435			

M	LEJ	NA	JDC 7318	AS BUILT FOR PROJ B340 B-4,5,6 b) DFC B-340-503, 2-E-2,3; 8-F; F 11, C 11, F4, C4 a) DFC B-340-272 2-F7,
REVISIONS				
KEH APPROVAL				
COMMENT REVIEW				

MICROFILMED

KHO APPROVAL BY	DATE
PROJ ENGR	
DESIGN	
SAFETY	
QA	
CONSTRUCTION ENGR	
DESIGN	T. KAWASAKI
CHECKED	R. KEHAT
DRAWN	T. KAWASAKI
CLASSIFICATION	NONE
CAT	NOT REQ'D

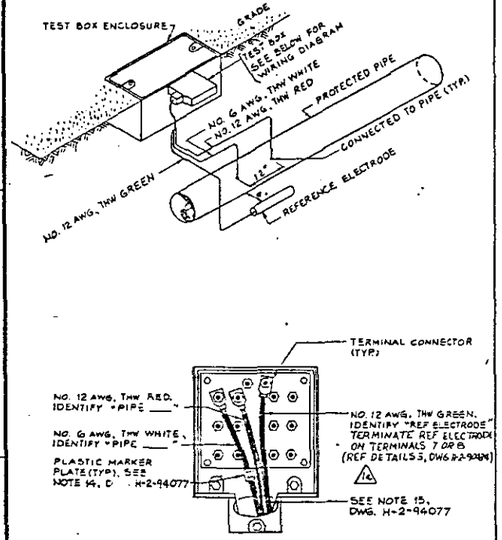

DETAIL 1

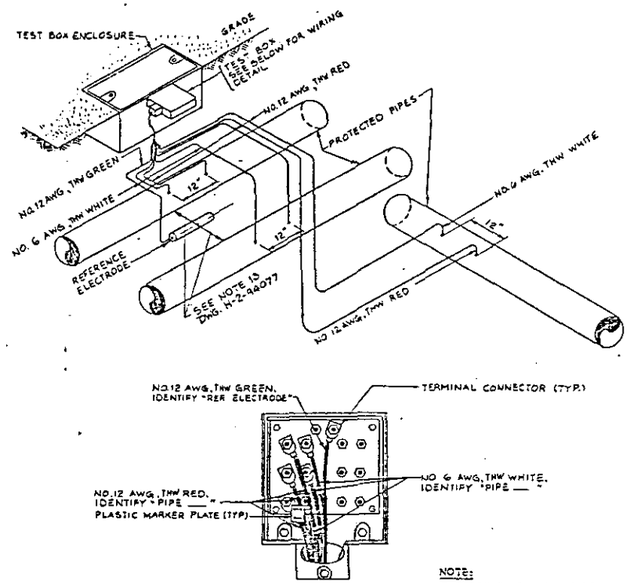

NOTE:
THIS DETAIL IS ALSO TO BE USED FOR TEST CONNECTIONS TO 2 PIPES

DETAIL 2

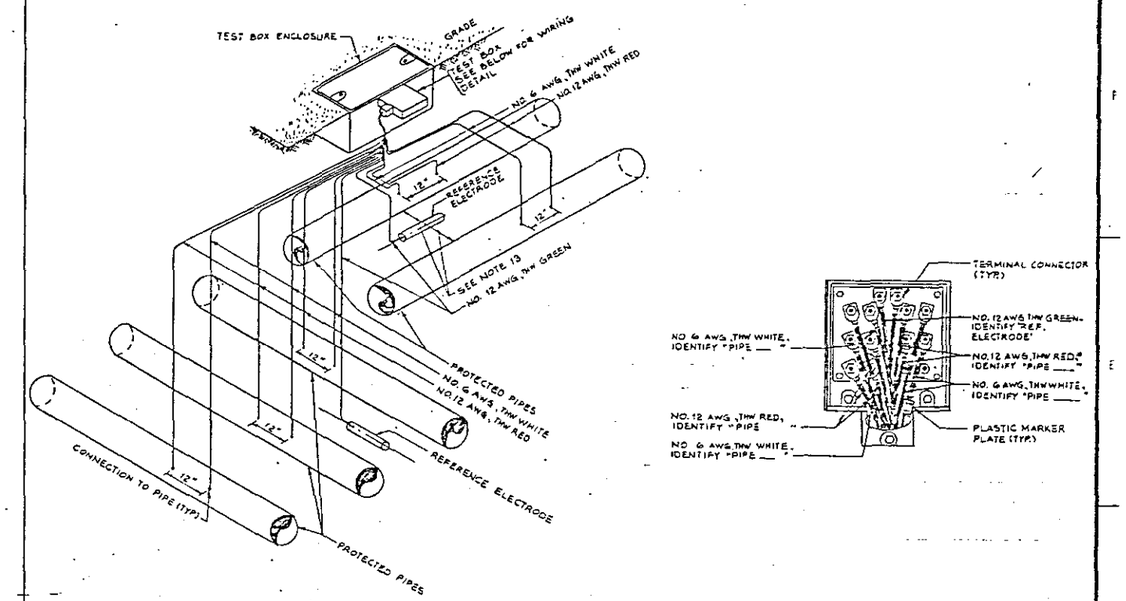

DETAIL 3

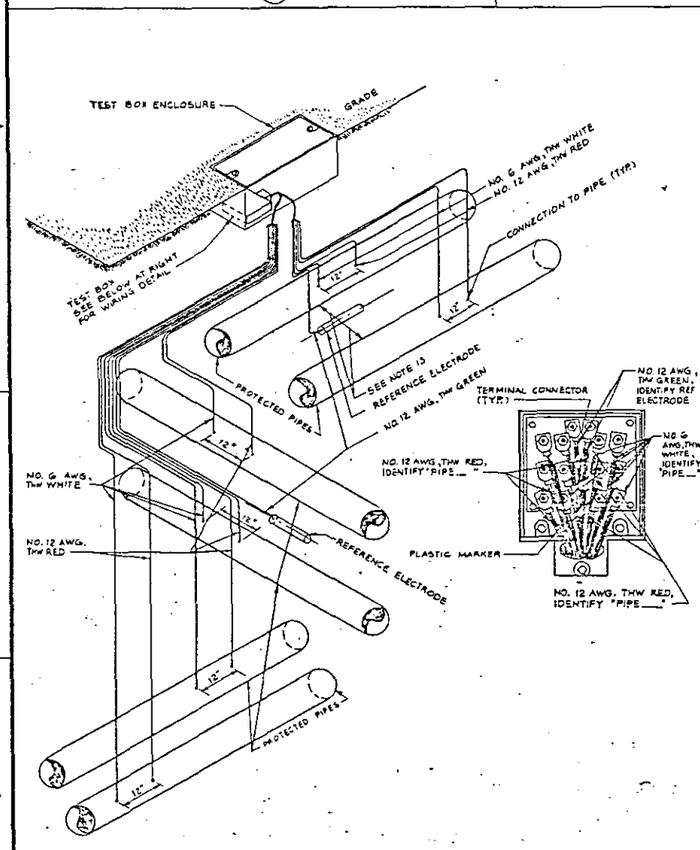

DETAIL 4

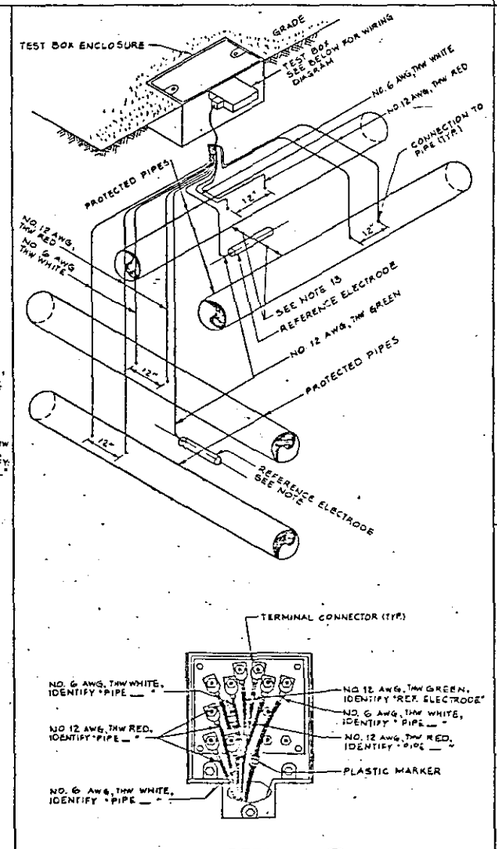

DETAIL 5

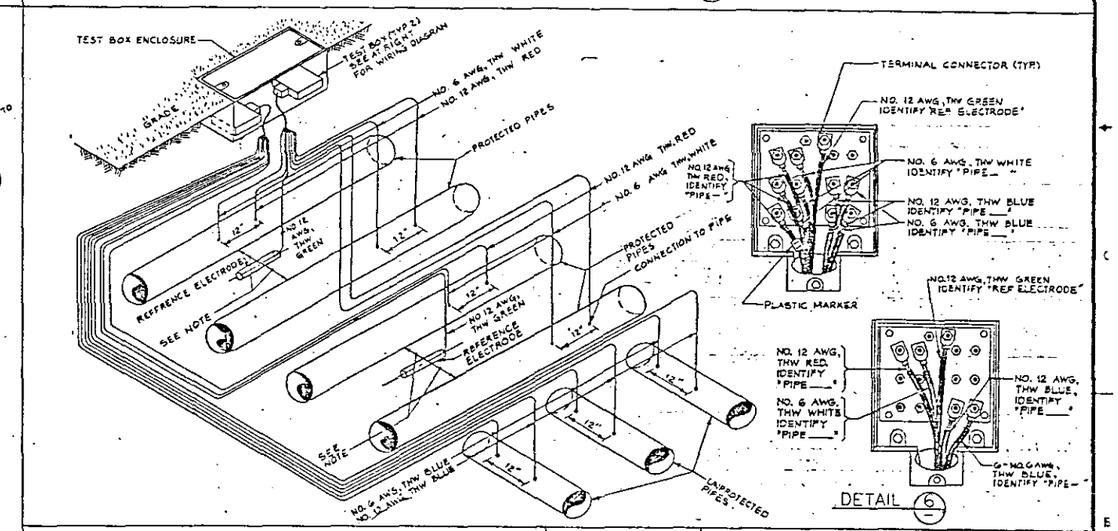

DETAIL 6

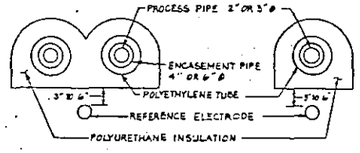

TYPICAL LOCATION OF REFRENCE ELECTRODES

DETAIL 7

NOTES:

1. FOR GENERAL NOTES SEE DWG. H-2-94077.
2. REFER TO 1 FOR TYPICAL DESCRIPTIONS APPLYING TO THIS SHEET
3. FOR TEST WIRES CONNECTIONS SCHEDULE SEE DET. 10, DWG. H-2-94087.
4. DETAILS ARE TYPICAL. NUMBER & DIRECTION OF PIPES MAY DIFFER FROM PLANS.

RELEASED FOR CONSTRUCTION
BY C. Hauer DATE 11-1-94
VDOE

REV	DATE	BY	CHK	APP	DESCRIPTION
M	11-1-94	CH			AS-BUILT FOR PROJ B-340 4) RCD CHNG ADD NOTE E-D7
	9-20-94	NA			

MICROFILMED: BY-DATE NA; BY-DATE; APPROVAL KEN APPROVAL

REVISIONS

COMMENT REVIEW

DRAWING LIST	H-2-90435
TITLE	
REFERENCES	
NEXT USED ON	H-2-90435

RHO APPROVAL BY K. Wright DATE 11-1-94

U. S. DEPARTMENT OF ENERGY
Richland Operations Office
KAISER ENGINEERS HANFORD COMPANY

CATHODIC PROTECTION TEST STATIONS DETAILS

PROJECT TITLE: 241-AP TANK FARM

PROJ	B-340	WO	X36002
JOB	K295A2	SCALE	—
BLDG	241-AP	MODEL	7501
CLASSIFICATION	NONE-NOT REQD	DRAWING NUMBER	H-2-94083
SHEET	1	OF	1
REV	1		

DENNIS R. HELGESON — REGISTERED PROFESSIONAL ENGINEER — STATE OF WASHINGTON

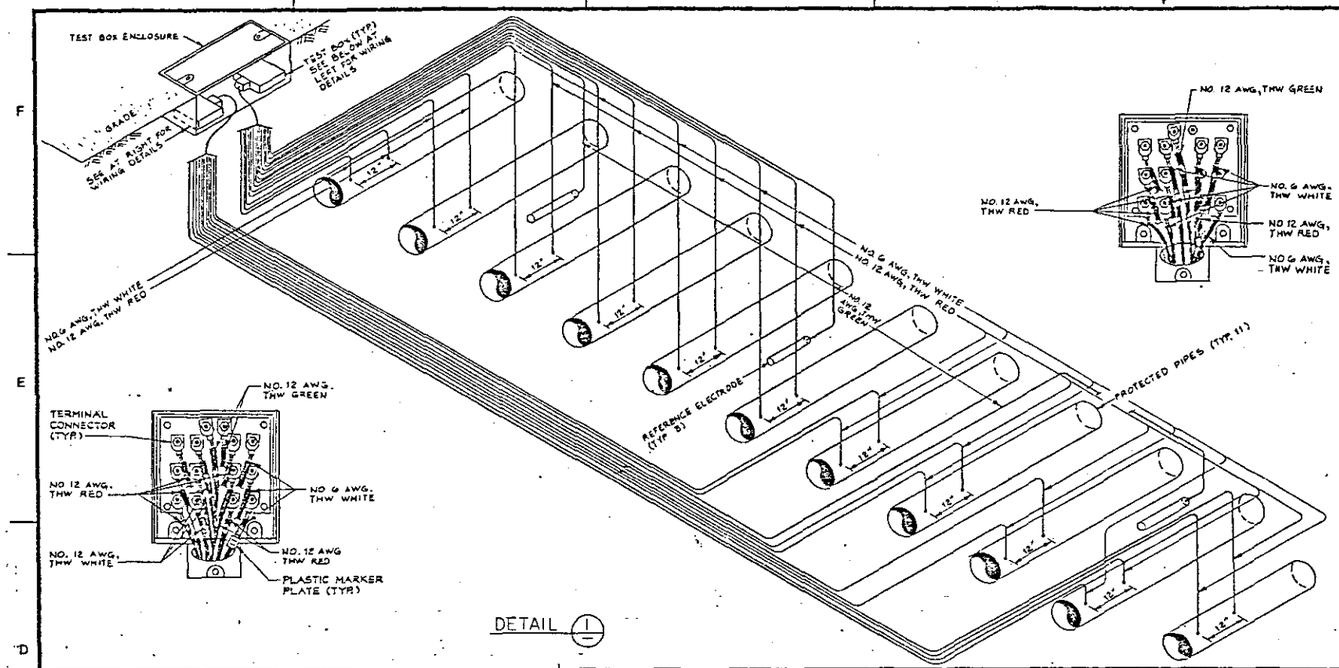

DETAIL 1

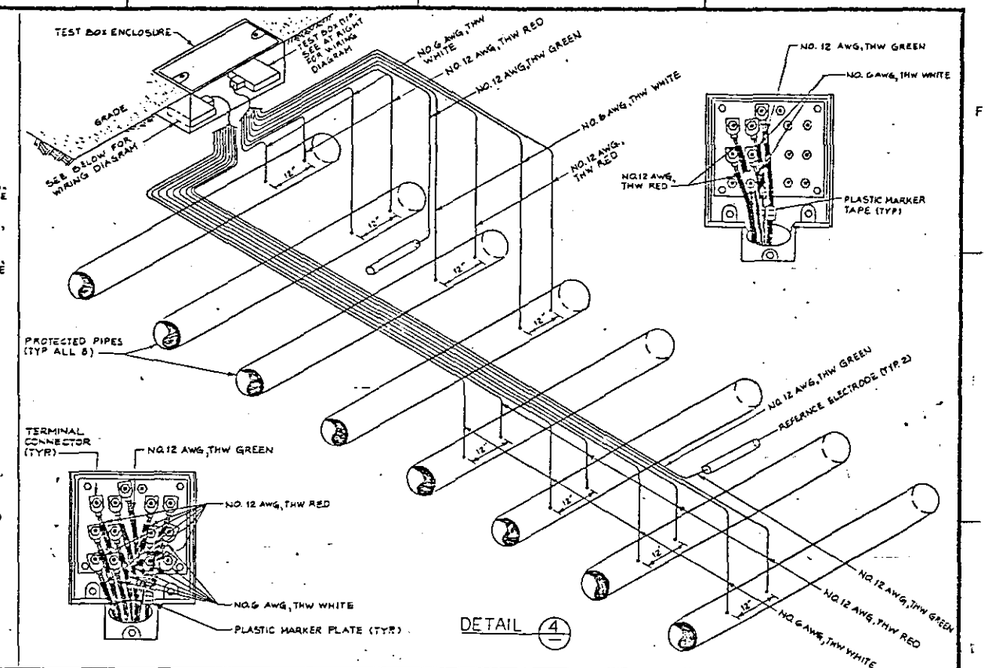

DETAIL 4

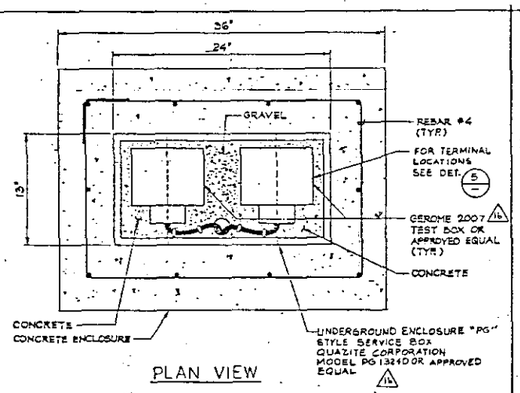

PLAN VIEW

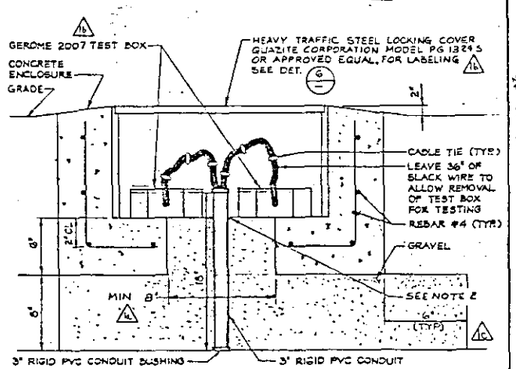

SIDE VIEW
FLUSH MOUNTED TEST STATION

DETAIL 2
SEE NOTE 3

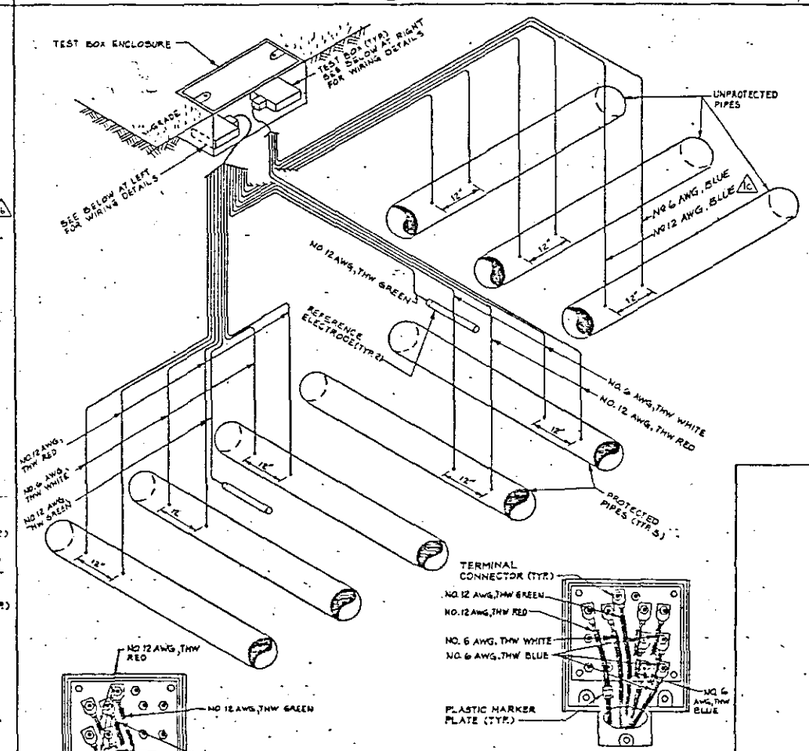

DETAIL 3

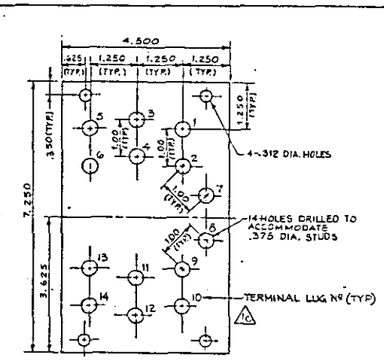

SPACING REQUIREMENT FOR TEST STATION TERMINAL STUDS

DETAIL 5

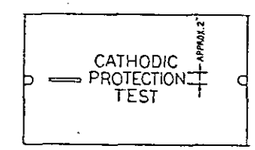

LABEL SIZE REQUIREMENT FOR TEST BOX ENCLOSURE

DETAIL 6

NOTES:
1. REFER TO NOTES ON DWG H-2-94083
2. CUT AN 7" HOLE IN THE BOTTOM OF THE TEST ENCLOSURE FOR CONDUIT ENTRANCE AND FOR DRAINAGE.
3. INSTALL ALL TEST ENCLOSURES PER THIS DETAIL WITHIN THE TANK FARM AND ALSO OUTSIDE TANK FARM IF IT IS IN TRAFFIC AREA.

RELEASED FOR CONSTRUCTION
BY DOE DATE

DENNIS R. HELDSON — STATE OF WASHINGTON — REGISTERED PROFESSIONAL ENGINEER — 19341

RHO APPROVAL			
PROJ ENGR			
DSG			
APPROVED			
APPROVED			
CHECKED			
DRAWN			
DESIGNED			
CLASSIFICATION			

U. S. DEPARTMENT OF ENERGY
Richland Operations Office
KAISER ENGINEERS HANFORD COMPANY

CATHODIC PROTECTION TEST STATIONS DETAILS

PROJECT TITLE 241-AP TANK FARM
PROJ B 340 NO X34002 JOB R295A2
SCALE — BLDG 241-AP PROJ 7801
DRAWING NUMBER H-2-94084 SHT 1 OF 1 REV 1

H				AS-BUILT FOR PROJ B-340 A-7 ADDED 6" GRAVEL N-5 SEC-4.5 REVISED WIRE LEND; C) RCD CHNG T.C.S ADDED LUG; b) DFC B-240-2912-87, B8 (C7 4) DFC B-340-454 2-88, A7(A8)	

MICROFILMED	BY-DATE	BY-DATE	REV BY DATE
	KOCOURKL	KEN APPROVAL	
APPROVAL			

REVISIONS

COMMENT REVIEW

H-290435	DRAWING LIST
NUMBER	TITLE
REFERENCES H-2-90435	
NEXT USED ON H-2-90435	

NONE NOT REQ'D

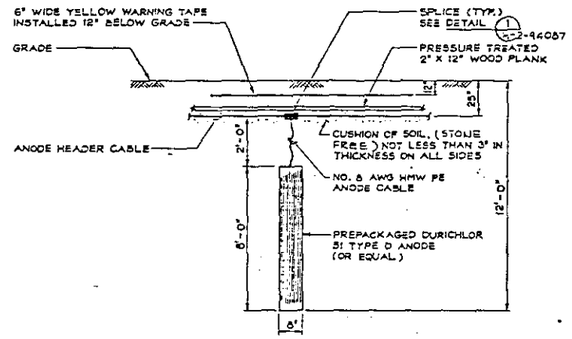

VERTICALLY INSTALLED ANODE

DETAIL 1

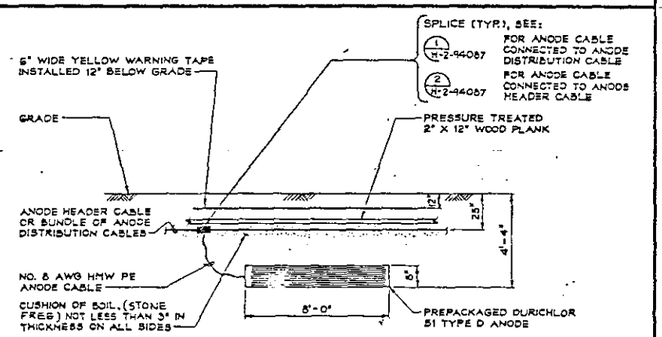

HORIZONTALLY INSTALLED ANODE

DETAIL 2

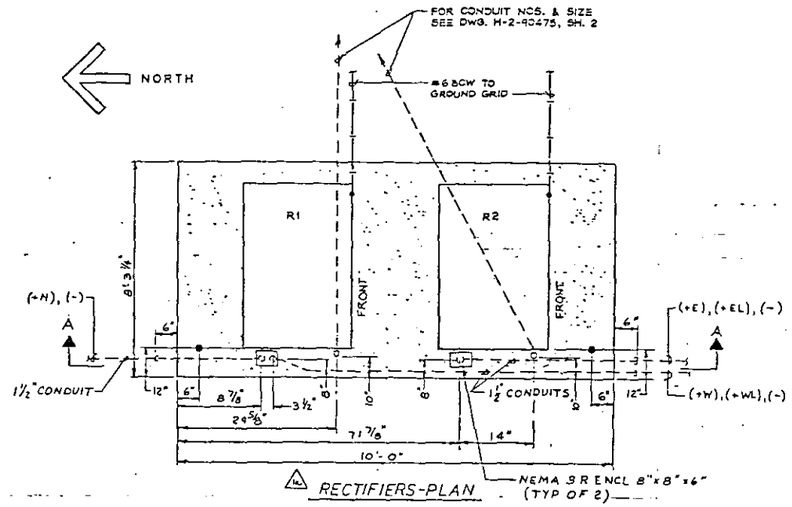

RECTIFIERS-PLAN

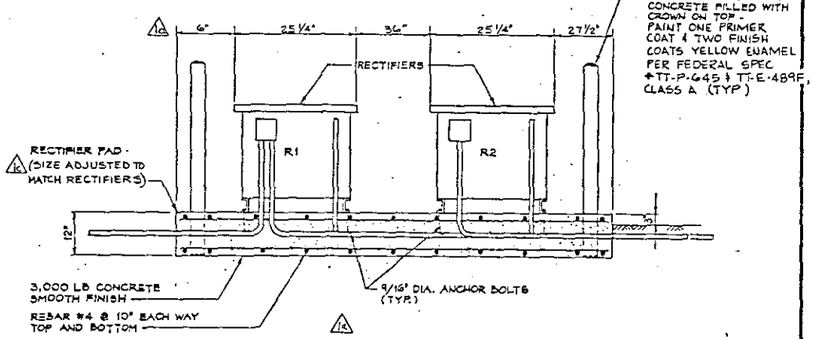

SECTION A-A

DETAIL 4

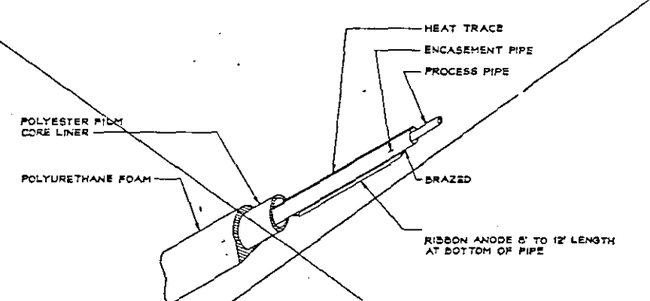

~~MAGNESIUM RIBBON ANODE~~

~~DETAIL 3~~

H-2-90435	DRAWING LIST	
NUMBER	TITLE	
REFERENCES		
NEXT USED ON	H-2-90435	

H	LH 9-10-90	NA	JW 9-10-90	JDE 7-31-90	KJW 7-31-90	AS-BUILT FOR PROJ B-340 C) D.T. 244.5-2.1, E.D-6.7 b) DFC B-340-272 Z-A770-4,5 c) DFC B-340-334 Z-F5 & C5	1
MICROFILMED	BY-DATE		BY-DATE		REV BY DATE	DESCRIPTION	REV
	HOCKVALL						
	APPROVAL		KEN APPROVAL				
			REVISIONS				
	COMMENT REVIEW						

RELEASED FOR CONSTRUCTION
BY LH DATE 10/31/90
DOE

DENNIS R. HEIGLAUN — STATE OF WASHINGTON — PROFESSIONAL ENGINEER — 17341

RHO APPROVAL BY	DATE 12/1/90	U. S. DEPARTMENT OF ENERGY Richland Operations Office
PROJ ENGR		KAISER ENGINEERS HANFORD COMPANY
DR		CATHODIC PROTECTION DETAILS ANODES, RECTIFIERS
APPROVED		
SAFETY		
APPROVED		
CHECKED U. CERATI		PROJECT TITLE 241-AP TANK FARM
DESIGNED A.G. DELA CRUZ		PROJ B-340 WO X34002 AUX R295A2
ENGINEERED RAYMSKAYA		SCALE — ALDG 241-AP INDEX 7801
CLASSIFICATION		DRAWING NUMBER H-2-94085 SHEET 1 OF 1 REV 1
NONE - NOT REQ'D		

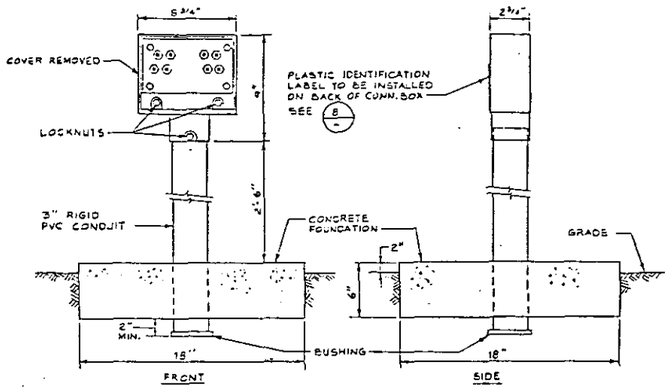

JUNCTION BOX INSTALLATION

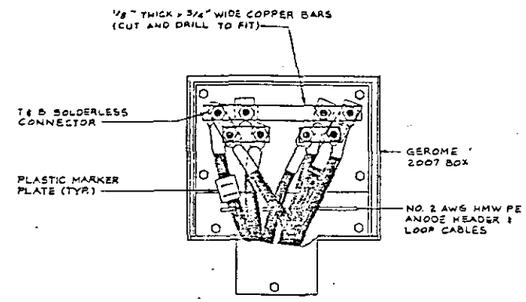

ANODE JUNCTION BOX WIRING

DETAIL 1

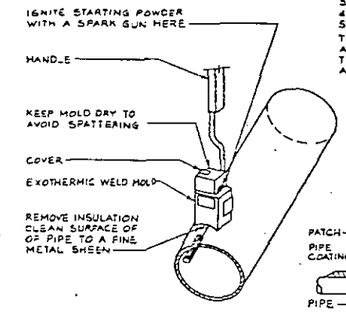

PATCH INSTRUCTIONS:

1. ONE LAYER OF COLD APPLIED COAL TAR, KOPPERS CO "BITUMASTIC 50".
2. FOLLOWED BY A 9" x 9" LAYER OF WOVEN GLASS FIBER, OWENS-CORNING "GLASFAB", WORKED INTO THE COAL TAR.
3. AN ADDITIONAL LAYER OF COAL TAR.
4. FOLLOWED BY AN ADDITIONAL GLASS FIBER LAYER.
5. A FINAL COAT OF COAL TAR SHALL COMPLETE THE PATCH.

THE PATCH SHALL OVERLAP THE PIPE COATING ALL AROUND THE WELD A MINIMUM OF 2".
THE PATCH SHALL ALSO OVERLAP ALL EXPOSED COPPER WIRE AND WELD MATERIAL A MINIMUM OF 2".

CONDUCTOR SIZE	PIPE DIAMETER	WELD MOLD PART NO.	WELD METAL
#2	6"	CAHAA-IVB	CA15
#2	2"	CAHAA-IVA	CA15
#4	2"	CAHAA-ICA	CA15
#4	4"	CAHAA-ILB	CA15
#4	6"	CAHAA-IL	CA15

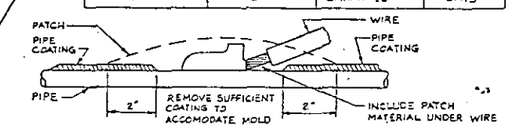

HORIZONTAL EXOTHERMIC WELD

DETAIL 5

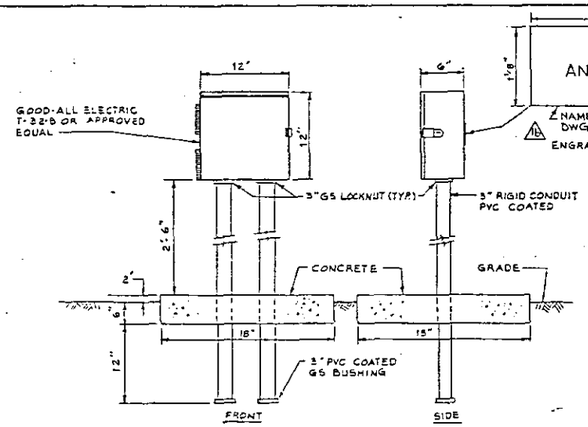

ANODE DISTRIBUTION BOX INSTALLATION

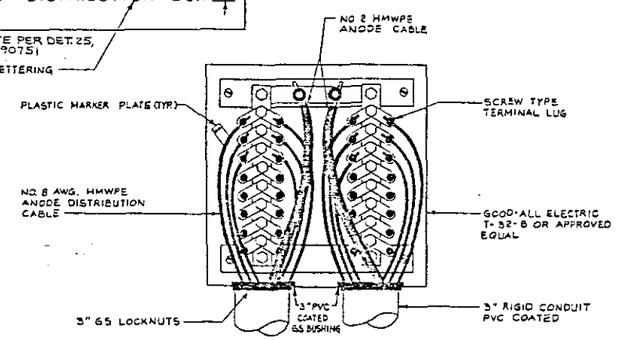

ANODE DISTRIBUTION BOX WIRING

DETAIL 2

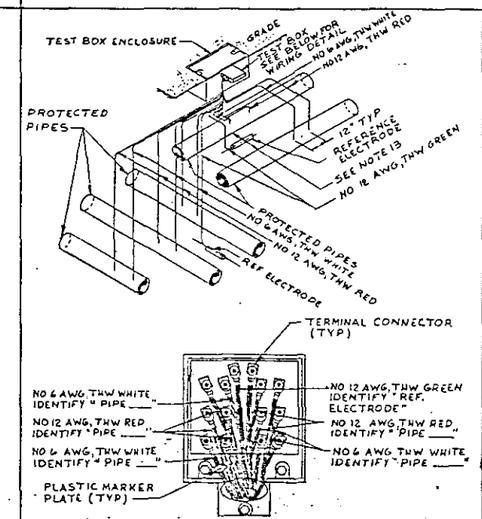

DETAIL 6

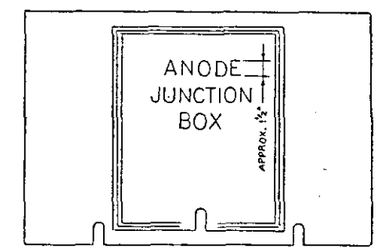

DETAIL 8

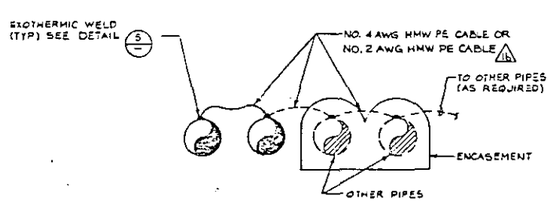

NOTES: EACH JUMPER CABLE SHALL HAVE A SEPARATE EXOTHERMIC WELD TO EACH PIPE

REPAIR PIPE COATINGS AS PER SPECIFICATIONS

JUMPER CONNECTION BETWEEN PIPES

DETAIL 3

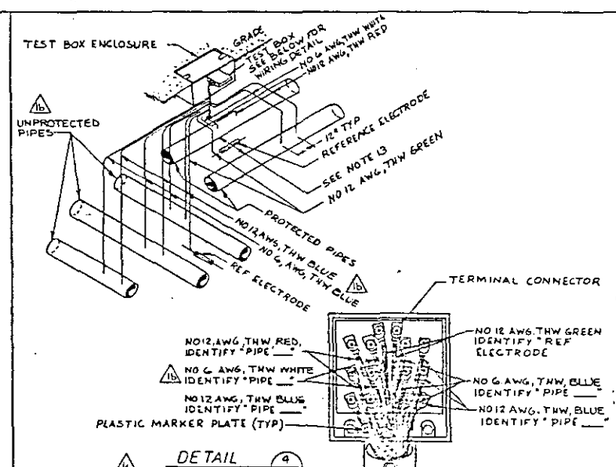

DETAIL 4

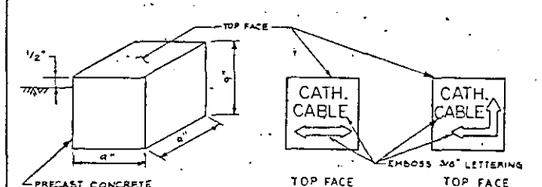

CABLE MARKERS

DETAIL 7

RELEASED FOR CONSTRUCTION
BY ___ DATE 12/21/90
DOE

1	9-6-86	—	NA	JDC 7-31-86	AS-BUILT FOR PROJ B-340 REVISED NAMEPLATE CALLOUT CHNGED WIRE NO & COLOR; D-6 WAS PROTECTED; A8-5-6. 1) ADDED CABLE #2 NOTE 13-6 2) RED CHNG & F-1 WAS TTA & ITB; 3) DFC B-340-404 Z-A6 & C3	1

H-2-90435	DRAWING LIST	MICROFILMED	
NUMBER	TITLE		
REFERENCES			
NEXT USED ON H-2-90435			

2ND APPROVAL BY	DATE 12/6/90	U. S. DEPARTMENT OF ENERGY Richland Operations Office	
		KAISER ENGINEERS HANFORD COMPANY	
PROJ ENGR	12-6-90	M	CATHODIC PROTECTION DETAILS CABLES, BOXES & JUMPERS
DR	12/6/90		
APPROVED	12-6-90		
APPROVED	9-25-90		
APPROVED	9-25-90	PROJECT TITLE	241-AP TANK FARM
CHECKED	11-26-90		
DRAWN	7-26-89	PROJ	B 340
DESIGNED	7-26-89	SCALE	—
CLASSIFICATION			

WO	X34002	JOB	R295A2
BLDG	241AP	HOLD	7301
DRAWING NUMBER		SHEET	REV
NONE	NOT REQD	H-2-94086	1 1 1

HUCKFELL	REH APPROVAL	REV	DESCRIPTION
APPROVAL			
COMMENT REVIEW		REVISIONS	

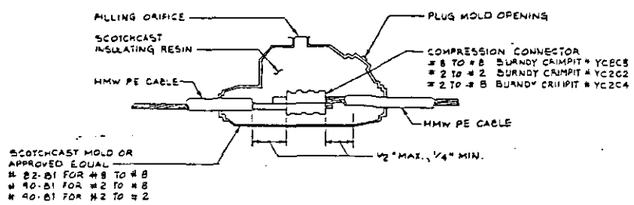

CABLE SPLICE
DETAIL 1

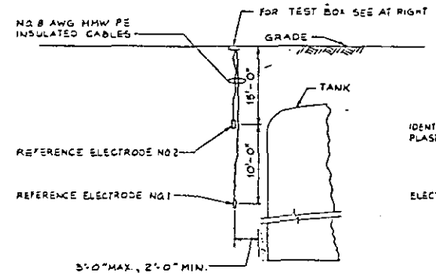

REFERENCE ELECTRODES
ADJACENT TO WASTE STORAGE TANKS

INSTALL TEST BOXES PER DETAIL 1 ON DWG H-2-94086 SH 1

DETAIL 5

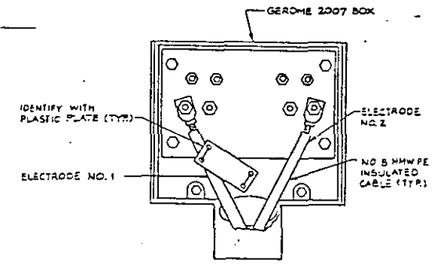

TEST BOX
TERMINALS

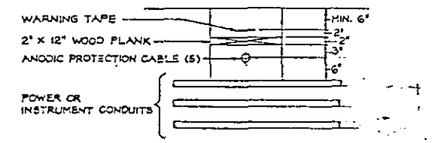

CROSSOVER OF ANODIC AND POWER
AND INSTRUMENT CIRCUITS

DETAIL 9

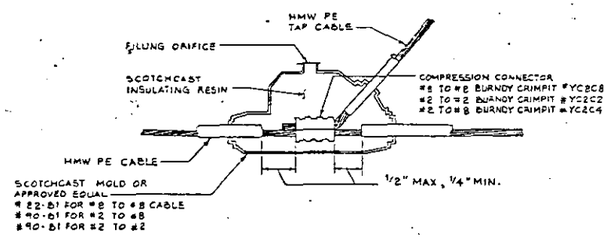

CABLE TAP
DETAIL 2

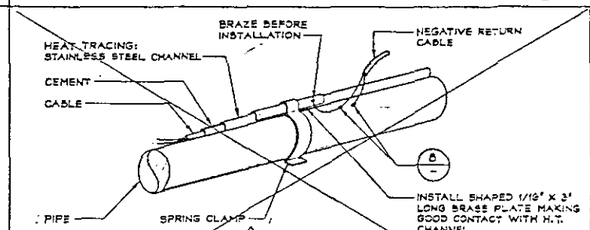

~~CONNECTION OF CABLE TO HEAT TRACED PIPE~~

~~DETAIL 6~~

TABLE I
CONNECTION ARRANGEMENTS FOR VARIOUS TYPICAL COMBINATIONS OF B-340 AND FOREIGN PIPES WHERE TEST POINTS ARE TO BE INSTALLED

NO. OF PROJECT B-340 PIPES	SCHEDULE OF CONNECTIONS OF TEST WIRES FROM PROJECT B-340 PIPING TO TERMINAL STUDS IN TEST BOXES — CONNECT TEST WIRE: NO. 12 AWG RED — BOX 1 STUD NOS.	NO. 12 AWG RED — BOX 2 STUD NOS.	NO. 8 AWG WHITE — BOX 1 STUD NOS.	NO. 8 AWG WHITE — BOX 2 STUD NOS.	SCHEDULE FOR CONNECTIONS OF TEST WIRES FROM PIPING OTHER THAN PROJECT B-340 TO TERMINAL STUDS IN TEST BOXES — CONNECT TEST WIRE: NO. 12 AWG BLUE — BOX 1 STUD NOS.	NO. 12 AWG BLUE — BOX 2 STUD NOS.	NO. 8 AWG BLUE — BOX 1 STUD NOS.	NO. 8 AWG BLUE — BOX 2 STUD NOS.	NO. OF FOREIGN PIPES
1	1,3	-	2,4	-	-	-	-	-	1
2	1,3	-	2,4	-	-	-	-	-	
3	1,3,5	-	2,4,6	-	-	-	-	-	
4	1,3,5,10	-	2,4,6,9	-	-	-	-	-	
5	1,3,5,10,12	-	2,4,6,9,11	-	-	-	-	-	
6	1,3,5,10,12,14	-	2,4,6,9,11,13	-	-	-	-	-	
7	1,3,5,10,12,14	1	2,4,6,9,11,13	2	-	-	-	-	
8	1,3,5,10,12,14	1,3	2,4,6,9,11,13	2,4	-	-	-	-	
9	1,3,5,10,12,14	1,3,5	2,4,6,9,11,13	2,4,6					
1	1	-	2,4	-	14	-	13	-	1
2	1,3	-	2,4	-	14	-	13	-	
3	1,3,5	-	2,4,6	-	14	-	13	-	
4	1,3,5,10	-	2,4,6,9	-	14	-	13	-	
5	1,3,5,10,12	-	2,4,6,9,11	-	14	-	13	-	
6	1,3,5,10,12	1	2,4,6,9,11	2	-	14	-	13	
7	1,3,5,10,12	1,3	2,4,6,9,11	2,4	-	14	-	13	
8	1,3,5,10,12	1,3,5	2,4,6,9,11	2,4,6	-	14	-	13	
9	1,3,5,10,12	1,3,5,10	2,4,6,9,11	2,4,6,9	-	14	-	13	
1	1	-	2	-	12,14	-	11,13	-	2
2	1,3	-	2,4	-	12,14	-	11,13	-	
3	1,3,5	-	2,4,6	-	12,14	-	11,13	-	
4	1,3,5,10	-	2,4,6,9	-	12,14	-	11,13	-	
5	1,3,5,10	1	2,4,6,9	2	14	14	13	13	
6	1,3,5,10,12	1	2,4,6,9,11	2	14	14	13	-	
7	1,3,5,10,12	1,3	2,4,6,9,11	2,4	14	14	13	13	
8	1,3,5,10,12	1,3,5	2,4,6,9,11	2,4,6	14	14	13	13	
9	1,3,5,10,12	1,3,5,10	2,4,6,9,11	2,4,6,9	14	14	13	13	
2	1,3	-	2	-	10,12,14	-	9,11,13	-	3
3	1,3,5	-	2,4	-	10,12,14	-	9,11,13	-	
4	1,3,5	-	2,4,6	-	10,12,14	-	9,11,13	-	
5	1,3,5,10	1	2,4,6,9	2	12,14	14	11,13	13	
6	1,3,5,10	1,3	2,4,6,9	2,4	12,14	14	11,13	13	
7	1,3,5,10	1,3,5	2,4,6,9	2,4,6	12,14	14	11,13	13	
8	1,3,5,10	1,3,5,10	2,4,6,9	2,4,6,9	12,14	14	11,13	13	
9	1,3,5,10	1,3,5,10,12	2,4,6,9	2,4,6,9,11	12,14	14	11,13	13	

TEST BOXES CONNECTION SCHEDULE

DETAIL 10

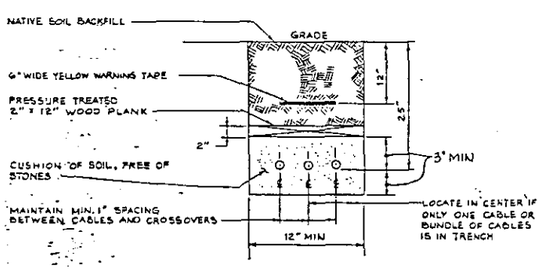

DIRECT BURIED CABLES

DETAIL 3

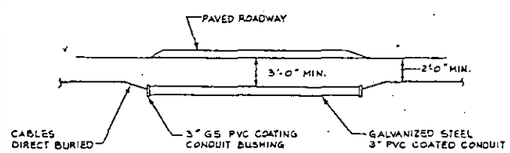

TYPICAL ANODE CABLE
INSTALLATION ACROSS PAVED ROADS

DETAIL 7

NOTE: INSTALL TEE FITTINGS FOR CONNECTIONS BETWEEN ANODE CABLES WHERE REQUIRED.

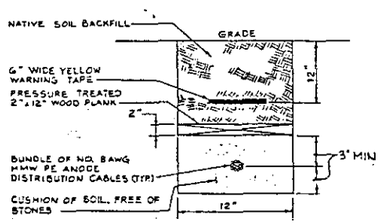

TYPICAL CROSSECTION OF BUNDLE OF
DIRECT BURIED ANODE DISTRIBUTION CABLES

DETAIL 4

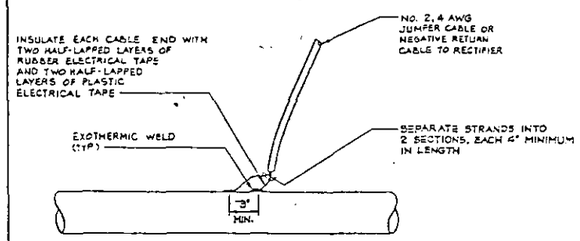

CONNECTION OF NEGATIVE
RETURN CABLES TO PIPE

DETAIL 8

RELEASED FOR CONSTRUCTION
BY ... DATE ...
DOE

DENNIS R. HELGESON — STATE OF WASHINGTON — PROFESSIONAL ENGINEER

M	9-20-94	NA	7-31-94	7-31-94	AS-BUILT FOR PROJ B-340 REVISED SCHEDULE STUD NOS. C) RCD CHNG, ZCDE-2,3,4, D) DFC-B-340-472 & E,F & G 4) DFC B-340-385 2-DS	

H-2-90635	DRAWING LIST		
NUMBER	TITLE		
REFERENCES			
NEXT USED ON	H-2-90635		

MICROFILMED — BY-DATE — BY-DATE — REV BY DATE — DESCRIPTION — REV
CLEARANCE — KEN APPROVAL — REVISIONS
APPROVAL
COMMENT REVIEW

U. S. DEPARTMENT OF ENERGY
Richland Operations Office
KAISER ENGINEERS HANFORD COMPANY

CATHODIC PROTECTION
DETAILS
CONNECTIONS, MISCELLANEOUS

PROJECT TITLE: 241-AP TANK FARM
CHECKED H CASATI
DRAWN W. WEIKEL
DESIGNED T. KRYMSKAYA
CLASSIFICATION LBT
PROJ B-340 — WO X3402 — JOB R295A2
SCALE — BLDG 241-AP — PAGE 7801
NONE - NOT REQ'D
DRAWING NUMBER H-2-94087 — SHT 1 — REV 1

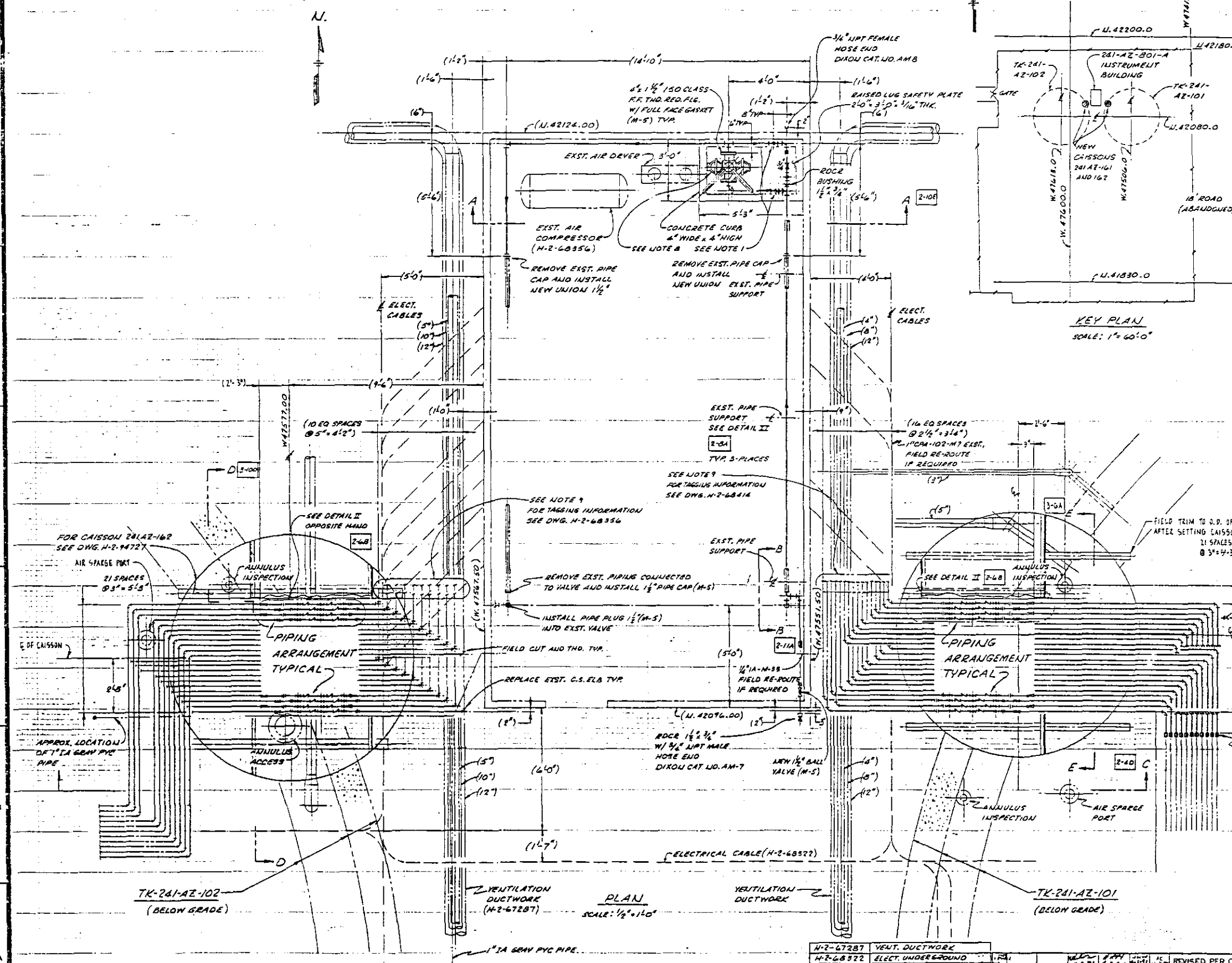

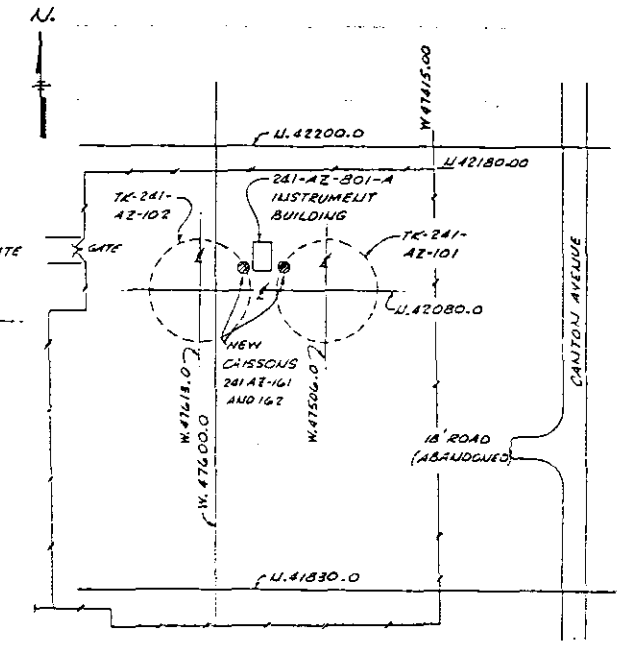

GENERAL NOTES

1. PRESSURE GAUGE, 0-160 PSI MARSHALLTOWN NO. 186, 2½" DIAL, ½" MNPT LOWER CONNECTION LIQUID FILLED, BRASS BOURDON TUBE.
2. BOLTS SHALL CONFORM TO ASTM A307 GR.B C.S. NUTS SHALL CONFORM TO ASTM A563 GR.B C.S.
3. PREPARE AND PAINT ALL CUT/EXPOSED CARBON STEEL SURFACES WITH AMERCOAT #86 PRIMER, AND TWO COATS OF AMERCOAT #33, PER MANUFACTURERS INSTRUCTIONS. COLOR OF FINAL COATS TO BE AS FOLLOWS: SAFETY YELLOW FOR ANNULUS RISERS, GRAY FOR ALL OTHER SURFACES.
4. REMOVE ALL BURRS AND BREAK SHARP EDGES.
5. FIELD RUN PIPING AND MISCELLANEOUS FITTINGS PER H-2-31750, SHEET 5 (M-5) EXCEPT PER NOTE 10. THE EXTERIOR SURFACE OF ALL BELOW GRADE CARBON STEEL PIPE AND FITTINGS, EXCEPT FOR 101-AZ PIPING, SHALL BE SAND BLASTED PER SSPC-SP6, PRIMED AND COATED WITH COAL-TAR MASTIC. WRAP WITH COLD APPLIED TAPE; TAPE COAT. TO CR EQUIV.
6. FIELD VERIFICATION OF FIT-UP AND DIMENSIONS SHALL BE DONE PRIOR TO FABRICATION/INSTALLATION.
7. LEAK TEST ALL NEW CONNECTIONS PER HWS 10257, TYPE II
   △2 HOLD AT 90 PSIG LINE PRESSURE FOR 10 MINUTES
8. STRAINER, IN-LINE DUPLEX, HAYWARD NO. ST0500400R31CHS 4" FLANGED MODEL 50 CARBON STEEL & STRAINER BASKETS 2-REQ'D. NO. ST31SHCX STAINLESS STEEL STANDARD PERF (3/16") WITH 60 MESH LINER.
9. IDENTIFY EACH LINE INPUT WITH THE SAME NUMBER AS SHOWN INSIDE THE INSTRUMENTATION HOUSE FOR EXAMPLE: "1"-PA-16__-___" ADDITIONAL INFORMATION LOCATED ON DWG. H-2-68356 AND H-2-68414 PER HS-85-0015 TYPE 2 WITH ½" HIGH CHARACTERS USING H-2-80240-1 AND FASTEN WITH SST WIRE.

CONTINUATION OF GENERAL NOTES ON SHEET 2

WELDING AND INSPECTION REQUIREMENTS

FABRICATION	1. WELDING STANDARD	☐ ASME ☐ AWS ■ ANSI D1.1
	2. PROCEDURE SPEC. & PERFORMANCE QUAL.	■ ASME ☐ AWS D1.1 ☐
	3. FILLER MATERIAL	■ ASME SEC. II ASME A5 ☐
INSPECTION	4. VISUAL (VT)	■ WELDING STD. IN (1) ☐ SPP 2.5.0-C (IN HOUSE) ☐ FITUP ☐ ROOT PASS ■ FINAL
	5. PENETRANT (PT)	☐ WELDING STD. IN (1) ☐
	6. MAGNETIC PART. (MT)	☐ WELDING STD. IN (1) ☐
	7. ULTRASONIC (UT)	☐ WELDING STD. IN (1) ☐
	8. RADIOGRAPH (RT)	☐ WELDING STD. IN (1) ☐
	9. LEAK TEST (LT)	☐
☐ OTHER (NOTE)		

UNLESS OTHERWISE SPECIFIED DIMENSIONS ARE IN INCHES
TOLERANCES ON: DECIMALS ±.0 ANGLES ± ½° FRACTIONS ± 1/64
DO NOT SCALE PRINT

THIS DRAWING MODIFIES: H-2-68353, H-2-68413, H-2-68414 AND H-2-68356

REVIEW NUMBER (R.D.)	1	2	3	4

THIS DRAWING HAS BEEN APPROVED BY A ROCKWELL DOCUMENT REVIEW BOARD. REVISION NO. 0
CHAIRMAN [signature] DATE 9/6/93

REFERENCE DRAWINGS		
H-2-67287	VENT. DUCTWORK	
H-2-68322	ELECT. UNDERGROUND	
H-2-68353	PIPING PLAN TANK 102	
H-2-68413	PIPING PLAN TANK 101	
H-2-68414	PIPING INSTRUMENT HOUSE	
H-2-68356	PIPING INSTRUMENT HOUSE	
H-2-94727	CAISSON FOR AIRLIFT CIRCULATORS	
H-2-31750	PIPING MATERIAL CODE (M-5)	
DWG NO.	DRAWING TITLE	

NEXT USED ON H-2-68355 AND H-2-68415

REVISION APPROVALS								REVISIONS	
								REVISED PER CED 11748	2
								AS BUILT PER FIELD INFORMATION	1
								DESCRIPTION	REV
COMMENT PRT ISSUE NO. 2	7-27-83	DATE	CHECK PRT ISSUE NO. 2	8-22-85	DATE				

DRAWING STATUS D.I. # 4251

DRAWING APPROVALS	DATE
[signature]	9/3/93
[signature]	9/6/93
[signature]	9/6/93
[signature]	9/7/93
J.A. WEBB	9/7/93
[signature]	9/7/93
[signature]	9/14/93

U. S. Department of Energy
Richland Operations Office
Rockwell Hanford Operations
Richland, Washington 99352

CHECK VALVE CAISSON AIRLIFT CIRCULATOR LINES

SCALE 1/2" = 1'-0" | PLANT DWG. 241-AZ | PROJECT NO. 0402
CLASSIFICATION NONE | DRAWING NO. H-2-94706 | SHEET 1 | REVISION 3

GENERAL NOTES CON'T.

13. ALL NEW SECTIONS OF AIR CIRCULATOR PIPING SHALL BE INSTALLED TO MAINTAIN THE EXISTING SELF DRAINING SLOPE FROM THE INSTRUMENTATION HOUSE DOWNWARD TOWARD THE TANKS.

10. DETAIL II AND I ASSEMBLIES ONLY: PIPE SHALL BE STAINLESS STEEL SCHD. 40 EXCEPT AS NOTED PER ASTM A312 GR. TP 304 WELDED OR SEAMLESS. TEES, ELBOWS, UNIONS AND COUPLINGS, ANY 300 SERIES SCREWED COM'L. SST 150 CLASS.

11. IDENTIFY EACH BALL VALVE IN PIT FOR EXAMPLE: "ISOLATION VALVE" "CIRCULATOR NO. 2-21" IDENTIFICATION NEED NOT BE SEQUENTIAL. CIRCULATOR NUMBER INFORMATION LOCATED ON DWG. H-2-68413 AND H-2-68353 PER HS-85-0015 TYPE 2 WITH 1/4" HIGH CHARACTERS USING H-2-80240-4 AND FASTEN WITH SST WIRE.

12. JOINT COMPOUND, USE "DEVCON" FOR ASSEMBLING AND SEALING ALL THREADED CONNECTIONS ON ALL BELOW GRADE AIR CIRCULATOR LINES. TEFLON SEALANT ACCEPTABLE ALL OTHER PLACES.

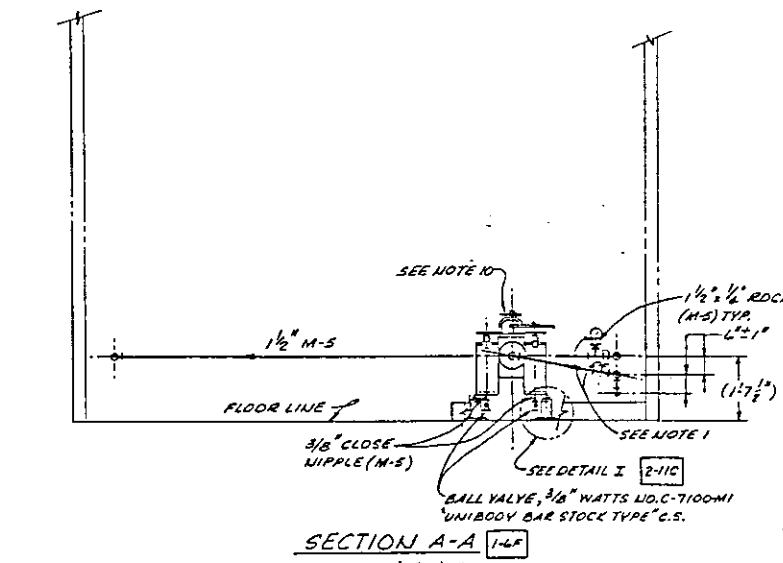

SECTION A-A 1-6F
SCALE: 1/2" = 1'-0"

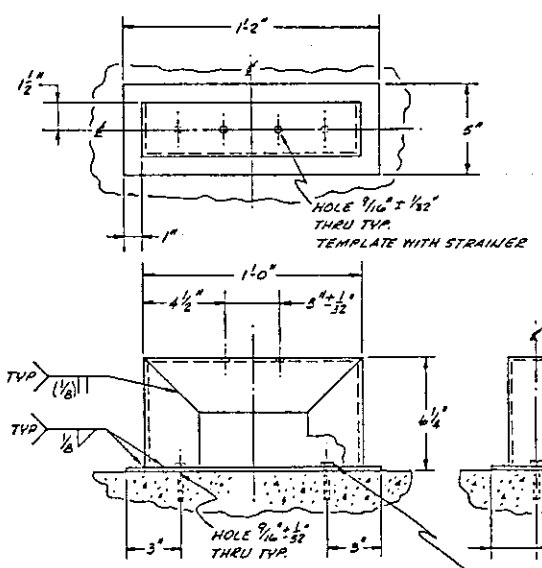

DETAIL I 2-10E
TWO REQ'D.
SCALE: 3" = 1'-0"

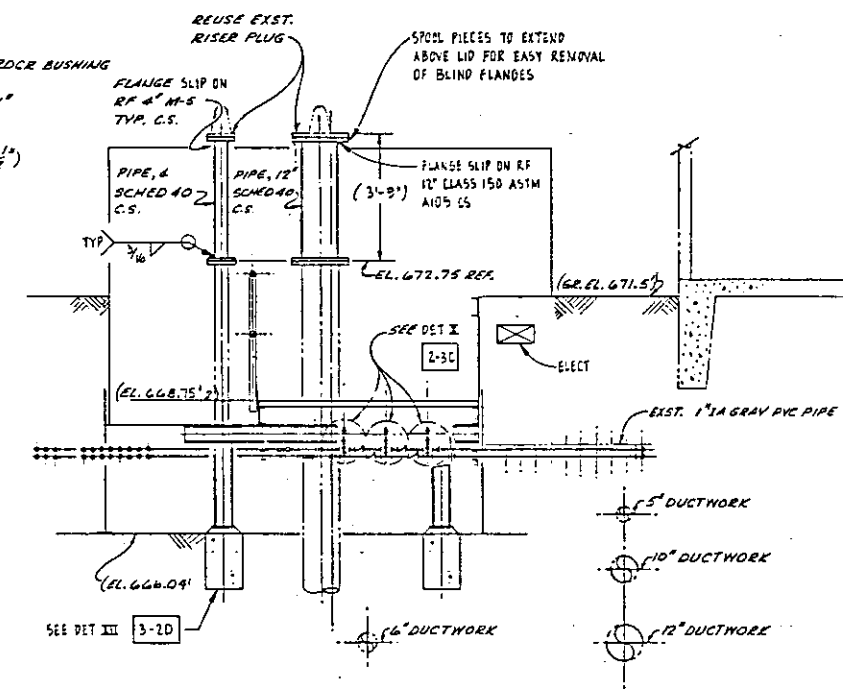

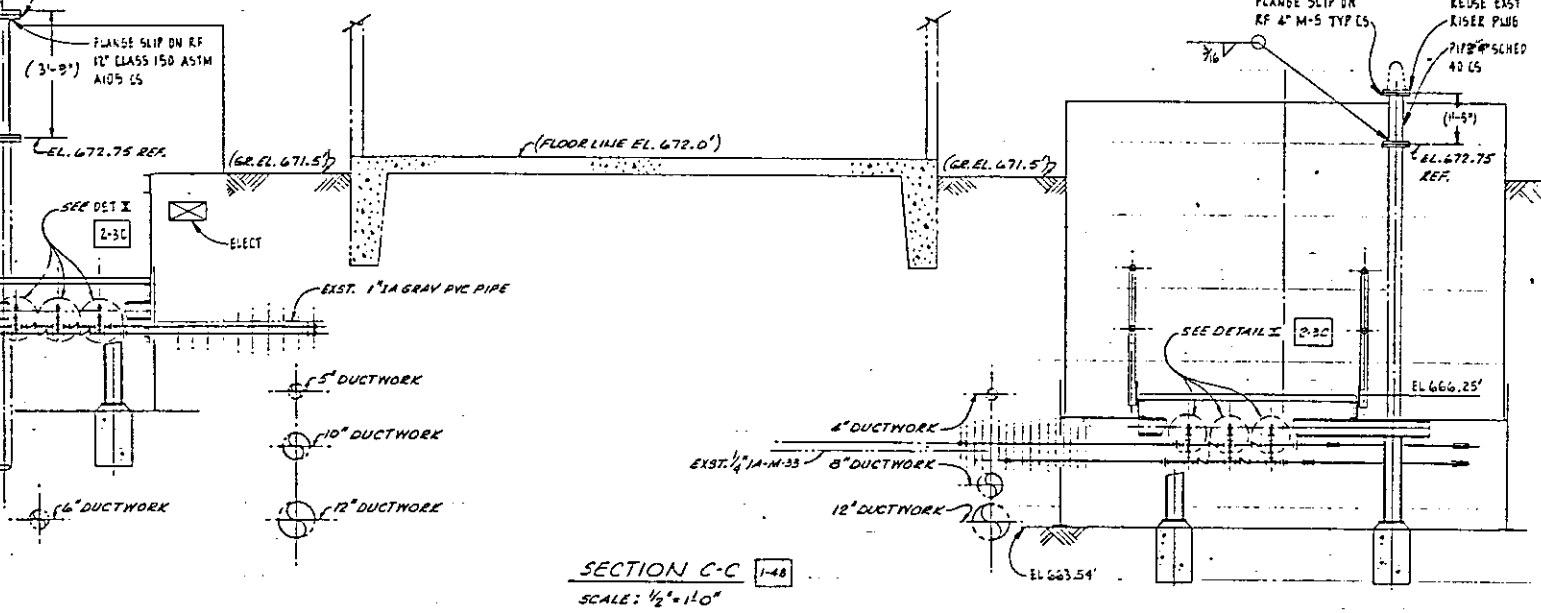

SECTION C-C 1-4B
SCALE: 1/2" = 1'-0"

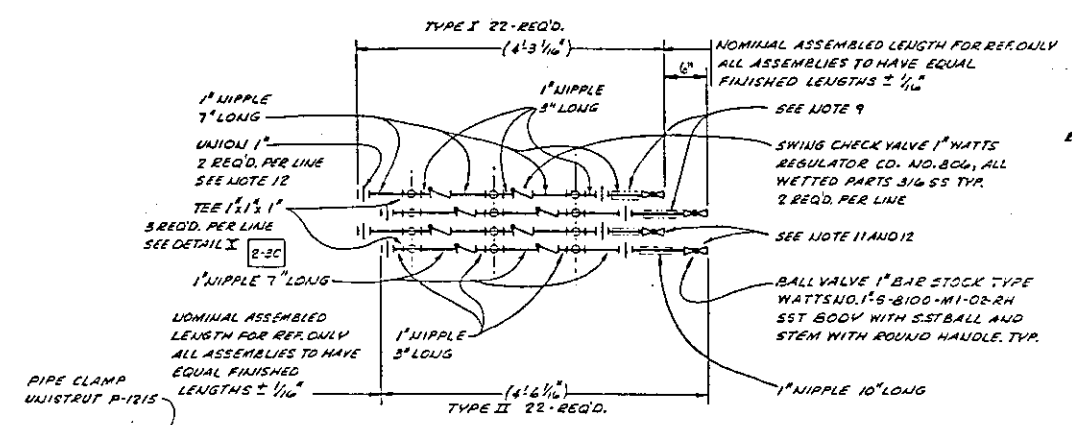

DETAIL II 1-5C NOTE 7
SCALE: 1" = 1'-0" 1-11C OPPOSITE HAND NOTE 10 FOR MATL.

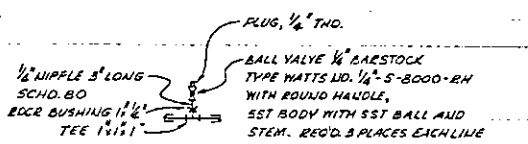

DETAIL X 2-7E 2-2E
SCALE: NONE

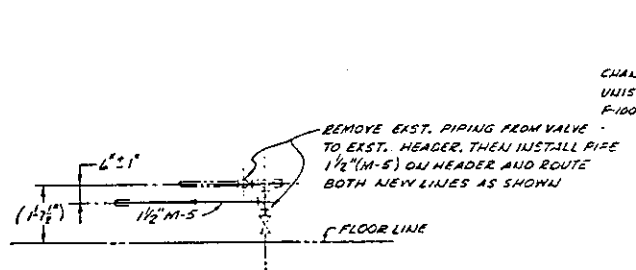

SECTION B-B 1-7C
SCALE: 1/2" = 1'-0"

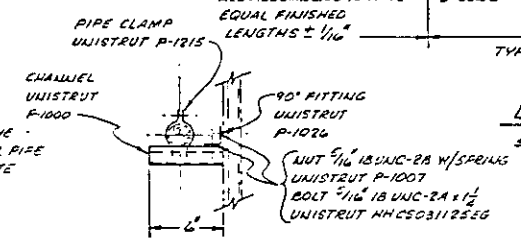

DETAIL XI 1-8D
SCALE: NONE

THIS DRAWING HAS BEEN APPROVED BY A ROCKWELL DOCUMENT REVIEW BOARD. REVISION NO. ____
CHAIRMAN ____ DATE 9/1/93
REVIEW PER NUMBER 3.24

QUALITY ASSURANCE LEVEL I

DRAWING APPROVALS	DATE
	9/1/93
	9/1/93
	9/1/93
	9/1/93
	9/1/93
J.A. WEBB	9/1/93
	9/1/93
	9/1/93
	7/14/93

U. S. Department of Energy
Richland Operations Office
Rockwell Hanford Operations
Richland, Washington 99352

CHECK VALVE CAISSON AIRLIFT CIRCULATOR LINES

SCALE: AS NOTED | DWG. NO. 241-AZ | PROJECT NO. 0402
CLASSIFICATION: NONE | ENGINEERING NO. NOT REQ'D. | DRAWING NO. H-2-94706 | SHEET NO. 2 | REV. 9

REV	DESCRIPTION	DATE	BY
9	AS BUILT PER FIELD INFORMATION	9/1/93	
1	COMMENT PRT ISSUE NO. 2	7-21-88	
1	CHECK PRT ISSUE NO. 2	8-22-88	

REVISION APPROVALS: QUALITY ASSURANCE, PERSONNEL SAFETY, DRAFTING
REVISIONS
REFERENCE DRAWINGS
NEXT USED ON
DRAWING STATUS

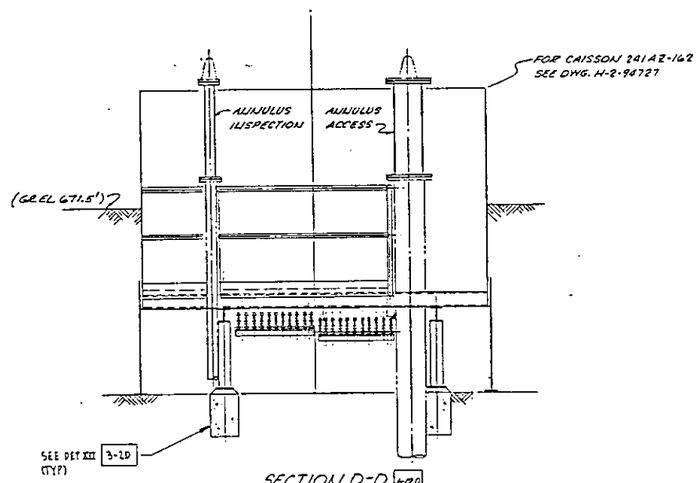

SECTION D-D 1-2D
SCALE: 1/2"=1'-0"

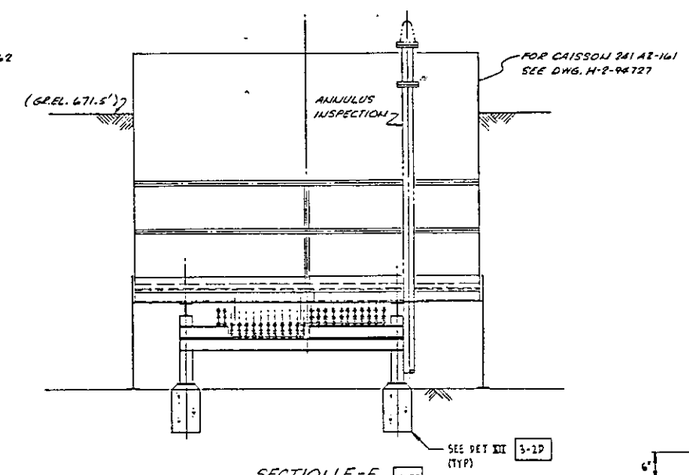

SECTION E-E 1-5D
SCALE: 1/2"=1'-0"

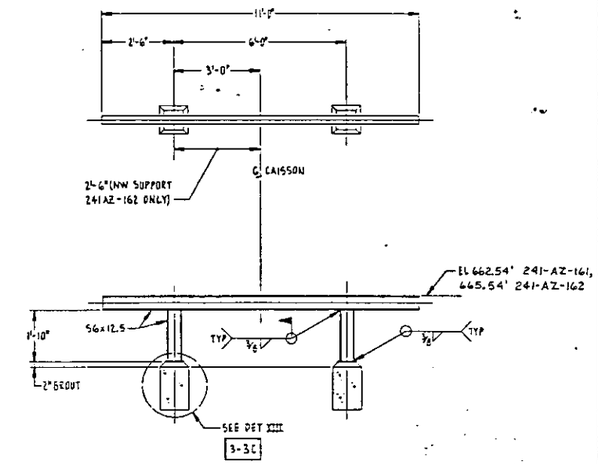

DETAIL XII 3-5D 3-12D
SCALE: 1/2" = 1'-0"

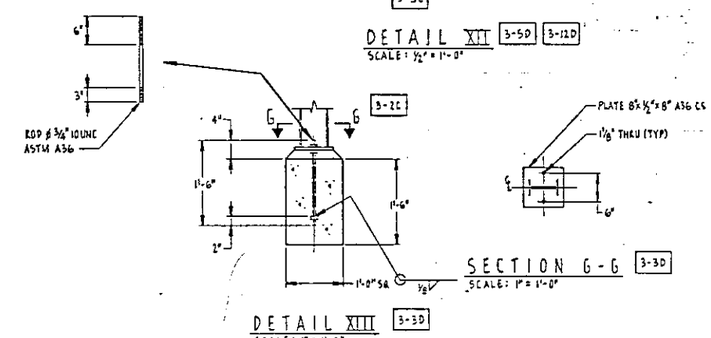

DETAIL XIII 3-3D
SCALE: 1" = 1'-0"

SECTION G-G 3-3D
SCALE: 1" = 1'-0"

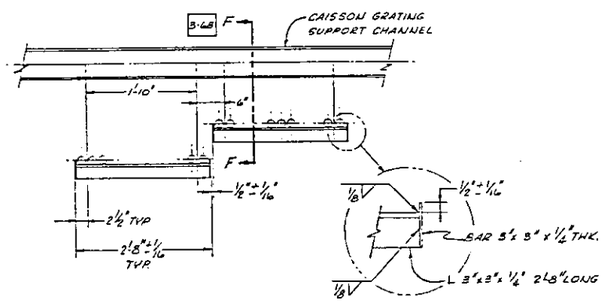

PIPE HANGER
DETAIL VII 2-7D
SCALE: NONE
4-ASSEMBLIES REQ'D.
241AZ-162 ONLY

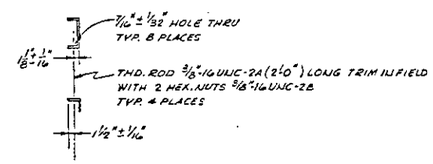

SECTION F-F 3-11C
SCALE: NONE

REVIEW RD NUMBER 355	1	2	3	4

THIS DRAWING HAS BEEN APPROVED BY A ROCKWELL DOCUMENT REVIEW BOARD.
REVISION NO. 0
CHAIRMAN [signature] DATE 8/1/83

QUALITY ASSURANCE LEVEL I

DRAWING APPROVALS	DATE
[signature]	7/1/83
[signature]	8/1/83
[signature]	8/1/83
[signature]	7/1/83
J.A. WEBB	8/1/83
[signature]	7/1/83
[signature]	7/30/83
[signature]	8/10/83

U. S. Department of Energy
Richland Operations Office
Rockwell Hanford Operations
Richland, Washington 99352

CHECK VALVE CAISSON AIRLIFT CIRCULATOR LINES

SCALE	DRAWN NO.	SHEET NO.
AS NOTED	241-AZ	0402
NONE	# NOT REQ'D	H-2-94706

SHEET 3 OF 5

REVISION APPROVALS								REVISIONS	
								AS BUILT PER FIELD INFORMATION	1
								DESCRIPTION	REV NO

REFERENCE DRAWINGS
COMMENT PRT ISSUE NO DATE | CHECK PRT ISSUE NO 1 6-22-83 DATE
DRAWING STATUS

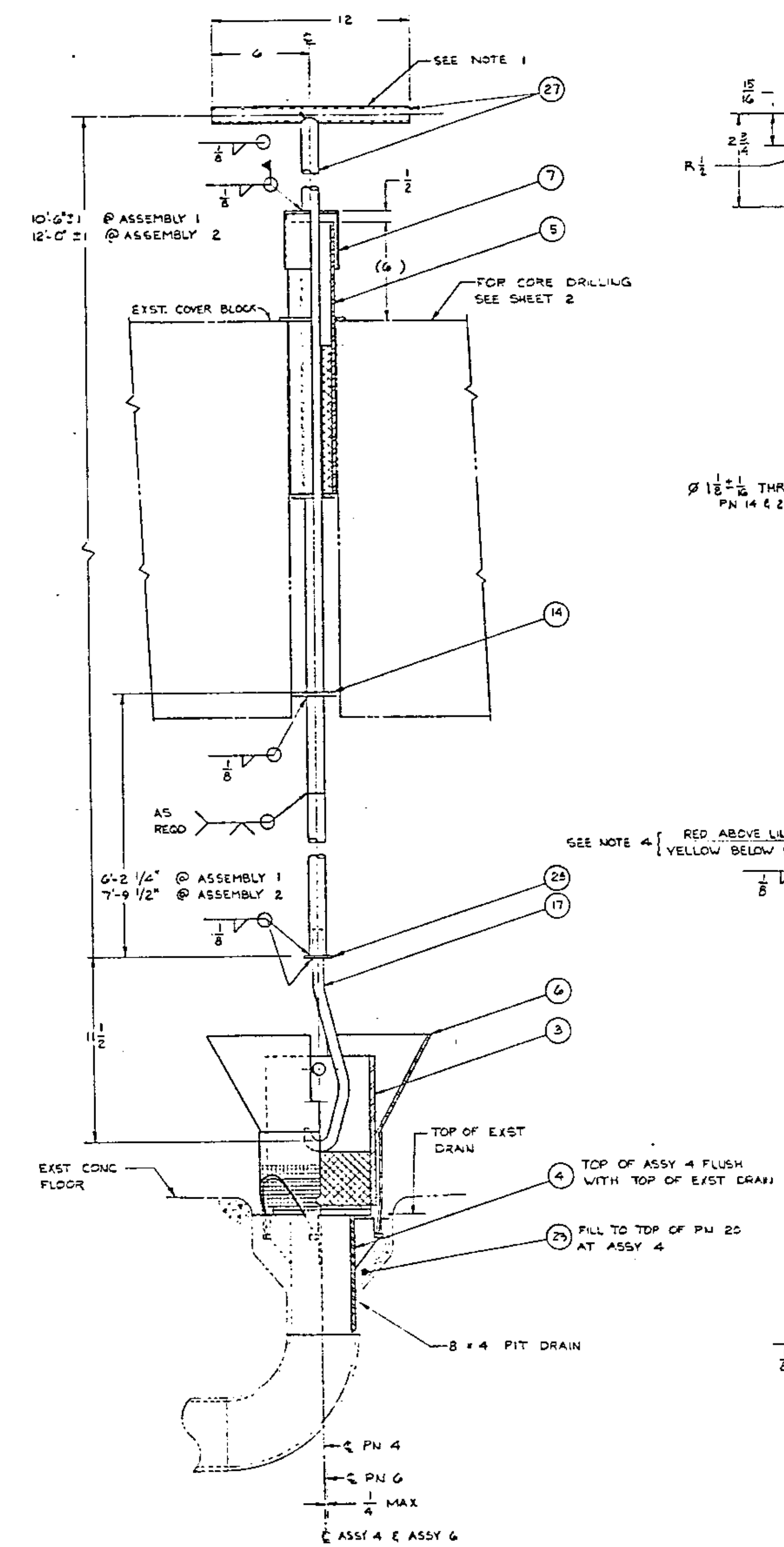

(1)(2) ASSEMBLY
SCALE: 3" = 1'-0"

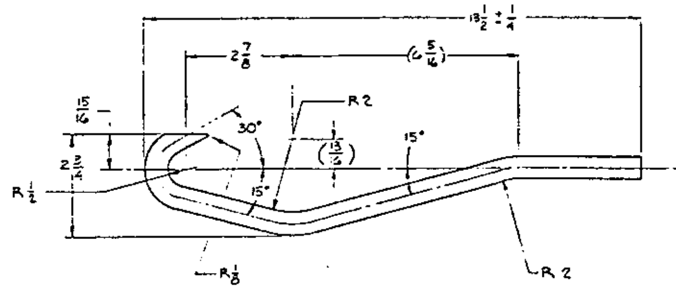

(17) BAR
SCALE: 1/2

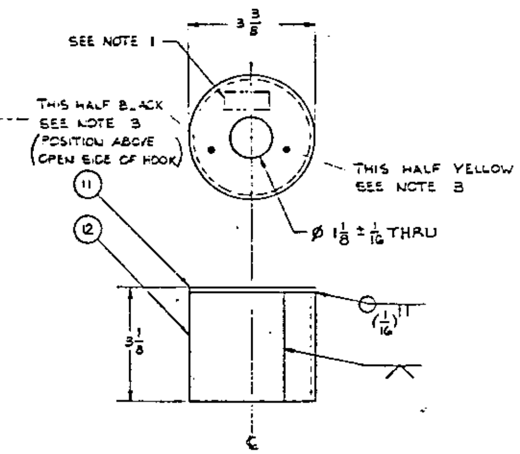

(7) SUB-ASSEMBLY
SCALE: 1/2

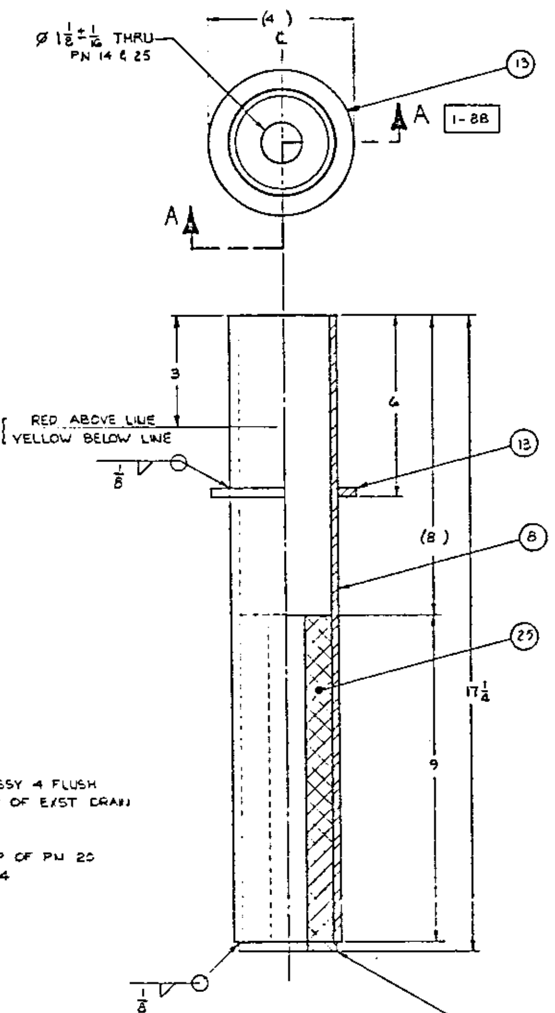

SECTION A-A [1-8E]

(5) ASSEMBLY
SCALE: 1/2

QTY.							PT. NO.	DESCRIPTION	MATL. / REF.
						X	1	ASSEMBLY SEE NOTE 4	
					X		2	ASSEMBLY SEE NOTE 4	
				X	1	1	3	ASSEMBLY	
			X		1	1	4	ASSEMBLY	
		X			1	1	5	ASSEMBLY	
	X				1	1	6	ASSEMBLY	
X					1	1	7	SUB-ASSEMBLY	
		1					8	PIPE 2 1/2 SCHED 40	ASTM A 53 TYPE E GR B CS
			1				9	PIPE 3 1/2 SCHED 40	
				1			10	PIPE 6 SCHED 40 x 9 1/8 L	
1							11	SHEET 12 GAUGE (.1046)	ASTM A 569 CS
1							12	SHEET 12 GAUGE (.1046)	ASTM A 569 CS
		1					13	PLATE 1/4 THK. x 4 O.D x 2 5/16 ± 1/16	ASTM A 36 CS
		1			1	1	14	PLATE 1/4 THK x 2 5/8 OD x 1 1/8 ± 1/16 ID	
				1			15	PLATE 1/4 THK x 6 5/16 DIA	
	1						16	PLATE 1/4 THK.	
					1	1	17	BAR Ø 5/8 x LENGTH AR	
				1			18	BAR Ø 3/4 x 1'-3 L	
	1						19	PLATE 6 x 1/4 x LENGTH AR	
			3				20	PLATE 1/4 THK.	ASTM A 36 CS
				1			21	SHEET, RUBBER 3/8 THK, 35-45 DURO x 6 5/16 DIA	ASTM D2000 3BA 415
				1			22	RUBBER ADHESIVE	3M SCOTCH GRIP NO. 1711
					AR	AR	23	EPOXY	DEVCON PLASTIC STEEL B
				AR			24	PIG (35.5 LB.)	LEAD
		AR					25	PIG (17.7 LB)	LEAD
	1						26	WIRE CLOTH 4 x 4 MESH PER SQUARE INCH x .063 DIA 304 SST	McMASTER-CARR 85 NO. 9226T19 OR EQUAL
-					AR	AR	27	PIPE 3/4 SCHED 40	ASTM A 53 TYPE E GR B CS
					1	1	28	WASHER, FLAT 1 3/4 OD x 11/16 ± 1/16" ID	COML CS
	6						29	BAR 1/4 x 1/4 x 1/2 L	ASTM - A 108 GRADE 10B

GENERAL NOTES

1. IDENTIFY ASSEMBLY 1 & 2 PER HS-BS-0015 TYPE 8 WITH DWG NO, PT NO & DWG REV NO IN LOCATION INDICATED USING 1/4 HIGH YELLOW LETTERS. IDENTIFY ASSEMBLIES 3, 4, 5, & 6 & SUB-ASSEMBLY 7 PER HS-BS-0015 TYPE F.
2. REMOVE ALL BURRS & BREAK SHARP EDGES.
3. PREPARE & PAINT ALL EXPOSED CARBON STEEL SURFACES WITH AMERCOAT NUMBER 187 PRIMER AND TWO COATS OF AMERCOAT NUMBER 33, FINAL COLOR GRAY PER MANUFACTURER'S INSTRUCTIONS. FINAL COLOR YELLOW INSIDE OF FUNNEL (PN 16) AND ON HANDLE (PN 17) OF ASSY 1 & 2. FINAL COLOR YELLOW & BLACK AS SHOWN ON ASSY 7, YELLOW & RED AS SHOWN ON ASSY 5, ALL OTHER PARTS FINAL COLOR GRAY.
4. ASSY 1 SHALL BE USED IN PUMP PIT (H-2-68304) ONLY. ASSY 2 SHALL BE USED IN ANNULUS PUMP-OUT PIT (H-2-68309) AND LEAK DETECTION PITS (H-2-68320 & H-2-67249).
5. WELD AND INSPECT PER AWS D1.1 AND D1.3. VT ALL WELDS FINAL PASS.
6. PART NO 1 & 2 ARE IMPACT LEVEL I. PART NO 3, 4 & 6 ARE IMPACT LEVEL II. ALL OTHER PART NO'S ARE IMPACT LEVEL III.

UNLESS OTHERWISE SPECIFIED DIMENSIONS ARE IN INCHES
TOLERANCES ON:
DECIMALS — ANGLES ± 5° — FRACTIONS ± 1/8"
DO NOT SCALE PRINT

THIS DRAWING MODIFIES H-2-67249, H-2-68304, H-2-68309 H-2-68320, H-2-68303.

DWG NO	DRAWING TITLE
H-2-68400	DRAWING INDEX
H-2-68320	TANK & ENCASEMENT LEAK
H-2-67249	STRUCT CONC LEAK DETN
H-2-68304	STRUCT CONC PUMP PIT
H-2-68309	STRUCT CONC PUMP-OUT PIT

DRAWING TRACEABILITY LIST

REFERENCE DRAWINGS

REVISIONS: 1 — FABRICATION PRACTICES UPDATE TO CURRENT

COMMENT PRT ISSUE NO 2 1-9-84 — CHECK PRT ISSUE NO 2 1-23-83

DRAWING STATUS

IMPACT LEVEL I

U. S. Department of Energy
Richland Operations Office
Rockwell Hanford Operations
Richland, Washington 99352

FLOOR DRAIN SEAL MODIFICATION

D.F. SALSMAN

SCALE: AS NOTED — 241-AZ — 0402 0900

NONE — NOT REQD — H-2-94792 — SHEET 1 OF 2

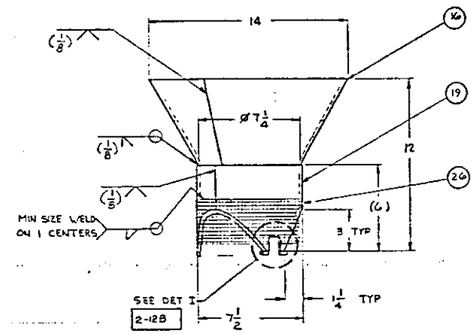

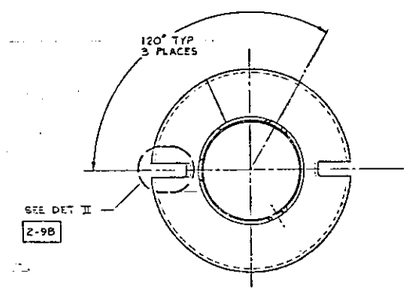

BOTTOM VIEW

6 ASSEMBLY

SCALE : 3 in=1'-0

PN 29 NOT SHOWN

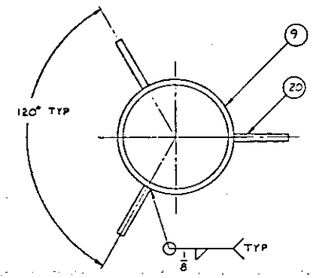

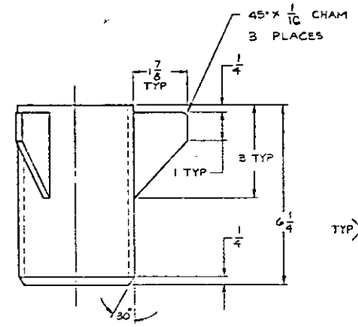

4 ASSEMBLY

SCALE : 1/2

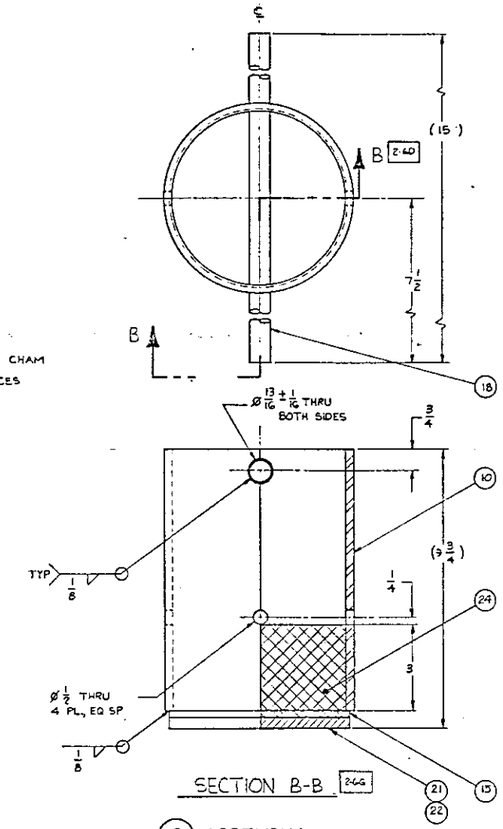

SECTION B-B 2-6G

3 ASSEMBLY

SCALE : HALF SIZE

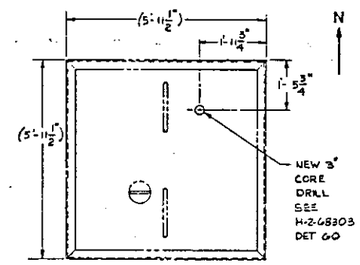

PLAN-COVER

2-REQD-TK-102 SCALE: NONE

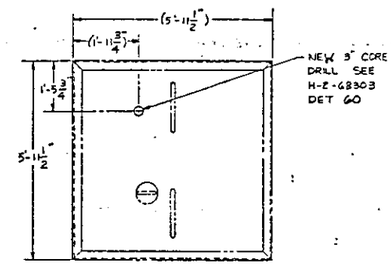

PLAN COVER

1 REQD TK-101 SCALE : NONE

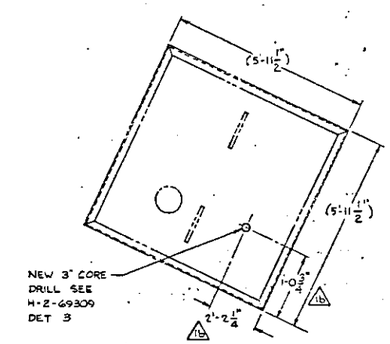

COVER SLAB PLAN

1 REQD TK-101 SCALE : NONE

1 REQD TK-102

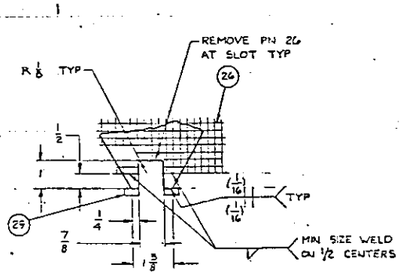

DETAIL I 2-13F

SCALE : HALF SIZE

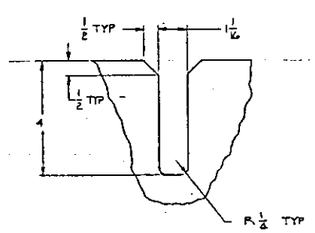

DETAIL II 2-13E

SCALE : 1/2

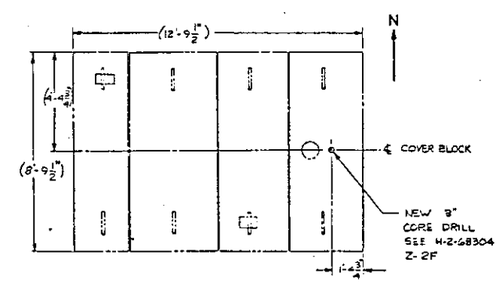

COVER BLOCK PLAN

1 REQD TK-101 SCALE : NONE

1 REQD TK-102

IMPACT LEVEL I

12		5-25-94				RWC	CEO 24494 (b) INCORPORATES FABRICATION PRACTICES (a) UPDATE TO CURRENT	1
REVISION APPROVALS							DESCRIPTION	REV NO

REVISIONS

COMMENT PRT ISSUE NO 2 1-7-94 CHECK PRT ISSUE NO 2 1-25-94

REFERENCE DRAWINGS

NEXT USED ON

DRAWING APPROVALS	DATE
	3/94
	3/94
C.F. SALSMAN	1/94
	1/5/94

U. S. Department of Energy
Richland Operations Office

Rockwell Hanford Operations
Richland, Washington 99352

FLOOR DRAIN SEAL MODIFICATION

SCALE: AS NOTED | 24:-AZ | 0402 0900

SUBMITTED NONE | NO. REQD 1 | DRAWING NO. H-2-94792 | SHEET NO. 2 | SHEETS 2

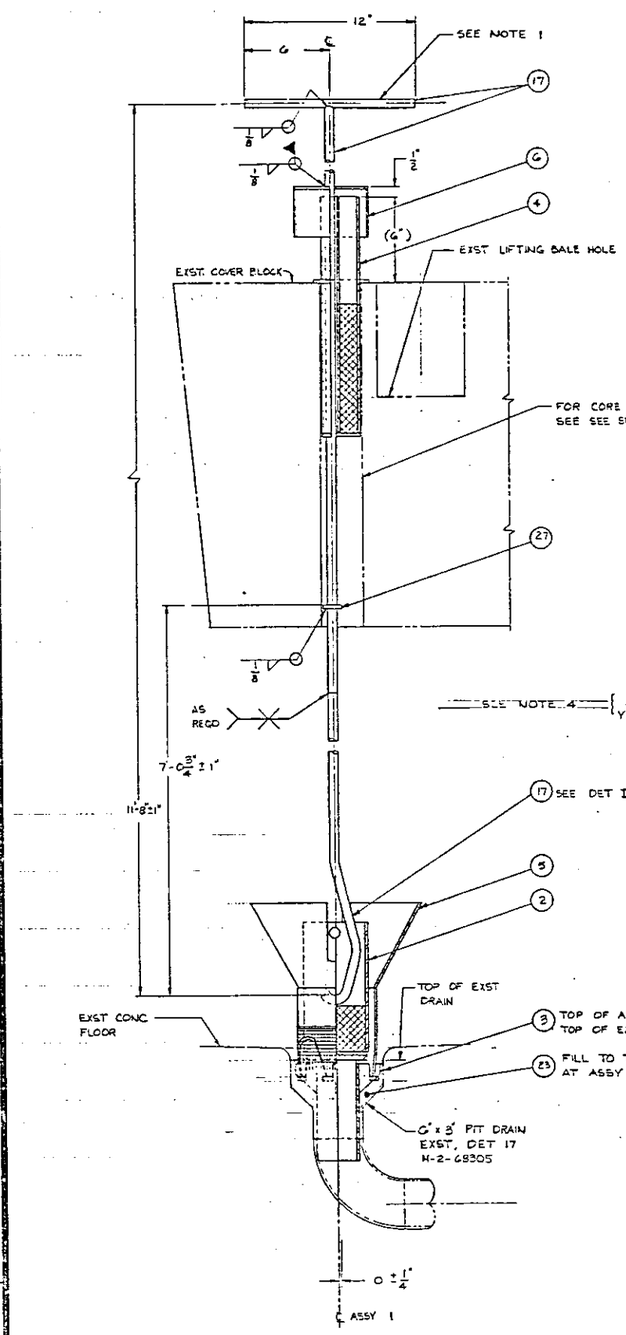

1 ASSEMBLY
SCALE : 3" = 1'-0"

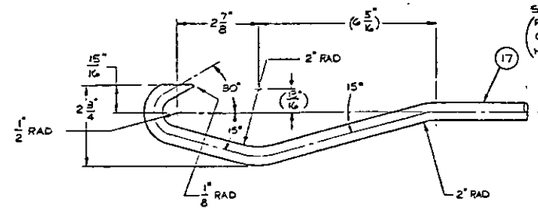

DETAIL I 1-1CD
SCALE : HALF SIZE

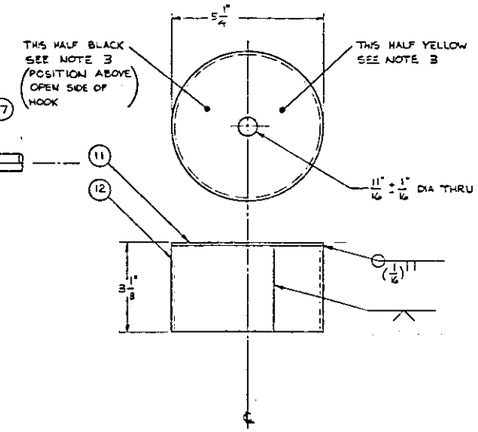

6 SUB-ASSEMBLY
SCALE : HALF SIZE

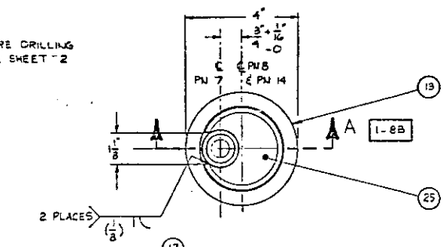

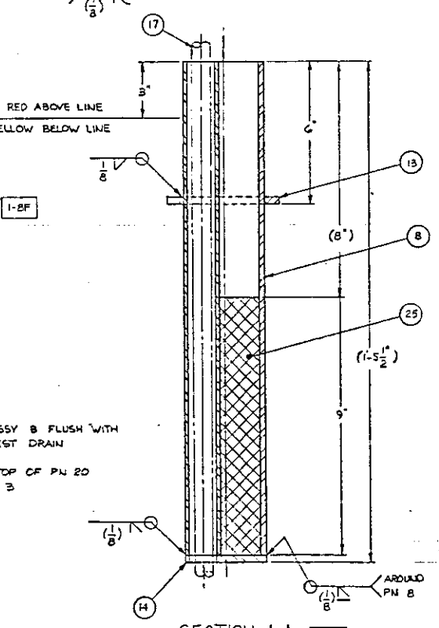

SECTION A-A 1-8E

4 ASSEMBLY
SCALE : HALF SIZE

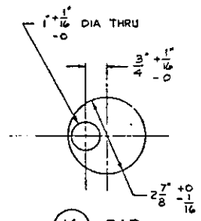

14 BAR
SCALE : HALF SIZE

QTY.						PT. NO.	DESCRIPTION	MAT'L / REF.
					X	1	ASSEMBLY	
				X		1	ASSEMBLY	
			X			1	ASSEMBLY	
		X				1	ASSEMBLY	
	X					1	ASSEMBLY	
X						1	SUB-ASSEMBLY	
		1				7	PIPE 1" SCHED 40 × 1'-5 1/4" L	ASTM A53 TYPE E GR B CS
		1				8	PIPE 2 1/2" SCHED 40 × 1'-5 1/4" L	
			1			9	PIPE 2 1/2" SCHED 40 × 7" L	
				1		10	PIPE 4" SCHED 40 × 9 1/8" L	
1						11	SHEET 12 GAUGE (.1046)	ASTM A569 CS
1						12	SHEET 12 GAUGE (.1046)	ASTM A569 CS
		1				13	PLATE 1/4" THK × 4" OD × 2 5/16" ± 1/16 ID	ASTM A36 CS
		1				14	PLATE 1/4" THK	
				1		15	PLATE 1/4" THK × 4 1/4" DIA	
	1					16	PLATE 1/4" THK	
					AR	17	BAR 5/8" DIA × LENGTH AR	
				1		18	BAR 3/4" DIA × 1'-1" L	
	1					19	PLATE 6" × 1/4" × LENGTH AR	
			3			20	PLATE 1/4" THK.	
				1		21	SHEET RUBBER 3/8" THK 35-45 DURO × 4 1/4" DIA.	ASTM D2000 3BA 415
					AR	22	RUBBER ADHESIVE	3M SCOTCH GRIP NO. 1711
					AR	23	EPOXY	DEVCON PLASTIC STEEL B
				AR		24	PIG (15.7 LB.)	LEAD
		AR				25	PIG (17.7 LB.)	LEAD
	AR					26	WIRE CLOTH, 4 × 4 MESH PER SQUARE INCH × .063 DIA 304 SS.	HOMASTER CARR CO NO. 922A719 OR EQUAL
					1	27	WASHER 1/4" THK × 1 1/4" × 11/16" ± 1/16 ID	ASTM A36 CS
	G					28	BAR 1/4" × 1/4" × 1/2" L	ASTM A108 GRADE 1015

FOR GENL. NOTES SEE SHEET 2

WELDING AND INSPECTION REQUIREMENTS		
FABRICATION	1. WELDING STANDARD	☐ AWS ☐ ANSI ■ AWS D1.2/D1.1 ■ HWS-BS-0013-OPTIONAL (IN HOUSE)
	2. PROCEDURE SPEC. & PERFORMANCE CERT.	■ ASME SEC IX ☒ AWS D1.1 ☐
	3. FILLER MATERIAL	■ ASME SPEC. NAME AS ☐
INSPECTION	4. VISUAL (VT) PROCEDURE ONLY	■ WELDING STD. IN (1) ☒ SPO 2.5.0 (IN HOUSE) ☐ FITUP ☐ ROOT PASS ☒ FINAL
	5. PENETRANT (PT)	☐ WELDING STD IN (1) ☐
	6. MAGNETIC PART (MT)	☐ WELDING STD IN (1) ☐
	7. ULTRASONIC (UT)	☐ WELDING STD IN (1) ☐
	8. RADIOGRAPHY (RT)	☐ WELDING STD IN (1) ☐
	9. LEAK TEST (LT)	☐
■ OTHER REQTS. VT ACC. CRITERIA HS-BS-0009 B		

FORMAL DOCUMENT REVIEW HAS BEEN WAIVED FOR REV 0 IN ACCORDANCE WITH ENGINEERING ORDER J2922 DATED 1-25-84
Rockwell Hanford Operations
RELEASE ENGINEERING ORDER R&O-12922
RELEASE DATE 2/22/84 REV. 0
☐ INFORMATION
☐ AUTHORIZED
☐ CONTROLLED
☐ CONSTRUCTION WORK ORDER
☐ ATTACHMENTS NOT REQUIRED
THIS DOCUMENT IS NOT COMPLETE WITHOUT THE FOLLOWING ATTACHMENTS:

UNLESS OTHERWISE SPECIFIED DIMENSIONS ARE IN INCHES
TOLERANCES ON:
DECIMALS ± .0 ANGLES ± 0° FRACTIONS ± 1/8
DO NOT SCALE PRINT

THIS DRAWING MODIFIES H-2-68305

QUALITY ASSURANCE LEVEL I

DRAWING APPROVALS	DATE
	2/1/84
	2/1/84 M
	2/1/84
D.F. SALSMAN	1/84
	2/1/84
	2/1/84
D.M. Anderson	1/19/84

U. S. Department of Energy
Richland Operations Office
Rockwell Hanford Operations
Richland, Washington 99352

FLOOR DRAIN SEAL MODIFICATION

SCALE AS NOTED | PLANT NO. 241-AZ | CODE NO. C402, C900

H-2-65300	DRAWING INDEX (TK 102)
H-2-68400	DRAWING INDEX (TK 101)
H-2-68305	STRUCT CONC. SLUICING PIT

REFERENCE DRAWINGS

REV. NO.	REVISION APPROVALS	REVISIONS	DESCRIPTION
0	COMMENT PRT ISSUE NO 1 1-20-84	CHECK PRT ISSUE NO 2 1-25-84	

NEXT USED ON
DRAWING STATUS

CLASSIFICATION NONE | BY NOT REQD | DRAWING NO. H-2-94805 | SHEET NO. 1 | SHEETS 2

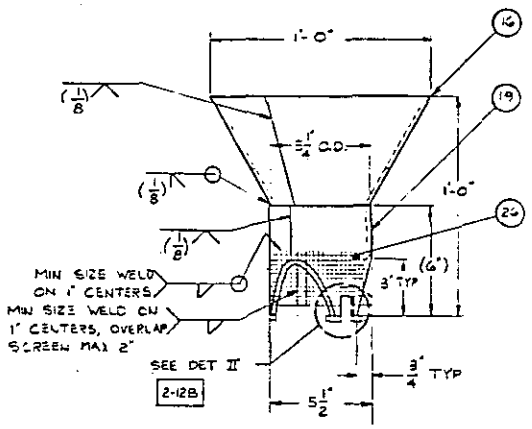

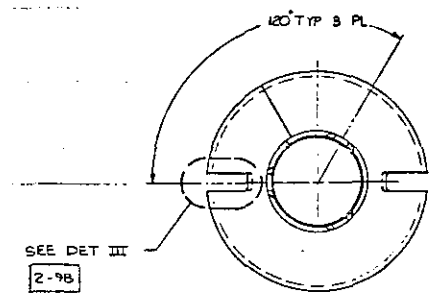

BOTTOM VIEW

5 ASSEMBLY

SCALE : 3"=1'-0"
PN 28 NOT SHOWN

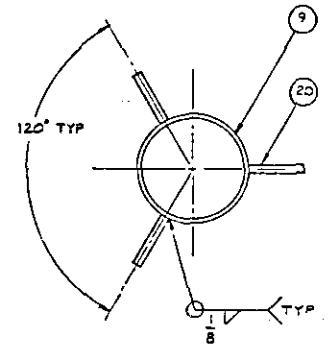

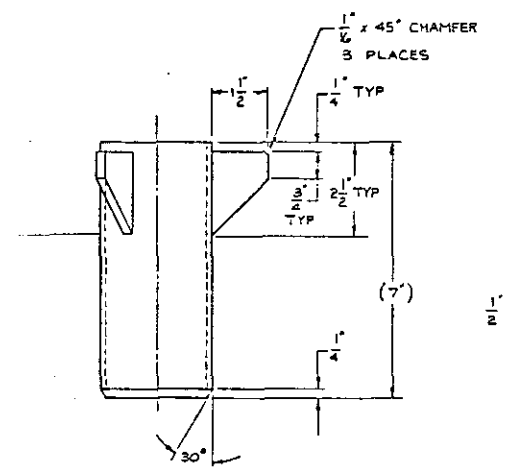

3 ASSEMBLY

SCALE : HALF SIZE

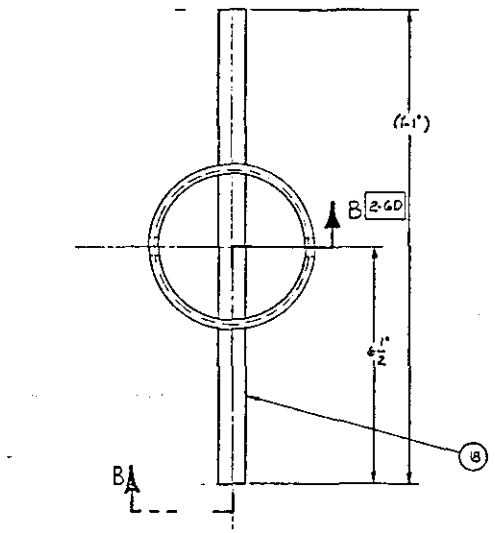

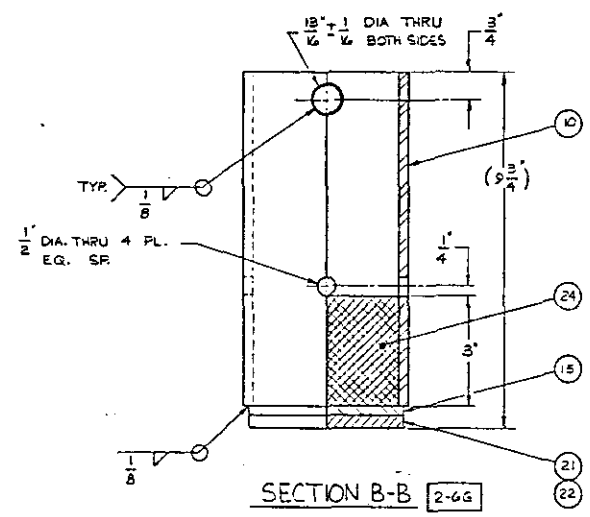

SECTION B-B 2-6G

2 ASSEMBLY

SCALE : HALF SIZE

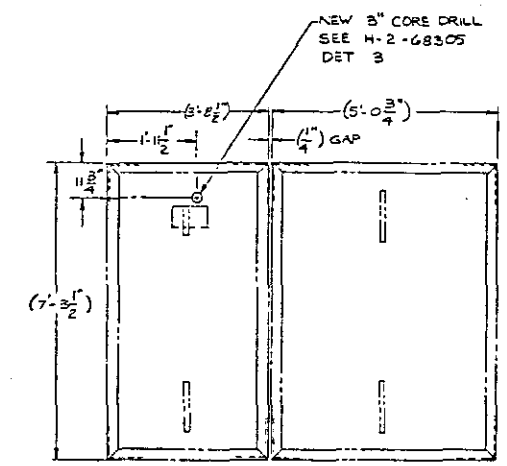

PLAN COVER SLABS

2 REQD TK-101
2 REQD TK-102

SCALE : NONE

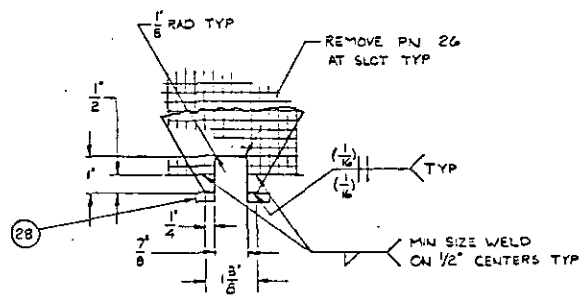

DETAIL II 2-15F

SCALE : HALF SIZE

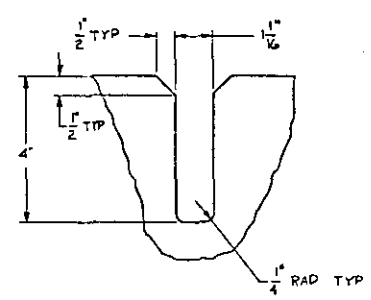

DETAIL III 2-13E

SCALE : HALF SIZE

GENERAL NOTES

1. IDENTIFY ASSEMBLY 1 PER HS-85-0015 TYPE 8 WITH DWG NO. PT NO & DWG REV NO. IN LOCATION INDICATED USING 1/4" HIGH YELLOW LETTERS. IDENTIFY ASSEMBLIES 2,3,4,5 & SUB-ASSEMBLY 6 PER HS-85-0015 TYPE F.
2. REMOVE ALL BURRS & BREAK SHARP EDGES.
3. PREPARE AND PAINT ALL EXPOSED CARBON STEEL SURFACES WITH AMERCOAT NUMBER 86 PRIMER AND TWO COATS OF AMERCOAT NUMBER 33, FINAL COLOR GRAY PER MANUFACTURERS INSTRUCTIONS. FINAL COLOR YELLOW INSIDE OF FUNNEL (P.N. 16), AND ON PN 17 (HANDLE) OF ASSY 1, FINAL COLOR YELLOW AND BLACK AS SHOWN ON ASSY 6, YELLOW AND RED AS SHOWN ON ASSY 4. ALL OTHER PARTS FINAL COLOR GRAY.

Rockwell Hanford Operations
RELEASE ENGINEERING ORDER REO-12922
RELEASE DATE 2/22/84 REV. 0
☐ INFORMATION
☐ AUTHORIZED
☐ CONTROLLED
☐ CONSTRUCTION WORK ORDER
☐ ATTACHMENTS NOT REQUESTED
THIS DOCUMENT IS NOT COMPLETE WITHOUT THE FOLLOWING ATTACHMENTS:

FORMAL DOCUMENT REVIEW HAS BEEN WAIVED FOR REV 0 IN ACCORDANCE WITH ENGINEERING ORDER 12922 DATED 1-25-84

THIS DRAWING MODIFIES H-2-68305

QUALITY ASSURANCE LEVEL I

DRAWING APPROVALS	DATE
D.F. SALEMAN	1/84

U. S. Department of Energy
Richland Operations Office
Rockwell Hanford Operations
Richland, Washington 99352

FLOOR DRAIN SEAL MODIFICATION

SCALE	SYSTEM NO.	WORK NO.
AS NOTED	241-AZ	C402.C900
NONE	IN NOT REQD	H-2-94805

SHEET 2 OF 2

REVISIONS

REV	DESCRIPTION
0	COMMENT PRT ISSUE NO 1 1-20-84; CHECK PRT ISSUE NO 2 1-25-84

REFERENCE DRAWINGS

NEXT USED ON

DRAWING STATUS

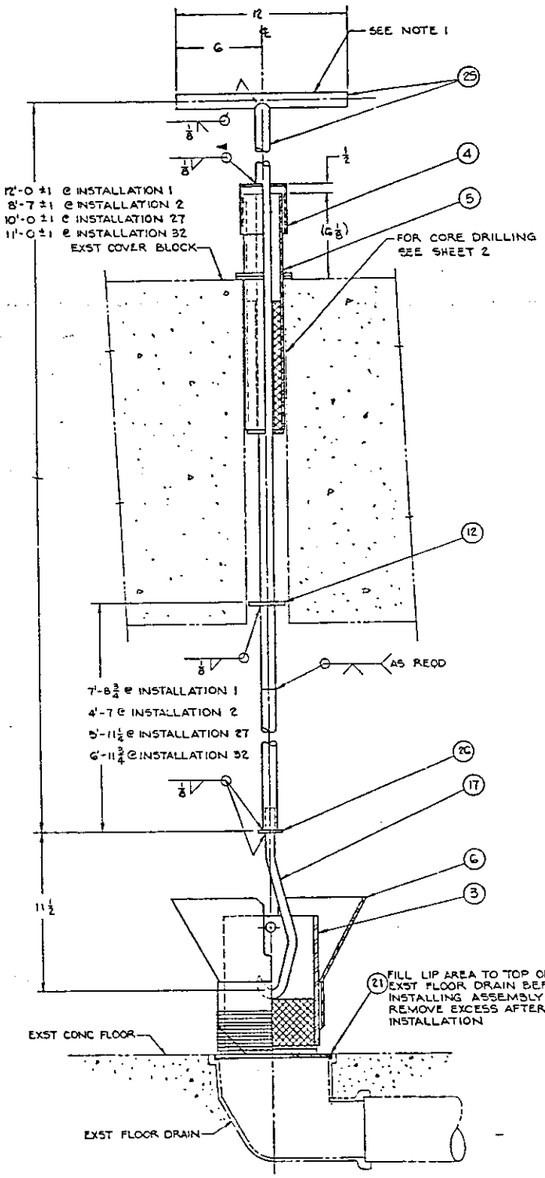

(32)(1)(2)(27) INSTALLATION
SCALE: 3" = 1'-0"

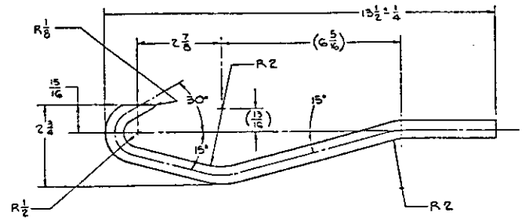

(17) BAR
SCALE: 1/2

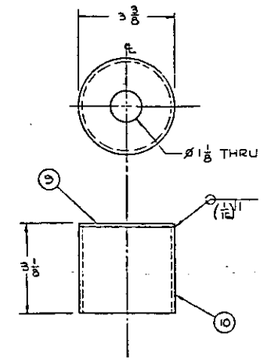

(4) ASSEMBLY
SCALE: 1/2

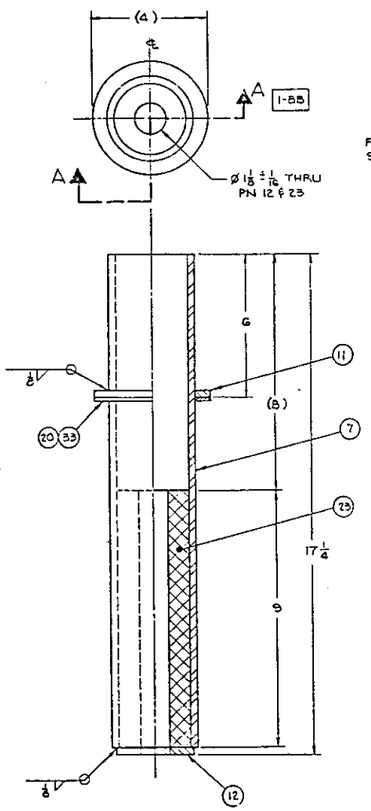

SECTION A-A 1-BE

(5) ASSEMBLY
SCALE: 1/2

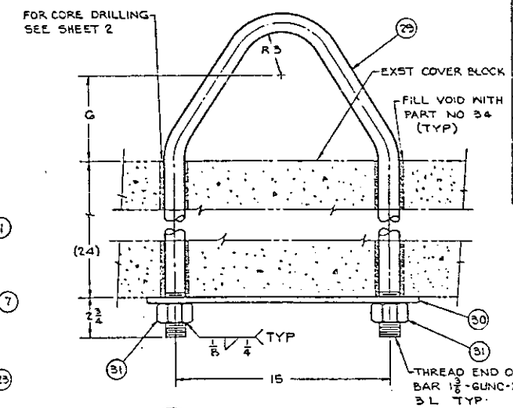

(28) INSTALLATION (SEE NOTE 7)
SCALE: 3" = 1'-0"

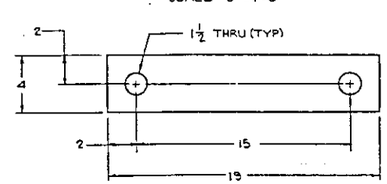

(30) PLATE
SCALE: 3" = 1'-0"

QTY								PT NO	DESCRIPTION	MATL / REF	IMP LVL
							X	1	INSTALLATION	SEE NOTE 4	I
						X		2	INSTALLATION	SEE NOTE 4	I
1		1			X	1	1	3	ASSEMBLY	——	II
1		1			X	1	1	4	ASSEMBLY	——	III
1		1		X		1	1	5	ASSEMBLY	——	II
1		1	X			1	1	6	ASSEMBLY	——	II
				1				7	PIPE 2½ SCHED 40	ASTM A53 TYPE E GR B CS	III
					1			8	PIPE 6 SCHED 40 × 9 1/8 L	ASTM A53 TYPE E GR B CS	
					1			9	SHEET 11 GAUGE (.1196)	ASTM A569 CS	
					1			10	PIPE 3 SCHED 40	ASTM A53 TYPE E GR B CS	
				1				11	PLATE ¼ THK × 4 OD × 2 15/16 ID	ASTM A36 CS	
1		1		1		1	1	12	PLATE ¼ THK × 2 5/8 OD × 1 1/8 ID		
					1			13	PLATE ¼ THK × Ø 6 5/16		
			1					14	PLATE ¼ THK × LENGTH AR		
			1					15	PLATE ¼ THK × 8 ± 1/32 OD × 3 ID		
			1					16	PLATE ¼ THK × 5 × LENGTH AR		
1		1				1	1	17	BAR Ø 1 5/8 × LENGTH AR		
					1			18	BAR Ø 1 3/4 × LENGTH AR	ASTM A36 CS	
					1			19	SHEET, RUBBER ⅜ THK × Ø 6 5/16	ASTM D2000 3BA415 35-45 DURO	
					AR			20	RUBBER ADHESIVE	3M SCOTCH GRIP NO. 1711	
AR		AR				AR	AR	21	EPOXY	DEVCON PLASTIC STEEL B	
					AR			22	PIG (35.5 LB)	LEAD	
			AR					23	PIG (17.7 LB)	LEAD	
			1					24	WIRE CLOTH 4×4 MESH PER SQUARE INCH × .063 DIA PLAIN STEEL	McMASTER-CARR #89 NO. 9219T36 OR EQUAL	
AR		AR				AR	AR	25	PIPE ¾ SCHED 40	ASTM A53 TYPE E GR B CS	
1		1				1	1	26	WASHER, FLAT 1 3/4 OD × 11/16 ± 1/16 ID	COML CS	III
		X						27	INSTALLATION	SEE NOTE 4	I
	X							28	INSTALLATION	SEE NOTE 4	III
	1							29	BAR Ø 1 3/8 × LENGTH AR	ASTM A36 CS	II
	1							30	PLATE ⅜ THK	ASTM A36 CS	III
	2							31	NUT, HEX HEAD, 1 3/8-6UNC-2B	COML CS	III
X								32	INSTALLATION	SEE NOTE 4	I
				1				33	SHEET, RUBBER ⅛ THK × 4 OD × 2 15/16 ID	ASTM D2000 3BA 415 35-45 DURO	III
	AR							34	NON-SHRINK GROUT	MASTER BUILDERS EMBECO 636	III

GENERAL NOTES

1. IDENTIFY INSTALLATION 1, 2 & 27 PER HS-B5-0015 TYPE B WITH DWG NO, PT NO, & DWG REV NO. IN LOCATION INDICATED USING ⅜" HIGH YELLOW LETTERS. IDENTIFY INSTALLATION 28 & ASSEMBLY 3, 4, 5 & 6 PER HS-B5-0015 TYPE F.
2. REMOVE ALL BURRS & BREAK SHARP EDGES.
3. PREPARE & PAINT ALL EXPOSED CARBON STEEL SURFACES WITH AMERCOAT NUMBER 187 PRIMER AND TWO COATS OF AMERCOAT NUMBER 33, FINAL COLOR GRAY PER MANUFACTURERS INSTRUCTIONS. FINAL COLOR YELLOW INSIDE OF FUNNEL (PN 14) AND ON HOOK (PN 17) OF INSTALLATION 1, 2 & 27.
4. INSTALLATION 1 SHALL BE USED IN LEAK DETECTION PIT (H-2-64318), LEAK DETECTION PITS (H-2-64325) & ANNULUS PUMP-OUT PITS (H-2-64329). INSTALLATION 2 SHALL BE USED IN PUMP PITS (H-2-64313) ONLY. INSTALLATION 27 & 28 SHALL BE USED IN ALL SLUICING PITS (H-2-64314) EXCEPT 241-AY-01D & 241-AY-02D (H-2-94035 & H-2-94036) WHICH WILL EMPLOY INSTALLATION 32.
5. WELD AND INSPECT PER AWS D1.1 AND D1.3. VT ALL WELDS FINAL PASS.
6. FIELD VERIFY LOCATION OF EXISTING FLOOR DRAIN. NEW CORE DRILL IN EXISTING CONCRETE COVER SLAB SHALL BE CENTERED OVER EXISTING FLOOR DRAIN.
7. LOAD TEST INSTALLATION 28 (RELOCATED BAIL) AT 6000 LBS LIFTING LOAD. HOLD LOAD FOR 5 MINUTES.

DESIGN REVIEW WAIVED
G S Kunkler 3-19-86
NAME DATE

UNLESS OTHERWISE SPECIFIED DIMENSIONS ARE IN INCHES
TOLERANCES ON:
DECIMALS ±.5 ANGLES ±½° FRACTIONS ±1/16
DO NOT SCALE PRINT

THIS DRAWING MODIFIES H-2-64313, H-2-64314, H-2-64318, H-2-64319, H-2-64325 & H-2-64329

H-2-94035	STRL MOD SLUICE PIT
H-2-94036	STRL MOD SLUICE PIT
H-2-64313	STRL CONC PUMP PIT
H-2-64314	STRL CONC SLUICING PIT
H-2-64318	LEAK DETECTION PIT
H-2-64319	LEAK DETECTION PIT
H-2-64325	LEAK DETECTION PITS
H-2-64329	STRL CONC ANNULUS PUMP
DWG NO	DRAWING TITLE

DRAWING TRACEABILITY LIST

REFERENCE DRAWINGS
NEXT HIGHER H-2-64325

REVISIONS
COMMENT PRT ISSUE NO 1 — 1-31-86 — CHECK PRT ISSUE NO 1 — 1-31-86
DRAWING STATUS DIST 25

IMPACT LEVEL I

DRAWING APPROVALS — DATE
GS KUNKLER

U. S. Department of Energy
Richland Operations Office
Rockwell Hanford Operations
Richland, Washington 99352

FLOOR DRAIN SEAL MODIFICATION

SCALE AS SHOWN — BLDG NO 241-AY — DRAWING NO 0402 0800
SIZE NONE — REV NO NOT REQD — H-2-95398 — SHEET 1 OF 2

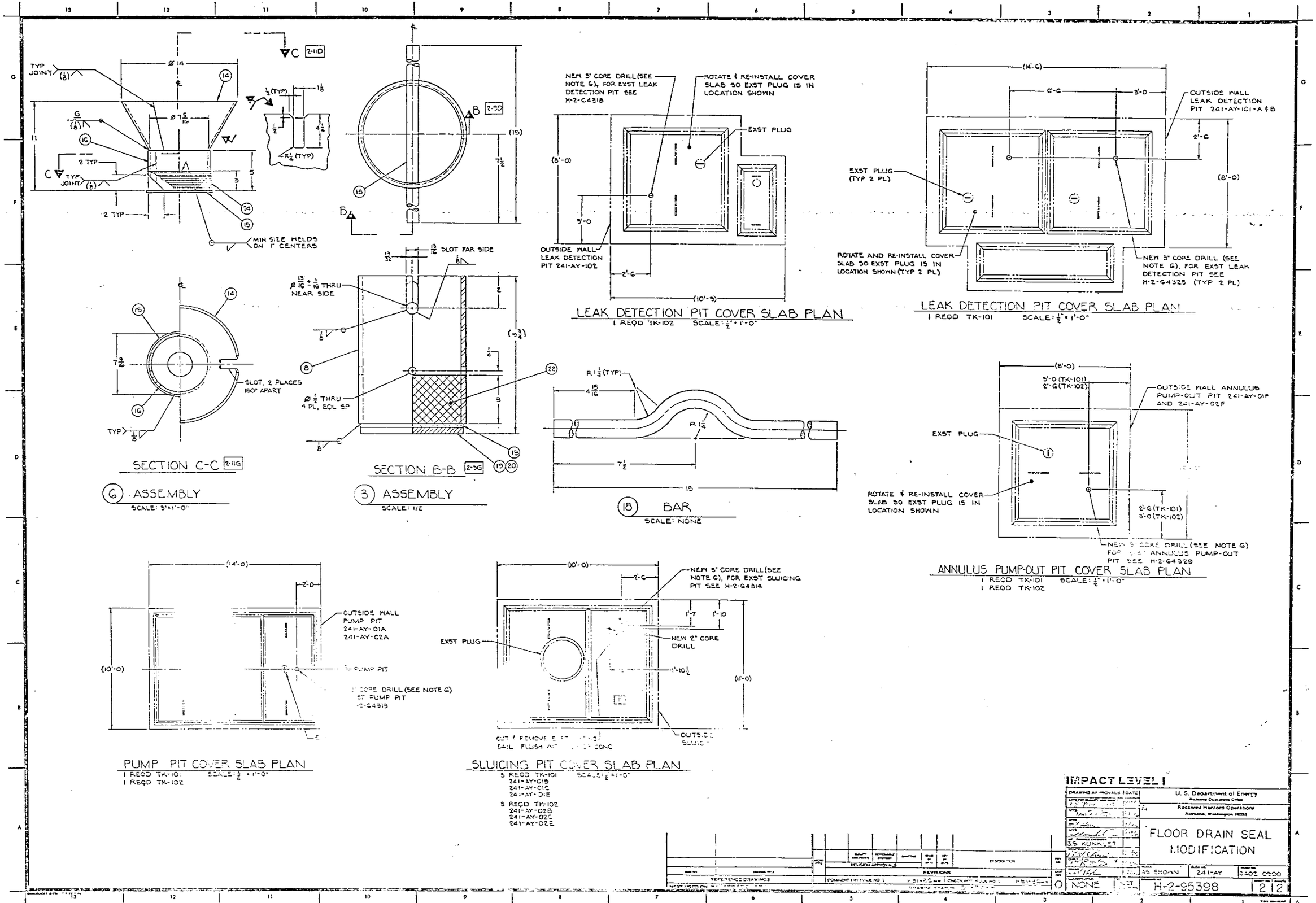

SECTION C-C 2-11G
6 ASSEMBLY
SCALE: 3"=1'-0"
SECTION B-B 2-9G
3 ASSEMBLY
SCALE: 1/2
LEAK DETECTION PIT COVER SLAB PLAN
1 REQD TK-102 SCALE: 1/2"=1'-0"
NEW 3" CORE DRILL (SEE NOTE 6), FOR EXST LEAK DETECTION PIT SEE H-2-64318
ROTATE & RE-INSTALL COVER SLAB SO EXST PLUG IS IN LOCATION SHOWN
EXST PLUG
OUTSIDE WALL LEAK DETECTION PIT 241-AY-102
LEAK DETECTION PIT COVER SLAB PLAN
1 REQD TK-101 SCALE: 1/2"=1'-0"
OUTSIDE WALL LEAK DETECTION PIT 241-AY-101-A & B
EXST PLUG (TYP 2 PL)
ROTATE AND RE-INSTALL COVER SLAB SO EXST PLUG IS IN LOCATION SHOWN (TYP 2 PL)
NEW 3" CORE DRILL (SEE NOTE 6), FOR EXST LEAK DETECTION PIT SEE H-2-64325 (TYP 2 PL)
18 BAR
SCALE: NONE
ANNULUS PUMP-OUT PIT COVER SLAB PLAN
1 REQD TK-101 SCALE: 1/2"=1'-0"
1 REQD TK-102
OUTSIDE WALL ANNULUS PUMP-OUT PIT 241-AY-01F AND 241-AY-02F
EXST PLUG
ROTATE & RE-INSTALL COVER SLAB SO EXST PLUG IS IN LOCATION SHOWN
NEW 3" CORE DRILL (SEE NOTE 6) FOR EXST ANNULUS PUMP-OUT PIT SEE H-2-64329
PUMP PIT COVER SLAB PLAN
1 REQD TK-101 SCALE: 3/8"=1'-0"
1 REQD TK-102
OUTSIDE WALL PUMP PIT 241-AY-01A 241-AY-02A
SLUICING PIT COVER SLAB PLAN
3 REQD TK-101 SCALE: 1/2"=1'-0"
241-AY-01B
241-AY-01C
241-AY-01E
3 REQD TK-102
241-AY-02B
241-AY-02C
241-AY-02E
NEW 3" CORE DRILL (SEE NOTE 6), FOR EXST SLUICING PIT SEE H-2-64314
EXST PLUG
NEW 2" CORE DRILL
IMPACT LEVEL I
U. S. Department of Energy
Richland Operations Office
Rockwell Hanford Operations
Richland, Washington 98352
FLOOR DRAIN SEAL MODIFICATION
AS SHOWN
241-AY
H-2-95398
NONE

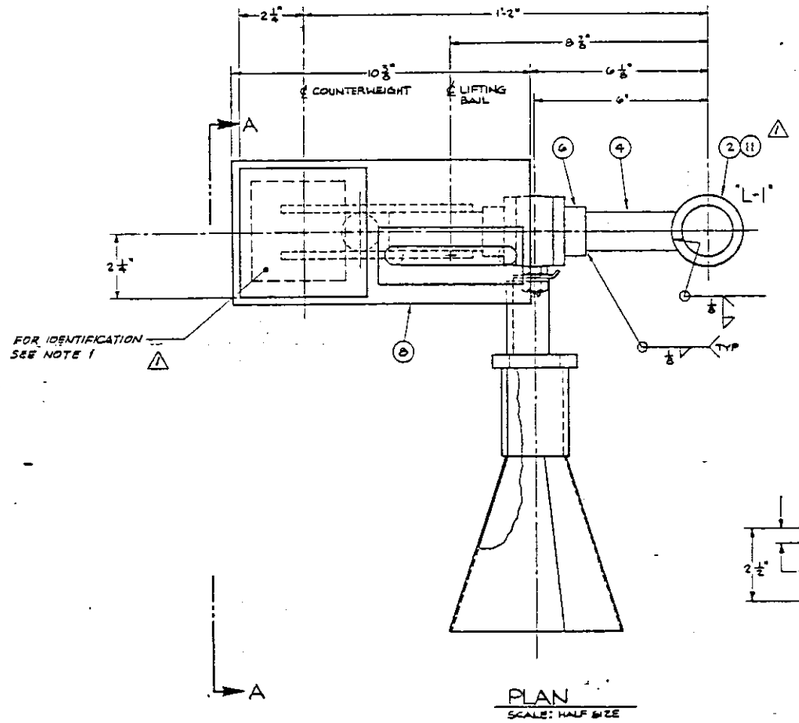

PLAN
SCALE: HALF SIZE

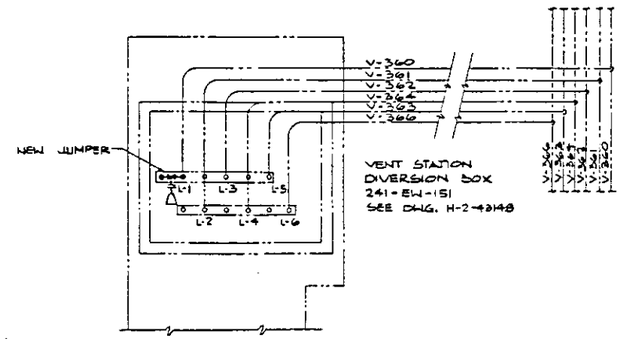

KEY PLAN
SCALE: NONE

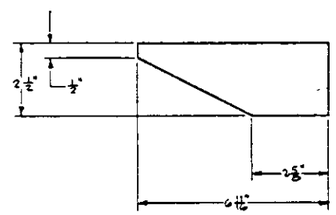

7 BAR

QTY -1	FIND NO.	PART NO.	NAME/DESCRIPTION	MATERIAL/SPECIFICATION	IMP LVL
X	1	-1	ASSEMBLY		II
1	2	H-2-32410-2	CONN VERT 1"		II
1	3	H-2-90161-3	LIFTING BAIL, RIGID		II
AR	4	-2	PIPE	1" SCHED 40S, SMLS ASTM A-312 GR TP 304 L SST	II
1	5	-3	ELBOW	1"-90° S.R., SCHED 40 S, B.W. ASTM A-403 WP-304L SST	II
1	6	-4	BALL VALVE	1" - WORCHESTER MODEL NO. 1 466TSW	II
2	7	-5	BAR	2 1/2" x 1/4" x 6 11/16" LG, ASTM A-240 304L SST	III
1	8	-6	BAR	5" x 3/8" x 10 3/8" LG, ASTM A-36 C.S.	III
1	9	-7	BAR	4 1/2" SQ x 4 5/8" LG, ASTM A-36 C.S. (WT 26.6#)	III
1	10	H-2-90171-3	ASSEMBLY, FUNNEL	SEE NOTE NO. 3.	III
1	11	H-2-3997-1	GASKET		II

GENERAL NOTES:

1. FABRICATION AND TESTING SHALL BE IN ACCORDANCE WITH HS-BS-0084. HYDROSTATIC TEST PRESSURE SHALL BE 350 PSI. IDENTIFICATION CHARACTERS SHALL BE 1/2" HIGH MINIMUM.
2. ESTIMATED PIPE JUMPER WEIGHT IS 61 LBS.
3. DISREGARD WORCHESTER BALL VALVE SIZES NOTED ON DWG. NO. H-2-90171-3.

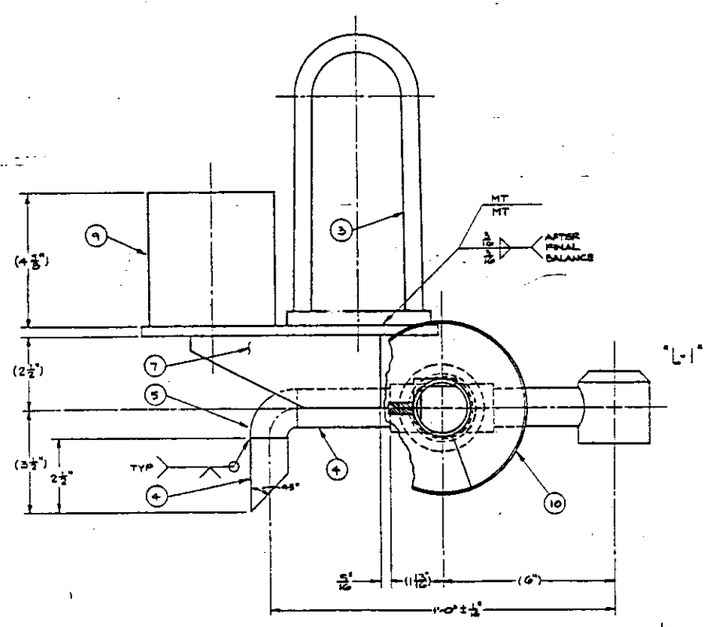

ELEVATION
1 ASSEMBLY
SCALE: HALF SIZE

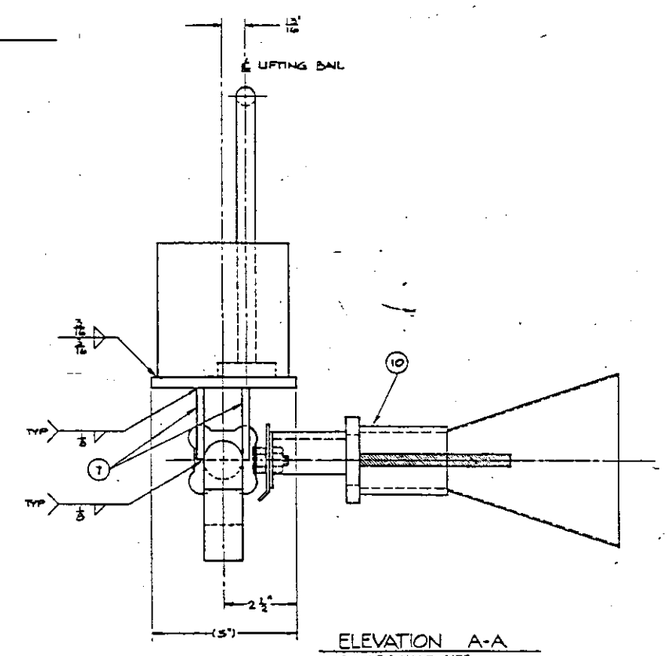

ELEVATION A-A
SCALE: HALF SIZE

THIS DWG. SUPERSEDES DWG. NO. H-2-68516

H-2-43148	JUMPER ARRANGEMENT
DWG. NO.	DRAWING TITLE
TRACEABILITY DRAWING LIST	

H-2-2338 SHT. 43	DIVERSION BOX 241-EW-151 NOZ. INFORMATION
REFERENCE DRAWINGS	
NEXT USED ON H-2-43148	

				INCORP EO No. 45453	1
REVISION APPROVALS				DESCRIPTION	
REVISIONS					
COMMENT PRT. ISSUE NO. 2	4-2-87	CHECK PRT. ISSUE NO. 2	4-2-87		1
DRAWING STATUS ESR 8502					

DRAWING APPROVALS	DATE
	4/14/87
	4/4/87
TOM SALZANO	3/87
	4/4/87
	4/2/87
	3/87

U. S. Department of Energy
Richland Operations Office
Rockwell Hanford Operations
Richland, Washington 99352

BLEEDER JUMPER DETAILS
VENT STATION DIVERSION BOX
241-EW-151

AS NOTED	241-EW	8405
H-2-99099	1	1