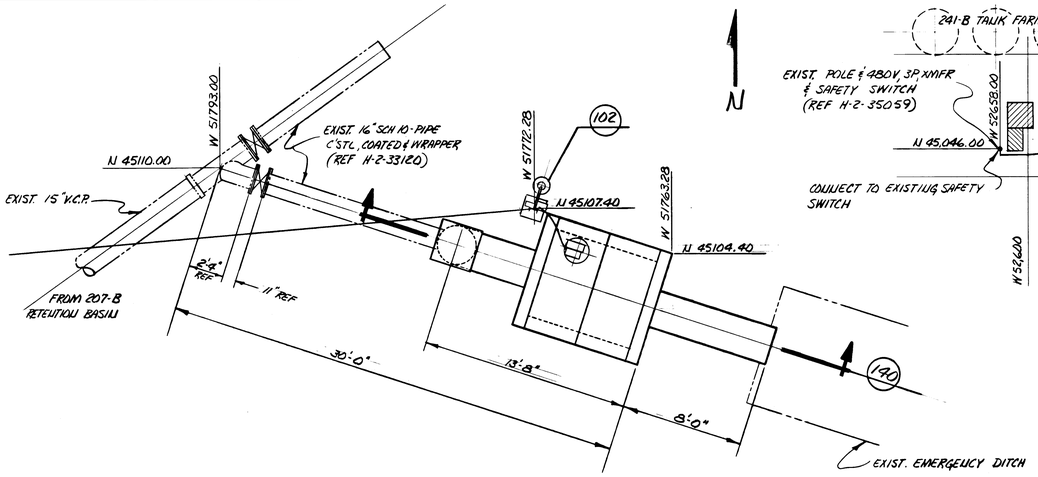

100 PARTIAL PLAN

SCALE: 1/4" = 1'-0"

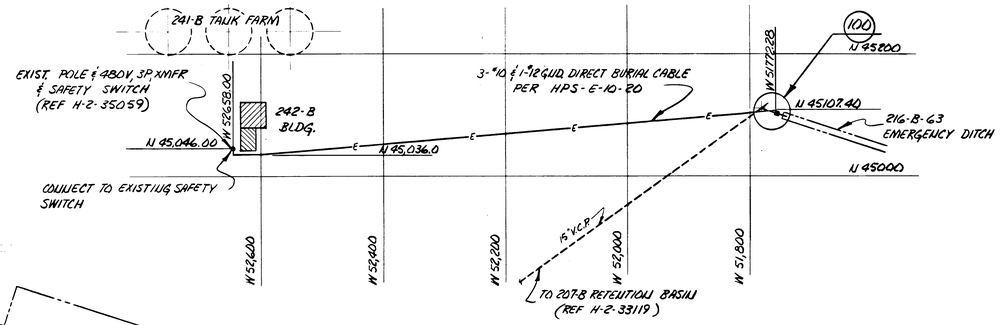

PLOT PLAN

SCALE: 1" = 100'-0"

GENERAL NOTES:

FABRICATION & INSTALLATION SHALL COMPLY WITH THE REQUIREMENTS OF ARHCO QUALITY ASSURANCE LEVEL III & THE FOLLOWING:

1. WELDING

☒ HPS-230-W	WELDING FABRICATION REQUIREMENTS			☐ HPS-230-W	OTHER REQ'TS.
WELD PROCESS	☐ GTAW	☐ GMAW	☐ SMAW	☐ SELLER'S OPTION	
PROCEDURE SPEC.	☐ ASME SEC. IX	☐ AWS-D1.1	☐ HPS-200-W		
PERFORMANCE CERT.	☐ ASME SEC. IX	☐ AWS-D1.1	☐ HPS-210-W		
MATERIAL	☐ ASME SEC. II	☐ ANSI B31.1.0	☐ HPS-230-W		
VISUAL (VT)	☐ ASME SEC. V	☒ HPS-220-W	☐ HPS-230-W	☐ HPS-200-W	
PENETRANT (PT)	☐ ASME SEC. III	☐ ASME SEC. V	☐ ASME SEC. VIII		
MAGNETIC PART. (MT)	☐ ASME SEC. III	☐ ASME SEC. V	☐ ASME SEC. VIII		
ULTRASONIC (UT)	☐ ASME SEC. V	☐ ASME SEC. VIII	☐ AWS-D1.1		
RADIOGRAPHIC (RT)	☐ ASME SEC. III	☐ ASME SEC. V	☐ ASME SEC. VIII		

84-3000-560 (7-73)

2. CONCRETE SHALL BE IN ACCORDANCE WITH HWS-4798, FINISH US & HWS-4799 COMPRESSIVE STRENGTH OF 3000 PSI.
3. EXCAVATION & BACKFILL SHALL BE IN ACCORDANCE WITH HPS-S50-AC.
4. INSTALLATION SHALL COMPLY WITH THE REQUIREMENTS OF THE 1971 EDITION OF THE NATIONAL ELECTRICAL CODE. INSTALL GROUNDING PER HPS-E-3-2 & HPS-E-12-1.
5. CONDUIT SHALL BE RIGID GALVANIZED STEEL. INSTALL PER HPS-E-10-20.
6. PAINT CHANNEL POWER POST WITH TWO PRIMER COATS & ONE FINISH COAT OF BLACK ENAMEL PER MFGR'S SPEC'S.
7. FLOWMETER, FLOAT ACTUATED COMPLETE WITH 270° DIAL TYPE INDICATOR 8-DIGIT TOTALIZER, 12" TYPE 302 S.S. FLOAT, 2" MOUNTING FLANGE WITH 2" PIPE STAND, TO MEASURE FLOW THROUGH 18" DEEP 60° V-NOTCH WIER, FLOW 0-ONE MILLION GALLONS PER DAY, MAXIMUM HEAD 18". EACH UNIT OF TOTALIZER TO REPRESENT 100 GALLONS OF FLOW. FISCHER-PORTER MODEL 10F1272 OR APPROVED EQUAL.

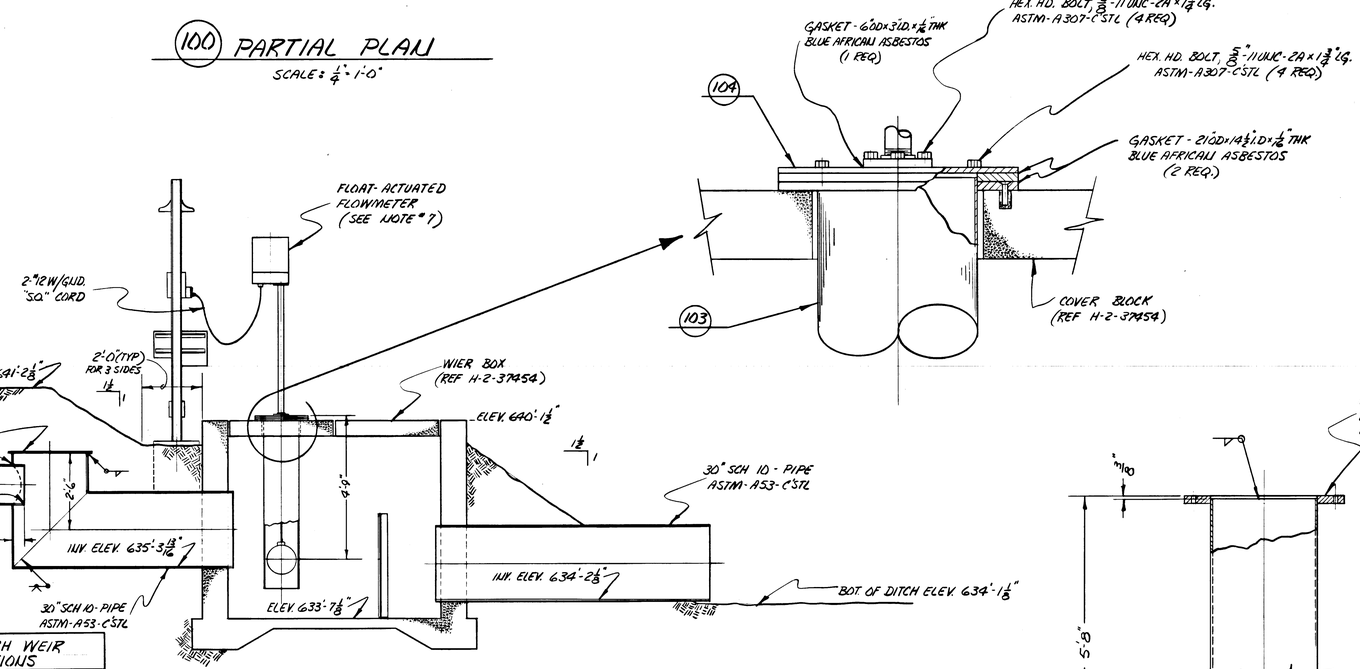

140 SECTION

SCALE: 1/2" = 1'-0"

60° V-NOTCH WEIR CALCULATIONS		
DEPTH OF FLOW (INCHS)	GPM	GPD x 10⁶
1	15	.022
2	43	.063
3	80	.115
4	123	.177
5	172	.248
6	226	.325
7	285	.410
8	349	.503
9	416	.599
10	487	.701
11	562	.809
12	641	.923
13	722	1.040
14	808	1.163
15	895	1.288
16	986	1.420
17	1080	1.555
18	1177	1.694

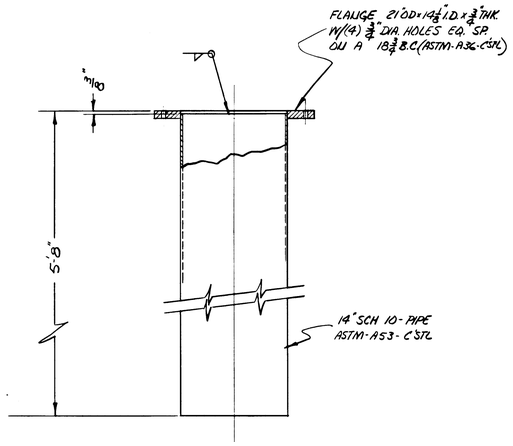

103 FLOAT WELL

SCALE: 3/16" = 1'

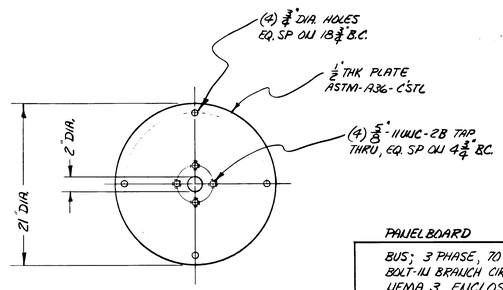

104 ADAPTOR FLANGE

SCALE: 1 1/2" = 1'-0"

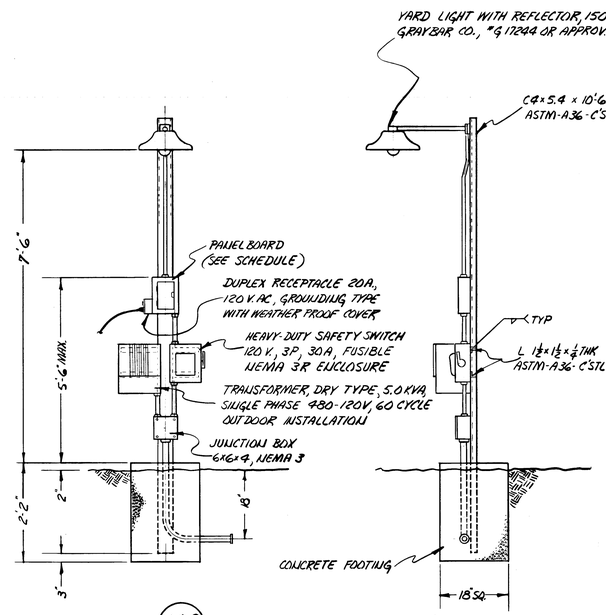

102 POWER POST

NO SCALE

PANEL BOARD

BUS; 3 PHASE, 70 AMP, 3 Ø; MAIN LUGS LOCATED AT BOTTOM; BOLT-IN BRANCH CIRCUIT BREAKERS 30 A; SURFACE MOUNT NEMA 3, ENCLOSURE.

CKT NO.	# OUT-LETS	LOCATION	CIRCUIT BREAKER		LOCATION	# OUT-LETS	CKT NO.
1	1	DUPLEX RECEPTACLE AT PANEL BOX	30A	30A	YARD LIGHT AT POST		2
3		SPARE	30A	30A	SPARE		4

DWG. NO.	REV NO.	DRAWING TITLE OR INDEX NO.

REFERENCE DRAWINGS

NEXT USED ON

MICRO F'M'D	BY-DATE	FOR	BY-DATE	FOR	REV BY DATE	DESCRIPTION	REV NO.
	APPD FOR CONFORM WITH DESIGN CRIT		APPD				

REVISIONS

COMMENT PRT ISSUE NO.	DATE	CHECK PRT ISSUE NO.	DATE	LAST REV.
		DRAWING STATUS S102		0

TRAC-1747, Rev. 0, 06/11/2019
Approved for Public Release;
Further Dissemination Unlimited

APPD. FOR CONFORMANCE WITH DESIGN CRITERIA	DATE
BY	
FOR	
APPD	
APPD	12-20-72
ENGR	2-3-73
DSGN	2-3-73
DFTG. MGR.	12/20/72
CHECKED	2-3-73
DRAWN	12-19-72
SCALE	NOTED
CLASSIFICATION	NONE

U. S. ATOMIC ENERGY COMMISSION
RICHLAND OPERATIONS OFFICE
Atlantic Richfield Hanford Company
Richland, Washington 99352

216-B-63 DITCH
WEIR BOX INSTALLATION
PLOT PLAN, SECTIONS, DETAIL

BLDG. NO. 216-B | INDEX NO. 0400, 7303 | DWG NO. H-2-37455 | SHEET NO. ~ | SHEETS ~