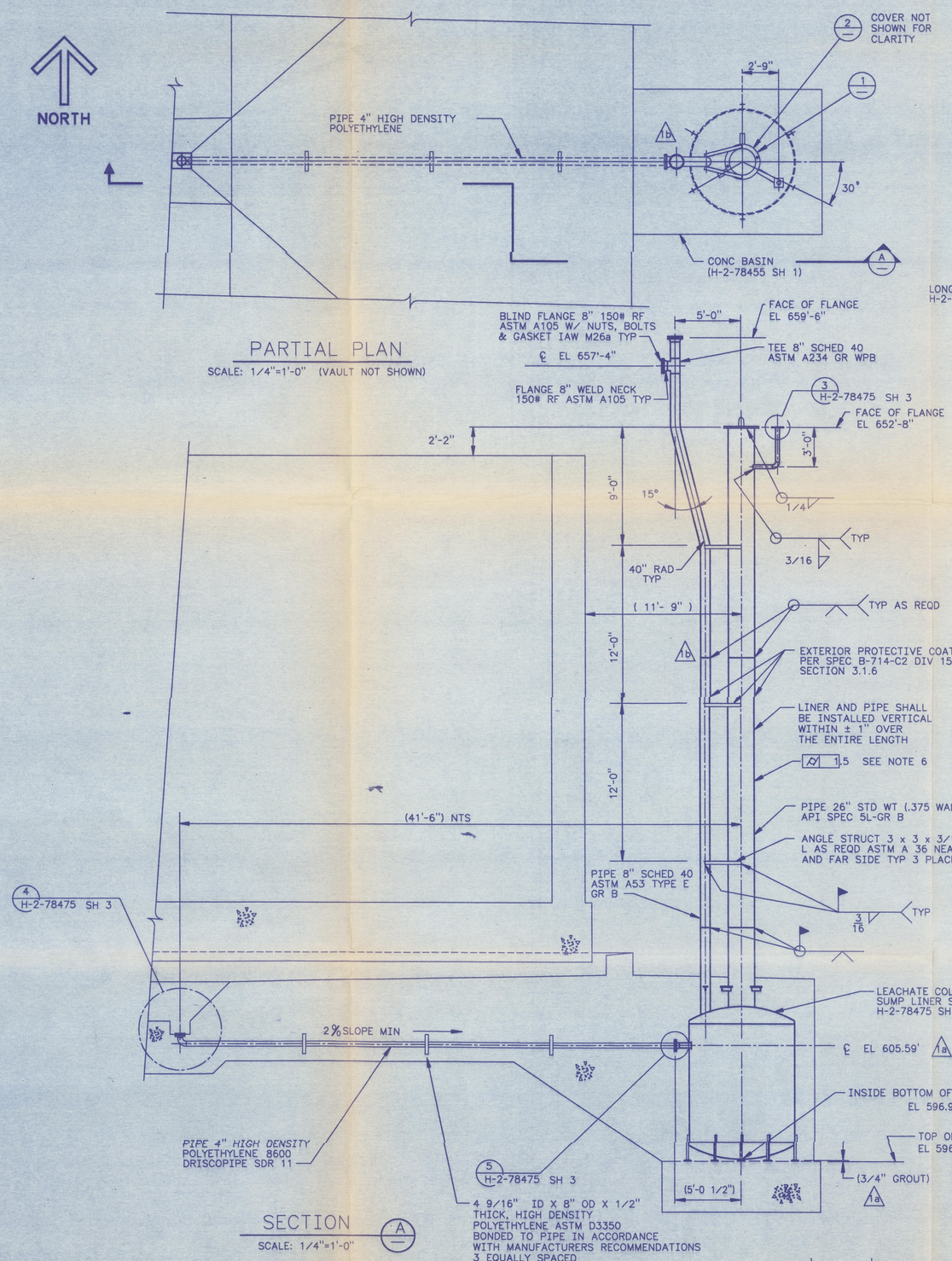

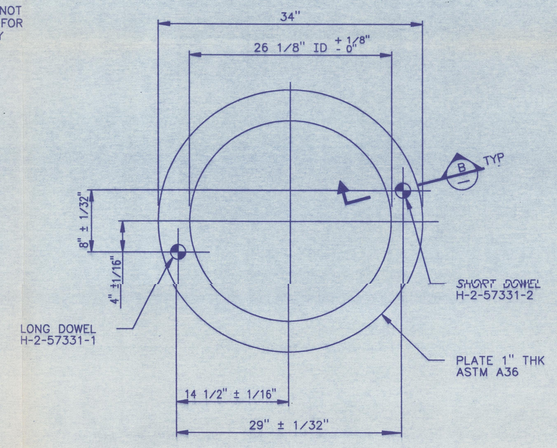

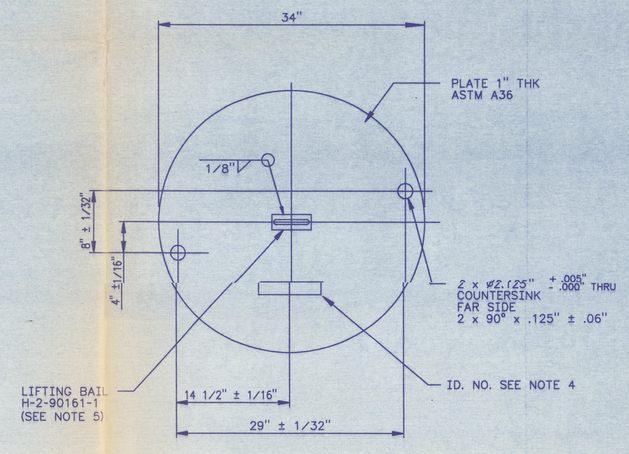

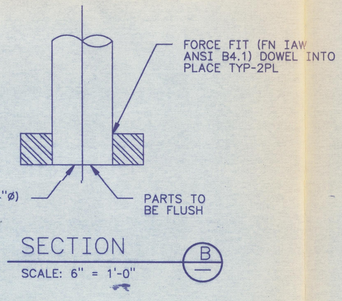

GENERAL NOTES:

1. ALL PIPING, WELDING, PAINTING, FABRICATION, MATERIALS, CLEANING, AND TESTING SHALL BE IN ACCORDANCE WITH CONSTRUCTION SPEC B-714-C2.
2. BREAK ALL SHARP EDGES AND CORNERS TO A A MINIMUM .010" RADIUS.
3. TOLERANCES (UOS)
   FRACTIONAL = ± 1/8"
   DECIMAL = ± .05
   ANGULAR = ± 1 °
4. IDENTIFY ASSEMBLY IAW HS-BS-0015 TYPE 8, BLACK ON YELLOW, WITH DRAWING AND PART No. IN LOCATION SHOWN, USING 1" HIGH CHARACTERS.
5. WELDING AND EXAMINE IN ACCORDANCE WITH AWS D1.1 SECTION 8.
6. GEOMETRIC TOLERANCE SHOWN, SHALL BE IAW ANSI 14.5M-1982.

JAN 1991 RECEIVED EDMC

DOES NOT CONTAIN CLASSIFIED OR UNCLASSIFIED CONTROLLED NUCLEAR INFORMATION

REVIEWING OFFICIAL/ADC: [illegible]

DATE: 11-28-90

CHARLES R. ZOOK — REGISTERED PROFESSIONAL ENGINEER

NUMBER	TITLE
HS-BS-0015	IDENTIFICATION METHODS
H-2-90161	STANDARD RIGID LIFTING BAILS
H-2-57331	MECHANICAL EQUIP DETAILS SHORT & LONG DOWELS
H-2-78443	DRAWING LIST

DRAWING TRACEABILITY LIST

NUMBER	TITLE	REFERENCES
		NEXT USED ON

MF	REV NO.	DESCRIPTION	REV BY DATE	KEH APPROVALS	APVD FOR IMPL/INC FOR DATE
RS	1	c) B-714-32 ZN C5 b) B-714-23 ZN A,E6 a) B-714-22 ZN A5 C5 THRU B-714-61 GEN REV; INCORP ALL ECNs	9-17-90 GD	DKE 12-7-90 [illegible] 12-11-90	JDR 12-5-90 DMS 12-5-90 JDR 12/5/90 WHC

REVISIONS

CAD FILE B078475A CAD CODE 2J:IBM:ACD2:10.0:NN

DRAWN Wm ZICKUHR	DATE	
CHECKED C KENOYER	10-29-89	
SAFETY J ARCHIBOLD	11-1-89	
ENVIR RG HOLLENBECK	11-1-89	
QE L GADDIS/T HAYS	11-1-89	
LEAD ENG APVD CR ZOOK	10-31-89	

APPROVED FOR IMPLEMENTATION BY SR BRIGGS FOR WHS DATE 11-3-89

IMPACT LEVEL 2 EDT 151655

M U.S. DEPARTMENT OF ENERGY
RICHLAND OPERATIONS OFFICE
KAISER ENGINEERS HANFORD COMPANY

PIPING
LEACHATE COLL SUMP LINER
PLAN, SECT, AND DET

PROJECT B-714, GROUT VAULT PAIR 218-E-16-104 & 105

SIZE	BLDG NO.	INDEX NO.	DWG NO.	REV NO.
F	218-E-16	2500	H-2-78475	1

SCALE SHOWN JOB NO. ER8159 SHEET 1 OF 3

KEHCAD 1=12

ON12377

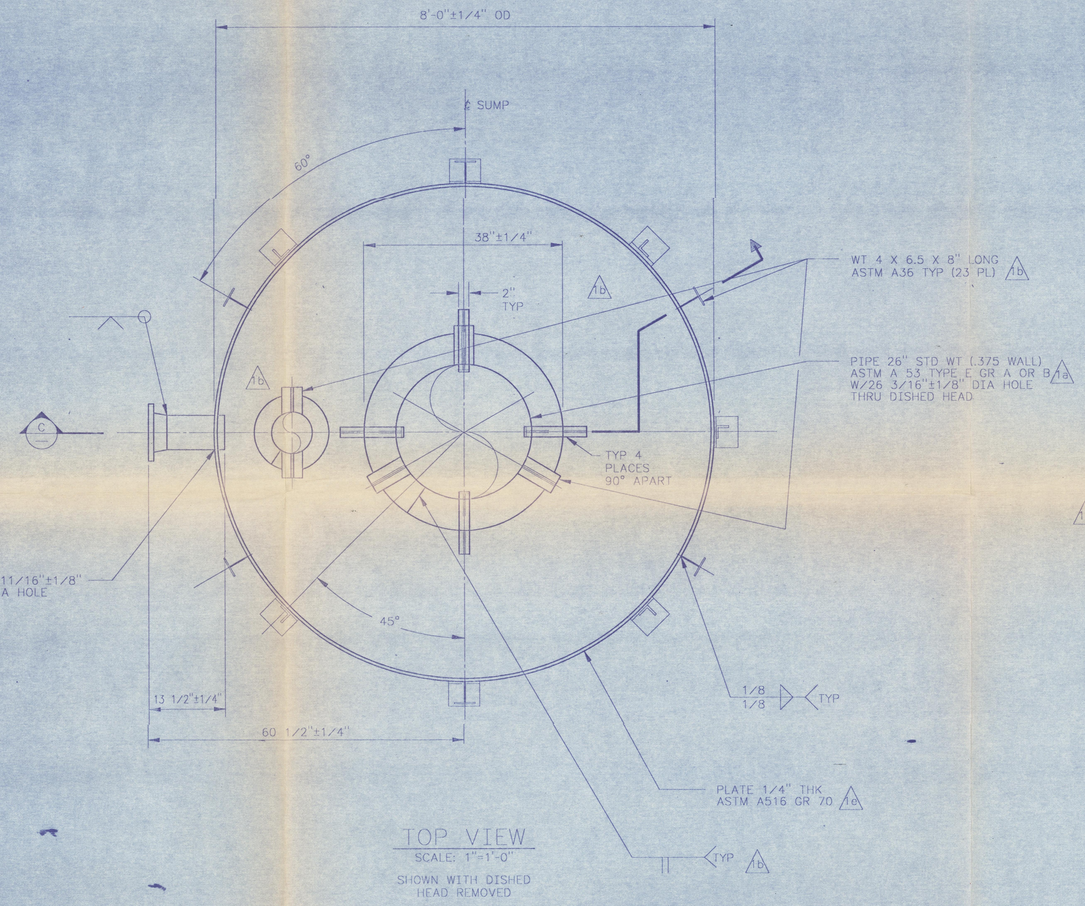

TOP VIEW
SCALE: 1"=1'-0"
SHOWN WITH DISHED HEAD REMOVED

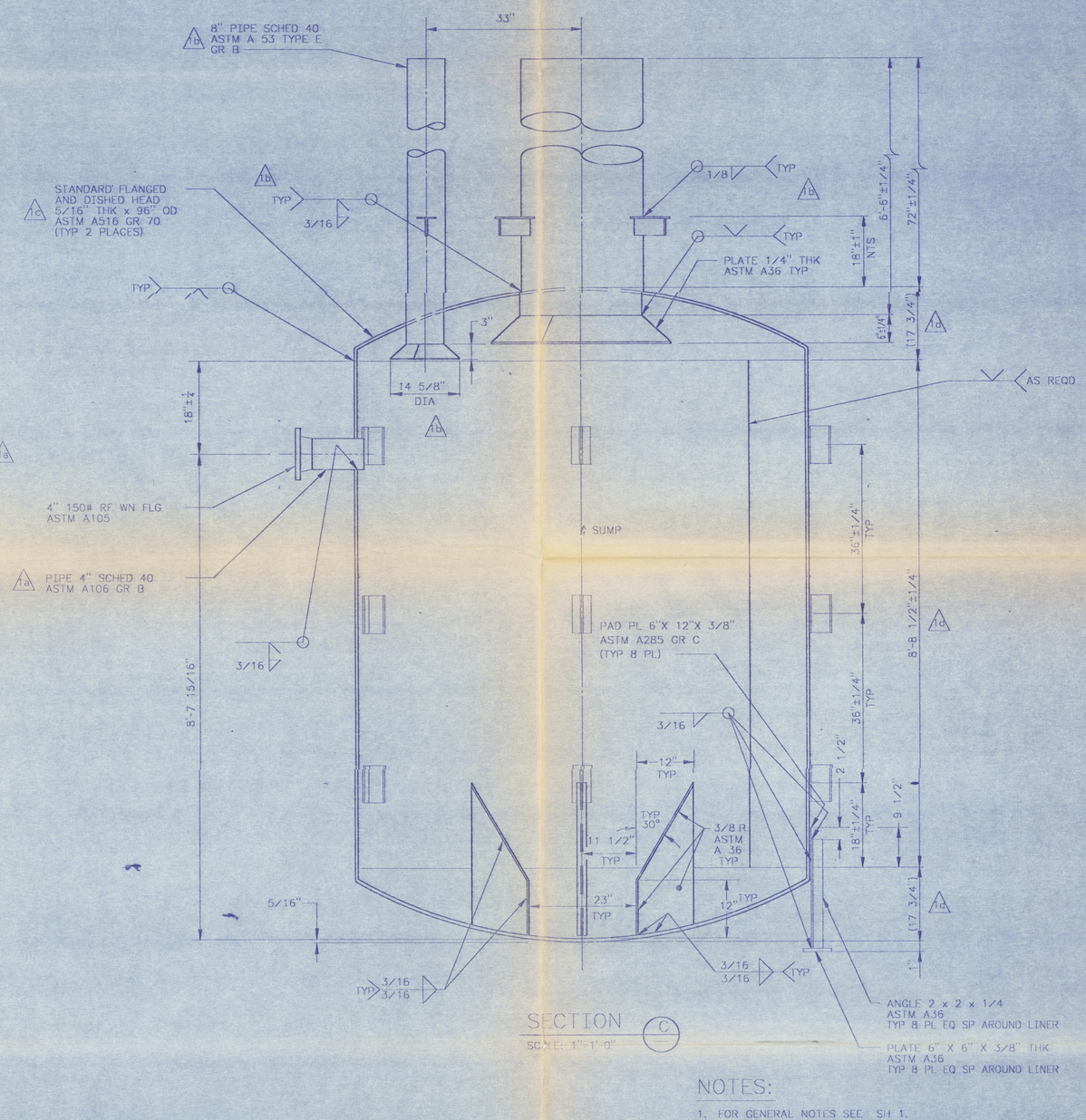

SECTION C
SCALE: 1"=1'-0"

NOTES:

1. FOR GENERAL NOTES SEE SH 1.
2. APPROXIMATE DRY WEIGHT = 4300 LB

CHARLES R. ZOOK
STATE OF WASHINGTON
PROFESSIONAL ENGINEER

DOES NOT CONTAIN CLASSIFIED OR UNCLASSIFIED CONTROLLED NUCLEAR INFORMATION
REVIEWING OFFICIAL/ADC: [illegible]
DATE: 11-28-90

REV NO.	DESCRIPTION	REV BY / DATE	KEY APPROVALS	APVD FOR IMPLMTNG FOR DATE
M				
RS 1	e) B-714-32 ZN C6 d) B-714-28 ZN C,D1 E1,4 c) B-714-24 ZN E4 E2,3 F1 b) B-714-23 ZN C6 D,E5,6,7 a) B-714-22 ZN D4,5 THRU B-714-61 GEN REV: INCORP ALL ECNs	9-17-90 GD	DRL 12-4-90 RH 12-11-90 TDH 12-5-90 BRS 12-7-90 JE 12/10/90	WRC

REVISIONS

CAD FILE B078475B CAD CODE 2J:TBM:ACD2:10.0:NN

NUMBER	TITLE	REFERENCES

DRAWING TRACEABILITY LIST

H-2-78143 DRAWING LIST

NUMBER	TITLE

NEXT USED ON

DRAWN Wm ZICKUHR DATE
CHECKED C KENOYER 10-29-89
SAFETY J ARCHIBOLD 11-1-89
ENVIR RG HOLLENBECK 11-1-89
QE L GADDIS/T HAYS 11-1-89
LEAD ENG APVD CR ZOOK 10-31-89

APPROVED FOR IMPLEMENTATION
BY SR BRIGGS
FOR WHS DATE 11-3-89

IMPACT LEVEL 2 EDT 151655

M U.S. DEPARTMENT OF ENERGY
RICHLAND OPERATIONS OFFICE
KAISER ENGINEERS HANFORD COMPANY

PIPING
LEACHATE COLL SUMP LINER
TOP VIEW AND SECTION

PROJECT B-714, GROUT VAULT PAIR 218-E-16-104 & 105

SYM	BLDG NO.	INDEX NO.	DWG NO.	REV NO.
F	218-E-16	2500	H-2-78475	1

SCALE SHOWN JOB NO. ER8159 SHEET 2 OF 3

KEHCAD 1-1

012477
8 of 3

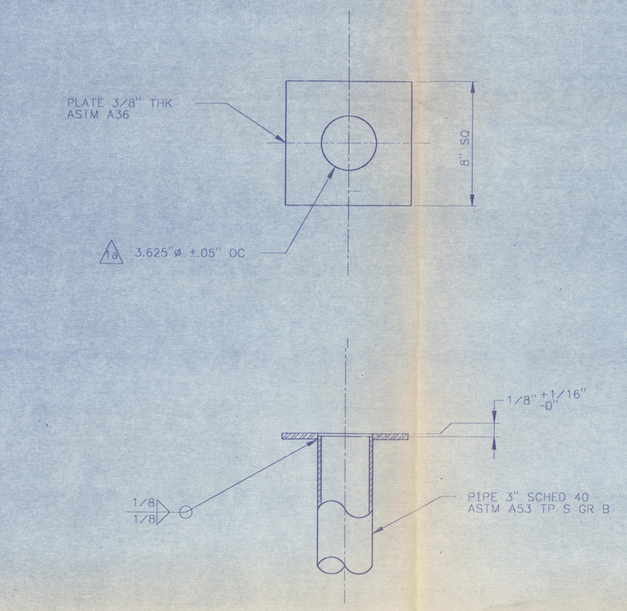

DETAIL 3
SCALE: 3"=1'-0"
H-2-78475 SH 1

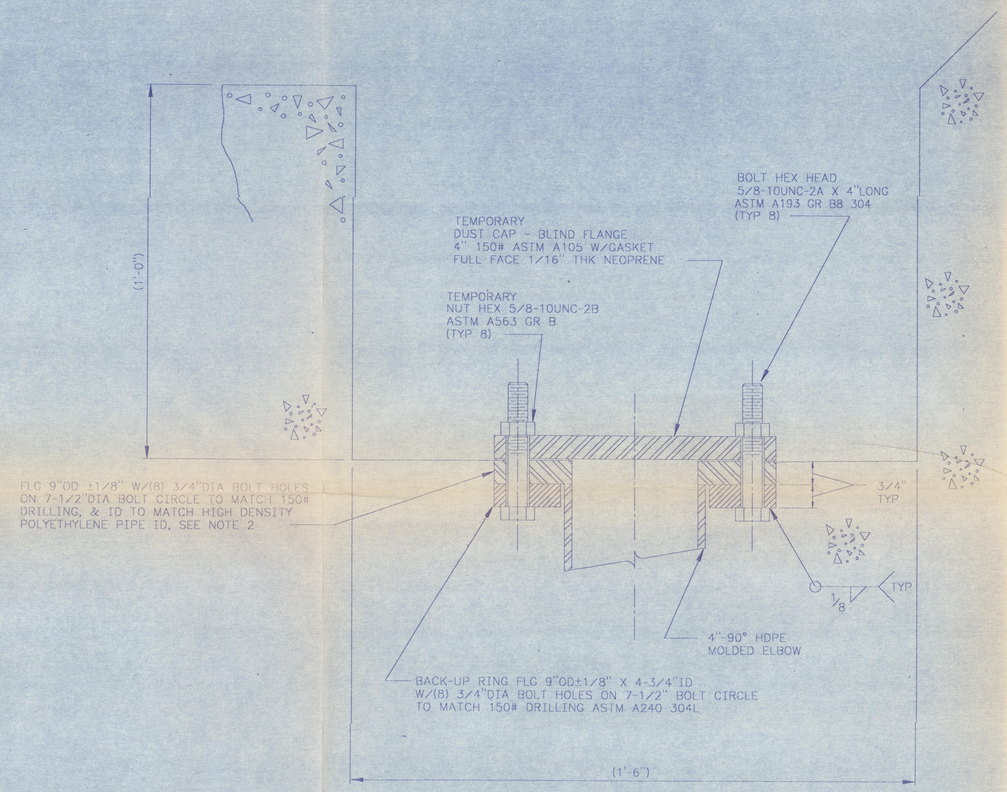

DETAIL 4
SCALE: 6"= 1'-0"
H-2-78475 SH 1

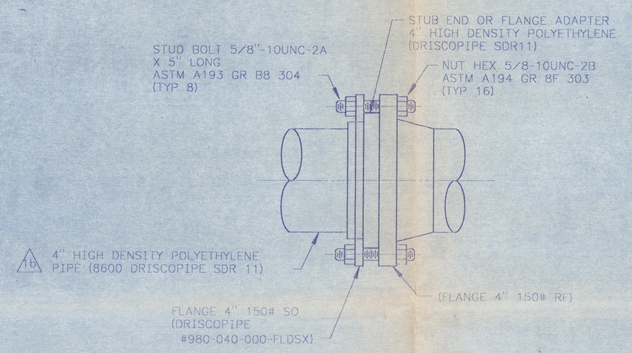

DETAIL 5
SCALE: 3"= 1'-0"
H-2-78475 SH 1

NOTES:

1. FOR GENERAL NOTES, SEE SH 1.
2. INSTALL HIGH DENSITY POLYETHYLENE FLG ASTM D3350 TO PIPE IN ACCORDANCE WITH MANUFACTURE RECOMMENDATIONS.
3. INSTALL BLIND FLANGE DUST COVER DURING CONCRETE POUR. REMOVE AND REPLACE WITH DRAINAGE PIPE.

CHARLES A. ZOOK
PROFESSIONAL ENGINEER

DOES NOT CONTAIN CLASSIFIED OR UNCLASSIFIED CONTROLLED NUCLEAR INFORMATION
REVIEWING OFFICIAL/ADC: [signature]
DATE: 11-28-90

NUMBER	TITLE
H-2-78443	DRAWING LIST

DRAWING TRACEABILITY LIST — REFERENCES: NEXT USED ON

REV NO.	DESCRIPTION	REV BY	DATE	KEH APPROVALS	APVD FOR IMPL/ENG	APVD FOR DATE
1	b) B-714-32 ZN B8 a) B-714-22 ZN E8 THRU B-714-61 GEN REV; INCORP ALL ECNs	GD	9-17-90	DRL 12-4-90 GAL 12-7-90 TDD 12-5-90 BWG 12-5-90	12/13/90	LHC

REVISIONS
CAD FILE B078475C — CAD CODE 2J:IBM:AC02:10.0:NN 1=1

DRAWN	Wm. ZICKUHR	DATE
CHECKED	C KENOYER 10-29-89	
SAFETY	J ARCHIBOLD 11-1-89	
CNVER	RG HOLLENBECK 11-1-89	
SF	L GADDIS/T HAYS 11-1-89	
LEAD ENG APVD	CR ZOOK 10-31-89	
COORDINATOR IMPLEMENTATION	SR BRIGGS	
FOR	WHS	DATE 11-3-89

IMPACT LEVEL 2 — EDT 151655

M U.S. DEPARTMENT OF ENERGY
RICHLAND OPERATIONS OFFICE
KAISER ENGINEERS HANFORD COMPANY

PIPING
LEACHATE COLL SUMP LINER
DETAILS

PROJECT: B-714, GROUT VAULT PAIR 218-E 16-104 & 105

SIZE	BLDG NO.	INDEX NO.	DWG NO.	REV NO.
F	218-E-16	2500	H-2-78475	1

SCALE: SHOWN — JOB NO. ER8159 — SHEET 3 OF 3

KEHCAD

013477
3473