STATE OF WASHINGTON
DEPARTMENT OF ECOLOGY
3100 Port of Benton Blvd • Richland, WA 99354 • (509) 372-7950
711 for Washington Relay Service • Persons with a speech disability can call (877) 833-6341

COVERSHEET
Proposed Permit Modification

For Letter 21-NWP-030
Dated February 18, 2021

Re: Proposed Class 3 Permit Modification 8C.2020.11D to the *Hanford Facility Resource Conservation and Recovery Act Permit, Dangerous Waste Portion, Revision 8C, for the Treatment, Storage, and Disposal of Dangerous Waste* (Site-wide Permit), Part III, Operating Unit Group 4, 242-A Evaporator, WA7890008967

Due to the Governor's "Safe Start" Order, the Department of Ecology (Ecology) cannot distribute hard copy letters or enclosures, including DVDs, at this time. All letters are being sent electronically with embedded links to the enclosures.

The enclosures are on the Ecology website at https://ecology.wa.gov/Waste-Toxics/Nuclear-waste/Public-comment-periods.

After the Order is lifted, Ecology will send all hard copy letters and associated hard copy enclosures or DVDs as appropriate.

STATE OF WASHINGTON
DEPARTMENT OF ECOLOGY
3100 Port of Benton Blvd • Richland, WA 99354 • (509) 372-7950
711 for Washington Relay Service • Persons with a speech disability can call (877) 833-6341

February 18, 2021 21-NWP-030

Brian T. Vance, Manager
Office of River Protection
United States Department of Energy
PO Box 450, MSIN: H6-60
Richland, Washington 99352

John R. Eschenberg, President
Washington River Protection Solutions
PO Box 850, MSIN: H3-21
Richland, Washington 99352

Re: Proposed Class 3 Permit Modification 8C.2020.11D to the *Hanford Facility Resource Conservation and Recovery Act Permit, Dangerous Waste Portion, Revision 8C, for the Treatment, Storage, and Disposal of Dangerous Waste* (Site-wide Permit), Part III, Operating Unit Group 4, 242-A Evaporator, WA7890008967

References: See page 3

Dear Brian T. Vance and John R. Eschenberg:

This letter transmits the Department of Ecology's (Ecology) proposed Class 3 permit modification 8C.2020.11D to Part III, Operating Unit Group 4, 242-A Evaporator, of the *Hanford Facility Resource Conservation and Recovery Act Permit, Dangerous Waste Portion, Revision 8C, for the Treatment, Storage and Disposal of Dangerous Waste*.

The permittees are the United States Department of Energy (USDOE) as owner/operator and Washington River Protection Solutions as co-operator.

USDOE proposed a Class 2 Permit Modification to the 242-A Evaporator on July 8, 2020 (Reference 1). USDOE held a public comment period from July 10 through September 8, 2020. A virtual public meeting was held on August 18, 2020. Ecology received 32 public comments from 12 members of the public or stakeholder groups during the public comment period.

Ecology performed a completeness determination and a technical review following the 60-day public comment period. During the completeness determination and technical review, Ecology assessed that the proposed leak detection systems for the PC-5000 and 3"-WTP-002-M17 transfer lines are not adequate to detect a leak within twenty-four hours, or in as timely as manner as is possible, as required by Washington Administrative Code (WAC) 173-303-640(4)(c)(iv). Many of the public comments received during the 60-day comment period focused on concerns with the current leak detection system. Ecology reclassified the Class 2 Permit Modification due to significant concern from members of the public, as well as concerns Ecology has on the leak detection system (Reference 2).

After performing a technical review, Ecology requested supplemental information from the Permittees and we have received that information, closing out the deficiencies we identified. The supplemental information is included in this permit modification. In addition, Ecology is proposing the following modifications to the draft submittal:

Ecology replaced permit condition III.4.C.1 with new, proposed permit conditions requiring upgrades to the leak detection systems for the PC-5000 and 3”-WTP-002-M17 transfer lines.

Additionally, Ecology did not accept USDOE’s proposal to reduce the frequency of backup visual inspections of the PC-5000 and 3”-WTP-002-M17 transfer lines from once-per-shift to once-per-day. All other revisions proposed by the Permittees are included in Ecology’s proposed permit modification.

Ecology issued a Response to Comments document from the public comment period. Ecology’s Response to Comments document is on the enclosed DVD (Ecology Publication 21-05-007) and on Ecology’s publication website at https://apps.ecology.wa.gov/publications/summarypages/2105007.html.

WAC 173-303-840(3)(d) requires at least a 45-day public comment period for the draft permit modification. The public comment period is scheduled February 22 through April 8, 2021. Since Ecology reclassified USDOE’s Class 2 permit modification to a Class 3 permit modification, this comment period initiates the second portion of the permit modification. A public hearing is not scheduled, but Ecology will consider holding one if there is enough interest.

This proposed Class 3 Permit Modification allows a tie-in from the combined 242-A Evaporator and Waste Treatment Plant process condensate line PC-5000/3”-WTP-002-M17 to the new Liquid Effluent Retention Facility (LERF) Basin 41. This proposed modification also requires upgrades to the leak detection system for these lines.

This permit modification only addresses the connection of the 242-A Evaporator process condensate lines to LERF Basin 41. The construction and operation of LERF Basin 41 is addressed in a different permit modification.

The proposed permit modification is on the enclosed DVD and on Ecology’s website at https://ecology.wa.gov/Waste-Toxics/Nuclear-waste/Public-comment-periods. A DVD is also at the Hanford Public Information Repositories in Richland, Spokane, and Seattle, Washington, as well as Portland, Oregon. A hard copy is on file at the locations listed below:

Department of Ecology Nuclear Waste Program 3100 Port of Benton Boulevard Richland, Washington 99354	United States Department of Energy Administrative Record 2440 Stevens Center Place Richland, Washington 99354

Individuals can request copies of the DVD and hard copies by contacting Ecology's Resource Center at (509) 372-7950.

If there are any questions, please contact Andrew Pomiak, 242-A Evaporator Permit Lead, at andrew.pomiak@ecy.wa.gov or (509) 372-7942, or Jeff Lyon, 242-A Evaporator Project Manager, at jeff.lyon@ecy.wa.gov or (509) 372-7914.

Sincerely,

Price, John (ECY) Digitally signed by Price, John (ECY) Date: 2021.02.16 12:19:30 -08'00'

Stephanie Schleif
Deputy Program Manager
Nuclear Waste Program

ap/aa
Enclosure

cc: See page 4

References:

1. Letter 20-ECD-032, dated July 8, 2020, "Submittal of Class 2 Permit Modification to the Hanford Facility Resource Conservation and Recovery Act Permit, Dangerous Waste Portion for the 242-A Evaporator [T-2-6]"
2. Letter 20-NWP-174, dated November 5, 2020, "Reclassification of Proposed Class 2 Permit Modification C2-242-A-2020-02 to the *Hanford Facility Resource Conservation and Recovery Act Permit, Dangerous Waste Portion, Revision 8C, for the Treatment, Storage, and Disposal of Dangerous Waste,* Part III, Operating Unit Group 4, 242-A Evaporator WA7890008967

cc electronic w/o enc:

Dave Bartus, EPA
David Einan, EPA
Kaylin Burnett, USDOE-ORP
Lori Huffman, USDOE-ORP
Christopher Kemp, USDOE-ORP
Glyn Trenchard, USDOE-ORP
Duane Carter, USDOE-RL
Mostafa Kamal, USDOE-RL
Tony McKarns, USDOE-RL
Brian Stickney, USDOE-RL
Sheila Davis, BNI
Brittany Sparks, BNI
Robert Bullock, CPCCo
Marc Jewett, CPCCo
Curt Clement, HMIS
Jon Perry, HMIS
Darci Teel, HMIS
Michael Stephenson, PNNL
Eric Van Mason, WRPS
ERWM Staff, YN
Debra Alexander, Ecology
Jennifer Cantu, Ecology
Annette Carlson, Ecology
Suzanne Dahl, Ecology
Katie Hall, Ecology
Mandy Jones, Ecology
Steve Lowe, Ecology
Jeff Lyon, Ecolgoy
Nina Menard, Ecology
Andrew Pomiak, Ecology
John Price, Ecology
Stephanie Schleif, Ecology
Dan Thompson, Ecology

cc electronic w/enc and DVD:

Tim Hamlin, EPA
Lori Huffman, USDOE-ORP
Tony McKarns, USDOE-RL
Sheila Davis, BNI
Brittany Sparks, BNI
Mason Murphy, CTUIR
Jack Bell, NPT
Rex Buck Jr., Wanapum
Laurene Contreras, YN
Susan Leckband, HAB
David Reeploeg, Hanford Communities
Max Woods, ODOE
Robin Priddy, BCAA
Matthew Drumheller, USACE
Trevor Fox, USFW
Mike Livingston, WDFW
Lauren Jenks, WDOH
John Martell, WDOH
Randy Treadwell, WSDA
Allyson Brooks, WSDAHP
Cindy Preston, WSDNR
Environmental Portal
Gonzaga University Foley Center Library
Hanford Administrative Record, Hanford Site-wide Permit
Hanford Facility Operating Record
NWP RIM Coordinators, Ecology
PNNL Correspondence Control
Portland State University Library, Government Information
University of Washington Suzzallo Library, Government Publications
BNI Correspondence Control
CPCCo Correspondence Control
EPA Region 10 Hanford Field Office, Correspondence Control
HMIS Correspondence Control
USDOE-ORP Correspondence Control
USDOE Public Reading Room, CIC
USDOE-RL Correspondence Control
WRPS Correspondence Control

cc w/enc, DVD and hard copy:

Hanford Administrative Record: Hanford Site-wide Permit
NWP Central File

Response to Comments Connection of the 242-A Evaporator PC-5000 Transfer line to Liquid Effluent Retention Facility Basin 41

July 10, 2020 to Sept. 8, 2020

For the **Nuclear Waste Program**

Washington State Department of Ecology

Richland, Washington

February 2021, Publication 21-05-007

DEPARTMENT OF ECOLOGY State of Washington

Publication Information

This document is available on the Department of Ecology's website at:
https://apps.ecology.wa.gov/publications/summarypages/2105007.html

Ecology publishes this document to meet the requirements of Washington Administrative Code 173-303-840 (9).

Cover photo credit

- Photo by Washington State Dept. of Ecology, July 26, 2020

Contact Information

Andrew Pomiak, 242-A Evaporator Permit Lead
Nuclear Waste Program
3100 Port of Benton Blvd
Richland, WA 99354
Phone: 509-372-7950
Email: Hanford@ecy.wa.gov

Website[1]: Washington State Department of Ecology

ADA Accessibility

The Department of Ecology is committed to providing people with disabilities access to information and services by meeting or exceeding the requirements of the Americans with Disabilities Act (ADA), Section 504 and 508 of the Rehabilitation Act, and Washington State Policy #188.

To request an ADA accommodation, contact Ecology by phone at 509-372-7950 or email at Daina.McFadden@ecy.wa.gov. For Washington Relay Service or TTY call 711 or 877-833-6341. Visit Ecology's website for more information.

[1] www.ecology.wa.gov/contact

Department of Ecology's Regional Offices

Map of Counties Served

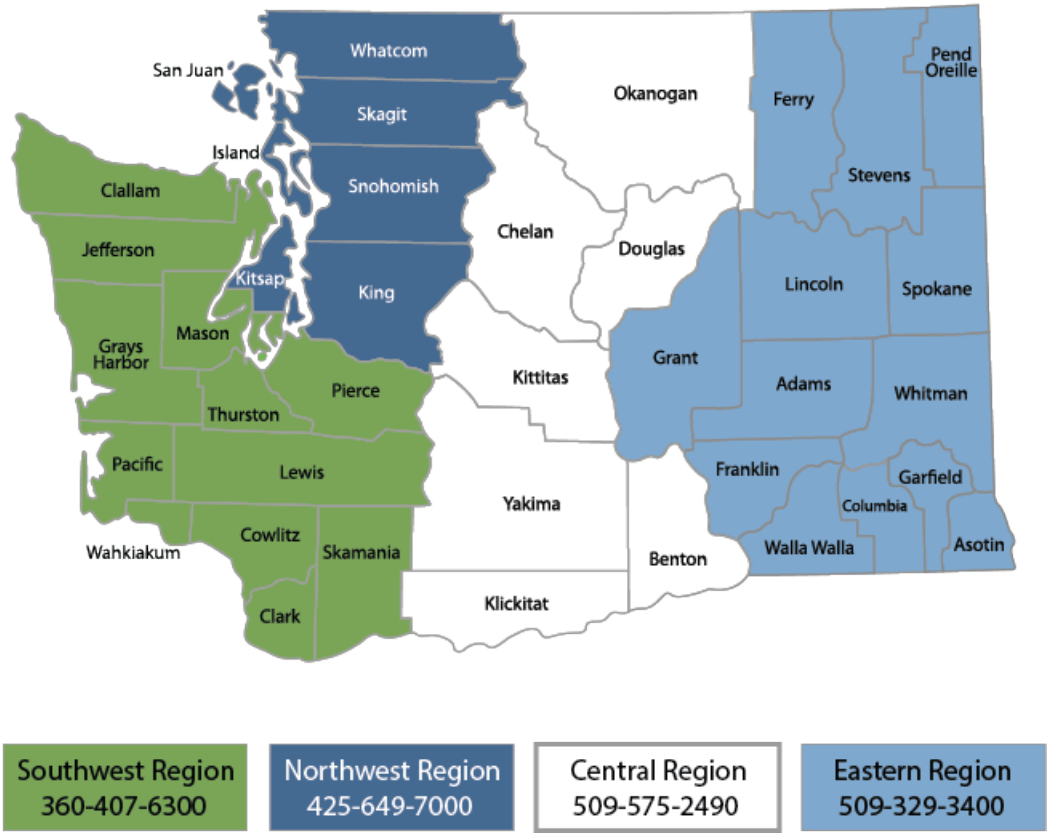

Region	Counties served	Mailing Address	Phone
Southwest	Clallam, Clark, Cowlitz, Grays Harbor, Jefferson, Mason, Lewis, Pacific, Pierce, Skamania, Thurston, Wahkiakum	PO Box 47775 Olympia, WA 98504	360-407-6300
Northwest	Island, King, Kitsap, San Juan, Skagit, Snohomish, Whatcom	3190 160th Ave SE Bellevue, WA 98008	425-649-7000
Central	Benton, Chelan, Douglas, Kittitas, Klickitat, Okanogan, Yakima	1250 W Alder St Union Gap, WA 98903	509-575-2490
Eastern	Adams, Asotin, Columbia, Ferry, Franklin, Garfield, Grant, Lincoln, Pend Oreille, Spokane, Stevens, Walla Walla, Whitman	4601 N Monroe Spokane, WA 99205	509-329-3400
Headquarters	Across Washington	PO Box 46700 Olympia, WA 98504	360-407-6000

Response to Comments
Connection of the 242-A Evaporator PC-5000 Transfer line to Liquid Effluent Retention Facility (LERF) Basin 41

July 10, 2020 through Sept. 8, 2020

Nuclear Waste Program
Washington State Department of Ecology
Richland, WA

February 2021 | Publication 21-05-007

DEPARTMENT OF
ECOLOGY
State of Washington

Table of Contents

Introduction 6

Reasons for Issuing the Permit 7

Public Involvement Actions 7

List of Commenters 8

Attachment 1: Comments and Responses 9

Appendix A. Copies of All Public Notices 10

Introduction

The Washington State Department of Ecology's Nuclear Waste Program (Ecology) manages dangerous waste within the state by writing permits to regulate its treatment, storage, and disposal.

When a new permit or a significant modification to an existing permit is proposed, Ecology holds a public comment period to allow the public to review the change and provide formal feedback. (See Washington Administrative Code [WAC] 173-303-830 for types of permit changes.)

The Response to Comments is the last step before issuing the final permit, and its purpose is to:

- Specify which provisions, if any, of a permit will become effective upon issuance of the final permit, providing reasons for those changes.
- Describe and document public involvement actions.
- List and respond to all significant comments received during the public comment period and any related public hearings.

This Response to Comments is prepared for:

Comment period	Connection of the 242-A Evaporator PC-5000 Transfer line to LERF Basin 41, July 10 to Sept. 8, 2020
Permit	*Hanford Facility Resource Conservation and Recovery Act (RCRA) Permit for the Treatment, Storage, and Disposal of Dangerous Waste, 242-A Evaporator*
Permittees	U.S. Department of Energy and Washington River Protection Solutions
Original Issuance date	November 11, 1980

To see more information related to the Hanford Site and nuclear waste in Washington State, please visit our webpage, Hanford Cleanup[2].

[2] https://www.ecology.wa.gov/Hanford

Reasons for Issuing the Permit

The 242-A Evaporator facility is a mixed-waste treatment and storage unit that concentrates the liquid portion of double-shell tank waste at Hanford.

This permit modification allows a tie-in from the combined 242-A Evaporator and Waste Treatment Plant process condensate line PC-5000/3”-WTP-002-M17 to the new Liquid Effluent Retention Facility (LERF) Basin 41.

Permitting of Hanford dangerous waste management is administratively divided into unit-groups, most often as an operation or collection of tank farms. The 242-A Evaporator and LERF are distinct unit groups, with the boundary between the two being the catch basins at the end of the process condensate line.

This permit modification only addresses the connection of the 242-A process condensate line to LERF Basin 41. The construction and operation of LERF Basin 41 is addressed in a different permit modification.

Public Involvement Actions

The U.S. Department of Energy (USDOE) encouraged public comment on the permit modification package, including changes to Chapter 4.0, “Process Information,” Chapter 6.0, “Procedures to Prevent Hazards,” and the Unit Specific Permit Conditions, during a 60-day public comment period held July 10 through Sept. 8, 2020.

The following actions were taken to notify the public:

- Mailed a public notice announcing the comment period to 1,152 members of the public.
- Placed a public announcement legal advertisement in the *Tri-City Herald* on July 10, 2020.
- Emailed a notice announcing the start of the comment period to the Hanford-Info email list, which has 1,337 recipients.
- Posted the comment period notice on the Washington Department of Ecology – Hanford Facebook and Twitter pages.

USDOE held a virtual public meeting on Aug. 18, 2020, at 5:30 p.m. via WebEx. Thirty-two members of the public participated, and no formal comments were collected.

The Hanford information repositories located in Richland, Spokane, and Seattle, Washington, and Portland, Oregon, received the following documents for public review:

- Public Notice
- Transmittal letter
- Fact Sheet for the proposed 242-A Evaporator Permit Modification
- Draft 242-A Evaporator Permit Modification

The following public notices for this comment period are in Appendix A of this document:

- Fact sheet
- Classified notice/advertisement in the *Tri-City Herald*
- Notices sent to the Hanford-Info email list
- Notices posted on Washington Department of Ecology – Hanford Facebook and Twitter pages

List of Commenters

The table below lists the names of organizations or individuals who submitted a comment on the 242-A Evaporator Permit modification. The comments and responses are in Attachment 1.

Commenter	Organization
Sylvia Haven	Citizen
Mike Conlan	Citizen
Stacy Thursby	Citizen
Linda Greene	Citizen
Peter von Christierson	Citizen
Michael Harding	Citizen
Nancy Arbuckle	Citizen
Amy Hagopian, PhD	Citizen
Jim Thomas	Citizen
William Harty	Citizen
Hanford Challenge	Hanford Challenge
Heart of America Northwest	Heart of America Northwest

Attachment 1: Comments and Responses

Description of comments:

Ecology accepted comments from July 10 through Sept. 8, 2020. This section provides a summary of comments that we received during the public comment period and our responses, as required by RCW 34.05.325(6)(a)(iii). Comments are grouped by individual, and each comment is addressed separately.

I-1: SYLVIA HAVEN

Comment I-1-1

To: Washington State Department of Ecology

Please see that the USDOE adheres to their obligations under the law as expressed in my letter to them below.

To: USDOE

Regarding the completely inadequate $700 million reduced FY 2022 Hanford budget it is difficult to know where to begin. Contrary to your binding agreement you have made it difficult for stakeholders to be informed. The information we do have shows failure to fund the following:

1. Repair of leaking tanks
2. Containment of illegally stored waste
3. Provision for public involvement in decision making

Failure to disclose the true cost of abiding by the TPA agreement is unacceptable. The following procedures must be included in the budget:

1. Removal of contaminations as opposed to fencing and signage
2. Emptying of leaking tanks
3. Removal of solid nuclear waste capsules from storage pools

Respectfully, Sylvia Haven 10418 12th Ave NE Seattle, WA 98125

Response to I-1-1

Ecology is also concerned about the material provided for the public as part of this public comment period. Ecology has inserted permit conditions with the approval of this modification to require USDOE to upgrade the leak detection system for the transfer lines between 242-A and WTP to LERF. That upgrade will require a permit modification, at which time Ecology will ensure all relevant documentation is included for public review.

1. Repair of leaking tanks.

    Leaking tanks are not a part of this modification.

2. Containment of illegally stored waste.

    This permit modification is for compliant waste storage and transfer. Illegally stored waste is not a part of this modification.

3. Provision for public involvement in decision making.

    When the leak detection system upgrades are being reflected in the permit through a permit modification, Ecology will ensure all relevant documentation is included for public review.

Budget is not a part of this modification. This includes removal of contaminations as opposed to fencing and signage, emptying leaking tanks, and removal of solid nuclear waste capsules from storage pools.

I-2: MIKE CONLAN

Comment I-2-1

1. Remove all nuclear waste,

2. Do not allow anymore nuclear waste into the facility,

3. Replace all the single storage tanks,

4. Stop all the nuclear leakage entering the Columbia River

5. Glassification!

Response to I-2-1

1. *Ecology is working to ensure that long-term storage, treatment, and disposal of the waste is protective of human health and the environment.*
2. *The proposed permit changes are not to allow additional nuclear waste into the Hanford Facility, but to better manage the waste already present.*
3. *Single-shell tanks (SSTs) are not in the scope of this comment period. Ecology does agree that the tanks pose a threat. Ecology believes a better approach to replacing the SSTs is to remove the waste from the SSTs and placing it in the compliant double-shell tanks (DSTs) to prepare for eventual treatment in the Waste Treatment Plant that is now being built.*
4. *Continued proper management of the waste will minimize the possibility of nuclear waste from entering the Columbia River.*
5. *When completed the Waste Treatment and Immobilization Plant will have the treatment capability to vitrify tank waste.*

I-3: STACY THURSBY

Comment I-3-1

I request a public hearing.

Response to I-3-1

A Class 2 permit modification requires a public meeting, which was held on August 18, 2020. Members of the public had the opportunity to review the draft permit modification in a presentation provided by the U.S. Department of Energy, submit public comments and ask questions. Ecology staff were in attendance as well to provide information and responses to questions and comments. A request for a hearing must meet requirements of WAC 173-303-840(4)(d): "...A request for a public hearing must be in writing and must state the nature of the

issues proposed to be raised in the hearing." Ecology did not receive enough information on the request for a public hearing and there was not a significant interest in holding one.

I-4: LINDA GREENE

Comment I-4-1

Thank you for the opportunity to provide public comment on the related comment periods for the effluent transfer lines and LERF's Basin 41. I am writing because I care about protecting future generations and the environment from Hanford's contamination. I care about worker, public, and environmental safety and believe in transparency and accountability.

Thank you for considering my comments:

Require Protective Leak Inspections: Ensure that the timing and rigor of leak detection inspections are not decreased by the permit modification.

Plan for Infrastructure Upgrades: Ensure planning for all necessary infrastructure upgrades, including the three existing LERF basins which have a 20-year design life that expired in 2015.

Include Plans for Avoidable Problems: Ensure that DOE takes action to avoid startup issues at the Effluent Treatment Facility that takes into consideration unknowns such as what the future Waste Treatment Plant effluent may contain. Ensure measures are taken to avoid impacts to ongoing and future site cleanup activities.

Information Before Approval: Ensure that additional information about leak detection, expired design life, infrastructure upgrades, and WTP effluent characterization are answered and this information is shared with the public prior to approving these permit modifications.

Prioritize Safety: Make sure requirements are in place to protect workers and the environment from the radioactive waste and toxic chemical vapors that may be present in the waste that will be moved through the new transfer lines and stored in the basins.

Increase Transparency: Share the details of the proposed actions AND any problems underpinning that action and the timeline for fixing problems.

Share the Big Picture: When you are soliciting input on anything that deals with treating tank waste, share the big picture of where the facility or action fits with immobilizing Hanford's high-level tank waste in glass. For example long-term plans for implementing additional upgrades to fix and replace additional aging infrastructure that is part of tank waste management, storage and treatment.

Sincerely, Linda Greene

Response to I-4-1

Please see the responses for I-4-2 to I-4-8.

Comment I-4-2

Thank you for the opportunity to provide public comment on the related comment periods for the effluent transfer lines and LERF's Basin 41. I am writing because I care about protecting

future generations and the environment from Hanford's contamination. I care about worker, public, and environmental safety and believe in transparency and accountability.

Thank you for considering my comments:

Require Protective Leak Inspections: Ensure that the timing and rigor of leak detection inspections are not decreased by the permit modification.

Response to I-4-2

Ecology shares similar concerns with the public as to the adequacy of leak detection systems for the PC-5000/3"-WTP-002-M17 transfer lines. USDOE originally proposed reducing the frequency of visual sight-glass inspections of these lines from once-per-shift to daily. Ecology is not approving this change and requiring the frequency to remain at once-per-shift.

Ecology has drafted permit conditions with this permit modification. The draft permit conditions were written in response to public comments and require USDOE to upgrade the leak detection systems for this line prior to use. This upgrade will require a permit modification and the public will have an opportunity to review the proposed permit changes and any relevant documentation.

Comment I-4-3

Plan for Infrastructure Upgrades: Ensure planning for all necessary infrastructure upgrades, including the three existing LERF basins which have a 20-year design life that expired in 2015.

Include Plans for Avoidable Problems: Ensure that DOE takes action to avoid startup issues at the Effluent Treatment Facility that takes into consideration unknowns such as what the future Waste Treatment Plant effluent may contain.

Ensure measures are taken to avoid impacts to ongoing and future site cleanup activities.

Response to I-4-3

Plan for Infrastructure Upgrades: Infrastructure upgrades are outside the scope of this Permit modification. The operational life expectancy for the three existing Liquid Effluent Retention Facility (LERF) basins is out of the scope of this modification.

Include Plans for Avoidable Problems: Ecology is working to ensure that long-term storage, treatment, and disposal of the waste is protective of human health and the environment.

Comment I-4-4

Information Before Approval: Ensure that additional information about leak detection, expired design life, infrastructure upgrades, and WTP effluent characterization are answered and this information is shared with the public prior to approving these permit modifications.

Response to I-4-4

Ecology has included supporting documentation associated with this permit modification. For future permit modifications on leak detection, Ecology will ensure all relevant documentation is proved for public review.

Comment I-4-5

Prioritize Safety: Make sure requirements are in place to protect workers and the environment from the radioactive waste and toxic chemical vapors that may be present in the waste that will be moved through the new transfer lines and stored in the basins.

Response to I-4-5

USDOE manages the safety onsite and has a rigid work package development which requires all adherence for worker safety requirements. Ecology is committed to protecting human health and the environment.

Comment I-4-6

Increase Transparency: Share the details of the proposed actions AND any problems underpinning that action and the timeline for fixing problems.

Response to I-4-6

Ecology agrees that transparency is important and we strive to ensure the public has access to adequate information to be able to make informed comments on the proposed permitting activities. Ecology is including additional supplemental information in the permit modification package for public review.

Comment I-4-7

Share the Big Picture: When you are soliciting input on anything that deals with treating tank waste, share the big picture of where the facility or action fits with immobilizing Hanford's high-level tank waste in glass. For example long-term plans for implementing additional upgrades to fix and replace additional aging infrastructure that is part of tank waste management, storage and treatment.

Response to I-4-7

Ecology recognizes the interconnectedness of work performed at the Hanford Site and we try to convey this larger picture in our public documents. We will also ensure "big-picture" ideas are appropriately addressed in Ecology documents and we encourage USDOE's to address these ideas in their documents and presentations during public meetings.

To try to connect the two similar decisions together, the 242-A Evaporator public comment period will be held concurrently with the LERF/ETF Basin 41 permit modification that addresses leak detection. Ecology strives to find opportunities for public review of decisions that are similar or connected through treatment, storage or disposal to make it easier for members of the public to see the big picture.

I-5: PETER VON CHRISTIERSON

Comment I-5-1

Thank you for the opportunity to provide public comment on the related comment periods for the effluent transfer lines and LERF's Basin 41. I am writing because I care about protecting

future generations and the environment from Hanford's contamination. I care about worker, public, and environmental safety and believe in transparency and accountability.

Thank you for considering my comments:

Require Protective Leak Inspections: Ensure that the timing and rigor of leak detection inspections are not decreased by the permit modification.

Plan for Infrastructure Upgrades: Ensure planning for all necessary infrastructure upgrades, including the three existing LERF basins which have a 20-year design life that expired in 2015.

Include Plans for Avoidable Problems: Ensure that DOE takes action to avoid startup issues at the Effluent Treatment Facility that takes into consideration unknowns such as what the future Waste Treatment Plant effluent may contain. Ensure measures are taken to avoid impacts to ongoing and future site cleanup activities.

Response to I-5-1

Require Protective Leak Inspections:

Ecology shares similar concerns with the public as to the adequacy of leak detection systems for the PC-5000/3"-WTP-002-M17 transfer lines. USDOE originally proposed reducing the frequency of visual sight-glass inspections of these lines from once-per-shift to daily. Ecology is not approving this change and requiring the frequency to remain at once-per-shift.

Ecology has drafted permit conditions with this permit modification. The draft permit conditions were written in response to public comments and require USDOE to upgrade the leak detection systems for this line prior to use. This upgrade will require a permit modification and the public will have an opportunity to review the proposed permit changes and any relevant documentation.

Plan for Infrastructure Upgrades:

Out of scope for this permit modification.

Include Plans for Avoidable Problems:

ETF and WTP permits are out of scope for this permit modification.

Ensure measures are taken to avoid impacts to ongoing and future site cleanup activities:

Out of scope for this modification.

Information Before Approval:

When the permit modification for leak detection upgrades goes out for public review, Ecology will ensure all relevant documentation is included. WTP construction and operations is included in a separate operating unit group in the Hanford Site-wide Permit and is not a part of this permit modification.

Prioritize Safety:

USDOE manages the safety onsite and has a rigid work package development which requires all adherence for worker safety requirements.

Increase Transparency:

Ecology agrees that transparency is important and we strive to ensure the public has access to adequate information to be able to make informed comments on the proposed permitting activities.

Share the Big Picture:

Ecology recognizes the interconnectedness of work performed at the Hanford Site and we try to convey this larger picture in our public documents. We will also ensure "big-picture" ideas are appropriately addressed in Ecology documents and we encourage USDOE's to address these ideas in their documents and presentations during public meetings.

To try to connect the two similar decisions together, the 242-A Evaporator public comment period will be held concurrently with the LERF/ETF Basin 41 permit modification that addresses leak detection. Ecology strives to find opportunities for public review of decisions that are similar or connected through treatment, storage or disposal to make it easier for members of the public to see the big picture.

I-6: MICHAEL HARDING

Comment I-6-1

To Whom It May Concern regarding 242-A Class 2 Modification for PC-5000 tie-in to LERF Basin 41

DOE should take action to avoid startup issues at the Effluent Treatment Facility and take into consideration unknowns such as what the future Waste Treatment Plant effluent may contain.

It is time for an upgrade of the three existing LERF basins (which have a twenty year design life that expired in 2015).

It would be advisable to ensure that leak detection inspections are not lessened by the permit modification.

DOE should also take measures to avoid impacts to ongoing and future site clean up activities by implementing a poorly considered permit modification.

As far as public relations are concerned, information about leak detection, expired design life, infrastructure upgrades, and Waste Treatment Plant effluent should be provided and shared with the public prior to asking for public comment on permit modifications.

The safety of Hanford workers should be a priority. Naturally, that idea extends to protecting the environment from the radioactive waste and toxic chemical vapors that are often present in the waste that will be moved through the new transfer lines and stored in the basins.

Any anticipated problems or likely complications associated with proposed actions (and the timeline for fixing such problems) must be shared with the general public.

Providing for an accurate public understanding of how Hanford's high-level tank waste glassification project is designed would force the DOE to grapple with the complexity of the task

fully so that it could share details with the general public without glossing over problems not yet solved.

Long term plans for implementing additional upgrades to deal with aging infrastructure must be made with a devotion to accuracy and clarity both in design and in disseminating and clearly sharing that design with the public sphere.

Response to I-6-1

DOE should take into consideration unknowns such as what the future Waste Treatment Plant effluent may contain:

Addendum B, Waste Analysis Plan for LERF and 200 Area ETF, requires the generator (i.e., DFLAW) to meet the waste acceptance criteria for LERF and 200 Area ETF. As such, the waste is also ensured to be compatible with equipment at the facility. This modification is not proposing any changes to the waste acceptance criteria. DOE submitted RPP-RPT-62215, LERF Basin 41 Material Compatibility with Wastewater, to show compatibility of the new Basin 41 construction with the constituents in the influent. This included chemical compatibility limits and radiological concerns.

An upgrade of the three existing LERF basins (which have a twenty year design life that expired in 2015) is due, is it not?:

This comment is out of scope for this modification.

It would be advisable to ensure that leak detection inspections are not lessened by the permit modification:

Ecology shares similar concerns with the public as to the adequacy of leak detection systems for the PC-5000/3"-WTP-002-M17 transfer lines. USDOE originally proposed reducing the frequency of visual sight-glass inspections of these lines from once-per-shift to daily. Ecology is not approving this change and requiring the frequency to remain at once-per-shift.

Ecology has drafted permit conditions with this permit modification. The draft permit conditions were written in response to public comments and require USDOE to upgrade the leak detection systems for this line prior to use. This upgrade will require a permit modification and the public will have an opportunity to review the proposed permit changes and any relevant documentation.

DOE should also take measures to avoid impacts to ongoing and future site clean up activities by implementing a poorly considered permit modification:

This comment is out of scope for this modification.

As far as public relations are concerned, information about leak detection, expired design life, infrastructure upgrades, and Waste Treatment Plant effluent should be provided and shared with the public prior to asking for public comment on permit modifications:

Ecology shares similar concerns with the public as to the adequacy of leak detection systems for the PC-5000/3"-WTP-002-M17 transfer lines. As a result, Ecology has drafted permit conditions with this permit modification. The draft permit conditions were drafted in response to public

comments and require USDOE to upgrade the leak detection systems for this line prior to use. This upgrade will require a permit modification and the public will have an opportunity to review the permit changes and any relevant documentation.

Infrastructure upgrades and expired design life are outside the scope of this Permit modification. The operational life expectancy for the three existing LERF basins has been extended with the replacement of materials and equipment.

The safety of Hanford workers should be a priority. Naturally, that idea extends to protecting the environment from the radioactive waste and toxic chemical vapors that are often present in the waste that will be moved through the new transfer lines and stored in the basins:

USDOE manages the safety onsite and has a rigid work package development which requires all adherence for worker safety requirements.

Any anticipated problems or likely complications associated with proposed actions (and the timeline for fixing such problems) must be shared with the general public:

This comment is out of scope for this modification.

Providing for an accurate public understanding of how Hanford's high-level tank waste glassification project is designed would force the DOE to grapple with the complexity of the task fully so that it could share details with the general public without glossing over problems not yet solved:

This comment is out of scope for this modification.

Long term plans for implementing additional upgrades to deal with aging infrastructure must be made with a devotion to accuracy and clarity both in design and in disseminating and clearly sharing that design with the public sphere:

Additional upgrades are out of scope of this modification. However, when the upgrades to the leak detection system are made in a future permit modification, Ecology will ensure all relevant documentation is included for public review.

I-7: NANCY ARBUCKLE

Comment I-7-1

Thank you for the opportunity to provide public comment on the related comment periods for the effluent transfer lines and LERF's Basin 41. I am writing because I was born in Richland and I care about protecting future generations and the environment from Hanford's contamination. I care about worker, public, and environmental safety and believe in transparency and accountability.

Thank you for considering my comments:

Require Protective Leak Inspections: Ensure that the timing and rigor of leak detection inspections are not decreased by the permit modification.

Plan for Infrastructure Upgrades: Ensure planning for all necessary infrastructure upgrades, including the three existing LERF basins which have a 20-year design life that expired in 2015.

Include Plans for Avoidable Problems: Ensure that DOE takes action to avoid startup issues at the Effluent Treatment Facility that takes into consideration unknowns such as what the future Waste Treatment Plant effluent may contain. Ensure measures are taken to avoid impacts to ongoing and future site cleanup activities.

Information Before Approval: Ensure that additional information about leak detection, expired design life, infrastructure upgrades, and WTP effluent characterization are answered and this information is shared with the public prior to approving these permit modifications.

Prioritize Safety: Make sure requirements are in place to protect workers and the environment from the radioactive waste and toxic chemical vapors that may be present in the waste that will be moved through the new transfer lines and stored in the basins.

Increase Transparency: Share the details of the proposed actions AND any problems underpinning that action and the timeline for fixing problems.

Share the Big Picture: When you are soliciting input on anything that deals with treating tank waste, share the big picture of where the facility or action fits with immobilizing Hanford's high-level tank waste in glass. For example long-term plans for implementing additional upgrades to fix and replace additional aging infrastructure that is part of tank waste management, storage and treatment.

Sincerely, Nancy Arbuckle

Response to I-7-1

Require Protective Leak Inspections:

Ecology shares similar concerns with the public as to the adequacy of leak detection systems for the PC-5000/3"-WTP-002-M17 transfer lines. USDOE originally proposed reducing the frequency of visual sight-glass inspections of these lines from once-per-shift to daily. Ecology is not approving this change and requiring the frequency to remain at once-per-shift.

Ecology has drafted permit conditions with this permit modification. The draft permit conditions were written in response to public comments and require USDOE to upgrade the leak detection systems for this line prior to use. This upgrade will require a permit modification and the public will have an opportunity to review the proposed permit changes and any relevant documentation.

Plan for Infrastructure Upgrades:

Infrastructure upgrades are outside the scope of this Permit modification. The operational life expectancy for the three existing LERF basins has been extended with the replacement of materials and equipment.

Include Plans for Avoidable Problems:

Ecology is working to ensure that long-term storage, treatment, and disposal of the waste is protective of human health and the environment through the Direct Feed Low-Activity Waste cleanup activities.

Include Plans for Avoidable Problems:

Ecology is working to ensure that long-term storage, treatment, and disposal of the waste is protective of human health and the environment through the Direct Feed Low-Activity Waste cleanup activities.

Information Before Approval:

When the permit modification for leak detection upgrades goes out for public review, Ecology will ensure all relevant documentation is included. WTP construction and operations is included in a separate operating unit group in the Hanford Site-wide Permit and is not a part of this permit modification.

Prioritize Safety:

USDOE manages the safety onsite and has a rigid work package development which requires all adherence for worker safety requirements.

Increase Transparency:

Ecology agrees that transparency is important and we strive to ensure the public has access to adequate information to be able to make informed comments on the proposed permitting activities.

Share the Big Picture:

Ecology recognizes the interconnectedness of work performed at the Hanford Site and we try to convey this larger picture in our public documents. We will also ensure "big-picture" ideas are appropriately addressed in Ecology documents and we encourage USDOE's to address these ideas in their documents and presentations during public meetings.

To try to connect the two similar decisions together, the 242-A Evaporator public comment period will be held concurrently with the LERF/ETF Basin 41 permit modification that addresses leak detection. Ecology strives to find opportunities for public review of decisions that are similar or connected through treatment, storage or disposal to make it easier for members of the public to see the big picture.

I-8: AMY HAGOPIAN, PHD

Comment I-8-1

I'm a public health faculty member at the University of Washington. I teach a unit on Hanford every year to my Master of Public Health students.

Thank you for the opportunity to provide public comment on the effluent transfer lines and LERF's Basin 41.

Please require Protective Leak Inspections. Ensure that the timing and rigor of leak detection inspections are not decreased by the permit modification.

Plan for Infrastructure Upgrades. Ensure planning for all necessary infrastructure upgrades, including the three existing LERF basins which have a 20-year design life that expired in 2015.

Include Plans for Avoidable Problems. Ensure DOE takes action to avoid startup issues at the Effluent Treatment Facility that considers unknowns such as what the future Waste Treatment Plant effluent may contain. Ensure measures are taken to avoid impacts to ongoing and future site cleanup activities

Response to I-8-1

Please require Protective Leak Inspections:

Ecology shares similar concerns with the public as to the adequacy of leak detection systems for the PC-5000/3"-WTP-002-M17 transfer lines. USDOE originally proposed reducing the frequency of visual sight-glass inspections of these lines from once-per-shift to daily. Ecology is not approving this change and requiring the frequency to remain at once-per-shift.

Ecology has drafted permit conditions with this permit modification. The draft permit conditions were written in response to public comments and require USDOE to upgrade the leak detection systems for this line prior to use. This upgrade will require a permit modification and the public will have an opportunity to review the proposed permit changes and any relevant documentation.

Plan for Infrastructure Upgrades:

Infrastructure upgrades are outside the scope of this Permit modification. The operational life expectancy for the three existing Liquid Effluent Retention Facility (LERF) basins has been extended with the replacement of materials and equipment.

Include Plans for Avoidable Problems:

Startup of the ETF is out of scope for this permit modification.

I-9: JIM THOMAS

Comment I-9-1

I appreciate this opportunity to submit comments on LERF's new Basin 41. As someone who has studied Hanford's waste issues since 1986, I am very concerned about protecting future generations and the environment. Thank you for considering my comments:

There has been insufficient detail presented on waste volumes and whether only one additional basin will be sufficient, especially if one of the other LERF basins fails, since the three other basins are already five years beyond their design life.

If I understood the information provided at the August 18 public meeting, the PC-5000 will be used as a backup to the WTP primary transfer line. Since the primary line is 4 inches in diameter, then why is the proposed PC-5000 only 3 inches in diameter? This seems that the smaller capacity could cause process backups in the WTP. Ecology should verify that a smaller transfer line will not cause safety or environmental problems before granting this and the LERF permits.

Ecology should require USDOE to install more robust leak detection. Strict legal compliance with RCRA is insufficient given the sordid history of Hanford's dumping a variety of wastes directly to the soil through the site but especially in the 200 Areas.

Requirements must be made more stringent to protect workers and the environment from the radioactive waste and toxic chemical vapors that may be present in the waste that will be moved through the new transfer lines and stored in the LERF basins.

While I have appreciated this public comment process, the August public meeting was hard to follow at times because there was insufficient attention paid to the big picture of where the facility or action fits with vitrifying Hanford's high-level tank waste. For example, the presentation should have provided the context of the long-term plans for implementing additional upgrades to replace additional aging infrastructure that is part of tank waste management, storage and treatment.

In peace, Jim Thomas

Response to I-9-1

There has been insufficient detail presented on waste volumes and whether only one additional basin will be sufficient, especially if one of the other LERF basins fails, since the three other basins are already five years beyond their design life:

LERF Basin design, life, and scope is out of scope of this 242-A modification.

If I understood the information provided at the August 18 public meeting, the PC-5000 will be used as a backup to the WTP primary transfer line. Since the primary line is 4 inches in diameter, then why is the proposed PC-5000 only 3 inches in diameter? This seems that the smaller capacity could cause process backups in the WTP. Ecology should verify that a smaller transfer line will not cause safety or environmental problems before granting this and the LERF permits:

The 3" backup line will be able to function as a backup line for the transfers from EMF to LERF. This will not cause backups in the WTP

Ecology should require USDOE to install more robust leak detection. Strict legal compliance with RCRA is insufficient given the sordid history of Hanford's dumping a variety of wastes directly to the soil through the site but especially in the 200 Areas:

Ecology shares similar concerns with the public as to the adequacy of leak detection systems for the PC-5000/3"-WTP-002-M17 transfer lines. USDOE originally proposed reducing the frequency of visual sight-glass inspections of these lines from once-per-shift to daily. Ecology is not approving this change and requiring the frequency to remain at once-per-shift.

Ecology has drafted permit conditions with this permit modification. The draft permit conditions were written in response to public comments and require USDOE to upgrade the leak detection systems for this line prior to use. This upgrade will require a permit modification and the public will have an opportunity to review the proposed permit changes and any relevant documentation.

While I have appreciated this public comment process, the August public meeting was hard to follow at times because there was insufficient attention paid to the big picture of where the

facility or action fits with vitrifying Hanford's high-level tank waste. For example, the presentation should have provided the context of the long-term plans for implementing additional upgrades to replace additional aging infrastructure that is part of tank waste management, storage and treatment:

Ecology agrees that big-picture ideas would be helpful in future presentations on public modifications. Ecology will work with DOE to recommend that these topics are addressed appropriately during public meetings.

I-10: WILLIAM HARTY

Comment I-10-1

What is the Operational life expectancy of 242-A Evaporator? A Flow Sheet of the chemical/radiological concentrations of condensate and evaporated liquids needs to be developed.

What type of pump will provide the force for the liquid transfers?

Will the liquid Effluent Retention Facilities operate in Parallel or Sequential?

Who will be doing the chemical & radiological analysis & sampling of the liquid streams? (222-S labs or Wtp lab?).

Do not reinject decontaminated water back into the ground. It will contaminate the ground water that flows to the Columbia River.

Response to I-10-1

What is the Operational life expectancy of 242-A Evaporator? A Flow Sheet of the chemical/radiological concentrations of condensate and evaporated liquids needs to be developed:

The life expectancy of the 242-A Evaporator and a flow sheet of chemical/radiological concentrations of condensate is out of scope of this modification. However, the 242-A Evaporator performs periodic integrity assessments of the facility on a 10-year frequency. These assessments note upgrades the facility should make to ensure it continues to operate.

What type of pump will provide the force for the liquid transfers?

The P-C-100 pump is used by the 242-A Evaporator to pump condensate from the 242-A Evaporator process condensate tank TK-C-100 directly to the LERF basins. The P-C-100 pump has a normal operating capacity of 60 gallons per minute. The pump for EMF transfers to LERF is out of scope for this modification.

Will the liquid Effluent Retention Facilities operate in Parallel or Sequential?

Out of scope for this 242-A Evaporator permit modification.

Who will be doing the chemical & radiological analysis & sampling of the liquid streams? (222-S labs or Wtp lab?)

Out of scope for this 242-A Evaporator permit modification.

Do not reinject decontaminated water back into the ground. It will contaminate the ground water that flows to the Columbia River.

Out of scope for this 242-A Evaporator permit modification.

O-1: HANFORD CHALLENGE

Comment O-1-1

Increase Transparency and Clarity in Communications: Permit Modifications are notoriously inaccessible to the public, but this does not need to be the case. In future permit modification public materials like fact sheets and presentations, use plain language to clearly communicate why an action is being taken and how it fits into the bigger picture of ultimate Hanford cleanup goals. For example; long-term plans for implementing additional upgrades to fix and replace aging infrastructure that is part of tank waste management, storage and treatment.

Response to O-1-1

Ecology agrees that public information should be more accessible to the public, which is why we always host the links on the Ecology webpage. Ecology will share these comments with USDOE and provide recommendations for improving public information for future permit modifications. When a future permit modification is Ecology-initiated, we will ensure the public information documents include the larger picture, as appropriate to the decision being proposed.

Comment O-1-2

Make Relevant Documents Easier to Navigate and Accessible: In the future, please provide a summary of which documents are included in each permit modification package for ease of navigation. Please make sure these materials are available and accessible in an easy to navigate format online.

Response to O-1-2

Ecology agrees that the information should be clearly displayed. For future modifications that is Ecology-initiated, we will find improvements in organizing and displaying the documents for public review. We will also encourage USDOE to look for improvements to display permit modifications on their webpage. When the permit modification is permittee-initiated, it is our practice to link to the USDOE webpage.

Comment O-1-3

Include Chemical Vapor Protections: Make sure to include requirements that protect workers from chemical vapor exposures at all facilities and related infrastructure that deal with tank waste. This is a legal requirement under existing environmental, health and safety laws, as well as a commitment made by the DOE and contractors in recent legal resolutions.

Response to O-1-3

Chemical Vapor Protections are not within the scope of this permit modification. However, USDOE and the contractors have a robust work package development program that considers worker safety as priority.

Comment O-1-4

Require Protective Leak Inspections: Ensure that the timing and rigor of leak detection inspections are not decreased by the permit modifications for both the basins and transfer lines.

Response to O-1-4

Ecology shares similar concerns with the public as to the adequacy of leak detection systems for the PC-5000/3"-WTP-002-M17 transfer lines. USDOE originally proposed reducing the frequency of visual sight-glass inspections of these lines from once-per-shift to daily. Ecology is not approving this change and requiring the frequency to remain at once-per-shift.

Ecology has drafted permit conditions with this permit modification. The draft permit conditions were drafted in response to public comments and require USDOE to upgrade the leak detection systems for this line prior to use. This upgrade will require a permit modification and the public will have an opportunity to review the permit changes and any relevant documentation.

Comment O-1-5

Plan for Additional Infrastructure Upgrades: We appreciate efforts to install new transfer lines to transport the condensed vapors from the evaporated tank waste, and have a backup line for the WTP evaporator. It appears that there are more infrastructure upgrades needed. Ensure planning for all necessary infrastructure upgrades, including the three existing LERF basins which have a 20-year design life that expired in 2015.

Response to O-1-5

Infrastructure upgrades for the LERF-ETF and WTP facility are outside the scope of this permit modification. The operational life expectancy for the three existing Liquid Effluent Retention Facility (LERF) basins has been extended with the replacement of materials and equipment.

Comment O-1-6

Include Plans for Avoidable Problems: Ensure that DOE takes action to avoid startup issues at the Effluent Treatment Facility that takes into consideration unknowns such as what the future Waste Treatment Plant effluent may contain and plans for characterization of that effluent. Ensure measures are taken for safe startup of the ETF so this waste may be safely treated onsite.

Response to O-1-6

This proposed permit modification connects the backup WTP effluent line from EMF to the new LERF Basin 41. Ensuring these lines are permitted, compliant, and functioning, facilitates the startup of WTP. The availability of these lines and of the LERF Basins will support the startup of WTP. Effluent from ETF must meet the waste acceptance criteria of the LERF and 200 Area ETF, which is out of scope of this permit modification

Comment O-1-7

Information Before Approval: Ensure that additional information about leak detection, expired design life, infrastructure upgrades, and WTP effluent characterization are answered and this information is shared with the public prior to approving these permit modifications.

Response to O-1-7

Infrastructure upgrades are outside the scope of this permit modification. The operational life expectancy for the three existing Liquid Effluent Retention Facility (LERF) basins has been extended with the replacement of materials and equipment.

Addendum B, Waste Analysis Plan for LERF and 200 Area ETF, requires the generator (i.e., DFLAW) to meet the waste acceptance criteria for LERF and 200 Area ETF. As such, the waste is also ensured to be compatible with equipment at the facility. This modification is not proposing any changes to the waste acceptance criteria. DOE submitted RPP-RPT-62215, LERF Basin 41 Material Compatibility with Wastewater, to show compatibility of the new Basin 41 construction with the constituents in the influent. This included chemical compatibility limits and radiological concerns.

O-2: HEART OF AMERICA NORTHWEST

Comment O-2-1

Heart of America Northwest comments on LERF and 200 Area ETF permit are attached. Please note that these are also submitted for the concurrent comment period on 242-A and pipelines to LERF. Heart of America Northwest urges that the permit not be issued without SEPA review and without significant requirements regarding leak detection.

We want to start our comments with a note of appreciation that the comment periods and workshops for these two integrally related permit modifications were integrated. Because the projects are literally interlinked, having one combined workshop and comment period allowed public to review and comment based on presentations that showed the relationship of the projects, e.g., how the pipelines proposed in one modification (ETF) would bring waste to the new proposed LERF Basin 41. It also enabled the agencies to conduct just one outreach program for both modifications. We hope that the TPA agencies will integrate closely related permit modification comment periods in this manner in the future.

LERF Basin 41was dug out in 1990. Now USDOE proposes to add clay and geotextile liners for a 7.2 million gallon basin. Is this the design that would be chosen if the basin was not already dug out (which was done before USDOE acknowledged that RCRA hazardous waste law permitting applied)? The permit lacks groundwater monitoring provisions.

Transfer lines shown to the new Basin 41 from 242-A and LERF are 5000 and 2,380 feet respectively - far more than a mile. Yet, the only leak detection will be at the end of the lines.

Response to O-2-1

Ecology will hold the second portion of the 242-A Evaporator Class 3 permit modification concurrently with the LERF/ETF Basin 41 Class 3 permit modification that addresses leak detection.

Ecology shares similar concerns with the public as to the adequacy of leak detection systems for the PC-5000/3"-WTP-002-M17 transfer lines. USDOE originally proposed reducing the frequency of visual sight-glass inspections of these lines from once-per-shift to daily. Ecology is not approving this change and requiring the frequency to remain at once-per-shift.

Ecology has drafted permit conditions with this permit modification. The draft permit conditions were written in response to public comments and require USDOE to upgrade the leak detection systems for this line prior to use. This upgrade will require a permit modification and the public will have an opportunity to review the proposed permit changes and any relevant documentation.

Concerns over the LERF/ETF Basin 41 construction are out of scope of this modification.

Comment O-2-2

Ecology's main website for comment periods failed to list this comment period and provide links for commenting or materials: https://ecology.wa.gov/Events/Search/Listing (viewed Sept 6, 2020 and to confirm Sept. 8, 2020). Ecology's Nuclear Waste Program website did have the link to the fact sheet and comment submission form.

Response to O-2-2

This comment was received during the Class 2 permit modification public comment period. For a Class 2 (or first 60-day comment period of a Class 3) permit modification, the Nuclear Waste Program does not host any of the permittee documents. The comment period notice is posted with a link to the permittees webpage to review the documents. These notices do not appear on the main Ecology webpage (https://ecology.wa.gov), only on the Nuclear Waste Program's webpage (https://ecology.wa.gov/Waste-Toxics/Nuclear-waste/Public-comment-periods).

The permit modification has been reclassified to a Class 3 and is undergoing the second 45-day public comment period. Links for commenting and permit materials during the 45-day comment periods will be available on the Nuclear Waste Program's webpage and a notice posted on the main Ecology webpage.

Comment O-2-3

The two page fact sheet is devoid of any meaningful information regarding the wastes, quantities, potential impacts, and alternatives. There is no RCRA technical fact sheet provided in any link, nor in either of the permit documents (totaling over 2,000 pages).

Response to O-2-3

USDOE initiated their public information document, in which they term it a fact sheet in support of the Class 3 permit modification. The first portion of a Class 3 permit modification is permittee-initiated and Ecology is not the lead to develop a technical fact sheet under WAC 173-303-830. In the second portion of a Class 3 permit modification, in WAC 173-303-840, Ecology is

responsible to develop a technical fact sheet. Since the first portion of a Class 3 permit modification is permittee-initiated, Ecology's responsibilities are to review the formal draft permit modification for completeness and to perform a technical review. Once Ecology makes a completeness determination and provides a technical review and any deficiencies are provided from the permittees, Ecology will begin to draft a permit to prepare for the second portion of the Class 3 permit modification. At that time, a technical fact sheet is developed and shared for public review.

See the fact sheet associated with this draft Class 3 permit modification.

Comment O-2-4

Most importantly, Ecology's website and notice did not provide any SEPA documentation to accompany the permit proposal. Building a brand new 7.8 million gallon capacity basin and over a mile of pipelines for waste effluents from High Level

Nuclear Waste Tanks and process condensate from the 242-A Evaporator. The public is legally entitled to review the SEPA documentation regarding whether there are potential significant impacts to the environment or human health and whether there are alternatives that would reduce or eliminate potential impacts at the same time the public reviews and comments on the permit.

We raised the need to have SEPA documentation (which may have included a threshold determination, Mitigated Determination of Non-Significance or adoption of prior NEPA and SEPA reviews of potential impacts) in our comments on the initial draft during phase one of the permit modification process. We were told then that SEPA review and documentation would occur and be presented for the final permit modification. The potential for significant impacts is clear from the scale of the proposed projects. However, the applicant (USDOE) and Ecology have failed to provide any SEPA documentation analyzing impacts or showing why they believe there will be no impacts due to adopted mitigation measures.

Response to O-2-4

The first portion of a Class 3 permit modification is permittee-initiated and would not include a SEPA determination. A SEPA determination has been made for this second portion of a Class 3 modification. See that determination on the fact sheet associated with this proposed permit modification.

Comment O-2-5

The agencies' fact sheet has one link for documentation regarding the permit, which is to the administrative record for the submission of the 524 page permit for the 242-A Evaporator permit modification, July 8, 2020 (20-ECD-0032), and the link for the 1532 page permit modification submittal for the LERF and 100 Area ETF:

https://pdw.hanford.gov/document/AR-03744. There are no other links or documents provided for review.

Response to O-2-5

Ecology has also raised concerns that the permit modification did not include all the supporting documentation as expected and agreed to in the informal review. Ecology provided comments to the permittees in the technical review in which additional information was requested and provided by the permittees for the second portion of the Class 3 permit modification. In addition, Ecology is proposing additional permit conditions requiring upgrades to the leak detection system for the draft permit modification. Ecology will ensure all relevant documents are included with that future permit modification.

Comment O-2-6

Basin 41 was designed and dug out in 1990. It will have two geotextile liners and a bentonite clay - soil mixture base and a “floating” cover. There are no SEPA or NEPA analyses of alternatives, especially for the danger level of these wastes and potential for long term release, or of mitigation measures such as limiting the time for use of the basins. Nor are there analyses of potential impacts from leaks in the pipelines and tanks (or alternative measures to detect and respond to leaks) which the permits would allow to be added.

Response to O-2-6

SEPA analysis for construction of Basin 41 is not in the scope of this permit modification.

For the 242-A components (PC-5000/3"-WTP-002-M17) tie in to the Basin 41 modificaiton, see response to comment O-2-4.

Comment O-2-7

The potential for leaks is more than hypothetical, and their potential impacts are significant. Ecology acknowledged this at the August 18, 2020 public meeting, in response to a question and comment from Heart of America NW’s Gerry Pollet. Indeed, the 242-A Evaporator has not been operating for two years due to corrosion of a transfer line. This was not disclosed in any materials. Yet there is no SEPA (or NEPA) document to review regarding the potential for leakage, the potential impacts from leakage, or of mitigation measures needed to detect and respond to them promptly.

Response to O-2-7

The failed transfer lines are out of scope for this proposed permit modification. See response to O-2-4 for responses regarding a SEPA determination.

Comment O-2-8

Ecology disclosed, in response to a question from Gerry Pollet during the meeting, that a report on leak detection capability was being prepared and was under review as of the August 18, 2020 public meeting on the permits, Heart of America NW’s Gerry Pollet requested that the agencies provide the report and place a link to it on the comment page to enable informed public comment. This might have alleviated the failure to prepare any SEPA documentation regarding leak potential and impacts. However, the report was never provided or placed on the website for this comment period.

Response to O-2-8

Ecology committed to provide the document for public review a supporting documentation and is provided for the second portion of the Class 3 permit modification.

Comment O-2-9

The only cure is a "do-over." If Ecology does not follow its own requirements to ensure that Ecology officials have SEPA documentation to review accompanying the permit proposal, then why should any other agency? If the public does not have SEPA documentation for this proposal from Ecology, why would other agencies ensure that their permit proposals are accompanied by the agency's SEPA Determinations or EIS?

Ecology can not simply ignore SEPA for a major RCRA permit modification to open up a 7 million gallon basin, over a mile of high level waste pipelines and numerous tanks.

Response to O-2-9

See response to O-2-4 for responses regarding SEPA determination.

Comment O-2-10

Leak Detection Requirements are Inadequate and Do Not Meet Legal Requirements: Pipeline PC-5000 will be 5,000 feet - over nine tenths of a mile (.95 mile). The line to transfer process condensate from the Waste Treatment Plant will be 2,380 feet. Yet, USDOE proposes to have just ONE single electronic leak detection point at the end of the pipelines at the Basins. See Permit Sections 4.1.2.1, 4.1.37.3.3, 4.1.51. Ironically, USDOE proposes to remove the words "single point" for detection capability and replace it with "end of line" leak detection. The semantic change is solely to avoid embarrassment of having a permit that allows for "single point" of detection at the end of 5,000 feet of piping.

A leak in the secondary piping (encasement) would render the entire end of line detection point irrelevant. If waste leaks through the primary line, there is a significant chance that: a) it will not flow most of a mile through the secondary pipe to the end point (the waste is not water); and, b) that there will also be a leak in the secondary pipe.

However, the entire leak detection system depends on waste flowing for as much as nine tenths of a mile through the secondary piping to the end point detection. The capability of the single endpoint electronic leak detection (and visual sight glass backup) is woefully inadequate. At the August 18 meeting, the agencies responded to us that the leak detection limit is 1.5 gals per hour to be captured at end point to be reported in 24 hours. Thus, leaks of up to 36 gallons a day would be allowed to go without discovery or notification. Leakage of these wastes at such large quantities would violate the relevant CERCLA and HWMA leak reporting requirements.

Section III.4.c.4.a provides for visual inspection just once a day at the LERF catch basin if electronic detection is inoperable. If there is any evidence of leakage, the visual inspections should be at least once every eight hour shift. However, transfers should be halted pursuant to a new permit condition if there is any credible evidence of a release or leakage.

Ecology and the public both need to consider a SEPA analysis of alternatives to mitigate the potential for leakage, including installation of additional electronic leakdetection systems (using liquid detection and radiation and chemical vapor monitoring).

Ecology should not approve the permit until additional leak monitoring and detection capability is determined and added to the permit.

Section III.4.c.4.b of the proposed 242-A permit provides that USDOE would not need to notify Ecology of failure or inoperability of leak detection capability for transfers to LERF Basins 41 or 43 for 90 (ninety) days.

This must be rejected. The permit should specify that USDOE must immediately notify Ecology when it has information that the leak detection equipment may be inoperable.

The permit should specify that no transfers may occur while leak detection is inoperable.

The permit should also specify that if there is doubt regarding its functionality (e.g.,minimum detection or that waste may be leaking) then increased visual inspection of the line as well as the alternative visual leak detection site must occur at least every 8 hours.

The relevant legal requirements for permitting and waste transfer via pipeline require operable leak detection. Going 90 days without even notifying Ecology that the single end point electronic detection is inoperable makes a travesty of the legal requirements.

The permit must set much lower minimum detection limits (hourly, daily, and weekly) and require reporting leaks immediately. Ecology should not be waiving the minimum standard for detection of releases in 24 hours. USDOE proposes (III.4.2.1) to replace a meaningful standard with detection “at earliest possible time.” This is meaningless as a permit condition and does not meet legal requirements.

USDOE seeks to have 90 days to demonstrate that it will meet an alternative standard. USDOE has had years to prepare this permit. The permit should set a firm enforceable standard that the public can review and have confidence in the required release detection capability and reporting.

WAC 173-303-64(4)(b) “Containment of Releases” and (4)(c)(ii) require that secondary containment must detect failures of either primary or secondary containment within twenty four (24) hours or earliest practicable time only “if existing detection technologies or site conditions will not allow detection of a release within 24 hours.” Site conditions do not preclude detection of releases within 24 hours.

Detection technologies are readily available to meet the requirement to detect releases in the primary or secondary containment at far lower minimum detection limits than the 1.5 gallons an hour currently proposed.

Indeed, because the wastes being transferred are radioactive, it is (ironically) easier to detect releases using several different technologies. As we comment earlier, additional electronic detection points may easily be added to the pipelines.

Permit section III.4.c.1 does not even include the relevant WAC language providing for an alternative to detection of failure and release within 24 hours ONLY IF the detection

technologies do not exist or site conditions preclude detection. Rather the proposed permit language simply cuts off the full language of the WAC and proposes to waive the standard.

The IQRPE (Meir) at 2.2 states that two leak detection systems for the encasement drain piping systems will be used rather than the one end point actually in the permit.

USDOE seeks approval of a permit with a waiver of the requirements for secondary containment and to notify Ecology of releases from primary or secondary containment within 24 hours. See III.J.2 for transfer lines WTP's EMF to LERF.

This should be rejected. USDOE should be required to meet the 24 hour notification, if not have real time notification required due to the nature of these wastes, the length of the pipelines, etc. If this alternative were available for this facility and transfer lines, Ecology would have to grant the same waiver anywhere in Washington. USDOE, the permit applicant, has a record of failing to notify Ecology in a timely manner of releases.

Consideration of the permittee's prior noncompliance for notifications is also highly relevant.

To qualify for the variance requested, WAC 173-303-640(4)(i)(D) requires disclosure and consideration of the characteristics and contents of the wastes in the transfer lines and storage facilities / vaults.1 USDOE has failed to disclose the waste quantities, characteristics, concentrations for secondary wastes from DFLAW which will be concentrated in EMF and then transferred in the pipelines and units subject to this permit modification. In order to qualify, USDOE must disclose, and Ecology consider,the maximum dangerous waste and radioactive constituent concentrations.

Response to O-2-10

Ecology shares the same concern about the adequacy of the leak detection system. Ecology approved the low-point leak detection system in the previous modification, but required USDOE submit a leak demonstration report. USDOE provided the leak demonstration report and Ecology provided comments that the report failed to consider existing detection technologies or site conditions. Ecology believes upgrades to the leak detection systems are feasible and that site conditions do not preclude these upgrades. As a result, Ecology is including permit conditions to require the permittees to provide a leak detection system which has the capacity to detect a leak earlier. These upgrades will require a subsequent permit modification. The public will have a chance to review those upgrades during the public comment review for that modification.

The permit allows for visual inspection of the sight glass if the electronic system is inoperable.

Comment O-2-11

The sumps and vaults in the proposed permit do not have 100% containment capacity as required by Washington's HWMA and RCRA:

This is a serious shortcoming for the highly radioactive and dangerous wastes generated and being transferred from DFLAW.

USDOE contends that an internal building floor with no berming is containment for the sump or vaults. This does not meet the RCRA / HWMA requirements and poses a grave risk of worker

exposure to dangerous wastes as well as the potential for ultimate escape and release to the environment. Allowing waste to spread over a large area of sealed concrete floor is not containment. This is compounded by use of older equipment and not requiring automatic backflow detection and overflow prevention. Instead the sump relies on visual observation.

Response to O-2-11

The aqueous waste generated from Direct Feed Low-Activity Waste (DFLAW) is process condensate from evaporator overheads.

Secondary containment requirements for the tank systems at the 200 Area Effluent Treatment Facility meet the WAC 173-303-640(4)(b), and the container storage areas meet WAC 173-303-630(7) containment requirements. These containment systems have adequate capacity to prevent a release to the environment. The Permit has appropriate controls and practices in place to prevent spills and overflows from the tanks or containment systems.

Daily visual inspections are conducted for the above ground portions of the tank systems to detect for corrosion and releases of waste in accordance with WAC 173-303-640(7). Tank system instrument monitoring is also provided for overfill and leak detection as described in Chapter 6, Procedures to Prevent Hazards.

Comment O-2-12

Reliance on Visual Inspection of sumps, tanks, and collection points and only 1 Electronic Detection is Inadequate and Should be Rejected:

WAC 173-303-640 (4)(e) requires secondary containment for 100% of the volume of a tank or vault with dangerous waste.

Tank CA-1 has a capacity of 35,600 gallons and Tank C-100 a capacity of 17,800 gallons. There are 33,400 gallons of waste which may be stored in 330 gallon “totes.” None of these are being required to meet the legal standard for 100% secondary containment.

The WAC also requires that the system protect against formation of vapors. The wastes include ammonia, VOCs and other hazardous vapor emitting wastes. There are no provisions to control and protect workers from formation and release of vapors in event of a leak or release.

Tank CA-1 is located over the operator platform. In event of a release, vapors are likely to prevent operator access or to result in serious injury and illness. The permit must have provisions to ensure that hazardous vapors do not form from releases. As with containment, USDOE callously assumes that interior spaces will perform as containment despite the obvious serious health hazard if the floors and operator accessible vaults are used as containment.

The lack of 100% containment for the sumps, sump pumps and other collection points and tanks is exacerbated by the legally inadequate proposed reliance on visual inspection (with apparently one point of electronic leak detection). Sump tank 59ATK-3 will only have a “sight glass to indicate level” and manual pump for overflow protection, instead of automatic cutoff. Reliance on proper following of protocols for visual inspections is particularly inappropriate in event of other upset conditions in the facilities which may interfere with visual inspections, simple operator inattention, and due to a history of the Hanford site contractors even ignoring

results of alarms for overflows and leaks (e.g., Tank AY-102). A recording of any overflow or release event is vitally important for permitting and to ensure that a release is reported in a timely manner.

Reliance on a written report following visual inspection is not acceptable. USDOE has failed to specify in the permit how releases will be contained. Rather, USDOE relies on the entire building floor and walls as containment, which wouldprevent the workforce from entering and carrying out other essential activities or immediate repairs. The failure to address vapors would mean that the workers in the vicinity of a release or re-entering the space would face serious exposure and illness. Only one tank will also have a manual override instead of all tanks in the event of equipment malfunction. This opens additional routes of potential release. The permit should require manual overrides as well as electronic release notifications and routine inspections.

Response to O-2-12

The 242-A Evaporator is not permitted to store waste in totes, which would be categorized as container storage.

The 242-A Evaporator maintains a negative pressure in rooms where vapors are most likely, respective to areas where personnel are generally located. The air in these rooms are collected, treated in through a HEPA treatment train, and released to the atmosphere. See Chapter 4.0, Process Information for a more detailed description.

The rooms that contain the tank systems in the 242-A Evaporator provide 100% containment for potentially released waste.

The 242-A Evaporator will use the electronic leak detection system for waste transfers through the PC-5000/3"-WTP-002-M17 lines, and will only rely on visual inspection at the catch tank if the electronic system is inoperable. Ecology must be notified if the electronic leak detection system is out of service in accordance with permit condition III.4.C.4.b.

Comment O-2-13

A Groundwater Monitoring Plan is Required and Should be Part of the Permit Now, Not Added Later:

The LERF permit proposes to add Addendum O for groundwater monitoring at a later date to be determined. As we have shown above, there are significant concerns over the nature of the wastes and potential for leakage from basins or pipelines. Whether appropriate groundwater monitoring requirements will be part of the permit must be answered now to determine if other permit provisions are adequate.

New constituents from DFLAW need to be added to the groundwater monitoring plan along with new wells. Permitting a massive basin without groundwater monitoring is simply not permissible. The considerations of where groundwater monitoring wells are needed may determine other design elements. This includes fundamentals of whether the dike built in 1990 and plan for soil/bentonite and geotextile are adequate when considering potential migration routes for groundwater monitoring.

“Procedures to Prevent Hazards” is another required permit element which should be part of this permit at this time, rather than also be deferred to a date to be determined.

Response to O-2-13

Groundwater monitoring at LERF/ETF is out of scope for this modification.

Comment O-2-14

Ecology should add a firm closure date for the LERF basins - which have a life of 30 years (Meir IQRPE), a fifteen year assessment for the newest basin, and five year assessments for the decades old basins. Groundwater monitoring conditions must be part of this permit to have a meaningful system to ensure that there will be evaluation of fitness for use.

Response to O-2-14

Closure dates for LERF/ETF is out of scope for this modification.

Comment O-2-15

Please disclose the constituents and concentrations in “brine” which was referred to in presentations on October 9 and is the term added to the permit describing wastes to be permitted, e.g., regarding 2025-E containerized wastes to be permitted and stored in addition to dry powder wastes (see, for example, page A.6). Please provide annual quantities and total amounts allowed to be stored.

“Brine” sounds as if it is a saltwater solution. Indeed, that is its dictionary definition. “Brine” is not a defined term pursuant to the dangerous waste rules in WAC 173-303-040. Without disclosure of the contents in the permit and fact sheet, USDOE cannot use this term and Ecology cannot have an undefined term with no limitations and description on dangerous waste constituents.

Use of the term “brine” is misleading and not permissible without describing the specific constituents. Without these disclosures, it is not possible to comment on adequacy of the permit conditions for storage in a facility which is currently permitted only for storage of dry powder.

Response to O-2-15

The brine concentrations for hazardous chemicals are managed by the waste acceptance process. Prior to wastewater acceptance at LERF and 200 Area ETF, a generator must provide a waste profile with supporting knowledge, data, and documentation. A completed and adequate waste profile is evaluated against the LERF and 200 Area ETF waste acceptance criteria provided in Addendum B, Waste Analysis Plan, to determine whether an aqueous waste stream is treatable. Depending on the source of the treatment campaign, powder or brine generated from the secondary treatment train may require additional treatment (grout) to meet RCRA Land disposal Restrictions (LDRs), and waste acceptance criteria for the RCRA disposal facility [e.g., Integrated Disposal Facility (IDF)].

A review of the current wastes being treated at ETF shows that organic constituents are only present in the brine in trace amounts because they are removed by the Main Treatment Train and the Evaporator. All of the RCRA hazardous inorganic constituents are likely to be present at

concentrations below 0.1 weight percent. The most prevalent constituents at this time are fluoride, barium, chromium, nickel, and vanadium.

The LERF/ETF Addendum A, Part A Form provides an estimated annual quantity of waste for container storage and treatment. The ETF process operates at a brine production ratio range of 0.015 (gallon brine/gallon feed) to 0.001 (gallon brine/gallon feed) depending on many factors that are evaluated for each process campaign. WTP DFLAW feed is expected to run toward the higher end of the brine ratio.

The LERF-ETF Facility is out of scope of this permit modification.

Appendix A. Copies of All Public Notices

Public notices for this comment period:

- Fact sheet
- Classified notice/advertisement in the Tri-City Herald
- Notices sent to the Hanford-Info email list
- Notices posted on Washington Department of Ecology – Hanford's Facebook and Twitter pages

PUBLIC COMMENT PERIOD

Class 2 Permit Modification for 242-A Evaporator Transfer Line Connection to Liquid Effluent Retention Facility Basin 41

Fact Sheet

GET INVOLVED

Comment Period
July 10 – Sept. 8, 2020

Virtual Public Meeting
Aug. 18, 5:30 p.m.
(see page 3 for details)

Send comments by Sept. 8 to
http://nw.ecology.commentinput.com/?id=cDGs4

Administrative Record:
https://pdw.hanford.gov/document/AR-03743

Contact Information

Dana Gribble
(509) 961-5609
Dana_C_Gribble@rl.gov

Daina McFadden, Ecology
(509) 372-7950
Hanford@ecy.wa.gov

The 242 A Evaporator facility is a vital facility for managing waste tank space.

The U.S. Department of Energy (DOE) is providing notice of a 60-day public comment period on a proposed Class 2 modification to the Hanford Dangerous Waste Permit. This proposed permit modification would allow connection of the 242-A Evaporator facility PC-5000 transfer line to a new basin (Basin 41) at the Liquid Effluent Retention Facility (LERF).

Background

The Hanford Site is located in southeastern Washington state along the Columbia River. The 580-square-mile site was created in 1943 as part of the Manhattan Project to produce plutonium for the nation's defense program. Today, waste management and environmental cleanup are the main missions at Hanford.

The DOE and its contractor Washington River Protection Solutions are requesting a Class 2 modification to the 242-A Evaporator operating unit group of the Hanford Dangerous Waste Permit. The 242-A Evaporator facility is a mixed-waste treatment and storage unit that concentrates the liquid portion of double-shell tank waste. The facility is located in the 200 East Area of the Hanford Site (see map).

Class 2 Permit Modification for 242-A Evaporator Transfer Line Connection to Liquid Effluent Retention Facility Basin 41

Overview

The Hanford Dangerous Waste Permit establishes requirements to ensure that waste management activities protect human health and the environment. DOE is proposing a Class 2 permit modification pursuant to WAC 173-303-830, which requires a 60-day comment period, a public meeting, a newspaper notice, and a mailing list notice. This fact sheet is the mailing notice.

Summary of Changes

If approved, the modification would allow DOE to connect the 242-A Evaporator facility PC-5000 transfer line to Basin 41 at the LERF.

Permit Chapters Affected by this Modification

- Permit Conditions
- Chapter 1, Part A Form
- Chapter 4, Process Information
- Chapter 6, Procedures to Prevent Hazards

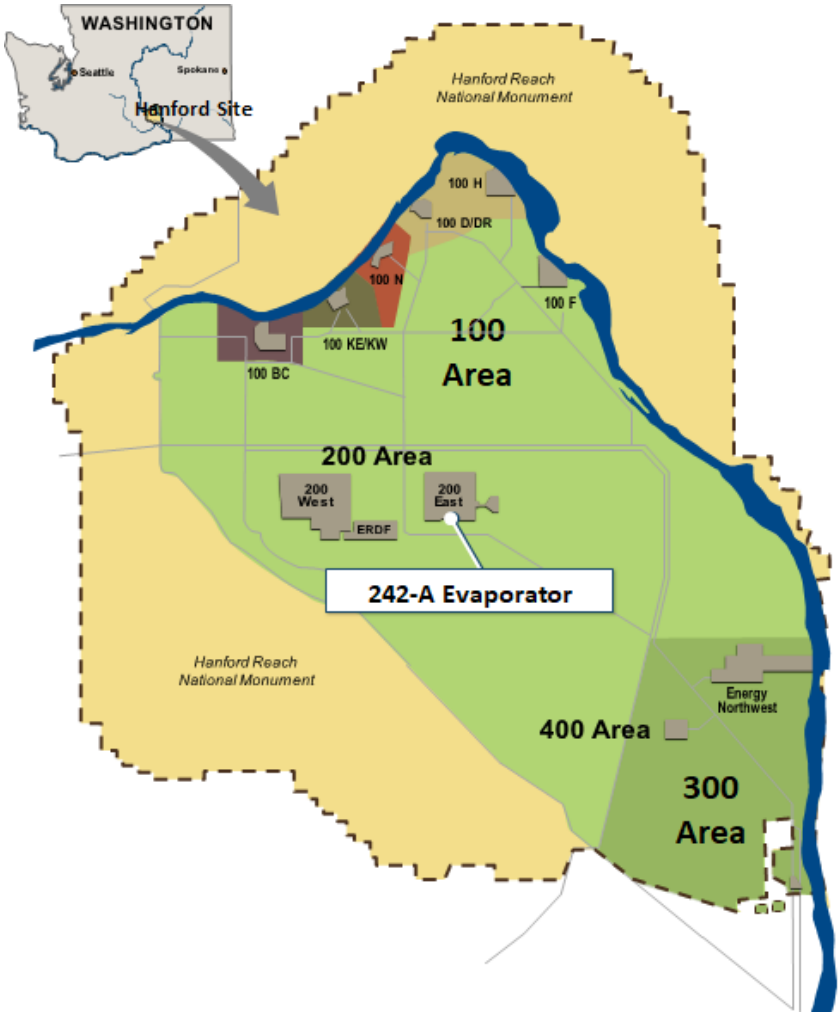

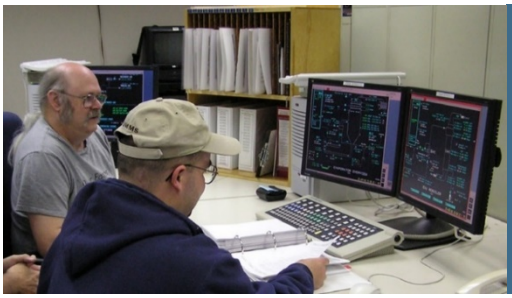

The 242-A Evaporator facility is monitored closely by the operations staff in the evaporator control room.

242 A Evaporator facility at night.

Class 2 Permit Modification for 242-A Evaporator Transfer Line Connection to Liquid Effluent Retention Facility Basin 41

Public Involvement

A 60-day public comment period will begin July 10, 2020, and continue through Sept. 8. A virtual public meeting will be held Aug. 18, at 5:30 p.m. PT, and will include two separate meetings with brief presentations. The first presentation will introduce the 242-A Evaporator facility modification for connecting the PC-5000 transfer line to Basin 41. The second presentation will introduce the LERF and 200 Area ETF modification for the construction of Basin 41. These two topics are being combined in response to recommendations made by the public to combine topics when it makes sense to do so.

You can view the presentation, hear the speakers and ask your questions. To participate via GoToWebinar, please follow the instructions below.

Click the GoToWebinar link: https://attendee.gotowebinar.com/register/2848563455984023821;
ID #: 903-104-371

Audio: 1. Dial +1 509-372-3087 (local) or +1 800-664-0771 (long distance)
2. Enter Conference ID: 1333#

All comments must be submitted by Sept. 8, in writing by mail or electronically (preferred) to:

Washington State Department of Ecology
3100 Port of Benton Boulevard
Richland, WA 99354
http://nw.ecology.commentinput.com/?id=cDGs4 (preferred)

At the conclusion of the public comment period, the Washington State Department of Ecology will address public comments and prepare a Response to Comment document.

Copies of the proposed plan and supporting documentation will be available online during the public comment period in the Administrative Record at https://pdw.hanford.gov/document/AR-03743. Hanford Public Information Repository locations are listed at https://go.usa.gov/xVDTS.

The permittee's compliance history during the life of the permit being modified is available from the Washington State Department of Ecology contact person.

Please contact Dana Gribble, Dana_C_Gribble@rl.gov, (509) 961-5609 at least 10 working days prior to the event to request disability accommodation. DOE makes every effort to honor disability accommodation requests.

Dana Gribble
P.O. Box 450, H6-60
Richland, WA 99352

Daina McFadden, Ecology
3100 Port of Benton Boulevard
Richland, WA 99354

Class 2 Permit Modification for 242-A Evaporator Transfer Line Connection to Liquid Effluent Retention Facility Basin 41

Public Involvement Opportunity

We want to hear from you.

Comment Period:

July 10 – Sept. 8, 2020
Public Meeting: Aug. 18, 5:30 p.m. (see page 3 for details)

Class 2 Permit Modification Fact Sheet
U.S. Department of Energy
P.O. Box 450, H6-60
Richland, WA 99352

AL DIAZ adiaz@miamiherald.com

Black Lives Matter protesters block the streets of Wynwood in Miami on June 13. Recent data has led epidemiologists to question whether large outdoor gatherings have served as the "superspreader" events they initially feared — and is providing them with further evidence that major coronavirus spreading events are occurring primarily at indoor facilities.

Scientists doubt Floyd protests led to spikes in COVID-19 cases

BY MICHAEL WILNER AND BEN WIEDER
mwilner@mcclatchydc.com
bwieder@mcclatchydc.com

WASHINGTON

A month after mass demonstrations against racial injustice filled city streets across America, epidemiologists and a McClatchy analysis of COVID-19 case data suggest the protests did not lead to dramatic increases in transmission, providing further insight into what does — and doesn't — lead the coronavirus to spread.

To the surprise of some epidemiologists, the surge of protests following George Floyd's death in Minneapolis police custody on May 25 hasn't consistently led to a surge in COVID-19 cases in the cities where those protests occurred.

Some metropolitan areas such as Miami, Dallas and Boise have seen increased case counts and "positivity rates" — the percentage of coronavirus tests that come back positive — since May 25. But other cities that had some of the largest protests, such as Minneapolis, Chicago, Washington and New York, have actually seen a decline in case counts and prevalence of the virus, as measured by the percentage of positive tests.

If the protests had played a direct and meaningful role in the coronavirus spikes, epidemiologists say they would have expected to see a consistent trend throughout cities across the country that saw mass demonstrations. But that has not occurred.

In Miami, for example, the positivity rate was roughly 4% on May 25. Since June 15, it's been in double digits practically every day, and has even topped 20% on a handful of days.

By contrast, in Washington, D.C., the positivity rate was above 10% in late May, but has consistently been below 5% since mid-June.

The recent data has led epidemiologists to question whether large outdoor gatherings have served as the "superspreader" events they initially feared — and is providing them with further evidence that major coronavirus spreading events are occurring primarily at indoor facilities.

"There was a concern that large group mass gatherings would be risky," said Dr. David Alden Drew, an epidemiologist at Massachusetts General Hospital and the Harvard T.H. Chan School of Public Health, referring to the Floyd demonstrations. "But I haven't seen any compelling data that shows there are spikes in incidence related to this."

"It is consistent with what we've been seeing, that indoor events are much more dangerous than outdoor events, for sure," Drew said.

Scientists examining the linkage between protests and spiking cases have struggled with a multitude of factors. Many cities began reopening around the same time that the protests began, which also coincided with Memorial Day, a major federal holiday for family and community gatherings that marks the start of warmer weather.

Some states are not tracking positivity rates at the city or county level, making it impossible to determine whether an increase in cases has been driven by the introduction of the virus in rural areas versus in cities that experienced protests.

But overseas, in countries with robust contact tracing programs, scientists have most commonly linked superspreading events to indoor facilities. Epidemiologists are increasingly confident that risk is especially pronounced in restaurants and bars — public venues where individuals must remove their masks to eat and drink.

In the United States, experts note that cities which saw the largest protests and are showing a decline in coronavirus cases — such as Washington and New York — prohibited indoor dining throughout most of June, while those that opened up indoor facilities in May are the ones seeing increases.

"Most of the cases where you've seen superspreading events have been indoors — choirs and churches, bars and restaurants. And those are generally indoor places," Lloyd Hough, a senior official and biology expert with the Department of Homeland Security's Science and Technology Directorate, told McClatchy this week.

McClatchy analyzed four weeks of data in a handful of cities where demonstrations took place, examining case numbers and positivity rates, when available, since the week before the Floyd protests began. The positivity rate is one statistic that epidemiologists have identified as a reliable marker to determine whether prevalence of COVID-19 is actually increasing, or whether higher case numbers are due to increased testing.

LIMITED DATA

When available, McClatchy examined case counts leading up to Floyd's death on May 25, and in the weeks following, since epidemiologists say there is normally a lag time of one to two weeks between when people are infected with COVID-19 and when they are tested.

McClatchy looked at daily case count and testing data at the city or county level — for Boise it was the public health district which includes the city — through the end of June.

The analysis showed that some cities, such as New York and Washington, which had some of the largest protests in the country saw a decline in both raw cases and the percentage of positive tests in the weeks following the protests, while other cities, such as Miami and Dallas, saw increases in both after the protests.

Some jurisdictions don't release testing data at a city or county level, making it impossible to determine the rate of COVID-19 tests that are positive. Still, it's possible to draw some conclusions by looking at raw case counts and statewide positivity rates.

In the two weeks prior to May 30, when protests in Raleigh began, COVID-19 cases increased 47% and the average daily increase was 39 in Wake County, the second most populous county in North Carolina. In the two weeks following May 30, positive cases increased 79% and the daily average of new cases more than doubled to 95.

While the number of completed tests in Wake County has not been released, the positive rate for the state during that time increased steadily from 6% to 10%, which suggests that the positivity rate might have increased in Wake County during that time period. The state began to reopen in late May, right before the protests, making it difficult to determine whether the increases were due to eased restrictions or the protests.

By contrast, Minneapolis, where Floyd died, saw a decreased number of cases in the weeks following his death. While the positive test rate isn't available for Minneapolis or for the county it's in, Hennepin County, the positive test rate dropped dramatically statewide.

In Florida, which has seen a large spike in positivity both in Miami-Dade County and across the state, the spike started in mid-June, as the county's positivity rate started creeping into double digits, where it has mostly remained ever since, topping 20 percent on a handful of days.

Miami-Dade County Mayor Carlos Gimenez blasted graduation parties and restaurants not following social distancing rules, but also attributed some of the spike to protests, without offering further evidence of how the protests and COVID-19 increase were linked. The county also began to reopen in late May, right before the protests began.

Further complicating the matter is that younger Americans — who were more likely to engage in protests, are less likely to exhibit symptoms and are less likely to get tested — have been driving recent coronavirus spikes in several communities across the South.

News & Observer database editor David Raynor and Miami Herald reporter Doug Hanks contributed to this report.

Michael Wilner: 202-383-6083, @mawilner
Ben Wieder: 202-383-6125, benbwieder

Join the Movement!
Restore Passenger Rail Service to Central Washington

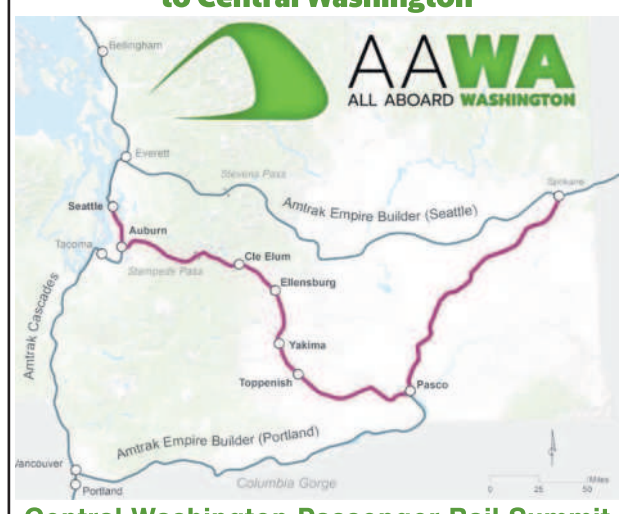

Central Washington Passenger Rail Summit
Saturday, July 11 / 1 to 3 pm
Learn how passenger rail serving the Yakima Valley, Kittitas County, the Tri-Cities, Spokane and Seattle can benefit our communities and economic recovery.
Register for Zoom event at https://www.AAWA.us/events
Or view on TVW cable and https://www.TVW.org/

THE HANFORD SITE

Learn About a Permit Modification for a 242-A Evaporator Transfer Line Connection to the Liquid Effluent Retention Facility Basin 41

PUBLIC COMMENT PERIOD: JULY 10 – SEPT. 8, 2020

The U.S. Department of Energy (DOE) is providing notice of a 60-day public comment period on a proposed Class 2 modification to the Hanford Dangerous Waste Permit. This proposed permit modification would allow connection of the 242-A Evaporator facility PC-5000 transfer line to a new basin (Basin 41) at the Liquid Effluent Retention Facility (LERF).

A virtual public meeting will be held Aug. 18 at 5:30 p.m. and will include two separate meetings with brief presentations. The first presentation will introduce the 242-A Evaporator facility modification for connecting the PC-5000 transfer line to Basin 41. The second presentation will introduce the LERF and 200 Area Effluent Treatment Facility modification for the construction of Basin 41. In response to recommendations made by the public, these two related topics are being combined. You can view the presentation, hear the speakers and ask your questions.

To participate via GoToWebinar, please follow the instructions below:

Visual (presentation only):

https://attendee.gotowebinar.com/register/2848563455984023821;
ID #: 903-104-371

Audio:
1. Dial +1 509-372-3087 (local) or +1 800-664-0771 (long distance)
2. Enter Conference ID: 1333#

Visit https://pdw.hanford.gov/document/AR-03743 to review details on these proposed changes. All comments must be submitted by Sept. 8, in writing by mail or electronically to:

Washington State Department of Ecology
3100 Port of Benton Boulevard
Richland, WA 99354
eComments (preferred): http://nw.ecology.commentinput.com/?id=cDGs4

Questions? Please contact Dana Gribble at Dana_C_Gribble@rl.gov, or Daina McFadden, Washington State Department of Ecology, at Hanford@ecy.wa.gov.

The permittee's compliance history during the life of the permit being modified is available from the Washington State Department of Ecology contact person.

To request disability accommodation, please contact Dana Gribble, Dana_C_Gribble@rl.gov, 509-961-5609 at least 10 working days prior to the event.

Learn more about Hanford cleanup at www.hanford.gov

From:	^TPA
To:	HANFORD-INFO@LISTSERV.ECOLOGY.WA.GOV
Subject:	Notice of Upcoming Public Comment Period on Proposed Changes to the Hanford Dangerous Waste Permit
Date:	Tuesday, May 5, 2020 7:42:55 AM
Attachments:	image001.png

THE HANFORD SITE

This is a message from the U.S. Department of Energy

Notice of Upcoming Public Comment Period on Proposed Changes to the Hanford Dangerous Waste Permit

The U.S. Department of Energy is holding a 60-day public comment period on a proposed Class 2 permit modification to the Hanford Dangerous Waste Permit. This proposed permit modification is required to connect the 242-A Evaporator PC-5000 transfer line to the Liquid Effluent Retention Facility Basin 41.

The comment period is expected to begin in June, with a public meeting in July.

The proposed modification and supporting documentation will be available online during the public comment period at the Hanford events calendar, the Hanford Administrative Record, and at the Hanford Public Information Repositories.

A summary fact sheet and details of the public meeting will be provided when the comment period begins.

Questions? Please contact Jennifer Colborn, Mission Support Alliance, at Jennifer_M_colborn@rl.gov, or Daina McFadden, Washington State Department of Ecology, at Hanford@ecy.wa.gov.

Ecology logo

Visit us on the web and follow our news and social media.

Subscribe or Unsubscribe

From:	^TPA
To:	HANFORD-INFO@LISTSERV.ECOLOGY.WA.GOV
Subject:	Learn about two public comment periods to build a new Basin 41 and a transfer line to the 242-A evaporator at Hanford
Date:	Friday, July 10, 2020 7:13:41 AM
Attachments:	image001.png LERF-ETF_Fact+Sheet_Class+3+Basin+41_6.30.20+FINAL.pdf 242-A+Evaporator_Fact+Sheet_connect+Basin+41_6.30.20+FINAL.pdf

---

THE HANFORD SITE

This is a message from the U.S. Department of Energy

Notice of two Related Concurrent Public Comment Periods and a Combined Public Meeting on Proposed Changes to the Hanford Dangerous Waste Permit

1. Construction of Liquid Effluent Retention Facility Basin 41

The U.S. Department of Energy (DOE) is providing notice of a 60-day public comment period on a proposed Class 3 modification to the Hanford Dangerous Waste Permit. This proposed Class 3 permit modification is required to construct a new basin (Basin 41) at the Liquid Effluent Retention Facility and 200 Area Effluent Treatment Facility.

The proposed Class 3 permit modification and supporting documentation is available online during the 60-day public comment period at the Hanford events calendar, the Hanford Administrative Record, and at the Hanford Public Information Repositories.

---

2. Connection of the 242-A Evaporator Facility PC-5000 Transfer line to Basin 41

The U.S. Department of Energy (DOE) is providing notice of a 60-day public comment period on a proposed Class 2 modification to the Hanford Dangerous Waste Permit. This proposed Class 2 permit modification is required to connect the 242-A Evaporator Facility PC-5000 transfer line to the Liquid Effluent Retention Facility Basin 41.

The proposed Class 2 modification and supporting documentation is available online during the 60-day public comment period at the Hanford events calendar, the Hanford Administrative Record, and at the Hanford Public Information Repositories.

The comment periods runs July 10 through Sept. 8, 2020.

One combined virtual public meeting is scheduled Aug. 18 at 5:30 p.m.

Visual (presentation only):
Click the GoToWebinar link:
https://attendee.gotowebinar.com/register/2848563455984023821;
ID #: 903-104-371

Audio:
1. Dial +1 509-372-3087 (local) or +1 800-664-0771 (long distance)
2. Enter Conference ID: 1333#

Please see both summary fact sheets on the comment periods attached.

Questions? Please contact Dana Gribble, Mission Support Alliance, at dana_c_gribble@rl.gov,

or Daina McFadden, Washington State Department of Ecology, at Hanford@ecy.wa.gov.

To request disability accommodation, please contact Dana Gribble, Dana_C_Gribble@rl.gov, (509) 961-5609, at least 10 working days prior to the event.

Ecology logo

Visit us on the web and follow our news and social media.

Subscribe or Unsubscribe

From:	^TPA
To:	HANFORD-INFO@LISTSERV.ECOLOGY.WA.GOV
Subject:	Update about two public comment periods to build a new Basin 41 and a transfer line to the 242-A evaporator at Hanford
Date:	Tuesday, July 21, 2020 3:42:35 PM
Attachments:	image001.png LERF-ETF_Fact+Sheet_Class+3+Basin+41_6.30.20+FINAL.pdf 242-A+Evaporator_Fact+Sheet_connect+Basin+41_6.30.20+FINAL.pdf

---

THE HANFORD SITE

This is a message from the U.S. Department of Energy

Notice of two Related Concurrent Public Comment Periods and a Combined Public Meeting on Proposed Changes to the Hanford Dangerous Waste Permit

Supporting information was added to the 242-A Evaporator administrative record link (details below)

1. Construction of Liquid Effluent Retention Facility Basin 41

The U.S. Department of Energy (DOE) is providing notice of a 60-day public comment period on a proposed Class 3 modification to the Hanford Dangerous Waste Permit. This proposed Class 3 permit modification is required to construct a new basin (Basin 41) at the Liquid Effluent Retention Facility and 200 Area Effluent Treatment Facility.

The proposed Class 3 permit modification and supporting documentation is available online during the 60-day public comment period at the Hanford events calendar, the Hanford Administrative Record, and at the Hanford Public Information Repositories.

---

2. Connection of the 242-A Evaporator PC-5000 Transfer line to Basin 41

The U.S. Department of Energy (DOE) is providing notice of a 60-day public comment period on a proposed Class 2 modification to the Hanford Dangerous Waste Permit. This proposed Class 2 permit modification is required to connect the 242-A Evaporator PC-5000 transfer line to the Liquid Effluent Retention Facility Basin 41.

The Independent Qualified Registered Professional Engineer Design Assessment for LERF Basin 41 was included in the administrative record for the LERF ETF Class 3 modification noted above. On July 20, the same report was added to the administrative record link for the 242-A Evaporator permit modification for reviewers' convenience. It is located at the end of Attachment 4, Supporting Information.

The proposed Class 2 modification and supporting documentation is available online during the 60-day public comment period at the Hanford events calendar, the Hanford Administrative Record, and at the Hanford Public Information Repositories.

The comment periods runs July 10 through Sept. 8, 2020.

One combined virtual public meeting is scheduled Aug. 18 at 5:30 p.m.

Visual (presentation only):
Click the GoToWebinar link:
https://attendee.gotowebinar.com/register/2848563455984023821;

ID #: 903-104-371

Audio:
1. Dial +1 509-372-3087 (local) or +1 800-664-0771 (long distance)
2. Enter Conference ID: 1333#

Questions? Please contact Dana Gribble, Mission Support Alliance, at dana_c_gribble@rl.gov, or Daina McFadden, Washington State Department of Ecology, at Hanford@ecy.wa.gov.

To request disability accommodation, please contact Dana Gribble, Dana_C_Gribble@rl.gov, (509) 961-5609, at least 10 working days prior to the event.

Ecology logo

Visit us on the web and follow our news and social media.

Subscribe or Unsubscribe

Ecology - Hanford @ecyHanford · 4h

Two concurrent #Hanford public comment periods held by @HanfordSite/ @RiverProtection (@ENERGY) began today, and will run through Sept. 8.

Check out the details here: ecology.wa.gov/Waste-Toxics/N... @EcologyWA @EPAnorthwest @EPA

2 2

Washington Department of Ecology - Hanford

4 hrs ·

Two concurrent Hanford public comment periods held by the U.S. Department of Energy began today, and will run through Sept. 8.

Check out the details and submit your comments here: https://ecology.wa.gov/Waste-Toxics/Nuclear-waste/Public-comment-periods

1 1 Share

Like Comment Share

DEPARTMENT OF ECOLOGY
State of Washington

242-A Evaporator permit modification

Basin 41 Tie-in to LERF

- Public comment period Feb. 22 – Apr. 8, 2021.
- Modification proposal will allow the facility's existing transfer line to connect with the proposed Liquid Effluent Retention Facility (LERF) Basin 41.
- Reclassified from a Class 2 to a Class 3 permit modification to require changes to the leak detection system for the transfer line.

Public comment invited

The Washington State Department of Ecology (Ecology) is proposing a change to the Hanford Facility Resource Conservation and Recovery Act Permit, Revision 8C.

This change affects the Dangerous Waste Portion for the Treatment, Storage, and Disposal of Dangerous Waste for the 242-A Evaporator.

This permit modification would allow connection of the 242-A Evaporator PC-5000 transfer line to the proposed LERF Basin 41.

The permittees are:

U.S. Department of Energy
Office of River Protection
P.O Box 450
Richland, WA 99352

Washington River Protection Solutions
P.O. Box 850
Richland, WA 99352

LERF and 200 Area ETF also have a Class 3 permit modification to propose permit application material in support of constructing the LERF Basin 41.

Background

The Hanford Site occupies 560 square miles in southeastern Washington State. Beginning in 1943, the site produced plutonium for the nation's defense program. Plutonium production ceased in the late 1980s. Today, waste management and environmental cleanup are the primary missions at Hanford.

Reclassifying to a Class 3 permit modification

Originally proposed as a Class 2 permit modification, the permittees held a 60-day comment period from July 10 through Sept. 8, 2020, with a virtual public meeting on August 18, 2020. Ecology received comments from 12 members of the public during the public comment period. Thirty-two members of the public attended the public meeting and no formal comments were made during the virtual meeting.

Multiple public comments expressed concern with the adequacy of the leak detection system. Ecology shares similar concerns, and reclassified the permit modification to a Class 3 to address those concerns and require changes to the leak detection system.

Overview of changes

Currently, the line PC-5000 exits the 242-A building and transfers waste to LERF Basin 43. A second condensate line from Effluent Management Facility (EMF) connects to the PC-5000 at a caisson about halfway to LERF Basin 43. Use of the PC-5000 is administratively controlled by the 242-A Evaporator.

The Waste Treatment and Immobilization Plant (WTP) EMF transfer line, 3"-WTP-002-M17, connects to the PC-5000 line at caisson

MH-WTP-01. This proposed permit modification would allow connection of the PC-5000 line to the proposed LERF Basin 41, and require upgrades to the leak detection system for both the PC-5000 line and the EMF line.

Required upgrades

Ecology has concerns on the adequacy of the leak detection system for the PC-5000 and 3”-WTP-002-M17 transfer lines. In order for the leak detection systems to meet regulatory requirements, this proposed permit modification includes draft permit conditions requiring upgrades to these ystems.

Since the leak detection systems do not meet the WAC 173-303-640(4)(c)(vi), Ecology is proposing permit condition III.4.C.1 with conditions requiring upgrades of the leak detection systems prior to waste transfers.

Figure 1 242-A Evaporator Photo courtesy USDOE

Reviewing the proposed changes

Ecology invites to you to review and comment on this proposed 242-A Evaporator permit modification. See the back page for comment period dates and information on how to submit comments.

Copies of the application for the proposed permit and supporting documentation will be available during the public comment period online at Ecology’s website[1]. The documents will also be available at the Hanford Public Information Repositories listed on the next page.

Ecology will consider and respond to all significant comments received during the public comment period. We will document our responses and issue a response to comments document when we make our final permitting decision.

[1] Ecology.wa.gov/Waste-Toxics/Nuclear-waste/Public-comment-periods

Hanford's Information Repositories

Ecology Nuclear Waste Program
Resource Center
3100 Port of Benton Blvd.
Richland, WA 99354
509-372-7950

U.S. Department of Energy
Administrative Record
2440 Stevens Drive, Room 1101
Richland, WA 99354
509-376-2530

Washington State University Tri-Cities
Department of Energy Reading Room
2770 Crimson Way, Room 101L
Richland WA 99354

University of Washington
Suzzallo Library
P.O. Box 352900
Seattle, WA 98195
206-543-5597

Gonzaga University
Foley Center
502 E Boone Avenue
Spokane, WA 99258
509-313-6110

Portland State University
Millar Library
1875 SW Park Avenue
Portland, OR 97207
503-725-4542

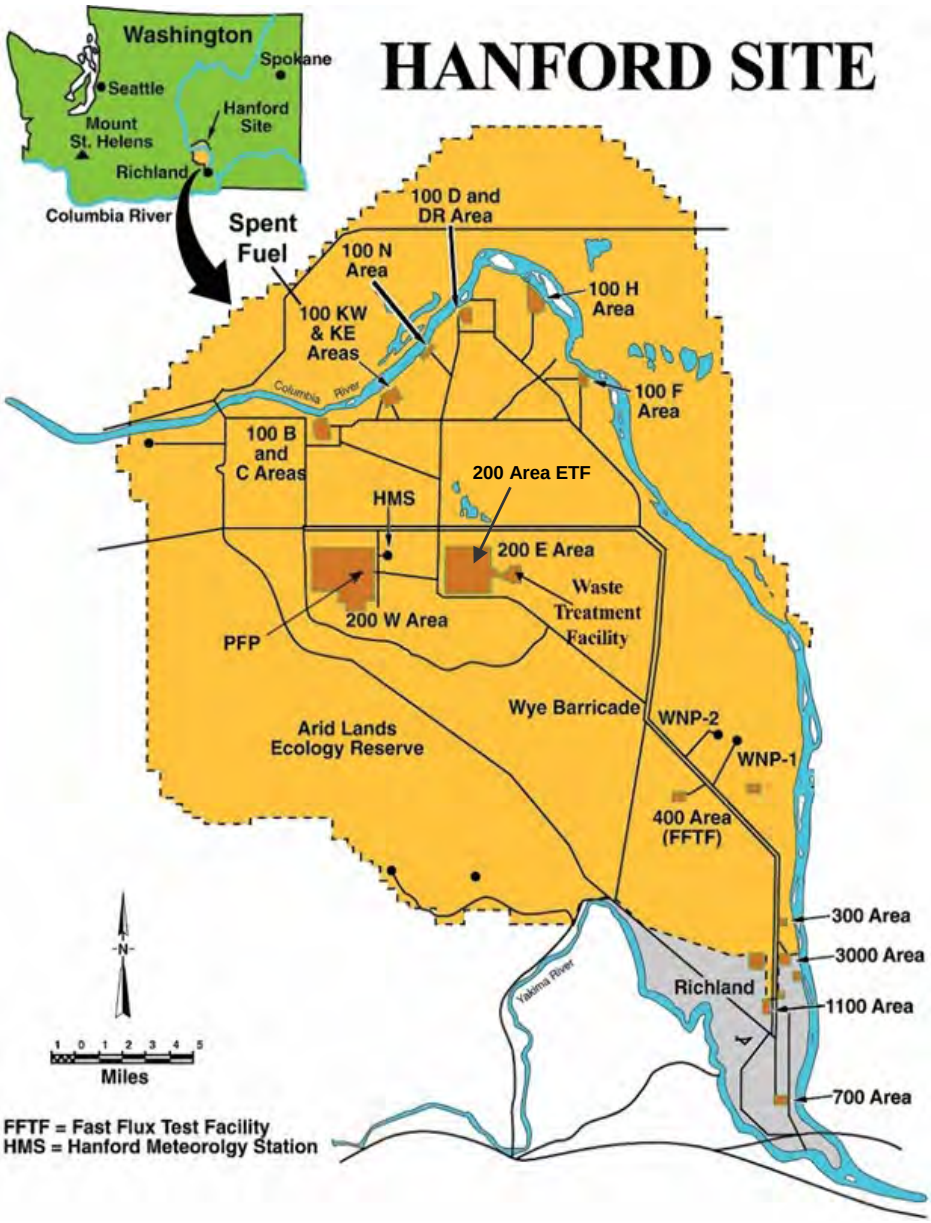

3100 Port of Benton Blvd
Richland WA 99354

242-A Evaporator permit modification – Basin 41 Tie in

Public comment period
Feb. 22 – Apr. 8, 2021

Electronic submission (preferred):
http://nw.ecology.commentinput.com/?id=7SCZm

Mail or hand delivery

Daina McFadden
3100 Port of Benton Blvd
Richland, WA 99354

A public hearing is not scheduled, but if there is enough interest, we will consider holding one. To request a hearing or for more information, contact:

Daina McFadden
509 372 7950
Hanford@ecy.wa.gov

To request an ADA accommodation, contact Ecology by phone at 509 372 7950, email at Daina.McFadden@ecy.wa.gov, or visit https://ecology.wa.gov/accessibility. For Relay Service or TTY call 711 or 877 833 6341.

DEPARTMENT OF
ECOLOGY
State of Washington

FACT SHEET

Proposed Permit Modification, 8C.2020.11D, of the *Hanford Facility Resource Conservation and Recovery Act Permit, Dangerous Waste Portion, Revision 8C, for the Treatment, Storage, and Disposal of Dangerous Waste,* Part III, Operating Unit Group 4, 242-A Evaporator, WA7890008967

February, 2021

This page is intentionally left blank.

FACT SHEET

Proposed Permit Modification, 8C.2020.11D, to Part III of the *Hanford Facility Resource Conservation and Recovery Act Permit, Dangerous Waste Portion, Revision 8C, for the Treatment, Storage, and Disposal of Dangerous Waste*, WA7890008967, Operating Unit Group 4, 242-A Evaporator

PERMITTEES

United States Department of Energy
Office of River Protection
PO Box 450, MSIN: H6-60
Richland, Washington 99352

Washington River Protection Solutions
PO Box 850, MSIN: H3-04
Richland, Washington 99352

The Washington State Department of Ecology (Ecology) developed this Fact Sheet in accordance with the requirements of Washington Administrative Code (WAC) 173-303-840(2)(f). Its purpose is to discuss the proposed draft permit modification to Part III of the *Hanford Facility Resource Conservation and Recovery Act Permit, Dangerous Waste Portion, Revision 8C, for the Treatment, Storage, and Disposal of Dangerous Waste* (hereafter called the Hanford Site-wide Permit).

This proposed draft permit modification will add the following to Operating Unit Group 4, 242-A Evaporator to Part III of the Hanford Site-wide Permit: Allow the permittees to connect the existing combined transfer line PC-5000/3”-WTP-002-M17 to the new Liquid Effluent Retention Facility (LERF) Basin 41. This draft permit modification also includes permit conditions requiring upgrades to the existing leak detection systems for these lines prior to waste transfer.

This Fact Sheet is divided into six sections:

1.0 Hanford Site-Wide Permit Background.
2.0 242-A Evaporator Dangerous Waste Management Unit Description.
3.0 Class 3 Permit Modification Process for the 242-A Evaporator.
4.0 Proposed Modification to Part III of the Hanford Site-wide Permit.
5.0 Procedures for Reaching a Final Decision on the Draft Permit Modification.
6.0 State Environmental Policy Act.

1.0 Hanford Site-wide Permit Background

Ecology’s Nuclear Waste Program (NWP) manages dangerous waste within the State by writing permits to regulate its treatment, storage, and disposal.

Ecology has the authority to regulate dangerous waste and the dangerous waste components of mixed (radioactive and dangerous) waste, under 70.105 Revised Code of Washington (RCW) and WAC 173-303. The Hanford Site-wide Permit has requirements for the treatment, storage, and disposal of dangerous and mixed waste at Hanford. Ecology does not regulate waste that is solely radioactive. The United States Department of Energy (USDOE) has the exclusive authority to regulate radioactive materials and radioactive waste at Hanford.

Ecology first issued the Hanford Site-wide Permit in 1994. Since 1994, the permit has been modified many times to incorporate changes or updates and to incorporate and closeout several Dangerous Waste Management Units (DWMUs).

The Hanford Site-wide Permit provides standard and general facility conditions, as well as unit group conditions for the operation, closure, and post-closure care of mixed and dangerous waste Treatment, Storage and Disposal (TSD) Units at Hanford. These TSDs are administratively grouped into operating, closure, or post-closure unit groups in the Hanford Site-wide Permit. Each unit group may contain one or more DWMUs.

The Hanford Site-wide Permit is organized as follows:

Part I	Standard Conditions.
Part II	General Facility Conditions.
Part III	Operating Units.
Part IV	Corrective Action for Past Practice Units.
Part V	Closure Units.
Part VI	Post-Closure Units.

Upon approval and issuance of this permit modification the 242-A Evaporator will be able to connect existing process condensate transfer lines, one from the 242-A Evaporator (PC-5000) and the other from the Effluent Management Facility (3”-WTP-002-M17), to the LERF Basin 41.

2.0 242-A Evaporator Operating Unit Group Description

The 242-A Evaporator consists of a conventional forced circulation tank system, providing treatment to Double-Shell Tank waste, and tank storage of process condensate generated during the evaporation process. The 242-A Evaporator receives waste from the Double-Shell Tank AW-102, called supernate, evaporates volatile compounds, routes the condensed tank waste, now called slurry, back to AW-102. In addition, the 242-A Evaporator condenses the evaporated compounds, collects and stores the condensate, and transfers the condensate to the LERF and 200 Area Effluent Treatment Facility for further treatment.

Type and Quantity of Waste

Chapter 1.0, Part A contains the type and quantity of waste managed at the 242-A Evaporator.

Basis for Permit Conditions

Ecology is proposing new permit conditions requiring upgrades to the leak detection systems for the combined PC-5000/3”-WTP-002-M17 transfer lines. These are contained in permit conditions III.4.C.1, III.4.C.1.a, III.4.C.1.b, III.4.C.1.c, and III.4.C.1.d. See more information in Section 3.0 below.

3.0 Class 3 Permit Modification Process for the 242-A Evaporator Operating Unit Group

USDOE proposed a Class 2 Permit Modification to the 242-A Evaporator on July 8, 2020. USDOE held a public comment period from July 10 through September 8, 2020, and a virtual public meeting on August 18, 2020. Ecology received 32 public comments during the public comment period from 12 members of the public or stakeholder groups. Thirty-two members of the public attended the virtual public meeting and provided no formal comments during the virtual meeting.

Concerns with the leak detection system started during informal review of an earlier permit modification to include the 3”-WTP-002-M17 transfer line into the 242-A Evaporator permit. That permit modification included permitting a single-low point leak detector at the tie-in of the PC-5000 line to LERF Basin 43. That single low-point leak detector was to replace the existing leak detection system which consisted of six discrete leak detectors spaced approximately 1000 feet apart along the length of the line. USDOE informed Ecology that the change had already been made several years earlier without the benefit of a permit modification or public input. During the informal review, USDOE provided Ecology a calculation estimating the minimum detectable leak rate for the single low-point leak detector. The

calculation noted that there was uncertainty in the minimum detectable leak rate due to the assumptions needed to arrive at an estimate. The calculation recommended a field test be performed to determine the minimum detectable leak rate. USDOE did not conduct this field test. Ecology determined the single low-point leak detector did not meet the requirements of WAC 173-303-640(4)(c)(iii). The single low-point leak detector was unable to detect leaks less than 1.6 gallons per hour. A demonstration has not been provided to support the assumption that a leak would be detected as soon as practicable. Ecology provided the formal review of this calculation in a letter to USDOE.

Ecology extended the decision period for that earlier Class 2 Permit Modification by 30 days, in accordance with WAC 173-303-830(4)(b)(vi)(A)(V) in a letter to USDOE. This letter required Ecology and USDOE resolve open comments on the leak detection system before a final decision could be made on the Class 2 Permit Modification. Ecology approved that permit modification and imposed a permit condition requiring USDOE to provide the leak detection demonstration required by WAC 173-303-640(4)(c)(iii).

The current permit modification proposes to install another single low-point leak detector where the PC-5000 line connects to the new LERF Basin 41. During the informal review, Ecology had questions about how the minimum detectable leak rate would be affected and how the two low-point leak detectors would function together. Ecology reclassified the current permit modification from a Class 2 to a Class 3 in accordance with WAC 173-303-830(4)(b)(vi)(B)(III)(AA). Ecology reclassified it due to concerns from Ecology and members of the public on the inability of the leak detection system to detect any leak within 24 hours, or as soon as practicable as required by WAC 173-303-640(4)(c)(iii).

Additionally, in order to fulfill the earlier permit condition III.4.C.1, USDOE provided a demonstration for the leak detection system for the PC-5000/3”-WTP-002-M17. After review, Ecology determined that this demonstration did not adequately consider existing detection technologies and site conditions, as required by WAC 173-303-640(c)(iii). Ecology provided a review of this demonstration in a letter to USDOE. Ecology believes upgrades to the leak detection systems are feasible and that site conditions do not preclude these upgrades.

Ecology has similar concerns that the leak detection systems for the PC-5000/3”-WTP-002-M17 tie-in to LERF Basin 41 in this draft permit modification do not meet regulatory requirements of WAC 173-303-640(4)(c)(iii).

Since Ecology determined the calculation and demonstration did not adequately justify the leak detection systems for the PC-5000/3”-WTP-002-M17 transfer lines, Ecology is proposing new permit conditions requiring upgrades to these systems prior to waste transfer. See the draft permit conditions III.4.C.1, III.4.C.1.a, III.4.C.1.b, III.4.C.1.c, III.4.C.1.d.

4.0 Proposed Modification to Part III of the Hanford Site-wide Permit

Class 3 permit modification 8C.2020.11D proposes to allow the 242-A Evaporator to connect the existing combined transfer line PC-5000/3”-WTP-002-M17 to the new LERF Basin 41. Currently, the combined transfer line is only connected to LERF Basin 43. Additionally, this proposed permit modification includes permit conditions requiring the permittees to upgrade the leak detection systems for these lines prior to waste transfer.

Permit documents included in this draft permit modification:

- Chapter 1.0, “Part A Form.”
- Chapter 4.0, “Process Information.”
- Chapter 6.0, “Procedures to Prevent Hazards.”
- *Independent Qualified Registered Professional Engineer Design Assessment Report for Liquid Effluent Retention Facility Basin (LERF) 41*, RPP-IQRPE-50063, Revision 00

- *WTP/Evaporator Transfer System Hydraulic Analysis*, RPP-CALC-62638, Revision 00
- *Effluent Management Facility (EMF) to Liquid Effluent Retention Facility (LERF) Process Condensate Transfer Pipeline Leak Detection*, RPP-RPT-61976, Revision 01

5.0 Procedures for Reaching a Final Decision on the Draft Permit Modification

The Washington State Dangerous Waste Regulations in WAC 173-303-830 describe the types of changes or modifications that may be made to a Dangerous Waste Permit issued by Ecology.

This draft permit modification was prepared according to the procedures in WAC 173-303-840(2). As required by WAC 173-303-840(3)(d), draft permits issued by Ecology will have at least a 45-day public comment period. The public comment period for this draft permit will be February 22, 2021 through April 8, 2021.

Comments must be post-marked, received by e-mail, or hand-delivered no later than close of business (5:00 p.m. PST) April 8, 2021.

Direct all comments to (electronic preferred):

Daina McFadden
Washington State Department of Ecology
3100 Port of Benton Boulevard
Richland, Washington 99354

eComments link: http://nw.ecology.commentinput.com/?id=7SCZm

Ecology will consider and respond to all written comments on this draft permit modification that are submitted by the April 8, 2021, deadline. At the completion of the 45-day public comment period Ecology will make a final permitting decision. If the final decision is to issue the permit, Ecology will issue a final permit for Part III, OUG 4, 242-A Evaporator to the Permittees, that will become effective 30 days after the issuance date. If the final decision includes substantial changes to the draft permit modification because of public comment, Ecology will consider initiating a new public comment period.

A public hearing is not scheduled, but if there is enough interest, we will consider holding one.

To request a hearing or for more information contact:

Daina McFadden
Washington State Department of Ecology
(509) 372-7950
E-mail address: hanford@ecy.wa.gov

Ecology will also issue a Response to Comments document to the Permittees and the public upon issuance of the final permit. The final permit modification may be appealed within 30 days after issuance. If there is no appeal, the permit will be effective 30 days following issuance.

At this time, **Ecology's offices are currently not open for in-person permit document reviews.** When in-person reviews become available again, Ecology will let you know. In the meantime, you can still view permit records on the Ecology website at https://ecology.wa.gov/Waste-Toxics/Nuclear-waste/Public-comment-periods. To view documents at the other Hanford Public Information Repositories, including the USDOE Administrative Record at 2440 Stevens Drive, please contact those facilities for access to public comment period documents.

If you have difficulty accessing documents on the Ecology website or at the other Public Information Repositories, we will work with you to arrange a way to provide records to you electronically or hard copy.

Members of the public can request a DVD or hard copy of the proposed permit modification or receive additional information by calling (509) 372-7950 or sending an e-mail to hanford@ecy.wa.gov.

This approach is consistent with Washington State Department of Ecology offices across the state.

Copies of the documents for Part III, Operating Unit Group 4, 242-A Evaporator are available for review at the Hanford Public Information Repositories locations listed below:

Hanford Public Information Repositories and Administrative Records

Richland, Washington

Ecology Nuclear Waste Program Resource Center
3100 Port of Benton Blvd.
Richland, WA 99354
(509) 372-7950

U.S. Department of Energy Administrative Record
2440 Stevens Drive, Room 1101
Richland, WA 99354
(509) 376-2530

Washington State University Tri-Cities
Department of Energy Reading Room
2770 Crimson Way, Room 101L
Richland, WA 99354
(509) 375-7443

Other Locations:

Portland

Portland State University
Branford Price Millar Library
1875 Southwest Park Avenue
Portland, Oregon 97201
(503) 725-4542

Seattle

University of Washington Suzzallo Library
P.O. Box 352900
4000 15th Avenue Northeast
Seattle, Washington 98195
(206) 543-5597

Spokane

Gonzaga University
Foley Center
502 East Boone Avenue
Spokane, Washington 99258
(509) 313-6110

Information on the proposed permit modification is also available online at http://www.ecy.wa.gov/programs/nwp/commentperiods.htm. If special accommodations are needed for public comment, contact Ecology's Nuclear Waste Program at (509) 372-7950.

6.0 State Environmental Policy Act

The permittees have developed the Final Tank Closure and Waste Management Environmental Impact Statement for the Hanford Site, Richland, Washington (TC&WM EIS). TC&WM EIS describes alternatives for the 242-A Evaporator (TC&WM EIS Section 2.2.2.2.10) and evalutes impacts for the 242-A and replacement evaporators. The latter would need to be constructed and operated to support the Tank Closure alternatives. The operation of the 242-A Evaporator is discussed in detail in Appendix E (E.1.2.3.2). TC&WM EIS (DOE/EIS-0391), issued on December 5, 2012, is available online at https://www.hanford.gov/page.cfm/FinalTCWMEIS.

Based on the TC&WM EIS, on January 16, 2020, Ecology issued a State Environmental Policy Act (SEPA) Determination of Significance/Notice of Adoption for connecting a primary waste transfer line from the EMF to LERF, and to make improvements to the 200 Area Liquid Effluent Treatment Facility (SEPA#202000342). Additionally, on August 24, 2020 Ecology issued a SEPA Determination of Significance/Notice of Adoption for Direct Feed Low-Activity Waste (DFLAW) (SEPA#202004362).

The current proposal for this permit modification is consistent with alternatives for the 242-A Evaporator described in the TC&WM EIS. Also, it is related to the environmental evaluation completed for the previously permitted projects (SEPA#202000342 and SEPA#202004362). Therefore, Ecology has determined that there is no need for additional environmental evaluation.

242-A EVAPORATOR
CHANGE CONTROL LOG

Change Control Logs ensure that changes to this unit are performed in a methodical, controlled, coordinated, and transparent manner. Each unit addendum will have a "**Last Modification Date**" which represents the last date the portion of the unit has been modified. The "**Modification Number**" represents Ecology's method for tracking the different versions of the permit. This log will serve as an up to date record of modifications and version history of the unit.

Last modification to 242-A Evaporator **June 24, 2020**

Chapters	Last Modification Date	Modification Number
Unit-Specific Conditions	06/24/2020	8C.2020.5F
1.0 Part A Form	11/12/2019	8C.2019.4F
2.0 Reserved		
3.0 Waste Analysis Plan	11/12/2019	8C.2019.4F
4.0 Process Information	11/12/2019	8C.2019.4F
5.0 Reserved		
6.0 Procedures to Prevent Hazards	11/12/2019	8C.2019.4F
7.0 Contingency Plan	06/24/2020	8C.2020.5F
8.0 Personnel Training	09/30/2013	
9.0 Reserved		
10.0 Reserved		
11.0 Closure	09/30/2013	

DRAFT

This page intentionally left blank.

DRAFT

242-A EVAPORATOR
PART III, OPERATING UNIT GROUP 4
UNIT-SPECIFIC PERMIT CONDITIONS

CHANGE CONTROL LOG

Change Control Logs ensure that changes to this unit are performed in a methodical, controlled, coordinated, and transparent manner. Each unit addendum will have its own change control log with a modification history table. The "**Modification Number**" represents Ecology's method for tracking the different versions of the permit. This log will serve as an up to date record of modifications and version history of the unit.

Modification History Table

Modification Date	Modification Number
06/24/2020	8C.2020.5F
11/12/2019	8C.2019.4F
04/30/2019	PCN-242-A-2019-01 (8C.2019.Q2)
04/09/2018	PCN-242-A-2017-02 (8C.2018.Q2)
11/16/2017	8C.2017.5F
07/19/2017	8C.2017.Q2
04/26/2017	8C.2017.Q1
02/18/2016	8C.2015.Q4

DRAFT

This page intentionally left blank.

DRAFT

242-A EVAPORATOR
PART III, OPERATING UNIT GROUP 4
UNIT-SPECIFIC PERMIT CONDITIONS

DRAFT

This page intentionally left blank.

DRAFT

PART III, OPERATING UNIT GROUP 4, UNIT-SPECIFIC PERMIT CONDITIONS 242-A EVAPORATOR

UNIT DESCRIPTION

The 242-A Evaporator is a mixed waste treatment and storage unit consisting of a conventional forced-circulation, vacuum evaporation system to concentrate mixed-waste solutions located in the 200 East Area.

This document sets forth the operating conditions for the 242-A Evaporator.

III.4.A COMPLIANCE WITH UNIT SPECIFIC PERMIT CONDITIONS

The Permittees shall comply with all requirements set forth in the Hanford Facility Resource Conservation and Recovery Act (RCRA) Permit (Permit) as specified in Permit Attachment 9, *Permit Applicability Matrix*, including all approved modifications. All chapters, subsections, figures, tables, and appendices included in the following Unit-Specific Permit Conditions are enforceable in their entirety.

In the event that the Part III Unit-Specific Conditions for Operating Unit 4, 242-A Evaporator conflict with the Part I Standard Conditions and/or Part II General Facility Conditions of the Permit, the Unit-Specific Permit Conditions for Operating Unit 4, 242-A Evaporator prevail.

CHAPTERS SPECIFIC TO OPERATING UNIT GROUP 4:

Chapter 1.0 Part A Form~~, dated November 12, 2019~~

Chapter 3.0 Waste Analysis Plan~~, dated November 12, 2019~~

Chapter 4.0 Process Information~~, dated November 12, 2019~~

Chapter 5.0 Groundwater Monitoring, (not applicable)

Chapter 6.0 Procedures to Prevent Hazards~~, dated November 12, 2019~~

Chapter 7.0 Contingency Plan~~, dated June 24, 2020~~

Chapter 8.0 Personnel Training~~, dated September 30, 2013~~

Chapter 11.0 Closure~~, dated September 30, 2013~~

III.4.B COMPLIANCE WITH UNIT-SPECIFIC PERMIT CONDITIONS

III.4.B.1 Portions of Permit Attachment 4 (DOE/RL-94-02) that are not made enforceable by inclusion in the applicability matrix for that document are not made enforceable by reference in this document.

III.4.C TANK SYSTEMS

III.4.C.1 ~~Within 90 days of the effective date of the permit modification, the Permittee shall demonstrate to the department that the leak detection system for the combined PC-5000/3" WTP-002-M17 transfer lines is designed and operated to detect the presence of liquid in the secondary containment system at the earliest practicable time if the existing detection technologies or site conditions will not allow detection of a release within 24 hours. The Permittees must consider alternative configurations for leak detection and this information will be provided to the department for concurrence. The department will provide a response within 30 days. [WAC 173-303-640(4)(c)(iii)]~~The Permittees must upgrade the existing leak detection system for the

PC-5000 and 3”-WTP-002-M17 lines to meet the requirements of Washington Administrative Code (WAC) 173-303-640(4)(c)(iii).

III.4.C.1.a The upgrades must include the installation of additional leak detectors along the PC-5000 and 3”-WTP-002-M17 lines, and in the caisson MH-WTP-01.

III.4.C.1.b The Permittees must submit a permit modification for upgrades to the leak detection system for the PC-5000 and 3”-WTP-002-M17 lines. The permit modification must include the final design of the upgrades.

III.4.C.1.c The Permittees must submit a schedule to the Department of Ecology (Ecology) for completing the permit modification and the upgrades within 30 days of the effective date of this permit condition.

III.4.C.1.d The upgraded leak detection system must be operational prior to waste transfers from 242-A Evaporator or the Waste Treatment and Immobilization Plant (WTP) to the Liquid Effluent Retention Facility (LERF).

III.4.C.2 Prior to receipt of any dangerous waste in the combined PC-5000/3”-WTP-002-M17 waste transfer system, the Permittees will submit the tightness test for the combined PC-5000/3”-WTP-002-M17 waste transfer system. [WAC 173-303-640(3)(e)]

III.4.C.2.a Tightness test for the combined waste transfer system piping (PC-5000/3”-WTP-002-M17) will be performed at a frequency of every 10 years upon completion of Permit Condition III.4.C.2.

III.4.C.3 Modifications to the leak detection system will be made in accordance with Permit Condition I.C.3.

III.4.C.4 The electronic leak detection system for the combined PC-5000 and 3”-WTP-002-M17 transfer lines shall be maintained and operated continuously when in use with the following exceptions:

III.4.C.4.a If the electronic leak detection system LDS-41-5 or LDE-43-2 is not operational for transfers to the Liquid Effluent Retention Facility (LERF)~~is not available~~, visual inspection shall be employed at the ~~PC-5000 catch tank 60M-TK-1 (sight glass FG-60M-001)~~ corresponding LERF Catch Basin 242AL-41 or 242AL-43 sight glass once per shift, during transfers. For LERF Basin 41, the sight glass is FG-60M-002; for LERF Basin 43, the sight glass is FG-60M-001.

III.4.C.4.b Ecology must be notified if ~~the~~ either electronic leak detection system for transfers to LERF Basin 41 or Basin 43 ~~is~~are not operational~~ out of service~~ for more than 90 days. This notification must include a schedule for repairing and returning the system to service within 90 days from notification, or longer if approved by the department.

III.4.C.5 Prior to receipt of dangerous wastes in the PC-5000 to LERF Basin 41 waste transfer system, the Permittees shall submit to Ecology the installation assessment report certified by an independent installation inspector or IQRPE, and the procedure for tightness testing and test results.

DRAFT

CHAPTER 1
242-A EVAPORATOR
PART A FORM

This page intentionally left blank

WASHINGTON STATE DEPARTMENT OF ECOLOGY

Dangerous Waste Permit Application Part A Form

Date Received	Reviewed by:	Date:
Month Day Year	Approved by:	Date:

I. This form is submitted to: (place an "X" in the appropriate box)

☒	Request modification to a final status permit (commonly called a "Part B" permit)
☐	Request a change under interim status
☐	Apply for a final status permit. This includes the application for the initial final status permit for a site or for a permit renewal (i.e., a new permit to replace an expiring permit).
☐	Establish interim status because of the wastes newly regulated on: (Date)
	List waste codes:

II. EPA/State ID Number

W A 7 8 9 0 0 0 8 9 6 7

III. Name of Facility

U.S. Department of Energy – Hanford Facility

IV. Facility Location (Physical address not P.O. Box or Route Number)

A. Street

Refer to Permit Attachment 2, Hanford Facility Permit Legal Description

City or Town	State	ZIP Code
Near Richland	WA	

County Code	County Name
0 0 5	Benton

B. Land Type	C. Geographic Location Latitude (degrees, mins, secs)	Longitude (degrees, mins, secs)	D. Facility Existence Date Month Day Year
F	Refer to TOPO Map (Section XV)		11 19 1980

V. Facility Mailing Address

Street or P.O. Box

P.O. Box 450

City or Town	State	ZIP Code
Richland	WA	99352

VI. Facility contact (Person to be contacted regarding waste activities at facility)		
Name (last)	**(first)**	
Vance	Brian	
Job Title	**Phone Number**	
Manager	(509) 376-7395	
Contact Address		
Street or P.O. Box		
P.O. Box 450		
City or Town	**State**	**ZIP Code**
Richland	WA	99352

VII. Facility Operator Information	
A. Name	**Phone Number**
U.S. Department of Energy Owner/Operator Washington River Protection Solutions, LLC Co-Operator for 242-A Evaporator	(509) 376-7395 (509) 376-2574
Street or P.O. Box	
P.O. Box 450 P.O. Box 850	

City or Town	State	ZIP Code
Richland	WA	99352

B. Operator Type	F	
C. Does the name in VII.A reflect a proposed change in operator?	☐ Yes ☒ No	
If yes, provide the scheduled date for the change:	**Month**	**Day** / **Year**
D. Is the name listed in VII.A, also the owner? If yes, skip to Section VIII.C.	☐ Yes ☒ No	

VIII. Facility Owner Information	
A. Name	**Phone Number**
U.S. Department of Energy Owner/Operator	(509) 376-7395
Street or P.O. Box	
P.O. Box 450	

City or Town	State	ZIP Code
Richland	WA	99352

B. Owner Type	F	
C. Does the name in VIII.A reflect a proposed change in owner?	☐ Yes ☒ No	
If yes, provide the scheduled date for the change:	**Month**	**Day** / **Year**

IX. NAICS Codes (5/6 digit codes)

A. First							B. Second						
5	6	2	2	1	1	Waste Treatment & Disposal	5	6	2	9	1	0	Remediation Services
C. Third							**D. Fourth**						
5	4	1	7	1	5	Research & Development in the Physical, Engineering, & Life Sciences	9	2	4	1	1	0	Administration of Air & Water Resource & Solid Waste Management Programs

X. Other Environmental Permits

A. Permit Type	B. Permit Number	C. Description
E	AOP00-05-006	Title V Air Operating Permit. Incorporation of current non-radiological Notice of Construction permits and FF-01 radiological licenses into the AOP may be delayed up to 2 years.
E	601-319-23	Petroleum Underground Storage Tank License

XI. Nature of Business (provide a brief description that includes both dangerous waste and non-dangerous waste areas and activities)

The 242-A Evaporator is a mixed waste treatment and storage unit that pretreats Double-Shell Tank (DST) waste supernatant. 242-A Evaporator operations began in March 1977; the evaporator is located in Hanford's 200 East Area. Tank waste is transferred from DST feed tank 241-102-AW to the 242-A Evaporator, where the evaporator removes water and most volatile organics.

T04 – Other Treatment - Evaporation:

The Evaporator is a conventional forced-circulation, vacuum evaporation system to reduce mixed waste from the DST System. The evaporator treats the waste by removing water and most volatile organics. This process creates two waste streams, which leave the 242-A Evaporator following the treatment process.

- Concentrated slurry (approximately 40 to 60 percent of the water is removed during evaporation along with a portion of volatile organics), is pumped back into the DST System.
- Process condensate (containing a portion of the volatile organics removed from the mixed waste during the evaporation process), is routed through condensate filters before release to the Liquid Effluent Retention Facility (LERF). Off gasses from the process are routed through a de-entrainment unit, a prefilter, and high-efficiency particulate air filters before being discharged to the environment.

S02 – Tank Storage

Tank C-A-1 Evaporator Vessel: Process slurry from the reboiler discharges to Tank C-A-1. Concentrated process slurry exits the lower section of Tank C-A-1 through a 28-inch recirculating line. Vapor flows out of Tank C-A-1 through a 42-inch vapor line at the top. The maximum design capacity of Tank C-A-1 is 35,600 gallons. Tank C-A-1 is in the Evaporator Room and consists of two sections:

- Lower (liquid) section, is a 14-foot diameter stainless steel shell.
- Upper (vapor) section is an 11.6-foot diameter stainless steel shell. The upper section contains two wire-mesh de-entrainment pads for the removal of liquids and solids that could be carried into the vapor header.

Tank TK-C-100: Process condensate from the primary, inter-, and after-condensers drain by gravity to tank TK-C-100. Tank TK-C-100 receives potentially contaminated drainage from the vessel vent system via a 27-gallon seal pot. Tank TK-C-100, is a 14-foot diameter x 19-foot high stainless steel tank located in the Condensate Room. The maximum design capacity of Tank TK-C-100 is 17,800 gallons.

The waste fed to the 242-A Evaporator is regulated as a mixed waste with the same waste constituents as the waste in the DST System. The concentrated slurry is a characteristic waste (D001, D002, and D003), toxic waste (D004 through D011, D018, D019, D022, D028 through D030, D033 through D036, D038 through D041, and D043), nonspecific source waste (F001 through F005 and F039), and state-only characteristic waste (WT01, WT02, WP01, WP02. Multi-source leachate (F039) is included as a waste derived from nonspecific source waste F001 through F005. The process condensate is regulated as a mixed waste due to the toxicity of ammonia (WT02) and because it is derived from the waste with a nonspecific source wastes F001 through F005. Multi-source leachate (F039) is included as a waste derived from nonspecific source waste F001 through F005. Section XIV.A includes a list of some dangerous waste constituents that may not have already been detected in the waste; however, knowledge of the processes providing the waste to the 242-A Evaporator indicates that these constituents are present in the waste or there is a potential for treating these constituents in the future.

Section XII, XIII, and XIV Capacity and Estimated Annual Quantities of Waste

T04 – Other Treatment (evaporation) process design capacity is 346,000 gallons per day based on a continuous feed operating 24 hours a day. The estimated annual quantity of waste treated for evaporation (T04) is 841,000,000 pounds per year based on 182 days of operation, processing 346,000 gallons per day, at a specific gravity (SpG) of 1.6.

S02 – Tank Storage process design capacity is 53,400 gallons based on the capacity of Tank C-A-1 (35,600 gallons), and TK-C-100 (17,800 gallons). The estimated annual quantity of waste for tank storage at any one time is 603,000 pounds per year based on the capacity of Tanks C-A-1 and TK-C-100 and each tanks SpG for the waste (1.6 and 1.0 SpG respectively).

NAICS Codes

NAICS Codes listed in Section IX.B – IX.D, apply to the Hanford Facility and not to this unit.

EXAMPLE FOR COMPLETING ITEMS XII and XIII (shown in lines numbered X-1, X-2, and X-3 below): A facility has two storage tanks that hold 1200 gallons and 400 gallons respectively. There is also treatment in tanks at 20 gallons/hr. Finally, a one-quarter acre area that is two meters deep will undergo in situ *vitrification*.

Section XII. Process Codes and Design Capacities								Section XIII. Other Process Codes								
Line Number		A. Process Codes (enter code)			B. Process Design Capacity		C. Process Total Number of Units	Line Number		A. Process Codes (enter code)			B. Process Design Capacity		C. Process Total Number of Units	D. Process Description
					1. Amount	2. Unit of Measure (enter code)							1. Amount	2. Unit of Measure (enter code)		
X	1	S	0	2	1,600	G	002	X	1	T	0	4	700	C	001	In situ vitrification
X	2	T	0	3	20	E	001									
X	3	T	0	4	700	C	001									
	1	T	0	4	346,000	U	001		1	T	0	4	346,000	U	001	Evaporation
	2	S	0	2	53,400	G	002		2							
	3								3							
	4								4							
	5								5							
	6								6							
	7								7							
	8								8							
	9								9							
1	0							1	0							
1	1							1	1							
1	2							1	2							
1	3							1	3							
1	4							1	4							
1	5							1	5							
1	6							1	6							
1	7							1	7							
1	8							1	8							
1	9							1	9							
2	0							2	0							
2	1							2	1							
2	2							2	2							
2	3							2	3							
2	4							2	4							
2	5							2	5							

XIV. Description of Dangerous Wastes

Example for completing this section: A facility will receive three non-listed wastes, then store and treat them on-site. Two wastes are corrosive only, with the facility receiving and storing the wastes in containers. There will be about 200 pounds per year of each of these two wastes, which will be neutralized in a tank. The other waste is corrosive and ignitable and will be neutralized then blended into hazardous waste fuel. There will be about 100 pounds per year of that waste, which will be received in bulk and put into tanks.

Line Number	A. Dangerous Waste No. (enter code)				B. Estimated Annual Quantity of Waste	C. Unit of Measure (enter code)	D. Processes									
							(1) Process Codes (enter)									(2) Process Description [If a code is not entered in D (1)]
X 1	D	0	0	2	400	P	S	0	1	T	0	1				
X 2	D	0	0	1	100	P	S	0	2	T	0	1				
X 3	D	0	0	2												Included with above
1	D	0	0	1	841,000,000	P	T	0	4							Evaporation
2	D	0	0	2												Included with above
3	D	0	0	3												Included with above
4	D	0	0	4												Included with above
5	D	0	0	5												Included with above
6	D	0	0	6												Included with above
7	D	0	0	7												Included with above
8	D	0	0	8												Included with above
9	D	0	0	9												Included with above
10	D	0	1	0												Included with above
11	D	0	1	1												Included with above
12	D	0	1	8												Included with above
13	D	0	1	9												Included with above
14	D	0	2	2												Included with above
15	D	0	2	8												Included with above
16	D	0	2	9												Included with above
17	D	0	3	0												Included with above
18	D	0	3	3												Included with above
19	D	0	3	4												Included with above
20	D	0	3	5												Included with above
21	D	0	3	6												Included with above
22	D	0	3	8												Included with above
23	D	0	3	9												Included with above
24	D	0	4	0												Included with above
25	D	0	4	1												Included with above

EPA/State ID Number	W	A	7	8	9	0	0	0	8	9	6	7

Continuation of Section XIV. Description of Dangerous Waste

Line Number	A. Dangerous Waste No. (enter code)				B. Estimated Annual Quantity of Waste	C. Unit of Measure (enter code)	D. Process									
							(1) Process Codes (enter)									(2) Process Description [If a code is not entered in D (1)]
26	D	0	4	3												Included with above
27	F	0	0	1												Included with above
28	F	0	0	2												Included with above
29	F	0	0	3												Included with above
30	F	0	0	4												Included with above
31	F	0	0	5												Included with above
32	F	0	3	9												Included with above
33	W	P	0	1												Included with above
34	W	P	0	2												Included with above
35	W	T	0	1												Included with above
36	W	T	0	2												Included with above
37	D	0	0	1	624,000	P	S	0	2							Tank Storage
38	D	0	0	2												Included with above
39	D	0	0	3												Included with above
40	D	0	0	4												Included with above
41	D	0	0	5												Included with above
42	D	0	0	6												Included with above
43	D	0	0	7												Included with above
44	D	0	0	8												Included with above
45	D	0	0	9												Included with above
46	D	0	1	0												Included with above
47	D	0	1	1												Included with above
48	D	0	1	8												Included with above
49	D	0	1	9												Included with above
50	D	0	2	2												Included with above
51	D	0	2	8												Included with above
52	D	0	2	9												Included with above
53	D	0	3	0												Included with above
54	D	0	3	3												Included with above
55	D	0	3	4												Included with above

EPA/State ID Number	W	A	7	8	9	0	0	0	8	9	6	7

Continuation of Section XIV. Description of Dangerous Waste

Line Number	A. Dangerous Waste No. (enter code)				B. Estimated Annual Quantity of Waste	C. Unit of Measure (enter code)	D. Process									
							(1) Process Codes (enter)									(2) Process Description [If a code is not entered in D (1)]
56	D	0	3	5												Included with above
57	D	0	3	6												Included with above
58	D	0	3	8												Included with above
59	D	0	3	9												Included with above
60	D	0	4	0												Included with above
61	D	0	4	1												Included with above
62	D	0	4	3												Included with above
63	F	0	0	1												Included with above
64	F	0	0	2												Included with above
65	F	0	0	3												Included with above
66	F	0	0	4												Included with above
67	F	0	0	5												Included with above
68	F	0	3	9												Included with above
69	W	P	0	1												Included with above
70	W	P	0	2												Included with above
71	W	T	0	1												Included with above
72	W	T	0	2												Included with above
73																
74																
75																
76																
77																
78																
79																
80																
81																
82																
83																
84																

XV. Map

Attach to this application a topographic map of the area extending to at least one (1) mile beyond property boundaries. The map must show the outline of the facility; the location of each of its existing and proposed intake and discharge structures; each of its dangerous waste treatment, storage, recycling, or disposal units; and each well where fluids are injected underground. Include all springs, rivers, and other surface water bodies in this map area, plus drinking water wells listed in public records or otherwise known to the applicant within ¼ mile of the facility property boundary. The instructions provide additional information on meeting these requirements.

XVI. Facility Drawing

All existing facilities must include a scale drawing of the facility (refer to Instructions for more detail).

XVII. Photographs

All existing facilities must include photographs (aerial or ground-level) that clearly delineate all existing structures; existing storage, treatment, recycling, and disposal areas; and sites of future storage, treatment, recycling, or disposal areas (refer to Instructions for more detail).

XVIII. Certifications

I certify under penalty of law that this document and all attachments were prepared under my direction or supervision in accordance with a system designed to assure that qualified personnel properly gather and evaluate the information submitted. Based on my inquiry of the person or persons who manage the system, or those persons directly responsible for gathering the information, the information submitted is, to the best of my knowledge and belief, true, accurate, and complete. I am aware that there are significant penalties for submitting false information, including the possibility of fine and imprisonment for knowing violations.

Operator	Signature	Date Signed
Name and Official Title (type or print) Brain T. Vance, Manager U.S. Department of Energy Office of River Protection	Digitally signed by Brian T. Vance DN: cn=Brian T. Vance, o=Office of River Protection, ou=Department of Energy, email=brian.t.vance@orp.doe.gov, c=US Date: 2020.07.07 09:51:58 -07'00'	
Co-Operator*	**Signature**	**Date Signed**
Name and Official Title (type or print) John R. Eschenberg President and Project Manager Washington River Protection Solutions, LLC		06012020
Co-Operator – Address and Telephone Number* P.O. Box 850 Richland, WA 99352 (509) 376-2574		
Facility-Property Owner	**Signature**	**Date Signed**
Name and Official Title (type or print) Brain T. Vance, Manager U.S. Department of Energy Office of River Protection	Digitally signed by Brian T. Vance DN: cn=Brian T. Vance, o=Office of River Protection, ou=Department of Energy, email=brian.t.vance@orp.doe.gov, c=US Date: 2020.07.07 09:52:31 -07'00'	

XIX. Comments

Photos 3/2016

Figure A.1. 242-A Evaporator

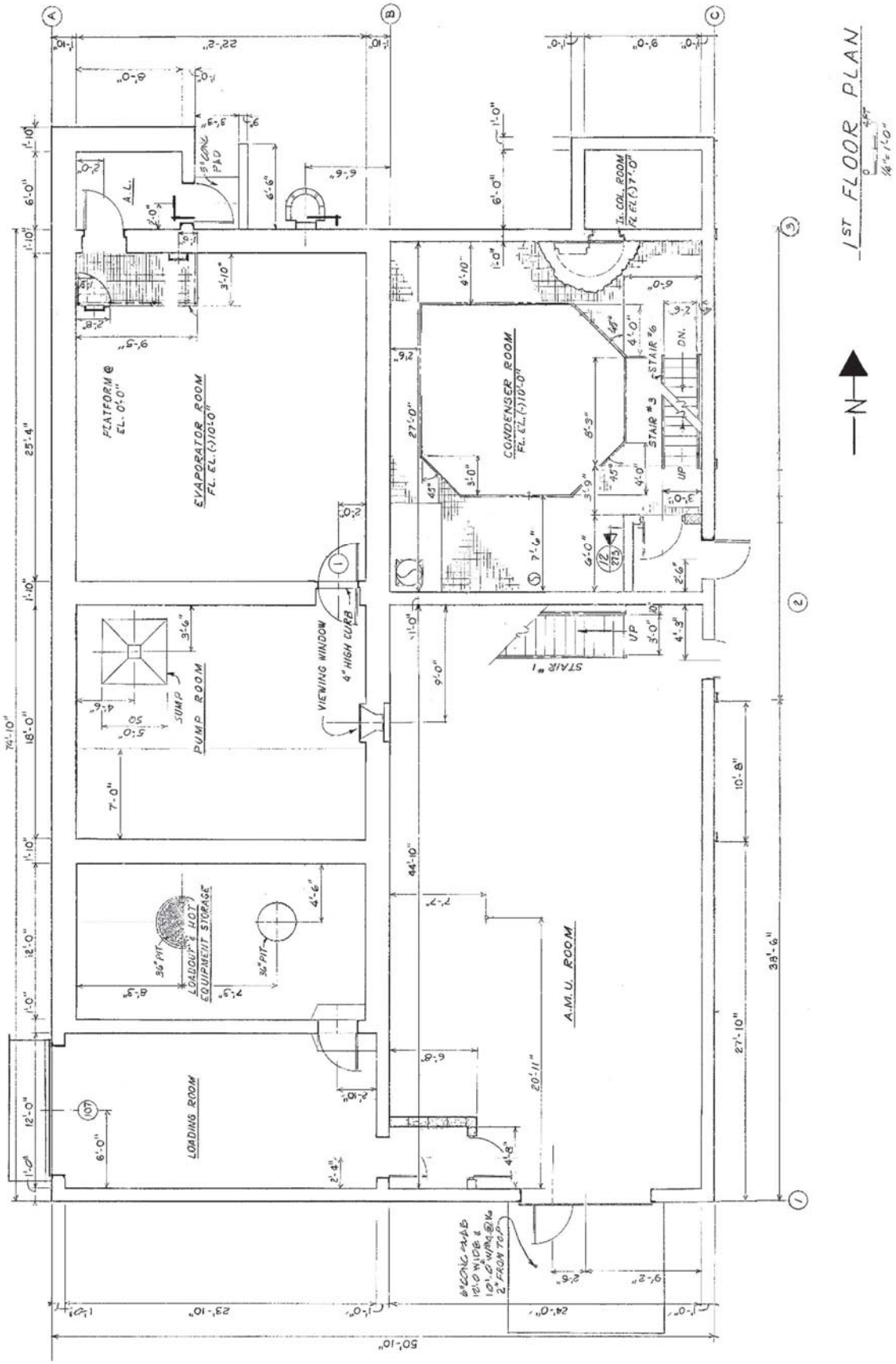

Figure A.2. 242-A Evaporator 1st Level Plan

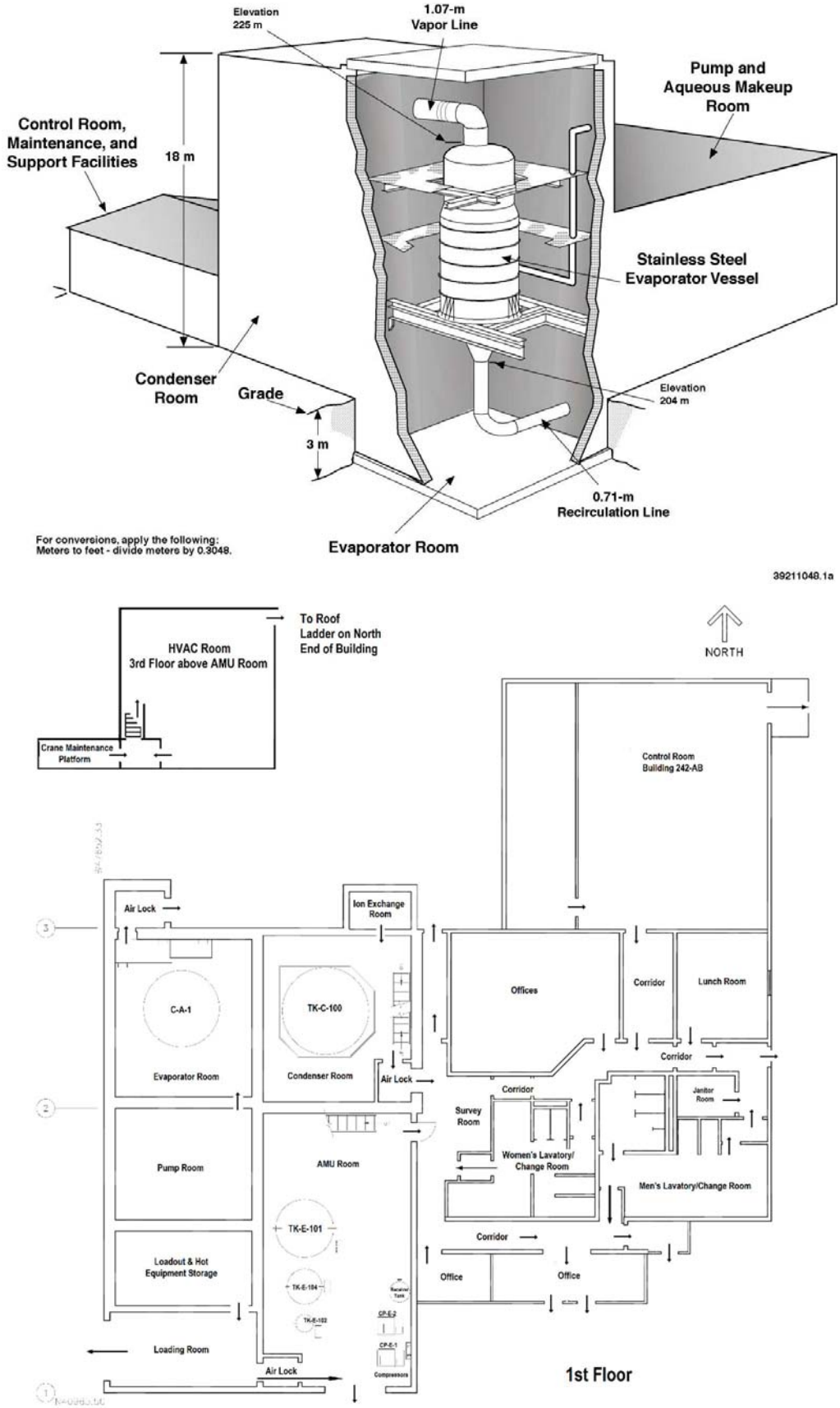

Figure A.3. 242-A Layout

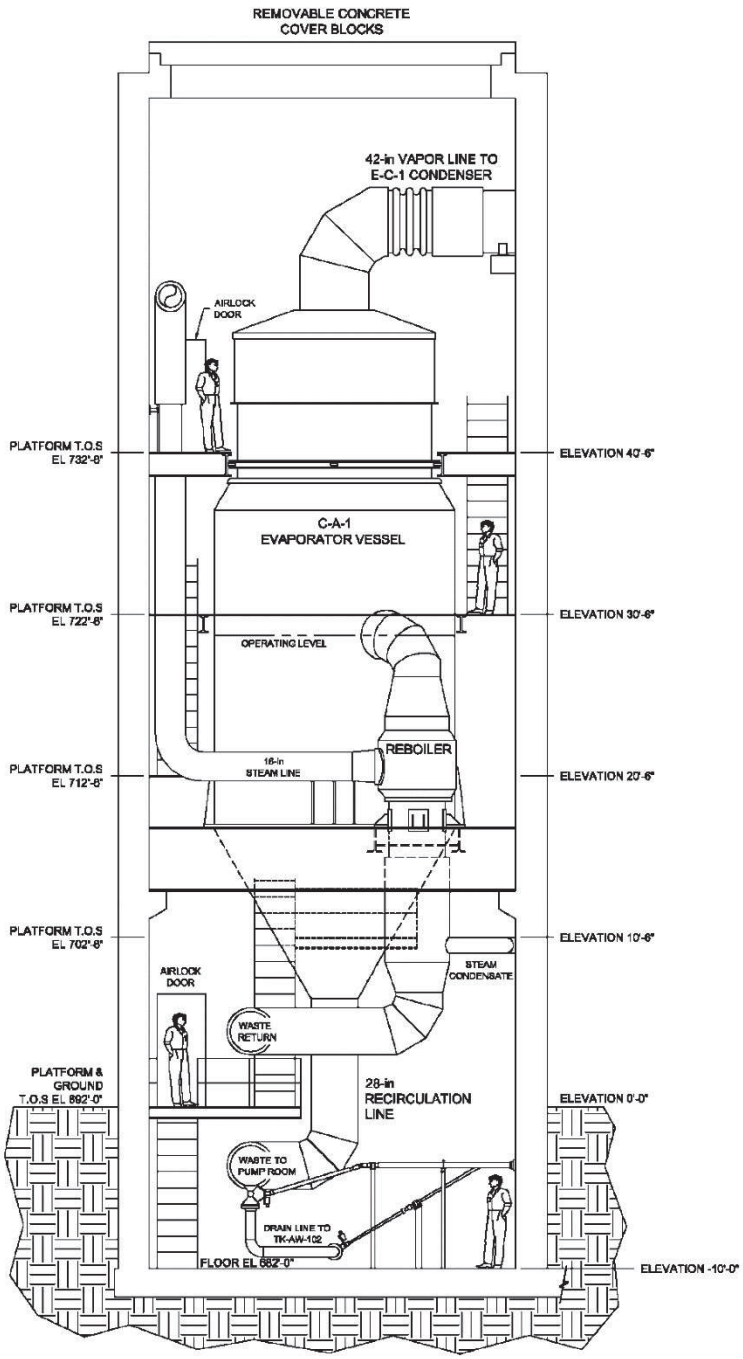

Tank C-A-1 Evaporator Vessel *Photo 1/2008*

Figure A.4. Evaporator Room

Process Condensate Collection Tank TK-C-100 *Photo 1/2008*

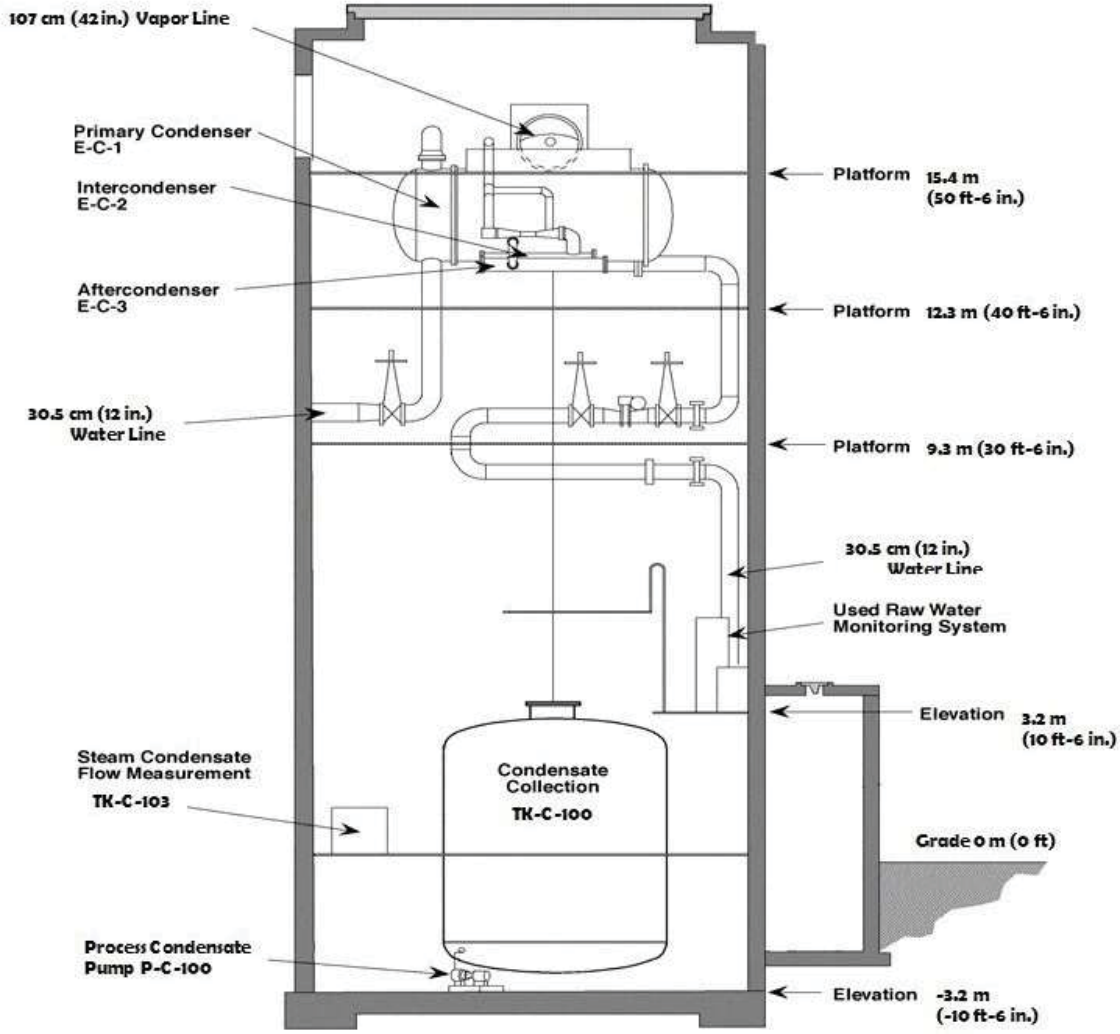

Vacuum Condenser System

Figure A.5. Condenser Room

Pump Room view from the Shield Window *Photo 9/2016*

Figure A.6. Pump Room

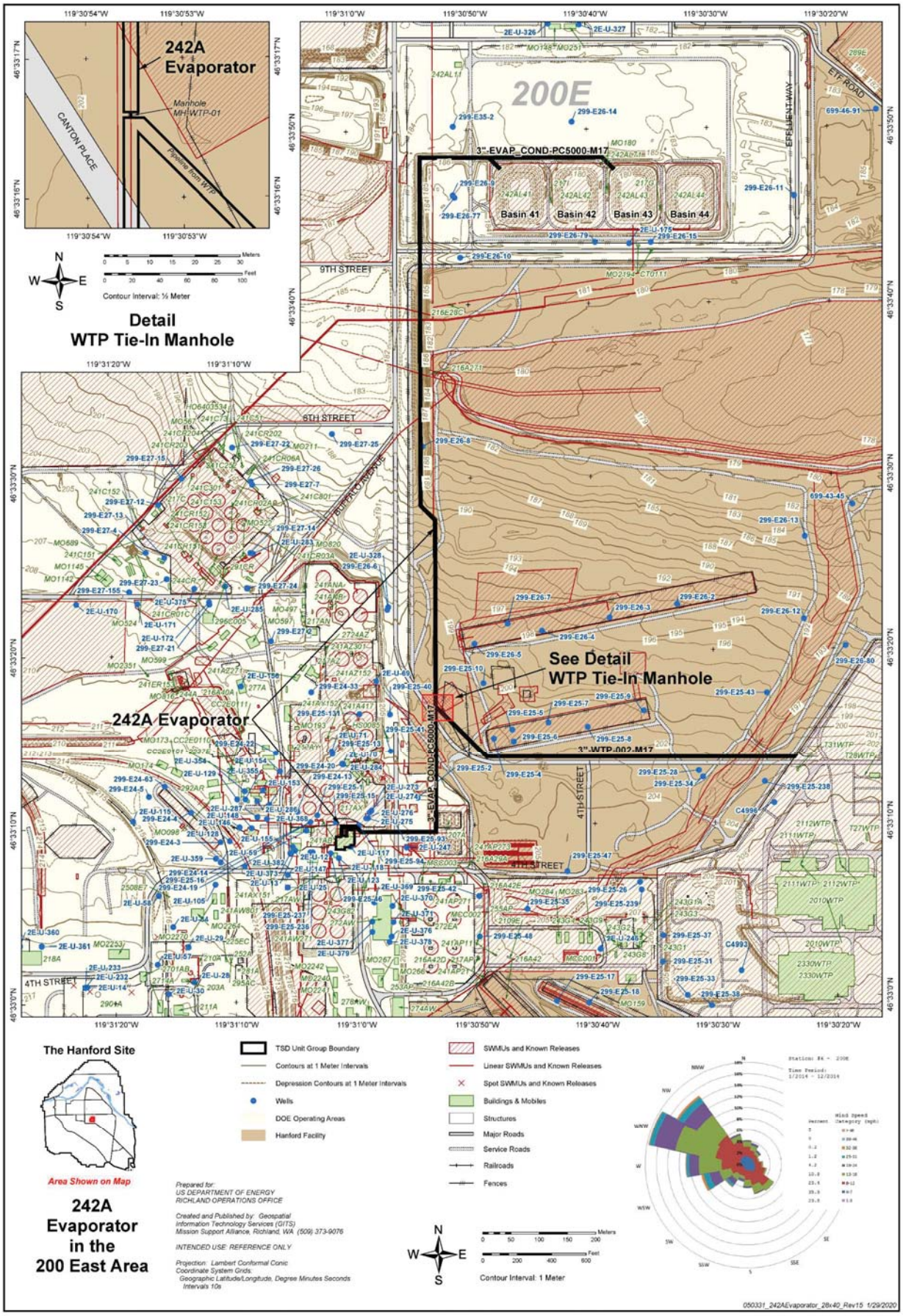
242A Evaporator
Manhole MH-WTP-01
CANTON PLACE
Pipeline from WTP
Detail
WTP Tie-In Manhole
200E
3"-EVAP_COND-PC5000-M17
Basin 41
Basin 42
Basin 43
Basin 44
9TH STREET
5TH STREET
4TH STREET
BUFFALO AVENUE
EFFLUENT WAY
ETF ROAD
See Detail
WTP Tie-In Manhole
3"-WTP-002-M17
242A Evaporator
Contour Interval: ½ Meter
The Hanford Site
Area Shown on Map
242A
Evaporator
in the
200 East Area
TSD Unit Group Boundary
Contours at 1 Meter Intervals
Depression Contours at 1 Meter Intervals
Wells
DOE Operating Areas
Hanford Facility
SWMUs and Known Releases
Linear SWMUs and Known Releases
Spot SWMUs and Known Releases
Buildings & Mobiles
Structures
Major Roads
Service Roads
Railroads
Fences
Contour Interval: 1 Meter
Prepared for:
US DEPARTMENT OF ENERGY
RICHLAND OPERATIONS OFFICE
Created and Published by: Geospatial
Information Technology Services (GITS)
Mission Support Alliance, Richland, WA (509) 373-9076
INTENDED USE: REFERENCE ONLY
Projection: Lambert Conformal Conic
Coordinate System Grids:
Geographic Latitude/Longitude, Degree Minutes Seconds
Intervals 10s
050331_242AEvaporator_28x40_Rev15 1/29/2020

This page intentionally left blank.

242-A EVAPORATOR
CHAPTER 4.0
PROCESS INFORMATION

CHANGE CONTROL LOG

Change Control Logs ensure that changes to this unit are performed in a methodical, controlled, coordinated, and transparent manner. Each unit addendum will have its own change control log with a modification history table. The "**Modification Number**" represents Ecology's method for tracking the different versions of the permit. This log will serve as an up to date record of modifications and version history of the unit.

Modification History Table

Modification Date	Modification Number
11/12/2019	8C.2019.4F
04/09/2018	PCN-242-A-2017-02
07/19/2017	8C.2017.Q2
04/26/2017	8C.2017.Q1
02/18/2016	8C.2015.Q4

DRAFT

This page intentionally left blank.

DRAFT

CHAPTER 4.0
PROCESS INFORMATION

DRAFT

This page intentionally left blank.

DRAFT

CHAPTER 4.0
PROCESS INFORMATION

TABLE OF CONTENTS

4.0 PROCESS INFORMATION....5
4.1 Tank Systems....7
4.1.1 Design Requirements....7
4.1.2 Transfer Lines....7
4.1.3 Vapor-Liquid Separator (C-A-1) and Ancillary Equipment....9
4.1.4 Condensate Collection Tank (TK-C-100) and Ancillary Equipment....11
4.1.5 Integrity Assessments....13
4.1.6 Additional Requirements for Existing Tanks....14
4.1.7 Secondary Containment and Release Detection for Tank Systems....14
4.1.8 Variances from Secondary Containment Requirements....20
4.1.9 Tank Management Practices....21
4.1.10 Labels or Signs....22
4.1.11 Air Emissions....22
4.1.12 Management of Ignitable or Reactive Wastes in Tank Systems....22
4.1.13 Management of Incompatible Wastes in Tank Systems....23
4.2 Air Emissions Control....23
4.2.1 Applicability of Subpart AA Standards....23
4.2.2 Process Vents - Demonstrating Compliance....23
4.3 Engineering Drawings....24

FIGURES

Figure 4-1 242-A Evaporator Simplified Process Flow Diagram....26
Figure 4-2 242-A Evaporator Process Loop....27
Figure 4-3 242-A Evaporator Slurry System....28
Figure 4-4 242-A Evaporator Process Condensate System....29
Figure 4-5 242-A Evaporator Vacuum Condenser System....30
Figure 4-6 242-A Evaporator Drain System....31

DRAFT

TABLES

Table 4-1 Process and Instrumentation Diagrams 25
Table 4-2 242-A Evaporator Secondary Containment Systems Drawings 25

DRAFT

4.0 PROCESS INFORMATION

The 242-A Evaporator receives mixed waste from the Double-Shell Tank (DST) System that contains inorganic and organic constituents and radionuclides. The 242-A Evaporator Treatment, Storage, and Disposal (TSD) unit group boundary for lines running between the 242-A Evaporator and the DST System end at the exterior wall of 242-A Building. At this point, these lines (e.g., feed and slurry line piping [SN-269, SN-270, SL-167, and SL-168]) are DST System components. Additional requirements for secondary containment and 242-A Evaporator simplified process flow diagram is given in Figure 4-1. The 242-A Evaporator separates the mixed waste received from the DST System, generating the following waste streams:

- A concentrated aqueous waste stream (slurry) containing the nonvolatile components, including most of the radionuclides, inorganic constituents, and nonvolatile organics such as tri-butyl phosphate.
- A dilute aqueous waste stream (process condensate) containing the volatile components, primarily water with low concentrations of radionuclides, inorganic constituents, and volatile constituents such as ammonia and acetone.

The slurry is routed back to the DST System pending further treatment. The process condensate is transferred to Liquid Effluent Retention Facility (LERF) through the PC-5000 transfer line for storage until processed through the 200 Area Effluent Treatment Facility (ETF). The 242-A Evaporator TSD unit group boundary for the PC-5000 transfer line running between the 242-A Evaporator and LERF end at the LERF TSD unit group boundary.

The 242-A Evaporator process employs a conventional forced circulation, vacuum evaporation system to concentrate the DST System waste solution. The major components of this system include the reboiler (E-A-1), vapor-liquid separator (C-A-1), recirculation pump (P-B-1) and pipe loop, slurry product pump, condenser, jet vacuum system, and condensate collection tank (TK-C-100).

The vapor-liquid separator (C-A-1) also called the evaporator vessel, and the condensate collection tank (TK-C-100), meet the definition of a tank in Washington Administrative Code (WAC) 173-303-040. Other process equipment associated with these tank systems is considered ancillary equipment. Drawings that aid in understanding the systems are provided in Section 4.3.

The 242-A Evaporator receives waste from DST System tank 241-AW-102 that serves as the 242-A Evaporator feed tank. The feed enters the recirculation line and blends with the main process slurry stream, which is pumped to the reboiler.

In the reboiler, the mixture is heated to the specified operating temperature, normally 100 to 155°F, using 3 to 10 pounds per square inch gauge (psig) pressure steam. The low-pressure steam provides adequate heat input, and the resulting low-temperature differential across the reboiler minimizes scale formation on the heat transfer surfaces. The static liquid head of the waste in the reboiler is sufficient to suppress the boiling point so the waste does not boil in the reboiler tubes. Boiling occurs only near or at the liquid surface in the vapor liquid separator (C-A-1), where the static liquid head is zero and the heated waste is at the reduced pressure of the vapor-liquid separator (C-A-1). Slurry may be transferred back to the 242-A Evaporator feed tank through the DST system for one or more passes through the 242-A Evaporator to achieve desired waste volume reduction.

The heated slurry stream is discharged from the reboiler (E-A-1) to the vapor-liquid separator (C-A-1). The vapor-liquid separator (C-A-1) is typically maintained at an absolute pressure of 0.77 to 1.55 psig absolute. Under this reduced pressure, a fraction of the water in the heated slurry flashes to steam and the steam is drawn through two, wire mesh deentrainer pads into a 42-inch diameter vapor line that leads to the primary condenser, leaving behind a more concentrated slurry solution in the vapor-liquid separator (C-A-1).

DRAFT

After a brief residence time in the vapor-liquid separator (C-A-1), the slurry exits from the bottom through the lower portion of the recirculation line and is recirculated by the recirculation pump (P-B-1). The pump discharges the slurry back to the reboiler via the upper portion of the recirculation line, thus completing the recirculation loop.

Operations monitors the specific gravity of the waste liquid, and adjusts process variables to stay within an acceptable range of the target specific gravity. As part of the campaign planning process, a process control plan is developed to identify the campaign objectives and process controls, including the target specific gravity that is determined before the campaign begins. Slurry is removed from the upper portion of the recirculation line and transferred using slurry pump (P-B-2) or gravity drained through an encased underground pipeline (pipe-within-a-pipe) to a designated slurry receiver tank in the DST System.

The vapors are drawn from the vapor-liquid separator (C-A-1), through a 42-inch diameter vapor line and enter a series of three condensers, where the vapors are condensed using raw water. The condensed vapors, called process condensate, are collected in the condensate collection tank (TK-C-100). Steam jets are used to create a vacuum on the vapor liquid separator drawing the process vapors into and through the condensers. Noncondensable vapors are drawn from the condensers, then through a series of particulate filters and vented to the atmosphere. The air discharges are monitored when the 242-A Evaporator is operating to verify that radionuclide and ammonia emissions standards are met.

The process condensate, a mixed waste, is a dilute aqueous solution with ammonia, volatile organics, and trace quantities of non-volatile constituents. The process condensate is pumped from the condensate collection tank (TK-C-100) through the PC-5000 encased underground pipeline (pipe-within-a-pipe) to the LERF.

During a campaign, the evaporation process is continuous, except when waste is recirculated when new feed is not being received. Typical feed flow rates of 69 to 119 gallons per minute (gpm), process condensate flow rates of 39 to 61 gpm, and slurry flow rates of 29 to 61 gpm. The evaporator process is shutdown when the desired endpoint concentration of the feed is met. Endpoints are established at the beginning of the campaign, based on the target specific gravity of the waste, or allowable waste volume reduction and defined operating limits. If the evaporation rate cannot achieve the desired endpoint, slurry in the DST System serving as the slurry receiver is transferred to the feed tank for one or more passes through the 242-A Evaporator. At the end of processing, the vapor-liquid separator (C-A-1) and recirculation loop are drained, flushed with raw water, and shutdown. The majority of maintenance activities are performed during this shutdown period when waste is not present in the processing equipment with the exception of the condensate collection tank (TK-C-100). The condensate collection tank (TK-C-100) continues to store process condensate from the last campaign.

Other discharges during 242-A Evaporator processing include condensate from the steam used to heat the waste and cooling water used to condense the vapors. The 242-A Evaporator is designed to prevent contamination of these streams, as such the cooling water and steam condensate waste streams do not designate as dangerous waste. The fluids on the uncontaminated side of the heat exchangers are maintained at a higher pressure than the waste stream so that uncontaminated fluid migrates toward the contaminated waste if a leak were to occur. The steam condensate and the cooling water are monitored continuously for radiation, pH, conductivity, and discharged to the Treated Effluent Disposal Facility (TEDF) as long as none of the discharge limits are exceeded. The steam condensate and cooling water streams were assessed in the stream specific reports (WHC-EP-0342-21 [1990], *242-A Evaporator Cooling Water Stream Specific Report, Addendum 21*, and WHC-EP-0342-26 [1996], *242-A Evaporator Steam Condensate Stream Specific Report, Addendum 26*), and are not dangerous waste in accordance with WAC 173-303. The steam condensate and the used raw water waste streams are discharged to the TEDF, under the authority of State Waste Discharge Permit ST0004502.

DRAFT

The 242-A Evaporator process is controlled by operators using the Monitoring Control System (MCS). The MCS computer monitors process parameters and controls the parameters where required. The MCS provides the capability to operate some components (e.g., pumps, valves) in a manual mode. Operations personnel monitor the function of the MCS and process equipment, and operate equipment in a manual mode when required to maintain safe facility operations. Once the configuration parameters and other process control inputs are set, the MCS maintains the process parameters within specified ranges by sending output signals that operate specific pieces of equipment (e.g., control valves). There are redundant MCS components in place that are not used to maintain the integrity of the mixed waste handling system and are not addressed in further detail in this permit.

4.1 Tank Systems

This section discusses information associated with design requirements, integrity assessments, and any additional requirements for tanks used to treat and store mixed waste in the 242-A Evaporator.

The 242-A Evaporator is divided into three major systems that manage mixed wastes. The systems are listed below:

- Transfer lines (PC-5000 and Waste Treatment and Immobilization Plant [WTP] backup transfer line [3”-WTP-002-M17]).
- Vapor-liquid separator (C-A-1) and ancillary equipment.
- Condensate collection tank (TK-C-100) and ancillary equipment.

4.1.1 Design Requirements

The following design requirements were addressed in the 242-A Evaporator/Crystallizer Tank System Integrity Assessment Reports (IARs), which are identified in Section 4.1.5:

- Minimum design wall thicknesses and measured wall thicknesses at various points throughout the tank systems.
- Design standards used in construction, including references.
- Waste characteristics.
- Materials of construction and compatibility of materials with the waste being processed.
- Corrosion protection.
- Seismic design basis evaluation.

The conclusion of the latest IARs are that the 242-A Evaporator system and associated PC-5000 transfer line is not leaking and is fit for use. The inspections, tests, and analyses performed provide assurance that the tank system has adequate design, sufficient structural strength, and sufficient compatibility with the waste to not collapse, rupture, or fail during operation. The report also states that a review of construction files indicates that the building structure was designed and constructed to withstand a design-basis earthquake and recommends a frequency of future integrity assessments. The codes and standards applicable to the design, construction, and testing of the 242-A Evaporator tank system are evaluated as part of the fit for use determination [WAC 173-303-640(2)(d)] reached by the latest IARs for the 242-A Evaporator and associated PC-5000 transfer line.

4.1.2 Transfer Lines

This permit includes the PC-5000 transfer line (3”-EVAP_COND-PC5000-M17) leaving the 242-A Evaporator and ending at LERF Catch Basins 242AL-41 and 242AL-43 (TSD unit group boundary between 242-A Evaporator and LERF and 200 Area ETF); and the WTP backup transfer line (3”-WTP-002-M17) leaving WTP and merging with the PC-5000 transfer line at caisson MH-WTP-01 (TSD unit group boundary between 242-A Evaporator and WTP is the WTP fence line). Addendum A, “Part A Form”, topographic map depicts these TSD unit group boundaries.

DRAFT

Caisson MH-WTP-01, is a flat-bottomed fiberglass tank that contains valves for the isolation of either PC-5000 (3”-PC-5000-M17) or WTP backup transfer line (3”-WTP-002-M17) carrier pipes. All containment pipes open into caisson MH-WTP-01 allowing any leaks to transfer through the caisson to LERF Basin 43. The containment pipe lower internal surfaces are flush with the inside bottom surface of the caisson. The caisson has a 48-inch inside diameter, an overall length of 98-inches and a nominal wall thickness of ½-inch. There are four isolation valves inside the caisson that are controlled by 242-A Evaporator for transfer line use. The valves are 3-inch valves fabricated with stainless steel bodies and pipe extensions.

The PC-5000 transfer line has limited capacity, and cannot be used by both the 242-A Evaporator and WTP at the same time due to valve alignment. The use of the PC-5000 transfer line to transfer liquid effluent from WTP to LERF will be controlled by the 242-A Evaporator. The WTP process condensate transfer to LERF will satisfy the waste acceptance criteria identified in the LERF and 200 Area ETF Permit, Addendum B, “Waste Analysis Plan.”

4.1.2.1 PC-5000 Transfer Line (3”-EVAP_COND-PC5000-M17)

The PC-5000 primary pipeline (3”-EVAP_COND-PC5000-M17) leaves the 242-A Evaporator and ends at LERF Catch Basins 242AL-41 (valve 60M-41-2) and 242AL-43 (valve 60M-43-P). Valve 60M-41-2 and valve 60M-43-P are controlled by LERF and 200 Area ETF for transfers to LERF. The PC-5000 encasement line (6” ENC-M17)~~”~~ includes an ~~single-point~~ end-of-line electronic leak detection element, ~~PC-5000 encasement catch tank 60M-TK-1,~~ and sight glass at LERF Catch Basins 242AL-41 and 242AL-43 (refer to Section 4.1.7.3.3)~~FG-60M-001~~. Process condensate from the 242-A Evaporator is transferred to the LERF using a pump located in the 242-A Evaporator and approximately 5,000 feet of pipe, consisting of a 3-inch carrier pipe within a 6-inch outer containment pipeline. Flow through the pump is controlled through a valve at approximate flow rates from 40 to 80 gpm.

The encased fiberglass transfer line (PC-5000) exits the 242-A Evaporator below grade and remains below grade at a minimum 4-feet depth for freeze protection, until the pipeline emerges at the LERF Catch Basins 242AL-41 and 242AL-43. All piping at the catch basin that is above grade is wrapped with electric heat tracing tape and insulated for protection from freezing. Additional detail including information on secondary containment, leak detection and integrity assessment for this line is provided in Sections 4.1.7.3.3 and 4.1.5.1. The PC-5000 transfer line leaving the 242-A Evaporator is considered ancillary equipment to the 242-A Evaporator up to LERF Catch Basins 242AL-41 and 242AL-43.

4.1.2.2 Waste Treatment and Immobilization Plant Backup Transfer Line (3”-WTP-002-M17)

The process condensate from WTP can be transferred to LERF Basins 41 or 43, by using a pump located at WTP, and approximately 2,380 feet of pipe, consisting of a 3-inch carrier pipe within a 6-inch outer containment pipeline that merges with the PC-5000 transfer line at caisson MH-WTP-001. Valves located at LERF Catch Basin 242AL-41 (valve 60M-41-2) and Catch Basin 242AL-43 (valve 60M-43-P) are controlled by LERF and 200 Area ETF for transfers to LERF. The combined PC-5000 encasement line (6”-ENC-M17) and WTP backup transfer line (3”-WTP-002-M17) includes an ~~single-point~~end-of-line electronic leak detection element ~~is installed at the end of the PC-5000 transfer line, PC-5000 encasement catch tank 60M-TK-1, and sight glass FG-60M-001.~~ and sight glass at LERF Catch Basins 242AL-41 and 242AL-43 (refer to Section 4.1.7.3.4).

The encased fiberglass backup transfer line (3”-WTP-002-M17) exits the WTP and runs below grade, and merges with the PC-5000 transfer line at caisson MH-WTP-01, for transferring process condensate to LERF. The WTP backup transfer line (3”-WTP-002-M17) leaving the WTP is considered ancillary equipment to the 242-A Evaporator from caisson MH-WTP-01 up to the WTP fence line.

DRAFT

4.1.3 Vapor-Liquid Separator (C-A-1) and Ancillary Equipment

The following sections describe the vapor-liquid separator (C-A-1) and ancillary equipment.

Waste Feed System. Feed to the 242-A Evaporator is supplied via a pump located in the DST System 241-AW-102 feed tank. The feed pump transfers the waste to the 242-A Evaporator through a 3-inch diameter carbon steel transfer pipeline encased in a 6-inch diameter carbon steel pipe to provide secondary containment. The pump pit is equipped with a leak detector that is part of the DST System.

Waste feed will be sampled from 241-AW-102 or identified candidate feed tanks as described in the "Waste Analysis Plan" (Chapter 3.0). The feed sampler (SAMP-F-1) located in a sample enclosure located in the hot equipment storage room has been isolated and blanked, and will be closed in accordance with the approved Closure Plan.

Evaporator Process Loop. The 242-A Evaporator process loop equipment components are as follows:

- Reboiler (E-A-1).
- Vapor-liquid separator (C-A-1).
- Recirculation pump (P-B-1).
- Recirculation loop.

Figure 4-2 is a simplified process flow diagram showing the major components of the process loop.

Reboiler (E-A-1). Waste is heated as the waste passes through the reboiler before entering the vapor-liquid separator (C-A-1). The reboiler (E-A-1) is a vertical tube unit with steam on the shell-side and process solution on the tube-side. The 364 tubes in the reboiler (E-A-1) are enclosed in an approximately 40-inch-outside diameter, 15-feet-long stainless steel shell. Both the reboiler shell and tubes are constructed of 304L stainless steel. The shell is 1/4-inch thick and the tubes are 14-gauge steel. The reboiler is designed to distribute steam evenly and to prevent tube damage from water droplets that may be present in the steam.

Vapor-Liquid Separator (C-A-1). Process solution from the reboiler enters the vapor-liquid separator (C-A-1) via the upper recirculation line. Some of the solution flashes into vapor, which exits through a vapor line at the top of the vapor-liquid separator (C-A-1). The remaining solution (slurry) exits through the recirculation line at the bottom.

The vapor-liquid separator (C-A-1) consists of a lower and upper section. The lower (liquid) section is a stainless steel shell 14 feet in diameter having a 22,500 to 26,000 gallon normal operating capacity (including recirculation loop and reboiler). The maximum design capacity is 35,600 gallons. The upper (vapor) section is a stainless steel shell is 11.5 feet in diameter containing two deentrainment pads. These wire mesh pads remove liquids and solids that entrain into the vapor section of the vessel. Spray nozzles, using recycled process condensate or filtered raw water, wash collected solids from the deentrainment pads and vessel walls; or raw water is used to flush the vapor-liquid separator (C-A-1) vessel. Both sections of the vapor-liquid separator (C-A-1) are constructed of 3/8-inch-thick stainless steel.

Operating parameters in the vapor-liquid separator (C-A-1) are monitored to provide an indication of process problems such as slurry foaming, deentrainer flooding, or excessive vapor temperatures. Instrumentation also is available to monitor the liquid levels in the vapor-liquid separator (C-A-1). Interlocks are activated when high pressures or high- or low-liquid levels are detected, shutting down the evaporation process and placing the facility in a safe configuration. Three configurations can be achieved during operation of the 242-A Evaporator:

- Recirculation with vacuum.
- Recirculation without vacuum.
- Waste in vapor-liquid separator (C-A-1) with no recirculation.

DRAFT

The vapor-liquid separator (C-A-1) and recirculation loop can be drained and flushed to remove any residual solids from the system and/or to reduce radiation levels. The most common flush solution is water, but dilute nitric or citric acid solutions could be used. All acidic flush solutions are chemically adjusted to meet DST acceptance criteria before transfer to the DST System. Antifoam solution is added (at very low flow rates - approximately 0.01 to 0.1 gpm) to the vessel to prevent foaming. The antifoam solution is a noncorrosive, nonregulated silicone-based solution that is compatible with the evaporator components.

242-A Evaporator shutdown is accomplished by performing manual, localized actions such as system isolation, equipment shutdown, etc. The system is designed to drain so that normal practices effectively drain the system. After shutdown, a small volume of liquid may be present in the vapor-liquid separator (C-A-1).

Recirculation Pump. The stainless steel recirculation pump (P-B-1), is constructed as part of the recirculation loop to the reboiler. The 28-inch diameter axial flow pump has nominal flow rate of 13,000 to 16,000 gpm output. The recirculation pump is designed to handle slurry up to 30 percent undissolved solids by volume at specific gravities up to 1.8. The recirculation pump moves waste at high velocities through the reboiler to improve heat transfer, keep solids in suspension, and reduce fouling of the heat transfer surfaces.

The recirculation pump is equipped with shaft seals with high-pressure recycled process condensate (or water) introduced between the seals to prevent the waste solution from leaking out of the system. Seal water pressure and flow are monitored and controlled to shut down the recirculation pump if conditions are not adequate to prevent waste liquid from migrating into the seal water. The used seal water is routed to the feed tank.

Recirculation Loop. The recirculation loop consists of a 28-inch diameter stainless steel pipe that connects the vapor-liquid separator (C-A-1) to the recirculation pump and reboiler. The lower loop runs from the bottom of the vapor-liquid separator (C-A-1) to the recirculation pump inlet. The upper loop connects the pump discharge to the reboiler and the reboiler to the vapor-liquid separator (C-A-1). The feed line from the DST System feed tank and the slurry line to underground storage tanks are connected to the upper recirculation line.

Slurry System. The slurry system draws a portion of the concentrated waste from the upper recirculation loop and transfers it to the DST System.

The major components of the slurry system are the slurry pump and the slurry transfer pipelines. Figure 4-3 shows a simplified flow diagram of the slurry system. These components are described in the following paragraphs.

The slurry pump (P-B-2) is used to transfer slurry from the recirculation loop to the designated DST System tank. The pump is driven by a variable speed motor and is constructed of 304L stainless steel. The slurry pump is designed to generate high pressures to alleviate the possibility of a transfer line plugging.

Interlocks control the operation of the slurry pump. The slurry pump (P-B-2) is shutdown if any of the following occur:

- Excessive pressure is detected in the slurry lines to 241-AW Tank Farm.
- A leak is detected in the slurry transfer lines secondary containment.
- A leak is detected in the 241-AW Tank Farm valve pits (see Section 4.1.7.3.2).

The slurry pump uses a shaft seal with recycled process condensate (or water) and pressure and flow controls similar to the system described above for the recirculation pump.

DRAFT

Compliant transfer pipelines route slurry to a designated DST System tank within the 200 East Area. The detection of any leak by the DST System automated leak detection system is used to shut off the slurry pump. In lieu of the MCS automated shutdown, the slurry pump (P-B-2) can be manually shutdown at the direction of the shift manager or 242-A Evaporator control room operator if a leak occurs.

The flow rate of the slurry transfer to the DST System is monitored and a decrease in flow below a specified value automatically will shut down the slurry pump (P-B-2) and initiate a line flush with water. The objective of flushing the transfer line is to prevent settling of solids, which precludes plugging the slurry transfer lines.

Slurry samples can be taken from the recirculation loop when needed via a sampler (SAMP-F-2) that is located near the feed sampler in the load out and hot equipment storage room.

4.1.4 Condensate Collection Tank (TK-C-100) and Ancillary Equipment

The following section discusses the condensate collection tank (TK-C-100) and ancillary equipment. This equipment collects process condensate via the condensers in the vacuum condenser system, filters the condensate, and pumps the process condensate to LERF. Figure 4-4 provides a simplified process flow diagram showing the major components of the process condensate system. The following major components make up the process condensate system:

- Vacuum condenser system.
- Condensate collection tank (TK-C-100).
- Process condensate pump (P-C-100).
- Condensate filters (F-C-1 and F-C-3).
- Process condensate radiation monitoring, sampling system and diversion system (RC3).
- Seal pot.
- Process condensate recycle system.
- Vessel vent system.

Vacuum Condenser System. Vapors removed from the vapor-liquid separator (C-A-1) flow to a series of three condensers where the vapors are condensed using raw water. Condensate drains to the condensate collection tank (TK-C-100). The vacuum condenser system consists of the following major components:

- Primary condenser (E-C-1).
- Intercondenser (E-C-2).
- Aftercondenser (E-C-3).
- Steam jet ejectors (J-EC1-1 and J-EC2-2).

Figure 4-5 provides a simplified process flow diagram showing the major components of the vacuum condenser system. These system components are discussed in the following sections.

Primary Condenser (E-C-1). Vapors drawn from the vapor-liquid separator flow through the 42-inch vapor line, into the E-C-1 condenser where the majority of the condensation takes place. Noncondensed vapors exit to the intercondenser (E-C-2) while the condensed vapors (process condensate) drain to the condensate collection tank (TK-C-100). Cooling water passes through the cooling tubes and exits to TEDF.

The carbon steel condenser shell measures approximately 17.5 feet long with an 85-inch inside diameter. The condenser consists of 2,950 equally spaced carbon steel tubes that are 11 feet long with a 0.75-inch outside diameter.

DRAFT

Intercondenser (E-C-2). Noncondensed vapors from E-C-1 enter the intercondenser. The vapor stream contacts the cooling tubes in the condenser where cooling water provides additional condensation. The condensate drains to the condensate collection tank (TK-C-100). Noncondensed vapors and cooling water are routed to the after condenser.

The carbon steel intercondenser measures 7.25 feet long with a 15.4-inch inside diameter. This heat exchanger contains 144 tubes that are 66 inches long with a 0.75-inch outside diameter.

After condenser (E-C-3). Vapor discharged from the intercondenser enters the after condenser. Cooling is supplied to the after condenser by the cooling water from the intercondenser. Condensate is routed to the condensate collection tank (TK-C-100), while the noncondensed vapors are filtered, monitored, and discharged to the atmosphere through the vessel ventilation system. The cooling water is discharged to TEDF.

The carbon steel after condenser measures 7.4 feet long and has an 8-inch inside diameter. This heat exchanger contains 45 tubes that are 6 feet long with a 0.75-inch outside diameter.

Steam Jet Ejectors. The vacuum that draws the vapors from vapor-liquid separator (C-A-1) into the condensers is created by a two-stage steam jet ejector system. The first-stage jet ejector (J-EC1-1) maintains a vacuum on the primary condenser, which in turn creates a vacuum on the vapor-liquid separator. The ejector consists of a steam jet, pressure controller, and air bleed-in valve. Steam and noncondensed vapors from the primary condenser are ejected from J-EC1-1 into the intercondenser. The desired vacuum is obtained by controlling steam pressure and bleeding ambient air as necessary into the vapor header through an air intake filter. The second-stage jet ejector (J-EC2-1) creates the vacuum that moves vapors from the intercondenser through the after condenser.

Condensate Collection Tank (TK-C-100). Process condensate from the primary condenser, intercondenser, after condenser, and the vessel ventilation system drain to the condensate collection tank (TK-C-100). The tank is 14 feet in diameter, 19 feet high, and is constructed of 5/16-inch-thick stainless steel. The tank has a maximum design capacity of 17,800 gallons. Normal operating volume is approximately 50 percent of the tank capacity. A carbon steel base supports the tank. An agitator is installed but not used.

In the event of a tank overflow, the solution is routed through an overflow line to the drain system, which returns waste to the feed tank (241-AW-102). Overflow occurs when the volume exceeds about 16,000 gallons. The overflow line is equipped with a liquid filled trap to isolate the drain system from the tank.

Candidate feed tank waste samples are evaluated for the presence of a separate organic layer as described in the "Waste Analysis Plan" (Chapter 3.0) and process controls are used to reduce the risk of the condensate collection tank (TK-C-100) to receive small amounts of immiscible organics with the condensed waste. If detected, the organic layer is removed by overflowing the condensate collection tank (TK-C-100) back to the feed tank 241-AW-102. The liquid level in the tank is controlled well above the discharge pump intake point and a controlled overflow is conducted upon completion of each processing cycle (campaign or campaigns) to ensure that an organic layer does not accumulate and cannot be pumped to LERF.

Process Condensate Pump. A pump (P-C-100) moves the process condensate from the condensate collection tank (TK-C-100) through the condensate filter to LERF. The process condensate pump is a centrifugal pump constructed of 316 stainless steel.

Condensate Filters. After leaving the condensate collection tank (TK-C-100), the process condensate is filtered to remove solids. The primary condensate filter (F-C-1) has a welded steel housing. A second filter system (F-C-3), installed downstream is also used to filter the process condensate.

This system has duplex in-line filters in cast iron housing. Both filters employ a filter material that is compatible with the process condensate.

DRAFT

Process Condensate Radiation Monitoring, Sampling, and Diversion System. The process condensate is monitored for radiation during transfer to LERF. If radiation levels exceed established limits, an alarm is received and interlocks immediately divert the stream back to the condensate collection tank (TK-C-100) (or the feed tank) and shut off the process condensate pump. This ensures process condensate containing excessive radionuclides due to an accidental carryover from the vapor-liquid separator (C-A-1) is not transferred to LERF.

Seal Pot. The condensate collection tank (TK-C-100) receives condensed liquids from the vessel ventilation system. A seal pot collects the drainage before discharge into the condensate collection tank (TK-C-100) and isolates the tank from the vessel ventilation system.

Condensate Recycle System. For waste minimization, a portion of the process condensate from the condensate collection tank (TK-C-100) is recycled for deentrainment pad sprays and seal water for the recirculation pump (P-B-1) and slurry pump (P-B-2). Use of process condensate instead of raw water results in approximately 10 percent reduction in waste volume generated during continuous operation of the 242-A Evaporator. Filtered raw water also is available as a backup for sprays and seal water. A 2-inch diameter carbon steel line, stainless steel centrifugal pump (P-C-106), and filters (F-C-5 and F-C-4) supply process condensate from condensate collection tank (TK-C-100) to the pad sprays and pump seals. The filters are disposable cartridge filters in carbon steel housings arranged in parallel with one filter in service while the other is in standby.

4.1.5 Integrity Assessments

The IARs are maintained in the Hanford Facility Operating Record, 242-A Evaporator unit-specific portion and discuss:

- The standards used during design and construction of the 242-A Evaporator and the adequacy of those standards.
- The characteristics of the DST System waste processed.
- The adequacy of the materials of construction to provide corrosion protection from the waste processed.
- The age of the tanks and the effect of age on tank integrity.
- The results of the leak tests, visual inspections, and tank wall thickness inspections.
- The frequency and scope of future integrity assessments.
- Deficiencies in secondary containment design. These deficiencies are discussed in the IARs.

An Independent, Qualified, Registered Professional Engineer (IQRPE) certified the integrity assessment.

The inspections, tests, and analyses performed provide assurance that the 242-A Evaporator tank system has adequate design, sufficient structural strength, and sufficient compatibility with the waste to not collapse, rupture, or fail during operation. No evidence of degradation was noted during the visual test, ultrasonic test, or leak test. Both the condensate collection tank (TK-C-100) and the vapor-liquid separator (C-A-1)/reboiler loop passed leak tests. The frequency of subsequent integrity assessments has been established at every 10 years. This frequency is based on the results of the 2008 IARs transmitted to Washington State Department of Ecology (Ecology) on May 27, 2008, which include:

- *IQRPE Integrity Assessment Report for the 242-A Evaporator Tank System*, RPP-RPT-33306, Revision 0, 2007.
- *Integrity Assessment Report for the 242-A PC-5000 Transfer Pipeline*, RPP-RPT-33307, Revision 0, 2007.
- *IQRPE Integrity Assessment Report for the 242-A Evaporator Tank System*, RPP-RPT-33306, Revision 0-A, IQRPE, 2008.

DRAFT

4.1.5.1 Transfer Line (PC-5000)

An integrity assessment for the PC-5000 transfer line was performed, including a hydrostatic leak/pressure test at 150 psig. A statement by an IQRPE attesting to the integrity of the piping system is included in the latest IAR, along with the results of the leak/pressure test. The next integrity assessment for the PC-5000 transfer line will be completed on or before May 27, 2018, in accordance with the 2008 IARs. The schedule for conducting integrity assessments will be at a frequency of every 10 years unless otherwise required by an IQRPE or as required for system repairs and upgrades. All integrity assessments will be conducted in accordance with WAC 173-303-640.

4.1.6 Additional Requirements for Existing Tanks

Refer to information in Section 4.1.1 and the IARs, which includes measuring tank wall thicknesses, evaluating corrosion protection, and performing leak tests.

4.1.7 Secondary Containment and Release Detection for Tank Systems

This section describes the design and operation of secondary containment sumps, drain lines, and leak detection systems for the 242-A Evaporator.

4.1.7.1 Requirements for All Tank Systems

The Construction Specification for 242-A Evaporator-Crystallizer Facilities Project B-100 (*Construction Specification for 242-A Evaporator-Crystallizer Facilities Project B-100, B-100-C1, Automated Industries, Vitro Engineering Division, Richland Washington*, Vitro 1974) was used during preparation, design, and construction of the tank and secondary containment systems. The 2008 IARs detail how the construction specification relates to the national codes and standards.

Constructing the building and vessels per this specification ensures that foundations are capable of supporting tank and secondary containment systems and that uneven settling and failures from pressure gradients do not occur. The 2008 IARs state that the "242-A Evaporator has adequate design, sufficient structural strength, and sufficient compatibility with the wastes to not collapse, rupture, or fail during service loads associated with normal operations and that the building structure was designed and constructed to withstand a design basis earthquake."

The 2008 IARs describe the building and secondary containment system. This system is designed to ensure any release is detected within 24 hours.

The secondary containment system also is designed to contain 100 percent of the maximum operating capacity of the vapor-liquid separator (C-A-1)/reboiler loop, and the drain systems are sloped to allow collection of solution and have sufficient capacity to drain this volume in less than the required 24 hours.

The IAR describes the protective coating material and sealant used to protect concrete and joints from attack by leaks to the secondary containment. The materials of construction for the sump and drain lines are also compatible with the waste processed at the 242-A Evaporator.

4.1.7.2 242-A Building Secondary Containment

The 242-A Building serves as a secondary containment vault for the vapor-liquid separator (C-A-1), condensate collection tank (TK-C-100), and ancillary equipment used for transferring mixed waste at the 242-A Evaporator. The concrete for the operating area was poured to form a monolithic structure. Where needed, joints in the concrete were fabricated with preformed filler conforming to the standards of the American Society of Testing and Materials. Joint filler is sealed with a polysulfide sealant per the requirements of the construction specifications (*Construction Specification for 242-A Evaporator-Crystallizer Facilities Project B-100, B-100-C1, Automated Industries, Vitro Engineering Division, Richland Washington*, Vitro 1974).

DRAFT

Before restart in 1994, a new acrylic special protective coating was applied to the concrete in the pump, evaporator, and condenser rooms. The coating meets the requirements of the construction specifications (*Construction Specification for 242-A Evaporator-Crystallizer Facilities Project B-100, B-100-C1, Automated Industries, Vitro Engineering Division, Richland Washington*, Vitro 1974), including resistance to very high radiation doses, temperatures of 170°F, and spills of 25 percent caustic solution. The protective coating is maintained.

The following six rooms contain equipment used to process or store* mixed waste:

- Pump room.
- Evaporator room.
- Condenser room.
- Ion exchange room.
- Loading room* (used for temporary storage of mixed waste).
- Loadout and hot equipment storage room.

4.1.7.2.1 Pump Room

The pump room contains the process recirculation loop, recirculation pump (P-B-1), and slurry pump (P-B-2), and jumpers that transfer feed and slurry solutions between the vapor liquid separator (C-A-1) and the DST System.

The pump room secondary containment walls are 12- to 22-inch thick reinforced concrete. The secondary containment floor is 20-inch-thick reinforced concrete. The pump room floor is lined with 0.25-inch stainless steel and the concrete walls and ceiling cover blocks are painted with a special protective coating. The pump room contains pipe jumpers used to transfer feed and slurry solutions between the vapor-liquid separator and the DST System, and the process recirculation loop, recirculation pump (P-B-1), and slurry pump (P-B-2).

Leaks in the pump room collect in the pump room sump, a 5 x 5 x 6-feet deep sump with a 0.25-inch stainless steel liner. The pump room sump collects spills from various sources for transfer to the feed tank, 241-AW-102. Figure 4-6 provides a simplified process flow schematic of sources, which drain to the pump room sump. Drainage to the sump includes:

- Leaks to the pump room floor from equipment in the pump room.
- Evaporator room floor drain.
- Loadout and hot equipment storage room floor drain.
- Loading room floor drain.
- Raw water backflow preventer drain.

Solution in the pump room sump is transferred to the feed tank (241-AW-102) using a steam jet. A 10-inch secondary containment overflow line is provided for draining large volumes of solution should a catastrophic tank failure occur. Because the overflow line provides a direct path between the air space of feed tank 241-AW-102 and the pump room, a minimum level of water must be maintained in the sump to prevent cross ventilation. A leak into the pump room sump would be detected by a rise in the sump level. Leaks in the pump room are detected by:

- A rise in the sump level resulting in instrumentation alarms on high sump level.
- Inspections of the ancillary equipment and floor in the pump room identified in Chapter 6.0, "Procedures to Prevent Hazards."
- Unexplained level increases in feed tank 241-AW-102 because of liquid entering the 242-A Evaporator sump overflow drain line.

DRAFT

The recirculation and slurry pumps in the pump room are equipped with mechanical seals having pressurized water introduced between the seals. The seal water is maintained at a pressure that exceeds the process pressure at the seal to ensure water leaks into the process solution, but waste solution does not leak out. Water from seal leakage is collected in funnels in the pump room and routed to feed tank 241-AW-102 via the 10-inch overflow line described previously.

4.1.7.2.2 Evaporator Room

The evaporator room contains the vapor-liquid separator vessel (C-A-1), part of the recirculation loop, the reboiler, the 42-inch vapor line, and line used to empty the vapor-liquid separator to feed tank 241-AW-102.

The evaporator room secondary containment walls are 22-inch-thick reinforced concrete. The secondary containment floor is 20-inch-thick reinforced concrete. Leaks in the evaporator room flow to a floor drain that routes through a 3-inch line to the pump room sump described in Section 4.1.7.2.1. A leak in the evaporator room would be detected by a rise in the pump room sump level. The floor of the evaporator room and a portion of the pump room floor are 10 feet below grade to contain the entire contents of the vapor-liquid separator, reboiler, and recirculation loop in the event of a catastrophic failure. The floor and walls of the evaporator room up to an elevation of 6 feet are painted with a special protective coating.

4.1.7.2.3 Condenser Room

The condenser room contains the components of the process condensate system described in Section 4.1.4 (refer Figure 4-4), including the condensate collection tank TK-C-100.

The condenser room secondary containment walls are 12- to 22-inch-thick reinforced concrete. The secondary containment floor is 20-inch-thick reinforced concrete. Leaks in the condenser room flow to two floor drains that join and route through a 6-inch line to feed tank 241-AW-102. Leaks in the condenser room are detected by the following:

- Unexpected changes in liquid level in the condensate collection tank (TK-C-100). Instrumentation is provided to monitor liquid level in the tank, including high- and low-level alarms.
- Daily visual inspections of process condensate system components and piping.
- Unexplained level increases in feed tank 241-AW-102 because of liquid entering the common drain line from 242-A Evaporator.

The floor and walls of the condenser room up to an elevation of 4 feet are painted with a special protective coating.

4.1.7.2.4 Ion Exchange Room

The ion exchange room is a small room connected to the condenser room. This room previously contained an ion exchange column that has since been removed from the processing unit in 2003. The ion exchange room walls are 12 inches thick reinforced concrete. The floor is 20-inch-thick reinforced concrete. The room contains a single pipeline used to transfer process condensate during a campaign if the process condensate is diverted to feed tank 241-AW-102. The pipeline within the ion exchange room does not contain valves or other components that could release waste into the ion exchange room other than by a rupture of the line.

Surveillance of the ion exchange room is only required if the piping is returned to service and dangerous waste is reintroduced to the piping as would be the case for diverting process condensate to feed tank 241-AW-102.

DRAFT

4.1.7.2.5 Loading Room and Loadout and Hot Equipment Storage Rooms

The loading room and the loadout and hot equipment storage rooms are used to support maintenance of pump room equipment and store contaminated reusable equipment. Movement of equipment, waste, personnel and other items in and out of the unit as necessary to support ongoing operations and maintenance activities in contaminated zones can occur in these rooms. A contamination control curtain may also be closed in support of evolutions conducted in the load-out and hot equipment storage room to control the spread of contamination. The loadout and hot equipment storage room contains a slurry sampling system.

The loadout and hot equipment storage rooms walls are 12- to 22-inch thick reinforced concrete. The floors are 6-inch-thick reinforced concrete. The room contains two recirculation lines and samplers used to sample the feed and slurry streams. The feed sampler has been isolated and is no longer capable of sampling feed. The lines and samplers are located in a shielded enclosure adjacent to the pump room wall.

The loadout and hot equipment storage room contains two sumps: the drain sump and decontamination sump. The sumps are approximately 3 feet in diameter, about 4 feet deep, and lined with stainless steel.

Both sumps drain via a 3-inch drain line to the pump room sump described in Section 4.1.7.2.1. The sumps, floor, and walls of the load out and hot equipment storage room up to an elevation of 12 feet are painted with a special protective coating.

Leaks in the sampler piping, flow into two drains in the sample enclosure that drain via a 2-inch line to the decontamination sump, which drains to the pump room sump (described in Section 4.1.7.2.1). Leak detectors in the sampler enclosures or a rise in the pump room sump level detects leaks in the sampler piping.

4.1.7.2.6 242-A Building Drain Lines

Figure 4-6 provides a simplified process flow schematic of sources routed to the 242-A Building drain lines. The 242-A Evaporator TSD unit group boundary includes these lines up until they exit the 242-A Building. At this point, the lines are considered DST System components. Four lines serve to drain the 242-A Building and equipment to feed tank 241-AW-102:

- Pump room sump drain line (DR-334): 10-inch carbon steel line that transfers process condensate overflow/diverted liquids and empty out of the pump room sump to the feed tank.
- Vapor-liquid separator vessel drain line (DR-335): 10-inch carbon steel line that allows gravity drain of the vessel to the DST feed tank 241-AW-102.
- Condenser room drain line (DR-343): 6-inch carbon steel line that drains potential leakage from the condenser room.
- Diverted process condensate drain line (DR-338): Process condensate liquid drains through DR-338 into sump drain line (DR-334) which drains to feed tank 241-AW-102.

The four lines are sloped to drain about 560 feet to feed tank 241-AW-102 via the drain pit (241-AW-02D). Although WAC 173-303-640(1)(c) exempts systems that serve as secondary containment from requiring secondary containment, drain lines DR-334, DR-335, and DR-338 have outer encasement piping and are part of the DST System.

4.1.7.3 Transfer Line Secondary Containment and Leak Detection

This section describes the design and operation of secondary containment and leak detection systems for transfer lines between the DST System and the 242-A Evaporator, from 242-A Evaporator to LERF, and from WTP Backup Transfer Line to PC-5000. The 242-A Evaporator TSD unit group boundary for lines running between the 242-A Evaporator and the DST System ends at the exterior wall of 242-A Building.

DRAFT

At this point, these lines (e.g., feed and slurry line piping [SN-269, SN-270, SL-167, and SL-168]) are DST System components.

The PC-5000 transfer line transfers process condensate (Section 4.1.2) from the 242-A Building to LERF. The 242-A Evaporator TSD unit boundary includes the PC-5000 transfer line up to the LERF TSD unit group boundary ("Part A Form," Chapter 1.0, and Section 4.1.2).

If a leak or spill of dangerous and/or mixed waste is detected in the secondary containment for PC-5000 and WTP backup transfer line (3"-WTP-002-M17), the following actions will be taken:

- Immediately and safely stop the flow of dangerous waste into the tank or secondary containment.
- Determine the source of the dangerous waste.
- Remove the dangerous waste from secondary containment pursuant to WAC 173-303-640(7)(b). The waste removed from secondary containment areas will be managed as dangerous and/or mixed waste.
- If the cause of the release has not damaged the integrity of the tank system, the Permittee may return the tank system to service pursuant to WAC 173-303-640(7)(e)(ii). In such a case, the Permittee will take action to ensure the incident that caused liquid to enter the secondary containment will not reoccur.
- If the source of the dangerous waste and/or mixed waste is determined to be a leak from the primary containment, or the tank system is unfit for use as determined through an integrity assessment or other inspection, the Permittee must comply with the requirements of WAC 173-303-640(7) and take the following actions [WAC 173-303-640(5)(c)]:
  - Close the tank system according to procedures in WAC 173-303-640(7)(e)(i); or
  - Repair and re-certify [in accordance with WAC 173-303-810(13)(a)] the tank system before the tank system is placed back into service [WAC 173-303-640(7)(e) and (f) and WAC 173-303-806(4)(c)(vii)].
- The permittees will notify and report to Ecology any releases to the environment in accordance with WAC 173-303-640(7)(d).
- If liquids (e.g., dangerous and/or mixed waste, leaks and spills, precipitation, fire water, liquids from damaged or broken pipes) cannot be removed from the secondary containment system within 24-hours, Ecology will be verbally notified within 24-hours of determination that the liquid cannot be removed.
- If the liquids cannot be removed with 24-hours, the Permittees will provide Ecology with a written demonstration within seven (7) business days, in accordance with WAC 173-303-640(4)(c)(iv), WAC 173-303-640(7)(b)(ii), and WAC 173-303-806(4)(c)(vii). The written demonstration will identify at a minimum:
  - Reasons for delayed removal.
  - Measures implemented to ensure continued protection of human health and the environment.
  - Current actions being taken to remove liquids from secondary containment.
- The Permittees will document in the operating record the actions/procedures taken to comply with the above conditions in accordance with WAC 173-303-640(6)(d).

DRAFT

4.1.7.3.1 Feed Line Piping

Waste feed is supplied to the 242-A Evaporator by two DST System feed lines (SN-269 and SN-270) (one in service and one spare), each consist of 3-inch transfer piping within a 6-inch secondary containment encasement piping. If the DST System MCS annunciates a leak alarm associated with the DST System transfer, the transfer operator notifies the 242-A Evaporator control room operator of the appropriate action regarding processing operations.

4.1.7.3.2 Slurry Line Piping

The slurry pump (P-B-2) transfers mixed waste through one of two DST System transfer lines: SL-167, for transfer to valve pit 241-AW-B (standard configuration), or SL-168 for transfer to valve pit 241-AW-A (alternate configuration). Slurry solution can be routed via double-encased piping from these valve pits to any designated DST System slurry receiver tank. If the DST System MCS annunciates a leak alarm associated with the DST System transfer, the transfer operator notifies the 242-A Evaporator control room operator of the appropriate action regarding processing operations.

4.1.7.3.3 PC-5000 Transfer Line (3”-EVAP_COND-PC5000-M17)

The process condensate transfer line (PC-5000) from the 242-A Evaporator is centrifugally cast, fiberglass-reinforced epoxy thermoset resin pressure pipe fabricated to meet the requirements of American Society of Mechanical Engineers (ASME) D2997 (ASME 1984). The 3-inch carrier piping is centered and supported within 6-inch containment piping. Pipe supports are fabricated of the same material as the pipe, and meet the strength requirements of American National Standards Institute (ANSI) B31.3 (ANSI 1987) for dead weight, thermal, and seismic loads. PC-5000 transfer line leaves the 242-A Evaporator and merges with the WTP backup transfer line (3”-WTP-002-M17) at caisson WTP-MH-01. At the intersection of the transfer lines (3”-EVAP_COND-PC5000-M17 and 3”-WTP-002-M17), caisson MH-WTP-01 provides secondary containment.

The PC-5000 primary pipe leaves the 242-A Evaporator and ends at valve 60M-43-P. The encasement line (6”-ENC-M17) and caisson MH-WTP-01 provide secondary containment. If a leak develops in the primary pipe, fluid will travel down the interior of the encasement line to a leak detection system that sounds an alarm in the 242-A Evaporator Control Room. In accordance with Permit Condition III.4.C.4, ~~I~~if the electronic leak detection system for LDS-41-5 or LDE-43-2 is not available, visual inspection can be employed at the corresponding LERF Catch Basins 242AL-41 or 242AL-43 sight glass. For LERF Basin 41, the sight glass is FG-60M-002; for LERF Basin 43, the sight glass is FG-60M-001.~~the PC-5000 encasement catch tank 60M-TK-1(sight glass FG-60M-001).~~ Upon verification of a leak, the 242-A Evaporator shift manager will direct the shutdown of the aqueous waste through the transfer line(s) to immediately prevent addition of waste. To stop 242-A Evaporator waste through the PC-5000 transfer line, the condensate pump (P-C-100), located at the 242-A Evaporator is shutdown. Any leaked waste in the encasement line is gravity drained to the corresponding LERF ~~B~~basin~~-43~~.

Drawing H-2-88766, Sheets 1 and 3, provide details of the piping from the 242-A Evaporator to LERF.

4.1.7.3.4 Waste Treatment Plant Backup Transfer Line (3”-WTP-002-M17)

The process condensate transfer line (3”-WTP-02-M17) from WTP is constructed of fiberglass-reinforced plastic. The piping material specification is American Society for Testing and Materials (ASTM) D2996, “Standard Specification for Filament-Wound ‘Fiberglass’ (Glass-Fiber-Reinforced Thermosetting-Resin) Pipe.” The 3-inch carrier piping is centered and supported within 6-inch containment piping. Pipe supports are fabricated of the same material as the pipe, and meet the strength requirements of ANSI B31.3 (ANSI 1987) for dead weight, thermal, and seismic loads. The backup transfer line leaves WTP and merges with PC-5000 transfer line at caisson WTP-MH-01. At the intersection of the transfer lines, the caisson (WTP-MH-01) provides secondary containment.

DRAFT

In accordance with Permit Condition III.4.C.4, ~~I~~if a leak develops in the primary pipe, fluid will travel down the interior of the secondary containment pipe to a leak detection system located at LERF Catch Basins 242AL-41 and 242AL-43, which sounds an alarm in the 242-A Evaporator control room or 200 Area ETF control room. If the electronic leak detection system for LDS-41-5 or LDE-43-2 is not available, visual inspection can be employed at the corresponding LERF Catch Basins 242AL-41 or 242AL-43 sight glass. For LERF Basin 41, the sight glass is FG-60M-002; for LERF Basin 43, the sight glass is FG-60M-001.~~PC-5000 encasement catch tank 60M-TK-1(sight glass FG-60M-001).~~ Upon verification of a leak, the shift manager notifies WTP to shutdown the aqueous waste through the backup transfer line from WTP (3”-WTP-002-M17). Any leaked waste in the encasement line is gravity drained to the corresponding LERF ~~B~~basin~~-43~~.

Drawing H-2-88766, Sheet 5 provides details of the transfer line from WTP to 242-A Evaporator.

4.1.7.4 Additional Requirements for Specific Types of Systems

Addressed in this section are additional requirements in WAC 173-303-640 for vault systems like the 242-A Building to ensure neither buildup of ignitable vapors nor does infiltration of precipitation occur. This section also addresses secondary containment for ancillary equipment and piping associated with the tank systems.

4.1.7.4.1 Vault Systems

The 242-A Building is a vault constructed partially below ground, providing secondary containment for the tank systems. The 242-A Evaporator “Part A Form” (Chapter 1) contains the ignitable waste number because of the presence of nitrite and nitrate salts, which in sufficient concentrations are considered oxidizers per WAC 173-303-090(5)(a)(iv). Because of their low volatility, these compounds are unlikely to be present in the vapor phase of the tank systems at the 242-A Evaporator. However, to prevent the spread of contamination, the vapor-liquid separator (C-A-1) is ventilated and maintained at lower air pressure than the building air space during operation. This ensures air leakage is from uncontaminated building air space into the tank vapor space. Vapors from the vapor-liquid separator (C-A-1) flow to the vacuum condenser system described in Section 4.0.

The condensate collection tank (TK-C-100), collects process condensate that is not designated ignitable or reactive. The tank systems and ancillary equipment are located within the 242-A Building, which is completely enclosed to prevent run-on and infiltration of precipitation into the secondary containment system.

4.1.7.4.2 Ancillary Equipment

The 242-A Building provides secondary containment for ancillary equipment. Double containment is provided for the feed and slurry transfer lines between the 242-A Building and the AW Tank Farm by pipe-in-pipe arrangements. Since the ancillary equipment has compliant secondary containment the daily inspection requirements in WAC 173-303-640(4)(f) are not applicable.

4.1.8 Variances from Secondary Containment Requirements

The IARs identified in Section 4.1.5 discuss the following three deficiencies associated with the secondary containment system:

Pump Room Sump. The pump room sump does not comply with secondary containment requirements because liquid must be kept in the sump to provide a seal to prevent airflow between the pump room and feed tank 241-AW-102. Although the sump has a 0.25-inch-thick stainless steel liner to prevent corrosion of the concrete floor, the sump does not have secondary containment.

DRAFT

Routine Discharges through Secondary Containment. The configuration of the 242-A Evaporator process requires routine, batch discharges of dangerous waste through secondary containment drain lines. These routine discharges include the following.

- Steam condensate, cooling water, and process condensate sample stations drain to the DST feed tank, 241-AW-102, through drain line DR-343. Total discharge is about 10 gallons per month during operation.
- Sample bottle water sprays down in the slurry sample station drains to the decontamination sump in the load out and hot equipment storage room. The decontamination sump then drains to the pump room sump. Total discharge is about 20 gallons per month during operation.
- Vapor-liquid separator (C-A-1) and recirculation loop gravity drain to DST feed tank 241-AW-102, through DR-335. During operations (end of campaigns/shutdown), the waste in the vapor-liquid separator (C-A-1) and recirculation loop can be emptied using the slurry or feed lines; however, this does not fully empty the vapor-liquid separator (C-A-1) and recirculation loop. To ensure that waste is not stored when the 242-A Evaporator is in the shutdown mode, dump valves (HV-CA1-7 and HV-CA1-9) are opened to gravity drain the vapor-liquid separator (C-A-1) and recirculation loop to DST feed tank 241-AW-102 via drain line DR-335. The dump valves may also open to drain the system in the event of equipment failure, interlocks, or power outage.

Transfer Piping Wall Penetrations. Three dangerous waste transfer line piping sections passing through the 242-A Building wall are single-walled, i.e., no secondary confinement in the wall (about 22-inch-thick reinforced concrete).

These deficiencies were identified to Ecology, October 28, 1993. Ecology's response stated:

- "No physical revision of the pipe wall penetrations or the floor drains in the evaporator pump room will be required prior to evaporator restart."
- "If at any time leakage is seen or detected from these installations, or if for any reason these installations are repaired or rebuilt, they will be rebuilt or repaired in accordance with regulations."
- "Should a spill occur in the evaporator pump room, the sump and the piping shall be rinsed three times as required in WAC 173-303-160, as appropriate. 'Appropriate' in this case means that the original regulation was written for a free container, not a sump, so that judgment will have to be used in the application of the regulation. The rinsate shall be transferred to the double-shell tanks."

4.1.9 Tank Management Practices

All waste to be processed at the 242-A Evaporator must be sampled to determine if the waste is compatible with the materials of construction at the 242-A Evaporator. Before each campaign, candidate feed tanks are sampled per the requirements of the "Waste Analysis Plan" (Chapter 3.0). Based on the results, three possible options are implemented.

- The waste is acceptable for processing without further actions.
- The waste is unacceptable for processing as a single batch, but is acceptable if blended with other waste that is going to be processed.
- The waste is unacceptable for processing.

DRAFT

The 242-A Evaporator process is controlled by operators using the MCS. The MCS computer monitors liquid levels in the vapor-liquid separator (C-A-1) and condensate collection tank (TK-C-100). The MCS system manages liquid levels in the vapor-liquid separator (C-A-1) using a control function that controls feed delivery to the vapor-liquid separator (C-A-1). The MCS system also manages liquid levels in the condensate collection tank (TK-C-100) using a control function to maintain the tank level at approximately 50-percent under normal conditions. The MCS has alarms that annunciate on high-liquid levels for both the vapor-liquid separator (C-A-1) and condensate collection tank (TK-C-100) to notify operators that actions must be taken to prevent overfilling of these vessels.

An interlock is activated when high-liquid level in the vapor-liquid separator (C-A-1) is detected, automatically shutting down the feed transfer pump at feed tank 241-AW-102, thereby preventing overfilling of the vessel and carryover of slurry into the process condensate system. The condensate collection tank (TK-C-100) has an overflow line that routes solution to feed tank 241-AW-102 in case of overfilling.

Process and instrumentation drawings are listed in Section 4.3.

The process condensate pump (P-C-100), recirculation pump (P-B-1), and slurry pump (P-B-2) can be shutdown using the MCS or manually at the direction of the Shift Manager or 242-A Evaporator Control Room Operator if a leak occurs.

4.1.10 Labels or Signs

This section identifies how tank labeling practices will be implemented to meet the requirements of WAC 173-303-640(5)(d). Both the condensate collection tank TK-C-100 and ancillary piping is labeled "Process Condensate" to alert trained personnel which pipes in the condenser room contain dangerous waste.

The vapor-liquid separator (C-A-1) is located in the evaporator room, a normally unoccupied area. This area is posted as a radiological area based on current conditions. Access is controlled using As Low as Reasonably Achievable (ALARA) principles and limited to personnel in accordance with "Personnel Training" (Chapter 8.0). The tank labels are visible from the walls of the tank enclosure rooms, which are less than 50 feet from the tank systems; therefore, label visibility requirements are met.

4.1.11 Air Emissions

Tank systems that contain acutely or chronically toxic waste, by inhalation must be designed to prevent the escape of such vapors as required by WAC 173-303-640(5)(e). For the DST System waste in the vapor-liquid separator (C-A-1), no determination has been performed to determine if the waste is acutely or chronically toxic by inhalation. Most of the toxic compounds in the DST waste are not volatile, but because of the high radioactivity of the waste, controls are included to prevent or mitigate the release of tank vapors. During operation, the vapor-liquid separator (C-A-1) is maintained under vacuum to ensure air leakage is from uncontaminated building air space into the tank vapor space. The vapor in the vapor-liquid separator (C-A-1) then passes through deentrainment pads to prevent liquid and solid carryover into condensers (E-C-1, E-C-2, and E-C-3). The vapor stream passes through the three condensers that remove the condensable components. The noncondensable vapors pass through High Efficiency Particulate Air (HEPA) filters before being discharged to the environment.

4.1.12 Management of Ignitable or Reactive Wastes in Tank Systems

The 242-A Evaporator "Part A Form" (Chapter 1.0) contains the ignitable waste number because of the presence of oxidizers (nitrates and nitrites). Waste accepted at the 242-A Evaporator does not meet the definition of a combustible or flammable liquid given in National Fire Protection Association (NFPA) code number 30 (NFPA 1996). The buffer zone requirements in NFPA-30, which require tanks containing combustible or flammable solutions be a safe distance from each other and from public way, are not applicable.

DRAFT

Testing is performed on the DST System candidate feed tank waste to be processed to verify the waste does not react exothermically at the elevated temperatures at the 242-A Evaporator. The "Waste Analysis Plan" (Chapter 3.0) discusses waste acceptance requirements due to the reactive waste number contained on the 242-A Evaporator "Part A Form" (Chapter 1.0).

4.1.13 Management of Incompatible Wastes in Tank Systems

Waste transferred to the 242-A Evaporator must be compatible before mixing. The "Waste Analysis Plan" (Chapter 3.0) includes waste compatibility requirements; including waste-to-waste compatibility of multiple candidate feed tanks. Waste stored in the condensate collection tank (TK-C-100) contains low quantities of constituents where compatibility from batch to batch is not a concern.

4.2 Air Emissions Control

This section addresses the requirements of Air Emission Standards for Process Vents, under 40 Code of Federal Regulations (CFR) 264 Subpart AA (incorporated by reference in WAC 173-303-690).

4.2.1 Applicability of Subpart AA Standards

The 242-A Evaporator performs distillation that specifically requires evaluation of process vents for the applicability of 40 CFR 264 Subpart AA.

Waste processed at the 242-A Evaporator routinely contains greater than 10 parts per million organic concentrations; therefore, organic air emissions are subject to 40 CFR 264.1032, which requires organic emissions from all affected vents at the Hanford Facility be less than 3 pounds per hour and 3.1 tons per year, or control devices be installed to reduce organic emissions by 95%.

The 242-A Evaporator has one process ventilation system that vents both the vapor-liquid separator (C-A-1) and the condensate collection tank (TK-C-100). The vent lines from both tanks combine before entering an off-gas system consisting of a deentrainer, a prefilter/demister, HEPA filters, and an exhaust fan. The vessel vent off-gas system is located on the third floor of the condenser room, with the exhaust stack extending horizontally through the east wall of the building at an elevation of approximately 48 feet above ground level. The exhaust stack bends to run vertically with the discharge point approximately 111 feet above ground level.

During waste processing, the airflow is about 720 cubic feet per minute, with about 150 cubic feet per minute ventilated from the condensate collection tank (TK-C-100) and the remainder from the vapor-liquid separator (C-A-1) and air in leakage.

Organic emissions occur during waste processing, which is less than 6 months (182 days) each year. This is the maximum annual operating time for the 242-A Evaporator, as shutdowns are required during the year for maintenance outages, candidate feed tank analysis, and establishing transfer routes for staging waste in the DST System.

4.2.2 Process Vents - Demonstrating Compliance

This section outlines how the 242-A Evaporator complies with the requirements of 40 CFR 264, Subpart AA, including a discussion of the basis for meeting the organic emission limits, calculations demonstrating compliance, and conditions for reevaluating compliance.

4.2.2.1 Basis for Meeting Limits/Reductions

The TSD units at the Hanford Facility subject to 40 CFR 264, Subpart AA meet the organic air emission limits of 3 pounds per hour and 3.1 tons per year, established in 40 CFR 264.1032, by the design of the facility. The 242-A Evaporator and the other TSD units collectively can meet these standards without the use of air pollution control devices.

DRAFT

4.2.2.2 Demonstrating Compliance

Process vent organic air emissions are controlled by establishing limits for acceptance of waste at the 242-A Evaporator. Before startup of each campaign, the waste to be processed is sampled in the DST System to determine the organic content. If the concentrations of organic constituents are less than the limits in the "Waste Analysis Plan" (Chapter 3.0), the waste can be processed, provided the Hanford Facility will not exceed 3 pounds per hour and 3.1 tons per year. The waste acceptance limits in the "Waste Analysis Plan" (Chapter 3.0) are based on equilibrium calculations and assumptions given in *Organic Emission Calculations for the 242-A Evaporator Vessel Vent System* (WHC-SD-WM-ES-380, 1996). The calculation to determine organic emissions consists of the following steps:

1. Determine the emission rate of each candidate feed tank organic constituent by multiplying the constituent concentration by the corresponding partition factor in *Organic Emission Calculations for the 242-A Evaporator Vessel Vent System* (WHC-SD-WM-ES-380, 1996).
2. Sum the emission rates of all organic constituents to determine the emission rate for the candidate feed tank. The maximum emission rate for the campaign is the rate from the candidate tank with the greatest emission rate.
3. Determine the total amount of emission during the campaign by using operating time and a weighted average emission rate, based on the volume of each candidate feed tank processed.

The organic emission rates and quantity of organics emitted during the campaign are determined using these calculations and are included in the operating record for each campaign, as required by 40 CFR 264.1035. The Hanford Facility has a system to ensure organic emissions from units subject to 40 CFR 264, Subpart AA are less than the limits of 3 pounds per hour and 3.1 tons per year. Records documenting total organic emissions are available for Ecology review on request.

4.2.2.3 Reevaluating Compliance with Subpart AA Standards

Calculations to determine compliance with Subpart AA will be reviewed when any of the following conditions occur at the 242-A Evaporator:

- Changes in the configuration or operation that affect the assumptions in the *Organic Emission Calculations for the 242-A Evaporator Vessel Vent System* (WHC-SD-WM-ES-380, 1996).
- Annual operating time exceeds 182 days.

4.3 Engineering Drawings

The drawings in Table 4-1 are Process and Instrumentation Diagrams (P&IDs) for the systems at the 242-A Evaporator that contact mixed waste. These drawings are provided for general information, and demonstrate adequacy of the tank systems design.

DRAFT

Table 4-1 Process and Instrumentation Diagrams

System	Drawing Number	Drawing Title
Vapor-Liquid Separator (C-A-1)	H-2-98988 Sheet 1	P&ID Evaporator Recirc System
Reboiler (E-A-1)/Recirculation Line	H-2-98988 Sheet 2	P&ID Evaporator Recirc System
Slurry System	H-2-98989 Sheet 1	P&ID Slurry System
Condensate Collection Tank (TK-C-100)	H-2-98990 Sheet 1	P&ID Process Condensate System
Secondary Containment Drain System	H-2-98995 Sheet 1	P&ID Drain System
Secondary Containment Drain System	H-2-98995 Sheet 2	P&ID Drain System
Condensers	H-2-98999 Sheet 1	P&ID Vacuum Condenser System
Pump Room Sump	H-2-99002 Sheet 1	P&ID Jet Gang Valve System
Condensate Recycle System	H-2-99003 Sheet 1	P&ID Filtered Raw Water System
PC-5000 Transfer Line (3”-EVAP_COND-PC5000-M17)	H-2-88766, Sheets 1, ~~and~~ 3, and 6	P&ID LERF Basin & ETF Influent Evaporator
WTP backup transfer line (3”-WTP-002-M17)	H-2-88766, Sheet 5	P&ID LERF WTP Interface

The drawings in Table 4-2 are for secondary containment systems for the 242-A Evaporator. Because secondary containment systems are the final barrier for preventing the release of dangerous waste into the environment, modifications that affect the secondary containment systems will be submitted to Ecology as a Class 1, 2, or 3 Permit modifications, as required by WAC 173-303-830.

Table 4-2 242-A Evaporator Secondary Containment Systems Drawings

System	Drawing Number	Drawing Title
242-A Building	H-2-69277 Sheet 1	Structural Foundation Plan Sections & General Notes - Areas 1 & 2
	H-2-69278 Sheet 1	Structural Foundation Elevations & Details - Areas 1 & 2
	H-2-69279 Sheet 1	Structural First Floor Plan & AMU - Areas 1 & 2
Pump Room Sump Drainage	H-2-69352 Sheet 1	Sections Process Waste Drainage
242-A Building Drainage	H-2-69354 Sheet 1	Plan Process Waste Drainage
Pump Room Sump	H-2-69369 Sheet 1	Pump Room Sump Assembly & Details

DRAFT

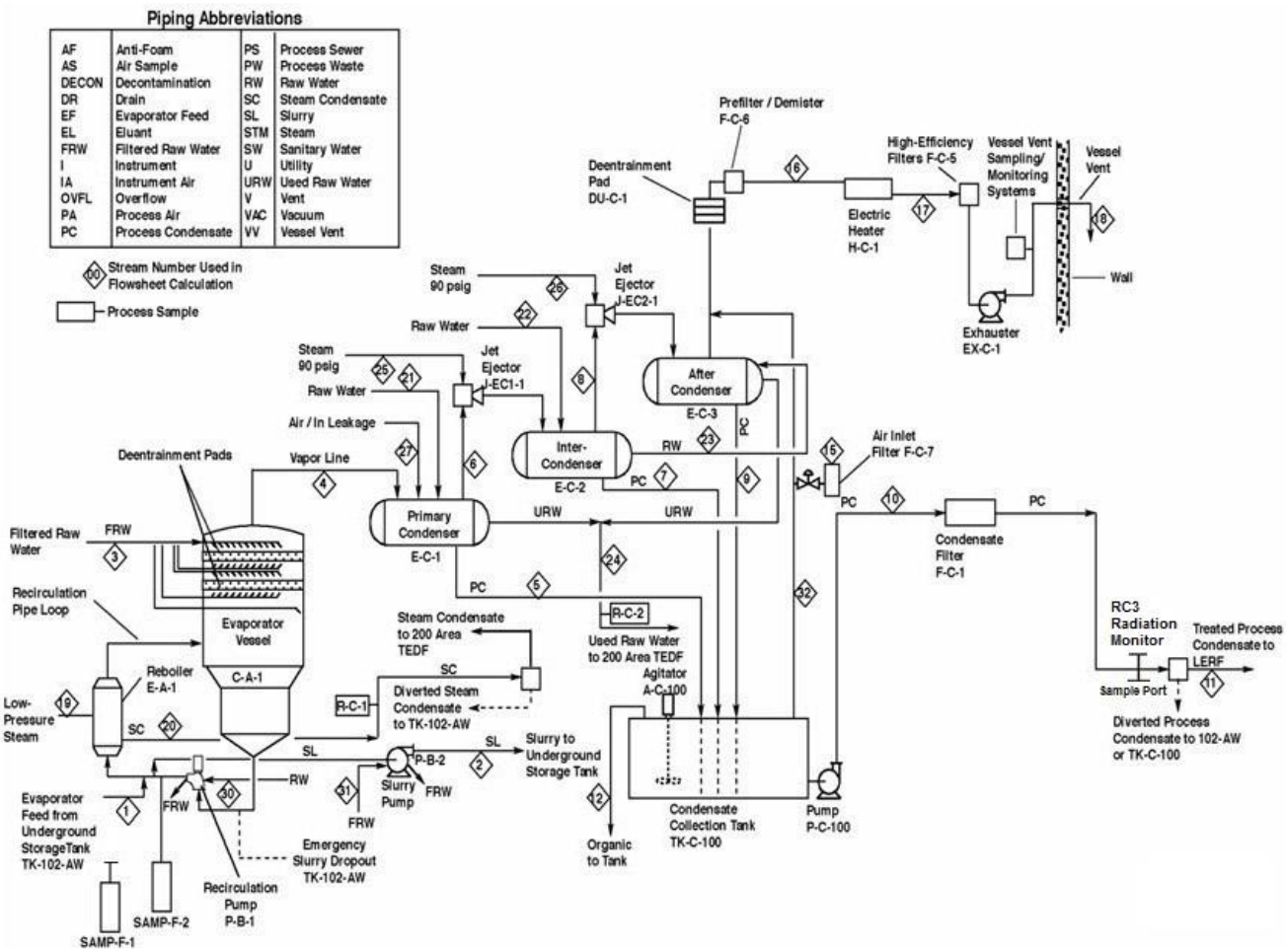

Figure 4-1 242-A Evaporator Simplified Process Flow Diagram

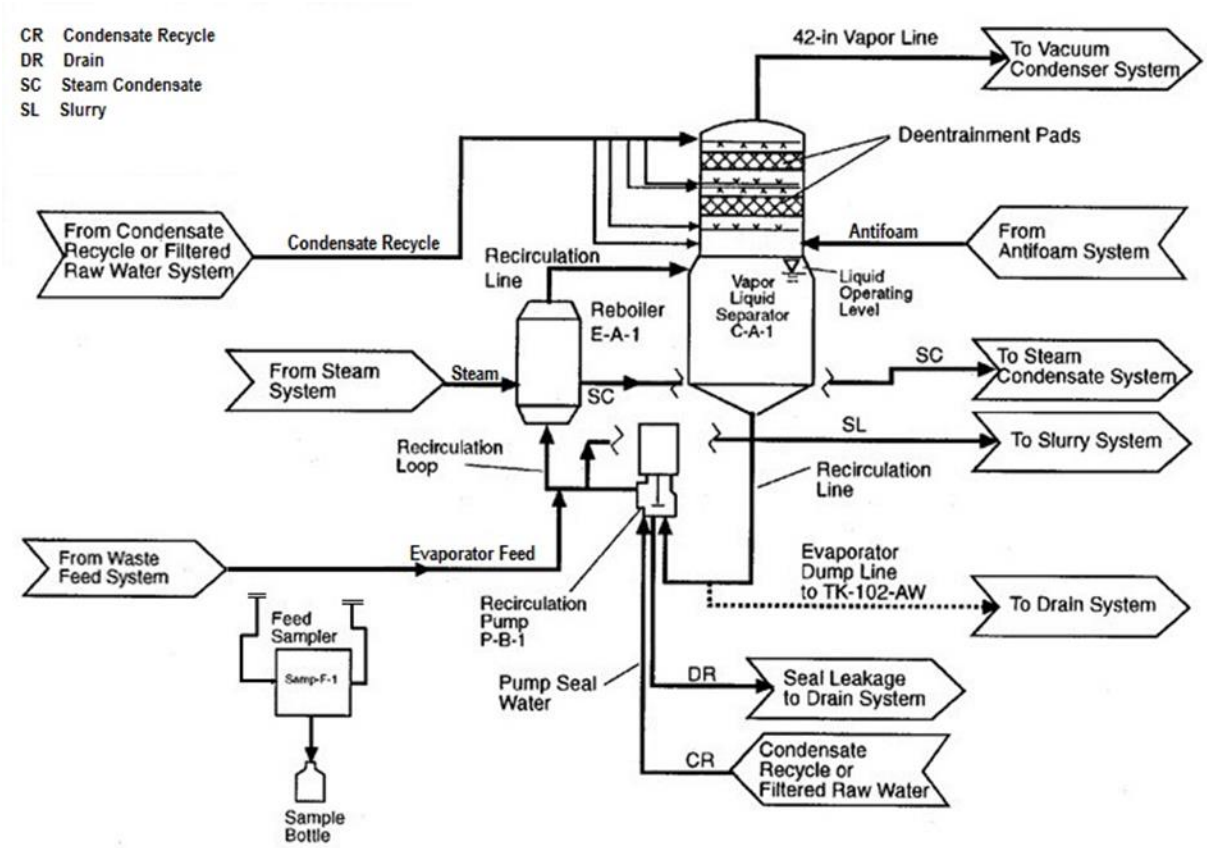

Figure 4-2 242-A Evaporator Process Loop

DRAFT

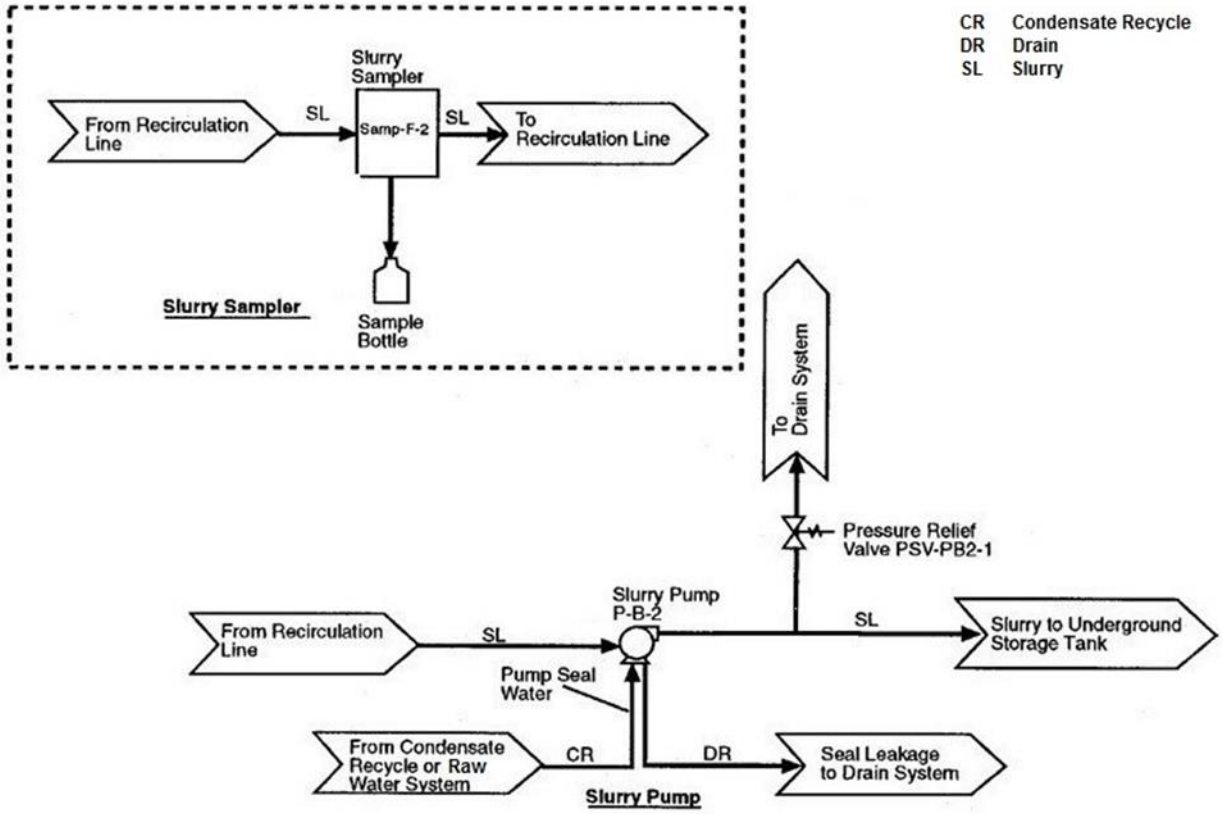

Figure 4-3 242-A Evaporator Slurry System

DRAFT

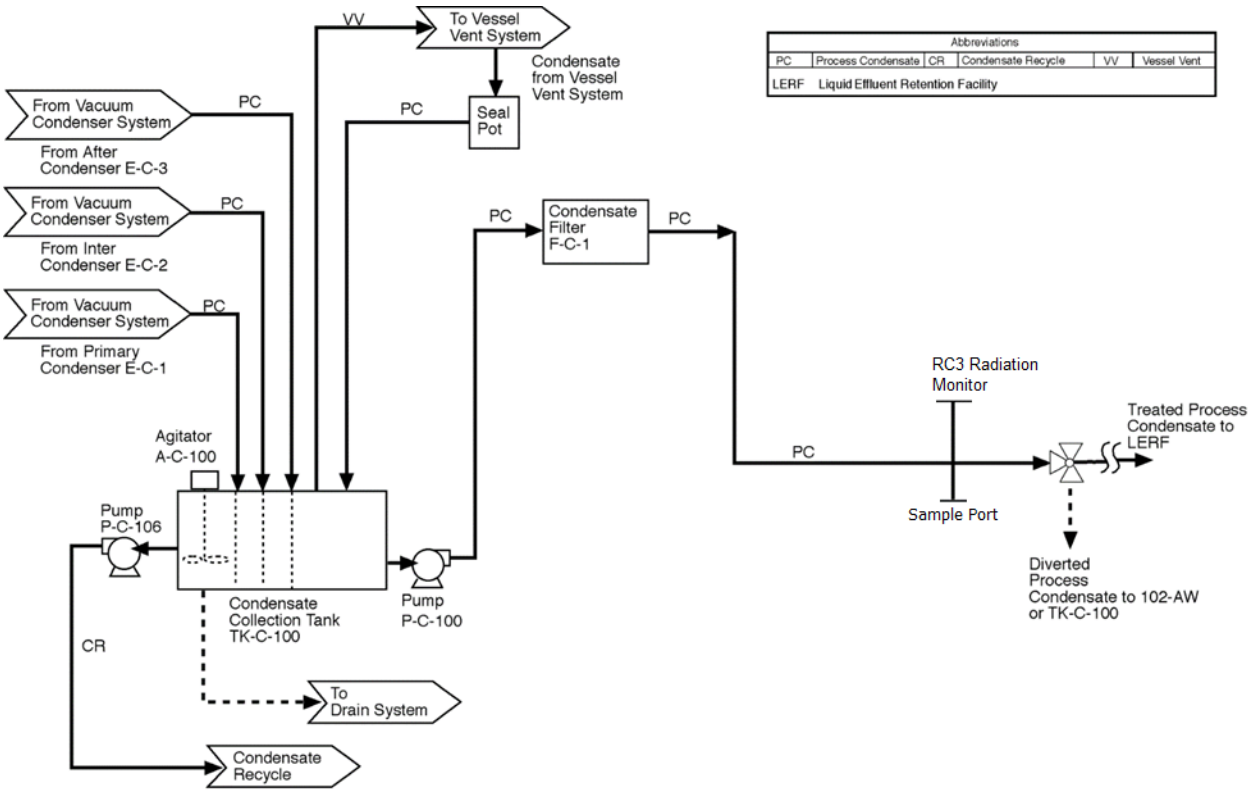

Figure 4-4 242-A Evaporator Process Condensate System

DRAFT

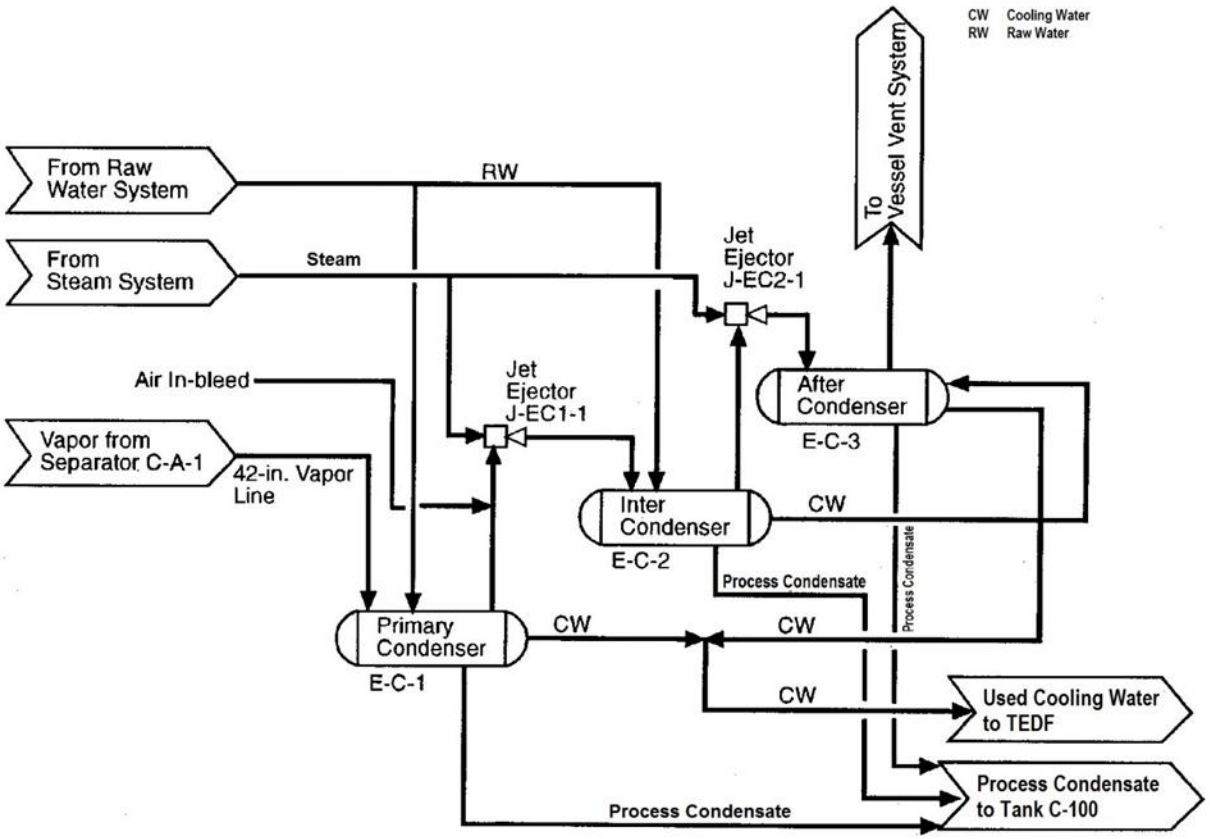

1 **Figure 4-5 242-A Evaporator Vacuum Condenser System**

DRAFT

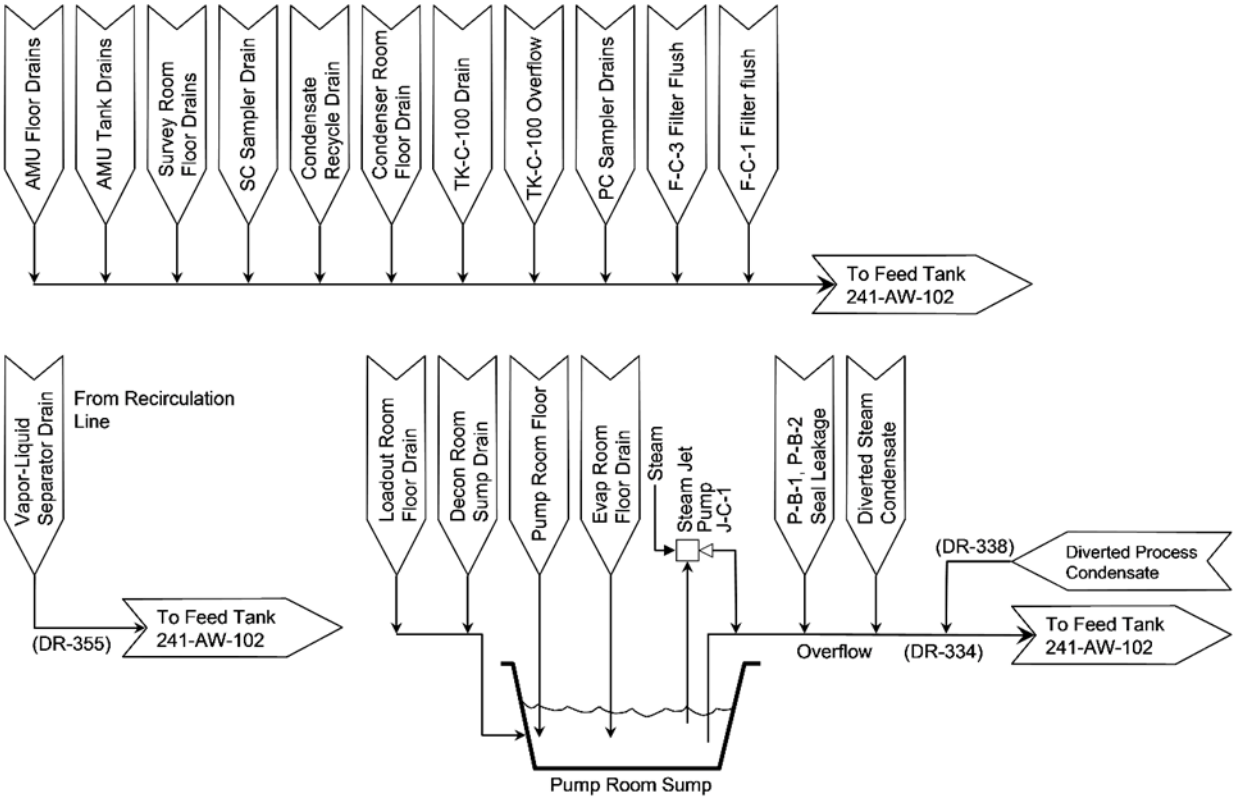

Figure 4-6 242-A Evaporator Drain System

DRAFT

This page intentionally left blank.

DRAFT

242-A EVAPORATOR
CHAPTER 6.0
PROCEDURES TO PREVENT HAZARDS

CHANGE CONTROL LOG

Change Control Logs ensure that changes to this unit are performed in a methodical, controlled, coordinated, and transparent manner. Each unit addendum will have its own change control log with a modification history table. The "**Modification Number**" represents Ecology's method for tracking the different versions of the permit. This log will serve as an up to date record of modifications and version history of the unit.

Modification History Table

Modification Date	Modification Number
11/12/2019	8C.2019.4F
04/09/2018	PCN-242-A-2017-02
11/16/2017	8C.2017.5F
02/18/2016	8C.2015.Q4

DRAFT

This page intentionally left blank.

DRAFT

CHAPTER 6.0
PROCEDURES TO PREVENT HAZARDS

DRAFT

This page intentionally left blank.

DRAFT

CHAPTER 6.0
PROCEDURES TO PREVENT HAZARDS

TABLE OF CONTENTS

6.0 PROCEDURES TO PREVENT HAZARDS 5
6.1 Security 5
6.2 Inspection Plan 5
6.2.1 General Inspection Requirements 5
6.2.2 Tank System Inspections and Corrective Actions 6
6.2.3 Storage of Reactive and Ignitable Wastes 8
6.2.4 Air Emissions Control and Detection Inspections 8
6.2.5 Inspection Logs 9
6.2.6 Schedule for Remedial Action for Problems Revealed 9
6.3 Preparedness and Prevention Requirements 9
6.3.1 Equipment Requirements 9
6.3.2 Internal Communications 10
6.3.3 Spacing Requirement 11
6.4 Preventive Procedures, Structures, and Equipment 11
6.4.1 Loading and Unloading Operations 11
6.4.2 Runoff 11
6.4.3 Water Supplies 11
6.4.4 Equipment Failure and Power Outages 11
6.4.5 Personnel Exposure 12
6.5 Prevention of Reaction of Ignitable, Reactive, and Incompatible Waste 13
6.5.1 Precautions to Prevent Ignition or Reaction of Ignitable or Reactive Waste 13
6.5.2 Precautions for Handling Ignitable or Reactive Waste and Mixing of Incompatible Waste 13

TABLES

Table 6-1 Visual Inspection Schedule for Tanks, Piping, and Rooms 14
Table 6-2 Inspection Schedule of Safety, Security, and Emergency Equipment 15
Table 6-3 Inspection Schedule for Alarm Monitoring 16
Table 6-4 Inspection Schedule for Maintenance and Other Inspections 18

DRAFT

This page intentionally left blank.

DRAFT

6.0 PROCEDURES TO PREVENT HAZARDS

This chapter discusses security, inspection schedules, preparedness and prevention requirements, preventive procedures, structures, and equipment, and prevention of reaction of ignitable, reactive, and incompatible waste for the 242-A Evaporator.

6.1 Security

Refer to Permit Attachment 3, *Security*, for compliance with Washington Administrative Code (WAC) 173-303-310(2)(b) and (c). The 242-A Evaporator is located within the 200 Area of the Hanford Facility and access is controlled by physical barriers, which complies with WAC 173-303-310(2)(c). To meet the requirements of WAC 173-303-310(2)(a), signs stating "Danger—Unauthorized Personnel Keep Out," or equivalent language, legible at 25 feet or more, are posted at each entrance to the active portion or each entrance that will lead to the active portion. The Permittees will post signs on or near the outside doors to the 242-A Evaporator.

6.2 Inspection Plan

This section describes the method and schedule for inspections of the 242-A Evaporator. The purpose of inspections is to identify situations that might cause or lead to a release of mixed waste that could pose a threat to human health and the environment. Abnormal conditions identified by an inspection must be corrected on a schedule that prevents hazards to the public and environment.

6.2.1 General Inspection Requirements

This section provides an overview of inspections performed at the 242-A Evaporator. A copy of the inspection plan is kept in the 242-A Evaporator Operating Record. There are three general classes of inspections at the 242-A Evaporator:

- Monitoring of remote instrumentations and alarms are performed by operating personnel in the 242-A Evaporator control room using the Monitor Control System (MCS) computer.
- Visual inspections of tanks and equipment are performed by operating personnel. Other inspections of 242-A Evaporator equipment are performed as noted in Table 6-1 through Table 6-4.
- Preventive maintenance of equipment and calibration of instruments are performed by maintenance personnel. A computerized tracking system is used to identify and schedule preventive maintenance and calibration activities.

Preventive maintenance and instrument calibrations on certain equipment might not be possible when the 242-A Evaporator is operating. Because of the limited duration of 242-A Evaporator campaigns, these activities are scheduled during outages between campaigns to avoid interference with operating activities. Per Condition II.O.3 inspection of high radiation areas will be addressed on a case-by-case basis.

6.2.1.1 Types of Problems

The 242-A Evaporator inspections include, but are not limited to, the following:

- Condition of tanks and ancillary equipment.
- Condition of secondary containment.
- Evidence of leaks or overflows from tanks, piping, or transfer lines.
- Condition of security equipment.
- Condition of safety, communications, and emergency equipment.

A schedule of inspections, including items to be inspected, problems to look for, frequency of inspections and responsible organization are provided in Table 6-1 through Table 6-4.

DRAFT

6.2.1.2 Frequency of Inspections

The frequency of inspections is based on the significance of a failure of the equipment and on regulatory requirements, Hanford Site and industry standards, and experience of the nature and frequency of equipment failures.

Unless otherwise noted, inspection frequencies are defined by the following periodicities:

- Daily means once per calendar day.
- Weekly means once per calendar week, spanning from Sunday to Saturday.
- Monthly means once per calendar month.
- Quarterly means once per calendar quarter.
- Annually means at least once per 12-month period ±30 days.
- Continuous monitoring means instrument monitoring performed remotely (control room) continuously during 242-A Evaporator waste processing operations and/or waste transfers, or Waste Treatment Plant (WTP) waste transfers as appropriate. If instrumentation is not functioning, visual inspections are performed as identified in Table 6-3.
- The frequency of inspections for the 242-A Evaporator is given in Tables 6-1 through Table 6.4.

6.2.1.3 Maintenance

Leak detectors are functionally checked annually. The frequency of some alarm monitoring is continuous. This means an operator must be present in the control room to monitor alarm instruments that continuously check for conditions such as leaks and high sump levels. Continuous monitoring is only required when the 242-A Evaporator is processing waste.

6.2.2 Tank System Inspections and Corrective Actions

This section discusses the inspections performed on the two tank systems at the 242-A Evaporator: the vapor liquid separator (C-A-1), and the condensate collection tank (TK-C-100). Inspections include secondary containment and leak and overfill prevention equipment.

6.2.2.1 Overfill Prevention

The vapor liquid separator (C-A-1), is equipped with instrumentation that alarms before the tank reaches a level where the tank could overflow or entrain liquid waste into the vacuum condenser system. The alarm annunciates in the 242-A Evaporator control room allowing operating personnel to take immediate action to stop the vapor liquid separator (C-A-1) from overfilling.

The condensate collection tank (TK-C-100), was designed with an overflow line that routes waste to the Double Shell Tank (DST) System feed tank 241-AW-102. This design prevents tank overflow to the condenser room.

6.2.2.2 Visual Inspections

Visual inspections of tanks and secondary containments are performed to check for leaks, signs of corrosion or damage, and malfunctioning equipment. The following rooms containing dangerous waste are inspected:

- Condenser room.
- Pump room.
- Loadout and hot equipment storage room.

In addition, the Aqueous Makeup Unit (AMU) and Loading Room are inspected when dangerous waste is present in the room.

DRAFT

The vapor liquid separator (C-A-1) is located in the evaporator room, with a portion of the recirculation loop located in the pump room. Because of the high radiation dose in the evaporator room, visual inspections cannot be performed. Leaks in the evaporator room drain to the pump room sump; monitoring of the pump room sump instrumentation is performed to determine if leaks have occurred. Visual inspection of the pump room and the loadout and hot equipment storage room is performed through the shielding windows in the AMU to constrain personnel radiological exposure to levels that are As Low as Reasonably Achievable (ALARA).

6.2.2.3 Leak Detection

The sample enclosures in the loadout and hot equipment storage room have leak detectors for both the feed and slurry samplers. For information on these systems and their secondary containment, refer to Chapter 4.0, "Process Information." The DST System slurry transfer lines have a leak detection system, which is monitored and functionally tested by the DST System.

During sampling or maintenance activities associated with the evaporator room, pump room, or loadout and hot equipment storage room, a radiological contamination control curtain may be extended over the loadout room to reduce the likelihood of contaminants reaching the environment through the loadout door. When extended, the contamination control curtain will limit visibility to the loadout and hot equipment storage room from the shielding window on the AMU mezzanine while completing inspections. When this is the case, inspection forms will denote that the containment curtain was extended. Leaks in the evaporator room, pump room, and the loadout and hot equipment storage room drain to the pump room sump. The sump high-level alarm serves as a leak detector for these rooms. For information on the rooms and their drain systems, refer to Chapter 4.0, "Process Information."

During 242-A Evaporator waste transfers to Liquid Effluent Retention Facility (LERF), the PC-5000 transfer line is continuously monitored by an ~~single-point~~end-of-line electronic leak detection element, or by visual inspection ~~at the PC-5000 encasement catch tank 60M-TK-1 (sight glass FG-60M-001).~~ employed at the corresponding sight glass at LERF Catch Basins 242AL-41 (FG-60M-002) and/or 242AL-43 (FG-60M-001), in accordance with Permit Condition III.4.C.4.a. The leak detection system alarms are monitored remotely in the 242-A Evaporator control room. If any liquid is observed the 242-A Evaporator Shift Manager is notified to take corrective actions. Section 4.1.7.3 addresses secondary containment and leak detection.

During WTP waste transfers to PC-5000, the WTP backup transfer line (3"-WTP-002-M17) is continuously monitored by an ~~single-point~~end-of-line electronic leak detection element, or by visual inspection ~~at the PC-5000 encasement catch tank 60M-TK-1 (sight glass FG-60M-001).~~ employed at the corresponding sight glass at LERF Catch Basins 242AL-41 (FG-60M-002) and/or 242AL-43 (FG-60M-001), in accordance with Permit Condition III.4.C.4.a. The leak detection system alarms are monitored remotely in the 242-A Evaporator control room or the 200 Area Effluent Treatment Facility (ETF) control room. If any liquid is observed the shift manager is notified to take corrective actions. Section 4.1.7.3 addresses transfer line secondary containment and leak detection.

6.2.2.4 Alternative Leak Detection during Electrical/Ventilation Outages

As part of maintenance or system upgrades, the need to secure electrical power or ventilation to the 242-A Evaporator sometimes becomes necessary. This includes activities such as, but not limited to: cleaning and inspection of the Motor Control Centers (MCCs) for distributing electrical power to the systems at the 242-A Evaporator, ventilation system maintenance and upgrades. Planned electrical or ventilation outages are performed during periods when DST System waste is not being processed.

During times when access is limited as a result of electrical or ventilation outages, performance of daily inspections specified in Table 6-1 may be impacted. When impacted, an alternative method of leak detection is implemented for the condenser room, and the inspections are suspended in the pump room, loadout and hot equipment storage room, and the loading room.

DRAFT

- **Condenser Room**. A camera will be placed above the floor drain to detect the presence of leaks or spills during maintenance as appropriate. If required, the camera and subsequent television monitor will be provided electrical power via an alternative source. Operators will complete their daily inspections for leaks or spills using this method for the condenser room. Facility personnel will document the use of this alternative method in the 242-A Evaporator Operating Record. The process condensate collection tank (TK-C-100), located in the condenser room, is the only tank storing dangerous waste on a routine basis. It is not normal to allow personnel access into the condenser room during extended electrical or ventilation outages unless maintenance activities or upgrades require entry.
- **Pump Room, Loadout and Hot Equipment Storage Room, and Loading Room**. Performance of Table 6-1 daily inspection is not possible during maintenance activities affecting the electrical power supply to the overhead lighting because these rooms do not have the capability for a camera. Storage of mixed waste does not occur in these rooms because systems which manage mixed waste within the pump room and the loadout and hot equipment storage room are flushed and gravity drained to the extent possible after each campaign. Should any remaining liquid leak from primary containment; it is captured by the secondary containment system and routed to the pump room sump and ultimately to the 241-AW-102 DST System feed tank. Quantities of liquid sufficient to reach 241-AW-102 would cause a change in tank level. Facility personnel will document when inspections cannot be performed due to electrical outages in the 242-A Evaporator Operating Record.

The process described in the preceding paragraphs of this section may also be implemented when external events cause electrical or ventilation outages.

6.2.2.5 Cathodic Protection

Cathodic protection is not required for the equipment within the 242-A facility boundaries. The only portion of the system, which is underground, is the PC-5000 transfer line. The PC-5000 transfer line is constructed of fiberglass.

6.2.2.6 Tank Assessments

The Integrity Assessment Reports were issued in 1998 and 2008. The frequency and nature of these assessments are discussed in Chapter 4.0, “Process Information.”

6.2.3 Storage of Reactive and Ignitable Wastes

Inspection of areas where ignitable or reactive wastes are stored is conducted by a professional person who is familiar with the International Fire Code, or in the presence of the local, state, or federal fire marshal. The inspection record includes the date and time of the inspection, the name of the professional inspector, a notation of the observations made, and any remedial actions which were taken as a result of the inspection. The completed inspection record is included in the 242-A Evaporator Operating Record.

6.2.4 Air Emissions Control and Detection Inspections

The process vent at the 242-A Evaporator is subject to 40 Code of Federal Regulations (CFR) 264, Subpart AA, which requires organic emissions be limited to 1.4 kilograms (3 pounds) per hour, and 2.8 mega grams (3.1 tons) per year, or controls be installed to reduce organic emissions by 95 percent. Organic concentrations in the waste processed at the 242-A Evaporator are limited to ensure the values of 1.4 kilograms (3 pounds) per hour and 2.8 mega grams (3.1 tons) per year are not exceeded. Therefore, no emission control devices are installed on the 242-A Evaporator vessel ventilation system and no inspections are required (Chapter 4.0, “Process Information”).

DRAFT

6.2.5 Inspection Logs

Visual inspections (refer to Tables 6-1-6-4) are performed using inspection log sheets (also called round sheets or eRounds) that outline frequency, the components to inspect, operating conditions and ranges, and types of problems. Log sheets are kept in the 242-A Evaporator control room or retained on electronic media. Inspectors record the following information:

- Date and time of the visual inspection.
- Printed name and handwritten or electronic signature of the person performing the inspection.
- Notations of the observations made, including space for writing comments.
- An account of spills or discharges in accordance with WAC 173-303-145.

Completed log sheets are reviewed and approved by the shift supervisor, collected, and stored for at least 5 years in the 242-A Evaporator Operating Record. If an inspection log cannot be located in the 242-A Evaporator Operating Record, a substitute documentation/log will be added to the 242-A Evaporator Operating Record that documents the missing log. If an inspection was scheduled or attempted; but could not be performed or fully completed due to a planned event (e.g., planned power outage), then a reasonable attempt will be made to re-schedule and complete the inspection within the identified inspection frequency. If an inspection was scheduled or attempted; but could not be performed or fully completed due to an unplanned event (e.g., Hanford Site or local area emergency or injury; unplanned power outage; unexpected or radiological conditions, work, training, or safety restrictions); the missed inspection or portions thereof that were not completed shall be documented in the relevant inspection log or facility logbook; and if applicable, reported in the Hanford Facility Annual Noncompliance Report.

Maintenance inspections are performed as part of the maintenance job control system. After completion, the maintenance documentation is reviewed and signed.

6.2.6 Schedule for Remedial Action for Problems Revealed

If while performing a visual inspection (Table 6-1), a leak or spill is discovered, 242-A Evaporator management responds immediately per Chapter 7.0, "Contingency Plan." Action is taken to stop the leak and determine the cause. The waste is removed from the secondary containment within 24 hours or in a timely manner that prevents harm to human health and the environment. The specific actions for the pump room sump are described in Chapter 4.0, "Process Information."

If an alarm activates during inspections, an operator responds immediately and implements appropriate actions.

If an inspection identifies equipment that is missing, damaged, or not operating properly, the operator records the problem on a deficiency log in the 242-A Evaporator control room or on electronic media. Repair work is prioritized by 242-A Evaporator management to mitigate health and environmental risks.

6.3 Preparedness and Prevention Requirements

The following sections document the preparedness and prevention measures taken at the 242-A Evaporator.

6.3.1 Equipment Requirements

The following sections describe the internal and external communications and emergency equipment located at the 242-A Evaporator that can be activated by the 242-A Evaporator Building Emergency Director (BED). Hanford Facility-wide equipment is identified in Permit Attachment 4, *Hanford Emergency Management Plan* (DOE/RL-94-02).

DRAFT

6.3.2 Internal Communications

The 242-A Evaporator is equipped with internal communication systems to provide immediate emergency instruction to personnel. The on-site communication systems at the 242-A Evaporator include telephones, hand-held two-way radios, a public address system, and alarm systems. The telephone and radio systems provide for internal and external communication. Alarm systems allow personnel to appropriately respond to various emergencies, including building evacuations, take cover events, fires and/or explosions. The locations of telephones, public address systems, and alarms are given in the Chapter 7.0, "Contingency Plan."

Immediate emergency instruction to personnel is provided by a public address system using speaker horns and speakers located throughout the 242-A and 242-AB buildings and outside.

6.3.2.1 External Communications

The 242-A Evaporator is equipped with devices for summoning emergency assistance from the Hanford Fire Department, the Hazardous Materials Response Team, and/or Hanford Patrol, as necessary. External communication to summon emergency assistance is made by using a telephone communication system, fire alarm pull boxes, or hand-held radio as described in Permit Attachment 4, *Hanford Emergency Management Plan*, (DOE/RL-94-02). These devices are provided throughout the 242-A Evaporator.

During certain periods, only one operator may be available within the 200 East plateau. This operator has access to external communication using telephones located throughout the building.

6.3.2.2 Emergency Equipment

Emergency equipment is available throughout the 242-A Building. The locations of emergency equipment are provided in Chapter 7.0, "Contingency Plan."

Major fire damage is unlikely at the 242-A Evaporator because of the concrete construction and because the amount of combustible material is minimized. Temperature activated water sprinkler systems, emergency lights, fire alarms pull boxes, and fire extinguishers are located throughout the 242-A Evaporator. The 242-A Evaporator relies primarily on the Hanford Fire Department to respond to fires and other emergencies as described in Permit Attachment 4, *Hanford Emergency Management Plan*, (DOE/RL-94-02). The Hanford Fire Department is capable of providing rapid response to fires within the 200 East Area.

Safety showers are used to decontaminate personnel. Water for these devices is supplied from the sanitary water system.

Spill kits are used to provide spill control measures. An inventory of the equipment in the spill kit is included inside the cabinet. The spill kit seal is checked monthly to ensure the spill kit has not been used. If used, the spill kit will be replenished by the next monthly inspection and a new seal applied.

If items are unavailable, then this will be noted on the inspection sheet and the kit will be left unsealed until inventory items are replenished.

The 242-A Evaporator operating personnel are trained in the use of emergency equipment (Chapter 8.0, "Personnel Training").

6.3.2.3 Water for Fire Control

Water for fire protection is supplied from the 200 East Area raw water system. The water distribution system is sized to provide adequate volume and pressure to supply firefighting needs under normal and emergency conditions. A fire hydrant is located in the immediate proximity of the 242-A Building.

In the event that the sprinkler system at the 242-A Evaporator does not put out a fire, or the sprinkler system is damaged during an accident, the Hanford Fire Department fire station will provide equipment as described in Permit Attachment 4, *Hanford Emergency Management Plan* (DOE/RL-94-02).

DRAFT

6.3.3 Spacing Requirement

Sufficient space is maintained on the exterior of the 242-A Evaporator to allow access of personnel and equipment responding to fires, spills, or other emergencies. Unobstructed fire lanes run from Fourth Street and Canton Avenue to the 242-A Building main entrance to allow emergency vehicle access to the main entrance and the nearby fire hydrant.

The 242-A Evaporator interior space is designed to allow access by emergency response personnel while maintaining barriers to contain releases of gaseous or liquid waste and hazardous substances as defined in WAC 173-303-040. Exit (egress) paths in the rooms containing dangerous waste are checked daily to ensure the walkways have not been obstructed.

6.4 Preventive Procedures, Structures, and Equipment

The following sections describe preventive procedures, structures, and equipment.

6.4.1 Loading and Unloading Operations

Loading and unloading operations, as described in WAC 173-303-395(4), do not take place at the 242-A Evaporator. Liquid mixed waste is transferred only by pipeline.

6.4.2 Runoff

Liquid waste handling at the 242-A Evaporator occurs within tank systems with secondary containment. Rooms containing mixed waste have drains that route to either the pump room sump or the DST System feed tank, 241-AW-102. The pump room sump overflows to the DST System feed tank as well. Therefore, runoff from a major leak, such as a break in a large water line within the 242-A Building, would be contained within the 242-A Evaporator or drained to the DST System feed tank 241-AW-102. Refer to Chapter 4.0, "Process Information," for information on secondary containment and drain systems.

6.4.3 Water Supplies

Raw and sanitary water are supplied to the 242-A Evaporator via separate underground lines. Raw water is filtered to prevent organisms and other debris from clogging valves, fire hydrants, and other equipment. Sanitary water is filtered and treated before distribution through a piping system separate from the raw water system.

The raw water supply to the 242-A Evaporator enters the 242-A-81 Water Service Building, passing through a strainer and backflow preventer before entering the facility. The backflow preventer ensures contaminated water cannot flow back into the raw water system. A second backflow preventer is installed in the 242-A Evaporator on the raw water supply line connecting with the condensate recycle line. This system allows either raw water or process condensate to be used for the pump seal water and deentrainment pad spray water without risk of contamination of the raw water system.

The sanitary water system provides water to the lunchroom, drinking fountains, men's and women's change rooms, and safety showers. There are no connections between sanitary water and any system or piping containing mixed waste.

6.4.4 Equipment Failure and Power Outages

The 242-A Evaporator is designed to mitigate the effects of failure of a major piece of equipment. In the event of equipment failure or power outages, the evaporator process can be shut down and the vapor liquid separator (C-A-1) gravity drains to the DST System feed tank, 241-AW-102, and the process condensate collection tank (TK-C-100), is designed to overflow to DST System feed tank, 241-AW-102. This places the 242-A Evaporator in a safe configuration, and mitigates failure of the process condensate pump used to transfer the process condensate to LERF.

DRAFT

Upon loss of power the following automatically occur:

- Supernate feed pump AW-P-102, which is located in a DST tank, de-energizes, stopping feed to the vapor liquid separator C-A-1 vessel.
- Supernate feed valve HV-CA1-1 opens, initiating emptying of the vapor liquid separator C-A-1 vessel to 241-AW-102.
- Steam supply valve HV-EA1-5 to the E-A-1 reboiler closes, ceasing boil off in the vapor liquid separator C-A-1 vessel.
- Vapor liquid separator C-A-1 vessel vacuum breaker HV-EC1-5 opens, ceasing boil off in the vapor liquid separator C-A-1 vessel.
- Recirculation pump P-B-1 de-energizes, stopping recirculation through the recirculation loop.
- Dump valves HV-CA1-7 and HV-CA1-9 open, draining waste in the vapor liquid separator C-A-1 vessel to 241-AW-102.
- Uninterruptible Power Supply (UPS) will provide temporary power to the MCS long enough to monitor the safe shutdown of the process described above.
- Personnel emergency equipment (Fire Alarm Control Panels, Emergency lighting and exit lights) operates on backup battery power to support safe exit from the facility if an emergency condition occurs.

Power Outages are discussed in Chapter 7.0, "Contingency Plan."

6.4.5 Personnel Exposure

Design, administrative controls, and personal protective equipment are used at the 242-A Evaporator to prevent undue exposure of personnel to mixed waste.

The following features were incorporated into the 242-A Evaporator design to minimize personnel exposure.

- The 242-A Evaporator is designed for remote operation of equipment containing highly radioactive solutions such as waste feed and slurry. These solutions usually are present only in the pump room and evaporator room, which are heavily shielded and routinely are not entered by operating personnel.
- The 242-A Building ventilation system is designed to provide airflow from uncontaminated zones to progressively more contaminated zones.
- Emergency lighting devices are located strategically throughout the 242-A Evaporator.
- Eyewash stations and safety showers are located as identified in Chapter 7.0, "Contingency Plan."
- Methods for decontaminating vessels and equipment are available to reduce personnel exposure if entry for maintenance activity is required.
- Offices, 242-A Evaporator control room, change rooms, and lunchroom are situated to minimize casual exposure of personnel.

All operations are conducted so employee exposure to mixed waste are maintained ALARA. Exposures are minimized by engineering or administrative controls with protective gear used where such controls are not practical. Before the start of any operation that might expose personnel to the risk of injury or contamination, a review of the operation is performed to ensure the nature of hazards that might be encountered are considered and that appropriate protective gear is selected. Administrative procedures dictate the level of protective clothing worn and depend on the location within the 242-A Evaporator and the nature of the activity being performed.

DRAFT

6.5 Prevention of Reaction of Ignitable, Reactive, and Incompatible Waste

The following sections describe prevention of reaction of ignitable, reactive, and incompatible waste.

6.5.1 Precautions to Prevent Ignition or Reaction of Ignitable or Reactive Waste

Administrative processes are designed to prevent the ignition or reaction of waste at the 242-A Evaporator. The precautions include the following:

- Analysis is performed on candidate waste in the DST System to check that there are no exothermic reactions when the waste is heated and that there will be no adverse effects due to mixing the contents of different waste tanks in the DST System feed tank and evaporator vessel (refer to Chapter 3.0, "Waste Analysis Plan").
- Sample analysis of the candidate feed tank waste in the DST System includes a surface sample to identify the presence of a separable organic layer that might be ignitable. Refer to Chapter 3.0, "Waste Analysis Plan," for addressing a separable organic layer. Near the end of the campaign(s), to ensure there is no separable organic layer, the condensate collection tank (TK-C-100) is allowed to overflow, transferring the organic phase to the DST System feed tank 241-AW-102.
- The condensate collection tank (TK-C-100) is overflowed to the DST System during each campaign to prevent the possibility of accumulating immiscible organics in the condensate waste tank.
- The vapor liquid separator (C-A-1) and the condensate tank are drained and flushed before any welding is performed.

6.5.2 Precautions for Handling Ignitable or Reactive Waste and Mixing of Incompatible Waste

Waste received at the 242-A Evaporator is protected from materials or conditions that might cause the waste to ignite or react. Much of the waste handling is done remotely to reduce the risk to operating personnel. For precautions taken to prevent the ignition or reaction of waste, refer to Section 6.5.1.

The constituents in the waste received at the 242-A Evaporator that are ignitable or reactive are not very volatile. Therefore, the evaporation process renders the waste that is evaporated (i.e., the process condensate) neither ignitable nor reactive.

DRAFT

Table 6-1 Visual Inspection Schedule for Tanks, Piping, and Rooms

Item	Inspection	Frequency[1]
Tank and Piping Inspection		
Condensate collection (TK-C-100) tank and piping	• Inspect piping for leaks or corrosion.	Daily
Caisson MH-WTP-01	• Inspect caisson for evidence of leaks or intrusion.	Completed 8/2018, due every 10 years thereafter
Room Inspections		
AMU Mezzanine	• Inspect piping for leaks or corrosion. • Inspect floor for spills or damage. • Inspect for equipment malfunctions. • Inspect for housekeeping.	Daily[2]
Pump room	• Inspect piping for leaks or corrosion. • Inspect floor for spills or damage. • Inspect for equipment malfunctions. • Inspect for housekeeping. • Monitor pump room sump for overflow.	Daily[3]
Loadout and hot equipment storage room	• Inspect piping for leaks or corrosion. • Inspect floor for spills or damage. • Inspect for housekeeping.	Daily[3]
Loading room	• Inspect for housekeeping. • Monitor drains.	Daily[2,3,4]
Condenser room	• Inspect tanks and piping for leaks or corrosion. • Inspect floors for spills or damage. • Inspect for equipment malfunctions. • Inspect for housekeeping.	Daily
IX column[5] room	• Inspect piping for leaks or corrosion. • Inspect floor for spills or damage.	Daily[6]

[1]Unless otherwise noted, inspection frequencies are defined in Section 6.2.1.2.

[2]When dangerous waste is present.

[3]Use viewing window in AMU Mezzanine to perform inspections except for the pump room which uses the ground floor window.

[4]Denote use of contamination control curtain when extended.

[5]IX column was removed in 2003. The remaining piping has been drained and isolated.

[6]In accordance with Section 6.2.2.4, visual surveillance is only required if the piping is returned to service and dangerous waste is reintroduced to the piping.

DRAFT

Table 6-2 Inspection Schedule of Safety, Security, and Emergency Equipment

Item	Inspection	Frequency[1]
Personnel Protective Equipment		
Personal protective clothing	Verify availability	Monthly
Security		
Building external doors	Verify external doors are closed and locked when the building is unoccupied[2]	Daily
Posted warning signs	Verify signs are present, legible, and visible at 25 feet	Monthly
Communications		
2-Way Radios	Verify radios are operable and batteries are charged	Monthly
Telephone	Verify telephone is operable	Quarterly
Intercom/public address system (PAX)	Verify the system is working properly	Quarterly
Underground Piping Signs for Combined PC-5000 and WTP Backup Transfer Lines	Verify underground transfer pipelines located outside the 200 East Area are marked with signs reading "Buried Dangerous Waste Pipe" in accordance with Permit Condition II.V. Note: Signs and anchoring devices are made of durable plastic or metal.	Annually
Emergency Equipment		
Safety showers/eyewash station	Verify operability	Quarterly
Emergency lighting	Verify operability	Monthly
Fire extinguishers	Verify fire extinguishers are in their proper location	Monthly
Spill kit	Verify the spill kit is present and that the seal is intact	Monthly
Respirators	Verify availability and shelf life	Monthly

[1]Inspection frequencies are defined in Section 6.2.1.2.

[2]Entrances to office areas are allowed to be unlocked.

DRAFT

Table 6-3 Inspection Schedule for Alarm Monitoring

Item	Inspection	Frequency[1]
Overfill Protection		
Vapor liquid separator (C-A-1): WFSH-CA11 WFSH-CA12	Monitor for vapor liquid separator (C-A-1) high level. Surveillance required only when solution is in the vapor liquid separator.	Continuously
Leak Detection		
Sampler line: LDS-SMPL2	Monitor slurry sampler lines for leaks. Surveillance required only during slurry sampling.	Continuously
Pump room sump: WFI-SUMP1	Monitor for leaks in the evaporator room, pump room, loadout and hot equipment storage room and loading room by monitoring the pump room sump (leaks from these rooms drain to the pump room sump). Surveillance required only when waste solution is present in the rooms listed. Surveillance is not required during maintenance activities or power outages.	Continuously
Transfer pipeline 242-A Evaporator to LERF Basin 41 Leak Alarm LDA-41-5	Verify no leak alarm for transfer pipeline in 242-A Evaporator control room; or perform once-per-shift visual inspection to check for liquid in the sight glass at LERF Catch Basin 242AL-41 (FG-60M-002). Note: Monitoring required only during 242-A Evaporator waste transfers.	Continuously[2,3]
Transfer pipeline 242-A Evaporator to LERF Basin 43 Leak Alarm LDA-43-2	Verify no leak alarm for transfer pipeline; or perform once-per-shift visual inspection to check for liquid in the sight glass (FG-60M-001) at the encasement catch tank 60M-TK-1, located in LERF Catch Basin 242AL-43. Note: Monitoring required only during 242-A Evaporator waste transfers.	Continuously[2,3]

DRAFT

Table 6-3 Inspection Schedule for Alarm Monitoring

Item	Inspection	Frequency[1]
WTP backup transfer pipeline (3"-WTP-002-M17) to PC-5000 to LERF Basin 242AL-41 Leak Alarm LDA-41-5	Verify no leak alarm for transfer pipeline in 242-A Evaporator control room or 200 Area ETF control room; or perform once-per-shift visual inspection to check for liquid in the sight glass at LERF Catch Basin 242AL-41 (FG-60M-002). Note: Monitoring required only during WTP waste transfers. Either the 242-A Evaporator or LERF and 200 Area ETF personnel can perform the monitoring, and either can perform the visual inspection.	Continuously[2,3]
WTP backup transfer pipeline (3"-WTP-002-M17) to PC-5000 to LERF Basin 242AL-43 Leak Alarm LDA-43-2	Verify no leak alarm for transfer pipeline in 242-A Evaporator control room or 200 Area ETF control room; or perform once-per-shift visual inspection to check for liquid in the sight glass (FG-60M-001) at ~~the PC-5000 encasement catch tank 60M-TK-1, located in~~ LERF Catch Basin 242AL-43. Note: Monitoring required only during WTP waste transfers. Either the 242-A Evaporator or LERF and 200 Area ETF personnel can perform the monitoring, and either can perform the visual inspection.	Continuously[2,3]

[1]Unless otherwise noted, inspection frequencies are defined in Section 6.2.1.2.

[2]Refer to Section 6.2.2.3, for continuous instrument monitoring during waste transfers.

[3]In accordance with Permit Condition III.4.C.4.a, if either electronic leak detection system LDS-41-5 or LDE-43-2 is not operational for transfers to LERF, visual inspection shall be employed at the corresponding LERF Catch Basins 242AL-41 sight glass FG-60M-002, or 242AL-43 sight glass FG-60M-001 once per shift, during transfers.

DRAFT

Table 6-4 Inspection Schedule for Maintenance and Other Inspections

Item	Inspection	Frequency[1]
Instrumentation Functional Checks and Calibrations		
~~Slurry and~~ PC-5000 leak detectors LDS-41-5 LDE-43-2	Perform leak detector functional checks.	Annually[2]
Vapor liquid separator (C-A-1) high level alarms: WFSH-CA11 WFSH-CA12	Perform calibrations of loop instruments.	Annually
Pump room sump level: WFI-SUMP1	Perform calibrations of loop instruments.	Annually
Backup Electrical Equipment		
Uninterruptible power supply	Verify output voltage and inspect battery for signs of damage or tampering.	Annually
Fire Systems		
Fire suppressant and notification systems (i.e., sprinkler system and fire alarm pull boxes)	Water flow alarm tests of the sprinkler system to ensure the operation of a single sprinkler head will transmit an alarm, and that any of the manual fire alarm boxes will properly transmit an alarm signal.	Annually
Visual inspection of the physical condition of the sprinkler system, testing, and calibration of smoke detectors, and testing of heat detectors	A visual inspection of the sprinkler system to ensure system integrity as well as the required testing and calibration of detectors to ensure functionality. A flow test at the sprinkler system is performed to ensure proper flow to the system riser.	Biennial
Annual ignitable and reactive waste inspection	Inspect areas where ignitable or reactive wastes are permitted to be stored per WAC 173-303-395(1)(d).	Annually

[1]Unless otherwise noted, inspection frequencies are defined in Section 6.2.1.2.

DRAFT

ENGINEERING CHANGE NOTICE

Prepared For the U.S. Department of Energy, Assistant Secretary for Environmental Management
By Washington River Protection Solutions, LLC., PO Box 850, Richland, WA 99352
Contractor For U.S. Department of Energy, Office of River Protection, under Contract DE-AC27-08RV14800

TRADEMARK DISCLAIMER: Reference herein to any specific commercial product, process, or service by trade name, trademark, manufacturer, or otherwise, does not necessarily constitute or imply its endorsement, recommendation, or favoring by the United States government or any agency thereof or its contractors or subcontractors. Printed in the United States of America.

Release Stamp

DATE: May 27,2020

HANFORD RELEASE

1a. **ECN No:** ECN-715508 **Rev.** 00	1b. **Project Number:** T1P226 ☐N/A
2. **Title:** LERF Basin 41 Existing Piping Connections - Mechanical	
3. **WA or Redline ECN:** ☐ WA ☐ REDLINE ☒ N/A	4. **Temporary Modification:** ☐ Yes ☒ No
5. **Design Type:** II	6. **Design Verification Required:** ☐Yes ☒No
7. **Safety Classification:** ☐SC ☐SS ☒GS ☐N/A	
8. **USQ Number:** ☒ N/A RPP-27195	9. **PrHA Number** **Rev.** ☒ N/A

Workflow Approval Status: For Approval
Clearance Review Restriction Type: undefined

10. **Trend Codes**

Cause	Commodity	Discipline Driver
Initial Design Release	Piping, Tubing	Mechanical

11. **Design Authority Designator**

PRJ - LERF BASIN 41

12. **Approvals**

Title	Name	Signature	Date
Design Authority	Wilson, Nathaniel W	*Wilson, Nathaniel W*	04/21/2020
Checker	Dorsh, Paul M	*Dorsh, Paul M*	03/18/2020
Document Control Approval	Alvarez, Efren	*Alvarez, Efren*	05/27/2020
Environmental Protection	Wall, Jeremy M	*Wall, Jeremy M*	04/30/2020
Originator	Hall, Richard B	*Hall, Richard B*	03/18/2020
Other Approver	Joslyn, Cameron C	*Joslyn, Cameron C*	05/07/2020
Responsible Engineering Manager	Huntington, Matthew R	*Huntington, Matthew R*	05/07/2020

13. **Problem**

The new LERF Basin 41, associated catch basin, and ancillary equipment was installed by ECN-715507. The 242-A Process Condensate and the EMF Effluent lines do not route to the new basin. Without a direct route for these two process lines to drain into Basin 41 the future liquid volume sent to LERF will overwhelm the other LERF basins.

14. **Solution**

Install a tie-in point within the existing 242-A Process Condensate (3"-EVAP COND-PC5000-M17) and EMF Effluent (4"-WTP-001-M17) lines and route new pipe to Basin 41. Install the new tie-in point in each transfer line utilizing an FRP carrier pipe and encasement pipe as identified on the design media, reference H-2-838765. Excavate into the south LERF transfer line berm to access the transfer line tie-in points as shown on the project design media. Cut and install the transfer line tie-in connections as described in the construction specification RPP-SPEC-63632 and the manufacturer's recommendations. Install the new transfer lines 4"-60M-008-M18 and 3"-60M-009-M18 up to the appropriate connection in Basin 41 with the proper piping insulation, heat trace, and pipe supports. Coordinate backfill of the transfer line berm with the installation of new transfer lines in ECN-715509.

15. **Analysis**

Perform the tie-in point into the 3"-EVAP COND-PC5000-M17 and the 4"-WTP-001-M17 at the coordinate location identified on drawing H-2-838765. Route the new pipe lines to Catch Basin 41 for connection with the catch basin piping as detailed within the design media and installed via ECN-715507. Perform all field work in accordance with the project construction specification RPP-SPEC-63632.

Design checks were performed in accordance with ARES ESD (Sargent & Lundy) Quality Assurance Procedure (QAP) 3.2 and 3.6.

16. **Description of Change**

H-2-79604 Sheet 1:
-Update drawing to depict the installation of new line 3"-60M-009-M18.

H-2-79610 Sheet 1:
-Update drawing to depict the installation of new line 3"-60M-009-M18. The installation includes the FRP tie-in into the existing transfer lines as depicted on H-2-838765.

H-2-88766 Sheet 1:
-Update the sheet and zone reference for the 3"-EVAP COND-PC5000-M17 transfer line.

H-2-88766 Sheet 2:
-Update the sheet and zone reference for the 4"-WTP-001-M17 transfer line.

H-2-88766 Sheet 3:
-Update the sheet and zone reference for the 3"-EVAP COND-PC5000-M17 transfer line

H-2-88766 Sheet 5:
-Update the sheet and zone reference for the 4"-WTP-001-M17 transfer line.

RICHARD B. HALL
STATE OF WASHINGTON
53333
REGISTERED
PROFESSIONAL ENGINEER
5/27/2020

ENGINEERING CHANGE NOTICE

ECN No: ECN-715508 **Rev.** 00

16. **Description of Change**

H-2-830097 Sheet 1:
-Update drawing to depict the installation of new line 3"-60M-009-M18 and the new line 4"-60M-008-M18. The installation includes the FRP tie-in into the existing transfer lines as depicted on H-2-838765.

H-2-830098 Sheet 1:
-Update drawing to depict the installation of new line 3"-60M-009-M18 and the new line 4"-60M-008-M18. The installation includes the FRP tie-in into the existing transfer lines as depicted on H-2-838765.

17. **Work Package Number(s)**

TBD

18. **TBDs or Holds** ☒N/A

19. **Related Structures, Systems, and Components**

a. **Related Building/Facilities** ☐N/A	b. **Related Systems** ☐N/A	c. **Related Equipment ID Nos. (EIN)** ☐N/A
LERF FACILITIES	LERF	3"-EVAP COND-PC5000-M17 4"-WTP-001-M17

20. **Engineering Drawings to be Changed** Does change affect the Electronic Routing Board? ☐

Drawing Number	Rev.	Title
H-2-79604 SH 001	03	PIPING PLOT & KEY PLANS 242-A EVAP COND STREAM
H-2-79610 SH 001	03	PIPING PLAN RETENTION BASINS
H-2-830097 SH 001	01	W-519 SITE/UTILITY SYSTEMS PLAN AND PROFILE STA 2+000 TO STA 2+333.0
H-2-830098 SH 001	01	W-519 SITE/UTILITY SYSTEMS PLAN & PROFILE LERF BASINS
H-2-88766 SH 001	14	P & ID LERF BASIN & ETF INFLUENT EVAPORATOR
H-2-88766 SH 002	16	P&ID LERF BASIN & ETF INFLUENT EVAPORATOR
H-2-88766 SH 003	20	P&ID LERF BASIN & ETF INFLUENT EVAPORATOR
H-2-88766 SH 005	02	P & ID LERF-WTP INTERFACE

21. **Related Modification Traveler** ☐N/A

MT-50497

22. **Related Documents** ☐N/A

Document Number	Rev.	Title
ECN-715507	00	LERF Basin 41 Installation - Mechanical
ECN-715509	00	LERF Basin 41 New Piping Connections - Mechanical
H-2-838765 SH 001	00	LERF BASIN 41 MECHANICAL GENERAL ARRANGEMENT
H-2-88766 SH 006	00	P&ID LERF BASIN & ETF INFLUENT EVAPORATOR
RPP-SPEC-63632	00	LERF Basin 41 Construction Specification

23. **Distribution**

Name	Organization
Angevine, Brennan T	MISSION ANALYSIS ENGINEERING
Blaak, Whitney S	COGNIZANT SYSTEM ENGINEERING
Demiter, Scott M	ETF OPERATIONS
Foster, Jim	242-A/AW/ETF OPERATIONS
Goessmann, Glen E	ENGINEERING PROGRAMS
Greenhalgh, Aaron M	TANK FARM PROJECTS ENGINEERING
Halgren, Dale L	ETF ENGINEERING
Harris, John W	SAFETY PROGRAM SERVICES RC/P
Joslyn, Cameron C	ETF ENGINEERING
McFerran, Brandon E	242-A/AW/ETF OPERATIONS
McShane, Michael P	ENGINEERING PROGRAMS
Omberg Carro, Susan K	NUCLEAR SAFETY
Powers, Daniel J	ETF ENGINEERING
Roosendaal, Gene D	TFP PROJECT MANAGEMENT
Rutherford, Wally	ETF ENGINEERING
Sackett, Tom E	TANK FARM PROJECTS
Samoska, Jerry A	INSTRUMENT & CNTRL ENGINEERING
Shultz, Milton V	NUCLEAR SAFETY
Smith, Gregory E	TANK FARM PROJECTS ENGINEERING
Smoot, Bill R	TFP RADCON
Swanson, Brad L	242-A/AW/ETF OPERATIONS
Wall, Jeremy M	RETRVL & CLOSURE/PROJ ENV CMPL
Wilson, Nathaniel W	ETF PROJECTS ENGINEERING

ENGINEERING CHANGE NOTICE
CONTINUATION SHEET

ECN NO.: 715508

Document/Drawing No. H-2-79604 Sheet 1 Revision 3

CONSTRUCTION NOTE: (DO NOT INCORPORATE)

THIS "WAS" CONDITION REFLECTS THE "IS" CONDITION OF ECN-715507 WHEN WORK COMPLETE.

WAS:

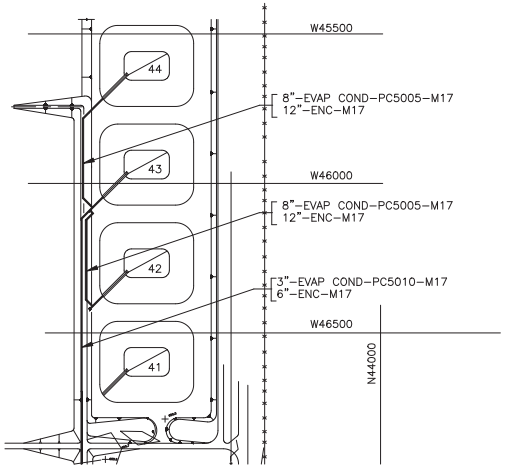

IS:

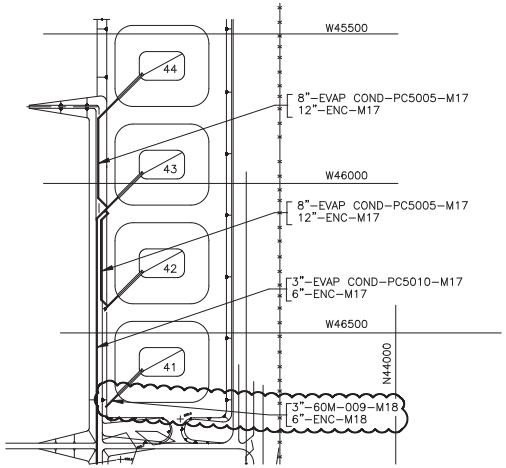

ENGINEERING CHANGE NOTICE
CONTINUATION SHEET

ECN NO.: 715508

Document/Drawing No. H-2-79610 Sheet 1 Revision 3

CONSTRUCTION NOTE: (DO NOT INCORPORATE)

THIS "WAS" CONDITION REFLECTS THE "IS" CONDITION OF ECN-715507 WHEN WORK COMPLETE.

WAS: (ZONE E/8)

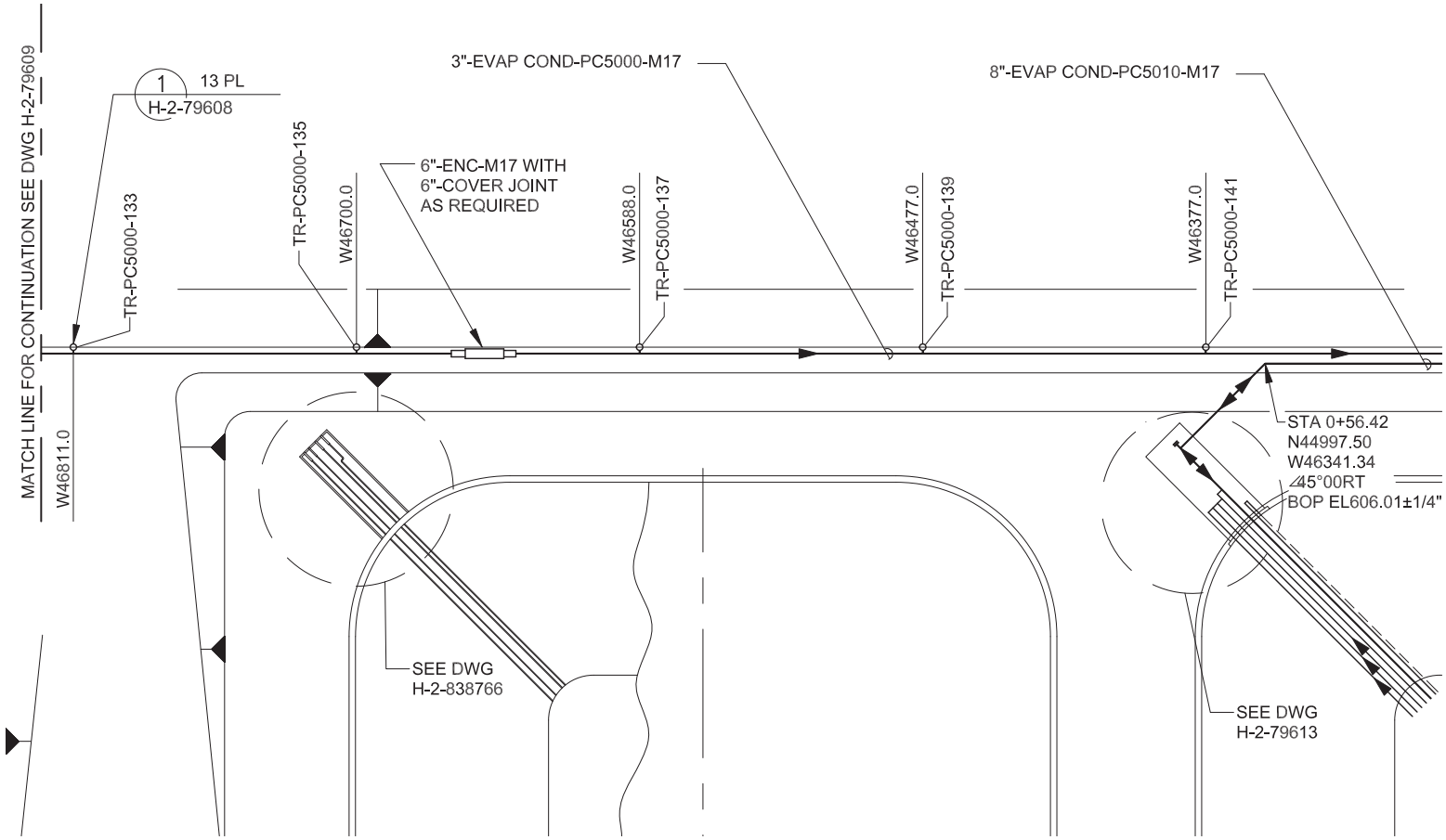

ENGINEERING CHANGE NOTICE
CONTINUATION SHEET

ECN NO.: 715508

Document/Drawing No. H-2-79610 Sheet 1 Revision 3

IS: (ZONE E/8)

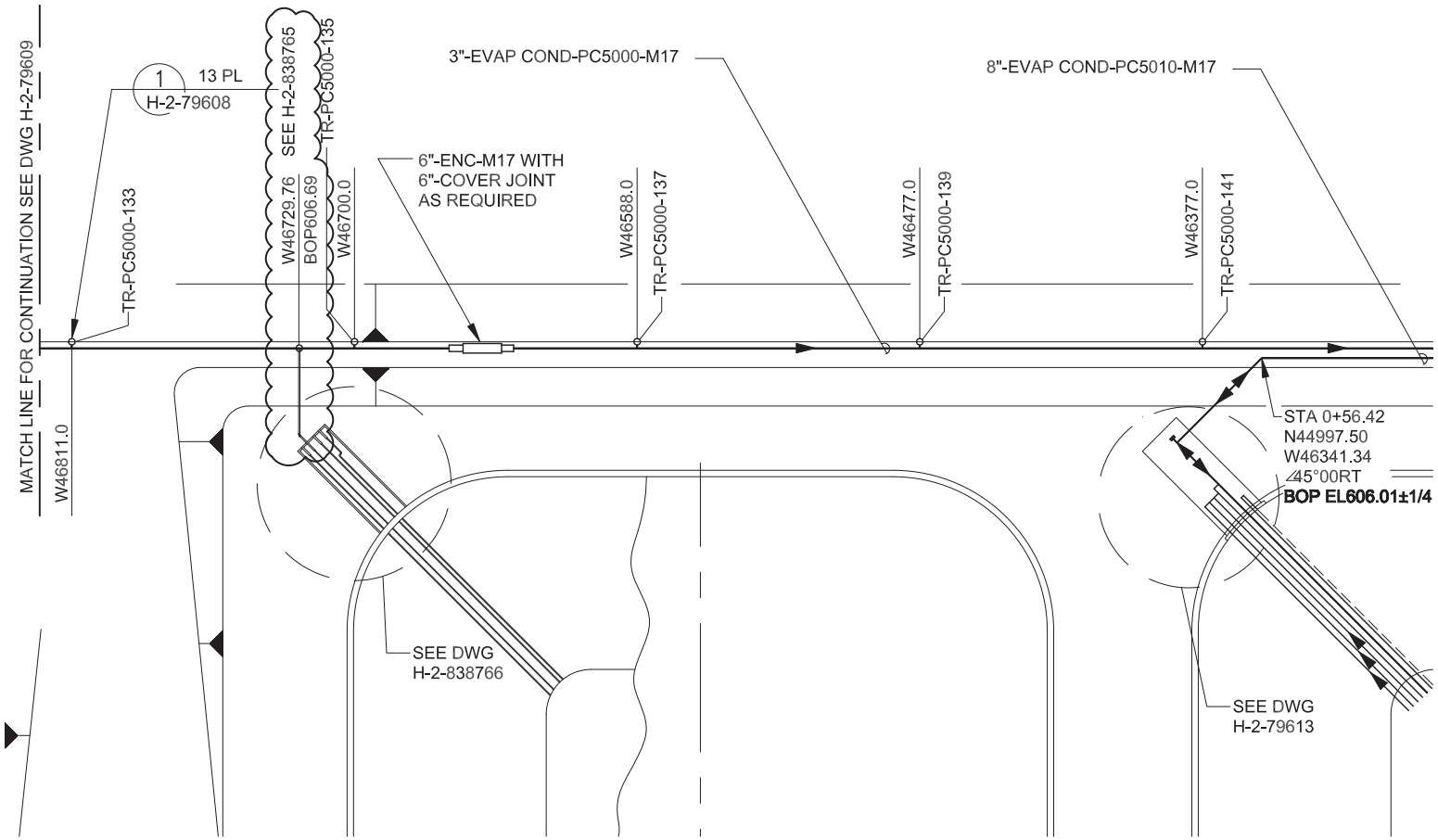

ENGINEERING CHANGE NOTICE CONTINUATION SHEET	ECN NO.: 715508

Document/Drawing No. H-2-88766 Sheet 1 Revision 14

WAS: (ZONE B/2)

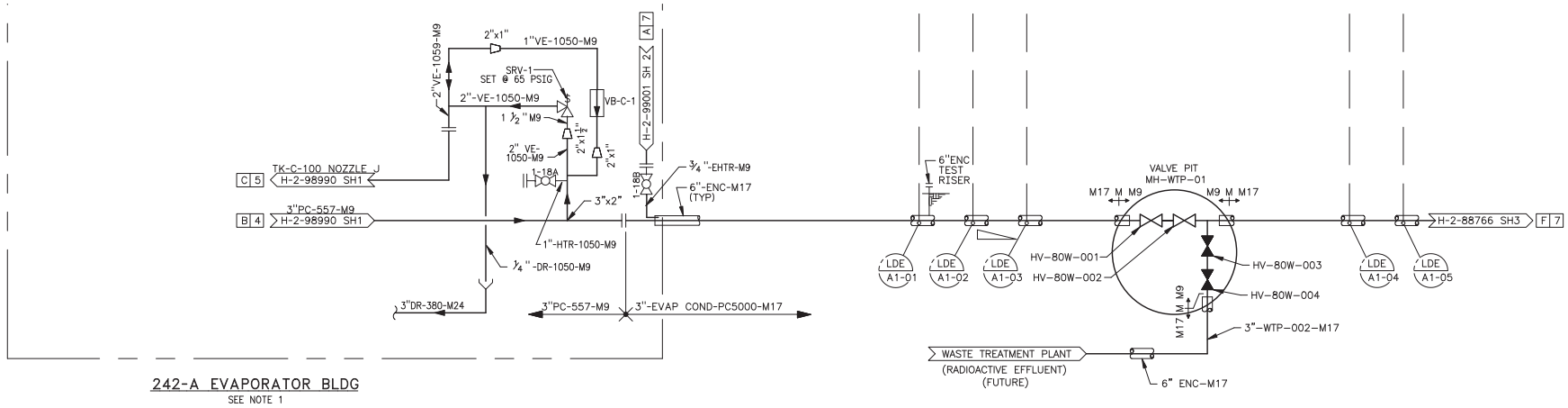

242-A EVAPORATOR BLDG
SEE NOTE 1

IS: (ZONE B/2)

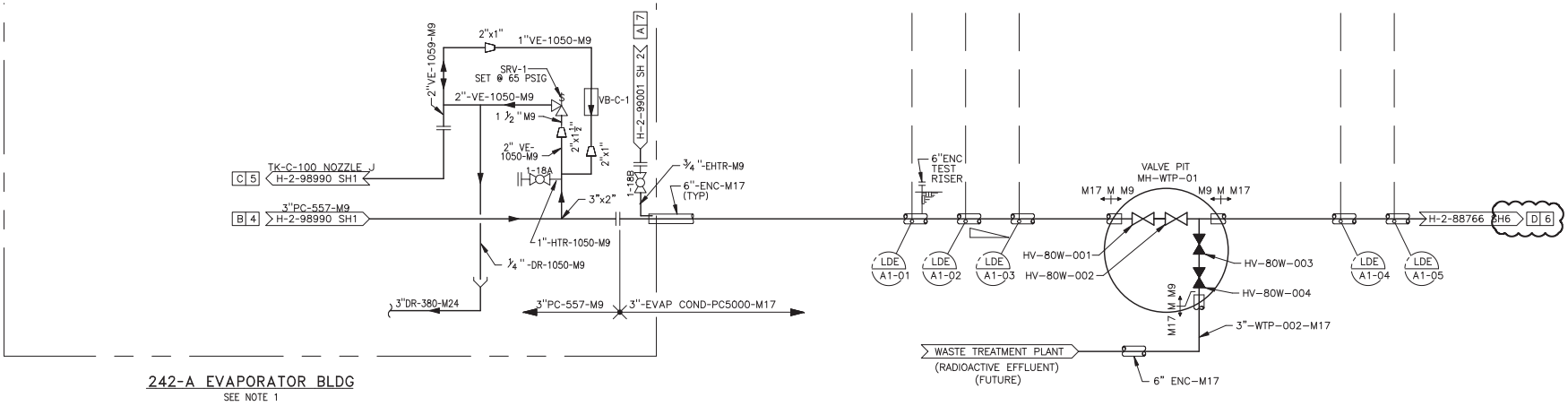

242-A EVAPORATOR BLDG
SEE NOTE 1

ENGINEERING CHANGE NOTICE CONTINUATION SHEET	ECN NO.: 715508

Document/Drawing No. H-2-88766 Sheet 2 Revision 16

WAS: (ZONE D/8)

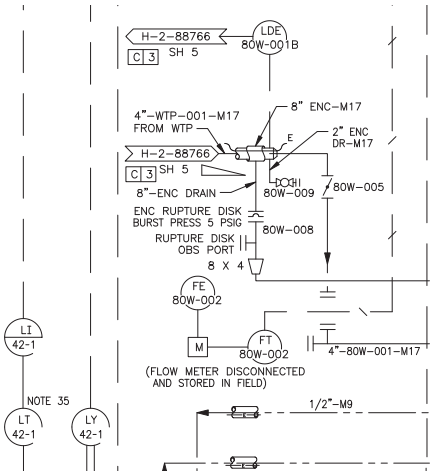

IS: (ZONE D/8)

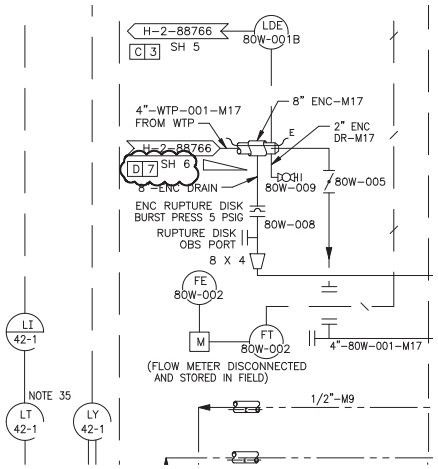

ENGINEERING CHANGE NOTICE CONTINUATION SHEET	ECN NO.: 715508

Document/Drawing No. H-2-88766 Sheet 3 Revision 20

WAS: (ZONE F/7)

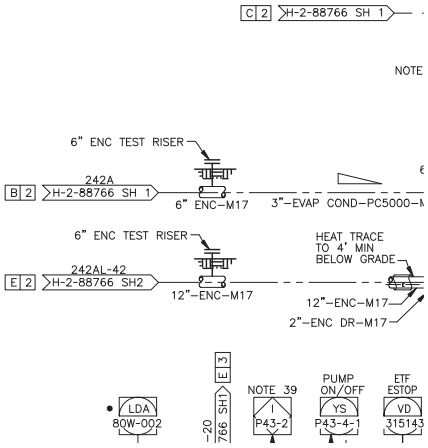

IS: (ZONE F/7)

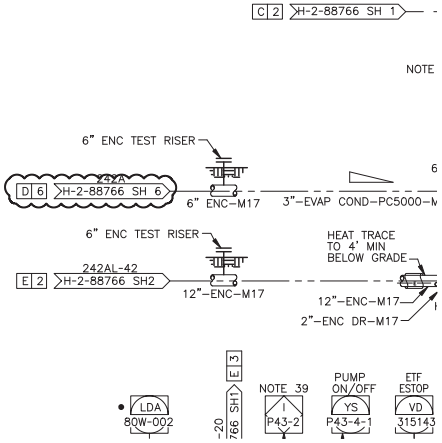

ENGINEERING CHANGE NOTICE
CONTINUATION SHEET

ECN NO.: 715508

Document/Drawing No. H-2-88766 Sheet 5 Revision 2

WAS: (ZONE C/2)

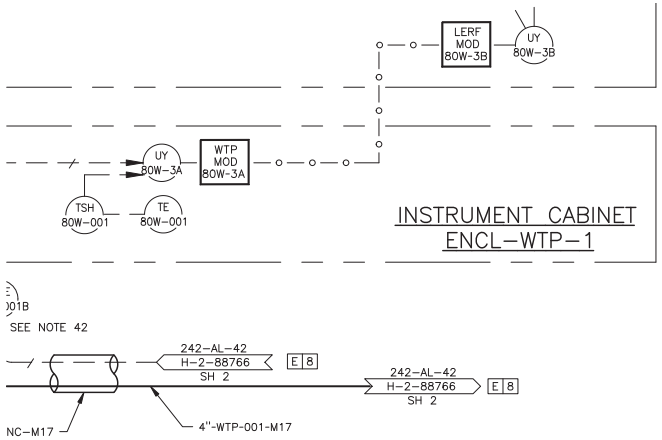

INUOUS LEAK DETECTION
E TO MH-WTP-01

3" EVAP COND-PC5000-M17 TIE-IN
H-2-88766
SH 1

NOTE:

1. FOR NOTES AND SYMBOL LEGEND, SEE SH 1.

SYMBOL LEGEND

FROM TEDF LINE J

LCU 55M17 (H-2-88836)

IS: (ZONE C/2)

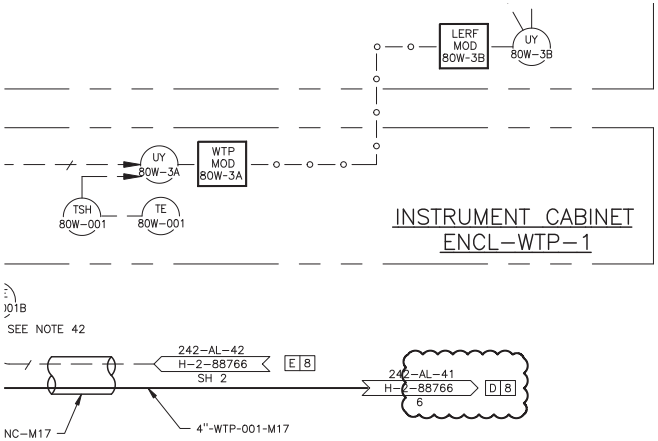

INUOUS LEAK DETECTION
E TO MH-WTP-01

3" EVAP COND-PC5000-M17 TIE-IN
H-2-88766
SH 1

NOTE:

1. FOR NOTES AND SYMBOL LEGEND, SEE SH 1.

SYMBOL LEGEND

FROM TEDF LINE J

LCU 55M17 (H-2-88836)

CONSTRUCTION NOTE: (DO NOT INCORPORATE)

THIS "WAS" CONDITION REFLECTS THE "IS" CONDITION OF ECN-715507 WHEN WORK COMPLETE.

ENGINEERING CHANGE NOTICE CONTINUATION SHEET	ECN NO.: 715508

Document/Drawing No. H-2-830097 Sheet 1 Revision 1

WAS: (ZONE E/5)

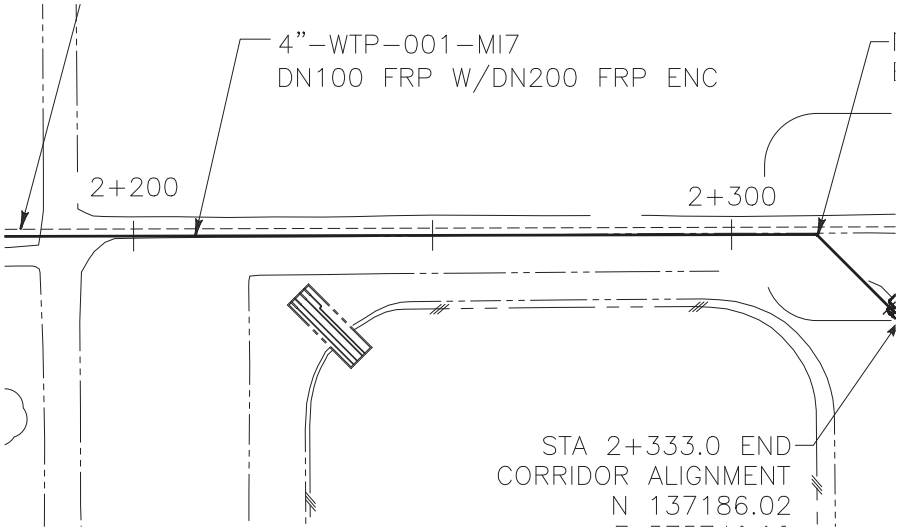

IS: (ZONE E/5)

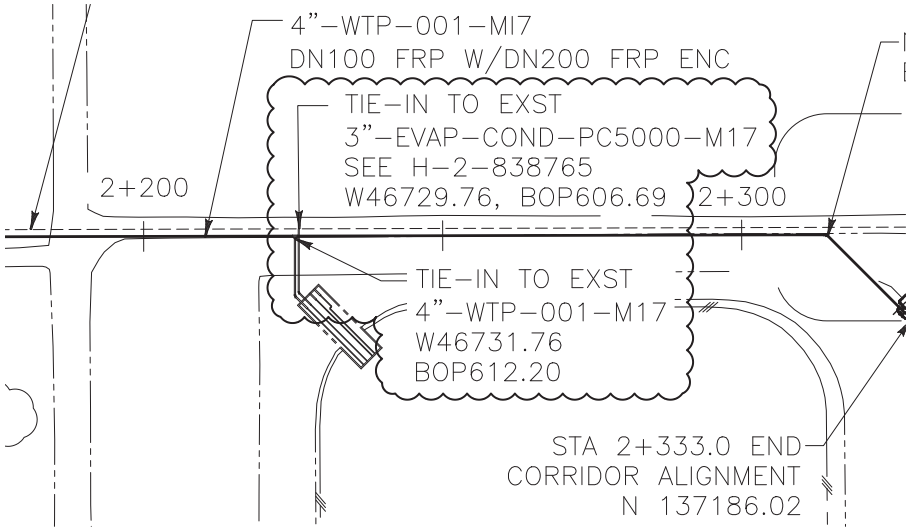

CONSTRUCTION NOTE: (DO NOT INCORPORATE)

THIS "WAS" CONDITION REFLECTS THE "IS" CONDITION OF ECN-715507 WHEN WORK COMPLETE.

ENGINEERING CHANGE NOTICE CONTINUATION SHEET	ECN NO.: 715508

Document/Drawing No. H-2-830098 Sheet 1 Revision 1

WAS: (ZONE E-F/7)

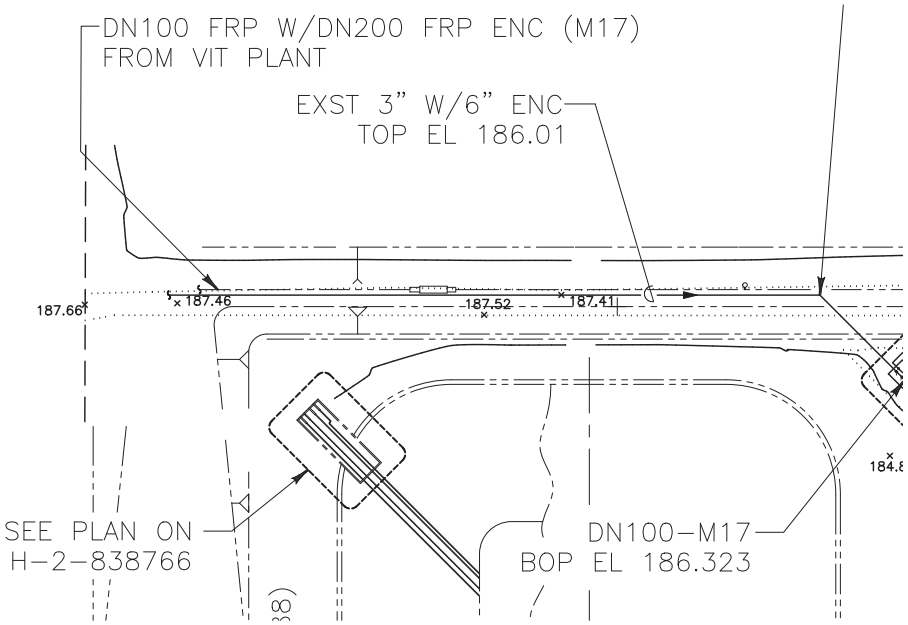

IS: (ZONE E-F/7)

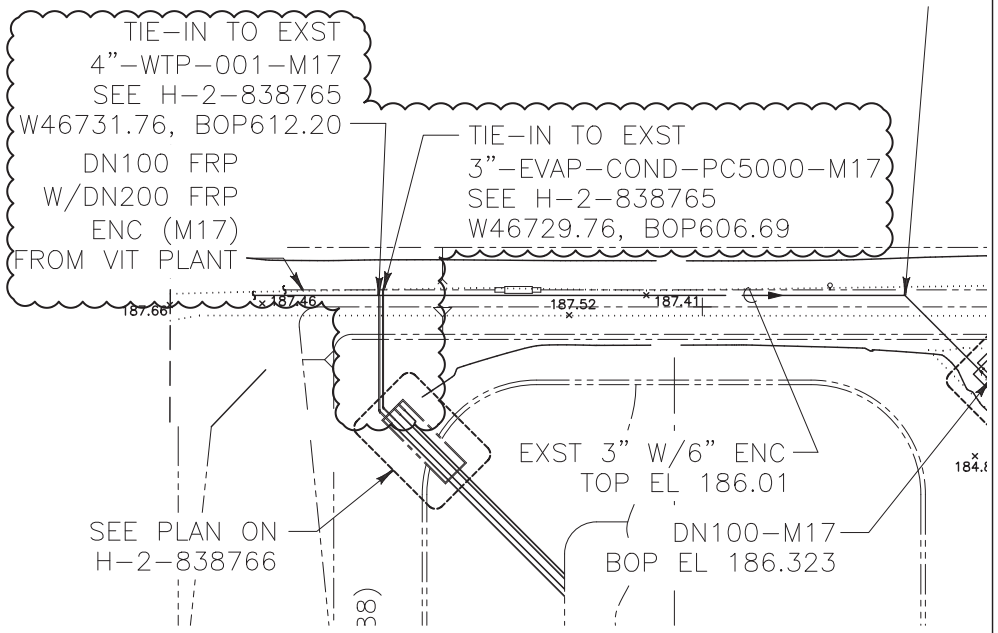

ENGINEERING CHANGE NOTICE

Prepared For the U.S. Department of Energy, Assistant Secretary for Environmental Management
By Washington River Protection Solutions, LLC., PO Box 850, Richland, WA 99352
Contractor For U.S. Department of Energy, Office of River Protection, under Contract DE-AC27-08RV14800

TRADEMARK DISCLAIMER: Reference herein to any specific commercial product, process, or service by trade name, trademark, manufacturer, or otherwise, does not necessarily constitute or imply its endorsement, recommendation, or favoring by the United States government or any agency thereof or its contractors or subcontractors. Printed in the United States of America.

Release Stamp

DATE: May 27,2020

HANFORD RELEASE

1a. **ECN No:** ECN-715509 **Rev.** 00	1b. **Project Number:** T1P226 ☐N/A
2. **Title:** LERF Basin 41 New Piping Connections - Mechanical	
3. **WA or Redline ECN:** ☐ WA ☐ REDLINE ☒ N/A	4. **Temporary Modification:** ☐ Yes ☒ No
5. **Design Type:** II	6. **Design Verification Required:** ☐Yes ☒No
7. **Safety Classification:** ☐SC ☐SS ☒GS ☐N/A	
8. **USQ Number:** ☒ N/A RPP-27195	9. **PrHA Number** **Rev.** ☒ N/A

Workflow Approval Status: For Approval
Clearance Review Restriction Type: undefined

10. **Trend Codes**

Cause	Commodity	Discipline Driver
Initial Design Release	Piping, Tubing	Mechanical

11. **Design Authority Designator**

PRJ - LERF BASIN 41

12. **Approvals**

Title	Name	Signature	Date
Design Authority	Wilson, Nathaniel W	*Wilson, Nathaniel W*	04/21/2020
Checker	Dorsh, Paul M	*Dorsh, Paul M*	04/07/2020
Document Control Approval	Meinecke, Kathryn R	*Meinecke, Kathryn R*	05/27/2020
Environmental Protection	Wall, Jeremy M	*Wall, Jeremy M*	04/30/2020
Originator	Hall, Richard B	*Hall, Richard B*	03/18/2020
Other Approver	Greenhalgh, Aaron M	*Greenhalgh, Aaron M*	04/15/2020
Other Approver	Joslyn, Cameron C	*Joslyn, Cameron C*	05/07/2020
Responsible Engineering Manager	Huntington, Matthew R	*Huntington, Matthew R*	05/11/2020

13. **Problem**

The new LERF Basin 41, associated catch basin, and ancillary equipment was installed by ECN-715507. However, this installation did not mechanically connect Basin 41 with the other LERF piping network. As such, no liquid can be transferred from Basin 41 to the other LERF basins and/or ETF, or subsequently the other LERF basins and/or ETF can not transfer feed to Basin 41.

14. **Solution**

Install two new transfer lines (4"-60M-010-M18 and 4"-60M-011-M18) from Catch Basin 41 to a tie-in point within Catch Basin 42. The installation of these two new transfer lines will allow Basin 41 to be connected with the existing LERF piping network. The installed transfer lines will utilize an FRP carrier pipe and encasement pipe as identified on the new design media, reference H-2-838765. Perform the tie-in connection to Catch Basin 42 piping as shown in H-2-838765. Excavate into the south LERF transfer line berm as necessary for installation of the new transfer lines as shown on the project design media. Install the transfer line as described in the construction specification RPP-SPEC-63632 and the manufacturer's recommendations. Ensure proper piping insulation, heat trace, and pipe supports are utilized per the project design media. Coordinate backfill of the transfer line berm with the installation of other the new transfer lines in ECN-715508. Remove the existing bling flange and install valve 60M-42-8 (see H-2-838765) as shown on this ECN.

15. **Analysis**

Perform the installation of new transfer line 4"-60M-010-M18 and new transfer line 4"-60M-011-M18 at the coordinate location identified on drawing H-2-838765. Route the new pipe lines from Catch Basin 41 to Catch Basin 42 for connection with the existing LERF piping. The Catch Basin 41 piping installation is detailed within ECN-715507. Perform all field work in accordance with the project construction specification RPP-SPEC-63632.

Design checks were performed in accordance with S&L Quality Assurance Procedure (QAP) 3.2 and 3.6.

16. **Description of Change**

H-2-79610 Sheet 1:
-Update drawing to depict the installation of transfer lines 4"-60M-010-M18 and 4"-60M-011-M18.

H-2-79613 Sheet 1:
-Update drawing sheet to show the installation of transfer lines 4"-60M-010-M18 and 4"-60M-011-M18 as they interface with the existing Catch Basin 42 piping. Install new valves within the existing Catch Basin 42 piping to facilitate necessary operations functionality.

H-2-88766 Sheet 2:
-Update the Catch Basin 42 P&ID drawing sheet to depict the interface connection of transfer lines 4"-60M-010-M18 and 4"-60M-011-M18.

H-2-830097 Sheet 1:
-Update this sheet to for installation of transfer lines 4"-60M-010-M18 and 4"-60M-011-M18.

H-2-830098 Sheet 1:
-Update this sheet to for installation of transfer lines 4"-60M-010-M18 and 4"-60M-011-M18.

RICHARD B. HALL
STATE OF WASHINGTON
REGISTERED
PROFESSIONAL ENGINEER
5/27/2020

ENGINEERING CHANGE NOTICE

ECN No: ECN-715509 **Rev.** 00

16. **Description of Change**

H-2-830099 Sheet 1:
-Update plan view indicating the installation of transfer line 4"-60M-011-M18 and it's interface with the existing Catch Basin 42 piping.

H-2-830099 Sheet 2:
-Update plan view and section views as appropriate to identify the interface of transfer line 4"-60M-011-M18 following installation.

17. **Work Package Number(s)**

TBD

18. **TBDs or Holds** ☒N/A

19. **Related Structures, Systems, and Components**

a. **Related Building/Facilities** ☐N/A	b. **Related Systems** ☐N/A	c. **Related Equipment ID Nos. (EIN)** ☐N/A
LERF FACILITIES	LERF	242AL-42

20. **Engineering Drawings to be Changed** Does change affect the Electronic Routing Board? ☐

Drawing Number	Rev.	Title
H-2-79610 SH 001	03	PIPING PLAN RETENTION BASINS
H-2-79613 SH 001	05	PIPING PLAN CATCH BASIN 242AL-42
H-2-830097 SH 001	01	W-519 SITE/UTILITY SYSTEMS PLAN AND PROFILE STA 2+000 TO STA 2+333.0
H-2-830098 SH 001	01	W-519 SITE/UTILITY SYSTEMS PLAN & PROFILE LERF BASINS
H-2-830099 SH 001	02	W-519 SITE/UTILITY SYSTEMS BASIN 242AL-42 PIPE LAYOUT
H-2-830099 SH 002	01	W-519 SITE/UTILITY SYSTEMS BASIN 243AL-42 PIPE LAYOUT
H-2-88766 SH 002	16	P&ID LERF BASIN & ETF INFLUENT EVAPORATOR

21. **Related Modification Traveler** ☐N/A

MT-50497

22. **Related Documents** ☐N/A

Document Number	Rev.	Title
ECN-715507	00	LERF Basin 41 Installation - Mechanical
ECN-715508	00	LERF Basin 41 Existing Piping Connections - Mechanical
H-2-838765 SH 001	00	LERF BASIN 41 MECHANICAL GENERAL ARRANGEMENT
H-2-88766 SH 006	00	P&ID LERF BASIN & ETF INFLUENT EVAPORATOR
RPP-SPEC-63632	00	LERF Basin 41 Construction Specification

23. **Distribution**

Name	Organization
Angevine, Brennan T	MISSION ANALYSIS ENGINEERING
Blaak, Whitney S	COGNIZANT SYSTEM ENGINEERING
Demiter, Scott M	ETF OPERATIONS
Foster, Jim	242-A/AW/ETF OPERATIONS
Goessmann, Glen E	ENGINEERING PROGRAMS
Greenhalgh, Aaron M	TANK FARM PROJECTS ENGINEERING
Harris, John W	SAFETY PROGRAM SERVICES RC/P
Joslyn, Cameron C	ETF ENGINEERING
McFerran, Brandon E	242-A/AW/ETF OPERATIONS
McShane, Michael P	ENGINEERING PROGRAMS
Omberg Carro, Susan K	NUCLEAR SAFETY
Powers, Daniel J	ETF ENGINEERING
Roosendaal, Gene D	TFP PROJECT MANAGEMENT
Rutherford, Wally	ETF ENGINEERING
Sackett, Tom E	TANK FARM PROJECTS
Samoska, Jerry A	INSTRUMENT & CNTRL ENGINEERING
Shultz, Milton V	NUCLEAR SAFETY
Smith, Gregory E	TANK FARM PROJECTS ENGINEERING
Smoot, Bill R	TFP RADCON
Stamper, Lavonne J	ETF ENGINEERING
Swanson, Brad L	242-A/AW/ETF OPERATIONS
Wall, Jeremy M	RETRVL & CLOSURE/PROJ ENV CMPL
Wilson, Nathaniel W	ETF PROJECTS ENGINEERING

CONSTRUCTION NOTE: (DO NOT INCORPORATE)

THIS "WAS" CONDITION REFLECTS THE "IS" CONDITION OF ECN-715507 AND ECN-715508 WHEN WORK COMPLETE.

ENGINEERING CHANGE NOTICE
CONTINUATION SHEET

ECN NO.: 715509

Document/Drawing No. H-2-79610 Sheet 1 Revision 3

WAS: (ZONE E/6-8)

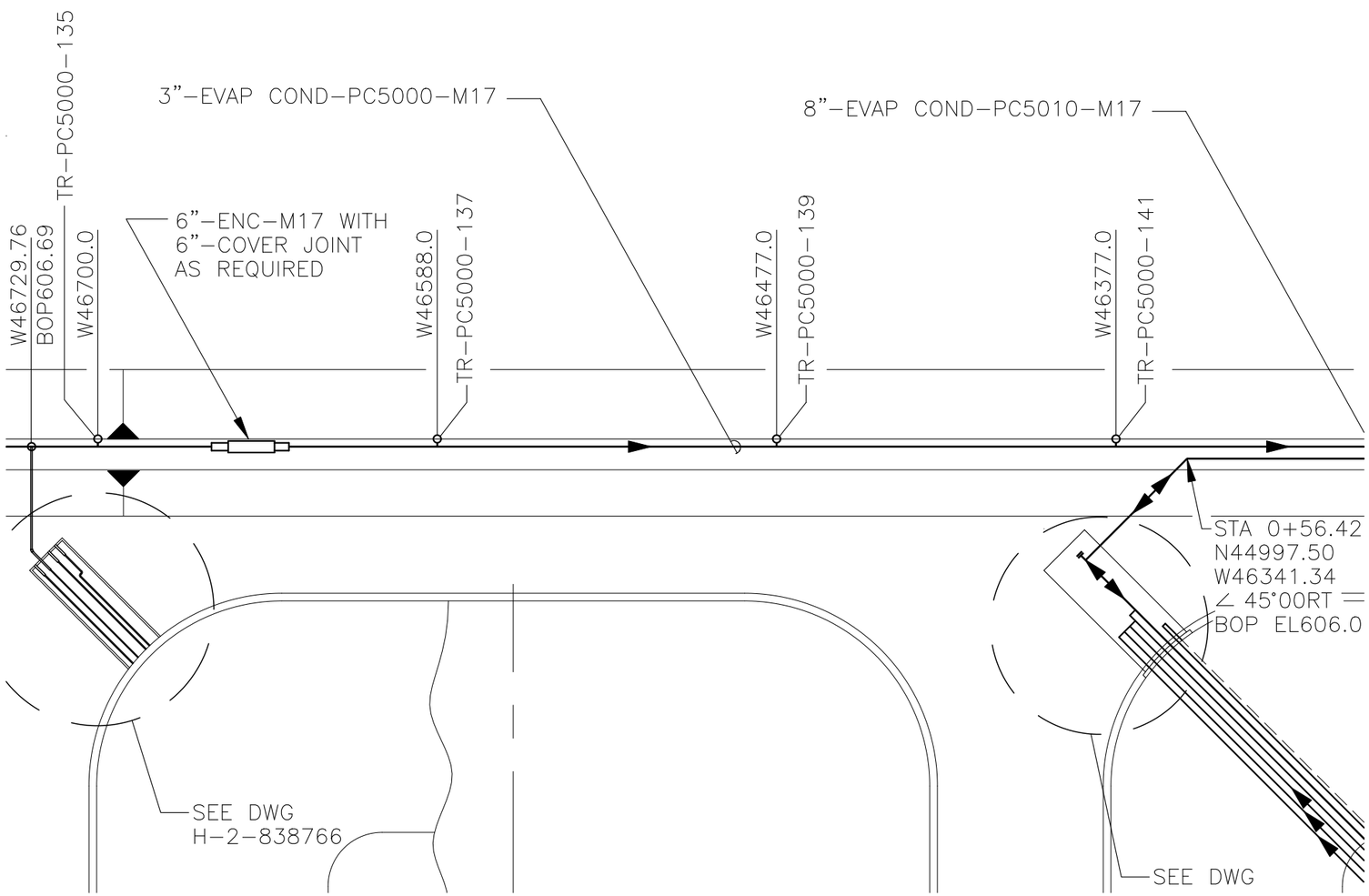

ENGINEERING CHANGE NOTICE
CONTINUATION SHEET

ECN NO.: 715509

Document/Drawing No. H-2-79610 Sheet 1 Revision 3

IS: (ZONE E/6-8)

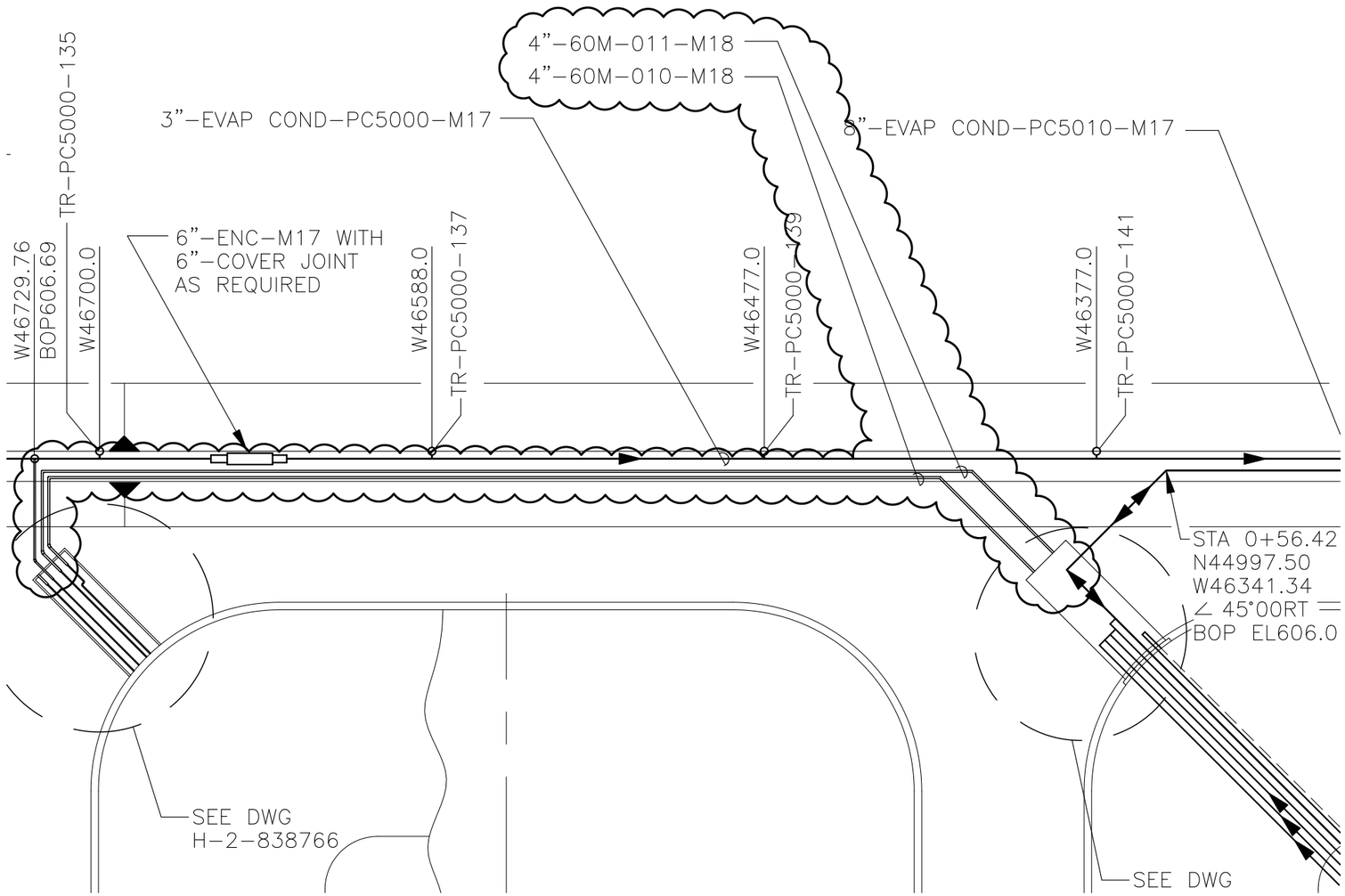

ENGINEERING CHANGE NOTICE
CONTINUATION SHEET

ECN NO.: 715509

Document/Drawing No. H-2-79613 Sheet 1 Revision 5

WAS: (ZONE B-D/6-8)

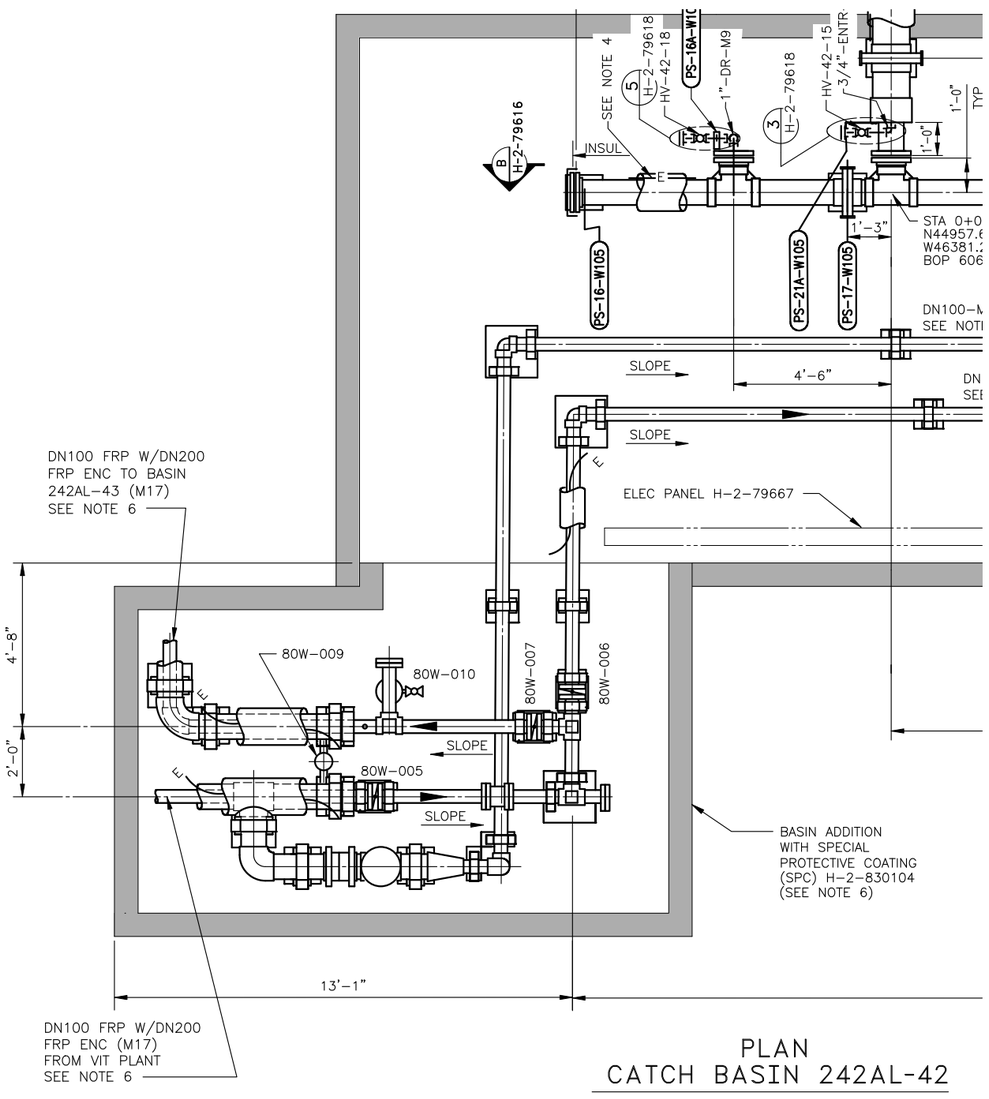

PLAN
CATCH BASIN 242AL-42

SCALE: 1/2" = 1'-0"

IS: (ZONE B-D/6-8)

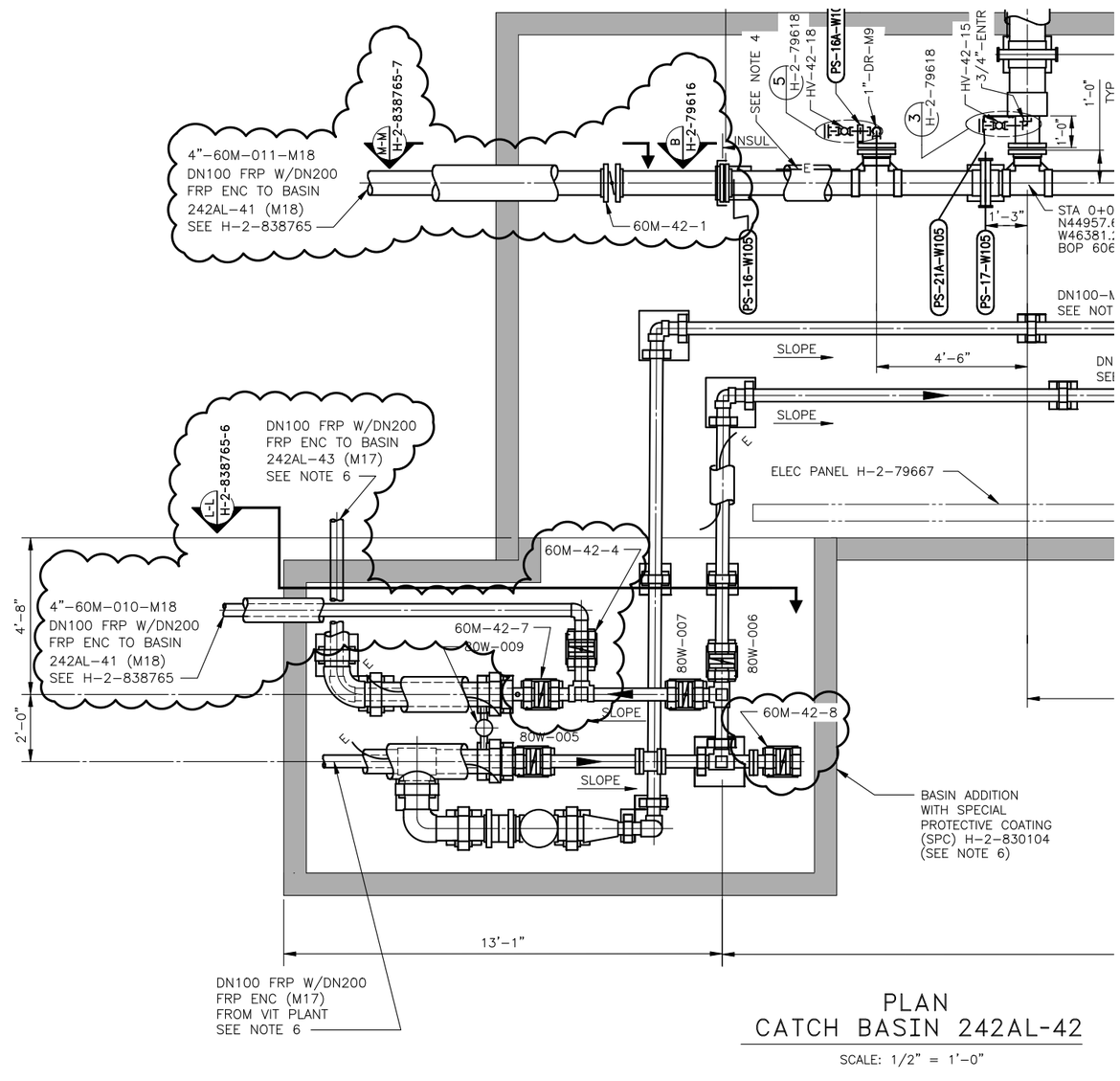

PLAN
CATCH BASIN 242AL-42

SCALE: 1/2" = 1'-0"

ENGINEERING CHANGE NOTICE
CONTINUATION SHEET

ECN NO.: 715509

Document/Drawing No. H-2-88766 Sheet 2 Revision 16

WAS: (ZONE E/3-4)

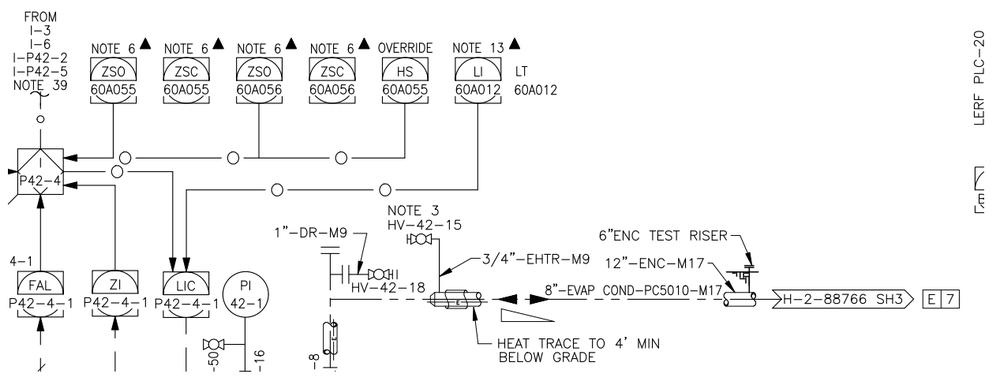

WAS: (ZONE E/6)

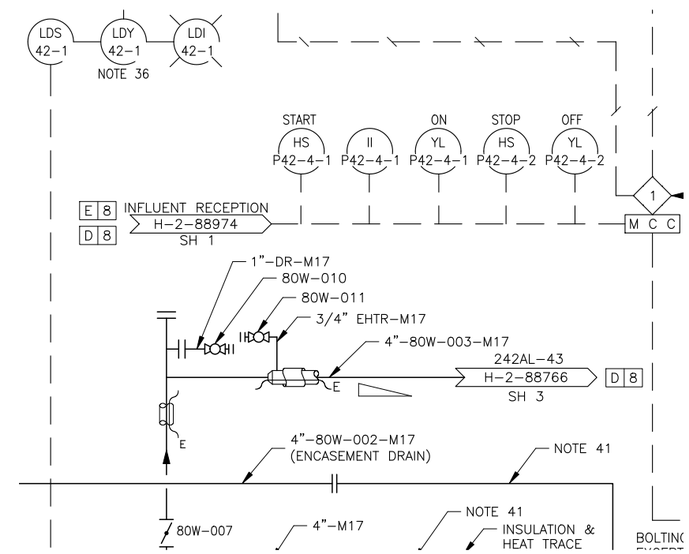

WAS: (ZONE D/7)

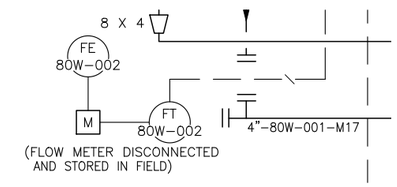

IS: (ZONE E/3-4)

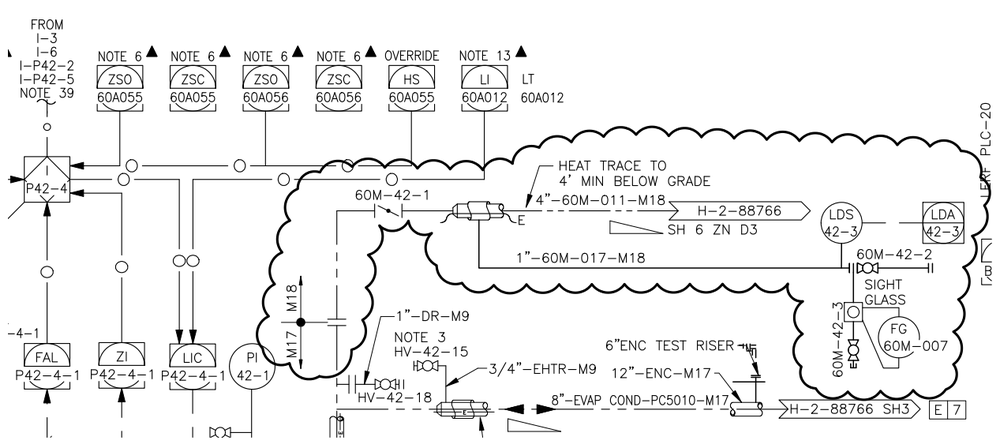

IS: (ZONE E/6)

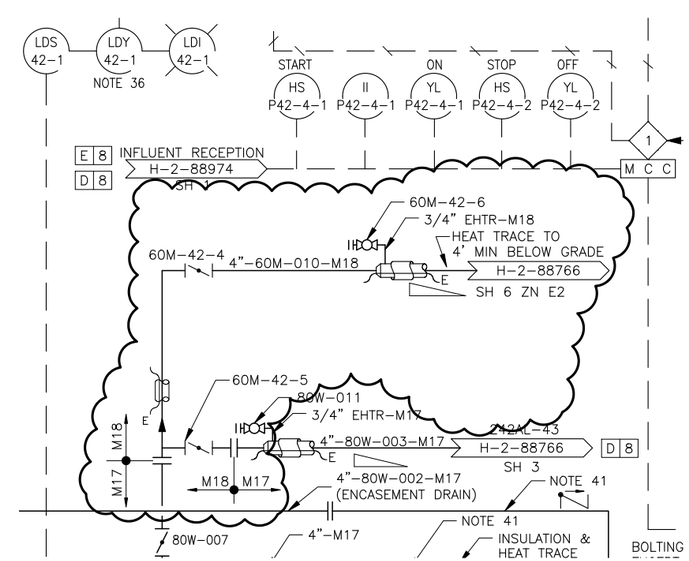

IS: (ZONE D/7)

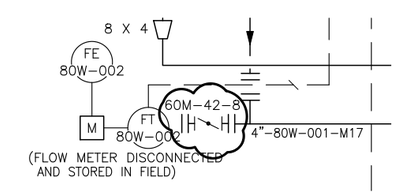

ENGINEERING CHANGE NOTICE CONTINUATION SHEET	ECN NO.: 715509

Document/Drawing No. H-2-830097 Sheet 1 Revision 1

CONSTRUCTION NOTE: (DO NOT INCORPORATE)

THIS "WAS" CONDITION REFLECTS THE "IS" CONDITION OF ECN-715507 AND ECN-715508 WHEN WORK COMPLETE.

WAS: (ZONE E/5)

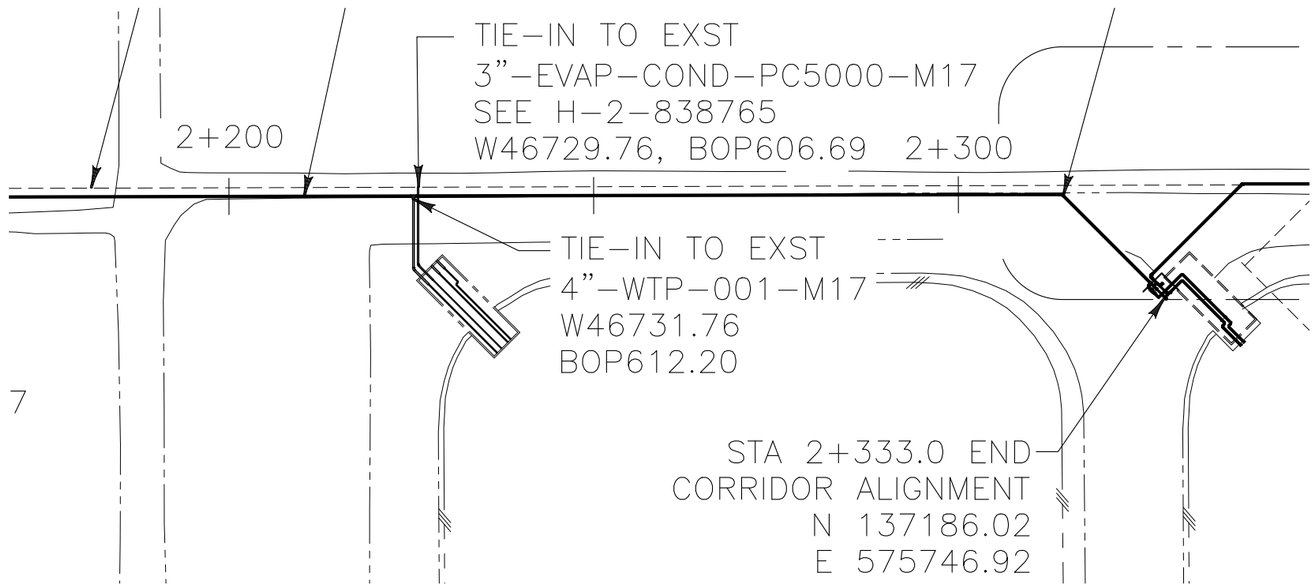

IS: (ZONE E/5)

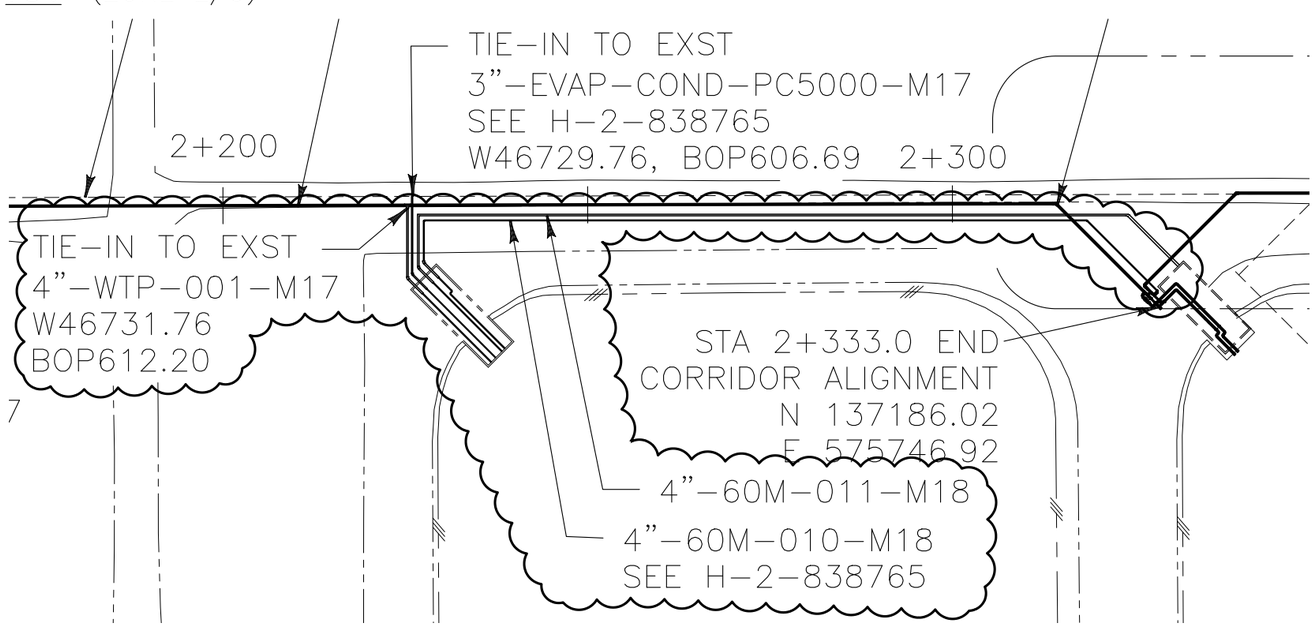

ENGINEERING CHANGE NOTICE
CONTINUATION SHEET

ECN NO.: 715509

Document/Drawing No. H-2-830098 Sheet 1 Revision 1

CONSTRUCTION NOTE: (DO NOT INCORPORATE)

THIS "WAS" CONDITION REFLECTS THE "IS" CONDITION OF ECN-715507 AND ECN-715508 WHEN WORK COMPLETE.

WAS: (ZONE E-F/7)

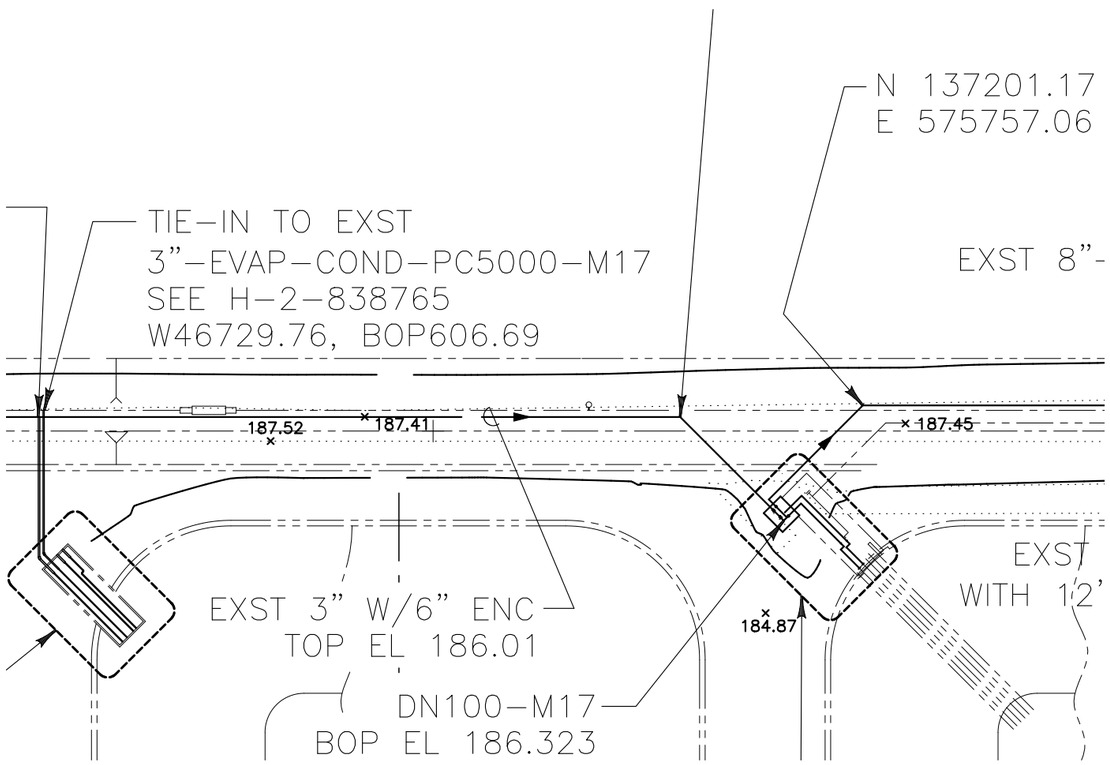

IS: (ZONE E-F/7)

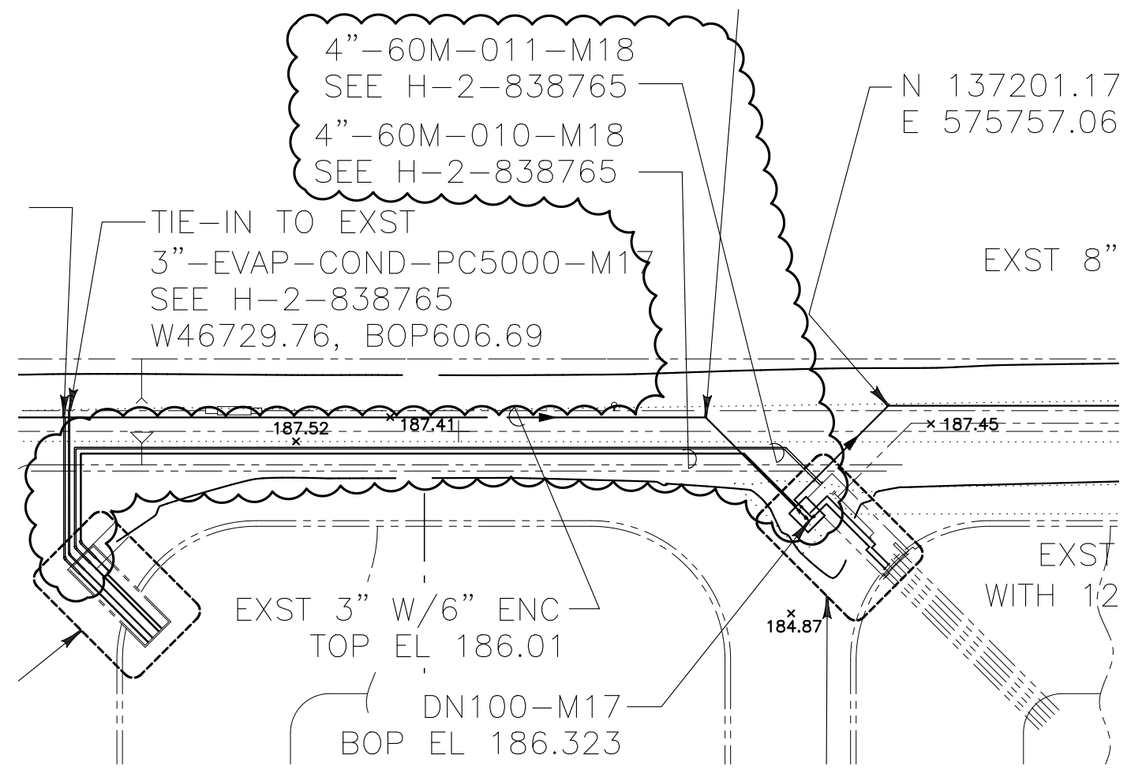

ENGINEERING CHANGE NOTICE
CONTINUATION SHEET

ECN NO.: 715509

Document/Drawing No. H-2-830099 Sheet 1 Revision 2

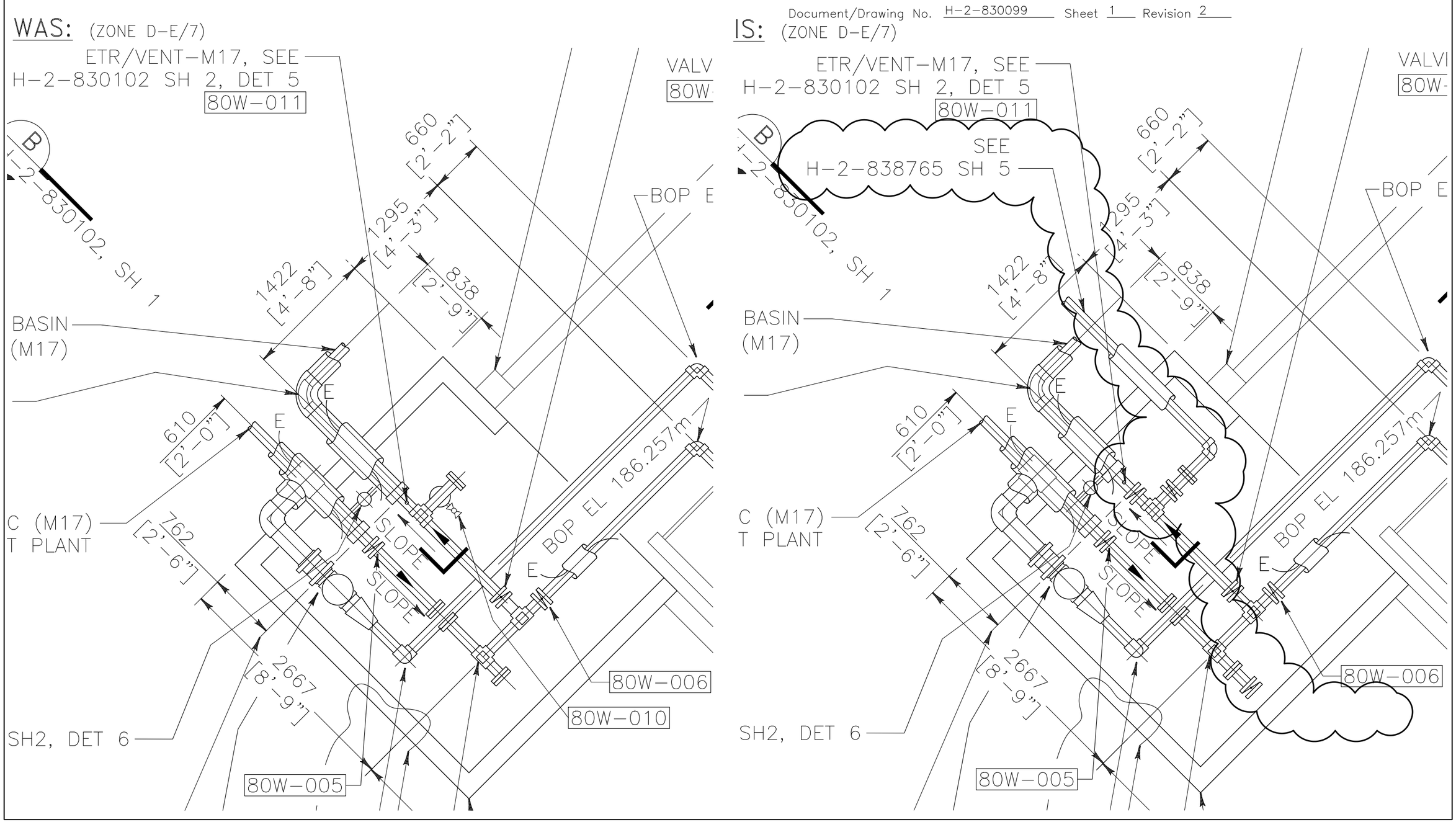

ENGINEERING CHANGE NOTICE
CONTINUATION SHEET

ECN NO.: 715509

Document/Drawing No. H-2-830099 Sheet 2 Revision 1

WAS: (ZONE E/7)

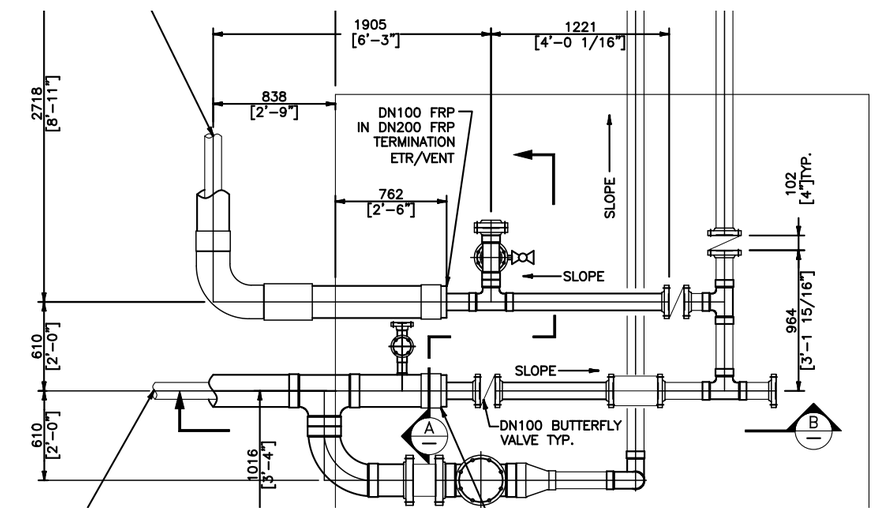

WAS: (ZONE B/6)

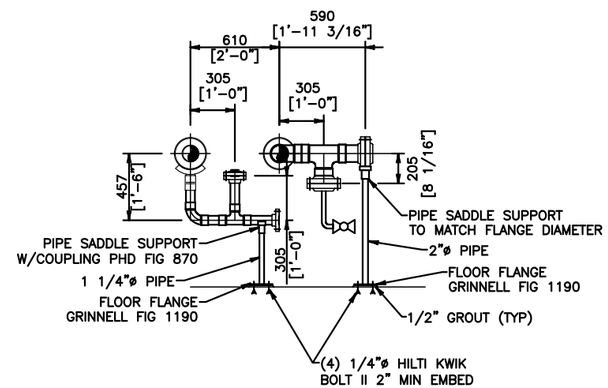

A VIEW
SCALE: NONE

WAS: (ZONE D/1)

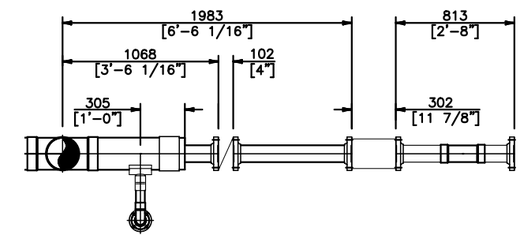

B VIEW
SCALE: NONE

IS: (ZONE E/7)

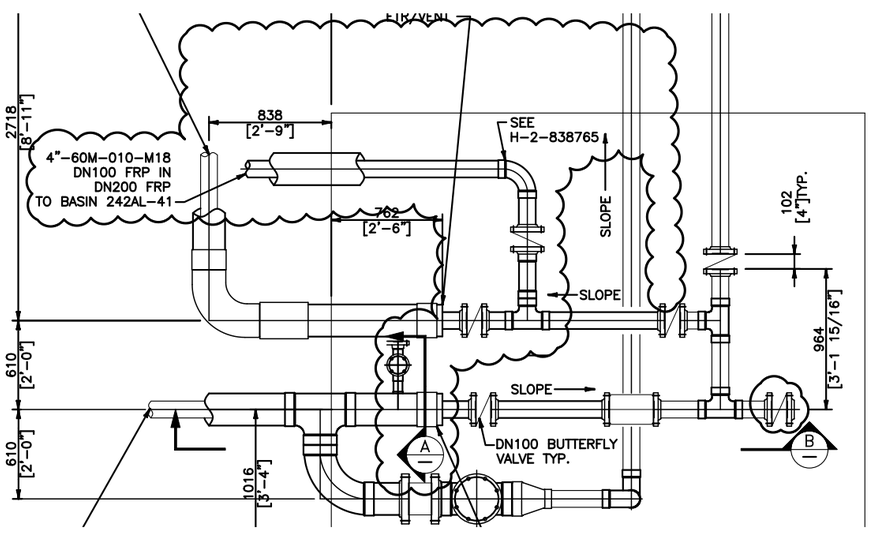

IS: (ZONE B/6)

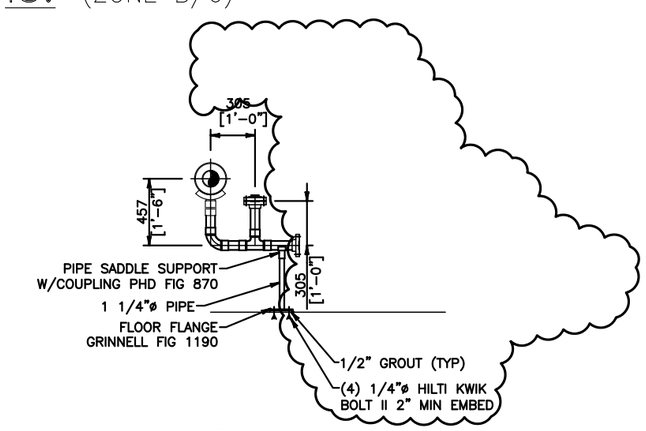

A VIEW
SCALE: NONE

IS: (ZONE D/1)

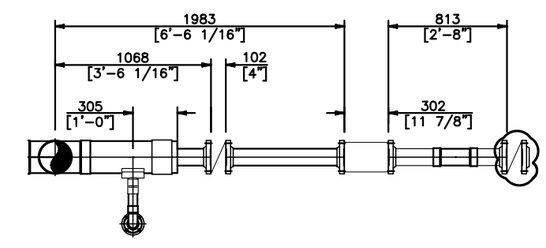

B VIEW
SCALE: NONE

ENGINEERING CHANGE NOTICE

Prepared For the U.S. Department of Energy, Assistant Secretary for Environmental Management
By Washington River Protection Solutions, LLC., PO Box 850, Richland, WA 99352
Contractor For U.S. Department of Energy, Office of River Protection, under Contract DE-AC27-08RV14800

TRADEMARK DISCLAIMER: Reference herein to any specific commercial product, process, or service by trade name, trademark, manufacturer, or otherwise, does not necessarily constitute or imply its endorsement, recommendation, or favoring by the United States government or any agency thereof or its contractors or subcontractors. Printed in the United States of America.

Release Stamp

DATE:
May 19,2020
HANFORD RELEASE

Workflow Approval Status:
For Approval
Clearance Review Restriction Type:
undefined

1a. **ECN No:** ECN-715586 **Rev.** 00

1b. **Project Number:** T1P226 ☐N/A

2. **Title:**
LERF Basin 41 - I&C Installation

3. **WA or Redline ECN:**
☐ WA ☐ REDLINE ☒ N/A

4. **Temporary Modification:**
☐ Yes ☒ No

5. **Design Type:**
II

6. **Design Verification Required:**
☐Yes ☒No

7. **Safety Classification:**
☐SC ☐SS ☒GS ☐N/A

8. **USQ Number:** ☒ N/A
RPP-27195

9. **PrHA Number** **Rev.** ☒ N/A

10. **Trend Codes**

Cause	Commodity	Discipline Driver
Initial Design Release	Instrumentation	Instrument & Controls

11. **Design Authority Designator**

PRJ - LERF BASIN 41

12. **Approvals**

Title	Name	Signature	Date
Design Authority	Wilson, Nathaniel W	*Wilson, Nathaniel W*	04/29/2020
Checker	Garcia, Michael F	*Garcia, Michael F*	05/05/2020
Document Control Approval	Scales, Anthony	*Scales, Anthony*	05/19/2020
Environmental Protection	Wall, Jeremy M	*Wall, Jeremy M*	04/30/2020
Originator	Salyers, Violet F	*Salyers, Violet F*	05/05/2020
Other Approver	Samoska, Jerry A	*Samoska, Jerry A*	05/12/2020
Other Approver	Joslyn, Cameron C	*Joslyn, Cameron C*	05/06/2020
Responsible Engineering Manager	Huntington, Matthew R	*Huntington, Matthew R*	05/12/2020

13. **Problem**

A fourth Retention Basin, 242AL-41, is being installed at the Liquid Effluent Retention Facility (LERF). Capability to control and/or monitor basin pumps and instrumentation from the Effluent Treatment Facility (ETF) and 242A Evaporator is required.

14. **Solution**

Instrumentation and controls wiring will be installed from the new basin to LERF Instrument Building 242AL-71 for connection to Local Control Unit LCU55M17, which ties into ETF. LCU55M17 is being upgraded with a new back panel and ABB components to replace the existing Rockwell system as part of the ETF Monitor and Control System Replacement Project. I/O required for the Basin 41 addition will be added and wired under that project (H-2-838830 and ECN-715497, in process). This ECN will connect field wiring to existing field terminal blocks located in LCU55M17 and show shared monitoring with Evaporator MCS.

15. **Analysis**

Design checks were performed in accordance with ARES ESD Sargent & Lundy Quality Assurance Procedure QAP 3.2, Engineering Drawings, and QAP 3.6, Design Process.

16. **Description of Change**

H-2-88766 Sh 1:
Add new displays and sheet references.

H-2-88813 Sh 1:
Add Loop Diagrams to show new Basin 41 24VDC analog instrumentation.

H-2-88813 Sh 4:
Add Loop Diagrams to show new Basin 41 24VDC discrete instrumentation.

H-2-88818 Sh 2:
Revise Elementary Diagram to show new Basin 41 24VDC discrete instrumentation.

H-2-88836 Sh 4:
Revise Wiring Diagram to show new Basin 41 24VDC signals and control power field terminations in LCU55M17.

17. **Work Package Number(s)**

TBD

18. **TBDs or Holds** ☒N/A

ENGINEERING CHANGE NOTICE

ECN No: ECN-715586 **Rev.** 00

19. **Related Structures, Systems, and Components**

a. **Related Building/Facilities** ☐N/A	b. **Related Systems** ☐N/A	c. **Related Equipment ID Nos. (EIN)** ☐N/A
242AL-41 242AL-71	LERF-60M-L	LCU-17

20. **Engineering Drawings to be Changed** Does change affect the Electronic Routing Board? ☐

Drawing Number	Rev.	Title
H-2-88766 SH 001	14	P & ID LERF BASIN & ETF INFLUENT EVAPORATOR
H-2-88813 SH 001	04	ELECTRICAL/INSTM INTERCONN & WIRING DIAG LERF INSTM BLDG
H-2-88813 SH 004	01	ELECTRICAL/INSTM INTERCONN & WIRING DIAG LERF INSTM BLDG
H-2-88818 SH 002	01	ELECTRICAL/INSTM ELEMENTARY DRAWINGS
H-2-88836 SH 004	04	LOCAL CONTROL PANEL LCU55M17 AC POWER DIST WIRING DIAGRAM

21. **Related Modification Traveler** ☐N/A

MT-50497

22. **Related Documents** ☐N/A

Document Number	Rev.	Title
RPP-SPEC-63632	00	LERF Basin 41 Construction Specification

23. **Distribution**

Name	Organization
Barnes, Jon E	DESIGN SERVICES
Blaak, Whitney S	COGNIZANT SYSTEM ENGINEERING
Goessmann, Glen E	ENGINEERING PROGRAMS
Greenhalgh, Aaron M	TANK FARM PROJECTS ENGINEERING
Halgren, Dale L	ETF ENGINEERING
Harris, John W	SAFETY PROGRAM SERVICES RC/P
Joslyn, Cameron C	ETF ENGINEERING
McShane, Michael P	ENGINEERING PROGRAMS
Moser, Aaron P	ETF ENGINEERING
O'Meara, Sean P	ETF ENGINEERING
Ozbas, Murat	PROC SYS & ENGINEERING SUPPORT
Rambo, Charles L	ENGINEERING PROGRAMS
Roosendaal, Gene D	TFP PROJECT MANAGEMENT
Rutherford, Wally	ETF ENGINEERING
Samoska, Jerry A	INSTRUMENT & CNTRL ENGINEERING
Smith, Gregory E	TANK FARM PROJECTS ENGINEERING
Smoot, Bill R	TFP RADCON
Wall, Jeremy M	RETRVL & CLOSURE/PROJ ENV CMPL
Wilson, Nathaniel W	ETF PROJECTS ENGINEERING

ENGINEERING CHANGE NOTICE
CONTINUATION SHEET

ECN NO.: 715586

WAS: (ZONE B-F/3-8)

Document/Drawing No. H-2-88766 Sheet 1 Revision 14

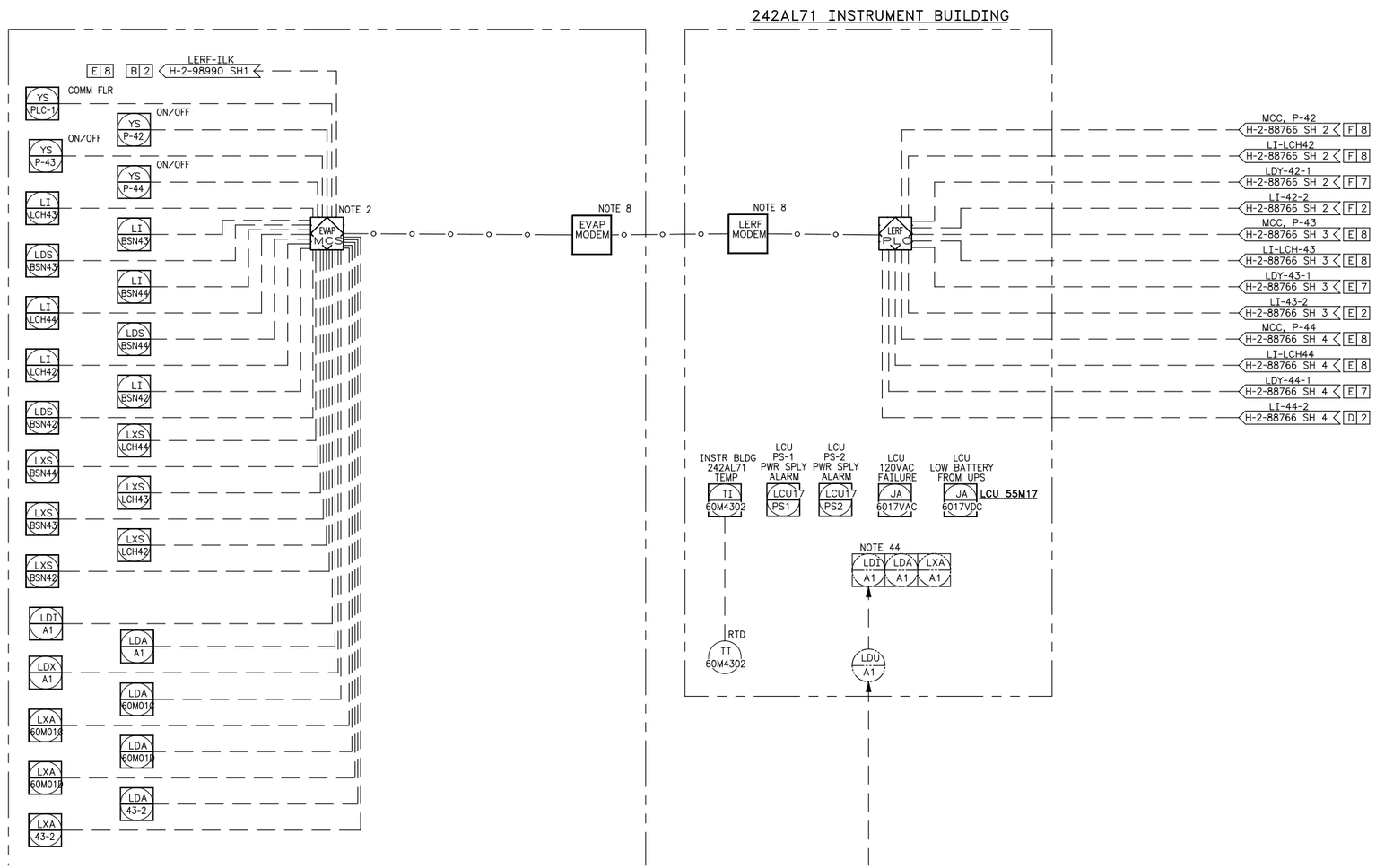

ENGINEERING CHANGE NOTICE
CONTINUATION SHEET

ECN NO.: 715586

IS: (ZONE B-F/3-8)

Document/Drawing No. H-2-88766 Sheet 1 Revision 14

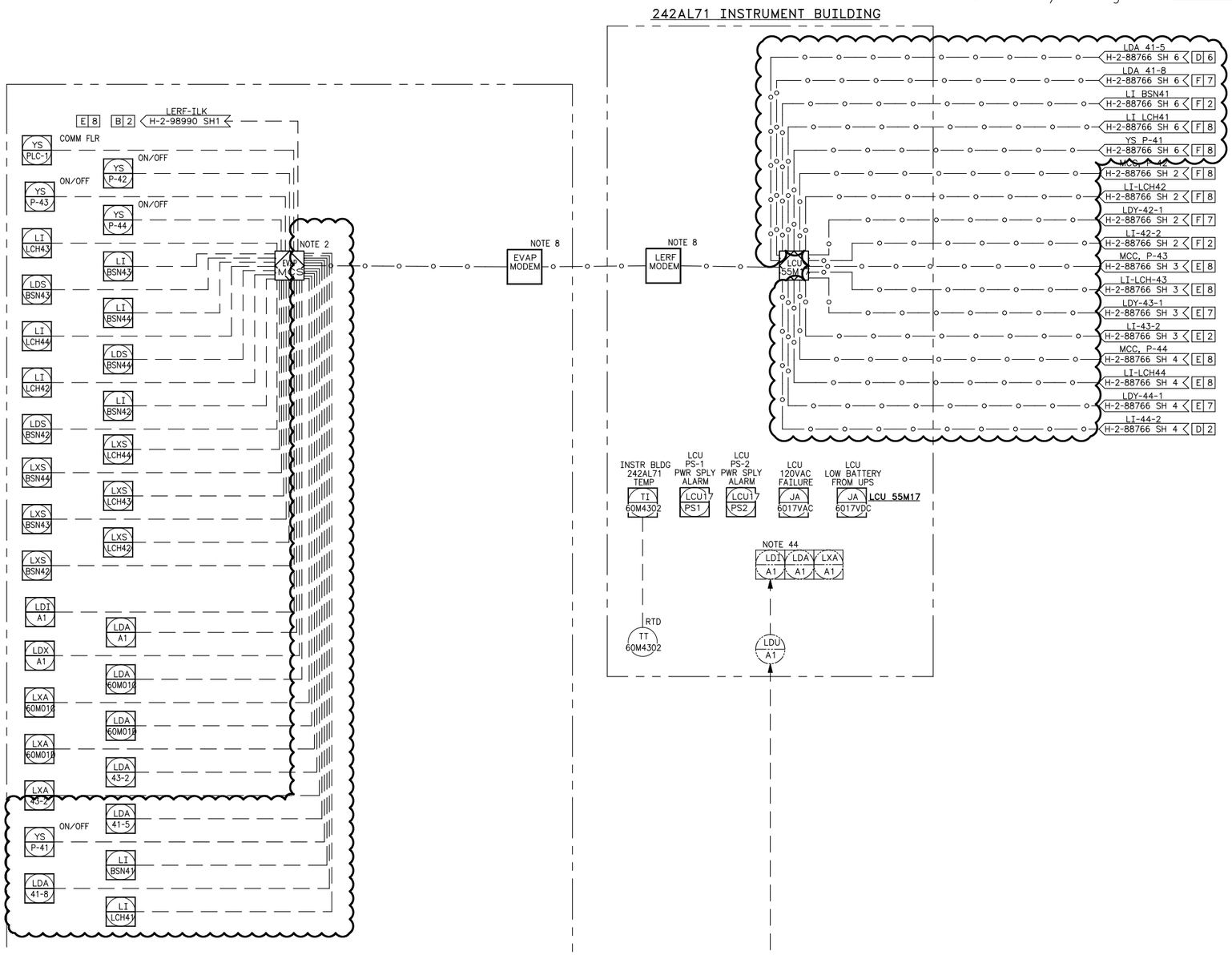

ENGINEERING CHANGE NOTICE
CONTINUATION SHEET

ECN NO.: 715586

Document/Drawing No. H-2-88813 Sheet 1 Revision 4

ADD:

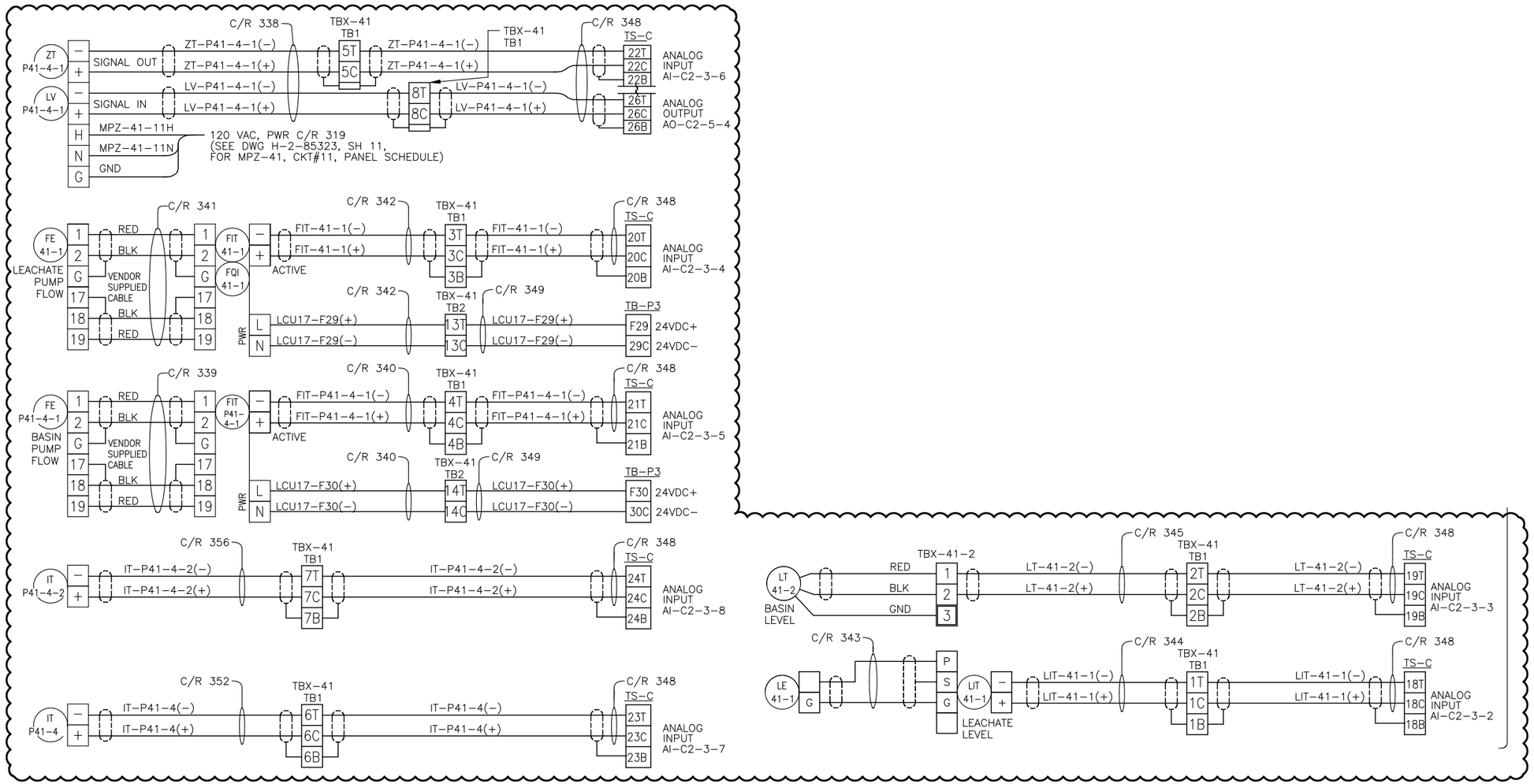

ENGINEERING CHANGE NOTICE
CONTINUATION SHEET

ECN NO.: 715586

Document/Drawing No. H-2-88813 Sheet 4 Revision 1

ADD:

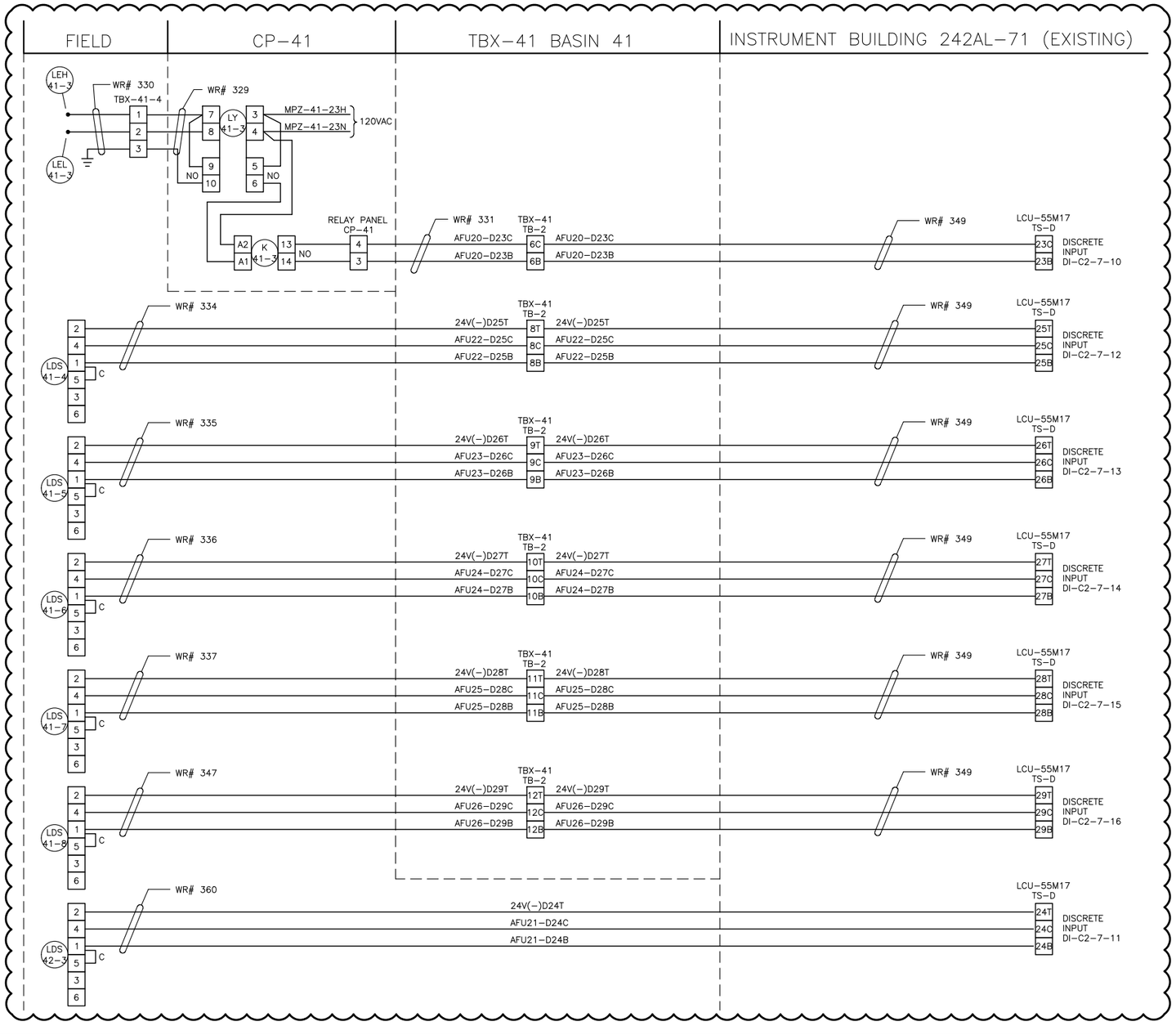

ENGINEERING CHANGE NOTICE CONTINUATION SHEET	ECN NO.: 715586

Document/Drawing No. H-2-88813 Sheet 4 Revision 1

ADD:

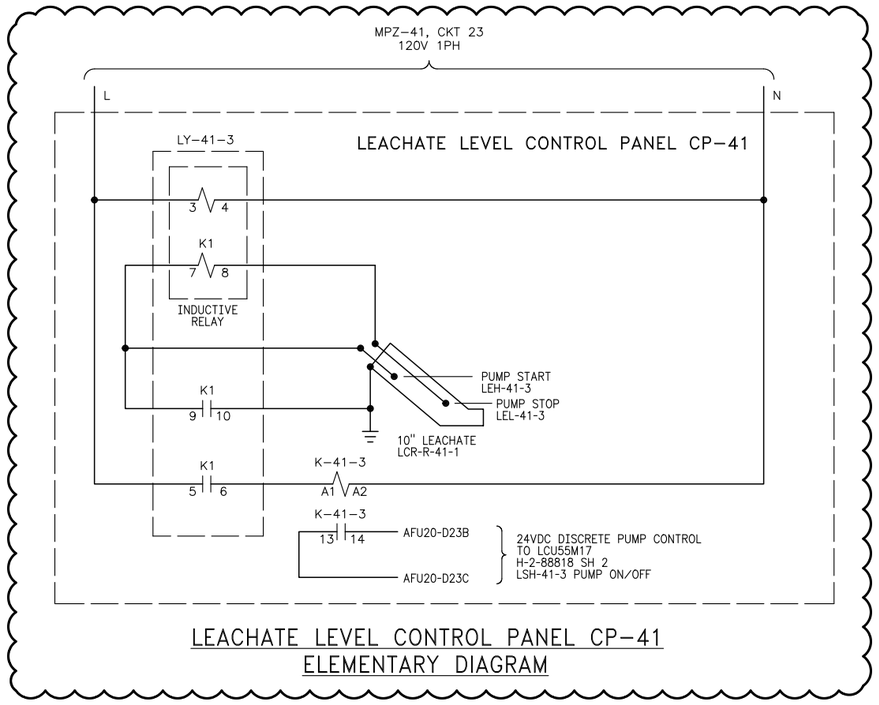

LEACHATE LEVEL CONTROL PANEL CP-41
ELEMENTARY DIAGRAM

ENGINEERING CHANGE NOTICE
CONTINUATION SHEET

ECN NO.: 715586

Document/Drawing No. H-2-88818 Sheet 2 Revision 1

WAS: (ZONE ALL)

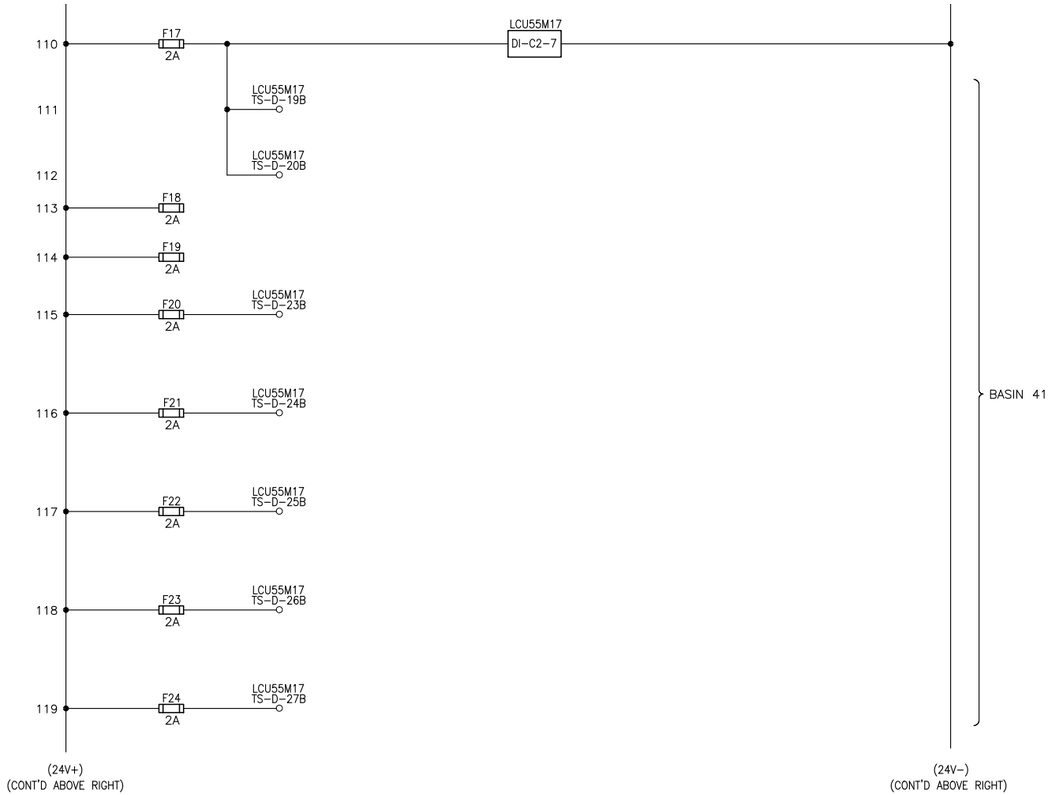

CONSTRUCTION NOTE: (DO NOT INCORPORATE)

THIS "WAS" IS SHOWN WITH WORKING ECN-715497 INCORPORATED.
NOTE; ECN-715497 IS PART OF THE ETF MCS UPGRADE PROJECT AND IS NOT FINALIZED.

IS: (ZONE ALL)

ENGINEERING CHANGE NOTICE
CONTINUATION SHEET

ECN NO.: 715586

Document/Drawing No. H-2-88818 Sheet 2 Revision 1

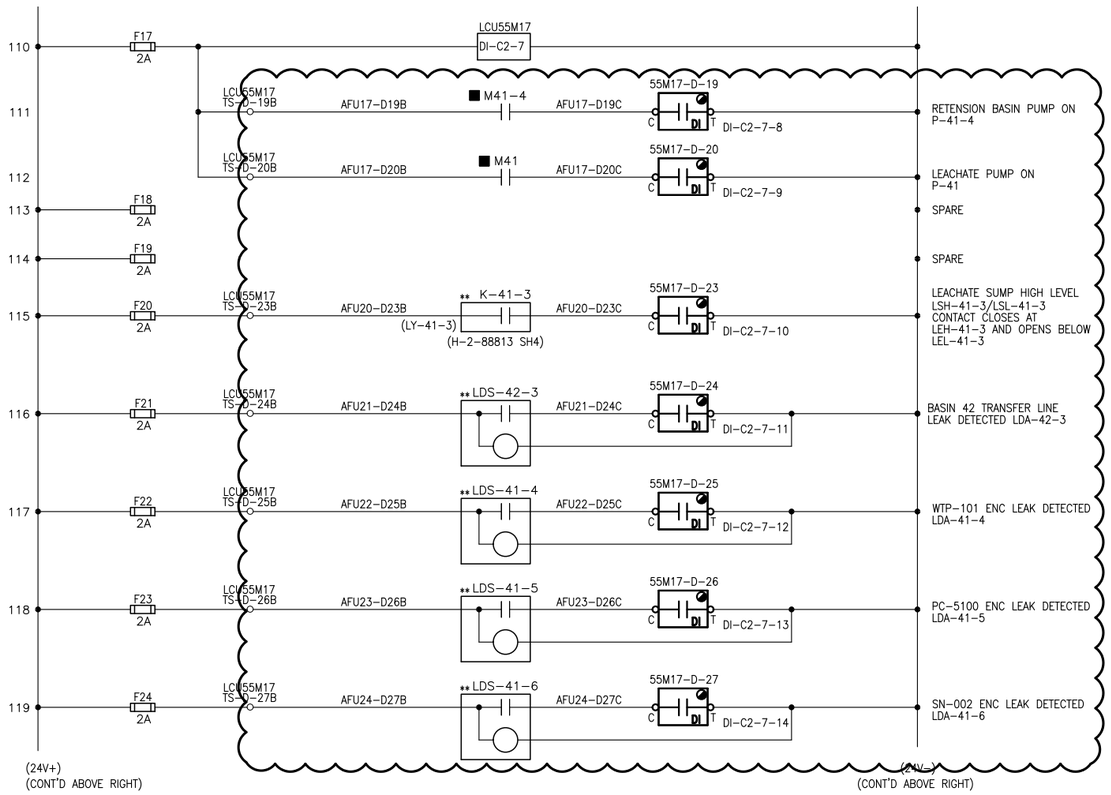

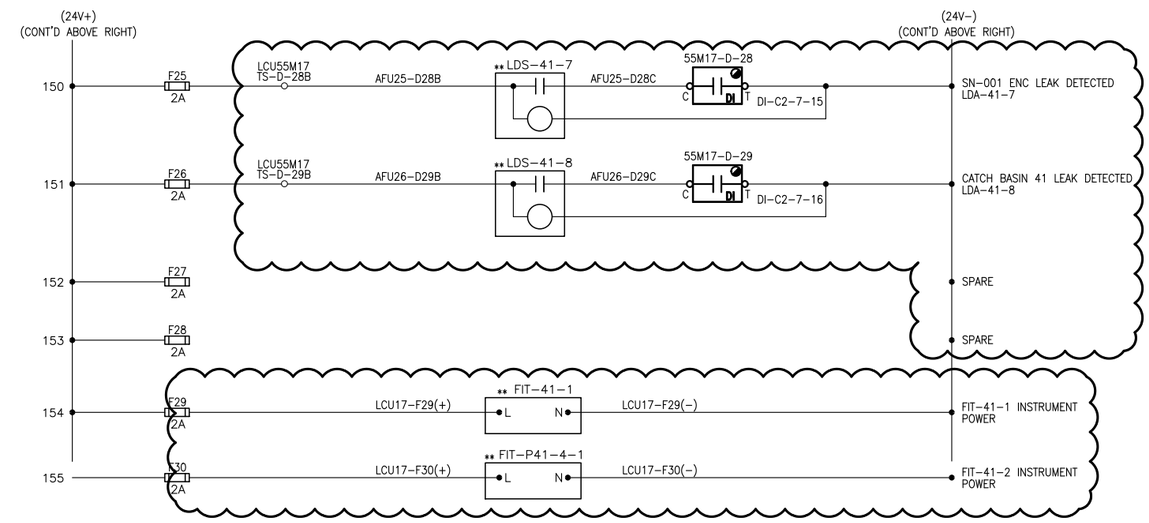

ENGINEERING CHANGE NOTICE
CONTINUATION SHEET

ECN NO.: 715586

Document/Drawing No. H-2-88836 Sheet 4 Revision 4

WAS: (ZONE ALL)

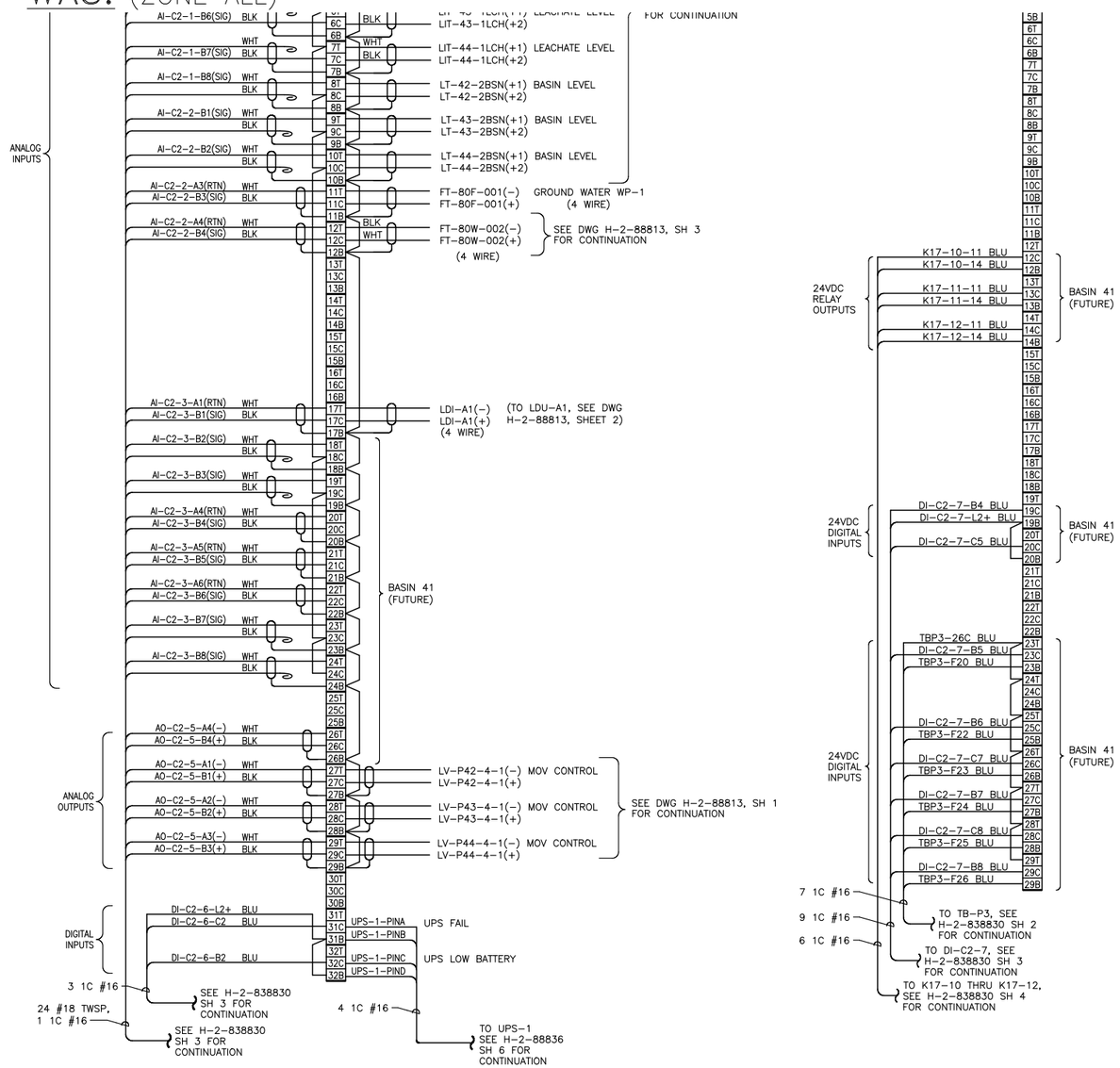

CONSTRUCTION NOTE: (DO NOT INCORPORATE)

THIS "WAS" IS SHOWN WITH WORKING ECN-715497 INCORPORATED. NOTE; ECN-715497 IS PART OF THE ETF MCS UPGRADE PROJECT AND IS NOT FINALIZED.

IS: (ZONE ALL)

ENGINEERING CHANGE NOTICE
CONTINUATION SHEET

ECN NO.: 715586

Document/Drawing No. H-2-88836 Sheet 4 Revision 4

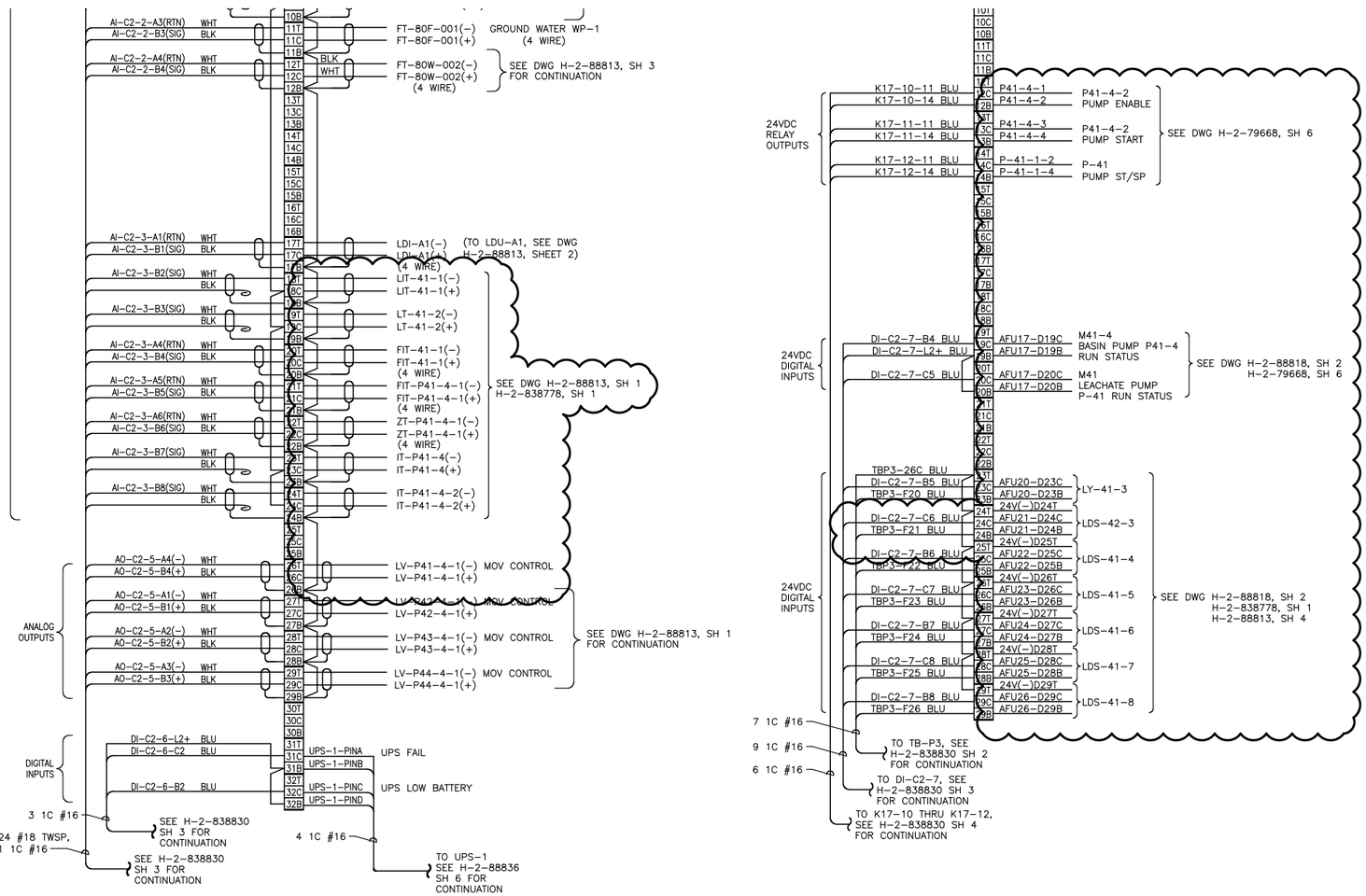

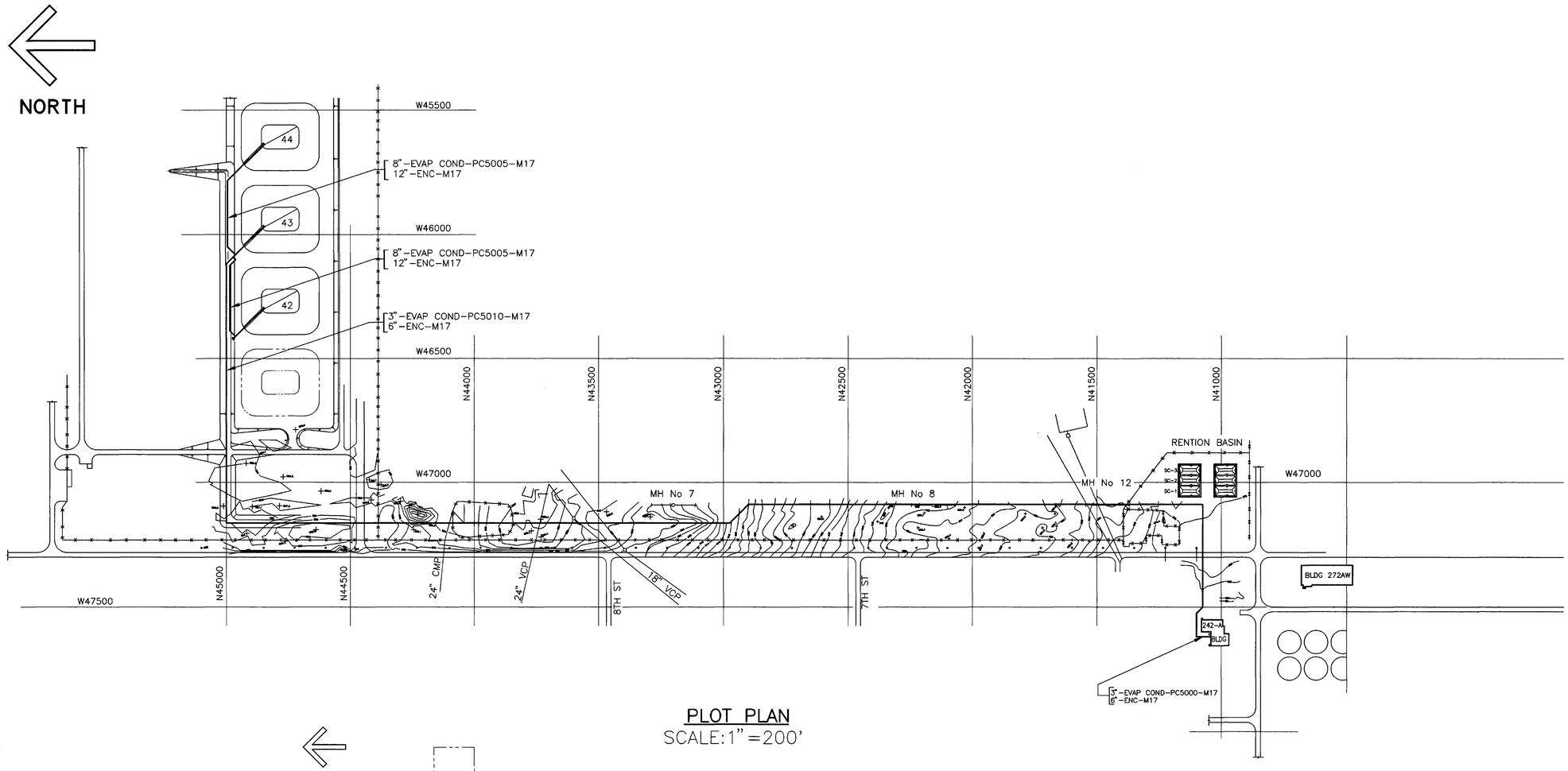

PLOT PLAN
SCALE: 1" = 200'

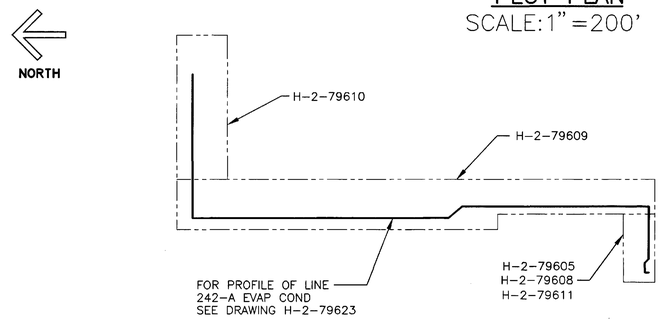

DRAWING KEY PLAN
SCALE: NONE

DWG NO	TITLE	REF NUMBER	TITLE
		H-2-79581	DWG LIST
DRAWING TRACEABILITY LIST		REFERENCES	

REV NO	DESCRIPTION	REV BY DATE	CHK BY DATE	DFTG APVD DATE	COG ENGR / COMPANY
3	REV ECN 646829 REDRAWN TO AUTOCAD PER DIR	PRW 7/22/98	9/9/98	9/11/98	9-29-98

REVISIONS

NEXT USED ON

CADFILE B079604A CADCODE WIN95:ACD2:14.0:SS

CHK PRINT ☐ DATE COMMENT PRINT ☐ DATE

2 PLOT SCALE: 1=1

DRAWN BY
CHECKED
DFTG APVD
COG ENGR
APVD
APVD
APVD
APVD
APVD

SEE PREVIOUS REVISION

U.S. DEPARTMENT OF ENERGY
Richland Operations Office
WASTE MANAGEMENT FEDERAL SERVICES OF HANFORD

PIPING PLOT & KEY PLANS 242-A EVAP COND STREAM

SIZE	BLDG NO	INDEX NO	DWG NO	REV
F	0110/ 0304	209E/ 282AL	H-2-79604	3

SCALE SHOWN EDIT 123424 SHEET 1 OF 1

GTITLE.DWG (10-96)

SH 1 OF 1 REV 3
DWG NO H-2-79604

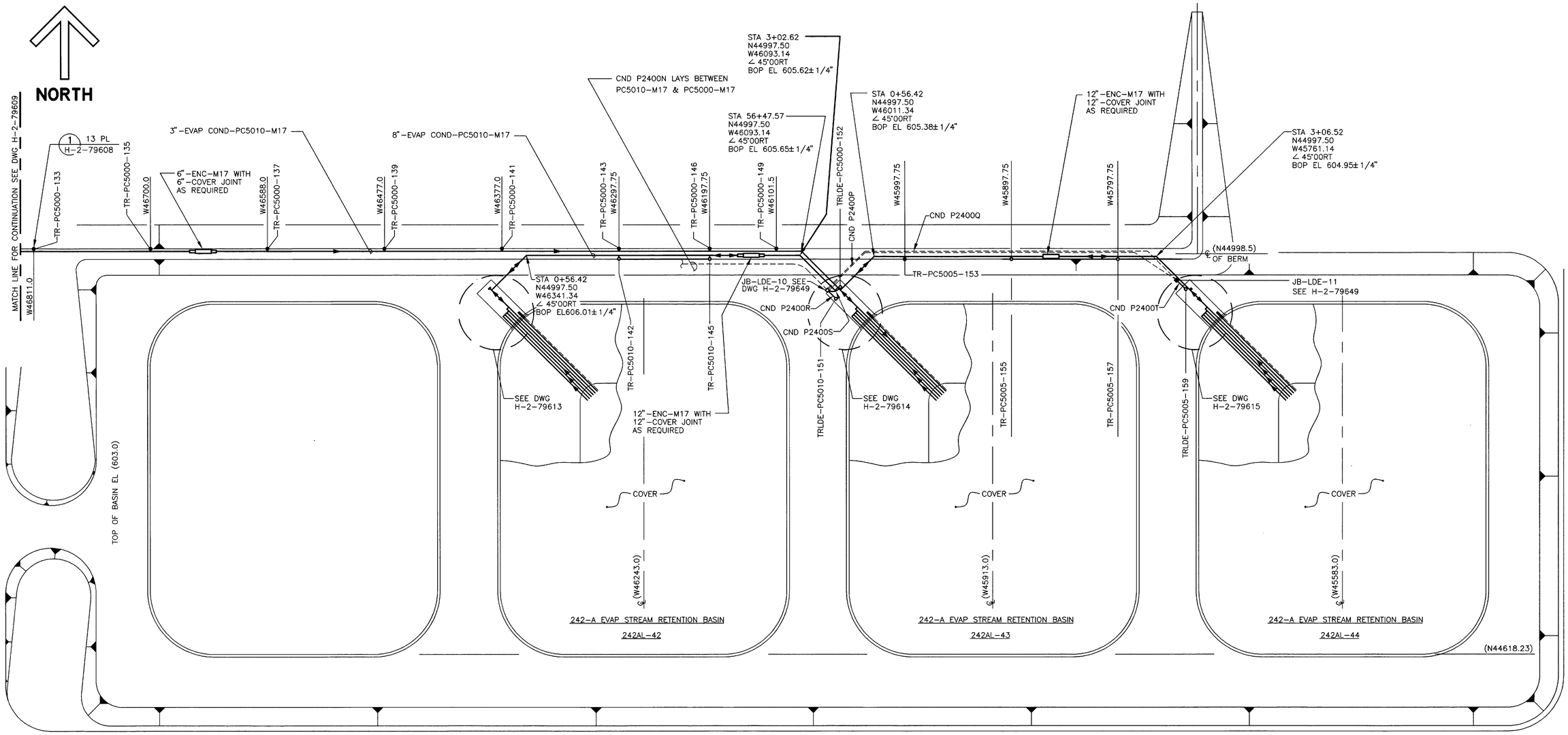

PLAN

SCALE: 1"=40'-0"

NOTE:

1. FOR GENERAL NOTES SEE DWG H-2-79605

DWG NO	TITLE
DRAWING TRACEABILITY LIST	

REF NUMBER	TITLE
H-2-79581	DRAWING LIST
REFERENCES	
NEXT USED ON	

REV NO	DESCRIPTION	REV BY DATE	CHK BY DATE	DFTG APVD DATE	COG ENGR / COMPANY
3	REV ECN 646829 REDRAWN TO AUTOCAD PER DIR	PRW 6/17/98			

REVISIONS

CADFILE B079610A CADCODE WIN95:ACD2:14.0:SS

CHK PRINT ☐ DATE COMMENT PRINT ☐ DATE

DRAWN BY
CHECKED
DFTG APVD
COG ENGR
APVD
APVD
APVD
APVD
APVD

SEE PREVIOUS REVISIONS

U.S. DEPARTMENT OF ENERGY
Richland Operations Office
WASTE MANAGEMENT FEDERAL SERVICES OF HANFORD

PIPING PLAN RETENTION BASINS

SIZE	BLDG NO	INDEX NO	DWG NO	REV
F	200E/ 242AL	0110/ 0304	H-2-79610	3

SCALE SHOWN IDF 123424 SHEET 1 OF 1

PLOT SCALE: 1=1

GTITLE.DWG (10-96)

REV 3 SH 1 OF 1 DWG NO H-2-79610

NORTH

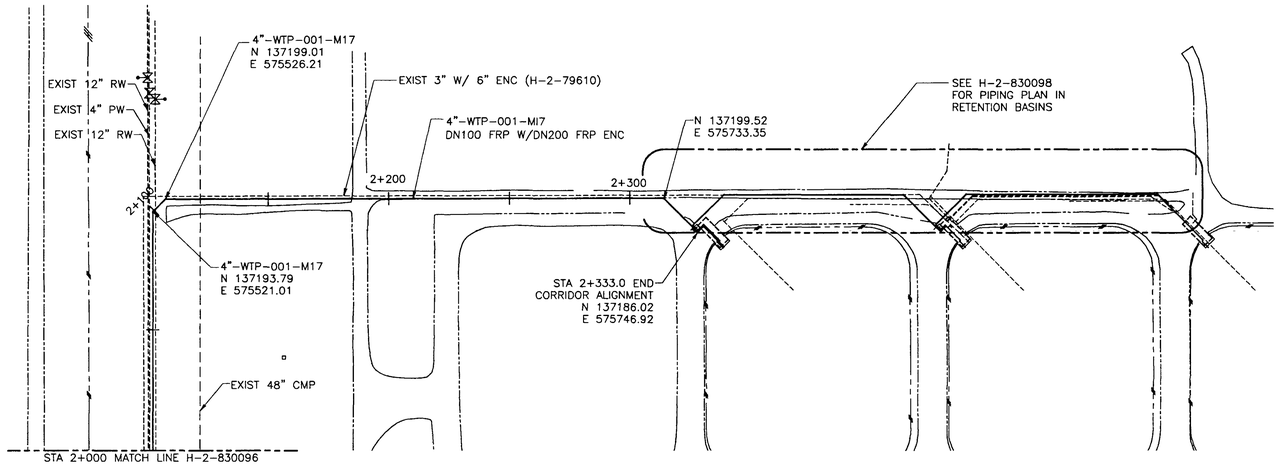

PLAN STA 2+000 TO END

10 0 20 40 60 80 100

1:1000
SCALE IN METERS

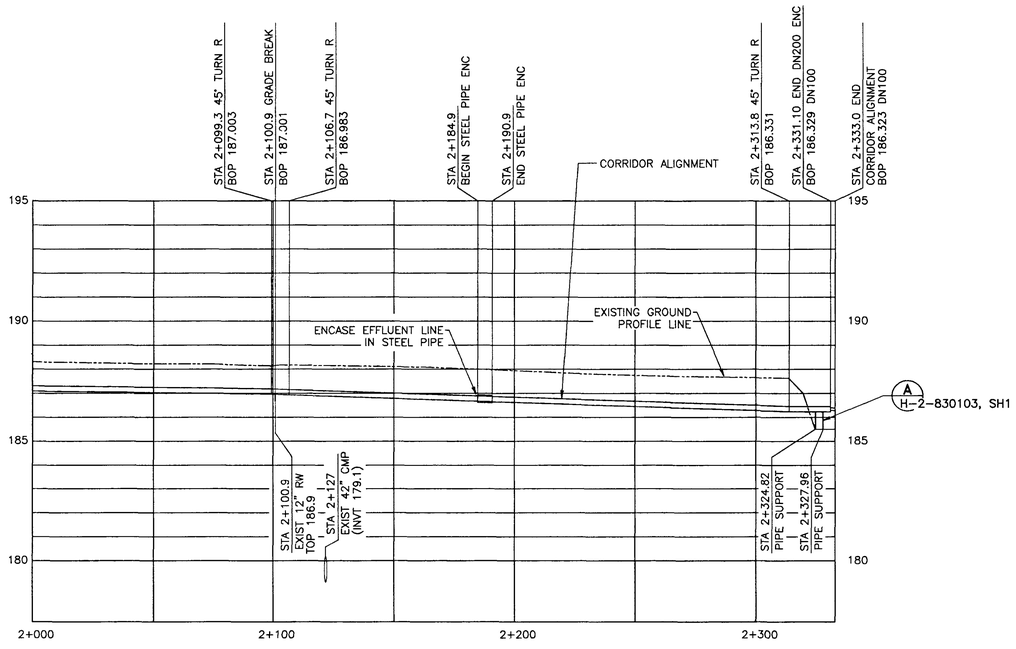

PROFILE STA 2+000 TO END

10 0 20 40 60 80 100

1:1000
HORIZONTAL SCALE IN METERS

1 0 2 4 6 8 10

VERTICAL SCALE IN METERS

NOTES:

1. FOR GENERAL NOTES AND LEGEND SEE H-1-830093
2. DATE SURVEYED: 3-9-, 4-11-01.

COORDINATE TABLE

4"-WTP-001-M17

STA	NORTHING	EASTING	ELEVATION	DESCRIPTION
2+011.80	137106.246	575521.229	187.257	TOPP 66---
2+005.26	137062.971	575757.499	186.442	TOP FLANGE
2+011.44	137105.919	575521.226	187.294	TOPP 66---
2+042.27	137136.749	575521.125	187.260	TOPP 67---
2+058.47	137153.951	575521.091	187.923	TOP FLANGE
2+073.42	137167.903	575521.024	187.244	TOPP 68---
2+099.38	137193.861	575520.882	187.214	TOPP 68+87 AP
2+102.22	137195.918	575522.846	187.853	TOP FLANGE
2+106.52	137198.909	575525.940	187.171	TOPP 69+11 AP
2+133.82	137199.130	575553.233	187.112	TOPP 70---
2+164.30	137199.248	575583.814	187.004	TOPP 71---
2+184.32	137199.281	575603.837	187.190	TOP CASE
2+190.36	137199.212	575609.880	187.144	TOP CASE
2+194.52	137199.258	575614.038	186.903	TOPP 72---
2+224.95	137199.290	575644.688	186.814	TOPP 73---
2+224.84	137199.333	575644.358	187.483	TOP FLANGE
2+255.68	137199.379	575675.194	186.699	TOPP 74---
2+285.87	137199.436	575705.386	186.624	TOPP 75---
2+313.66	137199.475	575733.190	186.514	TOPP 75+91 AP
2+314.34	137198.797	575733.870	187.084	TOP FLANGE

COORDINATE TABLE

EXISTING GROUND

STA	NORTHING	EASTING	ELEVATION	DESCRIPTION
2+011.69	137106.175	575521.275	188.289	GS 66---
2+042.13	137136.602	575521.124	188.234	GS 67---
2+073.34	137167.820	575521.117	188.216	GS 68---
2+099.47	137193.951	575520.967	188.136	GS 68+87 AP
2+106.41	137198.811	575525.924	188.179	GS 69+11
2+133.58	137199.107	575553.090	188.137	GS 70---
2+164.27	137199.237	575583.778	188.081	GS 71---
2+194.58	137199.120	575614.091	187.966	GS 72---
2+224.87	137199.304	575644.385	187.829	GS 73---
2+255.83	137199.507	575675.349	187.728	GS 74---
2+286.10	137199.487	575705.619	187.675	GS 75---
2+314.11	137199.624	575733.089	187.633	GS 75+91 AP

ALL DIMENSIONS IN METERS UNO.

MANUAL CHANGES TO THE DRAWING HAVE BEEN INCORPORATED INTO THE CAD DATA SET
6-28-01

JUL 13 2001

MEIER Enterprises, Inc.
www.meierinc.com

RCI ENVIRONMENTAL INC.
ENVIRONMENTAL CONTRACTORS & ENGINEERS

	NAME	DATE	COMPANY
DRAWN BY	TT MARTIN	5/4/01	
CHECKED BY	JV EGGER	5/22/00	
APPROVED BY	T MEIER	5/23/00	6/26/01
	D DOLD	5/29/00	
	MA PRZYBYLSKI	5/22/00	FFS
DESIGN AUTHORITY	LILLY	5/22/00	
	W BROWN		FH

U.S. DEPARTMENT OF ENERGY
Richland Operations Office

W-519 SITE/UTILITY SYSTEMS
PLAN AND PROFILE
STA 2+000 TO STA 2+333.0

SIZE	BLDG NO	INDEX NO	DWG NO	REV
F	200E 242AL	0304	H-2-830097	1

SCALE SHOWN | REF 612387 | SHEET 1 OF 1

GTITLE3.DWG (03-99)

BLDG. NO.

INDEX NO.

THIS SPACE RESERVED FOR BUILDING AND INDEX NUMBERS

DWG NO H-2-830097 SH 1 OF 1 REV 1

REV NO	DESCRIPTION	REV BY DATE	ENGR	COMPANY
1	FCN-W519-002, -010 GENERAL REVISION, INCORPORATED ADDED SURVEY DATA AS-BUILT	BDK 4/01 5/31/01		

REVISIONS

DWG NO	TITLE

DRAWING TRACEABILITY LIST

REF NUMBER	TITLE

REFERENCES

NEXT USED ON

EXPIRES 12/19/01

NORTH

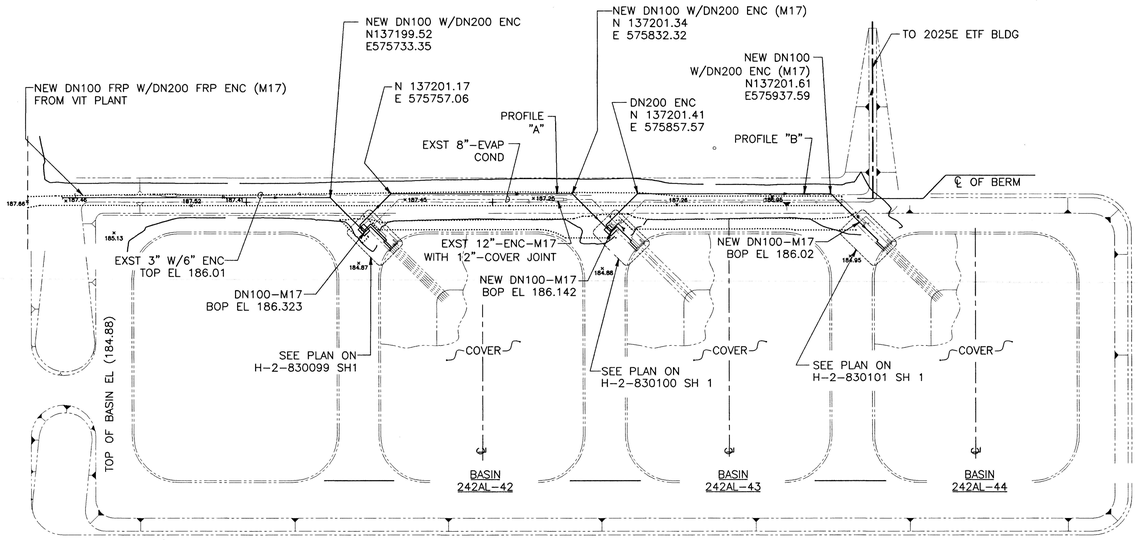

PLAN

10 0 20 40 60 80 100

1:1000
SCALE IN METERS

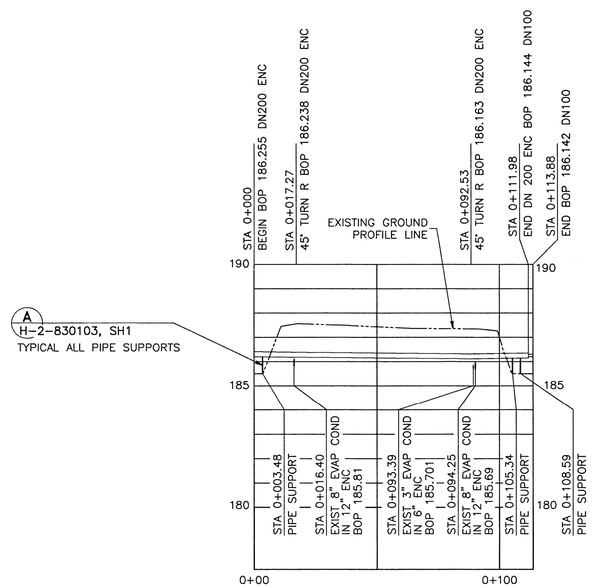

PROFILE "A"

10 0 20 40 60 80 100

1:1000
HORIZONTAL SCALE IN METERS

1 0 2 4 6 8 10

VERTICAL SCALE IN METERS

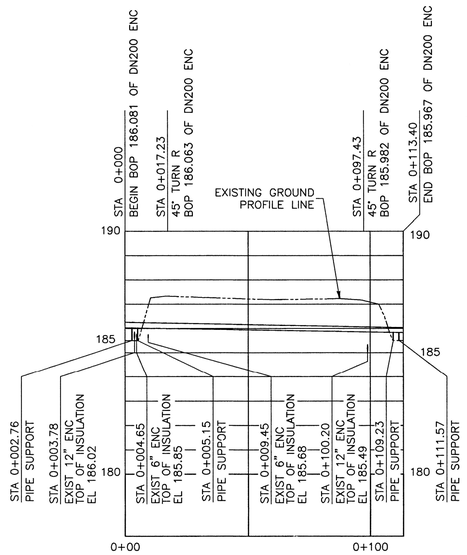

PROFILE "B"

10 0 20 40 60 80 100

1:1000
HORIZONTAL SCALE IN METERS

1 0 2 4 6 8 10

VERTICAL SCALE IN METERS

NOTES:

1. FOR GENERAL NOTES AND LEGEND SEE H-2-830093.
2. DATE SURVEYED: FEBRUARY 5, MARCH 11, 2001.

COORDINATE TABLE

LERF BERM AREA
PROFILE "A"

STA	NORTHING	EASTING	NGVD 29	NAVD 88	DESC
0+017.99	137201.739	575757.4990	186.4420		TOPP 0+56
0+017.04	137201.094	575756.8140	187.1480		TOP FLANGE
0+034.13	137201.966	575776.9076	186.4330		TOPP 1+20
0+064.61	137201.967	575804.3899	186.3920		TOPP 2+10
0+092.07	137201.824	575831.8605	186.4190		TOPP 3+03
0+092.82	137201.161	575832.5508	187.1180		TOP FLANGE

COORDINATE TABLE

LERF BERM AREA
PROFILE "B"

STA	NORTHING	EASTING	NGVD 29	NAVD 88	DESC
0+015.63	137200.635	575856.0753	187.0390		TOP FLANGE
0+016.56	137201.256	575856.7676	186.2990		TOPP 0+56
0+033.44	137201.413	575873.7846	186.2700		TOPP 1+10
0+061.00	137201.575	575901.3502	186.2300		TOPP 2+00
0+088.26	137201.639	575928.6062	186.2260		TOPP 2+90
0+097.69	137201.527	575937.8446	186.2190		TOPP 3+23
0+098.43	137200.885	575938.5461	186.9160		TOP FLANGE

COORDINATE TABLE

LERF BERM AREA
EXISTING GROUND
PROFILE "A"

STA	NORTHING	EASTING	ELEV	DESC
0+017.83	137201.538	575757.490	187.562	GS 0+56
0+037.02	137201.887	575776.800	187.496	GS 1+20
0+064.57	137201.928	575804.356	187.366	GS 2+10
0+092.24	137201.694	575832.032	187.364	GS 3+03
0+092.02	137202.066	575831.808	187.346	GS 3+03

COORDINATE TABLE

LERF BERM AREA
EXISTING GROUND
PROFILE "B"

STA	NORTHING	EASTING	ELEV	DESC
0+016.67	137201.356	575856.832	187.332	GS 0+56
0+033.19	137201.423	575873.534	187.271	GS 1+10
0+061.17	137201.590	575901.511	187.182	GS 2---
0+088.34	137201.687	575928.683	187.225	GS 2+90
0+097.65	137201.586	575937.818	187.170	GS 3+23

COORDINATE TABLE

EXISTING UTILITIES

NORTHING	EASTING	ELEV	DESC
137200.115	575755.3138	187.0550	TOPP 2" CON
137200.188	575756.6675	187.0650	TOPP 2" CON
137200.450	575832.8359	186.8590	TOPP 2" CON
137200.502	575833.8828	186.8690	TOPP 2" CON

ALL DIMENSIONS IN METERS UNO.

MANUAL CHANGES TO THE DRAWING HAVE BEEN INCORPORATED INTO THE CAD DATA SET

6-28-01

DATE STA 4 PARTIAL RELEASE ID 2 JUL 13 2001

MEIER Enterprises, Inc.
www.meierinc.com

RCI ENVIRONMENTAL INC.
ENVIRONMENTAL CONTRACTORS & ENGINEERS

THIS SPACE RESERVED FOR BUILDING AND INDEX NUMBERS

BLDG. NO.

INDEX NO.

TERRANCE E. BERRY STATE OF WASHINGTON 19462 REGISTERED PROFESSIONAL ENGINEER
5/21/01
EXPIRES 12/19/01

DWG NO	TITLE
DRAWING TRACEABILITY LIST	

REF NUMBER	TITLE
NEXT USED ON	REFERENCES

REV NO	DESCRIPTION	REV BY DATE	ENGR COMPANY
1	FCN-W519-002 GENERAL REVISION, INCORPORATED ADDED SURVEY DATA AS-BUILT	BDK 4/01	FH 5/21/01

REVISIONS

NAME	DATE	COMPANY
DRAWN BY TT MARTIN	5/4/01	
CHECKED BY JV EGGER	5/22/00	
APPROVED T MEIER	5/24/01	
D DOLD	5/29/00	
MA PRZYBYLSKI	5/22/00	FFS
DESIGN AUTHORITY LILLY LYN W BROWN	5/22/00	FH

U.S. DEPARTMENT OF ENERGY
Richland Operations Office

W-519 SITE/UTILITY SYSTEMS PLAN & PROFILE LERF BASINS

SIZE	BLDG NO	INDEX NO	DWG NO	REV
F	200E 242AL	0304	H-2-830098	1

SCALE SHOWN EDT 612387 SHEET 1 OF 1

GTITLE3.DWG (03-99)

GENERAL NOTES: (UNLESS OTHERWISE SPECIFIED)

1. DIMENSIONS ARE IN INCHES, TOLERANCES SHALL BE AS FOLLOWS: FRACTIONS = ±1/8" ANGLES = ±0.5° DECIMAL = .XX ±0.03 .XXX ±.010
2. REMOVE ALL BURRS AND BREAK SHARP EDGES.
3. VALVE PN: 990-0100W0A10010-I0S00S0E000KB FIGURE 990 SERIES VALVE, WAFER, 4", CAST IRON BODY, 316SS DISC, 316SS STEM, EPDM SEAT, ASME 150, BARE STEM VALVE.

   GEAR OPERATOR + STEM ADAPTER KIT PN'S: ISV-1103485 + ISV-1103450
   GEAR 24:1 WITH 6" HANDWEEL, BAC 1500 IN LBS + MTG KIT BAC
4. FOR BURIED PIPING ANALYSIS SEE RPP-CALC-63780.
5. USE CLASS M-18 PIPING CODE SEE CONSTRUCTION SPECIFICATION RPP-SPEC-63632 SECTION 40 40 00.
6. FOR PIPING INSULATION SEE CONSTRUCTION SPECIFICATION RPP-SPEC-63632 SECTION 40 42 13.
7. INSTALL FRP PIPING AND FITTINGS IN ACCORDANCE WITH MANUFACTURER INSTRUCTIONS AND/OR RECOMMENDATIONS.
8. WELD AND INSPECT STRUCTURAL WELDS IN ACCORDANCE WITH AWS D1.1, 2015 STATICALLY LOADED CRITERIA. ALL WELDS SHALL BE VT ON FINAL PASS UNLESS OTHERWISE SPECIFIED. WELD PROCEDURES AND QUALIFICATIONS PER ASME B&PV CODE SECTION IX, 2017 ARE ACCEPTABLE.
9. USE #251 DOUBLE CONTAINMENT INTERLOCKING UNION ON BOTH NEW M-18 LINES CENTERED ±20 FT BETWEEN BASIN 41 AND BASIN 42.
10. JOINT ADHESIVES AND BONDING MATERIAL SHALL BE OF THE SAME MANUFACTURER AS THE PIPE AND FITTINGS AND SHALL BE OF THE SAME RESIN SYSTEM. ADHESIVES SHALL BE APPLIED IN ACCORDANCE WITH MANUFACTURER RECOMMENDATIONS.

(NOTES CONTINUED)

11. PREPARE AND PAINT ALL EXPOSED CARBON STEEL SURFACES WITH PPG PSX700 OR EQUIVALENT. FINISH COLOR SHALL BE GRAY. APPLY PER MANUFACTURER'S SPECIFICATIONS. POWDER COATING IS AN ACCEPTABLE COATING SYSTEM.

NORTH

JACOB D WILLIAMS
STATE OF WASHINGTON
51722
REGISTERED
PROFESSIONAL ENGINEER
5/27/2020

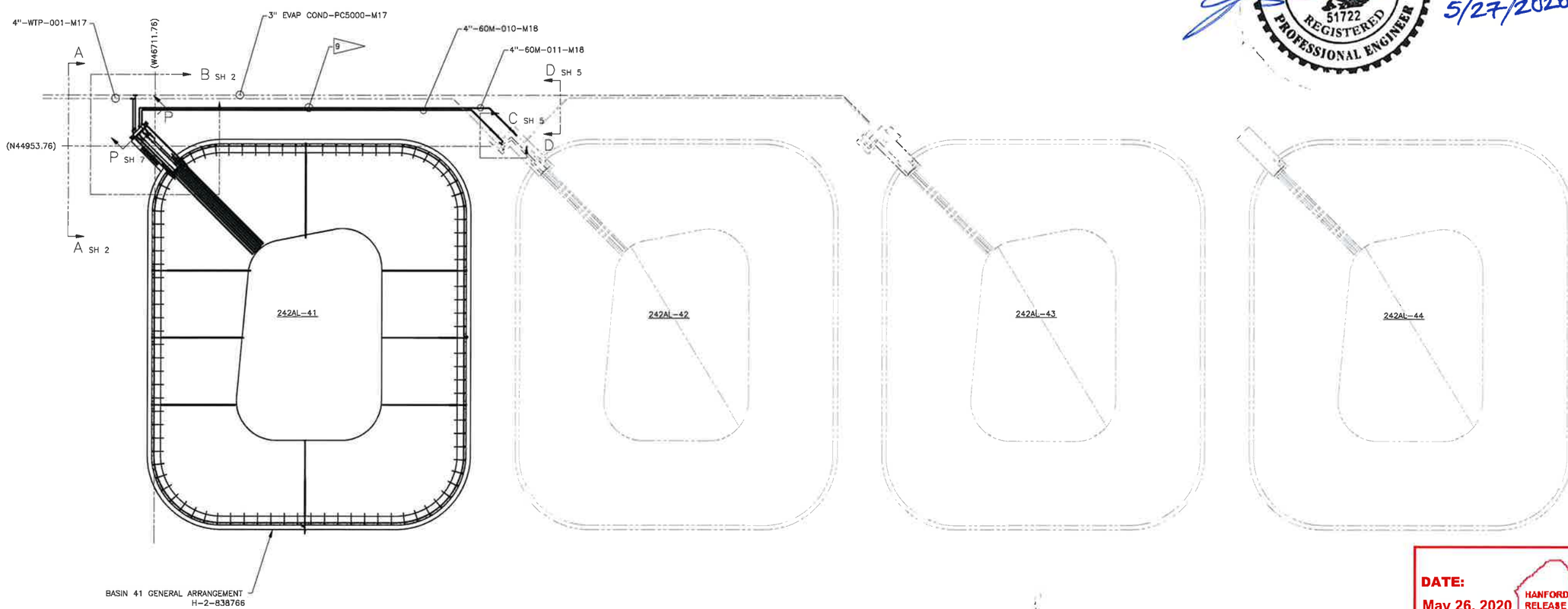

LERF BASIN 41 MECHANICAL GENERAL ARRANGEMENT

SCALE: NONE

DATE: May 26, 2020 HANFORD RELEASE

DWG NUMBER	TITLE
DRAWING TRACEABILITY LIST	

REF NUMBER	TITLE
H-15-38	LERF BASIN 41
H-2-838745	DRAWING LIST/TITLE SHEET
REFERENCES	
NEXT USED ON END ITEM	

REV NO	DESCRIPTION
0	RELEASED PER EDT-882463
REVISIONS	

INDEX NO 242-AL 242AL-41

INDEX NO 8407

CAUTION: NOT COMPLETE WITHOUT CURRENT CHANGE DOCUMENTS FROM DATABASE

	NAME	DATE
DRAFTER	W L ARNDT	05/19/2020
DRAFTING SUPERV	H A MENDEZ	05/19/2020
ENGINEERING TASK REVIEWER	G C JOSLYN	05/19/2020
DESIGN OWNER	J D WILLIAMS	05/19/2020
DESIGN AUTHORITY	N W WILSON	05/19/2020

U.S. DEPARTMENT OF ENERGY
Office of River Protection

LERF BASIN 41 MECHANICAL GENERAL ARRANGEMENT

SIZE F | DRAWING NUMBER H-2-838765 | SHEET 1 | REV 00

SCALE AS SHOWN

28472 DOC_TB_F.DWG (SEPTEMBER 2016)

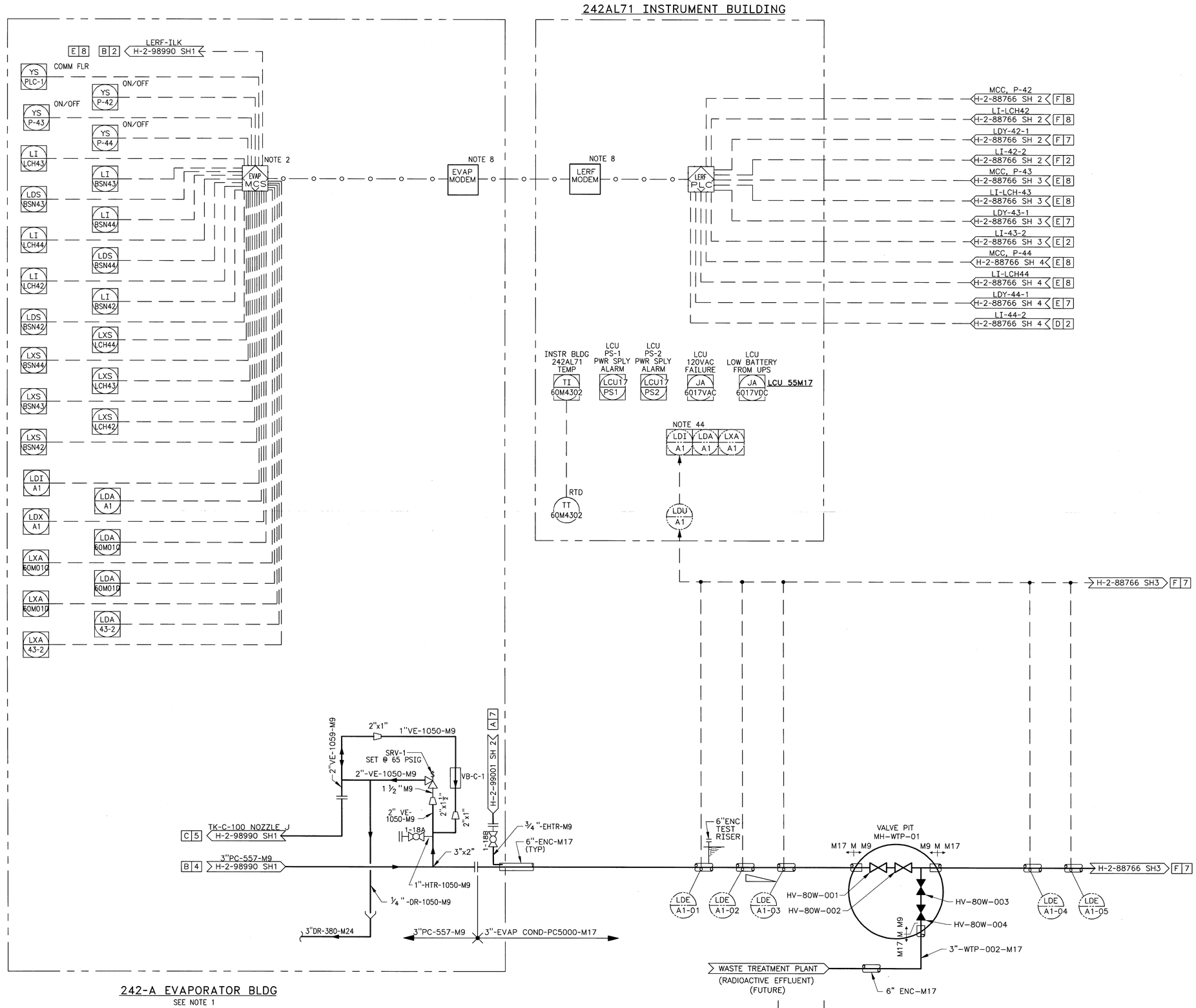

NOTES:

1. FOR ADDITIONAL NOTES AND SYMBOL LEGEND SEE DWG H-2-79601, SH 1.
2. OPERATING CONTRACTOR TO REPROGRAM EXISTING EVAP-MCS-10 AS REQUIRED. (EXISTING SIGNALS TO 242A MCS NOT SHOWN, SEE DWG H-2-79601, SH 2).
3. DELETED
4. AIR PRESSURE SHALL NOT EXCEED 15 PSIG PER M-17 PIPING MANUFACTURER RECOMMENDATION.
5. MODIFY ETF SURGE TANK 2925E-60A-TK-1 "HIGH" LEVEL FROM ETF MCS TO NEW MCS (REFERENCE DWG H-2-89337, SH 1).
6. MODIFY ETF SURGE TANK INLET VALVES AOV-60A055 AND AOV-60A056 POSITION FROM ETF MCS TO NEW MCS (REFERENCE DWG H-2-88974).
7. MODIFY EXISTING 242A MCS INTERLOCK PER DWG H-2-88816, SH 1.
8. RADIRECT ASMI-52 DSL MODEM.
9. RUPTURE DISKS TO BE OSECO 1.5" TYPE PLR NICKEL NONFRAGMENTING RUPTURE DISK IN 1.5" TYPE PRDI 316SS RUPTURE DISK HOLDER, 150 LB. ANSI OR ENGINEERING APPROVED EQUAL. RUPTURE DISK TO BE RATED FOR A BURST PRESSURE OF 7 PSIG @ 72 DEGREES F, 0% MANUFACTURING RANGE.
10. H-2-88815 CONTAINS SOFTWARE THAT PROVIDES SHUTDOWN TO LERF TRANSFER PUMPS IN THE EVENT OF LOW FLOW. THE FLOW SWITCH ON THE PUMP IS CAPABLE OF PROVIDING THE SAME PROTECTION TO THE PUMP. HOWEVER THE SWITCH IS NOT ADJUSTABLE AND MAY TRIP AT A FLOW HIGHER THAN NECESSARY. IN THE EVENT THAT A LOWER FLOW IS REQUIRED OR IF THE SWITCH BECOMES UNRELIABLE, THE SWITCH MAY BE JUMPERED OUT VIA THE CORRECTIVE MAINTENANCE PROGRAM.
11. DELETED
12. DELETED
13. MODIFY ETF SURGE TANK 2025E-60A-TK-1 CONTINUOUS LEVEL FROM ETF MCS TO NEW MCS (REFERENCE DWG H-2-89337, SH 1)
14. DELETED
15. DELETED
16. DELETED
17. DELETED
18. DELETED
19. DELETED
20. DELETED
21. PROVIDE ENCASEMENT TEST RISERS APPROXIMATELY EVERY 100 FEET.
22. INSTALL LDE 60M01D IN EXISTING RISER.
23. DELETED
24. DELETED
25. DELETED
26. DELETED
27. DELETED
28. DELETED
29. DELETED
30. PROVIDE LEAK DETECTION APPROXIMATELY EVERY 1000 FEET OF ENCASED PIPE.
31. DELETED
32. INSTALL LDE 60M01C IN EXISTING RISER.
33. DELETED
34. DELETED
35. MODIFY EXISTING BASIN AND LEACHATE LEVEL SIGNALS, SHARED WITH THE NEW MCS, FROM EXISTING LERF-PLC-20 TO EXISTING EVAP-PLC-10 TO EXISTING 242A MCS.
36. MODIFY EXISTING LEACHATE PUMP STATUS AND CATCH BASIN LEAK DETECTION SIGNALS, RETRANSMITTED FROM THE NEW MCS, FROM EXISTING LERF-PLC-20 TO EXISTING EVAP-PLC-10 TO EXISTING 242A MCS.
37. OPERATING CONTRACTOR TO REPROGRAM EXISTING 242A MCS AS REQUIRED.
38. OPERATING CONTRACTOR TO REPROGRAM ETF MCS AS REQUIRED.
39. FOR NEW MCS LOGIC SEE DRAWINGS H-2-88815, SH 1-6.
40. BLIND FLANGE CAN BE REMOVED AND LEFT OFF FOR INSPECTION OF CONTAINMENT PIPE.
41. REMOVEABLE SPOOL PIECE TO FACILITATE INSTALLATION OF PORTABLE PUMP AND PIPE MANIFOLD.
42. CONTINUOUS LEAK DETECTION CABLE.
43. SEND LERF PLC INPUTS LDA-60M01D, LXA-60M01D, LDA-60M01C, LXA-60M01C, LDA-43-2, & LXA-43-2 SIGNALS TO EVAPORATOR BLDG PLC VIA EXST MODEM.
44. SEND LERF PLC INPUT, LDU-A1, TO EVAPORATOR BLDG VIA EXST MODEM.
THE 4-20 ANALOG SIGNAL SHOULD BE INTERPRETED AS FOLLOWS:
0mA=Loss of Power;
2.0mA=Cable Break;
3.0mA=Cable Loop Impalance/Service Needed;
3.5mA=Service Required Alarm;
5.05mA=System Normal;
~6.45-8.75mA=LDE-A1-06 Leak;
~9.26-11.56mA=LDE-A1-05 Leak;
~11.85-14.15mA=LDE-A1-04 Leak;
~14.74-17.04mA=LDE-A1-03 Leak;
~17.45-19.75mA=LDE-A1-02 Leak;
~20.16-22.46mA=LDE-A1-01 Leak.

BLDG. NO.
2025E
242A
242AL71

INDEX NO.

THIS SPACE RESERVED FOR BUILDING AND INDEX NUMBERS

APR 20 2010
DATE: STA: 30
HANFORD RELEASE
ID: 25

H-2-79601,SH2	P & ID 242-A EVAP BLDG & XCY PIPING		
NUMBER	TITLE		
DRAWING TRACEABILITY LIST			
H-2-88737	SITE PLAN AND DRAWING LIST		
NUMBER	TITLE		
REFERENCES			
NEXT USED ON			

REV NO	DESCRIPTION	REV BY DATE	CHK BY DATE	DFTG APVD DATE	ENGR COMPANY
S RS 14	INCORPORATED ECN-726604-R2 AND ECN-726604-R3	KDJ 4/10			CHPRC

REVISIONS

		DATE
DESIGNED	CM NICKOLAUS	
DSGN ENGR	CM NICKOLAUS	10-1-1993
CHECKED	JA SHIPMAN	9-28-1993
SAFETY	J ARCHIBALD	10-14-1993
ENVIR	JD AXFORD	10-18-1993
QUAL ENGR	TD HAYS	10-14-1993
LEAD ENGR	RT HALLUM	10-12-1993

GR MEZGER 10-14-93
APPROVED FOR IMPLEMENTATION
BY JJ NOBLE
FOR WHC DATE 10-14-93

SAFETY CLASS 3 | EDT

U.S. DEPARTMENT OF ENERGY
RICHLAND FIELD OFFICE
KAISER ENGINEERS HANFORD COMPANY

P & ID
LERF BASIN & ETF INFLUENT EVAPORATOR

PROJECT C-018H 242-A EVAP PUREX PLANT CNDS TRTMT FACIL

SIZE	BLDG NO.	INDEX NO.	DWG NO.	REV NO.
F	SEE ABOVE	7004	H-2-88766	14

SCALE NONE | JOB NO. CR9583 | SHEET 1 OF 5

PLOT SCALE: 1=1 | 18466

KEH 0350.00 (04/92)

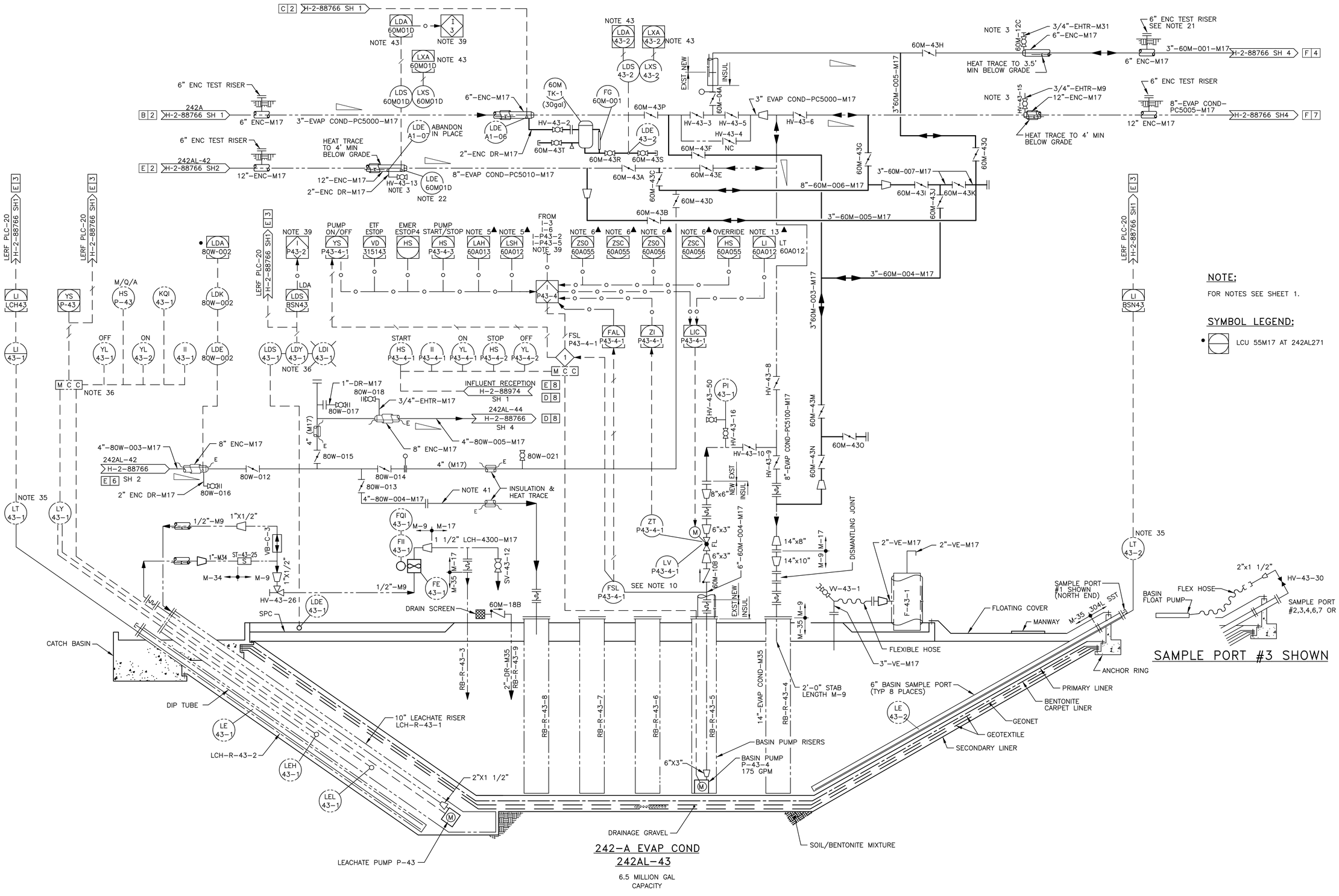

DWG NUMBER	TITLE	REF NUMBER	TITLE
DRAWING TRACEABILITY LIST		NEXT USED ON	REFERENCES

REV NO	DESCRIPTION
21	INC DCN-715849

REVISIONS

BLDG NO 242AL-43

INDEX NO 7004

CAUTION: NOT COMPLETE WITHOUT CURRENT CHANGE DOCUMENTS FROM DATABASE

NAME	DATE	COMPANY
DRAFTER		WRPS
DRAFTING CHECKER		WRPS
DESIGN AUTHORITY		WRPS

U.S. DEPARTMENT OF ENERGY
Office of River Protection

P&ID
LERF BASIN & ETF INFLUENT EVAPORATOR

SIZE F | DRAWING NUMBER H-2-88766 | SHEET 3 | REV 21

SCALE NONE

28722 DOE_TB_F.DWG (SEPTEMBER 2019)

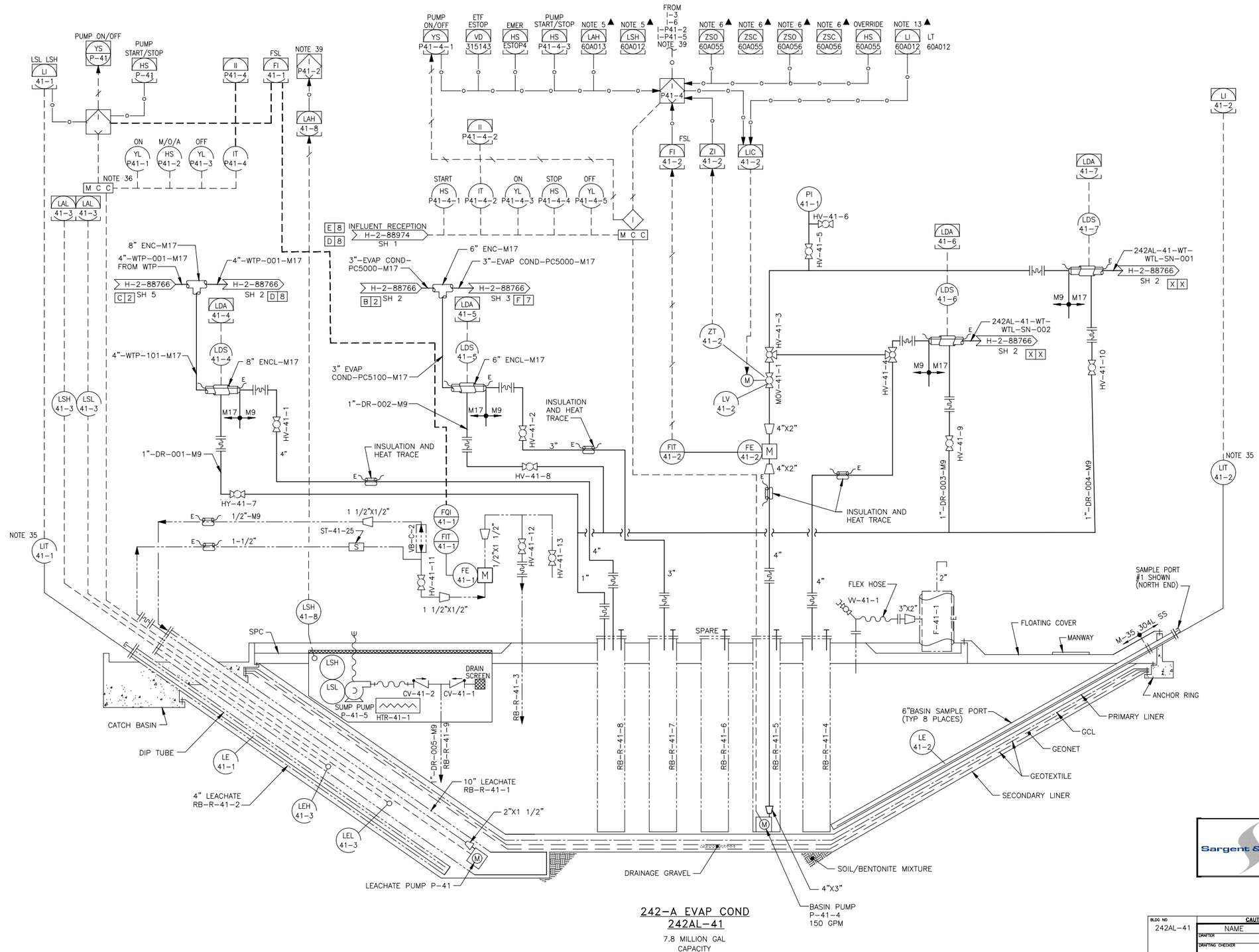

242-A EVAP COND
242AL-41
7.8 MILLION GAL CAPACITY

NOTES:

1. FOR DRAWINGS NOTES SEE SHEET 1.
2. REFERENCE TO BASIN COVER PUMP SYSTEM SEE H-2-88766 SHT XX.

Sargent & Lundy

60% REVIEW
PRELIMINARY
NOT FOR CONSTRUCTION

DWG NUMBER	TITLE	REF NUMBER	TITLE
		H-2-838745	DRAWING LIST/TITLE SHEET

DRAWING TRACEABILITY LIST — REFERENCES — NEXT USED ON

REV NO	DESCRIPTION
B	RELEASED PER EDT-882459

REVISIONS

BLDG NO 242AL-41
INDEX NO 7004

CAUTION: NOT COMPLETE WITHOUT CURRENT CHANGE DOCUMENTS FROM DATABASE

	NAME	DATE	COMPANY
DRAFTER			SAL
DRAFTING CHECKER			SAL
DISCIPLINE ENGINEER			SAL
DESIGN AUTHORITY			

U.S. DEPARTMENT OF ENERGY
Office of River Protection

P&ID
LERF BASIN & ETF INFLUENT EVAPORATOR

SIZE F | DRAWING NUMBER H-2-88766 | SHEET 6 | REV B
SCALE NONE
WRPS

PLOTID
DOE_TB_F.DWG (SEPTEMBER 2019)

DOCUMENT RELEASE AND CHANGE FORM

Prepared For the U.S. Department of Energy, Assistant Secretary for Environmental Management
By Washington River Protection Solutions, LLC., PO Box 850, Richland, WA 99352
Contractor For U.S. Department of Energy, Office of River Protection, under Contract DE-AC27-08RV14800

TRADEMARK DISCLAIMER: Reference herein to any specific commercial product, process, or service by trade name, trademark, manufacturer, or otherwise, does not necessarily constitute or imply its endorsement, recommendation, or favoring by the United States government or any agency thereof or its contractors or subcontractors. Printed in the United States of America.

Release Stamp

DATE:
Nov 29, 2018
HANFORD RELEASE

1. **Doc No:** RPP-CALC-62638 **Rev.** 00

2. **Title:**
WTP/Evaporator Transfer System Hydraulic Analysis

3. **Project Number:** ☐ N/A
T1P191

4. **Design Verification Required:**
☐ Yes ☒ No

5. **USQ Number:** ☒ N/A
N/A-9

6. **PrHA Number** **Rev.** ☒ N/A

Clearance Review Restriction Type:
public

7. **Approvals**

Title	Name	Signature	Date
Clearance Review	Ayers, Lynn M	*Ayers, Lynn M*	11/29/2018
Design Verifier	Lovelady, James T	*Lovelady, James T*	11/08/2018
Checker	Lovelady, James T	*Lovelady, James T*	11/08/2018
Document Control Approval	Manville, Kira	*Manville, Kira*	11/29/2018
Originator	Irwin, John	*Irwin, John*	11/07/2018
Other Approver	Huntington, Matthew R	*Huntington, Matthew R*	11/09/2018
Other Approver	Sijgers, Frederik O	*Sijgers, Frederik O*	11/08/2018
Responsible Engineer	Joslyn, Cameron C	*Joslyn, Cameron C*	11/14/2018
Responsible Engineering Manager	Rutherford, Wally	*Rutherford, Wally*	11/15/2018
USQ Evaluator	Carlstrom, Richard	*Carlstrom, Richard*	11/15/2018

8. **Description of Change and Justification**

Calculations determined the minimum detectable leak within 24 hours for the WTP/Evaporator transfer systems to the LERF Basins. Design verification of the leak detector system will be per ECN-714451 and MT-50373.

9. **TBDs or Holds** ☒ N/A

10. **Related Structures, Systems, and Components**

a. **Related Building/Facilities** ☐ N/A	b. **Related Systems** ☐ N/A	c. **Related Equipment ID Nos. (EIN)** ☐ N/A
LERF FACILITIES	LERF-60M-L LERF-80W LERF-80W-L	MH-WTP-01

11. **Impacted Documents – Engineering** ☒ N/A

Document Number	Rev.	Title

12. **Impacted Documents (Outside SPF):**

N/A

13. **Related Documents** ☐ N/A

Document Number	Rev.	Title
MT-50373	00	310/311 Waste Transfer Lines Leak Detection

14. **Distribution**

Name	Organization
Hall, Mark A	
Huntington, Matthew R	TANK FARM PROJECTS ENGINEERING
Irwin, John	DESIGN SERVICES
Joslyn, Cameron C	ETF ENGINEERING
Khabir, Sharok	ENGINEERING PROGRAMS
Lovelady, James T	DESIGN SERVICES
Rutherford, Wally	ETF ENGINEERING
Shreeve, Bryce	DESIGN SERVICES
Sijgers, Frederik O	DESIGN SERVICES

RPP-CALC-62638
Revision 00

WTP/Evaporator Transfer System Hydraulic Analysis

Prepared by

John J Irwin
Washington River Protection Solutions, LLC

Date Published
November 2018

Prepared for the U.S. Department of Energy
Office of River Protection

Contract No. DE-AC27-08RV14800

Approved for Public Release;
Further Dissemination Unlimited

Calculation Checklist

Calculation Number/Revision/Title:	RPP-CALC-62638, 00 WTP/Evaporator Transfer System Hydraulic Analysis
Scope of Review[1]:	Entire Document
Engineer/Analyst:	JJ Irwin (See DRCF OR SmartPlant for approvals)
Organization Manager:	FO Sijgers (See DRCF OR SmartPlant for approvals)

Yes	No[2]	NA		
☒	☐	☐	a.	The calculation was formatted in accordance with Attachment A of TFC-ENG-DESIGN-C-10.
☒	☐	☐	b.	The objective/purpose of the calculation is clearly stated and the problem is completely defined by the purpose statement.
☒	☐	☐	c.	Analytical and technical approaches and results are reasonable and appropriate.
☒	☐	☐	d.	Input data are adequately described, referenced to their source, and checked for consistency with original source information.
☒	☐	☐	e.	Necessary assumptions are reasonable, explicitly stated, and technically justifiable. Assumptions requiring verification prior to use are clearly stated and identified/tracked using TBD/HOLD numbers.
☒	☐	☐	f.	For both qualitative and quantitative data, uncertainties are recognized and discussed and the data is presented in a manner to minimize design interpretations.
☒	☐	☐	g.	Mathematical derivations were checked, including dimensional consistency of results.
☒	☐	☐	h.	Calculations are sufficiently detailed such that a technically qualified person can understand the analysis without requiring recourse to the originator.
☒	☐	☐	i.	Calculations were verified, including review that correct input data are used, equations are correctly applied to the problem being analyzed, correct units are used, and results are reasonable and appropriate.
☒	☐	☐	j.	Results produced by Mathcad® were replicated/verified by hand or alternate methods. If results could not be replicated/verified by hand, the utilized Mathcad® feature (e.g. advanced math function, equation, macro, etc.) is verified and registered in HISI.
☒	☐	☐	k.	Software[3] used is identified by the software name, version, HISI ID#, and if applicable the Software Management Plan (SMP).
☒	☐	☐	l.	Software is used in accordance the requirements prescribed by the Software Owner.[4] This includes adherence to limits of use, training requirements, software settings, specific software checklists, usage logs, error report checks, etc.
☒	☐	☐	m.	Software input reports and input files are attached.
☒	☐	☐	n.	The input was correctly entered/modeled in the Software, and consistent with the calculation document.
☒	☐	☐	o.	Software output is consistent with the input and with the results reported in the calculation document.
☐	☐	☒	p.	Multiple-Use spreadsheets are used in accordance with TFC-ENG-DESIGN-C-32, and identified by file name, version, HISI ID#, and as applicable; the SMP or Spreadsheet Verification Form.
☒	☐	☐	q.	Single-Use spreadsheets used in the calculation have adequate explanation of their method, are identified by file name, and checked/verified as part of the calculation.
☒	☐	☐	r.	Data or results presented in tables and graphs have been checked against original source.
☒	☐	☐	s.	The number of significant digits is appropriate and consistent.
☒	☐	☐	t.	Limits/criteria/guidelines applied to the analysis results are appropriate and referenced. Limits/criteria/guidelines were checked against references.
☒	☐	☐	u.	Conclusions are consistent with analytical results and applicable limits.
☒	☐	☐	v.	Results and conclusions address all points in the purpose.
☒	☐	☐	w.	Referenced documents are retrievable or otherwise available and the version or revision of each reference is cited.
☒	☐	☒	x.	Impacts on requirements have been assessed and change documentation initiated to incorporate revisions to affected documents, as appropriate.
☒	☐	☐	y.	The design media matches the calculations.

Checker: JT Lovelady (See DRCF OR SmartPlant for approvals)

Checkbox Justifications:

[1] If less than the entire calculation was checked, the scope of the check should be discussed.
[2] If any blocks are checked "No", a justification must be provided here or attached.
[3] Does not apply to non-computational software (e.g. Word®, Visio®).
[4] The Software Owner is responsible for managing software, including requirements, in accordance with TFC-BSM-IRM_HS-C-01.

Title:	WTP/Evaporator Transfer System Hydraulic Analysis
Engineer/Analyst:	JJ Irwin (Electronic Signature on File in SPF)
Checker:	JT Lovelady (Electronic Signature on File in SPF)

TABLE OF CONTENTS

1.0 OBJECTIVE/PURPOSE 8
2.0 INTRODUCTION 10
3.0 INPUT DATA 11
4.0 ASSUMPTIONS 17
5.0 METHOD OF ANALYSIS 20
6.0 USE OF COMPUTER SOFTWARE 31
7.0 RESULTS 32
8.0 CONCLUSIONS 35
9.0 REFERENCES 35
Attachment A - Supplemental Information 39
Attachment B – Excel and MathCAD Files 41

TABLE OF TABLES

Table 3-1. Piping Segment Definition 12
Table 7-1. Transfer Pipe Hydraulic Characteristics 32
Table 7-2. Calculated Volumes 33
Table 7-3. Calculated Minimum Leak Rate - “Falling Film” Method 33
Table 7-4. Calculated Minimum Leak Rate - “Open Channel” Method 34

TABLE OF FIGURES

Figure 1-1. 242-A Evaporator and WTP W310/311 Transfer Lines to the LERF Basins 9
Figure 3-1. Cross-Sectional View of the Double Encased Transfer Piping 13
Figure 4-1. 4-in to 8-in Piping Spacer, 3-in to 6-in Piping Spacer similar. 18
Figure 4-2. Piping Spacer Attached to Carrier Pipe, Opening at Top and Bottom 19

Title:	WTP/Evaporator Transfer System Hydraulic Analysis
Engineer/Analyst:	JJ Irwin (Electronic Signature on File in SPF)
Checker:	JT Lovelady (Electronic Signature on File in SPF)

LIST OF SYMBOLS AND ACRONYMS

Frequently used symbols and acronyms are defined below. Less frequently used symbols are defined where they are introduced.

Symbols

a,b,c	Ellipsoid radii, in or ft
A	Surface area, in^2
d	Diameter, in or ft
Fr	Froude number, dimensionless
g	gravitational acceleration, 32.17 ft/s^2
h	Height, in or ft
ID	Inside diameter, in or ft
ISD	Inside depth of dish, in or ft
K_m	Akgiray constant, dimensionless
L	Length, ft
MW	Molecular weight, gm/mol
n	Friction factor, dimensionless
N	Number
OAL	Overall length, in or ft
OD	Outside diameter, in or ft
P	Perimeter, in or ft
p	Pressure, atm
Q	Volumetric rate, gal/hr
R	Radius, in or ft
R_a	Gas constant for air, J/kg-K or ft-lbf/lbm-R
Re	Reynolds number, dimensionless
R_h	Hydraulic radius, in or ft
RH	Relative humidity
Ru	Universal gas constant, 1545.3457 lbf-ft/ lbmol-R
R_w	Gas constant for water vapor,
S	Slope, ft per ft of pipe
T	Temperature, °F or °C
t	thickness, in or ft
t	Time, se or hr
v	Liquid Velocity, ft per sec
v	Specific volume, m^3/kg
V	Volume, ft^3
W	Humidity ratio, dimensionless
w	Mass flowrate, lbm/sec
β	Angle, degree (°)
δ	Film Thickness, in
Δz	Elevation change, ft
θ	Angle, degree (°)
ρ	Density, kg/m^3 or lbm/ft^3
μ	Dynamic viscosity, kg/m-sec or lbm/ft-sec

μ	Degree of saturation (humidity), dimensionless
υ	Kinematic viscosity, ft^2/sec
γ	Specific humidity ratio, dimensionless

Subscripts

a	air
AB	Pipe Segment A-B
AC	Pipe Segment A-C
AE	Pipe Segment A-E
avg	average
b	bead (epoxy resin)
c	Caisson
CE	Pipe Segment C-E
cl	cylinder length
DC	Pipe Segment D-C
DE	Pipe Segment D-E
f	film or flow
h	head
ldf	leak detector fitting
p	pipe
sh	shell
t	total
w	wall (pipe or shell)
w	water
wet	film wetting
ws	saturated water
wv	water vapor

Units

°	degree (angular)
°C	degree Celsius
°F	degree Fahrenheit
atm	Atmosphere
cP	centi Poise
deg	degree (angular)
ft	foot
ft^2	square foot
ft^3	cubic feet
gal	gallon
gm	gram
gph	gallons per hour
gpm	gallons per minute
hr	hour
in	inch
in^2	square inches
J	Joule

kPa	kilo Pascals
K	degree Kelvin
kg	kilogram
lb_f	pound force
lb_m	pound mass
lbmol	pound mole
m	meter
m^3	cubic meter
mol	mole
oz	ounces
psia	pounds per square inch, absolute
R	Degree Rankine
s	seconds
sec	seconds

Acronyms

ASME®[1]	American Society of Mechanical Engineers
ASTM®[2]	American Society for Testing Materials
LERF	Liquid Effluent Retention Facility
WTP	Waste Treatment Plant
RTRP	Reinforced Thermosetting Resin Pipe
OAL	overall length

1 ASME is a registered trademark of the American Society of Mechanical Engineers.
2 ASTM is a registered trademark of the American Society for Testing and Materials.

Title:	WTP/Evaporator Transfer System Hydraulic Analysis
Engineer/Analyst:	JJ Irwin (Electronic Signature on File in SPF)
Checker:	JT Lovelady (Electronic Signature on File in SPF)

1.0 OBJECTIVE/PURPOSE

The purpose of this calculation is to determine containment piping flow rates for the 242-A Evaporator and Waste Treatment Facility (WTP) Condensate Transfer to the Liquid Effluent Retention Facility (LERF) Basin Transfer System for a 24-hour time limit. The drain lines are specified are listed as;

1. Segment A-B, W310 (4"-WTP-001-Ml7), from WTP Node 8A to LERF Basin 42.
2. Segment A-C, W311 (3"-WTP-002-Ml7), from WTP Node 8B to PC-5000 Caisson (MH-WTP-01).
3. Segment D-C, 3”-PC-5000-M17, from 242-A Evaporator to PC-5000 Caisson (MH-WTP-01).
4. Segment C-E, 3”-PC-5000-M17, from Caisson (MH-WTP-01) to LERF Basin 43.
5. Segment A-E, W311/PC-5000, from Node 8B through Caisson (MH-WTP-01) to LERF Basin 43.
6. Segment D-E, 3”-PC-5000-M17, from 242-A Evaporator through Caisson (MH-WTP-01) to LERF Basin 43.

A depiction of these lines are shown in Figure 1-1.

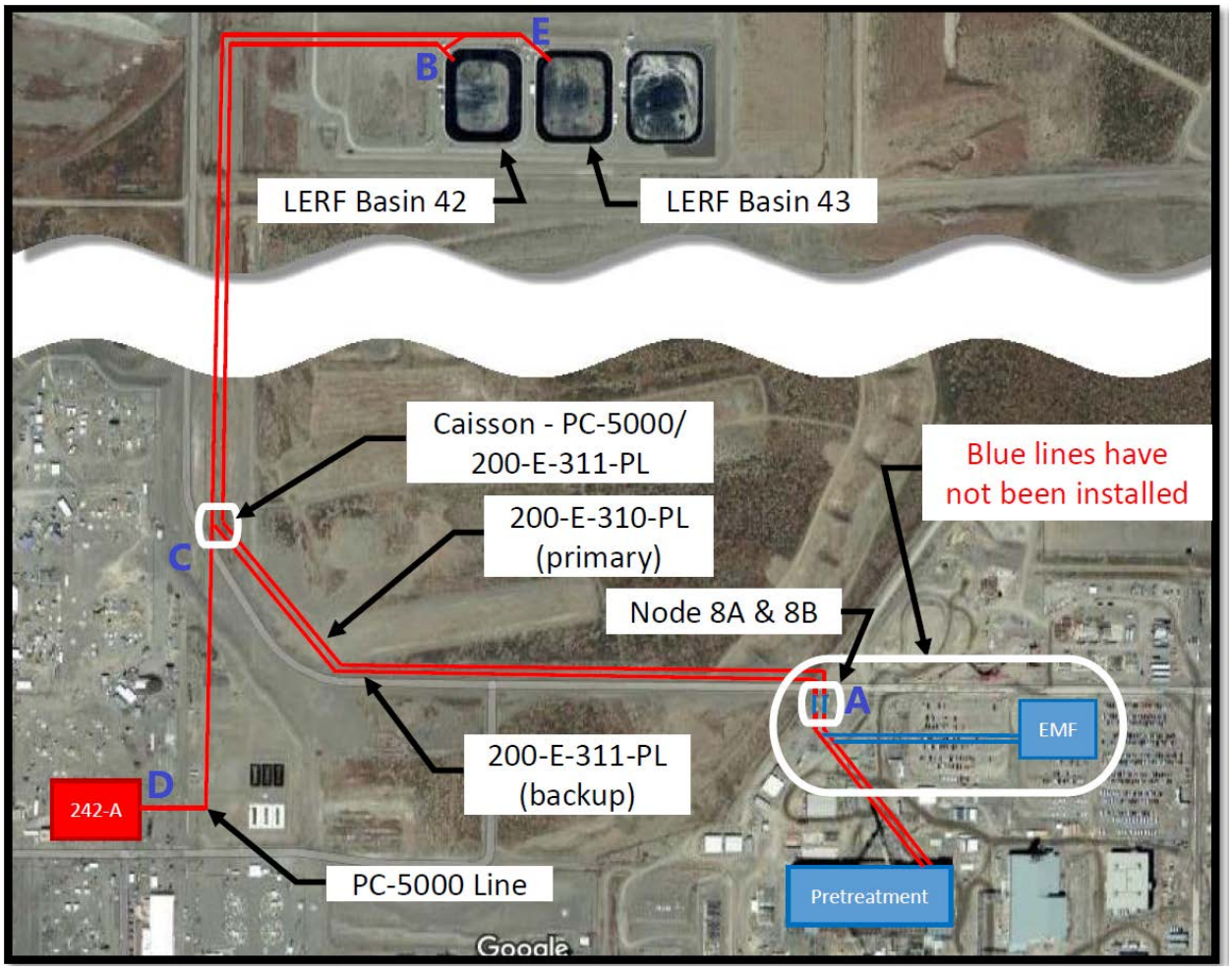

Figure 1-1. 242-A Evaporator and WTP W310/311 Transfer Lines to the LERF Basins

The PC-5000 transfer line receives process condensate (condensed water vapors) from the **242-A** Evaporator Facilities' condensate collection tank (TK-C-100). Process condensate is transferred to the LERF via the PC-5000 transfer line. **T**he PC-5000 transfer line system includes a primary three-inch carrier pipe (primary containment), a six-inch secondary containment pipe, a Caisson containing isolation valves a series of test and swab risers and leak detection system.

The W310/311 Transfer Pipeline System transfers process condensate (dangerous waste) from the WTP Facility to the LERF. The W310 Transfer Pipeline system includes a primary four-inch carrier pipe (primary containment), an eight-inch secondary containment pipe and leak detection system. The W311 Transfer Pipeline (Backup) system includes a primary three-inch carrier pipe (primary containment), a six-inch secondary containment pipe and leak detection system.

Minimum calculated leak rates based upon a 24-hour period are to be calculated based upon leakage from the carrier (primary) pipe into the containment (secondary) piping. Any leakage into the PC-5000 and W310/311 containment piping will drain by gravity from the leakage source to the LERF basin.

2.0 INTRODUCTION

The PC-5000 Transfer Pipeline and W310/311 Transfer Pipelines are ancillary equipment in accordance with the requirements of the Washington Administrative Code (WAC) 173-303-640(2)(c), Publication 94-114 (Ecology 1994) for existing tank systems, and Publication 95-420 (Ecology 1995) for dangerous waste secondary containment systems.

The Resource Conservation and Recovery Act (RCRA) Permit, Dangerous Waste Portion (Permit Number WA7890008967), Department of Ecology Rev 8C, Operating Unit 4, 242-A Evaporator, Chapter 4, Section 4.1.7.3.3, identifies approved leak detection methods as being electronic continuous monitoring or daily visual inspection at LERF catch basin (242AL-43) for the PC-5000 transfer line. The 200-E-311-PL WTP backup transfer line will be included in the 242-A Evaporator Permit. The 200-E-310-PL WTP primary transfer line will be included in the RCRA Permit, for Operating Unit 3, Liquid Effluent Retention Facility (LERF) and 200 Area Effluent Treatment Facility (ETF). Addendum C, Section C.4.3.2.2, Ancillary Equipment Secondary Containment) identifies approved leak detection methods as being electronic continuous monitoring or daily visual inspection during waste transfers

Construction on the PC-5000 transfer pipeline began in September 1990, and was essentially completed in January 1992. The 242-A Evaporator historical campaign data indicates that the 242-A Evaporator restart in 1994 used the newly constructed PC-5000 transfer pipeline for transferring the process condensate to the LERF. The LERF began operation in April 1994.

The first leak detection system in the PC-5000 transfer line consisted of a Tracetek continuous leak detection cable. However, the leak detectors associated with this condensate drain line have a history of false alarms. Evidence of this is documented by ECN-621736, Evap/LERF Cross-country Lines Leak Detectors/A2045 (released in 1997) which jumpered out the continuous leak detector element due to nuisance trips. Single-point electronic leak detection elements were installed along the transfer line at periodic intervals by project E-258. In addition, an integral catch tank, 60M-TK-1, to collect any leakage from the primary containment piping was installed at the end of the secondary containment casing at the LERF. A sixth leak detector system was installed in the catch tank system. This new leak detection system was turned over to operations in 2010 as documented in PC5000-PTD-001, Rev. 0, 2010, *PC-5000 Leak Detection Upgrades Project Turnover Document*.

The RCRA Permit allows for an alternate means of leak detection using visual observation of the encasement termination at the LERF end of the line for evidence of leakage. “Visual inspections of the PC-5000 transfer line are administratively controlled by the Shift Manager and occur a minimum of once every 24 hours during waste water transfers through PC-5000 transfer line to ensure compliance with WAC 173-303-604(4)(c)(iii).

3.0 INPUT DATA

3.1 242-A Evaporator Process Condensate Transfer Line

The 242-A Evaporator Process Condensate Transfer line (PC-5000) to LERF Basin Transfer System configurations and locations are shown on the following drawings;

Drawing No.	Sheet	Rev.	Drawing Title
H-2-79604	1	3	Piping Plot & Key Plans 242-A Evap Cond Stream
H-2-79605	1	3	Piping Plan Sect & Det 242-A Evap Cond Stream
H-2-79608	1	3	Piping Plan Sect & Det 242-A Evap Cond Stream
H-2-79609	1	3	Piping Plans 242-A Evap Cond Stream
H-2-79610	1	3	Piping Plan Retention Basins
H-2-79611	1	2	Piping Plan Sections and Isometric 242-A Evap Stream

3.2 WTP W310/311 Process Condensate Transfer Lines

The WTP W310/311 Process Condensate Transfer to LERF Basin Transfer System configurations and locations are shown on the following drawings;

Drawing No.	Sheet	Rev.	Drawing Title
H-2-830093	1	1	W-519 Site/Utility Systems Title Sheet, Dwg List, and General Notes
H-2-830094	1	1	W-519 Site/Utility Systems Plan and Profile Sta 0+400 To Sta 0+800
H-2-830095	1	2	W-519 Site/Utility Systems Plan and Profile Sta 0+800 To Sta 1+200
H-2-830096	1	1	W-519 Site/Utility Systems Plan and Profile Sta 1+200 To Sta 2+000
H-2-830096	2	0	W-519 Site/Utility Systems Plan and Profile Sta 1+200 To Sta 2+000
H-2-830097	1	1	W-519 Site/Utility Systems Plan and Profile Sta 2+000 To Sta 2+333.0
H-2-830098	1	1	W-519 Site/Utility Systems Plan and Profile LERF Basins

3.3 LERF Basin Transfer System

The LERF Basin Transfer System configurations and locations are shown on the following drawings;

Drawing No.	Sheet	Rev.	Drawing Title
H-2-79593	1	5	Civil Plan, Sections & Det Catch Basin
H-2-79593	3	0	Civil Plan, Sections & Det Catch Basin
H-2-79593	5	0	Civil Plan, Sections & Det Catch Basin
H-2-79613	1	5	Piping Plan Catch Basin 242AL-42
H-2-79614	1	6	Piping Plan Catch Basin 242AL-43
H-2-79614	2	1	Piping Plan Catch Basin 242AL-43
H-2-79615	1	5	Piping Plan Catch Basin 242AL-44

3.4 Pipe Segment Definitions

The pipe segment definitions for the pipe lines of interest for this report are defined below.

Table 3-1. Piping Segment Definition

Segment ID	Pipe Description	Carrier Pipe Size, in.	Containment Pipe Size, in.	Piping Material
A-B	W310 (4"-WTP-001-Ml7) from WTP Node 8A to LERF Basin 42	4	8	ASTM D-2996, RTRP[1,2]
A-C	W311 (3"-WTP-002-Ml7) from WTP Node 8B to PC-5000 Caisson (MH-WTP-01)	3	6	ASTM D-2996, RTRP[1,2]
D-C	PC-5000 from 242-A Evaporator to PC-5000 Caisson (MH-WTP-01)	3	6	ASTM D-2997, RTRP[1,3]
C-E	PC-5000 from PC-5000 (MH-WTP-01) to LERF Basin 43	3	6	ASTM D-2997, RTRP[1,3]
A-E	W311/PC-5000 from Node 8B through PC-5000 Caisson to LERF Basin 43	3	6	ASTM D-2996, ASTM D-2997, RTRP[1,2,3]
D-E	PC-5000 from 242-A Evaporator through PC-5000 Caisson to LERF Basin 43	3	6	ASTM D-2997, RTRP[1,3]

1) RTRP = Reinforced Thermosetting Resin Pipe
2) Ameron Bondstrand 4000
3) Fibercast Centricast III EP

3.5 Materials of Construction for the PC-5000 Piping Systems

The materials of construction for the PC-5000 piping systems are 3” fiberglass carrier piping within a containment piping made from 6” fiberglass piping. The piping code is M17 pipe material specification. The piping material is ASTM D-2997-90 “Centrifugally Cast "Fiberglass" Resin Pipe.” The transfer pipe definition is per C-018H-P2, 1993, “Procurement Specification for Fiberglass Double-Containment Piping system and Associated Engineering Services 242-A Evaporator and PUREX Condensate Effluent Treatment Facility.” The piping is a Fibercast Company dualcast double containment piping system using Centricast III EP carrier and containment pipe, centrifugally cast fiberglass-reinforced epoxy thermoset resin pipe (RTRP) as designated in ASTM D 2997. Per C-018H-P2, the classification of RTRP is Type II, Grade 1, Class C, and has a minimum 50 mil pure resin corrosion barrier on the pipe internal surface and a constant smooth Iron Pipe Size (IPS) outside diameter per ASME B36.10. The wall thickness of the 6-in. containment piping is 0.140-in. The outside diameter of the fiberglass piping is the same as for standard steel piping.

3.6 Materials of Construction for W310/311 Piping Systems

The materials of construction for the W310/311 piping systems are 3” and 4” fiberglass carrier piping within a containment piping made from 6” and 8” fiberglass piping. The piping code is M17 pipe material specification (W-519-P1, Appendix A). The piping material is ASTM D-2296, Type 1 Grade 1, Class F, “Filament Wound "Fiberglass" Resin Pipe” which is a fiberglass piping product. The piping product is Bondstrand 4000 series. The wall thickness of the 6-in. containment piping is 0.206-in and the 8-in piping is 0.229-in thick. The outside diameter of the fiberglass piping is the same as for standard steel piping (ASME B36.10). The adhesive used was Bondstrand type PSX34 two-part epoxy resin adhesive for field fabrication. The 3-in and 4-in double contained piping is depicted in Figure 3-1.

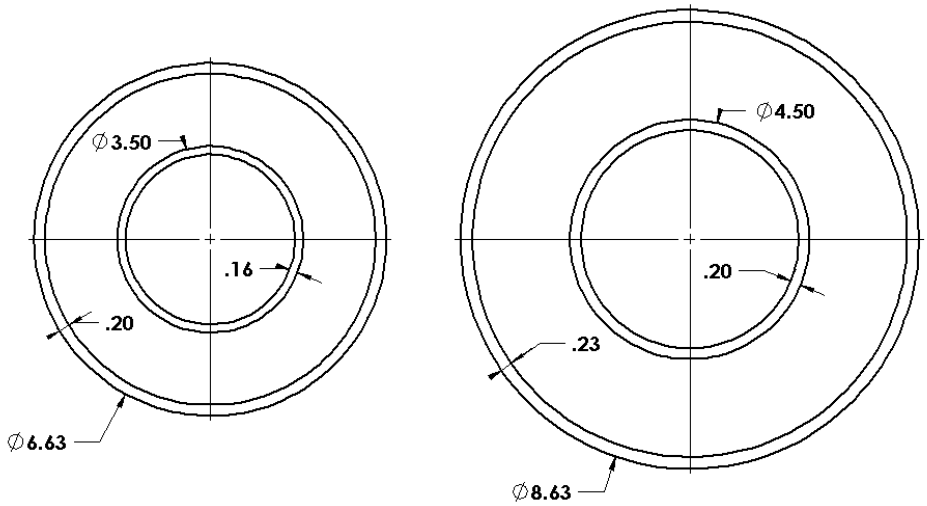

Figure 3-1. Cross-Sectional View of the Double Encased Transfer Piping
(all dimensions are in inches)

3.7 PC-5000 Test and Swab Riser Description

Test and Swab Risers are defined on H-2-88766, sht. 1, Test Riser are typically spaced every 100 ft along the length of PC-5000. The new single point leak detector elements (six each) are placed in selected Test Risers.

3.8 Evaporator/WTP Caisson Description

The Evaporator/WTP Caisson, MH-WTP-01, is depicted on drawing H-2-830102, Sht. 2. The Caisson is a flat bottomed fiberglass tank that contains valves for the isolation of either 3”-PC-5000-M17 or 3"-WTP-002-Ml7 carrier pipes. All containment pipes open into the Caisson allowing any water leaks to transfer through the Caisson to the LERF basin. The containment pipe lower internal surfaces are flush with the inside bottom surface of the Caisson. The Caisson has a 48-in. inside diameter, an overall length (OAL) of 98-in. and a nominal wall thickness of ½-in. There are 4 isolation valves inside the Caisson, the valves are 3-in. gate valves fabricated with stainless steel bodies and pipe extensions,

3.9 LERF Basin PC-5000 Leak Catch Tank Description

The LERF Basin PC-5000 leak catch tank, 60M-TK-1, is depicted on H-2-79614, sht. 2. This tank collects any water due to leaks from either 3”-PC-5000-M17 or 3"-WTP-002-Ml7 carrier pipes into their respective containment piping. The catch tank is a 30-gallon stainless steel air receiver type tank with 2:1 elliptic heads. Dimensions of the tank are depicted on a Roy Hanson tank vendor drawing (16VC30L-304SS). A low point leak detector is installed in piping connecting to the bottom of the tank as depicted on H-2-79614, sht. 2. Project E-528, “Trace-Tek Leak Detection System Upgrade Project” installed the revised leak detection system catch tank.

3.10 PC-5000 Transfer Line Leak Detection System Description

Six single-point electronic leak detection elements were installed along the PC-5000 transfer line. The leak detection elements are located in the bottom of specially designed test risers. Each sensor element employs a conductivity sensor, which is connected to a cable leading back to the 242-A Evaporator control room. A Depiction of the current leak detectors are shown on ECN-726604-R2. Project E-528, “Trace-Tek Leak Detection System Upgrade Project” installed the revised leak detection system. The PC-5000 Leak Detection System is depicted on the following drawings;

Drawing No.	Sheet	Rev.	Drawing Title
H-2-88766	01	14	P&ID LERF Basin & ETF Influent Evaporator
H-2-88766	02	14	P&ID LERF Basin & ETF Influent Evaporator
H-2-88766	03	19	P&ID LERF Basin & ETF Influent Evaporator
H-2-88766	04	20	P&ID LERF Basin & ETF Influent Evaporator
H-2-88766	05	02	P&ID LERF-WTP Interface
H-2-830108	01	01	W-519 Site Utility Systems Leak detection Details

The original PC-5000 leak detection system, Trace Tek Continuous Leak Detector System, was not used during evaporator campaigns after 2003 because of numerous false alarms (refer to ECN-721677, R0, "Disable 242-A Evaporator Trace Tek Leak Detectors to LERF and Associated Interlocs"). The Trace Tek system was disabled per TFC-WO-10-0283. Following the 2007 PC-5000 Integrity Assessment, Project E-528, 242-A Life Extension Upgrades, added the continuous leak detection cable with five single-point leak detectors and a 30 gal stainless steel catch tank equipped with a sixth leak detector to collect any encasement drainage at the LERF termination of the line. Construction was completed in March, 2010 (refer to RPP-RPT-40663, Rev. 0, Functions and Requirements for 242-A PC-5000 Condensate Drain Line Leak Detection System; PC5000-PTD-001, Rev. 0, ECN-726604, Rev. 3, "PC-5000 Leak Detection Upgrades;" ECN-726659, Rev. 4, "PC-5000 Leak Detection Upgrades;" and ECN-727154, Rev. 1, "242-A Software Modifications for PC5000 Upgrade Revision." The current single point leak detectors in the PC-5000 line are listed as follows (from ARP-T-601-064).

LDE Number, LDE-A1	Swab Riser Location
-01	4th riser from 242-A, 30 feet east of Canton Ave.
-02	14th riser from 242-A, 700 feet north of SC Basins
-03	24th riser from 242-A, 410 feet north of 7th street
-04	34th riser from 242-A, 370 feet north of 8th street
-05	44th riser from 242-A, 360 feet north of LERF south entry road
-06	Catch Basin 43, pipeline from 242-A

The modified leak detection system has continued to fault. For the near future, the alternate method of leak detection mentioned in RPP-RPT-60350, (Table 2, Item 33307-1), has been adopted:

"The PC-5000 transfer line may be continuously monitored during transfers by an automated leak detection system (Addendum C) or visually inspected at the LERF Valve HV-43-2. The automated leak detection system alarms are monitored in the 242-A Evaporator Control Room on the Monitoring and Control System (Addendum C, §C.1.6.3.3). Visual inspections of the PC-5000 transfer line are administratively controlled by the Shift Manager and occur at a minimum once every 24 hours during waste water transfers through the PC-5000 transfer line to ensure compliance with WAC 173-303-640(4)(c)(iii). Visual inspection for leaks from the PC-

5000 transfer line are performed by 242-A Evaporator Operations, by looking for signs of any liquid not contributed [sic] to rain/precipitation at the open LERF HV-43-2 valve. If any liquid is observed the Shift Manager is notified to take corrective actions."

The RCRA Permit, (WA7890008967), for the 242-A Evaporator, Chapter 4, Section 4.1.7.3.3, states "If the leak detection system is not available, visual inspection is employed at the encasement catch tank 60M-TK-1, at the LERF catch basin (242AL-43). If a leak is detected using visual inspection of the PC-5000 transfer line encasement, the shift manager is notified. The shift manager will direct shutdown of the aqueous waste through the PC-5000 transfer line."

3.11 PC-5000 Encasement Pipe Air Purge Description

A low-volume air purge of the annulus between the carrier pipe and the containment pipe is provided to prevent condensation buildup and minimize false alarms by the leak detection elements. Process air was connected from the 242-A air compressors to the PC-5000 encasement pipe. The Purge air is turned off during transfers and turned on during down periods. See procedure TO-600-010 Page 16 of 69, valve 1-18B (this is the valve line-up procedure that is used prior to running the evaporator).

3.12 Transfer Line Operating Temperatures

The minimum 242-A Evaporator and WTP Process Condensate Transfer to LERF Basin water operating temperature is 40°F (4°C) according to C-018H-P2, 1993. There is an insulated trace heat system on all exposed piping and the catch tank at the LERF Basin. Piping below ground has a minimum depth of 4 ft.

3.13 Thermo-physical Properties of the Waste Transfer Fluid

From Table A-3E, Çengel and Cimbala, 2010, Fluid Mechanics Fundamentals and Applications, at the minimum operating temperature of the condensate of 40°F (4.45°C), the mass density of water is 62.42 lbm/cu ft (999.8724 kg./cu m), the weight density of water is 62.42 lbf/cu ft (999.8724 gm./cu m), the dynamic viscosity is 1.038×10^{-3} lbm/ft-sec (1.545 cP) and the vapor pressure of water is 0.1217 psia (0.8391 kPa).

3.14 Maximum Allotted Time to Detect Leakage Flow

The maximum time to detect a leakage flow is 24 hours according to an agreement with the Washington State Department of Ecology as reference in RCRA Permit WA7890008967.

4.0 ASSUMPTIONS

4.1 TECHNICALLY JUSTIFIED ASSUMPTIONS

4.1.1 Liquid Temperature

The liquid leaking into the containment piping is assumed to have a nominal operating temperature of 40°F. This temperature is used to determine the fluid physical properties of the liquid which is assumed to be water. The fluid physical properties of water, weight density and viscosity, determine the basic flow parameters but they do not change significantly with temperature. There will be an estimated difference of 1 to 2% in the calculated flow capacity of the drain piping at a maximum operating fluid temperature of 100°F versus a 40°F fluid temperature. The lower fluid temperature will result in a lower flow capacity due to the increase in fluid viscosity at lower temperatures and is therefore conservative. No further verification of this assumption is required.

4.1.2 Constant Leak Rate

The leak is at a constant rate in a 24-hour period and the leak is assumed to occur at the farthest point from the leak detection equipment. The liquid is also assumed not to foam. No further verification of this assumption is required.

4.1.3 Surface Roughness of Pipe

The surface roughness coefficient of the pipe will be defined for the fiberglass pipe for conservatism. For the Open Channel flow method, a Manning coefficient is required. A Manning value of 0.013 is selected which is comparable to PVC piping. Typical flow coefficients values for RTRP are listed in Brater 1996 in the range of 0.009 to 0.013. The larger value is more conservative and is therefore selected to be used in the calculations. No further verification of this assumption is required.

4.1.4 Slope of Transfer Line Segments

The average slope of the transfer line segments will be used in the calculations. This method is used instead of the actual changing slopes from one station to the next. No further verification of this assumption is required.

4.1.5 Surface Wetting Volume

A volume of liquid is accumulated within the containment pipe before it reaches the end of a pipe segment. This is the hold-up volume and is the thin film of liquid that wets a small portion of the surface at the bottom of the pipe. This wetting occurs before any liquid is transported to the end of the pipe. A value for liquid holdup cannot be calculated analytically. It must be determined from empirical correlations and is a function of liquid properties, flow pattern, pipe diameter and pipe inclination (i.e., slope). A WTP calculation, 24590-PTF-PER-M-04-0006,

referenced an empirical test performed on a 25 ft long, 6-inch diameter carbon steel pipe encasement. The tested piping was inclined at a 1:400 slope (0.25%). That test showed a V_{wet} = 0.32 oz/ft. The subject piping slope is at least 1:345 (0.29%), which is approximately the same as steep as the test. Therefore, it is assumed that with all else being equal, the surface liquid volume of the containment piping would be less than that of WTP (meaning that due to the increased slope, less water would be held up due to surface adhesion between fluid and pipe wall for the transfer piping. However, the 0.32 oz/ft has been used for conservatism. No further verification of this assumption is required.

4.1.6 Primary Pipe Encasement Supports

The method of supporting the carrier pipe within the containment pipe is by the use of pipe spacers located periodically along the length of each pipe segment. The spacer utilized are shown in Figures 4-1 and 4-2. It is assumed that the spacers are installed as depicted and they allow the flow of liquid down the length of each pipe segment. No liquid holdup due to spacers are assumed at the expected low flow rates. No further verification of this assumption is required.

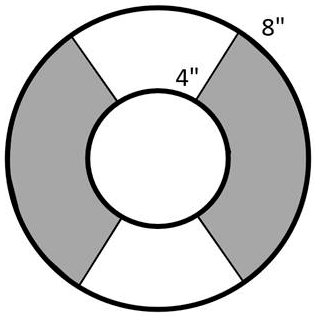

Figure 4-1. 4-in to 8-in Piping Spacer, 3-in to 6-in Piping Spacer is Similar.

Figure 4-2. Piping Spacer Attached to Carrier Pipe, Opening at Top and Bottom.

In addition, there are pipe spacers in the PC-5000 pipeline, these are depicted in Attachment A. No liquid holdup due to spacers are assumed at the expected low flow rates. There is a step in the pipe wall due to the elbow of a nominal 1/8-in. There are 10 elbows used in the assembly of the PC-5000 pipeline, 4 before the caisson and 6 after. Each of the steps will create a dam that holdups the flow of water. This assumption is based upon engineering judgement. This latter effect is similar to the epoxy resin dams discussed in Section 4.2.1 below.

4.1.7 Encasement Air Relative Humidity

Prior to a leak event, it is assumed that the containment piping is clean and dry and the air within the pipe has low humidity, for conservatism assume a 0% relative humidity. Any liquid leaking into the containment will partially vaporize causing the air to achieve a 100% relative humidity condition. No further verification of this assumption is required.

4.2 Assumptions Requiring Justification

4.2.1 Epoxy Resin Dams

The method of joining the containment piping segments consists of using an epoxy resin that joins one segment to another. The joint is a spigot or socket type joint. The epoxy resin will protrude into the joint as the pipes are joined together. This will create a small circumferential bead of epoxy resin around the inside of the carrier pipe. The containment pipes are made up of 20 ft segments, therefore at every 20 ft along the pipe line there will be a small bead of material that will cause a dam effect. The height of this dam is assumed to be 1/8-in. This assumption is based upon engineering judgement.

4.2.2 Leak Detector System Configuration

During prior projects associated with the transfer piping, a continuous leak detector system was installed in the containment piping. The leak detector system is based upon the Leak-Tek continuous leak detection cable system. This cable system was abandoned in place. The cable is located on the inside bottom surface of the containment piping. For this analysis report, the cable does not absorb liquid from the leak nor create any obstructions for liquid flowing down the containment pipe. This assumption is based upon engineering judgement.

4.2.3 Caisson Water Depth

The Evaporator/WTP Caisson, MH-WTP-01, is described in Section 3.8. The Caisson is flat bottomed and all containment pipes open into the Caisson allowing any water leaks to transfer through the Caisson to the LERF basin. The containment pipe lower internal surfaces are flush with the inside bottom surface of the Caisson. The Caisson bottom surface may have irregularities and may not be level, these conditions could lead to water pooling. Therefore, the Caisson has an assumed water depth of 1/8” causing a holdup of water traversing the containment pipe until it reaches the leak detector. This assumption is based upon engineering judgement.

5.0 METHOD OF ANALYSIS

The leak detection response times are based on the following analytical bases;

1) Basic Input parameters of pipeline length and slope, liquid flow area and pipe and tank volumes are discussed in section 5.1.
2) Fully developed falling film flow of the System lines is discussed in section 5.2.
3) Film wetting effect is discussed in section 5.3.
4) Liquid filling extra volumes is discussed in section 5.4
5) Dam effect created by containment pipe joint epoxy resin protruding into the pipe and elbow is discussed in section 5.5.
6) Humidity effects is discussed in section 5.6.
7) Time effects is discussed in section 5.7
8) Partially filled cross-sectional gravity flow within the transfer lines is discussed in section 5.8.

5.1 Basic Input

5.1.1 Pipe Segment Length and Slope

Distance between points in 3D, from Zwillinger, 1996, Chapter 4, eqn. 4.14.1 is determined by;

$$L_d = \sqrt{(x_1 - x_0)^2 + (y_1 - y_0)^2 + (z_1 - z_0)^2}$$

The slope angle, β, is determined from basic Geometrical relationships, using pipe segment length, L, and elevation change, Δz;

$$\beta = Cos^{-1}\left({}^{\Delta z}/_{L}\right)$$

5.1.2 The Flow Area

The approximate flow area, A_f, of the liquid flowing in the containment pipe is;

$$A_f = \delta\sqrt{1.7666d\delta - \delta^2}$$

Note, the symbol δ is used in the equation in place of "h" in the figure depicted below.

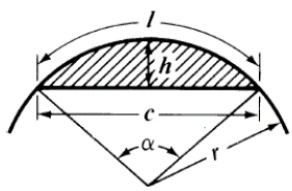

Circular Segment Formulas per Machinery's Handbook, 2000, Chapter 1 (Mathematics), pg. 63. and from Nayyar, 2000, Piping Handbook, Chapter A1, pg. A.38.

5.1.3 Annular Volume of a Double Contained Pipe

The annular volume of Pipe Segment A-B (Ref. Young, 2002, Table A.1 item 16.) is defined below.

$$V_{p1} = \frac{\pi({ID_8}^2 - {OD_4}^2) \cdot L_{AB}}{4}$$

Where ID8 is the Inner Diameter of the 8-in containment pipe, OD4 is the Outer Diameter of the 4-in carrier Pipe and L_{AB} is the length of pipe segment A-B.

The annular volume of pipe Segment A-C, Segment D-C and Segment C-E (Ref. Young, 2002, Table A.1 item 16.) is defined below.

$$V_{p2} = \frac{\pi(ID6^2 - OD3^2) \cdot L_{AE}}{4}$$

Where ID6 is the inner diameter of the 6-in Containment pipe, OD3 is the Outer Diameter of 3-in Carrier Pipe and L_{AE} is the length of pipe segments A-C, D-C and C-E.

5.1.4 Volume of a Tank

The inside volume of the top or bottom head is defined by Zwillinger, 1996, pg. 318.

$$V_{hd} = \frac{2}{3}\pi \cdot a_1 \cdot b_1 \cdot c_1$$

Where $a_i = b_i$ is the inside radius of the head and c_i is the inside radius / IDD (Inside depth of dish).

The inside volume of the tank shell is defined by Zwillinger, 1996, pg. 312.

$$V_{sh} = \frac{\pi \cdot ID_{sh}^2}{4} \cdot L_{sh}$$

Where ID_{sh} is the inside diameter of the shell and L_{sh} is the length of the shell plus straight flange lengths.

Total inside volume of tank is given by (with same top and bottom head configuration);

$$V_{tk1} = V_{sh} + 2 \cdot V_{hd}$$

5.2 Falling Film Fluid Flow Model

The configuration of the fluid flow model is depicted in Figure 5-1, as noted below. The basic methodology is called the "Falling Film" problem as defined in Bird, Stewart and Lightfoot, 2002, Chapter 2 as follows.

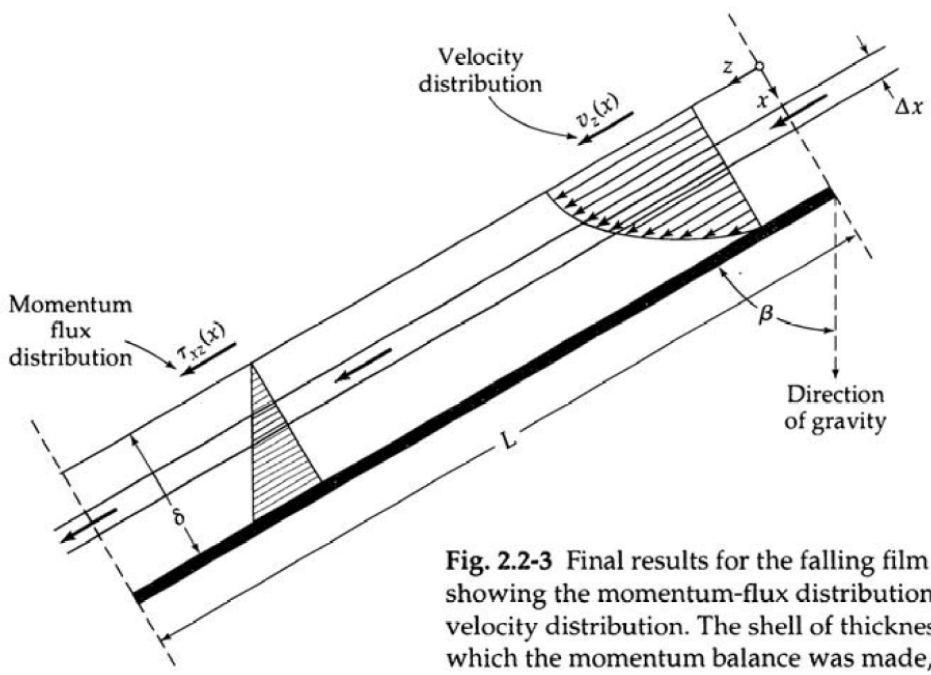

Fig. 2.2-3 Final results for the falling film problem, showing the momentum-flux distribution and the velocity distribution. The shell of thickness Δx, over which the momentum balance was made, is also shown.

Maximum velocity, v_{zmax}, from Bird, 2002, eqn. 2.2-19, is determined by;

$$v_{max} = \frac{\rho g \delta^2 \cos\beta}{2\mu}$$

Where;

ρ = Density of Fluid.

μ = Dynamic Viscosity.

δ = Film Thickness.

β = Slope angle.

g = Acceleration of gravity.

Average velocity,v_{avg}, from Bird, 2002, eqn. 2.2-20, is determined by;

$$v_{avg} = \frac{2}{3} v_{max}$$

Or

$$v_{avg} = \frac{\rho g \delta^2 \cos\beta}{3\mu}$$

Mass flow, *w*, from Bird, 2002, eqn. 2.2-21 is determined by;

$$w = \frac{\rho^2 g W \delta^3 \cos\beta}{3\mu} = \rho v_{avg} A$$

Film thickness, δ, from Bird, 2002, eqn. 2.2-22 is determined by;

$$\delta = \sqrt[3]{\frac{3\mu w}{\rho^2 g W \cos\beta}}$$

Also;

$$\delta = \left(\frac{3 v_{avg}}{g \cos\beta} \frac{v_{avg} Re}{4}\right)^{\frac{1}{3}}$$

Also from Bird, 2002, eqn. 2.2-20;

$$\delta = \sqrt{\frac{3\mu v_{avg}}{\rho g \cos\beta}} = \sqrt{\frac{3\mu v_{avg} L_p}{\rho g \Delta z}}$$

Note (from basic definition of the cosine function);

$$\cos\beta = \frac{\Delta z}{L_p}$$

Where;

L_p = Length of pipe.

Δz = Elevation change in pipeline.

The Reynolds number, Re, from Bird, 2002, eqn. 2.2-25 is determined by;

$$Re = \frac{4\delta v_{avg}\rho}{\mu} = \frac{4w/_{W}}{\eta\rho}$$

Where;

η= Kinematic Viscosity.

W= Width of the fluid.

There are three flow regimes as stated in Bird (2002) as follows.

laminar flow with negligible rippling	Re < 20
laminar flow with pronounced rippling	20 < Re < 1500
turbulent flow	Re > 1500

The above methodology is valid for laminar flow only.

5.3 Film Wetting Effect

A volume of liquid has to be accumulated within the containment pipe before it reaches the leak detector. This is the hold-up volume and is the thin film of liquid that wets a small portion of the surface at the bottom of the pipe. This wetting occurs before any liquid can be transported to the leak detector. This concept was reported in 24590-PTF-PER-M-04-0006, 2004, "Leak Detection for Underground Transfer Lines," for the Waste Treatment Project (WTP). A value for liquid holdup cannot be calculated analytically. It must be determined from empirical correlations and is a function of liquid properties, flow pattern, pipe diameter and pipe inclination (i.e., slope).

The original WTP calculation referenced an empirical test performed on a 25 ft long, 6-in diameter carbon steel pipe encasement. The tested piping was inclined at a 1:400 slope (0.25%). That test showed a V_{wet} = 0.32 oz/ft of pipe. The PC-5000 and W310/311 piping slope is at least 1:200 (0.5%), which is twice as steep as the test piping. Therefore, it is assumed that with all else being equal, the V_{wet} of the subject piping would be less than that of WTP (meaning that due

to the increased slope, less water would be held up due to friction between fluid and pipe wall for the subject piping.) However, the 0.32 oz per foot of pipe value, has been used for conservatism.

5.4 Liquid Filling Extra Volumes

The PC-5000 line and the backup WTP line, W311, containment piping is connected first to the Caisson and then to a Catch Tank at the LERF basin. The Caisson has an assumed water depth of 1/8” causing a holdup of water traversing the containment pipe until it reaches the leak detector.

$$V_c = \frac{\pi \cdot D_c^2}{4} \cdot L_c$$

Where;

V_c = Water volume at bottom of caisson,

D_c = Inside diameter of Caisson,

L_c = Average depth of holdup water in the Caisson.

The liquid that eventually gets to the LERF Catch Tank is first drained into the tank and then drains to a leak detector mounted in a pipe connected to the bottom head of the tank (lowest point).

The volume of liquid that has to accumulated before the detector alarms is the volume at the leak detector fixture is determined by;

$$V_{ldf} = \frac{\pi \cdot {D_p^2}/{2}}{4} \cdot L_{ldf}$$

Where;

V_{ldf} = Water volume in Catch Tank leak detector fixture piping,

D_p = Inside diameter of Catch Tank leak detector fixture piping (½-in sch 80 pipe),

L_{ldf} = Catch Tank leak detector fixture piping length (from catch tank to leak detector).

Note, it is assumed that the water in the leak detector pipe is half full in order to initiate a leak detection event.

5.5 Dam Effect Created by Containment Pipe Joint Epoxy Resin Protruding into the Pipe

The PC-5000 and W310/311 pipelines are constructed from fiberglass piping segments that are connected to each other using socket type end fittings. The pipes are held together by the use of

an adhesive epoxy resin that is applied to the end of the pipe segment before it is inserted into the socket. It can be conservatively assumed that the epoxy resin will create a small bead on the inside of the pipe during this assembly process. This epoxy resin bead will create a series of small dams that the liquid flowing on the inside of the pipe has to pass as it flows to the leak detector. It is assumed that the pipelines were constructed from 20 ft lengths of pipe. Therefore, on a conservative basis, there will be a small flow dam every 20 ft along the length of the pipe. Engineering judgement was used to conservatively assign a bead height of 1/8-in.

The use of standard Fibercast elbows in the PC-5000 line also creates a small flow dam every elbow. Engineering judgement was used to conservatively assign a bead height of 1/8-in.

The liquid holdup volume at each bead is conservatively determined by the following;

$$V_d = A_d L_d$$

And

$$A_d = h_b \sqrt{1.7666 d h_b - {h_b}^2}$$

$$L_d = \frac{h_b}{tan(90° - \beta)}$$

Where;

V_d = Water volume in dam behind the epoxy resin bead (or elbow),

d = diameter of containment pipe,

h_b = Height of bead,

L_d = Length of dam created by the bead and the slope of the pipe.

5.6 Humidity Effects

For the PC-5000 and W311 piping, as liquid (water) flows down the containment pipe it loses liquid by evaporation into the annular air space of the piping and into the caisson and catch tank. The W310 only loses liquid by evaporation into its annular piping volume as it does not pass through the caisson and does not have a catch tank. The evaporation process can be modelled by the humidity model contained within the ASHRAE Fundamentals handbook. It is assumed on a conservative basis that the air in the containment piping initially has 0% Relative Humidity (RH) before the leak starts and 100% RH after the leak starts. The ASHRAE model determines the density of water vapor in the air volume. From this, the liquid volume of water lost to evaporation can be determined. This lost volume is another water holdup volume that must be accounted for.

The density of water vapor in air is determined from the ideal gas law (Cengel and Cimbala, 2010, eqn. 2-4);

$$\rho_{wv} = \frac{p_w}{R_w T}$$

The partial pressure, p_w, of water as (2013 ASHRAE Fundamentals, Chapter 1, eqn. 19 and 24);

$$p_w := RH \cdot p_{ws}$$

And the partial pressure of water vapor (over liquid water) at saturation is given by (2013 ASHRAE Fundamentals, Chapter 1, eqn. 6);

$$p_{ws} := \exp\left[\frac{a}{(T)} + b + c \cdot T + d \cdot (T)^2 + e \cdot (T)^3 + f \cdot \ln(T)\right]$$

Finally, the amount of water lost from the liquid leak into the closed air volume of the containment piping due to evaporation is given by;

$$V_l = \frac{\rho_{wv}}{\rho_w} V_{air}$$

Where;

p_w = Partial pressure of water vapor

p_{ws} = Pressure of water vapor at saturation

RH = Relative humidity

R_w = Specific gas constant for water

T = Absolute temperature for water vapor

V_l = Volume of liquid water lost to the air space

V_{air} = Volume of air in the containment piping system

ρ_{wv} = Density of water vapor

ρ_w = Density of liquid water

The constants a, b, c, d, e, and f are defined in 2013 ASHRAE Fundamentals, Chapter 1.

5.7 Time Constraint Equation

The time limit to detect a water leak in the PC-5000 or W310/311 pipelines is 24 hours. This time limit shall be equated to the various time dependent parameters based upon the configuration of the leak path to the leak detector. The time dependent parameters include the time for the leak to flow to the leak detector, the time for the leak to wet the piping and the time for the liquid to fill various enclosed volumes within the pipeline.

The time for the leak to travel from the leak source to the leak detector is defined by the speed equation (fundamental physics definition) as;

$$t_1 = \frac{L_p}{v_{avg}}$$

Where the average velocity, v_{avg}, is given by the falling film equation in section 5.2 above. Substituting the parameters from the falling film method results (section 5.2) in;

$$t_1 = \frac{3\mu L_p^2}{\rho g \delta^2 \Delta z}$$

The time for the leak to wet the surface of the pipe (section 5.3) is defined by (fundamental physics definition);

$$t_2 = \frac{V_{wet} L_p}{v_{avg} A_f}$$

Note; v_{avg} A_f is the volumetric flow rate of the leak.

Substituting the parameters from the falling film method results in;

$$t_2 = \frac{3\mu L_p^2}{\rho g \delta^2 \Delta z A_f} V_{wet}$$

The time for the leak to fill a volume, V_c (Caisson water volume, section 5.4), is defined by (fundamental physics definition);

$$t_3 = \frac{V_c}{v_{avg} A_f}$$

Substituting the parameters from the falling film method results in;

$$t_3 = \frac{3\mu L_p}{\rho g \delta^2 \Delta z A_f} V_c$$

The time for the leak to fill a volume, V_{ldf} (Leak detector water volume, section 5.4), is defined by (fundamental physics definition);

$$t_4 = \frac{V_{ldf}}{v_{avg} A_f}$$

Substituting the parameters from the falling film method results in;

$$t_4 = \frac{3\mu L_p}{\rho g \delta^2 \Delta z A_f} V_{ldf}$$

The time for the leak to fill a volume, V_d (epoxy resin dam water volume (section 5.5), is defined by (fundamental physics definition);

$$t_5 = \frac{V_d}{v_{avg} A_f}$$

Substituting the parameters from the falling film method results in;

$$t_5 = \frac{3\mu L_p}{\rho g \delta^2 \Delta z A_f} V_d$$

The time for the leak to fill air volume, V_l (water volume lost by evaporation (section 5.6), is defined by (fundamental physics definition);

$$t_6 = \frac{V_l}{v_{avg} A_f}$$

Substituting the parameters from the falling film method results in;

$$t_6 = \frac{3\mu L_p}{\rho g \delta^2 \Delta z A_f} V_l$$

Notice that the terms for t_3, t_4, t_5 and t_6 have common terms except for the volume associated for the specific concern. Therefore, these last four terms can be combined into the following;

$$t_{36} = \frac{3\mu L_p}{\rho g \delta^2 \Delta z A_f} V_{36}$$

Where;

$$V_{36} = V_c + V_{ldf} + V_d + V_l$$

Finally, the constraint equation becomes;

$$24\ hrs = t_1 + t_2 + t_{36}$$

5.7 Open Channel Fluid Flow Model

The “Open Channel” flow model was used as an alternate calculation method to compare against the “Falling Film” model described in section 5.2. The model is analyzed with the use of a specifically developed MathCAD fluid flow analysis. This model assumes a partially water filled pipe and behaves as a gravity driven open channel flow using the Manning Method (see Akgiray, Ö, 2005, “Explicit Solutions of the Manning Equation for Partially Filled Circular Pipes”). Piping configurations are denoted on the Piping Drawings listed in Section 3 of this report. The slope of the pipe is one of the critical determining factors. The average slope specified in Table 7-1 was utilized in the analysis. The MathCAD analysis is documented in Attachment B of this report.

6.0 USE OF COMPUTER SOFTWARE

MathCAD®,[3] Version 15.0 (M010 [MC15_M010_20110622])

MathCAD was used to determine the partially filled pipe inputs and flow analysis given the inputs and assumptions of this calculation. This software meets the requirements of TFC-BSM-IRM_HS-C-01; See HISI ID #1916.

The output file is included in Attachment C, “MathCAD File - Open Channel Flow in Sloped Pipes - Akgiray Methods”.

File Names:

- B2 Pipe & Tank Volumes.xmcd
- B3 Properties of Moist Air - RH Known.xmcd
- 1 Falling Film Problem A-B.xmcd
- 2 Falling Film Problem A-C.xmcd
- 3 Falling Film Problem D-C.xmcd
- 4 Falling Film Problem C-E.xmcd
- 5 Falling Film Problem A-E.xmcd
- 6 Falling Film Problem D-E.xmcd
- 7 Open Channel Problem A-B.xmcd
- 8 Open Channel Problem C-E.xmcd

Microsoft Excel®,[4] (Part of Microsoft Office 2016)

File name: B1 W310-311 PC5000 Pipe Segment Calc Sheet.xlsd

Excel was used to list the input data described in Section 3.0, to perform the line segment lengths and slope calculations described in Section 7.0. The calculations are organized in convenient tables for compactness and clarity. Where necessary, the fields in the tables are annotated with the associated equation numbers or, in the case input data, the source document or the table number. The Excel file, B1 W310-311 PC5000 Pipe Segment Calc Sheet.xlsx, is uploaded to SPF as part of the project documents.

---

3 Mathcad® is a registered trademark of Parametric Technology Corporation or its subsidiaries in the U.S. and in other countries, Needham, MA.
4 Excel® is a registered trademarks of Microsoft Corporation.

7.0 RESULTS

7.1 Preliminary Results - Pipe Lengths, Slope and Volume Calculations

A tabulation of the pipe elevation changes, lengths, slopes calculations are depicted in Table 7-1. The calculations were determined by the use of the MS Excel spreadsheets defined in section 6, B1 W310-311 PC5000 Pipe Segment Calc Sheet.xlsd. The listed spreadsheet performed the calculations based upon the referenced project drawings.

Table 7-1. Transfer Pipe Hydraulic Characteristics

Segment ID	Pipe Segment	Pipe Size, in.	Pipe Elev. Change, ft	Pipe Length, ft	Nominal Design Slope, %
A-B	W310 (4"-WTP-001-Ml7) from WTP Node 8A to LERF Basin 42	8	49.98	6340.88	0.79
A-C	W311 (3"-WTP-002-Ml7) from WTP Node 8B to PC-5000 Caisson (MH-WTP-01)	6	7.06	2367.11	0.29
D-C	PC-5000 from 242-A Evaporator to PC-5000 Caisson (MH-WTP-01)	6	30.11	1357.75	2.22
C-E	PC-5000 from Caisson (MH-WTP-01) to LERF Basin 43	6	47.95	4340.54	1.10
A-E	W311/PC-5000 from Node 8B through PC-5000 Caisson to LERF Basin 43	6	58.19	6709.03	0.87
D-E	PC-5000 from 242-A Evaporator through PC-5000 Caisson to LERF Basin 43	6	78.06	5698.45	1.37

The volumes of the tanks and the annular space for the transfer lines were calculated in the MathCAD worksheet, “B2 Pipe & Tank Volumes.” The listed worksheet performed the calculations based upon the referenced project drawings. The amount of liquid lost to evaporation was determined in the MathCAD worksheet, “B3 Properties of Moist Air - RH Known.” The various volumes that were calculated are listed in Table 7-2.

Table 7-2. Calculated Volumes

Item	Calculated Volume, gallon
W310 (4"-WTP-001-Ml7) from WTP Node 8A to LERF Basin 42 Annular Air volume	12016.92
W311 and PC-5000 Annular Air volume	9216.86
Caisson (MH-WTP-01) Air volume	477.85
LERF Catch Tank Air volume	31.19
Pipe segment A-C, D-C and C-E , Caisson and Catch Tank Air volume	9229.53
Caisson (MH-WTP-01) liquid volume	0.98
LERF Catch Tank Leak Detector Fitting liquid volume	0.06
Pipe segment A-B liquid volume due to evaporation	0.08
Pipe segment A-C, D-C and C-E , Caisson and Catch Tank liquid volume due to evaporation	0.06

7.2 Calculated Design Leak Rate – Falling Film Methods

A tabulation of the calculated design leak rates (24-hour basis) using the “Falling Film” method is depicted in Table 7-3. The calculations were determined by the use of the MathCAD worksheets defined in section 6. The listed worksheets performed the calculations based upon the referenced project drawings.

Table 7-3. Calculated Minimum Leak Rate - “Falling Film” Method

Segment ID	Pipe Segment	Calculated Design Leak Rate Gallons/Hour
A-B[1]	W310 (4"-WTP-001-Ml7) from WTP Node 8A to LERF Basin 42	1.66
A-C[2]	W311 (3"-WTP-002-Ml7) from WTP Node 8B to PC-5000 Caisson (MH-WTP-01)	0.73
D-C[3]	PC-5000 from 242-A Evaporator to PC-5000 Caisson (MH-WTP-01)	0.24
C-E[4]	PC-5000 from PC-5000 (MH-WTP-01) to LERF Basin 43	0.88

A-E[5]	W311/PC-5000 from Node 8B through PC-5000 Caisson to LERF Basin 43	1.67
D-E[6]	PC-5000 from 242-A Evaporator through PC-5000 Caisson to LERF Basin 43	1.19

1) MathCAD worksheet, “1 Falling Film Problem A-B”
2) MathCAD worksheet, “2 Falling Film Problem A-C”
3) MathCAD worksheet, “3 Falling Film Problem D-C”
4) MathCAD worksheet, “4 Falling Film Problem C-E”
5) MathCAD worksheet, “5 Falling Film Problem A-E”
6) MathCAD worksheet, “6 Falling Film Problem D-E”

7.3 Calculated Design Leak Rate – Open Channel Flow Methods

A tabulation of the calculated design leak rates (24-hour basis) using the “Open Channel” method is depicted in Table 7-4. The calculations were determined by the use of the MathCAD worksheets defined in section 6. The listed worksheets performed the calculations based upon the referenced project drawings.

Table 7-4. Calculated Minimum Leak Rate - “Open Channel” Method

Segment ID	Pipe Segment	Calculated Design Leak Rate Gallons/Hour
A-B[1]	W310 (4"-WTP-001-Ml7) from WTP Node 8A to LERF Basin 42	1.34
C-E[2]	PC-5000 from PC-5000 (MH-WTP-01) to LERF Basin 43	0.72

1) MathCAD worksheet, “7 Open Channel Problem A-B”
2) MathCAD worksheet, “8 Open Channel Problem C-E”

8.0 CONCLUSIONS

A comparison of the design basis leak rates as calculated by the "Falling Film" and "Open Channel" methods as listed in Tables 7-3 and 7-4 shows that the "Falling Film" method determines more conservative results. Therefore, the "Falling Film" method results in Table 7-3 should be used for decisions related to leak rates and leak detector design solutions.

The calculated leak rates are based upon a series of assumptions that cannot be justified by analytical or definitive methods. Therefore, it is recommended that the minimum detectable leak rate be determined by experimental methods. One experimental method would be to introduce a series of known leaks (water flow) into the annulus of the three different pipeline segments; A-B, A-C and D-E. Leak rates in the range of 0.25 to 2.0 gph should be simulated.

9.0 REFERENCES

1. 24590-PTF-PER-M-04-0006, 2004, "Leak Detection for Underground Transfer Lines," Rev. 0, BNI, Richland Washington.
2. Akgiray,Ö, 2005, "Explicit Solutions of the Manning Equation for Partially Filled Circular Pipes," Canadian Journal of Civil Engineering, Vol. 32, pg. 490-499, NRC Research Press, Montreal, Quebec, Canada.
3. ARP-T-601-064, "Respond to Evaporator to LERF and PC-5000 Graphic #64 Alarms at the 242-A Evaporator," Rev. K-2, Washington River Protection Solutions, LLC (WRPS), Richland Washington.
4. ASHRAE, 2009, "ASHRAE Handbook of Fundamentals, SI Version," Chapter 1, *Psychrometrics*, America Society of Heating, Refrigerating and Air-Conditioning Engineers, Inc., Atlanta, Georgia.
5. ASHRAE, 2013, "ASHRAE Handbook of Fundamentals, IP Version," Chapter 1, *Psychrometrics*, America Society of Heating, Refrigerating and Air-Conditioning Engineers, Inc., Atlanta, Georgia.
6. ASME B36.10M, 2004, "Welded and Seamless Wrought Steel Pipe," American Society of Mechanical Engineers, New York, New York.
7. Bird, R.B., W. E. Stewart and E.N. Lightfoot, 2002, Transport Phenomena, Second Edition, John Wiley & Sons, Inc., New York, New York.
8. Brater, E. F., H. W. King, J. E. Lindell and C.Y. Wei, 1996, Handbook of Hydraulics, 7th Ed. McGraw-Hill, New York, New York.
9. C-018H-P2, 1993, "Procurement Specification for Fiberglass Double Contained Piping System and Associated Engineering Services 242-A Evaporator and Purex Condensate Effluent Treatment Facility," Kaiser Engineers Hanford Company, Richland, WA.
10. Cengel, Y.A., and J.M., Cimbala, 2010, Fluid Mechanics Fundamentals and Applications, Second Edition, McGraw Hill, Cimbala 2010New York, New York.

11. ECN 723912-R2, “Add Pressure Relief to PC-5000 Encasement Line–242-A Evaporator,” CH2M HILL Engineering, Richland, Washington.
12. ECN-721677-R7, 2010, “Disable 242-A Evaporator TraceTek Leak Detectors to LERF and Associated Interlocs,” (RE: H-2-99949, sht. 18), CH2M HILL Engineering, Richland, Washington.
13. ECN-726604-R3, 2010, “PC-5000 Leak Detection Upgrades,” (RE:H-2-79608, sht. 1, H-2-88810, sht 2 & 4, H-2-88813, sht.2, H-2-88815, sht.5 & 7, H-2-88820, sht.1, H-2-88766, sht.1), CH2M HILL Engineering, Richland, Washington.
14. ECN-726659-R4, 2010, “PC-5000 Leak Detection Upgrades,” (RE:H-2-79614, Sht.2), CH2M HILL Engineering, Richland, Washington.
15. ECN-727154-R1, 2010, “242-A Software Modifications for PC5000 upgrade revision,” (RE: RPP-36603-R0), CH2M HILL Engineering, Richland, Washington.
16. H-2-79593, Sht. 1, “Civil Plan Sections & Det Catch Basin” Rev. 5, US Department of Energy, Richland, Washington.
17. H-2-79593, Sht. 3,5, “Civil Plan Sections & Det Catch Basin” Rev. 0, US Department of Energy, Richland, Washington
18. H-2-79604, Sht. 1, “Piping Plan Sect & Det 242-A Evap Cond Stream,” Rev. 3, US Department of Energy, Richland, Washington.
19. H-2-79605, Sht. 1, “Piping Plan Sect & Det 242-A Evap Cond Stream,” Rev. 3, US Department of Energy, Richland, Washington.
20. H-2-79608, Sht. 1, “Piping Plan Sect & Det 242-A Evap Cond Stream,” Rev. 3, US Department of Energy, Richland, Washington.
21. H-2-79609, Sht. 1, “Piping Plans 242-A Evap Cond Stream,” Rev. 3, US Department of Energy, Richland, Washington.
22. H-2-79610, Sht. 1, “Piping Plan Retention Basins,” Rev. 3, US Department of Energy, Richland, Washington.
23. H-2-79611, Sht. 1, “Piping Plan Sections and Isometric 242-A Evap Stream,” Rev. 2, US Department of Energy, Richland, Washington.
24. H-2-79613, Sht. 1, “Piping Plan Catch Basin 242AL-42,” Rev. 5, US Department of Energy, Richland, Washington.
25. H-2-79614, Sht. 1, “Piping Plan Catch Basin 242AL-43,” Rev. 6, US Department of Energy, Richland, Washington.
26. H-2-79614, Sht. 2, “Piping Plan Catch Basin 242AL-43,” Rev. 1, US Department of Energy, Richland, Washington.
27. H-2-79615, Sht. 1, “Piping Plan Catch Basin 242AL-44,” Rev. 5, US Department of Energy, Richland, Washington.
28. H-2-88766, Sht. 1, “P&ID LERF Basin & ETF Influent Evaporator,” Rev. 14, US Department of Energy, Richland, Washington.

29. H-2-88766, Sht. 2, “P&ID LERF Basin & ETF Influent Evaporator,” Rev. 14, US Department of Energy, Richland, Washington.
30. H-2-88766, Sht. 3, “P&ID LERF Basin & ETF Influent Evaporator,” Rev. 19, US Department of Energy, Richland, Washington.
31. H-2-88766, Sht. 4, “P&ID LERF Basin & ETF Influent Evaporator,” Rev. 20, US Department of Energy, Richland, Washington.
32. H-2-88766, Sht. 5, “P&ID LERF-WTP Interface,” Rev. 2, US Department of Energy, Richland, Washington.
33. H-2-830093, Sht. 1, “W-519 Site/Utility Systems Title Sheet, Dwg List, and General Notes,” Rev. 1, US Department of Energy, Richland, Washington.
34. H-2-830094, Sht. 1, “W-519 Site/Utility Systems Plan and Profile Sta 0+400 To Sta 0+800,” Rev. 1, US Department of Energy, Richland, Washington.
35. H-2-830095, Sht. 1, “W-519 Site/Utility Systems Plan and Profile Sta 0+800 To Sta 1+200,” Rev. 1, US Department of Energy, Richland, Washington.
36. H-2-830096, Sht. 1, “W-519 Site/Utility Systems Plan and Profile Sta 1+200 To Sta 2+000,” Rev. 1, US Department of Energy, Richland, Washington.
37. H-2-830096, Sht. 2, “W-519 Site/Utility Systems Plan and Profile Sta 1+200 To Sta 2+000,” Rev. 0, US Department of Energy, Richland, Washington.
38. H-2-830097, Sht. 1, “W-519 Site/Utility Systems Plan and Profile Sta 2+000 To Sta 2+333.0,” Rev. 1, US Department of Energy, Richland, Washington.
39. H-2-830098, Sht. 1, “W-519 Site/Utility Systems Plan and Profile LERF Basins,” Rev. 1, US Department of Energy, Richland, Washington.
40. H-2-830102, Sht. 2, "W-519 Site/Utility Systems Piping Sections and Details", Rev. 2. U.S. Department of Energy, Richland, Washington.
41. H-2-830108, Sht. 1, “W-519 Site Utility Systems Leak Detection Details,” Rev. 1, US Department of Energy, Richland, Washington.
42. Hills, P.D., 1983, "Designing Piping for Gravity Flow", Chemical Engineering Magazine, New York, New York.
43. HNF-3395, “Interface Control Document Between the 242-A Evaporator Facility and the Liquid Effluent Retention Facility,” Rev. 3, Fluor Hanford, Richland, Washington.
44. IAR PC-5000, 2010, “242-A PC-5000 Drain Line Modifications Independent Integrity Assessment Report,” Rev 0, Meier Architecture and Engineering, Kennewick, Washington.
45. Lindeburg, M.R., 2001, Mechanical Engineering Reference Manual, Professional Publications, Inc., Belmont, California.
46. McCauley, C.J., 2000, Machinery’s Handbook, 26’Th edition, Industrial Press, New York, New York.
47. Nayyar, M.L., 2000, Piping Handbook, 7th Edition, McGraw Hill, New York, New York.

48. PC5000-PTD-001, “PC-5000 Leak Detection Upgrades Project Turnover Document,” Rev. 0, Washington River Protection Solutions, LLC (WRPS), Richland, Washington

49. Publication 95-420, “Guidance for Assessing and Certifying Tank Systems that Store and Treat Dangerous Waste,” Washington State Department of Ecology, Kennewick, Washington.

50. RPP-RPT-33307, 2007, “IQRPE Integrity Assessment Report for the 242-A PC-5000 Transfer Pipeline,” Rev. 0, CH2MHILL Hanford Group, Inc. Richland, Washington.

51. RPP-RPT-60350, 2018, “2007 242-A Evaporator System Integrity Assessment Recommendation Dispositions,” Rev. 0, Washington River Protection Solutions, LLC (WRPS), Richland, Washington.

52. FC-BSM-IRM_HS-C-01, 2017, “Software Development, Implementation, and Management”, Rev. H-5, Washington River Protection Solutions, LLC (WRPS), Richland, Washington.

53. TFC-ENG-STD-02, 2016, “Environmental Seasonal Requirements for TOC Systems, Structures, and Components”, Rev. A-11, Washington River Protection Solutions, LLC (WRPS), Richland, Washington.

54. Tilton, J.N., 2008, Perry's Chemical Engineers' Handbook, 8th Edition, McGraw Hill, New York, New York.

55. TO-600-010, “242-A Evaporator Initial Valving Verification,” Rev. S-11, Washington River Protection Solutions, LLC (WRPS), Richland Washington.

56. W-105-P1, “Procurement Specification for Fiberglass Epoxy Resin Double Containment Piping System and Associated Engineering for 242-A Evaporator and Interim Retention Basin,” Revision1, Westinghouse Hanford Company, Richland, Washington.

57. W-519-P1, “Performance Specification Liquid Effluent Transfer System,” Fluor Federal Services, Richland, Washington.

58. WAC 173-303-640(2), “Dangerous Waste Regulations,” Washington Administrative Code, Washington State Department of Ecology, Kennewick, Washington.

59. WHC-SD-WM-ER-112, “Integrity Assessment Report for 242-A Evaporator/LERF Waste Transfer Piping, Project W105,” Westinghouse Hanford Co, Richland, Washington.

60. VI File No. 50628, “PC-5000 Leak Detection Upgrades”

61. Young, W.C., and Budynas, R.G., 2002, Roark’ s Formulas for Stress and Strain, McGraw-Hill, New York, New York.

62. Zwillinger, D., 1996, CRC Standard Mathematical Tables and Formulae, CRC Press, LLC., Boca Raton, Florida.

Title:	WTP/Evaporator Transfer System Hydraulic Analysis
Engineer/Analyst:	JJ Irwin (Electronic Signature on File in SPF)
Checker:	JT Lovelady (Electronic Signature on File in SPF)

Attachment A - Supplemental Information

Part 1 - Vendor Brochures (National Oilwell Varco Brochure, 2013, "Bonstrand 4000 Product Data", Supplemental Bonstrand pipe dimensions, Fibercast elbow figure)

Part 2 - VI File No. 50628, “PC-5000 Leak Detection Upgrades” (Depiction of Caisson)

Part 3 - Roy E. Hanson Jr, "MFG Drawing 16-VC-30-L, 30 Gallon Air Receiver Tank," Rev. 2 (LERF Basin Catch Tank)

Part 4 - Thermo-Physical Property Data (Cengel Table for Water)

Bondstrand™ 4000 Product Data
(Corrosive Industrial Service)

Uses and Applications

- Acid drains
- Chemical process piping
- Corrosive slurries
- Food processing
- Geothermal
- Nonoxidizing chemicals and acids

Listings

Meets USFDA requirements for food processing piping under Federal Regulations 21CFR175.105 and 21CFR177.2280 when bonded using Bondstrand PSX™ •34 adhesive.

Performance

Working pressure from 150 to 300 psig (1.0 to 2.0 MPa) depending on pipe size.

Operating temperatures to 250°F (120°C), depending on fluid. Subzero temperatures will not adversely affect mechanical properties.

Excellent corrosion resistance over a wide temperature range. See most recent release of Bondstrand Corrosion Guide for specific applications.

Does not require thrust blocks at ambient temperatures when properly installed in most soils.

Smooth inner liner (Hazen-Williams C = 150) produces extremely low frictional loss for greater discharge and reduced pumping costs.

Individual system components may not have the same ratings as the pipe. Refer to the detailed product information for the specific components to determine the pressure rating for the system as a whole.

Composition

Pipe

Filament-wound fiberglass reinforced epoxy pipe with nominal 0.050-inch (1.3 mm) resin-rich reinforced liner.

Nominal Pipe Size		ASTM Designation
in	mm	D2996
2-3	20-75	RTRP 11FE-2111
4-6	100-150	RTRP 11FE-2112
8-16	200-400	RTRP 11FE-2113

Typical Pipe Dimensions and Weights

Nominal Pipe Size		Pipe I.D.		Nominal Wall Thickness[1]		Average[2] Sectional Area		Pipe Weight	
in	mm	in	mm	in	mm	in	mm	lb/ft	kg/m
2	50	2.10	53	.15	3.9	0.52	335	0.8	1.2
3	80	3.21	82	.16	4.0	0.81	525	1.1	1.7
4	100	4.14	105	.20	5.4	1.38	890	1.9	2.8
6	150	6.19	157	.20	5.4	2.63	1700	2.8	4.2
8	200	8.22	209	.23	5.7	5.83	3760	4.1	6.1
10	250	10.35	263	.23	5.7	7.31	4720	5.1	7.7
12	300	12.35	314	.23	5.7	8.69	5610	6.1	9.1
14	350	13.56	344	.25	6.4	10.40	6710	7.4	11.0
16	400	15.50	394	.29	7.3	13.40	8650	9.6	14.0

1) The minimum wall thickness shall not be less than 87.5% of nominal wall thickness in accordance with ASTM D2996.
2) Use these values for calculating longitudinal thrust.

Pressure Ratings

Nominal Pipe Size		Internal Pressure Rating[1]		Ultimate Collapse Pressure[2]	
in	mm	psig	MPa	psig	MPa
2	50	450	3.10	212	1.46
3	80	320	2.21	68	0.47
4	100	350	2.41	82	0.56
6	150	249	1.72	74	0.17
8	200	220	1.52	16	0.11
10	250	175	1.21	8	0.06
12	300	150	1.03	5	0.03
14	350	150	1.03	5	0.03
16	400	150	1.03	6	0.04

1) At 200°F (93°C) using Bondstrand type PSX™ •34 adhesive. For sustained service above 200°F, reduce rating linearly from tabulated 200°F values to 50% of those values at 250°F (121°C). Above 250°F, reduce ratings linearly to 0 at 300°F (149°C).
2) At 70°F (21°C). Reduce linearly to 90% at 150°F (66°C), 80% at 200°F and 65% at 230°F (110°C).

Typical pipe dimensions and weights

Nominal Pipe Size		Pipe ID		Nominal Wall Thickness[1]		Average Sectional Area[2]		Pipe Weight	
(in)	(mm)	(in)	(mm)	(in)	(mm)	(in^2)	(mm^2)	(lb/ft)	(kg/m)
2	50	2.10	53	.160	4.1	1.13	730	0.8	1.2
3	80	3.22	82	.160	4.1	1.70	1100	1.1	1.7
4	100	4.14	105	.206	5.2	2.73	1760	1.9	2.8
6	150	6.20	159	.206	5.2	4.06	2620	2.8	4.2
8	200	8.22	209	.229	5.8	5.83	3760	4.1	6.1
10	250	10.35	263	.229	5.8	7.31	4720	5.1	7.7
12	300	12.35	314	.229	5.8	8.69	5610	6.1	9.1
14	350	13.56	344	.250	6.3	10.40	6710	7.4	11.0
16	400	15.50	394	.286	7.3	13.40	8650	9.6	14.0

1) The minimum wall thickness shall not be less than 87.5% of nominal wall thickness in accordance with ASTM D2996.
2) Use these values for calculating longitudinal thrust.

Typical pipe performance

Nominal Pipe Size		Internal Pressure Rating[1]		Collapse Pressure Rating[2]	
(in)	(mm)	(psig)	(MPa)	(psig)	(MPa)
2	50	450	3.10	212	1.46
3	80	320	2.21	58	0.40
4	100	350	2.41	82	0.56
6	150	250	1.72	24	0.17
8	200	220	1.52	16	0.11
10	250	175	1.21	8	0.06
12	300	150	1.03	5	0.03
14	350	150	1.03	5	0.03
16	400	150	1.03	6	0.04

1) At 200°F (93°C) using Bondstrand type RP34C adhesive. For sustained service above 200°F, reduce rating linearly from tabulated 200°F values to 50% of those values at 250°F (121°C). Above 250°F, reduce ratings linearly to 0 at 300°F (149°C).
2) At 70°F (21°C). Reduce linearly to 90% at 150°F (66°C), 80% at 200°F and 65% at 230°F (110°C).

DUALCAST™ EPOXY

CENTRICAST PLUS® RB-2530 Carrier Pipe

Nominal Pipe Size (Inches)	Nominal Dimensions: OD	Total Wall Thickness (In.)	Rein-forcement Thickness (In.)	Weight Per Foot (lbs.)	Recommended Operating Data: Internal Pressure at 250°F. * (psi)	External Pressure at 75°F.** (psi)	Axial Load at 75°F. (lbs.)	Capacity Gallons Per Foot
1	1.315	.190	.110	.39	300	2,125	1,680	.040
1½	1.900	.210	.130	.64	1,275	2,065	3,700	.089
2	2.375	.250	.170	.96	1,000	1,825	4,700	.143
3	3.500	.260	.180	1.52	650	733	7,100	.362
4	4.500	.290	.210	2.21	500	360	9,200	.627
6	6.625	.300	.220	3.43	500	180	17,700	1.480
8	8.625	.300	.220	4.52	375	70	23,200	2.628
10	10.750	.300	.220	5.67	300	35	29,100	4.203
12	12.750	.300	.220	6.76	250	23	34,600	6.023

CENTRICAST III™ EP Carrier Pipe

Nominal Pipe Size (Inches)	Nominal Dimensions: OD	Total Wall Thickness (In.)	Rein-forcement Thickness (In.)	Weight Per Foot (lbs.)	Recommended Operating Data: Internal Pressure at 225°F.* (psi)	External Pressure at 75°F.** (psi)	Axial Load at 75°F. (lbs.)	Capacity Gallons Per Foot
1½	1.900	.140	.090	.45	300	865	4,008	.107
2	2.375	.120	.070	.49	200	265	3,830	.186
3	3.500	.120	.070	.73	200	120	5,695	.434
4	4.500	.120	.070	.95	175	43	7,355	.740
6	6.625	.140	.090	1.64	150	21	14,455	1.643
8	8.625	.170	.120	2.60	150	14	23,540	2.801
10	10.750	.190	.140	3.63	150	11	29,415	4.387
12	12.750	.190	.140	4.32	150	7	41,860	6.243

CENTRICAST III™ EP Containment Pipe

Nominal Pipe Size (Inches)	Nominal Dimensions: OD	Total Wall Thickness (In.)	Rein-forcement Thickness (In.)	Weight Per Foot (lbs.)	Recommended Operating Data: Internal Pressure at 225°F. (psi)	External Pressure at 75°F. ** (psi)	Axial Load at 75°F. (lbs.)	Capacity Gallons Per Foot
3	3.500	.120	.070	.73	200	120	5,695	.434
4	4.500	.120	.070	.95	175	43	7,355	.740
6	6.625	.140	.090	1.64	150	21	14,455	1.643
8	8.625	.170	.120	2.60	150	14	23,540	2.801
10	10.750	.190	.140	3.63	150	11	29,415	4.387
12	12.750	.190	.140	4.32	150	7	41,860	6.243
14	14.000	.220	.170	5.49	150	7	59,090	7.502
16***	16.470	.140	.120	5.77	100	7	11,088	10.680

** For external pressures at elevated temperatures, refer to the appropriate CENTRICAST® brochure. Annulus pressure should never exceed carrier pipe internal pressure.

*** Unless otherwise specified, pipe will be filament wound, Derakane 470 or equal.

NOTE: Larger filament wound sizes and grades available on request.

Epoxy – Unsupported Span

Based on 125° F. Ambient Temperature and 225° F. Fluid Temperature

Nom. Pipe Size (In.)	1N3	1½N3	1N4	1½N4	2N4	2N6	3N6	4N6	4N8	6N8	6N10	8N12	10N14	12N16
Span (Ft.)	16.2	15.1	18.8	17.5	16.7	20.0	20.0	18.8	20.0	20.0	20.0	20.0	20.0	20.0

The above spans are based on a 3-span continuous beam with maximum rated internal pressure and deflection considerations with pipe full of fluid, specific gravity 1.00 and 1/2" maximum deflection. For specific gravities other than 1, the following multipliers may be used:

SPECIFIC GRAVITY	MULTIPLIERS
1.25	.96
1.50	.93
2.00	.87
3.00	.80
Air	1.12

Values shown are based on long-term, elevated temperature test data.

Pressure Rating of FIBERCAST Epoxy Carrier Fittings up to 225° F. based on WELDFAST 440 Adhesive

Nominal Pipe Size (Inches)	Socket, Elbows, Tees and Couplings (psi)	Drainage Fittings Lateral, Combo "Y" P-Trap (Carrier/Containment)
1 N 3	300	–
1½ N 3	450	–
1 N 4	300	–
1½ N 4	450	–
2 N 4	450	25
2 N 6	450	25
3 N 6	300	25
4 N 6	225	25
4 N 8	225	25
6 N 8	225	25
6 N 10	225	25
8 N 12	225	25
10 N 14	225	25
12 N 16	225	25

Quotations for specially fabricated higher pressure fittings are available on request. For insulated and/or heat traced piping systems, use 100% of uninsulated piping recommendations up to 200° F. and reduce those ratings 50% for 225° F. operating temperatures.

DUALCAST ™ Features

- *Carrier pipe 1"–12" and containment pipe 3"–16"*
- *Containment pipe is pressure rated up to 150 psi* ***Annulus pressure should never exceed carrier pipe internal pressure***
- *Compatable with continuous cable or single point leak detection systems*
- *Prefabricated, shippable, subassemblies can be provided for quicker, on-site installation*
- *Operating temperatures up to 250°F.*
- *Utilizes FIBERCAST CENTRICAST PLUS ® and CENTRICAST III ™ pipe grades*
- *Suitable for above-ground or buried installations*
- *Easy to install –no tapering of pipe ends required*
- *Positive stop in all fitting sockets to facilitate close tolerance fabrication*
- *Containment pipe is designed to permit visual inspection of carrier pipe during hydrostatic test*
- *Special fabricated fittings available on request*
- *Engineering services available*

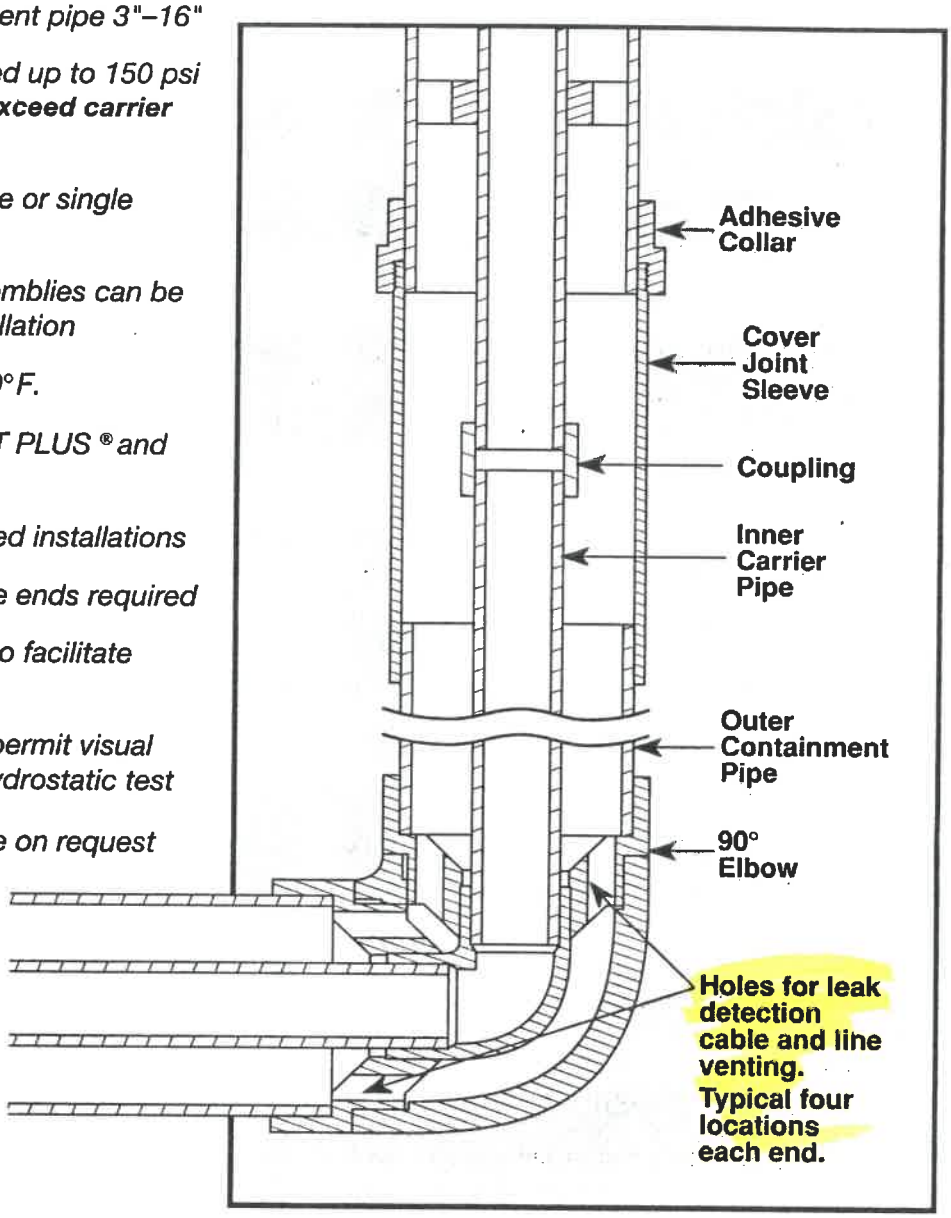

Standard Pipe Combinations

Nominal Carrier Pipe Size (Inches)	1	1½	1	1½	2	2	3	4	4	6	6	8	10	12
Nominal Containment Pipe Size (Inches)	3	3	4	4	4	6	6	6	8	8	10	12	14	16
DUALCAST Size Designation (Inches)	1N3**	1½N3	1N4**	1½N4*	2N4	2N6*	3N6*	4N6	4N8*	6N8	6N10*	8N12*	10N14*	12N16*

* Provides a minimum .75" diameter annular space to accomodate cable-type leak detection systems.
**Available on order only – nonreturnable.

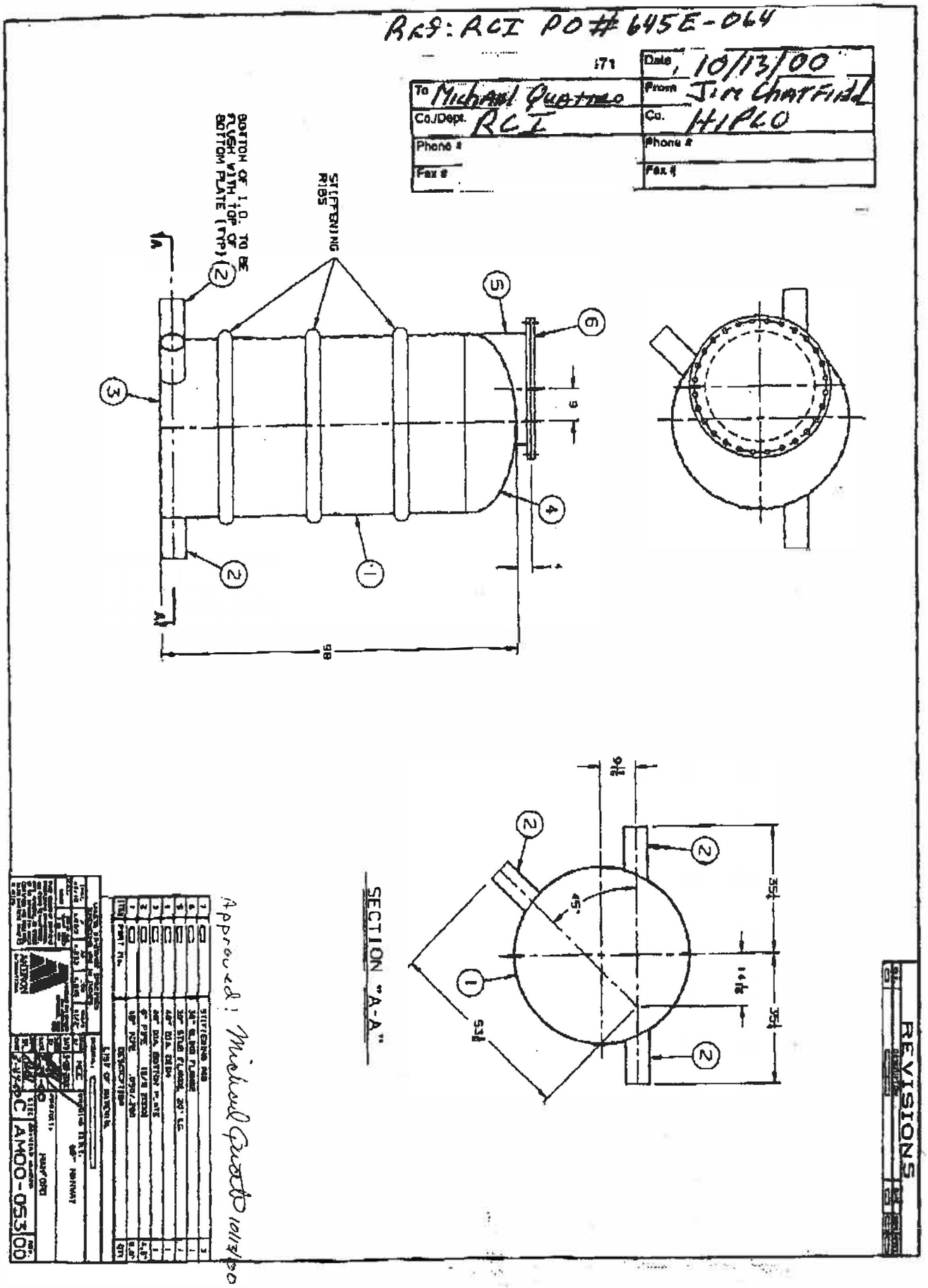
RE9: RCI PO # 645E-064
Date 10/13/00
To Michael Quattro
From Jim Chatfield
Co./Dept. RCI
Co. HIPCO
Phone #
Fax #
STIFFENING RIBS
BOTTOM OF I.D. TO BE FLUSH WITH TOP OF BOTTOM PLATE (TYP)
SECTION "A-A"
REVISIONS
Approved: Michael Quattro 10/17/00
AMOO-053
00

3) UHA-51 (e)(2) NO IMPACT TESTING.
2) ALL NPT ARE SA-182-304 S.S.
1) HYDRO @ 325 PSIG. MIN.

NOTE:

SHELL / HEADS	.135" SA-240-304 S.S. 2:1 S.E.		
	TRIM		
	.187" SA-240-304 S.S.		
M.A.W.P.	250 PSIG. @ 200 °F		
M.D.M.T.	-155 °F @ 250 PSIG.		
ASME: SECTION VIII DIV. 1, 2013			
X-RAY: RT-NO			
GALLONS: 30	WT. 131 LBS.		
SERIAL NO.			
N.B. NO.			

16-VC-30-L	REV. 2-16-15
304 S.S.	DATE: 12-12-06
FOR: HANSON STANDARD	
VERT. AIR TANK	
SURFACE AREA = 14.8 SQ. FT.	
INSIDE: UNPAINTED - PASSIVATE	
OUTSIDE: BEAD BLAST & PASSIVATE	
CAD-"B" SIZED UNDER "STD"-SERIES	
BY: E.S.	SCALE: 1"=12"

ROY E. HANSON JR. MFG.
1600 E. WASHINGTON BLVD.
LOS ANGELES, CA 90021

TABLE A–3E

Properties of saturated water

Temp. T, °F	Saturation Pressure P_{sat}, psia	Density ρ, lbm/ft^3 Liquid	Density ρ, lbm/ft^3 Vapor	Enthalpy of Vaporization h_{fg}, Btu/lbm	Specific Heat c_p, Btu/lbm·R Liquid	Specific Heat c_p, Btu/lbm·R Vapor	Thermal Conductivity k, Btu/h·ft·R Liquid	Thermal Conductivity k, Btu/h·ft·R Vapor	Dynamic Viscosity μ, lbm/ft·s Liquid	Dynamic Viscosity μ, lbm/ft·s Vapor	Prandtl Number Pr Liquid	Prandtl Number Pr Vapor	Volume Expansion Coefficient β, 1/R Liquid	Surface Tension, lbf/ft Liquid
32.02	0.0887	62.41	0.00030	1075	1.010	0.446	0.324	0.0099	1.204×10^{-3}	6.194×10^{-6}	13.5	1.00	-0.038×10^{-3}	0.00518
40	0.1217	62.42	0.00034	1071	1.004	0.447	0.329	0.0100	1.038×10^{-3}	6.278×10^{-6}	11.4	1.01	0.003×10^{-3}	0.00514
50	0.1780	62.41	0.00059	1065	1.000	0.448	0.335	0.0102	8.781×10^{-4}	6.361×10^{-6}	9.44	1.01	0.047×10^{-3}	0.00509
60	0.2563	62.36	0.00083	1060	0.999	0.449	0.341	0.0104	7.536×10^{-4}	6.444×10^{-6}	7.95	1.00	0.080×10^{-3}	0.00503
70	0.3632	62.30	0.00115	1054	0.999	0.450	0.347	0.0106	6.556×10^{-4}	6.556×10^{-6}	6.79	1.00	0.115×10^{-3}	0.00497
80	0.5073	62.22	0.00158	1048	0.999	0.451	0.352	0.0108	5.764×10^{-4}	6.667×10^{-6}	5.89	1.00	0.145×10^{-3}	0.00491
90	0.6988	62.12	0.00214	1043	0.999	0.453	0.358	0.0110	5.117×10^{-4}	6.778×10^{-6}	5.14	1.00	0.174×10^{-3}	0.00485
100	0.9503	62.00	0.00286	1037	0.999	0.454	0.363	0.0112	4.578×10^{-4}	6.889×10^{-6}	4.54	1.01	0.200×10^{-3}	0.00479
110	1.2763	61.86	0.00377	1031	0.999	0.456	0.367	0.0115	4.128×10^{-4}	7.000×10^{-6}	4.05	1.00	0.224×10^{-3}	0.00473
120	1.6945	61.71	0.00493	1026	0.999	0.458	0.371	0.0117	3.744×10^{-4}	7.111×10^{-6}	3.63	1.00	0.246×10^{-3}	0.00467
130	2.225	61.55	0.00636	1020	0.999	0.460	0.375	0.0120	3.417×10^{-4}	7.222×10^{-6}	3.28	1.00	0.267×10^{-3}	0.00460
140	2.892	61.38	0.00814	1014	0.999	0.463	0.378	0.0122	3.136×10^{-4}	7.333×10^{-6}	2.98	1.00	0.287×10^{-3}	0.00454
150	3.722	61.19	0.0103	1008	1.000	0.465	0.381	0.0125	2.889×10^{-4}	7.472×10^{-6}	2.73	1.00	0.306×10^{-3}	0.00447
160	4.745	60.99	0.0129	1002	1.000	0.468	0.384	0.0128	2.675×10^{-4}	7.583×10^{-6}	2.51	1.00	0.325×10^{-3}	0.00440
170	5.996	60.79	0.0161	996	1.001	0.472	0.386	0.0131	2.483×10^{-4}	7.722×10^{-6}	2.90	1.00	0.346×10^{-3}	0.00434
180	7.515	60.57	0.0199	990	1.002	0.475	0.388	0.0134	2.317×10^{-4}	7.833×10^{-6}	2.15	1.00	0.367×10^{-3}	0.00427
190	9.343	60.35	0.0244	984	1.004	0.479	0.390	0.0137	2.169×10^{-4}	7.972×10^{-6}	2.01	1.00	0.382×10^{-3}	0.00420
200	11.53	60.12	0.0297	978	1.005	0.483	0.391	0.0141	2.036×10^{-4}	8.083×10^{-6}	1.88	1.00	0.395×10^{-3}	0.00412
210	14.125	59.87	0.0359	972	1.007	0.487	0.392	0.0144	1.917×10^{-4}	8.222×10^{-6}	1.77	1.00	0.412×10^{-3}	0.00405
212	14.698	59.82	0.0373	970	1.007	0.488	0.392	0.0145	1.894×10^{-4}	8.250×10^{-6}	1.75	1.00	0.417×10^{-3}	0.00404
220	17.19	59.62	0.0432	965	1.009	0.492	0.393	0.0148	1.808×10^{-4}	8.333×10^{-6}	1.67	1.00	0.429×10^{-3}	0.00398
230	20.78	59.36	0.0516	959	1.011	0.497	0.394	0.0152	1.711×10^{-4}	8.472×10^{-6}	1.58	1.00	0.443×10^{-3}	0.00390
240	24.97	59.09	0.0612	952	1.013	0.503	0.394	0.0156	1.625×10^{-4}	8.611×10^{-6}	1.50	1.00	0.462×10^{-3}	0.00383
250	29.82	58.82	0.0723	946	1.015	0.509	0.395	0.0160	1.544×10^{-4}	8.611×10^{-6}	1.43	1.00	0.480×10^{-3}	0.00375
260	35.42	58.53	0.0850	939	1.018	0.516	0.395	0.0164	1.472×10^{-4}	8.861×10^{-6}	1.37	1.00	0.497×10^{-3}	0.00367
270	41.85	58.24	0.0993	932	1.020	0.523	0.395	0.0168	1.406×10^{-4}	9.000×10^{-6}	1.31	1.01	0.514×10^{-3}	0.00360
280	49.18	57.94	0.1156	925	1.023	0.530	0.395	0.0172	1.344×10^{-4}	9.111×10^{-6}	1.25	1.01	0.532×10^{-3}	0.00352
290	57.53	57.63	0.3390	918	1.026	0.538	0.395	0.0177	1.289×10^{-4}	9.250×10^{-6}	1.21	1.01	0.549×10^{-3}	0.00344
300	66.98	57.31	0.1545	910	1.029	0.547	0.394	0.0182	1.236×10^{-4}	9.389×10^{-6}	1.16	1.02	0.566×10^{-3}	0.00336
320	89.60	56.65	0.2033	895	1.036	0.567	0.393	0.0191	1.144×10^{-4}	9.639×10^{-6}	1.09	1.03	0.636×10^{-3}	0.00319
340	117.93	55.95	0.2637	880	1.044	0.590	0.391	0.0202	1.063×10^{-4}	9.889×10^{-6}	1.02	1.04	0.656×10^{-3}	0.00303
360	152.92	55.22	0.3377	863	1.054	0.617	0.389	0.0213	9.972×10^{-5}	1.013×10^{-5}	0.973	1.06	0.681×10^{-3}	0.00286
380	195.60	54.46	0.4275	845	1.065	0.647	0.385	0.0224	9.361×10^{-5}	1.041×10^{-5}	0.932	1.08	0.720×10^{-3}	0.00269
400	241.1	53.65	0.5359	827	1.078	0.683	0.382	0.0237	8.833×10^{-5}	1.066×10^{-5}	0.893	1.11	0.771×10^{-3}	0.00251
450	422.1	51.46	0.9082	775	1.121	0.799	0.370	0.0271	7.722×10^{-5}	1.130×10^{-5}	0.842	1.20	0.912×10^{-3}	0.00207
500	680.0	48.95	1.479	715	1.188	0.972	0.352	0.0312	6.833×10^{-5}	1.200×10^{-5}	0.830	1.35	1.111×10^{-3}	0.00162
550	1046.7	45.96	4.268	641	1.298	1.247	0.329	0.0368	6.083×10^{-5}	1.280×10^{-5}	0.864	1.56	1.445×10^{-3}	0.00118
600	1541	42.32	3.736	550	1.509	1.759	0.299	0.0461	5.389×10^{-5}	1.380×10^{-5}	0.979	1.90	1.885×10^{-3}	0.00074
650	2210	37.31	6.152	422	2.086	3.103	0.267	0.0677	4.639×10^{-5}	1.542×10^{-5}	1.30	2.54		0.00034
700	3090	27.28	13.44	168	13.80	25.90	0.254	0.1964	3.417×10^{-5}	2.044×10^{-5}	6.68	9.71		0.00002
705.44	3204	19.79	19.79	0	∞	∞	∞	∞	2.897×10^{-5}	2.897×10^{-5}				0

Note 1: Kinematic viscosity ν and thermal diffusivity α can be calculated from their definitions, $\nu = \mu/\rho$ and $\alpha = k/\rho c_p = \nu/\text{Pr}$. The temperatures 32.02°F, 212°F, and 705.44°F are the triple-, boiling-, and critical-point temperatures of water, respectively. All properties listed above (except the vapor density) can be used at any pressure with negligible error except at temperatures near the critical-point value.

Note 2: The unit Btu/lbm·°F for specific heat is equivalent to Btu/lbm·R, and the unit Btu/h·ft·°F for thermal conductivity is equivalent to Btu/h·ft·R.

Source: Viscosity and thermal conductivity data are from J. V. Sengers and J. T. R. Watson, *Journal of Physical and Chemical Reference Data* 15 (1986), pp. 1291–1322. Other data are obtained from various sources or calculated.

Attachment B – Excel and MathCAD Files

Part 1. Preliminary Calculations

- B1 W310-311 PC5000 Pipe Segment Calc Sheet.xlsd
- B2 Pipe & Tank Volumes.xmcd
- B3 Properties of Moist Air - RH Known.xmcd

Part 2. Open Channel Flow in Sloped Pipes – Falling Film Methods

- 1 Falling Film Problem A-B.xmcd
- 2 Falling Film Problem A-C.xmcd
- 3 Falling Film Problem D-C.xmcd
- 4 Falling Film Problem C-E.xmcd
- 5 Falling Film Problem A-E.xmcd
- 6 Falling Film Problem D-E.xmcd

Part 3. Open Channel Flow in Sloped Pipes – Manning/Akgiray Methods

- 7 Open Channel Problem A-B.xmcd
- 8 Open Channel Problem C-E.xmcd

Title: WTP/Evaporator Transfer System Hydraulic Analysis
Engineer/Analyst: JJ Irwin (Electronic Signature on File in SPF)
Checker: JT Lovelady (Electronic Signature on File in SPF)

Pipe Length Calculation 4"-WTP-001-M17										
	STA	**Northing (X), m**	**Easting (Y), m**	**Elevation (Z), m**	**Elevation Change, m**	**Length of Section, m**	**Elevation Change, ft**	**Length of Section, ft**	**β°**	**Slope, %**
Start of Pipe	0+400.00	136094.438	576188.726	201.6493	0.3054	42.4724	1.0020	139.3452	89.59	0.72%
90° Turn	0+433.00	136136.909	576189.005	201.3439						
	0+433.00	136136.909	576189.005	201.3439	1.0379	552.3970	3.4052	1812.3260	89.89	0.19%
45° Turn	0+995.39	136136.88	575636.609	200.306						
	0+995.39	136136.88	575636.609	200.306	0.5130	124.2831	1.6831	407.7529	89.76	0.41%
45° Turn	1+119.64	136224.59	575548.558	199.793						
	1+119.64	136224.59	575548.558	199.793	0.3160	83.4666	1.0367	273.8406	89.78	0.38%
45° Turn	1+202.99	136308.056	575548.606	199.477						
	1+202.99	136308.056	575548.606	199.477	0.1600	36.5101	0.5249	119.7839	89.75	0.44%
45° Turn	1+239.50	136333.999	575522.917	199.317						
	1+239.50	136333.999	575522.917	199.317	12.1030	859.9496	39.7080	2821.3569	89.19	1.41%
45° Turn	2+099.38	137193.861	575520.882	187.214						
	2+099.38	137193.861	575520.882	187.214	0.0430	7.1462	0.1411	23.4454	89.66	0.60%
45° Turn	2+106.52	137198.909	575525.94	187.171						
	2+106.52	137198.909	575525.94	187.171	0.6570	207.2518	2.1555	679.9600	89.82	0.32%
45° Turn	2+313.66	137199.475	575733.19	186.514						
	2+313.66	137199.475	575733.19	186.514	0.1000	19.2239	0.3281	63.0707	89.70	0.52%
End of Pipe	2+333.0	137186.02	575746.92	186.414						
						Totals:	49.98	6340.88	89.55	0.79%

File Name: B1 W310-311 PC5000 Pipe Segment Calc Sheet.xlsd

Title: WTP/Evaporator Transfer System Hydraulic Analysis
Engineer/Analyst: JJ Irwin (Electronic Signature on File in SPF)
Checker: JT Lovelady (Electronic Signature on File in SPF)

Pipe Configurations, 3"-WTP-002-M17										
	STA	**Northing (X), m**	**Easting (Y), m**	**Elevation (Z), m**	**Elevation Change, m**	**Length of Section, m**	**Elevation Change, ft**	**Length of Section, ft**	**β°**	**Slope, %**
Start of Pipe	0+400.00	136094.2965	576187.7445	201.5708	0.204	41.61	0.67	136.51	89.72	0.49%
90° Turn	0+443.00	136135.9031	576188.1477	201.3668						
	0+443.00	136135.9031	576188.1477	201.3668	1.0898	552.04	3.58	1811.14	89.89	0.20%
45° Turn	0+995.89	136136.004	575636.112	200.277						
	0+995.89	136136.004	575636.112	200.277	0.8570	127.850	2.81	419.46	89.62	0.67%
End of Pipe	1 +122.89	136226.048	575545.354	199.420						
					Totals	Node 8B to Caisson:	7.06	2367.11	89.83	0.30%
						Caisson to LERF:	51.14	4341.92	89.33	1.18%
						Node 8B to LERF:	58.19	6709.03	89.50	0.87%

File Name: B1 W310-311 PC5000 Pipe Segment Calc Sheet.xlsd

Title: WTP/Evaporator Transfer System Hydraulic Analysis
Engineer/Analyst: JJ Irwin (Electronic Signature on File in SPF)
Checker: JT Lovelady (Electronic Signature on File in SPF)

Pipe Length Calculation 3"-PC-5000-M17

	STA	Northing (X), ft	Westing (Y), ft	Elevation (Z), ft	Elevation Change, ft	Length of Section, ft	β°	Slope, %
Exit Pt @ 242-A	0+00	41040.33	47617.50	683.66	0.0000	4.3900	90.0000	0.0000%
45° bend	0+04.39	41044.72	47617.50	683.66				
	0+04.39	41044.72	47617.50	683.66	2.1100	2.9840	45.0000	70.7107%
45° bend	0+06.5	41046.83	47617.50	681.55				
	0+06.5	41046.83	47617.50	681.55	0.2600	50.5007	89.7050	0.5148%
90° bend	0+57	41097.33	47617.50	681.29				
	0+57	41097.33	47617.50	681.29	0.4200	81.5011	89.7047	0.5153%
45° bend	1+38.50	41097.33	47536.00	680.87				
	1+38.50	41097.33	47536.00	680.87	0.2400	45.2555	89.6961	0.5303%
45° bend	1+83.75	41065.33	47504.00	680.63				
	1+83.75	41065.33	47504.00	680.63	11.8200	434.1609	88.4399	2.7225%
90° bend	6+17.75	41065.33	47070.00	668.81				
	6+17.75	41065.33	47070.00	668.81	15.2600	739.1175	88.8170	2.0646%
Intersection of PC-5000 and WTP-002	Caisson Int Pt	41804.29	47070.00	653.55				
	Caisson Int Pt	41804.29	47070.00	653.55	38.5500	1082.3967	87.9590	3.5615%
45° bend	24+38.42	42886.00	47070.00	615.00				
	24+38.42	42886.00	47070.00	615.00	2.5000	118.8202	88.7944	2.1040%
45° bend	25+57.21	42970.00	47154.00	612.50				
	25+57.21	42970.00	47154.00	612.50	5.0700	2029.5063	89.8569	0.2498%
90° bend	45+86.71	44999.50	47154.00	607.43				
	45+86.71	44999.50	47154.00	607.43	1.7800	1060.8634	89.9039	0.1678%
45° bend at LERF Basin	3+02.62	44997.50	46093.14	605.65				
	3+02.62	44997.50	46093.14	605.65	0.0500	48.9522	89.9415	0.1021%
LDE at LERF Basin	3+52.97*	44961.90	46059.54	605.60				
				Totals:	78.06	5698.45	89.22	1.37%
				242-A Bldg to Caisson	30.11	1357.91	88.73	2.22%
				Caisson to LERF	47.95	4340.54	89.37	1.10%
				242-A Bldg to LERF	78.06	5698.45	89.22	1.37%

File Name: B1 W310-311 PC5000 Pipe Segment Calc Sheet.xlsd

Title: WTP/Evaporator Transfer System Hydraulic Analysis
Engineer/Analyst: JJ Irwin (Electronic Signature on File in SPF)
Checker: JT Lovelady (Electronic Signature on File in SPF)

B2 W310, W311 and PC-5000 Transfer Pipe and Tank Volume Calculations

Developed by Gabby Sanchez (11-07-2018)

Part. 1 Transfer Lines Volumes

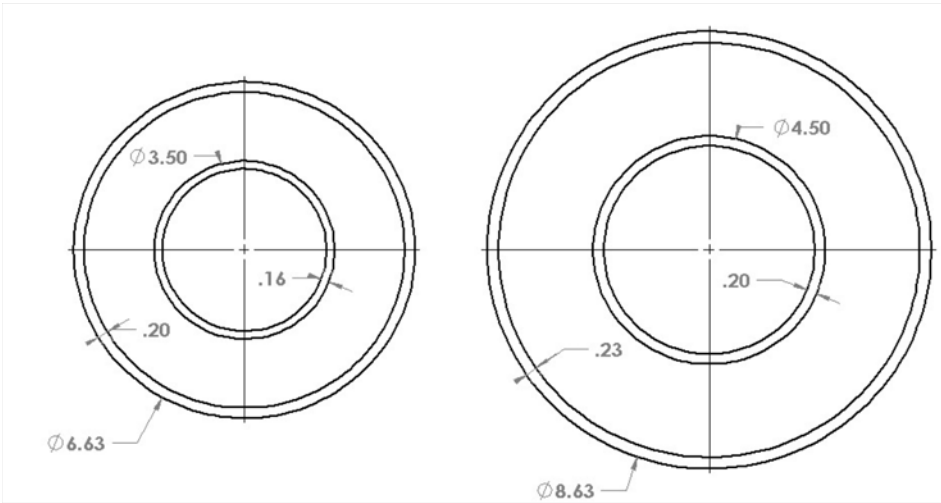

This calculation worksheet determines the volume of the 8" containment pipe with a 4" Carrier pipe and the 6" Containment Pipe with a 3" Carrier Pipe.

Segment A-B, W-310 (4"-WTP-001-M17), from WTP Node 8A to LERF Basin 42

Preliminary Calculations

$L_{AB} := 6340.88 \cdot ft$ — Pipe cylindrical length, Segment A-B (Ref. W310-311 PC5000 Pipe Segment Calc Sheet. xlsd)

$OD8 := 8.625 \cdot in$ — OD of 8-in. Fiberglass pipe, same as steel pipe per ASME B36-10M-2004.

$t_{w8} := 0.229 \cdot in$ — Wall thickness of 8" Containment Pipe (Ref. Bondstrand 4000 Brochure)

$ID8 := OD8 - 2t_{w8} = 8.167 \cdot in$ — Inner Diameter of 8-in Containment Pipe.

$OD4 := 4.50 \cdot in$ — OD of 4-in Fiberglass carrier pipe, same as steel pipe per ASME B36-10M-2004.

Volume Calculations

$$V_{p1} := \frac{\pi\left(ID8^2 - OD4^2\right) \cdot L_{AB}}{4} = 12016.925 \cdot gal$$

Volume of Pipe Segment A-B (Ref. Roark's, 2002, Table A.1 item 16.)

Segment A-C, Segment D-C and Segment C-E

Preliminary Calculations

$L_{AC} := 2367.11 \cdot ft$ — Pipe cylindrical length, Segment A-C (Ref. W310-311 PC5000 Pipe Segment Calc Sheet. xlsd)

$L_{DC} := 1357.75 \cdot ft$ — Pipe cylindrical length, Segment D-C (Ref. W310-311 PC5000 Pipe Segment Calc Sheet. xlsd)

$L_{CE} := 4340.54 \cdot ft$ — Pipe cylindrical length, Segment C-E (Ref. W310-311 PC5000 Pipe Segment Calc Sheet. xlsd)

$L_{AE} := L_{AC} + L_{DC} + L_{CE} = 8065.4 \cdot ft$ — Total Length of pipe segments.

$OD6 := 6.625 \cdot in$ — OD of 6-in. Fiberglass pipe, same as steel pipe per ASME B36-10M-2004.

$t_{w6} := 0.140 \cdot in$ — Wall thickness of 6" Containment Pipe (Ref. Fibercast Co. data)

$ID6 := OD6 - 2 \cdot t_{w6} = 6.345 \cdot in$ — Inner Diameter of 6" Containment Pipe.

$OD3 := 3.50 \cdot in$ — OD of 3-in. Fiberglass carrier pipe, same as steel pipe per ASME B36-10M-2004.

Volume Calculations

$$V_{p2} := \frac{\pi\left(ID6^2 - OD3^2\right) \cdot L_{AE}}{4} = 9216.861 \cdot gal$$

Volume of Pipe Segment A-C, Segment D-C and Segment C-E. (Ref. Roark's, 2002, Table A.1 item 16.)

Part. 2 Geometry of PC-5000 Caisson (Vertical Cylindrical Shell with 2:1 Ellipsoidal Head at top and Flat Bottom Head)

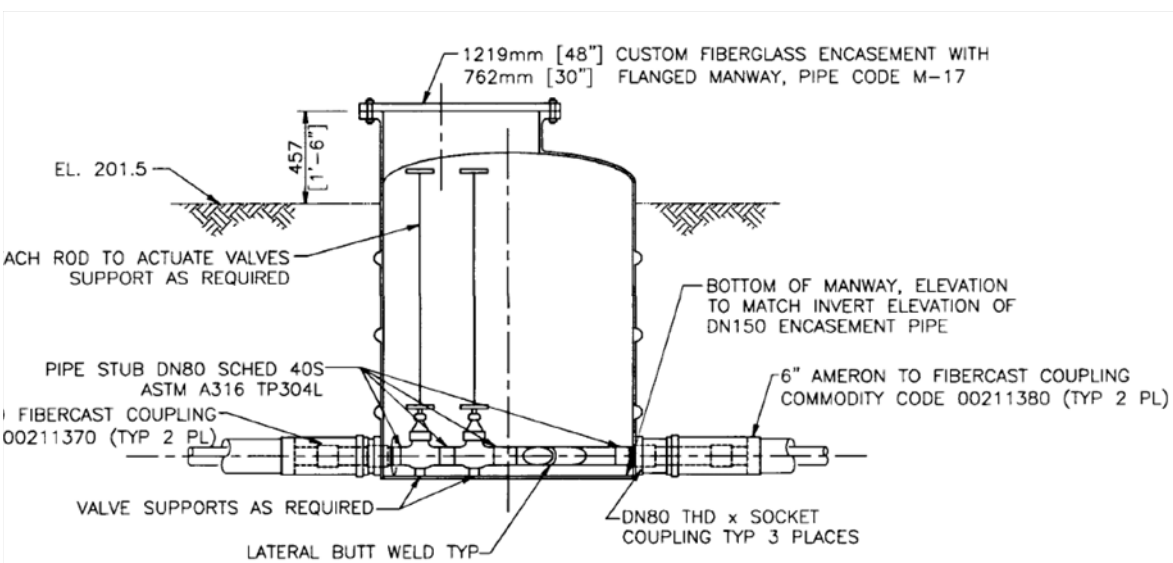

Figure 3. PC-5000 Caisson

Title: WTP/Evaporator Transfer System Hydraulic Analysis
Engineer/Analyst: JJ Irwin (Electronic Signature on File in SPF)
Checker: JT Lovelady (Electronic Signature on File in SPF)

This calculation worksheet determines the internal volume of a vertical cylindrical tank with ellipsoidal top head and flat bottom head.

Input Parameters (per drawing H-2-830102, Sht. 2)

$OD := 49.0 \cdot in$ Outside diameter of the tank/ellipsoidal head.

$OAL := 58.0 \cdot in$ Over All Length of cylindrical tank.

$t_{hd} := 0.50 \cdot in$ Wall thickness of top and bottom Head.

$t_{sh} := 0.5 \cdot in$ Wall thickness of Shell.

$L_{cl} := 57 \cdot in$ Tank cylindrical length

Preliminary Calculations

$ID_{hd} := OD - 2 \cdot t_{hd} = 48.0000 \cdot in$ Inside Diameter of the Ellipsoidal Head.

$ID_{sh} := OD - 2 \cdot t_{sh} = 48.0000 \cdot in$ Inside Diameter of the shell.

$ISD_e := 6.0 \cdot in$ Inside Depth of dish of the Ellipsoidal Portion of the Head.

$a_i := \frac{ID_{hd}}{2} = 24 \cdot in$ Inside Radius of the Head.

$b_i := a_i = 24 \cdot in$ Inside Radius of the Head.

$c_i := ISD_e = 6 \cdot in$ Inside Radius/ISDe of the Head.

$L_{sh} := OAL - 2 \cdot t_{hd} = 57 \cdot in$ Inside length of shell.

Volume Calculations

$V_{hd} := \frac{2}{3} \cdot \pi \cdot a_i \cdot b_i \cdot c_i = 4.189 \cdot ft^3$ Inside volume of the top or bottom head, Zwillinger, 1996, pg. 318.

$V_{sh} := \frac{\pi \cdot ID_{sh}^2}{4} \cdot L_{sh} = 59.69 \cdot ft^3$ Inside volume of the tank shell Zwillinger, 1996, pg. 312.

$V_{tk2} := V_{sh} + V_{hd} = 477.848 \cdot gal$ Total inside volume of tank.

$L_w := 0.125 \cdot in$ Assumed liquid height at bottom of Caisson.

$V_c := \frac{\pi \cdot ID_{sh}^2}{4} \cdot L_w = 0.979 \cdot gal$ Inside volume of the tank shell Zwillinger, 1996, pg. 312.

Part. 3 Geometry of LERF Catch Tank (Vertical Cylindrical Shell with 2:1 Ellipsoidal Heads)

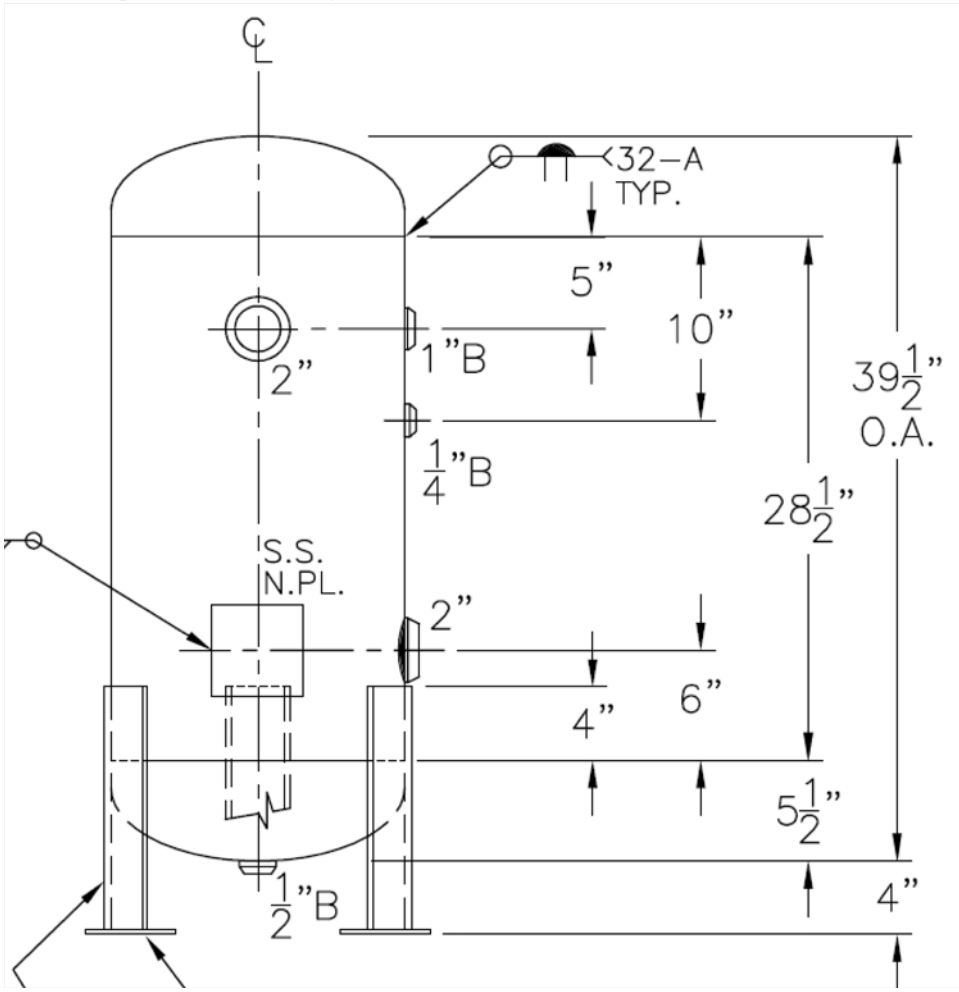

Figure 2. PC-5000 Transfer Line Catch Tank at LERF Basin, Ref. H-2-79614, sht. 2.

This calculation worksheet determines the internal volume of a vertical cylindrical tank with 2:1 ellipsoidal top and bottom heads (30 gallon nominal capacity).

Input Parameters (per Roy E. Hanson Jr MFG Drawing 16-VC-30-L, Rev. 2)

$OD := 16 \cdot in$	Outside diameter of the tank/ellipsoidal head.
$OAL := 39.5 \cdot in$	Over All Length of tank.
$t_{hd} := 0.1350 \cdot in$	Wall thickness of Head.
$t_{sh} := 0.187 \cdot in$	Wall thickness of Shell.
$L_{cl} := 28.5 \cdot in$	Tank cylindrical length (weld to weld)
$SF := 1.5 \cdot in$	Straight flange length of ellipsoidal head.

Title: WTP/Evaporator Transfer System Hydraulic Analysis
Engineer/Analyst: JJ Irwin (Electronic Signature on File in SPF)
Checker: JT Lovelady (Electronic Signature on File in SPF)

Preliminary Calculations

$ID_{hd} := OD - t_{hd} = 15.8650 \cdot in$ Inside Diameter of the 2:1 Ellipsoidal Head.

$ID_{sh} := OD - t_{sh} = 15.8130 \cdot in$ Inside Diameter of the shell.

$ISD_e := \frac{OD}{4} - t_{hd} = 3.865 \cdot in$ Inside Depth of dish of the 2:1 Ellipsoidal Portion of the Head.

$a_i := \frac{ID_{hd}}{2} = 7.933 \cdot in$ Inside Radius of the Head.

$b_i := a_i = 7.933 \cdot in$ Inside Radius of the Head.

$c_i := ISD_e = 3.865 \cdot in$ Inside Radius/ISDe of the Head.

$L_{sh} := L_{cl} + 2 \cdot SF = 31.5 \cdot in$ Length of shell plus straight flange lengths.

Volume Calculations

$V_{hd} := \frac{2}{3} \cdot \pi \cdot a_i \cdot b_i \cdot c_i = 0.295 \cdot ft^3$ Inside volume of the top or bottom head, Zwillinger, 1996, pg. 318.

$V_{sh} := \frac{\pi \cdot ID_{sh}^2}{4} \cdot L_{sh} = 3.58 \cdot ft^3$ Inside volume of the tank shell Zwillinger, 1996, pg. 312.

$V_{tk1} := V_{sh} + 2 \cdot V_{hd} = 31.19 \cdot gal$ Total inside volume of tank.

Total Volume of vapor space in Pipe segment A-C, D-C and C-E , Caisson and Catch tank.

$V_{t2} := V_{p2} + V_{tk1} + V_{tk2} = 9725.9 \cdot gal$

Title: WTP/Evaporator Transfer System Hydraulic Analysis
Engineer/Analyst: JJ Irwin (Electronic Signature on File in SPF)
Checker: JT Lovelady (Electronic Signature on File in SPF)

Volume of Catch Tank Leak Detector Fixture

Input Parameters (per Drawing H-2-79614, sht 2, Rev. 1)

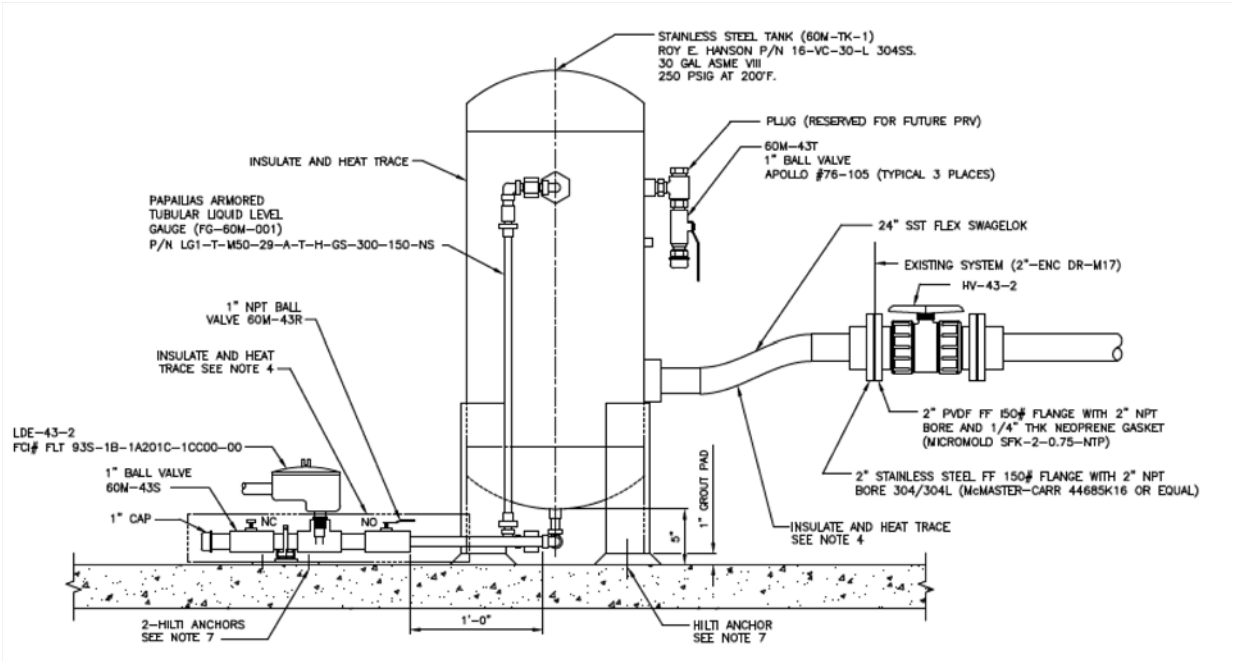

$d_1 := 0.957 \cdot in$ — Inside diameter for 1-in sch 80 pipe per ASME B36-10M.

$L_1 := 12 \cdot in$ — Length of pipe segment 1 per Autocad file for H-2-79614.

$L_2 := 12 \cdot in$ — Length of pipe segment 2 per Autocad file for H-2-79614.

$L_3 := 8.25 in$ — Length of pipe segment 3 per Autocad file for H-2-79614.

$L_{vlv} := 4 \cdot in$ — Length of pipe segment valve per Autocad file for H-2-79614.

$L_t := L_1 + L_2 + L_3 + 1.5 L_{vlv} = 3.187 \cdot ft$ — Total Length of pipe with 1 valve open and 1 valve closed.

$$Vol_{ldf} := \frac{\pi \cdot d_1^2}{4 \cdot 2} \cdot L_t = 7.961 \times 10^{-3} \cdot ft^3$$ — Volume of leak Detector Fitting, half full.

$Vol_{ldf} = 0.06 \cdot gal$

Title: WTP/Evaporator Transfer System Hydraulic Analysis
Engineer/Analyst: JJ Irwin (Electronic Signature on File in SPF)
Checker: JT Lovelady (Electronic Signature on File in SPF)

B3 Properties of Moist Air - Relative Humidity Known

Developed By: John J Irwin, Principal Mechanical Engineer (11-07-2018)

Psychrometric Chart

Moist air properties such as enthalpy and specific volume may be determined with the equations given in ASHRAE or using a psychrometric chart. The main limitation of the chart is, of course, accuracy and that it is drawn for a specific pressure.

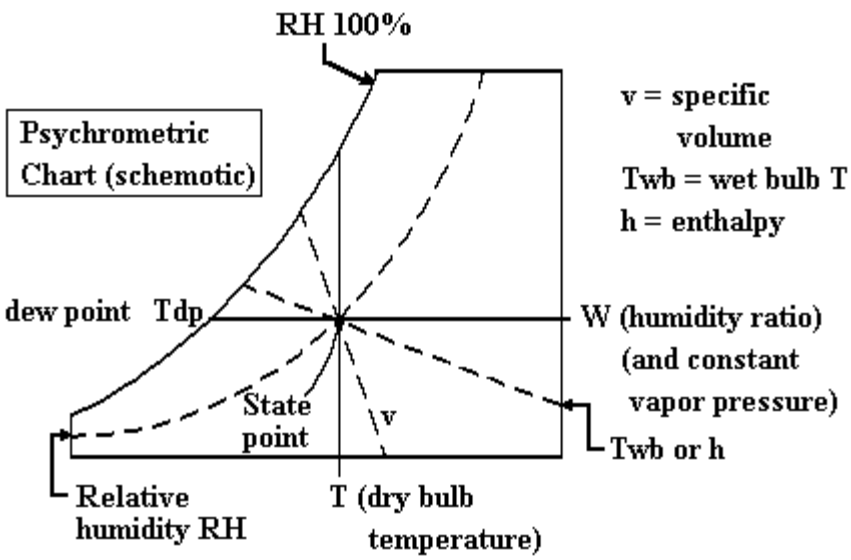

Usually, the problem in determining moist air properties can be reduced to three cases. In all cases, there are two known parameters: the pressure (total) and the dry bulb temperature. A third parameter is required to define the state of moist air. This third parameter is relative humidity, or dew-point or wet-bulb temperature. We consider below an example for known RH case.

Some initial definitions:

$kJ := 1000 \cdot joule$ $\qquad$ $lbmol := 453.592mol$

Specific Gas Constants of Air and Water Vapor (2013 ASHRAE Fundamentals, Chapter 1, eqn. 1 and 2)

$R_u := 8.314462 \frac{J}{mol \cdot K}$ $\qquad$ $R_u = 1545.3457 \cdot \frac{lbf \cdot ft}{lbmol \cdot R}$

$MW_a := 28.966 \cdot \frac{gm}{mol}$ $\qquad$ $MW_w := 18.015268 \cdot \frac{gm}{mol}$

$\frac{MW_w}{MW_a} = 0.6219453$

Title: WTP/Evaporator Transfer System Hydraulic Analysis
Engineer/Analyst: JJ Irwin (Electronic Signature on File in SPF)
Checker: JT Lovelady (Electronic Signature on File in SPF)

$R_a := \frac{R_u}{MW_a} = 287.0421 \cdot \frac{J}{kg \cdot K}$ $\qquad R_a = 53.3504 \cdot \frac{ft \cdot lbf}{lbm \cdot R}$

$R_w := \frac{R_u}{MW_w} = 461.5231 \cdot \frac{J}{kg \cdot K}$ $\qquad R_w = 85.7798 \cdot \frac{ft \cdot lbf}{lbm \cdot R}$

Given T, p, RH (relative humidity) 2013 ASHRAE Fundamentals, Chapter 1, Situation 3

Determine the various properties of moist air given the following data:

$p := 1 \cdot atm \qquad T := 4.4444\,°C \qquad T = 39.9999 \cdot °F \qquad RH := 1.0 \qquad (100\%RH)$

First calculate the saturated vapor pressure (2013 ASHRAE Fundamentals, Chapter 1, eqn. 6):

$a := -1.0440397 \cdot 10^{4} \qquad b := -11.294650$

$c := -2.7022355 \cdot 10^{-2} \qquad d := 1.2890360 \cdot 10^{-5}$

$e := -2.4780681 \cdot 10^{-9} \qquad f := 6.5459673$

$$p_{ws} := \left[\exp\left[\frac{a}{\left(\frac{T}{R}\right)} + b + c \cdot \frac{T}{R} + d \cdot \left(\frac{T}{R}\right)^2 + e \cdot \left(\frac{T}{R}\right)^3 + f \cdot \ln\left(\frac{T}{R}\right) \right] \right] \cdot psi = 0.12172 \cdot psi$$

For 40°F, per Cengel and Cimbala, 2010, $p_{ws} = 0.1217$ psia

Water and Air vapor pressures (2013 ASHRAE Fundamentals, Chapter 1, eqn. 19 and 24):

$p_w := RH \cdot p_{ws} = 0.1217 \cdot psi \qquad p_w = 839.2516 \cdot Pa$

$p_a := p - p_w = 14.5742 \cdot psi \qquad p_a = 1.0049 \times 10^{5} \cdot Pa$

$p = 14.6959 \cdot psi \qquad p = 1.0132 \times 10^{5} \cdot Pa$

Humidity Ratios ($kg_{water}/kg_{dry\ air}$, $lb_{water}/lb_{dry\ air}$) (2013 ASHRAE Fundamentals, Chapter 1, eqn. 22 and 23) :

$$W := 0.6219453 \cdot \frac{p_w}{p_a} = 0.00519$$

$$W_s := 0.6219453 \cdot \frac{p_{ws}}{p_a} = 0.0052$$

The term p_{ws} represents the saturation pressure of water vapor in the absence of air at the given temperature T. This pressure p_{ws} is a function only of temperature and differs slightly from the vapor pressure of water in saturated moist air.

Specific Humidity Ratio ($kg_{water}/kg_{mixture}$, $lb_{water}/lb_{mixture}$) (2013 ASHRAE Fundamentals, Chapter 1, eqn. 9b) :

$$\gamma := \frac{W}{1+W} = 0.0052$$

Degree of saturation μ is the ratio of air humidity ratio W to humidity ratio W_s of saturated moist air at the same temperature and pressure (2013 ASHRAE Fundamentals, Chapter 1, eqn. 12 or 14) :

$$\mu_{12} := \frac{W}{W_s} = 1.0000 \qquad \mu_{14} := \frac{RH}{1+\frac{(1-RH)\cdot W_s}{0.621945}} = 1$$

Density of air at 40°F (From Ideal Gas Law):

$$\rho_a := \frac{p_a}{R_a \cdot T} = 1.2611\cdot\frac{kg}{m^3} \qquad \rho_a = 0.07873\cdot\frac{lbm}{ft^3}$$

Density of water vapor at 40°F (From Ideal Gas Law):

$$\rho_{wv} := \frac{p_w}{R_w \cdot T} = 0.0066\cdot\frac{kg}{m^3} \qquad \rho_{wv} = 0.00041\cdot\frac{lbm}{ft^3}$$

Density of mixture (From Ideal Gas Law - Amagat's Model):

$$\rho := \rho_a + \rho_{wv} = 1.2676\cdot\frac{kg}{m^3} \qquad \rho = 0.07914\cdot\frac{lbm}{ft^3}$$

$$\frac{\rho_a}{\rho} = 0.9948 \qquad \%D := \frac{\rho - \rho_a}{\rho} = 0.0052$$

Specific volume:

$$v := \frac{1+W}{\rho} = 0.79296\cdot\frac{m^3}{kg}$$

Volume of liquid water lost to containment pipe due to leakage into pipe.

$$\rho_{wl} := 62.42\cdot\frac{lbm}{ft^3}$$

Density of liquid water at 40°F Cengel, 2010.

For Pipe Segment A-E

$V_{p1} := 12008.47 \cdot gal = 1605.299 \cdot ft^3$ Volume of containment pipe, ref MathCAD worksheet "Pipe & Tank Annular Volumes. xmcd."

$V_{p1L} := \frac{V_{p1} \cdot \rho_{wv}}{\rho_{wl}} = 0.0105 \cdot ft^3$ $V_{p1L} = 0.079 \cdot gal$ Volume of liquid water lost to vapor space of Containment Piping.

For Pipe segment A-C, D-C and C-E , Caisson and Catch tank.

$V_{t2} := 8720.495 \cdot gal = 1165.7607 \cdot ft^3$ Volume of containment pipe, ref MathCAD worksheet "Pipe & Tank Annular Volumes. xmcd."

$V_{t2L} := \frac{V_{t2} \cdot \rho_{wv}}{\rho_{wl}} = 0.0076 \cdot ft^3$ $V_{t2L} = 0.057 \cdot gal$ Volume of liquid water lost to vapor space of Containment Piping.

Title: WTP/Evaporator Transfer System Hydraulic Analysis
Engineer/Analyst: JJ Irwin (Electronic Signature on File in SPF)
Checker: JT Lovelady (Electronic Signature on File in SPF)

1 Falling Film Problem A-B: 4"-WTP-001-M17 to LERF

Developed by John J Irwin, Principal Mechanical Engineer (11-07-2018)

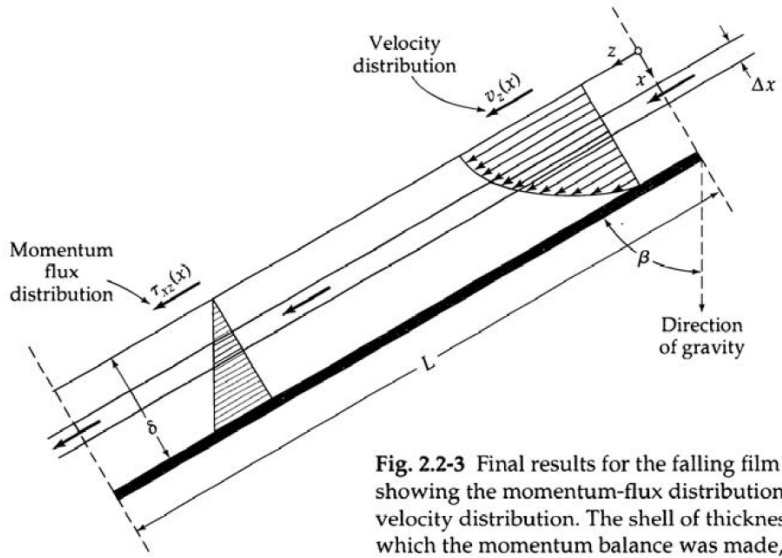

Fig. 2.2-3 Final results for the falling film problem, showing the momentum-flux distribution and the velocity distribution. The shell of thickness Δx, over which the momentum balance was made, is also shown.

Figure 2.2-3 from Bird, Stewart and Lightfoot, Transport Phenomena, 2002

Parameters

$T := 40\,°F = 4.444 \cdot °C$ — Assumed Temperature of Water.

$\mu := 0.00154502 \cdot \frac{kg}{m \cdot s} = 1.0382 \times 10^{-3} \cdot \frac{lbm}{ft \cdot sec}$ — Dynamic Viscosity of Water at 40°F (Cengel and Cimbala, 2010).

$\rho_W := 1000.124 \cdot \frac{kg}{m^3} = 62.4357 \cdot \frac{lbm}{ft^3}$ — Density of liquid Water at 40°F (Cengel and Cimbala, 2010).

$\rho_{WV} := 0.0066 \cdot \frac{kg}{m^3} = 0.00041 \cdot \frac{lbm}{ft^3}$ — Density of water vapor at 40°F per MathCad worksheet "Properties of Moist Air."

$\upsilon := \frac{\mu}{\rho_W} = 1.663 \times 10^{-5} \cdot \frac{ft^2}{sec}$ — Kinematic Viscosity at 40°F, water, basic definition.

$g = 32.174 \cdot \frac{ft}{sec^2}$ — Acceleration of gravity (MathCAD defined constant)

Configuration Data

$t_t := 24 \cdot hr$ — Maximum allowed time determined from project constraints.

Title: WTP/Evaporator Transfer System Hydraulic Analysis
Engineer/Analyst: JJ Irwin (Electronic Signature on File in SPF)
Checker: JT Lovelady (Electronic Signature on File in SPF)

$L_p := 6340.88 \cdot ft$ Length of pipe, defined by the drawings.

$\Delta z := 49.98 \cdot ft$ Change in pipe elevation defined by the drawings.

$d := 8.167 \cdot in = 0.681 \cdot ft$ Inside diamter of 8" Containment Pipe (Ref. Bondstrand 4000 Brochure)

$V_c := 0 \cdot ft^3$ Volume of Caisson, zero in this case.

$V_{wet} := 0.0025 \cdot \frac{gal}{ft}$ Experimentally determined film thickness, 0.32 oz per ft., per 24590-PTF-PER-M-04-0006.

$V_{ldf} := 0.060 \cdot gal$ Leak Detector Volume per MathCad Worksheet "Pipe and Tank Annular Volumes."

$h_b := 0.125 \cdot in$ Epoxy Resin dam height.

$V_{p1} := 12016.925 \cdot gal = 1606.429\, ft^3$ Annular volume for the 8-in containmnet pipe and L_p for this problem MathCad Worksheet "Pipe and Tank Annular Volumes."

Preliminary Calculations

$S_o := \frac{\Delta z}{L_p} = 0.00788$ Stated slope of the pipe, ft drop per foot length of pipe.

$\beta := acos\left(\frac{\Delta z}{L_p}\right) = 89.548 \cdot deg$ Slope angle, defined by the drawings.

$\cos(\beta) = 0.00788$ Approximately the same as S_o.

$V_2 := V_{wet} \cdot L_p = 15.852 \cdot gal$ Minimum volume of water for film coverage in the containment pipe.

$L_{d1} := \frac{h_b}{\tan(90° - \beta)} = 1.32150 \cdot ft$ Length of water behind one Epoxy Resin bead.

$N_b := floor\left(\frac{L_p}{20 \cdot ft}\right) = 317$ Number of Epoxy Resin beads, based upon one bead for every 20 ft of pipe.

$L_d := L_{d1} \cdot N_b = 418.917 \cdot ft$ Total Length of bed dams, based upon one bead for every 20 ft of pipe.

$A_b := h_b \sqrt{1.766 \cdot d \cdot h_b - h_b^2} = 0.00116 \cdot ft^2$ Area of bead dam.

$V_d := L_d \cdot A_b = 3.63663 \cdot gal$ Volume of water behind bead dam.

$V_l := \frac{\rho_{wv}}{\rho_w} \cdot V_{p1} = 0.079 \cdot gal$ Liquid equivalent for water evaporation into the annular space between pipes.

$\delta := 0.0640106740 \cdot in$ Initial guess of water film thickness.

$A_f := \delta\sqrt{1.766 \cdot d \cdot \delta - \delta^2} = 4.262 \times 10^{-4} \cdot ft^2$ Preliminary determination of water flow area.

Preliminary Time Determinations

$t_1 := \frac{3 \cdot \mu \cdot L_p^{\ 2}}{\rho_w \cdot g \cdot \delta^2 \cdot \Delta z} = 12.18 \cdot hr$ Time for water to traverse down the containment pipe to the LDF.

$t_2 := \frac{3 \cdot \mu \cdot L_p^{\ 2}}{\rho_w \cdot g \cdot \delta^2 \cdot \Delta z \cdot A_f} \cdot V_{wet} = 9.55 \cdot hr$ Time for water to create film on the containment pipe surface.

$t_3 := 0$ Time to fill auxiliary volume, zero in this case.

$t_4 := \frac{3 \cdot \mu \cdot L_p}{\rho_w \cdot g \cdot \delta^2 \cdot \Delta z \cdot A_f} \cdot V_{ldf} = 0.036 \cdot hr$ Time for water to fill LDF to minimum detection height.

$t_5 := \frac{3 \cdot \mu \cdot L_p}{\rho_w \cdot g \cdot \delta^2 \cdot \Delta z \cdot A_f} \cdot V_d = 2.191 \cdot hr$ Time for water to fill bead dams.

$t_6 := \frac{3 \cdot \mu \cdot L_p}{\rho_w \cdot g \cdot \delta^2 \cdot \Delta z \cdot A_f} \cdot V_l = 0.048 \cdot hr$ Time for water to compensate for loss by evaporation.

$t_t := t_1 + t_2 + t_3 + t_4 + t_5 + t_6 = 24.0000 \cdot hr$ Iterate on water thickness until t_t is 24 hrs.

$v_{avg} := \frac{\rho_w \cdot g \cdot \delta^2 \cdot \Delta z}{3 \cdot \mu \cdot L_p} = 0.1447 \cdot \frac{ft}{sec}$ Average Velocity of Flowing water, based upon Bird (2002), eqn. 2.2-20.

Using a MathCad Solve Block

Starting Iteration $\delta_f := 0.06 \cdot in$ $\delta = 0.0640106740 \cdot in$

Title: WTP/Evaporator Transfer System Hydraulic Analysis
Engineer/Analyst: JJ Irwin (Electronic Signature on File in SPF)
Checker: JT Lovelady (Electronic Signature on File in SPF)

$V_{36} := V_c + V_{ldf} + V_d + V_l = 3.776 \cdot gal$ Volume 3 thru 6, defined above

Given

$$24 \cdot hr = \frac{3 \cdot \mu \cdot L_p^2}{\rho_w \cdot g \cdot \delta_f^2 \cdot \Delta z} + \frac{3 \cdot \mu \cdot V_{wet} \cdot L_p^2}{\rho_w \cdot g \cdot \delta_f^2 \cdot \Delta z \cdot \left(\delta_f \sqrt{1.766 \cdot d \cdot \delta_f - \delta_f^2}\right)} \ldots + \frac{3 \cdot \mu \cdot L_p}{\rho_w \cdot g \cdot \delta_f^2 \cdot \Delta z \cdot \left(\delta_f \sqrt{1.766 \cdot d \cdot \delta_f - \delta_f^2}\right)} \cdot V_{36}$$

$\delta_f := \mathrm{Find}(\delta_f)$ $\delta_f = 0.0640106740 \cdot in$ Solve Block solution for film thickness

$v_{avg} := \frac{\rho_w \cdot g \cdot \delta_f^2 \cdot \Delta z}{3 \cdot \mu \cdot L_p} = 0.1447 \cdot \frac{ft}{sec}$ Average Velocity of Flowing water, final determination

$A_f := \delta_f \sqrt{1.766 \cdot d \cdot \delta_f - \delta_f^2} = 0.00043 \cdot ft^2$ Final determination of water flow area.

Mass and Volumetric Flow Rate Determinations

$Q_f := v_{avg} \cdot A_f = 0.0277 \cdot gpm$ Minimum required leak rate to be detected in 24 hrs.

$Q_f = 1.66 \cdot \frac{gal}{hr}$

$w := \rho_w \cdot A_f \cdot v_{avg} = 3.849 \times 10^{-3} \cdot \frac{lbm}{sec}$ Mass flow rate per the continuity equation.

Reynolds Number Definition

$Re := \frac{4 \delta_f \cdot v_{avg} \cdot \rho_w}{\mu} = 185.611$ Falling Film Reynolds Number, Bird (2002), eqn. 2.2-25. This is within the laminar flow regime.

There are three flow regimes as stated in Bird (2002) as follows.

laminar flow with negligible rippling	$Re < 20$
laminar flow with pronounced rippling	$20 < Re < 1500$
turbulent flow	$Re > 1500$

The above methodology is valid for laminar flow only.

Title: WTP/Evaporator Transfer System Hydraulic Analysis
Engineer/Analyst: JJ Irwin (Electronic Signature on File in SPF)
Checker: JT Lovelady (Electronic Signature on File in SPF)

2 Falling Film Problem A-C: 3"-WTP-002-M17 to Caisson

Developed by John J Irwin, Principal Mechanical Engineer (11-07-2018)

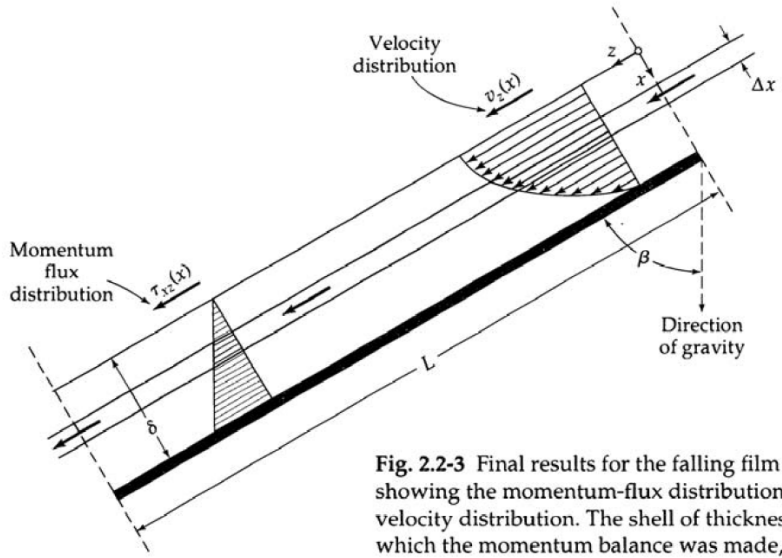

Fig. 2.2-3 Final results for the falling film problem, showing the momentum-flux distribution and the velocity distribution. The shell of thickness Δx, over which the momentum balance was made, is also shown.

Figure 2.2-3 from Bird, Stewart and Lightfoot, Transport Phenomena, 2002

Parameters

$T := 40\,°F = 4.444 \cdot °C$ — Assumed Temperature of Water.

$\mu := 0.00154502 \cdot \frac{kg}{m \cdot s} = 1.0382 \times 10^{-3} \cdot \frac{lbm}{ft \cdot sec}$ — Dynamic Viscosity of Water at 40°F (Cengel and Cimbala, 2010).

$\rho_W := 1000.124 \cdot \frac{kg}{m^3} = 62.4357 \cdot \frac{lbm}{ft^3}$ — Density of liquid Water at 40°F (Cengel and Cimbala, 2010).

$\rho_{WV} := 0.0066 \cdot \frac{kg}{m^3} = 0.00041 \cdot \frac{lbm}{ft^3}$ — Density of water vapor at 40°F per MathCad worksheet "Properties of Moist Air."

$\upsilon := \frac{\mu}{\rho_W} = 1.663 \times 10^{-5} \cdot \frac{ft^2}{sec}$ — Kinematic Viscosity at 40°F, water.

$g = 32.174 \cdot \frac{ft}{sec^2}$ — Acceleration of gravity (MathCad defined constant)

Configuration Data

$t_t := 24 \cdot hr$ — Maximum allowed time determined from project constraints.

$L_p := 2367.11 \cdot ft$ — Length of pipe, defined by the drawings.

$\Delta z := 7.06 \cdot ft$ — Change in pipe elevation defined by the drawings.

$d := (6.625 - 2 \cdot .206) \cdot in = 0.518 \cdot ft$ — Inside diameter of 6" Containment Pipe (Ref. Bondstrand 4000 Brochure)

$D_c := 48.0 \cdot in$ — Diameter of Caisson, per VI file.

$L_c := 0.125 \cdot in$ — Caisson leak detector minimum water height.

$V_{wet} := 0.0025 \cdot \frac{gal}{ft}$ — Experimentally determined film thickness, 0.32 oz per ft., per 24590-PTF-PER-M-04-0006.

$V_{ldf} := 0.0 \cdot gal$ — Leak Detector Volume per MathCad Worksheet "Pipe and Tank Annular Volumes," (zero in this case)

$h_b := 0.125 \cdot in$ — Epoxy Resin dam height.

$V_{t2} := 9216.861 \cdot gal = 1232.115 \cdot ft^3$ — Annular volume for the 6-in containment pipe and auxiliary volumes for this problem MathCad Worksheet "Pipe and Tank Annular Volumes."

Preliminary Calculations

$S_o := \frac{\Delta z}{L_p} = 0.00298$ — Stated slope of the pipe, ft drop per foot length of pipe.

$\beta := acos\left(\frac{\Delta z}{L_p}\right) = 89.829 \cdot deg$ — Slope angle, defined by the drawings.

$\cos(\beta) = 0.00298$ — Approximately the same as S_o.

$V_2 := V_{wet} \cdot L_p = 5.918 \cdot gal$ — Minimum volume of water for film coverage in the containment pipe.

$V_c := \frac{\pi \cdot D_c^2}{4} \cdot L_c = 0.979 \cdot gal$ — Minimum volume of water for detection in the Caisson.

$L_{d1} := \frac{h_b}{\tan(90° - \beta)} = 3.49253 \cdot ft$ — Length of water behind one Epoxy Resin bead.

$N_b := floor\left(\frac{L_p}{20 \cdot ft}\right) = 118$ — Number of Epoxy Resin beads, based upon one bead for every 20 ft of pipe.

$L_d := L_{d1} \cdot N_b = 412.119 \cdot ft$ — Total Length of bed dams, based upon one bead for every 20 ft of pipe.

$A_b := h_b \sqrt{1.766 \cdot d \cdot h_b - h_b^2} = 0.00101 \cdot ft^2$ — Area of bead dam.

$V_d := L_d \cdot A_b = 3.11612 \cdot gal$ — Volume of water behind bead dam.

$V_l := \frac{\rho_{wv}}{\rho_w} \cdot V_{t2} = 0.061 \cdot gal$ — Liquid equivalent for water evaporation into the annular space between pipes.

$\delta := 0.0694894694 \cdot in$ — Initial guess of water film thickness.

$A_f := \delta \sqrt{1.766 \cdot d \cdot \delta - \delta^2} = 4.2 \times 10^{-4} \cdot ft^2$ — Preliminary determination of water flow area.

Preliminary Time Determinations

$t_1 := \frac{3 \cdot \mu \cdot L_p^2}{\rho_w \cdot g \cdot \delta^2 \cdot \Delta z} = 10.19 \cdot hr$ — Time for water to traverse down the containment pipe to the LDF.

$t_2 := \frac{3 \cdot \mu \cdot L_p^2}{\rho_w \cdot g \cdot \delta^2 \cdot \Delta z \cdot A_f} \cdot V_{wet} = 8.11 \cdot hr$ — Time for water to create film on the containment pipe surface.

$t_3 := \frac{3 \cdot \mu \cdot L_p}{\rho_w \cdot g \cdot \delta^2 \cdot \Delta z \cdot A_f} \cdot V_c = 1.342 \cdot hr$ — Time to fill Caisson volume.

$t_4 := \frac{3 \cdot \mu \cdot L_p}{\rho_w \cdot g \cdot \delta^2 \cdot \Delta z \cdot A_f} \cdot V_{ldf} = 0 \cdot hr$ — Time for water to fill LDF to minimum detection height.

$t_5 := \frac{3 \cdot \mu \cdot L_p}{\rho_w \cdot g \cdot \delta^2 \cdot \Delta z \cdot A_f} \cdot V_d = 4.271 \cdot hr$ — Time for water to fill bead dams.

$t_6 := \frac{3 \cdot \mu \cdot L_p}{\rho_w \cdot g \cdot \delta^2 \cdot \Delta z \cdot A_f} \cdot V_l = 0.083 \cdot hr$ — Time for water to compensate for loss by evaporation.

$t_t := t_1 + t_2 + t_3 + t_4 + t_5 + t_6 = 24.0000 \cdot hr$ — Iterate on water thickness until t_t is 24 hrs.

$$v_{avg} := \frac{\rho_w \cdot g \cdot \delta^2 \cdot \Delta z}{3 \cdot \mu \cdot L_p} = 0.0645 \cdot \frac{ft}{sec}$$

Average Velocity of Flowing water, based upon Bird (2002), eqn. 2.2-20.

Using a MathCad Solve Block

Starting Iteration $\delta_f := 0.06 \cdot in$ $\delta = 0.0694894694 \cdot in$

$V_{36} := V_c + V_{ldf} + V_d + V_l = 4.156 \cdot gal$ Volume 3 thru 6, defined above

Given

$$24 \cdot hr = \frac{3 \cdot \mu \cdot L_p^2}{\rho_w \cdot g \cdot \delta_f^2 \cdot \Delta z} + \frac{3 \cdot \mu \cdot V_{wet} \cdot L_p^2}{\rho_w \cdot g \cdot \delta_f^2 \cdot \Delta z \cdot \left(\delta_f \sqrt{1.766 \cdot d \cdot \delta_f - \delta_f^2}\right)} \ldots + \frac{3 \cdot \mu \cdot L_p}{\rho_w \cdot g \cdot \delta_f^2 \cdot \Delta z \cdot \left(\delta_f \sqrt{1.766 \cdot d \cdot \delta_f - \delta_f^2}\right)} \cdot V_{36}$$

$\delta_f := \mathrm{Find}(\delta_f)$ $\delta_f = 0.0694894694 \cdot in$ Solve Block solution for film thickness

$$v_{avg} := \frac{\rho_w \cdot g \cdot \delta_f^2 \cdot \Delta z}{3 \cdot \mu \cdot L_p} = 0.0645 \cdot \frac{ft}{sec}$$

Average Velocity of Flowing water, final determination

$$A_f := \delta_f \sqrt{1.766 \cdot d \cdot \delta_f - \delta_f^2} = 0.00042 \cdot ft^2$$

Final determination of water flow area.

Mass and Volumetric Flow Rate Determinations

$Q_f := v_{avg} \cdot A_f = 0.0122 \cdot gpm$

Minimum required leak rate to be detected in 24 hrs.

$$Q_f = 0.73 \cdot \frac{gal}{hr}$$

$$w := \rho_w \cdot A_f \cdot v_{avg} = 1.692 \times 10^{-3} \cdot \frac{lbm}{sec}$$

Mass flow rate per the continuity equation.

Reynolds Number Definition

$$Re := \frac{4 \delta_f \cdot v_{avg} \cdot \rho_w}{\mu} = 89.855$$

Falling Film Reynolds Number, Bird (2002), eqn. 2.2-25. This is within the laminar flow regime.

Title: WTP/Evaporator Transfer System Hydraulic Analysis
Engineer/Analyst: JJ Irwin (Electronic Signature on File in SPF)
Checker: JT Lovelady (Electronic Signature on File in SPF)

3 Falling Film Problem D-C: 3"-PC-5000-M17 to Caisson

Developed by John J Irwin, Principal Mechanical Engineer (11-07-2018)

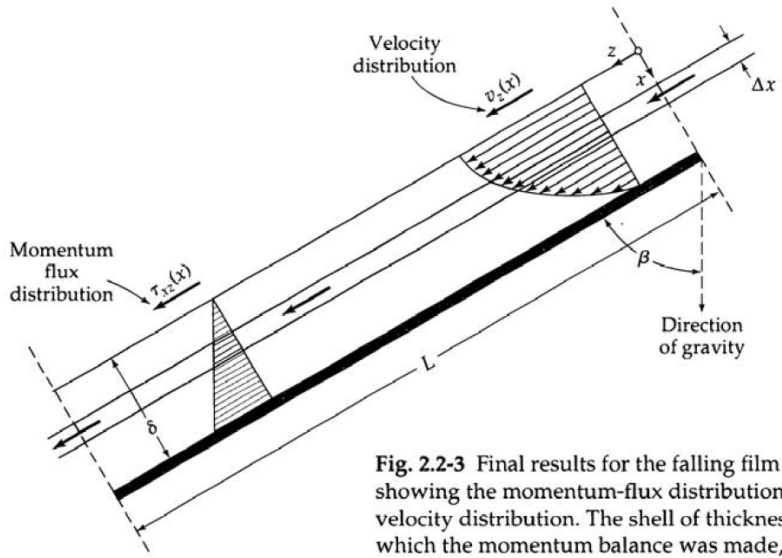

Fig. 2.2-3 Final results for the falling film problem, showing the momentum-flux distribution and the velocity distribution. The shell of thickness Δx, over which the momentum balance was made, is also shown.

Figure 2.2-3 from Bird, Stewart and Lightfoot, Transport Phenomena, 2002

Parameters

$T := 40\,°F = 4.444 \cdot °C$ — Assumed Temperature of Water.

$\mu := 0.00154502 \cdot \frac{kg}{m \cdot s} = 1.0382 \times 10^{-3} \cdot \frac{lbm}{ft \cdot sec}$ — Dynamic Viscosity of Water at 40°F (Cengel and Cimbala, 2010).

$\rho_W := 1000.124 \cdot \frac{kg}{m^3} = 62.4357 \cdot \frac{lbm}{ft^3}$ — Density of liquid Water at 40°F (Cengel and Cimbala, 2010).

$\rho_{WV} := 0.0066 \cdot \frac{kg}{m^3} = 0.00041 \cdot \frac{lbm}{ft^3}$ — Density of water vapor at 40°F per MathCad worksheet "Properties of Moist Air."

$\upsilon := \frac{\mu}{\rho_W} = 1.663 \times 10^{-5} \cdot \frac{ft^2}{sec}$ — Kinematic Viscosity at 40°F, water.

$g = 32.174 \cdot \frac{ft}{sec^2}$ — Acceleration of gravity (MathCad defined constant)

Configuration Data

$t_t := 24 \cdot hr$ — Maximum allowed time determined from project constraints.

$L_p := 1357.75 \cdot ft$ — Length of pipe, defined by the drawings.

$\Delta z := 30.11 \cdot ft$ — Change in pipe elevation defined by the drawings.

$d := (6.625 - 2 \cdot 0.140) \cdot in = 0.529 \cdot ft$ — Inside diameter of 6" Containment Pipe (Ref. Fibercast-Centricast data)

$D_c := 48.0 \cdot in$ — Diameter of Caisson, per VI file.

$L_c := 0.125 \cdot in$ — Caisson leak detector minimum water height.

$V_{wet} := 0.0025 \cdot \frac{gal}{ft}$ — Experimentally determined film thickness, 0.32 oz per ft., per 24590-PTF-PER-M-04-0006.

$V_{ldf} := 0.0 \cdot gal$ — Leak Detector Volume per MathCad Worksheet "Pipe and Tank Annular Volumes," (zero in this case)

$h_b := 0.125 \cdot in$ — Epoxy Resin and elbow dam height.

$V_{t2} := 1165.761 \cdot ft^3$ — Annular volume for the 6-in containment pipe and auxiliary volumes for this problem MathCad Worksheet "Pipe and Tank Annular Volumes."

Preliminary Calculations

$S_o := \frac{\Delta z}{L_p} = 0.02218$ — Stated slope of the pipe, ft drop per foot length of pipe.

$\beta := acos\left(\frac{\Delta z}{L_p}\right) = 88.729 \cdot deg$ — Slope angle, defined by the drawings.

$\cos(\beta) = 0.02218$ — Approximately the same as S_o.

$V_2 := V_{wet} \cdot L_p = 3.394 \cdot gal$ — Minimum volume of water for film coverage in the containment pipe.

$V_c := \frac{\pi \cdot D_c^2}{4} \cdot L_c = 0.979 \cdot gal$ — Minimum volume of water for detection in the Caisson.

$L_{d1} := \frac{h_b}{\tan(90° - \beta)} = 0.46960 \cdot ft$ — Length of water behind one mastic bead.

$N_b := floor\left(\frac{L_p}{20 \cdot ft}\right) + 4 = 71$ — Number of epoxy resin beads, based upon one bead for every 20 ft of pipe + 4 elbow dams.

$L_d := L_{d1} \cdot N_b = 33.342 \cdot ft$ — Total Length of bed dams, based upon one bead for every 20 ft of pipe.

$A_b := h_b \sqrt{1.766 \cdot d \cdot h_b - h_b^2} = 0.00102 \cdot ft^2$ — Area of bead dam.

$V_d := L_d \cdot A_b = 0.25480 \cdot gal$ — Volume of water behind bead dam.

$V_l := \frac{\rho_{wv}}{\rho_w} \cdot V_{t2} = 0.058 \cdot gal$ — Liquid equivalent for water evaporation into the annular space between pipes.

$\delta := 0.0284937706 \cdot in$ — Initial guess of water film thickness.

$A_f := \delta \sqrt{1.766 \cdot d \cdot \delta - \delta^2} = 1.117 \times 10^{-4} \cdot ft^2$ — Preliminary determination of water flow area.

Preliminary Time Determinations

$t_1 := \frac{3 \cdot \mu \cdot L_p^2}{\rho_w \cdot g \cdot \delta^2 \cdot \Delta z} = 4.68 \cdot hr$ — Time for water to traverse down the containment pipe to the LDF.

$t_2 := \frac{3 \cdot \mu \cdot L_p^2}{\rho_w \cdot g \cdot \delta^2 \cdot \Delta z \cdot A_f} \cdot V_{wet} = 14 \cdot hr$ — Time for water to create film on the containment pipe surface.

$t_3 := \frac{3 \cdot \mu \cdot L_p}{\rho_w \cdot g \cdot \delta^2 \cdot \Delta z \cdot A_f} \cdot V_c = 4.038 \cdot hr$ — Time to fill Caisson volume.

$t_4 := \frac{3 \cdot \mu \cdot L_p}{\rho_w \cdot g \cdot \delta^2 \cdot \Delta z \cdot A_f} \cdot V_{ldf} = 0 \cdot hr$ — Time for water to fill LDF to minimum detection height.

$t_5 := \frac{3 \cdot \mu \cdot L_p}{\rho_w \cdot g \cdot \delta^2 \cdot \Delta z \cdot A_f} \cdot V_d = 1.051 \cdot hr$ — Time for water to fill bead dams.

$t_6 := \frac{3 \cdot \mu \cdot L_p}{\rho_w \cdot g \cdot \delta^2 \cdot \Delta z \cdot A_f} \cdot V_l = 0.237 \cdot hr$ — Time for water to compensate for loss by evaporation.

$t_t := t_1 + t_2 + t_3 + t_4 + t_5 + t_6 = 24.0000 \cdot hr$ — Iterate on water thickness until t_t is 24 hrs.

$$v_{avg} := \frac{\rho_w \cdot g \cdot \delta^2 \cdot \Delta z}{3 \cdot \mu \cdot L_p} = 0.0806 \cdot \frac{ft}{sec}$$

Average Velocity of Flowing water, based upon Bird (2002), eqn. 2.2-20.

Using a MathCad Solve Block

Starting Iteration $\delta_f := 0.06 \cdot in$ $\delta = 0.0284937706 \cdot in$

$$V_{36} := V_c + V_{ldf} + V_d + V_l = 1.292 \cdot gal$$

Volume 3 thru 6, defined above

Given

$$24 \cdot hr = \frac{3 \cdot \mu \cdot L_p^2}{\rho_w \cdot g \cdot \delta_f^2 \cdot \Delta z} + \frac{3 \cdot \mu \cdot V_{wet} \cdot L_p^2}{\rho_w \cdot g \cdot \delta_f^2 \cdot \Delta z \cdot \left(\delta_f \sqrt{1.766 \cdot d \cdot \delta_f - \delta_f^2}\right)} \ldots + \frac{3 \cdot \mu \cdot L_p}{\rho_w \cdot g \cdot \delta_f^2 \cdot \Delta z \cdot \left(\delta_f \sqrt{1.766 \cdot d \cdot \delta_f - \delta_f^2}\right)} \cdot V_{36}$$

$\delta_f := \mathrm{Find}(\delta_f)$ $\delta_f = 0.0284937706 \cdot in$

Solve Block solution for film thickness

$$v_{avg} := \frac{\rho_w \cdot g \cdot \delta_f^2 \cdot \Delta z}{3 \cdot \mu \cdot L_p} = 0.0806 \cdot \frac{ft}{sec}$$

Average Velocity of Flowing water, final determination

$$A_f := \delta_f \sqrt{1.766 \cdot d \cdot \delta_f - \delta_f^2} = 0.00011 \cdot ft^2$$

Final determination of water flow area.

Mass and Volumetric Flow Rate Determinations

$$Q_f := v_{avg} \cdot A_f = 0.004 \cdot gpm$$

Minimum required leak rate to be detected in 24 hrs.

$$Q_f = 0.243 \cdot \frac{gal}{hr}$$

$$w := \rho_w \cdot A_f \cdot v_{avg} = 5.622 \times 10^{-4} \cdot \frac{lbm}{sec}$$

Mass flow rate per the continuity equation.

Reynolds Number Definition

$$Re := \frac{4 \delta_f \cdot v_{avg} \cdot \rho_w}{\mu} = 46.062$$

Falling Film Reynolds Number, Bird (2002), eqn. 2.2-25. This is within the laminar flow regime.

Title: WTP/Evaporator Transfer System Hydraulic Analysis
Engineer/Analyst: JJ Irwin (Electronic Signature on File in SPF)
Checker: JT Lovelady (Electronic Signature on File in SPF)

4 Falling Film Problem C-E: 3"-PC-5000-M17, Caisson to LERF

Developed by John J Irwin, Principal Mechanical Engineer (11-07-2018)

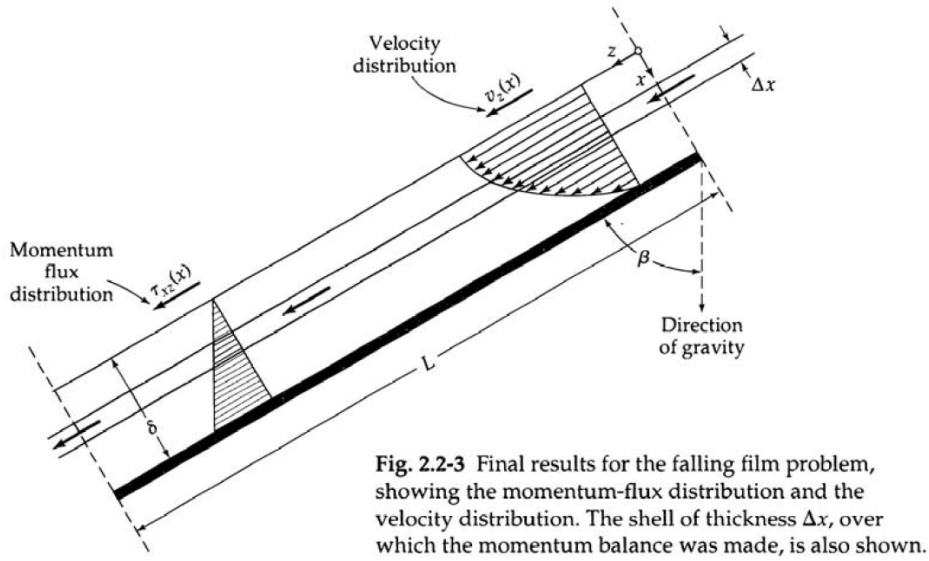

Fig. 2.2-3 Final results for the falling film problem, showing the momentum-flux distribution and the velocity distribution. The shell of thickness Δx, over which the momentum balance was made, is also shown.

Figure 2.2-3 from Bird, Stewart and Lightfoot, Transport Phenomena, 2002

Parameters

$T := 40\,°F = 4.444 \cdot °C$ — Assumed Temperature of Water.

$\mu := 0.00154502 \cdot \frac{kg}{m \cdot s} = 1.0382 \times 10^{-3} \cdot \frac{lbm}{ft \cdot sec}$ — Dynamic Viscosity of Water at 40°F (Cengel and Cimbala, 2010).

$\rho_w := 1000.124 \cdot \frac{kg}{m^3} = 62.4357 \cdot \frac{lbm}{ft^3}$ — Density of liquid Water at 40°F (Cengel and Cimbala, 2010).

$\rho_{wv} := 0.0066 \cdot \frac{kg}{m^3} = 0.00041 \cdot \frac{lbm}{ft^3}$ — Density of water vapor at 40°F per MathCad worksheet "Properties of Moist Air."

$\upsilon := \frac{\mu}{\rho_w} = 1.663 \times 10^{-5} \cdot \frac{ft^2}{sec}$ — Kinematic Viscosity at 40°F, water.

$g = 32.174 \cdot \frac{ft}{sec^2}$ — Acceleration of gravity (MathCad defined constant)

Configuration Data

$t_t := 24 \cdot hr$ — Maximum allowed time determined from project constraints.

$L_p := 4340.54 \cdot ft$ — Length of pipe, defined by the drawings.

$\Delta z := 47.95 \cdot ft$ — Change in pipe elevation defined by the drawings.

$d := (6.625 - 2 \cdot 0.140) \cdot in = 0.529 \cdot ft$ — Inside diameter of 6" Containment Pipe (Ref. Fibercast-Centricast data)

$D_c := 48.0 \cdot in$ — Diameter of Caisson, per VI file.

$L_c := 0.125 \cdot in$ — Caisson leak detector minimum water height.

$V_{wet} := 0.0025 \cdot \frac{gal}{ft}$ — Experimentally determined film thickness, 0.32 oz per ft., per 24590-PTF-PER-M-04-0006.

$V_{ldf} := 0.060 \cdot gal$ — Leak Detector Volume per MathCad Worksheet "Pipe and Tank Annular Volumes," (zero in this case)

$h_b := 0.125 \cdot in$ — Epoxy Resin dam and elbow dam height.

$V_{t2} := 1165.761 \cdot ft^3$ — Annular volume for the 6-in containment pipe and auxiliary volumes for this problem MathCad Worksheet "Pipe and Tank Annular Volumes."

Preliminary Calculations

$S_o := \frac{\Delta z}{L_p} = 0.01105$ — Stated slope of the pipe, ft drop per foot length of pipe.

$\beta := acos\left(\frac{\Delta z}{L_p}\right) = 89.367 \cdot deg$ — Slope angle, defined by the drawings.

$\cos(\beta) = 0.01105$ — Approximately the same as S_o.

$V_2 := V_{wet} \cdot L_p = 10.851 \cdot gal$ — Minimum volume of water for film coverage in the containment pipe.

$V_c := 0 \cdot gal$ — Minimum volume of water for detection in the Caisson (zero in this case).

$L_{d1} := \frac{h_b}{\tan(90° - \beta)} = 0.94288 \cdot ft$ — Length of water behind one Epoxy Resin bead.

$N_b := floor\left(\frac{L_p}{20 \cdot ft}\right) + 6 = 223$ — Number of Epoxy Resin and elbow dams, based upon one bead for every 20 ft of pipe.

$L_d := L_{d1} \cdot N_b = 210.263 \cdot ft$ Total Length of dams, based upon one bead for every 20 ft of pipe plus 6 elbows.

$A_b := h_b \sqrt{1.766 \cdot d \cdot h_b - h_b^2} = 0.00102 \cdot ft^2$ Area of bead dam.

$V_d := L_d \cdot A_b = 1.60684 \cdot gal$ Volume of water behind bead dam.

$V_l := \frac{\rho_{wv}}{\rho_w} \cdot V_{t2} = 0.058 \cdot gal$ Liquid equivalent for water evaporation into the annular space between pipes.

$\delta := 0.0502189318 \cdot in$ Initial guess of water film thickness.

$A_f := \delta \sqrt{1.766 \cdot d \cdot \delta - \delta^2} = 2.61 \times 10^{-4} \cdot ft^2$ Preliminary determination of water flow area.

Preliminary Time Determinations

$t_1 := \frac{3 \cdot \mu \cdot L_p^2}{\rho_w \cdot g \cdot \delta^2 \cdot \Delta z} = 9.66 \cdot hr$ Time for water to traverse down the containment pipe to the LDF.

$t_2 := \frac{3 \cdot \mu \cdot L_p^2}{\rho_w \cdot g \cdot \delta^2 \cdot \Delta z \cdot A_f} \cdot V_{wet} = 12.37 \cdot hr$ Time for water to create film on the containment pipe surface.

$t_3 := \frac{3 \cdot \mu \cdot L_p}{\rho_w \cdot g \cdot \delta^2 \cdot \Delta z \cdot A_f} \cdot V_c = 0 \cdot hr$ Time to fill Caisson volume.

$t_4 := \frac{3 \cdot \mu \cdot L_p}{\rho_w \cdot g \cdot \delta^2 \cdot \Delta z \cdot A_f} \cdot V_{ldf} = 0.068 \cdot hr$ Time for water to fill LDF to minimum detection height.

$t_5 := \frac{3 \cdot \mu \cdot L_p}{\rho_w \cdot g \cdot \delta^2 \cdot \Delta z \cdot A_f} \cdot V_d = 1.832 \cdot hr$ Time for water to fill bead dams.

$t_6 := \frac{3 \cdot \mu \cdot L_p}{\rho_w \cdot g \cdot \delta^2 \cdot \Delta z \cdot A_f} \cdot V_l = 0.066 \cdot hr$ Time for water to compensate for loss by evaporation.

$t_t := t_1 + t_2 + t_3 + t_4 + t_5 + t_6 = 24.0000 \cdot hr$ Iterate on water thickness until t_t is 24 hrs.

$$v_{avg} := \frac{\rho_w \cdot g \cdot \delta^2 \cdot \Delta z}{3 \cdot \mu \cdot L_p} = 0.1248 \cdot \frac{ft}{sec}$$

Average Velocity of Flowing water, based upon Bird (2002), eqn. 2.2-20.

Using a MathCad Solve Block

Starting Iteration $\delta_f := 0.06 \cdot in$ $\delta = 0.0502189318 \cdot in$

$$V_{36} := V_c + V_{ldf} + V_d + V_l = 1.724 \cdot gal$$

Volume 3 thru 6, defined above

Given

$$24 \cdot hr = \frac{3 \cdot \mu \cdot L_p^2}{\rho_w \cdot g \cdot \delta_f^2 \cdot \Delta z} + \frac{3 \cdot \mu \cdot V_{wet} \cdot L_p^2}{\rho_w \cdot g \cdot \delta_f^2 \cdot \Delta z \cdot \left(\delta_f \sqrt{1.766 \cdot d \cdot \delta_f - \delta_f^2}\right)} \ldots + \frac{3 \cdot \mu \cdot L_p}{\rho_w \cdot g \cdot \delta_f^2 \cdot \Delta z \cdot \left(\delta_f \sqrt{1.766 \cdot d \cdot \delta_f - \delta_f^2}\right)} \cdot V_{36}$$

$\delta_f := \mathrm{Find}(\delta_f)$ $\delta_f = 0.0502189318 \cdot in$

Solve Block solution for film thickness

$$v_{avg} := \frac{\rho_w \cdot g \cdot \delta_f^2 \cdot \Delta z}{3 \cdot \mu \cdot L_p} = 0.1248 \cdot \frac{ft}{sec}$$

Average Velocity of Flowing water, final determination

$$A_f := \delta_f \sqrt{1.766 \cdot d \cdot \delta_f - \delta_f^2} = 0.00026 \cdot ft^2$$

Final determination of water flow area.

Mass and Volumetric Flow Rate Determinations

$$Q_f := v_{avg} \cdot A_f = 0.0146 \cdot gpm$$

Minimum required leak rate to be detected in 24 hrs.

$$Q_f = 0.877 \cdot \frac{gal}{hr}$$

$$w := \rho_w \cdot A_f \cdot v_{avg} = 2.034 \times 10^{-3} \cdot \frac{lbm}{sec}$$

Mass flow rate per the continuity equation.

Reynolds Number Definition

$$Re := \frac{4 \delta_f \cdot v_{avg} \cdot \rho_w}{\mu} = 125.617$$

Falling Film Reynolds Number, Bird (2002), eqn. 2.2-25. This is within the laminar flow regime.

Title: WTP/Evaporator Transfer System Hydraulic Analysis
Engineer/Analyst: JJ Irwin (Electronic Signature on File in SPF)
Checker: JT Lovelady (Electronic Signature on File in SPF)

5 Falling Film Problem A-E: 3"-WTP-002-M17 to LERF

Developed by John J Irwin, Principal Mechanical Engineer (11-07-2018)

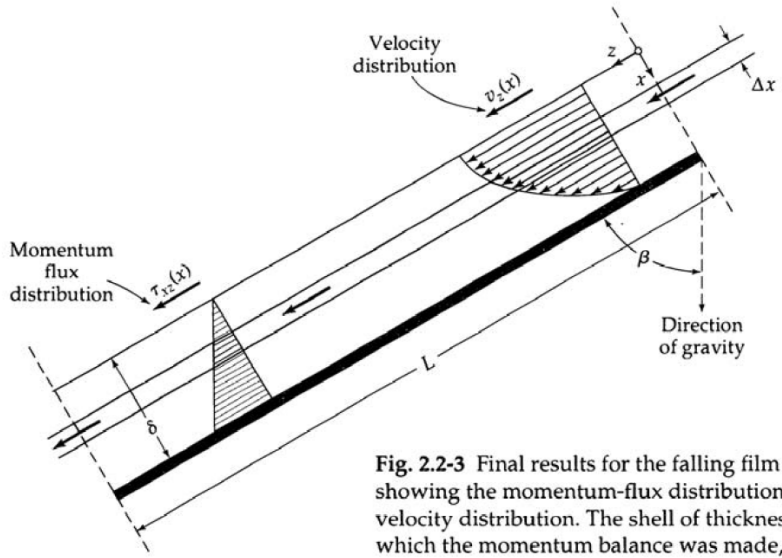

Fig. 2.2-3 Final results for the falling film problem, showing the momentum-flux distribution and the velocity distribution. The shell of thickness Δx, over which the momentum balance was made, is also shown.

Figure 2.2-3 from Bird, Stewart and Lightfoot, Transport Phenomena, 2002

Parameters

$T := 40\,°F = 4.444 \cdot °C$ — Assumed Temperature of Water.

$\mu := 0.00154502 \cdot \frac{kg}{m \cdot s} = 1.0382 \times 10^{-3} \cdot \frac{lbm}{ft \cdot sec}$ — Dynamic Viscosity of Water at 40°F (Cengel and Cimbala, 2010).

$\rho_W := 1000.124 \cdot \frac{kg}{m^3} = 62.4357 \cdot \frac{lbm}{ft^3}$ — Density of liquid Water at 40°F (Cengel and Cimbala, 2010).

$\rho_{WV} := 0.0066 \cdot \frac{kg}{m^3} = 0.00041 \cdot \frac{lbm}{ft^3}$ — Density of water vapor at 40°F per MathCad worksheet "Properties of Moist Air."

$\upsilon := \frac{\mu}{\rho_W} = 1.663 \times 10^{-5} \cdot \frac{ft^2}{sec}$ — Kinematic Viscosity at 40°F, water.

$g = 32.174 \cdot \frac{ft}{sec^2}$ — Acceleration of gravity (MathCad defined constant)

Configuration Data

$t_t := 24 \cdot hr$ — Maximum allowed time determined from project constraints.

$L_p := 6709.03 \cdot ft$ — Length of pipe, defined by the drawings.

$\Delta z := 58.19 \cdot ft$ — Change in pipe elevation defined by the drawings.

$d := (6.625 - 2 \cdot 0.14) \cdot in = 0.529 \cdot ft$ — Inside diameter of 6" Containment Pipe (Ref. Fibercast-Centricast data)

$D_c := 48.0 \cdot in$ — Diameter of Caisson, per VI file.

$L_c := 0.125 \cdot in$ — Caisson overflow to PC-5000 containment pipe minimum water height per H-2-830102, sht.2.

$V_{wet} := 0.0025 \cdot \frac{gal}{ft}$ — Experimentally determined film thickness, 0.32 oz per ft., per 24590-PTF-PER-M-04-0006.

$V_{ldf} := 0.060 \cdot gal$ — Leak Detector Volume per MathCad Worksheet "Pipe and Tank Annular Volumes."

$h_b := 0.125 \cdot in$ — Mastic dam bead height.

$V_{t2} := 165.761 \cdot ft^3$ — Annular volume for the 6-in containment pipe and auxiliary volumes for this problem MathCad Worksheet "Pipe and Tank Annular Volumes."

Preliminary Calculations

$S_o := \frac{\Delta z}{L_p} = 0.00867$ — Stated slope of the pipe, ft drop per foot length of pipe.

$\beta := acos\left(\frac{\Delta z}{L_p}\right) = 89.503 \cdot deg$ — Slope angle, defined by the drawings.

$\cos(\beta) = 0.00867$ — Approximately the same as S_o.

$V_2 := V_{wet} \cdot L_p = 16.773 \cdot gal$ — Minimum volume of water for film coverage in the containment pipe.

$V_c := \frac{\pi \cdot D_c^2}{4} \cdot L_c = 0.979 \cdot gal$ — Minimum volume of water for detection in the Caisson.

$L_{d1} := \frac{h_b}{\tan(90° - \beta)} = 1.20095 \cdot ft$ — Length of water behind one mastic bead.

$N_b := floor\left(\frac{L_p}{20 \cdot ft}\right) + 6 = 341$ — Number of mastic beads, based upon one bead for every 20 ft of pipe, plus 6 elbows.

$L_d := L_{d1} \cdot N_b = 409.523 \cdot ft$ — Total Length of dams, based upon one bead for every 20 ft of pipe, plus 6 elbows.

$A_b := h_b \sqrt{1.766 \cdot d \cdot h_b - h_b^2} = 0.00102 \cdot ft^2$ — Area of bead dam.

$V_d := L_d \cdot A_b = 3.12959 \cdot gal$ — Volume of water behind bead dam.

$V_l := \frac{\rho_{wv}}{\rho_w} \cdot V_{t2} = 8.183 \times 10^{-3} \cdot gal$ — Liquid equivalent for water evaporation into the annular space between pipes.

$\delta := 0.0647008358 \cdot in$ — Initial guess of water film thickness.

$A_f := \delta \sqrt{1.766 \cdot d \cdot \delta - \delta^2} = 0.00038 \cdot ft^2$ — Preliminary determination of water flow area.

Preliminary Time Determinations

$t_1 := \frac{3 \cdot \mu \cdot L_p^2}{\rho_w \cdot g \cdot \delta^2 \cdot \Delta z} = 11.46 \cdot hr$ — Time for water to traverse down the containment pipe to the LDF.

$t_2 := \frac{3 \cdot \mu \cdot L_p^2}{\rho_w \cdot g \cdot \delta^2 \cdot \Delta z \cdot A_f} \cdot V_{wet} = 10.04 \cdot hr$ — Time for water to create film on the containment pipe surface.

$t_3 := \frac{3 \cdot \mu \cdot L_p}{\rho_w \cdot g \cdot \delta^2 \cdot \Delta z \cdot A_f} \cdot V_c = 0.586 \cdot hr$ — Time to fill Caisson volume.

$t_4 := \frac{3 \cdot \mu \cdot L_p}{\rho_w \cdot g \cdot \delta^2 \cdot \Delta z \cdot A_f} \cdot V_{ldf} = 0.036 \cdot hr$ — Time for water to fill LDF to minimum detection height.

$t_5 := \frac{3 \cdot \mu \cdot L_p}{\rho_w \cdot g \cdot \delta^2 \cdot \Delta z \cdot A_f} \cdot V_d = 1.873 \cdot hr$ — Time for water to fill bead dams.

$t_6 := \frac{3 \cdot \mu \cdot L_p}{\rho_w \cdot g \cdot \delta^2 \cdot \Delta z \cdot A_f} \cdot V_l = 4.898 \times 10^{-3} \cdot hr$ — Time for water to compensate for loss by evaporation.

$t_t := t_1 + t_2 + t_3 + t_4 + t_5 + t_6 = 24.0000 \cdot hr$ — Iterate on water thickness until t_t is 24 hrs.

$$v_{avg} := \frac{\rho_w \cdot g \cdot \delta^2 \cdot \Delta z}{3 \cdot \mu \cdot L_p} = 0.1626 \cdot \frac{ft}{sec}$$

Average Velocity of Flowing water, based upon Bird (2002), eqn. 2.2-20.

Using a MathCad Solve Block

Starting Iteration $\delta_f := 0.06 \cdot in$ $\delta = 0.0647008358 \cdot in$

$$V_{36} := V_c + V_{ldf} + V_d + V_l = 4.177 \cdot gal$$

Volume 3 thru 6, defined above

Given

$$24 \cdot hr = \frac{3 \cdot \mu \cdot L_p^2}{\rho_w \cdot g \cdot \delta_f^2 \cdot \Delta z} + \frac{3 \cdot \mu \cdot V_{wet} \cdot L_p^2}{\rho_w \cdot g \cdot \delta_f^2 \cdot \Delta z \cdot \left(\delta_f \sqrt{1.766 \cdot d \cdot \delta_f - \delta_f^2}\right)} \ldots + \frac{3 \cdot \mu \cdot L_p}{\rho_w \cdot g \cdot \delta_f^2 \cdot \Delta z \cdot \left(\delta_f \sqrt{1.766 \cdot d \cdot \delta_f - \delta_f^2}\right)} \cdot V_{36}$$

$\delta_f := \mathrm{Find}(\delta_f)$ $\delta_f = 0.0647008358 \cdot in$

Solve Block solution for film thickness

$$v_{avg} := \frac{\rho_w \cdot g \cdot \delta_f^2 \cdot \Delta z}{3 \cdot \mu \cdot L_p} = 0.1626 \cdot \frac{ft}{sec}$$

Average Velocity of Flowing water, final determination

$$A_f := \delta_f \sqrt{1.766 \cdot d \cdot \delta_f - \delta_f^2} = 0.00038 \cdot ft^2$$

Final determination of water flow area.

Mass and Volumetric Flow Rate Determinations

$$Q_f := v_{avg} \cdot A_f = 0.0278 \cdot gpm$$

Minimum required leak rate to be detected in 24 hrs.

$$Q_f = 1.671 \cdot \frac{gal}{hr}$$

$$w := \rho_w \cdot A_f \cdot v_{avg} = 3.873 \times 10^{-3} \cdot \frac{lbm}{sec}$$

Mass flow rate per the continuity equation.

Reynolds Number Definition

$$Re := \frac{4 \delta_f \cdot v_{avg} \cdot \rho_w}{\mu} = 210.92$$

Falling Film Reynolds Number, Bird (2002), eqn. 2.2-25. This is within the laminar flow regime.

Title: WTP/Evaporator Transfer System Hydraulic Analysis
Engineer/Analyst: JJ Irwin (Electronic Signature on File in SPF)
Checker: JT Lovelady (Electronic Signature on File in SPF)

6 Falling Film Problem D-E: 3"-PC-5000-M17 to LERF

Developed by John J Irwin, Principal Mechanical Engineer (11-06-2018)

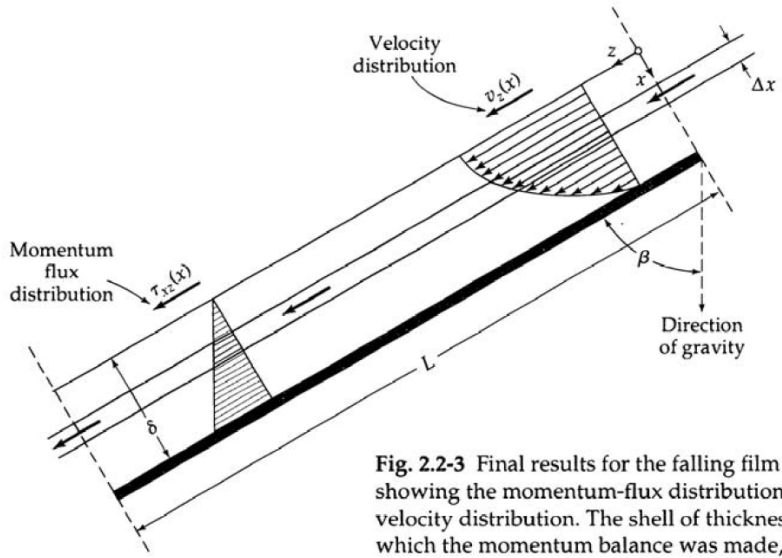

Fig. 2.2-3 Final results for the falling film problem, showing the momentum-flux distribution and the velocity distribution. The shell of thickness Δx, over which the momentum balance was made, is also shown.

Figure 2.2-3 from Bird, Stewart and Lightfoot, Transport Phenomena, 2002

Parameters

$T := 40\,°F = 4.444 \cdot °C$ — Assumed Temperature of Water.

$\mu := 0.00154502 \cdot \frac{kg}{m \cdot s} = 1.0382 \times 10^{-3} \cdot \frac{lbm}{ft \cdot sec}$ — Dynamic Viscosity of Water at 40°F (Cengel and Cimbala, 2010).

$\rho_W := 1000.124 \cdot \frac{kg}{m^3} = 62.4357 \cdot \frac{lbm}{ft^3}$ — Density of liquid Water at 40°F (Cengel and Cimbala, 2010).

$\rho_{WV} := 0.0066 \cdot \frac{kg}{m^3} = 0.00041 \cdot \frac{lbm}{ft^3}$ — Density of water vapor at 40°F per MathCad worksheet "Properties of Moist Air."

$\upsilon := \frac{\mu}{\rho_W} = 1.663 \times 10^{-5} \cdot \frac{ft^2}{sec}$ — Kinematic Viscosity at 40°F, water.

$g = 32.174 \cdot \frac{ft}{sec^2}$ — Acceleration of gravity (MathCad defined constant)

Configuration Data

$t_t := 24 \cdot hr$ — Maximum allowed time determined from project constraints.

$L_p := 5698.45 \cdot ft$ — Length of pipe, defined by the drawings.

$\Delta z := 78.06 \cdot ft$ — Change in pipe elevation defined by the drawings.

$d := (6.625 - 2 \cdot 0.140) \cdot in = 0.529 \cdot ft$ — Inside diameter of 6" Containment Pipe (Ref. Bondstrand 4000 Brochure)

$D_c := 48.0 \cdot in$ — Diameter of Caisson, per VI file.

$L_c := 0.125 \cdot in$ — Caisson overflow to PC-5000 containment pipe minimum water height per H-2-830102, sht.2.

$V_{wet} := 0.0025 \cdot \frac{gal}{ft}$ — Experimentally determined film thickness, 0.32 oz per ft., per 24590-PTF-PER-M-04-0006.

$V_{ldf} := 0.060 \cdot gal$ — Leak Detector Volume per MathCad Worksheet "Pipe and Tank Annular Volumes."

$h_b := 0.125 \cdot in$ — Mastic dam bead height.

$V_{t2} := 1165.761 \cdot ft^3$ — Annular volume for the 6-in containment pipe and auxiliary volumes for this problem MathCad Worksheet "Pipe and Tank Annular Volumes."

Preliminary Calculations

$S_o := \frac{\Delta z}{L_p} = 0.01370$ — Stated slope of the pipe, ft drop per foot length of pipe.

$\beta := acos\left(\frac{\Delta z}{L_p}\right) = 89.215 \cdot deg$ — Slope angle, defined by the drawings.

$\cos(\beta) = 0.01370$ — Approximately the same as S_o.

$V_2 := V_{wet} \cdot L_p = 14.246 \cdot gal$ — Minimum volume of water for film coverage in the containment pipe.

$V_c := \frac{\pi \cdot D_c^2}{4} \cdot L_c = 0.979 \cdot gal$ — Minimum volume of water for detection in the Caisson.

$L_{d1} := \frac{h_b}{\tan(90° - \beta)} = 0.76035 \cdot ft$ — Length of water behind one mastic bead.

$N_b := floor\left(\frac{L_p}{20 \cdot ft}\right) + 6 = 290$ — Number of mastic beads, based upon one bead for every 20 ft of pipe, plus 6 elbows.

$L_d := L_{d1} \cdot N_b = 220.503 \cdot ft$ — Total Length of bead dams, based upon one bead for every 20 ft of pipe, plus 6 elbows.

$A_b := h_b \sqrt{1.766 \cdot d \cdot h_b - h_b^2} = 0.00102 \cdot ft^2$ — Area of bead dam.

$V_d := L_d \cdot A_b = 1.68509 \cdot gal$ — Volume of water behind bead dam.

$V_l := \frac{\rho_{wv}}{\rho_w} \cdot V_{t2} = 0.058 \cdot gal$ — Liquid equivalent for water evaporation into the annular space between pipes.

$\delta := 0.0515465878 \cdot in$ — Initial guess of water film thickness.

$A_f := \delta \sqrt{1.766 \cdot d \cdot \delta - \delta^2} = 0.00027 \cdot ft^2$ — Preliminary determination of water flow area.

Preliminary Time Determinations

$t_1 := \frac{3 \cdot \mu \cdot L_p^2}{\rho_w \cdot g \cdot \delta^2 \cdot \Delta z} = 9.71 \cdot hr$ — Time for water to traverse down the containment pipe to the LDF.

$t_2 := \frac{3 \cdot \mu \cdot L_p^2}{\rho_w \cdot g \cdot \delta^2 \cdot \Delta z \cdot A_f} \cdot V_{wet} = 11.96 \cdot hr$ — Time for water to create film on the containment pipe surface.

$t_3 := \frac{3 \cdot \mu \cdot L_p}{\rho_w \cdot g \cdot \delta^2 \cdot \Delta z \cdot A_f} \cdot V_c = 0.822 \cdot hr$ — Time to fill Caisson volume.

$t_4 := \frac{3 \cdot \mu \cdot L_p}{\rho_w \cdot g \cdot \delta^2 \cdot \Delta z \cdot A_f} \cdot V_{ldf} = 0.05 \cdot hr$ — Time for water to fill LDF to minimum detection height.

$t_5 := \frac{3 \cdot \mu \cdot L_p}{\rho_w \cdot g \cdot \delta^2 \cdot \Delta z \cdot A_f} \cdot V_d = 1.414 \cdot hr$ — Time for water to fill bead dams.

$t_6 := \frac{3 \cdot \mu \cdot L_p}{\rho_w \cdot g \cdot \delta^2 \cdot \Delta z \cdot A_f} \cdot V_l = 0.048 \cdot hr$ — Time for water to compensate for loss by evaporation.

$t_t := t_1 + t_2 + t_3 + t_4 + t_5 + t_6 = 24.0000 \cdot hr$ — Iterate on water thickness until t_t is 24 hrs.

$$v_{avg} := \frac{\rho_w \cdot g \cdot \delta^2 \cdot \Delta z}{3 \cdot \mu \cdot L_p} = 0.1630 \cdot \frac{ft}{sec}$$

Average Velocity of Flowing water, based upon Bird (2002), eqn. 2.2-20.

Using a MathCad Solve Block

Starting Iteration $\delta_f := 0.06 \cdot in$ $\delta = 0.0515465878 \cdot in$

$$V_{36} := V_c + V_{ldf} + V_d + V_l = 2.782 \cdot gal$$

Volume 3 thru 6, defined above

Given

$$24 \cdot hr = \frac{3 \cdot \mu \cdot L_p^2}{\rho_w \cdot g \cdot \delta_f^2 \cdot \Delta z} + \frac{3 \cdot \mu \cdot V_{wet} \cdot L_p^2}{\rho_w \cdot g \cdot \delta_f^2 \cdot \Delta z \cdot \left(\delta_f \sqrt{1.766 \cdot d \cdot \delta_f - \delta_f^2}\right)} \ldots + \frac{3 \cdot \mu \cdot L_p}{\rho_w \cdot g \cdot \delta_f^2 \cdot \Delta z \cdot \left(\delta_f \sqrt{1.766 \cdot d \cdot \delta_f - \delta_f^2}\right)} \cdot V_{36}$$

$\delta_f := \mathrm{Find}(\delta_f)$ $\delta_f = 0.0515465878 \cdot in$

Solve Block solution for film thickness

$$v_{avg} := \frac{\rho_w \cdot g \cdot \delta_f^2 \cdot \Delta z}{3 \cdot \mu \cdot L_p} = 0.1630 \cdot \frac{ft}{sec}$$

Average Velocity of Flowing water, final determination

$$A_f := \delta_f \sqrt{1.766 \cdot d \cdot \delta_f - \delta_f^2} = 0.00027 \cdot ft^2$$

Final determination of water flow area.

Mass and Volumetric Flow Rate Determinations

$$Q_f := v_{avg} \cdot A_f = 0.0199 \cdot gpm$$

Minimum required leak rate to be detected in 24 hrs.

$$Q_f = 1.192 \cdot \frac{gal}{hr}$$

$$w := \rho_w \cdot A_f \cdot v_{avg} = 2.763 \times 10^{-3} \cdot \frac{lbm}{sec}$$

Mass flow rate per the continuity equation.

Reynolds Number Definition

$$Re := \frac{4 \delta_f \cdot v_{avg} \cdot \rho_w}{\mu} = 168.45$$

Falling Film Reynolds Number, Bird (2002), eqn. 2.2-25. This is within the laminar flow regime.

Title: WTP/Evaporator Transfer System Hydraulic Analysis
Engineer/Analyst: JJ Irwin (Electronic Signature on File in SPF)
Checker: JT Lovelady (Electronic Signature on File in SPF)

7 Open Channel Flow Problem A-B: 4"-WTP-001-M17 to LERF

Developed by John J Irwin, Principal Mechanical Engineer (11-06-2018)

Problem A-B, 4"-WTP-001-M17 to LERF (Type I problem, knowns are Q, D, S, and n_f)

Input Parameters

$T := 40\,°F = 4.444 \cdot °C$ — Assumed Temperature of Water.

$\mu_w := 0.00154502 \cdot \frac{kg}{m \cdot s} = 1.0382 \times 10^{-3} \cdot \frac{lbm}{ft \cdot sec}$ — Dynamic Viscosity of Water at 40°F (Cengel and Cimbala, 2010).

$\rho_w := 1000.124 \cdot \frac{kg}{m^3} = 62.4357 \cdot \frac{lbm}{ft^3}$ — Density of liquid Water at 40°F (Cengel and Cimbala, 2010).

$\rho_{wv} := 0.0066 \cdot \frac{kg}{m^3} = 0.00041 \cdot \frac{lbm}{ft^3}$ — Density of water vapor at 40°F per MathCad worksheet "Properties of Moist Air."

$\upsilon_w := \frac{\mu_w}{\rho_w} = 1.663 \times 10^{-5} \cdot \frac{ft^2}{sec}$ — Kinematic Viscosity at 40°F, water, Basic definition.

$g = 32.174 \cdot \frac{ft}{sec^2}$ — Acceleration of gravity (MathCad defined constant)

Configuration Data

$L_p := 6340.88 \cdot ft$ — Length of pipe, Pipe Segment A-B, defined by the project drawings and Excel Worksheet.

$\Delta z := 49.98 \cdot ft$ — Change in pipe elevation, Pipe Segment A-B, defined by the drawings and Excel Worksheet.

$d_8 := 8.165 \cdot in = 0.68 \cdot ft$ — Inside diameter of 8" Containment Pipe (Ref. Bondstrand 4000 Brochure)

$V_c := 0 \cdot ft^3$ — Volume of Caisson, zero in this case.

$V_{wet} := 0.0025 \cdot \frac{gal}{ft}$ — Experimentally determined film thickness, 0.32 oz per ft., per 24590-PTF-PER-M-04-0006.

$V_{ldf} := 0.060 \cdot gal$ — Leak Detector Volume per MathCad Worksheet "Pipe and Tank Annular Volumes."

$h_b := 0.125 \cdot in$ — Epoxy Resin dam bead height.

$V_{p1} := 1603.919 \cdot ft^3$ — Annular volume for the 8-in containment pipe and L_p for this problem MathCad Worksheet "Pipe and Tank Annular Volumes."

$t_t := 24 \cdot hr$ — Maximum allowed time determined from project constraints.

$n_f := 0.013$ — Manning roughness coefficient for FRP pipe, maximum value per Brater, 1996.

Preliminary Calculations

$S_o := \frac{\Delta z}{L_p} = 0.00788$ — Stated slope of the pipe, ft drop per foot length of pipe per project drawings and Excel worksheet.

$\beta := acos\left(\frac{\Delta z}{L_p}\right) = 89.548 \cdot deg$ — Slope angle, basic geometrical definition.

$\cos(\beta) = 0.00788$ — Approximately the same as S_o.

$S := S_o \cdot 12 \frac{in}{ft} = 0.00788$

$A_p := \frac{\pi \cdot d_8^{\,2}}{4} = 0.364 \cdot ft^2$ — Inside cross sectional area of the containment pipe.

$R_p := \frac{d_8}{2} = 4.082 \cdot in$ — Radius of the containment pipe.

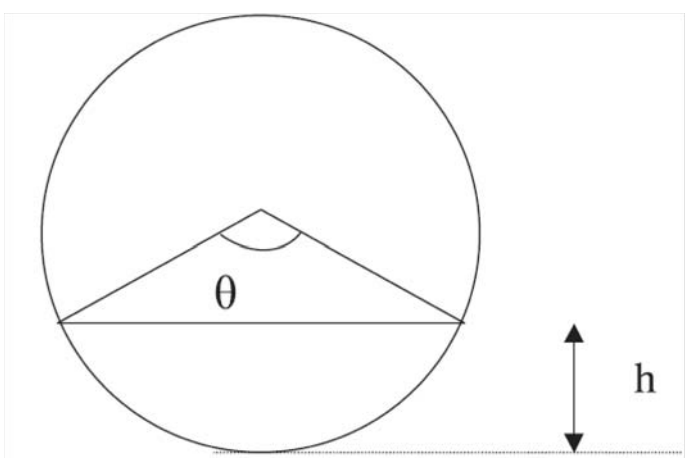

Cross-section geometry of a self venting pipe, general form

$V_2 := V_{wet} \cdot L_p = 15.852 \cdot gal$ — Minimum volume of water for film coverage in the containment pipe.

$L_{d1} := \frac{h_b}{\tan(90° - \beta)} = 1.32150 \cdot ft$ Length of water behind one Epoxy Resin bead.

$N_b := \text{floor}\left(\frac{L_p}{20 \cdot ft}\right) = 317$ Number of Epoxy Resin beads, based upon one bead for every 20 ft of pipe.

$L_d := L_{d1} \cdot N_b = 418.917 \cdot ft$ Total Length of bed dams, based upon one bead for every 20 ft of pipe.

$A_b := h_b \sqrt{1.766 \cdot d_8 \cdot h_b - h_b^2} = 0.00116 \cdot ft^2$ Area of bead dam.

$V_d := L_d \cdot A_b = 3.63618 \cdot gal$ Volume of water behind bead dam.

$V_l := \frac{\rho_{wv}}{\rho_w} \cdot V_{p1} = 0.079 \cdot gal$ Liquid equivalent for water evaporation into the annular space between pipes.

$V_{36} := V_c + V_{ldf} + V_d + V_l = 3.775 \cdot gal$ Volume 3 thru 6, defined above

Initial Guess on Water Flowrate

$Q_L := 0.0222548 \cdot gpm$ Initial guess liquid volumetric flow rate, iteratively determined until time constraints are met.

$Q_L = 1.335 \cdot \frac{gal}{hr}$

Mass Flow Rate Determinations

$w := \rho_w \cdot Q_L = 3.096 \times 10^{-3} \cdot \frac{lbm}{sec}$ Mass flow rate per the continuity equation.

Included Angle, Flow Area and Hydraulic Radius Determination

Calculate K_m value

$K_m := \frac{Q_L \cdot n_f}{d_8^{\frac{8}{3}} \cdot S^{\frac{1}{2}}} \cdot \frac{s}{m^{\frac{1}{3}}} = 1.364 \times 10^{-5}$ Akgiray, 2005, pg. 491, eqn. 9. This is a non-dimensional form.

For Km less than 1/π, use Akgiray eqn. 23 to determine, θ, otherwise use eqn. 48, 49 or 50.

Note: $\frac{1}{\pi} = 0.318$

$\theta := 1.28 \cdot K_m^{-0.26} \cdot \mathrm{acos}\left(1 - 5.965 \cdot K_m\right) = 17.22 \cdot °$ Akgiray, 2005, eqn. 23.

$\theta = 17.22 \cdot °$ Below mid-point of pipe.

$\delta := \frac{d_8}{2} \cdot \left(1 - \cos\left(\frac{\theta}{2}\right)\right) = 0.046 \cdot in$ Liquid height within the pipe, Akgiray, 2005, eqn. 15 (defined as "h" in above figure.

$A_L := \frac{(\theta - \sin(\theta)) d_8^2}{8} = 0.0375 \cdot in^2$ Cross-sectional flow area of the liquid (geometric definition, see Akigary, 2005, eqn. 4 .

$P_w := d_8 \cdot \mathrm{acos}\left(1 - \frac{\delta}{R_p}\right) = 1.227 \cdot in$ Wetted perimeter (geometric definition, See Lindeburg, 2001, pg. A-7).

$\frac{A_L}{A_p} = 7.169 \times 10^{-4}$ Area ratio, confirms flow area.

$R_h := \frac{d_8}{4} \cdot \left(\frac{\theta - \sin(\theta)}{\theta}\right) = 0.0306 \cdot in$ Hydraulic Radius, Akgiray, 2005, eqn. 5.

Flow Velocity Determination

$v_L := \frac{R_h^{\frac{2}{3}} \cdot S^{\frac{1}{2}}}{n_f} \cdot \frac{1}{m^{\frac{2}{3}}} \cdot \frac{m}{sec} = 0.058 \frac{m}{s}$ Manning equation with SI units, Akgiray, 2005, eqn. 1.

$v_L = 0.189 \cdot \frac{ft}{sec}$ Resulting liquid flow velocity.

Preliminary Time Determinations

$t_1 := \frac{L_p}{v_L} = 9.3 \cdot hr$ Time for water to traverse down the containment pipe to the LDF.

$t_2 := \frac{V_2}{Q_L} = 11.87 \cdot hr$ Time for water to create film on the containment pipe surface.

$$t_{36} := \frac{V_{36}}{Q_L} = 2.827 \cdot hr$$

Time for water to fill LDF to minimum detection height.

$$t_t := t_1 + t_2 + t_{36} = 24.0000 \cdot hr$$

Iterate on assumed water flowrate, Q_L, until t_t is 24 hrs.

$$Q_L = 1.335 \cdot \frac{gal}{hr}$$

Reynolds Number Definition

$$Re := \frac{4\delta \cdot v_L \cdot \rho_w}{\mu_w} = 174.657$$

Reynolds Number, Bird (2002), eqn. 2.2-25. This is within the laminar flow regime.

There are three flow regimes as stated in Bird (2002) as follows.

laminar flow with negligible rippling	$Re < 20$
laminar flow with pronounced rippling	$20 < Re < 1500$
turbulent flow	$Re > 1500$

Froude Number Determination

$$v_{Lp} := \frac{Q_L}{A_p} = 1.364 \times 10^{-4} \cdot \frac{ft}{sec}$$

Velocity the liquid would have in the pipe flowing full with the given flow rate.

$$Fr := \frac{4Q_L}{\pi \cdot d_8^{\,2} \sqrt{g \cdot d_8}} = 2.914 \times 10^{-5}$$

Froude No. in terms of flow rate, for Froude No. less than 1/3, the flow will be self venting (ref. Nayyar, 2000, pg. B.446, eqn. a, and Hills, 1983, eqn. 1).

also

$$Fr := \frac{v_{Lp}}{\sqrt{g \cdot d_8}} = 2.914 \times 10^{-5}$$

Title: WTP/Evaporator Transfer System Hydraulic Analysis
Engineer/Analyst: JJ Irwin (Electronic Signature on File in SPF)
Checker: JT Lovelady (Electronic Signature on File in SPF)

8 Open Channel Flow Problem C-E: 3"-PC-5000-M17, Caisson to LERF

Developed by John J Irwin, Principal Mechanical Engineer (11-07-2018)

Problem C-E: 3"-PC-5000-M17, Caisson to LERF (Type I problem, knowns are Q, D, S, and n_f)

Input Parameters

$T := 40\,°F = 4.444 \cdot °C$ — Assumed Temperature of Water.

$\mu_w := 0.00154502 \cdot \frac{kg}{m \cdot s} = 1.0382 \times 10^{-3} \cdot \frac{lbm}{ft \cdot sec}$ — Dynamic Viscosity of Water at 40°F (Cengel and Cimbala, 2010).

$\rho_w := 1000.124 \cdot \frac{kg}{m^3} = 62.4357 \cdot \frac{lbm}{ft^3}$ — Density of liquid Water at 40°F (Cengel and Cimbala, 2010).

$\rho_{wv} := 0.0066 \cdot \frac{kg}{m^3} = 0.00041 \cdot \frac{lbm}{ft^3}$ — Density of water vapor at 40°F per MathCad worksheet "Properties of Moist Air."

$\upsilon_w := \frac{\mu_w}{\rho_w} = 1.663 \times 10^{-5} \cdot \frac{ft^2}{sec}$ — Kinematic Viscosity at 40°F, water, Basic definition.

$g = 32.174 \cdot \frac{ft}{sec^2}$ — Acceleration of gravity (MathCad defined constant)

Configuration Data

$L_p := 4340.54 \cdot ft$ — Length of pipe, Pipe Segment C-E, defined by the project drawings and Excel Worksheet.

$\Delta z := 47.95 \cdot ft$ — Change in pipe elevation, Pipe Segment C-E, defined by the drawings and Excel Worksheet.

$d_6 := (6.625 - 2 \cdot 0.140) \cdot in = 0.529 \cdot ft$ — Inside diameter of 6" Containment Pipe (Ref. Fibercast-Centricast data)

$V_c := 0 \cdot ft^3$ — Volume of Caisson, zero in this case.

$V_{wet} := 0.0025 \cdot \frac{gal}{ft}$ — Experimentally determined film thickness, 0.32 oz per ft., per 24590-PTF-PER-M-04-0006.

$V_{ldf} := 0.060 \cdot gal$ — Leak Detector Volume per MathCad Worksheet "Pipe and Tank Annular Volumes."

$h_b := 0.125 \cdot in$ — Epoxy Resin dam bead height.

$V_{t2} := 1233.841 \cdot ft^3$ — Annular volume for the 6-in containment pipe and auxiliary volumes for this problem MathCad Worksheet "Pipe and Tank Annular Volumes."

$t_t := 24 \cdot hr$ — Maximum allowed time determined from project constraints.

$n_f := 0.013$ — Manning roughness coefficient for FRP pipe, maximum value per Brater, 1996.

Preliminary Calculations

$S_o := \frac{\Delta z}{L_p} = 0.01105$ — Stated slope of the pipe, ft drop per foot length of pipe per project drawings and Excel worksheet.

$\beta := acos\left(\frac{\Delta z}{L_p}\right) = 89.367 \cdot deg$ — Slope angle, basic geometrical definition.

$\cos(\beta) = 0.01105$ — Approximately the same as S_o.

$S := S_o \cdot 12 \frac{in}{ft} = 0.01105$

$A_p := \frac{\pi \cdot d_6^{\,2}}{4} = 0.22 \cdot ft^2$ — Inside cross sectional area of the containment pipe.

$R_p := \frac{d_6}{2} = 3.173 \cdot in$ — Radius of the containment pipe.

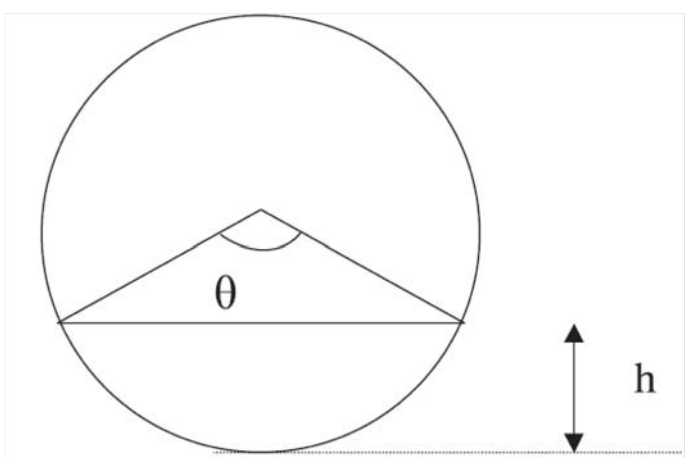

Cross-section geometry of a self venting pipe, general form

$V_2 := V_{wet} \cdot L_p = 10.851 \cdot gal$ — Minimum volume of water for film coverage in the containment pipe.

$L_{d1} := \frac{h_b}{\tan(90° - \beta)} = 0.94288 \cdot ft$ Length of water behind one Epoxy Resin bead.

$N_b := \text{floor}\left(\frac{L_p}{20 \cdot ft}\right) + 4 = 221$ Number of Epoxy Resin beads, based upon one bead for every 20 ft of pipe, plus 4 elbows.

$L_d := L_{d1} \cdot N_b = 208.377 \cdot ft$ Total Length of bead dams, based upon one bead for every 20 ft of pipe, plus 4 elbows.

$A_b := h_b \sqrt{1.766 \cdot d_6 \cdot h_b - h_b^2} = 0.00102 \cdot ft^2$ Area of bead dam.

$V_d := L_d \cdot A_b = 1.59243 \cdot gal$ Volume of water behind bead dam.

$V_l := \frac{\rho_{wv}}{\rho_w} \cdot V_{t2} = 0.061 \cdot gal$ Liquid equivalent for water evaporation into the annular space between pipes.

$V_{36} := V_c + V_{ldf} + V_d + V_l = 1.713 \cdot gal$ Volume 3 thru 6, defined above

Initial Guess on Water Flowrate

$Q_L := 0.01203 \cdot gpm$

$Q_L = 0.722 \cdot \frac{gal}{hr}$

Initial guess liquid volumetric flow rate, iteratively determined until time constraints are met.

Mass Flow Rate Determinations

$w := \rho_w \cdot Q_L = 1.673 \times 10^{-3} \cdot \frac{lbm}{sec}$ Mass flow rate per the continuity equation.

Included Angle, Flow Area and Hydraulic Radius Determination

Calculate K_m value

$K_m := \frac{Q_L \cdot n_f}{d_6^{\frac{8}{3}} \cdot S^{\frac{1}{2}}} \cdot \frac{s}{m^{\frac{1}{3}}} = 1.22 \times 10^{-5}$ Akgiray, 2005, pg. 491, eqn. 9. This is a non-dimensional form.

For Km less than 1/π, use Akgiray eqn. 23 to determine, θ, otherwise use eqn. 48, 49 or 50.

Note: $\frac{1}{\pi} = 0.318$

$\theta := 1.28 \cdot K_m^{-0.26} \cdot \mathrm{acos}\left(1 - 5.965 \cdot K_m\right) = 16.766 \cdot °$ Akgiray, 2005, eqn. 23.

$\theta = 16.766 \cdot °$ Below mid-point of pipe.

$\delta := \frac{d_6}{2} \cdot \left(1 - \cos\left(\frac{\theta}{2}\right)\right) = 0.034 \cdot in$ Liquid height within the pipe, Akgiray, 2005, eqn. 15 (defined as "h" in above figure.

$A_L := \frac{(\theta - \sin(\theta)) d_6^2}{8} = 0.0209 \cdot in^2$ Cross-sectional flow area of the liquid (geometric definition, see Akigary, 2005, eqn. 4.

$P_w := d_6 \cdot \mathrm{acos}\left(1 - \frac{\delta}{R_p}\right) = 0.928 \cdot in$ Wetted perimeter (geometric definition, See Lindeburg, 2001, pg. A-7).

$\frac{A_L}{A_p} = 6.617 \times 10^{-4}$ Area ratio, confirms flow area.

$R_h := \frac{d_6}{4} \cdot \left(\frac{\theta - \sin(\theta)}{\theta}\right) = 0.0225 \cdot in$ Hydraulic Radius, Akgiray, 2005, eqn. 5.

Flow Velocity Determination

$v_L := \frac{R_h^{\frac{2}{3}} \cdot S^{\frac{1}{2}}}{n_f} \cdot \frac{1}{m^{\frac{2}{3}}} \cdot \frac{m}{sec} = 0.056 \frac{m}{s}$ Manning equation with SI units, Akgiray, 2005, eqn. 1.

$v_L = 0.183 \cdot \frac{ft}{sec}$ Resulting liquid flow velocity.

Preliminary Time Determinations

$t_1 := \frac{L_p}{v_L} = 6.59 \cdot hr$ Time for water to traverse down the containment pipe to the LDF.

$t_2 := \frac{V_2}{Q_L} = 15.03 \cdot hr$ Time for water to create film on the containment pipe surface.

$t_{36} := \frac{V_{36}}{Q_L} = 2.374 \cdot hr$ Time for water to fill LDF to minimum detection height.

$t_t := t_1 + t_2 + t_{36} = 24.0000 \cdot hr$

Iterate on assumed water flowrate, Q_L, until t_t is 24 hrs.

$Q_L = 0.722 \cdot \frac{gal}{hr}$

Reynolds Number Definition

$Re := \frac{4\delta \cdot v_L \cdot \rho_w}{\mu_w} = 124.263$

Reynolds Number, Bird (2002), eqn. 2.2-25. This is within the laminar flow regime.

There are three flow regimes as stated in Bird (2002) as follows.

laminar flow with negligible rippling	$Re < 20$
laminar flow with pronounced rippling	$20 < Re < 1500$
turbulent flow	$Re > 1500$

Froude Number Determination

$v_{Lp} := \frac{Q_L}{A_p} = 1.221 \times 10^{-4} \cdot \frac{ft}{sec}$

Velocity the liquid would have in the pipe flowing full with the given flow rate.

$Fr := \frac{4Q_L}{\pi \cdot d_6^2 \sqrt{g \cdot d_6}} = 2.959 \times 10^{-5}$

Froude No. in terms of flow rate, for Froude No. less than 1/3, the flow will be self venting (ref. Nayyar, 2000, pg. B.446, eqn. a, and Hills, 1983, eqn. 1).

also

$Fr := \frac{v_{Lp}}{\sqrt{g \cdot d_6}} = 2.959 \times 10^{-5}$

DOCUMENT RELEASE AND CHANGE FORM

Prepared For the U.S. Department of Energy, Assistant Secretary for Environmental Management
By Washington River Protection Solutions, LLC., PO Box 850, Richland, WA 99352
Contractor For U.S. Department of Energy, Office of River Protection, under Contract DE-AC27-08RV14800

TRADEMARK DISCLAIMER: Reference herein to any specific commercial product, process, or service by trade name, trademark, manufacturer, or otherwise, does not necessarily constitute or imply its endorsement, recommendation, or favoring by the United States government or any agency thereof or its contractors or subcontractors. Printed in the United States of America.

Release Stamp

DATE:
May 27,2020
HANFORD RELEASE

1. **Doc No:** RPP-CALC-63780 **Rev.** 00

2. **Title:**
LERF Basin 41 Buried Piping Analysis

3. **Project Number:** ☐N/A
T1P226

4. **Design Verification Required:**
☐Yes ☒No

5. **USQ Number:** ☒ N/A
RPP-27195

6. **PrHA Number** **Rev.** ☒ N/A

Clearance Review Restriction Type:
public

7. **Approvals**

Title	Name	Signature	Date
Clearance Review	Raymer, Julia R	*Raymer, Julia R*	05/27/2020
Design Authority	Wilson, Nathaniel W	*Wilson, Nathaniel W*	05/04/2020
Checker	Huisingh, Jeffrey S	*Huisingh, Jeffrey S*	05/13/2020
Document Control Approval	Meinecke, Kathryn R	*Meinecke, Kathryn R*	05/27/2020
Environmental Protection	Wall, Jeremy M	*Wall, Jeremy M*	05/14/2020
Originator	Williams, Jacob D	*Williams, Jacob D*	05/13/2020
Other Approver	Lovelady, James T	*Lovelady, James T*	05/14/2020
Other Approver	Dorsh, Paul M	*Dorsh, Paul M*	05/13/2020
Responsible Engineering Manager	Huntington, Matthew R	*Huntington, Matthew R*	05/14/2020

8. **Description of Change and Justification**

Original issue.

This calculation documents the evaluation of four, new, double-containment fiberglass reinforced plastic (FRP) pipe lines in support of the Liquid Effluent Retention Facility (LERF) Basin 41 Design project. This calculation evaluates the adequacy of these lines relative to deadweight, seismic, wind, and other design loads as specified in TFC-ENG-STD-06, and the American Society of Mechanical Engineers (ASME) B31.3 Process Piping Code. The International Organization for Standardization's (ISO) code for glass-reinforced plastics (GRP) piping, ISO 14692, is utilized as a supplemental verification of system flexibility as well as a means to determine support and anchor loads.

9. **TBDs or Holds** ☒N/A

10. **Related Structures, Systems, and Components**

a. **Related Building/Facilities** ☐N/A	b. **Related Systems** ☐N/A	c. **Related Equipment ID Nos. (EIN)** ☒N/A
ETF FACILITIES LERF FACILITIES	ETF LERF	

11. **Impacted Documents – Engineering** ☐N/A

Document Number	Rev.	Title
RPP-CALC-63779	00	LERF Basin 41 Catch Basin Piping Analysis

12. **Impacted Documents (Outside SPF):**

N/A

13. **Related Documents** ☐N/A

Document Number	Rev.	Title
H-2-79613 SH 001	05	PIPING PLAN CATCH BASIN 242AL-42
H-2-79616 SH 001	03	PIPING SECTIONS CATCH BASINS 242AL-42-43-44
H-2-79633 SH 001	02	PIPE SUPPORTS
H-2-79634 SH 001	03	PIPE SUPPORTS
H-2-838765 SH 001	00	LERF BASIN 41 MECHANICAL GENERAL ARRANGEMENT
H-2-838765 SH 002	00	LERF BASIN 41 MECHANICAL SECTIONS AND DETAILS
H-2-838765 SH 003	00	LERF BASIN 41 MECHANICAL DETAILS
H-2-838765 SH 004	00	LERF BASIN 41 MECHANICAL SECTIONS AND DETAILS
H-2-838765 SH 005	00	LERF BASIN 41 MECHANICAL SECTIONS AND DETAILS
H-2-838765 SH 006	00	LERF BASIN 41 MECHANICAL SECTIONS
H-2-838765 SH 007	00	LERF BASIN 41 MECHANICAL SECTIONS
H-2-838765 SH 008	00	LERF BASIN 41 MECHANICAL DETAILS
H-2-88772 SH 001	02	P I P I N G S E C T I O N S
H-2-88773 SH 001	02	P I P E S U P P O R T S
MT-50497	00	Liquid Effluent Retention Facility (LERF) Basin 41

DOCUMENT RELEASE AND CHANGE FORM

Doc No: RPP-CALC-63780 **Rev.** 00

14. **Distribution**

Name	**Organization**
Angevine, Brennan T	MISSION ANALYSIS ENGINEERING
Blaak, Whitney S	COGNIZANT SYSTEM ENGINEERING
Demiter, Scott M	ETF OPERATIONS
Foster, Jim	242-A/AW/ETF OPERATIONS
Goessmann, Glen E	ENGINEERING PROGRAMS
Greenhalgh, Aaron M	TANK FARM PROJECTS ENGINEERING
Halgren, Dale L	ETF ENGINEERING
Harris, John W	SAFETY PROGRAM SERVICES RC/P
Joslyn, Cameron C	ETF ENGINEERING
Lovelady, James T	DESIGN SERVICES
McFerran, Brandon E	242-A/AW/ETF OPERATIONS
Omberg Carro, Susan K	NUCLEAR SAFETY
O'Meara, Sean P	ETF ENGINEERING
Powers, Daniel J	ETF ENGINEERING
Roosendaal, Gene D	TFP PROJECT MANAGEMENT
Rutherford, Wally	ETF ENGINEERING
Sackett, Tom E	TANK FARM PROJECTS
Samoska, Jerry A	INSTRUMENT & CNTRL ENGINEERING
Shultz, Milton V	NUCLEAR SAFETY
Smith, Gregory E	TANK FARM PROJECTS ENGINEERING
Smoot, Bill R	TFP RADCON
Swanson, Brad L	242-A/AW/ETF OPERATIONS
Wall, Jeremy M	RETRVL & CLOSURE/PROJ ENV CMPL
Wilson, Nathaniel W	ETF PROJECTS ENGINEERING

RPP-CALC-63780
Revision 0

LERF Basin 41 Buried Piping Analysis

Prepared by

JD Williams
Sargent & Lundy for Washington River Protection Solutions, LLC

Date Published
May 2020

washington river protection solutions

Prepared for the U.S. Department of Energy
Office of River Protection

Contract No. DE-AC27-08RV14800

JACOB D WILLIAMS
STATE OF WASHINGTON
51722
REGISTERED
PROFESSIONAL ENGINEER

10/28/20

RPP-CALC-63780, Rev. 0

Sargent & Lundy Engineering Services, Inc.	**CALCULATION COVER SHEET**	**Page No.** 1 of 192 **Date** 5/13/20 **Rev. No.** 0 **Calculation No:** S54413.024-M-001

Project No.	**Project Title:**	**Client:**
S54413.024	LERF Basin 41 Design	Washington River Protection Solutions, LLC

Title:

LERF Basin 41 Buried Piping Analysis

Purpose and Objective:

This calculation documents the evaluation of four, new, double-containment fiberglass reinforced plastic (FRP) pipelines in support of the Liquid Effluent Retention Facility (LERF) Basin 41 Design project. This calculation evaluates the adequacy of these lines relative to deadweight, seismic, wind, and other design loads as specified in TFC-ENG-STD-06, and the American Society of Mechanical Engineers (ASME) B31.3 Process Piping Code. The International Organization for Standardization's (ISO) code for glass-reinforced plastics (GRP) piping, ISO 14692, is utilized as a supplemental verification of system flexibility as well as a means to determine support and anchor loads.

Rev. No.	Total Pages		Prepared By	Checked By	PM/TL
0	192	**Print Name/ Sign:**	JD Williams, P.E.	JS Huisingh, P.E.	PM Dorsh, P.E.
		Date:	5/13/20	5/13/20	5/13/20

Revision Description (Revision Description/Affected Pages):

Original Issue.

		Print Name/ Sign:			
		Date:			

Revision Description (Revision Description/Affected Pages):

RPP-CALC-63780, Rev. 0

CALCULATION REVIEW CHECKLIST

Project No.	Calculation No.	Rev. No.	Page No.
S54413.024	S54413.024-M-001	0	2 of 192

Items Checked	Accept Y	Accept N	Accept N/A	Description of Resolution for Unacceptable Items
1. Cover sheets properly completed.	√			
2. Calculation sheet headers complete with calculation number, revision number, etc.	√			
3. Calculation sheet contents are legible, accurate, and complete per format.	√			
4. Listed attachments included.	√			
5. Calculation objective clearly described.	√			
6. Criteria are suitable and properly referenced to task specific documents.	√			
7. Assumptions and input data selected, described, reasonable, and attached or referenced to task documents.	√			
8. Calculation method identified and appropriate for the design activity.	√			
9. Calculation results reasonable and correctly described in results and conclusions.	√			
10. Physical property calculations generated by CAD software verified via hand calculations.			√	
11. Computer program identified with version and revision.	√			
12. Computer input/output provided or referenced and reasonable.	√			
13. Computer run traceable to calculation (file #, etc.).	√			
14. Computer input/output data and problem type within validation/verification range of use.	√			
15. Computer program validation/verification addressed.	√			
16. Computer operating system in use for calculation preparation is the same as when the software was verified on machine.	√			

Calculation Checking Method	√	Applicable Pages
1. Direct Step-by-Step Check	√	All.
2. Reference Chart(s) or Book(s) Comparison (Append Documentation)		
3. Alternate Calculation (Append Documentation)		

Comments:

Preparer (Print Name and Sign):	Date:
J. D. Williams	5/13/20
Checker (Print Name and Sign):	**Date:**
J.S. Huisingh	5/13/20

Signatures obtained only after discrepancies are corrected and comments are resolved.

CALCULATION SHEET

Project No. S54413.024	**Calculation No.** S54413.024-M-001	**Rev.** 0	**Page No.** 3 of 192
Title: LERF Basin 41 Buried Piping Analysis			
Prepared By: JD Williams	**Date:** 5/13/20	**Checked By:** JS Huisingh	**Date:** 5/13/20

TABLE OF CONTENTS

1.0 PURPOSE 5
2.0 METHODOLOGY 5
3.0 DESIGN INPUTS 20
4.0 ASSUMPTIONS 23
5.0 COMPUTER SOFTWARE 24
6.0 RESULTS 24
7.0 REFERENCES 27
8.0 CALCULATIONS 29

Appendices

Appendix A
LERF Piping Drawings

Appendix B
AutoPIPE Model Isometric Views

Appendix C
Model Input and Output Report

Attachments

Attachment 1
AutoPIPE SOIL Modeling Information

Attachment 2
New FRP Pipe Data (Conley Composites)

Attachment 3
Existing FRP Pipe Data

Attachment 4
AWWA M54 Fiberglass Pipe Design Data

Attachment 5
67246-024-RFI-002 – Fluid Specific Gravity

Attachment 6
Pipe Insulation Data

Attachment 7
Conley Composites AWWA M45 External Loading Calculations

Figures

Figure 2-1. Conley Composites ISO 14692 Design Envelopes. 11
Figure 2-2. Representation of Primary Pipe Support Guide. 13
Figure 2-3. Double Containment Pipe End Closures 14
Figure 2-4. Support-Anchor Detail 14
Figure 2-5. Conley Double-Containment Tee 16
Figure 2-6. New Tee & Existing Pipe Splicing Configuration 17
Figure 6-1. Maximum Pipe Stress in New FRP Pipe 25

Tables

Table 2-1. Summary of Design Conditions. (3 sheets) 6
Table 6-1. Bounding Support Reaction Loads on New Pipe Supports. 26
Table 6-2. Bounding Support Reaction Loads on Existing Pipe Supports. 26

Acronyms

AISC	American Institute of Steel Construction
ALA	American Lifelines Alliance
ASCE	American Society of Civil Engineers
ASME	American Society of Mechanical Engineers
DCR	Demand-to-Capacity Ratio
FRP	Fiber-Reinforced Plastics
GRP	Glass-Reinforced Plastics
HDB	Hydrostatic Design Basis Stress
HDS	Hydrostatic Design Stress
ISO	International Organization for Standardization
LERF	Liquid Effluent Retention Facility
WT	Waste Transfer
WTP	Waste Treatment Plant

Sargent & Lundy Engineering Services, Inc.	CALCULATION SHEET		
Project No. S54413.024	**Calculation No.** S54413.024-M-001	**Rev.** 0	**Page No.** 5 of 192
Title: LERF Basin 41 Buried Piping Analysis			
Prepared By: JD Williams	**Date:** 5/13/20	**Checked By:** JS Huisingh	**Date:** 5/13/20

1.0 PURPOSE

This calculation documents the evaluation of four, new, double-containment fiberglass reinforced plastic (FRP) pipelines in support of the Liquid Effluent Retention Facility (LERF) Basin 41 Design project. This calculation evaluates the adequacy of these lines relative to deadweight, seismic, wind, and other design loads as specified in TFC-ENG-STD-06, and the American Society of Mechanical Engineers (ASME[1]) B31.3 Process Piping Code. The International Organization for Standardization's (ISO) code for glass-reinforced plastics (GRP) piping, ISO 14692, is utilized as a supplemental verification of system flexibility as well as a means to determine support and anchor loads.

2.0 METHODOLOGY

The majority of the pipe is buried in long, straight runs, with relatively short sections of above-ground piping found at the LERF catch basins, where connections are made to new and existing piping. Two of the new lines branch off of existing buried piping (a 3"x6" evaporator condensate line [3" EVAP COND-PC5000-M17] and a 4"x8" waste treatment plant line [4"-WTP-001-M17]) and run to the new, above-ground stainless steel piping at the catch basin of the new LERF Basin 41. The other two new lines run between the new, above-ground stainless steel piping at the new LERF Basin 41 and the existing FRP piping at the catch basin of the existing LERF Basin 42. These new lines are depicted in design drawing H-2-838765.

In this section, a description is given of how and why the provisions of Chapter VII of the ASME B31.3 Code, which pertains to non-metallic piping, are utilized in this calculation. Section 2.2 of this calculation (see below) contains a description of why this different approach to piping analysis was chosen instead of a more typical approach for ASME B31.3 stress analysis as has been done for metallic piping systems. Section A319.4.1 within the "Flexibility & Support" section of B31.3's Chapter VII states, "No formal analysis is required for a piping system that … (c) is laid out with a conservative margin of inherent flexibility, or employs joining methods or expansion joint devices, or a combination of these methods, in accordance with manufacturers' instructions." Following guidance from FRP manufacturer Conley Composites, the general arrangement of the piping system found in design drawing H-2-838765 was developed, including (but not limited to) the use of expansion joints near changes in pipe material (i.e., to stainless steel piping), regularly-spaced guides between the primary and secondary piping of double containment pipes, anchor-type pipe supports near changes in direction, interlocking unions for long runs of double containment pipes, and deadweight supports at valve locations. Therefore, the B31.3 requirement from Section A319.4.1 is judged to have been met.

The minimum wall thickness check for internal pressure per ASME B31.3, Section A304.1.2(c) is performed in Section 8.5 of this calculation. The service design factor spoken of in section A304.1.2(c) and used in the thickness check was conservatively chosen as described in the Design Inputs. The design stress in the wall thickness check (Equation 26c of Chapter VII of B31.3) is the HDB stress value that is addressed in a Section 2.2. Results for this check are summarized in the Results section.

Conley Composites provided pipe external loading calculations following the AWWA M45, Fiberglass Pipe Design manual. These were done for the secondary containment pipes (6-inch and 8-inch) at burial depths of 2

[1] ASME is the registered trademark of the American Society of Mechanical Engineers, New York, NY.

feet and 12 feet. There are no wheel loads applied in the calculations since there are no crane or other vehicle crossings near where the new analyzed pipes will be installed. The Conley calculations satisfy the B31.3 external loading requirement in Section A302.3.3(c)(2).

To provide a supplemental means of verifying the inherent flexibility of the subject transfer piping, it is modeled as shown on the design drawing H-2-838765 using the Bentley AutoPIPE™[2] piping analysis software. (See Section 5.0 for relevant computer and analytical software information and Appendix B for model isometric images.) This supplemental analysis evaluates this piping that is designed and fabricated with materials in accordance with the ASTM standards listed in ASME Code B31.3-2016 (which is the code of record per RPP-SPEC-63632—see Design Input 2) using the ISO 14692-2002 code for *Petroleum and Natural Gas Industries – Glass-Reinforced Plastics (GRP) Piping* to analyze it in AutoPIPE. Although the pipe stresses are analyzed using the ISO code, the ASME B31.3 design conditions are addressed in the next section.

2.1 Summary Tabulation of ASME B31.3 Code Design Conditions

Table 2-1 below, presents a summary discussion of ASME B31.3 design conditions.

Table 2-1. Summary of Design Conditions. (5 sheets)

ASME B31.3, Section 301 Design Condition	Summary of Requirement	Description of Application of Requirement in Analysis
301.2 Design Pressure		
301.2.1 General	The design pressure of each component in a piping system shall be not less than the pressure at the most severe condition of coincident internal or external pressure and temperature (minimum or maximum) expected during service ...	The selection of components has considered design pressure as appropriate. The system design conditions are addressed in the AutoPIPE supplemental analysis.
301.2.2 Required Pressure Containment or Relief	Provision shall be made to safely contain or relieve … any pressure to which the piping may be subjected. Piping not protected by a pressure-relieving device, or that can be isolated from a pressure-relieving device, shall be designed for at least the highest expected pressure.	The deadhead pressure of new Basin 41 pump is ~100 psig (RPP-CALC-63650 Att. 2), which will not challenge 150 psig design pressure of new piping. Given 100 psig max. op. pressure of existing piping, new piping design pressures will likewise not be challenged.

[2] Bentley AutoPIPE is a registered trademark of Bentley Systems, Exton, PA.

Table 2-1. Summary of Design Conditions. (5 sheets)

ASME B31.3, Section 301 Design Condition	Summary of Requirement	Description of Application of Requirement in Analysis
301.3 Design Temperature		
301.3.1 Design Minimum Temperature	The design minimum temperature is the lowest component temperature expected in service. This temperature may establish special design requirements and material qualification requirements. See also paras. 301.4.4 and 323.2.2.	The minimum design ambient temperature is -25º F for FRP pipes above grade and exposed to the atmosphere. However, the minimum temperatures used in the AutoPIPE supplemental analysis for the buried portions of piping is 32º F (see *Design Inputs*) for cold contents (boundingly low) or empty lines. These are appropriately addressed in the AutoPIPE supplemental analysis and do not mandate special design requirements or material qualifications for this system.
301.3.2 Uninsulated Components	*Describe any special, justified allowances for considering piping and component temperatures to be other than that of the fluid design temperatures.* (Content summarized.)	Carrier piping temperature is taken to be equal to that of the contents including the case when the system is off and the piping and contents cool down to the ambient cold temperatures. (See *Design Inputs*) (See row above regarding 32° F piping.) All above ground piping is insulated.
301.3.3 Externally Insulated Piping	The component design temperature shall be the fluid temperature unless calculations, tests, or service experience based on measurements support the use of another temperature. Where piping is heated or cooled by tracing or jacketing, this effect shall be considered in establishing component design temperatures.	Addressed in the AutoPIPE model supplemental analysis.
301.3.4 Internally Insulated Piping	The component design temperature shall be based on heat transfer calculations or tests.	N/A – The assembly is not internally insulated.
301.4 Ambient Effects		
301.4.1 Cooling – Effects on Pressure	The cooling of a gas or vapor in a piping system may reduce the pressure sufficiently to create an internal vacuum. In such a case, the piping shall be capable of withstanding the external pressure at the lower temperature, or provision shall be made to break the vacuum.	N/A: These systems are designed to transfer and distribute liquid (~water) at temperatures that preclude significant vapor content. Also, the piping is free draining into the LERF basins because valves are not expected to be closed during operation. Due to this free-draining nature, when not operating, fluid is not expected to be trapped between valves in the system.

CALCULATION SHEET

Project No. S54413.024	**Calculation No.** S54413.024-M-001	**Rev.** 0	**Page No.** 8 of 192
Title: LERF Basin 41 Buried Piping Analysis			
Prepared By: JD Williams	**Date:** 5/13/20	**Checked By:** JS Huisingh	**Date:** 5/13/20

Table 2-1. Summary of Design Conditions. (5 sheets)

ASME B31.3, Section 301 Design Condition	Summary of Requirement	Description of Application of Requirement in Analysis
301.4.2 Fluid Expansion Effects	Provision shall be made in the design either to withstand or to relieve increased pressure caused by the heating of static fluid in a piping component. …	N/A: The piping is free draining into the LERF basins because valves are not expected to be closed during operation. Due to this free-draining nature, when not operating, fluid is not expected to be trapped between valves in the system.
301.4.3 Atmospheric Icing	Where the design minimum temperature of a piping system is below 0 °C (32 °F), the possibility of moisture condensation and buildup of ice shall be considered and provisions made in the design to avoid resultant malfunctions. …	N/A - Valves on above-ground piping are insulated and heat-traced, so build-up of ice and resultant malfunctioning of valves is precluded.
301.4.4 Low Ambient Temperature	Consideration shall be given to low ambient temperature conditions for displacement stress analysis.	Consideration for low ambient temperature conditions is addressed in this evaluation.
301.5 Dynamic Effects		
301.5.1 Impact	Impact forces caused by external or internal conditions (including changes in flow rate, hydraulic shock, liquid or solid slugging, flashing, and geysering) shall be taken into account in the design of piping.	The LERF piping is located in a remote location and is not expected to experience any external impact conditions. Changes in flow rates, liquid slugging, etc. may be encountered, and are discussed in the *Methodology* section and addressed in the AutoPIPE model as judged to be appropriate. Geysering is not an issue since maximum system operating temperature (150 ºF, see *Design Inputs*) will not cause boiling. Flashing is not an issue since the system pressures and temperatures will not cause vaporization of the fluid. Fluid transient loads are also discussed in the *Methodology* section.
301.5.2 Wind	The effect of wind loading shall be taken into account in the design of exposed piping. …	Addressed in the AutoPIPE model supplemental analysis.
301.5.3 Earthquake	The effect of earthquake loading shall be taken into account in the design of piping. The analysis considerations and loads may be as described in ASCE 7. …	Earthquake loading is addressed in the AutoPIPE model supplemental analysis.
301.5.4 Vibration	Piping shall be designed, arranged, and supported so as to eliminate excessive and harmful effects of vibration that may arise from such sources as impact, pressure pulsation, turbulent flow vortices, resonance in compressors, and wind.	N/A – There are no significant sources of vibration for the subject buried piping and above-ground piping.
301.5.5 Discharge Reactions	Piping shall be designed, arranged, and supported so as to withstand reaction forces due to let-down or discharge of fluids.	Applicable pressure and fluid loadings are addressed in the subsections below in the *Methodology* section.

CALCULATION SHEET

Project No. S54413.024	**Calculation No.** S54413.024-M-001	**Rev.** 0	**Page No.** 9 of 192
Title: LERF Basin 41 Buried Piping Analysis			
Prepared By: JD Williams	**Date:** 5/13/20	**Checked By:** JS Huisingh	**Date:** 5/13/20

Table 2-1. Summary of Design Conditions. (5 sheets)

ASME B31.3, Section 301 Design Condition	Summary of Requirement	Description of Application of Requirement in Analysis
301.6 Weight Effects		
301.6.1 Live Loads	These loads include the weight of the medium transported or the medium used for test. Snow and ice loads due to both environmental and operating conditions shall be considered.	Fluid weight, fluid thrust loads at bends, and snow and ice loads are considered for this piping. Fluid thrust loads are addressed in the *Methodology* section. Due to the relatively small diameter of the insulated piping and the low sustained load DCRs, the potential snow and ice loads on the above-ground portions of the piping are considered insignificant and are not included in the supplemental analysis.
301.6.2 Dead Loads	These loads consist of the weight of piping components, insulation, and other superimposed permanent loads supported by the piping.	Addressed in the AutoPIPE model supplemental analysis.
301.7 Thermal Expansion and Contraction Effects		
301.7.1 Thermal Loads Due to Restraints	These loads consist of thrusts and moments that arise when free thermal expansion and contraction of the piping are prevented by restraints or anchors.	Addressed in the AutoPIPE model supplemental analysis.
301.7.2 Loads Due to Temperature Gradients	These loads arise from stresses in pipe walls resulting from large rapid temperature changes or from unequal temperature distribution as may result from a high heat flux through a comparatively thick pipe or stratified two-phase flow causing bowing of the line.	N/A - Because the transfer piping is not subject to large, rapid temperature changes or significant, unequal temperature distribution, this loading will not be analyzed in this calculation.
301.7.3 Loads Due to Differences in Expansion Characteristics	These loads result from differences in thermal expansion where materials with different thermal expansion coefficients are combined, as in bimetallic, lined, jacketed, or metallic–nonmetallic piping.	Addressed in the AutoPIPE model supplemental analysis.
301.8 Effects of Support, Anchor, and Terminal Movement	The effects of movements of piping supports, anchors, and connected equipment shall be taken into account in the design of piping. These movements may result from the flexibility and/or thermal expansion of equipment, supports, or anchors; and from settlement, tidal movements, or wind sway.	Addressed in the AutoPIPE model supplemental analysis.
301.9 Reduced Ductility Effects	The harmful effects of reduced ductility shall be taken into account in the design of piping. The effects may, for example, result from welding, heat treatment, forming, bending, or low operating temperatures, including the chilling effect of sudden loss of pressure on highly volatile fluids. Low ambient temperatures expected during operation shall be considered.	Due to the nature of the materials used (FRP piping), reduced ductility effects are not necessary for this calculation.
301.10 Cyclic Effects	Fatigue due to pressure cycling, thermal cycling, and other cyclic loadings shall be considered in the design of piping. …	N/A – No significant cyclic effects are expected.

Table 2-1. Summary of Design Conditions. (5 sheets)

ASME B31.3, Section 301 Design Condition	Summary of Requirement	Description of Application of Requirement in Analysis
301.11 Air Condensation Effects	At operating temperatures below −191° C (−312° F) in ambient air, condensation and oxygen enrichment occur. These shall be considered in selecting materials, including insulation, and adequate shielding and/or disposal shall be provided.	N/A – Because the transfer piping is not subject to −312° F and below, air condensation effects need not be analyzed in this calculation.

2.2 Applications of the ASME B31.3 Code and the ISO 14692 Code for FRP Piping

As stated previously in this calculation, the GRP ISO 14692 piping code (hereafter also referred to as "the code" [with a lower case "c"]), is utilized in a supplemental pipe stress analysis to verify system flexibility. This supplemental analysis is also used as a means to extract support and anchor loads from the new LERF Basin 41 FRP piping. Typically, the ASME B31.3 Process Piping Code (hereafter also referred to as "the Code" [capitalized]) is used to analyze process piping, but the B31.3 Code does not provide in its appendices the required analysis data such as allowable stress values, thermal expansion coefficients, and modulus of elasticity values at design temperatures for filament wound epoxy FRP pipe like it does for metallic pipe.

In B31.3 Chapter VII (*Nonmetallic Piping and Piping Lined With Nonmetals*), Section A302.3 (*Allowable Stresses and Other Design Limits*) states that Table B-3, *Listed Specifications for Filament Wound and Centrifugally Cast Reinforced Thermosetting Resin and Reinforced Plastic Mortar Pipe*, provides listings of specifications that meet the criteria of paragraph A302.3.2(c). Listed in this table are ASTM D2996 and D2997, which are the standard specifications for filament-wound fiberglass pipe and centrifugally cast fiberglass pipe, respectively, which are employed in this design.

Paragraph A302.3.2(c) of the Code, mentioned above, states that the hydrostatic design basis stress (HDB) values for materials listed in Table B-3 shall be obtained by the procedures in ASTM D2992 and are valid only at 73° F. It also states that the hydrostatic design stress (HDS) shall be obtained by multiplying the HDB by a service (design) factor selected for the application and that when using the static HDB, the service (design) factor *F* shall not exceed 0.5. The B31.3 Code also states that the Code's intent in not to specify such service factors but leaves this decision to the designer to decide in consideration of service conditions and the engineering properties of the selected materials.

Paragraph A302.3(a) states that the use of HDS for calculations other than pressure design has not been verified and that the bases for determining allowable stresses and pressures are outlined in para. A302.3.2 (which was discussed earlier). In para. A302.3.3(c), the Code refers to non-B31.3 codes and standards for use as the basis of stress limits from external loadings. Here, the Code points away from its own content to other ASTM standards and codes to develop an HDB/HDS and to qualify the FRP pipe for loads other than pressure loads.

Conley Composites (manufacturer of ASTM D2996 filament-wound fiberglass pipe) performed the ASTM D2992 calculations for the HDB (see Attachment 2) after testing their pipe following that standard D2992. This demonstrated that their filament-wound pipe has HDB values of 16,000 psi at 75° F and 8,000 psi at 250° F.

Because the B31.3 Code cannot use this information directly to analyze the pipe for more than simple pressure loading, and because AutoPIPE has the option to use the ISO 14692 code, which facilitates the selection of service factors to aid in the evaluation of GRP, this latter code was utilized in the supplemental analysis to verify system flexibility. Conley developed the required idealized short-term and long-term design envelopes per the ISO 14692 code (shown in Figure 2, Part 3 of that code) which is used in AutoPIPE to determine allowable stresses. Note the calculated design envelopes in Figure 2-1 below with added descriptive terms at identified node points.

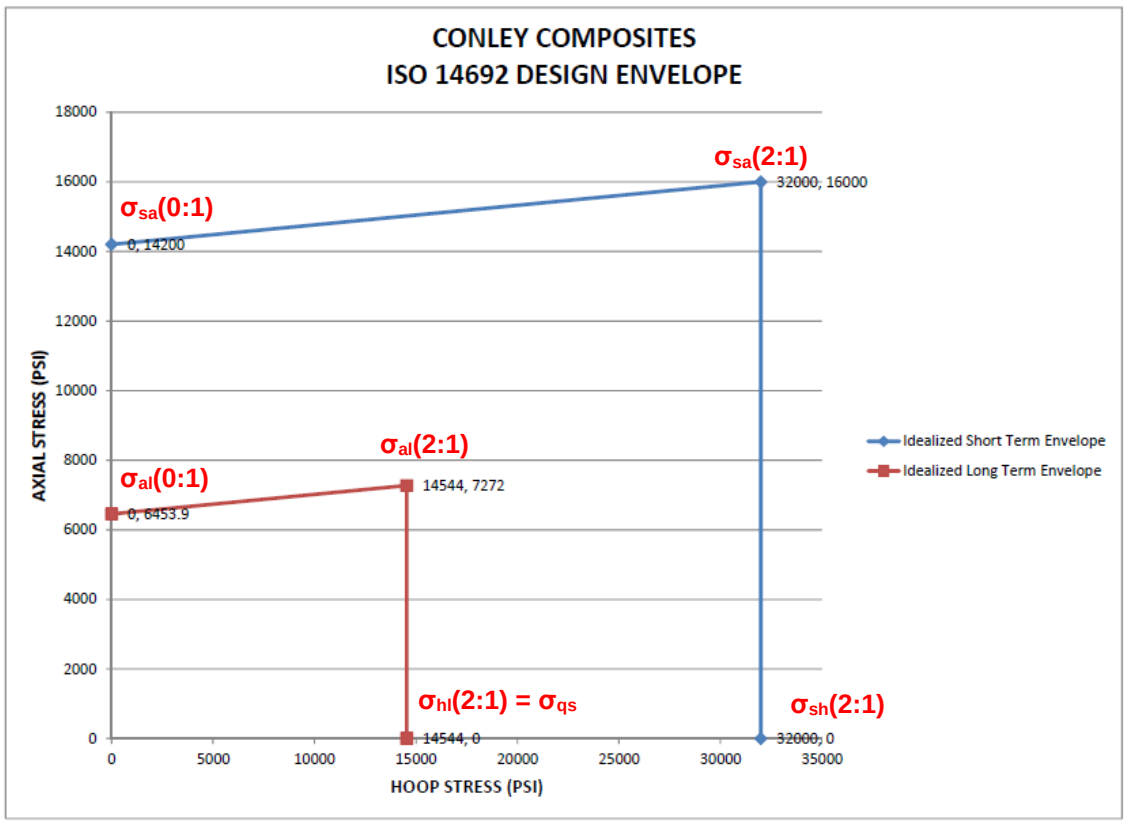

Figure 2-1. Conley Composites ISO 14692 Design Envelopes.

Similar to ASTM D2992's use of HDB, the ISO 14692 code uses what it calls the "qualified stress." A Conley Composites representative explained in detail (in Attachment 2) that the ISO 14692 code uses the ASTM D2992 test data to arrive at a qualified stress in a different way that he describes below:

> *ASTM D2992 has the manufacturer calculate the Long Term Hydrostatic Strength (LTHS) at 100,000 hrs (~11.5 yrs) and 438,000 hrs (50 yrs) and establishes the Hydrostatic Design Basis (HDB) or allowable hoop stress σ(2:1) based on the range these values fall in. Our calculated values for the LTHS at 100,000 and 438,000 hrs are*

17802 psi and 16719 psi respectively. Following Table 1 of ASTM D2992 our established and published HDB is therefore 16,000 psi with this method as ASTM D2992 correlates an HDB per a given range of calculated LTHS.

As we discussed, the ISO-14692 allows the use of ASTM D2992 to establish the qualified pressure as called out in ISO 14692-2 Table 1 and 6.2.3.1. The difference is that when establishing the qualified stress or pressure, which are relatable through product geometry (diameter and wall thickness), the time interval that is considered is 20 years or 175,200 hrs. ISO 14692 also takes the lower confidence level at this time instead of the mean value or the value established by the regression line. Since ASTM D2992 is establishing a hoop stress and our testing methodology was per ASTM D2992 Procedure B (static pressure) with unrestrained ends, the stress we are evaluating is σ(2:1) for the Lower confidence level at a 20 year time. So when considering ISO 14692 the 20 year lower confidence level hoop stress or $\sigma(2:1)_{20yrLCL}$ is σ_{qs}. This is the ISO 14692 version of HDB, evaluated at the 20 year time with the conservancy that the lower confidence level brings.

He also stated that the qualified stresses arrived at using the ISO 14692 code, used to establish the allowable stress limits for the material, resulted (in the case of Conley's test data) in being more conservative than the values arrived at when directly following ASTM D2992 methods. In addition to using ISO 14692, in order to be more conservative and get more representative results at specific temperatures, the values used in the supplemental analysis for "qualified stress" are the (reduced) "HDB" values that were calculated in Section 8.0 through interpolation between the HDB values provided at 75° F and 250° F by Conley (see Attachment 2).

2.3 Miscellaneous Modeling Notes

The following approaches used or features employed in the AutoPIPE modeling of the subject FRP piping were judged to be significant enough to warrant the discussions provided. Piping loadings considered are discussed in subsequent sections.

2.3.1 Support and Anchorage

The underground pipe lines are a pipe-in-pipe design in which the smaller (3-in. and 4-in. nominal) pipe is the primary (or process or carrier) pipe that is relied upon to confine and convey the fluid while the outer, larger (6-in. and 8-in. nominal) pipe is the secondary (or containment or encasement) pipe to capture any potential leak and drain it to appropriate collection points. Where double-contained pipes are employed, the primary pipe is supported entirely by the secondary pipe via guides (2-degree-of-freedom [four-way] restraints installed within the annulus of the two pipes). Guide supports (see Figure 2-2) are installed inside pipe-in-pipe spools from the manufacturer at maximum spacings of 10 ft (see Attachment 2). These guides allow the primary pipe to slide axially along the interior of the secondary pipe while restraining the primary pipe laterally.

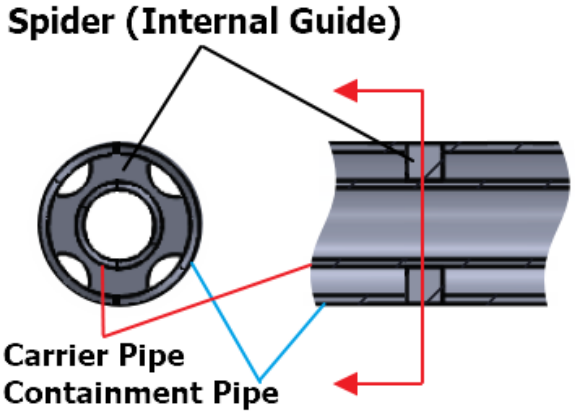

Figure 2-2. Representation of Primary Pipe Support Guide.

There are two locations where interlocking unions are employed to rigidly connect the inner and outer piping. This occurs near the middle of the two long pipe runs between Basins 41 and 42. This is done to accommodate the recommendation from Conley Composites to axially restrain the inner pipe in this way.

The other guide supports in the model are on the encasement pipes (or un-encased primary pipes) where they are connected to vertical steel support members (pipe or HSS) connected to the LERF catch basins or to a concrete anchor footing outside of the basins. These guide supports have small gaps on both sides of the pipe. (See support details on drawing H-2-838765.)

Another type of support used in the model is a V-stop (vertical, two-direction restraint), where the pipe is supported vertically but allowed to slide axially and laterally (with respect to the pipe it supports) and rotate around any axis. There is a large gap at the top of these supports (also called “shoes” in AutoPIPE) so that they can displace vertically upwards without any restraint.

Another support type used on the existing pipe is a Line Stop (axially restraining the pipe). The catch basin at LERF Basin 42 has many angled “kicker”-type steel members welded to vertical support members. At these locations in AutoPIPE, vertical steel members were modeled with line stop supports connected to the top of them (attached to a nearby pipe node point) to simulate the effects of the angled kicker providing axial restraint (with respect to the pipe).

The containment piping is terminated over the LERF Catch Basins as shown on the design drawings (H-2-838765). These end closures are shown in the figure below and are modeled in AutoPIPE by connecting the inner and outer pipes at nearly-coincident nodes using a rigid beam element which anchors the outer pipe to the inner pipe at that location. In reality, these end closure connections are quite rigid and the modeling is representative of the inherent rigidity between the carrier and containment pipes at these locations. It is noted that for the two lines going between Basin 41 and Basin 42, each has an end closure with a vent port at its respective high side (elevation-wise) of the line for pressure testing purposes.

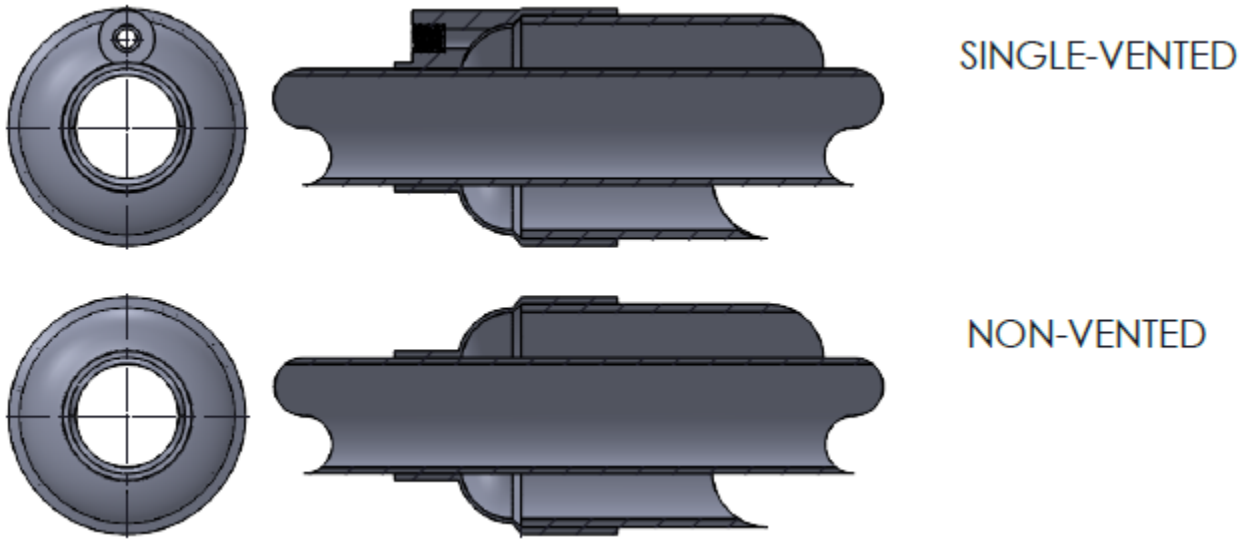

Figure 2-3. Double Containment Pipe End Closures

The last type of pipe support is what shall be called in this calculation a *support-anchor* which is a 5-degree of freedom restraint (not restraining torsion) with the use of dual U-bolts and shear collars as shown in the figure below. These supports are utilized near the 45-degree bend just off of the catch basin at Basin 41. They are modeled in AutoPIPE with their support beams attached directly to the pipe. Although this type of connection restrains 6 degrees of freedom, the imposed fictitious torsional restraint does not significantly affect the system flexibility and overall response.

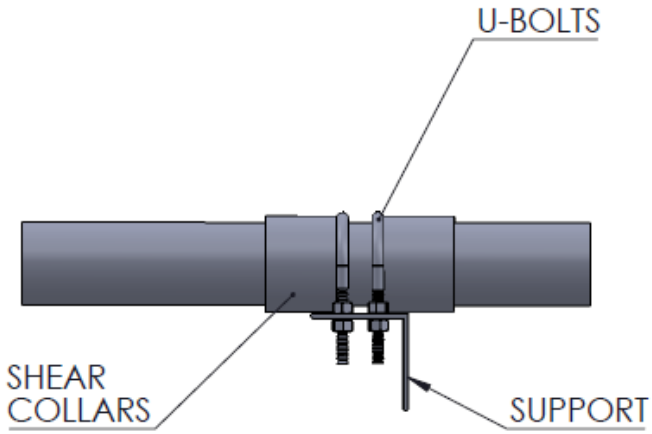

Figure 2-4. Support-Anchor Detail

The anchors (six-degree of freedom restraints) modeled in AutoPIPE are found at the rigid riser connections of the pipes in the two catch basins (LERF Basin 41 and 42); at specified ends of the existing buried pipe within the berm, which are located ~45 feet inside and along the length of the berm, just north of the LERF basins; and

also at a soil penetration point of one existing 12" FRP pipe[3]. See Appendix B for AutoPIPE model screenshots.

2.4 Connections to Existing FRP Pipes

The table below specifies the differences between the existing and new FRP piping and whether or not custom adapters are required at the connections between the existing and new pipes.

Table 2-2. Existing & New FRP Pipe Data.

EXISTING PIPE	Pipe Size	Pipe OD	Manufacturer/Type	Custom Adapter Required?
Evaporator Piping	3"	3.5"	Fibercast FRP Pipe Centrifugally Cast, Epoxy, Centricast III EP	NO
	6"	6.625"		YES
WTP Piping	4"	4.552"	Bondstrand FRP Pipe Filament-wound, Epoxy, Series 4000	YES
	8"	8.678"		YES
NEW PIPE	**Pipe Size**	**Pipe OD**	**Manufacturer/Type**	
	3"	3.47"	Conley FRP Pipe Filament Wound, Epoxy Series 40	
	6"	6.57"		
	4"	4.48"		
	8"	8.60"		

Conley Composites sent the following three points to take note of in preparation to connect to existing FRP pipes (see Conley email in Attachment 2):

> *(1.) When connecting Conley FRP pipe with FRP pipe from a different manufacture, Conley will manufacture an adapter fitting to make the connection if difference in diameter greater than 0.040".*
>
> *(2.) Bonding of FRP pipe is a mechanical bond that relies on good preparation and cleanliness. Epoxy will bond to Epoxy as well as Vinyl FRP pipe.*
>
> *(3.) Generally, it is recommended that an anchor be installed when mating to piping from a different manufacture. In this case, the anchor will not be required. As stated, the buried pipe will see low temperature fluctuations.*

[3] The lateral stiffnesses at the soil penetration point (for the existing pipe) are set to 0 to allow the pipe to grow/displace axially.

Additional notes on those points:

- As shown in the table above, the existing 6", 4", and 8" pipes will require custom adapter fittings from Conley while the existing 3" pipe will only require a standard fitting from Conley.
- All three of the FRP pipe types in the table above are epoxy resin pipes, so bonding will not pose an issue.
- The new Conley pipe is filament wound FRP pipe. The strengths of the existing pipes (filament-wound and centrifugally-cast) are of comparable magnitudes to the new Conley pipe such that when the new piping is shown to be adequate with a conservative margin of safety, adequacy may also be judged of the existing pipes.

The new pipe will tee into the existing pipe using a Conley prefabricated tee-in-tee piece as shown below:

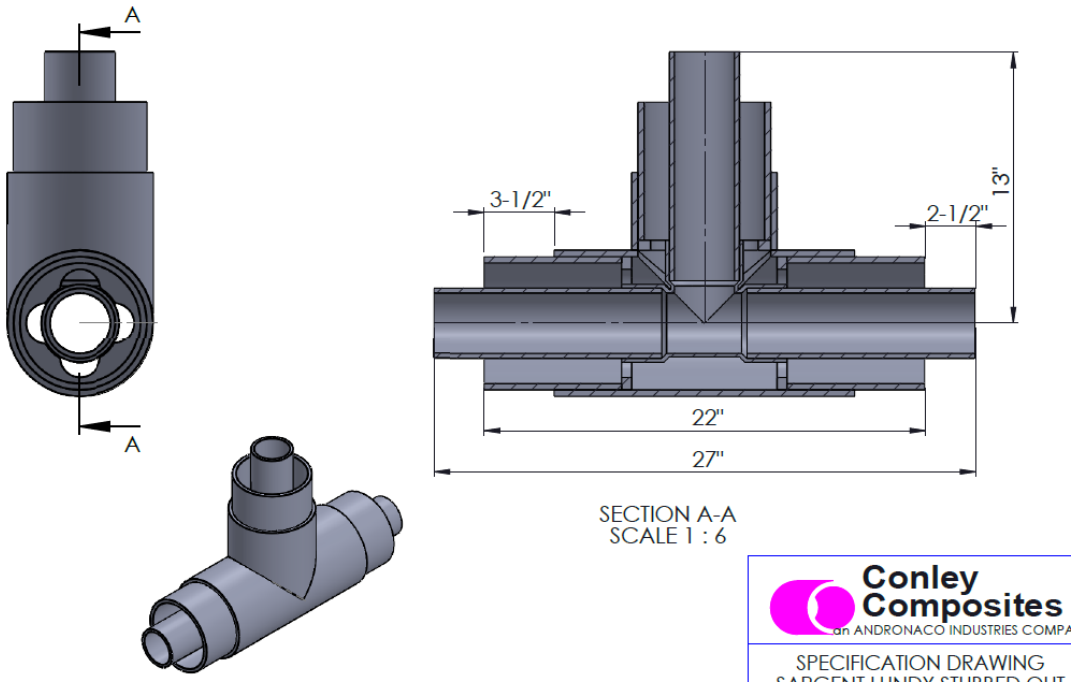

Figure 2-5. Conley Double-Containment Tee

The method of splicing in the tee will be as shown below with clam-shell type couplings (standard or custom adapters):

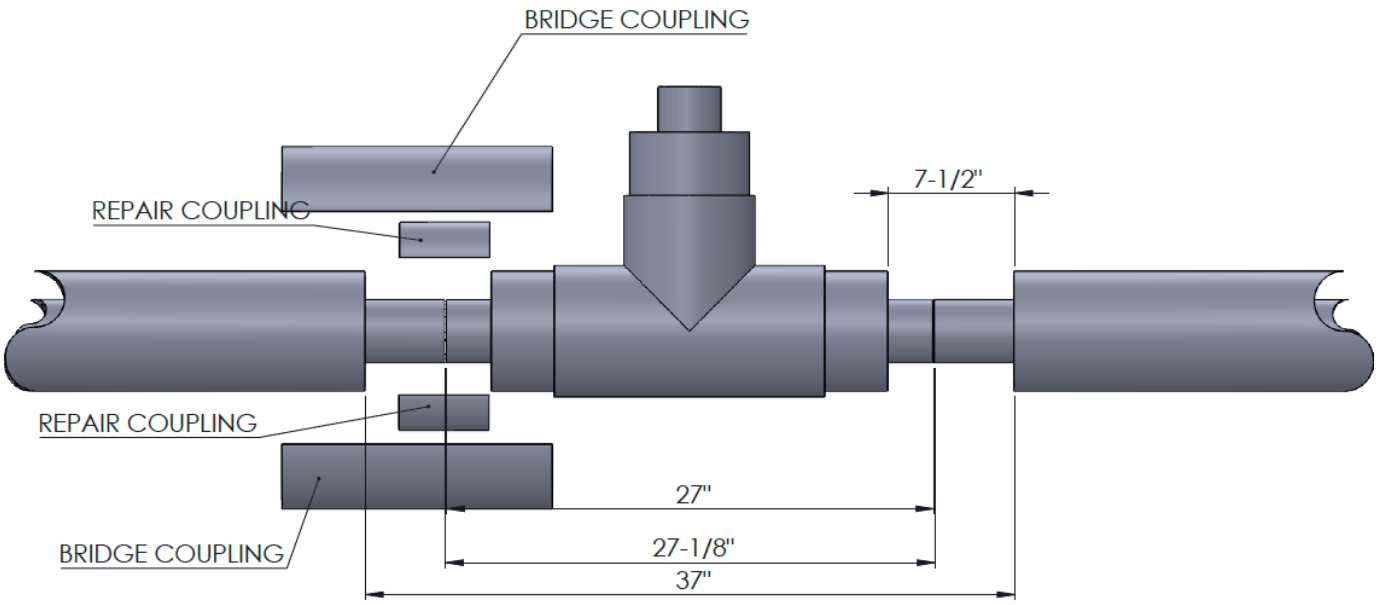

Figure 2-6. New Tee & Existing Pipe Splicing Configuration

2.5 Piping Loading Considerations for Analysis

Steps described in the WRPS engineering standard TFC-ENG-DESIGN-C-60 are used to identify the design conditions and load combinations imposed on the waste transfer piping. In the supplemental analysis, all relevant load combinations are reviewed. The highest demand-to-capacity ratios (DCRs) for code stresses from these load combinations are summarized at the end of the input and output AutoPIPE report presented in Appendix C.

2.5.1 Thermal Loading

Although thermal stress ranges are typically evaluated in the ASME B31.3 Code, allowable stresses for thermal loads are not provided in ISO 14692; the evaluation of thermal loading is left to the system designer. In ISO 14692, the primary and secondary piping is evaluated for the combined stress due to gravity, pressure, and thermal load effects. The thermal effects are added to the stress evaluation through the supplemental flexibility analysis due to temperature change of the pipe between the ambient (installation) temperature and the largest change in temperature (cold or hot). The three operating cases that are analyzed in AutoPIPE are described as follows:

1) Operating Case 1 (*Hot-in-Hot, Pressurized*): Both the primary and secondary pipes are pressurized. Buried piping and above-ground piping are all taken to be at the hot design temperature of 150° F. This thermal case uses a low ambient temperature of 60° F. (See *Design Inputs*.)

2) Operating Case 2 (*Cold-in-Cold, No Pressure*) The system is off, so neither the primary nor secondary pipes are pressurized, but they are both at the cold design temperatures of -25° F (for above ground, outermost pipes) and both are at 32° F (for buried pipe). This thermal case uses a high ambient temperature of 80° F. (See *Design Inputs*.)

3) Operating Case 3 (*Hot-in-Cold, Pressurized*): Both the primary and secondary pipes are pressurized, the secondary pipes are cold (-25° F for above ground pipe; 32° F for buried pipe), and the primary piping is hot (120° F for both above-ground and buried pipe). (See *Design Inputs*.) This type of operating case often produces the worst-case thermal displacements and support loading conditions. This operating case evaluates an expanding primary pipe within a contracting secondary pipe.

To be consistent with the ASME B31.3 Code and TFC-ENG-DESIGN-C-60, the support reactions are products of the operating cases above (see paragraph below with excerpt from B31.3).

> **319.3.1 Thermal Expansion Data**
> *(a)…*
> *(b) Values for Reactions.* Values of thermal displacements to be used in determining total displacement strains for computation of reactions on supports and connected equipment shall be determined as the algebraic difference between the value at maximum (or minimum) temperature for the thermal cycle under analysis and the value at the temperature expected during installation.

The thermal loading for displacement-based reactions is defined in two generalized cases: 1) a temperature range from 80° F to the cold (ambient) design condition, and 2) a temperature range from 60° F to the hot design temperature condition. Because the Conley FRP pipe has a thermal expansion coefficient (see Conley pipe data in Attachment 2) based on a difference in temperature (not various values over a range of temperatures), thermal expansion coefficients at the associated design temperatures were calculated in Section 8.0 using the appropriate high or low ambient temperature and manually input in the AutoPIPE supplemental analysis.

2.5.2 Seismic Loading

Using the acceleration values cited in TFC-ENG-STD-06 paragraph 3.5.5.2 and following the methodology in Chapter 13 of ASCE 7, seismic accelerations were calculated (see Design Inputs and Section 8.0 Calculations). The controlling load combination (reference ASCE 7 Section 2.4.1) is D + 0.7E, where D is the dead load demand and E is the seismic demand. As a general service system, the LERF piping will be analyzed to NDC-1 criteria per Design Input 12. NOTE: A static earthquake analysis is used to satisfy requirements for the seismic evaluation for NDC-1 piping. The FRP piping is evaluated based on the ISO 14692 Code. A separate structural analysis addresses the evaluation of the structural adequacy of the primary pipe supports (see the *Results* section).

2.5.3 Fluid Loads

2.5.3.1 Thrust Forces on Bends Due to Normal Operation and Occasional Loads

Thrust loads for normal operation and from pump start-ups could be applied at the midpoints of the elbows in the model. The normal operating loads could be applied in the two in-plane directions at the bends in

association with gravity loadings. However, given the sizes of the carrier pipes and the maximum expected flow rates, the resulting calculated thrust forces that could act at the 3-in. & 4-in. primary piping elbows were found to be very small (<10 lbf) and were therefore judged to be negligible and not included in the AutoPIPE supplemental analysis.

2.5.3.2 Transient (e.g., Water Hammer) Loads

Evaluation of occasional loads due to transient pressures is not required. The new piping and components being installed as part of this project's scope have a pressure capacity greater than or equal to that of the existing system. Therefore, the new piping is considered sufficient to handle all existing transient pressures from existing transient initiators. New transient initiators include the installation of LV-P41-4-1 located in Catch Basin 41. However, this valve has a 30 second closure time which significantly exceeds the communication time of the system and will introduce negligible transient pressures.

2.5.4 Wind Loads

The wind loading criteria is taken from Table 3 of TFC-ENG-STD-06 for a WDC-1 classification for general service systems. It employs an ultimate design wind speed of 110 mph and Exposure Category C.

3.0 DESIGN INPUTS

1. Dimensions and details for the new, FRP lines are per drawing H-2-838765. (See Appendix A.)
2. Code of Record: B31.3 2016 (RPP-SPEC-63632, Section 40 40 00, Part 1, Subsection 1.2)
3. Operating/Ambient Temperatures:
   - A. Above Ground Pipe:
     - i. Carrier:
       - a. Hot: 150° F (RPP-SPEC-63632, Section 40 40 00—Attachment 2 of that section) in ambient hot air. Considered to be 120 °F when operating in Load Case 3 at cold ambient temperatures.
       - b. Cold: -25° F (Minimum ambient temperature per TFC-STD-02, Section 3.1.1 for exposed piping.) Used for empty pipes in Load Case 2.
     - ii. Containment:
       - a. Hot: 150° F (RPP-SPEC-63632, Section 40 40 00—Attachment 2 of that section) in ambient hot air.
       - b. Cold: -25° F (Minimum ambient temperature per TFC-STD-02, Section 3.1.1 for exposed piping.)
   - B. Buried Pipe:
     - i. Carrier:
       - a. Hot: 120° F (RPP-SPEC-63632, Section 40 40 00—Attachment 2 of that section)
       - b. Cold: 32° F (Conservative cold temperature for buried pipe at a burial depth greater than 3 ft, which is below frost line. See Design Input 7.A. Also see TFC-ENG-STD-02 Table 2 and Table B-1 at 3ft.) Used for empty pipes in Load Case 2.
     - ii. Containment:
       - a. Hot: 100° F (Conservative, RPP-SPEC-63632, Section 40 40 00—Attachment 2 of that section, given that the pipe temperature will stay around that of the soil at the buried depth. Also see TFC-ENG-STD-02 Table 2 and Table B-1 at 3ft.)
       - b. Cold: 32° F (Conservative cold temperature for buried pipe at a burial depth greater than 3 ft, which is below frost line. See Design Input 7.A. Also see TFC-ENG-STD-02 Table 2 and Table B-1 at 3ft.)

C. The temperature of piping at the time of installation is unknown. Therefore, per TFC-ENG-DESIGN-C-60, Table 2(a), the ambient temperature is taken to be 60° F for the hot case and 80° F for the cold case.

4. Operating Pressures (RPP-SPEC-63632, Section 40 40 00—Attachment 2 of that section):

A. Carrier (Inner) Pipe: 150 psig

B. Containment (Outer) Pipe: 50 psig

5. New Piping Data[4]:

A. Material: Carrier and containment pipe are Conley double containment FRP pipe utilizing Conley Aromatic® amine cured epoxy resin. FRP pipe construction is filament wound fiberglass-reinforced thermosetting epoxy resin pressure pipe manufactured per ASTM D2996—Type 1, Grade 1, Class F (RTRP-11FW). (RPP-SPEC-63632, Section 40 40 00—Attachment 2 of that section.)

B. Pipe Properties (Attachment 2; see also Section 8.0 Calculations):

i. Thermal Expansion Coefficient: $\alpha = 9.5*10^{-6}$ in/in/° F

ii. Poisson's ratio: Stress in the hoop direction, $\nu_{ha} = 0.23$

iii. Axial Modulus of Elasticity: $1.75*10^{6}$ psi (at 75° F) & $1.30*10^{6}$ psi (at 250° F)

iv. Hydrostatic Design Basis (HDB): 16,000 psi (at 75° F) and 8,000 psi (at 250° F)

6. Existing Piping Data:
(Note: HNF-27957 documents the pipe classes for the 200 Area ETF, Load-In, and LERF systems.)

A. 3"/6" Pipe: Fibercast® Centricast III EP[5] centrifugally cast epoxy resin fiberglass pipe manufactured in accordance with ASTM D2997 classification of RTRP, Type II, Grade 1, Class C. (See Attachment 3.)

B. 4"/8" Pipe: Bondstrand Series 4000 filament-wound epoxy resin fiberglass pipe manufactured in accordance with ASTM D2996 classifications of RTRP-11FE-1112 & -1113. (See Attachment 3.)

---

[4] New connected, above-ground, stainless steel piping at the catch basin (LERF Basin 41) has been modeled and analyzed separately in RPP-CALC-63779. The model analyzed in that calculation is used in the current analysis only to more accurately simulate the boundary conditions at the connections between the new FRP piping and the new stainless steel piping at the catch basin at LERF Basin 41. The stainless steel piping is not being evaluated or reported on in this calculation. Design inputs, including pipe properties and operating conditions from RPP-CALC-63779 are utilized for the stainless steel piping in this analysis.

[5] HNF-27957 calls out Centricast RB-1520 piping in their Class M-17 (System 60M) pipe description, but references W-105-C3, Rev. 1 M-17 piping specification which calls out Centricast III EP piping which has reinforcement thickness that is approximately half that of the RB-1520 piping. Old specifications do not indicate which Centricast series was ultimately used. However, we know that the Conley product strength in the new design is equal to or weaker than that of the existing pipe such that if the new piping stresses are acceptable, so will be the stresses for the existing piping.

CALCULATION SHEET

Project No. S54413.024	**Calculation No.** S54413.024-M-001	**Rev.** 0	**Page No.** 22 of 192
Title: LERF Basin 41 Buried Piping Analysis			
Prepared By: JD Williams	**Date:** 5/13/20	**Checked By:** JS Huisingh	**Date:** 5/13/20

7. Buried Pipe Data (See Section 8.0 Calculations):
   - A. Average depth (H) of pipe centerline (see screenshots in Mathcad file)
     - i. 3"/6" Pipes = 8ft + 9.94in
     - ii. 4"/8" Upper Pipes = 3ft + 9.13in
     - iii. 4"/8" Lower Pipes = 8ft + 9.94in
   - B. Coating factor for fusion bonded epoxy = 0.6 (ASCE 2001, Table B.1)
   - C. Soil Data (See Section 2.0 Methodology):
     - i. Crushed rock (pipe bedding and initial backfill material) – (RPP-SPEC-63632, Section 31 23 33, Subsection 2.1.E.3)
       - a. Class I soil class (Attachment 2 & Attachment 4)
       - b. Density: 110 lbf/ft^3 (See Section 2.0 Methodology)
       - c. Internal friction angle: $\Phi = 40°$ (Attachment 1)
       - d. Cohesion value: c = 0 (Attachment 1)
     - ii. Site Soil (final backfill only)
       - a. Density: 110 lbf/ft^3 (TFC-ENG-STD-06)
       - b. Internal friction angle: $\Phi = 40°$ (Attachment 1)

8. Conley FRP Pipe Geometry (See Section 8.0 & Attachment 2):

Nom. Pipe Diameter	Pipe Series	Pipe O.D.	(Outer) UV Thickness	Pipe Reinf. Thickness	Reinf. O.D.*	Reinf. I.D.**	Fitting Reinf. Thickness***
3"	40	3.47"	0.040"	0.135"	3.39"	3.12"	0.295"
4"	40	4.48"	0.020"	0.160"	4.44"	4.12"	0.295"
6"	30	6.38"	0.020"	0.110"	6.34"	6.12"	0.410"
8"	30	8.38"	0.020"	0.110"	8.34"	8.12"	0.410"

* Reinf. O.D. = Pipe O.D. – 2 (UV Thickness)
** Reinf. I.D. = Reinf. O.D. – 2 (Reinf. Thickness)
*** See Attachment 2.

9. Corrosion-erosion allowance for FRP pipe is neglected since the pipe has a corrosion barrier (inner liner) which has a thickness of 0.060". (See Attachment 2.)

10. Specific gravity of contents is 1.0, but conservatively modeled using a value of 1.5. (See Attachment 5.)

11. The pipe insulation (for above-ground containment and exposed carrier pipes) was originally specified in RPP-SPEC-63632, Section 40 42 13 to be 2" thick black rubber "Armaflex" type pipe insulation, which has a maximum density of 6 lbf/ft^3. The current supplemental AutoPIPE analysis uses this density. However, per client direction, the specification for this insulation has since changed to be 2" of Owens Corning FoamGlas insulation, which has a maximum density of 7.5 lbf/ft^3 (see Attachment 6). Considering the weights of the double contained piping, the contents, and the insulation, the new, heavier insulation increases the weight per foot of contents filled double contained piping by less than 5%. Given that all DCRs for new insulated FRP piping do not exceed 0.80 (see Section 6.1), it is apparent that this additional weight does not threaten the results of this analysis nor justify rerunning the supplemental analysis with this slight difference in insulation density. Therefore, no rerun of the supplemental analysis is necessary.

12. The effluent lines are classified as general service lines and as such TFC-ENG-STD-06 requires the system to be designed to NPH (Natural Phenomena Hazard) Design Category (NDC)-1. (See design category comparisons in Table 1 of TFC-ENG-STD-06.) TFC-ENG-STD-06 invokes the International Building Code [IBC] which also invokes ASCE 7 in which Ip=1.0 such that equivalent static seismic values of Ah = 0.123g and Av = 0.082g are calculated (see Section 8.0 Calculations) and applied in the supplemental analysis. Also reference TFC-ENG-STD-06 Section 3.5.5.1, 3.5.5.2, and Table 6.

13. The service design factor used in the wall thickness calculation is taken as 0.2. Section A302.3.2(c)(2) states that when using the static HDB[S], the service design factor *F* shall not exceed 0.5. The service design factor is selected based on different conditions, including but not limited to installation, environment, temperature, hazard involved, life expectancy desired, and the properties of the pipe selected. The buried piping evaluated herein is general service, carrying water (very minor contamination levels), with no water hammer loadings expected. Also, the entire system is dual contained. In general, there is very low risk involved with this piping. Therefore, the factor of 0.2 is judged to be a conservatively low service design factor.

4.0 ASSUMPTIONS

There are no unverified assumptions in this calculation. Engineering judgments are used and justified in the body of the calculation.

5.0 COMPUTER SOFTWARE

The pipe stress analysis modeling software, Bentley AutoPIPE CONNECT Edition generation, Version 11.01.00.24 was used to model the piping assembly and perform the supplemental stress analysis per the ISO 14692 GRP Piping Code. The program was executed on a Dell computer; model Dell Precision™[6] Tower 3620, Service Tag Number JMKFRD2, with an S&L ID of GDV11145. This software has been validated as documented in ARES ESD V&V No. VV-19-10-042, Rev. 0.

Mathcad®[7] 15.0 (M045) was used for the hand calculations. Calculations are checked step by step.

6.0 RESULTS

6.1 ASME B31.3 Evaluation Results

As stated in the Methodology section, the minimum wall thickness check for internal pressure per ASME B31.3, Section A304.1.2(c) is performed in Section 8.5 where it is shown that the Series 40 and 30 pipe (i.e,. for inner and outer FRP pipes, respectively), is all adequate for the internal pressures expected in the system and meet the Code requirement for minimum required wall thickness. Also, as shown in manufacturer-provided, AWWA M45-based buried piping (external load) calculations in Attachment 7, the outer FRP pipes (6-inch and 8-inch) are structurally adequate to handle the external (burial) loads and thereby meet the external loading requirement in Section A302.3.3(c)(2) of the Code.

6.2 Overall Supplemental Analysis Results

The maximum stress DCR among all associated buried transfer piping is 0.80 at Point X40 (4-in. primary elbow) for the combined stress due to gravity, pressure, and thermal loadings. (See stress isometric below.) It is also noted for reference that among the existing regions of piping that were modeled for the sake of determining representative stresses on newly-connected piping, the maximum stress DCR is 0.83 at Point W58 (8-in. pipe near tee) for the occasional stress due to seismic loads. Given that all stress DCRs associated with this supplemental analysis are less than 1.0, the subject piping is found to perform acceptably under anticipated loadings per ISO 14692 requirements and Hanford standards cited previously.

[6] Dell Precision is a registered trademark of Dell Computer Corporation, One Dell Way, Round Rock, TX 78682.
[7] Mathcad is a registered trademark of Parametric Technology Corporation., Needham, Massachusetts.

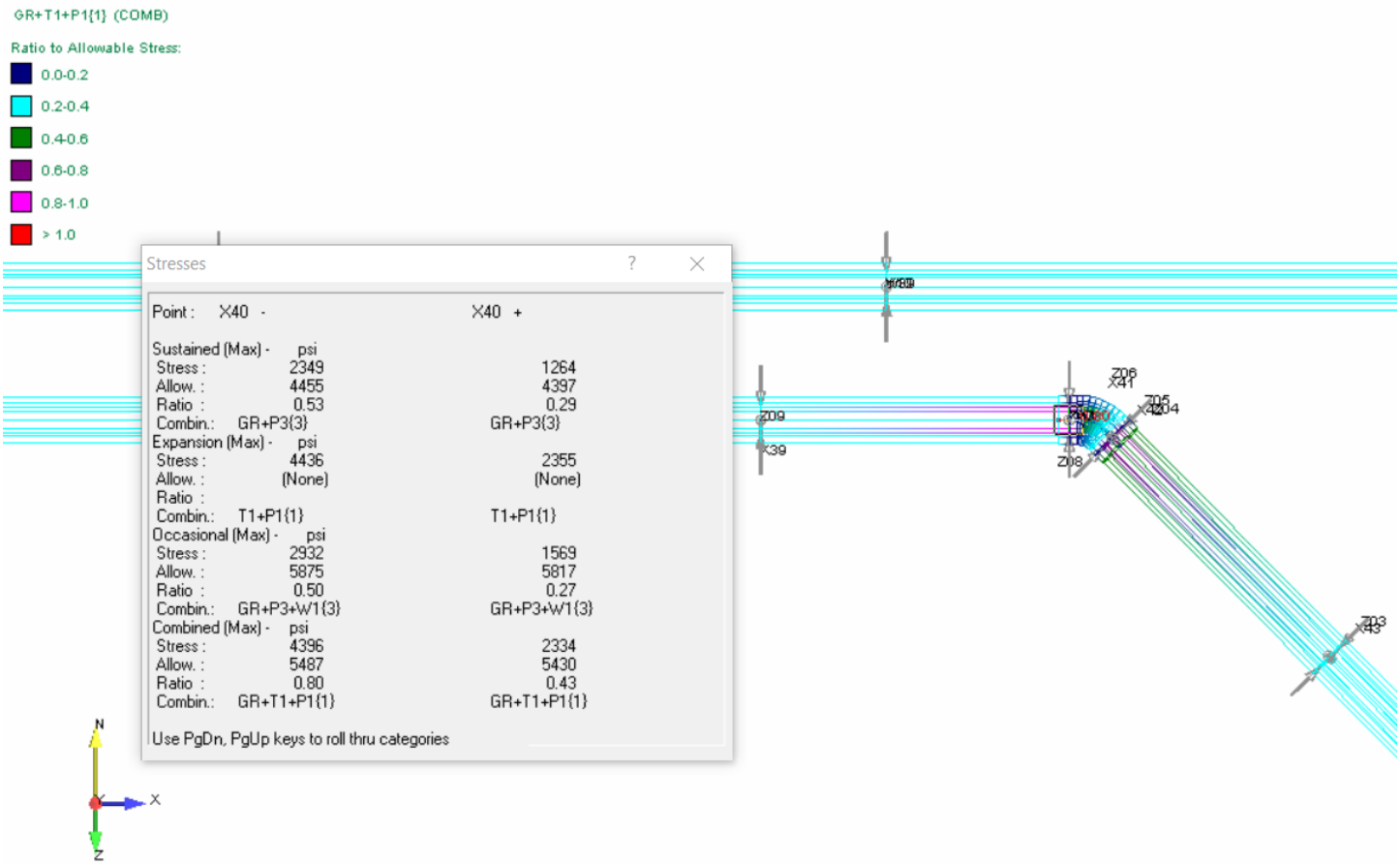

Figure 6-1. Maximum Pipe Stress in New FRP Pipe

The anchor and support loadings from the supplemental analysis are summarized in Section 6.3 below.

6.3 Piping Support Loads

Designs of associated supports and anchors are presented in design drawing H-2-838765. Primary piping supports (i.e., guides, vertical supports) for both primary and secondary piping are structurally evaluated in RPP-CALC-63779, Appendix H. No evaluation of existing supports for existing piping that is tied into and affected by the new FRP piping analyzed herein is necessary as the supports are judged to be adequate by comparison to the loading of the new piping and the types of supports used for the new piping. As shown in Table 6-1 and Table 6-2, the maximum moment on the new support bases bounds the maximum moment on the support bases for the existing pipe supports. Also, the support types used on the existing piping are judged to be structurally adequate for the relatively low forces reported in the AutoPIPE analysis and in the tables below.

CALCULATION SHEET

Project No. S54413.024	**Calculation No.** S54413.024-M-001	**Rev.** 0	**Page No.** 26 of 192
Title: LERF Basin 41 Buried Piping Analysis			
Prepared By: JD Williams	**Date:** 5/13/20	**Checked By:** JS Huisingh	**Date:** 5/13/20

Table 6-1. Bounding Support Reaction Loads on New Pipe Supports.

Support Node Point	Support Type*	Support Location	Vertical Load** (lbf)	Lateral Load (Transverse to Pipe Axis) (lbf)	Maximum Moment at Support Base (lbf*ft)
Z52	HSS Guide	ON Catch Basin 42	204	429	2282
Y45	HSS Guide	OFF Catch Basin 41	567	264	858
Y54	HSS Guide	ON Catch Basin 41	296	381	697

* See drawing H-2-838765.
** Actual vertical load concurrent with maximum lateral load.

Table 6-2. Bounding Support Reaction Loads on Existing Pipe Supports.

Support Node Point	Support Type*	Support Location	Vertical Load** (lbf)	Lateral Load (Transverse to Pipe Axis) (lbf)	Maximum Moment at Support Base (lbf*ft)
W65	HSS Guide	ON Catch Basin 42	490	1109	2063
AC02	HSS Guide	OFF Catch Basin 42	1258	455	1201

* See drawings H-2-79633 and H-2-79634.
** Actual vertical load concurrent with maximum lateral load.

7.0 REFERENCES

AISC 14th Edition, *Steel Construction Manual*, American Institute of Steel Construction, Inc., 2011, Chicago, IL.

ARES ESD, a division of Sargent & Lundy Engineering Services, Inc. V&V No. VV-19-10-042, Rev. 0, *Bentley AutoPIPE CONNECT Edition*, Version 11.01.00.24 (available upon request).

ASCE 2001; Guidelines for the Design of Buried Steel Pipe; 2001; American Lifelines Alliance, contracted under a cooperative agreement between the American Society of Civil Engineers and the Federal Emergency Management Agency, Reston, VA.

ASCE 7-10, *Minimum Design Loads for Buildings and Other Structures*, American Society of Civil Engineers, Reston, VA.

ASME B31.3-2016, *Process Piping*, American Society of Mechanical Engineers, New York, NY.

ASTM D2992-18, Standard Practice for Obtaining Hydrostatic or Pressure Design Basis for “Fiberglass” (Glass-Fiber-Reinforced Thermosetting Resin) Pipe and Fittings, ASTM International, West Conshohocken, PA.

ASTM D2996-17, Standard Specification for Filament-Wound “Fiberglass” (Glass-Fiber-Reinforced Thermosetting Resin) Pipe, ASTM International, West Conshohocken, PA.

ASTM D2997-15, Standard Specification for Centrifugally Cast “Fiberglass” (Glass-Fiber-Reinforced Thermosetting Resin) Pipe, ASTM International, West Conshohocken, PA.

AWWA M45, Third Edition, *Fiberglass Pipe Design*, American Water Works Association, Denver, CO, 2014.

Das, B.M., *Principles of Foundation Engineering*, Sixth Edition, Cengage Learning, Stamford, CT, 2007.

HNF-27957, Rev. 3, *200 Area ETF, Load-In, and LERF Pipe Class Specification*, U.S. Department of Energy, Richland, WA.

H-2-79633, Rev. 2, W-105 LERF 242-A EVAP CON INTERIM RETNN BASIN, *Pipe Supports*, U.S. Department of Energy, Richland, WA.

H-2-79634, Rev. 3, W-105 LERF 242-A EVAP CON INTERIM RETNN BASIN, *Pipe Supports*, U.S. Department of Energy, Richland, WA.

H-2-838765, Rev. 0, *LERF Basin 41, Mechanical, General Arrangement, Sections and Details, Etc.*, U.S. Department of Energy, Richland, WA.

ISO 14692:2002, Parts 1-4, *Petroleum and Natural Gas Industries — Glass-reinforced Plastics (GRP) Piping*, International Organization for Standardization.

Lindeburg, Michael R., *Civil Engineering Reference Manual*, 11th Edition, Professional Publications, Inc., Belmont, CA, 2008.

RPP-CALC-63650, Rev. 0, *242AL-41 Leachate and Basin Pump flow Calculation*, U.S. Department of Energy, Richland, WA.

RPP-CALC-63779, Rev. 0, *ASME B31.3 Evaluation of the LERF Basin 41 Stainless Steel Piping*, U.S. Department of Energy, Richland, WA.

RPP-SPEC-63632, Rev. 0, *LERF Basin 41 Design Construction Specification*, U.S. Department of Energy, Richland, WA.

TFC-ENG-DESIGN-C-60, Rev. A-3, Preparation of Piping Analyses for Waste Transfer Systems, U.S. Department of Energy, Richland, WA.

TFC-ENG-STD-02, Rev. B-0, *Environmental/Seasonal Requirements for TOC Systems, Structures, and Components*, U.S. Department of Energy, Richland, WA.

TFC-ENG-STD-06, Rev. D-2, *Design Loads for Tank Farm Facilities*, U.S. Department of Energy, Richland, WA.

8.0 CALCULATIONS

APPENDIX A

LERF PIPING DRAWINGS

RPP-CALC-63780, Rev. 0

CALCULATION SHEET

Project No. S54413.024	**Calculation No.** S54413.024-M-001	**Rev.** 0	**Page No.** 41 of 192
Title: LERF Basin 41 Buried Piping Analysis			
Prepared By: JD Williams	**Date:** 5/13/20	**Checked By:** JS Huisingh	**Date:** 5/13/20

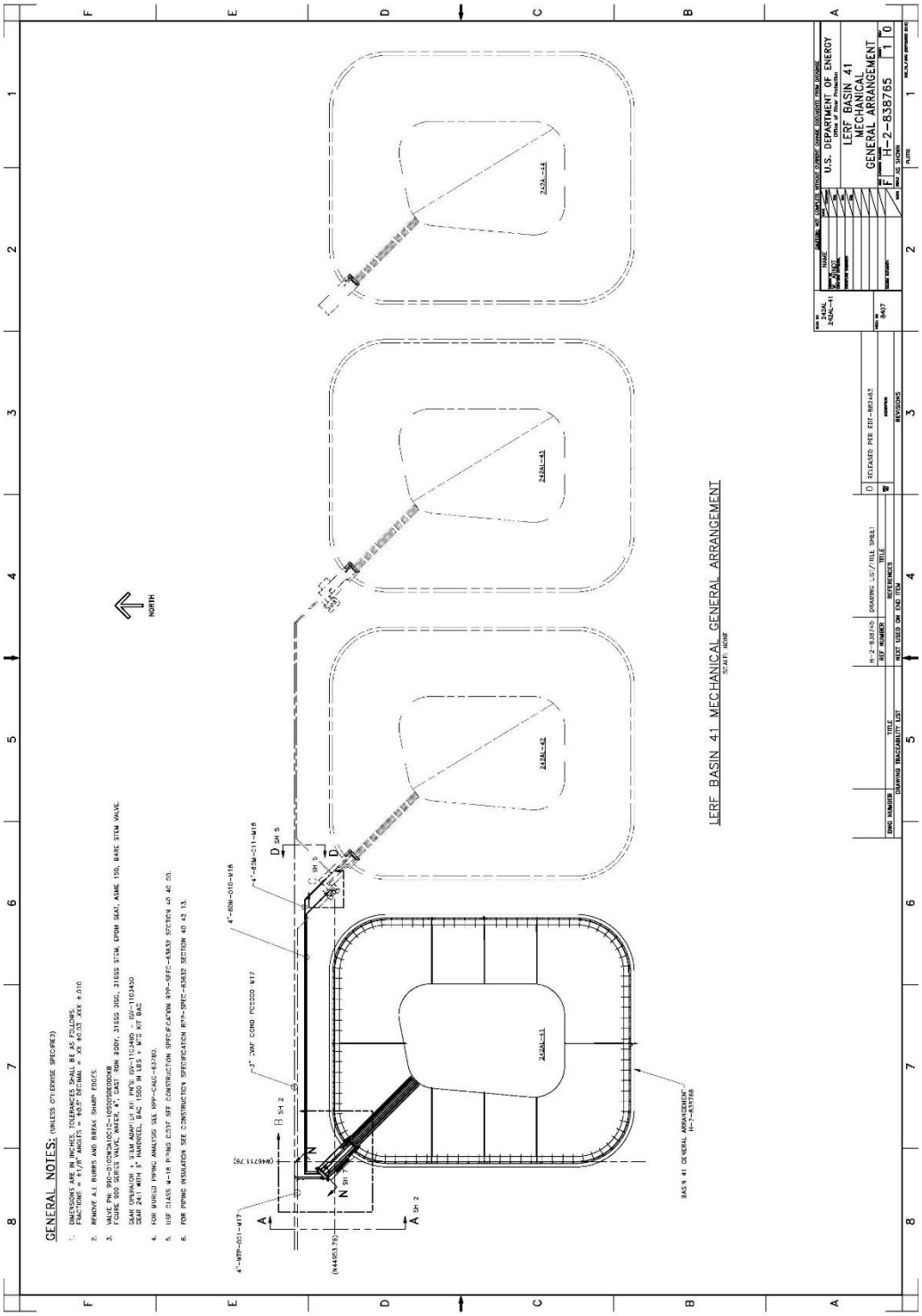

RPP-CALC-63780, Rev. 0

CALCULATION SHEET

Project No. S54413.024	**Calculation No.** S54413.024-M-001	**Rev.** 0	**Page No.** 42 of 192
Title: LERF Basin 41 Buried Piping Analysis			
Prepared By: JD Williams	**Date:** 5/13/20	**Checked By:** JS Huisingh	**Date:** 5/13/20

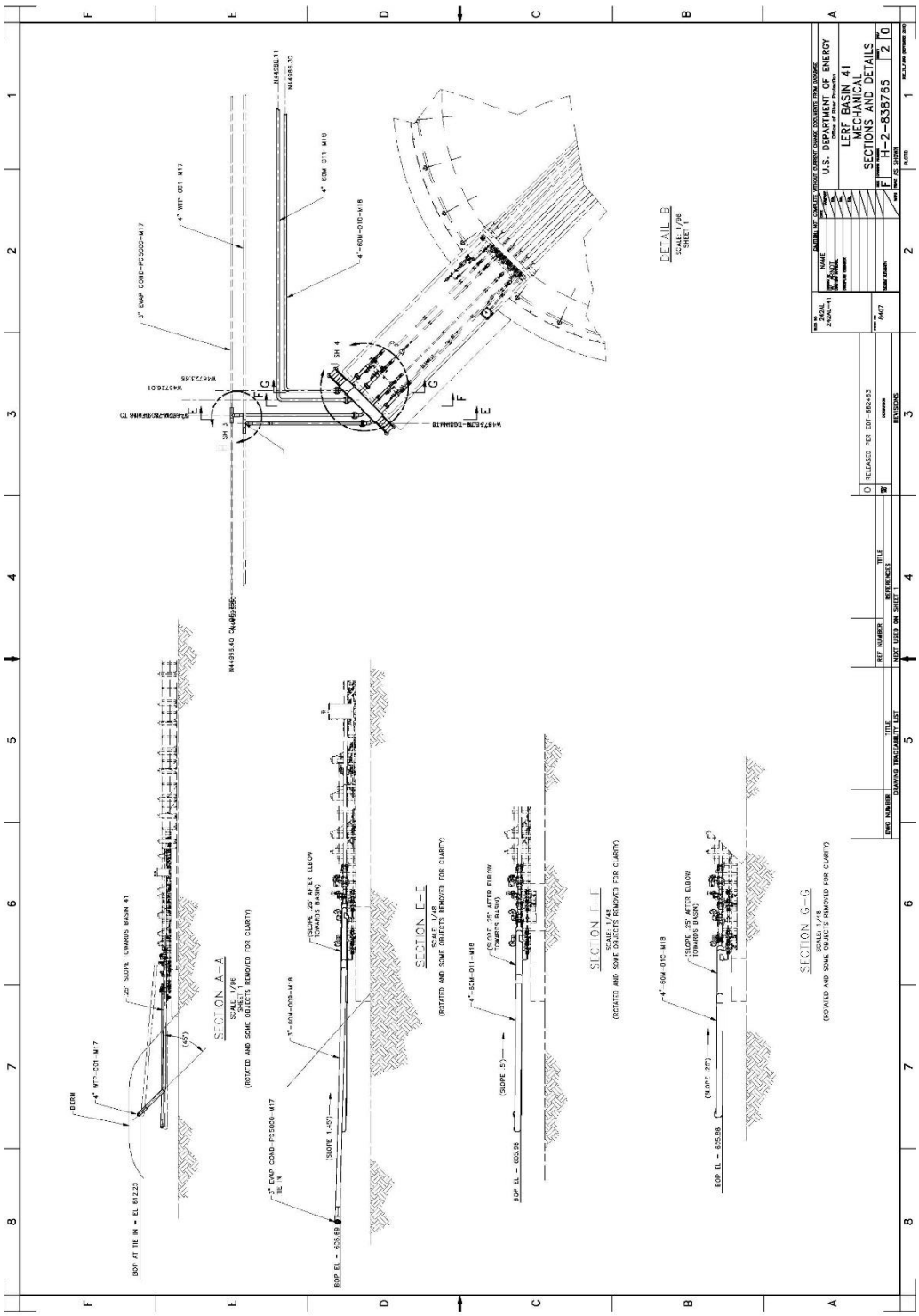

RPP-CALC-63780, Rev. 0

CALCULATION SHEET

Project No. S54413.024	**Calculation No.** S54413.024-M-001	**Rev.** 0	**Page No.** 43 of 192
Title: LERF Basin 41 Buried Piping Analysis			
Prepared By: JD Williams	**Date:** 5/13/20	**Checked By:** JS Huisingh	**Date:** 5/13/20

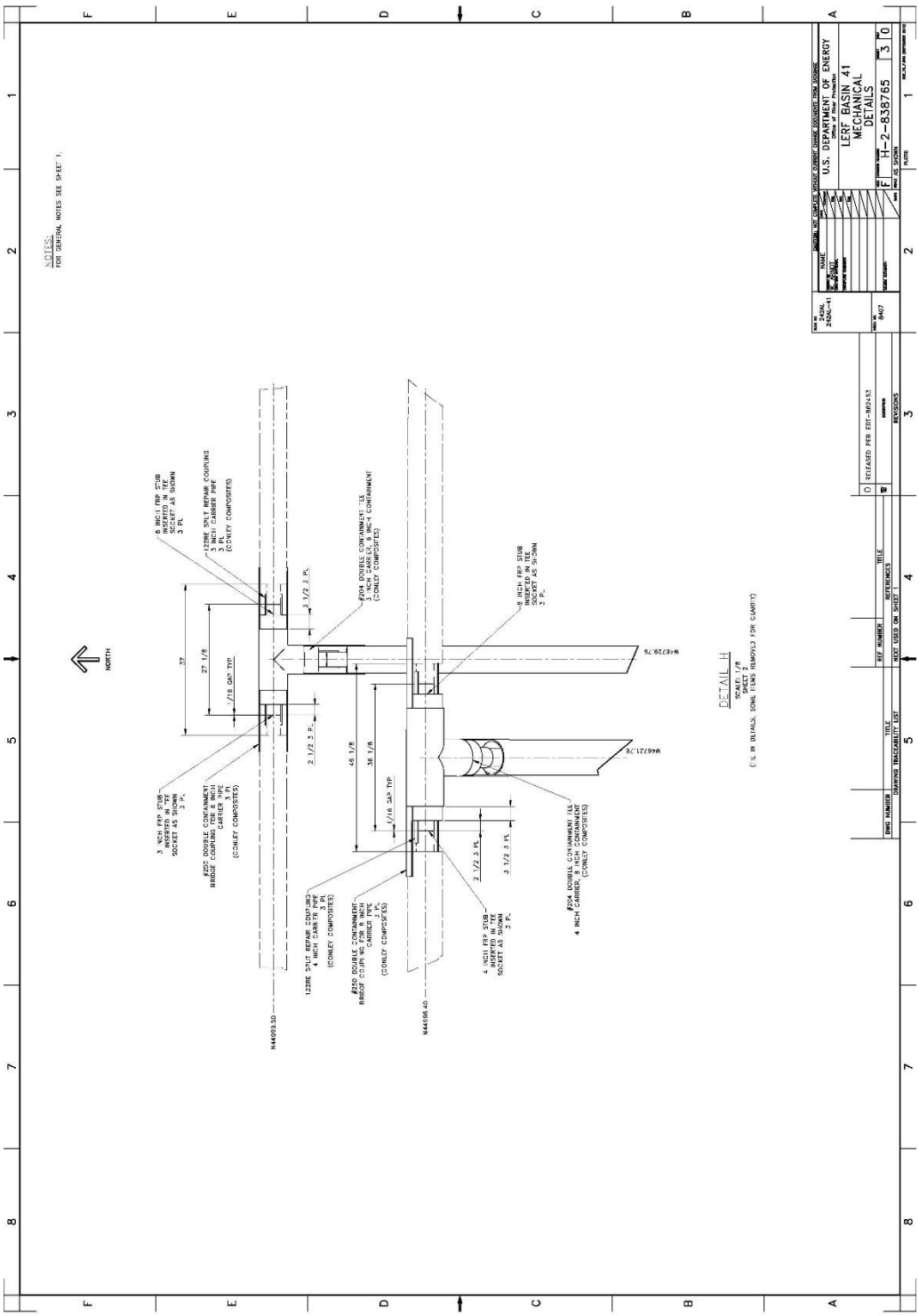

RPP-CALC-63780, Rev. 0

CALCULATION SHEET

Project No. S54413.024	**Calculation No.** S54413.024-M-001	**Rev.** 0	**Page No.** 44 of 192
Title: LERF Basin 41 Buried Piping Analysis			
Prepared By: JD Williams	**Date:** 5/13/20	**Checked By:** JS Huisingh	**Date:** 5/13/20

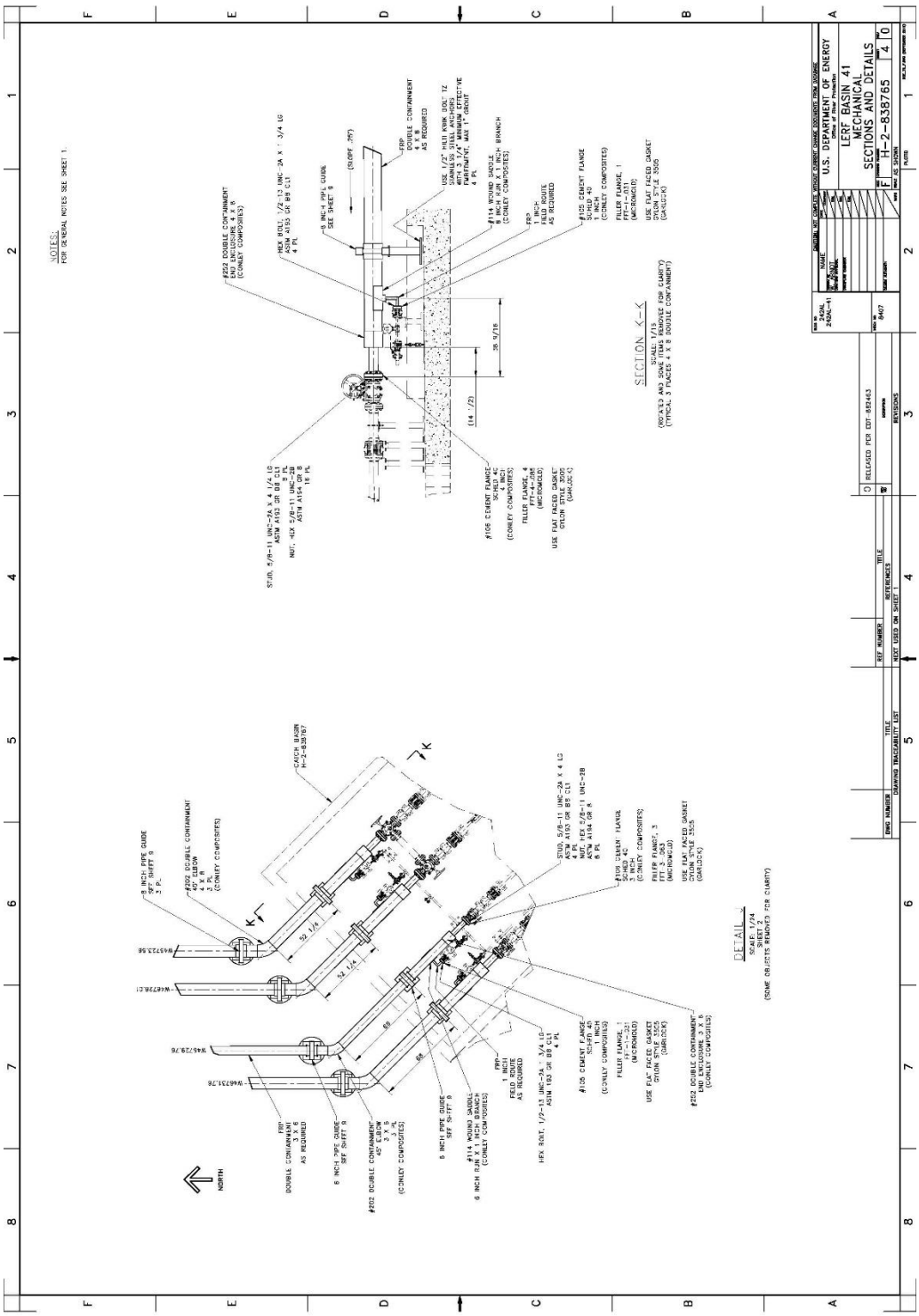

RPP-CALC-63780, Rev. 0

CALCULATION SHEET

Project No. S54413.024	**Calculation No.** S54413.024-M-001	**Rev.** 0	**Page No.** 45 of 192
Title: LERF Basin 41 Buried Piping Analysis			
Prepared By: JD Williams	**Date:** 5/13/20	**Checked By:** JS Huisingh	**Date:** 5/13/20

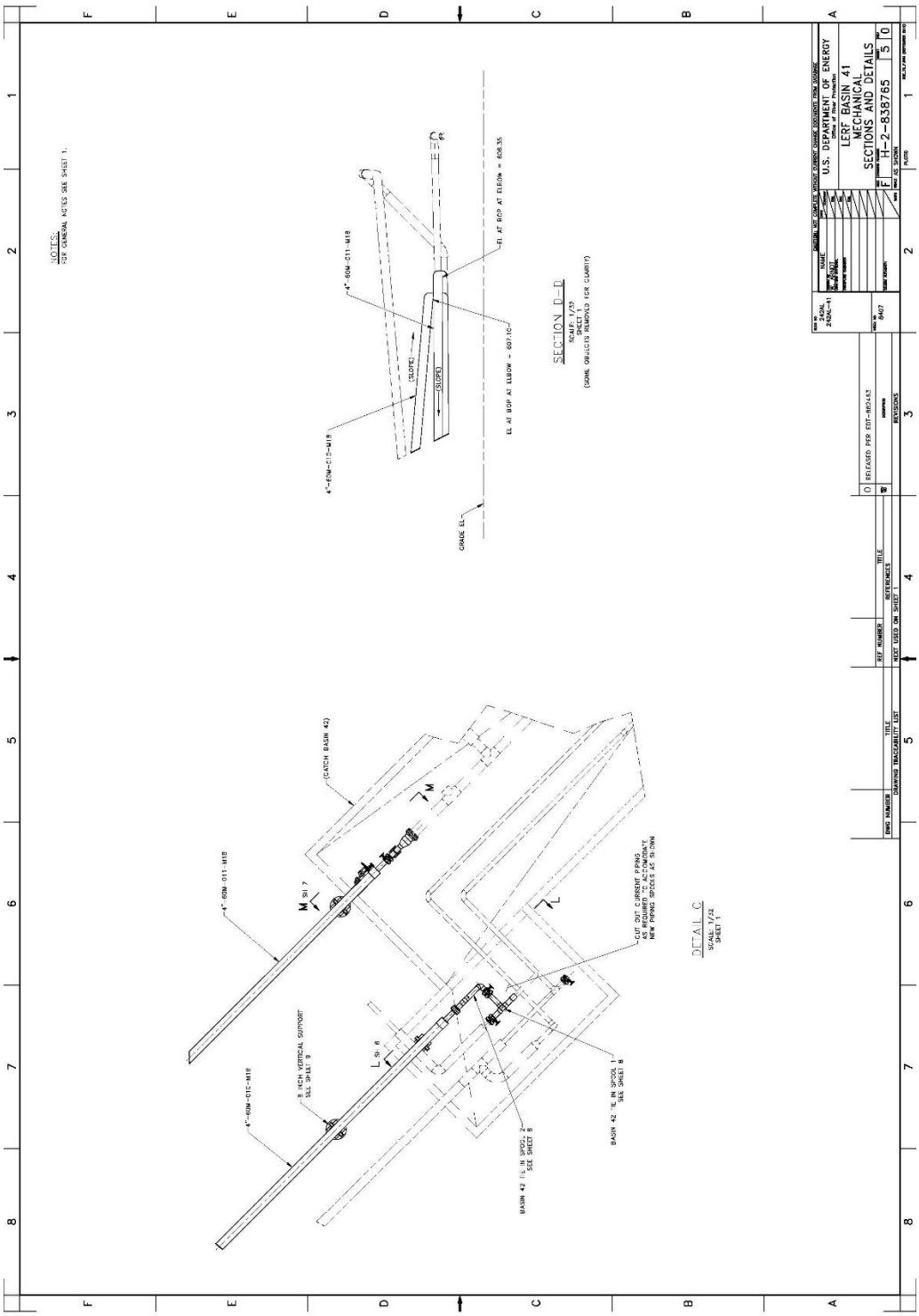

CALCULATION SHEET

Project No. S54413.024	**Calculation No.** S54413.024-M-001	**Rev.** 0	**Page No.** 46 of 192
Title: LERF Basin 41 Buried Piping Analysis			
Prepared By: JD Williams	**Date:** 5/13/20	**Checked By:** JS Huisingh	**Date:** 5/13/20

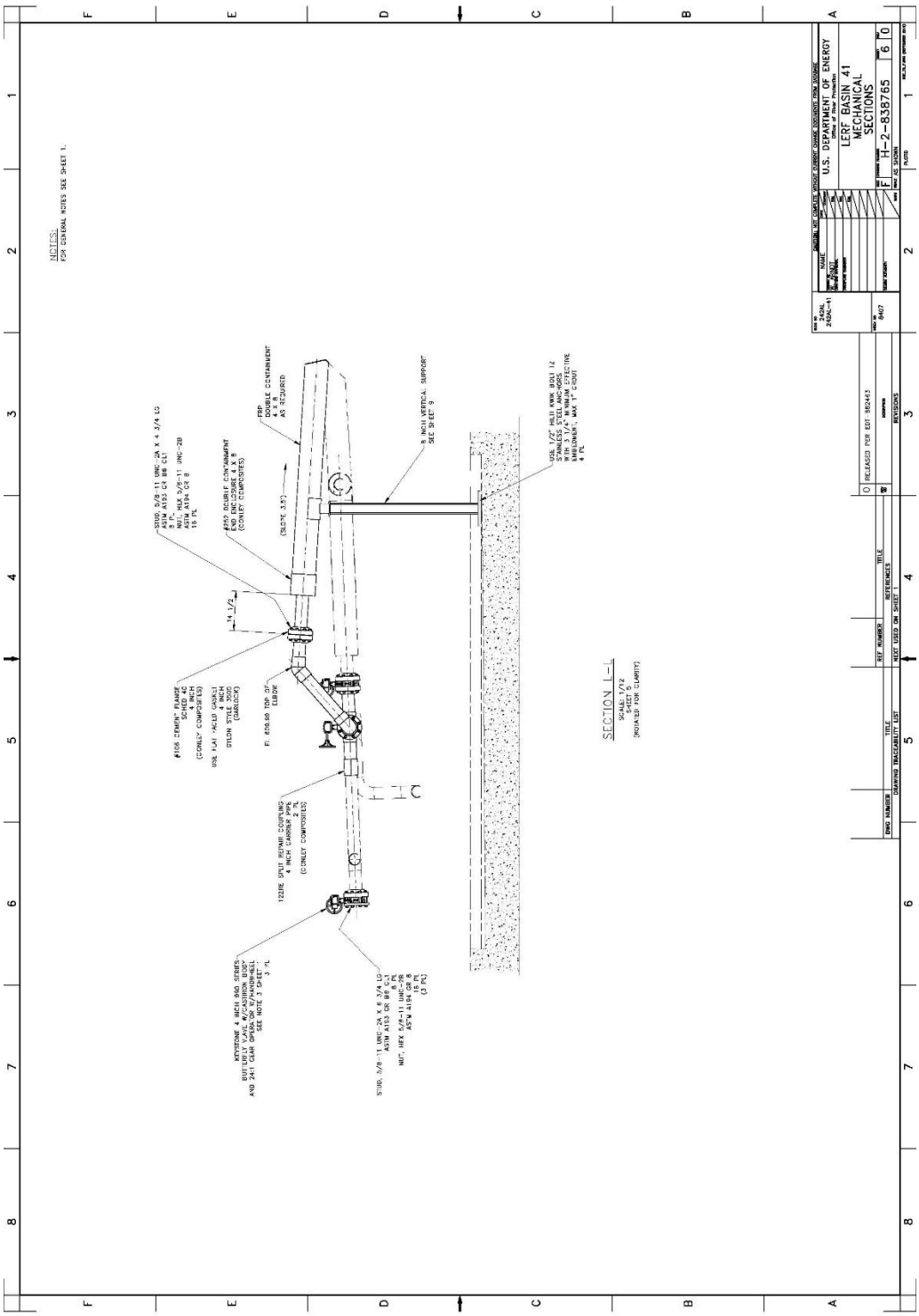

RPP-CALC-63780, Rev. 0

Sargent & Lundy Engineering Services, Inc.

CALCULATION SHEET

Project No. S54413.024	**Calculation No.** S54413.024-M-001	**Rev.** 0	**Page No.** 47 of 192
Title: LERF Basin 41 Buried Piping Analysis			
Prepared By: JD Williams	**Date:** 5/13/20	**Checked By:** JS Huisingh	**Date:** 5/13/20

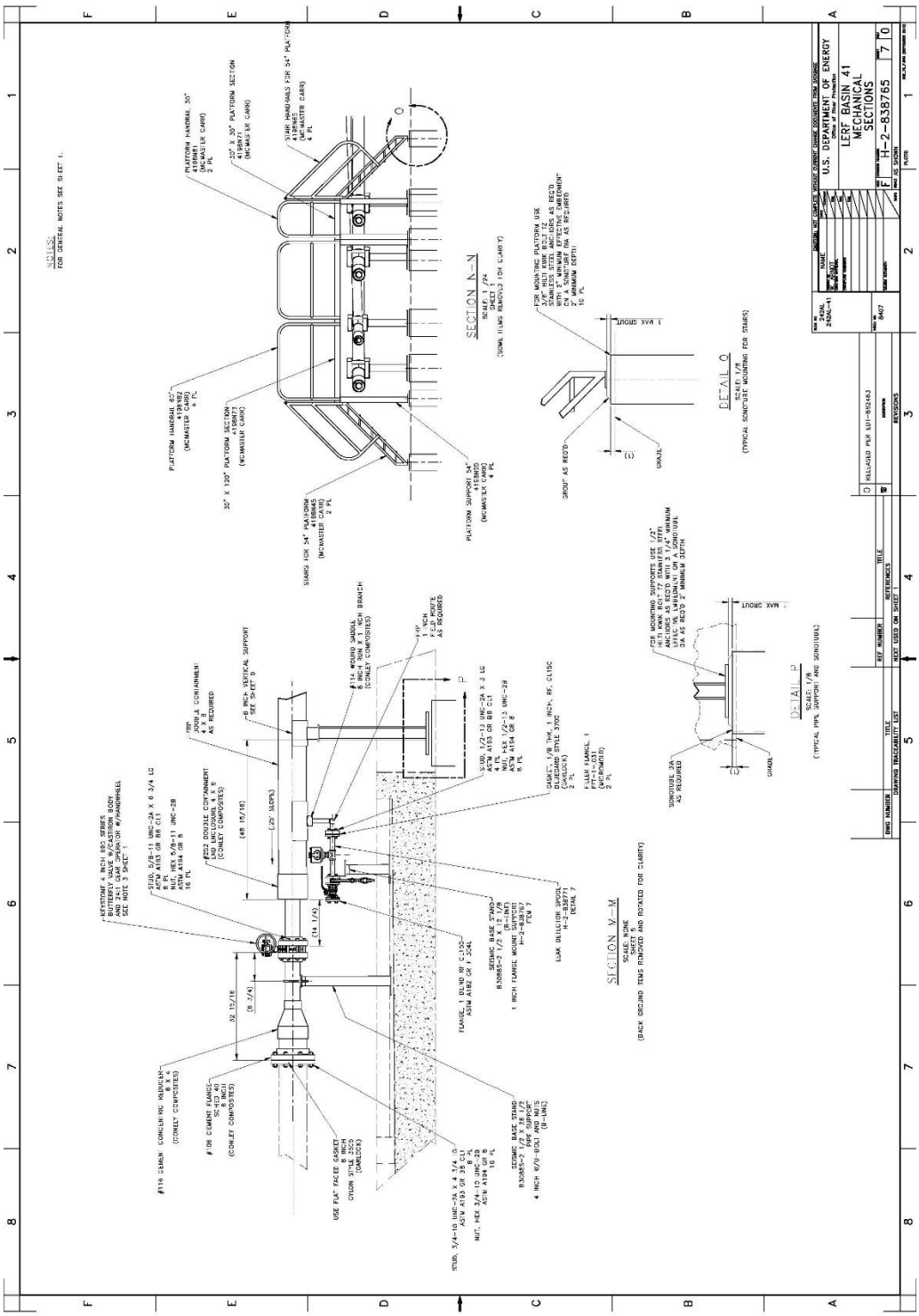

RPP-CALC-63780, Rev. 0

CALCULATION SHEET

Project No. S54413.024	**Calculation No.** S54413.024-M-001	**Rev.** 0	**Page No.** 48 of 192
Title: LERF Basin 41 Buried Piping Analysis			
Prepared By: JD Williams	**Date:** 5/13/20	**Checked By:** JS Huisingh	**Date:** 5/13/20

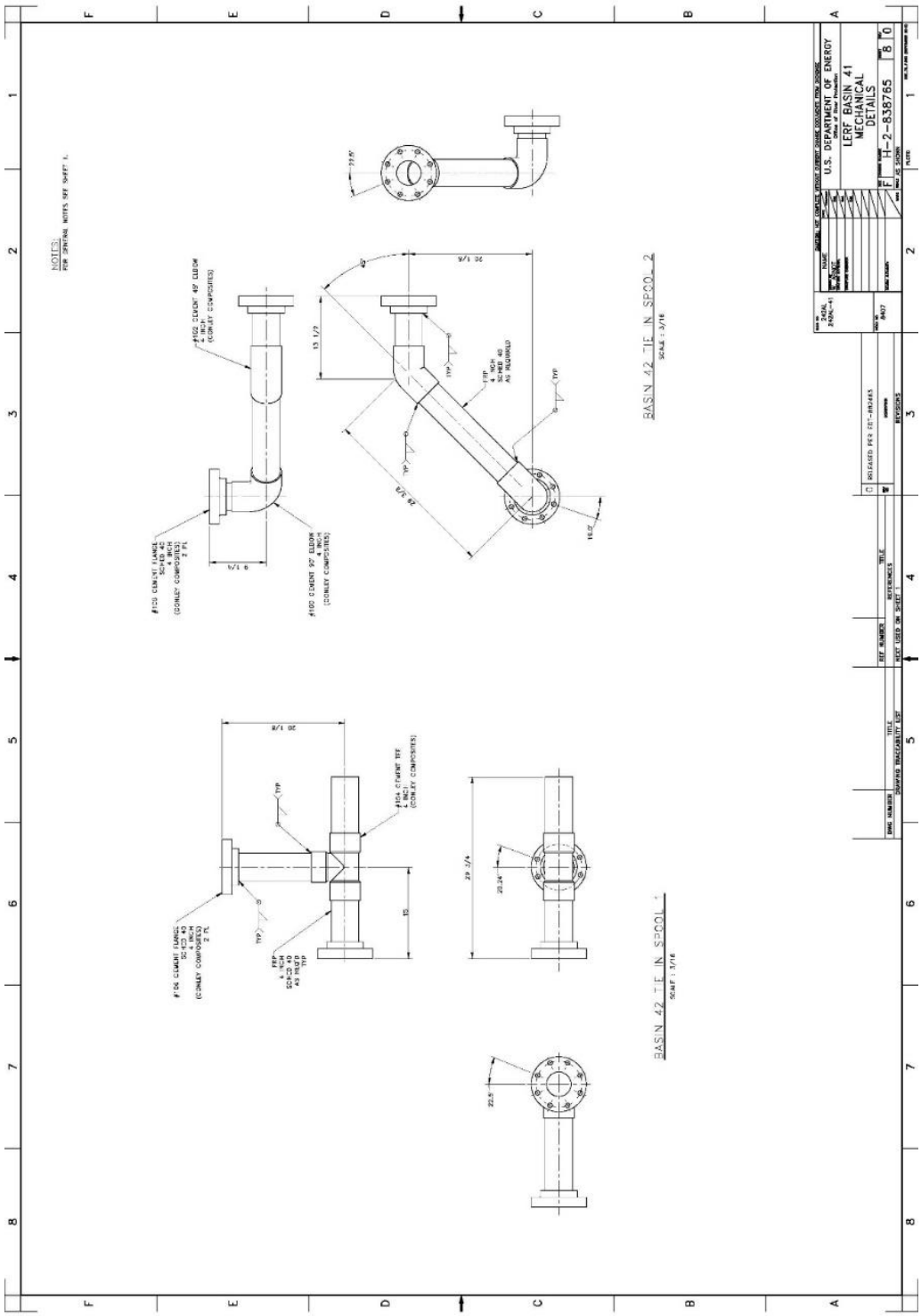

RPP-CALC-63780, Rev. 0

CALCULATION SHEET

Project No. S54413.024	**Calculation No.** S54413.024-M-001	**Rev.** 0	**Page No.** 49 of 192
Title: LERF Basin 41 Buried Piping Analysis			
Prepared By: JD Williams	**Date:** 5/13/20	**Checked By:** JS Huisingh	**Date:** 5/13/20

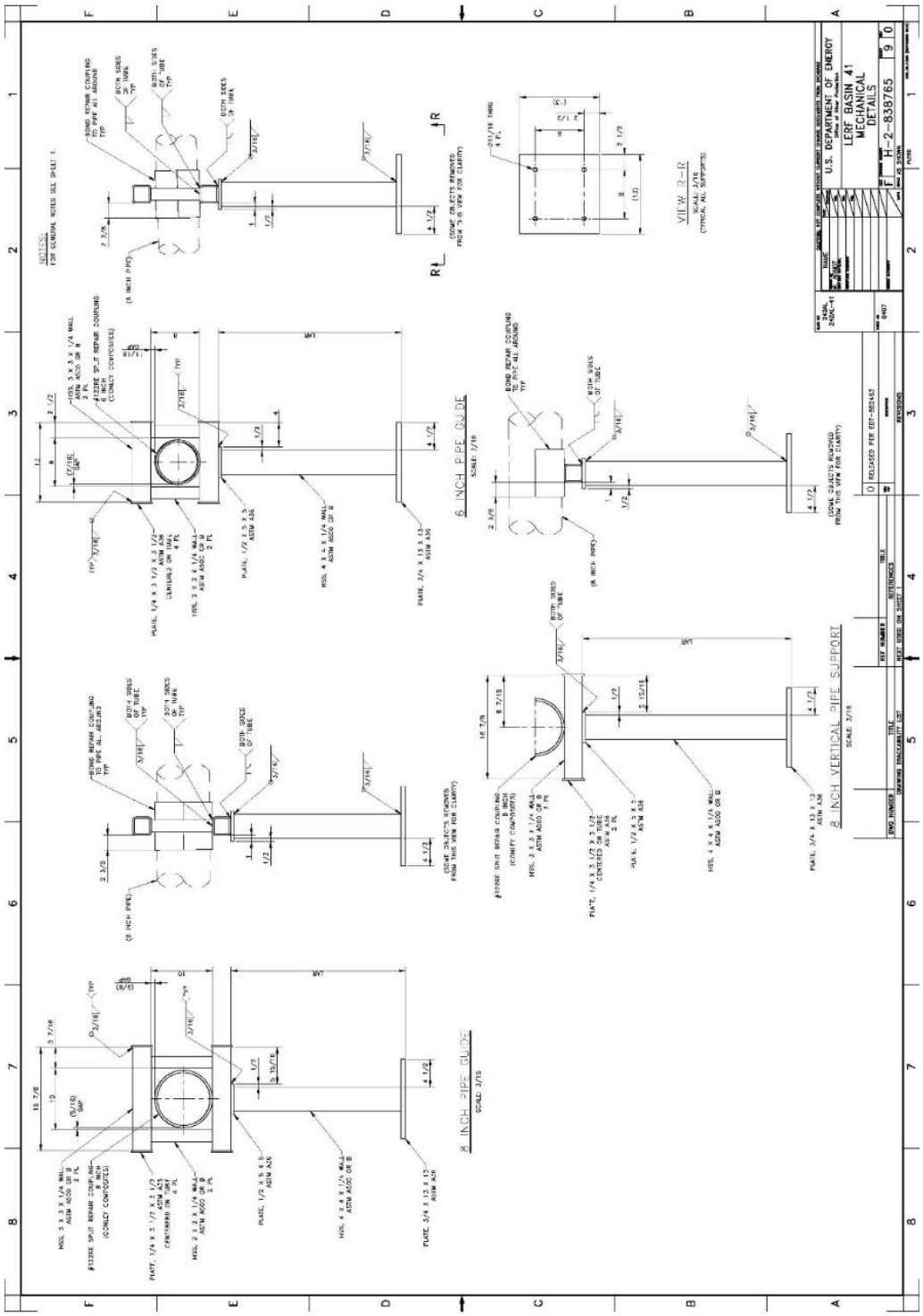

RPP-CALC-63780, Rev. 0

CALCULATION SHEET

Project No. S54413.024	**Calculation No.** S54413.024-M-001	**Rev.** 0	**Page No.** 50 of 192
Title: LERF Basin 41 Buried Piping Analysis			
Prepared By: JD Williams	**Date:** 5/13/20	**Checked By:** JS Huisingh	**Date:** 5/13/20

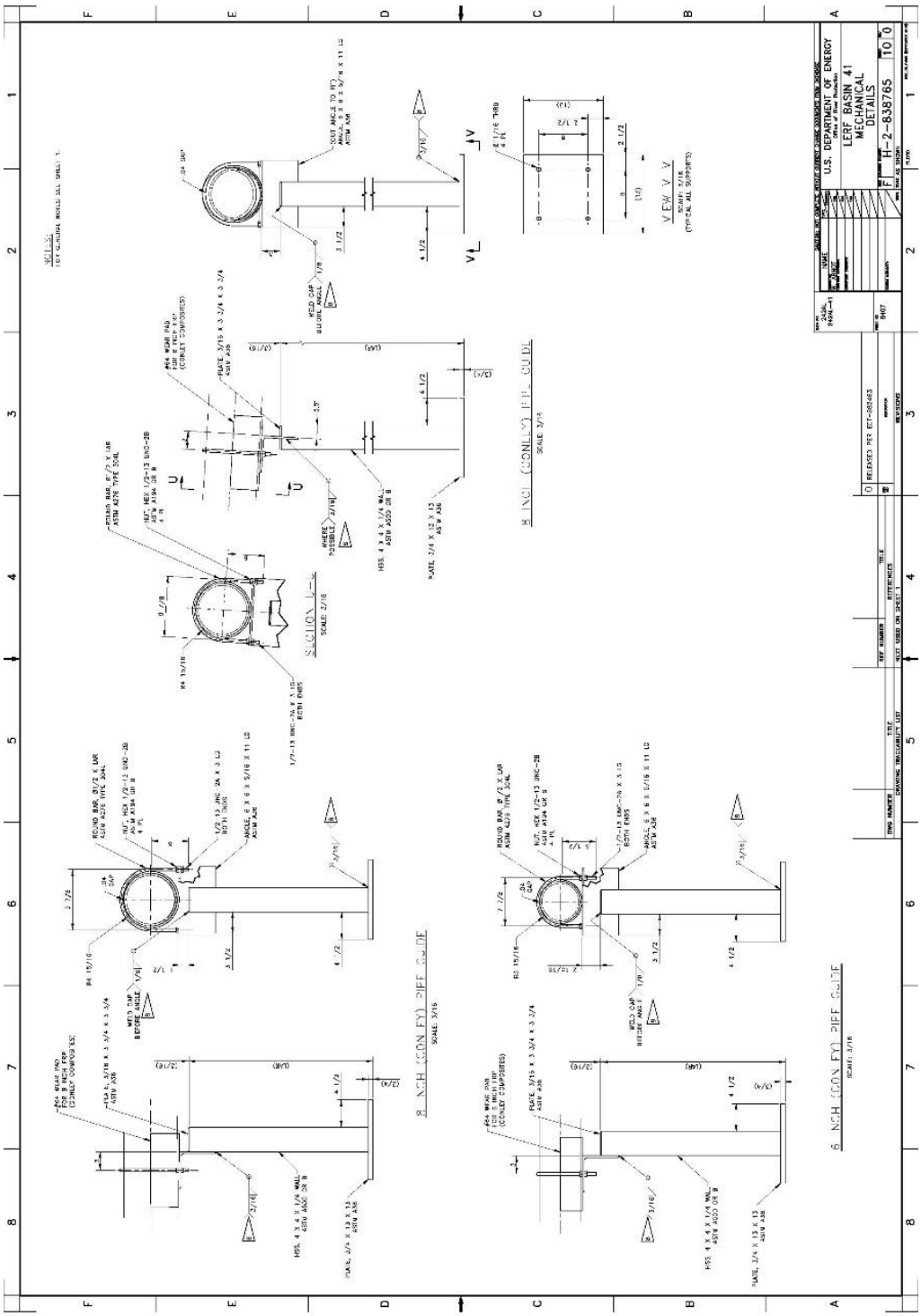

RPP-CALC-63780, Rev. 0

CALCULATION SHEET

Project No. S54413.024	**Calculation No.** S54413.024-M-001	**Rev.** 0	**Page No.** 51 of 192
Title: LERF Basin 41 Buried Piping Analysis			
Prepared By: JD Williams	**Date:** 5/13/20	**Checked By:** JS Huisingh	**Date:** 5/13/20

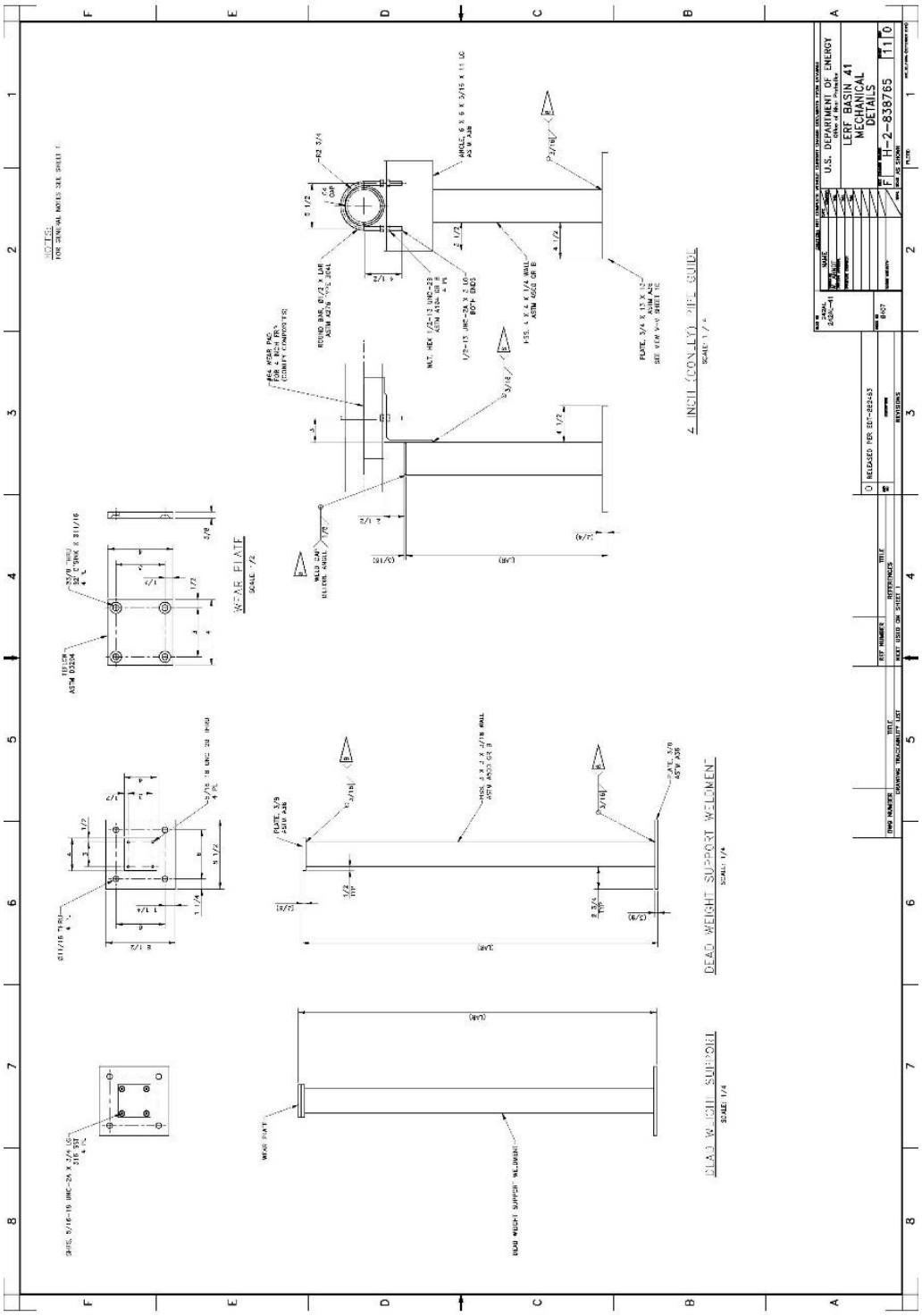

APPENDIX B

AUTOPIPE MODEL ISOMETRIC VIEWS

CALCULATION SHEET

Project No. S54413.024	**Calculation No.** S54413.024-M-001	**Rev.** 0	**Page No.** 53 of 192
Title: LERF Basin 41 Buried Piping Analysis			
Prepared By: JD Williams	**Date:** 5/13/20	**Checked By:** JS Huisingh	**Date:** 5/13/20

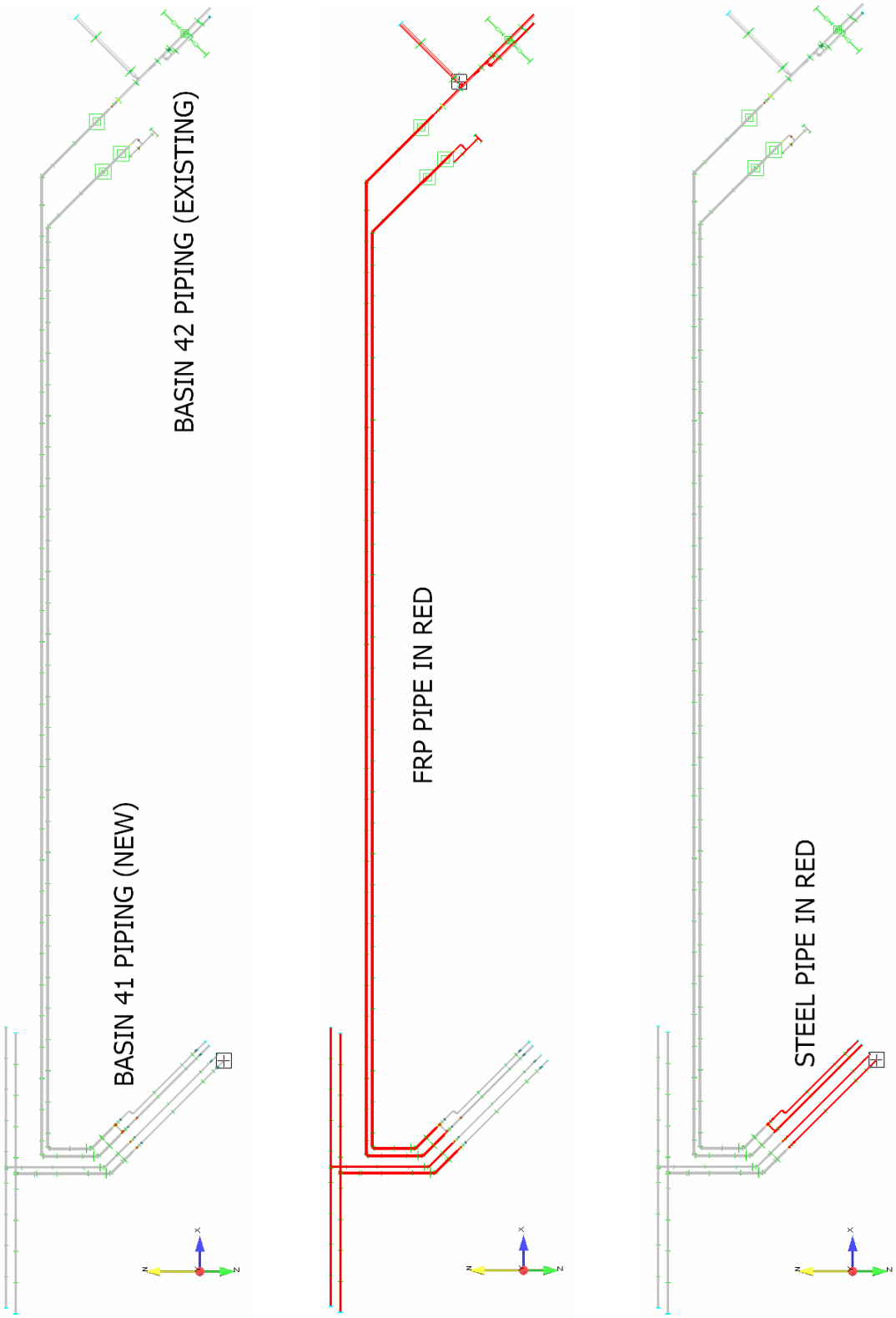

CALCULATION SHEET

Project No. S54413.024	**Calculation No.** S54413.024-M-001	**Rev.** 0	**Page No.** 54 of 192
Title: LERF Basin 41 Buried Piping Analysis			
Prepared By: JD Williams	**Date:** 5/13/20	**Checked By:** JS Huisingh	**Date:** 5/13/20

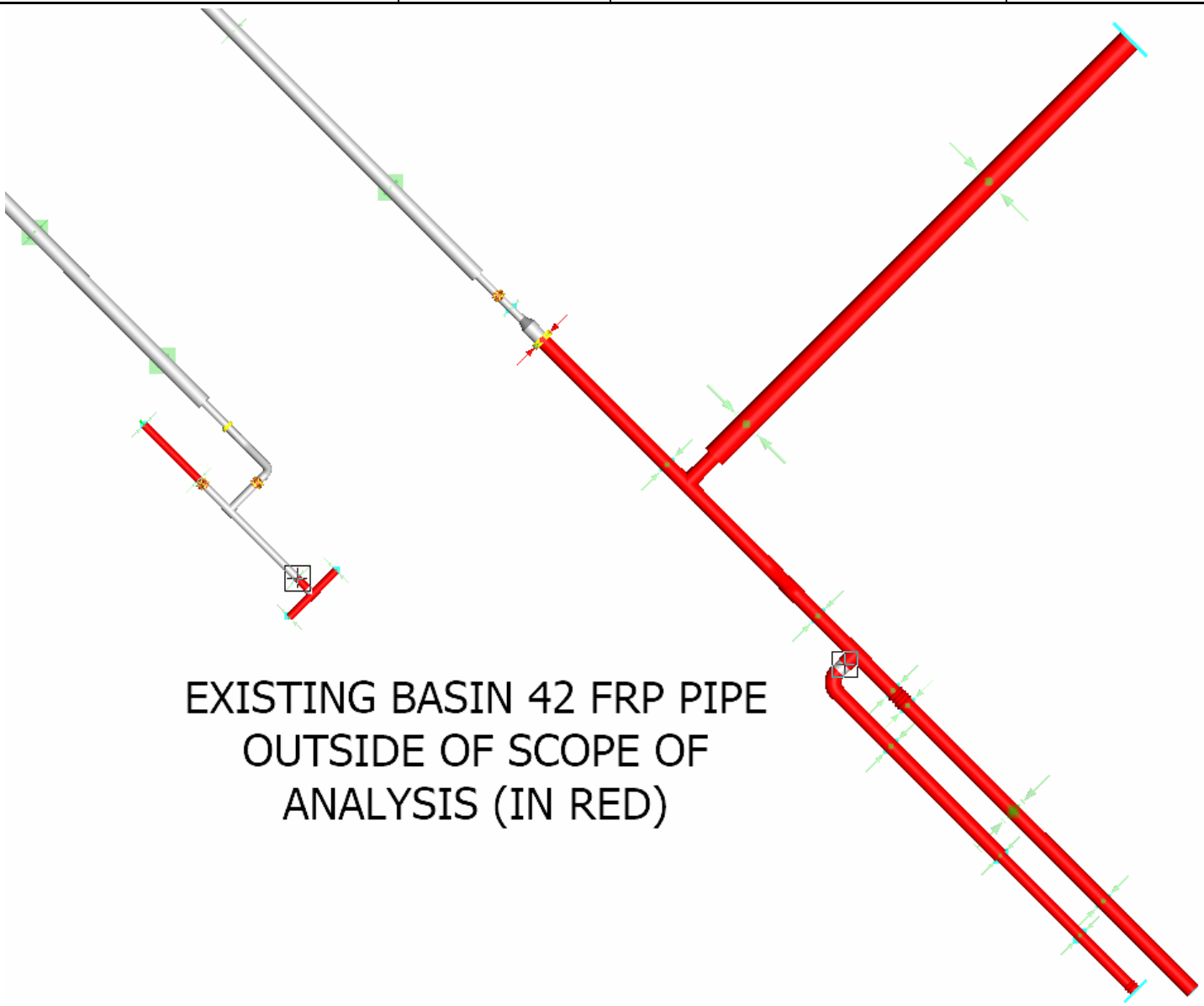

CALCULATION SHEET

Project No. S54413.024	**Calculation No.** S54413.024-M-001	**Rev.** 0	**Page No.** 55 of 192
Title: LERF Basin 41 Buried Piping Analysis			
Prepared By: JD Williams	**Date:** 5/13/20	**Checked By:** JS Huisingh	**Date:** 5/13/20

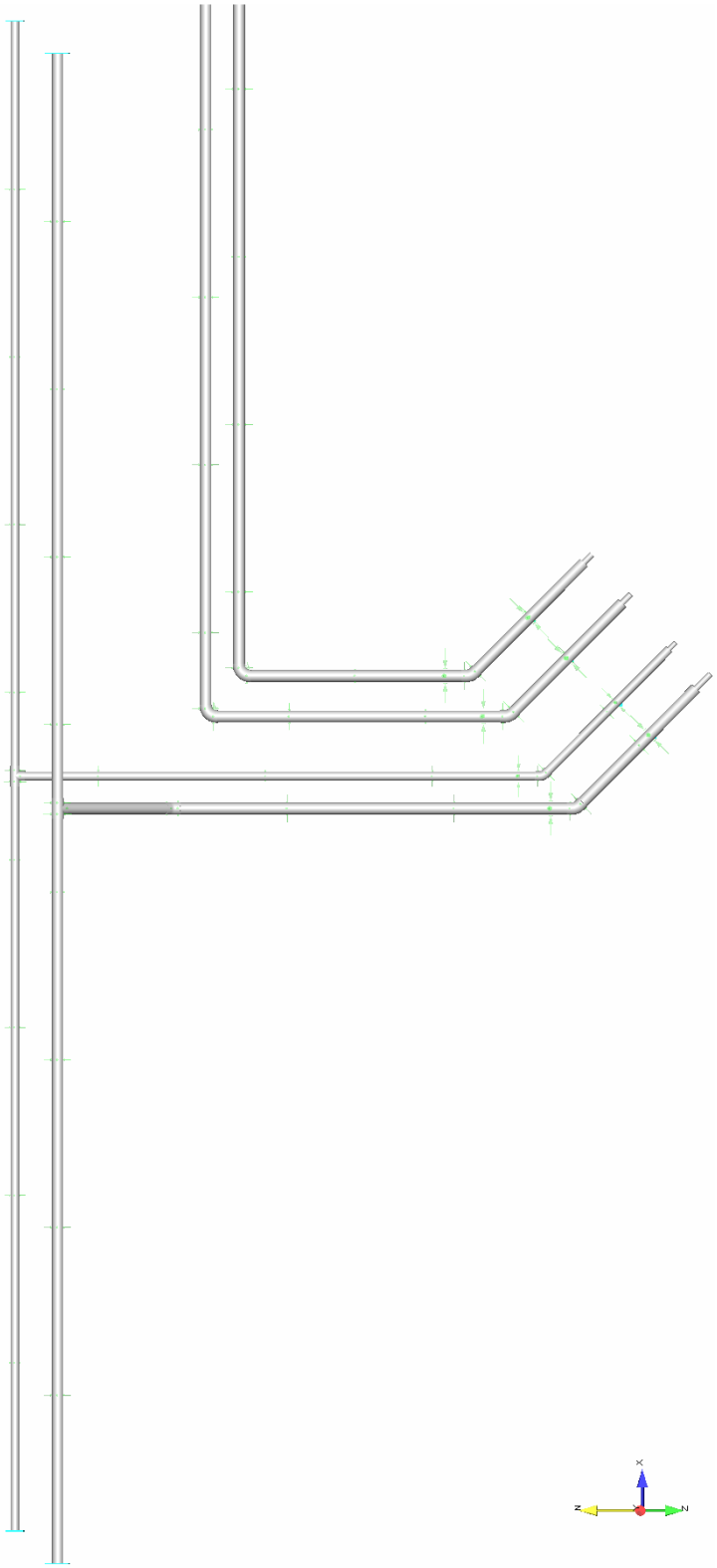

CALCULATION SHEET

Project No. S54413.024	**Calculation No.** S54413.024-M-001	**Rev.** 0	**Page No.** 56 of 192
Title: LERF Basin 41 Buried Piping Analysis			
Prepared By: JD Williams	**Date:** 5/13/20	**Checked By:** JS Huisingh	**Date:** 5/13/20

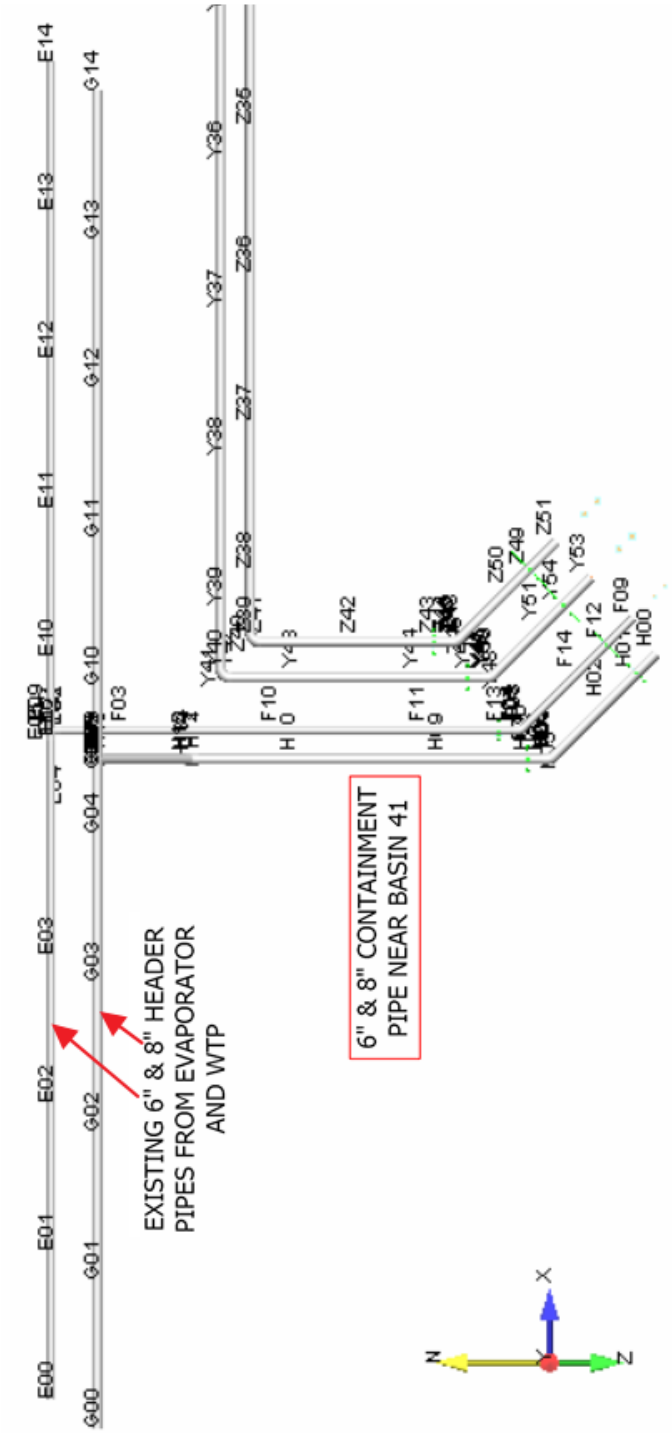

RPP-CALC-63780, Rev. 0

CALCULATION SHEET

Project No. S54413.024	**Calculation No.** S54413.024-M-001	**Rev.** 0	**Page No.** 57 of 192
Title: LERF Basin 41 Buried Piping Analysis			
Prepared By: JD Williams	**Date:** 5/13/20	**Checked By:** JS Huisingh	**Date:** 5/13/20

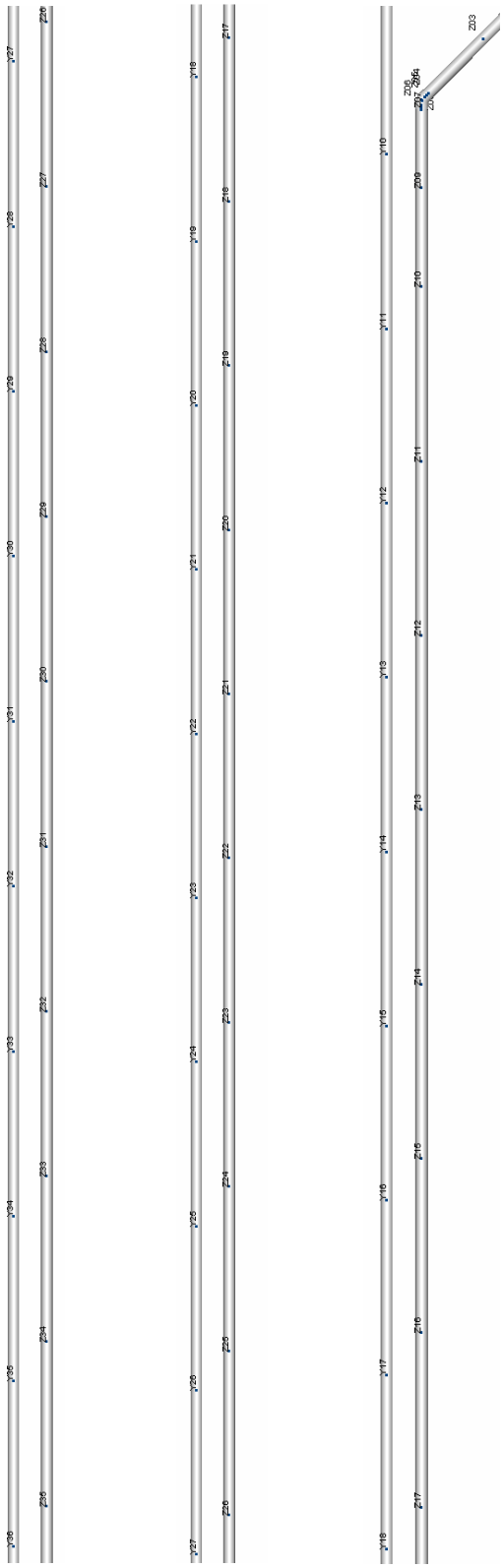

CALCULATION SHEET

Project No. S54413.024	**Calculation No.** S54413.024-M-001	**Rev.** 0	**Page No.** 58 of 192
Title: LERF Basin 41 Buried Piping Analysis			
Prepared By: JD Williams	**Date:** 5/13/20	**Checked By:** JS Huisingh	**Date:** 5/13/20

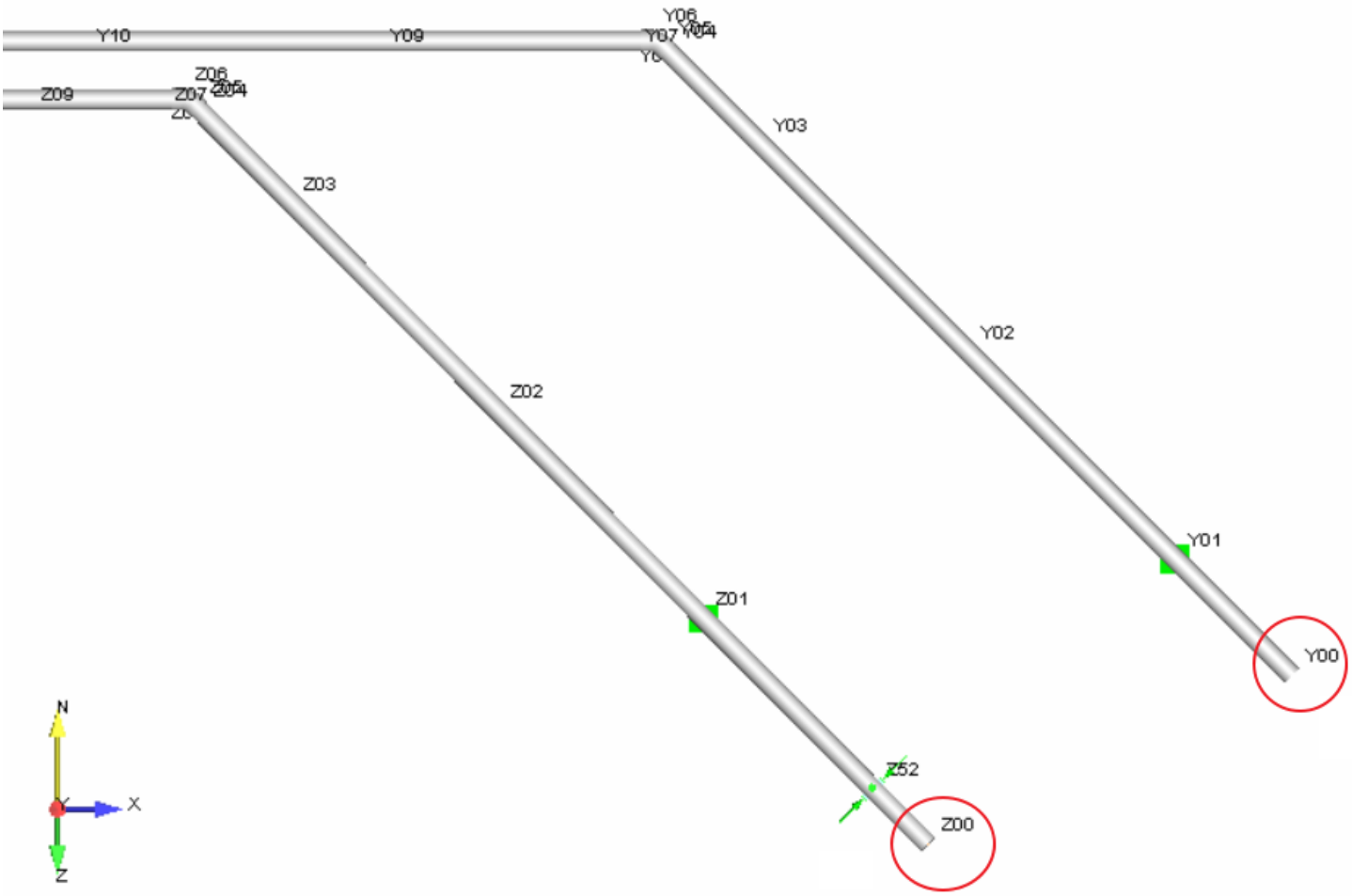

END OF 8" CONTAINMENT PIPES NEAR BASIN 42

CALCULATION SHEET

Project No. S54413.024	**Calculation No.** S54413.024-M-001	**Rev.** 0	**Page No.** 59 of 192
Title: LERF Basin 41 Buried Piping Analysis			
Prepared By: JD Williams	**Date:** 5/13/20	**Checked By:** JS Huisingh	**Date:** 5/13/20

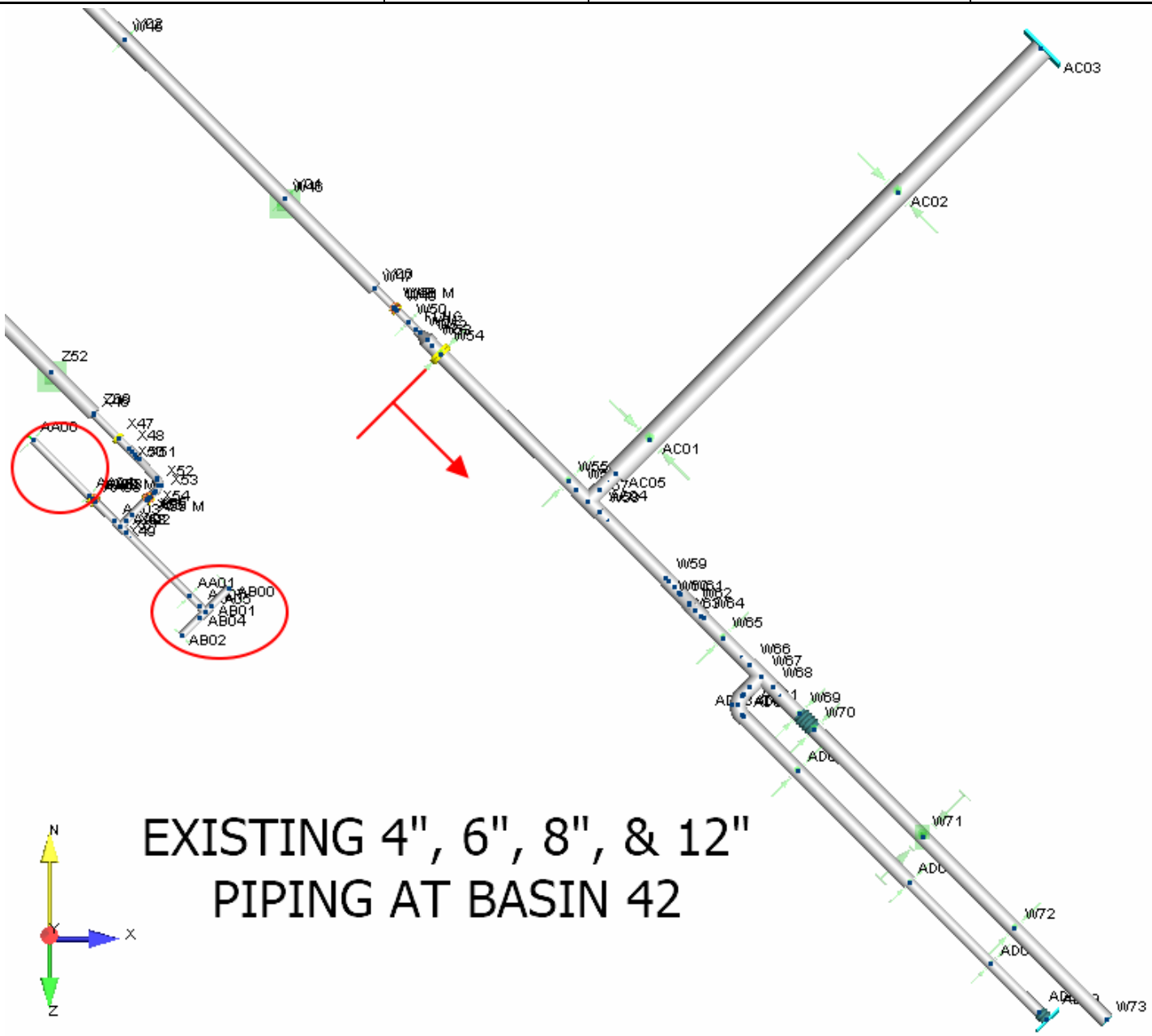

CALCULATION SHEET

Project No. S54413.024	**Calculation No.** S54413.024-M-001	**Rev.** 0	**Page No.** 60 of 192
Title: LERF Basin 41 Buried Piping Analysis			
Prepared By: JD Williams	**Date:** 5/13/20	**Checked By:** JS Huisingh	**Date:** 5/13/20

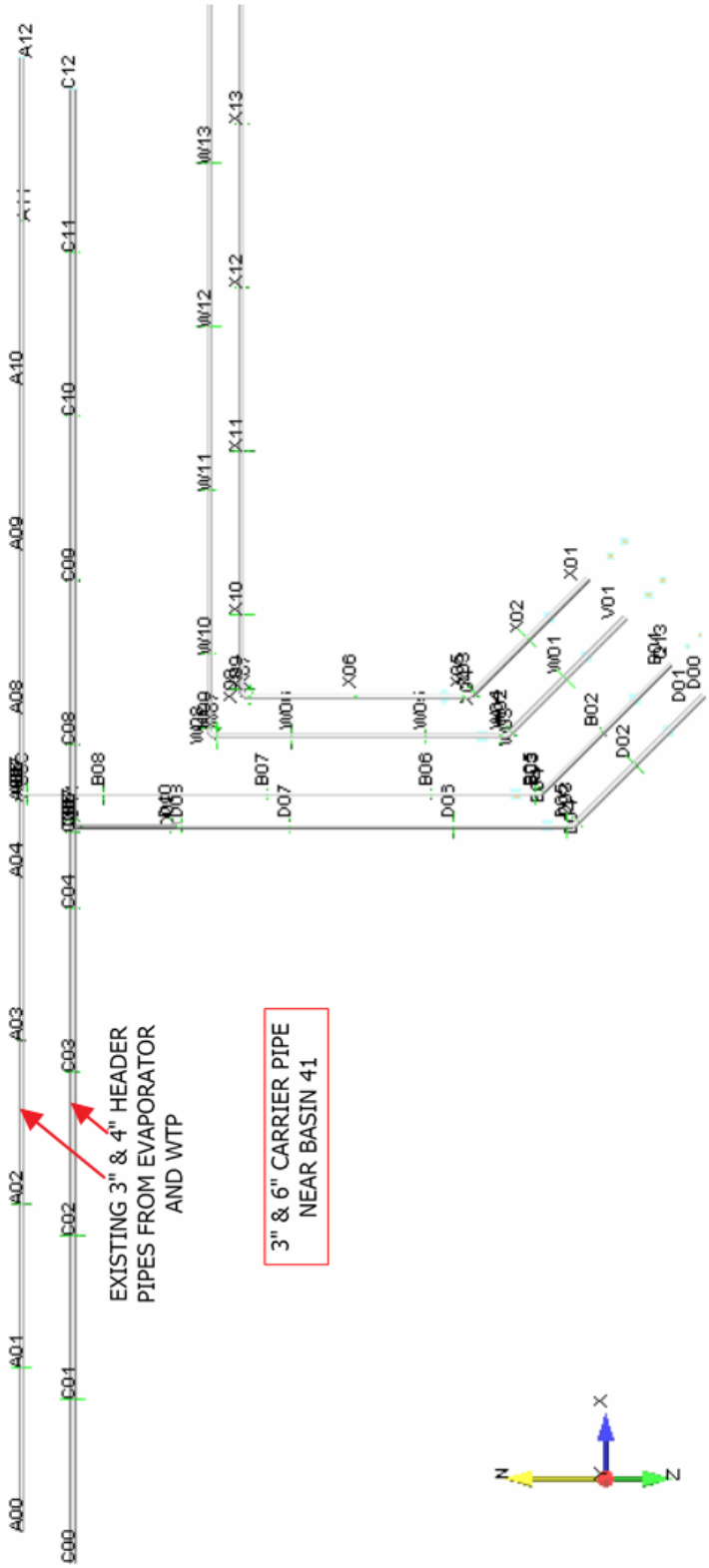

CALCULATION SHEET

Project No. S54413.024	**Calculation No.** S54413.024-M-001	**Rev.** 0	**Page No.** 61 of 192
Title: LERF Basin 41 Buried Piping Analysis			
Prepared By: JD Williams	**Date:** 5/13/20	**Checked By:** JS Huisingh	**Date:** 5/13/20

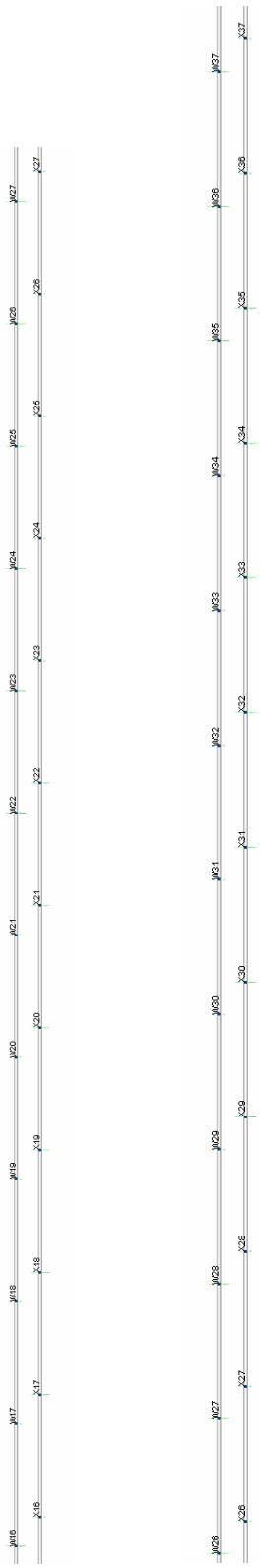

CALCULATION SHEET

Project No. S54413.024	**Calculation No.** S54413.024-M-001	**Rev.** 0	**Page No.** 62 of 192
Title: LERF Basin 41 Buried Piping Analysis			
Prepared By: JD Williams	**Date:** 5/13/20	**Checked By:** JS Huisingh	**Date:** 5/13/20

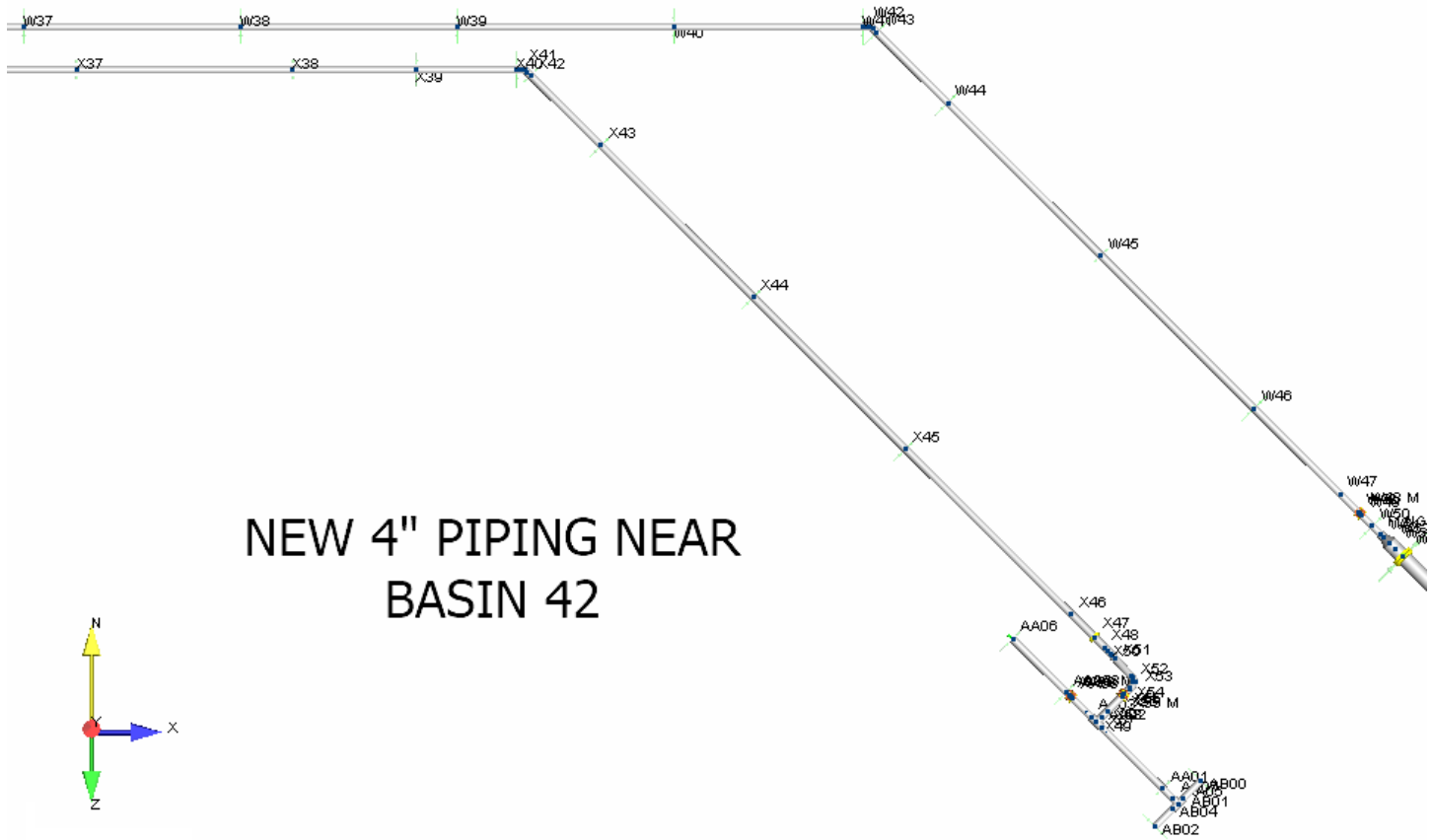

CALCULATION SHEET

Project No. S54413.024	**Calculation No.** S54413.024-M-001	**Rev.** 0	**Page No.** 63 of 192
Title: LERF Basin 41 Buried Piping Analysis			
Prepared By: JD Williams	**Date:** 5/13/20	**Checked By:** JS Huisingh	**Date:** 5/13/20

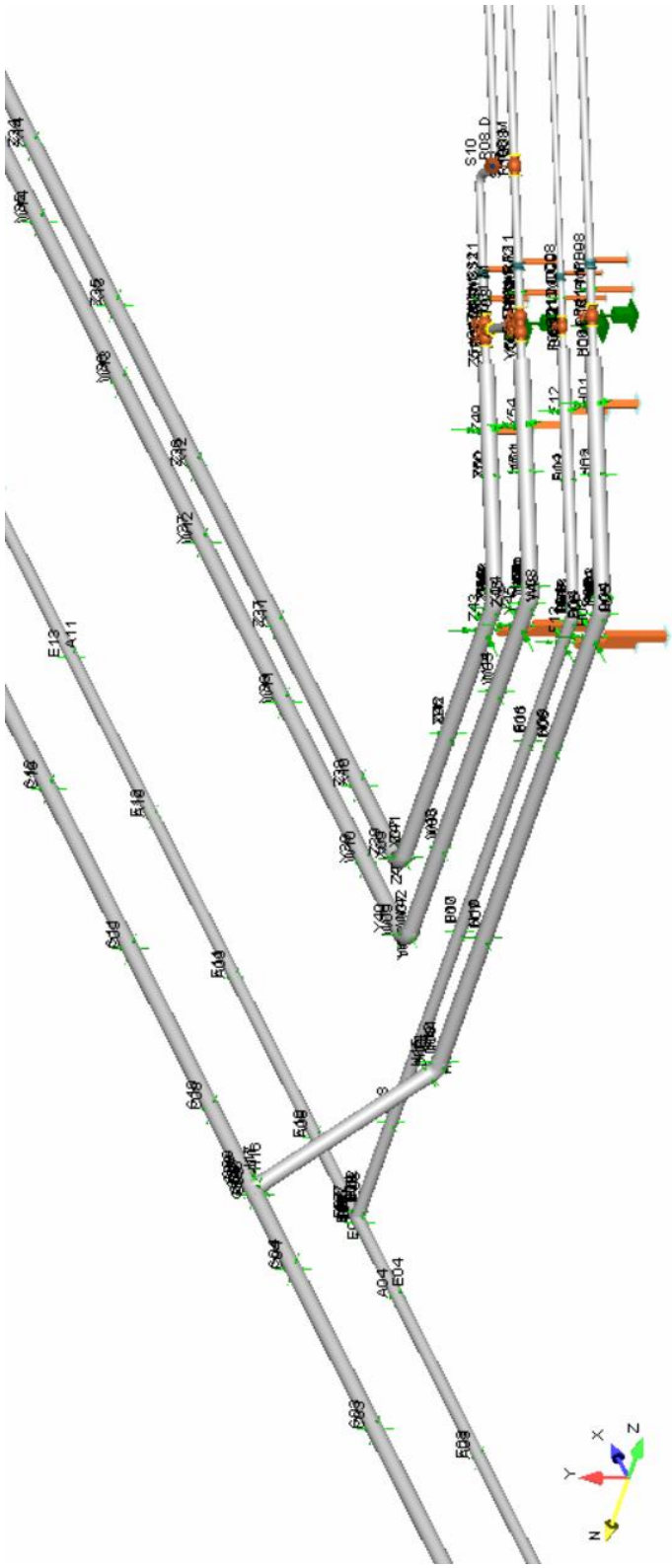

CALCULATION SHEET

Project No. S54413.024	**Calculation No.** S54413.024-M-001	**Rev.** 0	**Page No.** 64 of 192
Title: LERF Basin 41 Buried Piping Analysis			
Prepared By: JD Williams	**Date:** 5/13/20	**Checked By:** JS Huisingh	**Date:** 5/13/20

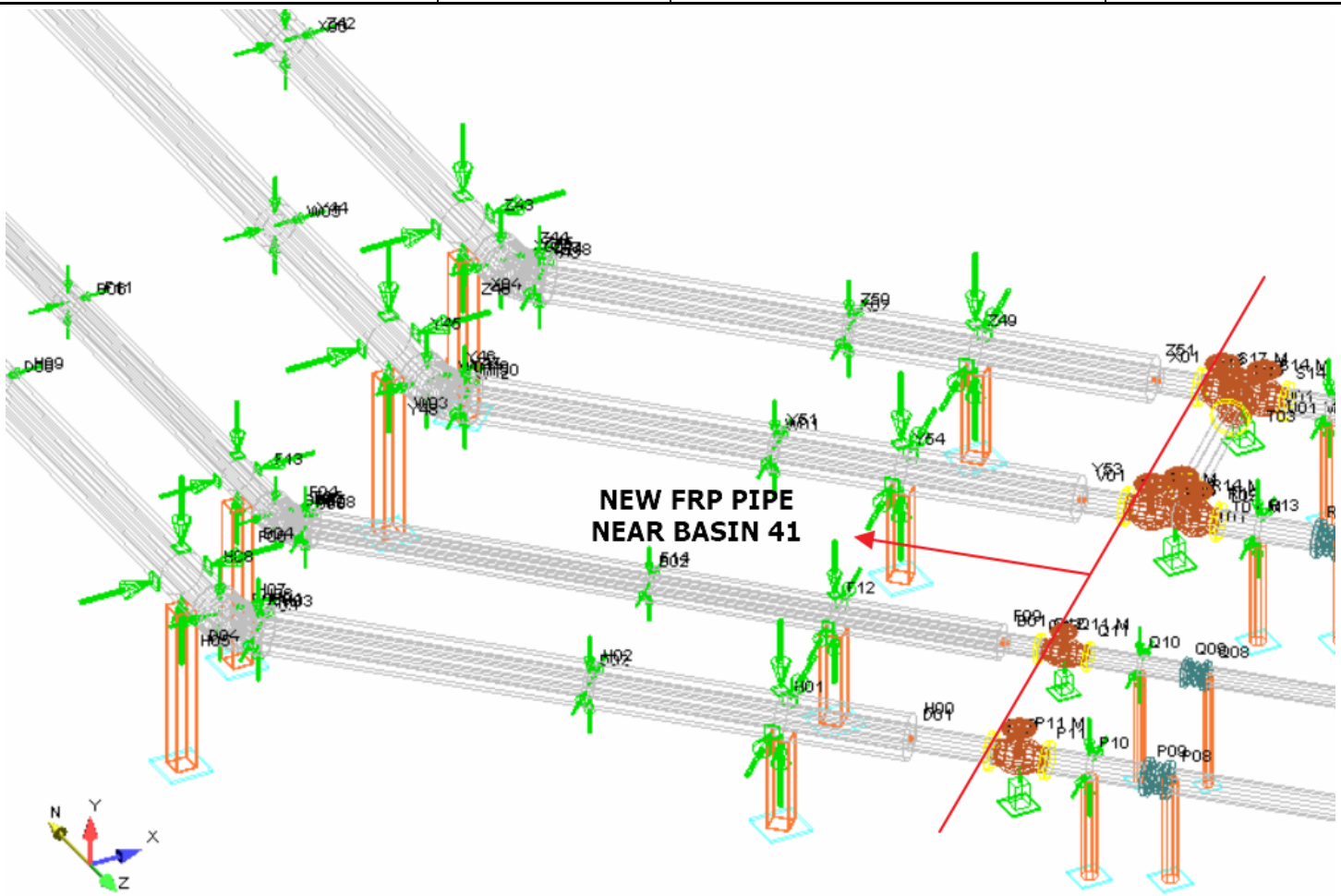

CALCULATION SHEET

Project No. S54413.024	**Calculation No.** S54413.024-M-001	**Rev.** 0	**Page No.** 65 of 192
Title: LERF Basin 41 Buried Piping Analysis			
Prepared By: JD Williams	**Date:** 5/13/20	**Checked By:** JS Huisingh	**Date:** 5/13/20

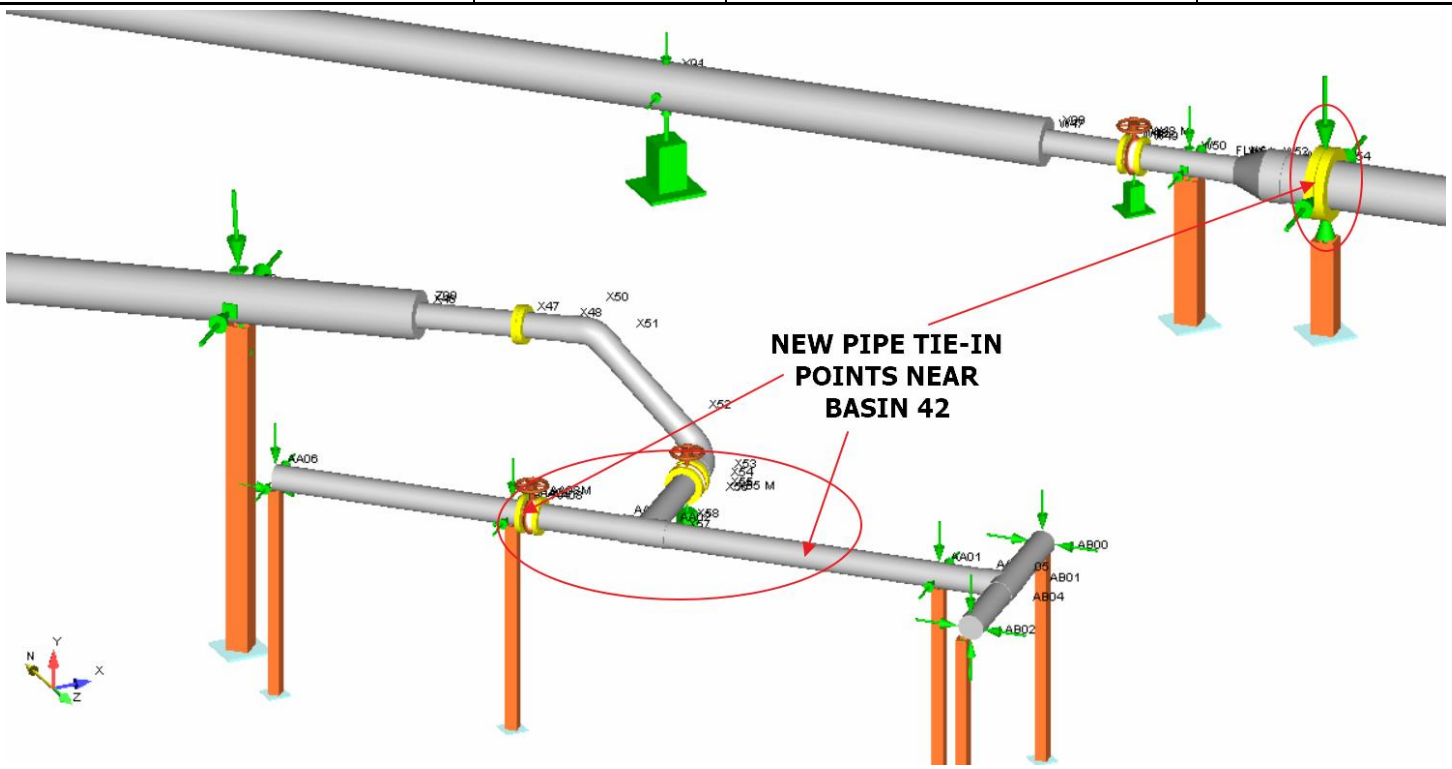

CALCULATION SHEET

Project No. S54413.024	**Calculation No.** S54413.024-M-001	**Rev.** 0	**Page No.** 66 of 192
Title: LERF Basin 41 Buried Piping Analysis			
Prepared By: JD Williams	**Date:** 5/13/20	**Checked By:** JS Huisingh	**Date:** 5/13/20

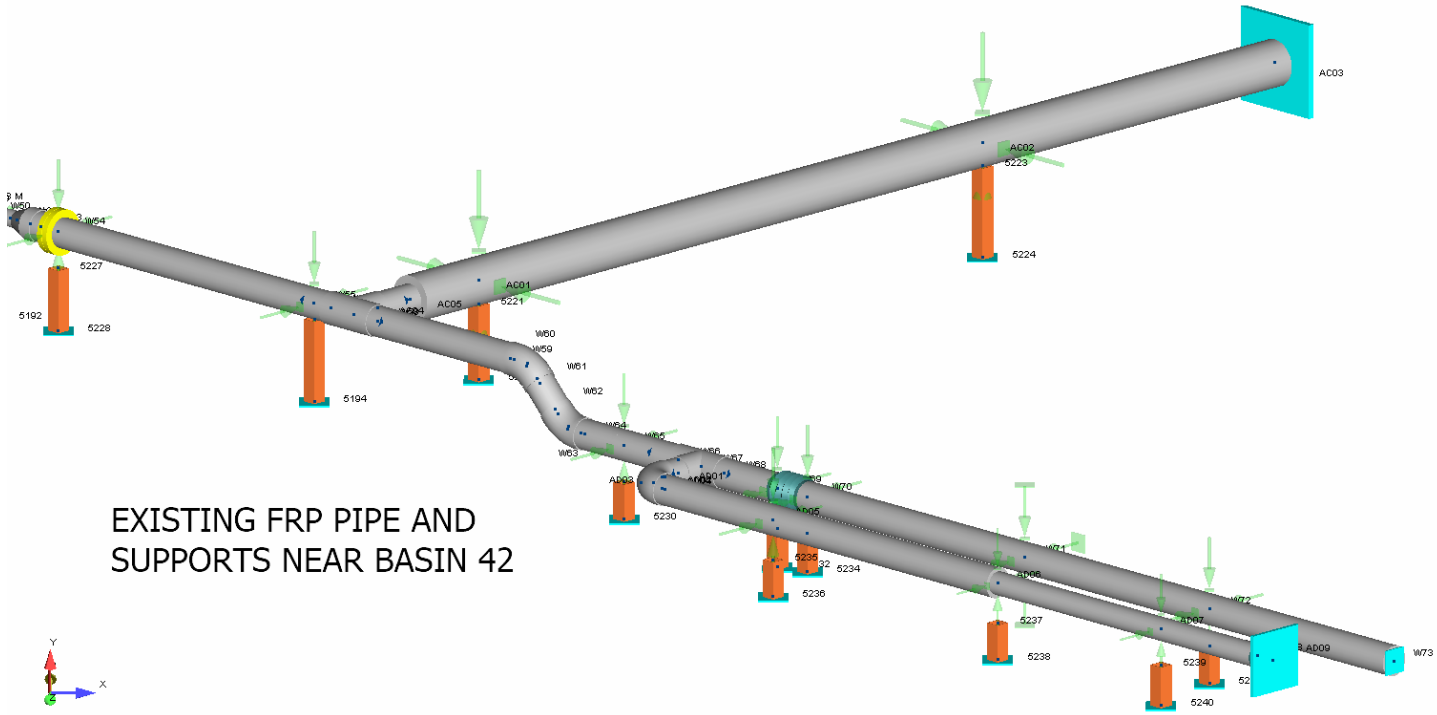

APPENDIX C

MODEL INPUT AND OUTPUT REPORT

Given the large model size, the amount of input and output has been significantly abbreviated as noted below. A representative sampling is provided below.

Additional information can be made available upon request.

CALCULATION SHEET

Project No. S54413.024	**Calculation No.** S54413.024-M-001	**Rev.** 0	**Page No.** 68 of 192
Title: LERF Basin 41 Buried Piping Analysis			
Prepared By: JD Williams	**Date:** 5/13/20	**Checked By:** JS Huisingh	**Date:** 5/13/20

```
-----------------------------------------------------------------------------------------------------------
LERF_FRP_3m
04/24/2020                                                                                  BENTLEY
12:37 PM                                                                                    AutoPIPE Advanced 11.01.00.24
-----------------------------------------------------------------------------------------------------------
```

```
          *                             *******   **  *******   *******
         ***               **           **    **  **  **    **  **
        ** **            ******         **    **  **  **    **  **
       **   **    **   **  **   *****   *******   **  *******   *****
      *********   **   **  **  **   **  **        **  **        **
     **       **  **   **  **  **   **  **        **  **        **
    **         **  *****   **   *****   **        **  **        *******
```

Pipe Stress Analysis and Design Program

Version: 11.01.00.24

Edition: Advanced

Developed and Maintained by

BENTLEY SYSTEMS, INCORPORATED
1600 Riviera Ave., Suite 300
Walnut Creek, CA 94596

CALCULATION SHEET

Project No. S54413.024	**Calculation No.** S54413.024-M-001	**Rev.** 0	**Page No.** 69 of 192
Title: LERF Basin 41 Buried Piping Analysis			
Prepared By: JD Williams	**Date:** 5/13/20	**Checked By:** JS Huisingh	**Date:** 5/13/20

```
-----------------------------------------------------------------------------------------------------------
LERF_FRP_3m
04/24/2020                                                                          BENTLEY
12:37 PM                                                                            AutoPIPE Advanced 11.01.00.24
-----------------------------------------------------------------------------------------------------------


            ************************************************************
            **                                                        **
            **              AUTOPIPE SYSTEM INFORMATION               **
            **                                                        **
            ************************************************************


            SYSTEM NAME : LERF_FRP_3m

            PROJECT ID  :


            PREPARED BY  : ______________________________

            CHECKED BY   : ______________________________

            1ST APPROVER : ______________________________

            2ND APPROVER : ______________________________


            PIPING CODE            : ISO 14692

            YEAR                   : 2002 + 2005 addenda

            VERTICAL AXIS          : Y

            AMBIENT TEMPERATURE    :   60.0 deg F

            COMPONENT LIBRARY      : ISOGRPP

            MATERIAL LIBRARY       : ISOGRPM

            MODEL REVISION NUMBER  :   173
```

CALCULATION SHEET

Project No. S54413.024	**Calculation No.** S54413.024-M-001	**Rev.** 0	**Page No.** 70 of 192
Title: LERF Basin 41 Buried Piping Analysis			
Prepared By: JD Williams	**Date:** 5/13/20	**Checked By:** JS Huisingh	**Date:** 5/13/20

LERF_FRP_3m
04/24/2020 BENTLEY
12:37 PM AutoPIPE Advanced 11.01.00.24

T A B L E O F C O N T E N T S

Components..... 1
Coordinates..... 87
Segment Data..... 99
Pipe Properties..... 100
Material Properties..... 102
Material Allowables..... 104
Temperature and Pressure..... 106
Soil Properties..... 120
Loads Summary..... 129
Support..... 139
Bend..... 153
Tee..... 157
Center of Gravity..... 158
Analysis Summary..... 159
Restraint Reactions..... 177
Code Compliance..... 414
Result Summary.....11068

CALCULATION SHEET

Project No. S54413.024	**Calculation No.** S54413.024-M-001	**Rev.** 0	**Page No.** 71 of 192
Title: LERF Basin 41 Buried Piping Analysis			
Prepared By: JD Williams	**Date:** 5/13/20	**Checked By:** JS Huisingh	**Date:** 5/13/20

```
-----------------------------------------------------------------------------------------------------------------
LERF_FRP_3m
04/24/2020                                                          BENTLEY
12:36 PM                                                            AutoPIPE Advanced 11.01.00.24  MODEL  PAGE   1
-----------------------------------------------------------------------------------------------------------------

                 C O M P O N E N T   D A T A   L I S T I N G

 ---------------------------------------------------------------------------
 *** SEGMENT A

 ---------------------------------------------------------------------------
 From A00 to A01, DX= 10.00 ft                                        Run

 PIPE DATA:
   Pipe Id= 3CON40, Material= NS, Poisson= 0.230, Nom Size= 3.000, OD= 3.390 inch, Sch= NS,
   Wall Thk= 0.135 inch, Mill= 0.017 inch, Cor= 0 inch, Pipe Density= 115.80 lb/cu.ft,
   Pipe Unit Wgt= 1.11 lb/ft, Content Sp Gr= 1.500, Content Unit Wgt= 4.97 lb/ft, Insul Thk= 2.000 inch,
   Insul Material= OTHER, Insul Density= 6.00 lb/cu.ft, Insul Unit Wgt= 1.41 lb/ft, Cladding Thickness = 0 inch,
   Lining Thk= 0 inch, Long Weld factor= 1.00, Circ Weld factor= 1.00, Long Modulus= 1.75000 E6 psi,
   Hoop Modulus= 2.50000 E6 psi, Shear Modulus= 1.30000 E6 psi, Sc= 6454.0 psi, Syc= 0.0 psi

 OPERATING DATA:
   P1= 150.00 psi, P2= 0 psi, P3= 150.00 psi, T1= 120.00 deg F, T2= 32.00 deg F, T3= 120.00 deg F,
   Exp1= 0.68400 in/100ft, Exp2= -0.54700 in/100ft, Exp3= 0.68400 in/100ft, E1= 1.63000 E6 psi,
   E2= 1.86000 E6 psi, E3= 1.63000 E6 psi, Sh1= 0.85 psi, Sh2= 0.85 psi, Sh3= 0.85 psi

 POINT DATA:
   A00, Coordinates, X= -45.07 ft, Y= -0.28 ft, Z= -0.01 ft

 SUPPORT DATA:
   A00, Anchor, KTX= Rigid, KTY= Rigid, KTZ= Rigid, KRX= Rigid, KRY= Rigid, KRZ= Rigid

 ---------------------------------------------------------------------------
 From A01 to A02, DX= 10.00 ft                                        Run

 POINT DATA:
   A01, Coordinates, X= -35.07 ft, Y= -0.28 ft, Z= -0.01 ft

 SUPPORT DATA:
   A01, Guide, Support Id= A03  1, Connected to E01, Tag No.= INT, Comp.Wt = 0.000 lb, Stiffness= RIGID

 ---------------------------------------------------------------------------
 From A02 to A03, DX= 10.00 ft                                        Run

 POINT DATA:
   A02, Coordinates, X= -25.07 ft, Y= -0.28 ft, Z= -0.01 ft

 SUPPORT DATA:
   A02, Guide, Support Id= A04  1, Connected to E02, Tag No.= INT, Comp.Wt = 0.000 lb, Stiffness= RIGID

 ---------------------------------------------------------------------------
 From A03 to A04, DX= 10.00 ft                                        Run

 POINT DATA:
   A03, Coordinates, X= -15.07 ft, Y= -0.28 ft, Z= -0.01 ft

 SUPPORT DATA:
   A03, Guide, Support Id= A05  1, Connected to E03, Tag No.= INT, Comp.Wt = 0.000 lb, Stiffness= RIGID

 ---------------------------------------------------------------------------
 From A04 to A05, DX= 4.66 ft                                         Run
```

CALCULATION SHEET

Project No. S54413.024	**Calculation No.** S54413.024-M-001	**Rev.** 0	**Page No.** 72 of 192
Title: LERF Basin 41 Buried Piping Analysis			
Prepared By: JD Williams	**Date:** 5/13/20	**Checked By:** JS Huisingh	**Date:** 5/13/20

```
-----------------------------------------------------------------------------------------------------------
LERF_FRP_3m
04/24/2020                                                    BENTLEY
12:36 PM                                                      AutoPIPE Advanced 11.01.00.24  MODEL  PAGE   2
-----------------------------------------------------------------------------------------------------------

                 C O M P O N E N T   D A T A   L I S T I N G

 POINT DATA:
   A04, Coordinates, X= -5.07 ft, Y= -0.28 ft, Z= -0.01 ft

 SUPPORT DATA:
   A04, Guide, Support Id= A06  1, Connected to E04, Tag No.= INT, Comp.Wt = 0.000 lb, Stiffness= RIGID

 ---------------------------------------------------------------------------
 From A05 to A06, DX= 0.34 ft                                        Run

 PIPE DATA:
   Pipe Id= FITT3, Material= NS, OD= 3.710 inch, Wall Thk= 0.295 inch, Mill= 0.037 inch,
   Pipe Density= 115.80 lb/cu.ft, Pipe Unit Wgt= 2.55 lb/ft, Content Sp Gr= 1.500, Content Unit Wgt= 4.97 lb/ft,
   Insul Density= 6.00 lb/cu.ft, Insul Unit Wgt= 1.49 lb/ft, Syc= 0.0 psi

 POINT DATA:
   A05, Coordinates, X= -0.41 ft, Y= -0.28 ft, Z= -0.01 ft

 SUPPORT DATA:
   A05, Guide, Support Id= A12  1, Connected to E06, Tag No.= INT, Comp.Wt = 0.000 lb, Stiffness= RIGID

 ---------------------------------------------------------------------------
 From A06 to A07, DX= 0.34 ft                                        Tee

 COMPONENT DATA (Tee Header, Center= A06):
   Reinforced tee, SIFI= 1.52, SIFO= 1.52, Pad thick= 0.00 inch

 POINT DATA:
   A06, Coordinates, X= -0.07 ft, Y= -0.28 ft, Z= -0.01 ft

 ---------------------------------------------------------------------------
 From A07 to A08, DX= 4.66 ft                                        Run

 PIPE DATA:
   Pipe Id= 3CON40, Material= NS, OD= 3.390 inch, Wall Thk= 0.135 inch, Mill= 0.017 inch,
   Pipe Density= 115.80 lb/cu.ft, Pipe Unit Wgt= 1.11 lb/ft, Content Sp Gr= 1.500, Content Unit Wgt= 4.97 lb/ft,
   Insul Density= 6.00 lb/cu.ft, Insul Unit Wgt= 1.41 lb/ft, Syc= 0.0 psi

 POINT DATA:
   A07, Coordinates, X= 0.27 ft, Y= -0.28 ft, Z= -0.01 ft

 SUPPORT DATA:
   A07, Guide, Support Id= A11  1, Connected to E08, Tag No.= INT, Comp.Wt = 0.000 lb, Stiffness= RIGID

 ---------------------------------------------------------------------------
 From A08 to A09, DX= 10.00 ft                                       Run

 POINT DATA:
   A08, Coordinates, X= 4.93 ft, Y= -0.28 ft, Z= -0.01 ft

 SUPPORT DATA:
   A08, Guide, Support Id= A07  1, Connected to E10, Tag No.= INT, Comp.Wt = 0.000 lb, Stiffness= RIGID

 ---------------------------------------------------------------------------
 From A09 to A10, DX= 10.00 ft                                       Run
```

CALCULATION SHEET

Project No. S54413.024	**Calculation No.** S54413.024-M-001	**Rev.** 0	**Page No.** 73 of 192
Title: LERF Basin 41 Buried Piping Analysis			
Prepared By: JD Williams	**Date:** 5/13/20	**Checked By:** JS Huisingh	**Date:** 5/13/20

```
-----------------------------------------------------------------------------------------------------------------
LERF_FRP_3m
04/24/2020                                                          BENTLEY
12:36 PM                                                            AutoPIPE Advanced 11.01.00.24  MODEL  PAGE   3
-----------------------------------------------------------------------------------------------------------------

                 C O M P O N E N T   D A T A   L I S T I N G

 POINT DATA:
   A09, Coordinates, X= 14.93 ft, Y= -0.28 ft, Z= -0.01 ft

 SUPPORT DATA:
   A09, Guide, Support Id= A08  1, Connected to E11, Tag No.= INT, Comp.Wt = 0.000 lb, Stiffness= RIGID

 ---------------------------------------------------------------------------
 From A10 to A11, DX= 10.00 ft                                        Run

 POINT DATA:
   A10, Coordinates, X= 24.93 ft, Y= -0.28 ft, Z= -0.01 ft

 SUPPORT DATA:
   A10, Guide, Support Id= A09  1, Connected to E12, Tag No.= INT, Comp.Wt = 0.000 lb, Stiffness= RIGID

 ---------------------------------------------------------------------------
 From A11 to A12, DX= 10.00 ft, DZ= 0 ft, L= 10.00 ft                 Run

 POINT DATA:
   A11, Coordinates, X= 34.93 ft, Y= -0.28 ft, Z= -0.01 ft
   A12, Coordinates, X= 44.93 ft, Y= -0.28 ft, Z= -0.01 ft

 SUPPORT DATA:
   A11, Guide, Support Id= A10  1, Connected to E13, Tag No.= INT, Comp.Wt = 0.000 lb, Stiffness= RIGID
   A12, Anchor, KTX= Rigid, KTY= Rigid, KTZ= Rigid, KRX= Rigid, KRY= Rigid, KRZ= Rigid

 ---------------------------------------------------------------------------
 ---------------------------------------------------------------------------
 *** SEGMENT B

 ---------------------------------------------------------------------------
 From Q13 to B01, DX= -0.33 ft, DZ= -0.33 ft, L= 0.47 ft              Junc

 PIPE DATA:
   Pipe Id= 3CON40, Material= NS, Pipe Density= 115.80 lb/cu.ft, Pipe Unit Wgt= 1.11 lb/ft,
   Content Sp Gr= 1.500, Content Unit Wgt= 4.97 lb/ft

 OPERATING DATA:
   T1= 150.00 deg F, T2= -25.00 deg F, Exp1= 1.02600 in/100ft, Exp2= -1.19700 in/100ft, E1= 1.56000 E6 psi,
   E2= 2.01000 E6 psi

 POINT DATA:
   Q13, Coordinates, X= 7.88 ft, Y= -0.28 ft, Z= 39.56 ft

 ---------------------------------------------------------------------------
 From B01 to B02, DX= -3.78 ft, DY= 0 ft, DZ= -3.78 ft, L= 5.35 ft    Run

 POINT DATA:
   B01, Coordinates, X= 7.55 ft, Y= -0.28 ft, Z= 39.23 ft

 ---------------------------------------------------------------------------
 From B02 to B03, DX= -3.63 ft, DZ= -3.63 ft, L= 5.13 ft              Run

 POINT DATA:
   B02, Coordinates, X= 3.77 ft, Y= -0.28 ft, Z= 35.44 ft
```

CALCULATION SHEET

Project No. S54413.024	**Calculation No.** S54413.024-M-001	**Rev.** 0	**Page No.** 74 of 192
Title: LERF Basin 41 Buried Piping Analysis			
Prepared By: JD Williams	**Date:** 5/13/20	**Checked By:** JS Huisingh	**Date:** 5/13/20

```
-----------------------------------------------------------------------------------------------------------------
LERF_FRP_3m
04/24/2020                                                          BENTLEY
12:36 PM                                                            AutoPIPE Advanced 11.01.00.24  MODEL  PAGE   4
-----------------------------------------------------------------------------------------------------------------

                 C O M P O N E N T   D A T A   L I S T I N G

 SUPPORT DATA:
   B02, Guide, Support Id= B11  1, Connected to F14, Tag No.= INT, Comp.Wt = 0.000 lb, Stiffness= RIGID

 ---------------------------------------------------------------------------
 From B03 to B04, DX= -0.21 ft, DZ= -0.21 ft, L= 0.30 ft                    Run

 PIPE DATA:
   Pipe Id= FITT3, Material= NS, OD= 3.710 inch, Wall Thk= 0.295 inch, Mill= 0.037 inch,
   Pipe Density= 115.80 lb/cu.ft, Pipe Unit Wgt= 2.55 lb/ft, Content Sp Gr= 1.500, Content Unit Wgt= 4.97 lb/ft,
   Insul Density= 6.00 lb/cu.ft, Insul Unit Wgt= 1.49 lb/ft, Syc= 0.0 psi

 POINT DATA:
   B03, Coordinates, X= 0.14 ft, Y= -0.28 ft, Z= 31.81 ft

 SUPPORT DATA:
   B03, Guide, Support Id= B05  1, Connected to F07, Tag No.= INT, Comp.Wt = 0.000 lb, Stiffness= RIGID

 ---------------------------------------------------------------------------
 From B04 to B05, DZ= -0.30 ft                                              Bend

 COMPONENT DATA (Bend, TIP= B04, Near= B04 N, Mid= B04 M, Far= B04 F):
    , Radius= 3.92 inch, Bend angle= 45.00 deg, Mid point at 50.00 percent, End flanges= 0, Flex= Auto,
   SIFI Circ= 2.50, SIFO Circ= 2.50, SIFI Long= 1.25, SIFO Long= 1.00

 POINT DATA:
   B04, Coordinates, X= -0.07 ft, Y= -0.28 ft, Z= 31.60 ft
   B04 N, Coordinates, X= 0.03 ft, Y= -0.28 ft, Z= 31.70 ft
   B04 M, Coordinates, X= -0.04 ft, Y= -0.28 ft, Z= 31.59 ft
   B04 F, Coordinates, X= -0.07 ft, Y= -0.28 ft, Z= 31.47 ft

 ---------------------------------------------------------------------------
 From B05 to B06, DZ= -6.31 ft                                              Run

 PIPE DATA:
   Pipe Id= 3CON40, Material= NS, OD= 3.390 inch, Wall Thk= 0.135 inch, Mill= 0.017 inch,
   Pipe Density= 115.80 lb/cu.ft, Pipe Unit Wgt= 1.11 lb/ft, Content Sp Gr= 1.500, Content Unit Wgt= 4.97 lb/ft,
   Insul Density= 6.00 lb/cu.ft, Insul Unit Wgt= 1.41 lb/ft, Syc= 0.0 psi

 POINT DATA:
   B05, Coordinates, X= -0.07 ft, Y= -0.28 ft, Z= 31.30 ft

 SUPPORT DATA:
   B05, Guide, Support Id= B06  1, Connected to F05, Tag No.= INT, Comp.Wt = 0.000 lb, Stiffness= RIGID

 ---------------------------------------------------------------------------
 From B06 to B07, DZ= -10.00 ft                                             Run

 POINT DATA:
   B06, Coordinates, X= -0.07 ft, Y= -0.28 ft, Z= 24.99 ft

 SUPPORT DATA:
   B06, Guide, Support Id= B08  1, Connected to F11, Tag No.= INT, Comp.Wt = 0.000 lb, Stiffness= RIGID

 ---------------------------------------------------------------------------
 From B07 to B08, DZ= -10.00 ft                                             Run
```

```
-----------------------------------------------------------------------------------------------------------
LERF_FRP_3m
04/24/2020                                                    BENTLEY
12:36 PM                                                      AutoPIPE Advanced 11.01.00.24  MODEL  PAGE   5
-----------------------------------------------------------------------------------------------------------

                 C O M P O N E N T   D A T A   L I S T I N G

 OPERATING DATA:
   T1= 120.00 deg F, T2= 32.00 deg F, Exp1= 0.68400 in/100ft, Exp2= -0.54700 in/100ft, E1= 1.63000 E6 psi,
   E2= 1.86000 E6 psi

 POINT DATA:
   B07, Coordinates, X= -0.07 ft, Y= -0.28 ft, Z= 14.99 ft

 SUPPORT DATA:
   B07, Guide, Support Id= B07  2, Connected to F10, Tag No.= INT, Comp.Wt = 0.000 lb, Stiffness= RIGID

 ---------------------------------------------------------------------------
 From B08 to B09, DZ= -4.66 ft                                        Run

 POINT DATA:
   B08, Coordinates, X= -0.07 ft, Y= -0.28 ft, Z= 4.99 ft

 SUPPORT DATA:
   B08, Guide, Support Id= B03  1, Connected to F03, Tag No.= INT, Comp.Wt = 0.000 lb, Stiffness= RIGID

 ---------------------------------------------------------------------------
 From B09 to A06, DZ= -0.34 ft                                        Run

 PIPE DATA:
   Pipe Id= FITT3, Material= NS, OD= 3.710 inch, Wall Thk= 0.295 inch, Mill= 0.037 inch,
   Pipe Density= 115.80 lb/cu.ft, Pipe Unit Wgt= 2.55 lb/ft, Content Sp Gr= 1.500, Content Unit Wgt= 4.97 lb/ft,
   Insul Density= 6.00 lb/cu.ft, Insul Unit Wgt= 1.49 lb/ft, Syc= 0.0 psi

 POINT DATA:
   B09, Coordinates, X= -0.07 ft, Y= -0.28 ft, Z= 0.33 ft
   A06, Coordinates, X= -0.07 ft, Y= -0.28 ft, Z= -0.01 ft

 SUPPORT DATA:
   B09, Guide, Support Id= B07  1, Connected to F01, Tag No.= INT, Comp.Wt = 0.000 lb, Stiffness= RIGID

 ---------------------------------------------------------------------------
 ---------------------------------------------------------------------------
 *** SEGMENT C

 ---------------------------------------------------------------------------
 From C00 to C01, DX= 10.00 ft                                        Run

 PIPE DATA:
   Pipe Id= 4CON40, Material= NS, Nom Size= 4 in, OD= 4.440 inch, Wall Thk= 0.160 inch, Mill= 0.020 inch,
   Pipe Density= 115.80 lb/cu.ft, Pipe Unit Wgt= 1.73 lb/ft, Content Sp Gr= 1.500, Content Unit Wgt= 8.67 lb/ft,
   Insul Density= 6.00 lb/cu.ft, Insul Unit Wgt= 1.69 lb/ft, Syc= 0.0 psi

 POINT DATA:
   C00, Coordinates, X= -47.00 ft, Y= 6.00 ft, Z= 3.10 ft

 SUPPORT DATA:
   C00, Anchor, KTX= Rigid, KTY= Rigid, KTZ= Rigid, KRX= Rigid, KRY= Rigid, KRZ= Rigid

 ---------------------------------------------------------------------------
 From C01 to C02, DX= 10.00 ft                                        Run
```

CALCULATION SHEET

Project No. S54413.024	**Calculation No.** S54413.024-M-001	**Rev.** 0	**Page No.** 76 of 192
Title: LERF Basin 41 Buried Piping Analysis			
Prepared By: JD Williams	**Date:** 5/13/20	**Checked By:** JS Huisingh	**Date:** 5/13/20

```
-----------------------------------------------------------------------------------------------------------------
LERF_FRP_3m
04/24/2020                                                          BENTLEY
12:36 PM                                                            AutoPIPE Advanced 11.01.00.24  MODEL  PAGE   6
-----------------------------------------------------------------------------------------------------------------

                 C O M P O N E N T   D A T A   L I S T I N G

 POINT DATA:
   C01, Coordinates, X= -37.00 ft, Y= 6.00 ft, Z= 3.10 ft

 SUPPORT DATA:
   C01, Guide, Support Id= C03  1, Connected to G01, Tag No.= INT, Comp.Wt = 0.000 lb, Stiffness= RIGID

 ---------------------------------------------------------------------------
 From C02 to C03, DX= 10.00 ft                                        Run

 POINT DATA:
   C02, Coordinates, X= -27.00 ft, Y= 6.00 ft, Z= 3.10 ft

 SUPPORT DATA:
   C02, Guide, Support Id= C04  1, Connected to G02, Tag No.= INT, Comp.Wt = 0.000 lb, Stiffness= RIGID

 ---------------------------------------------------------------------------
 From C03 to C04, DX= 10.00 ft                                        Run

 POINT DATA:
   C03, Coordinates, X= -17.00 ft, Y= 6.00 ft, Z= 3.10 ft

 SUPPORT DATA:
   C03, Guide, Support Id= C05  1, Connected to G03, Tag No.= INT, Comp.Wt = 0.000 lb, Stiffness= RIGID

 ---------------------------------------------------------------------------
 From C04 to C05, DX= 4.66 ft                                         Run

 POINT DATA:
   C04, Coordinates, X= -7.00 ft, Y= 6.00 ft, Z= 3.10 ft

 SUPPORT DATA:
   C04, Guide, Support Id= C06  1, Connected to G04, Tag No.= INT, Comp.Wt = 0.000 lb, Stiffness= RIGID

 ---------------------------------------------------------------------------
 From C05 to C06, DX= 0.34 ft                                         Run

 PIPE DATA:
   Pipe Id= FITT4, Material= NS, OD= 4.710 inch, Wall Thk= 0.295 inch, Mill= 0.037 inch,
   Pipe Density= 115.80 lb/cu.ft, Pipe Unit Wgt= 3.29 lb/ft, Content Sp Gr= 1.500, Content Unit Wgt= 8.67 lb/ft,
   Insul Density= 6.00 lb/cu.ft, Insul Unit Wgt= 1.76 lb/ft, Syc= 0.0 psi

 POINT DATA:
   C05, Coordinates, X= -2.34 ft, Y= 6.00 ft, Z= 3.10 ft

 SUPPORT DATA:
   C05, Guide, Support Id= C13  1, Connected to G06, Tag No.= INT, Comp.Wt = 0.000 lb, Stiffness= RIGID

 ---------------------------------------------------------------------------
 From C06 to C07, DX= 0.34 ft                                         Tee

 COMPONENT DATA (Tee Header, Center= C06):
   Reinforced tee, SIFI= 1.74, SIFO= 1.74, Pad thick= 0.00 inch

 POINT DATA:
   C06, Coordinates, X= -2.00 ft, Y= 6.00 ft, Z= 3.10 ft
```

CALCULATION SHEET

Project No. S54413.024	**Calculation No.** S54413.024-M-001	**Rev.** 0	**Page No.** 77 of 192
Title: LERF Basin 41 Buried Piping Analysis			
Prepared By: JD Williams	**Date:** 5/13/20	**Checked By:** JS Huisingh	**Date:** 5/13/20

```
-----------------------------------------------------------------------------------------------------------
LERF_FRP_3m
04/24/2020                                                    BENTLEY
12:36 PM                                                      AutoPIPE Advanced 11.01.00.24  MODEL  PAGE   7
-----------------------------------------------------------------------------------------------------------

                 C O M P O N E N T   D A T A   L I S T I N G

 ---------------------------------------------------------------------------
 From C07 to C08, DX= 4.66 ft                                        Run

 PIPE DATA:
   Pipe Id= 4CON40, Material= NS, OD= 4.440 inch, Wall Thk= 0.160 inch, Mill= 0.020 inch,
   Pipe Density= 115.80 lb/cu.ft, Pipe Unit Wgt= 1.73 lb/ft, Content Sp Gr= 1.500, Content Unit Wgt= 8.67 lb/ft,
   Insul Density= 6.00 lb/cu.ft, Insul Unit Wgt= 1.69 lb/ft, Syc= 0.0 psi

 POINT DATA:
   C07, Coordinates, X= -1.66 ft, Y= 6.00 ft, Z= 3.10 ft

 SUPPORT DATA:
   C07, Guide, Support Id= C12  1, Connected to G08, Tag No.= INT, Comp.Wt = 0.000 lb, Stiffness= RIGID

 ---------------------------------------------------------------------------
 From C08 to C09, DX= 10.00 ft                                       Run

 POINT DATA:
   C08, Coordinates, X= 3.00 ft, Y= 6.00 ft, Z= 3.10 ft

 SUPPORT DATA:
   C08, Guide, Support Id= C07  1, Connected to G10, Tag No.= INT, Comp.Wt = 0.000 lb, Stiffness= RIGID

 ---------------------------------------------------------------------------
 From C09 to C10, DX= 10.00 ft                                       Run

 POINT DATA:
   C09, Coordinates, X= 13.00 ft, Y= 6.00 ft, Z= 3.10 ft

 SUPPORT DATA:
   C09, Guide, Support Id= C08  1, Connected to G11, Tag No.= INT, Comp.Wt = 0.000 lb, Stiffness= RIGID

 ---------------------------------------------------------------------------
 From C10 to C11, DX= 10.00 ft                                       Run

 POINT DATA:
   C10, Coordinates, X= 23.00 ft, Y= 6.00 ft, Z= 3.10 ft

 SUPPORT DATA:
   C10, Guide, Support Id= C09  1, Connected to G12, Tag No.= INT, Comp.Wt = 0.000 lb, Stiffness= RIGID

 ---------------------------------------------------------------------------
 From C11 to C12, DX= 10.00 ft                                       Run

 POINT DATA:
   C11, Coordinates, X= 33.00 ft, Y= 6.00 ft, Z= 3.10 ft
   C12, Coordinates, X= 43.00 ft, Y= 6.00 ft, Z= 3.10 ft

 SUPPORT DATA:
   C11, Guide, Support Id= C10  1, Connected to G13, Tag No.= INT, Comp.Wt = 0.000 lb, Stiffness= RIGID
   C12, Anchor, KTX= Rigid, KTY= Rigid, KTZ= Rigid, KRX= Rigid, KRY= Rigid, KRZ= Rigid

 ---------------------------------------------------------------------------
 ---------------------------------------------------------------------------
 *** SEGMENT D
```

CALCULATION SHEET

Project No. S54413.024	**Calculation No.** S54413.024-M-001	**Rev.** 0	**Page No.** 78 of 192
Title: LERF Basin 41 Buried Piping Analysis			
Prepared By: JD Williams	**Date:** 5/13/20	**Checked By:** JS Huisingh	**Date:** 5/13/20

```
-----------------------------------------------------------------------------------------------------------
LERF_FRP_3m
04/24/2020                                                    BENTLEY
12:36 PM                                                      AutoPIPE Advanced 11.01.00.24  MODEL  PAGE   8
-----------------------------------------------------------------------------------------------------------

                 C O M P O N E N T   D A T A   L I S T I N G

 ---------------------------------------------------------------------------
 From D00 to D01, DX= -0.84 ft, DZ= -0.84 ft, L= 1.19 ft                Junc

 PIPE DATA:
   Pipe Id= 4CON40, Material= NS, Pipe Density= 115.80 lb/cu.ft, Pipe Unit Wgt= 1.73 lb/ft,
   Content Sp Gr= 1.500, Content Unit Wgt= 8.67 lb/ft

 OPERATING DATA:
   T1= 150.00 deg F, T2= -25.00 deg F, Exp1= 1.02600 in/100ft, Exp2= -1.19700 in/100ft, E1= 1.56000 E6 psi,
   E2= 2.01000 E6 psi

 POINT DATA:
   D00, Coordinates, X= 6.01 ft, Y= -0.28 ft, Z= 41.63 ft

 ---------------------------------------------------------------------------
 From D01 to D02, DX= -3.40 ft, DZ= -3.40 ft, L= 4.81 ft                Run

 POINT DATA:
   D01, Coordinates, X= 5.17 ft, Y= -0.28 ft, Z= 40.79 ft

 ---------------------------------------------------------------------------
 From D02 to D03, DX= -3.50 ft, DZ= -3.50 ft, L= 4.95 ft                Run

 POINT DATA:
   D02, Coordinates, X= 1.77 ft, Y= -0.28 ft, Z= 37.39 ft

 SUPPORT DATA:
   D02, Guide, Support Id= D13  1, Connected to H02, Tag No.= INT, Comp.Wt = 0.000 lb, Stiffness= RIGID

 ---------------------------------------------------------------------------
 From D03 to D04, DX= -0.27 ft, DZ= -0.27 ft, L= 0.38 ft                Run

 PIPE DATA:
   Pipe Id= FITT4, Material= NS, OD= 4.710 inch, Wall Thk= 0.295 inch, Mill= 0.037 inch,
   Pipe Density= 115.80 lb/cu.ft, Pipe Unit Wgt= 3.29 lb/ft, Content Sp Gr= 1.500, Content Unit Wgt= 8.67 lb/ft,
   Insul Density= 6.00 lb/cu.ft, Insul Unit Wgt= 1.76 lb/ft, Syc= 0.0 psi

 POINT DATA:
   D03, Coordinates, X= -1.73 ft, Y= -0.28 ft, Z= 33.89 ft

 SUPPORT DATA:
   D03, Guide, Support Id= D05  1, Connected to H04, Tag No.= INT, Comp.Wt = 0.000 lb, Stiffness= RIGID

 ---------------------------------------------------------------------------
 From D04 to D05, DZ= -0.38 ft                                          Bend

 COMPONENT DATA (Bend, TIP= D04, Near= D04 N, Mid= D04 M, Far= D04 F):
    , Radius= 4.53 inch, Bend angle= 45.00 deg, Mid point at 50.00 percent, End flanges= 0, Flex= Auto,
   SIFI Circ= 2.50, SIFO Circ= 2.50, SIFI Long= 1.64, SIFO Long= 1.21

 POINT DATA:
   D04, Coordinates, X= -2.00 ft, Y= -0.28 ft, Z= 33.62 ft
   D04 N, Coordinates, X= -1.89 ft, Y= -0.28 ft, Z= 33.73 ft
   D04 M, Coordinates, X= -1.97 ft, Y= -0.28 ft, Z= 33.61 ft
   D04 F, Coordinates, X= -2.00 ft, Y= -0.28 ft, Z= 33.47 ft
```

```
-----------------------------------------------------------------------------------------------------------
LERF_FRP_3m
04/24/2020                                                    BENTLEY
12:36 PM                                                      AutoPIPE Advanced 11.01.00.24  MODEL  PAGE   9
-----------------------------------------------------------------------------------------------------------

                 C O M P O N E N T   D A T A   L I S T I N G

 ---------------------------------------------------------------------------
 From D05 to D06, DZ= -6.94 ft                                        Run

 PIPE DATA:
   Pipe Id= 4CON40, Material= NS, OD= 4.440 inch, Wall Thk= 0.160 inch, Mill= 0.020 inch,
   Pipe Density= 115.80 lb/cu.ft, Pipe Unit Wgt= 1.73 lb/ft, Content Sp Gr= 1.500, Content Unit Wgt= 8.67 lb/ft,
   Insul Density= 6.00 lb/cu.ft, Insul Unit Wgt= 1.69 lb/ft, Syc= 0.0 psi

 POINT DATA:
   D05, Coordinates, X= -2.00 ft, Y= -0.28 ft, Z= 33.24 ft

 SUPPORT DATA:
   D05, Guide, Support Id= D06  1, Connected to H06, Tag No.= INT, Comp.Wt = 0.000 lb, Stiffness= RIGID

 ---------------------------------------------------------------------------
 From D06 to D07, DZ= -10.00 ft                                       Run

 POINT DATA:
   D06, Coordinates, X= -2.00 ft, Y= -0.28 ft, Z= 26.30 ft

 SUPPORT DATA:
   D06, Guide, Support Id= D10  2, Connected to H09, Tag No.= INT, Comp.Wt = 0.000 lb, Stiffness= RIGID

 ---------------------------------------------------------------------------
 From D07 to D08, DZ= -6.53 ft                                        Run

 OPERATING DATA:
   T1= 120.00 deg F, T2= 32.00 deg F, Exp1= 0.68400 in/100ft, Exp2= -0.54700 in/100ft, E1= 1.63000 E6 psi,
   E2= 1.86000 E6 psi

 POINT DATA:
   D07, Coordinates, X= -2.00 ft, Y= -0.28 ft, Z= 16.30 ft

 SUPPORT DATA:
   D07, Guide, Support Id= D09  2, Connected to H10, Tag No.= INT, Comp.Wt = 0.000 lb, Stiffness= RIGID

 ---------------------------------------------------------------------------
 From D08 to D09, DZ= -0.38 ft                                        Run

 PIPE DATA:
   Pipe Id= FITT4, Material= NS, OD= 4.710 inch, Wall Thk= 0.295 inch, Mill= 0.037 inch,
   Pipe Density= 115.80 lb/cu.ft, Pipe Unit Wgt= 3.29 lb/ft, Content Sp Gr= 1.500, Content Unit Wgt= 8.67 lb/ft,
   Insul Density= 6.00 lb/cu.ft, Insul Unit Wgt= 1.76 lb/ft, Syc= 0.0 psi

 POINT DATA:
   D08, Coordinates, X= -2.00 ft, Y= -0.28 ft, Z= 9.76 ft

 SUPPORT DATA:
   D08, Guide, Support Id= D09  1, Connected to H12, Tag No.= INT, Comp.Wt = 0.000 lb, Stiffness= RIGID

 ---------------------------------------------------------------------------
 From D09 to D10, DY= 0.27 ft, DZ= -0.27 ft, L= 0.38 ft               Bend

 COMPONENT DATA (Bend, TIP= D09, Near= D09 N, Mid= D09 M, Far= D09 F):
    , Radius= 4.53 inch, Bend angle= 45.00 deg, Mid point at 50.00 percent, End flanges= 0, Flex= Auto,
```

BREAK IN DATA

CALCULATION SHEET

Project No. S54413.024	**Calculation No.** S54413.024-M-001	**Rev.** 0	**Page No.** 80 of 192
Title: LERF Basin 41 Buried Piping Analysis			
Prepared By: JD Williams	**Date:** 5/13/20	**Checked By:** JS Huisingh	**Date:** 5/13/20

```
-----------------------------------------------------------------------------------------------------------------
LERF_FRP_3m
04/24/2020                                                                BENTLEY
12:36 PM                                                                  AutoPIPE Advanced 11.01.00.24  MODEL  PAGE  86
-----------------------------------------------------------------------------------------------------------------

                C O M P O N E N T   D A T A   L I S T I N G

 ---------------------------------------------------------------------------
 From AD08 to AD09, DX= 0.35 ft, DZ= 0.35 ft, L= 0.49 ft                    Flex

 COMPONENT DATA (Flex Jt):
   Length= 0.49 ft, Weight= 0 lb, Area= 0.0 sq.in, Kax= 300.0 lb/in, Kylat= 300.0 lb/in, Kzlat= 300.0 lb/in,
   Ktor= 300.0 ft-lb/deg, Kybend= 300.0 ft-lb/deg, Kzbend= 300.0 ft-lb/deg

 POINT DATA:
   AD08, Coordinates, X= 368.59 ft, Y= -1.53 ft, Z= 65.03 ft
   AD09, Coordinates, X= 368.94 ft, Y= -1.53 ft, Z= 65.38 ft

 SUPPORT DATA:
   AD09, Anchor, KTX= Rigid, KTY= Rigid, KTZ= Rigid, KRX= Rigid, KRY= Rigid, KRZ= Rigid

 ---------------------------------------------------------------------------


 Number of points in the system (Pipe + Frame + Soil): 577 + 118 + 848 = 1543


 Weight of Empty Pipes + Weight of Contents = Total Weight of System
        11794.9 lb     +     45249.0 lb     =       57043.9 lb
```

CALCULATION SHEET

Project No. S54413.024	**Calculation No.** S54413.024-M-001	**Rev.** 0	**Page No.** 81 of 192
Title: LERF Basin 41 Buried Piping Analysis			
Prepared By: JD Williams	**Date:** 5/13/20	**Checked By:** JS Huisingh	**Date:** 5/13/20

```
-----------------------------------------------------------------------------------------------------------
LERF_FRP_3m
04/24/2020                                                    BENTLEY
12:36 PM                                                      AutoPIPE Advanced 11.01.00.24  MODEL  PAGE  87
-----------------------------------------------------------------------------------------------------------
```

C O O R D I N A T E S D A T A L I S T I N G

POINT NAME	COORDINATE (ft) X	Y	Z
*** SEGMENT A			
A00	-45.07	-0.28	-0.01
A01	-35.07	-0.28	-0.01
A02	-25.07	-0.28	-0.01
A03	-15.07	-0.28	-0.01
A04	-5.07	-0.28	-0.01
A05	-0.41	-0.28	-0.01
A06	-0.07	-0.28	-0.01
A07	0.27	-0.28	-0.01
A08	4.93	-0.28	-0.01
A09	14.93	-0.28	-0.01
A10	24.93	-0.28	-0.01
A11	34.93	-0.28	-0.01
A12	44.93	-0.28	-0.01
*** SEGMENT B			
Q13	7.88	-0.28	39.56
B01	7.55	-0.28	39.23
B02	3.77	-0.28	35.44
B03	0.14	-0.28	31.81
B04 N	0.03	-0.28	31.70
B04	-0.07	-0.28	31.60
B04 M	-0.04	-0.28	31.59
B04 F	-0.07	-0.28	31.47
B05	-0.07	-0.28	31.30
B06	-0.07	-0.28	24.99
B07	-0.07	-0.28	14.99
B08	-0.07	-0.28	4.99
B09	-0.07	-0.28	0.33
A06	-0.07	-0.28	-0.01
*** SEGMENT C			
C00	-47.00	6.00	3.10
C01	-37.00	6.00	3.10
C02	-27.00	6.00	3.10
C03	-17.00	6.00	3.10
C04	-7.00	6.00	3.10
C05	-2.34	6.00	3.10
C06	-2.00	6.00	3.10
C07	-1.66	6.00	3.10
C08	3.00	6.00	3.10
C09	13.00	6.00	3.10
C10	23.00	6.00	3.10
C11	33.00	6.00	3.10
C12	43.00	6.00	3.10
*** SEGMENT D			
D00	6.01	-0.28	41.63
D01	5.17	-0.28	40.79
D02	1.77	-0.28	37.39
D03	-1.73	-0.28	33.89
D04 N	-1.89	-0.28	33.73

CALCULATION SHEET

Project No. S54413.024	**Calculation No.** S54413.024-M-001	**Rev.** 0	**Page No.** 82 of 192
Title: LERF Basin 41 Buried Piping Analysis			
Prepared By: JD Williams	**Date:** 5/13/20	**Checked By:** JS Huisingh	**Date:** 5/13/20

```
-----------------------------------------------------------------------------------------------------------
LERF_FRP_3m
04/24/2020                                                          BENTLEY
12:36 PM                                                            AutoPIPE Advanced 11.01.00.24  MODEL  PAGE  88
-----------------------------------------------------------------------------------------------------------
```

C O O R D I N A T E S D A T A L I S T I N G

POINT NAME	COORDINATE (ft) X	Y	Z
D04	-2.00	-0.28	33.62
D04 M	-1.97	-0.28	33.61
D04 F	-2.00	-0.28	33.47
D05	-2.00	-0.28	33.24
D06	-2.00	-0.28	26.30
D07	-2.00	-0.28	16.30
D08	-2.00	-0.28	9.76
D09 N	-2.00	-0.28	9.54
D09	-2.00	-0.28	9.38
D09 M	-2.00	-0.25	9.40
D09 F	-2.00	-0.17	9.27
D10	-2.00	-0.01	9.11
D11	-2.00	5.76	3.34
C06	-2.00	6.00	3.10
*** SEGMENT E			
E00	-45.07	-0.28	-0.01
E01	-35.07	-0.28	-0.01
E02	-25.07	-0.28	-0.01
E03	-15.07	-0.28	-0.01
E04	-5.07	-0.28	-0.01
E05	-0.69	-0.28	-0.01
E06	-0.41	-0.28	-0.01
E07	-0.07	-0.28	-0.01
E08	0.27	-0.28	-0.01
E09	0.55	-0.28	-0.01
E10	4.93	-0.28	-0.01
E11	14.93	-0.28	-0.01
E12	24.93	-0.28	-0.01
E13	34.93	-0.28	-0.01
E14	44.93	-0.28	-0.01
*** SEGMENT F			
E07	-0.07	-0.28	-0.01
F01	-0.07	-0.28	0.33
F02	-0.07	-0.28	0.61
F03	-0.07	-0.28	4.99
F10	-0.07	-0.28	14.99
F11	-0.07	-0.28	24.99
F13	-0.07	-0.28	30.14
F04	-0.07	-0.28	31.14
F05	-0.07	-0.28	31.30
F06 N	-0.07	-0.28	31.40
F06	-0.07	-0.28	31.60
F06 M	-0.03	-0.28	31.59
F06 F	0.08	-0.28	31.75
F07	0.14	-0.28	31.81
F08	0.25	-0.28	31.92
F14	3.77	-0.28	35.44
F12	5.73	-0.28	37.40
F09	7.49	-0.28	39.17

CALCULATION SHEET

Project No. S54413.024	**Calculation No.** S54413.024-M-001	**Rev.** 0	**Page No.** 83 of 192
Title: LERF Basin 41 Buried Piping Analysis			
Prepared By: JD Williams	**Date:** 5/13/20	**Checked By:** JS Huisingh	**Date:** 5/13/20

```
-----------------------------------------------------------------------------------------------------------
LERF_FRP_3m
04/24/2020                                                          BENTLEY
12:36 PM                                                            AutoPIPE Advanced 11.01.00.24  MODEL  PAGE  89
-----------------------------------------------------------------------------------------------------------
```

C O O R D I N A T E S D A T A L I S T I N G

POINT NAME	COORDINATE (ft) X	Y	Z
*** SEGMENT G			
G00	-47.00	6.00	3.10
G01	-37.00	6.00	3.10
G02	-27.00	6.00	3.10
G03	-17.00	6.00	3.10
G04	-7.00	6.00	3.10
G05	-2.62	6.00	3.10
G06	-2.34	6.00	3.10
G07	-2.00	6.00	3.10
G08	-1.66	6.00	3.10
G09	-1.38	6.00	3.10
G10	3.00	6.00	3.10
G11	13.00	6.00	3.10
G12	23.00	6.00	3.10
G13	33.00	6.00	3.10
G14	43.00	6.00	3.10
*** SEGMENT H			
H00	5.16	-0.28	40.77
H01	3.79	-0.28	39.41
H02	1.77	-0.28	37.38
H03	-1.62	-0.28	33.99
H04	-1.73	-0.28	33.88
H05 N	-1.81	-0.28	33.80
H05	-2.00	-0.28	33.61
H05 M	-1.95	-0.28	33.59
H05 F	-2.00	-0.28	33.35
H06	-2.00	-0.28	33.23
H07	-2.00	-0.28	33.07
H08	-2.00	-0.28	32.07
H09	-2.00	-0.28	26.30
H10	-2.00	-0.28	16.30
H11	-2.00	-0.28	9.92
H12	-2.00	-0.28	9.76
H13 N	-2.00	-0.28	9.65
H13	-2.00	-0.28	9.38
H13 M	-2.00	-0.23	9.41
H13 F	-2.00	-0.09	9.20
H14	-2.00	-0.01	9.11
H15	-2.00	0.10	9.00
H16	-2.00	5.56	3.54
H17	-2.00	5.76	3.34
G07	-2.00	6.00	3.10
*** SEGMENT P			
P00	34.17	-0.75	69.79
P01 N	32.93	-0.29	68.55
P01	32.90	-0.28	68.52
P01 F	32.87	-0.28	68.49
P03	32.32	-0.28	67.94
P04	31.69	-0.28	67.31
P05	30.75	-0.28	66.38

CALCULATION SHEET

Project No. S54413.024	**Calculation No.** S54413.024-M-001	**Rev.** 0	**Page No.** 84 of 192
Title: LERF Basin 41 Buried Piping Analysis			
Prepared By: JD Williams	**Date:** 5/13/20	**Checked By:** JS Huisingh	**Date:** 5/13/20

```
LERF_FRP_3m
04/24/2020                                                    BENTLEY
12:36 PM                                                      AutoPIPE Advanced 11.01.00.24  MODEL  PAGE  90
```

C O O R D I N A T E S D A T A L I S T I N G

POINT NAME	X (ft)	Y (ft)	Z (ft)
P06	27.45	-0.28	63.08
P07	17.81	-0.28	53.43
P08	7.90	-0.28	43.52
P09	7.63	-0.28	43.25
P10	7.05	-0.28	42.67
P11	6.57	-0.28	42.19
P11 M	6.31	-0.28	41.93
P12	6.04	-0.28	41.66
D00	6.01	-0.28	41.63
*** SEGMENT Q			
Q00	36.05	-0.74	67.72
Q01 N	34.84	-0.29	66.51
Q01	34.82	-0.28	66.49
Q01 F	34.79	-0.28	66.47
Q03	34.26	-0.28	65.94
Q04	33.73	-0.28	65.41
Q05	33.09	-0.28	64.77
Q06	30.62	-0.28	62.29
Q07	20.31	-0.28	51.98
Q08	9.67	-0.28	41.35
Q09	9.42	-0.28	41.09
Q10	8.95	-0.28	40.62
Q11	8.39	-0.28	40.06
Q11 M	8.15	-0.28	39.82
Q12	7.91	-0.28	39.59
Q13	7.88	-0.28	39.56
*** SEGMENT R			
R00	38.94	-1.02	65.05
R01 N	37.00	-0.29	63.10
R01	36.97	-0.28	63.07
R01 F	36.93	-0.28	63.04
R03	36.39	-0.28	62.49
R04	35.76	-0.28	61.86
R05	34.82	-0.28	60.92
R06	31.52	-0.28	57.62
R07	22.56	-0.28	48.67
R08	16.02	-0.28	42.12
R08 M	15.75	-0.28	41.86
R10	15.49	-0.28	41.59
R11	13.01	-0.28	39.12
R12	12.74	-0.28	38.85
R13	12.13	-0.28	38.23
R14	11.68	-0.28	37.79
R14 M	11.47	-0.28	37.58
R15	11.26	-0.28	37.37
R16	11.26	-0.28	37.36
R17	11.25	-0.28	37.36
R17 M	11.01	-0.28	37.11
R18	10.77	-0.28	

BREAK IN DATA

CALCULATION SHEET

Project No. S54413.024	**Calculation No.** S54413.024-M-001	**Rev.** 0	**Page No.** 85 of 192
Title: LERF Basin 41 Buried Piping Analysis			
Prepared By: JD Williams	**Date:** 5/13/20	**Checked By:** JS Huisingh	**Date:** 5/13/20

```
LERF_FRP_3m
04/24/2020                                                    BENTLEY
12:36 PM                                                      AutoPIPE Advanced 11.01.00.24  MODEL  PAGE 100
-------------------------------------------------------------------------------------------------------------

                    P I P E   D A T A   L I S T I N G

 Pipe ID/     Nom/ I.D.  -----Thickness(inch)----- Spec  InsuDen/   Weight(lb/ft )    ZL/ Composition/
 Material     Sch  inch  W.Th. Corr Mill Insu Ling Grav/ LingDen/  Pipe/ Ling/ Total  ZC
 CladMaterial            Clad                      InsMt CladDen   Cont  Insu/
 ---Line Class---                                        lb/cu.ft        Clad
 ------------ ---- ----- ----- ---- ---- ---- ---- ----- --------  ----- ----- ----- ---- --------------------

 Tag No. : <None>
 3CON40      3.000 3.120 0.135    0      2.00    0  1.50    6.000   1.11     0  7.49 1.00
 NS           NS                                   Other    0.000   4.97  1.41       1.00
                             0                              0.000            0


 Tag No. : <None>
 4CON40          4  4.120 0.160    0      2.00    0  1.50    6.000   1.73     0 12.08 1.00
 NS           NS                                   Other    0.000   8.67  1.69       1.00
                             0                              0.000            0


 Tag No. : <None>
 6CON30          6  6.120 0.110    0      2.00    0  1.50    6.000   1.73     0 23.04 1.00
 NS           NS                                   Other    0.000  19.12  2.18       1.00
                             0                              0.000            0


 Tag No. : <None>
 8CON30          8  8.120 0.110    0      2.00    0  1.50    6.000   2.29     0 38.65 1.00
 NS           NS                                   Other    0.000  33.66  2.71       1.00
                             0                              0.000            0


 Tag No. : <None>
 FITT3       3.000 3.120 0.295    0      2.00    0  1.50    6.000   2.55     0  9.01 1.00
 NS           NS                                   Other    0.000   4.97  1.49       1.00
                             0                              0.000            0


 Tag No. : <None>
 FITT6           6  6.120 0.410    0      2.00    0  1.50    6.000   6.76     0 28.23 1.00
 NS           NS                                   Other    0.000  19.12  2.34       1.00
                             0                              0.000            0


 Tag No. : <None>
 FITT8           8  8.120 0.410    0      2.00    0  1.50    6.000   8.84     0 45.36 1.00
 NS           NS                                   Other    0.000  33.66  2.86       1.00
                             0                              0.000            0
```

CALCULATION SHEET

Project No. S54413.024	**Calculation No.** S54413.024-M-001	**Rev.** 0	**Page No.** 86 of 192
Title: LERF Basin 41 Buried Piping Analysis			
Prepared By: JD Williams	**Date:** 5/13/20	**Checked By:** JS Huisingh	**Date:** 5/13/20

```
-----------------------------------------------------------------------------------------------------------------
LERF_FRP_3m
04/24/2020                                                          BENTLEY
12:36 PM                                                            AutoPIPE Advanced 11.01.00.24  MODEL  PAGE 101
-----------------------------------------------------------------------------------------------------------------

                    P I P E   D A T A   L I S T I N G

 Pipe ID/     Nom/ I.D.  -----Thickness(inch)----- Spec  InsuDen/   Weight(lb/ft )    ZL/ Composition/
 Material     Sch  inch  W.Th. Corr Mill Insu Ling Grav/ LingDen/  Pipe/ Ling/ Total  ZC
 CladMaterial            Clad                        InsMt CladDen   Cont  Insu/
 ---Line Class---                                        lb/cu.ft        Clad
 ------------ ---- ----- ----- ---- ---- ---- ---- ----- --------  ----- ----- ----- ---- --------------------
 Tag No. : <None>
 FITT4          4  4.120 0.295    0      2.00    0  1.50    6.000   3.29     0 13.71 1.00
 NS           NS                                   Other    0.000   8.67  1.76       1.00
                             0                              0.000            0


 Tag No. : <None>
 3INSCH40     3.000 3.068 0.208 0.01      1.00    0  1.50    3.500   7.75     0 12.90 1.00
 NS           NS                                   Other    0.000   4.81  0.34       1.00
                             0                              0.000            0


 Tag No. : <None>
 4INSCH40       4  4.026 0.229 0.01      1.00    0  1.50    3.500  11.04     0 19.74 1.00
 NS           NS                                   Other    0.000   8.27  0.42       1.00
                             0                              0.000            0


 Tag No. : <None>
 8INSCH40       8  7.981 0.322 0.01      1.00    0  1.50    3.500  29.98     0 63.23 1.00
 NS           NS                                   Other    0.000  32.52  0.74       1.00
                             0                              0.000            0


 Tag No. : <None>
 12BOND        12 12.450 0.179    0      2.00    0  1.50    6.000   5.71     0 88.72 1.00
 NS           NS                                   Other    0.000  79.13  3.88       1.00
                             0                              0.000            0
```

CALCULATION SHEET

Project No. S54413.024	**Calculation No.** S54413.024-M-001	**Rev.** 0	**Page No.** 87 of 192
Title: LERF Basin 41 Buried Piping Analysis			
Prepared By: JD Williams	**Date:** 5/13/20	**Checked By:** JS Huisingh	**Date:** 5/13/20

```
-----------------------------------------------------------------------------------------------------------------
LERF_FRP_3m
04/24/2020                                                          BENTLEY
12:36 PM                                                            AutoPIPE Advanced 11.01.00.24  MODEL  PAGE 102
-----------------------------------------------------------------------------------------------------------------
```

M A T E R I A L D A T A L I S T I N G

Material Name	Pipe ID	Density lb/cu.ft	A2. fac	A3. fac	Temp. deg F	Expans. in/100ft	Long. Mod. E6 psi	Temp. A1-fac	K-fac	Poisson Ea/Eh*Vh/a
NS	3CON40	115.800	1.0	1.0	60.0	0.0	1.7500			0.23
					120.0	0.7	1.6300	1.00	0.85	0.23
					32.0	-0.5	1.8600	1.00	0.85	0.23
					150.0	1.0	1.5600	1.00	0.85	0.23
					-25.0	-1.2	2.0100	1.00	0.85	0.23
NS	FITT3	115.800	1.0	1.0	60.0	0.0	1.7500			0.23
					120.0	0.7	1.6300	1.00	0.85	0.23
					32.0	-0.5	1.8600	1.00	0.85	0.23
					150.0	1.0	1.5600	1.00	0.85	0.23
					-25.0	-1.2	2.0100	1.00	0.85	0.23
NS	4CON40	115.800	1.0	1.0	60.0	0.0	1.7500			0.23
					120.0	0.7	1.6300	1.00	0.85	0.23
					32.0	-0.5	1.8600	1.00	0.85	0.23
					150.0	1.0	1.5600	1.00	0.85	0.23
					-25.0	-1.2	2.0100	1.00	0.85	0.23
NS	FITT4	115.800	1.0	1.0	60.0	0.0	1.7500			0.23
					120.0	0.7	1.6300	1.00	0.85	0.23
					32.0	-0.5	1.8600	1.00	0.85	0.23
					150.0	1.0	1.5600	1.00	0.85	0.23
					-25.0	-1.2	2.0100	1.00	0.85	0.23
NS	6CON30	115.800	1.0	1.0	60.0	0.0	1.7500			0.23
					100.0	0.5	1.6900	1.00	0.85	0.23
					32.0	-0.5	1.8600	1.00	0.85	0.23
					150.0	1.0	1.5600	1.00	0.85	0.23
					-25.0	-1.2	2.0100	1.00	0.85	0.23
					120.0	0.7	1.6300	1.00	0.85	0.23
NS	FITT6	115.800	1.0	1.0	60.0	0.0	1.7500			0.23
					100.0	0.5	1.6900	1.00	0.85	0.23
					32.0	-0.5	1.8600	1.00	0.85	0.23
					150.0	1.0	1.5600	1.00	0.85	0.23
					-25.0	-1.2	2.0100	1.00	0.85	0.23
NS	8CON30	115.800	1.0	1.0	60.0	0.0	1.7500			0.23
					100.0	0.5	1.6900	1.00	0.85	0.23
					32.0	-0.5	1.8600	1.00	0.85	0.23
					150.0	1.0	1.5600	1.00	0.85	0.23
					-25.0	-1.2	2.0100	1.00	0.85	0.23
					120.0	0.7	1.6300	1.00	0.85	0.23
NS	FITT8	115.800	1.0	1.0	60.0	0.0	1.7500			0.23
					100.0	0.5	1.6900	1.00	0.85	0.23
					32.0	-0.5	1.8600	1.00	0.85	0.23
					150.0	1.0	1.5600	1.00	0.85	0.23
					-25.0	-1.2	2.0100	1.00	0.85	0.23
					120.0	0.7	1.6300	1.00	0.85	0.23

CALCULATION SHEET

Project No. S54413.024	**Calculation No.** S54413.024-M-001	**Rev.** 0	**Page No.** 88 of 192
Title: LERF Basin 41 Buried Piping Analysis			
Prepared By: JD Williams	**Date:** 5/13/20	**Checked By:** JS Huisingh	**Date:** 5/13/20

```
-----------------------------------------------------------------------------------------------------------------
LERF_FRP_3m
04/24/2020                                                          BENTLEY
12:36 PM                                                            AutoPIPE Advanced 11.01.00.24  MODEL  PAGE 103
-----------------------------------------------------------------------------------------------------------------
```

M A T E R I A L D A T A L I S T I N G

Material Name	Pipe ID	Density lb/cu.ft	A2. fac	A3. fac	Temp. deg F	Expans. in/100ft	Long. Mod. E6 psi	Temp. A1-fac	K-fac	Poisson Ea/Eh*Vh/a
NS	4INSCH40	501.000	1.0	1.0	60.0	0.0	28.3408			0.30
					150.0	1.0	27.8700	16.70	0.85	0.30
					-25.0	-1.1	28.6900	16.70	0.85	0.30
					120.0	0.6	28.0300	1.00	0.85	0.30
NS	3INSCH40	501.000	1.0	1.0	60.0	0.0	28.3408			0.30
					150.0	1.0	27.8700	16.70	0.85	0.30
					-25.0	-1.1	28.6900	16.70	0.85	0.30
					120.0	0.6	28.0300	1.00	0.85	0.30
NS	12BOND	115.800	1.0	1.0	60.0	0.0	1.7500			0.23
					150.0	1.0	1.5600	1.00	0.85	0.23
					-25.0	-1.2	2.0100	1.00	0.85	0.23
					120.0	0.7	1.6300	1.00	0.85	0.23

CALCULATION SHEET

Project No. S54413.024	**Calculation No.** S54413.024-M-001	**Rev.** 0	**Page No.** 89 of 192
Title: LERF Basin 41 Buried Piping Analysis			
Prepared By: JD Williams	**Date:** 5/13/20	**Checked By:** JS Huisingh	**Date:** 5/13/20

```
-----------------------------------------------------------------------------------------------------------------
LERF_FRP_3m
04/24/2020                                                                BENTLEY
12:36 PM                                                                  AutoPIPE Advanced 11.01.00.24  MODEL  PAGE 104
-----------------------------------------------------------------------------------------------------------------

        M A T E R I A L   A L L O W A B L E   D A T A   L I S T I N G

  Material            Temper.  al(0:1)  al(2:1)  hl(2:1)=Qs  al(1:1)  hl(1:1)
    Name     Pipe ID   deg F    psi      psi      psi         psi      psi
 ----------- -------- -------  -------  -------  ----------  -------  -------
 NS          3CON40      60.0   6454.0   7272.0     12571.0      0.0      0.0
                        120.0
                         32.0
                        150.0
                        -25.0

 NS          FITT3       60.0   6454.0   7272.0     12571.0      0.0      0.0
                        120.0
                         32.0
                        150.0
                        -25.0

 NS          4CON40      60.0   6454.0   7272.0     12571.0      0.0      0.0
                        120.0
                         32.0
                        150.0
                        -25.0

 NS          FITT4       60.0   6454.0   7272.0     12571.0      0.0      0.0
                        120.0
                         32.0
                        150.0
                        -25.0

 NS          6CON30      60.0   6454.0   7272.0     12571.0      0.0      0.0
                        100.0
                         32.0
                        150.0
                        -25.0
                        120.0

 NS          FITT6       60.0   6454.0   7272.0     12571.0      0.0      0.0
                        100.0
                         32.0
                        150.0
                        -25.0

 NS          8CON30      60.0   6454.0   7272.0     12571.0      0.0      0.0
                        100.0
                         32.0
                        150.0
                        -25.0
                        120.0

 NS          FITT8       60.0   6454.0   7272.0     12571.0      0.0      0.0
                        100.0
                         32.0
                        150.0
                        -25.0
                        120.0
```

CALCULATION SHEET

Project No. S54413.024	**Calculation No.** S54413.024-M-001	**Rev.** 0	**Page No.** 90 of 192
Title: LERF Basin 41 Buried Piping Analysis			
Prepared By: JD Williams	**Date:** 5/13/20	**Checked By:** JS Huisingh	**Date:** 5/13/20

```
-----------------------------------------------------------------------------------------------------------------
LERF_FRP_3m
04/24/2020                                                                BENTLEY
12:36 PM                                                                  AutoPIPE Advanced 11.01.00.24  MODEL  PAGE 105
-----------------------------------------------------------------------------------------------------------------

        M A T E R I A L   A L L O W A B L E   D A T A   L I S T I N G

  Material            Temper.  al(0:1)  al(2:1)  hl(2:1)=Qs  al(1:1)  hl(1:1)
    Name     Pipe ID   deg F    psi      psi      psi         psi      psi
 ----------- -------- -------  -------  -------  ----------  -------  -------
 NS          4INSCH40    60.0  16700.0  16700.0     16700.0      0.0      0.0
                        150.0
                        -25.0
                        120.0

 NS          3INSCH40    60.0  16700.0  16700.0     16700.0      0.0      0.0
                        150.0
                        -25.0
                        120.0

 NS          12BOND      60.0   6454.0   7272.0     12571.0      0.0      0.0
                        150.0
                        -25.0
                        120.0
```

```
-----------------------------------------------------------------------------------------------------------
LERF_FRP_3m
04/24/2020                                                          BENTLEY
12:36 PM                                                            AutoPIPE Advanced 11.01.00.24  MODEL  PAGE 106
-----------------------------------------------------------------------------------------------------------

        OPERATING TEMPERATURE AND PRESSURE DATA
                    STRESSES IN psi

 POINT       PRESS. TEMPER  EXPAN.      MODULUS                          HOT
 NAME  CASE  psi    deg F   in/100ft    E6 psi     A1-FAC     K-FAC     Va/h
 ----  ----  ------ ------  --------    -------    ------     -----     -----

 *** SEGMENT A
 A00   T1       150    120     0.684*     1.630*     1.00      0.85      0.23*
                               0.420p
       T2         0  32.00    -0.547*     1.860*     1.00      0.85      0.23*
                               0.000p
       T3       150    120     0.684*     1.630*     1.00      0.85      0.23*
                               0.420p
 A05   T1       150    120     0.684*     1.630*     1.00      0.85      0.23*
                               0.202p
       T2         0  32.00    -0.547*     1.860*     1.00      0.85      0.23*
                               0.000p
       T3       150    120     0.684*     1.630*     1.00      0.85      0.23*
                               0.202p
 A07   T1       150    120     0.684*     1.630*     1.00      0.85      0.23*
                               0.420p
       T2         0  32.00    -0.547*     1.860*     1.00      0.85      0.23*
                               0.000p
       T3       150    120     0.684*     1.630*     1.00      0.85      0.23*
                               0.420p
 A12    Same as previous point.

 *** SEGMENT B
 Q13   T1       150    150     1.026*     1.560*     1.00      0.85      0.23*
                               0.420p
       T2         0 -25.00    -1.197*     2.010*     1.00      0.85      0.23*
                               0.000p
       T3       150    120     0.684*     1.630*     1.00      0.85      0.23*
                               0.420p
 B03   T1       150    150     1.026*     1.560*     1.00      0.85      0.23*
                               0.202p
       T2         0 -25.00    -1.197*     2.010*     1.00      0.85      0.23*
                               0.000p
       T3       150    120     0.684*     1.630*     1.00      0.85      0.23*
                               0.202p
 B05   T1       150    150     1.026*     1.560*     1.00      0.85      0.23*
                               0.420p
       T2         0 -25.00    -1.197*     2.010*     1.00      0.85      0.23*
                               0.000p
       T3       150    120     0.684*     1.630*     1.00      0.85      0.23*
                               0.420p
 B07   T1       150    120     0.684*     1.630*     1.00      0.85      0.23*
                               0.420p
       T2         0  32.00    -0.547*     1.860*     1.00      0.85      0.23*
                               0.000p
       T3       150    120     0.684*     1.630*     1.00      0.85      0.23*
                               0.420p
 B09   T1       150    120     0.684*     1.630*     1.00      0.85      0.23*
                               0.202p
       T2         0  32.00    -0.547*     1.860*     1.00      0.85      0.23*
                               0.000p
       T3       150    120     0.684*     1.630*     1.00      0.85      0.23*
```

CALCULATION SHEET

Project No. S54413.024	**Calculation No.** S54413.024-M-001	**Rev.** 0	**Page No.** 92 of 192
Title: LERF Basin 41 Buried Piping Analysis			
Prepared By: JD Williams	**Date:** 5/13/20	**Checked By:** JS Huisingh	**Date:** 5/13/20

```
LERF_FRP_3m
04/24/2020                                                    BENTLEY
12:36 PM                                                      AutoPIPE Advanced 11.01.00.24  MODEL  PAGE 107

        OPERATING TEMPERATURE AND PRESSURE DATA
                    STRESSES IN psi

 POINT       PRESS. TEMPER  EXPAN.      MODULUS                          HOT
 NAME  CASE  psi    deg F   in/100ft    E6 psi     A1-FAC     K-FAC     Va/h
 ----  ----  ------ ------  --------    -------    ------     -----     -----
                                0.202p
 A06    Same as previous point.

 *** SEGMENT C
 C00   T1       150    120     0.684*     1.630*     1.00      0.85      0.23*
                                0.466p
       T2         0  32.00    -0.547*     1.860*     1.00      0.85      0.23*
                                0.000p
       T3       150    120     0.684*     1.630*     1.00      0.85      0.23*
                                0.466p
 C05   T1       150    120     0.684*     1.630*     1.00      0.85      0.23*
                                0.261p
       T2         0  32.00    -0.547*     1.860*     1.00      0.85      0.23*
                                0.000p
       T3       150    120     0.684*     1.630*     1.00      0.85      0.23*
                                0.261p
 C07   T1       150    120     0.684*     1.630*     1.00      0.85      0.23*
                                0.466p
       T2         0  32.00    -0.547*     1.860*     1.00      0.85      0.23*
                                0.000p
       T3       150    120     0.684*     1.630*     1.00      0.85      0.23*
                                0.466p
 C12    Same as previous point.

 *** SEGMENT D
 D00   T1       150    150     1.026*     1.560*     1.00      0.85      0.23*
                                0.466p
       T2         0 -25.00    -1.197*     2.010*     1.00      0.85      0.23*
                                0.000p
       T3       150    120     0.684*     1.630*     1.00      0.85      0.23*
                                0.466p
 D03   T1       150    150     1.026*     1.560*     1.00      0.85      0.23*
                                0.261p
       T2         0 -25.00    -1.197*     2.010*     1.00      0.85      0.23*
                                0.000p
       T3       150    120     0.684*     1.630*     1.00      0.85      0.23*
                                0.261p
 D05   T1       150    150     1.026*     1.560*     1.00      0.85      0.23*
                                0.466p
       T2         0 -25.00    -1.197*     2.010*     1.00      0.85      0.23*
                                0.000p
       T3       150    120     0.684*     1.630*     1.00      0.85      0.23*
                                0.466p
 D07   T1       150    120     0.684*     1.630*     1.00      0.85      0.23*
                                0.466p
       T2         0  32.00    -0.547*     1.860*     1.00      0.85      0.23*
                                0.000p
       T3       150    120     0.684*     1.630*     1.00      0.85      0.23*
                                0.466p
 D08   T1       150    120     0.684*     1.630*     1.00      0.85      0.23*
                                0.2
       T2         0  32.00    -0.5
                                0.000p
```

BREAK IN DATA

CALCULATION SHEET

Project No. S54413.024	**Calculation No.** S54413.024-M-001	**Rev.** 0	**Page No.** 93 of 192
Title: LERF Basin 41 Buried Piping Analysis			
Prepared By: JD Williams	**Date:** 5/13/20	**Checked By:** JS Huisingh	**Date:** 5/13/20

```
LERF_FRP_3m
04/24/2020                                                    BENTLEY
12:36 PM                                                      AutoPIPE Advanced 11.01.00.24  MODEL  PAGE 120
-------------------------------------------------------------------------------------------------------------


                          SOIL DATA LISTING
                          -----------------


                      SOIL STIFFNESS PROPERTIES (6"SOIL)

                   Initial K         Yield P     Final K    Yield disp
     Dirn    Auto  (lb/in/ft) Auto  (lb/ft  )   (lb/in/ft)   (in    )
     ------- ----  ---------- ----  ----------  ----------  ----------

  Low Stiffness
     Horiz.   N      3116.494  N      2917.039       0.100      0.9360
     Long.    N      1363.759  N       272.752       0.100      0.2000
     Vert. Up N      2731.644  N      1704.545       0.100      0.6240
     Vert. Dn N      8060.909  N      5030.007       0.100      0.6240


  High Stiffness
     Horiz.   N      3116.494  N      2917.039       0.100      0.9360
     Long.    N      1363.759  N       272.752       0.100      0.2000
     Vert. Up N      2731.644  N      1704.545       0.100      0.6240
     Vert. Dn N      8060.909  N      5030.007       0.100      0.6240


  Average Stiffness
     Horiz.   N     12540.000  N     10001.000       0.100      0.7975
     Long.    N      4901.000  N       490.000       0.100      0.1000
     Vert. Up N     12216.000  N      7794.000       0.100      0.6380
     Vert. Dn N     27315.000  N     34854.000       0.100      1.2760
```

CALCULATION SHEET

Project No. S54413.024	**Calculation No.** S54413.024-M-001	**Rev.** 0	**Page No.** 94 of 192
Title: LERF Basin 41 Buried Piping Analysis			
Prepared By: JD Williams	**Date:** 5/13/20	**Checked By:** JS Huisingh	**Date:** 5/13/20

```
-----------------------------------------------------------------------------------------------------------
LERF_FRP_3m
04/24/2020                                                          BENTLEY
12:36 PM                                                            AutoPIPE Advanced 11.01.00.24  MODEL  PAGE 121
-----------------------------------------------------------------------------------------------------------


                                SOIL PARAMETERS (6"SOIL)
                                ------------------------

  Calculation Method :  User

  Parameters                                          Low          High       Average
  ----------------------------------------------    ----------   ----------   ----------
  Outside Diameter, D [in]                               6.57
  Depth to Centerline, H [inch]                        105.94
```

CALCULATION SHEET

Project No. S54413.024	**Calculation No.** S54413.024-M-001	**Rev.** 0	**Page No.** 95 of 192
Title: LERF Basin 41 Buried Piping Analysis			
Prepared By: JD Williams	**Date:** 5/13/20	**Checked By:** JS Huisingh	**Date:** 5/13/20

```
-----------------------------------------------------------------------------------------------------------
LERF_FRP_3m
04/24/2020                                                          BENTLEY
12:36 PM                                                            AutoPIPE Advanced 11.01.00.24  MODEL  PAGE 122
-----------------------------------------------------------------------------------------------------------


                                VIRTUAL ANCHOR DATA (6"SOIL)
                                ----------------------------

  Pipe Identifier            :   6CON30
  Point name for temp. data  :   A03
  Operating Case             :   OP1
  Thermal Expansion          :       0.684 in/100ft
  Temperature Change         :      60.000 deg F
  Operating Pressure         :     150.000 psi
  Virtual Anchor lengths  Lm :      22.624 ft
                          La :      45.248 ft
                          Lb :       5.220 ft
```

CALCULATION SHEET

Project No. S54413.024	**Calculation No.** S54413.024-M-001	**Rev.** 0	**Page No.** 96 of 192
Title: LERF Basin 41 Buried Piping Analysis			
Prepared By: JD Williams	**Date:** 5/13/20	**Checked By:** JS Huisingh	**Date:** 5/13/20

```
-----------------------------------------------------------------------------------------------------------
LERF_FRP_3m
04/24/2020                                                          BENTLEY
12:36 PM                                                            AutoPIPE Advanced 11.01.00.24  MODEL  PAGE 123
-----------------------------------------------------------------------------------------------------------
```

SOIL STIFFNESS PROPERTIES (8USOIL)

Dirn	Auto	Initial K (lb/in/ft)	Auto	Yield P (lb/ft)	Final K (lb/in/ft)	Yield disp (in)
Low Stiffness						
Horiz.	N	5770.000	N	6044.000	0.100	1.0475
Long.	N	2742.000	N	274.000	0.100	0.0999
Vert. Up	N	2089.000	N	1414.000	0.100	0.6769
Vert. Dn	N	12825.000	N	21495.000	0.100	1.6760
High Stiffness						
Horiz.	N	3502.522	N	1702.226	0.100	0.4860
Long.	N	708.106	N	141.621	0.100	0.2000
Vert. Up	N	5260.942	N	1704.545	0.100	0.3240
Vert. Dn	N	7871.595	N	2550.397	0.100	0.3240
Average Stiffness						
Horiz.	N	3502.522	N	1702.226	0.100	0.4860
Long.	N	708.106	N	141.621	0.100	0.2000
Vert. Up	N	5260.942	N	1704.545	0.100	0.3240
Vert. Dn	N	7871.595	N	2550.397	0.100	0.3240

CALCULATION SHEET

Project No. S54413.024	**Calculation No.** S54413.024-M-001	**Rev.** 0	**Page No.** 97 of 192
Title: LERF Basin 41 Buried Piping Analysis			
Prepared By: JD Williams	**Date:** 5/13/20	**Checked By:** JS Huisingh	**Date:** 5/13/20

```
-----------------------------------------------------------------------------------------------------------
LERF_FRP_3m
04/24/2020                                                          BENTLEY
12:36 PM                                                            AutoPIPE Advanced 11.01.00.24  MODEL  PAGE 124
-----------------------------------------------------------------------------------------------------------


                                SOIL PARAMETERS (8USOIL)
                                ------------------------

  Calculation Method :  User

  Parameters                                          Low          High       Average
  ---------------------------------------------    ----------   ----------   ----------
  Outside Diameter, D [in]                              8.60
  Depth to Centerline, H [inch]                       105.94
```

CALCULATION SHEET

Project No. S54413.024	**Calculation No.** S54413.024-M-001	**Rev.** 0	**Page No.** 98 of 192
Title: LERF Basin 41 Buried Piping Analysis			
Prepared By: JD Williams	**Date:** 5/13/20	**Checked By:** JS Huisingh	**Date:** 5/13/20

```
-----------------------------------------------------------------------------------------------------------
LERF_FRP_3m
04/24/2020                                                          BENTLEY
12:36 PM                                                            AutoPIPE Advanced 11.01.00.24  MODEL  PAGE 125
-----------------------------------------------------------------------------------------------------------


                                VIRTUAL ANCHOR DATA (8USOIL)
                                ----------------------------

  Pipe Identifier            :   3CON40
  Point name for temp. data  :   A06
  Operating Case             :   OP1
  Thermal Expansion          :       0.684 in/100ft
  Temperature Change         :      60.000 deg F
  Operating Pressure         :     150.000 psi
  Virtual Anchor lengths  Lm :      11.010 ft
                          La :      22.019 ft
                          Lb :       3.060 ft
```

CALCULATION SHEET

Project No. S54413.024	**Calculation No.** S54413.024-M-001	**Rev.** 0	**Page No.** 99 of 192
Title: LERF Basin 41 Buried Piping Analysis			
Prepared By: JD Williams	**Date:** 5/13/20	**Checked By:** JS Huisingh	**Date:** 5/13/20

```
-----------------------------------------------------------------------------------------------------------
LERF_FRP_3m
04/24/2020                                                          BENTLEY
12:36 PM                                                            AutoPIPE Advanced 11.01.00.24  MODEL  PAGE 126
-----------------------------------------------------------------------------------------------------------
```

SOIL STIFFNESS PROPERTIES (8LSOIL)

Dirn	Auto	Initial K (lb/in/ft)	Auto	Yield P (lb/ft)	Final K (lb/in/ft)	Yield disp (in)
Low Stiffness						
Horiz.	N	17341.000	N	18165.000	0.100	1.0475
Long.	N	6437.000	N	644.000	0.100	0.1000
Vert. Up	N	9301.000	N	7794.000	0.100	0.8380
Vert. Dn	N	27735.000	N	46484.000	0.100	1.6760
High Stiffness						
Horiz.	N	3502.522	N	1702.226	0.100	0.4860
Long.	N	708.106	N	141.621	0.100	0.2000
Vert. Up	N	5260.942	N	1704.545	0.100	0.3240
Vert. Dn	N	7871.595	N	2550.397	0.100	0.3240
Average Stiffness						
Horiz.	N	3502.522	N	1702.226	0.100	0.4860
Long.	N	708.106	N	141.621	0.100	0.2000
Vert. Up	N	5260.942	N	1704.545	0.100	0.3240
Vert. Dn	N	7871.595	N	2550.397	0.100	0.3240

CALCULATION SHEET

Project No. S54413.024	**Calculation No.** S54413.024-M-001	**Rev.** 0	**Page No.** 100 of 192
Title: LERF Basin 41 Buried Piping Analysis			
Prepared By: JD Williams	**Date:** 5/13/20	**Checked By:** JS Huisingh	**Date:** 5/13/20

```
-----------------------------------------------------------------------------------------------------------
LERF_FRP_3m
04/24/2020                                                          BENTLEY
12:36 PM                                                            AutoPIPE Advanced 11.01.00.24  MODEL  PAGE 127
-----------------------------------------------------------------------------------------------------------
```

SOIL PARAMETERS (8LSOIL)

Calculation Method : User

Parameters	Low	High	Average
Outside Diameter, D [in]	8.60		
Depth to Centerline, H [inch]	45.13		

CALCULATION SHEET

Project No. S54413.024	**Calculation No.** S54413.024-M-001	**Rev.** 0	**Page No.** 101 of 192
Title: LERF Basin 41 Buried Piping Analysis			
Prepared By: JD Williams	**Date:** 5/13/20	**Checked By:** JS Huisingh	**Date:** 5/13/20

```
-----------------------------------------------------------------------------------------------------------
LERF_FRP_3m
04/24/2020                                                          BENTLEY
12:36 PM                                                            AutoPIPE Advanced 11.01.00.24  MODEL  PAGE 128
-----------------------------------------------------------------------------------------------------------


                                VIRTUAL ANCHOR DATA (8LSOIL)
                                ----------------------------

  Pipe Identifier            :   3CON40
  Point name for temp. data  :   A06
  Operating Case             :   OP1
  Thermal Expansion          :       0.684 in/100ft
  Temperature Change         :      60.000 deg F
  Operating Pressure         :     150.000 psi
  Virtual Anchor lengths  Lm :      11.010 ft
                          La :      22.019 ft
                          Lb :       3.060 ft
```

CALCULATION SHEET

Project No. S54413.024	**Calculation No.** S54413.024-M-001	**Rev.** 0	**Page No.** 102 of 192
Title: LERF Basin 41 Buried Piping Analysis			
Prepared By: JD Williams	**Date:** 5/13/20	**Checked By:** JS Huisingh	**Date:** 5/13/20

```
-----------------------------------------------------------------------------------------------------------
LERF_FRP_3m
04/24/2020                                                    BENTLEY
12:36 PM                                                      AutoPIPE Advanced 11.01.00.24  MODEL  PAGE 129
-----------------------------------------------------------------------------------------------------------

            L O A D S   S U M M A R Y   D A T A   L I S T I N G

     EARTHQUAKE LOAD CASES :
     -----------------------

     Number of load cases :  8

     Load case 1  -  E1

          Seismic Code :  User-defined

          X-Resultant =        0.123    Y-Resultant =        0.082    Z-Resultant =        0.123

     Load case 2  -  E2

          Seismic Code :  User-defined

          X-Resultant =        0.123    Y-Resultant =        0.082    Z-Resultant =       -0.123

     Load case 3  -  E3

          Seismic Code :  User-defined

          X-Resultant =        0.123    Y-Resultant =       -0.082    Z-Resultant =        0.123

     Load case 4  -  E4

          Seismic Code :  User-defined

          X-Resultant =        0.123    Y-Resultant =       -0.082    Z-Resultant =       -0.123

     Load case 5  -  E5

          Seismic Code :  User-defined

          X-Resultant =       -0.123    Y-Resultant =        0.082    Z-Resultant =        0.123

     Load case 6  -  E6

          Seismic Code :  User-defined

          X-Resultant =       -0.123    Y-Resultant =        0.082    Z-Resultant =       -0.123

     Load case 7  -  E7

          Seismic Code :  User-defined

          X-Resultant =       -0.123    Y-Resultant =       -0.082    Z-Resultant =        0.123

     Load case 8  -  E8

          Seismic Code :  User-defined

          X-Resultant =       -0.123    Y-Resultant =       -0.082    Z-Resultant =       -0.123
```

CALCULATION SHEET

Project No. S54413.024	**Calculation No.** S54413.024-M-001	**Rev.** 0	**Page No.** 103 of 192
Title: LERF Basin 41 Buried Piping Analysis			
Prepared By: JD Williams	**Date:** 5/13/20	**Checked By:** JS Huisingh	**Date:** 5/13/20

```
-----------------------------------------------------------------------------------------------------------
LERF_FRP_3m
04/24/2020                                                          BENTLEY
12:36 PM                                                            AutoPIPE Advanced 11.01.00.24  MODEL  PAGE 130
-----------------------------------------------------------------------------------------------------------

            L O A D S   S U M M A R Y   D A T A   L I S T I N G

     WIND LOAD CASES :
     -----------------

     Number of load cases :  4

     Ground elevation for wind :      -3.50 ft

     Wind shape factor multiplier for piping:  1.000

     Wind shape factor multiplier for beams:   1.000

     Exposure factor for buried pipes :  0.000

     Exposure factor for submerged pipes :  0.000

     Exposed Segments -

     Wind application method : Projected
```

CALCULATION SHEET

Project No. S54413.024	**Calculation No.** S54413.024-M-001	**Rev.** 0	**Page No.** 104 of 192
Title: LERF Basin 41 Buried Piping Analysis			
Prepared By: JD Williams	**Date:** 5/13/20	**Checked By:** JS Huisingh	**Date:** 5/13/20

```
-----------------------------------------------------------------------------------------------------------------
LERF_FRP_3m
04/24/2020                                                                BENTLEY
12:36 PM                                                                  AutoPIPE Advanced 11.01.00.24  MODEL  PAGE 131
-----------------------------------------------------------------------------------------------------------------

            L O A D S   S U M M A R Y   D A T A   L I S T I N G

     Load case 1  -  W1

     Direction  -      X=   0.707     Y=   0.000     Z=   0.707

     ASCE 7-2010

     Basic wind speed at 33 ft (10m): 110.00 mph

     Exposure category : C

     Gust effect factor (G) :   0.85

     Force coefficient (Cf), Figure 29.5-1 : Automatic

     ASCE 7-10 PARAMETERS AS A FUNCTION OF HEIGHT

         HEIGHT       Kz          Cf          Qz       Pressure
         (ft  )                            (psf   )    (psf   )
       ----------  ----------  ----------  ----------  --------

            0.0       0.849       0.700      26.295      15.646
           10.0       0.849       0.700      26.295      15.646
           20.0       0.902       0.700      27.937      16.622
           33.0       1.002       0.700      31.043      18.471
           50.0       1.094       0.700      33.881      20.159
           75.0       1.191       0.700      36.900      21.955
          100.0       1.266       0.700      39.204      23.326
          200.0       1.464       0.700      45.363      26.991
          500.0       1.776       0.700      55.015      32.734
         1000.0       2.010       0.700      62.262      37.046

     Kz = Velocity pressure exposure coefficient
     Cf = Force coefficient or wind shape factor
     Qz = Velocity pressure = 0.00256*Kz*Kzt*V^2  (Eq. 27.3-1)
     Pressure               = Qz*G*Cf                (Eq. 23)

     Per ASCE Figure 29.5-1, wind appl. method should be "Projected"
     Default Gust Factor G assumes pipe frequency > 1 Hz.
     Piping is assumed not to be on an isolated hill (Kzt=1).
     Automatic Cf reported in chart above is calculated
     assuming D=1 ft. Program uses actual Pipe OD to
     calculate Cf at height during analysis.
```

CALCULATION SHEET

Project No. S54413.024	**Calculation No.** S54413.024-M-001	**Rev.** 0	**Page No.** 105 of 192
Title: LERF Basin 41 Buried Piping Analysis			
Prepared By: JD Williams	**Date:** 5/13/20	**Checked By:** JS Huisingh	**Date:** 5/13/20

```
-----------------------------------------------------------------------------------------------------------------
LERF_FRP_3m
04/24/2020                                                                BENTLEY
12:36 PM                                                                  AutoPIPE Advanced 11.01.00.24  MODEL  PAGE 132
-----------------------------------------------------------------------------------------------------------------

            L O A D S   S U M M A R Y   D A T A   L I S T I N G

     Load case 1  -  W1

     Structural members wind load application data

     Structural members wind facing width:    Wind facing

     Gust effect factor (G) for structures (manual):     0.85

     Force coefficient (Cf) for structures (manual):    2.000

     ASCE 7-10 PARAMETERS AS A FUNCTION OF HEIGHT

         HEIGHT       Kz          Cf          Qz       Pressure
         (ft  )                            (psf   )    (psf   )
       ----------  ----------  ----------  ----------  --------

           0.0       0.849       2.000      26.295      44.702
          10.0       0.849       2.000      26.295      44.702
          20.0       0.902       2.000      27.937      47.493
          33.0       1.002       2.000      31.043      52.773
          50.0       1.094       2.000      33.881      57.597
          75.0       1.191       2.000      36.900      62.730
         100.0       1.266       2.000      39.204      66.646
         200.0       1.464       2.000      45.363      77.117
         500.0       1.776       2.000      55.015      93.525
        1000.0       2.010       2.000      62.262     105.845

     Kz = Velocity pressure exposure coefficient
     Cf = Force coefficient or wind shape factor
     Qz = Velocity pressure = 0.00256*Kz*Kzt*V^2  (Eq. 27.3-1)
     Pressure               = Qz*G*Cf                (Eq. 23)
```

CALCULATION SHEET

Project No. S54413.024	**Calculation No.** S54413.024-M-001	**Rev.** 0	**Page No.** 106 of 192
Title: LERF Basin 41 Buried Piping Analysis			
Prepared By: JD Williams	**Date:** 5/13/20	**Checked By:** JS Huisingh	**Date:** 5/13/20

```
-----------------------------------------------------------------------------------------------------------------
LERF_FRP_3m
04/24/2020                                                                BENTLEY
12:36 PM                                                                  AutoPIPE Advanced 11.01.00.24  MODEL  PAGE 133
-----------------------------------------------------------------------------------------------------------------

            L O A D S   S U M M A R Y   D A T A   L I S T I N G

     Load case 2  -  W2

     Direction  -      X=  -0.707     Y=   0.000     Z=  -0.707

     ASCE 7-2010

     Basic wind speed at 33 ft (10m): 110.00 mph

     Exposure category : C

     Gust effect factor (G) :   0.85

     Force coefficient (Cf), Figure 29.5-1 : Automatic

     ASCE 7-10 PARAMETERS AS A FUNCTION OF HEIGHT

         HEIGHT       Kz          Cf          Qz       Pressure
         (ft  )                            (psf   )    (psf   )
       ----------  ----------  ----------  ----------  --------

            0.0       0.849       0.700      26.295      15.646
           10.0       0.849       0.700      26.295      15.646
           20.0       0.902       0.700      27.937      16.622
           33.0       1.002       0.700      31.043      18.471
           50.0       1.094       0.700      33.881      20.159
           75.0       1.191       0.700      36.900      21.955
          100.0       1.266       0.700      39.204      23.326
          200.0       1.464       0.700      45.363      26.991
          500.0       1.776       0.700      55.015      32.734
         1000.0       2.010       0.700      62.262      37.046

     Kz = Velocity pressure exposure coefficient
     Cf = Force coefficient or wind shape factor
     Qz = Velocity pressure = 0.00256*Kz*Kzt*V^2  (Eq. 27.3-1)
     Pressure               = Qz*G*Cf                (Eq. 23)

     Per ASCE Figure 29.5-1, wind appl. method should be "Projected"
     Default Gust Factor G assumes pipe frequency > 1 Hz.
     Piping is assumed not to be on an isolated hill (Kzt=1).
     Automatic Cf reported in chart above is calculated
     assuming D=1 ft. Program uses actual Pipe OD to
     calculate Cf at height during analysis.
```

CALCULATION SHEET

Project No. S54413.024	**Calculation No.** S54413.024-M-001	**Rev.** 0	**Page No.** 107 of 192
Title: LERF Basin 41 Buried Piping Analysis			
Prepared By: JD Williams	**Date:** 5/13/20	**Checked By:** JS Huisingh	**Date:** 5/13/20

```
-----------------------------------------------------------------------------------------------------------------
LERF_FRP_3m
04/24/2020                                                                BENTLEY
12:36 PM                                                                  AutoPIPE Advanced 11.01.00.24  MODEL  PAGE 134
-----------------------------------------------------------------------------------------------------------------

            L O A D S   S U M M A R Y   D A T A   L I S T I N G

     Load case 2  -  W2

     Structural members wind load application data

     Structural members wind facing width:    Wind facing

     Gust effect factor (G) for structures (manual):     0.85

     Force coefficient (Cf) for structures (manual):    2.000

     ASCE 7-10 PARAMETERS AS A FUNCTION OF HEIGHT

         HEIGHT       Kz          Cf          Qz       Pressure
         (ft  )                            (psf   )    (psf   )
       ----------  ----------  ----------  ----------  --------

           0.0       0.849       2.000      26.295      44.702
          10.0       0.849       2.000      26.295      44.702
          20.0       0.902       2.000      27.937      47.493
          33.0       1.002       2.000      31.043      52.773
          50.0       1.094       2.000      33.881      57.597
          75.0       1.191       2.000      36.900      62.730
         100.0       1.266       2.000      39.204      66.646
         200.0       1.464       2.000      45.363      77.117
         500.0       1.776       2.000      55.015      93.525
        1000.0       2.010       2.000      62.262     105.845

     Kz = Velocity pressure exposure coefficient
     Cf = Force coefficient or wind shape factor
     Qz = Velocity pressure = 0.00256*Kz*Kzt*V^2  (Eq. 27.3-1)
     Pressure               = Qz*G*Cf                (Eq. 23)
```

CALCULATION SHEET

Project No. S54413.024	**Calculation No.** S54413.024-M-001	**Rev.** 0	**Page No.** 108 of 192
Title: LERF Basin 41 Buried Piping Analysis			
Prepared By: JD Williams	**Date:** 5/13/20	**Checked By:** JS Huisingh	**Date:** 5/13/20

```
-----------------------------------------------------------------------------------------------------------------
LERF_FRP_3m
04/24/2020                                                                BENTLEY
12:36 PM                                                                  AutoPIPE Advanced 11.01.00.24  MODEL  PAGE 135
-----------------------------------------------------------------------------------------------------------------

            L O A D S   S U M M A R Y   D A T A   L I S T I N G

     Load case 3  -  W3

     Direction  -      X=  -0.707     Y=   0.000     Z=   0.707

     ASCE 7-2010

     Basic wind speed at 33 ft (10m): 110.00 mph

     Exposure category : C

     Gust effect factor (G) :   0.85

     Force coefficient (Cf), Figure 29.5-1 : Automatic

     ASCE 7-10 PARAMETERS AS A FUNCTION OF HEIGHT

         HEIGHT       Kz          Cf          Qz       Pressure
         (ft  )                            (psf   )    (psf   )
       ----------  ----------  ----------  ----------  --------

            0.0       0.849       0.700      26.295      15.646
           10.0       0.849       0.700      26.295      15.646
           20.0       0.902       0.700      27.937      16.622
           33.0       1.002       0.700      31.043      18.471
           50.0       1.094       0.700      33.881      20.159
           75.0       1.191       0.700      36.900      21.955
          100.0       1.266       0.700      39.204      23.326
          200.0       1.464       0.700      45.363      26.991
          500.0       1.776       0.700      55.015      32.734
         1000.0       2.010       0.700      62.262      37.046

     Kz = Velocity pressure exposure coefficient
     Cf = Force coefficient or wind shape factor
     Qz = Velocity pressure = 0.00256*Kz*Kzt*V^2  (Eq. 27.3-1)
     Pressure               = Qz*G*Cf               (Eq. 23)

     Per ASCE Figure 29.5-1, wind appl. method should be "Projected"
     Default Gust Factor G assumes pipe frequency > 1 Hz.
     Piping is assumed not to be on an isolated hill (Kzt=1).
     Automatic Cf reported in chart above is calculated
     assuming D=1 ft. Program uses actual Pipe OD to
     calculate Cf at height during analysis.
```

CALCULATION SHEET

Project No. S54413.024	**Calculation No.** S54413.024-M-001	**Rev.** 0	**Page No.** 109 of 192
Title: LERF Basin 41 Buried Piping Analysis			
Prepared By: JD Williams	**Date:** 5/13/20	**Checked By:** JS Huisingh	**Date:** 5/13/20

```
-----------------------------------------------------------------------------------------------------------
LERF_FRP_3m
04/24/2020                                                          BENTLEY
12:36 PM                                                            AutoPIPE Advanced 11.01.00.24  MODEL  PAGE 136
-----------------------------------------------------------------------------------------------------------

            L O A D S   S U M M A R Y   D A T A   L I S T I N G

     Load case 3  -  W3

     Structural members wind load application data

     Structural members wind facing width:    Wind facing

     Gust effect factor (G) for structures (manual):     0.85

     Force coefficient (Cf) for structures (manual):    2.000

     ASCE 7-10 PARAMETERS AS A FUNCTION OF HEIGHT

         HEIGHT       Kz          Cf          Qz       Pressure
         (ft  )                            (psf   )    (psf   )
       ----------  ----------  ----------  ----------  --------

           0.0       0.849       2.000      26.295      44.702
          10.0       0.849       2.000      26.295      44.702
          20.0       0.902       2.000      27.937      47.493
          33.0       1.002       2.000      31.043      52.773
          50.0       1.094       2.000      33.881      57.597
          75.0       1.191       2.000      36.900      62.730
         100.0       1.266       2.000      39.204      66.646
         200.0       1.464       2.000      45.363      77.117
         500.0       1.776       2.000      55.015      93.525
        1000.0       2.010       2.000      62.262     105.845

     Kz = Velocity pressure exposure coefficient
     Cf = Force coefficient or wind shape factor
     Qz = Velocity pressure = 0.00256*Kz*Kzt*V^2  (Eq. 27.3-1)
     Pressure               = Qz*G*Cf                (Eq. 23)
```

CALCULATION SHEET

Project No. S54413.024	**Calculation No.** S54413.024-M-001	**Rev.** 0	**Page No.** 110 of 192
Title: LERF Basin 41 Buried Piping Analysis			
Prepared By: JD Williams	**Date:** 5/13/20	**Checked By:** JS Huisingh	**Date:** 5/13/20

```
-----------------------------------------------------------------------------------------------------------
LERF_FRP_3m
04/24/2020                                                          BENTLEY
12:36 PM                                                            AutoPIPE Advanced 11.01.00.24  MODEL  PAGE 137
-----------------------------------------------------------------------------------------------------------

            L O A D S   S U M M A R Y   D A T A   L I S T I N G

     Load case 4  -  W4

     Direction  -      X=   0.707     Y=   0.000     Z=  -0.707

     ASCE 7-2010

     Basic wind speed at 33 ft (10m): 110.00 mph

     Exposure category : C

     Gust effect factor (G) :   0.85

     Force coefficient (Cf), Figure 29.5-1 : Automatic

     ASCE 7-10 PARAMETERS AS A FUNCTION OF HEIGHT

         HEIGHT       Kz          Cf          Qz       Pressure
         (ft  )                            (psf   )    (psf   )
       ----------  ----------  ----------  ----------  --------

            0.0       0.849       0.700      26.295      15.646
           10.0       0.849       0.700      26.295      15.646
           20.0       0.902       0.700      27.937      16.622
           33.0       1.002       0.700      31.043      18.471
           50.0       1.094       0.700      33.881      20.159
           75.0       1.191       0.700      36.900      21.955
          100.0       1.266       0.700      39.204      23.326
          200.0       1.464       0.700      45.363      26.991
          500.0       1.776       0.700      55.015      32.734
         1000.0       2.010       0.700      62.262      37.046

     Kz = Velocity pressure exposure coefficient
     Cf = Force coefficient or wind shape factor
     Qz = Velocity pressure = 0.00256*Kz*Kzt*V^2  (Eq. 27.3-1)
     Pressure               = Qz*G*Cf                (Eq. 23)

     Per ASCE Figure 29.5-1, wind appl. method should be "Projected"
     Default Gust Factor G assumes pipe frequency > 1 Hz.
     Piping is assumed not to be on an isolated hill (Kzt=1).
     Automatic Cf reported in chart above is calculated
     assuming D=1 ft. Program uses actual Pipe OD to
     calculate Cf at height during analysis.
```

CALCULATION SHEET

Project No. S54413.024	**Calculation No.** S54413.024-M-001	**Rev.** 0	**Page No.** 111 of 192
Title: LERF Basin 41 Buried Piping Analysis			
Prepared By: JD Williams	**Date:** 5/13/20	**Checked By:** JS Huisingh	**Date:** 5/13/20

```
-----------------------------------------------------------------------------------------------------------------
LERF_FRP_3m
04/24/2020                                                                  BENTLEY
12:36 PM                                                                    AutoPIPE Advanced 11.01.00.24  MODEL  PAGE 138
-----------------------------------------------------------------------------------------------------------------

            L O A D S   S U M M A R Y   D A T A   L I S T I N G

     Load case 4  -  W4

     Structural members wind load application data

     Structural members wind facing width:    Wind facing

     Gust effect factor (G) for structures (manual):     0.85

     Force coefficient (Cf) for structures (manual):    2.000

     ASCE 7-10 PARAMETERS AS A FUNCTION OF HEIGHT

         HEIGHT       Kz          Cf          Qz       Pressure
         (ft  )                            (psf   )    (psf   )
       ----------  ----------  ----------  ----------  --------

           0.0       0.849       2.000      26.295      44.702
          10.0       0.849       2.000      26.295      44.702
          20.0       0.902       2.000      27.937      47.493
          33.0       1.002       2.000      31.043      52.773
          50.0       1.094       2.000      33.881      57.597
          75.0       1.191       2.000      36.900      62.730
         100.0       1.266       2.000      39.204      66.646
         200.0       1.464       2.000      45.363      77.117
         500.0       1.776       2.000      55.015      93.525
        1000.0       2.010       2.000      62.262     105.845

     Kz = Velocity pressure exposure coefficient
     Cf = Force coefficient or wind shape factor
     Qz = Velocity pressure = 0.00256*Kz*Kzt*V^2  (Eq. 27.3-1)
     Pressure               = Qz*G*Cf                (Eq. 23)
```

CALCULATION SHEET

Project No. S54413.024	**Calculation No.** S54413.024-M-001	**Rev.** 0	**Page No.** 112 of 192
Title: LERF Basin 41 Buried Piping Analysis			
Prepared By: JD Williams	**Date:** 5/13/20	**Checked By:** JS Huisingh	**Date:** 5/13/20

```
-----------------------------------------------------------------------------------------------------------------
LERF_FRP_3m
04/24/2020                                                                BENTLEY
12:36 PM                                                                  AutoPIPE Advanced 11.01.00.24  MODEL  PAGE 139
-----------------------------------------------------------------------------------------------------------------

                              S U P P O R T   D A T A   L I S T I N G

 Point Support  Support Conn.to Comp.Wt  Stiff.     Gap 1   Gap 2  Fric. GapSet Preload Ld.Var Size    Figure
 Name   Type      ID     /Dir    (lb)               (in)    (in)   Fact. /#hgr   (lbf)
 ----- -------- ------- ------- ------- ---------- ------- ------- ----- ------ ------- ------ ---- ------------

 Tag No.: INT                                     Attachment ID: <None>
 A01   Guide-V  A03  1  E01       0.000 Rigid        0.000   0.000  0.00
       Guide-H  A03  1  E01       0.000 Rigid        0.000   0.000  0.00

 Tag No.: INT                                     Attachment ID: <None>
 A02   Guide-V  A04  1  E02       0.000 Rigid        0.000   0.000  0.00
       Guide-H  A04  1  E02       0.000 Rigid        0.000   0.000  0.00

 Tag No.: INT                                     Attachment ID: <None>
 A03   Guide-V  A05  1  E03       0.000 Rigid        0.000   0.000  0.00
       Guide-H  A05  1  E03       0.000 Rigid        0.000   0.000  0.00

 Tag No.: INT                                     Attachment ID: <None>
 A04   Guide-V  A06  1  E04       0.000 Rigid        0.000   0.000  0.00
       Guide-H  A06  1  E04       0.000 Rigid        0.000   0.000  0.00

 Tag No.: INT                                     Attachment ID: <None>
 A05   Guide-V  A12  1  E06       0.000 Rigid        0.000   0.000  0.00
       Guide-H  A12  1  E06       0.000 Rigid        0.000   0.000  0.00

 Tag No.: INT                                     Attachment ID: <None>
 A07   Guide-V  A11  1  E08       0.000 Rigid        0.000   0.000  0.00
       Guide-H  A11  1  E08       0.000 Rigid        0.000   0.000  0.00

 Tag No.: INT                                     Attachment ID: <None>
 A08   Guide-V  A07  1  E10       0.000 Rigid        0.000   0.000  0.00
       Guide-H  A07  1  E10       0.000 Rigid        0.000   0.000  0.00

 Tag No.: INT                                     Attachment ID: <None>
 A09   Guide-V  A08  1  E11       0.000 Rigid        0.000   0.000  0.00
       Guide-H  A08  1  E11       0.000 Rigid        0.000   0.000  0.00

 Tag No.: INT                                     Attachment ID: <None>
 A10   Guide-V  A09  1  E12       0.000 Rigid        0.000   0.000  0.00
       Guide-H  A09  1  E12       0.000 Rigid        0.000   0.000  0.00

 Tag No.: INT                                     Attachment ID: <None>
 A11   Guide-V  A10  1  E13       0.000 Rigid        0.000   0.000  0.00
       Guide-H  A10  1  E13       0.000 Rigid        0.000   0.000  0.00

 Tag No.: INT                                     Attachment ID: <None>
 B02   Guide-V  B11  1  F14       0.000 Rigid        0.000   0.000  0.00
       Guide-H  B11  1  F14       0.000 Rigid        0.000   0.000  0.00

 Tag No.: INT                                     Attachment ID: <None>
 B03   Guide-V  B05  1  F07       0.000 Rigid        0.000   0.000  0.00
       Guide-H  B05  1  F07       0.000 Rigid        0.000   0.000  0.00

 Tag No.: INT                                     Attachment ID: <None>
 B05   Guide-V  B06  1  F05       0.000 Rigid        0.000   0.000  0.00
       Guide-H  B06  1  F05       0.000 Rigid        0.000   0.000  0.00
```

CALCULATION SHEET

Project No. S54413.024	**Calculation No.** S54413.024-M-001	**Rev.** 0	**Page No.** 113 of 192
Title: LERF Basin 41 Buried Piping Analysis			
Prepared By: JD Williams	**Date:** 5/13/20	**Checked By:** JS Huisingh	**Date:** 5/13/20

```
-----------------------------------------------------------------------------------------------------------------
LERF_FRP_3m
04/24/2020                                                                  BENTLEY
12:36 PM                                                                    AutoPIPE Advanced 11.01.00.24  MODEL  PAGE 140
-----------------------------------------------------------------------------------------------------------------

                              S U P P O R T   D A T A   L I S T I N G

 Point Support  Support Conn.to Comp.Wt  Stiff.     Gap 1   Gap 2  Fric. GapSet Preload Ld.Var Size    Figure
 Name   Type      ID     /Dir    (lb)               (in)    (in)   Fact. /#hgr   (lbf)
 ----- -------- ------- ------- ------- ---------- ------- ------- ----- ------ ------- ------ ---- ------------
 Tag No.: INT                                     Attachment ID: <None>
 B06   Guide-V  B08  1  F11       0.000 Rigid        0.000   0.000  0.00
       Guide-H  B08  1  F11       0.000 Rigid        0.000   0.000  0.00

 Tag No.: INT                                     Attachment ID: <None>
 B07   Guide-V  B07  2  F10       0.000 Rigid        0.000   0.000  0.00
       Guide-H  B07  2  F10       0.000 Rigid        0.000   0.000  0.00

 Tag No.: INT                                     Attachment ID: <None>
 B08   Guide-V  B03  1  F03       0.000 Rigid        0.000   0.000  0.00
       Guide-H  B03  1  F03       0.000 Rigid        0.000   0.000  0.00

 Tag No.: INT                                     Attachment ID: <None>
 B09   Guide-V  B07  1  F01       0.000 Rigid        0.000   0.000  0.00
       Guide-H  B07  1  F01       0.000 Rigid        0.000   0.000  0.00

 Tag No.: INT                                     Attachment ID: <None>
 C01   Guide-V  C03  1  G01       0.000 Rigid        0.000   0.000  0.00
       Guide-H  C03  1  G01       0.000 Rigid        0.000   0.000  0.00

 Tag No.: INT                                     Attachment ID: <None>
 C02   Guide-V  C04  1  G02       0.000 Rigid        0.000   0.000  0.00
       Guide-H  C04  1  G02       0.000 Rigid        0.000   0.000  0.00

 Tag No.: INT                                     Attachment ID: <None>
 C03   Guide-V  C05  1  G03       0.000 Rigid        0.000   0.000  0.00
       Guide-H  C05  1  G03       0.000 Rigid        0.000   0.000  0.00

 Tag No.: INT                                     Attachment ID: <None>
 C04   Guide-V  C06  1  G04       0.000 Rigid        0.000   0.000  0.00
       Guide-H  C06  1  G04       0.000 Rigid        0.000   0.000  0.00

 Tag No.: INT                                     Attachment ID: <None>
 C05   Guide-V  C13  1  G06       0.000 Rigid        0.000   0.000  0.00
       Guide-H  C13  1  G06       0.000 Rigid        0.000   0.000  0.00

 Tag No.: INT                                     Attachment ID: <None>
 C07   Guide-V  C12  1  G08       0.000 Rigid        0.000   0.000  0.00
       Guide-H  C12  1  G08       0.000 Rigid        0.000   0.000  0.00

 Tag No.: INT                                     Attachment ID: <None>
 C08   Guide-V  C07  1  G10       0.000 Rigid        0.000   0.000  0.00
       Guide-H  C07  1  G10       0.000 Rigid        0.000   0.000  0.00

 Tag No.: INT                                     Attachment ID: <None>
 C09   Guide-V  C08  1  G11       0.000 Rigid        0.000   0.000  0.00
       Guide-H  C08  1  G11       0.000 Rigid        0.000   0.000  0.00

 Tag No.: INT                                     Attachment ID: <None>
 C10   Guide-V  C09  1  G12       0.000 Rigid        0.000   0.000  0.00
       Guide-H  C09  1  G12       0.000 Rigid        0.000   0.000  0.00
```

CALCULATION SHEET

Project No. S54413.024	**Calculation No.** S54413.024-M-001	**Rev.** 0	**Page No.** 114 of 192
Title: LERF Basin 41 Buried Piping Analysis			
Prepared By: JD Williams	**Date:** 5/13/20	**Checked By:** JS Huisingh	**Date:** 5/13/20

```
-----------------------------------------------------------------------------------------------------------------
LERF_FRP_3m
04/24/2020                                                                BENTLEY
12:36 PM                                                                  AutoPIPE Advanced 11.01.00.24  MODEL  PAGE 141
-----------------------------------------------------------------------------------------------------------------

                              S U P P O R T   D A T A   L I S T I N G

 Point Support  Support Conn.to Comp.Wt  Stiff.     Gap 1   Gap 2  Fric. GapSet Preload Ld.Var Size    Figure
 Name   Type      ID     /Dir    (lb)               (in)    (in)   Fact. /#hgr   (lbf)
 ----- -------- ------- ------- ------- ---------- ------- ------- ----- ------ ------- ------ ---- ------------
 Tag No.: INT                                     Attachment ID: <None>
 C11   Guide-V  C10  1  G13       0.000 Rigid        0.000   0.000  0.00
       Guide-H  C10  1  G13       0.000 Rigid        0.000   0.000  0.00

 Tag No.: INT                                     Attachment ID: <None>
 D02   Guide-V  D13  1  H02       0.000 Rigid        0.000   0.000  0.00
       Guide-H  D13  1  H02       0.000 Rigid        0.000   0.000  0.00

 Tag No.: INT                                     Attachment ID: <None>
 D03   Guide-V  D05  1  H04       0.000 Rigid        0.000   0.000  0.00
       Guide-H  D05  1  H04       0.000 Rigid        0.000   0.000  0.00

 Tag No.: INT                                     Attachment ID: <None>
 D05   Guide-V  D06  1  H06       0.000 Rigid        0.000   0.000  0.00
       Guide-H  D06  1  H06       0.000 Rigid        0.000   0.000  0.00

 Tag No.: INT                                     Attachment ID: <None>
 D06   Guide-V  D10  2  H09       0.000 Rigid        0.000   0.000  0.00
       Guide-H  D10  2  H09       0.000 Rigid        0.000   0.000  0.00

 Tag No.: INT                                     Attachment ID: <None>
 D07   Guide-V  D09  2  H10       0.000 Rigid        0.000   0.000  0.00
       Guide-H  D09  2  H10       0.000 Rigid        0.000   0.000  0.00

 Tag No.: INT                                     Attachment ID: <None>
 D08   Guide-V  D09  1  H12       0.000 Rigid        0.000   0.000  0.00
       Guide-H  D09  1  H12       0.000 Rigid        0.000   0.000  0.00

 Tag No.: INT                                     Attachment ID: <None>
 D10   Guide-V  D10  1  H14       0.000 Rigid        0.000   0.000  0.00
       Guide-H  D10  1  H14       0.000 Rigid        0.000   0.000  0.00

 Tag No.: INT                                     Attachment ID: <None>
 D11   Guide-V  D07  1  H17       0.000 Rigid        0.000   0.000  0.00
       Guide-H  D07  1  H17       0.000 Rigid        0.000   0.000  0.00

 Tag No.: NEW OFF BASIN 41                        Attachment ID: <None>
 F13   Guide-V  F13  1  5263      0.000 Rigid        0.000   0.040  0.00  Weightless
       Guide-H  F13  1  5263      0.000 Rigid        0.063   0.063  0.00  Weightless

 Tag No.: NEW-ON BASIN 41                         Attachment ID: <None>
 F12   Guide-V  F12  1  5169      0.000 Rigid        0.000   0.125  0.00  Weightless
       Guide-H  F12  1  5169      0.000 Rigid        0.062   0.062  0.00  Weightless

 Tag No.: NEW-ON BASIN 41                         Attachment ID: <None>
 H01   Guide-V  H16  1  5197      0.000 Rigid        0.000   0.125  0.00  Weightless
       Guide-H  H16  1  5197      0.000 Rigid        0.062   0.062  0.00  Weightless

 Tag No.: NEW OFF BASIN 41                        Attachment ID: <None>
 H08   Guide-V  H08  1  5401      0.000 Rigid        0.000   0.040  0.00  Weightless
       Guide-H  H08  1  5401      0.000 Rigid        0.063   0.063  0.00  Weightless
```

CALCULATION SHEET

Project No. S54413.024	**Calculation No.** S54413.024-M-001	**Rev.** 0	**Page No.** 115 of 192
Title: LERF Basin 41 Buried Piping Analysis			
Prepared By: JD Williams	**Date:** 5/13/20	**Checked By:** JS Huisingh	**Date:** 5/13/20

```
-----------------------------------------------------------------------------------------------------------------
LERF_FRP_3m
04/24/2020                                                                BENTLEY
12:36 PM                                                                  AutoPIPE Advanced 11.01.00.24  MODEL  PAGE 142
-----------------------------------------------------------------------------------------------------------------

                                S U P P O R T   D A T A   L I S T I N G

 Point Support  Support Conn.to Comp.Wt  Stiff.     Gap 1   Gap 2  Fric. GapSet Preload Ld.Var Size    Figure
 Name   Type      ID     /Dir    (lb)               (in)    (in)   Fact. /#hgr   (lbf)
 ----- -------- ------- ------- ------- ---------- ------- ------- ----- ------ ------- ------ ---- ------------
 Tag No.: F07                                     Attachment ID: <None>
 P05   Guide-V  P05  2  5105      0.000 Rigid        0.000   0.000  0.00
       Guide-H  P05  2  5105      0.000 Rigid        0.000   0.000  0.00

 Tag No.: F12                                     Attachment ID: <None>
 P06   Guide-V  P06  2  5138      0.000 Rigid        0.000   0.000  0.00
       Guide-H  P06  2  5138      0.000 Rigid        0.000   0.000  0.00

 Tag No.: F08                                     Attachment ID: <None>
 P07   Guide-V  P07  2  5107      0.000 Rigid        0.000   0.000  0.00
       Guide-H  P07  2  5107      0.000 Rigid        0.000   0.000  0.00

 Tag No.: F09                                     Attachment ID: <None>
 P10   Guide-V  P10  2  5127      0.000 Rigid        0.000   0.000  0.00
       Guide-H  P10  2  5127      0.000 Rigid        0.000   0.000  0.00

 Tag No.: Valve Support                           Attachment ID: <None>
 P11 M Shoe     P11 M1  Ground    0.000 Rigid        0.000 100.000  0.00  Weightless

 Tag No.: G07                                     Attachment ID: <None>
 Q05   Guide-V  Q05  2  5101      0.000 Rigid        0.000   0.000  0.00
       Guide-H  Q05  2  5101      0.000 Rigid        0.000   0.000  0.00

 Tag No.: G12                                     Attachment ID: <None>
 Q06   Guide-V  Q06  2  5144      0.000 Rigid        0.000   0.000  0.00
       Guide-H  Q06  2  5144      0.000 Rigid        0.000   0.000  0.00

 Tag No.: G08                                     Attachment ID: <None>
 Q07   Guide-V  Q07  2  5103      0.000 Rigid        0.000   0.000  0.00
       Guide-H  Q07  2  5103      0.000 Rigid        0.000   0.000  0.00

 Tag No.: G10                                     Attachment ID: <None>
 Q10   Guide-V  Q10  2  5125      0.000 Rigid        0.000   0.000  0.00
       Guide-H  Q10  2  5125      0.000 Rigid        0.000   0.000  0.00

 Tag No.: Valve Support                           Attachment ID: <None>
 Q11 M Shoe     Q11 M1  Ground    0.000 Rigid        0.000 100.000  0.00  Weightless

 Tag No.: H13                                     Attachment ID: <None>
 R05   Guide-V  R05  2  5097      0.000 Rigid        0.000   0.000  0.00
       Guide-H  R05  2  5097      0.000 Rigid        0.000   0.000  0.00

 Tag No.: H17                                     Attachment ID: <None>
 R06   Guide-V  R06  2  5140      0.000 Rigid        0.000   0.000  0.00
       Guide-H  R06  2  5140      0.000 Rigid        0.000   0.000  0.00

 Tag No.: H14                                     Attachment ID: <None>
 R07   Guide-V  R07  2  5099      0.000 Rigid        0.000   0.000  0.00
       Guide-H  R07  2  5099      0.000 Rigid        0.000   0.000  0.00

 Tag No.: H15                                     Attachment ID: <None>
 R13   Guide-V  R13  2  5119      0.000 Rigid        0.000   0.000  0.00
```

BREAK IN DATA

CALCULATION SHEET

Project No. S54413.024	**Calculation No.** S54413.024-M-001	**Rev.** 0	**Page No.** 116 of 192
Title: LERF Basin 41 Buried Piping Analysis			
Prepared By: JD Williams	**Date:** 5/13/20	**Checked By:** JS Huisingh	**Date:** 5/13/20

```
-----------------------------------------------------------------------------------------------------------
LERF_FRP_3m
04/24/2020                                                          BENTLEY
12:36 PM                                                            AutoPIPE Advanced 11.01.00.24  RESULT PAGE 159
-----------------------------------------------------------------------------------------------------------


                    A N A L Y S I S   S U M M A R Y


   Current model revision number : 173

     Constant values used
              Acceleration due to gravity................  386.40000 in/s/s
              Density of water for specific gravity Cal..     62.400 lb/cu.ft
              Density of sea water.......................     62.400 lb/cu.ft
              Density of ground water ...................     62.400 lb/cu.ft

     Static - Analysis set number ................... 1
              Date and Time of analysis ............. Apr 23, 2020   2:15 PM
              Model Revision Number ................. 173
              Number of load cases .................. 15
              Load cases analyzed ................... GR T1 E1 E2 E3 E4 E5 E6 E7 E8 W1 W2 W3 W4 P1
              Description ........................... Analysis Set No.1
              Gaps/Friction/Soil considered ......... Yes
              Tolerance - Force, Displacement ....... 10.00 lbf  0.0010 in
              Friction - Scale Factor, Tolerance .... 1.00   0.10
              Ignore friction for cases E1,E2,E3 .... Yes
              Ignore friction for gravity case ...... Yes
              Hanger design run ..................... No
              Cut short included .................... No
              Thermal bowing included ............... No
              Include Bourdon rotational effect ..... No
              Pipe radius for Bourdon calculation ... Mean
              Occasional load analysis type ......... Nonlinear
              Non-linear analysis summary file ...... LERF_FRP_3m.LOG
              Use default load sequence ............. Yes
              Base load cases for nonlinear analysis
                                                        GR   = None
                                                        T1   = P1
                                                        E1   = T1
                                                        E2   = T1
                                                        E3   = T1
                                                        E4   = T1
                                                        E5   = T1
                                                        E6   = T1
                                                        E7   = T1
                                                        E8   = T1
                                                        W1   = T1
                                                        W2   = T1
                                                        W3   = T1
                                                        W4   = T1
                                                        P1   = GR
              Weight of contents included ........... Yes
              Fluid density factor for contents ..... 1.00
              Pressure stiffening case .............. None
              Hot modulus case ...................... None
              Pressure Extension..................... Yes
              Soil Stiffness ........................ Low
              Water elevation for buoyancy loads .... Not considered
              Wind analysis method .................. Projected
              Use corroded thickness in analysis .... No
              Rigid stiffness factor ................ 1000.0
```

CALCULATION SHEET

Project No. S54413.024	**Calculation No.** S54413.024-M-001	**Rev.** 0	**Page No.** 117 of 192
Title: LERF Basin 41 Buried Piping Analysis			
Prepared By: JD Williams	**Date:** 5/13/20	**Checked By:** JS Huisingh	**Date:** 5/13/20

```
-----------------------------------------------------------------------------------------------------------
LERF_FRP_3m
04/24/2020                                                    BENTLEY
12:36 PM                                                      AutoPIPE Advanced 11.01.00.24  RESULT PAGE 160
-----------------------------------------------------------------------------------------------------------

              Support rigid stiffness (translation) . 0.100000E+11 lb/in
              Support rigid stiffness (rotation) .... 0.100000E+11 ft-lb/deg
              Anchor rigid stiffness (translation) .. 0.100000E+11 lb/in
              Anchor rigid stiffness (rotation) ..... 0.100000E+11 ft-lb/deg
              Remove Lift-Off Supports ............. No

     Static - Analysis set number ................... 2
              Date and Time of analysis ............ Apr 23, 2020   2:18 PM
              Model Revision Number ................ 173
              Number of load cases ................. 15
              Load cases analyzed ................... GR T2 E1 E2 E3 E4 E5 E6 E7 E8 W1 W2 W3 W4 P2
              Description ........................
              Gaps/Friction/Soil considered ......... Yes
              Tolerance - Force, Displacement ....... 10.00 lbf  0.0010 in
              Friction - Scale Factor, Tolerance .... 1.00   0.10
              Ignore friction for cases E1,E2,E3 .... Yes
              Ignore friction for gravity case ...... Yes
              Hanger design run ..................... No
              Cut short included .................... No
              Thermal bowing included ............... No
              Include Bourdon rotational effect ..... No
              Pipe radius for Bourdon calculation ... Mean
              Occasional load analysis type ......... Nonlinear
              Non-linear analysis summary file ...... LERF_FRP_3m.LOG
              Use default load sequence ............. Yes
              Base load cases for nonlinear analysis
                                                         GR   = None
                                                         T2   = GR
                                                         E1   = P2
                                                         E2   = P2
                                                         E3   = P2
                                                         E4   = P2
                                                         E5   = P2
                                                         E6   = P2
                                                         E7   = P2
                                                         E8   = P2
                                                         W1   = P2
                                                         W2   = P2
                                                         W3   = P2
                                                         W4   = P2
                                                         P2   = T2
              Weight of contents included ........... Yes
              Fluid density factor for contents ..... 1.00
              Pressure stiffening case .............. None
              Hot modulus case ...................... None
              Pressure Extension..................... Yes
              Soil Stiffness ........................ Low
              Water elevation for buoyancy loads .... Not considered
              Wind analysis method .................. Projected
              Use corroded thickness in analysis .... No
              Rigid stiffness factor ................ 1000.0
              Support rigid stiffness (translation) . 0.100000E+11 lb/in
              Support rigid stiffness (rotation) .... 0.100000E+11 ft-lb/deg
              Anchor rigid stiffness (translation) .. 0.100000E+11 lb/in
              Anchor rigid stiffness (rotation) ..... 0.100000E+11 ft-lb/deg
              Remove Lift-Off Supports ............. No
```

CALCULATION SHEET

Project No. S54413.024	**Calculation No.** S54413.024-M-001	**Rev.** 0	**Page No.** 118 of 192
Title: LERF Basin 41 Buried Piping Analysis			
Prepared By: JD Williams	**Date:** 5/13/20	**Checked By:** JS Huisingh	**Date:** 5/13/20

```
-----------------------------------------------------------------------------------------------------------
LERF_FRP_3m
04/24/2020                                                    BENTLEY
12:36 PM                                                      AutoPIPE Advanced 11.01.00.24  RESULT PAGE 161
-----------------------------------------------------------------------------------------------------------

     Static - Analysis set number ................... 3
              Date and Time of analysis ............ Apr 23, 2020   2:20 PM
              Model Revision Number ................ 173
              Number of load cases ................. 15
              Load cases analyzed .................. GR T3 E1 E2 E3 E4 E5 E6 E7 E8 W1 W2 W3 W4 P3
              Description ...........................
              Gaps/Friction/Soil considered ......... Yes
              Tolerance - Force, Displacement ...... 10.00 lbf  0.0010 in
              Friction - Scale Factor, Tolerance .... 1.00   0.10
              Ignore friction for cases E1,E2,E3 .... Yes
              Ignore friction for gravity case ...... Yes
              Hanger design run ..................... No
              Cut short included .................... No
              Thermal bowing included ............... No
              Include Bourdon rotational effect ..... No
              Pipe radius for Bourdon calculation ... Mean
              Occasional load analysis type ......... Nonlinear
              Non-linear analysis summary file ...... LERF_FRP_3m.LOG
              Use default load sequence ............. Yes
              Base load cases for nonlinear analysis
                                                        GR   = None
                                                        T3   = GR
                                                        E1   = P3
                                                        E2   = P3
                                                        E3   = P3
                                                        E4   = P3
                                                        E5   = P3
                                                        E6   = P3
                                                        E7   = P3
                                                        E8   = P3
                                                        W1   = P3
                                                        W2   = P3
                                                        W3   = P3
                                                        W4   = P3
                                                        P3   = T3
              Weight of contents included ........... Yes
              Fluid density factor for contents ..... 1.00
              Pressure stiffening case .............. None
              Hot modulus case ...................... None
              Pressure Extension..................... Yes
              Soil Stiffness ........................ Low
              Water elevation for buoyancy loads .... Not considered
              Wind analysis method .................. Projected
              Use corroded thickness in analysis .... No
              Rigid stiffness factor ................ 1000.0
              Support rigid stiffness (translation) . 0.100000E+11 lb/in
              Support rigid stiffness (rotation) .... 0.100000E+11 ft-lb/deg
              Anchor rigid stiffness (translation) .. 0.100000E+11 lb/in
              Anchor rigid stiffness (rotation) ..... 0.100000E+11 ft-lb/deg
              Remove Lift-Off Supports .............. No
```

CALCULATION SHEET

Project No. S54413.024	**Calculation No.** S54413.024-M-001	**Rev.** 0	**Page No.** 119 of 192
Title: LERF Basin 41 Buried Piping Analysis			
Prepared By: JD Williams	**Date:** 5/13/20	**Checked By:** JS Huisingh	**Date:** 5/13/20

```
LERF_FRP_3m
04/24/2020                                                    BENTLEY
12:36 PM                                                      AutoPIPE Advanced 11.01.00.24  RESULT PAGE 162
```

CODE COMPLIANCE COMBINATIONS

<Description> Combination	Category	Method	Case/Combination	Factor	M/S	f2 Factor	Allowable (psi)	D/A/P/C
GR{1}	Sustain	Sum	GR[1]	1.00		0.670	C Automatic	Y Y Y Y
GR+P1{1}	Sustain	Sum	Max Long	1.00		0.670	C Automatic	Y Y Y Y
			Max Hoop	1.00			L Automatic	
			GR[1]	1.00				
			P1[1]	1.00				
T1+P1{1}	Expansion	Sum	T1[1]	1.00			C Automatic	Y Y Y N
			Max Long	1.00			L Automatic	
			Max Hoop	1.00				
			P1[1]	1.00				
GR+E1{1}	Occasion	Sum	GR[1]	1.00		0.890	C Automatic	Y Y Y N
			E1[1]	1.00			L Automatic	
GR+P1+E1{1}	Occasion	Sum	Max Long	1.00		0.890	C Automatic	Y Y Y N
			Max Hoop	1.00			L Automatic	
			GR[1]	1.00				
			P1[1]	1.00				
			E1[1]	1.00				
GR+E2{1}	Occasion	Sum	GR[1]	1.00		0.890	C Automatic	Y Y Y N
			E2[1]	1.00			L Automatic	
GR+P1+E2{1}	Occasion	Sum	Max Long	1.00		0.890	C Automatic	Y Y Y N
			Max Hoop	1.00			L Automatic	
			GR[1]	1.00				
			P1[1]	1.00				
			E2[1]	1.00				
GR+E3{1}	Occasion	Sum	GR[1]	1.00		0.890	C Automatic	Y Y Y N
			E3[1]	1.00			L Automatic	
GR+P1+E3{1}	Occasion	Sum	Max Long	1.00		0.890	C Automatic	Y Y Y N
			Max Hoop	1.00			L Automatic	
			GR[1]	1.00				
			P1[1]	1.00				
			E3[1]	1.00				
GR+E4{1}	Occasion	Sum	GR[1]	1.00		0.890	C Automatic	Y Y Y N
			E4[1]	1.00			L Automatic	
GR+P1+E4{1}	Occasion	Sum	Max Long	1.00		0.890	C Automatic	Y Y Y N
			Max Hoop	1.00			L Automatic	
			GR[1]	1.00				
			P1[1]	1.00				
			E4[1]	1.00				
GR+E5{1}	Occasion	Sum	GR[1]	1.00		0.890	C Automatic	Y Y Y N
			E5[1]	1.00			L Automatic	

CALCULATION SHEET

Project No. S54413.024	**Calculation No.** S54413.024-M-001	**Rev.** 0	**Page No.** 120 of 192
Title: LERF Basin 41 Buried Piping Analysis			
Prepared By: JD Williams	**Date:** 5/13/20	**Checked By:** JS Huisingh	**Date:** 5/13/20

```
-----------------------------------------------------------------------------------------------------------
LERF_FRP_3m
04/24/2020                                                    BENTLEY
12:36 PM                                                      AutoPIPE Advanced 11.01.00.24  RESULT PAGE 163
-----------------------------------------------------------------------------------------------------------

                                    CODE COMPLIANCE COMBINATIONS

  <Description>                                                                    f2     Allowable
  Combination              Category    Method      Case/Combination      Factor M/S  Factor     (psi)    D/A/P/C
  ------------------------ ----------- -------- ------------------------ ------ --- -------- ----------- -------
  GR+P1+E5{1}              Occasion    Sum      Max Long                   1.00        0.890 C Automatic Y Y Y N
                                                Max Hoop                   1.00              L Automatic
                                                GR[1]                      1.00
                                                P1[1]                      1.00
                                                E5[1]                      1.00

  GR+E6{1}                 Occasion    Sum      GR[1]                      1.00        0.890 C Automatic Y Y Y N
                                                E6[1]                      1.00              L Automatic

  GR+P1+E6{1}              Occasion    Sum      Max Long                   1.00        0.890 C Automatic Y Y Y N
                                                Max Hoop                   1.00              L Automatic
                                                GR[1]                      1.00
                                                P1[1]                      1.00
                                                E6[1]                      1.00

  GR+E7{1}                 Occasion    Sum      GR[1]                      1.00        0.890 C Automatic Y Y Y N
                                                E7[1]                      1.00              L Automatic

  GR+P1+E7{1}              Occasion    Sum      Max Long                   1.00        0.890 C Automatic Y Y Y N
                                                Max Hoop                   1.00              L Automatic
                                                GR[1]                      1.00
                                                P1[1]                      1.00
                                                E7[1]                      1.00

  GR+E8{1}                 Occasion    Sum      GR[1]                      1.00        0.890 C Automatic Y Y Y N
                                                E8[1]                      1.00              L Automatic

  GR+P1+E8{1}              Occasion    Sum      Max Long                   1.00        0.890 C Automatic Y Y Y N
                                                Max Hoop                   1.00              L Automatic
                                                GR[1]                      1.00
                                                P1[1]                      1.00
                                                E8[1]                      1.00

  GR+W1{1}                 Occasion    Sum      GR[1]                      1.00        0.890 C Automatic Y Y Y N
                                                W1[1]                      1.00              L Automatic

  GR+P1+W1{1}              Occasion    Sum      Max Long                   1.00        0.890 C Automatic Y Y Y N
                                                Max Hoop                   1.00              L Automatic
                                                GR[1]                      1.00
                                                P1[1]                      1.00
                                                W1[1]                      1.00

  GR+W2{1}                 Occasion    Sum      GR[1]                      1.00        0.890 C Automatic Y Y Y N
                                                W2[1]                      1.00              L Automatic

  GR+P1+W2{1}              Occasion    Sum      Max Long                   1.00        0.890 C Automatic Y Y Y N
                                                Max Hoop                   1.00              L Automatic
                                                GR[1]                      1.00
                                                P1[1]                      1.00
                                                W2[1]                      1.00
```

CALCULATION SHEET

Project No. S54413.024	**Calculation No.** S54413.024-M-001	**Rev.** 0	**Page No.** 121 of 192
Title: LERF Basin 41 Buried Piping Analysis			
Prepared By: JD Williams	**Date:** 5/13/20	**Checked By:** JS Huisingh	**Date:** 5/13/20

```
-----------------------------------------------------------------------------------------------------------
LERF_FRP_3m
04/24/2020                                                    BENTLEY
12:36 PM                                                      AutoPIPE Advanced 11.01.00.24  RESULT PAGE 164
-----------------------------------------------------------------------------------------------------------

                                    CODE COMPLIANCE COMBINATIONS

  <Description>                                                                    f2     Allowable
  Combination              Category    Method      Case/Combination      Factor M/S  Factor     (psi)    D/A/P/C
  ------------------------ ----------- -------- ------------------------ ------ --- -------- ----------- -------
  GR+W3{1}                 Occasion    Sum      GR[1]                      1.00        0.890 C Automatic Y Y Y N
                                                W3[1]                      1.00              L Automatic

  GR+P1+W3{1}              Occasion    Sum      Max Long                   1.00        0.890 C Automatic Y Y Y N
                                                Max Hoop                   1.00              L Automatic
                                                GR[1]                      1.00
                                                P1[1]                      1.00
                                                W3[1]                      1.00

  GR+W4{1}                 Occasion    Sum      GR[1]                      1.00        0.890 C Automatic Y Y Y N
                                                W4[1]                      1.00              L Automatic

  GR+P1+W4{1}              Occasion    Sum      Max Long                   1.00        0.890 C Automatic Y Y Y N
                                                Max Hoop                   1.00              L Automatic
                                                GR[1]                      1.00
                                                P1[1]                      1.00
                                                W4[1]                      1.00

  GR+T1+P1{1}              Combined    Sum      GR[1]                      1.00        0.830 C Automatic Y Y Y Y
                                                T1[1]                      1.00              L Automatic
                                                Max Long                   1.00
                                                Max Hoop                   1.00
                                                P1[1]                      1.00

  GR{2}                    Sustain     Sum      GR[2]                      1.00        0.670 C Automatic Y Y Y Y

  GR+P2{2}                 Sustain     Sum      Max Long                   1.00        0.670 C Automatic Y Y Y N
                                                Max Hoop                   1.00              L Automatic
                                                GR[2]                      1.00
                                                P2[2]                      1.00

  T2+P2{2}                 Expansion   Sum      T2[2]                      1.00              C Automatic Y Y Y N
                                                Max Long                   1.00              L Automatic
                                                Max Hoop                   1.00
                                                P2[2]                      1.00

  GR+E1{2}                 Occasion    Sum      GR[2]                      1.00        0.890 C Automatic Y Y Y N
                                                E1[2]                      1.00              L Automatic

  GR+P2+E1{2}              Occasion    Sum      Max Long                   1.00        0.890 C Automatic Y Y Y N
                                                Max Hoop                   1.00              L Automatic
                                                GR[2]                      1.00
                                                P2[2]                      1.00
                                                E1[2]                      1.00

  GR+E2{2}                 Occasion    Sum      GR[2]                      1.00        0.890 C Automatic Y Y Y N
                                                E2[2]                      1.00              L Automatic
```

CALCULATION SHEET

Project No. S54413.024	**Calculation No.** S54413.024-M-001	**Rev.** 0	**Page No.** 122 of 192
Title: LERF Basin 41 Buried Piping Analysis			
Prepared By: JD Williams	**Date:** 5/13/20	**Checked By:** JS Huisingh	**Date:** 5/13/20

```
-----------------------------------------------------------------------------------------------------------
LERF_FRP_3m
04/24/2020                                                    BENTLEY
12:36 PM                                                      AutoPIPE Advanced 11.01.00.24  RESULT PAGE 165
-----------------------------------------------------------------------------------------------------------
```

CODE COMPLIANCE COMBINATIONS

<Description> Combination	Category	Method	Case/Combination	Factor	M/S	f2 Factor	Allowable (psi)	D/A/P/C
GR+P2+E2{2}	Occasion	Sum	Max Long	1.00		0.890	C Automatic	Y Y Y N
			Max Hoop	1.00			L Automatic	
			GR[2]	1.00				
			P2[2]	1.00				
			E2[2]	1.00				
GR+E3{2}	Occasion	Sum	GR[2]	1.00		0.890	C Automatic	Y Y Y N
			E3[2]	1.00			L Automatic	
GR+P2+E3{2}	Occasion	Sum	Max Long	1.00		0.890	C Automatic	Y Y Y N
			Max Hoop	1.00			L Automatic	
			GR[2]	1.00				
			P2[2]	1.00				
			E3[2]	1.00				
GR+E4{2}	Occasion	Sum	GR[2]	1.00		0.890	C Automatic	Y Y Y N
			E4[2]	1.00			L Automatic	
GR+P2+E4{2}	Occasion	Sum	Max Long	1.00		0.890	C Automatic	Y Y Y N
			Max Hoop	1.00			L Automatic	
			GR[2]	1.00				
			P2[2]	1.00				
			E4[2]	1.00				
GR+E5{2}	Occasion	Sum	GR[2]	1.00		0.890	C Automatic	Y Y Y N
			E5[2]	1.00			L Automatic	
GR+P2+E5{2}	Occasion	Sum	Max Long	1.00		0.890	C Automatic	Y Y Y N
			Max Hoop	1.00			L Automatic	
			GR[2]	1.00				
			P2[2]	1.00				
			E5[2]	1.00				
GR+E6{2}	Occasion	Sum	GR[2]	1.00		0.890	C Automatic	Y Y Y N
			E6[2]	1.00			L Automatic	
GR+P2+E6{2}	Occasion	Sum	Max Long	1.00		0.890	C Automatic	Y Y Y N
			Max Hoop	1.00			L Automatic	
			GR[2]	1.00				
			P2[2]	1.00				
			E6[2]	1.00				
GR+E7{2}	Occasion	Sum	GR[2]	1.00		0.890	C Automatic	Y Y Y N
			E7[2]	1.00			L Automatic	
GR+P2+E7{2}	Occasion	Sum	Max Long	1.00		0.890	C Automatic	Y Y Y N
			Max Hoop	1.00			L Automatic	
			GR[2]	1.00				
			P2[2]	1.00				
			E7[2]	1.00				

CALCULATION SHEET

Project No. S54413.024	**Calculation No.** S54413.024-M-001	**Rev.** 0	**Page No.** 123 of 192
Title: LERF Basin 41 Buried Piping Analysis			
Prepared By: JD Williams	**Date:** 5/13/20	**Checked By:** JS Huisingh	**Date:** 5/13/20

```
-----------------------------------------------------------------------------------------------------------
LERF_FRP_3m
04/24/2020                                                    BENTLEY
12:36 PM                                                      AutoPIPE Advanced 11.01.00.24  RESULT PAGE 166
-----------------------------------------------------------------------------------------------------------

                                    CODE COMPLIANCE COMBINATIONS

  <Description>                                                                    f2     Allowable
  Combination              Category    Method      Case/Combination      Factor M/S  Factor     (psi)    D/A/P/C
  ------------------------ ----------- -------- ------------------------ ------ --- -------- ----------- -------
  GR+E8{2}                 Occasion    Sum      GR[2]                      1.00        0.890 C Automatic Y Y Y N
                                                E8[2]                      1.00              L Automatic

  GR+P2+E8{2}              Occasion    Sum      Max Long                   1.00        0.890 C Automatic Y Y Y N
                                                Max Hoop                   1.00              L Automatic
                                                GR[2]                      1.00
                                                P2[2]                      1.00
                                                E8[2]                      1.00

  GR+W1{2}                 Occasion    Sum      GR[2]                      1.00        0.890 C Automatic Y Y Y N
                                                W1[2]                      1.00              L Automatic

  GR+P2+W1{2}              Occasion    Sum      Max Long                   1.00        0.890 C Automatic Y Y Y N
                                                Max Hoop                   1.00              L Automatic
                                                GR[2]                      1.00
                                                P2[2]                      1.00
                                                W1[2]                      1.00

  GR+W2{2}                 Occasion    Sum      GR[2]                      1.00        0.890 C Automatic Y Y Y N
                                                W2[2]                      1.00              L Automatic

  GR+P2+W2{2}              Occasion    Sum      Max Long                   1.00        0.890 C Automatic Y Y Y N
                                                Max Hoop                   1.00              L Automatic
                                                GR[2]                      1.00
                                                P2[2]                      1.00
                                                W2[2]                      1.00

  GR+W3{2}                 Occasion    Sum      GR[2]                      1.00        0.890 C Automatic Y Y Y N
                                                W3[2]                      1.00              L Automatic

  GR+P2+W3{2}              Occasion    Sum      Max Long                   1.00        0.890 C Automatic Y Y Y N
                                                Max Hoop                   1.00              L Automatic
                                                GR[2]                      1.00
                                                P2[2]                      1.00
                                                W3[2]                      1.00

  GR+W4{2}                 Occasion    Sum      GR[2]                      1.00        0.890 C Automatic Y Y Y N
                                                W4[2]                      1.00              L Automatic

  GR+P2+W4{2}              Occasion    Sum      Max Long                   1.00        0.890 C Automatic Y Y Y N
                                                Max Hoop                   1.00              L Automatic
                                                GR[2]                      1.00
                                                P2[2]                      1.00
                                                W4[2]                      1.00

  GR+T2+P2{2}              Combined    Sum      GR[2]                      1.00        0.830 C Automatic Y Y Y Y
                                                T2[2]                      1.00              L Automatic
                                                Max Long                   1.00
                                                Max Hoop                   1.00
                                                P2[2]                      1.00
```

CALCULATION SHEET

Project No. S54413.024	**Calculation No.** S54413.024-M-001	**Rev.** 0	**Page No.** 124 of 192
Title: LERF Basin 41 Buried Piping Analysis			
Prepared By: JD Williams	**Date:** 5/13/20	**Checked By:** JS Huisingh	**Date:** 5/13/20

```
-----------------------------------------------------------------------------------------------------------
LERF_FRP_3m
04/24/2020                                                    BENTLEY
12:36 PM                                                      AutoPIPE Advanced 11.01.00.24  RESULT PAGE 167
-----------------------------------------------------------------------------------------------------------

                                    CODE COMPLIANCE COMBINATIONS

  <Description>                                                                    f2     Allowable
  Combination              Category    Method       Case/Combination     Factor M/S  Factor     (psi)    D/A/P/C
  ------------------------ ----------- -------- ------------------------ ------ --- -------- ----------- -------
  GR{3}                    Sustain     Sum      GR[3]                      1.00        0.670 C Automatic Y Y Y Y

  GR+P3{3}                 Sustain     Sum      Max Long                   1.00        0.670 C Automatic Y Y Y N
                                                Max Hoop                   1.00              L Automatic
                                                GR[3]                      1.00
                                                P3[3]                      1.00

  T3+P3{3}                 Expansion   Sum      T3[3]                      1.00              C Automatic Y Y Y N
                                                Max Long                   1.00              L Automatic
                                                Max Hoop                   1.00
                                                P3[3]                      1.00

  GR+E1{3}                 Occasion    Sum      GR[3]                      1.00        0.890 C Automatic Y Y Y N
                                                E1[3]                      1.00              L Automatic

  GR+P3+E1{3}              Occasion    Sum      Max Long                   1.00        0.890 C Automatic Y Y Y N
                                                Max Hoop                   1.00              L Automatic
                                                GR[3]                      1.00
                                                P3[3]                      1.00
                                                E1[3]                      1.00

  GR+E2{3}                 Occasion    Sum      GR[3]                      1.00        0.890 C Automatic Y Y Y N
                                                E2[3]                      1.00              L Automatic

  GR+P3+E2{3}              Occasion    Sum      Max Long                   1.00        0.890 C Automatic Y Y Y N
                                                Max Hoop                   1.00              L Automatic
                                                GR[3]                      1.00
                                                P3[3]                      1.00
                                                E2[3]                      1.00

  GR+E3{3}                 Occasion    Sum      GR[3]                      1.00        0.890 C Automatic Y Y Y N
                                                E3[3]                      1.00              L Automatic

  GR+P3+E3{3}              Occasion    Sum      Max Long                   1.00        0.890 C Automatic Y Y Y N
                                                Max Hoop                   1.00              L Automatic
                                                GR[3]                      1.00
                                                P3[3]                      1.00
                                                E3[3]                      1.00

  GR+E4{3}                 Occasion    Sum      GR[3]                      1.00        0.890 C Automatic Y Y Y N
                                                E4[3]                      1.00              L Automatic

  GR+P3+E4{3}              Occasion    Sum      Max Long                   1.00        0.890 C Automatic Y Y Y N
                                                Max Hoop                   1.00              L Automatic
                                                GR[3]                      1.00
                                                P3[3]                      1.00
                                                E4[3]                      1.00

  GR+E5{3}                 Occasion    Sum      GR[3]                      1.00        0.890 C Automatic Y Y Y N
                                                E5[3]                      1.00              L Automatic
```

CALCULATION SHEET

Project No. S54413.024	**Calculation No.** S54413.024-M-001	**Rev.** 0	**Page No.** 125 of 192
Title: LERF Basin 41 Buried Piping Analysis			
Prepared By: JD Williams	**Date:** 5/13/20	**Checked By:** JS Huisingh	**Date:** 5/13/20

```
-----------------------------------------------------------------------------------------------------------
LERF_FRP_3m
04/24/2020                                                    BENTLEY
12:36 PM                                                      AutoPIPE Advanced 11.01.00.24  RESULT PAGE 168
-----------------------------------------------------------------------------------------------------------
```

CODE COMPLIANCE COMBINATIONS

<Description> Combination	Category	Method	Case/Combination	Factor	M/S	f2 Factor	Allowable (psi)	D/A/P/C
GR+P3+E5{3}	Occasion	Sum	Max Long	1.00		0.890	C Automatic	Y Y Y N
			Max Hoop	1.00			L Automatic	
			GR[3]	1.00				
			P3[3]	1.00				
			E5[3]	1.00				
GR+E6{3}	Occasion	Sum	GR[3]	1.00		0.890	C Automatic	Y Y Y N
			E6[3]	1.00			L Automatic	
GR+P3+E6{3}	Occasion	Sum	Max Long	1.00		0.890	C Automatic	Y Y Y N
			Max Hoop	1.00			L Automatic	
			GR[3]	1.00				
			P3[3]	1.00				
			E6[3]	1.00				
GR+E7{3}	Occasion	Sum	GR[3]	1.00		0.890	C Automatic	Y Y Y N
			E7[3]	1.00			L Automatic	
GR+P3+E7{3}	Occasion	Sum	Max Long	1.00		0.890	C Automatic	Y Y Y N
			Max Hoop	1.00			L Automatic	
			GR[3]	1.00				
			P3[3]	1.00				
			E7[3]	1.00				
GR+E8{3}	Occasion	Sum	GR[3]	1.00		0.890	C Automatic	Y Y Y N
			E8[3]	1.00			L Automatic	
GR+P3+E8{3}	Occasion	Sum	Max Long	1.00		0.890	C Automatic	Y Y Y N
			Max Hoop	1.00			L Automatic	
			GR[3]	1.00				
			P3[3]	1.00				
			E8[3]	1.00				
GR+W1{3}	Occasion	Sum	GR[3]	1.00		0.890	C Automatic	Y Y Y N
			W1[3]	1.00			L Automatic	
GR+P3+W1{3}	Occasion	Sum	Max Long	1.00		0.890	C Automatic	Y Y Y N
			Max Hoop	1.00			L Automatic	
			GR[3]	1.00				
			P3[3]	1.00				
			W1[3]	1.00				
GR+W2{3}	Occasion	Sum	GR[3]	1.00		0.890	C Automatic	Y Y Y N
			W2[3]	1.00			L Automatic	
GR+P3+W2{3}	Occasion	Sum	Max Long	1.00		0.890	C Automatic	Y Y Y N
			Max Hoop	1.00			L Automatic	
			GR[3]	1.00				
			P3[3]	1.00				
			W2[3]	1.00				

CALCULATION SHEET

Project No. S54413.024	**Calculation No.** S54413.024-M-001	**Rev.** 0	**Page No.** 126 of 192
Title: LERF Basin 41 Buried Piping Analysis			
Prepared By: JD Williams	**Date:** 5/13/20	**Checked By:** JS Huisingh	**Date:** 5/13/20

```
-----------------------------------------------------------------------------------------------------------
LERF_FRP_3m
04/24/2020                                                    BENTLEY
12:36 PM                                                      AutoPIPE Advanced 11.01.00.24  RESULT PAGE 169
-----------------------------------------------------------------------------------------------------------

                                    CODE COMPLIANCE COMBINATIONS

  <Description>                                                                    f2     Allowable
  Combination              Category    Method       Case/Combination     Factor M/S  Factor     (psi)    D/A/P/C
  ------------------------ ----------- -------- ------------------------ ------ --- -------- ----------- -------
  GR+W3{3}                 Occasion    Sum      GR[3]                      1.00        0.890 C Automatic Y Y Y N
                                                W3[3]                      1.00              L Automatic

  GR+P3+W3{3}              Occasion    Sum      Max Long                   1.00        0.890 C Automatic Y Y Y N
                                                Max Hoop                   1.00              L Automatic
                                                GR[3]                      1.00
                                                P3[3]                      1.00
                                                W3[3]                      1.00

  GR+W4{3}                 Occasion    Sum      GR[3]                      1.00        0.890 C Automatic Y Y Y N
                                                W4[3]                      1.00              L Automatic

  GR+P3+W4{3}              Occasion    Sum      Max Long                   1.00        0.890 C Automatic Y Y Y N
                                                Max Hoop                   1.00              L Automatic
                                                GR[3]                      1.00
                                                P3[3]                      1.00
                                                W4[3]                      1.00

  GR+T3+P3{3}              Combined    Sum      GR[3]                      1.00        0.830 C Automatic Y Y Y Y
                                                T3[3]                      1.00              L Automatic
                                                Max Long                   1.00
                                                Max Hoop                   1.00
                                                P3[3]                      1.00


  Notes:

  Allowable: C=Circumferential or Hoop, L=Longitudinal

  D/A/P/C: [D]efault/[A]uto-Update/[P]rint options/[C]Consistent (Y=Yes, N=No)
```

CALCULATION SHEET

Project No. S54413.024	**Calculation No.** S54413.024-M-001	**Rev.** 0	**Page No.** 127 of 192
Title: LERF Basin 41 Buried Piping Analysis			
Prepared By: JD Williams	**Date:** 5/13/20	**Checked By:** JS Huisingh	**Date:** 5/13/20

```
-----------------------------------------------------------------------------------------------------------------
LERF_FRP_3m
04/24/2020                                                          BENTLEY
12:36 PM                                                            AutoPIPE Advanced 11.01.00.24  RESULT PAGE 170
-----------------------------------------------------------------------------------------------------------------

                              NON-CODE COMBINATIONS

  <Description>
  Combination                 Method       Case/Combination      Factor  D/A/P/C
  -----------------------     -------- ------------------------ ------  -------
  Gravity{1}                  Sum      GR[1]                      1.00  Y N N Y

  Thermal 1{1}                Sum      T1[1]                      1.00  Y N N N

  Static Seismic 1{1}         Sum      E1[1]                      1.00  Y N N N

  Static Seismic 2{1}         Sum      E2[1]                      1.00  Y N N N

  Static Seismic 3{1}         Sum      E3[1]                      1.00  Y N N N

  Static Seismic 4{1}         Sum      E4[1]                      1.00  Y N N N

  Static Seismic 5{1}         Sum      E5[1]                      1.00  Y N N N

  Static Seismic 6{1}         Sum      E6[1]                      1.00  Y N N N

  Static Seismic 7{1}         Sum      E7[1]                      1.00  Y N N N

  Static Seismic 8{1}         Sum      E8[1]                      1.00  Y N N N

  Wind 1{1}                   Sum      W1[1]                      1.00  Y N N N

  Wind 2{1}                   Sum      W2[1]                      1.00  Y N N N

  Wind 3{1}                   Sum      W3[1]                      1.00  Y N N N

  Wind 4{1}                   Sum      W4[1]                      1.00  Y N N N

  Pressure 1{1}               Sum      P1[1]                      1.00  Y N N N

  GP1{1}                      Sum      GR[1]                      1.00  Y N N Y
                                       P1[1]                      1.00

  GP1T1{1}                    Sum      GR[1]                      1.00  Y Y Y Y
                                       P1[1]                      1.00
                                       T1[1]                      1.00

  GP1T1E1{1}                  Sum      GR[1]                      1.00  Y Y Y Y
                                       P1[1]                      1.00
                                       T1[1]                      1.00
                                       E1[1]                      1.00

  GP1T1E2{1}                  Sum      GR[1]                      1.00  Y Y Y Y
                                       P1[1]                      1.00
                                       T1[1]                      1.00
                                       E2[1]                      1.00

  GP1T1E3{1}                  Sum      GR[1]                      1.00  Y Y Y Y
                                       P1[1]                      1.00
                                       T1[1]                      1.00
                                       E3[1]                      1.00
```

CALCULATION SHEET

Project No. S54413.024	**Calculation No.** S54413.024-M-001	**Rev.** 0	**Page No.** 128 of 192
Title: LERF Basin 41 Buried Piping Analysis			
Prepared By: JD Williams	**Date:** 5/13/20	**Checked By:** JS Huisingh	**Date:** 5/13/20

```
-----------------------------------------------------------------------------------------------------------
LERF_FRP_3m
04/24/2020                                                    BENTLEY
12:36 PM                                                      AutoPIPE Advanced 11.01.00.24  RESULT PAGE 171
-----------------------------------------------------------------------------------------------------------

                              NON-CODE COMBINATIONS

  <Description>
  Combination                 Method       Case/Combination      Factor  D/A/P/C
  ------------------------    --------  ------------------------ ------  -------
  GP1T1E4{1}                  Sum       GR[1]                      1.00  Y Y Y Y
                                        P1[1]                      1.00
                                        T1[1]                      1.00
                                        E4[1]                      1.00

  GP1T1E5{1}                  Sum       GR[1]                      1.00  Y Y Y Y
                                        P1[1]                      1.00
                                        T1[1]                      1.00
                                        E5[1]                      1.00

  GP1T1E6{1}                  Sum       GR[1]                      1.00  Y Y Y Y
                                        P1[1]                      1.00
                                        T1[1]                      1.00
                                        E6[1]                      1.00

  GP1T1E7{1}                  Sum       GR[1]                      1.00  Y Y Y Y
                                        P1[1]                      1.00
                                        T1[1]                      1.00
                                        E7[1]                      1.00

  GP1T1E8{1}                  Sum       GR[1]                      1.00  Y Y Y Y
                                        P1[1]                      1.00
                                        T1[1]                      1.00
                                        E8[1]                      1.00

  GP1T1W1{1}                  Sum       GR[1]                      1.00  Y Y Y Y
                                        P1[1]                      1.00
                                        T1[1]                      1.00
                                        W1[1]                      1.00

  GP1T1W2{1}                  Sum       GR[1]                      1.00  Y Y Y Y
                                        P1[1]                      1.00
                                        T1[1]                      1.00
                                        W2[1]                      1.00

  GP1T1W3{1}                  Sum       GR[1]                      1.00  Y Y Y Y
                                        P1[1]                      1.00
                                        T1[1]                      1.00
                                        W3[1]                      1.00

  GP1T1W4{1}                  Sum       GR[1]                      1.00  Y Y Y Y
                                        P1[1]                      1.00
                                        T1[1]                      1.00
                                        W4[1]                      1.00

  Gravity{2}                  Sum       GR[2]                      1.00  Y N N Y

  Thermal 2{2}                Sum       T2[2]                      1.00  Y N N N

  Static Seismic 1{2}         Sum       E1[2]                      1.00  Y N N N
```

CALCULATION SHEET

Project No. S54413.024	**Calculation No.** S54413.024-M-001	**Rev.** 0	**Page No.** 129 of 192
Title: LERF Basin 41 Buried Piping Analysis			
Prepared By: JD Williams	**Date:** 5/13/20	**Checked By:** JS Huisingh	**Date:** 5/13/20

```
-----------------------------------------------------------------------------------------------------------
LERF_FRP_3m
04/24/2020                                                    BENTLEY
12:36 PM                                                      AutoPIPE Advanced 11.01.00.24  RESULT PAGE 172
-----------------------------------------------------------------------------------------------------------

                              NON-CODE COMBINATIONS

  <Description>
  Combination                 Method       Case/Combination     Factor  D/A/P/C
  ------------------------    -------- ------------------------ ------  -------
  Static Seismic 2{2}         Sum      E2[2]                      1.00  Y N N N

  Static Seismic 3{2}         Sum      E3[2]                      1.00  Y N N N

  Static Seismic 4{2}         Sum      E4[2]                      1.00  Y N N N

  Static Seismic 5{2}         Sum      E5[2]                      1.00  Y N N N

  Static Seismic 6{2}         Sum      E6[2]                      1.00  Y N N N

  Static Seismic 7{2}         Sum      E7[2]                      1.00  Y N N N

  Static Seismic 8{2}         Sum      E8[2]                      1.00  Y N N N

  Wind 1{2}                   Sum      W1[2]                      1.00  Y N N N

  Wind 2{2}                   Sum      W2[2]                      1.00  Y N N N

  Wind 3{2}                   Sum      W3[2]                      1.00  Y N N N

  Wind 4{2}                   Sum      W4[2]                      1.00  Y N N N

  Pressure 2{2}               Sum      P2[2]                      1.00  Y N N N

  GT2{2}                      Sum      GR[2]                      1.00  Y N N Y
                                       T2[2]                      1.00

  GT2P2{2}                    Sum      GR[2]                      1.00  Y Y Y Y
                                       T2[2]                      1.00
                                       P2[2]                      1.00

  GT2P2E1{2}                  Sum      GR[2]                      1.00  Y Y Y Y
                                       T2[2]                      1.00
                                       P2[2]                      1.00
                                       E1[2]                      1.00

  GT2P2E2{2}                  Sum      GR[2]                      1.00  Y Y Y Y
                                       T2[2]                      1.00
                                       P2[2]                      1.00
                                       E2[2]                      1.00

  GT2P2E3{2}                  Sum      GR[2]                      1.00  Y Y Y Y
                                       T2[2]                      1.00
                                       P2[2]                      1.00
                                       E3[2]                      1.00

  GT2P2E4{2}                  Sum      GR[2]                      1.00  Y Y Y Y
                                       T2[2]                      1.00
                                       P2[2]                      1.00
                                       E4[2]                      1.00
```

```
-----------------------------------------------------------------------------------------------------------
LERF_FRP_3m
04/24/2020                                                    BENTLEY
12:36 PM                                                      AutoPIPE Advanced 11.01.00.24  RESULT PAGE 173
-----------------------------------------------------------------------------------------------------------

                              NON-CODE COMBINATIONS

  <Description>
  Combination                 Method       Case/Combination      Factor  D/A/P/C
  ------------------------    -------- ------------------------ ------  -------
  GT2P2E5{2}                  Sum      GR[2]                      1.00  Y Y Y Y
                                       T2[2]                      1.00
                                       P2[2]                      1.00
                                       E5[2]                      1.00

  GT2P2E6{2}                  Sum      GR[2]                      1.00  Y Y Y Y
                                       T2[2]                      1.00
                                       P2[2]                      1.00
                                       E6[2]                      1.00

  GT2P2E7{2}                  Sum      GR[2]                      1.00  Y Y Y Y
                                       T2[2]                      1.00
                                       P2[2]                      1.00
                                       E7[2]                      1.00

  GT2P2E8{2}                  Sum      GR[2]                      1.00  Y Y Y Y
                                       T2[2]                      1.00
                                       P2[2]                      1.00
                                       E8[2]                      1.00

  GT2P2W1{2}                  Sum      GR[2]                      1.00  Y Y Y Y
                                       T2[2]                      1.00
                                       P2[2]                      1.00
                                       W1[2]                      1.00

  GT2P2W2{2}                  Sum      GR[2]                      1.00  Y Y Y Y
                                       T2[2]                      1.00
                                       P2[2]                      1.00
                                       W2[2]                      1.00

  GT2P2W3{2}                  Sum      GR[2]                      1.00  Y Y Y Y
                                       T2[2]                      1.00
                                       P2[2]                      1.00
                                       W3[2]                      1.00

  GT2P2W4{2}                  Sum      GR[2]                      1.00  Y Y Y Y
                                       T2[2]                      1.00
                                       P2[2]                      1.00
                                       W4[2]                      1.00

  Gravity{3}                  Sum      GR[3]                      1.00  Y N N Y

  Thermal 3{3}                Sum      T3[3]                      1.00  Y N N N

  Static Seismic 1{3}         Sum      E1[3]                      1.00  Y N N N

  Static Seismic 2{3}         Sum      E2[3]                      1.00  Y N N N

  Static Seismic 3{3}         Sum      E3[3]                      1.00  Y N N N

  Static Seismic 4{3}         Sum      E4[3]                      1.00  Y N N N
```

CALCULATION SHEET

Project No. S54413.024	**Calculation No.** S54413.024-M-001	**Rev.** 0	**Page No.** 131 of 192
Title: LERF Basin 41 Buried Piping Analysis			
Prepared By: JD Williams	**Date:** 5/13/20	**Checked By:** JS Huisingh	**Date:** 5/13/20

```
-----------------------------------------------------------------------------------------------------------
LERF_FRP_3m
04/24/2020                                                    BENTLEY
12:36 PM                                                      AutoPIPE Advanced 11.01.00.24  RESULT PAGE 174
-----------------------------------------------------------------------------------------------------------

                              NON-CODE COMBINATIONS

  <Description>
  Combination                 Method       Case/Combination     Factor  D/A/P/C
  ------------------------    -------- ------------------------ ------  -------
  Static Seismic 5{3}         Sum      E5[3]                      1.00  Y N N N

  Static Seismic 6{3}         Sum      E6[3]                      1.00  Y N N N

  Static Seismic 7{3}         Sum      E7[3]                      1.00  Y N N N

  Static Seismic 8{3}         Sum      E8[3]                      1.00  Y N N N

    < 0.71, 0.00, 0.71>
  Wind 1{3}                   Sum      W1[3]                      1.00  Y N N N

    < -0.71, 0.00, -0.71>
  Wind 2{3}                   Sum      W2[3]                      1.00  Y N N N

    < -0.71, 0.00, 0.71>
  Wind 3{3}                   Sum      W3[3]                      1.00  Y N N N

    < 0.71, 0.00, -0.71>
  Wind 4{3}                   Sum      W4[3]                      1.00  Y N N N

  Pressure 3{3}               Sum      P3[3]                      1.00  Y N N N

  GT3{3}                      Sum      GR[3]                      1.00  Y N N Y
                                       T3[3]                      1.00

  GT3P3{3}                    Sum      GR[3]                      1.00  Y Y Y Y
                                       T3[3]                      1.00
                                       P3[3]                      1.00

  GT3P3E1{3}                  Sum      GR[3]                      1.00  Y Y Y Y
                                       T3[3]                      1.00
                                       P3[3]                      1.00
                                       E1[3]                      1.00

  GT3P3E2{3}                  Sum      GR[3]                      1.00  Y Y Y Y
                                       T3[3]                      1.00
                                       P3[3]                      1.00
                                       E2[3]                      1.00

  GT3P3E3{3}                  Sum      GR[3]                      1.00  Y Y Y Y
                                       T3[3]                      1.00
                                       P3[3]                      1.00
                                       E3[3]                      1.00

  GT3P3E4{3}                  Sum      GR[3]                      1.00  Y Y Y Y
                                       T3[3]                      1.00
                                       P3[3]                      1.00
                                       E4[3]                      1.00
```

```
-----------------------------------------------------------------------------------------------------------
LERF_FRP_3m
04/24/2020                                                    BENTLEY
12:36 PM                                                      AutoPIPE Advanced 11.01.00.24  RESULT PAGE 175
-----------------------------------------------------------------------------------------------------------

                              NON-CODE COMBINATIONS

  <Description>
  Combination                 Method       Case/Combination     Factor  D/A/P/C
  -----------------------     -------- ------------------------ ------  -------
  GT3P3E5{3}                  Sum      GR[3]                      1.00  Y Y Y Y
                                       T3[3]                      1.00
                                       P3[3]                      1.00
                                       E5[3]                      1.00

  GT3P3E6{3}                  Sum      GR[3]                      1.00  Y Y Y Y
                                       T3[3]                      1.00
                                       P3[3]                      1.00
                                       E6[3]                      1.00

  GT3P3E7{3}                  Sum      GR[3]                      1.00  Y Y Y Y
                                       T3[3]                      1.00
                                       P3[3]                      1.00
                                       E7[3]                      1.00

  GT3P3E8{3}                  Sum      GR[3]                      1.00  Y Y Y Y
                                       T3[3]                      1.00
                                       P3[3]                      1.00
                                       E8[3]                      1.00

  GT3P3W1{3}                  Sum      GR[3]                      1.00  Y Y Y Y
                                       T3[3]                      1.00
                                       P3[3]                      1.00
                                       W1[3]                      1.00

  GT3P3W2{3}                  Sum      GR[3]                      1.00  Y Y Y Y
                                       T3[3]                      1.00
                                       P3[3]                      1.00
                                       W2[3]                      1.00

  GT3P3W3{3}                  Sum      GR[3]                      1.00  Y Y Y Y
                                       T3[3]                      1.00
                                       P3[3]                      1.00
                                       W3[3]                      1.00

  GT3P3W4{3}                  Sum      GR[3]                      1.00  Y Y Y Y
                                       T3[3]                      1.00
                                       P3[3]                      1.00
                                       W4[3]                      1.00

    <OMEGA FACTOR OF 2.5 ON SEISMIC>
  GT1P1E4{1}+Omega            Sum      GR[1]                      1.00  N N Y Y
                                       P1[1]                      1.00
                                       T1[1]                      1.00
                                       E4[1]                      2.50


  Notes:

  D/A/P/C: [D]efault/[A]uto-Update/[P]rint options/[C]Consistent (Y=Yes, N=No)
```

CALCULATION SHEET

Project No. S54413.024	**Calculation No.** S54413.024-M-001	**Rev.** 0	**Page No.** 133 of 192
Title: LERF Basin 41 Buried Piping Analysis			
Prepared By: JD Williams	**Date:** 5/13/20	**Checked By:** JS Huisingh	**Date:** 5/13/20

```
-----------------------------------------------------------------------------------------------------------
LERF_FRP_3m
04/24/2020                                                          BENTLEY
12:36 PM                                                            AutoPIPE Advanced 11.01.00.24  RESULT PAGE 176
-----------------------------------------------------------------------------------------------------------


   CODE COMPLIANCE

   Sustained factor      - f2............. 0.67
   Sus. + thermal factor - f2............. 0.83
   Occasional factor     - f2............. 0.89
   Minimum stress ratio used in reports... 0.00
   Number of stress points per span ...... 0
   Include corrosion in stress calcs. .... Y
   Include torsion in code stress ........ Y
   Include axial force in code stress .... Y
   Set Hoop SIF=1 (Bends) ................ N
   Set sustained/occasional SIF = 1 ...... N
   Set sustained/occasional SIF = 0.75i .. N
   Disable auto code combinations ........ N
   Disable auto non-code combinations .... N
   No. of thermal ranges to report ....... 0
   Include Max Range combination ......... N
   Total stress .......................... Octahedral
   Direct shear .......................... None
   Longitudinal pressure calculation ..... PD/4t
```

CALCULATION SHEET

Project No. S54413.024	**Calculation No.** S54413.024-M-001	**Rev.** 0	**Page No.** 134 of 192
Title: LERF Basin 41 Buried Piping Analysis			
Prepared By: JD Williams	**Date:** 5/13/20	**Checked By:** JS Huisingh	**Date:** 5/13/20

LERF_FRP_3m
04/24/2020 BENTLEY
12:36 PM AutoPIPE Advanced 11.01.00.24 RESULT PAGE 177

R E S T R A I N T R E A C T I O N S

Point name	Load combination	FORCES (lbf) X	Y	Z	Result	MOMENTS (ft-lb) X	Y	Z	Result
A00	Anchor Tag No.: <None>								
	GP1T1{1}	-2160	-37	0	2161	0	0	-63	63
	GP1T1E1{1}	-2129	-34	5	2129	0	-8	-58	58
	GP1T1E2{1}	-2129	-34	-5	2129	0	8	-58	58
	GP1T1E3{1}	-2129	-41	5	2130	0	-8	-68	68
	GP1T1E4{1}	-2129	-41	-5	2130	0	8	-68	68
	GP1T1E5{1}	-2192	-34	5	2192	0	-8	-58	58
	GP1T1E6{1}	-2192	-34	-5	2192	0	8	-58	58
	GP1T1E7{1}	-2192	-41	5	2192	0	-8	-68	68
	GP1T1E8{1}	-2192	-41	-5	2192	0	8	-68	68
	GP1T1W1{1}	-2161	-37	0	2161	0	0	-63	63
	GP1T1W2{1}	-2160	-37	0	2161	0	0	-63	63
	GP1T1W3{1}	-2160	-37	0	2161	0	0	-63	63
	GP1T1W4{1}	-2160	-37	0	2161	0	0	-63	63
	GT2P2{2}	1106	-37	0	1107	0	0	-63	63
	GT2P2E1{2}	1137	-34	5	1138	0	-8	-58	58
	GT2P2E2{2}	1137	-34	-5	1138	0	8	-58	58
	GT2P2E3{2}	1137	-41	5	1138	0	-8	-68	68
	GT2P2E4{2}	1137	-41	-5	1138	0	8	-68	68
	GT2P2E5{2}	1075	-34	5	1075	0	-8	-58	58
	GT2P2E6{2}	1075	-34	-5	1075	0	8	-58	58
	GT2P2E7{2}	1075	-41	5	1075	0	-8	-68	68
	GT2P2E8{2}	1075	-41	-5	1075	0	8	-68	68
	GT2P2W1{2}	1106	-37	0	1107	0	0	-63	63
	GT2P2W2{2}	1106	-37	0	1107	0	0	-63	63
	GT2P2W3{2}	1106	-37	0	1107	0	0	-63	63
	GT2P2W4{2}	1106	-37	0	1107	0	0	-63	63
	GT3P3{3}	-2160	-37	0	2161	0	0	-63	63
	GT3P3E1{3}	-2129	-34	5	2129	0	-8	-58	58
	GT3P3E2{3}	-2129	-34	-5	2129	0	8	-58	58
	GT3P3E3{3}	-2129	-41	5	2130	0	-8	-68	68
	GT3P3E4{3}	-2129	-41	-5	2130	0	8	-68	68
	GT3P3E5{3}	-2192	-34	5	2192	0	-8	-58	58
	GT3P3E6{3}	-2192	-34	-5	2192	0	8	-58	58
	GT3P3E7{3}	-2192	-41	5	2192	0	-8	-68	68
	GT3P3E8{3}	-2192	-41	-5	2192	0	8	-68	68
	GT3P3W1{3}	-2160	-37	0	2161	0	0	-63	63
	GT3P3W2{3}	-2160	-37	0	2161	0	0	-63	63
	GT3P3W3{3}	-2160	-37	0	2161	0	0	-63	63
	GT3P3W4{3}	-2160	-37	0	2161	0	0	-63	63
	GT1P1E4{1}+Omega	-2082	-45	-12	2083	0	20	-76	78

CALCULATION SHEET

Project No. S54413.024	**Calculation No.** S54413.024-M-001	**Rev.** 0	**Page No.** 135 of 192
Title: LERF Basin 41 Buried Piping Analysis			
Prepared By: JD Williams	**Date:** 5/13/20	**Checked By:** JS Huisingh	**Date:** 5/13/20

```
-----------------------------------------------------------------------------------------------------------------
LERF_FRP_3m
04/24/2020                                                          BENTLEY
12:36 PM                                                            AutoPIPE Advanced 11.01.00.24  RESULT PAGE 178
-----------------------------------------------------------------------------------------------------------------
```

R E S T R A I N T R E A C T I O N S

Point name	Load combination	FORCES (lbf) X	Y	Z	Result	MOMENTS (ft-lb) X	Y	Z	Result
A01	Guide Tag No.: INT [ID: A03 1]								
	GP1T1{1}	0	-75	0	75	0	0	0	0
	GP1T1E1{1}	0	-69	9	69	0	0	0	0
	GP1T1E2{1}	0	-69	-9	69	0	0	0	0
	GP1T1E3{1}	0	-81	9	82	0	0	0	0
	GP1T1E4{1}	0	-81	-9	82	0	0	0	0
	GP1T1E5{1}	0	-69	9	69	0	0	0	0
	GP1T1E6{1}	0	-69	-9	69	0	0	0	0
	GP1T1E7{1}	0	-81	9	82	0	0	0	0
	GP1T1E8{1}	0	-81	-9	82	0	0	0	0
	GP1T1W1{1}	0	-75	0	75	0	0	0	0
	GP1T1W2{1}	0	-75	0	75	0	0	0	0
	GP1T1W3{1}	0	-75	0	75	0	0	0	0
	GP1T1W4{1}	0	-75	0	75	0	0	0	0
	GT2P2{2}	0	-75	0	75	0	0	0	0
	GT2P2E1{2}	0	-69	9	69	0	0	0	0
	GT2P2E2{2}	0	-69	-9	69	0	0	0	0
	GT2P2E3{2}	0	-81	9	82	0	0	0	0
	GT2P2E4{2}	0	-81	-9	82	0	0	0	0
	GT2P2E5{2}	0	-69	9	69	0	0	0	0
	GT2P2E6{2}	0	-69	-9	69	0	0	0	0
	GT2P2E7{2}	0	-81	9	82	0	0	0	0
	GT2P2E8{2}	0	-81	-9	82	0	0	0	0
	GT2P2W1{2}	0	-75	0	75	0	0	0	0
	GT2P2W2{2}	0	-75	0	75	0	0	0	0
	GT2P2W3{2}	0	-75	0	75	0	0	0	0
	GT2P2W4{2}	0	-75	0	75	0	0	0	0
	GT3P3{3}	0	-75	0	75	0	0	0	0
	GT3P3E1{3}	0	-69	9	69	0	0	0	0
	GT3P3E2{3}	0	-69	-9	69	0	0	0	0
	GT3P3E3{3}	0	-81	9	82	0	0	0	0
	GT3P3E4{3}	0	-81	-9	82	0	0	0	0
	GT3P3E5{3}	0	-69	9	69	0	0	0	0
	GT3P3E6{3}	0	-69	-9	69	0	0	0	0
	GT3P3E7{3}	0	-81	9	82	0	0	0	0
	GT3P3E8{3}	0	-81	-9	82	0	0	0	0
	GT3P3W1{3}	0	-75	0	75	0	0	0	0
	GT3P3W2{3}	0	-75	0	75	0	0	0	0
	GT3P3W3{3}	0	-75	0	75	0	0	0	0
	GT3P3W4{3}	0	-75	0	75	0	0	0	0
	GT1P1E4{1}+Omega	0	-90	-23	93	0	0	0	0

BREAK IN DATA

CALCULATION SHEET

Project No. S54413.024	**Calculation No.** S54413.024-M-001	**Rev.** 0	**Page No.** 136 of 192
Title: LERF Basin 41 Buried Piping Analysis			
Prepared By: JD Williams	**Date:** 5/13/20	**Checked By:** JS Huisingh	**Date:** 5/13/20

```
-----------------------------------------------------------------------------------------------------------------------
LERF_FRP_3m
04/24/2020                                                                  BENTLEY
12:36 PM                                                                    AutoPIPE Advanced 11.01.00.24  RESULT PAGE 414
-----------------------------------------------------------------------------------------------------------------------

                       ISO 14692 (2002 + 2005 addenda)  CODE COMPLIANCE
                        (Moments in ft-lb  )              (Stress in psi     )
 Point  Load comb.                          Str.    S.I.F   Bend.  Press. Tors.   Code   Code   Stress
 name   /Category                  Moments  Type   In  Out  stress stress stress stress Allow.   Ratio
 ------ ---------------------    --------- ----- ---- ---- ------ ------ ------ ------ ------  ------

 *** Segment A  begin ***

 A00    GR{1}                     I      63  Hoop 1.00 1.00             0      0      0   8423   0.00
        SUST                      O       0 Axial 1.00 1.00    697      0      0    697   4324   0.16^
                                  T       0           mps =  1.00    r =  1.03    qs =  12571

        GR+P1{1}                  I      63  Hoop 1.00 1.00          1808      0   1808   8423   0.21
        SUST                      O       0 Axial 1.00 1.00    697    904      0   1601   4442   0.36^
                                  T       0           mps =  1.00    r =  1.03    qs =  12571

        GR{2}                     I      63  Hoop 1.00 1.00             0      0      0   8423   0.00
        SUST                      O       0 Axial 1.00 1.00    697      0      0    697   4324   0.16^
                                  T       0           mps =  1.00    r =  1.03    qs =  12571

        GR+P2{2}                  I      63  Hoop 1.00 1.00             0      0      0   8423   0.00
        SUST                      O       0 Axial 1.00 1.00    697      0      0    697   4324   0.16^
                                  T       0           mps =  1.00    r =  1.03    qs =  12571

        GR{3}                     I      63  Hoop 1.00 1.00             0      0      0   8423   0.00
        SUST                      O       0 Axial 1.00 1.00    697      0      0    697   4324   0.16^
                                  T       0           mps =  1.00    r =  1.03    qs =  12571

        GR+P3{3}                  I      63  Hoop 1.00 1.00          1808      0   1808   8423   0.21
        SUST                      O       0 Axial 1.00 1.00    697    904      0   1601   4442   0.36^
                                  T       0           mps =  1.00    r =  1.03    qs =  12571

        T1+P1{1}                  I       0  Hoop 1.00 1.00          1808      0   1808
        DISP                      O       0 Axial 1.00 1.00      0    904      0    905
                                  T       0           mps =  1.00    r =  1.03    qs =  12571

        T2+P2{2}                  I       0  Hoop 1.00 1.00             0      0      0
        DISP                      O       0 Axial 1.00 1.00      0      0      0      0
                                  T       0           mps =  1.00    r =  1.03    qs =  12571

        T3+P3{3}                  I       0  Hoop 1.00 1.00          1808      0   1808
        DISP                      O       0 Axial 1.00 1.00      0    904      0    904
                                  T       0           mps =  1.00    r =  1.03    qs =  12571

        GR+E1{1}                  I      58  Hoop 1.00 1.00             0      0      0  11188   0.00
         OCC                      O       8 Axial 1.00 1.00    646      0      0    646   5744   0.11^
                                  T       0           mps =  1.00    r =  1.03    qs =  12571

        GR+P1+E1{1}               I      58  Hoop 1.00 1.00          1808      0   1808  11188   0.16
         OCC                      O       8 Axial 1.00 1.00    646    904      0   1550   5862   0.26^
                                  T       0           mps =  1.00    r =  1.03    qs =  12571

        GR+E2{1}                  I      58  Hoop 1.00 1.00             0      0      0  11188   0.00
         OCC                      O       8 Axial 1.00 1.00    646      0      0    646   5744   0.11^
                                  T       0           mps =  1.00    r =  1.03    qs =  12571
```

CALCULATION SHEET

Project No. S54413.024	**Calculation No.** S54413.024-M-001	**Rev.** 0	**Page No.** 137 of 192
Title: LERF Basin 41 Buried Piping Analysis			
Prepared By: JD Williams	**Date:** 5/13/20	**Checked By:** JS Huisingh	**Date:** 5/13/20

```
-----------------------------------------------------------------------------------------------------------------
LERF_FRP_3m
04/24/2020                                                          BENTLEY
12:36 PM                                                            AutoPIPE Advanced 11.01.00.24  RESULT PAGE 415
-----------------------------------------------------------------------------------------------------------------

                      ISO 14692 (2002 + 2005 addenda)  CODE COMPLIANCE
                       (Moments in ft-lb  )             (Stress in psi     )
 Point  Load comb.                          Str.    S.I.F   Bend.  Press. Tors.   Code   Code   Stress
 name   /Category                  Moments  Type   In  Out  stress stress stress stress Allow.   Ratio
 ------ ---------------------    --------- ----- ---- ---- ------ ------ ------ ------ ------  ------

        GR+P1+E2{1}               I      58  Hoop 1.00 1.00          1808      0   1808  11188   0.16
         OCC                      O       8 Axial 1.00 1.00    646    904      0   1550   5862   0.26^
                                  T       0           mps =  1.00    r =  1.03    qs =  12571

        GR+E3{1}                  I      68  Hoop 1.00 1.00             0      0      0  11188   0.00
         OCC                      O       8 Axial 1.00 1.00    759      0      0    759   5744   0.13^
                                  T       0           mps =  1.00    r =  1.03    qs =  12571

        GR+P1+E3{1}               I      68  Hoop 1.00 1.00          1808      0   1808  11188   0.16
         OCC                      O       8 Axial 1.00 1.00    759    904      0   1663   5862   0.28^
                                  T       0           mps =  1.00    r =  1.03    qs =  12571

        GR+E4{1}                  I      68  Hoop 1.00 1.00             0      0      0  11188   0.00
         OCC                      O       8 Axial 1.00 1.00    759      0      0    759   5744   0.13^
                                  T       0           mps =  1.00    r =  1.03    qs =  12571

        GR+P1+E4{1}               I      68  Hoop 1.00 1.00          1808      0   1808  11188   0.16
         OCC                      O       8 Axial 1.00 1.00    759    904      0   1663   5862   0.28^
                                  T       0           mps =  1.00    r =  1.03    qs =  12571

        GR+E5{1}                  I      58  Hoop 1.00 1.00             0      0      0  11188   0.00
         OCC                      O       8 Axial 1.00 1.00    646      0      0    646   5744   0.11^
                                  T       0           mps =  1.00    r =  1.03    qs =  12571

        GR+P1+E5{1}               I      58  Hoop 1.00 1.00          1808      0   1808  11188   0.16
         OCC                      O       8 Axial 1.00 1.00    646    904      0   1550   5862   0.26^
                                  T       0           mps =  1.00    r =  1.03    qs =  12571

        GR+E6{1}                  I      58  Hoop 1.00 1.00             0      0      0  11188   0.00
         OCC                      O       8 Axial 1.00 1.00    646      0      0    646   5744   0.11^
                                  T       0           mps =  1.00    r =  1.03    qs =  12571

        GR+P1+E6{1}               I      58  Hoop 1.00 1.00          1808      0   1808  11188   0.16
         OCC                      O       8 Axial 1.00 1.00    646    904      0   1550   5862   0.26^
                                  T       0           mps =  1.00    r =  1.03    qs =  12571

        GR+E7{1}                  I      68  Hoop 1.00 1.00             0      0      0  11188   0.00
         OCC                      O       8 Axial 1.00 1.00    759      0      0    759   5744   0.13^
                                  T       0           mps =  1.00    r =  1.03    qs =  12571

        GR+P1+E7{1}               I      68  Hoop 1.00 1.00          1808      0   1808  11188   0.16
         OCC                      O       8 Axial 1.00 1.00    759    904      0   1663   5862   0.28^
                                  T       0           mps =  1.00    r =  1.03    qs =  12571

        GR+E8{1}                  I      68  Hoop 1.00 1.00             0      0      0  11188   0.00
         OCC                      O       8 Axial 1.00 1.00    759      0      0    759   5744   0.13^
                                  T       0           mps =  1.00    r =  1.03    qs =  12571
```

BREAK IN DATA

CALCULATION SHEET

Project No. S54413.024	**Calculation No.** S54413.024-M-001	**Rev.** 0	**Page No.** 138 of 192
Title: LERF Basin 41 Buried Piping Analysis			
Prepared By: JD Williams	**Date:** 5/13/20	**Checked By:** JS Huisingh	**Date:** 5/13/20

```
-----------------------------------------------------------------------------------------------------------------
LERF_FRP_3m
04/24/2020                                                          BENTLEY
12:36 PM                                                            AutoPIPE Advanced 11.01.00.24  RESULT PAGE****
-----------------------------------------------------------------------------------------------------------------

                       ISO 14692 (2002 + 2005 addenda)  CODE COMPLIANCE
                        (Moments in ft-lb  )             (Stress in psi     )
 Point  Load comb.                          Str.    S.I.F   Bend.  Press. Tors.   Code   Code   Stress
 name   /Category                  Moments  Type   In  Out  stress stress stress stress Allow.   Ratio
 ------ ---------------------    --------- ----- ---- ---- ------ ------ ------ ------ ------  ------

        GR+P1+E8{1}               I      17  Hoop 1.00 1.00      0   1416     26   1417  11188   0.13
         OCC                      O       1 Axial 1.00 1.00     60    708     26    770   5836   0.13^
                                  T      10           mps =  1.00    r =  1.03    qs =  12571

        GR+W1{1}                  I      15  Hoop 1.00 1.00      0      0     29     59  11188   0.01
         OCC                      O       0 Axial 1.00 1.00     55      0     29     81   5748   0.01^
                                  T      11           mps =  1.00    r =  1.03    qs =  12571

        GR+P1+W1{1}               I      15  Hoop 1.00 1.00      0   1416     28   1417  11188   0.13
         OCC                      O       2 Axial 1.00 1.00     56    708     28    766   5836   0.13^
                                  T      10           mps =  1.00    r =  1.03    qs =  12571

        GR+W2{1}                  I      15  Hoop 1.00 1.00      0      0     25     50  11188   0.00
         OCC                      O       0 Axial 1.00 1.00     56      0     25     75   5747   0.01^
                                  T       9           mps =  1.00    r =  1.03    qs =  12571

        GR+P1+W2{1}               I      15  Hoop 1.00 1.00      0   1416     24   1417  11188   0.13
         OCC                      O       2 Axial 1.00 1.00     56    708     24    766   5836   0.13^
                                  T       9           mps =  1.00    r =  1.03    qs =  12571

        GR+W3{1}                  I      15  Hoop 1.00 1.00      0      0     42     83  11188   0.01
         OCC                      O      17 Axial 1.00 1.00     83      0     42    118   5749   0.02^
                                  T      15           mps =  1.00    r =  1.03    qs =  12571

        GR+P1+W3{1}               I      15  Hoop 1.00 1.00      0   1416     40   1418  11188   0.13
         OCC                      O      15 Axial 1.00 1.00     78    708     40    790   5836   0.14^
                                  T      15           mps =  1.00    r =  1.03    qs =  12571

        GR+W4{1}                  I      16  Hoop 1.00 1.00      0      0     11     22  11188   0.00
         OCC                      O       4 Axial 1.00 1.00     59      0     11     63   5745   0.01^
                                  T       4           mps =  1.00    r =  1.03    qs =  12571

        GR+P1+W4{1}               I      16  Hoop 1.00 1.00      0   1416     10   1416  11188   0.13
         OCC                      O       2 Axial 1.00 1.00     57    708     10    766   5836   0.13^
                                  T       4           mps =  1.00    r =  1.03    qs =  12571

        GR+E1{2}                  I      14  Hoop 1.00 1.00      0      0     27     55  11188   0.00
         OCC                      O       1 Axial 1.00 1.00     51      0     27     75   5748   0.01^
                                  T      10           mps =  1.00    r =  1.03    qs =  12571

        GR+P2+E1{2}               I      14  Hoop 1.00 1.00      0      0     27     55  11188   0.00
         OCC                      O       1 Axial 1.00 1.00     51      0     27     75   5748   0.01^
                                  T      10           mps =  1.00    r =  1.03    qs =  12571

        GR+E2{2}                  I      15  Hoop 1.00 1.00      0      0      4      8  11188   0.00
         OCC                      O       7 Axial 1.00 1.00     59      0      4     60   5745   0.01^
                                  T       2           mps =  1.00    r =  1.03    qs =  12571
```

CALCULATION SHEET

Project No. S54413.024	**Calculation No.** S54413.024-M-001	**Rev.** 0	**Page No.** 139 of 192
Title: LERF Basin 41 Buried Piping Analysis			
Prepared By: JD Williams	**Date:** 5/13/20	**Checked By:** JS Huisingh	**Date:** 5/13/20

```
-----------------------------------------------------------------------------------------------------------------
LERF_FRP_3m
04/24/2020                                                          BENTLEY
12:36 PM                                                            AutoPIPE Advanced 11.01.00.24  RESULT PAGE****
-----------------------------------------------------------------------------------------------------------------

                       ISO 14692 (2002 + 2005 addenda)  CODE COMPLIANCE
                        (Moments in ft-lb  )             (Stress in psi     )
 Point  Load comb.                          Str.    S.I.F   Bend.  Press. Tors.   Code   Code   Stress
 name   /Category                  Moments  Type   In  Out  stress stress stress stress Allow.   Ratio
 ------ ---------------------    --------- ----- ---- ---- ------ ------ ------ ------ ------  ------

        GR+P2+E2{2}               I      15  Hoop 1.00 1.00      0      0      4      8  11188   0.00
         OCC                      O       7 Axial 1.00 1.00     59      0      4     60   5745   0.01^
                                  T       2           mps =  1.00    r =  1.03    qs =  12571

        GR+E3{2}                  I      16  Hoop 1.00 1.00      0      0     32     64  11188   0.01
         OCC                      O       1 Axial 1.00 1.00     60      0     32     88   5748   0.02^
                                  T      12           mps =  1.00    r =  1.03    qs =  12571

        GR+P2+E3{2}               I      16  Hoop 1.00 1.00      0      0     32     64  11188   0.01
         OCC                      O       1 Axial 1.00 1.00     60      0     32     88   5748   0.02^
                                  T      12           mps =  1.00    r =  1.03    qs =  12571

        GR+E4{2}                  I      17  Hoop 1.00 1.00      0      0      0      1  11188   0.00
         OCC                      O       7 Axial 1.00 1.00     67      0      0     67   5744   0.01^
                                  T       0           mps =  1.00    r =  1.03    qs =  12571

        GR+P2+E4{2}               I      17  Hoop 1.00 1.00      0      0      0      1  11188   0.00
         OCC                      O       7 Axial 1.00 1.00     67      0      0     67   5744   0.01^
                                  T       0           mps =  1.00    r =  1.03    qs =  12571

        GR+E5{2}                  I      13  Hoop 1.00 1.00      0      0     54    108  11188   0.01
         OCC                      O      16 Axial 1.00 1.00     76      0     54    132   5751   0.02^
                                  T      20           mps =  1.00    r =  1.03    qs =  12571

        GR+P2+E5{2}               I      13  Hoop 1.00 1.00      0      0     54    108  11188   0.01
         OCC                      O      16 Axial 1.00 1.00     76      0     54    132   5751   0.02^
                                  T      20           mps =  1.00    r =  1.03    qs =  12571

        GR+E6{2}                  I      14  Hoop 1.00 1.00      0      0     23     47  11188   0.00
         OCC                      O       1 Axial 1.00 1.00     51      0     23     69   5747   0.01^
                                  T       9           mps =  1.00    r =  1.03    qs =  12571

        GR+P2+E6{2}               I      14  Hoop 1.00 1.00      0      0     23     47  11188   0.00
         OCC                      O       1 Axial 1.00 1.00     51      0     23     69   5747   0.01^
                                  T       9           mps =  1.00    r =  1.03    qs =  12571

        GR+E7{2}                  I      16  Hoop 1.00 1.00      0      0     59    117  11188   0.01
         OCC                      O      16 Axial 1.00 1.00     82      0     59    143   5752   0.02^
                                  T      21           mps =  1.00    r =  1.03    qs =  12571

        GR+P2+E7{2}               I      16  Hoop 1.00 1.00      0      0     59    117  11188   0.01
         OCC                      O      16 Axial 1.00 1.00     82      0     59    143   5752   0.02^
                                  T      21           mps =  1.00    r =  1.03    qs =  12571

        GR+E8{2}                  I      17  Hoop 1.00 1.00      0      0     28     56  11188   0.00
         OCC                      O       1 Axial 1.00 1.00     60      0     28     82   5748   0.01^
                                  T      10           mps =  1.00    r =  1.03    qs =  12571
```

CALCULATION SHEET

Project No. S54413.024	**Calculation No.** S54413.024-M-001	**Rev.** 0	**Page No.** 140 of 192
Title: LERF Basin 41 Buried Piping Analysis			
Prepared By: JD Williams	**Date:** 5/13/20	**Checked By:** JS Huisingh	**Date:** 5/13/20

```
-----------------------------------------------------------------------------------------------------------------
LERF_FRP_3m
04/24/2020                                                          BENTLEY
12:36 PM                                                            AutoPIPE Advanced 11.01.00.24  RESULT PAGE****
-----------------------------------------------------------------------------------------------------------------

                       ISO 14692 (2002 + 2005 addenda)  CODE COMPLIANCE
                        (Moments in ft-lb  )             (Stress in psi     )
 Point  Load comb.                          Str.    S.I.F   Bend.  Press. Tors.   Code   Code   Stress
 name   /Category                  Moments  Type   In  Out  stress stress stress stress Allow.   Ratio
 ------ ---------------------    --------- ----- ---- ---- ------ ------ ------ ------ ------  ------

        GR+P2+E8{2}               I      17  Hoop 1.00 1.00      0      0     28     56  11188   0.00
         OCC                      O       1 Axial 1.00 1.00     60      0     28     82   5748   0.01^
                                  T      10           mps =  1.00    r =  1.03    qs =  12571

        GR+W1{2}                  I      15  Hoop 1.00 1.00      0      0     29     58  11188   0.01
         OCC                      O       0 Axial 1.00 1.00     55      0     29     81   5748   0.01^
                                  T      11           mps =  1.00    r =  1.03    qs =  12571

        GR+P2+W1{2}               I      15  Hoop 1.00 1.00      0      0     29     58  11188   0.01
         OCC                      O       0 Axial 1.00 1.00     55      0     29     81   5748   0.01^
                                  T      11           mps =  1.00    r =  1.03    qs =  12571

        GR+W2{2}                  I      15  Hoop 1.00 1.00      0      0     26     51  11188   0.00
         OCC                      O       1 Axial 1.00 1.00     56      0     26     76   5747   0.01^
                                  T       9           mps =  1.00    r =  1.03    qs =  12571

        GR+P2+W2{2}               I      15  Hoop 1.00 1.00      0      0     26     51  11188   0.00
         OCC                      O       1 Axial 1.00 1.00     56      0     26     76   5747   0.01^
                                  T       9           mps =  1.00    r =  1.03    qs =  12571

        GR+W3{2}                  I      15  Hoop 1.00 1.00      0      0     44     87  11188   0.01
         OCC                      O       4 Axial 1.00 1.00     56      0     44    103   5750   0.02^
                                  T      16           mps =  1.00    r =  1.03    qs =  12571

        GR+P2+W3{2}               I      15  Hoop 1.00 1.00      0      0     44     87  11188   0.01
         OCC                      O       4 Axial 1.00 1.00     56      0     44    103   5750   0.02^
                                  T      16           mps =  1.00    r =  1.03    qs =  12571

        GR+W4{2}                  I      16  Hoop 1.00 1.00      0      0     13     25  11188   0.00
         OCC                      O      18 Axial 1.00 1.00     86      0     13     89   5746   0.02^
                                  T       5           mps =  1.00    r =  1.03    qs =  12571

        GR+P2+W4{2}               I      16  Hoop 1.00 1.00      0      0     13     25  11188   0.00
         OCC                      O      18 Axial 1.00 1.00     86      0     13     89   5746   0.02^
                                  T       5           mps =  1.00    r =  1.03    qs =  12571

        GR+E1{3}                  I      14  Hoop 1.00 1.00      0      0     26     53  11188   0.00
         OCC                      O       1 Axial 1.00 1.00     51      0     26     73   5747   0.01^
                                  T      10           mps =  1.00    r =  1.03    qs =  12571

        GR+P3+E1{3}               I      14  Hoop 1.00 1.00      0   4248     24   4248  11188   0.38^
         OCC                      O       5 Axial 1.00 1.00     54   2124     24   2179   6020   0.36
                                  T       9           mps =  1.00    r =  1.03    qs =  12571

        GR+E2{3}                  I      15  Hoop 1.00 1.00      0      0      4      9  11188   0.00
         OCC                      O      16 Axial 1.00 1.00     80      0      4     81   5745   0.01^
                                  T       2           mps =  1.00    r =  1.03    qs =  12571
```

CALCULATION SHEET

Project No. S54413.024	**Calculation No.** S54413.024-M-001	**Rev.** 0	**Page No.** 141 of 192
Title: LERF Basin 41 Buried Piping Analysis			
Prepared By: JD Williams	**Date:** 5/13/20	**Checked By:** JS Huisingh	**Date:** 5/13/20

```
-----------------------------------------------------------------------------------------------------------------
LERF_FRP_3m
04/24/2020                                                          BENTLEY
12:36 PM                                                            AutoPIPE Advanced 11.01.00.24  RESULT PAGE****
-----------------------------------------------------------------------------------------------------------------

                       ISO 14692 (2002 + 2005 addenda)  CODE COMPLIANCE
                        (Moments in ft-lb  )             (Stress in psi     )
 Point  Load comb.                          Str.    S.I.F   Bend.  Press. Tors.   Code   Code   Stress
 name   /Category                  Moments  Type   In  Out  stress stress stress stress Allow.   Ratio
 ------ ---------------------    --------- ----- ---- ---- ------ ------ ------ ------ ------  ------

        GR+P3+E2{3}               I      15  Hoop 1.00 1.00      0   4248      6   4248  11188   0.38^
         OCC                      O      10 Axial 1.00 1.00     65   2124      6   2189   6020   0.36
                                  T       2           mps =  1.00    r =  1.03    qs =  12571

        GR+E3{3}                  I      16  Hoop 1.00 1.00      0      0     31     62  11188   0.01
         OCC                      O       1 Axial 1.00 1.00     60      0     31     86   5748   0.01^
                                  T      11           mps =  1.00    r =  1.03    qs =  12571

        GR+P3+E3{3}               I      17  Hoop 1.00 1.00      0   4248     29   4248  11188   0.38^
         OCC                      O       5 Axial 1.00 1.00     63   2124     29   2188   6020   0.36
                                  T      11           mps =  1.00    r =  1.03    qs =  12571

        GR+E4{3}                  I      17  Hoop 1.00 1.00      0      0      0      0  11188   0.00
         OCC                      O      16 Axial 1.00 1.00     87      0      0     87   5744   0.02^
                                  T       0           mps =  1.00    r =  1.03    qs =  12571

        GR+P3+E4{3}               I      17  Hoop 1.00 1.00      0   4248      2   4248  11188   0.38^
         OCC                      O      10 Axial 1.00 1.00     73   2124      2   2196   6020   0.36
                                  T       1           mps =  1.00    r =  1.03    qs =  12571

        GR+E5{3}                  I      13  Hoop 1.00 1.00      0      0     54    108  11188   0.01
         OCC                      O       7 Axial 1.00 1.00     56      0     54    121   5751   0.02^
                                  T      20           mps =  1.00    r =  1.03    qs =  12571

        GR+P3+E5{3}               I      13  Hoop 1.00 1.00      0   4248     52   4249  11188   0.38^
         OCC                      O       1 Axial 1.00 1.00     49   2124     52   2175   6021   0.36
                                  T      19           mps =  1.00    r =  1.03    qs =  12571

        GR+E6{3}                  I      14  Hoop 1.00 1.00      0      0     22     44  11188   0.00
         OCC                      O       1 Axial 1.00 1.00     51      0     22     68   5747   0.01^
                                  T       8           mps =  1.00    r =  1.03    qs =  12571

        GR+P3+E6{3}               I      14  Hoop 1.00 1.00      0   4248     20   4248  11188   0.38^
         OCC                      O       5 Axial 1.00 1.00     55   2124     20   2179   6020   0.36
                                  T       7           mps =  1.00    r =  1.03    qs =  12571

        GR+E7{3}                  I      16  Hoop 1.00 1.00      0      0     58    116  11188   0.01
         OCC                      O       7 Axial 1.00 1.00     64      0     58    133   5752   0.02^
                                  T      21           mps =  1.00    r =  1.03    qs =  12571

        GR+P3+E7{3}               I      16  Hoop 1.00 1.00      0   4248     56   4249  11188   0.38^
         OCC                      O       1 Axial 1.00 1.00     58   2124     56   2185   6021   0.36
                                  T      21           mps =  1.00    r =  1.03    qs =  12571

        GR+E8{3}                  I      17  Hoop 1.00 1.00      0      0     27     53  11188   0.00
         OCC                      O       1 Axial 1.00 1.00     60      0     27     81   5748   0.01^
                                  T      10           mps =  1.00    r =  1.03    qs =  12571
```

CALCULATION SHEET

Project No. S54413.024	**Calculation No.** S54413.024-M-001	**Rev.** 0	**Page No.** 142 of 192
Title: LERF Basin 41 Buried Piping Analysis			
Prepared By: JD Williams	**Date:** 5/13/20	**Checked By:** JS Huisingh	**Date:** 5/13/20

```
-----------------------------------------------------------------------------------------------------------------
LERF_FRP_3m
04/24/2020                                                          BENTLEY
12:36 PM                                                            AutoPIPE Advanced 11.01.00.24  RESULT PAGE****
-----------------------------------------------------------------------------------------------------------------

                       ISO 14692 (2002 + 2005 addenda)  CODE COMPLIANCE
                        (Moments in ft-lb  )             (Stress in psi     )
 Point  Load comb.                          Str.    S.I.F   Bend.  Press. Tors.   Code   Code   Stress
 name   /Category                  Moments  Type   In  Out  stress stress stress stress Allow.   Ratio
 ------ ---------------------    --------- ----- ---- ---- ------ ------ ------ ------ ------  ------

        GR+P3+E8{3}               I      17  Hoop 1.00 1.00      0   4248     25   4248  11188   0.38^
         OCC                      O       5 Axial 1.00 1.00     63   2124     25   2188   6020   0.36
                                  T       9           mps =  1.00    r =  1.03    qs =  12571

        GR+W1{3}                  I      15  Hoop 1.00 1.00      0      0     29     57  11188   0.01
         OCC                      O       2 Axial 1.00 1.00     56      0     29     80   5748   0.01^
                                  T      11           mps =  1.00    r =  1.03    qs =  12571

        GR+P3+W1{3}               I      15  Hoop 1.00 1.00      0   4248     27   4248  11188   0.38^
         OCC                      O       5 Axial 1.00 1.00     58   2124     27   2183   6020   0.36
                                  T      10           mps =  1.00    r =  1.03    qs =  12571

        GR+W2{3}                  I      15  Hoop 1.00 1.00      0      0     25     50  11188   0.00
         OCC                      O       0 Axial 1.00 1.00     56      0     25     75   5747   0.01^
                                  T       9           mps =  1.00    r =  1.03    qs =  12571

        GR+P3+W2{3}               I      15  Hoop 1.00 1.00      0   4248     23   4248  11188   0.38^
         OCC                      O       6 Axial 1.00 1.00     60   2124     23   2185   6020   0.36
                                  T       8           mps =  1.00    r =  1.03    qs =  12571

        GR+W3{3}                  I      15  Hoop 1.00 1.00      0      0     42     83  11188   0.01
         OCC                      O      18 Axial 1.00 1.00     85      0     42    119   5749   0.02^
                                  T      15           mps =  1.00    r =  1.03    qs =  12571

        GR+P3+W3{3}               I      15  Hoop 1.00 1.00      0   4248     40   4248  11188   0.38^
         OCC                      O      12 Axial 1.00 1.00     69   2124     40   2194   6021   0.36
                                  T      15           mps =  1.00    r =  1.03    qs =  12571

        GR+W4{3}                  I      16  Hoop 1.00 1.00      0      0     11     22  11188   0.00
         OCC                      O       4 Axial 1.00 1.00     59      0     11     63   5745   0.01^
                                  T       4           mps =  1.00    r =  1.03    qs =  12571

        GR+P3+W4{3}               I      16  Hoop 1.00 1.00      0   4248      9   4248  11188   0.38^
         OCC                      O       2 Axial 1.00 1.00     57   2124      9   2181   6020   0.36
                                  T       3           mps =  1.00    r =  1.03    qs =  12571

        GR+T1+P1{1}               I      15  Hoop 1.00 1.00      0   1416     23   1417  10434   0.14
        COMB                      O       9 Axial 1.00 1.00     64    708     23    773   5449   0.14^
                                  T       8           mps =  1.00    r =  1.03    qs =  12571

        GR+T2+P2{2}               I      15  Hoop 1.00 1.00      0      0     30     61  10434   0.01
        COMB                      O       9 Axial 1.00 1.00     65      0     30     89   5361   0.02^
                                  T      11           mps =  1.00    r =  1.03    qs =  12571

        GR+T3+P3{3}               I      15  Hoop 1.00 1.00      0   4248     24   4248  10434   0.41^
        COMB                      O       9 Axial 1.00 1.00     65   2124     24   2190   5633   0.39
                                  T       9           mps =  1.00    r =  1.03    qs =  12571

 *** Segment AD end   ***
```

CALCULATION SHEET

Project No. S54413.024	**Calculation No.** S54413.024-M-001	**Rev.** 0	**Page No.** 143 of 192
Title: LERF Basin 41 Buried Piping Analysis			
Prepared By: JD Williams	**Date:** 5/13/20	**Checked By:** JS Huisingh	**Date:** 5/13/20

```
-----------------------------------------------------------------------------------------------------------
LERF_FRP_3m
04/24/2020                                                    BENTLEY
12:36 PM                                                      AutoPIPE Advanced 11.01.00.24  RESULT PAGE****
-----------------------------------------------------------------------------------------------------------


                         R E S U L T   S U M M A R Y
                         ---------------------------




 Maximum restraint forces (lb)
 -----------------------------

          Maximum X :     -3846      Point : W07        Load Comb.: GT3P3W2{3}
          Maximum Y :     -1594      Point : 5222       Load Comb.: GT1P1E4{1}+Omega
          Maximum Z :     -3339      Point : W09        Load Comb.: GT3P3W2{3}
          Max. total:      3847      Point : W07        Load Comb.: GT3P3W2{3}

 Maximum restraint moments (ft-lb)
 ---------------------------------

          Maximum X :      1651      Point : 5300       Load Comb.: GT2P2W3{2}
          Maximum Y :      -722      Point : W73        Load Comb.: GT1P1E4{1}+Omega
          Maximum Z :     -1677      Point : 5300       Load Comb.: GP1T1W4{1}
          Max. total:      2304      Point : 5300       Load Comb.: GP1T1W4{1}
```

CALCULATION SHEET

Project No. S54413.024	**Calculation No.** S54413.024-M-001	**Rev.** 0	**Page No.** 144 of 192
Title: LERF Basin 41 Buried Piping Analysis			
Prepared By: JD Williams	**Date:** 5/13/20	**Checked By:** JS Huisingh	**Date:** 5/13/20

```
-----------------------------------------------------------------------------------------------------------
LERF_FRP_3m
04/24/2020                                                    BENTLEY
12:36 PM                                                      AutoPIPE Advanced 11.01.00.24  RESULT PAGE****
-----------------------------------------------------------------------------------------------------------


                         R E S U L T    S U M M A R Y
                         ----------------------------



     Maximum sustained stress

                           Point            : R16
                           Stress    psi    : 14684
                           Allowable psi    : 186856
                           Ratio            : 0.08
                           Load combination : GR+P1{1}

     Maximum displacement stress

                           Point            : R16
                           Stress    psi    : 14678
                           Allowable psi    : 0
                           Ratio            : 0.00
                           Load combination : T1+P1{1}

     Maximum occasional stress

                           Point            : R16
                           Stress    psi    : 14685
                           Allowable psi    : 248212
                           Ratio            : 0.06
                           Load combination : GR+P1+E3{1}

     Maximum combined stress

                           Point            : R16
                           Stress    psi    : 14684
                           Allowable psi    : 231479
                           Ratio            : 0.06
                           Load combination : GR+T1+P1{1}
```

CALCULATION SHEET

Project No. S54413.024	**Calculation No.** S54413.024-M-001	**Rev.** 0	**Page No.** 145 of 192
Title: LERF Basin 41 Buried Piping Analysis			
Prepared By: JD Williams	**Date:** 5/13/20	**Checked By:** JS Huisingh	**Date:** 5/13/20

```
-----------------------------------------------------------------------------------------------------------
LERF_FRP_3m
04/24/2020                                                    BENTLEY
12:36 PM                                                      AutoPIPE Advanced 11.01.00.24  RESULT PAGE****
-----------------------------------------------------------------------------------------------------------


                         R E S U L T    S U M M A R Y
                         ----------------------------



     Maximum sustained stress ratio

                           Point            : AC05
                           Stress    psi    : 3868
                           Allowable psi    : 4689
                           Ratio            : 0.82
                           Load combination : GR+P3{3}

     Maximum displacement stress ratio

                           Point            : A00
                           Stress    psi    : 1808
                           Allowable psi    : 0
                           Ratio            : 0.00
                           Load combination : T1+P1{1}

     Maximum occasional stress ratio

                           Point            : W58
                           Stress    psi    : 5059
                           Allowable psi    : 6111
                           Ratio            : 0.83
                           Load combination : GR+P3+E4{3}

     Maximum combined stress ratio

                           Point            : X40
                           Stress    psi    : 4396
                           Allowable psi    : 5487
                           Ratio            : 0.80
                           Load combination : GR+T1+P1{1}



     * * * The system satisfies ISO 14692 (2002 + 2005 addenda) code requirements * * *
     * * * for the selected options                                               * * *

           Warnings:
           (1) Maximum displacement stress ratio is zero
```

CALCULATION SHEET

Project No. S54413.024	**Calculation No.** S54413.024-M-001	**Rev.** 0	**Page No.** 146 of 192
Title: LERF Basin 41 Buried Piping Analysis			
Prepared By: JD Williams	**Date:** 5/13/20	**Checked By:** JS Huisingh	**Date:** 5/13/20

ATTACHMENT 1

AUTOPIPE SOIL MODELING INFORMATION

Sargent & Lundy Engineering Services, Inc.

CALCULATION SHEET

Project No. S54413.024	**Calculation No.** S54413.024-M-001	**Rev.** 0	**Page No.** 147 of 192
Title: LERF Basin 41 Buried Piping Analysis			
Prepared By: JD Williams	**Date:** 5/13/20	**Checked By:** JS Huisingh	**Date:** 5/13/20

TABLE D-2
Unified Soil Classification System (ASTM D-2487)

Major Divisions		Grp Sym	Soil Description	Lab Classification Criteria: General	Lab Classification Criteria: % Finer than #200 Sieve (Note 2)
Coarse-Grained Soils (over 50% by weight retained on No. 200 sieve)	Gravelly Soils (over 50% of coarse fraction retained on No. 4 sieve)	GW	Well graded gravels, gravel-sand mixtures, little or no fines	$C_u > 4$ and $1 < C_z < 3$	Less than 5
		GP	Poorly graded gravels, gravel-sand mixtures, little or no fines	not meeting both criteria for GW	Less than 5
		GM	Silty gravels, gravel-sand-silt mixtures	Atterberg limits plot below "A-line", or $I_p < 4$ (see Note 1)	More than 12
		GC	Clayey gravels, gravel-sand-clay mixtures	Atterberg limits plot above "A-line" and $I_p > 7$ (see Note 1)	More than 12
	Sandy Soils (over 50% of coarse fraction passes thru No. 4 sieve)	SW	Well graded sands, gravelly sands, little or no fines	$C_u > 6$ and $1 < C_z < 3$	Less than 5
		SP	Poorly graded sands, gravelly sands, little or no fines	not meeting both criteria for SW	Less than 5
		SM	Silty sands, sand-silt mixtures	Atterberg limits plot below "A-line", or $I_p < 4$ (see Note 1)	More than 12
		SC	Clayey sands, sand-clay mixtures	Atterberg limits plot above "A-line" and $I_p > 7$ (see Note 1)	More than 12
Fine-Grained Soils (over 50% by weight passes thru No 200 sieve)	Silts & Clays (W_L <50%)	ML	Inorganic silts & very fine sands, rock flour, silty or clayey fine sands, or clayey silts with slight plasticity	Use the Plasticity chart (Figure D-9) for classification of fine-grained soils and fine fraction of coarse-grained soils. (see Note 1)	
		CL	Inorganic clays of low to medium plasticity, gravelly clays, sandy clays, silty clays, lean clays		
		OL	Organic silts and organic silty clays of low plasticity		
	Silts & Clays (W_L >50%)	MH	Inorganic silts, micaceous or diatomaceous fine sandy or silty soils, elastic silts		
		CH	Inorganic clays of high plasticity, fat clays		
		OH	Organic clays of medium to high plasticity, organic silts		
	Highly Organic Soils	Pt	Peat, muck and other highly organic soils	Visual-manual identification	

NOTES

1. Atterberg limits plotting in the hatched area (see Figure D-9) are borderline classifications requiring use of dual Group Symbols. The equation of the "A-line" is as follows: $I_P = 0.73(W_L - 20)$
2. For soils having 5 to 12% of fines passing through a No. 200 sieve, use dual Group Symbols (e.g. GW-GC).
3. Variable Definitions:

C_u = uniformity coefficient

I_p = plasticity index (%)

= coefficient of curvature

CALCULATION SHEET

Project No. S54413.024	**Calculation No.** S54413.024-M-001	**Rev.** 0	**Page No.** 148 of 192
Title: LERF Basin 41 Buried Piping Analysis			
Prepared By: JD Williams	**Date:** 5/13/20	**Checked By:** JS Huisingh	**Date:** 5/13/20

C_z

w_L = liquid limit (%)

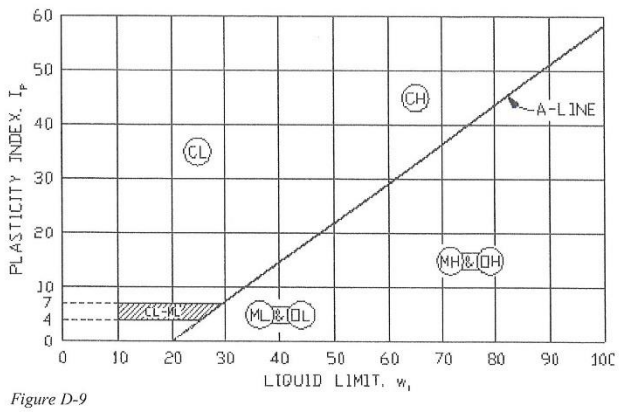

Figure D-9

TABLE D-3
Summary of Estimated Soil Properties

Group Symbol	Coarse Material Content	at 100 % comp	at ≈ 94% compaction					at ≈ 80 % compaction				
			Assumed					Assumed				
		γ_{dry} (lb/ft3)	γ_{dry} (lb/ft3)	H_2O Content (%)	γ_{Tot} (lb/ft³)	ϕ (°)	C (lb/ft²)	γ_{dry} (lb/ft3)	H_2O Content (%)	γ_{Tot} (lb/ft³)	ϕ (°)	C (lb/ft²)
ML	< 5%	105	99	18	117	32	1000	85	25	106	30	190
CL	< 5%	105	99	18	117	30	800	85	25	106	28	270
ML	5-25%	120	113	13	128	34	1000	95	20	114	30	190
CL	5-25%	120	113	13	128	30	800	95	20	114	28	270
ML	25-50%	130	122	9	133	34	1000	105	15	121	30	190
CL	25-50%	130	122	9	133	30	800	105	15	121	28	270
MH	< 5%	105	99	21	120	30	1000	85	30	111	28	400
CH	< 5%	105	99	21	120	21	900	85	30	111	19	300
MH	5-25%	120	113	16	131	32	1000	95	25	119	30	400
CH	5-25%	120	113	16	131	21	900	95	25	119	19	300
MH	25-50%	130	122	13	138	32	1000	105	20	126	28	400
CH	25-50%	130	122	13	138	21	900	105	20	126	19	300
SM		122	115	12	129	34	450	105	15	121	32	400
SC		122	115	12	129	32	300	105	15	121	29	230
SW		132	124	9	135	39		115	10	127	38	
SP		115	108	9	118	38		105	10	116	37	
GM		140	132	8	142	40		120	10	132	35	
GC		140	132	7	141	40		120	10	132	33	
GW		140	132	4	137	42		125	5	131	39	
GP		125	118	4	122	42		110	5	116	38	

$c = 0$
$\phi = 40$
$\gamma = 125$

The properties for soil backfill around a buried pipe can vary greatly depending on the type of soil, and the degree of backfill compaction. General guidelines for estimating soil properties based on these factors are summarized in Table D-4.

CALCULATION SHEET

Project No. S54413.024	**Calculation No.** S54413.024-M-001	**Rev.** 0	**Page No.** 149 of 192
Title: LERF Basin 41 Buried Piping Analysis			
Prepared By: JD Williams	**Date:** 5/13/20	**Checked By:** JS Huisingh	**Date:** 5/13/20

ATTACHMENT 2

NEW FRP PIPE DATA (CONLEY COMPOSITES)

- Series 40 Pipe Data
- Series 30 Pipe Data
- Double Containment Pipe Properties
- Buried Pipe Data
- Fitting-in-Fitting Dimensions
- Fitting Thicknesses (Email from Conley Rep.)
- ISO 14692 Code Explanation (Email from Conley Rep.)
- ASTM D2992-01 Calculation, Regression, & Test Data
- ISO 14692 Design Envelope
- Connecting to Existing FRP Pipe (Email from Conley Rep.)

CALCULATION SHEET

Project No. S54413.024	**Calculation No.** S54413.024-M-001	**Rev.** 0	**Page No.** 150 of 192
Title: LERF Basin 41 Buried Piping Analysis			
Prepared By: JD Williams	**Date:** 5/13/20	**Checked By:** JS Huisingh	**Date:** 5/13/20

Conley Composites
an ANDRONACO INDUSTRIES company

EPOXY SCHEDULE 40 EXTRA HEAVY DUTY PIPING

ASTM DESIGNATION CODE RTRP-11FW1-2113

Conley Product Data

RUGGED TOP OF THE LINE PERFORMANCE ~ AFFORDABLE COST

Description

- Extra heavy wall filament wound piping for service up to 300 psi
- 60 mil double Nexus® reinforced corrosion barrier (inner liner)
- Premium aromatic amine cured product for operating temperatures up to 275°F
- Sizes available from 1" through 30"
- Complete line of filament wound fittings available
- In house fabrication facilities "From your blueprints to pipe assemblies"
- Color coding available
- Conductive systems available
- Fire-resistant systems available
- See Sch 40 Piping Specification

Typical Applications

- Waste water treatment
- Steel pickling
- Solvents
- Petrochemical
- Pharmaceutical
- Chemical processing
- Brine (salts) and brackish water
- Jet fuel
- Gasoline – Diesel – Fuel Oil
- Cooling water
- Odor control
- Industrial waste
- Food and beverages
- Bridge, roof and floor drains

Performance

- Excellent chemical resistance inside and outside to a variety of caustics, acids, brines, and petroleum products ~ See the chemical resistance chart for fluid services
- External UV/Corrosion barrier minimum 20 mil on all pipe and fittings
- 25 year guarantee against *'fiber blooming'* on all pipe and fittings
- Straight socket joining system (No expensive tapering tools required)

Specifications

- ASTM D2996 Filament-Wound "Fiberglass" Pipe
- ASTM D2310 Classification for Machine-Made "Fiberglass" Pipe
- ASTM D3567 Determining Dimensions of "Fiberglass" Pipe and Fittings
- ASTM D4024 Machine Made "Fiberglass" Flanges
- ASTM D5685 "Fiberglass" Pressure Pipe Fittings

Codes & Standards

- AWWA C950 Fiberglass Pressure Pipe Standards
- ASME B31.1 Power Piping Code
- ASME B31.3 Process Piping Code

Listings

- U.S. Federal Regulations FDA 21 CFR 175.300
- API 15LR Specification for Low Pressure Fiberglass Line Pipe and Fittings

PDS40E (12/14) 1

Sargent & Lundy Engineering Services, Inc.

CALCULATION SHEET

Project No. S54413.024	**Calculation No.** S54413.024-M-001	**Rev.** 0	**Page No.** 151 of 192
Title: LERF Basin 41 Buried Piping Analysis			
Prepared By: JD Williams	**Date:** 5/13/20	**Checked By:** JS Huisingh	**Date:** 5/13/20

Schedule 40
Pipe Dimensional Data* and Pressure Ratings[1] from –50° to 275°F

[1]Static pressure rating; steady (stationary) pressure is created when using a gear pump, turbine pump, centrifugal pump, etc.
[2]Vacuum Service: A full vacuum within the pipe is equivalent to 14.7 psi external pressure at sea level. Contact Conley for higher external pressure ratings.

NOM PIPE DIA	PIPE I.D.	PIPE O.D.	NOM LINER THK (IN)	NOM REINF THK (IN)	NOM UV THK (IN)	TOT THK (IN)	INT PRESS (PSI)	VAC PRESS (PSI)[2]
1"	0.88	1.32	0.060	0.120	0.040	0.220	300	2026
1 ½"	1.38	1.88	0.060	0.150	0.040	0.250	300	1370
2"	1.88	2.38	0.060	0.150	0.040	0.250	300	675
2 ½"	2.38	2.88	0.060	0.150	0.040	0.250	300	380
3"	3.00	3.47	0.060	0.135	0.040	0.235	300	160
4"	4.00	4.48	0.060	0.160	0.020	0.240	300	123
6"	6.00	6.57	0.060	0.205	0.020	0.285	250	82
8"	8.00	8.60	0.060	0.220	0.020	0.300	250	45
10"	10.00	10.68	0.060	0.220	0.060	0.340	200	22.9
12"	12.25	13.00	0.060	0.275	0.040	0.375	200	24.8
14"	14.25	15.00	0.060	0.275	0.040	0.375	175	16.1
16"	16.25	17.00	0.060	0.275	0.040	0.375	150	11.1
18"	18.25	19.00	0.060	0.275	0.040	0.375	125	7.9
20"	20.25	20.96	0.060	0.275	0.020	0.355	125	5.9
24"	24.25	25.11	0.060	0.330	0.040	0.430	125	5.9
30"	30.50	31.43	0.060	.0385	0.020	0.465	100	4.8

*All values are nominal. Minimum wall thickness shall not be less than 87.5% of nominal wall thickness in accordance with ASTM D2996.

Support Spans* and Capacities at 75°F

NOM PIPE DIA	TYPE I SIMPLE SPAN (FT)	TYPE II MAX CONT SPAN (FT)	TYPE IV FIXED END SPAN (FT)	MIN BEND RADIUS (FT)	WT/FT (LBS)	CAP (GAL/FT)
1"	7.6	9.0	11.4	20	0.61	0.03
1 ½"	9.1	10.7	13.7	32	1.03	0.08
2"	10.1	11.8	15.1	44	1.35	0.14
2 ½"	10.9	12.8	16.3	55	1.66	0.23
3"	11.5	13.5	17.2	69	1.92	0.37
4"	13.0	15.2	19.4	93	2.57	0.65
6"	15.3	18.0	22.9	139	4.52	1.47
8"	16.9	19.8	25.3	185	6.29	2.61
10"	18.1	21.2	27.0	231	8.88	4.08
12"	20.0	23.5	30.0	284	11.96	6.12
14"	20.9	24.5	31.3	330	13.85	8.28
16"	21.7	25.5	32.5	376	15.75	10.77
18"	22.5	26.3	33.6	422	17.64	13.59
20"	23.1	27.1	34.6	469	18.48	16.73
24"	25.3	29.6	37.7	561	26.81	23.99
30"	27.8	32.6	41.6	706	36.37	37.95

***NOTE:** Span deflection = ½" with fluid of 1.0 specific gravity

2 PDS40E (12/14)

CALCULATION SHEET

Project No. S54413.024	**Calculation No.** S54413.024-M-001	**Rev.** 0	**Page No.** 152 of 192
Title: LERF Basin 41 Buried Piping Analysis			
Prepared By: JD Williams	**Date:** 5/13/20	**Checked By:** JS Huisingh	**Date:** 5/13/20

Conley Composites
an ANDRONACO INDUSTRIES company

EPOXY SCHEDULE 30
HEAVY DUTY PIPING

ASTM DESIGNATION CODE RTRP-11FW1-2113

Conley Product Data

OUTSTANDING BENEFITS AND COST SAVINGS

Description

- Heavy duty filament wound piping for service up to 250 psi
- 60 mil double Nexus® reinforced corrosion barrier (inner liner)
- Premium aromatic amine cured product for operating temperatures up to 275°F
- Sizes available from 2" through 30"
- Complete line of filament wound fittings available
- In house fabrication facilities "From your blueprints to pipe assemblies"
- Color coding available
- Conductive systems available
- Fire-resistant systems available
- See Sch 30 Piping Specification

Typical Applications

- Waste water treatment
- Steel pickling
- Solvents
- Petrochemical
- Pharmaceutical
- Chemical processing
- Brine (salts) and brackish water
- Jet fuel
- Gasoline – Diesel – Fuel Oil
- Cooling water
- Odor control
- Industrial waste
- Food and beverages
- Bridge, roof and floor drains

Performance

- Excellent chemical resistance inside and outside to a variety of caustics and acids ~ See the chemical resistance chart for fluid services
- External UV/Corrosion barrier minimum 10 mil on all pipe and fittings
- 25 year guarantee against *'fiber blooming'* on all pipe and fittings
- Straight socket joining system (No expensive tapering tools required)

Specifications

- ASTM D2996 Filament-Wound "Fiberglass" Pipe
- ASTM D2310 Classification for Machine-Made "Fiberglass" Pipe
- ASTM D3567 Determining Dimensions of "Fiberglass" Pipe and Fittings
- ASTM D4024 Machine Made "Fiberglass" Flanges
- ASTM D5685 "Fiberglass" Pressure Pipe Fittings

Codes & Standards

- AWWA C950 Fiberglass Pressure Pipe Standards
- ASME B31.1 Power Piping Code
- ASME B31.3 Process Piping Code

Listings

- U.S. Federal Regulations FDA 21 CFR 175.300
- CRN:0A10216.5 Category A - Pipe Fittings
- CRN:0B10216.5 Category B - Pipe Flanges

PDS30E (12/14) 1

Sargent & Lundy Engineering Services, Inc.

CALCULATION SHEET

Project No. S54413.024	**Calculation No.** S54413.024-M-001	**Rev.** 0	**Page No.** 153 of 192
Title: LERF Basin 41 Buried Piping Analysis			
Prepared By: JD Williams	**Date:** 5/13/20	**Checked By:** JS Huisingh	**Date:** 5/13/20

Schedule 30 Pipe Dimensional Data* and Pressure Ratings[1] from –50° to 275°F

[1]Static pressure rating; steady (stationary) pressure is created when using a gear pump, turbine pump, centrifugal pump, etc.
[2]Vacuum Service: A full vacuum within the pipe is equivalent to 14.7 psi external pressure at sea level. Contact Conley for higher external pressure ratings.

NOM PIPE DIA	PIPE I.D.	PIPE O.D.	NOM LINER THK (IN)	NOM REINF THK (IN)	NOM UV THK (IN)	TOT THK (IN)	INT PRESS (PSI)	VAC PRESS (PSI)[2]
2"	1.88	2.17	0.060	0.075	0.010	0.145	250	111.4
3"	3.00	3.34	0.060	0.090	0.020	0.170	250	52.8
4"	4.00	4.34	0.060	0.090	0.020	0.170	250	24.1
6"	6.00	6.38	0.060	0.110	0.020	0.190	175	13.8
8"	8.00	8.38	0.060	0.110	0.020	0.190	150	6.1
10"	10.00	10.49	0.060	0.165	0.020	0.245	150	10.2
12"	12.25	12.74	0.060	0.165	0.020	0.245	125	5.7
14"	14.25	14.78	0.060	0.165	0.040	0.265	100	3.6
16"	16.25	16.78	0.060	0.165	0.040	0.265	100	2.5
18"	18.25	18.85	0.060	0.220	0.020	0.300	100	4.2
20"	20.25	20.85	0.060	0.220	0.020	0.300	100	3.1
24"	24.25	24.96	0.060	0.275	0.020	0.355	100	3.5
30"	30.50	31.32	0.060	0.330	0.020	0.410	100	3.1

*All values are nominal. Minimum wall thickness shall not be less than 87.5% of nominal wall thickness in accordance with ASTM D2996.

Support Spans* and Capacities at 75°F

NOM PIPE DIA	TYPE I SIMPLE SPAN (FT)	TYPE II MAX CONT SPAN (FT)	TYPE IV FIXED END SPAN (FT)	MIN BEND RADIUS (FT)	WT/FT (LBS)	CAP (GAL/FT)
2"	8.6	10.1	12.9	44	0.74	0.14
3"	10.3	12.0	15.3	69	1.36	0.37
4"	11.4	13.3	17.0	93	1.79	0.65
6"	13.1	15.3	19.5	139	2.97	1.47
8"	14.4	16.9	21.5	185	3.93	2.61
10"	16.3	19.1	24.4	231	6.34	4.08
12"	17.3	20.3	25.8	284	7.73	6.12
14"	18.0	21.1	27.0	330	9.72	8.28
16"	18.7	21.9	27.9	376	11.05	10.77
18"	20.5	24.0	30.6	422	14.06	13.59
20"	21.1	24.7	31.5	469	15.57	16.73
24"	23.2	27.2	34.7	561	22.06	23.99
30"	25.7	30.1	38.4	706	32.01	37.95

***NOTE:** Span deflection = ½" with fluid of 1.0 specific gravity

Span multipliers for fluids of different specific gravities

FLUID SPECIFIC GRAVITY							
AIR	0.75	0.9	1.0	1.1	1.25	1.5	2.0
1.40	1.07	1.02	1.0	0.98	0.95	0.90	0.84
(MULTIPLIER FOR CORRECTED SPAN LENGTHS)							

Span multipliers for fluids at different temperatures

FLUID TEMPERATURE						
75°F	100°F	150°F	200°F	225°F	250°F	275°F
1.0	0.98	0.93	0.88	0.84	0.80	0.75
(MULTIPLIER FOR CORRECTED SPAN LENGTHS)						

2 PDS30E (12/14)

Sargent & Lundy Engineering Services, Inc.

CALCULATION SHEET

Project No. S54413.024	**Calculation No.** S54413.024-M-001	**Rev.** 0	**Page No.** 154 of 192
Title: LERF Basin 41 Buried Piping Analysis			
Prepared By: JD Williams	**Date:** 5/13/20	**Checked By:** JS Huisingh	**Date:** 5/13/20

Conley Composites
an ANDRONACO INDUSTRIES company

EPOXY SCHEDULE 40/30 DOUBLE CONTAINED PIPING

ASTM DESIGNATION CODE RTRP-11FW1-2113

Conley Product Data

RUGGED TOP OF THE LINE PERFORMANCE ~ AFFORDABLE COST

Description

- Extra heavy duty filament wound piping for service up to 150 psi
- 60 mil double Nexus® reinforced corrosion barrier (inner liner)
- Premium aromatic amine cured product for operating temperatures up to 275°F
- Sizes available from 2" through 30"
- Complete line of filament wound fittings available
- In house fabrication facilities "From your blueprints to pipe assemblies"
- Color coding available
- Patented interlocking union for thermal expansion (US Patent #5449204 & 5368338)
- See Sch 40/30 Specification
- See Sch 40 Product Data
- See Sch 30 Product Data

Typical Applications

- Waste water treatment
- Steel pickling
- Automotive
- Petrochemical
- Pharmaceutical
- Chemical processing
- Brine and brackish water
- Jet fuel
- Gasoline – Diesel – Fuel Oil
- Cooling water
- Odor control
- Industrial waste
- Food and beverages
- Bridge, roof and floor drains

Performance

- Excellent chemical resistance inside and outside to a variety of caustics, acids, brines and petroleum products ~ See the chemical resistance chart for fluid services
- External UV/Corrosion barrier minimum 10/20 mil on all pipe and fittings
- 25 year guarantee against *'fiber blooming'* on all pipe and fittings
- Straight socket joining system (No expensive tapering tools required)

Specifications

- ASTM D2996 Filament-Wound "Fiberglass" Pipe
- ASTM D2310 Classification for Machine-Made "Fiberglass" Pipe
- ASTM D3567 Determining Dimensions of "Fiberglass" Pipe and Fittings
- ASTM D4024 Machine Made "Fiberglass" Flanges
- ASTM D5685 "Fiberglass" Pressure Pipe Fittings

Codes & Standards

- AWWA C950 Fiberglass Pressure Pipe Standards
- ASME B31.1 Power Piping Code
- ASME B31.3 Process Piping Code

Listings

- U.S. Federal Regulations FDA 21 CFR 175.300

Application Legislation

- 40 CFR 280. RCRA, Subtitle 1
- 40 CFR 264/5
- CERCLA "Superfund Act"

PDS4030E (12/14) 1

Sargent & Lundy Engineering Services, Inc.

CALCULATION SHEET

Project No. S54413.024	**Calculation No.** S54413.024-M-001	**Rev.** 0	**Page No.** 155 of 192
Title: LERF Basin 41 Buried Piping Analysis			
Prepared By: JD Williams	**Date:** 5/13/20	**Checked By:** JS Huisingh	**Date:** 5/13/20

Typical Properties

TEMPERATURE	75°F	250°F	
PROPERTY	VALUE	VALUE	METHOD
AXIAL TENSILE STRENGTH	14,200 psi	10,650 psi	ASTM D2105
AXIAL TENSILE DESIGN STRENGTH	3,550 psi	2,660 psi	ASTM D2105
AXIAL MODULUS OF ELASTICITY	1.75×10^6 psi	1.30×10^6 psi	ASTM D2105
COMPRESSIVE STRENGTH	22,750 psi	17,000 psi	ASTM D695
COMPRESSIVE DESIGN STRENGTH	5,685 psi	4,250 psi	ASTM D695
COMPRESSION MODULUS	2.80×10^6 psi	2.10×10^6 psi	ASTM D695
POISSON'S RATIO $V_{a/h}$ ($V_{h/a}$)	0.33 (0.23)		*CONLEY METHOD #20
BEAM BENDING, ULTIMATE STRESS	30,000 psi	22,500 psi	CONLEY METHOD 8
BEAM BENDING, DESIGN STRESS[1]	3,750 psi	2,810 psi	CONLEY METHOD 8
SHEAR MODULUS	1.30×10^6 psi	1.00×10^6 psi	*CONLEY METHOD #9
HYDROSTATIC DESIGN BASIS	16,000 psi	8,000 psi	ASTM D2992 PROCEDURE B
HYDROSTATIC BURST (WALL STRESS @ 72°F)	32,000 psi	24,000 psi	ASTM D1599
CIRCUMFERENTIAL MODULUS OF ELASTICITY	2.50×10^6 psi	1.87×10^6 psi	ASTM D1599
FLEXURAL MODULUS OF ELASTICITY	1.75×10^6 psi	1.30×10^6 psi	ASTM 2790
COEFFICIENT OF LINEAR THERMAL EXPANSION	9.5×10^{-6} IN / IN- °F		CONLEY METHOD 3
COEFFICIENT OF THERMAL CONDUCTIVITY	2.9 BTU/HR-IN / FT^2 - °F		CONLEY METHOD 16
SPECIFIC GRAVITY	1.85		
DENSITY	0.067 LB/CU IN		
DIELECTRIC STRENGTH	535 VOLTS / MIL		ASTM D149
DEGREE OF CURE	175°C (347°F) Tg		DMA
HEAT DEFLECTION TEMPERATURE	150°C (302°F)		ISO 75-3
FLOW FACTOR (HAZEN-WILLIAMS)	150		
SURFACE ROUGHNESS	1.7×10^{-5} FEET		
MANNING'S "n"	0.009 INCH		

[1] Beam bending design stress is 1/8 of ultimate to allow for combined stress (bending and pressure)

PDS4030E (12/14) 5

Sargent & Lundy Engineering Services, Inc.

CALCULATION SHEET

Project No. S54413.024	**Calculation No.** S54413.024-M-001	**Rev.** 0	**Page No.** 156 of 192
Title: LERF Basin 41 Buried Piping Analysis			
Prepared By: JD Williams	**Date:** 5/13/20	**Checked By:** JS Huisingh	**Date:** 5/13/20

(Conley Literature)

Buried Pipe

A successful buried Conley Piping System requires proper fabrication, curing and handling. Equally important is trench design, bedding, backfill, and soil coverage of the pipe system.

Fiberglass pipe and fittings are sensitive to impact loads and must be handled accordingly. Refer to the Conley Installation and Fabrication Manual for shipping, handling, storage and inspection of Conley Fiberglass Pipe page 1. For dimensional data and tables of pipe weights refer to the Conley Products section.

Conley Piping Systems use a straight socket adhesive joining system that is totally restrained. Except in cases of very high pressure and/or temperature, thrust blocks at changes in direction are not required.

For burial applications, Conley Fiberglass pipe is considered to be a *"flexible conduit"*. Buried piping is considered to be "continuously anchored" and therefore very stable. Conley piping requires typical burial requirements for fiberglass pipe, i.e., shaped trench bottom, select granular bedding and backfill compacted to 90% Proctor Density and pavement or sleeves to provide load distribution for live loads.

In double containment piping systems, the containment pipe will remain at essentially ground temperature so thrust blocks are not normally required. Trench, bedding, and backfill materials are all specified and controlled to provide the required support for the pipe under the burial loads.

A. Trench Design and Burial Depths

One purpose of the trench is to provide working space while installing the pipe. Nominal trench widths are listed in the table below.

Table 1 Nominal Trench Widths

Pipe Size (in)	Minimum (in)	Maximum (in)
1	18	26
1 1/2	18	26
2	18	26
2 1/2	18	27
3	18	27
4	18	28
6	20	30
8	23	32
10	25	34
12	28	36
14	31	38
16	33	40
18	36	42
20	39	44
24	44	48
30	52	56

The maximum and minimum burial depths vary with diameter, soil conditions, loading conditions and pipe schedule. On the conservative side of planning and with a backfill modulus or shear strength of 1,500 lbs/ft^2, the minimum burial depth of pipe under unpaved areas is two feet.

This depth of cover assumes a tandem axle wheel load of 34,000 pounds.

For soils that do not meet the shear strength of 1,500 lbs/ft^2 or if the axial load is higher than the standard the minimum pipe burial depth will be greater than 3 feet.

The minimum burial depth may be reduced if the pipe is buried under concrete or asphalt. Maximum burial depths are usually limited to 20-ft, but may be greater if the trench and bedding are designed for greater depth.

CALCULATION SHEET

Project No. S54413.024	**Calculation No.** S54413.024-M-001	**Rev.** 0	**Page No.** 157 of 192
Title: LERF Basin 41 Buried Piping Analysis			
Prepared By: JD Williams	**Date:** 5/13/20	**Checked By:** JS Huisingh	**Date:** 5/13/20

(Conley Literature)

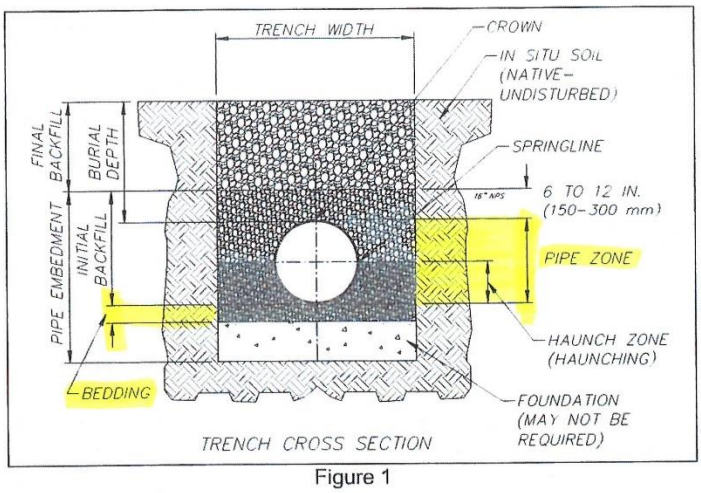

Figure 1

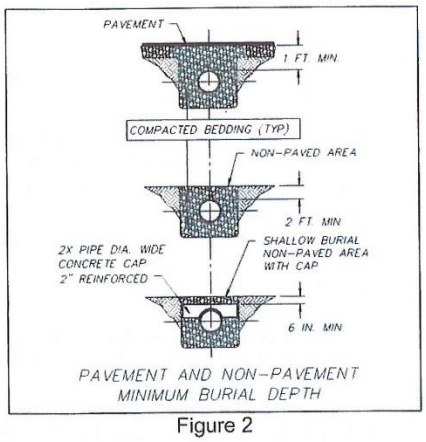

Figure 2

Table 2 Bedding and Backfill Materials Recommendation

Stiffness category (Reference for AWWA M45)	Backfill Material	Compaction (%) necessary
SC1	Crushed rock 15% or less sand, maximum 25% (passing 3/8inch sieve and maximum 5%)	No compaction required
SC2	Clean coarse-grained soils (12% or less)	75-85
SC3	Coarse-grained soils (more than 12%)	85-95
SC4	Fine-grained soils (30% or less)	More than 95

B. Bedding & Backfill

Typical burial requirements for fiberglass pipe require a fully supported and uniform trench bottom, avoiding sharp angular rocks and or voids in the bedding material. Full longitudinal support must be met.

If more than one pipe is to be laid in a trench at least six inches of properly supported backfill should separate the two pipe lines.

Generally, the most successful bedding and pipe zone embedment material is crushed rock or pea gravel under the SC1 Stiffness Category per ASTM D2487 Standard Classification of soils for Engineering Purposes. S1 material will provide good support for the pipeline even if it is only dumped rather than compacted. Still it is better to work the bedding material into the critical zone of the trench as shown below in Figure 3.

- 2 -

CALCULATION SHEET

Project No. S54413.024	**Calculation No.** S54413.024-M-001	**Rev.** 0	**Page No.** 158 of 192
Title: LERF Basin 41 Buried Piping Analysis			
Prepared By: JD Williams	**Date:** 5/13/20	**Checked By:** JS Huisingh	**Date:** 5/13/20

CR = CARRIER CT = CONTAINMENT

CR DIA	CT DIA	Ai	Ao	Bi	Bo	Ci	Co
1 1/2	3	2 9/16	4 1/16	1 5/16	1 1/2	1 1/4	2 9/16
2	4	3 3/16	5 3/8	1 1/2	2 1/8	1 11/16	3 1/4
3	6	4 1/4	7 1/4	2	3	2 1/4	4 1/4
4	8	5 5/8	8 5/8	2 5/8	3 1/4	3	5 3/8
6	10	7 5/8	10 3/8	3 1/2	3 1/2	4 1/8	6 7/8
8	12	8 5/8	12 3/4	3 3/4	4	4 7/8	8 3/4
10	14	10 3/8	14 5/8	4	4 1/4	6 3/8	10 3/8
12	16	12 3/4	17 5/8	4 1/2	4 7/8	8 1/4	12 3/4
14	18	15 1/8	20	4 3/4	4 7/8	10 3/8	15 1/8
16	20	15 1/2	20 3/8	5 3/8	4 7/8	10 1/8	15 1/2

* * *

CONTACT CONLEY FOR INFORMATION ON NON-STANDARD SIZES

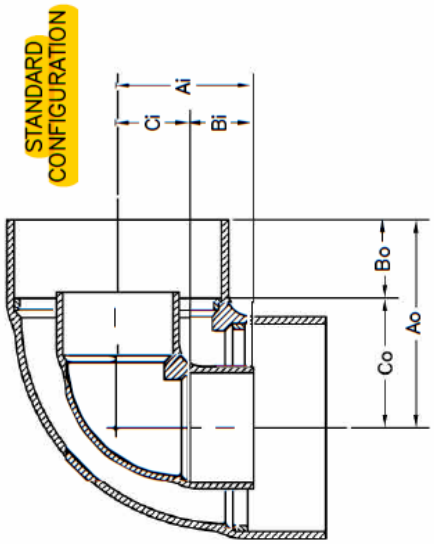

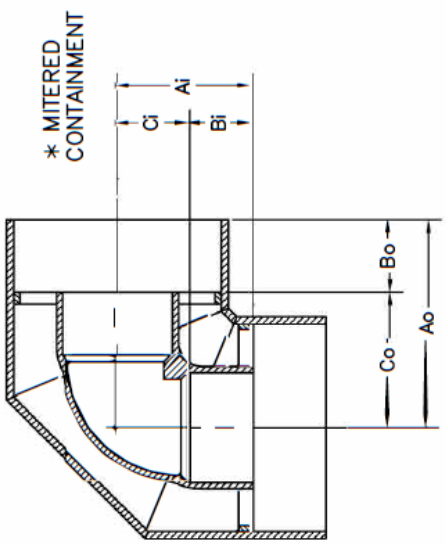

THIS FITTING IS PROTECTED UNDER U.S. PATENT NO. 5,449,204

Conley Composites
an ANDRONACO INDUSTRIES company

#200 DOUBLE CONTAINMENT 90° ELBOW

R5

200

RPP-CALC-63780, Rev. 0

Sargent & Lundy Engineering Services, Inc.

CALCULATION SHEET

Project No. S54413.024	**Calculation No.** S54413.024-M-001	**Rev.** 0	**Page No.** 159 of 192
Title: LERF Basin 41 Buried Piping Analysis			
Prepared By: JD Williams	**Date:** 5/13/20	**Checked By:** JS Huisingh	**Date:** 5/13/20

	CR = CARRIER			CT = CONTAINMENT			
CR DIA	CT DIA	Ai	Ao	Bi	Bo	Ci	Co
1 1/2	3	2 5/16	3 1/8	1 5/16	1 1/2	1	1 5/8
2	4	2 9/16	4 1/2	1 1/2	2 1/8	1 1/16	2 3/8
3	6	3 5/8	5 1/2	2	3	1 5/8	2 1/2
4	8	4 1/2	6 7/16	2 5/8	3 1/4	1 7/8	3 3/16
6	10	5 1/2	7 9/16	3 1/2	3 1/2	2	4 1/16
8	12	6 7/16	8 7/8	3 3/4	4	2 11/16	4 7/8
10	14	7 9/16	9 3/4	4	4 1/4	3 9/16	5 1/2
12	16	8 7/8	11 1/4	4 1/2	4 7/8	4 3/8	6 3/8
14	18	9 3/4	11 7/8	4 3/4	4 7/8	5	7
16	20	11 1/4	12 1/4	5 3/8	4 7/8	5 7/8	7 3/8

CONTACT CONLEY FOR INFORMATION ON NON-STANDARD SIZES

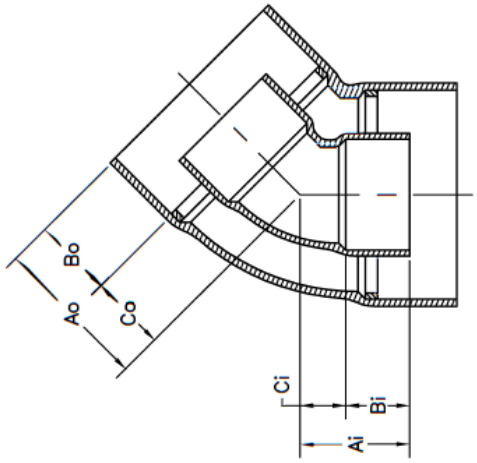

THIS FITTING IS PROTECTED UNDER U.S. PATENT NO. 5,449,204

Conley Composites an ANDRONACO INDUSTRIES company

#202 DOUBLE CONTAINMENT 45° ELBOW

R2

CALCULATION SHEET

Project No. S54413.024	**Calculation No.** S54413.024-M-001	**Rev.** 0	**Page No.** 160 of 192
Title: LERF Basin 41 Buried Piping Analysis			
Prepared By: JD Williams	**Date:** 5/13/20	**Checked By:** JS Huisingh	**Date:** 5/13/20

From: David Chaney <dchaney@andronaco.com>
Sent: Wednesday, January 22, 2020 11:52 AM
To: WILLIAMS, JACOB D <jacob.d.williams@sargentlundy.com>
Cc: Matt Burdick <mburdick@andronaco.com>; Niki Reyff <nreyff@andronaco.com>
Subject: Re: Tensile Strength Questions

Jacob,

The reinforcement thickness of Conley fittings is greater than their piping counter parts. Conley 4" series 40 pipe has a reinforcement thickness of .160" Conley 4" fittings have a reinforcement thickness .295".

Size.	Pipe reinforcement	Fitting reinforcement
3"	.135"	.295"
4"	.160"	.295"
6"	.205"	.410"
8"	.220"	.410"

Conley fittings from series 30, & 4 0 are wound with the same reinforcement thickness; the series 50 fittings have the inner liner thickness increased from .060" to 100" with the same reinforcement thickness. Conley series 90-150 over 14" have a heavier reinforcement thickness. Series 90-250 fittings over 10" have a heavier reinforcement thickness.

The fundamentals of anchoring, guiding, and supporting the FRP piping systems apply to both the carrier and the containment. Conley places 3 spiders on each 20' section of pipe placed at 5', 10', and 15' measured from the same end. This placement of spiders makes for a span of no more than 10' when piping sections are connected. Fittings are supplied fitting in fitting with spiders on each side of the fitting. These spiders serve as anchor the carrier and containment together ant each fitting. The containment will still require anchors at every change in direction, change in pipe size, change of material and or manufacturer, and every 300' on any straight of pipe.

Thank You,

David Chaney

Explanation of Hydrostatic Design Basis & Qualified Stress Using ASTM D2992 & ISO 14692

From: Matt Burdick <mburdick@andronaco.com>
Sent: Thursday, February 6, 2020 1:46 PM
To: WILLIAMS, JACOB D <jacob.d.williams@sargentlundy.com>
Cc: Niki Reyff <nreyff@andronaco.com>; David Chaney <dchaney@andronaco.com>
Subject: RE: Hydrostatic Design Basis & Qualified Stress

Jacob,

As we discussed before, the difference in our published HDB and the ISO-14692 qualified stress are the differences between the ISO mythology and the ASTM methodology for these established ratings or allowable / design stresses. The main difference is the duration and if it is based on the mean data or the lower confidence level of the established data. The qualified stresses per ISO 14692 result in slightly more conservative numbers than directly following the ASTM methods.

ASTM D2992 has the manufacturer calculate the Long Term Hydrostatic Strength (LTHS) at 100,000 hrs (~11.5 yrs) and 438,000 hrs (50 yrs) and establishes the Hydrostatic Design Basis (HDB) or allowable hoop stress σ(2:1) based on the range these values fall in. Our calculated values for the LTHS at 100,000 and 438,000 hrs are 17802psi and 16719 psi respectively. Following Table 1 of ASTM D2992 our established and published HDB is therefore 16,000 psi with this method as ASTM D2992 correlates an HDB per a given range of calculated LTHS.

From ASTM D2992:

TABLE 1 Hydrostatic Design Basis Categories by Procedure A or Procedure B

Hydrostatic Design Basis Category		Range of Calculated Values	
psi[A]	(kPa)	psi	(kPa)
2 500	(17 200)	2 400 to 3 010	(16 500 to 20 700)
3 150	(21 700)	3 020 to 3 820	(20 800 to 26 300)
4 000	(27 600)	3 830 to 4 790	(26 400 to 33 000)
5 000	(34 500)	4 800 to 5 990	(33 100 to 40 900)
6 300	(43 400)	6 000 to 7 590	(41 000 to 52 900)
8 000	(55 200)	7 600 to 9 590	(53 000 to 65 900)
10 000	(68 900)	9 600 to 11 990	(66 000 to 82 900)
12 500	(86 200)	12 000 to 15 290	(83 000 to 105 900)
16 000	(110 000)	15 300 to 18 990	(106 000 to 130 900)
20 000	(138 000)	19 000 to 23 990	(131 000 to 169 900)
25 000	(172 000)	24 000 to 29 990	(170 000 to 209 900)
31 500	(217 000)	30 000 to 37 990	(210 000 to 259 900)
40 000	(276 000)	38 000 to 47 000	(260 000 to 320 000)

[A] Standard stress levels chosen in accordance with ISO 3, Series R10

As we discussed, the ISO-14692 allows the use of ASTM D2992 to establish the qualified pressure as called out in ISO 14692-2 Table 1 and 6.2.3.1. The difference is that when establishing the qualified stress or pressure, which are relatable through product geometry (diameter and wall thickness), the time interval that is considered is 20 years or 175,200 hrs. ISO 14692 also takes the lower confidence level at this time instead of the mean value or the value established by the regression line. Since ASTM D2992 is establishing a hoop stress and our testing methodology was per ASTM D2992 Procedure B (static pressure) with unrestrained ends, the stress we are evaluating is σ(2:1) for the Lower confidence level at a 20 year time. So when considering ISO 14692 the 20 year lower confidence level hoop stress or $\sigma(2:1)_{20yrLCL}$ is σ_{qs}. This is the IS 14692 version of HDB, evaluated at the 20 year time with the conservancy that the lower confidence level brings. The other stresses in the envelope are relatable to the short term failure stresses or ultimate stresses in the different orientations through the F_{scale} factor.

I did have a typo in the design envelope that was originally sent, as you pointed out the qualified stress should have been 14,546 psi, not 14,544 psi, but this should be negligible in your analysis.

ISO 14692-3 Figure 2 shows the design envelope as shown below and describes the relationships between short term and qualified stresses rather well. Please note that σ_{qs} is a the hoop stress shown on the x-axis and that boundary of the long term design envelope.

CALCULATION SHEET

Project No. S54413.024	**Calculation No.** S54413.024-M-001	**Rev.** 0	**Page No.** 162 of 192
Title: LERF Basin 41 Buried Piping Analysis			
Prepared By: JD Williams	**Date:** 5/13/20	**Checked By:** JS Huisingh	**Date:** 5/13/20

From: WILLIAMS, JACOB D [mailto:jacob.d.williams@sargentlundy.com]
Sent: Thursday, February 6, 2020 3:06 PM
To: Matt Burdick
Cc: Niki Reyff; David Chaney
Subject: Hydrostatic Design Basis & Qualified Stress

Matt,

Thank you for the information you provided to me on the phone on Tuesday. I could still use your help in correlating what I understand to be the Conley-published design data we are to use in our design and analysis (hydrostatic design basis [HDB], etc.) with some of the numbers presented in the ISO-14692 design envelope data you provided. You told me that the hydrostatic design basis value that was determined by following Procedure B of ASTM D2992 is the same thing as the qualified stress, which I understand is the long-term hoop stress at 2:1 stress ratio, $\sigma_{hl}(2:1)$.

The $\sigma_{hl}(2:1)$ value shown on the design envelope is 14,544 psi. Was the idealized long-term envelope based on the 20-year testing? When I see the ASTM D2992-01 calculations you sent me, the lower confidence limit stress (LCL) for 20 years is 14,546 psi (nearly identical to 14,544 psi). Does this value represent the $\sigma_{hl}(2:1)$, which is (as I understand it) the qualified stress? If so, should the value that is reported in the published pipe typical properties data sheet for the HDB at 75° F be something less than 16,000 psi? Or are we to rely on the published data for these values (for reasons you can help me understand)?

I welcome your insight to help reconcile the published Conley HDB data with the test data, so I can ensure I am using the appropriate data in our design and analysis.

Thank you,

Jacob Williams, P.E.
Senior Mechanical/Structural Engineer
Sargent & Lundy
1-509-946-3300
Licensed in WA
www.sargentlundy.com

CALCULATION SHEET

Project No. S54413.024	**Calculation No.** S54413.024-M-001	**Rev.** 0	**Page No.** 163 of 192
Title: LERF Basin 41 Buried Piping Analysis			
Prepared By: JD Williams	**Date:** 5/13/20	**Checked By:** JS Huisingh	**Date:** 5/13/20

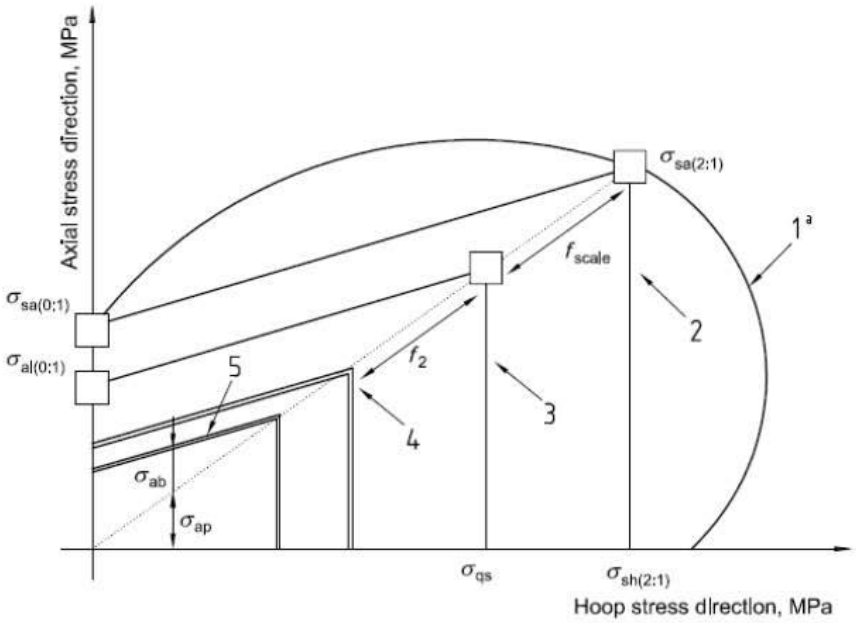

σ_{qs} is the qualified stress, in megapascals;

$\sigma_{al(0:1)}$ is the long-term axial (longitudinal) strength at 0:1 stress ratio, in megapascals;

$\sigma_{sa(0:1)}$ is the short-term axial strength at 0:1 stress ratio, in megapascals;

$\sigma_{sh(2:1)}$ is the short-term hoop strength at 2:1 stress ratio, in megapascals;

r is derived according to Equation (12).

$$f_{scale} = \frac{\sigma_{qs}}{\sigma_{sh(2:1)}} \quad , \quad \sigma_{al(0:1)} = r \times \frac{\sigma_{qs}}{2} \quad \text{and} \quad r = 2 \cdot \frac{\sigma_{sa(0:1)}}{\sigma_{sh(2:1)}}$$

Per ISO 14692 the qualified pressure is basically the calculated $\sigma_{hl}(2:1)$ at a 20 year time considering the established statistical lower confidence level from logarithmic regression testing data, which capture various failure pressures at various time intervals.

$\sigma_{hl}(2:1)$

Thank you,
Matt Burdick
Senior Mechanical and Piping Engineer | Andronaco Industries
PureFlex | Nil-Cor | Ethylene | Hills-McCanna | RamParts Pumps | Polyvalve | Conley Composites
4855 Broadmoor Ave. SE | Kentwood, MI 49512
P: (616)554-4600 x174 | F: (616)554-9889
E: mburdick@andronaco.com

Sargent & Lundy Engineering Services, Inc.

CALCULATION SHEET

Project No. S54413.024	**Calculation No.** S54413.024-M-001	**Rev.** 0	**Page No.** 164 of 192
Title: LERF Basin 41 Buried Piping Analysis			
Prepared By: JD Williams	**Date:** 5/13/20	**Checked By:** JS Huisingh	**Date:** 5/13/20

Conley Composites
an ANDRONACO INDUSTRIES company

ASTM D2992-01 Calculations

01/17/20
Calculations by MJB

Specimen Identification

Material Type: Glass Fiber Reinforced Epoxy Resin Pipe with liner
Manufacturer: Conley Corporation, Kentwood, MI
Manufacturer's Code: Schedule 40
Nominal Size Tested: 2"

Test Conditions

Test Method: ASTM D2992-01 Procedure B per ASTM D1598-97
End Closure: Free-End, 4-Bolt Steel Flange w/ Backer Rings
Test Temperature: 75°F
Environment: Interior-Water; Exterior-Air
Test Dates: 10/03/2001 to 07/14/2004

Long Term Hydrostatic Strength (100,000 hr Stress and 150,000 hr Stress)

$LTHS_{100k}$: 17,802 psi *122.7 Mpa*
$LTHS_{150k}$: 17,498 psi *120.6 Mpa*

20 Year Stress (175,200 hrs)

20yr: 17,383 psi *119.8 Mpa*

50 Year Stress (438,000 hrs)

50yr: 16718.8 psi *115.3 Mpa*

Lower Confidence Limits

LCL_{100k}: 15,118 psi *104.2 Mpa*
LCL_{150k}: 14,703 psi *101.4 Mpa*
LCL_{20yr}: 14,546 psi *100.3 Mpa*
LCL_{50yr}: 13,653 psi *94.1 Mpa*

Lower Prediction Limits

LPL_{100k}: 13,100 psi *90.3 Mpa*
LPL_{150k}: 12,802 psi *88.3 Mpa*
LPL_{20yr}: 12,688 psi *87.5 Mpa*
LPL_{50yr}: 12,029 psi *82.9 Mpa*

Coefficient of Correlation

r: 0.6186

Hydrostatic Design Basis

$HDB_{100k\ (ASTM\ D2992\ Table\ 1)}$: ***16000*** psi *110.3 Mpa*

Regression Equation

log(stress)= 4.4631 -0.0425 * log(time)

CALCULATION SHEET

Project No. S54413.024	**Calculation No.** S54413.024-M-001	**Rev.** 0	**Page No.** 165 of 192
Title: LERF Basin 41 Buried Piping Analysis			
Prepared By: JD Williams	**Date:** 5/13/20	**Checked By:** JS Huisingh	**Date:** 5/13/20

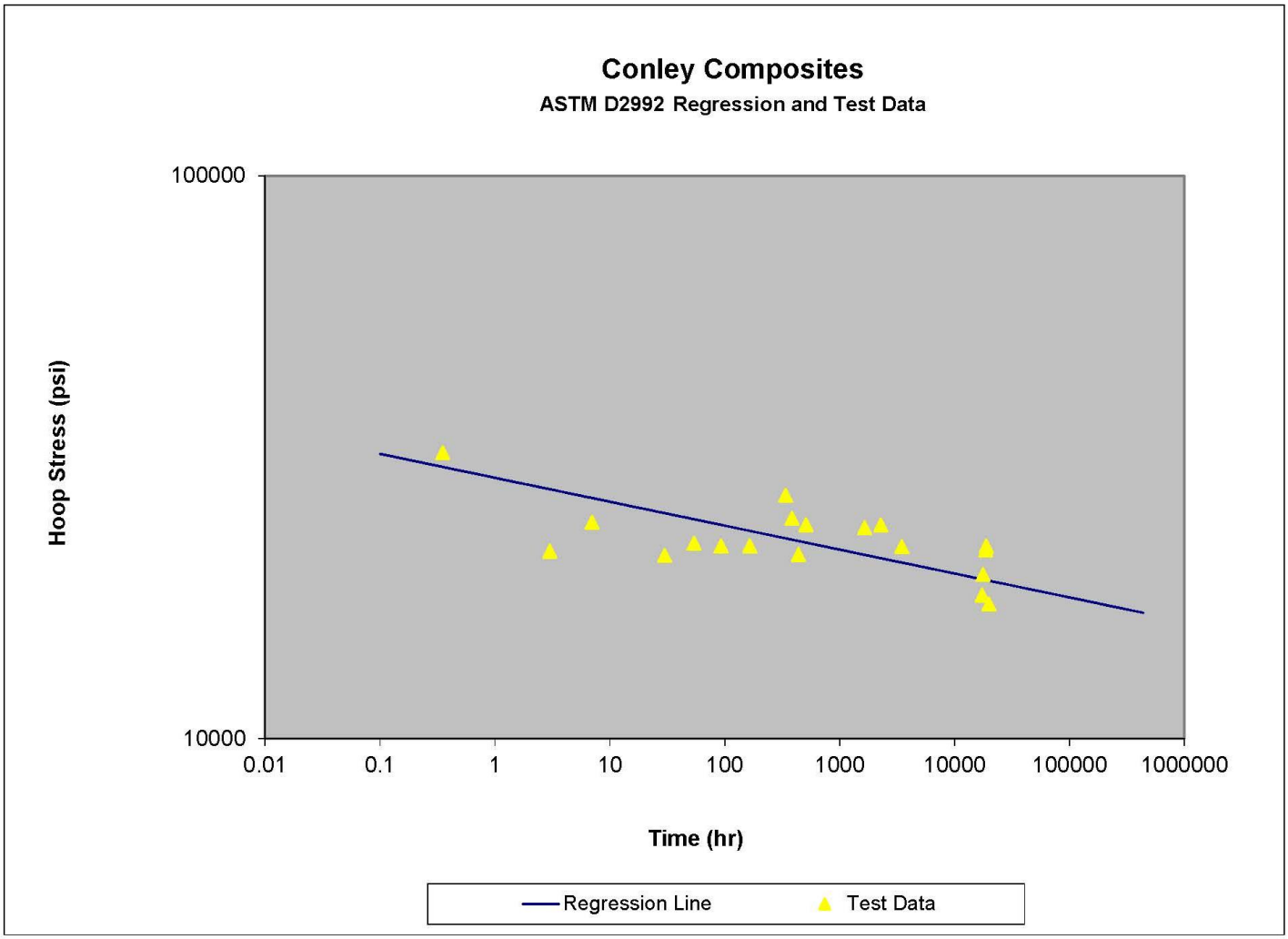

CALCULATION SHEET

Project No. S54413.024	**Calculation No.** S54413.024-M-001	**Rev.** 0	**Page No.** 166 of 192
Title: LERF Basin 41 Buried Piping Analysis			
Prepared By: JD Williams	**Date:** 5/13/20	**Checked By:** JS Huisingh	**Date:** 5/13/20

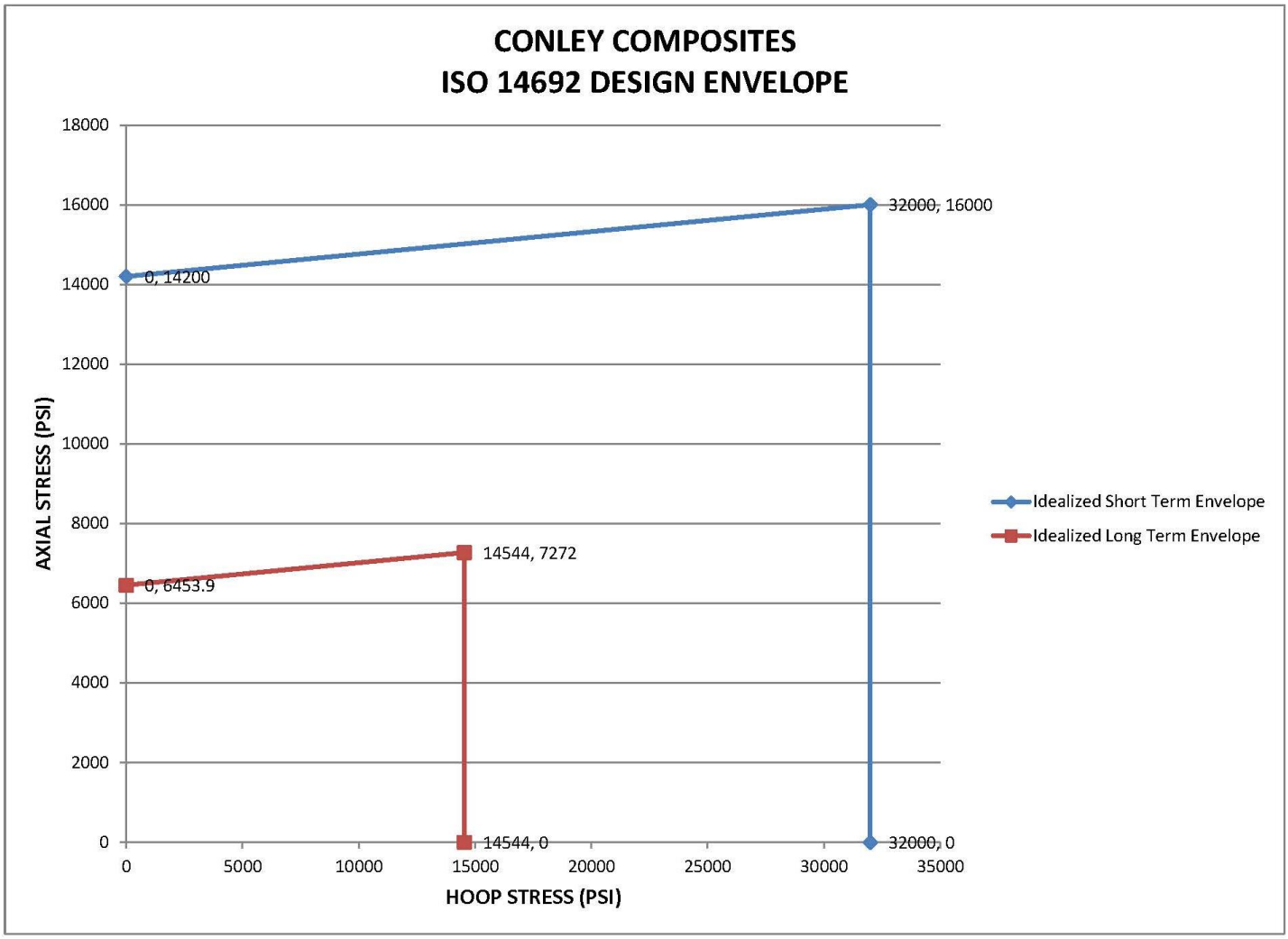

CALCULATION SHEET

Project No. S54413.024	**Calculation No.** S54413.024-M-001	**Rev.** 0	**Page No.** 167 of 192
Title: LERF Basin 41 Buried Piping Analysis			
Prepared By: JD Williams	**Date:** 5/13/20	**Checked By:** JS Huisingh	**Date:** 5/13/20

From: David Chaney <dchaney@andronaco.com>
Sent: Thursday, February 6, 2020 4:51 AM
To: WILLIAMS, JACOB D <jacob.d.williams@sargentlundy.com>; Niki Reyff <nreyff@andronaco.com>
Subject: Re: Connecting to Existing Pipe

Jacob,

(1.) When connecting Conley FRP pipe with FRP pipe from a different manufacture Conley will manufacture an adapter fitting to make the connection if difference in diameter greater than 0.040".

(2.) Bonding of FRP pipe is a mechanical bond that relies on good preparation and cleanliness. Epoxy will bond to Epoxy as well as Vinyl FRP pipe.

(3.) Generally, it is recommended that an anchor be installed when mating to piping from a different manufacture. In this case the anchor will not be required. As stated, the buried pipe will see low temperature fluctuations.

Thank You,
David Chaney

On Wed, Feb 5, 2020 at 4:23 PM WILLIAMS, JACOB D <jacob.d.williams@sargentlundy.com> wrote:

Dave,

I just wanted to have you confirm some of the details that we discussed on our phone call this morning. Please let me know if you agree with the following; or if you do not, or if something needs clarification, can you please change it to read differently as you deem appropriate:

1. Mating up with the same nominally-sized pipe (e.g. 4") is achieved using repair couplings even if the actual ODs of the existing and new pipes differ slightly (~1/16" difference in *OD* is acceptable). If the discrepancy between ODs is much larger than that, Conley Composites will simply fabricate custom couplings that match the ODs of the existing and new pipe.
2. Since the existing and new pipes are made with epoxy-type resins, there will not be any adhesion issues between the glue and the pipes for both the existing and new pipes.
3. The difference in pipe strengths and flexibility between the existing and new pipes will not pose a large issue since the system is double-contained, buried, and the 3" or 4" carrier pipe is internally guided at lengths not to exceed 10'. Also, the buried pipe will not see large ambient fluctuations in temperature.

Thank you,

Jacob Williams, P.E.
Senior Mechanical/Structural Engineer
Sargent & Lundy
1-509-946-3300
Licensed in WA
www.sargentlundy.com

CALCULATION SHEET

Project No. S54413.024	**Calculation No.** S54413.024-M-001	**Rev.** 0	**Page No.** 168 of 192
Title: LERF Basin 41 Buried Piping Analysis			
Prepared By: JD Williams	**Date:** 5/13/20	**Checked By:** JS Huisingh	**Date:** 5/13/20

ATTACHMENT 3

EXISTING FRP PIPE DATA

- Fibercast FRP Pipe Data
- Bondstrand FRP Pipe Data

Sargent & Lundy Engineering Services, Inc.

CALCULATION SHEET

Project No. S54413.024	**Calculation No.** S54413.024-M-001	**Rev.** 0	**Page No.** 169 of 192
Title: LERF Basin 41 Buried Piping Analysis			
Prepared By: JD Williams	**Date:** 5/13/20	**Checked By:** JS Huisingh	**Date:** 5/13/20

Fibercast®
World Leader In Composite Piping Systems

CENTRICAST III™ EP

Third Generation Composites

CENTRICAST III EP offers the benefits and advantages of our heavy-duty centrifugally cast pipe grades with the economics of less expensive filament wound epoxy piping. CENTRICAST III EP is manufactured from high-strength glass fabrics and our highly resilient formulation of epoxy resin. This pipe grade is available either plain end x plain end or bell x plain end.

Fluid Temperatures up to 225° F.

CENTRICAST III EP is manufactured in standard iron pipe sizes 1½"–14" in nominal 20-foot lengths. This quality piping system is rated at 150 psi up to 225° F. Higher pressures with special fittings are available on request. It is lightweight, easy to fabricate and has excellent flow capabilities. Also, CENTRICAST III EP has excellent corrosion and abrasion resistance, making it ideal for many industrial applications.

Superior to Filament Wound Pipe

CENTRICAST III EP is stronger and more corrosion resistant than filament wound pipe. Our unique glass reinforcements have continuous glass fibers oriented in both hoop and axial directions for maximum resistance to piping stresses. The hoop fibers provide excellent internal pressure capabilities, while the axial fibers provide much higher axial tensile and beam bending strength capabilities for unsupported span situations.

100% Pure Resin Corrosion Barrier

CENTRICAST III EP has a corrosion barrier of 50 mils of 100% pure resin. This 100% pure resin barrier provides much better corrosion and abrasion resistance than common glass-filled liners in filament wound pipe. Also, CENTRICAST III EP is easier and less expensive to fabricate than competitive filament wound piping and welded metallic systems.

RPP-CALC-63780, Rev. 0

Sargent & Lundy Engineering Services, Inc.

CALCULATION SHEET

Project No. S54413.024	**Calculation No.** S54413.024-M-001	**Rev.** 0	**Page No.** 170 of 192
Title: LERF Basin 41 Buried Piping Analysis			
Prepared By: JD Williams	**Date:** 5/13/20	**Checked By:** JS Huisingh	**Date:** 5/13/20

Pipe Classification

For general industrial corrosive applications of pipe sizes 1½" – 14", the pipe shall be manufactured by the centrifugal casting process in accordance with ASTM D 2997 classification of RTRP, Type II, Grade 1, Class C, and have a nominal 50 mil pure resin corrosion barrier and a constant smooth IPS OD. The pipe, fittings and adhesive shall be made using the same type epoxy resin and be suitable for at least 150 psi at 225°F. using adhesive socket joints made in accordance with the manufacturer's recommendations. Higher pressures with special fittings are available on request. Field tapering or machining of pipe ends for joining with adhesive socket joints shall not be allowed.

Joining Systems

FIBERCAST®adhesive joints are assembled with our patented, high-strength adhesives. Our fittings are equipped with consistent, predetermined socket dimensions and positive landing areas for the mating pipe ends. Thorough sanding of the pipe OD and the mating fitting's socket is required prior to applying the adhesive for assembly.

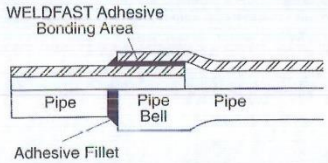

High-strength fabrications to close tolerances are easily accomplished with a minimum amount of time and tools. Order WELDFAST®440 epoxy adhesive for joining CENTRICAST III EP epoxy piping.

CENTRICAST III™EP Pipe

3"/6" (Evap.)

	Nominal Dimensions					Recommended Operating Data			
I.D.	Nominal Pipe Size (Inches)	OD	Total Wall Thickness (Inches)		Reinforcement Thickness (Inches)	Weight Per Foot (lbs.)	Internal Pressure at 225° F. (psi)	External Pressure at 75° F. (psi)	Axial Load at 75° F. (lbs.)	Capacity Gallons Per Foot
	1½	1.900	.140		.090	.45	1,045	865	4,008	.107
	2	2.375	.120		.070	.49	640	265	3,830	.186
3.26	3	3.500	.120	0.03"	.070	.73	430	120	5,695	.434
	4	4.500	.120		.070	.95	330	43	7,355	.740
6.345	6	6.625	.140	0.055"	.090	1.64	290	21	14,455	1.643
	8	8.625	.170		.120	2.60	295	14	23,540	2.801
	10	10.750	.190		.140	3.63	275	11	29,415	4.387
	12	12.750	.190		.140	4.32	235	7	41,860	6.243
	14	14.000	.220		.170	5.49	255	7	59,090	7.502

Unsupported Span (Feet) at Various Temperatures

Nominal Pipe Size (Inches)	75° F.	150° F.	175° F.	200° F.	225° F.
1½	11.8	11.2	11.0	10.7	10.4
2	12.0	11.3	11.1	10.8	10.6
3	13.4	12.7	12.4	12.1	11.8
4	14.3	13.5	13.3	12.9	12.6
6	16.9	15.9	15.6	15.2	14.8
8	19.4	18.3	17.9	17.5	17.0
10	20.0	20.0	19.7	19.2	18.7
12	20.0	20.0	20.0	20.0	19.6
14	20.0	20.0	20.0	20.0	20.0

The above spans are based on a 3-span continuous beam with maximum rated internal pressure and deflection considerations with pipe full of fluid, specific gravity 1.00 and 1/2" maximum deflection. For specific gravities other than 1, the following multipliers may be used:

Specific Gravity	Multipliers
1.25	.95
1.50	.90
2.00	.84
3.00	.76
Air	1.40

Values shown are based on long-term, elevated temperature test data.

Operating External Pressure at Various Temperatures (psi)

Nominal Pipe Size (Inches)	75° F.	150° F.	175° F.	200° F.	225° F.
1½	865	753	718	692	649
2	265	231	220	212	199
3	120	104	100	96	90
4	43	37	35	34	32
6	21	18	17	17	18
8	14	12	12	11	11
10	11	10	9	9	8
12	7	6	6	6	5
14	7	6	6	6	5

Ratings shown are 50% of ultimate.

14.7 psi external pressure is equal to full vacuum.

2

CALCULATION SHEET

Project No. S54413.024	**Calculation No.** S54413.024-M-001	**Rev.** 0	**Page No.** 171 of 192
Title: LERF Basin 41 Buried Piping Analysis			
Prepared By: JD Williams	**Date:** 5/13/20	**Checked By:** JS Huisingh	**Date:** 5/13/20

AMERON

Bondstrand Product Data

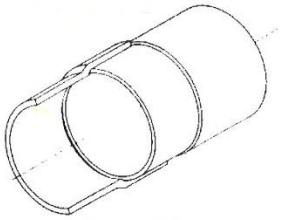

Series 4000 Fiberglass Pipe and Fittings

4" / 8" WTP

for corrosive industrial service

Uses and applications	Acid drains Chemical process piping Corrosive slurries Food processing Geothermal Nonoxidizing acids
Listings	Meets USDA requirements for food processing piping under Federal Regulations 21CFR 175.105 and 21CFR 177.2420.
Performance	Working pressure from 150 to 450 psig (1 to 3.1 MPa) depending on pipe size. Withstands full vacuum in most sizes when properly bedded and backfilled. Operating temperatures to 300ºF (150ºC) and continuous service to 250ºF (121ºC) based on media. Subzero temperatures will not adversely affect mechanical properties. For temperatures above 250 to 300ºF contact your Ameron representative. Excellent corrosion resistance over a wide temperature range. See Bondstrand Corrosion Guide FP132 for specific applications. Does, not require thrust blocks at ambient temperatures when properly installed in most soils. Smooth inner liner provides Hazen-Williams coefficient of 150 for lower friction losses and reduced pumping costs.
Joining systems	Quick-Lock® straight/taper adhesive-bonded joint featuring integral pipe stop in bell for predictable, precise laying lengths. Flanges and flanged fittings. Mechanical couplings (temperature and chemical resistance properties of system may be reduced).

© Ameron 1986 FP215 0 04/94 Printed in Holland

Sargent & Lundy Engineering Services, Inc.

CALCULATION SHEET

Project No. S54413.024	**Calculation No.** S54413.024-M-001	**Rev.** 0	**Page No.** 172 of 192
Title: LERF Basin 41 Buried Piping Analysis			
Prepared By: JD Williams	**Date:** 5/13/20	**Checked By:** JS Huisingh	**Date:** 5/13/20

Composition

Pipe
Filament-wound fiberglass reinforced epoxy resin pipe with integral 0.050-inch (1.3 mm) resin-rich reinforced liner.

Nominal Pipe Size (in)	(mm)	ASTM Designation (D2996)
1	25	RTRP-11FE-1112
1½	40	RTRP-11FE-1114
2-6	50-150	RTRP-11FE-1112
8-16	200-400	RTRP-11FE-1113

Epoxy fittings
Filament-wound fittings furnished with reinforced liner using same materials as pipe.
Tees
90° and 45° elbows
Crosses
45° laterals
Nipples and couplings
Tapered body reducers
Molded
Reducing flanges
Plugs and end caps
Epoxy flanges
Filament-wound 1 - 16 inches (25 - 400 mm)
Compression molded 2 - 12 inches (50 - 300 mm)
Blind flanges
Compression molded 2 - 12 inches (50 - 300 mm)
Reducer bushings and plugs
Compression molded 2 - 12 inches (50 - 300 mm)
Metallic saddle reductions
316SS - ¼ - 1½ inches (6 - 40 mm)
Thermosetting adhesives
RP-34 two-part epoxy for field fabrication

Fittings

In all sizes
Elbows
Tees
Flanges and blind flanges Reducers
Nipples and couplings

In 2- to 12-inch (50-300 mm) sizes Compression-molded plugs, reducers and reducing flanges End caps
Crosses
Laterals
Laying lengths of fittings with Quick-Lock ends in 2-to 12-inch sizes match those of ANSI B16.9 steel buttwelding fittings.
Flanged ends match ANSI B16.1 and B16.5 bolt hole pattern and face-to-face dimensions for 150-lb flanges.

2

RPP-CALC-63780, Rev. 0

Sargent & Lundy Engineering Services, Inc.

CALCULATION SHEET

Project No. S54413.024	**Calculation No.** S54413.024-M-001	**Rev.** 0	**Page No.** 173 of 192
Title: LERF Basin 41 Buried Piping Analysis			
Prepared By: JD Williams	**Date:** 5/13/20	**Checked By:** JS Huisingh	**Date:** 5/13/20

Bondstrand 4"/8" (WTP)

Pipe length

Nominal Pipe Size (in)	Nominal Pipe Size (mm)	Random Length (ft)	Random Length (m)
1-11/2	25-40	10	3
2-8	50-200	20,30,40	6,9,12
10-16	250-400	20,40	6,12

Typical pipe dimensions and weights

Nominal Pipe Size (in)	Nominal Pipe Size (mm)	Pipe ID (in)	Pipe ID (mm)	Nominal Wall Thickness* (in)	Nominal Wall Thickness* (mm)	Average** Sectional Area (in)	Average** Sectional Area (mm)	Pipe Wt (lb/ft)	Pipe Wt (kg/m)
1	25	.98	25	.169	4.3	.60	390	.4	.6
11/2	40	1.50	38	.214	5.4	1.11	730	.8	1.2
2	50	2.10	53	.160	4.1	1.13	730	.8	1.2
3	80	3.22	82	.160	4.1	1.70	1100	1.1	1.7
4	100	4.14	105	.206	5.2	2.73	1760	1.9	2.8
6	150	6.20	159	.206	5.2	4.06	2620	2.8	4.2
8	200	8.22	209	.229	5.8	5.83	3760	4.1	6.1
10	250	10.35	263	.229	5.8	7.31	4710	5.1	7.7
12	300	12.35	314	.229	5.8	8.69	5610	6.1	9.1
14	350	13.56	344	.250	6.3	10.40	6680	7.4	11.0
16	400	15.50	394	.286	7.3	13.40	8630	9.6	14.0

Conley OD	Δ	OD (in)
4.48"	0.072	4.552
8.60"	0.078	8.678

* Minimum wall thickness shall be not less than 87.5% of nominal wall thickness in accordance with ASTM D2996.
** Use these values for calculating longitudinal thrust.

Typical pipe performance

Nominal Pipe Size (in)	Nominal Pipe Size (mm)	Internal Pressure Rating (psig)	Internal Pressure Rating (MPa)	Ultimate Collapse Pressure * (psig)	Ultimate Collapse Pressure * (MPa)
1	25	600	4.12	7612	52.5
11/2	40	550	3.79	6103	42.1
2	50	450	3.10	635	4.38
3	80	320	2.21	174	1.20
4	100	350	2.41	246	1.70
6	150	250	1.72	71	0.49
8	200	220	1.52	48	0.33
10	250	175	1.21	24	0.17
12	300	150	1.03	14	0.10
14	350	150	1.03	15	0.10
16	400	150	1.03	17	0.12

* At 200ºF (93ºC) using RP-34 epoxy adhesive. For sustained service above 200ºF reduce ratings linearly to 50% of values shown at 250º(121 ºC). Above 250ºF reduce linearly to 0 at 300ºF (149ºC).
* At 70ºF (21ºc) Reduce linearly to 90% at 150ºF (66ºC) and 85% at 250ºF (121ºc).

3

CALCULATION SHEET

Project No. S54413.024	**Calculation No.** S54413.024-M-001	**Rev.** 0	**Page No.** 174 of 192
Title: LERF Basin 41 Buried Piping Analysis			
Prepared By: JD Williams	**Date:** 5/13/20	**Checked By:** JS Huisingh	**Date:** 5/13/20

ATTACHMENT 4

AWWA M54 FIBERGLASS PIPE DESIGN DATA

Sargent & Lundy Engineering Services, Inc.	CALCULATION SHEET		
Project No. S54413.024	**Calculation No.** S54413.024-M-001	**Rev.** 0	**Page No.** 175 of 192
Title: LERF Basin 41 Buried Piping Analysis			
Prepared By: JD Williams	**Date:** 5/13/20	**Checked By:** JS Huisingh	**Date:** 5/13/20

Manual of Water Supply Practices

M45

Fiberglass Pipe Design

Third Edition

American Water Works Association

Copyright American Water Works Association
Provided by IHS Markit under license with AWWA
No reproduction or networking permitted without license from IHS

Copyright © 2014 American Water Works Association. All Rights Reserved.

Licensee=Sargent & Lundy/5181830001, User=Williams, Jacob
Not for Resale, 01/22/2020 12:28:21 MST

CALCULATION SHEET

Project No. S54413.024	**Calculation No.** S54413.024-M-001	**Rev.** 0	**Page No.** 176 of 192
Title: LERF Basin 41 Buried Piping Analysis			
Prepared By: JD Williams	**Date:** 5/13/20	**Checked By:** JS Huisingh	**Date:** 5/13/20

Manual of Water Supply Practices—M45, Third Edition

Fiberglass Pipe Design

Copyright © 1996, 2005, 2014 American Water Works Association

All rights reserved. No part of this publication may be reproduced or transmitted in any form or by any means, electronic or mechanical, including photocopy, recording, or any information or retrieval system, except in the form of brief excerpts or quotations for review purposes, without the written permission of the publisher.

Disclaimer
The authors, contributors, editors, and publisher do not assume responsibility for the validity of the content or any consequences of their use. In no event will AWWA be liable for direct, indirect, special, incidental, or consequential damages arising out of the use of information presented in this book. In particular, AWWA will not be responsible for any costs, including, but not limited to, those incurred as a result of lost revenue. In no event shall AWWA's liability exceed the amount paid for the purchase of this book.

Project Manager/Senior Technical Editor: Melissa Valentine
Manuals Specialist: Molly Beach
Production Editor: Cheryl Armstrong

Library of Congress Cataloging-in-Publication Data

Fiberglass pipe design manual.
Fiberglass pipe design. -- Third edition / Richard C. Turkopp, Phillip Sharff.
pages cm -- (Manual of water supply practices ; M45)
Developed by the American Water Works Association, Fiberglass Pipe Design Manual Subcommittee chaired by Richard C. Turkopp and the Standards Committee on Thermosetting Fiberglass Reinforced Plastic Pipe chaired by Phillip Sharff.
Originally edition published as: Fiberglass pipe design manual. 1996.
Includes bibliographical references and index.
ISBN 978-1-58123-967-6 -- ISBN 978-1-61300-246-9 (eISBN) 1. Fiberglass pipe--Design and construction. 2. Water-pipes--Design and construction. I. Turkopp, Richard C. II. Sharff, Phillip. III. American Water Works Association. IV. Title.
TA448.F53 2013
628.1'5--dc23
2013028156

ISBN: 978-1-58321-967-6
eISBN: 978-1-61300-246-9

Printed in the United States of America

American Water Works Association
6666 West Quincy Avenue
Denver, CO 80235-3098
awwa.org

Printed on recycled paper

Copyright American Water Works Association
Provided by IHS Markit under license with AWWA
No reproduction or networking permitted without license from IHS

Copyright © 2014 American Water Works Association. All Rights Reserved.

Licensee=Sargent & Lundy/5931792001, User=Williams, Jacob
Not for Resale, 01/22/2020 12:28:21 MST

CALCULATION SHEET

Project No. S54413.024	**Calculation No.** S54413.024-M-001	**Rev.** 0	**Page No.** 177 of 192
Title: LERF Basin 41 Buried Piping Analysis			
Prepared By: JD Williams	**Date:** 5/13/20	**Checked By:** JS Huisingh	**Date:** 5/13/20

6.4 IN SITU SOILS

Content Hidden for Copyright Purposes

6.5 EMBEDMENT MATERIALS

Content Hidden for Copyright Purposes

6.5.1 Soil Stiffness Classes

Class I. Use of Class I materials provides maximum pipe support for a given percent compaction due to low content of sand and fines. With minimum effort these materials

Content Hidden for Copyright Purposes

AWWA Manual M45
Copyright American Water Works Association
Provided by IHS Markit under license with AWWA
No reproduction or networking permitted without license from IHS
Copyright © 2014 American Water Works Association. All Rights Reserved.
Not for Resale, 01/22/2020 12:28:21 MST

Sargent & Lundy Engineering Services, Inc.

CALCULATION SHEET

Project No. S54413.024	**Calculation No.** S54413.024-M-001	**Rev.** 0	**Page No.** 178 of 192
Title: LERF Basin 41 Buried Piping Analysis			
Prepared By: JD Williams	**Date:** 5/13/20	**Checked By:** JS Huisingh	**Date:** 5/13/20

Table 6-1 Soil classes

Soil Classes	Unified Soil Classification System Soil Groups*	American Association of State Highway and Transportation Officials (AASHTO) Soil Groups†
Class I	Crushed rock: ≤ 15% sand, maximum 25% passing the ⅜-in. sieve and maximum 5% passing No. 200 sieve‡	

Content Hidden for Copyright Purposes

NOTES:

* ASTM D2487, Standard Classification of Soils for Engineering Purposes (Unified Soil Classification System).

† AASHTO M145, Classification of Soils and Soil Aggregate Mixtures.

‡ Class I soils have higher stiffness than Class II soils, but data on specific soil stiffness values are not available at the current time. Until such data are available, the soil stiffness of placed, uncompacted Class I soils can be taken to be equivalent to Class II soils compacted to 95% of maximum Standard Proctor Density (SPD 95), and the soil stiffness of compacted Class I soils can be taken to be equivalent to Class II soils compacted to 100% of maximum Standard Proctor Density (SPD 100). Even if placed, uncompacted (i.e., dumped), Class I materials should always be worked into the haunch zone to assure complete placement, see Sec. 6.7.3.

Crushed rock is defined as angular and subangular per ASTM D2488 and D5821.

Content Hidden for Copyright Purposes

Copyright American Water Works Association
Provided by IHS Markit under license with AWWA
No reproduction or networking permitted without license from IHS

Copyright © 2014 American Water Works Association. All Rights Reserved.
Not for Resale, 01/22/2020 12:28:21 MST

CALCULATION SHEET

Project No. S54413.024	**Calculation No.** S54413.024-M-001	**Rev.** 0	**Page No.** 179 of 192
Title: LERF Basin 41 Buried Piping Analysis			
Prepared By: JD Williams	**Date:** 5/13/20	**Checked By:** JS Huisingh	**Date:** 5/13/20

ATTACHMENT 5

67246-024-RFI-002 – FLUID SPECIFIC GRAVITY

Sargent & Lundy Engineering Services, Inc.

CALCULATION SHEET

Project No. S54413.024	**Calculation No.** S54413.024-M-001	**Rev.** 0	**Page No.** 180 of 192
Title: LERF Basin 41 Buried Piping Analysis			
Prepared By: JD Williams	**Date:** 5/13/20	**Checked By:** JS Huisingh	**Date:** 5/13/20

REQUEST FOR INFORMATION

Section 1 ***(Subcontractor)***

Subcontract No.: 67246 Rel No.: 024 RFI No. *(Subcontract No.-Rel. No.-RFI-Seq. No.-Rev. No.)*: 67246-024-RFI-002-R0

Subcontract Title: LERF Basin 41 Engineering Design

Project Title: LERF Basin 41 Design Project No.: T1P226

RFI Title/Description: Basin 41 pump design criteria

RFI Initiated By: Paul Dorsh Phone: 946-3300 Date of Request: 12/2/2019

E-Mailed To: Phone: Response Requested By: 12/9/2019

Section 2 ***(Subcontractor)***

Reference Drawing or Document:

N/A

Proposed Change to Document(s)? ☐ Yes ☒ No

Description of Request/Recommendation:

The currently installed LERF Basin pumps consist of a Berkeley submersible pump mounted a 6" Franklin submersible motor. The design requires the motor to be mounted below the pump to ensure proper motor cooling has occurred. This inherently locates the pump suction approximately 31" above the basin floor. To perform a full basin pump down this configuration requires Operations to remove the pump assembly and replace with a temporary pump that has a lower suction elevation.

As a part of the Basin 41 design, a new pump assembly will be designed to facilitate a full basin pump down. To aid in the pump selection a few pump design requirements need to be determined:

1. What is the target flow rate of the new pump?
2. What is the maximum operating design temperature?
3. What is the orifice size of FO-60A-001 on H-2-88974? Where is this located on H-2-89183?
4. What is the maximum and minimum differential pressure of Influent Filter(s) 60B-FL-1A? Where are they located on H-2-89183?
5. What is the fluid density to be used in the flow calculation?
6. What is the fluid viscosity to be used in the flow calculation?

Recommendation:

It appears that previous LERF pump designs target flow rates were nominally 140gpm. Industry standard process fluid temperatures are nominally 100F. Flow rates and temperatures above these values are achievable but will reduce the pump options available.

For the 30% submittal 40psid, 1SpG, and 1cP was used for questions #4, #5, and #6 respectively. All values need to be confirmed and/or updated for the 60% design submittal.

Requestor: Paul Dorsh Date: 12/2/2019

Page 1 of 2 A-6003-417 (REV 10)

Sargent & Lundy Engineering Services, Inc.

CALCULATION SHEET

Project No. S54413.024	**Calculation No.** S54413.024-M-001	**Rev.** 0	**Page No.** 181 of 192
Title: LERF Basin 41 Buried Piping Analysis			
Prepared By: JD Williams	**Date:** 5/13/20	**Checked By:** JS Huisingh	**Date:** 5/13/20

REQUEST FOR INFORMATION (Continued)

Page 2 of 2

Section 1 *(Subcontractor)*

Subcontract No.: 67246 Rel No.: 024 RFI No. *(Subcontract No.-Rel. No.-RFI-Seq. No.-Rev. No.)*: 67246-024-RFI-002-R0

Subcontract Title: LERF Basin 41 Engineering Design

Project Title: LERF Basin 41 Design Project No.: T1P226

RFI Title/Description: Basin 41 pump design criteria

Section 3 (WRPS)

Response to Request:

Basin pump design criteria is as follows:

1. Target flow rate for basin pump is 75 gpm (normal) and 150 gpm (max).

2. Nominal process liquid temperature at the LERF basins is 60 deg. F.

3. Orifice size of FO-60A-001 is 1.361" (ref. FO-60A-001 tag details in SmartPlant Foundation (SPF), ECN-642756, and H-2-88974, Sheet 1, Rev 19, Zone F6; see attached). This flow-restricting orifice is located on H-2-89183, Sheet 1, Rev 7 in Zone C3 and on Sheet 2, Rev 1 in Zone C4 (see attached).

4. Maximum differential pressure across influent filters is 60 psid, but filters are normally changed when they reach 40 psid. Assume a differential pressure across clean filters of 2 psid.

5. Use 1.0 specific gravity for fluid density.

6. Use 1.0 cP for fluid viscosity.

Engineer/Position *(if applicable)*: Nathaniel Wilson (PRJ DA) Date:

Contract Change Required?	☐ Yes ☒ No	Contract Change Request/CAL No.:	
Engineering Review Necessary?	☒ Yes ☐ No	Date Sent to Engineering:	12/6/2019
DCN/ECN/EDT Required?	☐ Yes ☒ No	DCN/ECN/EDT No.:	
Applicable TOC-MT Required?	☒ Yes ☐ No	TOC-MT No.:	MT-50497
Clarification Only?	☒ Yes ☐ No		

Responder:

Nathaniel Wilson (PRJ DA) — *Print First and Last Name* — *Signature* — 12/16/19 *Date*

Buyer's Technical Representative (BTR):

Steven Shepherd — *Print First and Last Name* — *Signature* — 12/16/19 *Date*

Page 2 of 2 A-6003-417 (REV 10)

CALCULATION SHEET

Project No. S54413.024	**Calculation No.** S54413.024-M-001	**Rev.** 0	**Page No.** 182 of 192
Title: LERF Basin 41 Buried Piping Analysis			
Prepared By: JD Williams	**Date:** 5/13/20	**Checked By:** JS Huisingh	**Date:** 5/13/20

ATTACHMENT 6

PIPE INSULATION DATA

Sargent & Lundy Engineering Services, Inc.

CALCULATION SHEET

Project No. S54413.024	**Calculation No.** S54413.024-M-001	**Rev.** 0	**Page No.** 183 of 192
Title: LERF Basin 41 Buried Piping Analysis			
Prepared By: JD Williams	**Date:** 5/13/20	**Checked By:** JS Huisingh	**Date:** 5/13/20

PHYSICAL AND THERMAL PROPERTIES OF FOAMGLAS® ONE™ INSULATION

PHYSICAL PROPERTIES	ASTM			EN ISO
	SI	ENGLISH	Method	Method
Absorption of Moisture (Water % by Volume)	0.2%	0.2%	C 240	EN 1609 EN 12087
	Only moisture retained is that adhering to surface cells after immersion			
Water-Vapor Permeability	0.00 perm-cm	0.00 perm-in	E96 Water Method Procedure B	EN 12086 EN ISO 10456
Acid Resistance	Impervious to common acids and their fumes except hydrofluoric acid			
Capillarity	None			
Combustibility & Reaction to Fire	Noncombustible - will not burn Flame Spread 0 Smoke Development 0		E 136 E84	EN ISO 1182 (Class A1)
Composition	Soda-lime silicate glass – inorganic with no fibers or binders			
Compressive Strength, Block	620 kPa	90 psi	C 165 C 240 C 552	EN 826 Method A
	Strength for flat surfaces capped with hot asphalt			
Density	120 kg/m^3	7.5 lb/ft^3	C 303	EN 1602
Dimensional Stability	Excellent—does not shrink, swell or warp			EN 1604 (DS 70/90)
Flexural Strength, Block	480 kPa	70 psi	C 203 C 240	EN 12089 (BS450)
Hygroscopicity	No increase in weight at 90% relative humidity			
Coefficient of Linear Thermal Expansion	9.0 x 10^{-6}/K 25°C to 300°C	5.0 x 10^{-6}/°F 75°F to 575°F	E 228	EN 13471
Maximum Service Temperature	482° C	900° F		
Modulus of Elasticity, Approx.	900 MPa	1.3 x 10^5 psi	C 623	EN 826 Method A1
Thermal Conductivity	W/mK 0.040 @ 10°C 0.042 @ 24°C	Btu-in/hr.ft^2.°F 0.28 @ 50°F 0.29 @ 75°F	C 177 C 518	EN 12667 EN 12939 ($\lambda_{D\ (90/90)}$ ≤ 0.041 W/mK @ 10° C)
Specific Heat	0.84 kJ/kg.K	0.18 Btu/lb.°F		
Thermal Diffusivity	4.2 x 10^{-7} m^2/sec	0.016 ft^2/hr		

Note: FOAMGLAS® ONE™ is manufactured to meet or exceed the minimum requirements of *ASTM C552 Standard Specification for Cellular Glass Insulation* (or most recent revision). Unless otherwise specified, measurements were collected using ASTM guidelines at 24°C (75°F) and are average or typical values recommended for design purposes and not intended as specification or limit values. Values under EN ISO are declared as limit values under the specific set of standard test conditions. Properties may vary with temperature. Where testing method or reporting values differ between ASTM and EN ISO methodologies, values are denoted within parentheses in the EN ISO column.

CALCULATION SHEET

Project No. S54413.024	**Calculation No.** S54413.024-M-001	**Rev.** 0	**Page No.** 184 of 192
Title: LERF Basin 41 Buried Piping Analysis			
Prepared By: JD Williams	**Date:** 5/13/20	**Checked By:** JS Huisingh	**Date:** 5/13/20

ATTACHMENT 7

CONLEY COMPOSITES AWWA M45 EXTERNAL LOADING CALCULATIONS

RPP-CALC-63780, Rev. 0

CALCULATION SHEET

Project No. S54413.024	**Calculation No.** S54413.024-M-001	**Rev.** 0	**Page No.** 185 of 192
Title: LERF Basin 41 Buried Piping Analysis			
Prepared By: JD Williams	**Date:** 5/13/20	**Checked By:** JS Huisingh	**Date:** 5/13/20

```
AWWA Manual M45              Project: 6" Series 30                          <INPUT
Pipe Burial Design          Customer: Sargent & Lundy                       <INPUT
Date:    05/12/20            Contact: Jacob Williams                        <INPUT
       Nominal Pipe Diameter,                      D =      6  in
                                          REINF WALL =   0.11  in
Step 1 - DESIGN CONDITIONS                Total Wall =  0.190  in
       Nominal Pipe Diameter,                      D =      6  in        <INPUT
       Working Pressure,                          Pw =      0  psi       <INPUT
       Surge Pressure, (Est per Sec. 5.7.1.3)     Ps =      0  psi       <INPUT
       Internal Vacuum Pressure,                  Pv =      0  psi       <INPUT
       Minimum Burial Depth,                   H min =      2  ft        <INPUT
       Maximum Burial Depth,                   H max =     12  ft        <INPUT
       Wheel Load, (AASHTO HS-20, Page 55)         P =      0  lb        <INPUT
       Overburden Spec. Wght (at 95% Pr. Dens), Gs =    120  lb/cu ft
       Average Service Temp =                            80  deg F     <INPUT
       Soil Conditions at Depth =
       Hgt of water table above top of pipe @ H Min      0  ft        <INPUT
       Hgt of water table above top of pipe @ H Max      0  ft        <INPUT
       Service Type:      NUCLEAR WASTE WATER DUAL CONTAINMENT HOUSING PIPE <INPUT

Step 2 - PIPE PROPERTIES
       Pressure Class                             Pc =    247  psi
       Cover Thickness                            tc =   0.04  in
       Reinf. Wall Thick.                         tr =   0.11  in
       Liner Thickness                            tl =   0.06  in
       Stiffness Factor                           EI =   1429  lb-in
       Pipe Stiffness                          F/Dy =  323.00  lb/in^2
       HDB (Stress Basis)                          14000  psi
       HDB (Strain Basis)                          0.003  in/in
       Sb (Strain Basis)                          Sb =  0.003  in/in
       Hoop Tensile Modulus                       Eh = 2500000  psi
       Hoop Circumferential Modulus                E = 2500000  psi
       Diameter, mean reinforcement,               D =   6.23  in
Step 3 - INSTALLATION PARAMETERS
       Modulus of soil reaction, Table A.5        E' =   1500  psi
       Deflection coefficient, Table A.2         Kx =  0.103
       From Table A.1                            Kb =  0.189
       Deflection lag factor, (Sec A.3.4.2.1)    D1 =    1.5
****** ********** ******** ******** ******** ** **** ******** ********  *******
Pw   Design Check OK          Pw+Ps   Design Check OK
Str bnd @ Max Defl Design Check OK  Min Cmb Str @ Max Defl Design Check OK

                          --- @ 2.0 ft --        -- @ 12.0 ft ---
Deflection:               0.0%  Design Check OK   0.0%  Design Check OK
BUCKLING - WITHOUT Vacuum, Design Check OK        Design Check OK
Ground Water, WITH Live Loads
BUCKLING - WITH Vacuum,    Design Check OK        Design Check OK
Ground Water, NO Live Loads
```

5/12/2020 p. 1

CALCULATION SHEET

Project No. S54413.024	**Calculation No.** S54413.024-M-001	**Rev.** 0	**Page No.** 186 of 192
Title: LERF Basin 41 Buried Piping Analysis			
Prepared By: JD Williams	**Date:** 5/13/20	**Checked By:** JS Huisingh	**Date:** 5/13/20

AWWA Manual M45 **Project:** 6" Series 30 <INPUT
Pipe Burial Design **Customer:** Sargent & Lundy <INPUT
Date: 05/12/20 **Contact:** Jacob Williams <INPUT
Nominal Pipe Diameter, D = 6 in

Step 4 CHECK DESIGN REQUIREMENTS

1. **Calculate Pressure Class, Pc:** Where Pc <= (HDB/2)(2t/d)

   Pc = 247 (HDB/FS)(2t/d) = 247.2 psi (Eq 5-2)

   Design Check OK

   Note: Pressure is calculated on a stress basis only, since calculations based on strain give equal results.

2. **Check Working Pressure:** Pw<=Pc is the requirement

   Pw =0 <= Pc = 247.2 (Eq 5-3)
   Design Check OK

3. **Check Surge Pressure:** Pw+Ps<=Pc is the requirement

   Pw+Ps = 0 <= Pc = 247.2 (Eq 5-4)
   Design Check OK

4. **Calculate External Loads:** Wc, Wl, If, and Cl

   Wc = (Gs)(H)(D+t)/144 If = 0.766-0.133(H) (Eq 5-9 and 5-11)

   Wc = 10.6 Lb/in at 2.0 ft If = 0.500 at 2.0 ft

   Wc = 63.4 Lb/in at 12.0 ft If = 0.000 at 12.0 ft

   Wl = Cl(P)(1+If)/12 Cl is from ***Table A.3*** (Eq 5-10)

   Wl = 0.00 lb/in at 2.0 ft Cl = 0.056 at 2.0 ft

   Wl = 0.00 lb/in at 12.0 ft Cl = 0.003 at 12.0 ft

5/12/2020 p. 2

CALCULATION SHEET

Project No. S54413.024	**Calculation No.** S54413.024-M-001	**Rev.** 0	**Page No.** 187 of 192
Title: LERF Basin 41 Buried Piping Analysis			
Prepared By: JD Williams	**Date:** 5/13/20	**Checked By:** JS Huisingh	**Date:** 5/13/20

```
AWWA Manual M45            Project: 6" Series 30                <INPUT
Pipe Burial Design        Customer: Sargent & Lundy             <INPUT
Date:   05/12/20           Contact: Jacob Williams              <INPUT
      Nominal Pipe Diameter,                    D =      6  in

    5. Check Deflection, Dy <= .05D is the requirement.

       Dy=(Dl)(Wc+Wl)(Kx)(R^3)/EI+0.061(Ka)(E')(R^3)+Da              (Eq 5-8)

       Using procedure A of Sec A3.4.2.6 Ka =0.75 and Da = 0.00

       Dy at 2.0 ft = 0.000 in      0.000 <= 0.312

                   Design Check OK

       Dy at 12.0 ft = 0.000 in     0.000 <= 0.312

                   Design Check OK

    6. Check Ring Bending Strain at maximum Deflection, Dy.

       Strain ben(6(Dy/D)(t/D)      Str Bnd <= Sb/1.5 is the requireme(Eq 5-6)

       Str Bnd = 0.000002 at 12.0 ft         0.000002 <= 0.002000
                                             Design Check OK

    7. Check Combined Load Strain, Str Comb <= Sb/1.5 is the requirement

       Str Comb = (Pw+Ps)(D)/2(Eh)(t) + Str Bnd                      (Eq 5-22)

       Str Comb = 0.000002 at 12.0 ft        Design Check OK

OR  Str Comb = (Pw+Ps)(D)/2(Eh)(t)+3(Kb)(D)(t)/3(Kx)(Pw+Ps)(D^3+(E)(t^3)

       Str Comb = 0.000117 at 12.0 ft        Design Check OK

       0.000002 is the lower of the two values and < 0.002000
                                             Design Check OK

5/12/2020                                                          p. 3
```

CALCULATION SHEET

Project No. S54413.024	**Calculation No.** S54413.024-M-001	**Rev.** 0	**Page No.** 188 of 192
Title: LERF Basin 41 Buried Piping Analysis			
Prepared By: JD Williams	**Date:** 5/13/20	**Checked By:** JS Huisingh	**Date:** 5/13/20

```
AWWA Manual M45            Project: 6" Series 30          <INPUT
Pipe Burial Design        Customer: Sargent & Lundy       <INPUT
Date:   05/12/20           Contact: Jacob Williams        <INPUT
      Nominal Pipe Diameter,                  D =      6 in

   8. Check Buckling  (Wc+Wl)/D<=qa is the requirement

      NOTE: Without Ground Water or Vacuum


      qa = 1/FS((32)(Rw)(B')(E')(EI/D^3))^.5                    (Eq 5-24b)

      FS =2.0 at 2.0 ft   Rw = 1.000 at 2.0 ft     B' = 0.222 at 2.0 ft
      FS =2.0 at 12.0 ft  Rw = 1.000 at 12.0 ft    B' = 0.353 at 12.0 ft

      Wc+Wl/D = 1.70 psi at 2.0 ft      qa = 125.36 psi at 2.0 ft
      Wc+Wl/D = 10.18 psi at 12.0       qa = 158.20 psi at 12.0 ft

                 Buckling  Design Check OK    2.0 ft
                 Buckling  Design Check OK    12.0 ft



  8a. Check Buckling With Ground Water and with Vacuum

          (Gw)(hw)+Rw(Wc/D)+Pv <= qa is the requirement            (Eq 5-25)

      NOTE:  Without Live Loads

      (Gw)(hw)+Rw(Wc/D)+Pv = 1.696 at 2.0 ft       qa = 125.36 at 2.0 ft
      (Gw)(hw)+Rw(Wc/D)+Pv = 10.177 at 12.0 ft     qa = 158.20 at 12.0 ft

      Buckling    Design Check OK                  2.0 ft
      Buckling    Design Check OK                  12.0 ft


5/12/2020                                                          p. 4
```

RPP-CALC-63780, Rev. 0

CALCULATION SHEET

Project No. S54413.024	**Calculation No.** S54413.024-M-001	**Rev.** 0	**Page No.** 189 of 192
Title: LERF Basin 41 Buried Piping Analysis			
Prepared By: JD Williams	**Date:** 5/13/20	**Checked By:** JS Huisingh	**Date:** 5/13/20

```
AWWA Manual M45              Project: 8" Series 30 Dual Containment Housing   <INPUT
Pipe Burial Design          Customer: Sargent & Lundy                         <INPUT
Date:    05/07/20            Contact: Jacob Williams                          <INPUT
       Nominal Pipe Diameter,                    D =      8  in
                                       REINF WALL =   0.11  in
                                       Total Wall =  0.190  in
Step 1 - DESIGN CONDITIONS
       Nominal Pipe Diameter,                    D =      8  in        <INPUT
       Working Pressure,                        Pw =      0  psi       <INPUT
       Surge Pressure, (Est per Sec. 5.7.1.3)   Ps =      0  psi       <INPUT
       Internal Vacuum Pressure,                Pv =      0  psi       <INPUT
       Minimum Burial Depth,                H min =      2  ft        <INPUT
       Maximum Burial Depth,                H max =     12  ft        <INPUT
       Wheel Load, (AASHTO HS-20, Page 55)       P =      0  lb        <INPUT
       Overburden Spec. Wght (at 95% Pr. Dens). Gs =    120  lb/cu ft
       Average Service Temp =                          80  deg F     <INPUT
       Soil Conditions at Depth =
       Hgt of water table above top of pipe @ H Min      0  ft        <INPUT
       Hgt of water table above top of pipe @ H Max      0  ft        <INPUT
       Service Type:      NUCLEAR WASTE WATER DUAL CONTAINMENT HOUSING PIPE  <INPUT

Step 2 - PIPE PROPERTIES
       Pressure Class                           Pc =    187  psi
       Cover Thickness                          tc =   0.04  in
       Reinf. Wall Thick.                       tr =   0.11  in
       Liner Thickness                          tl =   0.06  in
       Stiffness Factor                         EI =   1429  lb-in
       Pipe Stiffness                        F/Dy =  137.63  lb/in^2
       HDB (Stress Basis)                          14000  psi
       HDB (Strain Basis)                          0.003  in/in
       Sb (Strain Basis)                        Sb =  0.003  in/in
       Hoop Tensile Modulus                     Eh = 2500000  psi
       Hoop Circumferential Modulus              E = 2500000  psi
       Diameter, mean reinforcement,             D =   8.23  in
Step 3 - INSTALLATION PARAMETERS
       Modulus of soil reaction, Table A.5      E' =   1500  psi
       Deflection coefficient, Table A.2        Kx =  0.103
       From Table A.1                           Kb =  0.189
       Deflection lag factor, (Sec A.3.4.2.1)   D1 =    1.5
****** ********** ******** ******** ******** ** **** ******** ********  *******
Pw   Design Check OK          Pw+Ps   Design Check OK
Str bnd @ Max Defl Design Check OK  Min Cmb Str @ Max Defl Design Check OK

                          --- @ 2.0 ft --        -- @ 12.0 ft ---
Deflection:               0.0%  Design Check OK   0.0%  Design Check OK
BUCKLING - WITHOUT Vacuum, Design Check OK        Design Check OK
Ground Water, WITH Live Loads
BUCKLING - WITH Vacuum,    Design Check OK        Design Check OK
Ground Water, NO Live Loads
```

5/7/2020 p. 1

CALCULATION SHEET

Project No. S54413.024	**Calculation No.** S54413.024-M-001	**Rev.** 0	**Page No.** 190 of 192
Title: LERF Basin 41 Buried Piping Analysis			
Prepared By: JD Williams	**Date:** 5/13/20	**Checked By:** JS Huisingh	**Date:** 5/13/20

AWWA Manual M45 **Project:** 8" Series 30 Dual Containment Housing <INPUT
Pipe Burial Design **Customer:** Sargent & Lundy <INPUT
Date: 05/07/20 **Contact:** Jacob Williams <INPUT
Nominal Pipe Diameter, D = 8 in

Step 4 CHECK DESIGN REQUIREMENTS

1. **Calculate Pressure Class, Pc:** Where Pc <= (HDB/2)(2t/d)

   Pc = 187 (HDB/FS)(2t/d) = 187.1 psi (Eq 5-2)

   Design Check OK

   Note: Pressure is calculated on a stress basis only, since calculations based on strain give equal results.

2. **Check Working Pressure:** Pw<=Pc is the requirement

   Pw =0 <= Pc = 187.1 (Eq 5-3)
   Design Check OK

3. **Check Surge Pressure:** Pw+Ps<=Pc is the requirement

   Pw+Ps = 0 <= Pc = 187.1 (Eq 5-4)
   Design Check OK

4. **Calculate External Loads:** Wc, Wl, If, and Cl

   Wc = (Gs)(H)(D+t)/144 If = 0.766-0.133(H) (Eq 5-9 and 5-11)

   Wc = 13.9 Lb/in at 2.0 ft If = 0.500 at 2.0 ft

   Wc = 83.4 Lb/in at 12.0 ft If = 0.000 at 12.0 ft

   Wl = Cl(P)(1+If)/12 Cl is from ***Table A.3*** (Eq 5-10)

   Wl = 0.00 lb/in at 2.0 ft Cl = 0.056 at 2.0 ft

   Wl = 0.00 lb/in at 12.0 ft Cl = 0.003 at 12.0 ft

5/7/2020 p. 2

CALCULATION SHEET

Project No. S54413.024	**Calculation No.** S54413.024-M-001	**Rev.** 0	**Page No.** 191 of 192
Title: LERF Basin 41 Buried Piping Analysis			
Prepared By: JD Williams	**Date:** 5/13/20	**Checked By:** JS Huisingh	**Date:** 5/13/20

```
AWWA Manual M45            Project: 8" Series 30 Dual Containment Housing   <INPUT
Pipe Burial Design        Customer: Sargent & Lundy                         <INPUT
Date:   05/07/20           Contact: Jacob Williams                          <INPUT
      Nominal Pipe Diameter,                    D =      8  in

    5. Check Deflection, Dy <= .05D is the requirement.

       Dy=(Dl)(Wc+Wl)(Kx)(R^3)/EI+0.061(Ka)(E')(R^3)+Da              (Eq 5-8)

       Using procedure A of Sec A3.4.2.6 Ka =0.75 and Da = 0.00

       Dy at 2.0 ft = 0.000 in      0.000 <= 0.412

                   Design Check OK

       Dy at 12.0 ft = 0.000 in     0.000 <= 0.412

                   Design Check OK

    6. Check Ring Bending Strain at maximum Deflection, Dy.

       Strain ben(6(Dy/D)(t/D)      Str Bnd <= Sb/1.5 is the requireme(Eq 5-6)

       Str Bnd = 0.000004 at 12.0 ft        0.000004 <= 0.002000
                                            Design Check OK

    7. Check Combined Load Strain, Str Comb <= Sb/1.5 is the requirement

       Str Comb = (Pw+Ps)(D)/2(Eh)(t) + Str Bnd                     (Eq 5-22)

       Str Comb = 0.000004 at 12.0 ft       Design Check OK

OR  Str Comb = (Pw+Ps)(D)/2(Eh)(t)+3(Kb)(D)(t)/3(Kx)(Pw+Ps)(D^3+(E)(t^3)

       Str Comb = 0.000154 at 12.0 ft       Design Check OK

       0.000004 is the lower of the two values and < 0.002000
                                            Design Check OK

5/7/2020                                                          p. 3
```

CALCULATION SHEET

Project No. S54413.024	**Calculation No.** S54413.024-M-001	**Rev.** 0	**Page No.** 192 of 192
Title: LERF Basin 41 Buried Piping Analysis			
Prepared By: JD Williams	**Date:** 5/13/20	**Checked By:** JS Huisingh	**Date:** 5/13/20

```
AWWA Manual M45            Project: 8" Series 30 Dual Containment Housing  <INPUT
Pipe Burial Design        Customer: Sargent & Lundy                        <INPUT
Date:   05/07/20           Contact: Jacob Williams                         <INPUT
      Nominal Pipe Diameter,                    D =      8  in

   8. Check Buckling  (Wc+Wl)/D<=qa is the requirement

      NOTE: Without Ground Water or Vacuum


      qa = 1/FS((32)(Rw)(B')(E')(EI/D^3))^.5                      (Eq 5-24b)

      FS =2.0 at 2.0 ft   Rw = 1.000 at 2.0 ft     B' = 0.222 at 2.0 ft
      FS =2.0 at 12.0 ft  Rw = 1.000 at 12.0 ft    B' = 0.353 at 12.0 ft

      Wc+Wl/D = 1.69 psi at 2.0 ft      qa = 82.57 psi at 2.0 ft
      Wc+Wl/D = 10.13 psi at 12.0       qa = 104.19 psi at 12.0 ft

                 Buckling  Design Check OK    2.0 ft
                 Buckling  Design Check OK    12.0 ft



  8a. Check Buckling With Ground Water and with Vacuum

          (Gw)(hw)+Rw(Wc/D)+Pv <= qa is the requirement            (Eq 5-25)

      NOTE:  Without Live Loads

      (Gw)(hw)+Rw(Wc/D)+Pv = 1.689 at 2.0 ft       qa = 82.57 at 2.0 ft
      (Gw)(hw)+Rw(Wc/D)+Pv = 10.134 at 12.0 ft     qa = 104.19 at 12.0 ft

      Buckling    Design Check OK                  2.0 ft
      Buckling    Design Check OK                  12.0 ft


5/7/2020                                                          p. 4
```