0074190

Department of Energy
Richland Operations Office
P.O. Box 550
Richland, Washington 99352

OCT 16 2007

08-KBC-0001

Mr. N. Ceto, Program Manager
Office of Environmental Cleanup
Hanford Project Office
U.S. Environmental Protection Agency
309 Bradley Blvd., Suite 115
Richland, Washington 99352

RECEIVED
OCT 21 2007
EDMC

Dear Mr. Ceto:

SAMPLING AND ANALYSIS PLAN FOR 105 K EAST BASIN ION EXCHANGE COLUMN MONOLITH, KBC-32692, REVISION 0, DRAFT A

The purpose of this letter is to transmit the Sampling and Analysis Plan for 105 K East Basin Ion Exchange Column Monolith, KBC-32692, Revision 0, Draft A for your review and approval.

This sampling and analysis plan is a deliverable per Section 4.2 of the Remedial Design Report and Remedial Action Work Plan for the K Basins Interim Remedial Action (RDR/RAWP), DOE/RL-99-889, Revision 1, requiring U.S. Environmental Protection Agency (EPA) approval. Informal comments from EPA have been incorporated.

The sampling and analysis plan provides the rationale and strategy for sampling and analysis activities to support removal of six ion exchange columns (IXC) located in the 105 K East Basin Building. The IXC exhibit a high radiation dose rate that will be managed by encapsulating them in a grouted structure for transportation and disposal.

RL requests formal approval within 45 days of receipt of this document. Following EPA approval, the document will be released as Revision 0, and submitted to the Administrative Record for the 100-KR-2 Operable Unit.

If you have any questions, please contact me, or your staff may contact Matt McCormick, Acting Federal Project Director for K Basin Closure, on (509) 373-9971.

Sincerely,

David A. Brockman
Manager

KBC:EWK

Attachment

cc w/attach:
G. Bohnee, NPT
L. Buck, Wanapum
L. E. Gadbois, EPA
S. Harris, CTUIR
J. Hedges, Ecology
R. Jim, YN
S. L. Leckband, HAB
K. Niles, ODOE
Administrative Record 100-KR-2
Environmental Portal

cc w/o attach:
R. E. Piippo, FHI
J. G. Vance, FFS
R. E. Wilkinson, FFS

KBC-32692
Revision 0 DRAFT A

Sampling and Analysis Plan for 105-K East Basin Ion Exchange Column Monolith

Prepared for the U.S. Department of Energy
Assistant Secretary for Environmental Management

Project Hanford Management Contractor for the
U.S. Department of Energy under Contract DE-AC06-96RL13200

FLUOR®
P.O. Box 1000
Richland, Washington

Approved for Public Release;
Further Dissemination Unlimited

KBC-32692
Revision 0 DRAFT A

Sampling and Analysis Plan for 105-K East Basin Ion Exchange Column Monolith

Document Type: RPT Program/Project: KBC

R. M. Jochen
Fluor Hanford, Inc.

Date Published
September 2007

Prepared for the U.S. Department of Energy
Assistant Secretary for Environmental Management

Project Hanford Management Contractor for the
U.S. Department of Energy under Contract DE-AC06-96RL13200

FLUOR®
P.O. Box 1000
Richland, Washington

LE Bratton 9/13/2007
Release Approval Date

TRADEMARK DISCLAIMER

Reference herein to any specific commercial product, process, or service by trade name, trademark, manufacturer, or otherwise, does not necessarily constitute or imply its endorsement, recommendation, or favoring by the United States Government or any agency thereof or its contractors or subcontractors.

This report has been reproduced from the best available copy.

Printed in the United States of America

This page intentionally left blank.

CONTENTS

1.0 INTRODUCTION 1-1
1.1 BACKGROUND 1-1
1.2 DATA QUALITY OBJECTIVES (DQO) 1-2
1.2.1 Statement of Problem 1-2
1.2.2 Identify the Decisions 1-5
1.2.3 Identify Inputs to the Decisions 1-6
1.2.4 Define the Study Boundaries 1-6
1.2.5 Decision Rule 1-7
1.2.6 Limits on Decision Error 1-8
1.2.7 Optimize the Design for Obtaining Data 1-9

2.0 MEASUREMENT RATIONALE AND DESIGN 2-1
2.1 PHYSICAL WASTE FORM 2-1
2.2 PCB WASTE CHARACTERIZATION 2-6
2.3 DANGEROUS WASTE CONSTITUENTS 2-6
2.4 RADIONUCLIDE CHARACTERIZATION OF ENCAPSULATED MONOLITHS 2-6
2.5 DESCRIPTION OF EXISTING DATA 2-6

3.0 SAMPLE AND MEASUREMENT LOCATION AND FREQUENCY 3-1
3.1 SAMPLING 3-1
3.2 MEASUREMENTS 3-1

4.0 SAMPLE HANDLING AND ANALYSIS 4-1
4.1 SAMPLE HANDLING AND CUSTODY REQUIREMENTS 4-1
4.1.1 Sample Preservation, Containers, and Holding Times 4-1
4.1.2 Sample Shipping 4-1
4.2 SAMPLE ANALYSIS 4-1

5.0 QUALITY ASSURANCE PROJECT PLAN 5-1
5.1 PROJECT MANAGEMENT 5-1
5.1.1 Project/Task Description 5-1
5.1.2 Project Organization 5-2
5.1.3 Roles and Responsibilities 5-2
5.1.4 Special Training Requirements and Certification 5-4
5.1.5 Quality Assurance Objectives and Criteria for Measurement Data 5-4
5.1.6 Documentation and Records 5-6
5.2 DATA GENERATION AND ACQUISITION 5-6
5.2.1 Quality Control Requirements 5-6
5.2.2 Instrument Testing, Inspection and Maintenance 5-6
5.2.3 Instrument Calibration and Calibration Frequency 5-7
5.2.4 Inspection/Acceptance Requirements for Supplies 5-7
5.2.5 Data Management 5-7

5.3 ASSESSMENT/OVERSIGHT FOR MEASUREMENTS 5-9
5.3.1 Assessments and Response Actions 5-9
5.3.2 Reports to Management 5-9
5.4 DATA, REVIEW, VALIDATION, AND USABILITY 5-10
5.4.1 Data Review, verification, and Validation Requirements 5-10
5.4.2 Verification and Validation Methods 5-10
5.4.3 Reconciliation with User Requirements 5-10

6.0 HEALTH AND SAFETY 6-1

7.0 REFERENCES 7-1

APPENDICES

A EPA QUALITY ASSURANCE PROJECT RQUIREMENTS CROSSWALK ..... A-i

FIGURES

Figure 1-1. Ion Exchange Column Cells and Lead Cave Measurements. 1-4

Figure 5 1. Measurement Collection and Waste Management Organization Chart. 5-2

TABLES

Table 1-1. Data Quality Objective Planning Team for the Ion Exchange Column Monolith. (2 sheets) 1-2

Table 1-2. Key Decision Makers for the Ion Exchange Column Monolith Data Quality Objectives. 1-3

Table 1-3. Final List of Constituents of Concern for the IXC Monolith. 1-5

Table 1-4. Decision Statements for Ion Exchange Column Monolith Designations. 1-5

Table 1-5. Decision Rules for the Ion Exchange Column Monolith. 1-7

Table 2-1. Total Monolith Gross Void Volume and Weight Before Grouting. 2-3

Table 2-2. Monolith Volume and Weight Deductions After Initial Grouting. 2-4

Table 2-3. Monolith Volume and Weight Deductions for Waste Classification. 2-5

Table 5-1. Inventory QAO Criteria. 5-5

Table 5-2. Weight and Volume Measurements QAO Criteria. 5-5

Table 5-3. Field Instrument Performance Requirements. 5-6

Table A-1. Crosswalk of SAP Outline with EPA QA/R-5 Required Elements. (2 sheets) A-1

TERMS

ALARA	as low as reasonably achievable
ARAR	applicable or relevant and appropriate requirement
BHI	Bechtel Hanford, Inc.
CFR	*U.S. Code of Federal Regulations*
D&D	deactivation and decommissioning
DQO	data quality objective
DR	decision rule
DS	decision statement
EFSH	Energy Solutions Federal Services, Hanford
ERDF	Environmental Restoration Disposal Facility
EPA	U.S. Environmental Protection Agency
FH	Fluor Hanford, Inc.
IXC	Ion Exchange Column
KBC	K Basins Closure
KE	105-K East (Basin)
KW	105-K West (Basin)
LDR	land disposal restricted
NRC	U.S. Nuclear Regulatory Commission
PCB	polychlorinated biphenyl
QA	quality assurance
QAO	quality assurance objectives
QC	quality control
ROD	Record of Decision
SAP	Sampling and Analysis Plan
SNF	spent nuclear fuel
SWOC	Solid Waste Operations Complex
TRU	transuranic
TSD	treatment, storage, and disposal
WAC	*Washington Administrative Code*
WCH	Washington Closure Hanford, LLC
WIPP	Waste Isolation Pilot Plant
WSD	Waste Stabilization and Disposition

1.0 INTRODUCTION

The 105-K East (KE) Basin Ion Exchange Column (IXC) cells, lead caves, and the surrounding vault are to be removed as necessary components in implementing *Hanford Federal Facility Agreement and Consent Order* (Ecology et al. 2003) milestone M-034-32 (Complete Removal of the K East Basin Structure). The IXCs consist of six units located in the KE Basin, three in operating positions in cells and three stored in a lead cave.

Methods to remove the IXCs from the KE Basin were evaluated in KBC-28343, *Disposal of K East Basin Ion Exchange Column Evaluation*. The method selected for removal was grouting of the six IXCs into a single monolith for disposal at the Environmental Restoration Disposal Facility (ERDF). Grout will be added to the IXC cells, IXC lead caves containing spent IXCs, and in the spaces between to immobilize the contaminants, provide self-shielding, minimize void space, and provide a structurally stable waste form. The waste to be offered for disposal is the encapsulated monolith defined by the exterior surfaces of the vault and the lower surface of the underlying slab.

The IXC monolith must be characterized and prepared for disposal per the *Declaration of the Record of Decision for DOE Hanford 100 Area, 100-KR-2 Operable Unit* [EPA et al. 1999], and removed by the *Interim Action Record of Decision for the 100-BC-I, 100-BC-2, 100-DR-1, 100-DR-2, 100-FR-1, 100-FR-2, 100-HR-I, 100-HR-2, 100-KR-I, 100-KR-2, 100-IU-2, 100-IU-6, and 200-CW-3 Operable Units, Hanford Site, Benton County, Washington (also known as the "100 Area Remaining Sites ROD"* [EPA 1999]) for the K Basins interim remedial action. Characterization data will be evaluated relative to BHI-00139, *Environmental Restoration Disposal Facility Waste Acceptance Criteria*, or other applicable requirements. If the IXC monolith does not comply with BHI-00139, then the waste will be disposed at another waste management facility, such as the Hanford Site low-level burial ground, as approved by the U.S. Environmental Protection Agency (EPA). The purpose of this document is to specify the data, data quality control, and data management necessary to dispose of the IXC monolith as low-level waste at ERDF, or if not ERDF-compliant, then at another facility approved by the EPA.

1.1 BACKGROUND

The KE Basin is located in the 100 K Area on the Hanford Site. The KE Basin is a 4.9 million L (1.3 million gal), open-topped concrete pool constructed in the early 1950s to store spent nuclear fuel (SNF) from the KE Reactor, which was removed from service in the early 1970s. SNF, primarily from the N Reactor, was stored in the KE Basin beginning in 1975 (DOE/EIS-0245, *Environmental Impact Statement-Management of Spent Nuclear Fuel from the K Basins at the Hanford Site*). Fuel was stored in canisters arranged in metal racks on the floor of the basin with a water cover to a depth of approximately 6.1 m (20 ft). Fuel stored in the basin fractured or corroded, releasing soluble materials, particulates, and fuel pieces which, combined with dust and other debris, accumulated as sludge on the basin floor.

The water recirculation equipment (termed the "main recirculation loop" or the "primary recirculation loop") processed approximately 9 L/s (150 gal/min) of water through each of the

Basin's three bays via suction and discharge headers located about 2 m below the pool's surface. By 1981, the KE Basin was reactivated and three IXCs were added to the loop. Each IXC contains 142 L (5 ft^3) of strong acid cation/strong base anion, organic ion exchange resin, and [1]Duolite™ or [2]Purolite® (mixed bed resin). The three IXCs were operated in parallel in order to provide the necessary water processing flow rate. IXCs were used from 1981 through 1993 to maintain the water quality in the basins. The columns were drained after use in February 1993. IXCs are no longer in service at the KE Basin because of the high radiation exposure during handling. There are no plans to generate additional IXCs.

1.2 DATA QUALITY OBJECTIVES

The data quality objectives (DQOs) applicable to this waste were developed in accordance with EPA QA/G-4, *Guidance for the Data Objectives Process* (EPA QA/G-4 2000). KBC-31475, *Data Quality Objectives Summary Report for the 105 K East Basin Ion Exchange Column Monolith,* documents the DQO process for the IXC monolith.

1.2.1 Statement of Problem

Table 1-1 shows the planning team assembled to contribute to the DQO process for the IXC monolith, based on the recommendations of the project lead and decision makers. Table 1-2 shows the key decision makers.

The problem is stated as:

> "The K Basin Closure (KBC) IXC monolith must be prepared and characterized for compliant disposal at ERDF or other EPA-authorized facility."

The disposal of the IXC monolith requires collecting information on the physical characteristics of the waste to demonstrate its compliance with BHI-00139. Figure 1-1 shows the IXC cells and lead cave configuration prepared for removal as a monolith.

Table 1-1. Data Quality Objective Planning Team for the Ion Exchange Column Monolith. (2 sheets)

Name	Company/organization	Position or area of expertise
Michael Horhota	FH/Quality Assurance	Environmental QA
Mary Ann Green	FH/KBC D&D Work Management	D&D Technical Point of Contact
Gary Hastings	FH/KBC Radiological Control	Radiological Specialist
Rod Jochen	FH/100K Facility Operations	KW Waste Management
Rich Lipinski	WCH/Waste Services	Waste Management

[1] Duolite is a trademark of Rohm and Hass Company, Philadelphia, Pennsylvania.

[2] Purolite is a registered trademark of The Purolite Company, Bala Cynwyd, Pennsylvania.

Table 1-1. Data Quality Objective Planning Team for the Ion Exchange Column Monolith. (2 sheets)

Name	Company/organization	Position or area of expertise
George Mata	FH/KBC Quality Assurance	Quality Assurance
Dan Moder	FH/Closure Projects	Manager, Waste Management
Tom Orgill	EFSH/KBC D&D Work Management	D&D Project Manager
Tino Romano	FH/Transportation Safety Operations	Transportation Specialist
Jim Sailer	Xron Associates, Inc.	Environmental Compliance
Dave Watson	FH/KBC Environmental	Environmental Compliance Officer
Jeff Westcott	FH/SWOC Projects	Waste Management
Terry Winward	FH/KBC Environmental	Regulatory Support

D&D = deactivation and decommissioning.
EFSH = Energy Solutions Federal Services, Hanford.
FH = Fluor Hanford, Inc.
KBC = K Basins Closure.
KE = K East.
KW = K West.
QA = quality assurance.
SWOC = Solid Waste Operations Complex.
WCH = Washington Closure Hanford, LLC.

Table 1-2. Key Decision Makers for the Ion Exchange Column Monolith Data Quality Objectives.

Name	Organization
Ellen Dagan	U.S. Department of Energy, Richland Operations Office
Larry Gadbois	U.S. Environmental Protection Agency

Figure 1-1. Ion Exchange Column Cells and Lead Cave Monolith.

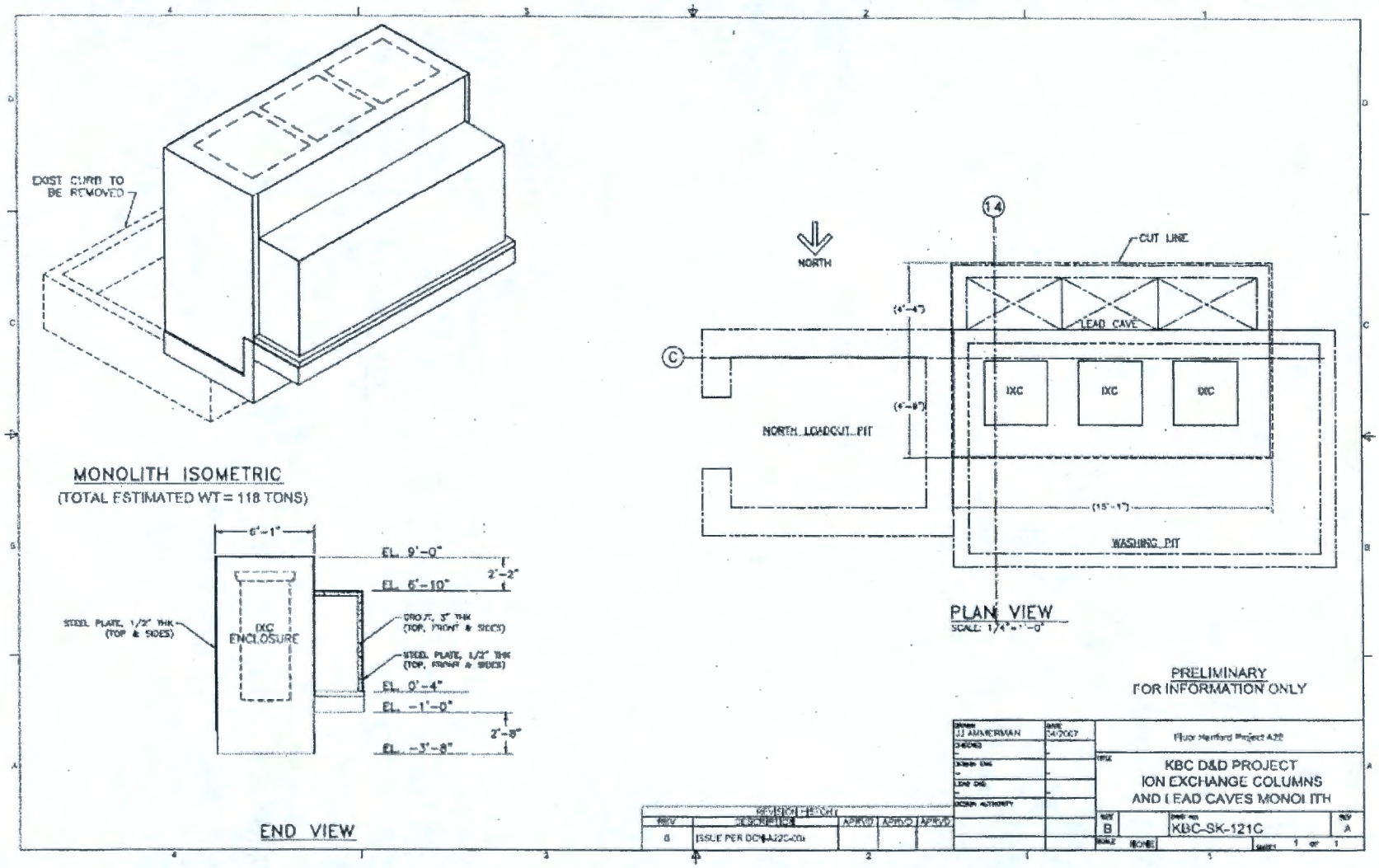

Table 1-3 shows the contaminants of concern for the IXC monolith determined by the DQO process.

Table 1-3. Final List of Constituents of Concern for the IXC Monolith.

Radionuclides	H-3, C-14, Fe-55, Ni-59, Co-60, Ni-63, Se-79, Sr-90, Zr-93, Nb-93m, Tc-99, Pd-107, Cd-113m, Sn-121m, Sb-125, Sn-126, Cs-134, Sc-135, Cs-137, Pm-147, Sm-151, Eu-152, Eu-154, Eu-155, U-234, U-235, U-236, U-238, Np-237, Pu-238, Pu-239, Pu-240, Pu-241, Pu-242, Am-241, Am-242m, Am-243, Cm-242 and Cm-244.
Metals	Arsenic, barium, cadmium, chromium, lead, mercury, selenium, and silver.
Organics	Polychlorinated biphenyl.
Physical characteristics	Void space, pH.

1.2.2 Identify the Decisions

After the alternative actions were examined, the principal study question and the alternative actions were combined into a decision statement expressing a choice among alternatives. Table 1-4 shows decision statements relevant to the disposition of the waste.

Table 1-4. Decision Statements for Ion Exchange Column Monolith Designations. (2 sheets)

No.	Decision Statement
1	Determine if the waste • **is** a TRU waste and will be evaluated for treatment and disposal at WIPP. **OR** • **is not** a TRU waste and will be evaluated for disposal at a candidate Hanford Site facility (e.g., ERDF or other Facility approved by EPA).
2	Determine if the waste • **is** a dangerous waste and will be managed as dangerous for disposal at a candidate Hanford Site facility (e.g., ERDF or other Facility approved by EPA). **OR** • **is not** a dangerous waste and will be managed as not dangerous waste for disposal at a candidate Hanford Site facility (e.g., ERDF or other Facility approved by EPA).
3	If the waste is dangerous waste, then determine if the waste • **is** land disposal restricted and requires treatment prior to disposal in ERDF or another facility approved by EPA. **OR** • **is not** land disposal restricted and may be disposed without treatment in ERDF or another facility approved by EPA.
4	Determine if the waste • **is** a PCB waste and will be managed for PCB content for disposal at a candidate Hanford Site facility (e.g., ERDF or other Facility approved by EPA). **OR** • **is not** a PCB waste and will not be managed for PCB content for disposal at a candidate Hanford Site facility (e.g., ERDF or other Facility approved by EPA).

Table 1-4. Decision Statements for Ion Exchange Column Monolith Designations. (2 sheets)

No.	Decision Statement
5	Determine if the waste • **does** comply with BHI-00139 and can be disposed at ERDF. **OR** • **does not** comply with BHI-00139 and must be disposed at another Hanford Site facility approved by EPA.

BHI-00139, 2002, *Environmental Restoration Disposal Facility Waste Acceptance Criteria*, Rev. 4, Bechtel Hanford, Inc., Richland, Washington.

EPA = U.S. Environmental Protection Agency.
ERDF = Environmental Restoration Disposal Facility.
PCB = polychlorinated biphenyl.
TRU = transuranic.
WIPP = Waste Isolation Pilot Plant.

1.2.3 Identify Inputs to the Decisions

Based on past sampling and analysis and process knowledge, some contaminants are known to remain in the IXC resin. The type and concentration of contaminants in the resin are well represented by the contaminants in the basin water during the time the IXCs were running (HNF-6273, *Data Quality Objectives Process for Designation of K Basin Debris*). The basin water has been determined to contain levels of toxic characteristic metals below the regulatory threshold, but if accumulated over time on the resin that would be regulated as a dangerous waste under *Washington Administrative Code* (WAC) 173-303, "Dangerous Waste Regulations" (KBC-31475). Grout application to the IXC monolith and the resulting immobilization of contaminants is performed for compliance with Title 40, *Code of Federal Regulations*, Part 268, "Land Disposal Restrictions" (40 CFR 268).

The IXC monolith is polychlorinated biphenyl (PCB) remediation waste due to below regulatory concentrations of PCBs in the basin water that accumulated on the ion exchange resin from the flow of basin water through the resin over time (KBC-31475). However, analysis for PCB content is not planned as ERDF and the Hanford Site lined trench can accept solid PCB remediation waste.

Data collection is necessary to support radioactivity characterization and physical form. The new data collection necessary to support decision-making consists of the following:

- Volume and density of grout added to the IXC monolith.

1.2.4 Define the Study Boundaries

The target population for this DQO is the KE Basin IXC monolith including ancillary piping and instruments and the surrounding vault, which will be grouted in preparation for disposal at ERDF. Characterization must be sufficient to resolve the decision statements identified in Table 1-4.

Figure 1-1 shows the ion column cells and lead cave. The IXC monolith will include the cells, lead cave, IXCs with resin, internal piping, and external piping within the limits of the surrounding vault; and grout that will be placed in the cells, the cave, and in the space between the lead cave and vault walls, and a minimum of 3 inches around the exterior of the lead cave. Drawing H-1-34837, *Structural Plans and Sections,* shows the ion column cells; the boundaries of the monolith are the exterior surfaces of the vault and the underlying 15-cm (6-in.) slab. The lead caves are located on the south side of the cells as shown in KBC-31475.

It is anticipated that the IXC cells and lead caves will be grouted in 2007 and the monolith removed as operational readiness allows. The volume and mass of the IXC monolith and the concentration of contaminants will be calculated. Calculation results will be used to determine the waste acceptance to ERDF before adding grout to the cells and caves.

The open cells and lead caves are expected to exhibit substantial radiation dose rates, so personnel exposure will limit the work activities. Work shall be performed in a manner consistent with as-low-as-reasonably-achievable (ALARA) principles.

1.2.5 Decision Rule

The information developed in the previous steps of the DQO process (KBC-31475) are combined with the parameter of interest and an action level to provide a concise description of what action will be taken based on the results of data collected. Table 1-5 lists the decision rules that apply to the designation of the KE basin IXC cells and lead caves encapsulated in grout.

Table 1-5. Decision Rules for the Ion Exchange Column Monolith. (2 sheets)

DS No.	DR No.	Decision Rule
1	1	1. If the waste **is** a TRU waste, then dispose at the WIPP facility in accordance with the acceptance criteria. 2. If the waste **is not** a TRU waste, then dispose at the ERDF or another EPA approved Hanford Site TSD facility.
2	2	1. If the waste **is** a dangerous waste, then manage as dangerous waste in accordance to WAC 173-303 and evaluate for LDR compliance per DR# 3. 2. If the waste **is not** a dangerous waste, then dispose at the ERDF in accordance with BHI-00139 or at another EPA approved Hanford Site TSD facility.
3	3	1. If the waste **is dangerous waste and not** LDR compliant, then treat waste prior to disposal to the ERDF or other EPA approved Hanford Site TSD facility in accordance to WAC-173-303-140. 2. If the waste **is dangerous waste and** LDR, then dispose at the ERDF in accordance with BHI-00139 or at another EPA approved Hanford Site TSD facility.
4	4	1. If the waste **is** a PCB waste, then manage waste in accordance with ARARs of 40 CFR 761 and dispose at the ERDF in accordance with BHI-00139 or at another EPA approved Hanford Site TSD facility. 2. If the waste **is not** a PCB waste, then dispose at the ERDF in accordance with BHI-00139 or at another EPA approved Hanford Site TSD facility.

Table 1-5. Decision Rules for the Ion Exchange Column Monolith. (2 sheets)

DS No.	DR No.	Decision Rule
5	5	1. If the waste **does** comply with BHI-00139 waste acceptance criteria, then dispose at the ERDF. 2. If the waste **does not** comply with BHI-00139 waste acceptance criteria, then **do not** dispose at the ERDF, but at another EPA approved Hanford Site TSD facility.

40 CFR 761, "Polychlorinated Biphenyls (PCBs) Manufacturing, Processing, Distribution in Commerce, and Use Prohibitions," *Code of Federal Regulations*, as amended.
BHI-00139, 2002, *Environmental Restoration Disposal Facility Waste Acceptance Criteria*, Rev. 4, Bechtel Hanford, Inc., Richland, Washington.
WAC 173-303, "Dangerous Waste Regulations," *Washington Administrative Code*, as amended.

ARAR = applicable or relevant and appropriate requirement.
DR = decision rule.
DS = decision statement.
EPA = U.S. Environmental Protection Agency.
ERDF = Environmental Restoration Disposal Facility.
LDR = land disposal restricted.
PCB = polychlorinated biphenyl.
TRU = transuranic.
TSD = treatment, storage, and disposal.
WIPP = Waste Isolation Pilot Plant.

1.2.6 Limits on Decision Error

The parameters to be considered to support decision-making are primarily process knowledge, monolith preparation such as the packaging, grouting process, monolith weight and volume, dose rate, and contamination of the monolith. The measurements collected are not statistically based, so quantitative error tolerances are not set.

Based on the calculated source term in the IXC monolith KBC-31475 (Appendix B), the IXC monolith would not exceed 10 CFR 61, "Licensing Requirements for Land Disposal of Radioactive Waste," 61.55, "Waste Classification," Table 1 and Table 2 Class C limits. Because the IXC monolith source term is fixed, the possibility of an incorrect decision is known to be small. The impact for an incorrect decision is possible effects to human health and the environment.

The monolith will not contain listed dangerous wastes. Although the monolith will contain regulated quantities of lead and other toxic metals, the waste will be encapsulated. The monolith will not contain persistent waste constituents. The monolith may contain small quantities of PCBs; however, ERDF is authorized to accept unlimited quantities of PCB waste in solid form. The consequences of incorrect decisions in regard to chemical contamination are anticipated to be minimal because the macroencapsulated IXC monolith will be treated to satisfy the requirement 40 CFR 268.40, "Applicability of Treatment Standards," for treating radioactive lead solids and 40 CFR 268.45, "Treatment Standards for Hazardous Debris."

All columns were drained when they were removed from service. If a small amount of liquid remained entrained in the column, it would have been removed by the normal evaporative process during the more than twelve years that the IXCs have been stored at the basin. The IXCs in the cells are still vented through the vent tree, and the three IXCs in the lead caves have

[3]Nucfil® vents installed on them. The resins are expected to be dewatered to the extent necessary to pass a paint filter test.

The condition of the resins residing in the IXC vessels also affects plans for treatment and disposal. Research by Pacific Northwest National Laboratory (PNNL-12120), Westinghouse Savannah River Company (WSRC-MS-97-0180), and Du Pont (Du Pont 1978) indicates that over the twelve years in storage, the resin has experienced crosslinking. Crosslinking of organics, such as resin beads, occurs in high radiation fields, including thermoplastic resins. The Du Pont document showed that while polystyrene is radiation-resistant up to a dose of 10^8 R, at higher doses, there is significant hydrogen removal and carbon bond formation (i.e., crosslinking). Since the resin was in a neutral solution with no oxidizers present, and had a relatively high accumulated dose (> 10^9 R), the resin will have undergone extensive crosslinking. This will have caused the resin beads to agglomerate into large chunks, even potentially to the point of forming a single mass of material. With extensive crosslinking, the material will have reduced surface area and restricted access to the pores where the ions are exchanged, making removal from the IXC vessel by any means difficult.

The IXC monolith will exhibit void spaces that will meet the ERDF acceptance criteria through structural stabilization of the IXC monolith itself. However, because the waste will be fully encapsulated in the cells, lead cave and around the lead cave with grout, the waste form meets waste encapsulation requirements that would prevent possible future subsidence or migration of any contaminants including lead from the lead shielding.

1.2.7 Optimize the Design for Obtaining Data

Only a few parameters can be considered for optimization. Reduction of dose rate to the IXC monolith can be achieved through the grouting process. Another parameter for optimization is the density of the grout that can be used. Optimization is not applicable to process knowledge because it already exists.

Data collection is straightforward and on one entire solid monolith that constitutes the entire waste stream. Data collection alternatives are not necessary. A statistical method is not being used. Source term concentrations contaminating the IXCs, cells, and cave will be calculated based on existing data for the water that passed through the IXCs (KBC-31475).

---

[3] Nucfil is a registered trademark of Nuclear Filter Technology, Golden, Colorado.

This page intentionally left blank.

2.0 MEASUREMENT RATIONALE AND DESIGN

Existing radionuclide analytical data and process knowledge are adequate to establish contaminants of concern concentrations in the ion exchange media (resin). The columns were taken out of service and drained in February 1993. If a small amount of liquid remained entrained in the column, it would have been removed by the normal evaporative process during the more than twelve years that the IXCs have been stored at the basin.

As described in Section 1.2.3 of this Sampling and Analysis Plan (SAP), new information required to adequately characterize the IXC monolith is as follows:

- Volume and density of grout added to the IXC monolith.

2.1 PHYSICAL WASTE FORM

The IXC monolith is expected to have no free liquids and a small amount of void space. Inlet and outlet pipes have been drained, and hoses will be disconnected from the IXCs in the cells. The IXC inlet of each IXC in the cells will be connected to a vent port that has a Nucfil vent attached at the end of the vent line. The IXCs located in the lead cave will have the vent plug replaced with a vent port consisting of a Nucfil filter attached to the end of the vent line. The outlets of all IXCs in the cell will be plugged. The IXCs in the lead cave already have plugs installed on the outlet of each IXC. All vent lines will extend outside the steel skin and/or the grouted interior of the cells and lead cave. Since the IXCs will be vented to the exterior of the monolith and all internal piping are plugged, no grout is expected to enter any of the IXCs.

An inventory of the contents of the IXC monolith will be maintained, including at a minimum, the IXCs, grout added, structural concrete, piping, and instruments. The inventory will support determinations of monolith mass and volume.

Table 2-1 calculates the IXCs, cells, caves, piping and flooring void volume, material volume and material weight as it exists prior to grouting the monolith. Table 2-2 calculates the void volume and total weight and volume of the monolith containing the IXCs after grouting. Table 2-3 calculates the void volume and waste weight and volume of the monolith containing the IXCs that is appropriate to consider for determining the concentration of radionuclides in accordance with the U.S. Nuclear Regulatory Commission (NRC) radioactive waste classification requirements. A discussion of the appropriate waste weight and volume for NRC radioactive waste classification determination is presented in KBC-28343.

Table 2-1 calculates the IXCs, cells, caves, piping and flooring void volume and material volume and weight prior to grouting the monolith. This table was added to show total void volume of the original configuration to better represent the voids that may exist after grouting.

Table 2-2 presents estimates of the constituents, volumes, and weights associated with the monolith form based on 150 lb/ft^3 density structural concrete and 105 lb/ft^3 density grout being added. The monolith is designed to have maximum measurements of approximately 9 ft 1 in. wide, 15 ft 1 in. long, and 12 ft 8 in. high and exhibit a total weight of 225,278.8 lb. The total

possible ungrouted void space (assumes no grout infiltration into the IXCs) of the monolith containing the six IXCs is conservatively estimated to total 21.3 ft^3 (i.e., approximately 160 gal).

Table 2-3 volumes and weights are determined starting with the weights and volumes presented on Table 2-2, then deducting the material weights and volumes that are not appropriate for calculating the radioactive concentrations for the purpose of determining the radioactive waste class. The reasons for the deductions are discussed in KCB-28343. The deductions from the total monolith weight and volume shown in Table 2-2 are:

- One-half of the grout in the interior of the lead cave
- The metal frame installed on the outside of the monolith.

The total void volume will remain at 21.3 ft^3, but the reduction of some grout and exterior steel frame and steel skin results in a calculated waste weight of 206,415.8 lbs.

Table 2-1. Cell and Cave Gross Void Volume and Weight Before Grouting.

COMPONENT	VOID VOLUME (ft^3)	MATERIAL VOLUME (ft^3)	COMPONENT WEIGHT (lbs)
CONCRETE CELLS (per drawing H-1-45071, H-1-34789, H-1-34790, H-1-34793, H-1-34794) 6' W x 15' L x 10'-1" H			
3-IXCs	10.2	2.0	960.0
Resin	0.0	15.0	660.0
Associated Piping and misc. steel (Estimated)	0.9	1.2	600.0
Concrete Cell (Calculated by subtracting the cell and void volumes from the total cell dimensions)	0.0	699.0	104,850.0
Cavity Void Volume	175.1	0.0	0.0
Cell Penetration void volume	2.7	0.0	0.0
Drain void volume	3.3	0.0	0.0
Subtotal	**192.2**	**717.2**	**107,070.0**
LEAD CAVES (per drawing H-1-45071, H-1-34789) 165"L x 30"W x 72"H			
3-IXCs	10.2	2.0	960.0
Resin	0.0	15.0	660.0
Associated Piping (Estimated)	0.0	0.0	0.0
Steel Skin - Front (.5" x 164" x 72")	0.0	3.4	1,674.2
Steel Skin - Sides (0.5" x 27.5" x 72") x 2	0.0	1.1	561.5
Steel Skin - Top (0.5" x 30" x 165")	0.0	1.4	701.8
Lead Shielding - Front (2" x 164" x 72")	0.0	13.7	9,703.3
Lead Shielding - Sides (2" x 27.5" x 72") x 2	0.0	4.6	3,254.2
Lead Shielding - Top (2" x 30" x 165")	0.0	5.7	4,067.7
Steel Frame, calculated	0.0	2.7	1,342.0
Void Space in Cave (calculated by subtracting the total volume occupied by the IXCs and total internal volume of the cave)	153.2	0.0	0.0
Subtotal	**163.4**	**49.7**	**22,924.7**
Existing Slabs 8'-10"W x 15'-1"L x 12'-8-1/2"H, plus cutting allowance at slabs			
Concrete Floor Under Lead Cave (2.96' W x 14.5'L x 1.33'D) (1' slab per drawings H-1- 21072, H-1-21073 and 4" topping per walk downs)	0.0	57.2	8,581.9
Washing Pit topping added when IXC Cell Enclosure formed, per H-1-34793 (cut to 15'-2"x6'-2", 11" height)	0.0	85.7	12,861.0
Washing Pit Concrete slab, 1'-8" thick, H-1-21072	0.0	155.9	23,388.4
Subtotal	**0.0**	**298.9**	**44,831.3**
Total monolith	**355.6**	**1,065.7**	**174,826.0**

H-1-21072, 1983, *Structural Concrete Sections & Details at Elev.0 Feet-0 Inches Storage & Transfer Area,* United Nuclear Industries, Inc., Richland, Washington.
H-1-21073, 1955, *Structural Concrete Sections & Details at Elev.0'0" Storage & Transfer Area,* General Electric, Richland, Washington.
H-1-34789, 1987, *Ion Exchange Column,* United Nuclear Industries, Inc., Richland, Washington.
H-1-34790, 1986, *Parallel Ion Exchange System Piping Plan & Section,* Energy Research & Development Administration, Richland Washington.
H-1-34793, 1979, *Structural Plans and Sections,* U.S. Energy Research & Development Administration, Richland Washington.
H-1-34794, 1984, *Structural Sections and Miscellaneous Details,* U.S. Energy Research & Development Administration, Richland Washington.
H-1-45071, 2000, *K-East Ion Exchange Module General Arrangement & PID,* Westinghouse Hanford Company, Richland, Washington.

IXC = Ion Exchange Column.

Table 2-2. Total Monolith Volume and Weight After Grouting.

COMPONENT	VOID VOLUME[1] (ft^3)	MATERIAL VOLUME[2] (ft^3)	COMPONENT WEIGHT[3] (lbs)
CONCRETE CELLS (per drawing H-1-45071, H-1-34789, H-1-34790, H-1-34793, H-1-34794) 6' W x 15' L x 10'-1" H			
3-IXCs	10.2	2.0	960.0
Resin	0.0	15.0	660.0
Associated Piping and misc. steel (Estimated)	0.9	1.2	600.0
Concrete Cell (Calculated by subtracting the cell and void volumes from the total cell dimensions)	0.0	699.0	104,850.0
Grout in Cell (Calculated by subtracting the volume of the IXCs and piping from the open cell space)	0.0	181.1	19,016.6
Subtotal	**11.1**	**898.3**	**126,086.6**
LEAD CAVES (per drawing H-1-45071, H-1-34789) 165"L x 30"W x 72"H			
3-IXCs	10.2	2.0	960.0
Resin	0.0	15.0	660.0
Associated Piping (Estimated)	0.0	0.0	0.0
Steel Skin - Front (.5" x 164" x 72")	0.0	3.4	1,674.2
Steel Skin - Sides (0.5" x 27.5" x 72") x 2	0.0	1.1	561.5
Steel Skin - Top (0.5" x 30" x 165")	0.0	1.4	701.8
Lead Shielding - Front (2" x 164" x 72")	0.0	13.7	9,703.3
Lead Shielding - Sides (2" x 27.5" x 72") x 2	0.0	4.6	3,254.2
Lead Shielding - Top (2" x 30" x 165")	0.0	5.7	4,067.7
Steel Frame, calculated	0.0	2.7	1,342.0
Grout in Cave (calculated by subtracting the total volume occupied by the IXCs and total internal volume of the cave)	0.0	153.2	16,086.4
Subtotal	**10.2**	**202.9**	**39,011.0**
Existing Slabs and MONOLITH FORM (3" grout plus 1/2" steel plate outside exposed top and sides of Lead Cave and 1/2" steel plate, top & sides of IXC enclosure) 8'-10"W x 15'-1"L x 12'-8-1/2"H, plus cutting allowance at slabs			
Concrete Floor Under Lead Cave (2.96' W x 14.5'L x 1.33'D) (1' slab per drawings H-1- 21072, H-1-21073 and 4" topping per walk downs)	0.0	57.2	8,581.9
Washing Pit topping added when IXC Cell Enclosure formed, per H-1-34793 (cut to 15'-2"x6'-2", 11" height)	0.0	85.7	12,861.0
Washing Pit Concrete slab, 1'-8" thick, H-1-21072	0.0	155.9	23,388.4
Steel Skin at Lead Cave top, front and sides (1/2" steel plate, at outer dimensions of grout 2'-9"W x 14'-3"L x 6'-5-1/2"H)	0.0	6.9	3,404.9
Steel Skin (1/2" steel plate) at IXC Cell Enclosure top, front, sides and back (except against lead cave)	0.0	15.9	7,780.0
Grout on the Exterior at Lead Cave (3" on top, front and sides, use dimensions to grout centerlines to calculate volume: ht 76", length 168", width 31.5")	0.0	39.7	4,165.0
Subtotal	**0.0**	**361.4**	**60,181.2**
Total monolith	**21.3**	**1,462.5**	**225,278.8**

H-1-21072, 1983, *Structural Concrete Sections & Details at Elev.0 Feet-0 Inches Storage & Transfer Area,* United Nuclear Industries, Inc., Richland, Washington.
H-1-21073, 1955, *Structural Concrete Sections & Details at Elev.0'0" Storage & Transfer Area,* General Electric, Richland, Washington.
H-1-34789, 1987, *Ion Exchange Column,* United Nuclear Industries, Inc., Richland, Washington.
H-1-34790, 1986, *Parallel Ion Exchange System Piping Plan & Section,* Energy Research & Development Administration, Richland Washington.
H-1-34793, 1979, *Structural Plans and Sections,* U.S. Energy Research & Development Administration, Richland Washington.
H-1-34794, 1984, *Structural Sections and Miscellaneous Details,* U.S. Energy Research & Development Administration, Richland Washington.
H-1-45071, 2000, *K-East Ion Exchange Module General Arrangement & PID,* Westinghouse Hanford Company, Richland, Washington.
[1] Void volume is an estimate and will be re-calculated once grout is added to the monolith.
[2] Material volume is an estimate and will be re-calculated once grout is added to the monolith.
[3] Component weight is an estimate and will be re-calculated once grout is added to the monolith.

IXC = Ion Exchange Column.

Table 2-3. Monolith Volume and Weight Suitable for Waste Classification.

COMPONENT	VOID VOLUME[1] (ft^3)	MATERIAL VOLUME[2] (ft^3)	COMPONENT WEIGHT[3] (lbs)
CONCRETE CELLS (per drawing H-1-45071, H-1-34789, H-1-34790, H-1-34793, H-1-34794) 6' W x 15' L x 10'-1" H			
3-IXCs	10.2	2.0	960.0
Resin	0.0	15.0	660.0
Associated Piping and misc. steel (Estimated)	0.9	1.2	600.0
Concrete Cell (Calculated by subtracting the cell and void volumes from the total cell dimensions)	0.0	699.0	104,850.0
Grout in Cell (Calculated by subtracting the volume of the IXCs and piping from the open cell space)	0.0	181.1	19,016.6
Subtotal	**11.1**	**898.3**	**126,086.6**
LEAD CAVES (per drawing H-1-45071, H-1-34789) 165"L x 30"W x 72"H			
3-IXCs	10.2	2.0	960.0
Resin	0.0	15.0	660.0
Associated Piping (Estimated)	0.0	0.0	0.0
Steel Skin - Front (.5" x 164" x 72")	0.0	3.4	1,674.2
Steel Skin - Sides (0.5" x 27.5" x 72") x 2	0.0	1.1	561.5
Steel Skin - Top (0.5" x 30" x 165")	0.0	1.4	701.8
Lead Shielding - Front (2" x 164" x 72")	0.0	13.7	9,703.3
Lead Shielding - Sides (2" x 27.5" x 72") x 2	0.0	4.6	3,254.2
Lead Shielding - Top (2" x 30" x 165")	0.0	5.7	4,067.7
Steel Frame, calculated	0.0	2.7	1,342.0
Grout in Cave (calculated by subtracting the total volume occupied by the IXCs and half the internal volume of the cave)	0.0	62.9	6,605.2
3" internal grout layer for lead encapsulation in other half of lead cave (Use centerline of grout, reduce dimensions by 1.5")	0.0	17.2	1,803.0
Subtotal	**10.2**	**129.7**	**31,332.9**
CONCRETE FLOOR (per drawing H-1- 21072, H-1-21073, H-1-34793)			
Concrete Floor Under Lead Cave (2.96' W x 14.5'L x 1.33'D) (1' slab per drawings H-1- 21072, H-1-21073 and 4" topping per walk downs)	0.0	57.2	8,581.9
Washing Pit topping added when IXC Cell Enclosure formed, per H-1-34793 (cut to 15'-2"x6'-2", 11" height)	0.0	85.7	12,861.0
Washing Pit Concrete slab, 1'-8" thick, H-1-21072	0.0	155.9	23,388.4
Grout on the Exterior at Lead Cave (3" on top, front and sides, use dimensions to grout centerlines to calculate volume: ht 76", length 168", width 31.5")	0.0	39.7	4,165.0
Subtotal	**0.0**	**338.5**	**48,996.3**
Total Waste	**21.3**	**1,366.5**	**206,415.8**

H-1-21072, 1983, *Structural Concrete Sections & Details at Elev.0 Feet-0 Inches Storage & Transfer Area,* United Nuclear Industries, Inc., Richland, Washington.

H-1-21073, 1955, *Structural Concrete Sections & Details at Elev.0'0" Storage & Transfer Area,* General Electric, Richland, Washington.

H-1-34789, 1987, *Ion Exchange Column,* United Nuclear Industries, Inc., Richland, Washington.

H-1-34790, 1986, *Parallel Ion Exchange System Piping Plan & Section,* Energy Research & Development Administration, Richland Washington.

H-1-34793, 1979, *Structural Plans and Sections,* U.S. Energy Research & Development Administration, Richland Washington.

H-1-34794, 1984, *Structural Sections and Miscellaneous Details,* U.S. Energy Research & Development Administration, Richland Washington.

H-1-45071, 2000, *K-East Ion Exchange Module General Arrangement & PID,* Westinghouse Hanford Company, Richland, Washington.

[1] Void volume is an estimate and will be re-calculated once grout is added to the monolith.

[2] Material volume is an estimate and will be re-calculated once grout is added to the monolith.

[3] Component weight is an estimate and will be re-calculated once grout is added to the monolith.

2.2 PCB WASTE CHARACTERIZATION

The IXC monolith might contain small quantities of PCBs; however, ERDF is authorized to accept PCB waste in solid form and the Hanford Site lined trench, in specific cases with EPA approval, can accent PCB remediation waste in solid form. The waste will be an encapsulated solid; therefore, sampling is not necessary. PCB content shall be specified as the ion exchange media containing the maximum PCB concentration in the KE Basin sludge.

2.3 DANGEROUS WASTE CONSTITUENTS

The monolith will not contain listed dangerous wastes. Although the monolith will contain regulated quantities of lead and other toxic metals, the waste will be encapsulated. The monolith will not contain persistent waste constituents. The waste will be in an encapsulated solid; therefore, the macroencapsulated IXC monolith will be treated to satisfy the requirement 40 CFR 268.40, "Applicability of Treatment Standards," for treating radioactive lead solids, since no credit is being taken for lead shielding and 40 CFR 268.45, "Treatment Standards for Hazardous Debris," for treating of the other toxic metals.

2.4 RADIONUCLIDE CHARACTERIZATION OF ENCAPSULATED MONOLITHS

Characterization of the radionuclide content of the monolith is required for purposes of determining that the waste meets the requirements of BHI-00139. The radiological characterization of the monolith is based on the IXCs because it dominates the inventory. The radionuclide inventories for the IXCs are calculated for Cs-137, Sr-90, Pu-238, and Pu-239 by subtracting the outlet concentration from the inlet concentration to determine the concentration captured on the IXC, and then multiplying times the flow rate, and time in service, as seen in the column labeled "Calculated IXC Nuclide Inventory (Ci)" of Table B-1 of KBC-31475. The activities of other isotopes were ratioed from Cs-137 and Pu-239. All isotopes with an atomic weight less than 210 were ratioed to Cs-137, otherwise any isotope with an atomic weight greater than 210 were ratioed to Pu-239. The concentration of radionuclides is determined by dividing the monolith radioactive inventory reported in Table B-1 of KBC-31475 by the waste weight or volume listed on Table 2-3.

2.5 DESCRIPTION OF EXISTING DATA

Data collection consisted of using inlet and outlet composite samples that were taken monthly at the time the IXCs were in service and the associated laboratory data results received from the composite samples. The total Cs-137, Sr-90, Pu-238, and Pu-239 loading of an IXC was calculated by multiplying the in minus out water concentrations determined by analysis times the hours of service.

3.0 SAMPLE AND MEASUREMENT LOCATION AND FREQUENCY

3.1 SAMPLING

Sample collection and testing are not being conducted per this activity so these attributes do not apply in this document.

3.2 MEASUREMENTS

Measurements are not being collected to support monolith decision-making. However, an inventory shall be prepared that records the content of the monolith. Also, calculations will be performed based on process knowledge and monolith design to support monolith decision-making.

This page intentionally left blank.

4.0 SAMPLE HANDLING AND ANALYSIS

4.1 SAMPLE HANDLING AND CUSTODY REQUIREMENTS

4.1.1 Sample Preservation, Containers, and Holding Times

Activity is not applicable because no sample management activities are required.

4.1.2 Sample Shipping

Activity is not applicable because no sample management shipping is required.

4.2 SAMPLE ANALYSIS

Activity is not applicable because no sample analysis is required.

This page intentionally left blank.

5.0 QUALITY ASSURANCE PROJECT PLAN

This quality assurance project plan describes the specific quality assurance (QA) procedures and quality control (QC) activities associated with data acquisition for the disposition of the KE IXC monolith.

This document has been prepared consistent with EPA QA/R-5, *EPA Requirements for Quality Assurance Project Plans*, as supplemented by EPA QA/G-5, *Guidance for Quality Assurance Project Plans*. A crosswalk to information elements required by the EPA QA/R-5 document and this SAP is provided in Appendix A. The quality assurance project plan includes the following four elements:

- Project management
- Data generation and acquisition
- Assessment and oversight
- Data validation and usability.

This document considered application of SW-846, *Test Methods for Evaluating Solid, Waste Physical/Chemical Methods*. However, because SW-846 applies to sample collection and analysis for chemical constituents (activities not being performed to accomplish this action), it does not apply to this SAP.

5.1 PROJECT MANAGEMENT

5.1.1 Project/Task Description

Once the project is ready to grout the IXC monolith, the three IXCs in the concrete cells will be unhooked from all hoses while in the cells (when the system was taken out-of-service, the IXCs were drained but were not unhooked from the system), vents will be installed on all inlet ports and caps applied to the outlet port if not already installed, and all cell and lead cave access ports will be removed. Once all access ports and hoses are open, grout will be pumped into the cells, lead cave, and the lead cave and steel skin surrounding the three sides of the lead cave. Approximately 17,828 kg (39,268 lb) of grout will be added inside the IXC cells, lead caves and in the space exterior to the lead cave. The estimated total mass of the IXC monolith after grouting is about 102,276 kg (225,278.8 lb). The estimated total mass of the IXC monolith for waste classification is about 93,713 kg (206,415.8 lb).

After curing, the monolith will be removed from the facility. The monolith will be transferred to an onsite facility for disposal.

This activity is proposed to occur in 2007.

As documented in KBC-31475, existing analytical data from monthly sampling of the IXC's inlet and outlet samplers will be used to calculate the radioactive inventory. In addition, KBC-31475 compiles material quantities associated with the IXC cells and lead cave, plus the

surrounding vault. The data will be used to calculate material quantities and the concentration of contaminants. Contaminant concentrations will be used to designate the waste, and verify the waste meets BHI-00139 requirements.

5.1.2 Project Organization

Table 1-1 shows major participants in the SAP process. Table 1-2 shows the principal decision makers. The primary data users are KBC Project personnel, who will calculate contaminant concentrations in the IXC monolith. Data will be used for purposes of verifying compliance with BHI-00139 for ERDF disposal or the acceptance criteria of another facility approved by EPA, both by KBC staff and personnel at the receiving facility.

Figure 5-1 shows the organization chart for measurement collection and waste management interfaces to the receiving facility.

Figure 5-1. Measurement Collection and Waste Management Organization Chart.

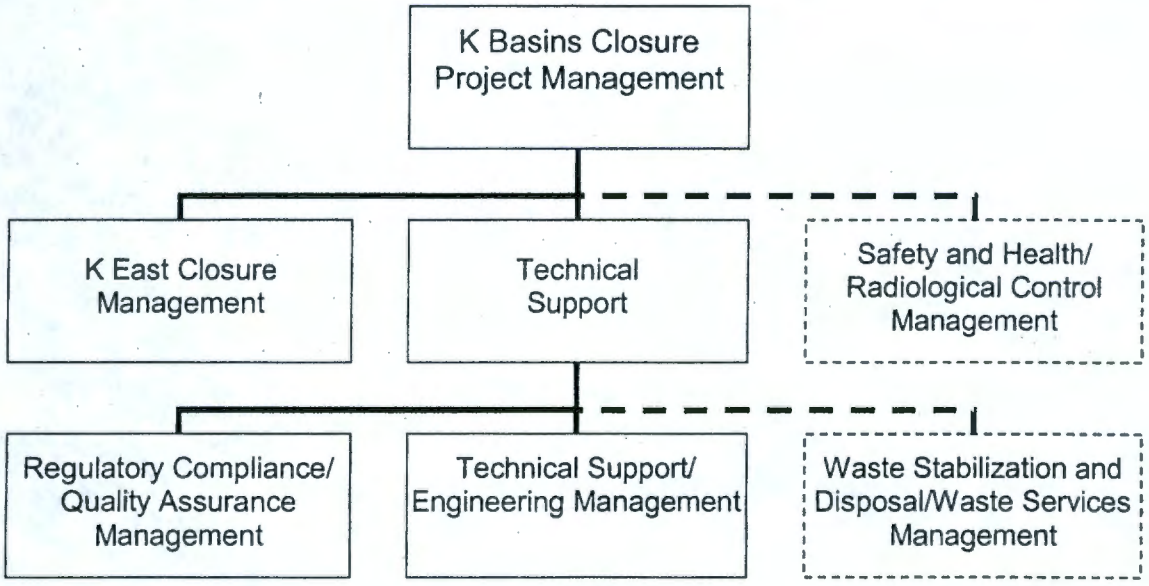

The organization responsible for maintaining this quality assurance project plan is Waste Stabilization and Disposal.

5.1.3 Roles and Responsibilities

Roles and responsibilities for the IXC project are as follows.

K Basins Closure Project

The KBC Project has the following responsibilities:

- Integrate activities of the project to accomplish removal and disposal of KE Basin IXC monolith

- Manage corrective actions associated with work performed by organization
- Maintain qualifications of personnel performing work in accordance with this document.

K East Basin Closure Project

The K East Basin Closure Project has the following responsibilities:

- Manage and integrate KE Basin IXC monolith removal activities
- Procure equipment necessary to perform KE Basin IXC monolith removal operations
- Grout the IXC monolith and cut from building for removal
- Excavate around the IXC monolith to gain access to the IXC monolith and load monolith for transport to disposal
- Execute KE Basin IXC monolith grout and removal activities
- Collect information necessary to maintain an inventory of the monolith
- Manage corrective actions associated with work performed by organization
- Maintain qualifications of personnel performing work in accordance with this document.

K Basins Technical Support/Engineering

The K Basins Technical Support/Engineering organization has the following responsibilities:

- Determine and maintain calculation of monolith weight and volume
- Manage corrective actions associated with work performed by organization
- Maintain qualifications of personnel performing work in accordance with this document.

Safety and Health/ Radiological Control

The K Basins Safety, Health, and Radiological Control organization has the following responsibilities:

- Support the KE Basin IXC monolith removal activities and monolith transportation to disposal
- Manage corrective actions associated with work performed by organization
- Maintain qualifications of personnel performing work in accordance with this document.

Waste Stabilization and Disposal

The Waste Stabilization and Disposal/Waste Services organization has the following responsibilities:

- Maintain an inventory of the contents of the monolith
- Perform data review and validation, then prepare a report of measurements performed
- Perform waste designation and radioactive waste classification determinations
- Prepare disposal facility waste profile and shipping papers
- Manage corrective actions associated with work performed by organization
- Maintain qualifications of personnel performing work in accordance with this document.

Regulatory Compliance/Quality Assurance

The K Basins Technical Support/Quality Assurance Organization has the following responsibilities:

- Conduct surveillance to verify compliance with the implementation of this SAP
- Manage corrective actions associated with work performed by organization
- Maintain qualifications of personnel performing work in accordance with this document.

5.1.4 Special Training Requirements and Certification

No activities associated with this SAP require task-specific training. All activities being performed are routine work activities for which training is provided in accordance with the Fluor Hanford Training and Quality Assurance Program.

5.1.5 Quality Assurance Objectives and Criteria for Measurement Data

The data quality assurance objectives (QAO) are expressed as representativeness, comparability, accuracy, precision, and completeness. These parameters are defined as follows:

- **Representativeness** – A measure of how closely data reflect the characteristic of a population, a parameter, variations at a sampling point, or environmental conditions.

- **Comparability** – A measure of the confidence with which one data set can be compared to another.

- **Accuracy** – The degree to which the data agree with an accepted reference or true value.

- **Precision** – A measure of the mutual agreement between comparable data gathered or developed under similar conditions.

- **Completeness** – A measure of the amount of valid data obtained compared to the amount that was expected.

The QAO as applied to each type of data collection is presented in Tables 5-1 and 5-2.

Table 5-1. Inventory QAO Criteria.

QAO	Attainment Criteria
Precision	The qualitative data collection, such as compiling and assessing inventory documentation, do not lend themselves to evaluations of precision. Therefore, precision requirements are not established for this attribute.
Accuracy	The qualitative data collection, such as compiling and assessing inventory documentation, do not lend themselves to evaluations of accuracy. Therefore, accuracy requirements are not established for this attribute.
Representativeness	Representativeness is a qualitative parameter that will be satisfied by ensuring that the process of obtaining, evaluating, and documenting inventory information is sufficient to perform monolith and waste volume and mass calculations presented in Tables 2-2 and 2-3.
Completeness	The inventory documentation shall contain all of the information requirements specified in Section 5.2.5 of this SAP.
Comparability	The inventory data comparability is attained by complying with training requirements for personnel collecting and evaluating the data and performing the work in compliance with work documents.

QAO = quality assurance objectives.
SAP = Sampling and Analysis Plan.

Table 5-2. Weight and Volume Measurements QAO Criteria.

QAO	Attainment Criteria
Precision	Precision is established and maintained within the recommendations of the manufacturer of the instrument and performance requirements of Table 5-3 as applicable.
Accuracy	Calibration is established and maintained within the recommendations of the manufacturer of the instrument used and performance requirements of Table 5-3 as applicable.
Representativeness	The measurement is applied to the component or entire monolith as applicable.
Completeness	100% of the measurements needed are performed and useable.
Comparability	Measurements are performed by personnel trained in their use and in accordance with applicable standards and work documents.

QAO = quality assurance objectives.

No QAOs are necessary for the collection of length measurements using tapes or rods.

The field instrument performance requirements are listed in Table 5-3.

Table 5-3. Field Instrument Performance Requirements.

Measurement	Measurement Method	Action Level/ Detection Limit	Accuracy Requirement	Precision Requirement
Length	Tapes, Rods	Lower 5% of scale range	not applicable	not applicable
Dose Rate	Bicron microrem meter, Geiger-Mueller AMP-100, or ion chamber	Lower 5% of scale range	± 20%	± 20%
Weight	Weigh scale	Lower 5% of scale range	± 2%*	± 2%*

*The stated value or manufacturer's specifications.

5.1.6 Documentation and Records

Documentation and calculations will be kept in accordance with quality processes and work instructions that satisfy the fundamentals of the quality criteria expressed in the Fluor Hanford Quality Assurance Program. Field measurements will include weight and length measurements. Documentation will include an inventory of the materials comprising the contents of the monolith.

5.2 DATA GENERATION AND ACQUISITION

No samples are collected for analysis. Because samples are not collected, this document will not discuss activities specific to sampling and laboratory analysis including sample process design, sampling methods, sample handling and custody, and laboratory analytical methods.

Field data will be collected including an inventory, grout volume, and weights.

5.2.1 Quality Control Requirements

The SAP does not involve the collection of samples for testing so QC samples such as blanks, duplicates, etc. are not applicable. Field measurements are performed and an inventory of the monolith is maintained; the QC attribute is attained when these activities are performed in accordance with work documents.

All corrective actions for a nonconformance must be established and implemented through the Fluor Hanford Quality Assurance Program.

5.2.2 Instrument Testing, Inspection and Maintenance

Instruments measuring grout volume, weight, and length may be used; an instrument, if used, will be tested, inspected, and maintained in accordance with the Fluor Hanford Quality Assurance Program. The program describes the frequency, requirements, and methods used to perform these activities.

Correction of nonconformances shall be in accordance with quality processes and work instructions that satisfy the fundamentals of the quality criteria expressed in the Fluor Hanford Quality Assurance Program.

5.2.3 Instrument Calibration and Calibration Frequency

Instruments measuring grout volume and weight may be used; an instrument, if used, will be calibrated in accordance with the Fluor Hanford Quality Assurance Program. Rod and tapes used to measure length are not calibrated. The program describes the frequency, requirements, and methods used to calibrate these instruments as needed.

Correction of nonconformances shall be in accordance with quality processes and work instructions that satisfy the fundamentals of the quality criteria expressed in the Fluor Hanford Quality Assurance Program.

5.2.4 Inspection/Acceptance Requirements for Supplies

Instruments measuring grout volume, weight, and length may be used; an instrument, if used, will have supplies for it inspected/accepted in accordance with the Fluor Hanford Quality Assurance Program. The program describes the requirements and methods used to inspect/accept supplies.

Correction of nonconformances shall be in accordance with quality processes and work instructions that satisfy the fundamentals of the quality criteria expressed in the Fluor Hanford Quality Assurance Program.

5.2.5 Data Management

Data will be collected implementing this SAP including preparing a monolith inventory and measurements of length and weight may be included. The following are the minimum requirements for raw data collection and management of data:

- All raw data shall be signed and dated in reproducible ink by the person generating them. Alternately, unalterable electronic signatures may be used.
- All data must be recorded clearly, legibly, and accurately in filed records (bench sheets, logbooks), and include applicable identification numbers.
- All changes to original data must be lined out, initialed, and dated by the individual making the change. A justification for changing the original data may also be included. Original data must not be obliterated or otherwise disfigured so as not to be readable. Data changes shall only be made by the individual who originally collected the data or an individual authorized to change the data.

- All data must be transferred and reduced from field records completely and accurately.
- All field records must be maintained as QA records.
- Data must be organized into a standard format for reporting purposes, as specified in work documents.

The data sheet used to record measurements of length, weight, or volume of grout placed into the monolith shall contain at a minimum the following:

- Identification of the material being measured, for grout; record the placement (inside cells, inside lead caves, and exterior to cell and cave)
- Person's name and signature recording the measurement and date
- Identification of the equipment used to make the measurement (equipment number or make, model, and serial number)
- The measurement with units specified
- Identification of the work document directing the measurement activity
- Location where the measurement was taken
- Identification of conditions or occurrences that may affect the quality of the data.

The inventory data sheet of the monolith contents shall contain at a minimum the following information.

- Identification of the data sheet
- Person's name and signature recording the measurement and date
- All the mass and volume of materials listed on Table 2-1, with the grout as partitioned in accordance with the table, and monolith form materials updated for actual quantities
- Volume and mass units are identified and recorded as cubic feet and pounds
- Identification of conditions or occurrences that may affect the quality of the data.

Sampling and measurements generated during this project will be managed according to the processes described in Section 5.1.6 of this SAP, "Documents and Records."

5.3 ASSESSMENT/OVERSIGHT FOR MEASUREMENTS

5.3.1 Assessments and Response Actions

Fluor Hanford Quality Assurance may conduct random surveillances and assessments. Assessments and surveillances are performed to verify compliance with requirements outlined in this SAP, procedures, and regulatory requirements. Deficiencies identified during surveillances are addressed in accordance with quality improvement processes that satisfy the basic fundamentals from the quality criteria expressed in the Fluor Hanford Quality Assurance Program.

Assessments may include surveillance, management systems reviews, readiness reviews, technical systems audits, performance evaluations, and audits of data quality. Assessment may evaluate the following criteria:

- Data meet basic project specifications and are appropriately relevant and suitable for their targeted use
- The quality of data meets the acceptance criteria specified and that a sufficient quantity of existing data is available to allow the project to meet criteria on data quality
- Sufficient QC information is obtained on the data
- The QA techniques documented in this quality assurance project plan are followed.

A graded approach is used to determine the overall scope and level of detail in which the assessments are performed. Assessments performed shall document the following:

- The role that these assessments play in the project's total set of assessments
- The schedule of assessments
- The organizations and individuals expected to participate in the assessments
- Information expected from the assessment
- Documentation needed for the assessment
- Types of corrective action and levels of authority that would determine corrective action.

5.3.2 Reports to Management

Reports on the results of performance evaluations and system audits, of periodic data quality assessments, and significant QA problems and recommended solutions are distributed to affected managers as appropriate. Nonconformances and corrective action status are reported to Fluor Hanford management in accordance with internal work processes.

5.4 DATA, REVIEW, VALIDATION, AND USABILITY

Waste Stabilization and Disposal (WSD) personnel shall review, verify, and validate data prior to use. The reported data are compared to the established data quality requirements. WSD personnel will then review the data against acceptance criteria for transportation and disposal.

5.4.1 Data Review, verification, and Validation Requirements

The data collected will be reviewed and validated. The testing of samples is not being performed under this SAP so verification is not an applicable activity. The data will be reviewed to ensure all of the data reporting requirements of Section 5.2.5 and quality requirements of Section 5.1.5 have been fulfilled. The data review and validation will be performed by WSD reviewer identified by the organization identified in Section 5.1.3.

Data will not undergo a third-party validation because the data quality is adequate without it.

5.4.2 Verification and Validation Methods

The data sheets recording the monolith inventory and measurements, if collected, of weight, length, and grout volume will be reviewed by a WSD reviewer. The reviewer will ensure that content and requirements listed in Section 5.2.5 for each applicable data type have been completed.

The data sheets recording the monolith inventory and measurements, if collected, of weight, length, and grout volume will be validated by a WSD reviewer. The WSD reviewer will validate the data by evaluating the reviewed data to determine that it satisfies the QAO associated with each data type, as applicable, provided in Section 5.1.5 and recording the result within the work instructions.

The data collected will not undergo a third-party validation because the data quality is adequate without it.

5.4.3 Reconciliation with User Requirements

Once the data measurements have been reviewed and validated, the data are provided to WSD personnel to reconcile the data with user requirements. The data will be used to determine that the monolith may be disposed at ERDF. The reconciliation shall use process knowledge and data collected to resolve each Decision Rule and state if the waste is compliant for ERDF disposal recording each result within the work instructions. The reconciliation will include a waste designation and land disposal restricted status determination and radioactive waste class determination.

A report summarizing the results of the data reconciliation with user requirements will be sent to Waste Services and KBC Management. The report will be published on an as-needed basis but before shipment of waste to disposal.

This page intentionally left blank.

6.0 HEALTH AND SAFETY

All field operations at Fluor Hanford-operated facilities required by this SAP will be conducted in accordance with the principles of an integrated environmental, safety, and health management program.

The integrated environmental, safety, and health management program identifies processes and procedures where the primary hazards associated with waste management activities are managed. Some of these hazards are direct radiation exposure, potential personnel contamination, potential inhalation of airborne concentrations of radioactive materials, and exposures to hazardous substances. Rather than list the requirements to mitigate and control radiological and hazardous chemical exposures, the management plan references documents that provide the necessary direction to mitigate and control these hazards. The program incorporates the requirements of 29 CFR 1910, "Occupational Safety and Health Standards," Subpart 120(6)(l)(v), the management plan shall be made available to Fluor Hanford employees and any contractor or subcontractor involved with hazardous waste operations.

Fluor Hanford has a robust and mature radiation protection program, which fully implements 10 CFR 835, "Occupational Radiation Protection." Implementation of radiological work and radiation protection activities include defining roles and responsibilities, qualifications, training, implementation of the ALARA philosophy, external and internal dosimetry, monitoring and surveillance, work control mechanisms (e.g., radiation work permits and access and entry requirements), self-assessments, and use of specific radiation monitoring devices and meters. The Fluor Hanford Chemical Management Program, in conjunction with implementation of the Automated Job Hazards Analysis, will be relied on to protect the workers, the general public, and the environment from specific chemical substances and their associated hazards. The Chemical Management Program provides direction for the acquisition, storage, transportation, use, final disposition, record keeping, and management review of program performance for chemicals at the Hanford Site.

This page intentionally left blank.

7.0 REFERENCES

10 CFR 61, "Licensing Requirements for Land Disposal of Radioactive Waste," *Code of Federal Regulations,* as amended.

10 CFR 835, "Occupational Radiation Protection," *Code of Federal Regulations*, as amended.

29 CFR 1910, "Occupational Safety and Health Standards," *Code of Federal Regulations*, as amended.

40 CFR 268, "Land Disposal Restrictions," *Code of Federal Regulations,* as amended.

40 CFR 761, "Polychlorinated Biphenyls (PCBs) Manufacturing, Processing, Distribution in Commerce, and Use Prohibitions," *Code of Federal Regulations,* as amended.

BHI-00139, 2002, *Environmental Restoration Disposal Facility Waste Acceptance Criteria*, Rev. 4, Bechtel Hanford, Inc., Richland, Washington.

DOE/EIS-0245, *Environmental Impact Statement-Management of Spent Nuclear Fuel from the K Basins at the Hanford Site*, U.S. Department of Energy, Richland Operations Office, Richland, Washington.

Du Pont, 1978, *Radiation Effects on Nonmetallic Materials and Components*, DPE-3586, E. I. Du Pont de Nemours & Co., Inc. Wilmington, Delaware.

Ecology, EPA, and DOE, 2003, *Hanford Federal Facility Agreement and Consent Order,* 89-10, Rev. 6, Washington State Department of Ecology, U.S. Environmental Protection Agency, and U.S. Department of Energy, Olympia, Washington.

EPA, 1999, *Interim Action Record of Decision for the 100-BC-I, 100-BC-2, 100-DR-I, 100-DR-2, 100-FR-I, 100-FR-2, 100-HR-I, 100-HR-2, 100-KR-I, 100-KR-2, 100-IU-2, 100-IU-6, and 200-CW-3 Operable Units, Hanford Site, Benton County, Washington* (also known as the "100 Area Remaining Sites ROD"), U.S. Environmental Protection Agency, Washington, D.C.

EPA, DOE, and Ecology, 1999, *Declaration of the Record of Decision for DOE Hanford 100 Area, 100-KR-2 Operable Unit*, U.S. Department of Energy, U.S. Environmental Protection Agency (EPA 541-R99-059), and Washington State Department of Ecology, Richland, Washington.

EPA QA/G-4, 2000, *Guidance for the Data Quality Objectives Process,* EPA/600/R-96-055, U.S. Environmental Protection Agency, Washington, D.C.

EPA QA/G-5, *Guidance for Quality Assurance Project Plans*, U.S. Environmental Protection Agency, Washington, D.C.

EPA QA/R-5, 2001, *EPA Requirements for Quality Assurance Project Plans*, EPA/240/B-01/003, U.S. Environmental Protection Agency, Washington, D.C.

H-1-21072, 1983, *Structural Concrete Sections & Details at Elev.0 Feet-0 Inches Storage & Transfer Area,* United Nuclear Industries, Inc., Richland, Washington.

H-1-21073, 1955, *Structural Concrete Sections & Details at Elev.0'0" Storage & Transfer Area,* General Electric, Richland, Washington.

H-1-34789, 1987, *Ion Exchange Column,* United Nuclear Industries, Inc., Richland, Washington.

H-1-34790, 1986, *Parallel Ion Exchange System Piping Plan & Section*, Energy Research & Development Administration, Richland Washington.

H-1-34793, 1979, *Structural Plans and Sections*, U.S. Energy Research & Development Administration, Richland Washington.

H-1-34794, 1984, *Structural Sections and Miscellaneous Details,* U.S. Energy Research & Development Administration, Richland Washington.

H-1-34837, 1984, *Structural Plans and Sections,* United Nuclear Industries, Inc., Richland, Washington.

H-1-45071, 2000, *K-East Ion Exchange Module General Arrangement & PID,* Westinghouse Hanford Company, Richland, Washington.

HNF-6273, 2000, *Data Quality Objectives Process for Designation of K Basin Debris*, Rev. 0, Fluor Hanford, Inc., Richland, Washington.

KBC-28343, 2006, *Disposal of K Basin Ion Exchange Column Evaluation,* Rev. 1, Fluor Hanford, Inc., Richland, Washington.

KBC-31475, 2007, *Data Quality Objectives Summary Report for the 105 K East Basin Ion Exchange Column Monolith*, Rev. 1, Fluor Hanford, Inc., Richland, Washington.

PNNL-12120, 1999, *Validation Testing of the Nitric Acid Dissolution Step within the K-Basin Sludge Pretreatment Process*, Pacific Northwest National Laboratory, Richland, Washington.

SW-846, 1997, *Test Methods for Evaluating Solid, Waste Physical/Chemical Methods,* 3rd Edition, as amended, U.S. Environmental Protection Agency, Washington, D.C.

WAC 173-303, "Dangerous Waste Regulations," *Washington Administrative Code,* as amended.

WSRC-MS-97-0180, 1997, *Russian Studies of the Safety of Anion Exchange in Nitric Acid*, Westinghouse Savannah River Company, Aiken, South Carolina.

APPENDIX A

EPA QUALITY ASSURANCE PROJECT REQUIREMENTS CROSSWALK

This page intentionally left blank.

APPENDIX A

EPA QUALITY ASSURANCE PROJECT REQUIREMENTS CROSSWALK

Table A-1 is a crosswalk of the requirements of EPA QA/R-5, *EPA Requirements for Quality Assurance Project Plans* that this SAP was written in accordance with to the SAP document organization. The section number and title shown in the column entitled SAP indicates where in the SAP the EPA QA/R-5 elements are incorporated. The elements A1 through A3 of EPA QA/R-5 are not shown in Table A-1, but are incorporated by the title page, document approval record, and distribution.

Table A-1. Crosswalk of SAP Outline with EPA QA/R-5 Required Elements. (2 sheets)

Sampling and Analysis Plan	EPA QA/R-5, EPA Requirements for Quality Assurance Project Plans
1.0 INTRODUCTION	
1.1 BACKGROUND	A5- Problem Definition and Background
1.2 DATA QUALITY OBJECTIVES	
1.2.1 Statement of Problem	A5- Problem Definition and Background
1.2.2 Contaminates of Concern	
1.2.3 Decision Rules	
1.2.4 Required Data to Support Decision-Making	
1.2.5 Data Collection Temporal Considerations	
2.0 SAMPLING AND MEASUREMENT RATIONALE AND DESIGN	B1- Sampling Process Design
3.0 SAMPLE AND MEASUREMENT LOCATION AND FREQUENCY	B: Data Generation and Acquisition
3.1 SAMPLE COLLECTION LOCATION AND FREQUENCY	B2- Sampling Methods
3.2 SAMPLE COLLECTION METHODS	B2- Sampling Methods
3.3 MEASUREMENT LOCATION AND FREQUENCY	B2- Sampling Methods
4.0 SAMPLE HANDLING AND ANALYSIS	B: Data Generation and Acquisition
4.1 SAMPLE HANDLING AND CUSTODY REQUIREMENTS	B3- Sample Handling and Custody
4.1.1 Sample Preservation, Containers, and Holding Times	B3- Sample Handling and Custody
4.1.2 Sample Shipping	B3- Sample Handling and Custody
4.2 SAMPLE ANALYSIS	B4- Analytical Methods
5.0 QUALITY ASSURANCE PROJECT PLAN	
5.1 PROJECT MANAGEMENT	A: Project Management
5.1.1 Project/Task Description	A6- Project/Task Description
5.1.2 Project Organization	A4- Project/Task Organization
5.1.3 Roles and Responsibilities	A4- Project/Task Organization

Table A-1. Crosswalk of SAP Outline with EPA QA/R-5 Required Elements. (2 sheets)

Sampling and Analysis Plan	EPA QA/R-5, EPA Requirements for Quality Assurance Project Plans
5.1.4 Special Training Requirements and Certification	A8- Special Training/Certification
5.1.5 Quality Assurance Objectives and Criteria for Measurement Data	A7- Quality Objectives and Criteria
5.1.6 Documentation and Records	A9- Documents and Records
5.2 DATA GENERATION AND ACQUISITION	B: Data Generation and Acquisition
5.2.1 Quality Control Requirements	B5- Quality Control
5.2.2 Instrument Testing, Inspection, and Maintenance	B6- Instrument/Equipment Testing, Inspection, and Maintenance
5.2.3 Instrument Calibration and Calibration Frequency	B7- Instrument/Equipment Calibration and Frequency
5.2.4 Inspection/Acceptance Requirements for Supplies	B8- Inspection/Acceptance of Supplies and Consumables
5.2.5 Non-direct Measurement	B9- Non-direct Measurements
5.2.6 Data Management	B10- Data Management
5.3 ASSESSMENT/OVERSIGHT FOR MEASUREMENTS	C: Assessment and Oversight
5.3.1 Assessments and Response Actions	C1- Assessments and Response Actions
5.3.2 Reports to Management	C2- Reports to Management
5.4 DATA VALIDATION AND USABILITY	D: Data Validation and Usability
5.4.1 Data Review, Verification, and Validation	D1- Data Review, Verification, and Validation
5.4.2 Verification and Validation Methods	D2- Verification and Validation Methods
5.4.3 Reconciliation With User Requirements	D3- Reconciliation with User Requirements
6.0 HEALTH AND SAFETY	
7.0 REFERENCES	

REFERENCE

EPA QA/R-5, 2001, *EPA Requirements for Quality Assurance Project Plans*, EPA/240/B-01/003, U.S. Environmental Protection Agency, Washington, D.C.