0100012

U.S. Department of Energy
Office of River Protection
P.O. Box 450, MSIN H6-60
Richland, Washington 99352

OCT 2 0 2011

11-ESQ-271

RECEIVED
OCT 27 2011
ECAC

Ms. Jane A. Hedges, Program Manager
Nuclear Waste Program
Washington State
Department of Ecology
3100 Port of Benton Blvd.
Richland, Washington 99354

Dear Ms. Hedges:

SUBMITTAL OF HANFORD FACILITY RESOURCE CONSERVATION AND RECOVERY ACT (RCRA) PERMIT MODIFICATION NOTIFICATION FORM 24590-LAW-PCN-ENV-11-001, REPLACE PIPING AND INSTRUMENTATION DIAGRAMS (P&ID) FOR LOW-ACTIVITY WASTE MELTER PROCESS SYSTEM (LMP) IN APPENDIX 9.2 OF THE DANGEROUS WASTE PERMIT (DWP)

Reference: WA7890008967, "Dangerous Waste Portion of the Hanford Facility Resource Conservation and Recovery Act Permit for the Treatment, Storage, and Disposal of Dangerous Waste, Part III, Operating Unit 10, 'Waste Treatment and Immobilization Plant.'"

This letter transmits Hanford Facility RCRA Permit Modification Notification Form 24590-LAW-PCN-ENV-11-001, attached, for the Washington State Department of Ecology (Ecology) review and approval. The form describes a requested Class 1 modification requiring concurrence or approval to the Reference. A number of drawings included in this modification are "Confidential Business Information" (CBI). A letter requesting certification of records as confidential in accordance with Ecology procedures is provided in Attachment 2. The eight individual drawings that contain CBI are also specifically listed on the Permit Change Notice form, and are included in Attachment 3.

Modification Notification Form 24590-LAW-PCN-ENV-11-001 requests the replacement of existing P&ID for the LMP in Appendix 9.2 of the DWP with the enhanced version of the drawings listed on the modification form.

Ecology comments resulting from review of this modification notification form and the associated information have been resolved.

If you have any questions, please contact me, or your staff may contact Gae M. Neath, Environmental Compliance Division, (509) 376-7828.

Sincerely,

P. G. Harrington

Paul G. Harrington, Acting Assistant Manager
Office of Environmental Safety and Quality

ESQ:GMN

Attachments: (3)

cc w/attachs:
B. L. Curn, BNI
B. G. Erlandson, BNI
P. A. Fisher, BNI
S. K. Murdock, BNI
D. C. Robertson, BNI
F. M. Russo, BNI
Administrative Record (WTP H-0-8)
BNI Correspondence
Environmental Portal, LMSI

cc electronic:
J. Cantu, Ecology (2 hard copies)
A. S. Carlson, Ecology
T. Z. Gao, Ecology
M. E. Jones, Ecology
J. F. Ollero, MSA
A. C. McKarns, RL
D. J. Sommer, SCS

cc w/o attachs:
D. M. Busche, BNI
J. Cox, CTUIR
S. G. Harris, CTUIR
S. L. Dahl, Ecology
D. McDonald, Ecology
G. P. Bohnee, NPT
K. Niles, Oregon Energy
S. R. Weil, RL
R. Jim, RL

Attachment 1
11-ESQ-271
(27 Pages)

Hanford Facility RCRA Permit Modification Notification
Form 24590-LAW-PCN-ENV-11-001

Quarter Ending 12/31/2011 24590-LAW-PCN-ENV-11-001

Hanford Facility RCRA Permit Modification Notification Form

Part III, Operating Unit 10

Waste Treatment and Immobilization Plant

Index

Page 2 of 3: Hanford Facility RCRA Permit, Part III, Operating Unit 10, Waste Treatment and Immobilization Plant
Replace Piping and Instrumentation Diagrams (P&ID) for LAW Melter Process System (LMP) in Appendix 9.2 of the Dangerous Waste Permit (DWP).

Submitted by Co-Operator:

BTAllen for DBusche 9/23/11

D. M. Busche Date

Reviewed by ORP Program Office:

Thomas M. Brown for 10/19/2011

D. L. Noyes Date

Quarter Ending 12/31/2011 24590-LAW-PCN-ENV-11-001

Hanford Facility RCRA Permit Modification Notification Form	
Unit: **Waste Treatment and Immobilization Plant**	Permit Part: **Part III, Operating Unit 10**

Description of Modification:

The purpose of this Class 1 prime modification is to update the P&IDs for the LAW LMP System in Appendix 9.2 of the DWP.

The following P&IDs are being submitted to replace the P&IDs currently in Appendix 9.2. The increase in the number of drawings submitted results from converting the source drawings into two or more drawings to provide a clearer representation of the LMP System, including additional details on instrumentation and logic controls. A number of drawings included in this modification are Confidential Business Information (CBI).

Appendix 9.2			
Replace:	24590-LAW-M6-LMP-00001, Rev. 2	With:	24590-LAW-M6-LMP-00001001, Rev. 0 (CBI)
	24590-LAW-M6-LMP-00002, Rev. 2		24590-LAW-M6-LMP-00002001, Rev. 0 (CBI)
			24590-LAW-M6-LMP-00002002, Rev. 0 (CBI)
	24590-LAW-M6-LMP-00003, Rev. 4		24590-LAW-M6-LMP-00003001, Rev. 0
	24590-LAW-M6-LMP-00005, Rev. 2		24590-LAW-M6-LMP-00005001, Rev. 0 (CBI)
	24590-LAW-M6-LMP-00007, Rev. 3		24590-LAW-M6-LMP-00007001, Rev. 0
			24590-LAW-M6-LMP-00007002, Rev. 0
	24590-LAW-M6-LMP-00008, Rev. 3		24590-LAW-M6-LMP-00008001, Rev. 0
	24590-LAW-M6-LMP-00010, Rev. 3		24590-LAW-M6-LMP-00010001, Rev. 0
	24590-LAW-M6-LMP-00012, Rev. 5		24590-LAW-M6-LMP-00012001, Rev. 0
	24590-LAW-M6-LMP-00013, Rev. 5		24590-LAW-M6-LMP-00013001, Rev. 0
			24590-LAW-M6-LMP-00013002, Rev. 0
	24590-LAW-M6-LMP-00031, Rev. 2		24590-LAW-M6-LMP-00031001, Rev. 0 (CBI)
	24590-LAW-M6-LMP-00032, Rev. 2		24590-LAW-M6-LMP-00032001, Rev. 0 (CBI)
			24590-LAW-M6-LMP-00032002, Rev. 0 (CBI)
	24590-LAW-M6-LMP-00033, Rev. 4		24590-LAW-M6-LMP-00033001, Rev. 0
	24590-LAW-M6-LMP-00035, Rev. 2		24590-LAW-M6-LMP-00035001, Rev. 0 (CBI)
	24590-LAW-M6-LMP-00037, Rev. 3		24590-LAW-M6-LMP-00037001, Rev. 0
			24590-LAW-M6-LMP-00037002, Rev. 0
	24590-LAW-M6-LMP-00038, Rev. 3		24590-LAW-M6-LMP-00038001, Rev. 0
	24590-LAW-M6-LMP-00040, Rev. 3		24590-LAW-M6-LMP-00040001, Rev. 0
	24590-LAW-M6-LMP-00042, Rev. 5		24590-LAW-M6-LMP-00042001, Rev. 0
	24590-LAW-M6-LMP-00043, Rev. 5		24590-LAW-M6-LMP-00043001, Rev. 0
			24590-LAW-M6-LMP-00043002, Rev. 0

This modification requests Ecology approval and incorporation into the permit the specific changes to these P&IDs that are indicated by revision notes and clouds. The referenced P&IDs include changes provided in applicable document change forms (e.g., DCN, SCN, SDDR, FCN, FCR, etc.) that were submitted to Ecology in accordance with Condition III.10.C.9.h. In addition, the P&IDs include changes associated with the resolution to comments on change documents since the issuance of the last revision of the permitted drawing.

Quarter Ending 12/31/2011 24590-LAW-PCN-ENV-11-001

The following types of changes apply to the LMP P&IDs:

- Drawing converted from a single sheet to multi-sheet drawings
- Modified, deleted, and added notes and references
- Expanded instruments and logic controls information
- Incorporated change notices as specified in Revision Notes

This modification requests Ecology approval and incorporation of the following list of outstanding change documents into the permit. Although not yet incorporated into the revised documents attached to this PCN, this list of outstanding DCNs are intended to be incorporated into this modification:

24590-LAW-M6-LMP-00008001
- 24590-LAW-M6N-LMP-00078

24590-LAW-M6-LMP-00010001
- 24590-LAW-M6N-LMP-00078

24590-LAW-M6-LMP-00038001
- 24590-LAW-M6N-LMP-00078

24590-LAW-M6-LMP-00040001
- 24590-LAW-M6N-LMP-00078

WAC 173-303-830 Modification Class:	Class 1	Class [1]1	Class 2	Class 3
Please mark the Modification Class:		X		

Enter relevant WAC 173-303-830, Appendix I Modification citation number: NA

Enter wording of WAC 173-303-830, Appendix I Modification citation:

In accordance with WAC 173-303-830(4)(d)(i), this modification notification is requested to be reviewed and approved as a Class [1]1 modification. WAC 173-303-830(4)(d)(ii)(A) states, "Class 1 modifications apply to minor changes that keep the permit current with routine changes to the facility or its operation. These changes do not substantially alter the permit conditions or reduce the capacity of the facility to protect human health or the environment. In the case of Class 1 modifications, the director may require prior approval."

Modification Approved/Concur: ☐ Yes ☐ Denied (state reason below) Reason for denial:	Reviewed by Ecology:
	D. McDonald Date

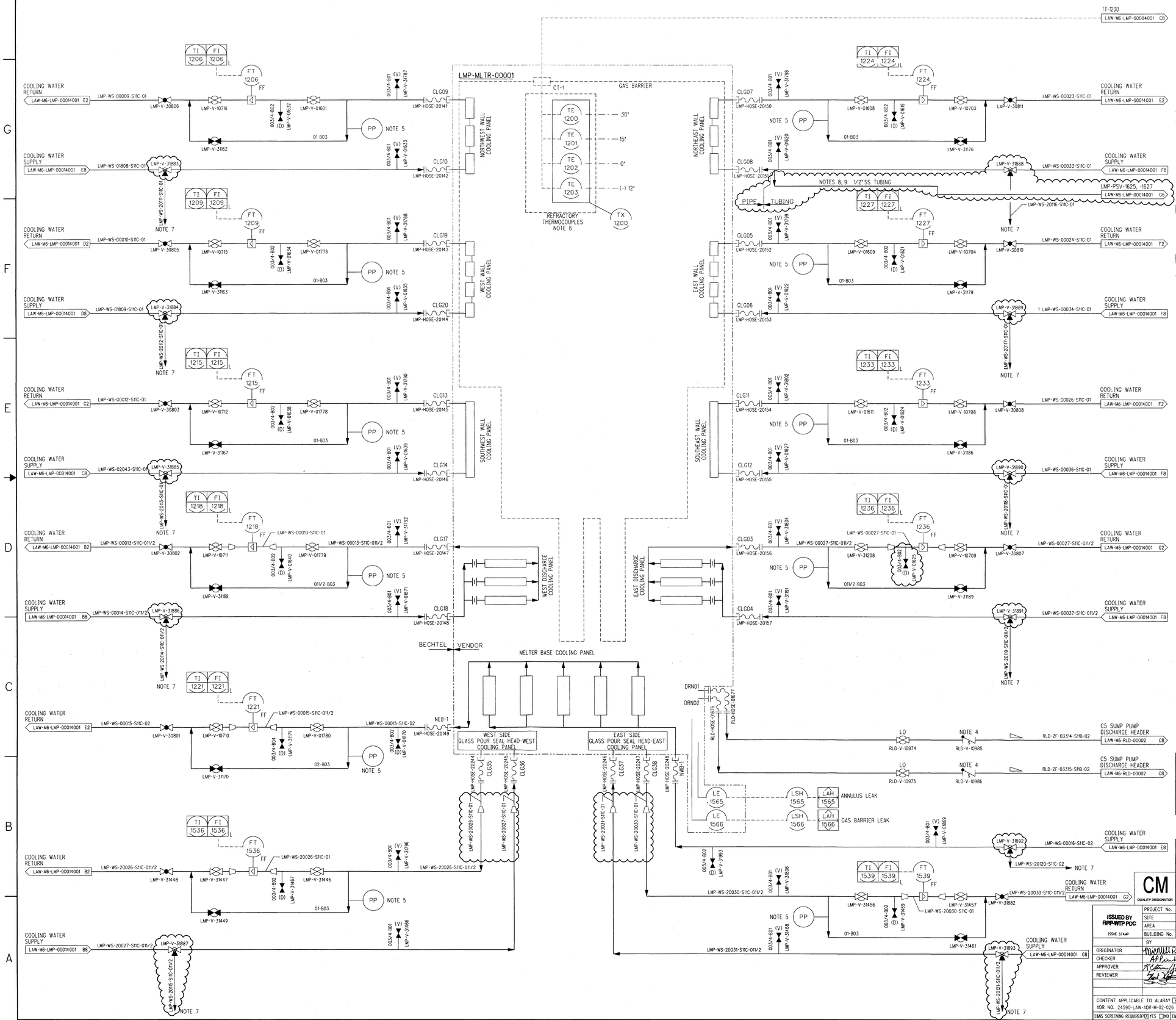

NOTES:

1. SEE DRAWINGS 24590-WTP-M6-50-00001 THROUGH 24590-WTP-M6-50-00008 FOR GENERAL NOTES, SYMBOLS AND LEGEND, AND GENERAL SLOPE REQUIREMENTS.
2. CONTENTS OF THIS DOCUMENT ARE DANGEROUS WASTE PERMIT AFFECTING.
3. THE PRESSURE BOUNDARY FOR ALL COMPONENTS IS QUALITY LEVEL CM AND SEISMIC CATEGORY SC-IV, UNLESS OTHERWISE NOTED.
4. INSTALL CHECK VALVE IN HORIZONTAL PIPING.
5. CONNECTIONS FOR PP'S ARE 1/2" THREADED. THIS CONNECTION FOR TEMPORARY INSTRUMENT WILL BE PLUGGED AFTER TEST.
6. REFRACTORY THERMOCOUPLE LOCATIONS ARE RELATIVE TO REFRACTORY FLOOR.
7. 3-WAY VALVE BLEED LINE TO BE ROUTED TOWARDS SAFE LOCATION. SUPPLY SIDE CLOSES WHEN BLEED OPENS.
8. TUBING IS REMOTE SENSING LINE FOR LMP-PSV-1626, -1627.
9. CONSTRUCTION SHALL FIELD ROUTE TUBING FROM PSV SENSING LINE PORT TO COOLING WATER SUPPLY PIPING NEAR CONNECTION CLG08. MECHANICAL SYSTEMS CONNECTION DETAIL SERIES 24590-WTP-MO-50 (FUTURE) DRAWING WILL DEFINE ROUTING.
10. THIS DRAWING SUPERSEDES 24590-LAW-M6-LMP-00003 REV 5. THIS DRAWING INCLUDES INFORMATION FROM 24590-LAW-M6N-LMP-00009, -00022, -00033, -00041, 24590-LAW-6PN-LMP-00006, AND 24590-LAW-M6PR-LMP-00001.

HOLD/OPEN ITEMS:

NONE

REFERENCES:

1. 24590-LAW-3YD-LMP-00001, SYSTEM DESCRIPTION FOR THE SYSTEM LMP, LOW ACTIVE WASTE MELTER.

Please note that source, special nuclear, and byproduct materials, as defined in the Atomic Energy Act of 1954, are not regulated by the U.S. Department of Energy (DOE) facilities exclusively for at the U.S. Department of Energy (DOE) facilities exclusively for pursuant to AEA, it has sole and exclusive responsibility and authority to regulate source, special nuclear, and byproduct materials at DOE-owned nuclear facilities. Information contained herein on radionuclides is provided for process description purposes only.

DRAWING INDEX

DWG NO	TITLE
24590-LAW-M6-LMP-00003001	LAW MELTER PROCESS SYSTEM COOLING SYSTEM

REV	DESCRIPTION	ORG	CHKD	RVWD	APVD	DATE
0	ISSUED FOR CONSTRUCTION, SEE NOTE 10	MP	APP			08/30/10

REVISION HISTORY

CM QUALITY DESIGNATOR

ISSUED BY RFP-WTP PDC

ISSUE STAMP		
PROJECT No.	24590	
SITE	HANFORD	
AREA	200E	
BUILDING No.	20	
	BY	DATE
ORIGINATOR		8/17/10
CHECKER		8/17/10
APPROVER		8/30/10
REVIEWER		8/25/10

CONTENT APPLICABLE TO ALARA? [X] YES [ ] NO
ADR NO. 24590-LAW-ADR-M-02-026 REV: 3
EMS SCREENING REQUIRED? [X] YES [ ] NO | EMS INITIAL IF YES DEK

BECHTEL

RIVER PROTECTION PROJECT
WASTE TREATMENT PLANT
2435 STEVENS CENTER PLACE
RICHLAND, WA 99354

CONTRACT No: DE-AC27-01RV14136

P&ID - LAW
LAW MELTER PROCESS SYSTEM
MELTER 1
WALLS AND FLOOR PANELS
COOLING SYSTEM

SCALE: NONE

24590-LAW-M6-LMP-00003001

REV 0

E SIZE - 44x34
COMPUTER GENERATED - MANUAL DESIGN CHANGES NOT PERMITTED

SCREENING IS REQUIRED FOR DRAWING TYPES IDENTIFIED IN 24590-WTP-GPP-SREG-002

R11270949

8/13/2010 2:31:50 PM

C:\Work\eewebb\smd38381\LAWMELMP00003001.dgn

PLOTTED BY: eewebb

FORM E_SDN.DGN 02/2009

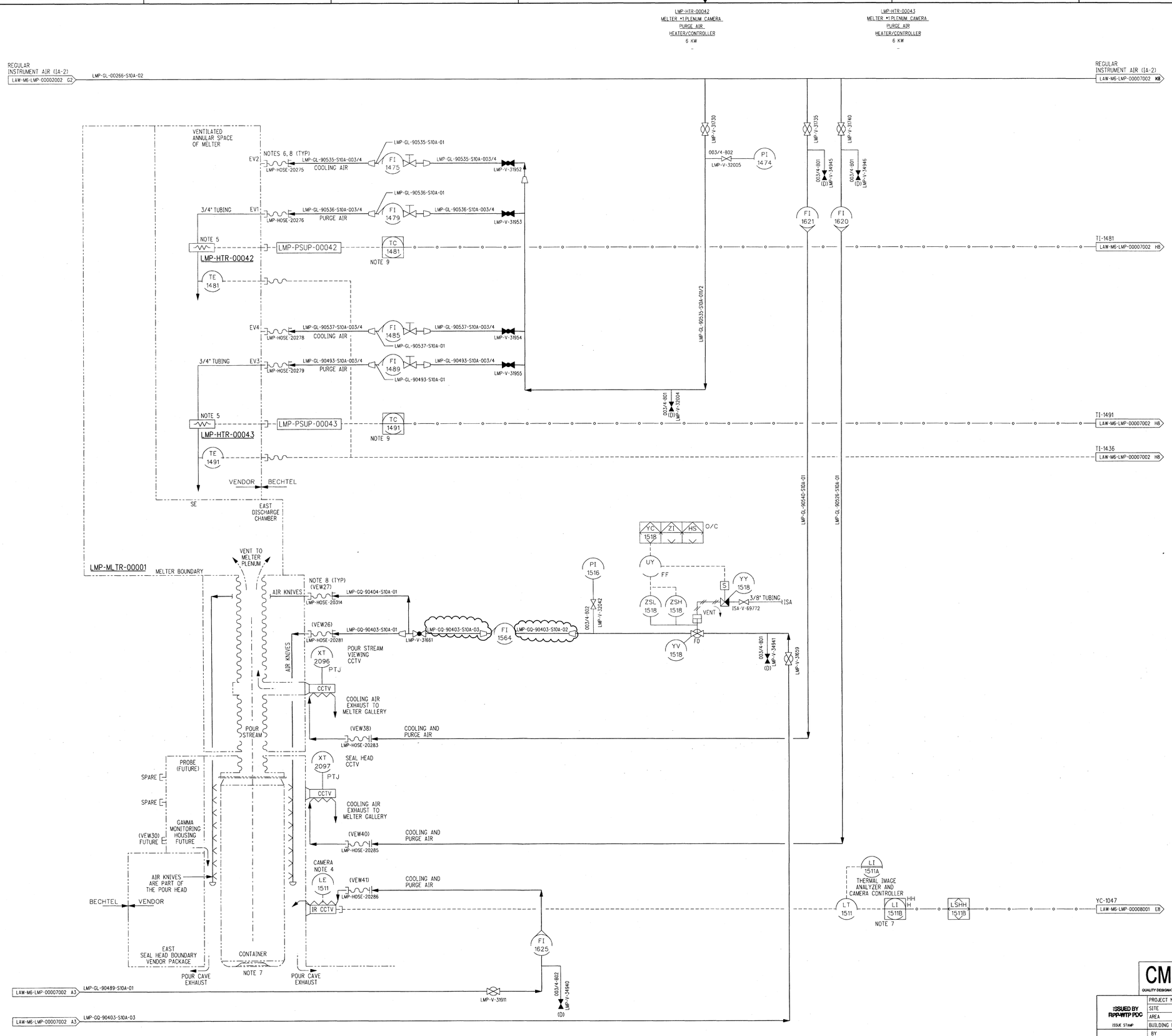

NOTES:

1. SEE DRAWINGS 24590-WTP-M6-50-00001 THROUGH 24590-WTP-M6-50-00008 FOR GENERAL NOTES, SYMBOLS AND LEGEND, AND GENERAL SLOPE REQUIREMENTS.
2. CONTENTS OF THIS DOCUMENT ARE DANGEROUS WASTE PERMIT AFFECTING.
3. THE PRESSURE BOUNDARY FOR ALL COMPONENTS ON THIS DRAWING IS QUALITY LEVEL CM AND SEISMIC CATEGORY SC-IV, UNLESS OTHERWISE NOTED.
4. THE IR CAMERA DETECTS GLASS LEVEL (THERMAL TRANSITION REGION) ON CONTAINER.
5. AIR PRE-HEATER FOR FUTURE CCTV VIEWPORT.
6. AIR FOR FUTURE PLENUM CCTV.
7. HIGH HIGH LEVEL FROM THE THERMAL IMAGE SYSTEM AUTOMATICALLY SHUTS DOWN THE MELTER DISCHARGE. THE LAW CONTAINER POUR HANDLING SYSTEM LPH-WE-3505 (LOAD CELL) AT LPH-ELEV-00001 (WEST POUR CAVE ELEVATOR) PROVIDES SECONDARY HIGH HIGH LEVEL MONITORING TO PREVENT OVERFILL, SEE DRAWING 24590-LAW-M7-LPH-00001007. LPH-WE-4005 (LOAD CELL) AT LPH-ELEV-00002 (EAST POUR CAVE ELEVATOR) PROVIDES SECONDARY HIGH HIGH LEVEL MONITORING TO PREVENT OVERFILL, SEE DRAWING. 24590-LAW-M7-LPH-00001009.
8. SERVICE SIDE OF FLEX CONNECTION IS FEMALE CAMLOCK BY PLANT EQUIPMENT GROUP.
9. ON HIGH HIGH TEMPERATURE, THE CONTROLLER OUTPUT IS SET TO 0%.
10. THIS DRAWING IS CONVERTED FROM A SINGLE SHEET TO MULTI-SHEET DRAWINGS AND, IN PART, SUPERSEDES 24590-LAW-M6-LMP-00007 REV 4. THIS DRAWING INCLUDES INFORMATION FROM 24590-LAW-M6N-LMP-00035, AND -00057.

HOLD/OPEN ITEMS:

NONE

REFERENCES:

1. 24590-LAW-3YD-LMP-00001, SYSTEM DESCRIPTION FOR THE SYSTEM LMP, LOW ACTIVITY WASTE MELTER.

Please note that source, special nuclear, and byproduct materials are not subject to the requirements of DOE Order 5400.5 regulating at the U. S. Department of Energy (DOE) facilities exclusively by DOE acting pursuant to its AEA authority. DOE asserts that pursuant to AEA, it has sole and exclusive responsibility and authority to regulate source, special nuclear, and byproduct material at DOE-owned nuclear facilities. Information contained herein on radionuclides is provided for process description purposes only.

DRAWING INDEX

DWG NO	TITLE
24590-LAW-M6-LMP-00007001	MELTER PROCESS SYS MONITORING INSTRUMENTATION
24590-LAW-M6-LMP-00007002	MELTER PROCESS SYS MONITORING INSTRUMENTATION

CM
QUALITY DESIGNATOR

REVISION HISTORY

REV	DESCRIPTION	ORG	CHKD	RVWD	APVD	DATE
0	ISSUED FOR CONSTRUCTION, SEE NOTE 10	MP	APL	[illegible]	[illegible]	08/30/10

ISSUED BY RPP-WTP PDC

PROJECT No.	24590	
SITE	HANFORD	
AREA	200E	
BUILDING No.	20	
ISSUE STAMP		

	BY	DATE
ORIGINATOR	[illegible]	8/17/10
CHECKER	APL	8/17/10
APPROVER	[illegible]	8/30/10
REVIEWER	[illegible]	8/30/10

CONTENT APPLICABLE TO ALARA? [X] YES [ ] NO
ADR NO. 24590-LAW-ADR-M-02-026 REV: 3
EMS SCREENING REQUIRED? [X] YES [ ] NO EMS INITIAL IF YES DEK

BECHTEL

RIVER PROTECTION PROJECT
WASTE TREATMENT PLANT
2435 STEVENS CENTER PLACE
RICHLAND, WA 99354

CONTRACT No: DE-AC27-01RV14136

P&ID - LAW
LAW MELTER PROCESS SYSTEM
MELTER 1
GLASS POURING AND MONITORING INSTRUMENTATION

SCALE: NONE
24590-LAW-M6-LMP-00007001
REV 0

SCREENING IS REQUIRED FOR DRAWING TYPES IDENTIFIED IN 24590-WTP-GPP-SRCG-002

E SIZE - 44x34
COMPUTER GENERATED - MANUAL DESIGN CHANGES NOT PERMITTED

R11270952

8/17/2010 8:45:58 AM

PLOTTED BY: ewebb

C:\Work\ewebb\dms03838\LAWMELMP00007001.dgn

FORM E_SDN.DGN 02/2009

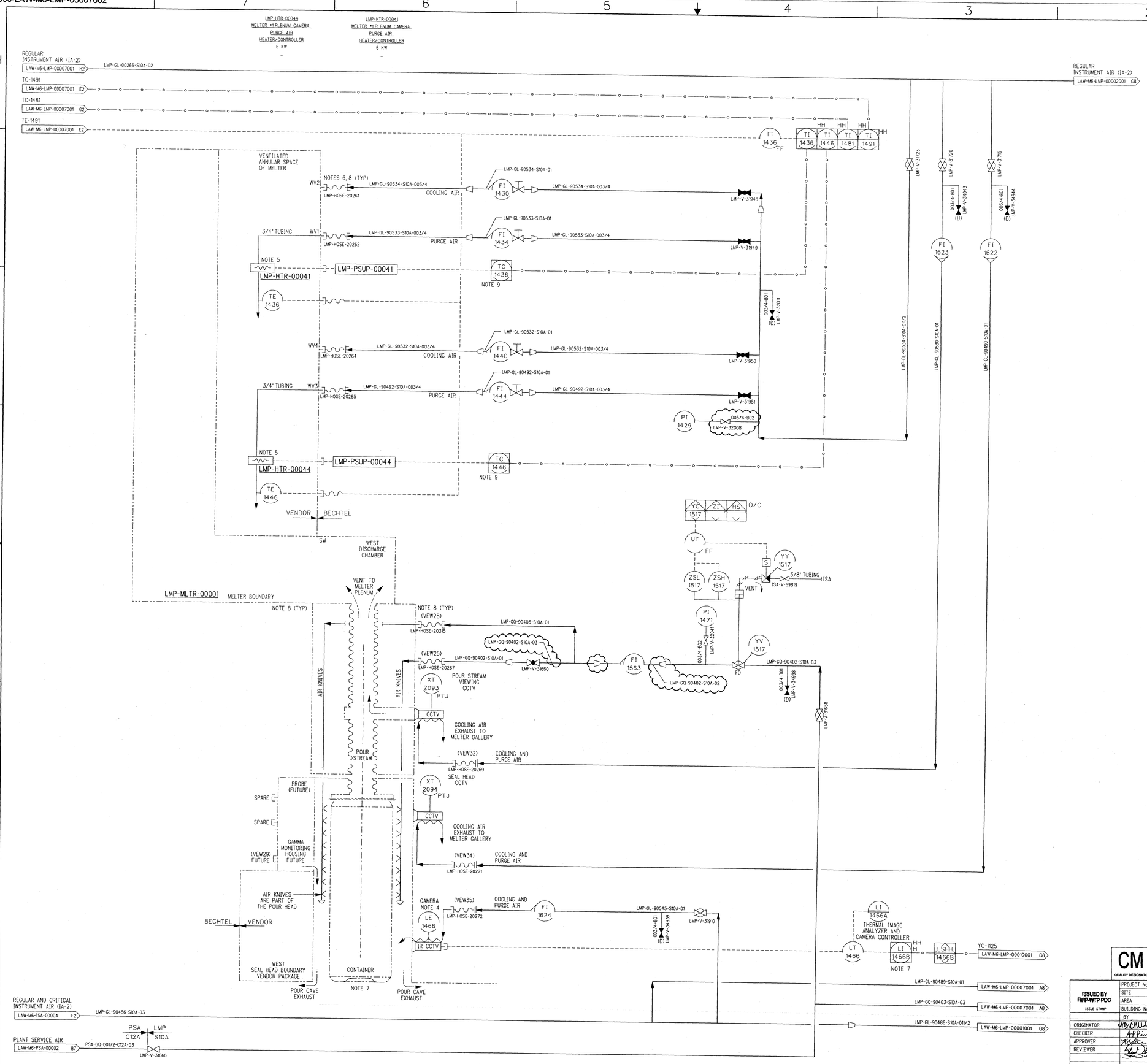

NOTES:

1. SEE DRAWINGS 24590-WTP-M6-50-00001 THROUGH 24590-WTP-M6-50-00008 FOR GENERAL NOTES, SYMBOLS AND LEGEND, AND GENERAL SLOPE REQUIREMENTS.
2. CONTENTS OF THIS DOCUMENT ARE DANGEROUS WASTE PERMIT AFFECTING.
3. THE PRESSURE BOUNDARY FOR ALL COMPONENTS ON THIS DRAWING IS QUALITY LEVEL CM AND SEISMIC CATEGORY SC-IV, UNLESS OTHERWISE NOTED.
4. THE IR CAMERA DETECTS GLASS LEVEL (THERMAL TRANSITION REGION) ON CONTAINER.
5. AIR PRE-HEATER FOR FUTURE CCTV VIEW PORT.
6. AIR FOR FUTURE PLENUM CCTV.
7. HIGH HIGH LEVEL FROM THE THERMAL IMAGE SYSTEM AUTOMATICALLY SHUTS DOWN THE MELTER DISCHARGE. THE LAW CONTAINER POUR HANDLING SYSTEM LPH-WE-3505 (LOAD CELL) AT LPH-ELEV-00001 (WEST POUR CAVE ELEVATOR) PROVIDES SECONDARY HIGH HIGH LEVEL MONITORING TO PREVENT OVERFILL, SEE DRAWING. 24590-LAW-M7-LPH-00001007. LPH-WE-4005 (LOAD CELL) AT LPH-ELEV-00002 (EAST POUR CAVE ELEVATOR) PROVIDES SECONDARY HIGH HIGH LEVEL MONITORING TO PREVENT OVERFILL, SEE DRAWING. 24590-LAW-M7-LPH-00001009.
8. SERVICE SIDE OF FLEX CONNECTION IS FEMALE CAMLOCK BY PLANT EQUIPMENT GROUP.
9. ON HIGH HIGH TEMPERATURE, THE CONTROLLER OUTPUT IS SET TO 0%.
10. THIS DRAWING IS CONVERTED FROM A SINGLE SHEET TO MULTI-SHEET DRAWINGS AND, IN PART, SUPERSEDES 24590-LAW-M6-LMP-00007 REV 4. THIS DRAWING INCLUDES INFORMATION FROM 24590-LAW-M6N-LMP-00035, AND -00057.

HOLD/OPEN ITEMS:

NONE

REFERENCES:

1. 24590-LAW-3YD-LMP-00001, SYSTEM DESCRIPTION FOR THE SYSTEM LMP, LOW ACTIVITY WASTE MELTER.

Please note that source, special nuclear, and byproduct materials, as defined in the Atomic Energy Act of 1954 (AEA) are regulated at the U. S. Department of Energy (DOE) facilities exclusively by DOE acting pursuant to its AEA authority. DOE asserts that pursuant to AEA, it has sole and exclusive responsibility and authority regarding health and safety and protection of nuclear materials at DOE-owned nuclear facilities. Information contained herein on radionuclides is provided for process description purposes only.

CM
QUALITY DESIGNATOR

REV	DESCRIPTION	ORG	CHKD	RVWD	APVD	DATE
0	ISSUED FOR CONSTRUCTION, SEE NOTE 10	MW	APP			08/30/10

REVISION HISTORY

ISSUED BY RPP-WTP PDC		
	PROJECT No.	24590
	SITE	HANFORD
	AREA	200E
ISSUE STAMP	BUILDING No.	20
	BY	DATE
ORIGINATOR	MW	8/17/10
CHECKER	APP	8/18/10
APPROVER		8/30/10
REVIEWER		8/25/10 8/26/10

CONTENT APPLICABLE TO ALARA? [X] YES [ ] NO
ADR NO. 24590-LAW-ADR-M-02-026 REV: 3
EMS SCREENING REQUIRED? [X] YES [ ] NO EMS INITIAL IF YES DEL

RIVER PROTECTION PROJECT
WASTE TREATMENT PLANT
2435 STEVENS CENTER PLACE
RICHLAND, WA 99354

CONTRACT No: DE-AC27-01RV14136

P&ID - LAW
LAW MELTER PROCESS SYSTEM
MELTER 1
GLASS POURING AND MONITORING INSTRUMENTATION

SCALE: NONE
24590-LAW-M6-LMP-00007002
REV 0

SCREENING IS REQUIRED FOR DRAWING TYPES IDENTIFIED IN 24590-WTP-GPP-SREQ-002

"E" SIZE - 44x34
COMPUTER GENERATED - MANUAL DESIGN CHANGES NOT PERMITTED

R11270953

8/17/2010 8:55:23 AM

C:\Work\Derek\Jmu\13538\LAW\MLMP\00007002.dgn

R.CITED BY: derekb

FORM E_SDN.DGN 02/2009

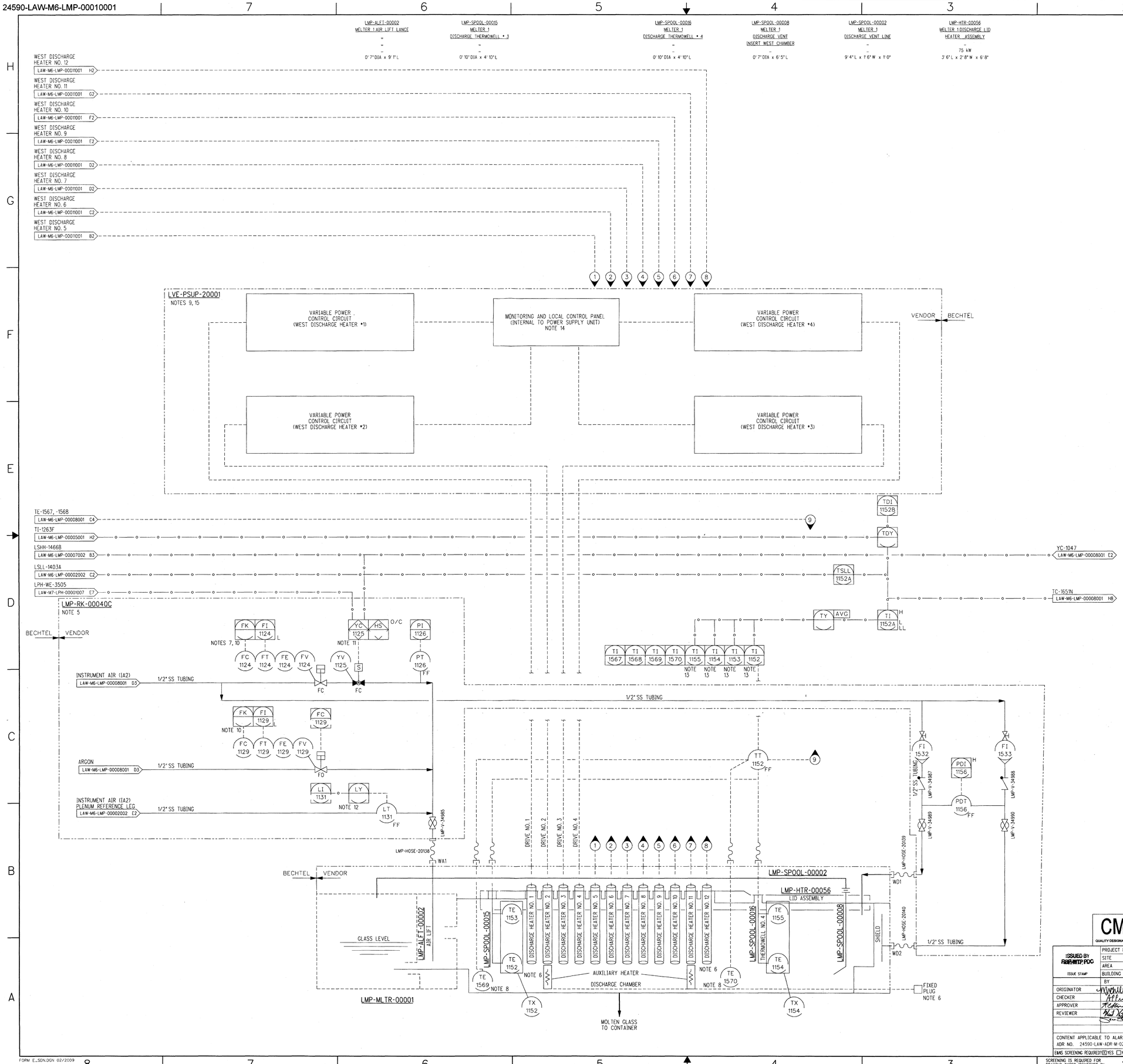

NOTES:

1. SEE DRAWINGS 24590-WTP-M6-50-00001 THROUGH 24590-WTP-M6-50-00008 FOR GENERAL NOTES, SYMBOLS AND LEGEND, AND GENERAL SLOPE REQUIREMENTS.
2. CONTENTS ON THIS DOCUMENT ARE DANGEROUS WASTE PERMIT AFFECTING.
3. THE PRESSURE BOUNDARY FOR ALL COMPONENTS ON THIS DRAWING IS QUALITY LEVEL CM AND SEISMIC CATEGORY SC-IV, UNLESS OTHERWISE NOTED.
4. ALL LINES SHOWN ON THIS DRAWING SHALL BE FREE DRAINING, UNLESS OTHERWISE NOTED.
5. ALL INSTRUMENTS AND VALVING FOR AIR LIFT SHOULD BE LOCATED AS CLOSE AS POSSIBLE TO THE SHIELD WALL TO REDUCE LINE CAPACITANCE AND AIR LIFT SURGING.
6. DISCHARGE AUXILIARY HEATERS PREWIRED TO PLUG FOR USE, AS REQUIRED BY OPERATIONS.
7. WHEN VALVE LMP-YV-1125 IS NOT OPEN, SETPOINT TO LMP-FC-1124 IS FORCED TO ZERO PERCENT..
8. TE-1569 AND TE-1570 ARE INTEGRAL WITH AUXILIARY HEATER AND ARE NOT REPLACEABLE.
9. FOR ELECTRICAL SUPPLY DESIGN SEE DRAWING 24590-LAW-E1-LVE-00031.
10. FLOW CONTROL (FC) IS INTEGRAL TO THE VALVE. ACTUAL SETPOINT PROVIDED FROM ICN.
11. HIGH HIGH WEIGHT FROM MECHANICAL HANDLING LOAD CELL LPH-WE-3505 (REPRESENTING HIGH HIGH LEVEL IN CONTAINER) CLOSES VALVE LMP-YV-1125 TO SHUT THE WEST CHAMBER DISCHARGE.
12. LMP-DI-1404 ON P&ID 24590-LAW-M6-LMP-00002002 IS BACK UP TO CALCULATING ALTERNATE LEVEL IN LMP-LI-1131.
13. INDIVIDUAL WEST DISCHARGE CHAMBER TEMPERATURE INDICATORS HAVE HIGH ALARMS ON RATE OF CHANGE AND ON DIFFERENTIAL FROM AVERAGE WEST DISCHARGE CHAMBER TEMPERATURE.
14. POWER SUPPLY SEPARATELY CONTROLS BOTH THE EAST AND WEST DISCHARGE CHAMBERS.
15. FOR VENDOR DETAILS DRAWING, SEE VENDOR DRAWING 24590-CM-POA-EY00-00002-03-00005.
16. THIS DRAWING SUPERSEDES 24590-LAW-M6-LMP-00010 REV 4. THIS DRAWING INCLUDES INFORMATION FROM 24590-LAW-M6N-LMP-00022 AND -00060.

HOLD/OPEN ITEMS:

NONE

REFERENCES:

1. 24590-LAW-3YD-LMP-00001, SYSTEM DESCRIPTION FOR THE SYSTEM LMP, LOW ACTIVITY WASTE MELTER.

Please note that source, special nuclear, and byproduct materials, as defined in the Atomic Energy Act of 1954 (AEA) are regulated at the U. S. Department of Energy (DOE) facilities exclusively by DOE acting pursuant to its AEA authority. Any regulation by DOE acting pursuant to AEA in has sole and exclusive responsibility and authority with regard to safety of source, special nuclear, and byproduct materials at DOE-owned nuclear facilities. Information contained herein on radionuclides is provided for process description purposes only.

DRAWING INDEX	
DWG NO	TITLE
24590-LAW-M6-LMP-00010001	LMP POWER CONTROLS & AIR LIFT - WESTSIDE

CM — QUALITY DESIGNATOR

REVISION HISTORY

REV	DESCRIPTION	ORG	CHKD	RVWD	APVD	DATE
0	ISSUED FOR CONSTRUCTION, SEE NOTE 16	MP	AFF	RWS	AFF	08/30/10

ISSUED BY RPE-WTP PDC

ISSUE STAMP

PROJECT No.	24590	
SITE	HANFORD	
AREA	200E	
BUILDING No.	20	
	BY	DATE
ORIGINATOR	MP	8/23/10
CHECKER	AFF	8/23/10
APPROVER	AFF	8/30/10
REVIEWER	RWS	8/25/10

CONTENT APPLICABLE TO ALARA? [X] YES [ ] NO

ADR NO. 24590-LAW-ADR-M-02-026 REV: 3

EMS SCREENING REQUIRED? [X] YES [ ] NO EMS INITIAL IF YES DEK

SCREENING IS REQUIRED FOR DRAWING TYPES IDENTIFIED IN 24590-WTP-GPP-SREG-002

E-SIZE - 44x34
COMPUTER GENERATED - MANUAL DESIGN CHANGES NOT PERMITTED

RIVER PROTECTION PROJECT
WASTE TREATMENT PLANT
2435 STEVENS CENTER PLACE
RICHLAND, WA 99354

CONTRACT No: DE-AC27-01RV14136

P&ID - LAW
LAW MELTER PROCESS SYSTEM
MELTER 1 DISCHARGE HEATERS, POWER CONTROLS (1 - 4) & AIR LIFT - WESTSIDE

SCALE: NONE

24590-LAW-M6-LMP-00010001

REV 0

R11270956

FORM E_SDNLDGN 02/2009

8/23/2010 9:27:24 AM PLOTTED BY: dewebb C:\Work\dewebb\dmd38350\LAWMELMP00010001.dgn

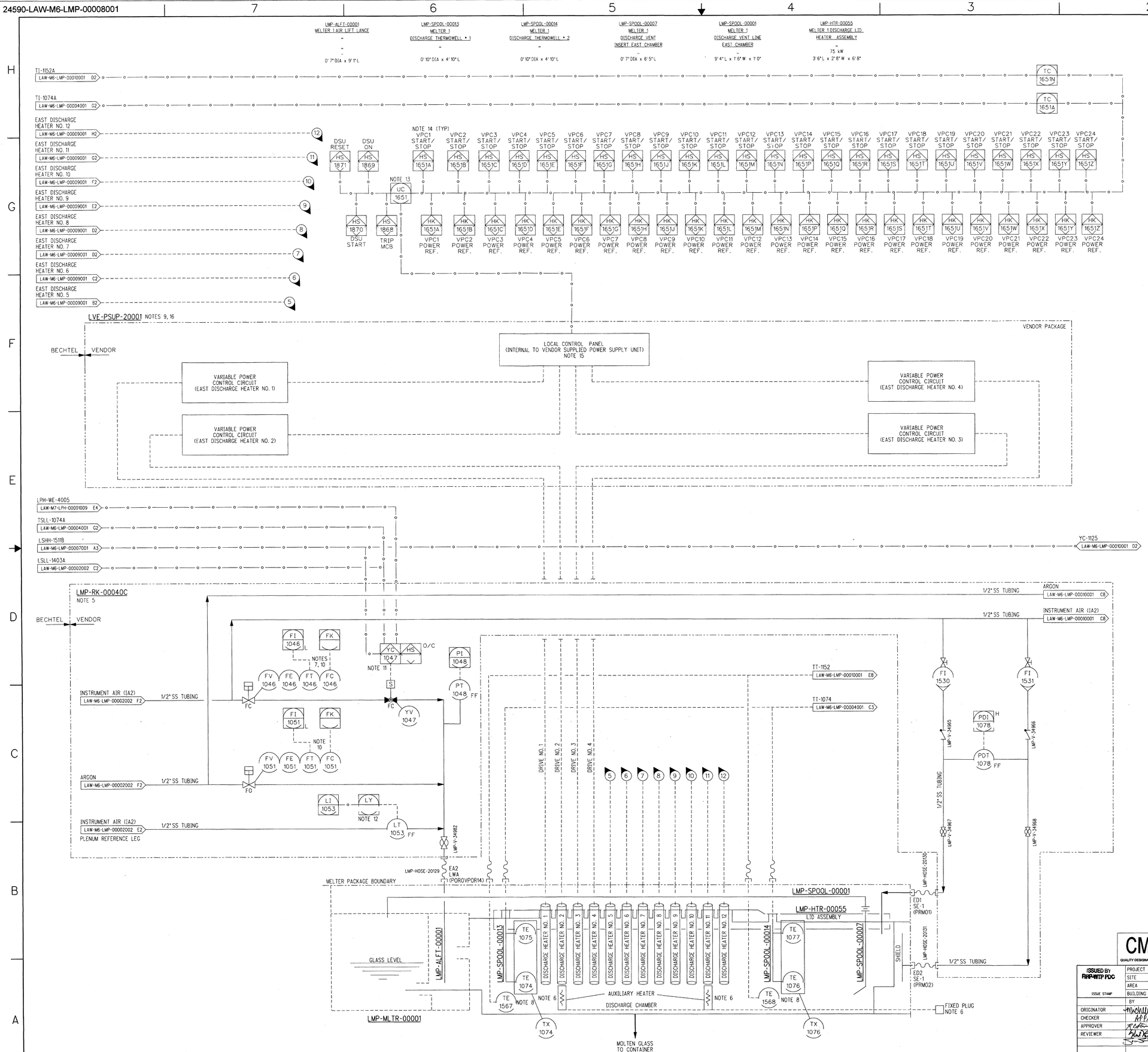

NOTES:

1. SEE DRAWINGS 24590-WTP-M6-50-00001 THROUGH 24590-WTP-M6-50-00008 FOR GENERAL NOTES, SYMBOLS AND LEGEND, AND GENERAL SLOPE REQUIREMENTS.
2. CONTENTS OF THIS DOCUMENT ARE DANGEROUS WASTE PERMIT AFFECTING.
3. THE PRESSURE BOUNDARY FOR ALL COMPONENTS ON THIS DRAWING IS QUALITY LEVEL CM AND SEISMIC CATEGORY SC-IV, UNLESS OTHERWISE NOTED.
4. ALL LINES SHOWN ON THIS DRAWING SHALL BE FREE DRAINING, UNLESS OTHERWWISE NOTED.
5. ALL INSTRUMENTS AND VALVING FOR AIR LIFT SHOULD BE LOCATED AS CLOSE AS POSSIBLE TO THE SHIELD WALL TO REDUCE LINE CAPACITANCE AND AIR LIFT SURGING.
6. DISCHARGE AUXILIARY HEATERS PREWIRED TO PLUG FOR USE, AS REQUIRED BY OPERATIONS.
7. WHEN VALVE LMP-YV-1047 IS NOT OPEN, SETPOINT TO LMP-FC-1046 IS FORCED TO ZERO PERCENT.
8. TE-1567 AND TE-1568 ARE INTEGRAL WITH AUXILIARY HEATER AND ARE NOT REPLACEABLE.
9. FOR ELECTRICAL SUPPLY DESIGN SEE DRAWING 24590-LAW-E1-LVE-00031.
10. FLOW CONTROL (FC) IS INTEGRAL TO THE VALVE. ACTUAL SETPOINT PROVIDED FROM ICN.
11. HIGH HIGH WEIGHT FROM MECHANICAL HANDLING LOAD CELL LPH-WE-4005 (REPRESENTING HIGH HIGH LEVEL IN CONTAINER) CLOSES VALVE LMP-YV-1047 TO SHUT THE EAST CHAMBER DISCHARGE.
12. LMP-DI-1404 ON P&ID 24590-LAW-M6-LMP-00002002 IS BACK UP TO CALCULATING ALTERNATE LEVEL IN LMP-LI-1053.
13. DISCHARGE HEATER POWER SUPPLY OPERATION IS INITIATED AND OPERATIONAL STATUS IS MONITORED FROM THE FACILITY CONTROL SYSTEM. TAG REPRESENTS MULTIPLE CONTROL AND INDICATING PARAMETERS FOR ALL EAST AND WEST DISCHARGE CHAMBER HEATERS AVAILABLE TO FACILITY OPERATOR CONTROL SIGNAL ORIGINATES FROM AVERAGE DISCHARGE CHAMBER TEMPERATURES.
14. EACH HEATER VPC HAS A START/STOP HAND SWITCH AND A REFERENCE AUTO/MANUAL STATION. EAST CHAMBER HEATERS ARE VPC1 THROUGH VPC12. WEST CHAMBER HEATERS ARE VPC13 THROUGH VPC24.
15. POWER SUPPLY SEPARATELY CONTROLS BOTH THE EAST AND WEST DISCHARGE CHAMBERS.
16. FOR PACKAGE DETAILS, SEE DRAWING 24590-CM-P0A-EY00-00002-03-00005.
17. THIS DRAWING SUPERSEDES 24590-LAW-M6-LMP-00008 REV 4. THIS DRAWING INCLUDES INFORMATION FROM 24590-LAW-M6N-LMP-00022, AND -00058.

HOLD/OPEN ITEMS:

NONE

REFERENCES:

1. 24590-LAW-3YD-LMP-00001, SYSTEM DESCRIPTION FOR THE SYTEM LMP, LOW ACTIVITY WASTE MELTER.

Please note that source, special nuclear, and byproduct materials, as defined in the Atomic Energy Act of 1954 (AEA) are regulated at the U. S. Department of Energy (DOE) facilities exclusively by DOE acting pursuant to its AEA authority. DOE asserts that pursuant to section 202(4) of the Energy Reorganization Act of 1974, source, special nuclear, and byproduct materials, at DOE-owned nuclear facilities. Information contained herein on radionuclides is provided for process description purposes only.

DRAWING INDEX	
DWG NO	TITLE
24590-LAW-M6-LMP-00008001	LAW MELTER PROCESS SYSTEM

REV	DESCRIPTION	ORG	CHKD	RVWD	APVD	DATE
0	ISSUED FOR CONSTRUCTION, SEE NOTE 17	VRP	AFP	RPE-SJR	RCD	08/30/10

CM — QUALITY DESIGNATOR

REVISION HISTORY

ISSUED BY RPP-WTP PDC

ISSUE STAMP

PROJECT No.	24590	
SITE	HANFORD	
AREA	200E	
BUILDING No.	20	
	BY	DATE
ORIGINATOR		8/23/10
CHECKER		8/23/10
APPROVER		8/30/10
REVIEWER		8/25/10
		8/24/10

CONTENT APPLICABLE TO ALARA? [X] YES [ ] NO
ADR NO. 24590-LAW-ADR-M-02-026 REV: 3
EMS SCREENING REQUIRED? [X] YES [ ] NO EMS INITIAL IF YES DEK

RIVER PROTECTION PROJECT
WASTE TREATMENT PLANT
2435 STEVENS CENTER PLACE
RICHLAND, WA 99354

CONTRACT No: DE-AC27-01RV14136

P&ID - LAW
LAW MELTER PROCESS SYSTEM
MELTER 1 DISCHARGE HEATERS, POWER CONTROLS (1 - 4) & AIR LIFT - EASTSIDE

SCALE: NONE

24590-LAW-M6-LMP-00008001 REV 0

"E" SIZE - 44x34
COMPUTER GENERATED - MANUAL DESIGN CHANGES NOT PERMITTED

SCREENING IS REQUIRED FOR DRAWING TYPES IDENTIFIED IN 24590-WTP-GPP-SREG-002

R11270954 8/23/2010 9:30:44 AM

FORM E_SDN.DGN 02/2009

PLOTTED BY: eewebb C:\Work\eewebb\dms03538\LAWMELMP00008001.dgn

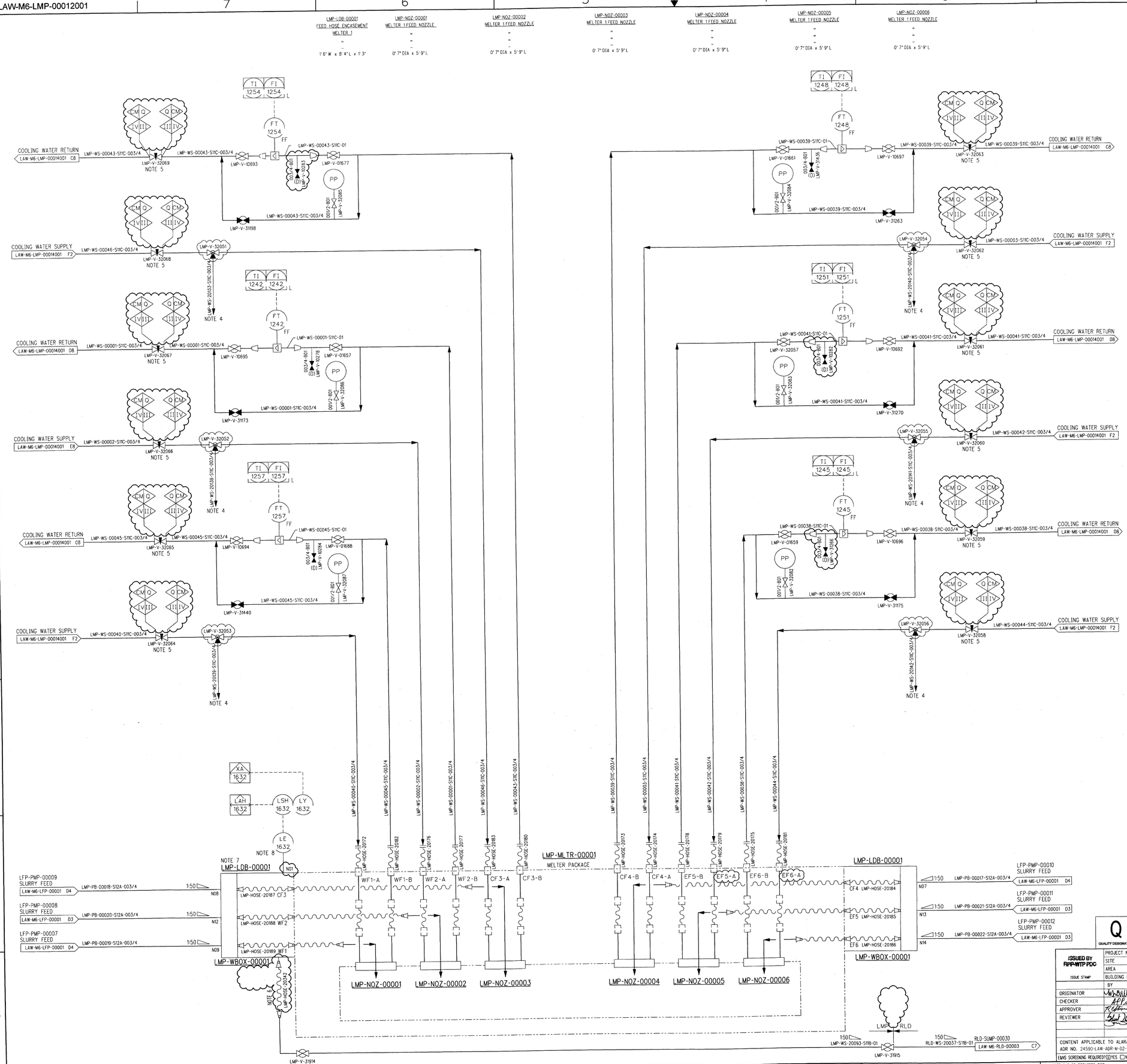

NOTES:

1. SEE DRAWINGS 24590-WTP-M6-50-00001 THROUGH 24590-WTP-M6-50-00008 FOR GENERAL NOTES, SYMBOLS AND LEGEND, AND GENERAL SLOPE REQUIREMENTS.
2. CONTENTS OF THIS DOCUMENT ARE DANGEROUS WASTE PERMIT AFFECTING.
3. THE PRESSURE BOUNDARY FOR ALL COMPONENTS ON THIS DRAWING IS QUALITY LEVEL CM AND SEISMIC CATEGORY SC-IV, UNLESS OTHERWISE NOTED.
4. 3-WAY VALVE BLEED LINE TO BE ROUTED TOWARD SAFE LOCATION. SUPPLY SIDE CLOSES WHEN BLEED OPENS.
5. VALVE SETTING SHALL LIMIT FLOW TO MELT POOL IN THE EVENT OF A BREACH IN THE COOLING JACKET OF THE FEED NOZZLE. VALVES SHALL BE SET FOR PRESCRIBED FLOW RATE THEN ADMINISTRATIVELY CONTROLLED IN THIS POSITION.
6. COUPLING HAS ONE SHUTOFF VALVE INTEGRAL TO THE SOCKET AND ONE INTEGRAL TO THE PLUG. BOTH VALVES CLOSE WHEN COUPLING IS DISCONNECTED.
7. THE LEAK DETECTION BOX PROVIDES SECONDARY CONTAINMENT AROUND THE LAW FEED HOSES AND DIRECTS ANY RELEASE TO THE CELL SUMP. THIS PIECE OF EQUIPMENT WAS GIVEN THE EQUIPMENT DESIGNATOR LDB. LEAK DETECTION BOX. BECAUSE THERE IS NOT A DESIGNATOR FOR A MELTER FEED HOSE ENCASEMENT ASSEMBLY.
8. LE-1632 IS A CABLE TYPE CONDUCTIVITY LEVEL DETECTION ELEMENT.
9. THIS DRAWING SUPERSEDES 24590-LAW-M6-LMP-00012 REV 6. THIS DRAWING INCLUDES INFORMATION FROM 24590-LAW-M6N-LMP-00010, -00028, -00030, -00033, -00037, -00046, -00071, AND 24590-LAW-M6PN-LMP-00006.

HOLD/OPEN ITEMS:

NONE

REFERENCES:

1. 24590-LAW-3YD-LMP-00001, SYSTEM DESCRIPTION FOR THE SYSTEM LMP, LOW ACTIVITY WASTE MELTER.

Please note that source, special nuclear, and byproduct materials, as defined by the Atomic Energy Act of 1954 (AEA) are regulated by the U. S. Department of Energy (DOE) facilities exclusively by DOE acting pursuant to its AEA authority. DOE assets that, pursuant to AEA, it has sole and particular authority to regulate source, special nuclear, and byproduct materials in DOE-owned nuclear facilities. Information contained herein on radionuclides is provided for process description purposes only.

DRAWING INDEX	
DWG NO	TITLE
24590-LAW-M6-LMP-00012001	LMP MELTER 1 NOZZLES COOLING SYS & FEED NOZZLES

REV	DESCRIPTION	ORG	CHKD	RVWD	APVD	DATE
0	ISSUED FOR CONSTRUCTION, SEE NOTE 9	YYP	APP	RWSCO	RDL	08/30/10

REVISION HISTORY

Q
QUALITY DESIGNATOR

ISSUED BY RPP-WTP PDC

PROJECT No.	24590	
SITE	HANFORD	
AREA	200E	
BUILDING No.	20	
ISSUE STAMP		
	BY	DATE
ORIGINATOR	[signature]	8/17/10
CHECKER	[signature]	8/17/10
APPROVER	[signature]	8/30/10
REVIEWER	[signature]	8/30/10

CONTENT APPLICABLE TO ALARA? [X] YES [ ] NO
ADR NO. 24590-LAW-ADR-M-02-026 REV: 3
EMS SCREENING REQUIRED? [X] YES [ ] NO EMS INITIAL IF YES DEC

SCREENING IS REQUIRED FOR DRAWING TYPES IDENTIFIED IN 24590-WTP-GPP-SREG-002

E-SIZE - 44x34
COMPUTER GENERATED - MANUAL DESIGN CHANGES NOT PERMITTED

BECHTEL

RIVER PROTECTION PROJECT
WASTE TREATMENT PLANT
2435 STEVENS CENTER PLACE
RICHLAND, WA 99354

CONTRACT No: DE-AC27-01RV14136

P&ID - LAW
LAW MELTER PROCESS SYSTEM
MELTER 1
FEED NOZZLES COOLING SYSTEM AND FEED NOZZLES

SCALE: NONE

24590-LAW-M6-LMP-00012001

REV 0

R11270958

8/17/2010 4:26:25 PM

PLOTTED BY: eewelb C:\Work\ewelb\Grp\03838\LAW\M6\LMP\00012001.dgn

FORM E_SDN.DGN 02/2009

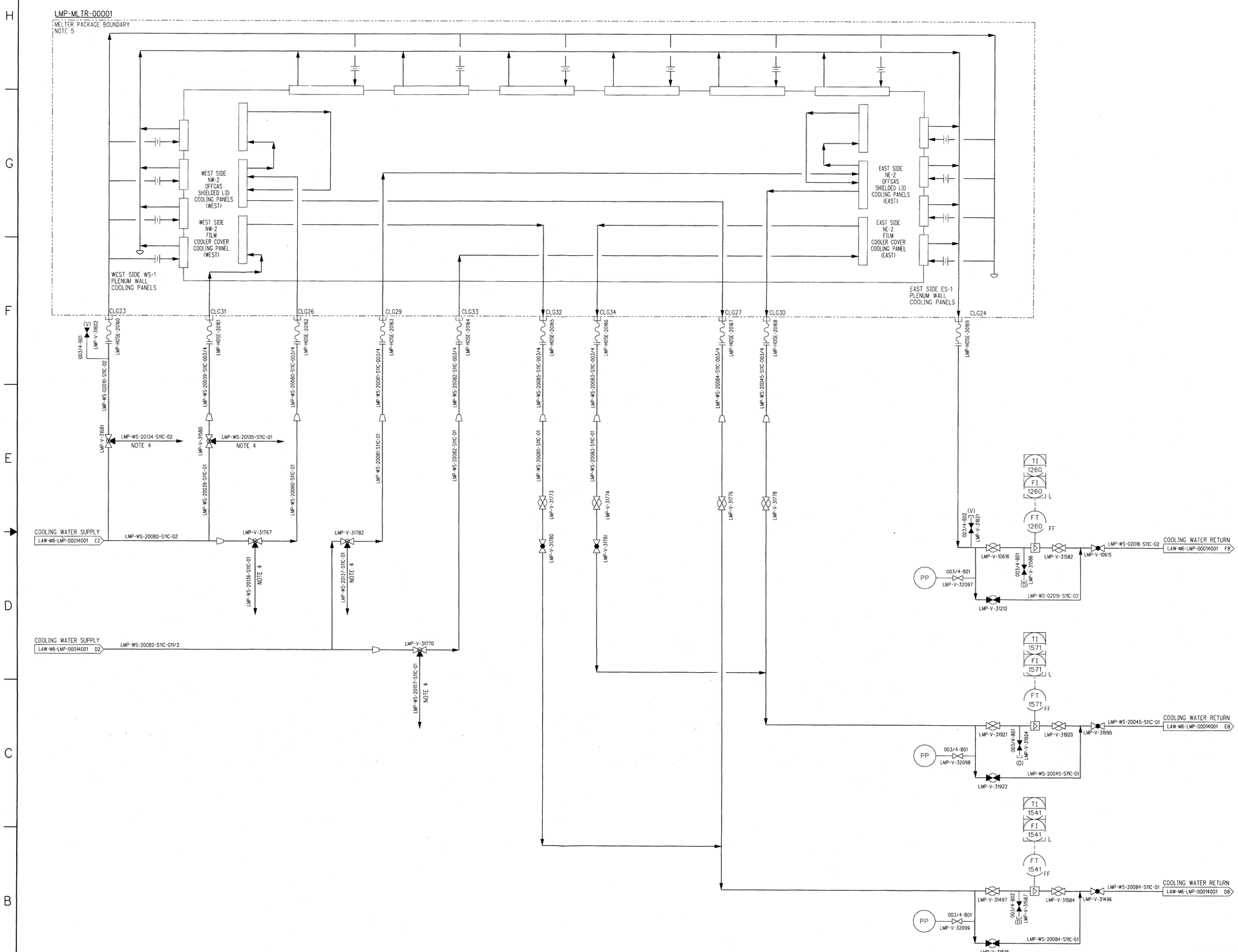

NOTES:

1. SEE DRAWINGS 24590-WTP-M6-50-00001 THROUGH 24590-WTP-M6-50-00008 FOR GENERAL NOTES, SYMBOLS AND LEGEND, AND GENERAL SLOPE REQUIREMENTS.
2. THE PRESSURE BOUNDARY FOR ALL COMPONENTS ON THIS DRAWING IS QUALITY LEVEL CM AND SEISMIC CATEGORY SC-IV, UNLESS OTHERWISE NOTED.
3. ALL LINES SHOWN ON THIS DRAWING SHALL BE FREE DRAINING, UNLESS OTHERWISE NOTED.
4. 3-WAY VALVE BLEED LINE TO BE ROUTED TOWARD SAFE LOCATION. SUPPLY SIDE CLOSES WHEN BLEED OPENS.
5. THIS IS A SCHEMATIC REPRESENTATION OF MELTER PLENUM COOLING. THE PIPING IS INTEGRAL TO THE MELTER. THERE IS NO VENDOR PIPING AND INSTRUMENTATION DIAGRAM FOR MELTER INTERNALS.
6. THIS DRAWING IS CONVERTED FROM A SINGLE SHEET DRAWING TO MULTI-SHEET DRAWINGS AND, IN PART, SUPERSEDES 24590-LAW-M6-LMP-00013 REV 6. THIS DRAWING INCLUDES INFORMATION FROM 24590-LAW-M6N-LMP-00042, AND 24590-WTP-SDDR-ML-09-00035.

HOLD/OPEN ITEMS:

NONE

REFERENCES:

1. 24590-LAW-3YD-LMP-00001, SYSTEM DESCRIPTION FOR THE SYSTEM LMP, LOW ACTIVITY WASTE MELTER.

Please note that source, special nuclear, and byproduct materials, as defined in the Atomic Energy Act of 1954 (AEA) are regulated at the U. S. Department of Energy (DOE) facilities exclusively by DOE acting pursuant to its AEA authority. DOE asserts that pursuant to AEA, it has exclusive regulatory authority and pursuant to DOE-owned nuclear facilities, information contained herein on radionuclides is provided for process description purposes only.

DRAWING INDEX	
DWG NO	TITLE
24590-LAW-M6-LMP-00013001	MELTER PROCESS SYS MELTER 1COOLING SYS
24590-LAW-M6-LMP-00013002	MELTER PROCESS SYS MELTER 1LID COOLING LOOP

REV	DESCRIPTION	ORG	CHKD	RVWD	APVD	DATE
0	ISSUED FOR CONSTRUCTION, SEE NOTE 6					08/30/10

REVISION HISTORY

CM
QUALITY DESIGNATOR

ISSUED BY RPP-WTP PDC
ISSUE STAMP

PROJECT No.	24590	
SITE	HANFORD	
AREA	200E	
BUILDING No.	20	

	BY	DATE
ORIGINATOR		8/17/10
CHECKER		8/17/2010
APPROVER		8/30/10
REVIEWER		8/30/10

CONTENT APPLICABLE TO ALARA? [X] YES [ ] NO
ADR NO. 24590-LAW-ADR-M-02-026 REV: 3
EMS SCREENING REQUIRED? [X] YES [ ] NO EMS INITIAL IF YES DEK

BECHTEL

RIVER PROTECTION PROJECT
WASTE TREATMENT PLANT
2435 STEVENS CENTER PLACE
RICHLAND, WA 99354

CONTRACT No: DE-AC27-01RV14136

P&ID - LAW
LAW MELTER PROCESS SYSTEM
MELTER 1
LID, PLENUM AND OFFGAS PORTS COOLING SYSTEM

SCALE: NONE
24590-LAW-M6-LMP-00013001
REV 0

SCREENING IS REQUIRED FOR DRAWING TYPES IDENTIFIED IN 24590-WTP-GPP-SREQ-002

'E' SIZE - 44x34
COMPUTER GENERATED - MANUAL DESIGN CHANGES NOT PERMITTED

WHEN REFERENCING DRAWING AND DIM NUMBERS IN DOCUMENTS, BE SURE TO INCLUDE DASHES BETWEEN ELEMENTS

8/13/2010 2:33:38 PM

PLOTTED BY: erwebb C:\Wip\erwebb\oms03538\LAWM6_LMP00013001.dgn

FORM E_SDN.DGN 02/2009

R11270959

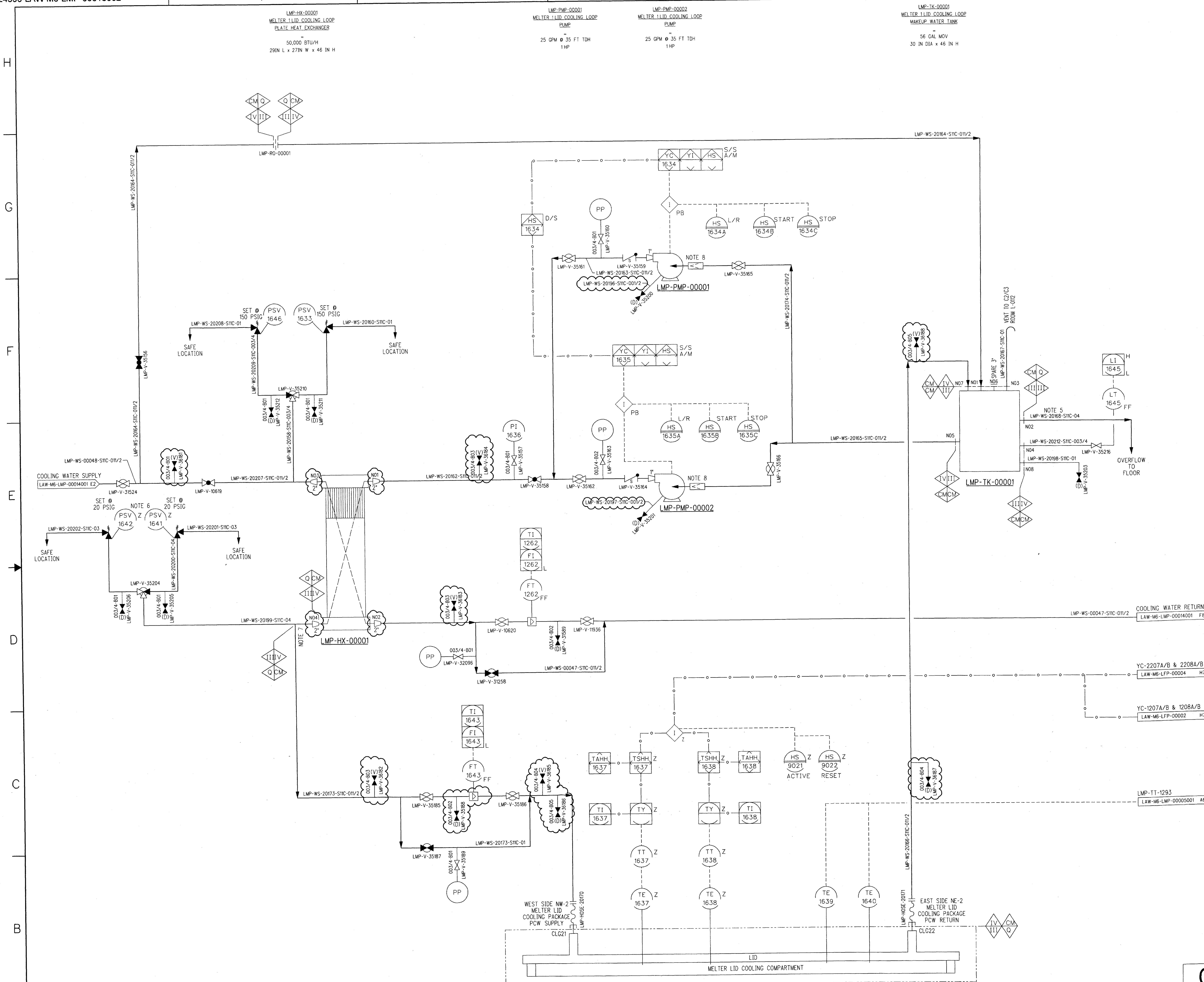

NOTES:

1. SEE DRAWINGS 24590-WTP-M6-50-00001 THROUGH 24590-WTP-M6-50-00008 FOR GENERAL NOTES, SYMBOLS AND LEGEND, AND GENERAL SLOPE REQUIREMENTS.
2. CONTENTS OF THIS DOCUMENT ARE DANGEROUS WASTE PERMIT AFFECTING.
3. THE PRESSURE BOUNDARY FOR ALL COMPONENTS ON THIS DRAWING IS QUALITY LEVEL CM AND SEISMIC CATEGORY SC-IV, UNLESS OTHERWISE NOTED.
4. ALL LINES SHOWN ON THIS DRAWING SHALL BE FREE DRAINING, UNLESS OTHERWISE NOTED.
5. TANK OVERFLOW LINE IS NOT SUPPORTED BY TANK.
6. SETPOINT AND PHYSICAL LOCATION OF PSV MAINTAINS MELTER LID BELOW 14.5 PSIG.
7. LOCATE LMP-WS-20173-S11C-01 1/2 BRANCH LESS THAN 6 FEET FROM HEAT EXCHANGER OUTLET N04. PLACE CENTERLINE OF PSV NO MORE THAN 2.5 FT ABOVE 3 FT ELEVATION FLOOR.
8. PROVIDE REMOVABLE PIPING SPOOL FOR STARTUP STRAINER, STRAINER WILL BE REMOVED PRIOR TO STARTUP.
9. THIS DRAWING IS CONVERTED FROM A SINGLE SHEET DRAWING TO MULTI-SHEET DRAWINGS AND, IN PART, SUPERSEDES 24590-LAW-M6-LMP-00013 REV 6. THIS DRAWING INCLUDES INFORMATION FROM 24590-LAW-M6N-LMP-00005, -00042, -00071, -00075, 24590-LAW-M6N-20-00003, 24590-WTP-SDDR-ML-09-00035, AND 24590-WTP-SDDR-MS-10-00024.

HOLD/OPEN ITEMS:

NONE

REFERENCES:

1. 24590-LAW-3YD-LMP-00001, SYSTEM DESCRIPTION FOR THE SYSTEM LMP, LOW ACTIVITY WASTE MELTER.

Please note that source, special nuclear, and byproduct materials, as defined in the Atomic Energy Act of 1954 (AEA) are regulated at the U. S. Department of Energy (DOE) facilities exclusively by DOE acting pursuant to its AEA authority. DOE asserts that pursuant to AEA, it has sole and exclusive responsibility and authority to regulate source, special nuclear, and byproduct materials at DOE-owned nuclear facilities. Information contained herein on radionuclides is provided for process description purposes only.

REV	DESCRIPTION	ORG	CHKD	RVWD	APVD	DATE
0	ISSUED FOR CONSTRUCTION, SEE NOTE 9	MP	[signature]	[signature]	[signature]	08/30/10

REVISION HISTORY

Q
QUALITY DESIGNATOR

ISSUED BY RPP-WTP PDC
ISSUE STAMP

PROJECT No.	24590
SITE	HANFORD
AREA	200E
BUILDING No.	20

	BY	DATE
ORIGINATOR	Michelle Rasner	8/18/10
CHECKER	[signature]	8/19/10
APPROVER	[signature]	8/30/10
REVIEWER	[signature]	8/25/10

CONTENT APPLICABLE TO ALARA? [X] YES [ ] NO
ADR NO. 24590-LAW-ADR-M-02-026 REV: 3
E&NS SCREENING REQUIRED? [X] YES [ ] NO E&NS INITIAL IF YES DEK

BECHTEL
RIVER PROTECTION PROJECT
WASTE TREATMENT PLANT
2435 STEVENS CENTER PLACE
RICHLAND, WA 99354

CONTRACT No: DE-AC27-01RV14136

P&ID - LAW
LAW MELTER PROCESS SYSTEM
MELTER 1
MELTER LID
COOLING LOOP

SCALE: NONE
24590-LAW-M6-LMP-00013002
REV 0

SCREENING IS REQUIRED FOR DRAWING TYPES IDENTIFIED IN 24590-WTP-GPP-SREG-002

'E' SIZE - 44x34
COMPUTER GENERATED - MANUAL DESIGN CHANGES NOT PERMITTED

WHEN REFERENCING DRAWING AND DIM NUMBERS IN DOCUMENTS, BE SURE TO INCLUDE DASHES BETWEEN ELEMENTS

8/18/2010 4:33:11 PM

PLOTTED BY: eewebb C:\Work\eewebb\dms03838\LAWM6LMP00013002.dgn

FORM E_SDN.DGN 02/2009

R11270960

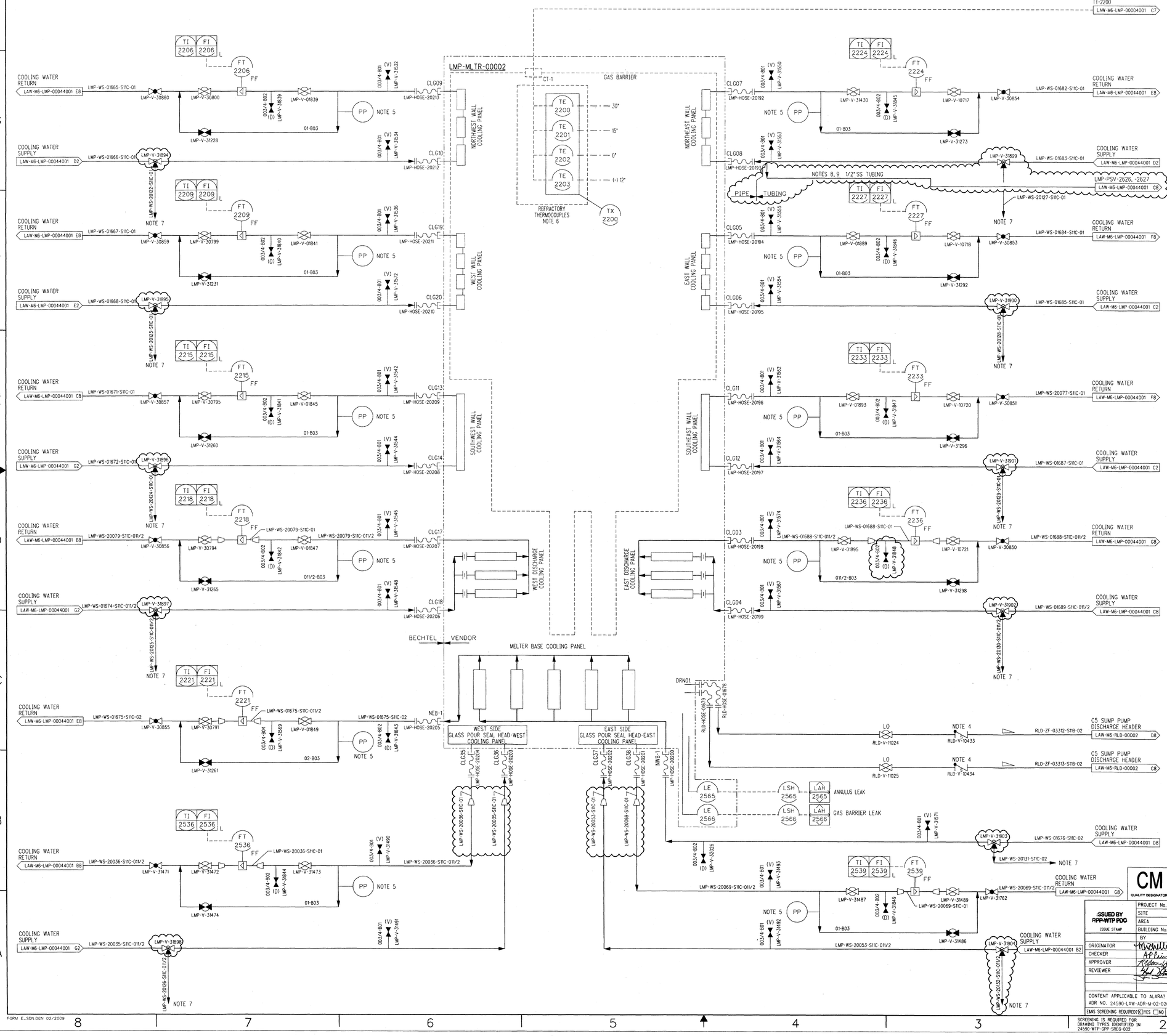

NOTES:

1. SEE DRAWINGS 24590-WTP-M6-50-00001 THROUGH 24590-WTP-M6-50-00008 FOR GENERAL NOTES, SYMBOLS AND LEGEND, AND GENERAL SLOPE REQUIREMENTS.
2. CONTENTS OF THIS DOCUMENT ARE DANGEROUS WASTE PERMIT AFFECTING.
3. THE PRESSURE BOUNDARY FOR ALL COMPONENTS IS QUALITY LEVEL CM AND SEISMIC CATEGORY SC-IV, UNLESS OTHERWISE NOTED.
4. INSTALL CHECK VALVE IN HORIZONTAL PIPING.
5. CONNECTIONS FOR PP'S ARE 1/2" THREADED, THIS CONNECTION FOR TEMPORARY INSTRUMENT WILL BE PLUGGED AFTER TEST.
6. REFRACTORY THERMOCOUPLE LOCATIONS ARE RELATIVE TO REFRACTORY FLOOR.
7. 3-WAY VALVE BLEED LINE TO BE ROUTED TOWARDS SAFE LOCATION. SUPPLY SIDE CLOSES WHEN BLEED OPENS.
8. TUBING IS REMOTE SENSING LINE FOR LMP-PSV 2626, 2627.
9. CONSTRUCTION SHALL FIELD ROUTE TUBING FROM PSV SENSING LINE PORT TO COOLING WATER SUPPLY PIPING NEAR CONNECTION CLG08 MECHANICAL SYSTEMS CONNECTION DETAIL SERIES 24590-WTP-MO-50 (FUTURE) DRAWING WILL DEFINE ROUTING.
10. THIS DRAWING SUPERSEDES 24590-LAW-M6-LMP-00033 REV 5. THIS DRAWING INCLUDES INFORMATION FROM 24590-LAW-M6N-LMP-00009, -00022, -00033, -00043, 24590-LAW-M6PN-LMP-00006, AND 24590-LAW-M6PR-LMP-00001.

HOLD/OPEN ITEMS:

NONE

REFERENCES:

1. 24590-LAW-3YD-LMP-00001, SYSTEM DESCRIPTION FOR THE SYSTEM LMP, LOW ACTIVE WASTE MELTER.

Please note that source, special nuclear, and byproduct materials, as defined in the Atomic Energy Act of 1954 (AEA) are regulated at the U. S. Department of Energy (DOE) facilities exclusively by DOE acting pursuant to its AEA authority. DOE asserts that the AEA and DOE orders, not state laws, exclusive responsibility and authority to regulate source, special nuclear, and byproduct materials at DOE-owned nuclear facilities. Reproduction of herein on radionuclides is provided for process description purposes only.

DRAWING INDEX

DWG NO	TITLE
24590-LAW-M6-LMP-00033001	LAW MELTER PROCESS SYSTEM COOLING SYSTEM

REVISION HISTORY

REV	DESCRIPTION	ORG	CHKD	RVWD	APVD	DATE
0	ISSUED FOR CONSTRUCTION, SEE NOTE 10	MP	APP			8/30/10

CM QUALITY DESIGNATOR

ISSUED BY RPP-WTP PDC ISSUE STAMP

	BY	DATE
ORIGINATOR		8/17/10
CHECKER		8/18/10
APPROVER		8/30/10
REVIEWER		8/25/10

CONTENT APPLICABLE TO ALARA? [X] YES [ ] NO

ADR NO. 24590-LAW-ADR-M-02-026 REV: 3

EMS SCREENING REQUIRED? [X] YES [ ] NO EMS INITIAL IF YES

SCREENING IS REQUIRED FOR DRAWING TYPES IDENTIFIED IN 24590-WTP-GPP-SREG-002

PROJECT No. 24590
SITE HANFORD
AREA 200E
BUILDING No. 20

RIVER PROTECTION PROJECT
WASTE TREATMENT PLANT
2435 STEVENS CENTER PLACE
RICHLAND, WA 99354

CONTRACT No: DE-AC27-01RV14136

P&ID - LAW
LAW MELTER PROCESS SYSTEM
MELTER 2
WALLS AND FLOOR PANELS
COOLING SYSTEM

SCALE: NONE

24590-LAW-M6-LMP-00033001

REV. 0

"E" SIZE - 44x34
COMPUTER GENERATED - MANUAL DESIGN CHANGES NOT PERMITTED

R11270965

8/13/2010 2:34:29 PM

PLOTTED BY: eeeebb

C:\Work\eeeebb\Sms\038381\LAWMELMFC00033001.dgn

FORM E_SDN.DGN 02/2009

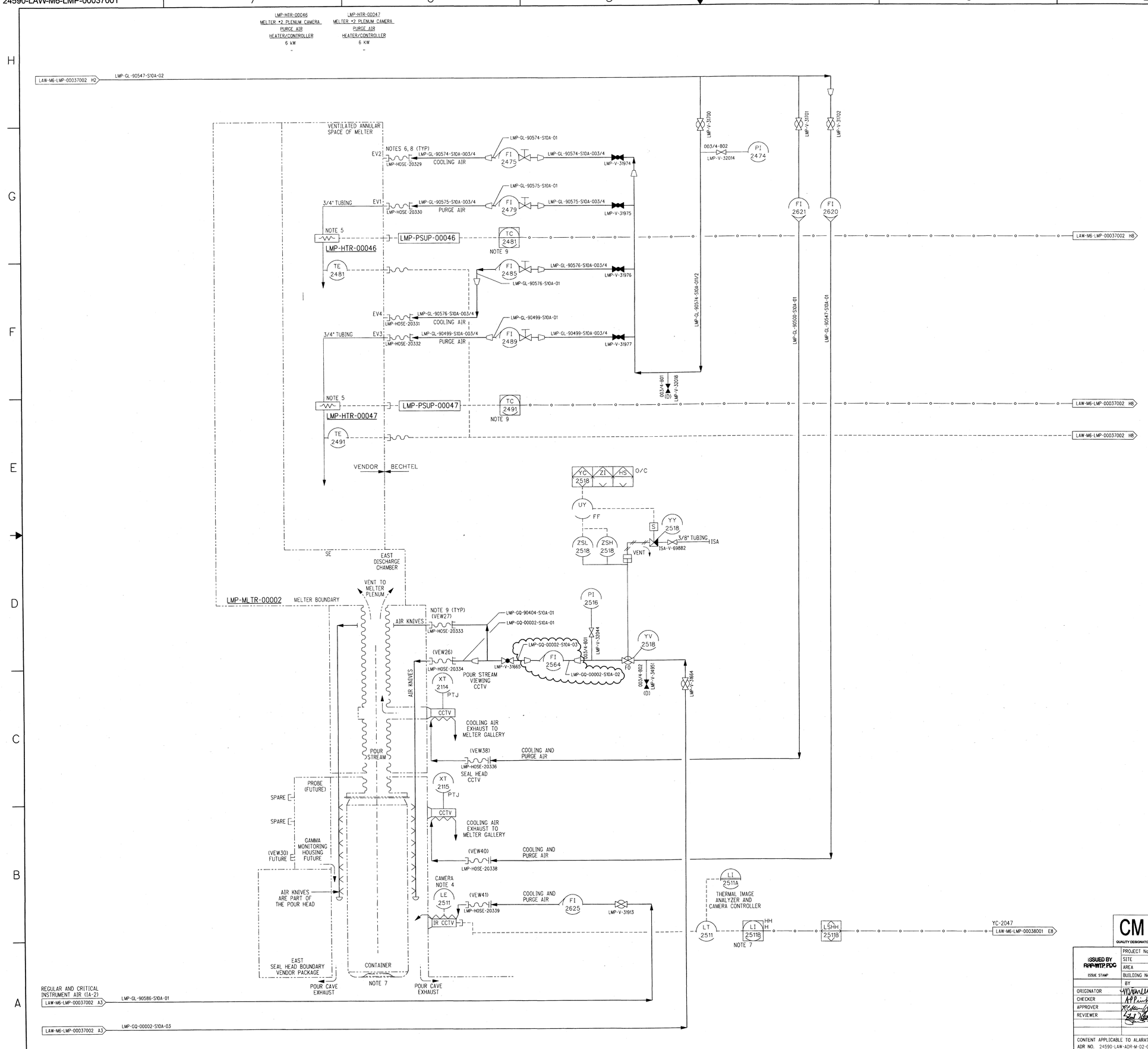

NOTES:

1. SEE DRAWINGS 24590-WTP-M6-50-00001 THROUGH 24590-WTP-M6-50-00008 FOR GENERAL NOTES, SYMBOLS AND LEGEND, AND GENERAL SLOPE REQUIREMENTS.
2. CONTENTS OF THIS DOCUMENT ARE DANGEROUS WASTE PERMIT AFFECTING.
3. THE PRESSURE BOUNDARY FOR ALL COMPONENTS ON THIS DRAWING IS QUALITY LEVEL CM AND SEISMIC CATEGORY SC-IV, UNLESS OTHERWISE NOTED.
4. THE IR CAMERA DETECTS GLASS LEVEL (THERMAL TRANSITION REGION) ON CONTAINER.
5. AIR PRE-HEAT FOR FUTURE CCTV VIEW PORT.
6. AIR FOR FUTURE PLENUM CCTV.
7. HIGH HIGH LEVEL FROM THE THERMAL IMAGE SYSTEM AUTOMATICALLY SHUTS DOWN THE MELTER DISCHARGE. THE LAW CONTAINER POUR HANDLING SYSTEM LPH-WE-4605 (LOAD CELL) AT LPH-ELEV-00003 (WEST POUR CAVE ELEVATOR) PROVIDES SECONDARY HIGH HIGH LEVEL MONITORING TO PREVENT OVERFILL, SEE DRAWING. 24590-LAW-M7-LPH-00001011. LPH-WE-5205 (LOAD CELL) AT LPH-ELEV-00004 (EAST POUR CAVE ELEVATOR) PROVIDES SECONDARY HIGH HIGH LEVEL MONITORING TO PREVENT OVERFILL, SEE DRAWING. 24590-LAW-M7-LPH-00001013.
8. SERVICE SIDE OF FLEX CONNECTION IS FEMALE CAMLOCK BY PLANT EQUIPMENT GROUP.
9. ON HIGH HIGH TEMPERATURE, THE CONTROLLER OUTPUT IS SET TO 0%.
10. THIS DRAWING IS CONVERTED FROM A SINGLE SHEET TO MULTI-SHEET DRAWINGS AND, IN PART, SUPERSEDES 24590-LAW-M6-LMP-~~00007~~ REV 4. THIS DRAWING INCLUDES INFORMATION FROM 24590-LAW-M6N-LMP-00035, AND -00062.

00037 mp 8/18/10

HOLD/OPEN ITEMS:

NONE

REFERENCES:

1. 24590-LAW-3YD-LMP-00001, SYSTEM DESCRIPTION FOR THE SYSTEM LMP, LOW ACTIVITY WASTE MELTER.

Please note that source, special nuclear, and byproduct materials, as defined by the Atomic Energy Act of 1954 (AEA) are regulated at the U. S. Department of Energy (DOE) facilities exclusively by DOE acting pursuant to its AEA authority. DOE asserts that pursuant to AEA, it has sole and exclusive responsibility and authority to regulate source, special nuclear, and byproduct materials at DOE-owned nuclear facilities. Any reference herein on radionuclides is promised for process description purposes only.

DRAWING INDEX

DWG NO	TITLE
24590-LAW-M6-LMP-00037001	MELTER PROCESS SYS MONITORING INSTRUMENTATION
24590-LAW-M6-LMP-00037002	MELTER PROCESS SYS MONITORING INSTRUMENTATION

CM
QUALITY DESIGNATOR

REVISION HISTORY

REV	DESCRIPTION	ORG	CHKD	RVWD	APVD	DATE
0	ISSUED FOR CONSTRUCTION, SEE NOTE 10	MP	APP			08/30/10

ISSUED BY RPP-WTP PDC
ISSUE STAMP

PROJECT No.	24590
SITE	HANFORD
AREA	200E
BUILDING No.	20

	BY	DATE
ORIGINATOR		8/17/10
CHECKER		8/18/10
APPROVER		8/20/10
REVIEWER		8/20/10

CONTENT APPLICABLE TO ALARA? [X] YES [ ] NO
ADR NO. 24590-LAW-ADR-M-02-026 REV: 3
EMS SCREENING REQUIRED? [X] YES [ ] NO EMS INITIAL IF YES DEK

RIVER PROTECTION PROJECT
WASTE TREATMENT PLANT
2435 STEVENS CENTER PLACE
RICHLAND, WA 99354

CONTRACT No: DE-AC27-01RV14136

P&ID - LAW
LAW MELTER PROCESS SYSTEM
MELTER 2
GLASS POURING AND MONITORING INSTRUMENTATION

SCALE: NONE
24590-LAW-M6-LMP-00037001
REV 0

SCREENING IS REQUIRED FOR DRAWING TYPES IDENTIFIED IN 24590-WTP-GPP-SRCG-002

'E' SIZE - 44x34
COMPUTER GENERATED - MANUAL DESIGN CHANGES NOT PERMITTED

R11270967

8/17/2010 9:13:19 AM

PLOTTED BY: ewebb C:\Work\ewebb\cmd38538\LAW\M6_LMP\00037001.dgn

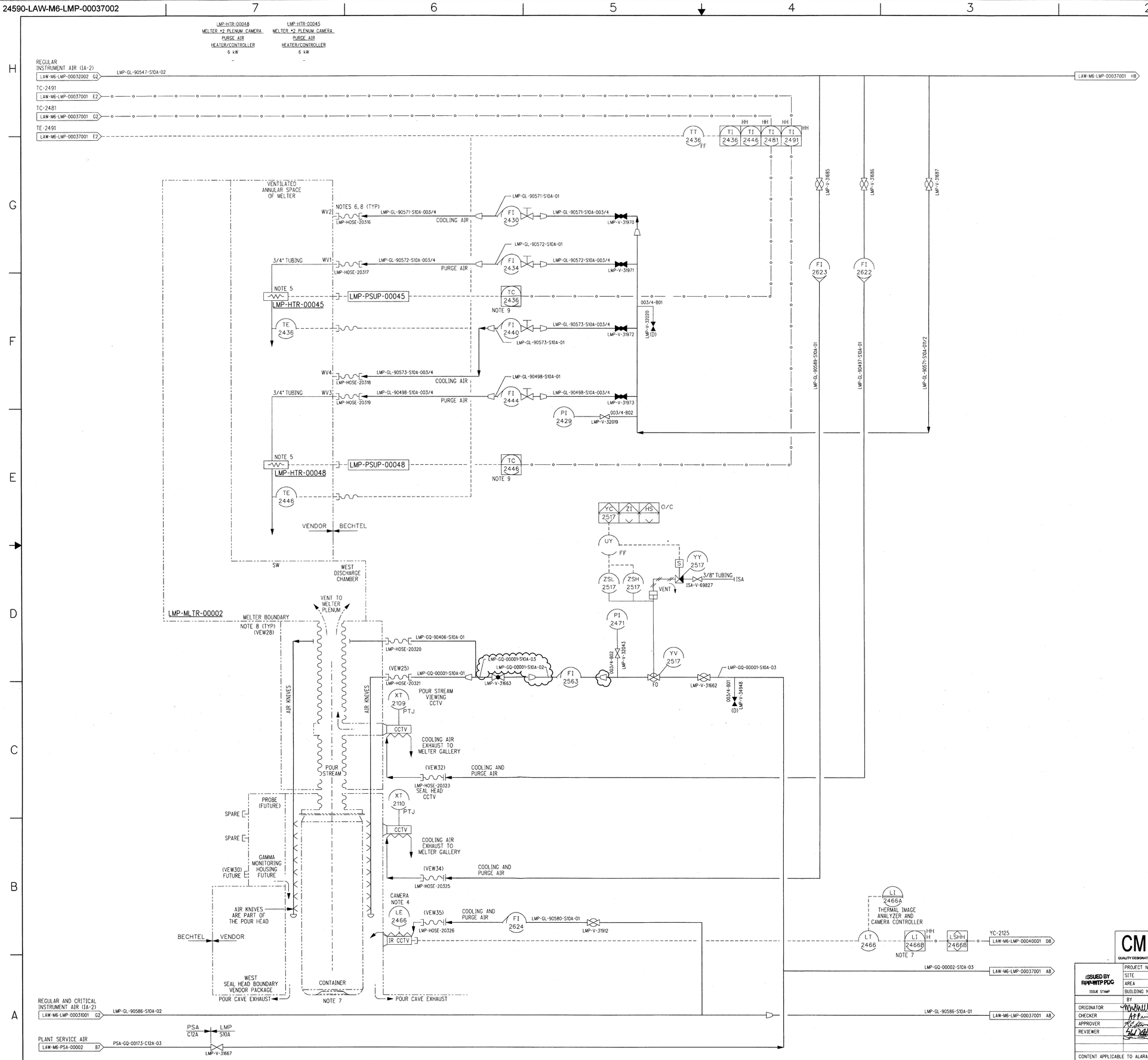

NOTES:

1. SEE DRAWINGS 24590-WTP-M6-50-00001 THROUGH 24590-WTP-M6-50-00008 FOR GENERAL NOTES, SYMBOLS AND LEGEND, AND GENERAL SLOPE REQUIREMENTS.
2. CONTENTS OF THIS DOCUMENT ARE DANGEROUS WASTE PERMIT AFFECTING.
3. THE PRESSURE BOUNDARY FOR ALL COMPONENTS ON THIS DRAWING IS QUALITY LEVEL CM AND SEISMIC CATEGORY SC-IV, UNLESS OTHERWISE NOTED.
4. THE IR CAMERA DETECTS GLASS LEVEL (THERMAL TRANSITION REGION) ON CONTAINER.
5. AIR PRE-HEATER FOR FUTURE CCTV VIEWPORT.
6. AIR FOR FUTURE PLENUM CCTV.
7. HIGH HIGH LEVEL FROM THE THERMAL IMAGE SYSTEM AUTOMATICALLY SHUTS DOWN THE MELTER DISCHARGE. THE LAW CONTAINER POUR HANDLING SYSTEM LPH-WE-4605 (LOAD CELL) AT LPH-ELEV-00003 (WEST POUR CAVE ELEVATOR) PROVIDES SECONDARY HIGH HIGH LEVEL MONITORING TO PREVENT OVERFILL, SEE DRAWING. 24590-LAW-M7-LPH-00001011. LPH-WE-5205 (LOAD CELL) AT LPH-ELEV-00004 (EAST POUR CAVE ELEVATOR) PROVIDES SECONDARY HIGH HIGH LEVEL MONITORING TO PREVENT OVERFILL, SEE DRAWING. 24590-LAW-M7-LPH-00001013
8. SERVICE SIDE OF FLEX CONNECTION IS FEMALE CAMLOCK BY PLANT EQUIPMENT GROUP.
9. ON HIGH HIGH TEMPERATURE, THE CONTROLLER OUTPUT IS SET TO 0%.
10. THIS DRAWING IS CONVERTED FROM A SINGLE SHEET TO MULTI-SHEET DRAWINGS AND, IN PART, SUPERSEDES 24590-LAW-M6-LMP-00037 REV 4. THIS DRAWING INCLUDES INFORMATION FROM 24590-LAW-M6N-LMP-00035, AND -00057.

HOLD/OPEN ITEMS:

NONE

REFERENCES:

1. 24590-LAW-3YD-LMP-00001, SYSTEM DESCRIPTION FOR THE SYSTEM LMP, LOW ACTIVITY WASTE MELTER.

Please note that source, special nuclear, and byproduct materials, as defined in the Atomic Energy Act of 1954 (AEA) are regulated by the U.S. Department of Energy (DOE) facilities exclusively by DOE acting pursuant to its AEA authority. DOE asserts that pursuant to AEA, it has sole and exclusive regulatory authority to regulate source, special nuclear, and byproduct materials at DOE-owned nuclear facilities. Information contained herein, nevertheless is provided for process description purposes only.

REV	DESCRIPTION	ORG	CHKD	RVWD	APVD	DATE
0	ISSUED FOR CONSTRUCTION, SEE NOTE 10	MP	APP	RWS	PCG	8/30/10

CM — QUALITY DESIGNATOR

REVISION HISTORY

ISSUED BY RPP-WTP PDC — ISSUE STAMP

PROJECT No.	24590
SITE	HANFORD
AREA	200E
BUILDING No.	20

	BY	DATE
ORIGINATOR		8/17/10
CHECKER		8/18/10
APPROVER		8/30/10
REVIEWER		8/31/10
		9/27/10

CONTENT APPLICABLE TO ALARA? [X] YES [ ] NO
ADR NO. 24590-LAW-ADR-M-02-026 REV. 3
EMS SCREENING REQUIRED? [X] YES [ ] NO EMS INITIAL IF YES DEK

RIVER PROTECTION PROJECT
WASTE TREATMENT PLANT
2435 STEVENS CENTER PLACE
RICHLAND, WA 99354

CONTRACT No: DE-AC27-01RV14136

P&ID - LAW
LAW MELTER PROCESS SYSTEM
MELTER 2
GLASS POURING AND MONITORING INSTRUMENTATION

SCALE: NONE
24590-LAW-M6-LMP-00037002
REV 0

SCREENING IS REQUIRED FOR DRAWING TYPES IDENTIFIED IN 24590-WTP-GPP-SEG-002

'C' SIZE - 44x34
COMPUTER GENERATED - MANUAL DESIGN CHANGES NOT PERMITTED

R:1270968

8/17/2010 9:20:34 AM

C:\Work\ewebb\smb38538\LAW46LMP00037002.dgn

PLOTTED BY: ewebb

FORM E_SDN.DGN 02/2009

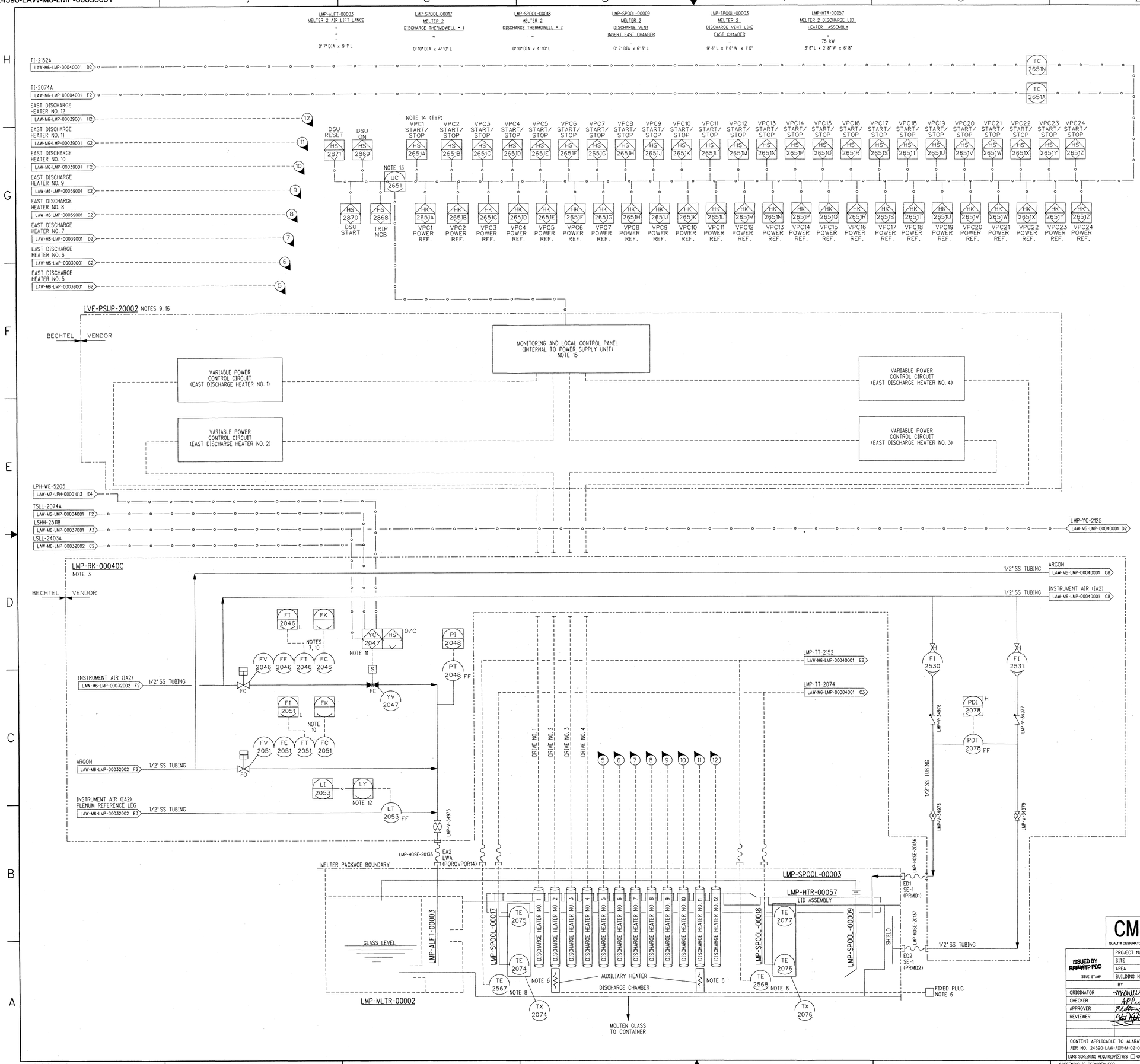

NOTES:

1. SEE DRAWINGS 24590-WTP-M6-50-00001 THROUGH 24590-WTP-M6-50-00008 FOR GENERAL NOTES, SYMBOLS AND LEGEND, AND GENERAL SLOPE REQUIREMENTS.
2. CONTENTS OF THIS DOCUMENT ARE DANGEROUS WASTE PERMIT AFFECTING.
3. THE PRESSURE BOUNDARY FOR ALL COMPONENTS ON THIS DRAWING IS QUALITY LEVEL CM AND SEISMIC CATEGORY SC-IV, UNLESS OTHERWISE NOTED.
4. ALL LINES SHOWN ON THIS DRAWING SHALL BE FREE DRAINING, UNLESS OTHERWISE NOTED.
5. ALL INSTRUMENTS AND VALVING FOR AIR LIFT SHOULD BE LOCATED AS CLOSE AS POSSIBLE TO THE SHIELD WALL TO REDUCE LINE CAPACITANCE AND AIR LIFT SURGING.
6. DISCHARGE AUXILIARY HEATERS PREWIRED TO PLUG FOR USE, AS REQUIRED BY OPERATIONS.
7. WHEN VALVE LMP-YV-2047 IS NOT OPEN, SETPOINT TO LMP-FC-2046 IS FORCED TO ZERO PERCENT.
8. TE-2567 AND TE-2568 ARE INTEGRAL WITH AUXILIARY HEATER AND ARE NOT REPLACEABLE.
9. FOR ELECTRICAL SUPPLY DESIGN SEE DRAWING 24590-LAW-E1-LVE-00031.
10. FLOW CONTROL (FC) IS INTEGRAL TO THE VALVE. ACTUAL SETPOINT PROVIDED FROM ICN.
11. HIGH HIGH WEIGHT FROM MECHANICAL HANDLING LOAD CELL LPH-WE-5205 (REPRESENTING HIGH HIGH LEVEL IN CONTAINER) CLOSES VALVE LMP-YV-2047 TO SHUT THE EAST CHAMBER DISCHARGE.
12. LMP-DI-2404 ON P&ID 24590-LAW-M6-LMP-00032002 IS USED IN CALCULATION OF ALTERNATE LEVEL LMP-LI-2053.
13. DISCHARGE HEATER POWER SUPPLY OPERATION IS INITIATED AND OPERATIONAL STATUS IS MONITORED FROM THE FACILITY CONTROL SYSTEM. TAG REPRESENTS MULTIPLE CONTROL AND INDICATING PARAMETERS FOR ALL EAST AND WEST DISCHARGE CHAMBER HEATERS AVAILABLE TO FACILITY OPERATOR. CONTROL SIGNAL ORIGINATES FROM AVERAGE DISCHARGE CHAMBER TEMPERATURES.
14. EACH HEATER VPC HAS A START/STOP HAND SWITCH AND A POWER REFERENCE AUTO/MANUAL STATION. EAST CHAMBER HEATERS ARE VPC1 THROUGH VPC12. WEST CHAMBER HEATERS ARE VPC13 THROUGH VPC24.
15. POWER SUPPLY SEPARATELY CONTROLS BOTH THE EAST AND WEST DISCHARGE CHAMBERS.
16. FOR PACKAGE DETAILS, SEE DRAWING 24590-CM-POA-EY00-00002-03-00005.
17. THIS DRAWING SUPERSEDES 24590-LAW-M6-LMP-00038 REV 4. THIS DRAWING INCLUDES INFORMATION FROM 24590-LAW-M6N-LMP-00022, AND -00063.

HOLD/OPEN ITEMS:

NONE

REFERENCES:

1. 24590-LAW-3YD-LMP-00001, SYSTEM DESCRIPTION FOR THE SYSTEM LMP, LOW ACTIVITY WASTE MELTER.

Please note that source, special nuclear, and byproduct materials, as defined in the Atomic Energy Act of 1954 (AEA) are regulated by DOE, not the Nuclear Regulatory Agency (NRC) facilities exclusively for DOE acting pursuant to its AEA authority. DOE asserts that pursuant to AEA, it has sole and exclusive regulatory authority and authority to regulate source, special nuclear, and byproduct materials at DOE-owned nuclear facilities. Information contained herein on radionuclides is provided for process description purposes only.

DRAWING INDEX

DWG NO	TITLE
24590-LAW-M6-LMP-00038001	LAW MELTER PROCESS SYSTEM

REV	DESCRIPTION	ORG	CHKD	RVWD	APVD	DATE
0	ISSUED FOR CONSTRUCTION, SEE NOTE 17	MP	APP			08/20/10

CM QUALITY DESIGNATOR

REVISION HISTORY

ISSUED BY RPP-WTP PDC

PROJECT No.	24590	
SITE	HANFORD	
AREA	200E	
BUILDING No.	20	
ISSUE STAMP		

	BY	DATE
ORIGINATOR	MP	8/20/10
CHECKER	APP	8/20/10
APPROVER		8/20/10
REVIEWER		8/20/10

CONTENT APPLICABLE TO ALARA? [X] YES [ ] NO
ADR NO. 24590-LAW-ADR-M-02-026 REV: 3
EMS SCREENING REQUIRED? [X] YES [ ] NO EMS INITIAL IF YES DGK

BECHTEL

RIVER PROTECTION PROJECT
WASTE TREATMENT PLANT
2435 STEVENS CENTER PLACE
RICHLAND, WA 99354

CONTRACT No: DE-AC27-01RV14136

P&ID - LAW
LAW MELTER PROCESS SYSTEM
MELTER 2 DISCHARGE HEATERS, POWER CONTROLS (1 - 4) & AIR LIFT - EASTSIDE

SCALE: NONE
24590-LAW-M6-LMP-00038001
REV 0

SCREENING IS REQUIRED FOR DRAWING TYPES IDENTIFIED IN 24590-WTP-GPP-SREG-002

'E' SIZE - 44 x 34
COMPUTER GENERATED - MANUAL DESIGN CHANGES NOT PERMITTED

R11270969

8/26/2010 8:49:52 AM

PLOTTED BY: eewebb C:\Work\eewebb\cmd0.38.25\LAWM6LMP00038001.dgn

FORM E_SDN.DGN 02/2009

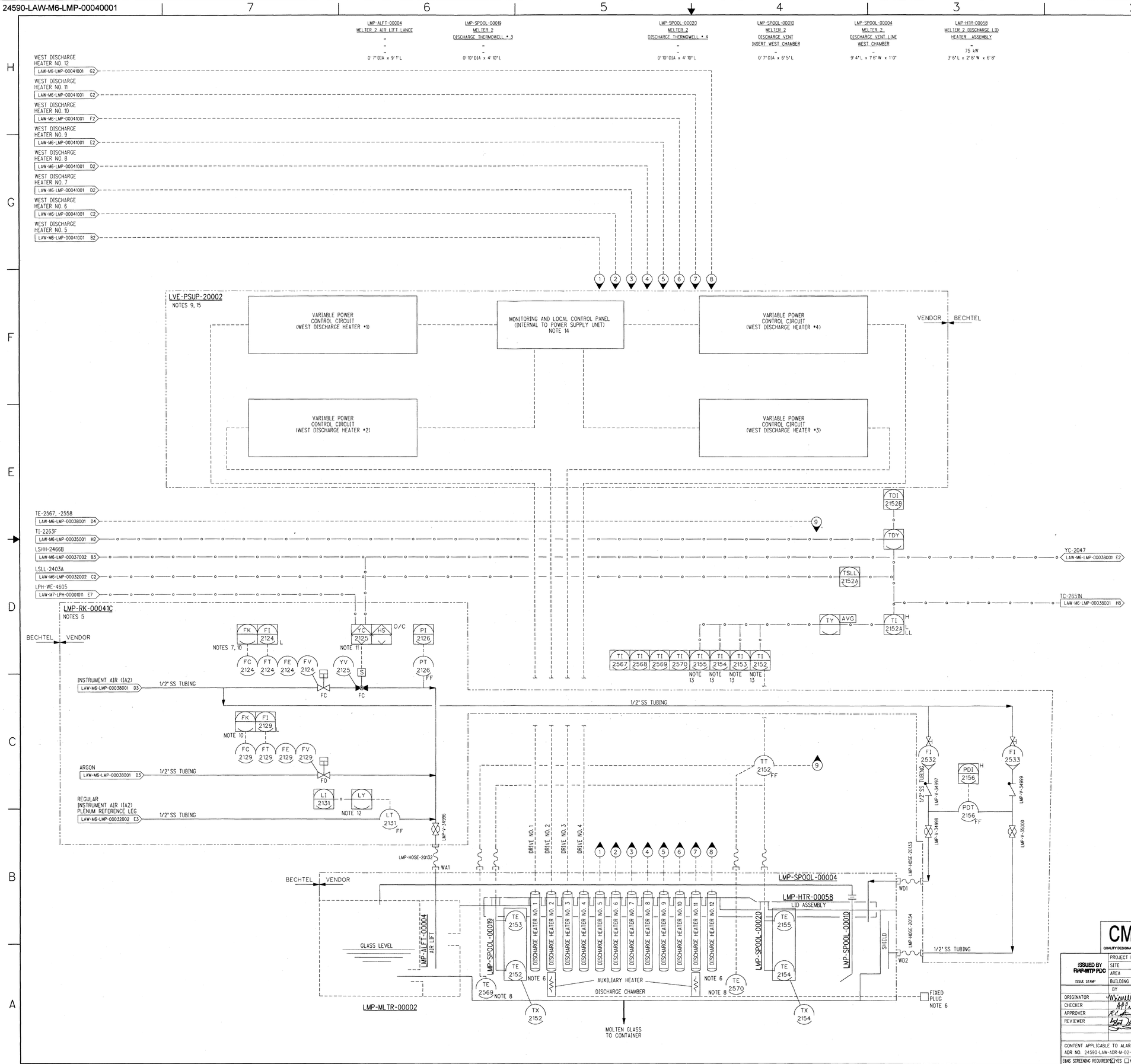

NOTES:

1. SEE DRAWINGS 24590-WTP-M6-50-00001 THROUGH 24590-WTP-M6-50-00008 FOR GENERAL NOTES, SYMBOLS AND LEGEND, AND GENERAL SLOPE REQUIREMENTS.
2. CONTENTS OF THIS DOCUMENT ARE DANGEROUS WASTE PERMIT AFFECTING.
3. THE PRESSURE BOUNDARY FOR ALL COMPONENTS ON THIS DRAWING IS QUALITY LEVEL CM AND SEISMIC CATEGORY SC-IV, UNLESS OTHERWISE NOTED.
4. ALL LINES SHOWN ON THIS DRAWING SHALL BE FREE DRAINING, UNLESS OTHERWISE NOTED.
5. ALL INSTRUMENTS AND VALVING FOR AIR LIFT SHOULD BE LOCATED AS CLOSE AS POSSIBLE TO THE SHIELD WALL TO REDUCE LINE CAPACITANCE AND AIR LIFT SURGING.
6. DISCHARGE AUXILIARY HEATERS PREWIRED TO PLUG FOR USE, AS REQUIRED BY OPERATIONS.
7. WHEN VALVE LMP-YV-2125 IS NOT OPEN, SETPOINT TO LMP-FC-2124 IS FORCED TO ZERO PERCENT.
8. TE-2569 AND TE-2570 ARE INTEGRAL WITH AUXILIARY HEATERS AND ARE NOT REPLACEABLE.
9. FOR ELECTRICAL SUPPLY DESIGN SEE DRAWING 24590-LAW-E1-LVE-00033.
10. FLOW CONTROL (FC) IS INTEGRAL TO THE VALVE. ACTUAL SETPOINT PROVIDED FROM ICN.
11. HIGH HIGH WEIGHT FROM MECHANICAL HANDLING LOAD CELL LPH-WE-4605 (REPRESENTING HIGH HIGH LEVEL IN CONTAINER) CLOSES VALVE LMP-YV-2125 TO SHUT THE WEST CHAMBER DISCHARGE.
12. LMP-DI-2404 ON P&ID 24590-LAW-M6-LMP-00032002 IS BACK UP TO CALCULATING ALTERNATE LEVEL IN LMP-LI-2131.
13. INDIVIDUAL WEST DISCHARGE CHAMBER TEMPERATURE INDICATORS HAVE HIGH ALARMS ON RATE OF CHANGE AND ON DIFFERENTIAL FROM AVERAGE WEST DISCHARGE CHAMBER TEMPERATURE.
14. POWER SUPPLY SEPARATELY CONTROLS BOTH THE EAST AND WEST DISCHARGE CHAMBERS.
15. FOR PACKAGE DETAILS SEE DRAWING, 24590-CM-POA-EY00-00002-03-00005.
16. THIS DRAWING SUPERSEDES 24590-LAW-M6-LMP-00040 REV 4. THIS DRAWING INCLUDES INFORMATION FROM 24590-LAW-M6N-LMP-00022 AND -00065.

HOLD/OPEN ITEMS:

NONE

REFERENCES:

1. 24590-LAW-3YD-LMP-00001, SYSTEM DESCRIPTION FOR THE SYSTEM LMP, LOW ACTIVITY WASTE MELTER.

Please note that source, special nuclear, and byproduct materials, as defined in the Atomic Energy Act of 1954 (AEA) are regulated by the U. S. Department of Energy (DOE) facilities exclusively by DOE under the AEA. DOE, in its contracts with its contractors pursuant to AEA, it has sole and exclusive responsibility and authority to regulate source, special nuclear, and byproduct materials at DOE-owned nuclear facilities. Information contained herein on radionuclides is provided for process description purposes only.

DRAWING INDEX	
DWG NO	TITLE
24590-LAW-M6-LMP-00040001	LMP POWER CONTROLS & AIR LIFT - WESTSIDE

CM — QUALITY DESIGNATOR

REV	DESCRIPTION	ORG	CHKD	RVWD	APVD	DATE
0	ISSUED FOR CONSTRUCTION, SEE NOTE 16	MP	AH	DEK	DEK	08/30/10

REVISION HISTORY

ISSUED BY RAP-WTP PDC

PROJECT No.	24590
SITE	HANFORD
AREA	200E
BUILDING No.	20

ISSUE STAMP

	BY	DATE
ORIGINATOR		8/23/10
CHECKER		8/25/10
APPROVER		8/30/10
REVIEWER		8/25/10

CONTENT APPLICABLE TO ALARA? [X] YES [ ] NO
ADR NO. 24590-LAW-ADR-M-02-026 REV: 3
E&NS SCREENING REQUIRED? [X] YES [ ] NO E&NS INITIAL IF YES DEK

BECHTEL
RIVER PROTECTION PROJECT
WASTE TREATMENT PLANT
2435 STEVENS CENTER PLACE
RICHLAND, WA 99354

CONTRACT No: DE-AC27-01RV14136

P&ID - LAW
LAW MELTER PROCESS SYSTEM
MELTER 2 DISCHARGE HEATERS, POWER CONTROLS (1 - 4) & AIR LIFT - WESTSIDE

SCALE: NONE
24590-LAW-M6-LMP-00040001
REV 0

SCREENING IS REQUIRED FOR DRAWING TYPES IDENTIFIED IN 24590-WTP-GPP-SRD-002

E SIZE - 44x34
COMPUTER GENERATED - MANUAL DESIGN CHANGES NOT PERMITTED

R1:1270971

8/23/2010 9:39:08 AM

C:\WorkArea\ebb\cms\03535\LAWML\MP00040001.dgn

PLOTTED BY: ebwebb

FORM E_SDN.DGN 02/2009

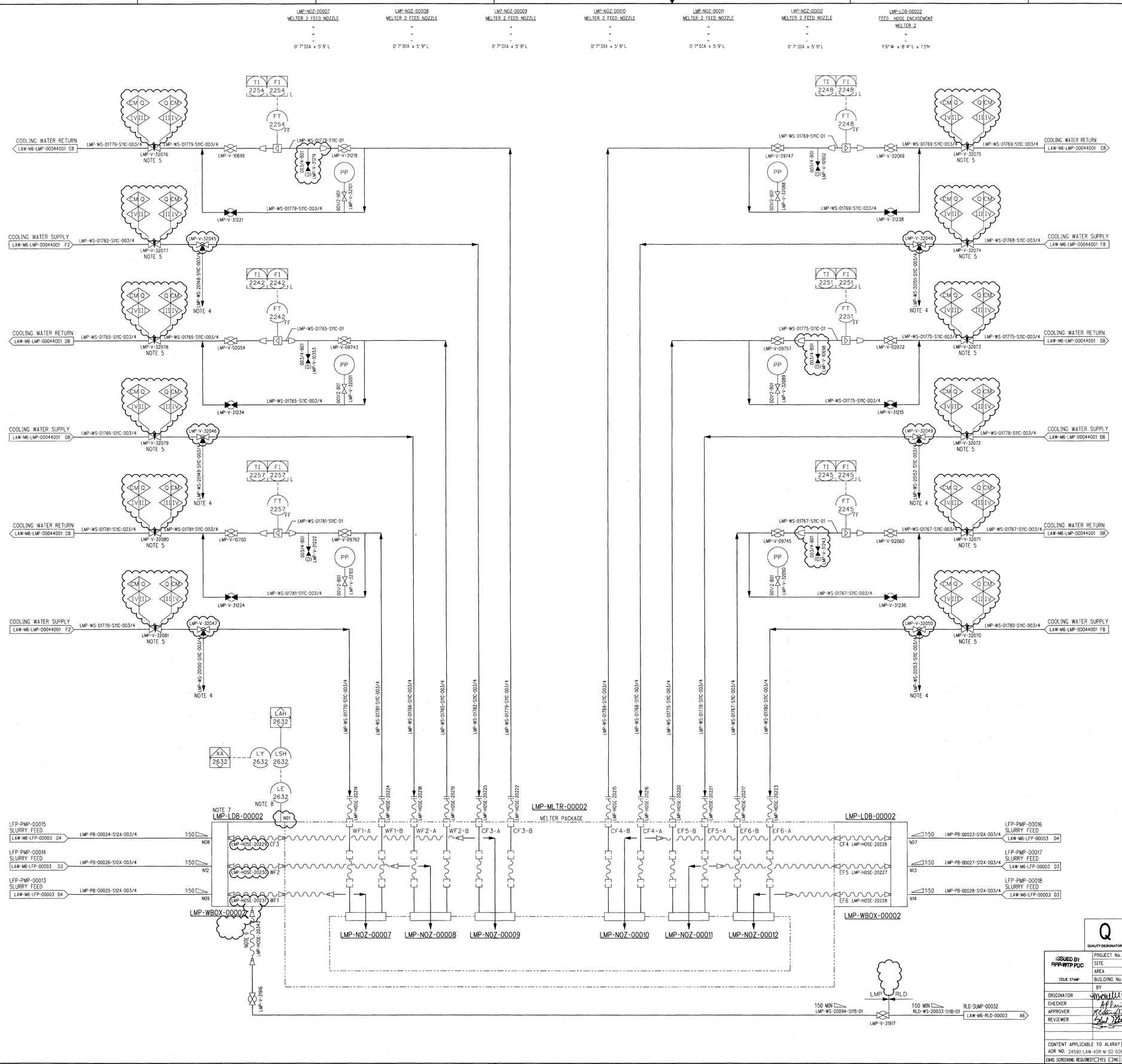

NOTES:

1. SEE DRAWINGS 24590-WTP-M6-50-00001 THROUGH 24590-WTP-M6-50-00008 FOR GENERAL NOTES, SYMBOLS AND LEGEND, AND GENERAL SLOPE REQUIREMENTS.
2. CONTENTS OF THIS DOCUMENT ARE DANGEROUS WASTE PERMIT AFFECTING.
3. THE PRESSURE BOUNDARY FOR ALL COMPONENTS ON THIS DRAWING IS QUALITY LEVEL CM AND SEISMIC CATEGORY SC-IV, UNLESS OTHERWISE NOTED.
4. 3-WAY VALVE BLEED LINE TO BE ROUTED TOWARD SAFE LOCATION. SUPPLY SIDE CLOSES WHEN BLEED OPENS.
5. VALVE SETTING SHALL LIMIT FLOW TO MELT POOL IN THE EVENT OF A BREACH IN THE COOLING JACKET OF THE FEED NOZZLE. VALVES SHALL BE SET FOR PRESCRIBED FLOW RATE THEN ADMINISTRATIVELY CONTROLLED IN THIS POSITION.
6. COUPLING HAS ONE SHUTOFF VALVE INTEGRAL TO THE SOCKET AND ONE INTEGRAL TO THE PLUG. BOTH VALVES CLOSE WHEN COUPLING IS DISCONNECTED.
7. THE LEAK DETECTION BOX PROVIDES SECONDARY CONTAINMENT AROUND THE LAW FEED HOSES AND DIRECTS ANY RELEASE TO THE CELL SUMP. THIS PIECE OF EQUIPMENT WAS GIVEN THE EQUIPMENT DESIGNATOR LDB, LEAK DETECTION BOX, BECAUSE THERE IS NOT A DESIGNATOR FOR A MELTER FEED HOSE ENCASEMENT ASSEMBLY.
8. LE-2632 IS A CABLE TYPE CONDUCTIVITY LEVEL DETECTION ELEMENT.
9. THIS DRAWING SUPERSEDES 24590-LAW-M6-LMP-00042 REV 6. THIS DRAWING INCLUDES INFORMATION FROM 24590-LAW-M6-LMP-00010, -00032, -00033, -00038, -00048, -00071, 24590-LAW-M6PN-LMP-00006, AND 24590-LAW-M6N-M80T-00004.

HOLD/OPEN ITEMS:

NONE

REFERENCES:

1. 24590-LAW-3YD-LMP-00001, SYSTEM DESCRIPTION FOR THE SYSTEM LMP, LOW ACTIVITY WASTE MELTER.

Please note that source, special nuclear, and byproduct materials, as defined by the Atomic Energy Act of 1954 (AEA), are regulated by the U.S. Department of Energy (DOE) facilities exclusively by DOE acting pursuant to its AEA authority. DOE asserts that pursuant to AEA, it has sole and exclusive responsibility and authority to regulate source, special nuclear, and byproduct materials. DOE-owned nuclear facilities, materials, and radioactive wastes are radionuclides is provided for process description purposes only.

DRAWING INDEX

DWG NO	TITLE
24590-LAW-M6-LMP-00042001	LMP MELTER 2 NOZZLES COOLING SYS & FEED NOZZLES

REVISION HISTORY

REV	DESCRIPTION	ORG	CHKD	RVWD	APVD	DATE
0	ISSUED FOR CONSTRUCTION, SEE NOTE 9					08/30/10

QUALITY DESIGNATOR: Q

ISSUED BY: RPP-WTP PDC

ISSUE STAMP

	PROJECT No.	24590
	SITE	HANFORD
	AREA	200E
	BUILDING No.	20

	BY	DATE
ORIGINATOR		8/23/10
CHECKER		8/23/10
APPROVER		8/30/10
REVIEWER		8/23/10

CONTENT APPLICABLE TO ALARA? [X] YES [ ] NO
ADR NO. 24590-LAW-ADR-M-02-026 REV: 3
EMS SCREENING REQUIRED? [ ] YES [X] NO EMS INITIAL IF YES DEK

BECHTEL

RIVER PROTECTION PROJECT
WASTE TREATMENT PLANT
2435 STEVENS CENTER PLACE
RICHLAND, WA 99354

CONTRACT No: DE-AC27-01RV14136

P&ID - LAW
LAW MELTER PROCESS SYSTEM
MELTER 2
FEED NOZZLES COOLING SYSTEM AND FEED NOZZLES

SCALE: NONE

24590-LAW-M6-LMP-00042001

REV 0

SCREENING IS REQUIRED FOR DRAWING TYPES IDENTIFIED IN 24590-WTP-GPP-SREQ-002

'E' SIZE - 44x34
COMPUTER GENERATED - MANUAL DESIGN CHANGES NOT PERMITTED

R11270973

8/23/2010 9:23:45 AM

PLOTTED BY: eewebb

C:\Work\eewebb\cms03835\LAW\M6\LMP00042001.dgn

FORM E_SDN.DGN 02/2009

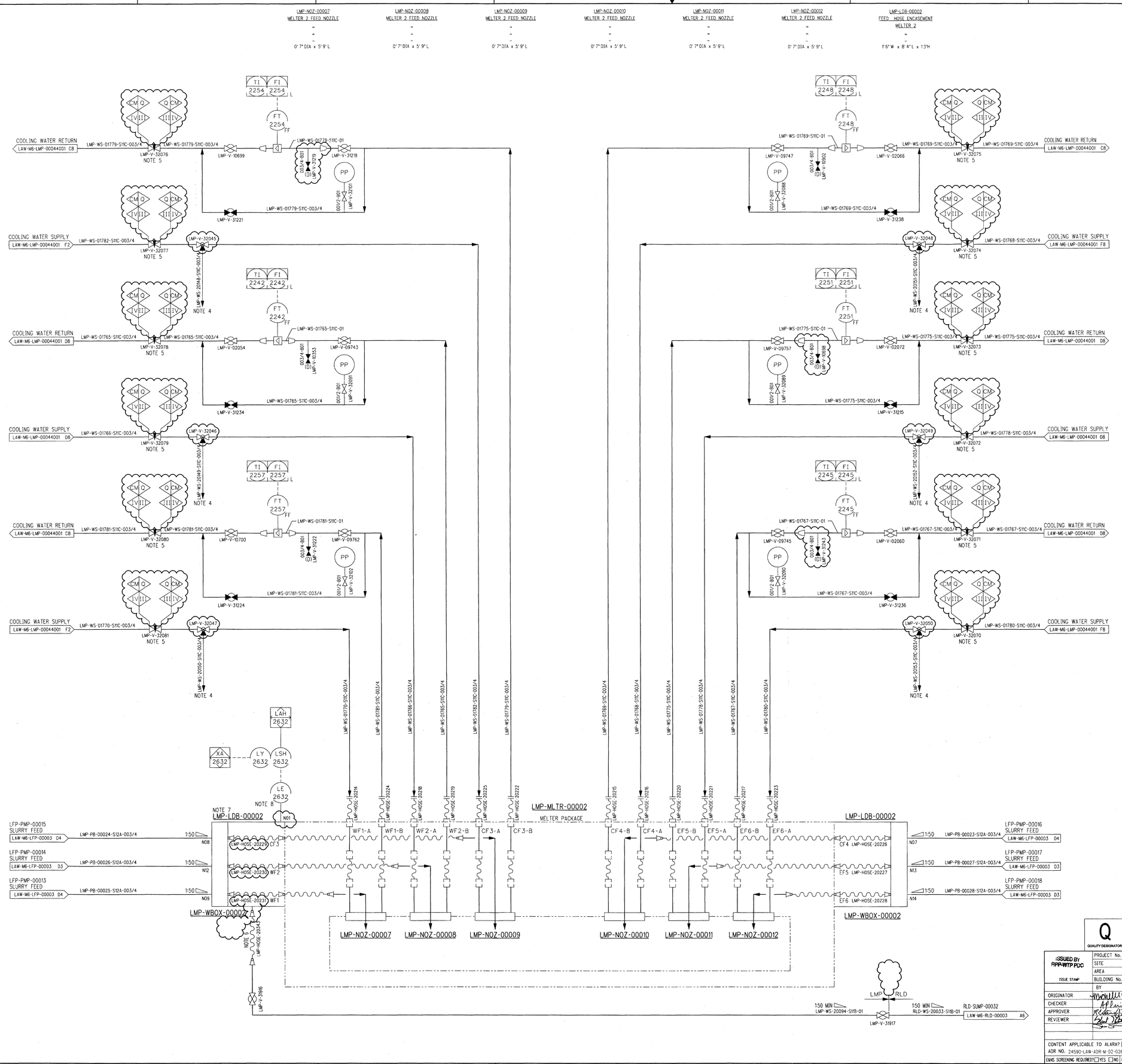

NOTES:

1. SEE DRAWINGS 24590-WTP-M6-50-00001 THROUGH 24590-WTP-M6-50-00008 FOR GENERAL NOTES, SYMBOLS AND LEGEND, AND GENERAL SLOPE REQUIREMENTS.
2. CONTENTS OF THIS DOCUMENT ARE DANGEROUS WASTE PERMIT AFFECTING.
3. THE PRESSURE BOUNDARY FOR ALL COMPONENTS ON THIS DRAWING IS QUALITY LEVEL CM AND SEISMIC CATEGORY SC-IV, UNLESS OTHERWISE NOTED.
4. 3-WAY VALVE BLEED LINE TO BE ROUTED TOWARD SAFE LOCATION. SUPPLY SIDE CLOSES WHEN BLEED OPENS.
5. VALVE SETTING SHALL LIMIT FLOW TO MELT POOL IN THE EVENT OF A BREACH IN THE COOLING JACKET OF THE FEED NOZZLE. VALVES SHALL BE SET FOR PRESCRIBED FLOW RATE THEN ADMINISTRATIVELY CONTROLLED IN THIS POSITION.
6. COUPLING HAS ONE SHUTOFF VALVE INTEGRAL TO THE SOCKET AND ONE INTEGRAL TO THE PLUG. BOTH VALVES CLOSE WHEN COUPLING IS DISCONNECTED.
7. THE LEAK DETECTION BOX PROVIDES SECONDARY CONTAINMENT AROUND THE LAW FEED HOSES AND DIRECTS ANY RELEASE TO THE CELL SUMP. THIS PIECE OF EQUIPMENT WAS GIVEN THE EQUIPMENT DESIGNATOR LDB, LEAK DETECTION BOX, BECAUSE THERE IS NOT A DESIGNATOR FOR A MELTER FEED HOSE ENCASEMENT ASSEMBLY.
8. LE-2632 IS A CABLE TYPE CONDUCTIVITY LEVEL DETECTION ELEMENT.
9. THIS DRAWING SUPERSEDES 24590-LAW-M6-LMP-00042 REV 6. THIS DRAWING INCLUDES INFORMATION FROM 24590-LAW-M6-LMP-00010, -00032, -00033, -00038, -00048, -00071, 24590-LAW-M6PN-LMP-00006, AND 24590-LAW-M6N-M80T-00004.

HOLD/OPEN ITEMS:

NONE

REFERENCES:

1. 24590-LAW-3YD-LMP-00001, SYSTEM DESCRIPTION FOR THE SYSTEM LMP, LOW ACTIVITY WASTE MELTER.

Please note that source, special nuclear, and byproduct materials, as defined by the Atomic Energy Act of 1954 (AEA), are regulated by the U.S. Department of Energy (DOE) facilities exclusively by DOE acting pursuant to its AEA authority. DOE asserts that pursuant to AEA, it has sole and exclusive responsibility and authority to regulate source, special nuclear, and byproduct materials. DOE-owned nuclear facilities, materials, and radioactive wastes are radionuclides is provided for process description purposes only.

DRAWING INDEX

DWG NO	TITLE
24590-LAW-M6-LMP-00042001	LMP MELTER 2 NOZZLES COOLING SYS & FEED NOZZLES

REVISION HISTORY

REV	DESCRIPTION	ORG	CHKD	RVWD	APVD	DATE
0	ISSUED FOR CONSTRUCTION, SEE NOTE 9					08/30/10

QUALITY DESIGNATOR: Q

ISSUED BY: RPP-WTP PDC

ISSUE STAMP

	PROJECT No.	24590
	SITE	HANFORD
	AREA	200E
	BUILDING No.	20

	BY	DATE
ORIGINATOR		8/23/10
CHECKER		8/23/10
APPROVER		8/30/10
REVIEWER		8/23/10

CONTENT APPLICABLE TO ALARA? [X] YES [ ] NO
ADR NO. 24590-LAW-ADR-M-02-026 REV: 3
EMS SCREENING REQUIRED? [ ] YES [X] NO EMS INITIAL IF YES DEK

BECHTEL

RIVER PROTECTION PROJECT
WASTE TREATMENT PLANT
2435 STEVENS CENTER PLACE
RICHLAND, WA 99354

CONTRACT No: DE-AC27-01RV14136

P&ID - LAW
LAW MELTER PROCESS SYSTEM
MELTER 2
FEED NOZZLES COOLING SYSTEM AND FEED NOZZLES

SCALE: NONE

24590-LAW-M6-LMP-00042001

REV 0

SCREENING IS REQUIRED FOR DRAWING TYPES IDENTIFIED IN 24590-WTP-GPP-SREQ-002

'E' SIZE - 44x34
COMPUTER GENERATED - MANUAL DESIGN CHANGES NOT PERMITTED

R11270973

8/23/2010 9:23:45 AM

PLOTTED BY: eewebb

C:\Work\eewebb\cms03835\LAW\M6\LMP00042001.dgn

FORM E_SDN.DGN 02/2009

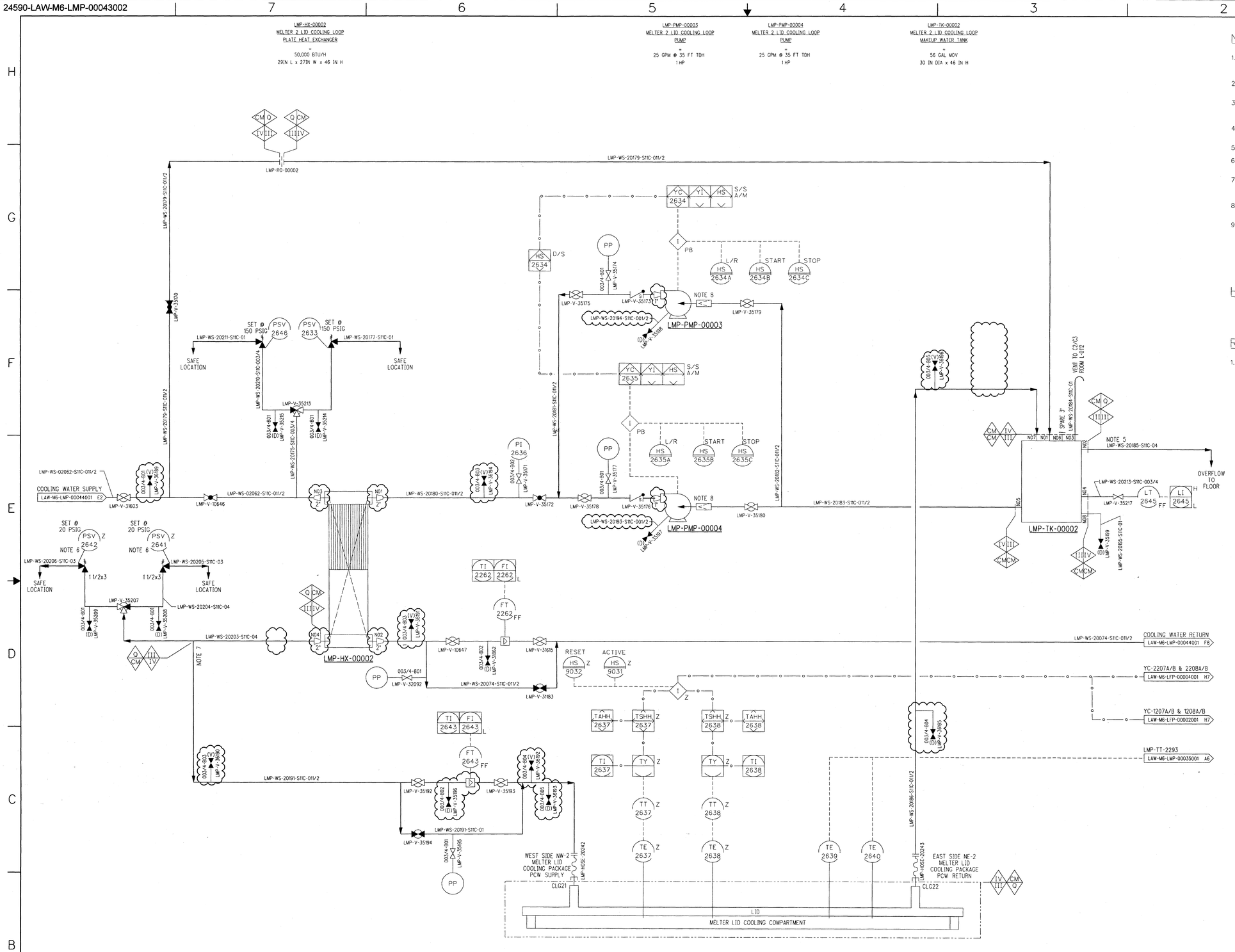

NOTES:

1. SEE DRAWINGS 24590-WTP-M6-50-00001 THROUGH 24590-WTP-M6-50-00008 FOR GENERAL NOTES, SYMBOLS AND LEGEND, AND GENERAL SLOPE REQUIREMENTS.
2. CONTENTS OF THIS DOCUMENT ARE DANGEROUS WASTE PERMIT AFFECTING.
3. THE PRESSURE BOUNDARY FOR ALL COMPONENTS ON THIS DRAWING IS QUALITY LEVEL CM AND SEISMIC CATEGORY SC-IV, UNLESS OTHERWISE NOTED.
4. ALL LINES SHOWN ON THIS DRAWING SHALL BE FREE DRAINING UNLESS OTHERWISE NOTED.
5. TANK OVERFLOW LINE IS NOT SUPPORTED BY TANK.
6. SETPOINT AND PHYSICAL LOCATION OF PSV MAINTAINS MELTER LID BELOW 14.5 PSIG.
7. LOCATE LMP-WS-20191-S11C-011 1/2 BRANCH LESS THAN 6 FEET FROM HEAT EXCHANGER OUTLET N04. PLACE CENTERLINE OF PSV NO MORE THAN 2.5 FT ABOVE 3 FT ELEVATION FLOOR.
8. PROVIDE REMOVABLE PIPING SPOOL FOR STARTUP STRAINER. STRAINER WILL BE REMOVED PRIOR TO STARTUP.
9. THIS DRAWING IS CONVERTED FROM A SINGLE SHEET DRAWING TO MULTI-SHEET DRAWINGS AND, IN PART, SUPERSEDES 24590-LAW-M6-LMP-00043 REV 6. THIS DRAWING INCLUDES INFORMATION FROM 24590-LAW-M6N-LMP-00044, -00071, -00075, -00005, AND 24590-LAW-M6N-20-00003, 24590-WTP-SDDR-ML-09-00035, AND 24590-WTP-SDDR-MS-10-00024.

HOLD/OPEN ITEMS:

NONE

REFERENCES:

1. 24590-LAW-3YD-LMP-00001, SYSTEM DESCRIPTION FOR THE SYSTEM LMP, LOW ACTIVITY WASTE MELTER.

Please note that source, special nuclear, and byproduct materials, as defined in the Atomic Energy Act of 1954 (AEA) are regulated at the U. S. Department of Energy (DOE) facilities exclusively by DOE acting pursuant to its AEA authority. DOE assets that pursuant to AEA, it has sole and exclusive responsibility and authority over all source, special nuclear, and byproduct materials at DOE-owned nuclear facilities. Information contained herein on radionuclides is provided for process description purposes only.

REV	DESCRIPTION	ORG	CHKD	RVWD	APVD	DATE
0	ISSUED FOR CONSTRUCTION, SEE NOTE 9	MP				08/30/10

Q — QUALITY DESIGNATOR

REVISION HISTORY

ISSUED BY RPP-WTP PDC — ISSUE STAMP

PROJECT No.	24590
SITE	HANFORD
AREA	200E
BUILDING No.	20

	BY	DATE
ORIGINATOR		8/18/10
CHECKER		8/19/10
APPROVER		8/30/10
REVIEWER		8/25/10

CONTENT APPLICABLE TO ALARA? [X] YES [ ] NO

ADR NO. 24590-LAW-ADR-M-02-026 REV: 3

ENS SCREENING REQUIRED? [X] YES [ ] NO ENS INITIAL IF YES

RIVER PROTECTION PROJECT
WASTE TREATMENT PLANT
2435 STEVENS CENTER PLACE
RICHLAND, WA 99354

CONTRACT No: DE-AC27-01RV14136

P&ID - LAW
LAW MELTER PROCESS SYSTEM
MELTER 2
MELTER LID
COOLING LOOP

SCALE: NONE

24590-LAW-M6-LMP-00043002

REV 0

FORM E_SDN.DGN 02/2009

SCREENING IS REQUIRED FOR DRAWING TYPES IDENTIFIED IN 24590-WTP-GPP-SREQ-002

"E" SIZE - 44x34 COMPUTER GENERATED - MANUAL DESIGN CHANGES NOT PERMITTED

WHEN REFERENCING DRAWING AND DIM NUMBERS IN DOCUMENTS, BE SURE TO INCLUDE DASHES BETWEEN ELEMENTS

8/18/2010 4:36:22 PM

PLOTTED BY: rewebb C:\Work\rewebb\dms0358\LAWMELMP0004-3002.dgn

R11270975

Plug	Description	Size	Bubbler	Description	Size
LMP-PLUG-00028	MELTER 1 LARGE PLUG	0' 9" DIA. x 2' 6" L	LMP-BBLR-00001	MELTER 1 BUBBLER • 1	1' 8" DIA. x 9' 9" L
LMP-PLUG-00029	MELTER 1 LARGE PLUG	0' 9" DIA. x 2' 6" L	LMP-BBLR-00002	MELTER 1 BUBBLER • 2	1' 8" DIA. x 9' 9" L
LMP-PLUG-00030	MELTER 1 LARGE PLUG	0' 9" DIA. x 2' 6" L	LMP-BBLR-00003	MELTER 1 BUBBLER • 3	1' 8" DIA. x 9' 9" L
LMP-PLUG-00031	MELTER 1 LARGE PLUG	0' 9" DIA. x 2' 6" L	LMP-BBLR-00004	MELTER 1 BUBBLER • 4	1' 8" DIA. x 9' 9" L
LMP-PLUG-00032	MELTER 1 LARGE PLUG	0' 9" DIA. x 2' 6" L	LMP-BBLR-00005	MELTER 1 BUBBLER • 5	1' 8" DIA. x 9' 9" L
LMP-PLUG-00033	MELTER 1 LARGE PLUG	0' 9" DIA. x 2' 6" L	LMP-BBLR-00006	MELTER 1 BUBBLER • 6	1' 8" DIA. x 9' 9" L
LMP-PLUG-00034	MELTER 1 LARGE PLUG	0' 9" DIA. x 2' 6" L	LMP-BBLR-00007	MELTER 1 BUBBLER • 7	1' 8" DIA. x 9' 9" L
LMP-PLUG-00035	MELTER 1 LARGE PLUG	0' 9" DIA. x 2' 6" L	LMP-BBLR-00008	MELTER 1 BUBBLER • 8	1' 8" DIA. x 9' 9" L
LMP-PLUG-00036	MELTER 1 LARGE PLUG	0' 9" DIA. x 2' 6" L	LMP-BBLR-00009	MELTER 1 BUBBLER • 9	1' 8" DIA. x 9' 9" L
LMP-PLUG-00037	MELTER 1 LARGE PLUG	0' 9" DIA. x 2' 6" L	LMP-BBLR-00010	MELTER 1 BUBBLER • 10	1' 8" DIA. x 9' 9" L
LMP-PLUG-00038	MELTER 1 LARGE PLUG	0' 9" DIA. x 2' 6" L	LMP-BBLR-00011	MELTER 1 BUBBLER • 11	1' 8" DIA. x 9' 9" L
LMP-PLUG-00039	MELTER 1 LARGE PLUG	0' 9" DIA. x 2' 6" L	LMP-BBLR-00012	MELTER 1 BUBBLER • 12	1' 8" DIA. x 9' 9" L
LMP-PLUG-00040	MELTER 1 LARGE PLUG	0' 9" DIA. x 2' 6" L	LMP-BBLR-00013	MELTER 1 BUBBLER • 13	1' 8" DIA. x 9' 9" L

LMP-MLTR-00001
LAW MELTER 1
15 MT/DAY
262" L x 367" W x 190" H

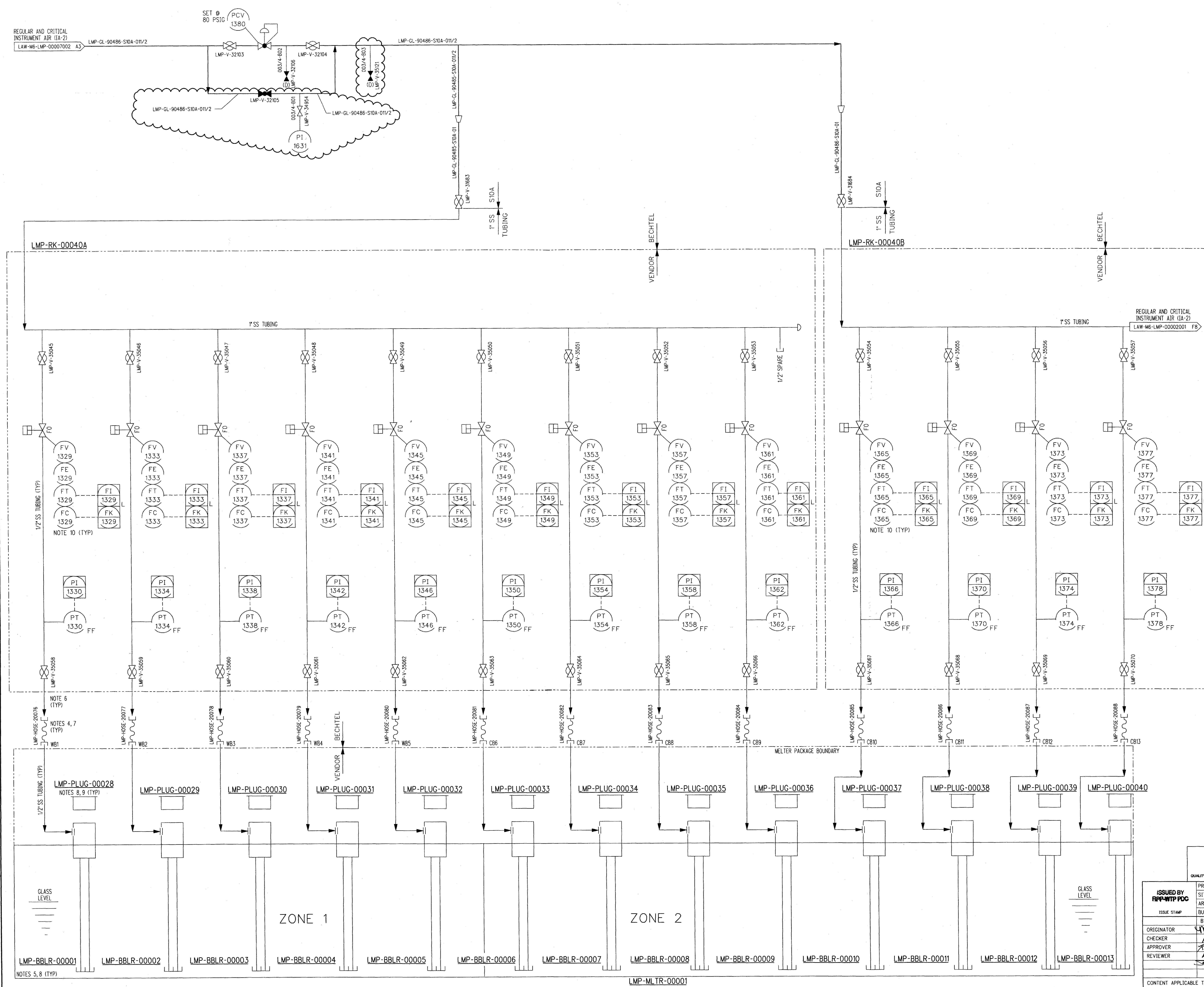

NOTES:

1. SEE DRAWINGS 24590-WTP-M6-50-00001 THROUGH 24590-WTP-M6-50-00008 FOR GENERAL NOTES, SYMBOLS AND LEGEND, AND GENERAL SLOPE REQUIREMENTS.
2. CONTENTS OF THIS DOCUMENT ARE DANGEROUS WASTE PERMIT AFFECTING.
3. THE PRESSURE BOUNDARY FOR ALL COMPONENTS ON THIS DRAWING IS QUALITY LEVEL CM AND SEISMIC CATEGORY SC-IV, UNLESS OTHERWISE NOTED. MELTER SHELL IS QUALITY LEVEL Q AND SEISMIC CATEGORY SC-III FOR CONFINEMENT OF OFFGAS.
4. FOR HOSE CONNECTION LAYOUT, SEE DRAWING 24590-LAW-M61-P23T-00103.
5. BUBBLER ASSEMBLY ALSO SERVES AS THERMOCOUPLE FOR MELTER GLASS POOL AND PLENUM TEMPERATURE. SEE DRAWING 24590-LAW-M6-LMP-00035, FOR ASSOCIATED THERMOCOUPLE ASSEMBLY.
6. FOR INSTRUMENT RACK CONNECTION POINTS, SEE DRAWING 24590-LAW-J9-LMP-00003 AND 24590-LAW-J9-LMP-00005.
7. REMOVABLE FLEXIBLE CONNECTIONS SHOULD BE ROUTED AND SUPPORTED TO AVOID LOW POINTS/DEAD LEGS.
8. THIS IS A MELTER PLUG AND BUBBLER SYMBOL.
9. PLUGS ARE ALTERNATE INSERTS FOR MELTER PORTS.
10. FLOW CONTROL IS INTEGRAL TO THE VALVE. ACTUAL SETPOINT PROVIDED FROM ICN.
11. THIS DRAWING SUPERSEDES 24590-LAW-M6-LMP-00001, REV 3. THIS DRAWING INCLUDES INFORMATION FROM 24590-LAW-M6N-LMP-00049 AND 24590-LAW-M6PN-LMP-00001.

HOLD/OPEN ITEMS:

NONE

REFERENCES:

1. 24590-LAW-3YD-LMP-00001, SYSTEM DESCRIPTION FOR THE SYSTEM LMP, LOW ACTIVITY WASTE MELTER.

LIMITED RIGHTS LEGEND (APRIL 2001)

THIS TECHNICAL DATA CONTAINS PROPRIETARY DATA FURNISHED UNDER CONTRACT No. DE-AC27-96RL13308 WITH THE U.S. DEPARTMENT OF ENERGY WHICH MAY BE DUPLICATED AND USED BY THE GOVERNMENT WITH THE EXPRESS LIMITATIONS THAT THE PROPRIETARY DATA MAY NOT BE DISCLOSED OUTSIDE OF THE GOVERNMENT WITHOUT PRIOR PERMISSION OF THE CONTRACTOR, EXCEPT THAT FURTHER DISCLOSURE OR USE MAY BE MADE SOLELY FOR THE FOLLOWING PURPOSES:

(a) THIS PROPRIETARY DATA MAY BE DISCLOSED FOR EVALUATION PURPOSES UNDER RESTRICTION THAT THE PROPRIETARY DATA BE RETAINED IN CONFIDENCE AND NOT BE FURTHER DISCLOSED;

(b) THIS PROPRIETARY DATA MAY BE DISCLOSED TO OTHER CONTRACTORS OR SUBCONTRACTORS PARTICIPATING IN THE GOVERNMENT FOLLOW-ON PILOT MELTER PROGRAM AT THE COLUMBIA SITE IN COLUMBIA, MARYLAND, FOR THE DESIGN, CONSTRUCTION, AND OPERATION OF THE WASTE TREATMENT AND IMMOBILIZATION PLANT (WTP), OR FOR THE TREATMENT OF HANFORD TANK WASTE, FOR INFORMATION OR USE IN CONNECTION WITH THE WORK PERFORMED UNDER THEIR CONTRACTS OR SUBCONTRACTS AND UNDER THE RESTRICTION THAT THE PROPRIETARY DATA BE RETAINED IN CONFIDENCE AND NOT BE FURTHER DISCLOSED;

(c) THIS PROPRIETARY DATA MAY BE USED BY THE GOVERNMENT OR OTHERS ON ITS BEHALF FOR EMERGENCY REPAIR OR OVERHAUL WORK UNDER THE RESTRICTIONS THAT THE PROPRIETARY DATA BE RETAINED IN CONFIDENCE AND NOT BE FURTHER DISCLOSED; OR

(d) DOE MAY MAKE THIS PROPRIETARY DATA AVAILABLE TO GOVERNMENTAL DEPARTMENTS AND AGENCIES IN A MANNER THAT PROVIDES FOR THE PROTECTION OF PROPRIETARY DATA TO ENABLE DOE, OR ANY CONTRACTOR ACTING ON ITS BEHALF, TO OBTAIN NECESSARY PERMITS AND LICENSES.

(e) PROPRIETARY DATA SHALL BE USED AT THE PILOT MELTER AT THE COLUMBIA SITE IN COLUMBIA, MARYLAND, FOR THE DESIGN, CONSTRUCTION, AND OPERATION OF THE WASTE TREATMENT AND IMMOBILIZATION PLANT (WTP), OR FOR THE TREATMENT OF HANFORD TANK WASTE.

"PROPRIETARY DATA" SHALL MEAN TECHNICAL DATA WHICH EMBODY TRADE SECRETS DEVELOPED AT PRIVATE EXPENSE, SUCH AS DESIGN PROCEDURES OR TECHNIQUES, CHEMICAL COMPOSITION OF MATERIALS, OR MANUFACTURING METHODS, PROCESSES, OR TREATMENTS, INCLUDING MINOR MODIFICATIONS THEREOF, PROVIDED THAT SUCH DATA: (i) ARE NOT GENERALLY KNOWN OR AVAILABLE FROM OTHER SOURCES WITHOUT OBLIGATION CONCERNING THEIR CONFIDENTIALITY; (ii) HAVE NOT BEEN MADE AVAILABLE BY THE OWNER TO OTHERS WITHOUT OBLIGATION CONCERNING THEIR CONFIDENTIALITY; AND (iii) ARE NOT ALREADY AVAILABLE TO THE GOVERNMENT WITHOUT OBLIGATION CONCERNING THEIR CONFIDENTIALITY.

THIS LEGEND SHALL BE MARKED ON ANY REPRODUCTION OF THIS DATA IN WHOLE OR IN PART, AND SUPERCEDES ANY EARLIER LEGEND. EACH PAGE CONTAINING DATA ASSERTED TO BE PROPRIETARY DATA SHALL BE IDENTIFIED AS CONTAINING "PROPRIETARY DATA," AND THE COVER SHEET OF EACH DOCUMENT CONTAINING PROPRIETARY DATA SHALL BE MARKED WITH THE LEGEND SET FORTH ABOVE.

- - END OF LEGEND - -

DRAWING INDEX

DWG NO	TITLE
24590-LAW-M6-LMP-00001001	LMP SYSTEM MELTER 1 AGITATION LMP-RK-00040A/B

Please note that source, special nuclear, and byproduct materials, as defined in the Atomic Energy Act of 1954 (AEA) are regulated at the U. S. Department of Energy (DOE) facilities exclusively by DOE acting pursuant to its AEA authority. DOE asserts that pursuant to AEA, it has sole and exclusive responsibility and authority to regulate source, special nuclear, and byproduct materials at DOE-owned nuclear facilities. Information contained herein on radionuclides is provided for process description purposes only.

Q
QUALITY DESIGNATOR

REVISION HISTORY

REV	DESCRIPTION	ORG	CHKD	RVWD	APVD	DATE
0	ISSUED FOR CONSTRUCTION, SEE NOTE 11	MP	APP	[illegible]	[illegible]	08/30/10

ISSUED BY RPP-WTP PDC
ISSUE STAMP

PROJECT No.	24590
SITE	HANFORD
AREA	200E
BUILDING No.	20

	BY	DATE
ORIGINATOR	[signature]	8/17/10
CHECKER	[signature]	8/17/10
APPROVER	[signature]	8/30/10
REVIEWER	[signature]	8/25/10

CONTENT APPLICABLE TO ALARA? [X] YES [ ] NO
ADR NO. 24590-LAW-ADR-M-02-026 REV: 3
E&NS SCREENING REQUIRED? [X] YES [ ] NO E&NS INITIAL IF YES DEK

RIVER PROTECTION PROJECT
WASTE TREATMENT PLANT
2435 STEVENS CENTER PLACE
RICHLAND, WA 99354

CONTRACT No: DE-AC27-01RV14136

P&ID - LAW
LAW MELTER PROCESS SYSTEM MELTER 1 AGITATION ZONE 1 & ZONE 2 LMP-RK-00040A/B

SCALE: NONE
24590-LAW-M6-LMP-00001001
REV 0

SCREENING IS REQUIRED FOR DRAWING TYPES IDENTIFIED IN 24590-WTP-GPP-SREG-002
'E' SIZE - 44x34
COMPUTER GENERATED - MANUAL DESIGN CHANGES NOT PERMITTED
R11270946
8/15/2010 9:36:15 AM
FORM E_SDN.DGN 02/2009
C:\Work\eidorn\dms03838\LAWM6LMP00001001.dgn
PLOTTED BY: eidorn

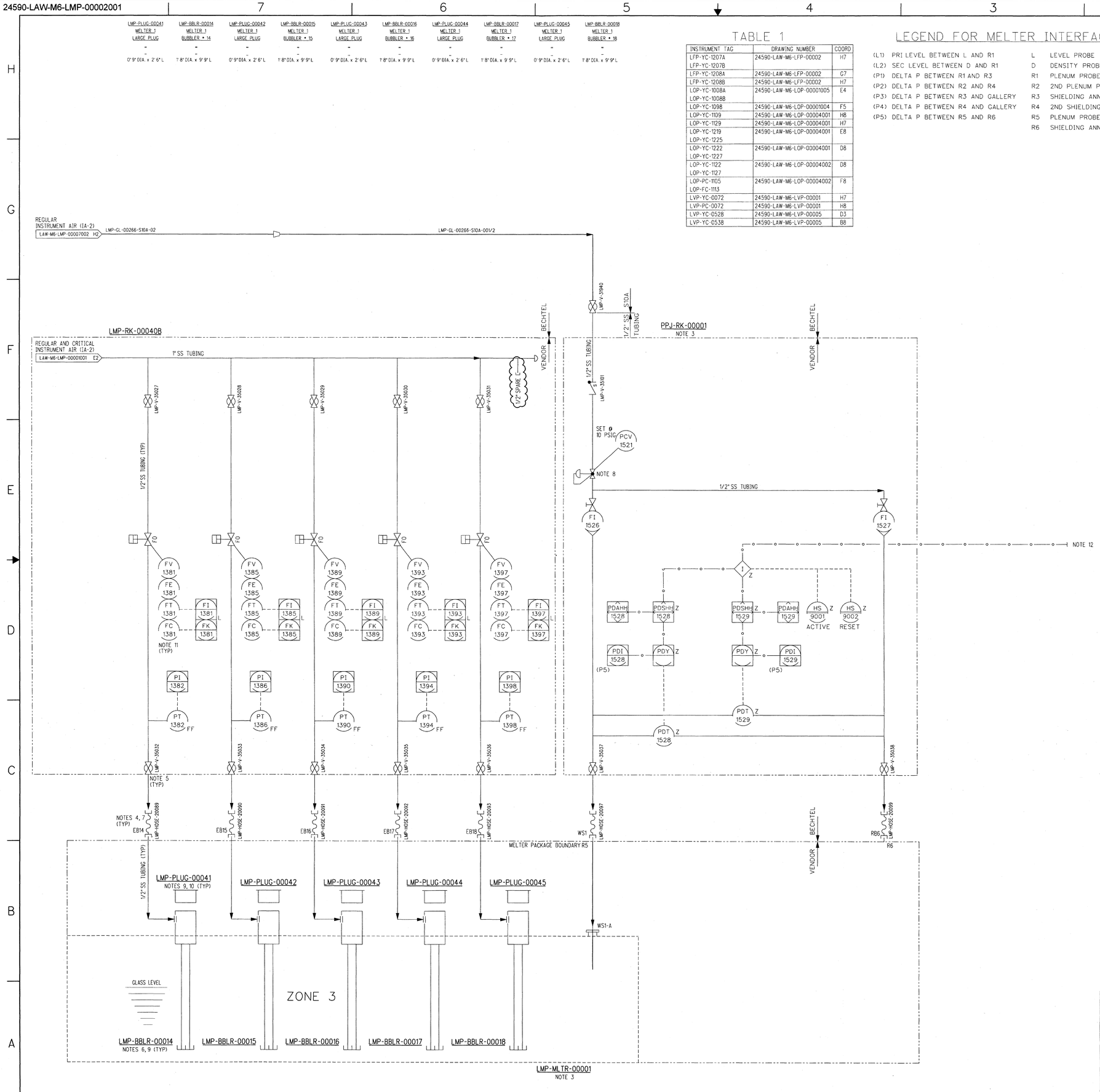

TABLE 1

INSTRUMENT TAG	DRAWING NUMBER	COORD
LFP-YC-1207A LFP-YC-1207B	24590-LAW-M6-LFP-00002	H7
LFP-YC-1208A	24590-LAW-M6-LFP-00002	G7
LFP-YC-1208B	24590-LAW-M6-LFP-00002	H7
LOP-YC-1008A LOP-YC-1008B	24590-LAW-M6-LOP-00001005	E4
LOP-YC-1098	24590-LAW-M6-LOP-00001004	F5
LOP-YC-1109	24590-LAW-M6-LOP-00004001	H8
LOP-YC-1129	24590-LAW-M6-LOP-00004001	H7
LOP-YC-1219 LOP-YC-1225	24590-LAW-M6-LOP-00004001	E8
LOP-YC-1222 LOP-YC-1227	24590-LAW-M6-LOP-00004001	D8
LOP-YC-1122 LOP-YC-1127	24590-LAW-M6-LOP-00004002	D8
LOP-PC-1105 LOP-FC-1113	24590-LAW-M6-LOP-00004002	F8
LVP-YC-0072	24590-LAW-M6-LVP-00001	H7
LVP-PC-0072	24590-LAW-M6-LVP-00001	H8
LVP-YC-0528	24590-LAW-M6-LVP-00005	D3
LVP-YC-0538	24590-LAW-M6-LVP-00005	B8

LEGEND FOR MELTER INTERFACE:

(L1) PRI LEVEL BETWEEN L AND R1
(L2) SEC LEVEL BETWEEN D AND R1
(P1) DELTA P BETWEEN R1 AND R3
(P2) DELTA P BETWEEN R2 AND R4
(P3) DELTA P BETWEEN R3 AND GALLERY
(P4) DELTA P BETWEEN R4 AND GALLERY
(P5) DELTA P BETWEEN R5 AND R6

L LEVEL PROBE
D DENSITY PROBE
R1 PLENUM PROBE
R2 2ND PLENUM PROBE
R3 SHIELDING ANNULUS PRESSURE
R4 2ND SHIELDING ANNULUS PRESSURE
R5 PLENUM PROBE (ITS)
R6 SHIELDING ANNULUS PRESSURE (ITS)

NOTES:

1. SEE DRAWINGS 24590-WTP-M6-50-00001 THROUGH 24590-WTP-M6-50-00008 FOR GENERAL NOTES, SYMBOLS AND LEGEND, AND GENERAL SLOPE REQUIREMENTS.
2. CONTENTS OF THIS DOCUMENT ARE DANGEROUS WASTE PERMIT AFFECTING.
3. THE PRESSURE BOUNDARY FOR ALL COMPONENTS ON THIS DRAWING IS QUALITY LEVEL CM AND SEISMIC CATEGORY SC-IV, UNLESS OTHERWISE NOTED. MELTER SHELL AND PPJ-RK-00001 ARE QUALITY LEVEL Q AND SEISMIC CATEGORY SC-III.
4. FOR HOSE CONNECTION LAYOUT, SEE DRAWING 24590-LAW-M61-P23T-00103 AND -00084.
5. FOR INSTRUMENT RACK CONNECTION POINTS, SEE DRAWING 24590-LAW-J9-LMP-00003 AND 24590-LAW-J9-LMP-00005.
6. BUBBLER ASSEMBLY ALSO SERVES AS THERMOWELL FOR MELTER GLASS POOL AND PLENUM TEMPERATURE. SEE DRAWING 24590-LAW-M6-LMP-00005001 FOR ASSOCIATED THERMOCOUPLE ASSEMBLY.
7. REMOVABLE FLEXIBLE CONNECTIONS SHOULD BE ROUTED AND SUPPORTED TO AVOID LOW POINTS/DEAD LEGS.
8. PRESSURE REGULATOR (PCV) IS PROVIDED WITH AN INTERNAL PRESSURE INDICATOR.
9. THIS IS A MELTER PLUG AND BUBBLER SYMBOL.
10. PLUGS ARE ALTERNATE INSERTS FOR MELTER PORTS.
11. FLOW CONTROL (FC) IS INTEGRAL TO THE VALVE. ACTUAL SETPOINT PROVIDED FROM ICN.
12. HIGH HIGH PLENUM PRESSURE LMP-PDSHH-1528 OR -1529 TRIP THE VALVES ASSOCIATED WITH CONTROLLERS LISTED IN TABLE 1. DETAILS ARE CONTAINED IN SAFETY LOGIC DIAGRAM 24590-LAW-J3-LMP-90001, AND LOGIC DIAGRAM 24590-LAW-J3-LMP-00003.
13. THIS DRAWING IS CONVERTED FROM A SINGLE SHEET TO MULTI-SHEET DRAWINGS AND, IN PART, SUPERSEDES 24590-LAW-M6-LMP-00002 REV 3. THIS DRAWING INCLUDES INFORMATION FROM 24590-LAW-M6N-LMP-00072.

HOLD/OPEN ITEMS:

NONE

REFERENCES:

1. 24590-LAW-3YD-LMP-00001, SYSTEM DESCRIPTION FOR THE SYSTEM LMP, LOW ACTIVITY WASTE MELTER.

Please note that source, special nuclear, and byproduct materials, as defined in the Atomic Energy Act of 1954 (AEA) are regulated at the U. S. Department of Energy (DOE) facilities exclusively by DOE acting pursuant to its AEA authority. DOE asserts that authority to regulate the chemical hazardous waste portion of mixed waste, special nuclear, and byproduct materials at DOE-owned nuclear facilities. Information contained herein on radionuclides is provided for process description purposes only.

PROPRIETARY INFORMATION
LIMITED RIGHTS LEGEND ON DRAWING
24590-LAW-M6-LMP-00001001 APPLIES

DRAWING INDEX

DWG NO	TITLE
24590-LAW-M6-LMP-00002001	LMP SYS MELTER 1 AGITATION & LEVEL DETECTION
24590-LAW-M6-LMP-00002002	LMP SYS MELTER 1 AGITATION & LEVEL DETECTION

Q QUALITY DESIGNATOR

REVISION HISTORY

REV	DESCRIPTION	ORG	CHKD	RVWD	APVD	DATE
0	ISSUED FOR CONSTRUCTION, SEE NOTE 13	MP	MP	HB	RK	08/30/10

ISSUED BY RPS WTP PDC
ISSUE STAMP

PROJECT No.	24590	
SITE	HANFORD	
AREA	200E	
BUILDING No.	20	
	BY	DATE
ORIGINATOR		8/17/10
CHECKER		8/17/2010
APPROVER		8/30/10
REVIEWER		8/25/10
		8/25/10

CONTENT APPLICABLE TO ALARA? [X] YES [ ] NO
ADR NO.: 24590-LAW-ADR-M-02-026 REV: 3
EMS SCREENING REQUIRED [X] YES [ ] NO | EMS INITIAL IF YES DCE

BECHTEL

RIVER PROTECTION PROJECT
WASTE TREATMENT PLANT
2435 STEVENS CENTER PLACE
RICHLAND, WA 99354

CONTRACT No: DE-AC27-01RV14136

P&ID - LAW
MELTER PROCESS SYSTEM
MELTER 1 AGITATION
ZONE 3 AND LEVEL DETECTION
LMP-RK-00040B AND PPJ-RK-00001

SCALE: NONE
24590-LAW-M6-LMP-00002001
REV 0

SCREENING IS REQUIRED FOR DRAWING TYPES IDENTIFIED IN 24590-WTP-GPP-SEG-002

E SIZE - 44x34
COMPUTER GENERATED - MANUAL DESIGN CHANGES NOT PERMITTED

R11270947

8/15/2010 9:16:40 AM

PLOTTED BY: eldorn C:\Work\eldorn\dms0383\LAW\LMP\00002001.dgn

FORM E_SDN.DGN 02/2009

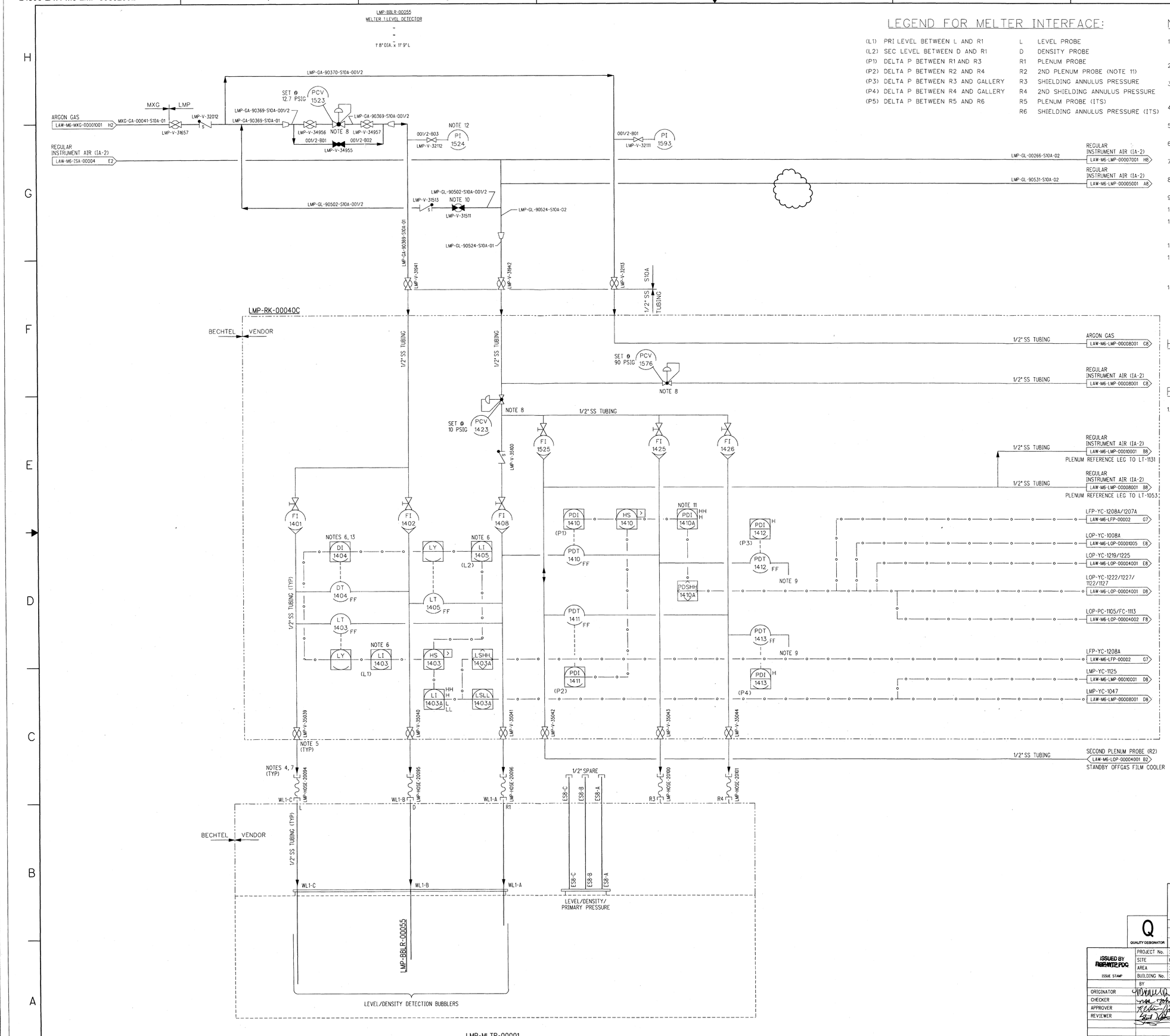

LEGEND FOR MELTER INTERFACE:

(L1)	PRI LEVEL BETWEEN L AND R1	L	LEVEL PROBE
(L2)	SEC LEVEL BETWEEN D AND R1	D	DENSITY PROBE
(P1)	DELTA P BETWEEN R1 AND R3	R1	PLENUM PROBE
(P2)	DELTA P BETWEEN R2 AND R4	R2	2ND PLENUM PROBE (NOTE 11)
(P3)	DELTA P BETWEEN R3 AND GALLERY	R3	SHIELDING ANNULUS PRESSURE
(P4)	DELTA P BETWEEN R4 AND GALLERY	R4	2ND SHIELDING ANNULUS PRESSURE
(P5)	DELTA P BETWEEN R5 AND R6	R5	PLENUM PROBE (ITS)
		R6	SHIELDING ANNULUS PRESSURE (ITS)

NOTES:

1. SEE DRAWINGS 24590-WTP-M6-50-00001 THROUGH 24590-WTP-M6-50-00008 FOR GENERAL NOTES, SYMBOLS AND LEGEND, AND GENERAL SLOPE REQUIREMENTS.
2. CONTENTS OF THIS DOCUMENT ARE DANGEROUS WASTE PERMIT AFFECTING.
3. THE PRESSURE BOUNDARY FOR ALL COMPONENTS ON THIS DRAWING IS QUALITY LEVEL CM AND SEISMIC CATEGORY SC-IV, UNLESS OTHERWISE NOTED.
4. FOR HOSE CONNECTION LAYOUT, SEE DRAWING 24590-LAW-M61-P23T-00103 AND -00084.
5. FOR INSTRUMENT RACK CONNECTION POINTS, SEE DRAWING 24590-LAW-J9-LMP-00003 AND 24590-LAW-J9-LMP-00005.
6. INDICATION VALUE IS CALCULATED AS PER FUNCTIONAL DIAGRAM 24590-LAW-J3-LMP-01013.
7. REMOVABLE FLEXIBLE CONNECTIONS SHOULD BE ROUTED AND SUPPORTED TO AVOID LOW POINTS/DEAD LEGS.
8. PRESSURE REGULATOR (PCV) IS PROVIDED WITH AN INTEGRAL PRESSURE INDICATOR.
9. OPEN TO MELTER GALLERY (REFERENCE LEG).
10. OPEN VALVE UPON FAILURE OF ARGON SUPPLY.
11. OUTPUT TO FILM COOLER AIR INJECTION CONTROL LOP-PC-1105 FOR VALVE LOP-PV-1105 AND SECOND PLENUM PROBE ARE AS SHOWN ON DRAWING 24590-LAW-M6-LOP-00004002.
12. PI TO BE VISIBLE FROM ASSOCIATED PRESSURE REGULATOR.
13. LMP-DI-1404 IS USED IN CALCULATION OF ALTERNATE LEVEL LMP-LI-1053 ON DRAWING 24590-LAW-M6-LMP-00008001 AND LMP-LI-1131 ON DRAWING 24590-LAW-M6-LMP-00010001. REFER TO FUNCTIONAL DIAGRAM 24590-LAW-J3-LMP-01022.
14. THIS DRAWING IS CONVERTED FROM A SINGLE SHEET TO MULTI-SHEET DRAWINGS AND, IN PART, SUPERSEDES 24590-LAW-M6-LMP-00002 REV 3. THIS DRAWING INCLUDES INFORMATION FROM 24590-LAW-M6N-LMP-00072 AND 24590-LAW-M6PN-LMP-00004.

HOLD/OPEN ITEMS:

NONE

REFERENCES:

1. 24590-LAW-3YD-LMP-00001, SYSTEM DESCRIPTION FOR THE SYSTEM LMP, LOW ACTIVITY WASTE MELTER.

Please note that source, special nuclear, and byproduct materials, as defined in the Atomic Energy Act of 1954 (AEA) are regulated at the U. S. Department of Energy (DOE) facilities exclusively by DOE acting pursuant to its AEA authority. DOE asserts that pursuant to AEA, it has sole and exclusive responsibility and authority to regulate source, special nuclear, and byproduct materials. Any reference to source, special nuclear, or byproduct materials or radionuclides is provided for process description purposes only.

PROPRIETARY INFORMATION
LIMITED RIGHTS LEGEND ON DRAWING
24590-LAW-M6-LMP-00001 APPLIES

Q
QUALITY DESIGNATOR

REV	DESCRIPTION	ORG	CHKD	RVWD	APVD	DATE
0	ISSUED FOR CONSTRUCTION, SEE NOTE 14	MP	MB	SHJ	RCL	08/30/10

REVISION HISTORY

ISSUED BY RPP-WTP PDC
ISSUE STAMP

PROJECT No.	24590	
SITE	HANFORD	
AREA	200E	
BUILDING No.	20	

	BY	DATE
ORIGINATOR	MP	8/17/10
CHECKER	MB	8/17/10
APPROVER	RCL	8/30/10
REVIEWER	SHJ	8/30/10
		8/30/10

CONTENT APPLICABLE TO ALARA? [X] YES [ ] NO
ADR NO. 24590-LAW-ADR-M-02-026 REV: 3
EMS SCREENING REQUIRED? [X] YES [ ] NO EMS INITIAL IF YES DEF

SCREENING IS REQUIRED FOR DRAWING TYPES IDENTIFIED IN 24590-WTP-GPP-SREG-002

RIVER PROTECTION PROJECT
WASTE TREATMENT PLANT
2435 STEVENS CENTER PLACE
RICHLAND, WA 99354

CONTRACT No: DE-AC27-01RV14136

P&ID - LAW
MELTER PROCESS SYSTEM
MELTER 1 AGITATION
ZONE 3 AND LEVEL DETECTION
LMP-RK-00040C

SCALE: NONE
24590-LAW-M6-LMP-00002002
REV 0

E-SIZE - 44x34
COMPUTER GENERATED - MANUAL DESIGN CHANGES NOT PERMITTED

R11270948

8/17/2010 12:24:55 PM

C:\Work\ees88b\dms0383\LAWM6LMP00002002.dgn

PLOTTED BY: ees88b

FORM E_SDN.DGN 02/2009

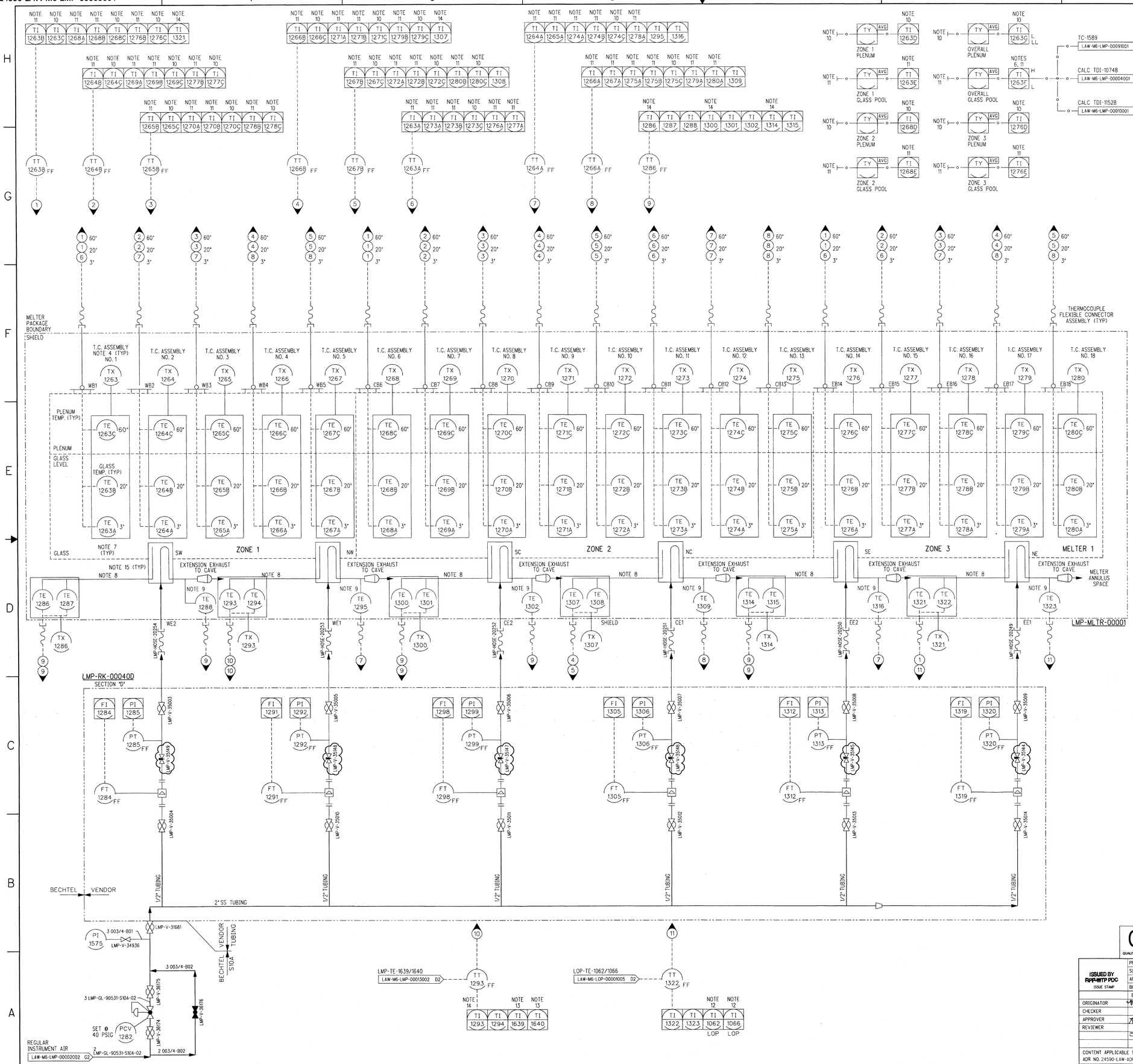

NOTES:

1. SEE DRAWINGS 24590-WTP-M6-50-00001 THROUGH 24590-WTP-M6-50-00008 FOR GENERAL NOTES, SYMBOLS AND LEGEND, AND GENERAL SLOPE REQUIREMENTS.
2. THE PRESSURE BOUNDARY FOR ALL COMPONENTS ON THIS DRAWING IS QUALITY LEVEL CM AND SEISMIC CATEGORY SC-IV, UNLESS OTHERWISE NOTED.
3. THERE ARE TWO GLASS TEMPERATURE MEASUREMENTS AT DIFFERENT DEPTHS. THERE IS ONE PLENUM TEMPERATURE ABOVE THE GLASS LEVEL.
4. ONE LEG OF EACH BUBBLER ASSEMBLY SERVES AS A THERMOWELL WHICH CONTAINS A THREE POINT TYPE "H" THERMOCOUPLE ASSEMBLY.
5. SEE DRAWINGS 24590-LAW-M61-P23T-00101 THROUGH -00104, AND -00089 FOR HOSE CONNECTIONS AND LAYOUT.
6. CALCULATED OVERALL AVERAGE GLASS TEMPERATURE OUTPUT TO JOULE HEATER POWER SUPPLY CONTROLS.
7. THERMOCOUPLE LOCATIONS RELATIVE TO REFRACTORY FLOOR.
8. TWO (2) POINT TYPE "S" THERMOCOUPLE ASSEMBLY.
9. SINGLE POINT TYPE "N" THERMOCOUPLE ASSEMBLY.
10. INDIVIDUAL PLENUM TEMPERATURE INDICATORS HAVE A HI ALARM ON DIFFERENTIAL FROM THE AVERAGE ZONE PLENUM TEMPERATURE. AVERAGE ZONE PLENUM TEMPERATURES AND AVERAGE OVERALL PLENUM TEMPERATURE ARE CALCULATED AND INDICATED. AVERAGE OVERALL PLENUM TEMPERATURE ALARMS ON LO AND LO LO. ICN INTERLOCKS NORMAL SHUTDOWN ON ALL FEEDING IN THE LFP SYSTEM ON LO LO AVERAGE OVERALL PLENUM TEMPERATURE.
11. INDIVIDUAL GLASS POOL TEMPERATURE INDICATORS HAVE HI ALARMS ON RATE OF CHANGE AND ON DIFFERENTIAL FROM THE AVERAGE GLASS POOL TEMPERATURE. AVERAGE ZONE GLASS POOL TEMPERATURES AND AVERAGE OVERALL GLASS POOL TEMPERATURE ARE CALCULATED AND INDICATED. AVERAGE OVERALL GLASS POOL TEMPERATURE ALARMS ON HI AND LO. ICN PERMISSIVE ON PRE-FEEDING IN THE LFP SYSTEM ON HI AND LO AVERAGE OVERALL GLASS POOL TEMPERATURE.
12. LOP-TI-1062 AND LOP-TI-1066 ALARM ON HI TEMPERATURE.
13. LMP-TI-1639 AND LMP-TI-1640 ALARM ON HI TEMPERATURE.
14. ELECTRODE EXTENSION HAVE A HI TEMPERATURE ALARM AT THIS INDICATION.
15. THIS BOX IS PART OF THE ELECTRODE EXTENSIONS ASSEMBLY.
16. THIS DRAWING SUPERSEDES 24590-LAW-M6-LMP-00005, REV 3. THIS DRAWING INCLUDES INFORMATION FROM 24590-LAW-M6N-LMP-00019, -00022, -00029, -00069, AND 24590-LAW-M6LN-LMP-00001.

HOLD/OPEN ITEMS:

NONE

REFERENCES:

1. 24590-LAW-3YD-LMP-00001, SYSTEM DESCRIPTION FOR THE SYSTEM LMP, LOW ACTIVITY WASTE MELTER.

KEY:

SW SOUTHWEST ELECTRODE
SC SOUTH CENTER ELECTRODE
SE SOUTHEAST ELECTRODE
NW NORTHWEST ELECTRODE
NC NORTH CENTER ELECTRODE
NE NORTHEAST ELECTRODE

Please note that source, special nuclear, and byproduct materials, as defined in the Atomic Energy Act of 1954 (AEA) are regulated at the U. S. Department of Energy (DOE) facilities exclusively by DOE acting through its agent, CH2M HILL Hanford Group, Inc. (CHG). AEA, it has sole and exclusive responsibility and authority to regulate source, special nuclear, and byproduct materials at DOE-owned nuclear facilities. Information contained herein on radionuclides is provided for process description purposes only.

PROPRIETARY INFORMATION
LIMITED RIGHTS LEGEND ON DRAWING
24590-LAW-M6-LMP-00001 APPLIES

DRAWING INDEX

DWG NO	TITLE
24590-LAW-M6-LMP-00005001	MELTER 1 ELECTRODE EXTENSION COOLING

REVISION HISTORY

REV	DESCRIPTION	ORG	CHKD	RVWD	APVD	DATE
0	ISSUED FOR CONSTRUCTION, SEE NOTE 16	MW	APP	HASSE		08/30/10

CM QUALITY DESIGNATOR

ISSUED BY RPP-WTP PDC ISSUE STAMP

PROJECT No.	24590	
SITE	HANFORD	
AREA	200E	
BUILDING No.	200A	
	BY	DATE
ORIGINATOR	MW	8/17/10
CHECKER	APPrinja	8/17/10
APPROVER		8/30/10
REVIEWER		8/25/10 8/25/10

CONTENT APPLICABLE TO ALARA? [X] YES [ ] NO
ADR NO. 24590-LAW-ADR-M-02-026 REV: 3
EMS SCREENING REQUIRED? [X] YES [ ] NO EMS INITIAL IF YES DEL

SCREENING IS REQUIRED FOR DRAWING TYPES IDENTIFIED IN 24590-WTP-GPP-SREG-002

'E' SIZE - 44x34
COMPUTER GENERATED - MANUAL DESIGN CHANGES NOT PERMITTED

BECHTEL
RIVER PROTECTION PROJECT
WASTE TREATMENT PLANT
2435 STEVENS CENTER PLACE
RICHLAND, WA 99354

CONTRACT No: DE-AC27-01RV14136

P&ID - LAW
LAW MELTER PROCESS SYSTEM
MELTER 1 ELECTRODE EXTENSION COOLING & GLASS/PLENUM TEMPERATURES

SCALE: NONE
24590-LAW-M6-LMP-00005001
REV 0

R11270951

8/13/2010 2:32:14 PM

PLOTTED BY: eewebb C:\Work\eewebb\cm0283b\LAWM6LMP0005001.dgn

FORM E_SDN.DGN 02/2009

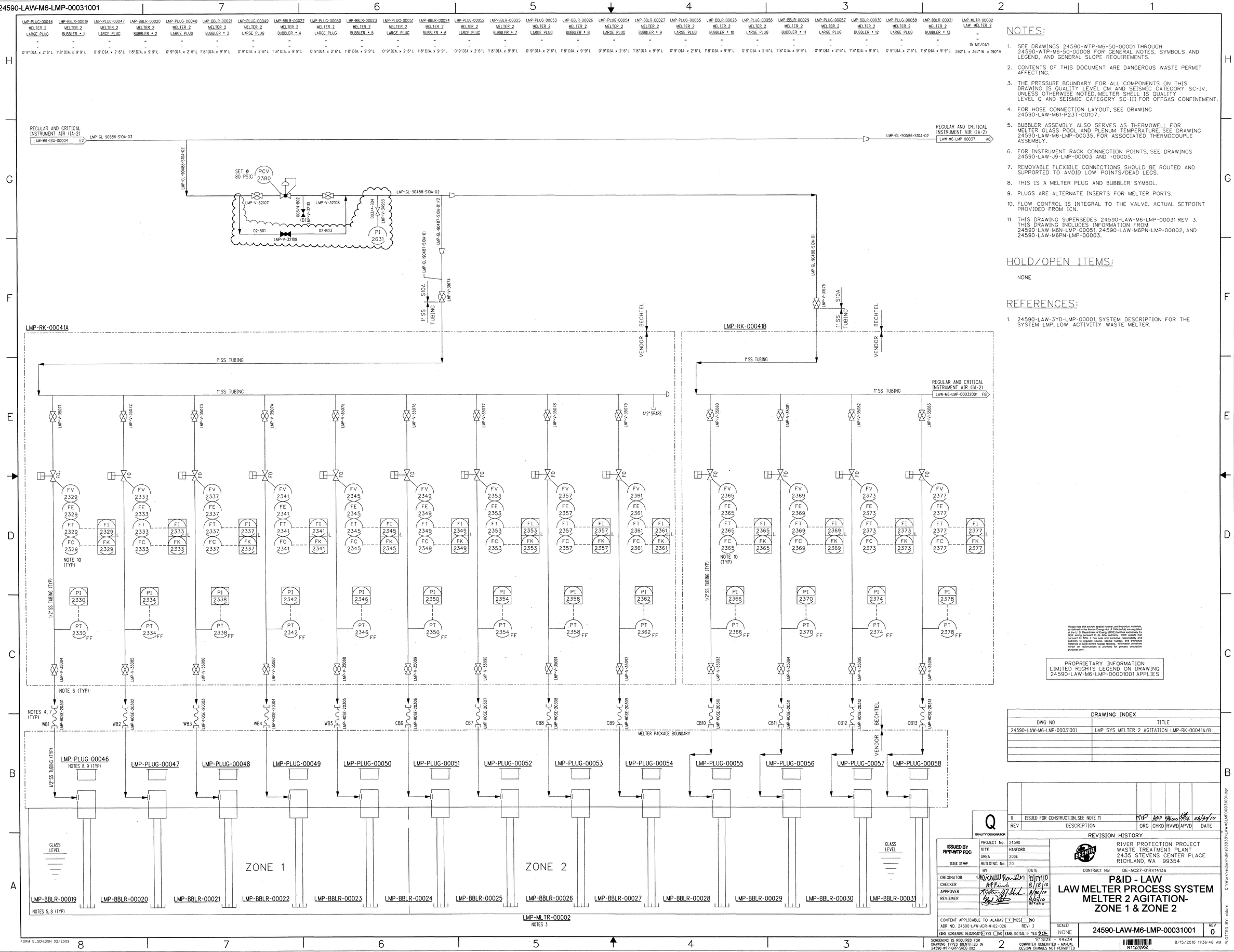

NOTES:

1. SEE DRAWINGS 24590-WTP-M6-50-00001 THROUGH 24590-WTP-M6-50-00008 FOR GENERAL NOTES, SYMBOLS AND LEGEND, AND GENERAL SLOPE REQUIREMENTS.
2. CONTENTS OF THIS DOCUMENT ARE DANGEROUS WASTE PERMIT AFFECTING.
3. THE PRESSURE BOUNDARY FOR ALL COMPONENTS ON THIS DRAWING IS QUALITY LEVEL CM AND SEISMIC CATEGORY SC-IV, UNLESS OTHERWISE NOTED. MELTER SHELL IS QUALITY LEVEL Q AND SEISMIC CATEGORY SC-III FOR OFFGAS CONFINEMENT.
4. FOR HOSE CONNECTION LAYOUT, SEE DRAWING 24590-LAW-M61-P231-00107.
5. BUBBLER ASSEMBLY ALSO SERVES AS THERMOWELL FOR MELTER GLASS POOL AND PLENUM TEMPERATURE. SEE DRAWING 24590-LAW-M6-LMP-00035, FOR ASSOCIATED THERMOCOUPLE ASSEMBLY.
6. FOR INSTRUMENT RACK CONNECTION POINTS, SEE DRAWINGS 24590-LAW-J9-LMP-00003 AND -00005.
7. REMOVABLE FLEXIBLE CONNECTIONS SHOULD BE ROUTED AND SUPPORTED TO AVOID LOW POINTS/DEAD LEGS.
8. THIS IS A MELTER PLUG AND BUBBLER SYMBOL.
9. PLUGS ARE ALTERNATE INSERTS FOR MELTER PORTS.
10. FLOW CONTROL IS INTEGRAL TO THE VALVE. ACTUAL SETPOINT PROVIDED FROM ICN.
11. THIS DRAWING SUPERSEDES 24590-LAW-M6-LMP-00031 REV 3. THIS DRAWING INCLUDES INFORMATION FROM 24590-LAW-M6N-LMP-00051, 24590-LAW-M6PN-LMP-00002, AND 24590-LAW-M6PN-LMP-00003.

HOLD/OPEN ITEMS:

NONE

REFERENCES:

1. 24590-LAW-3YD-LMP-00001, SYSTEM DESCRIPTION FOR THE SYSTEM LMP, LOW ACTIVITIY WASTE MELTER.

Please note that source, special nuclear, and byproduct materials, as defined in the Atomic Energy Act of 1954 (AEA) are regulated by the U.S. Nuclear Regulatory Commission (NRC) and not by DOE acting pursuant to its AEA authority. DOE asserts that pursuant to AEA, it has sole and exclusive responsibility and authority to regulate source, special nuclear, and byproduct materials at DOE-owned nuclear facilities. Information contained herein on radionuclides is provided for process description purposes only.

PROPRIETARY INFORMATION
LIMITED RIGHTS LEGEND ON DRAWING
24590-LAW-M6-LMP-00001001 APPLIES

DRAWING INDEX

DWG NO	TITLE
24590-LAW-M6-LMP-00031001	LMP SYS MELTER 2 AGITATION LMP-RK-00041A/B

REV	DESCRIPTION	ORG	CHKD	RVWD	APVD	DATE
0	ISSUED FOR CONSTRUCTION, SEE NOTE 11	MP	APP			08/30/10

REVISION HISTORY

Q
QUALITY DESIGNATOR

ISSUED BY RPP-WTP PDC

PROJECT No.	24590	
SITE	HANFORD	
AREA	200E	
BUILDING No.	20	
ISSUE STAMP	BY	DATE
ORIGINATOR		9/17/10
CHECKER		8/18/10
APPROVER		8/30/10
REVIEWER		8/30/10

CONTENT APPLICABLE TO ALARA? [X] YES [ ] NO
ADR NO. 24590-LAW-ADR-M-02-026 REV: 3
EMS SCREENING REQUIRED? [X] YES [ ] NO EMS INITIAL IF YES DEK

BECHTEL
RIVER PROTECTION PROJECT
WASTE TREATMENT PLANT
2435 STEVENS CENTER PLACE
RICHLAND, WA 99354

CONTRACT No: DE-AC27-01RV14136

P&ID - LAW
LAW MELTER PROCESS SYSTEM
MELTER 2 AGITATION-
ZONE 1 & ZONE 2

SCALE: NONE

24590-LAW-M6-LMP-00031001 REV 0

R11270962

8/15/2010 11:36:46 AM

SCREENING IS REQUIRED FOR DRAWING TYPES IDENTIFIED IN 24590-WTP-GPP-SREQ-002

"E" SIZE - 44x34
COMPUTER GENERATED - MANUAL DESIGN CHANGES NOT PERMITTED

FORM E_SDN.DGN 02/2009

PLOTTED BY: eldorn C:\Work\eldorn\pns0383\LAW\LMP\00031001.dgn

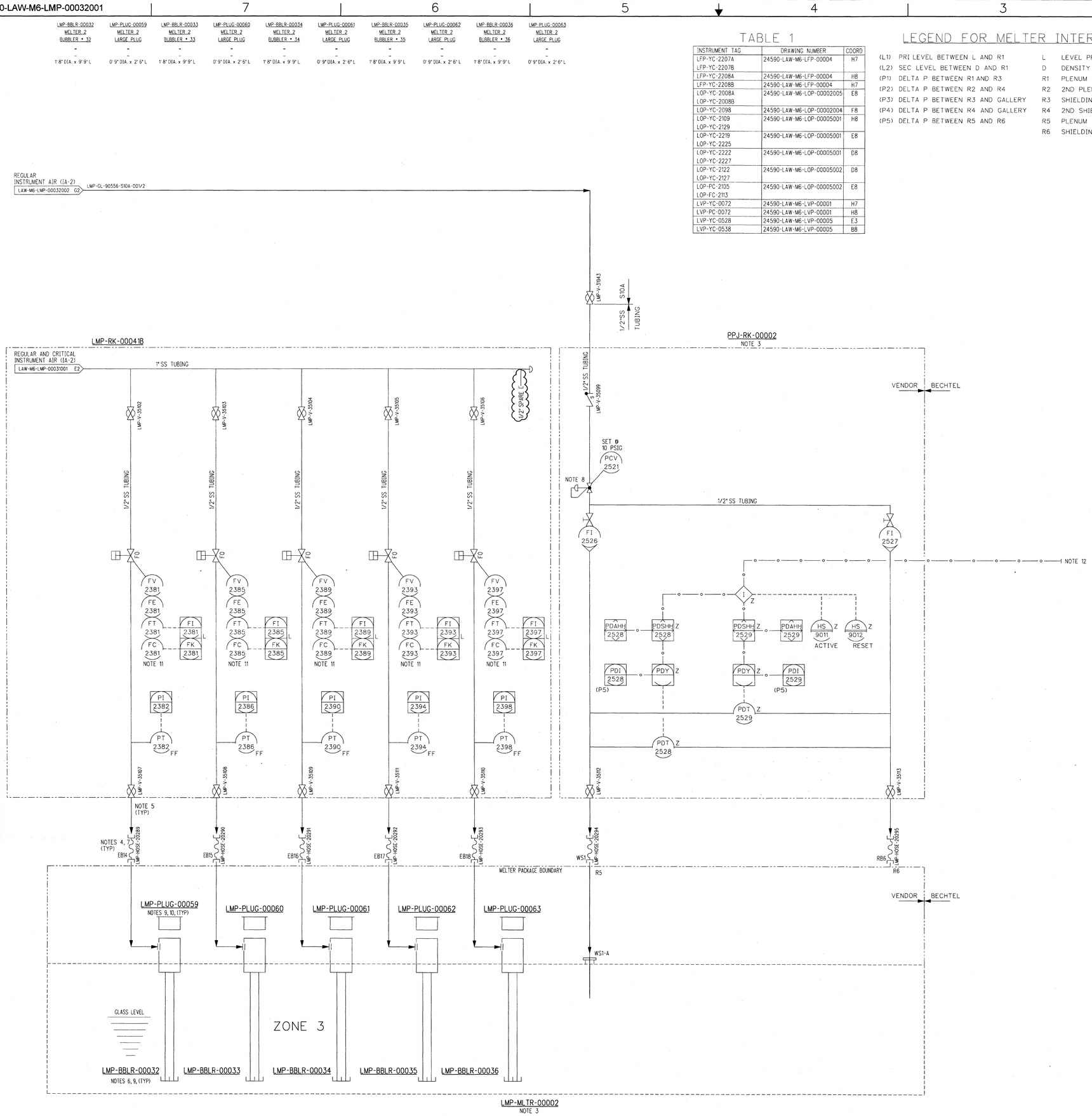

TABLE 1

INSTRUMENT TAG	DRAWING NUMBER	COORD
LFP-YC-2207A LFP-YC-2207B	24590-LAW-M6-LFP-00004	H7
LFP-YC-2208A	24590-LAW-M6-LFP-00004	H8
LFP-YC-2208B	24590-LAW-M6-LFP-00004	H7
LOP-YC-2008A LOP-YC-2008B	24590-LAW-M6-LOP-00002005	E8
LOP-YC-2098	24590-LAW-M6-LOP-00002004	F8
LOP-YC-2109 LOP-YC-2129	24590-LAW-M6-LOP-00005001	H8
LOP-YC-2219 LOP-YC-2225	24590-LAW-M6-LOP-00005001	E8
LOP-YC-2222 LOP-YC-2227	24590-LAW-M6-LOP-00005001	D8
LOP-YC-2122 LOP-YC-2127	24590-LAW-M6-LOP-00005002	D8
LOP-PC-2105 LOP-FC-2113	24590-LAW-M6-LOP-00005002	E8
LVP-YC-0072	24590-LAW-M6-LVP-00001	H7
LVP-PC-0072	24590-LAW-M6-LVP-00001	H8
LVP-YC-0528	24590-LAW-M6-LVP-00005	E3
LVP-YC-0538	24590-LAW-M6-LVP-00005	B8

LEGEND FOR MELTER INTERFACE:

(L1) PRI LEVEL BETWEEN L AND R1
(L2) SEC LEVEL BETWEEN D AND R1
(P1) DELTA P BETWEEN R1 AND R3
(P2) DELTA P BETWEEN R2 AND R4
(P3) DELTA P BETWEEN R3 AND GALLERY
(P4) DELTA P BETWEEN R4 AND GALLERY
(P5) DELTA P BETWEEN R5 AND R6

L LEVEL PROBE
D DENSITY PROBE
R1 PLENUM PROBE
R2 2ND PLENUM PROBE
R3 SHIELDING ANNULUS PRESSURE
R4 2ND SHIELDING ANNULUS PRESSURE
R5 PLENUM PROBE (ITS)
R6 SHIELDING ANNULUS PRESSURE (ITS)

NOTES:

1. SEE DRAWINGS 24590-WTP-M6-50-00001 THROUGH 24590-WTP-M6-50-00008 FOR GENERAL NOTES, SYMBOLS AND LEGEND, AND GENERAL SLOPE REQUIREMENTS.
2. CONTENTS OF THIS DOCUMENT ARE DANGEROUS WASTE PERMIT AFFECTING.
3. THE PRESSURE BOUNDARY FOR ALL COMPONENTS ON THIS DRAWING IS QUALITY LEVEL CM AND SEISMIC CATEGORY SC-IV, UNLESS OTHERWISE NOTED. MELTER SHELL AND PPJ-RK-00002 ARE QUALITY LEVEL Q AND SEISMIC CATEGORY SC-III.
4. FOR HOSE CONNECTION LAYOUT, SEE DRAWING 24590-LAW-M61-P23T-00107 AND -00084.
5. FOR INSTRUMENT RACK CONNECTION POINTS, SEE DRAWING 24590-LAW-J9-LMP-00003 AND 24590-LAW-J9-LMP-00005.
6. BUBBLER ASSEMBLY ALSO SERVES AS THERMOWELL FOR MELTER GLASS POOL AND PLENUM TEMPERATURE. SEE P&ID 24590-LAW-M6-LMP-00035001 FOR ASSOCIATED THERMOCOUPLE ASSEMBLY.
7. REMOVABLE FLEXIBLE CONNECTIONS SHOULD BE ROUTED AND SUPPORTED TO AVOID LOW POINTS/DEAD LEGS.
8. PRESSURE REGULATOR (PCV) IS PROVIDED WITH AN INTERNAL PRESSURE INDICATOR.
9. THIS IS A MELTER PLUG AND BUBBLER SYMBOL.
10. PLUGS ARE ALTERNATE INSERTS FOR MELTER PORTS.
11. FLOW CONTROL (FC) IS INTEGRAL TO THE VALVE. ACTUAL SETPOINT PROVIDED FROM ICN.
12. HIGH HIGH PLENUM PRESSURE LMP-PDSHH-2528 OR -2529 TRIP THE VALVES ASSOCIATED WITH CONTROLLERS LISTED IN TABLE 1. DETAILS ARE CONTAINED IN SAFETY LOGIC DIAGRAM 24590-LAW-J3-LMP-90002, AND LOGIC DIAGRAM 24590-LAW-J3-LMP-00004.
13. THIS DRAWING IS CONVERTED FROM A SINGLE SHEET TO MULTI-SHEET DRAWINGS AND, IN PART, SUPERSEDES 24590-LAW-M6-LMP-00032 REV 3. THIS DRAWING INCLUDES INFORMATION FROM 24590-LAW-M6N-LMP-00073.

HOLD/OPEN ITEMS:

NONE

REFERENCES:

1. 24590-LAW-3YD-LMP-00001, SYSTEM DESCRIPTION FOR THE SYSTEM LMP, LOW ACTIVITY WASTE MELTER.

Please note that source, special nuclear, and byproduct materials, as defined in the Atomic Energy Act of 1954 (AEA) are regulated at the U. S. Department of Energy (DOE) facilities exclusively by DOE acting pursuant to its AEA authority. DOE asserts that pursuant to AEA, it has sole and exclusive responsibility and authority regarding health and safety related to these materials at DOE-owned nuclear facilities. Information contained herein on radionuclides is provided for process description purposes only.

PROPRIETARY INFORMATION
LIMITED RIGHTS LEGEND ON DRAWING
24590-LAW-M6-LMP-00001001 APPLIES

DRAWING INDEX

DWG NO	TITLE
24590-LAW-M6-LMP-00032001	LMP SYS MELTER 2 AGITATION & LEVEL DETECTION
24590-LAW-M6-LMP-00032002	LMP SYS MELTER 2 AGITATION & LEVEL DETECTION

Q QUALITY DESIGNATOR

REV	DESCRIPTION	ORG	CHKD	RVWD	APVD	DATE
0	ISSUED FOR CONSTRUCTION, SEE NOTE 13	MP				08/30/10

REVISION HISTORY

ISSUED BY RPP-WTP PDC
ISSUE STAMP

PROJECT No.	24590
SITE	HANFORD
AREA	200E
BUILDING No.	20

	BY	DATE
ORIGINATOR		08/30/10
CHECKER		8/17/2010
APPROVER		8/30/10
REVIEWER		8/25/10

CONTENT APPLICABLE TO ALARA? [X] YES [ ] NO
ADR NO. 24590-LAW-ADR-M-02-026 REV: 3
EMS SCREENING REQUIRED? [X] YES [ ] NO EMS INITIAL IF YES

RIVER PROTECTION PROJECT
WASTE TREATMENT PLANT
2435 STEVENS CENTER PLACE
RICHLAND, WA 99354

CONTRACT No: DE-AC27-01RV14136

P&ID - LAW
MELTER PROCESS SYSTEM
MELTER 2 AGITATION
ZONE 3 & LEVEL DETECTION
LMP-RK-000041B & PPJ-RK-00002

SCALE: NONE
24590-LAW-M6-LMP-00032001
REV 0

SCREENING IS REQUIRED FOR DRAWING TYPES IDENTIFIED IN 24590-WTP-GPP-SREG-002

E SIZE - 44x34
COMPUTER GENERATED - MANUAL DESIGN CHANGES NOT PERMITTED

R11270963

8/15/2010 11:40:02 AM

C:\Work\eidorn\dms03838\LAW\M6\LMP00032001.dgn

PLOTTED BY: eidorn

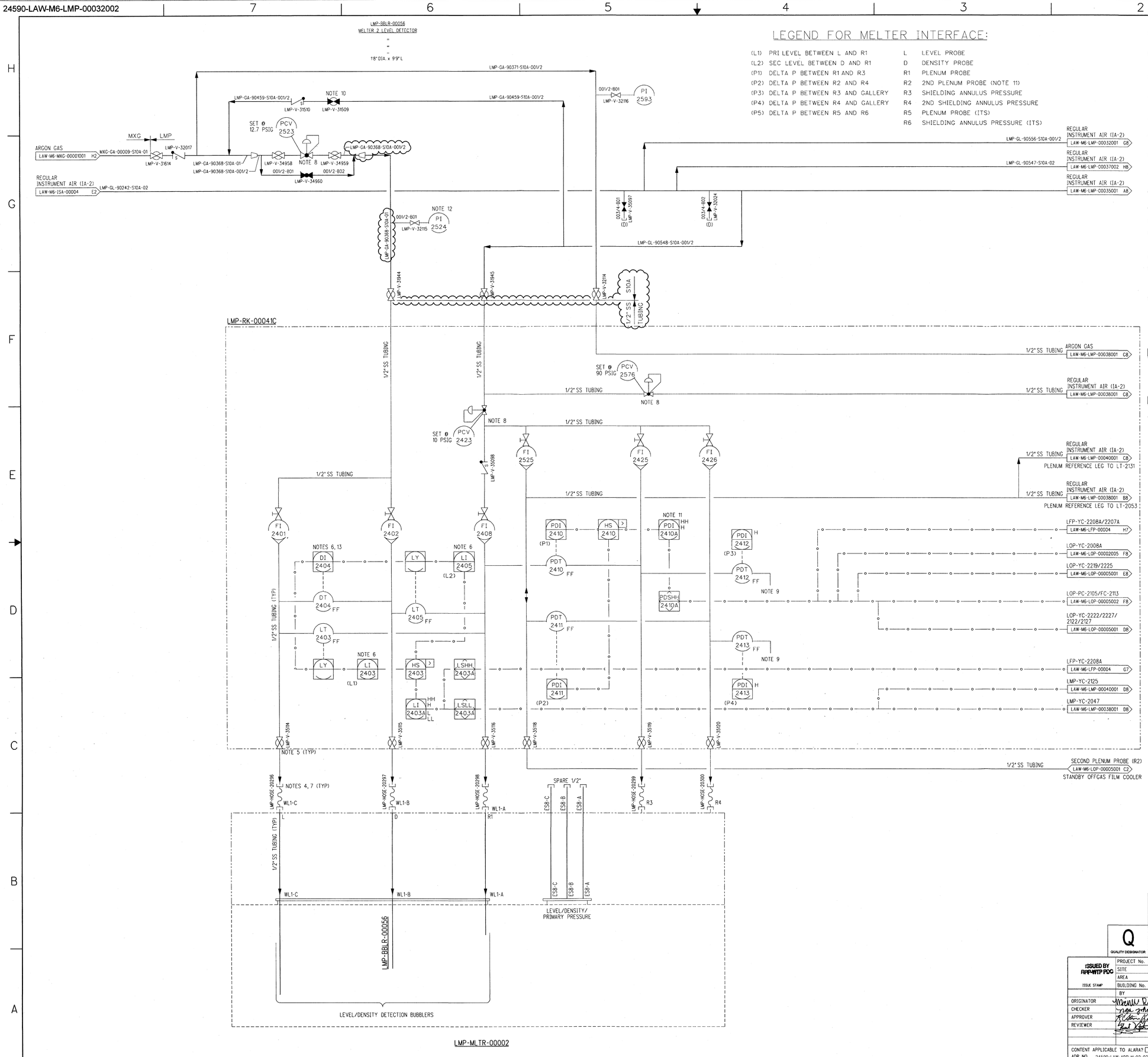

LEGEND FOR MELTER INTERFACE:

(L1)	PRI LEVEL BETWEEN L AND R1	L	LEVEL PROBE
(L2)	SEC LEVEL BETWEEN D AND R1	D	DENSITY PROBE
(P1)	DELTA P BETWEEN R1 AND R3	R1	PLENUM PROBE
(P2)	DELTA P BETWEEN R2 AND R4	R2	2ND PLENUM PROBE (NOTE 11)
(P3)	DELTA P BETWEEN R3 AND GALLERY	R3	SHIELDING ANNULUS PRESSURE
(P4)	DELTA P BETWEEN R4 AND GALLERY	R4	2ND SHIELDING ANNULUS PRESSURE
(P5)	DELTA P BETWEEN R5 AND R6	R5	PLENUM PROBE (ITS)
		R6	SHIELDING ANNULUS PRESSURE (ITS)

NOTES:

1. SEE DRAWINGS 24590-WTP-M6-50-00001 THROUGH 24590-WTP-M6-50-00008 FOR GENERAL NOTES, SYMBOLS AND LEGEND, AND GENERAL SLOPE REQUIREMENTS.
2. CONTENTS OF THIS DOCUMENT ARE DANGEROUS WASTE PERMIT AFFECTING.
3. THE PRESSURE BOUNDARY FOR ALL COMPONENTS ON THIS DRAWING IS QUALITY LEVEL CM AND SEISMIC CATEGORY SC-IV, UNLESS OTHERWISE NOTED.
4. FOR HOSE CONNECTION LAYOUT, SEE DRAWING 24590-LAW-M61-P23T-00107 AND -00084.
5. FOR INSTRUMENT RACK CONNECTION POINTS, SEE DRAWING 24590-LAW-J9-LMP-00003 AND 24590-LAW-J9-LMP-00005.
6. INDICATION VALUE IS CALCULATED AS PER FUNCTIONAL DIAGRAM 24590-LAW-J3-LMP-1015.
7. REMOVABLE FLEXIBLE CONNECTIONS SHOULD BE ROUTED AND SUPPORTED TO AVOID LOW POINTS/DEAD LEGS.
8. PRESSURE REGULATOR (PCV) IS PROVIDED WITH AN INTEGRAL PRESSURE INDICATOR.
9. OPEN TO MELTER GALLERY (REFERENCE LEG).
10. OPEN VALVE UPON FAILURE OF ARGON SUPPLY.
11. OUTPUT TO FILM COOLER AIR INJECTION CONTROL LOP-PC-1105 FOR VALVE LOP-PV-2105 AND SECOND PLENUM PROBE ARE AS SHOWN ON DRAWING 24590-LAW-M6-LOP-00005002.
12. PI TO BE VISIBLE FROM ASSOCIATED PRESSURE REGULATOR.
13. LMP-DI-2404 IS USED IN CALCULATION OF ALTERNATE LEVEL LMP-LI-2053 ON DRAWING 24590-LAW-M6-LMP-00038001 AND LMP-LI-2131 ON DRAWING 24590-LAW-M6-LMP-00040001. REFER TO FUNCTIONAL DIAGRAM 24590-LAW-J3-LMP-01022.
14. THIS DRAWING IS CONVERTED FROM A SINGLE SHEET TO MULTI-SHEET DRAWINGS AND, IN PART, SUPERSEDES 24590-LAW-M6-LMP-00032 REV. 3. THIS DRAWING INCLUDES INFORMATION FROM 24590-LAW-M6N-LMP-00073, AND 24590-LAW-M6PN-LMP-00005.

HOLD/OPEN ITEMS:

NONE

REFERENCES:

1. 24590-LAW-3YD-LMP-00001, SYSTEM DESCRIPTION FOR THE SYSTEM LMP, LOW ACTIVITY WASTE MELTER.

Please note that source, special nuclear, and byproduct materials, as defined in the Atomic Energy Act of 1954 (AEA) are regulated at the U. S. Department of Energy (DOE) facilities exclusively by DOE acting pursuant to its AEA authority. DOE asserts that pursuant to AEA, it has sole and exclusive responsibility and authority regarding regulation of source, special and byproduct materials at DOE-owned nuclear facilities. Information contained herein on radionuclides is provided for process description purposes only.

PROPRIETARY INFORMATION
LIMITED RIGHTS LEGEND ON DRAWING
24590-LAW-M6-LMP-00001 APPLIES

Q
QUALITY DESIGNATOR

REV	DESCRIPTION	ORG	CHKD	RVWD	APVD	DATE
0	ISSUED FOR CONSTRUCTION, SEE NOTE 14	MP	TJD	KOLSON	AHA	08/30/10

REVISION HISTORY

ISSUED BY RPP-WTP PDC

PROJECT No.	24590
SITE	HANFORD
AREA	200E
BUILDING No.	20

ISSUE STAMP

	BY	DATE
ORIGINATOR	Michelle Ramos	8/17/10
CHECKER	Tom Davey	8/17/2010
APPROVER	Robert Allen	8/20/10
REVIEWER	Bob Dyer	8/25/10
		8/26/10

CONTENT APPLICABLE TO ALARA? [X] YES [ ] NO
ADR NO. 24590-LAW-ADR-M-02-026 REV: 3
EMS SCREENING REQUIRED? [X] YES [ ] NO EMS INITIAL IF YES DEK

BECHTEL

RIVER PROTECTION PROJECT
WASTE TREATMENT PLANT
2435 STEVENS CENTER PLACE
RICHLAND, WA 99354

CONTRACT No: DE-AC27-01RV14136

P&ID - LAW
MELTER PROCESS SYSTEM
MELTER 2 AGITATION
ZONE 3 & LEVEL DETECTION
LMP-RK-00041C

SCALE: NONE

24590-LAW-M6-LMP-00032002

REV 0

SCREENING IS REQUIRED FOR DRAWING TYPES IDENTIFIED IN 24590-WTP-GPP-SREG-002

'E' SIZE - 44x34
COMPUTER GENERATED - MANUAL DESIGN CHANGES NOT PERMITTED

R11270964

8/17/2010 12:30:08 PM

PLOTTED BY: elwe80

C:\Work\renewed0\dmd\39359\LAW\MLMP\00032002.dgn

FORM E_SDN.DGN 02/2009

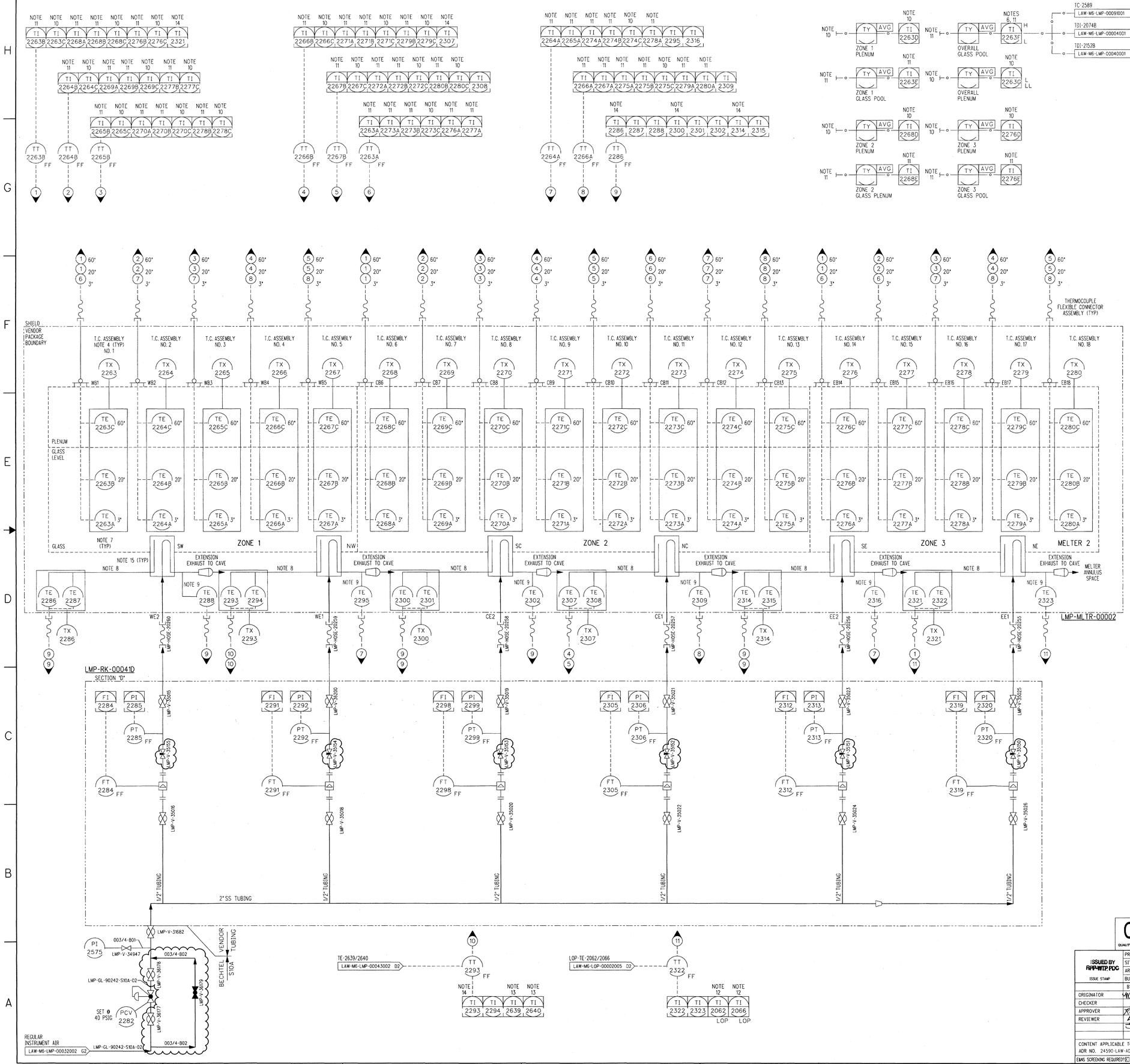

NOTES:

1. SEE DRAWINGS 24590-WTP-M6-50-00001 THROUGH 24590-WTP-M6-50-00008 FOR GENERAL NOTES, SYMBOLS AND LEGEND, AND GENERAL SLOPE REQUIREMENTS.
2. THE PRESSURE BOUNDARY FOR ALL COMPONENTS ON THIS DRAWING IS QUALITY LEVEL CM AND SEISMIC CATEGORY SC-IV, UNLESS OTHERWISE NOTED.
3. THERE ARE TWO GLASS TEMPERATURE MEASUREMENTS AT DIFFERENT DEPTHS. THERE IS ONE PLENUM TEMPERATURE ABOVE THE GLASS LEVEL.
4. FOR HOSE CONNECTIONS AND LAYOUT SEE DRAWINGS 24590-LAW-M61-P23T-00101 THROUGH -00104, AND -00089.
5. ONE LEG OF EACH BUBBLER ASSEMBLY SERVES AS A THERMOWELL WHICH CONTAINS A THREE POINT TYPE "H" THERMOCOUPLE ASSEMBLY
6. CALCULATED OVERALL AVERAGE GLASS TEMPERATURE OUTPUT TO JOULE HEATER POWER SUPPLY CONTROLS.
7. THERMOCOUPLE LOCATIONS RELATIVE TO REFRACTORY FLOOR.
8. TWO (2) POINT TYPE "S" THERMOCOUPLE ASSEMBLY.
9. SINGLE POINT TYPE "N" THERMOCOUPLE ASSEMBLY.
10. INDIVIDUAL PLENUM TEMPERATURE INDICATORS HAVE A HI ALARM ON DIFFERENTIAL FROM THE AVERAGE ZONE PLENUM TEMPERATURE. AVERAGE ZONE PLENUM TEMPERATURES AND AVERAGE OVERALL PLENUM TEMPERATURE ARE CALCULATED AND INDICATED. AVERAGE OVERALL PLENUM TEMPERATURE ALARMS ON LO AND LO LO. ICN INTERLOCKS NORMAL SHUTDOWN ON ALL FEEDING IN THE LFP SYSTEM ON LO LO AVERAGE OVERALL PLENUM TEMPERATURE.
11. INDIVIDUAL GLASS POOL TEMPERATURE INDICATORS HAVE HI ALARMS ON RATE OF CHANGE AND ON DIFFERENTIAL FROM THE AVERAGE GLASS POOL TEMPERATURE. AVERAGE ZONE GLASS POOL TEMPERATURES AND AVERAGE OVERALL GLASS POOL TEMPERATURE ARE CALCULATED AND INDICATED. AVERAGE OVERALL GLASS POOL TEMPERATURE ALARMS ON HI AND LO. ICN PERMISSIVE ON PRE-FEEDING IN THE LFP SYSTEM ON HI AND LO AVERAGE OVERALL GLASS POOL TEMPERATURE.
12. LOP-TI-2062 AND LOP-TI-2066 ALARM ON HI TEMPERATURE.
13. LMP-TI-2639 AND LMP-TI-2640 ALARM ON HI TEMPERATURE.
14. ELECTRODE EXTENSION HAVE A HI TEMPERATURE ALARM AT THIS INDICATION.
15. THIS BOX IS PART OF THE ELECTRODE EXTENSION ASSEMBLY.
16. THIS DRAWING SUPERSEDES 24590-LAW-M6-LMP-00035, REV 3. THIS DRAWING INCLUDES INFORMATION FROM 24590-LAW-M6N-LMP-00019, -00022, -00029, -00070, AND 24590-LAW-M6LN-LMP-00001.

HOLD/OPEN ITEMS:

NONE

REFERENCES:

1. 24590-LAW-3YD-LMP-00001, SYSTEM DESCRIPTION FOR THE SYSTEM LMP, LOW ACTIVITY WASTE MELTER.

KEY:

SW	SOUTHWEST ELECTRODE
SC	SOUTH CENTER ELECTRODE
SE	SOUTHEAST ELECTRODE
NW	NORTHWEST ELECTRODE
NC	NORTH CENTER ELECTRODE
NE	NORTHEAST ELECTRODE

Please note that source, special nuclear, and byproduct materials, as defined in the Atomic Energy Act of 1954 (AEA) are regulated at the U. S. Department of Energy (DOE) facilities exclusively by DOE acting pursuant to its AEA authority. DOE asserts that pursuant to AEA, it has sole and exclusive responsibility and authority to regulate source, special nuclear, and byproduct materials at DOE-owned nuclear facilities. Information contained herein or reproducibles is provided for process description purposes only.

PROPRIETARY INFORMATION
LIMITED RIGHTS LEGEND ON DRAWING
24590-LAW-M6-LMP-00001 APPLIES

DRAWING INDEX

DWG NO	TITLE
24590-LAW-M6-LMP-00035001	MELTER 2 ELECTRODE EXTENSION COOLING

REVISION HISTORY

REV	DESCRIPTION	ORG	CHKD	RVWD	APVD	DATE
0	ISSUED FOR CONSTRUCTION, SEE NOTE 16	MNP	APP	RVWD	APVD	8/30/10

CM QUALITY DESIGNATOR

ISSUED BY RPP-WTP PDC

	BY	DATE
PROJECT No. 24590		
SITE HANFORD		
AREA 200E		
BUILDING No. 20		
ORIGINATOR	MNP	8/17/10
CHECKER	APP	8/18/10
APPROVER	RVW	08/30/10
REVIEWER	APV	08/30/10

CONTENT APPLICABLE TO ALARA? [X] YES [ ] NO
ADR NO. 24590-LAW-ADR-M-02-026 REV: 3
EMS SCREENING REQUIRED? [X] YES [ ] NO EMS INITIAL IF YES DEK

BECHTEL

RIVER PROTECTION PROJECT
WASTE TREATMENT PLANT
2435 STEVENS CENTER PLACE
RICHLAND, WA 99354

CONTRACT No: DE-AC27-01RV14136

P&ID - LAW
LAW MELTER PROCESS SYSTEM
MELTER 2 ELECTRODE EXTENSION COOLING & GLASS/PLENUM TEMPERATURES

SCALE: NONE
24590-LAW-M6-LMP-00035001
REV 0

SCREENING IS REQUIRED FOR DRAWING TYPES IDENTIFIED IN 24590-WTP-GPP-SREG-002

"E" SIZE - 44x34
COMPUTER GENERATED - MANUAL DESIGN CHANGES NOT PERMITTED

R11270968

8/13/2010 2:34:42 PM

PLOTTED BY: erwesb

C:\Work\erwesb\dms03838\LAWM6LMP00035001.dgn

FORM E_SDN.DGN 02/2009