008182

DOE/RL 88-27

Copy No. 48

Vol 4 of 6

GROUT TREATMENT FACILITY DANGEROUS WASTE PERMIT APPLICATION

9011150781

United States
Department of Energy
Richland, Washington

Reference herein to any trademark, manufacturer, or otherwise, does not necessarily constitute or imply its endorsement, recommendation, or favoring by the United States Government or any agency thereof.

9 0 1 1 7 8 5 0 7 8 2

CONTENTS

VOLUME I

Foreword

Acronyms and Abbreviations

Part A

Part B

1.0	Introduction
2.0	Facility Description and General Provisions
3.0	Waste Characteristics
4.0	Process Information
5.0	Groundwater Monitoring
6.0	Procedures to Prevent Hazards
7.0	Contingency Plan
8.0	Personnel Training
9.0	Exposure Information Report
10.0	Waste Minimization Plan
11.0	Closure/Postclosure Requirements
12.0	Reporting and Recordkeeping
13.0	Other Relevant Laws
14.0	Certification

VOLUME II

Appendix 1A	Notice-of-Deficiency Response Table
Appendix 2A	Engineering Drawings
Appendix 2B	Hanford Site and Area Maps
Appendix 2C	Topographic Maps

9 0 L L 7 8 5 0 7 8 3

CONTENTS (cont)

Appendix 2D Legal Description of the Grout Treatment Facility Property Boundary

Appendix 2E Engineering Report--Road Evaluation for the Grout Treatment Facility

Appendix 2F Department of Ecology Certificate of Non-Designation for Centralia Fly Ash

Appendix 3A Double-Shell Tank Waste Compositional Modeling

Appendix 3B Laboratory Analysis Reports for Double-Shell Tank Waste Stored in Tanks 241-AN-106, 241-AW-101, and 241-AN-103

Appendix 3C Thermal Analysis in Support of Grout Temperature Limits and Heat-Loading Guidelines

Appendix 3D Test Results for Extraction Procedure Toxicity Testing

Appendix 3E Test Results for Toxicity Testing of Double-Shell Tank Grout

Appendix 3F Pilot-Scale Test Report--Evaluation of Grout Processing Parameters

VOLUME III

Appendix 3G Pilot-Scale Test Report--Correlate Lab to Plant

Appendix 3H Below-Liquid-Surface Supernatant Sampling Procedure for Underground Storage Tanks

Appendix 3I Laboratory Procedures and Grout 222-S/RCRA Laboratory Quality Assurance Plan

Appendix 3J Grout Campaign Waste Composition Verification

Appendix 4A Engineering Drawings

VOLUME IV

Appendix 4A Engineering Drawings

Appendix 4B Plant Operating Procedures

CONTENTS (cont)

VOLUME V

Appendix 4C Equipment List--Transportable Grout Equipment

Appendix 4D Instrument List--Transportable Grout Equipment

Appendix 4E Waste/Concrete Compatibility Test Program

Appendix 4F Vendor Information

Appendix 4G Grout Disposal Facilities Construction Quality Assurance Plan

Appendix 4H Flexible Membrane Liner/Waste Compatibility Test Results

Appendix 4I Vault Design

VOLUME VI

Appendix 4J Run-on/Run-off Control Design

Appendix 4K Asphalt Compatibility with 90-Degree Centigrade Double-Shell Slurry Feed

Appendix 5A Geologic Data

Appendix 5A-1 Particle Size Analyses and Calcium Carbonate Determinations

Appendix 5A-2 Chemical Analyses of Sediment Samples

Appendix 5A-3 Radionuclide Analyses of Sediment Samples

Appendix 5A-4 Sediment Moisture Data

Appendix 5A-5 Lithologic Sections for the Detection Monitoring Wells and Site Baseline Wells

Appendix 5B Hydrologic Data

Appendix 5B-1 Liquid Effluent Discharge Volumes of Nearby Disposal Facilities, January 1985 through December 1987

Appendix 5B-2 Results of Shallow Borehole and Laboratory Permeability Tests for the Unsaturated Zone

Appendix 5B-3 Hydrologic Test Data and Analyses

Appendix 5B-4 Water-Level Elevation Data

CONTENTS (cont)

Appendix 5B-5 Baseline Water-Chemistry Data Collected Between September 1985 and July 1987

Appendix 5C Groundwater Monitoring Program Information

Appendix 5C-1 Well Completion Information

Appendix 5C-2 Analyses Performed to Justify Well Spacing, Detectability of Chromium, and Detectability of Technetium-99

Appendix 5D Detection Monitoring Program

Appendix 5D-1 Sampling and Analysis Plan

Appendix 5D-2 Establishing Background

Appendix 5D-3 Statistical Procedures for Evaluating Changes in Groundwater Parameters

Appendix 5D-4 Quality Assurance Project Plan

Appendix 5E Groundwater Characterization Drawings

Appendix 7A Response Action Plan for Grout Treatment Facility

Appendix 8A Organizational Chart

Appendix 8B Job Titles, Positions, and Descriptions

Appendix 8C Sample Grout Facilities Employee Training Matrix

Appendix 8D Environmental and Hazardous Material Safety Training Requirements

Appendix 8E Sample Training Course Summaries

Appendix 9A Overview of the Hanford Site Grout Performance Assessment

Appendix 9B Long-Term Performance Assessment of Grouted Phosphate/Sulfate Waste from N Reactor Operations

Appendix 9C Land Use and Zoning Map

Appendix 11A Cover Design Engineering Report

Appendix 11B Closure Plan Drawing

Appendix 11C Clay Liners (Admixtures) in Semiarid Environments

CONTENTS (cont)

Appendix 13A Grout Treatment Facility Hazardous Air Pollutant Permit Application

Appendix 13B Grout Treatment Facility Approval of Construction

Appendix 13C Grout Treatment Facility Cultural Resources Review

ACRONYMS

AASHTO	American Association of State Highway and Transportation Officials
ACI	American Concrete Institute
AEA	Atomic Energy Act of 1954
AFFF	aqueous film-forming foam
ALARA	as low as reasonably achievable
ANSI	American National Standards Institute
API	American Petroleum Institute
ARM	area radiation monitor
ASME	American Society of Mechanical Engineers
ASTM	American Society for Testing and Materials
BED	building emergency director
CABF	Cochran's approximation to the Behrens-Fisher (t-test)
CAM	continuous air monitor
CASS	Computer Automated Surveillance System
CC	concentrated complexed
CERCLA	Comprehensive Environmental Response, Compensation, and Liability Act of 1980
CFR	Code of Federal Regulations
COE	U.S. Army Corps of Engineers
CRT	cathode ray tube
DMF	Dry Materials Facility, formerly called DMRHF
DMRHF	Dry Materials Receiving and Handling Facility
DOE	U.S. Department of Energy
DOE-RL	U.S. Department of Energy-Richland Operations Office
DOT	U.S. Department of Transportation
DSSF	double-shell slurry feed
DST	double-shell tank
DW	dangerous waste
EACT	Emergency Action Coordination Team (DOE-RL/EACT)
EC	equivalent concentration
E/C	Engineer/Constructor Contractor
ECC	Emergency Control Center
Ecology	Washington State Department of Ecology
EDO	emergency duty officer
EDTA	ethylenediaminetetraacetic acid
EHW	extremely hazardous waste
EMT	emergency medical technician
EP	extraction procedure
EPA	U.S. Environmental Protection Agency
EP/APC	emergency procedures and abnormal plant conditions
EPDM	ethylene-propylene diene monomer
FFTF	Fast Flux Test Facility
FML	flexible membrane liner

FTMS	federal test method standard
FY	fiscal year
GR-CO	general radio-chemical operator
GTF	Grout Treatment Facility
HDPE	high-density polyethylene
HEHF	Hanford Environmental Health Foundation
HELP	hydrologic evaluation of landfill performance (computer model)
HEPA	high-efficiency particulate air
HMRT	hazardous materials response team
HSWA	Hazardous and Solid Waste Amendments
HWVP	Hanford Waste Vitrification Plant
HVAC	heating, ventilating, and air conditioning
IARC	International Agency for Research on Cancer
IC	ion chromatography
ICBO	International Conference of Building Officials
ICP	inductively coupled plasma
JRPT	junior radiation protection technologist
LA	analytical laboratory procedure
LCT	liquid-collection tank
LDCRS	leachate detection/collection and removal system
LR	laboratory reference (material specification procedure)
MHSC	Medical and Health Services Contractor
MOU	Memorandum of Understanding
MSDS	material safety data sheet
NA	not applicable
NCAW	neutralized current acid waste
NCRW	neutralized cladding removal waste
NESHAP	National Emission Standards for Hazardous Air Pollutants
NFPA	National Fire Protection Association
NO	nuclear operator
NPDES	National Pollutant Discharge Elimination System
NPO	nuclear process operator
NRC	U.S. Nuclear Regulatory Commission
NRCR	nonradioactive compositionally representative
NSF	National Sanitation Foundation
OEC	Operations and Engineering Contractor
OHP	Operational Health Physics
OJT	on-the-job training
ORM	other regulated material
OT	operator trainee
PCA	Portland Cement Association
PFP	Plutonium Finishing Plant
pH	negative logarithm of the hydrogen-ion concentration

PIH	portable instrument house
PISCES	Plant Instrumentation Surveillance Calibration Evaluation System
PLC	programmable logic controller
PSPL	Puget Sound Power and Light
PSW	phosphate and sulfate waste
PUREX	Plutonium/Uranium Extraction (Plant)
QA	quality assurance
QC	quality control
RAP	response action plan
RCRA	Resource Conservation and Recovery Act of 1976
RCW	Revised Code of Washington
RDC	Research and Development Contractor
RN	registered nurse
ROD	record of decision
RPT	radiation protection technologist
SARA	Superfund Amendments and Reauthorization Act of 1986
SCBA	self-contained breathing apparatus
SRPT	senior radiation protection technologist
SST	single-shell tank
SWP	special work permit (clothing)
TGE	Transportable Grout Equipment
TGF	Transportable Grout Facility
TOB	top of basalt
TOC	total organic carbon
TOX	total organic halogen
TRU	transuranic (waste)
TSD	treatment, storage, and/or disposal
UHF	ultra-high frequency
VHF	very-high frequency
WAC	Washington Administrative Code
WDOE	Washington Department of Ecology
WESF	Waste Encapsulation and Storage Facility
WL	water level
WMA	Waste Management Area
WNP	Washington Nuclear Power (reactor name)
WRAP	Waste Receiving and Processing (Facility)

ABBREVIATIONS

ac	alternating current
Ci	curie
Ci/L	curies per liter
cm	centimeter
cm/s	centimeters per second
cm^3	cubic centimeters
°C	degrees centigrade
d	day
dia	diameter
e.g.	for example
et al.	and others
et seq.	and following
°F	degrees Fahrenheit
ft	foot
ft/d	feet per day
ft^3/s	cubic feet per second
g	standard acceleration of free fall (gravity)
gal	gallon
gal/min	gallons per minute
h	hour
hp	horsepower
i.e.	that is
in.	inch
km	kilometer
kVA	kilovoltampere
kW	kilowatt
L	liter
L/s	liters per second
lb	pound
lbf	pound force
lbf/in^2	pound force per square inch
lb/h	pounds per hour
lbm/ft^3	pound mass per cubic foot
lb/min	pounds per minute
m	meter
mi	mile
mi^2	square mile
Mgal	million gallons
mil	mils

min	minute
mL	milliliter
mo	month
Mrad	megarad
mR/h	milliroentgen per hour
mrem/h	millirem per hour
μm	micrometer
m.s.l.	mean sea level
p/b	parts per billion
pCi/L	picocuries per liter
r/min	revolutions per minute
s	second
$stdft^3/min$	standard cubic feet per minute
V	volt
wk	week
wt%	weight percent
yd	yard
yr	year

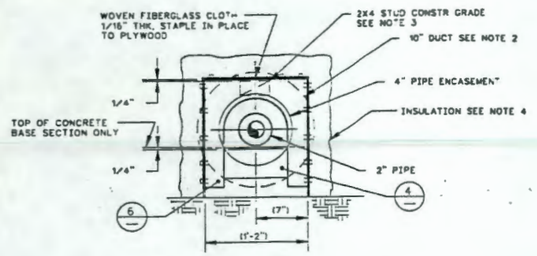

SECTION A
SCALE: NONE

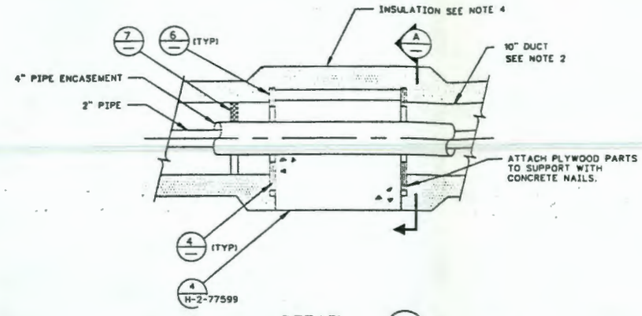

DETAIL 13
SCALE: NONE H-2-77598 & H-2-77611 SH2

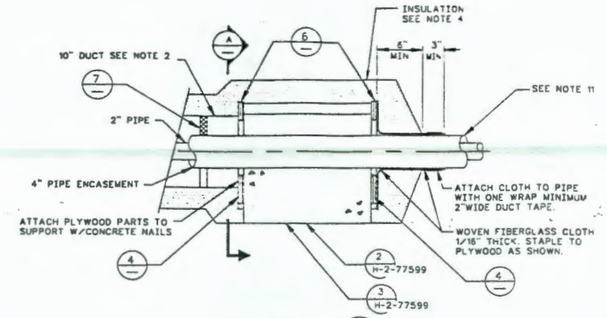

DETAIL 16
SCALE: NONE H-2-77598 & H-2-77611 SH2

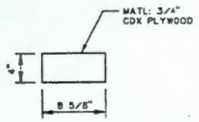

DETAIL 4
SCALE:NONE

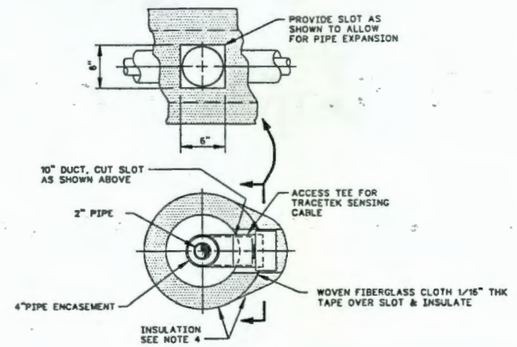

DETAIL 14
SCALE: NONE H-2-77598 & H-2-77611 SH2

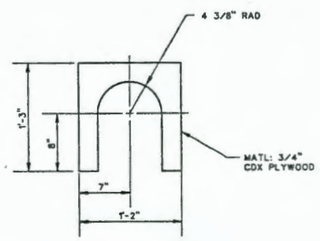

DETAIL 6
SCALE:NONE

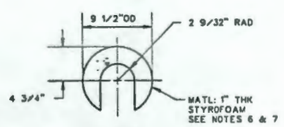

DETAIL 7
SCALE:NONE

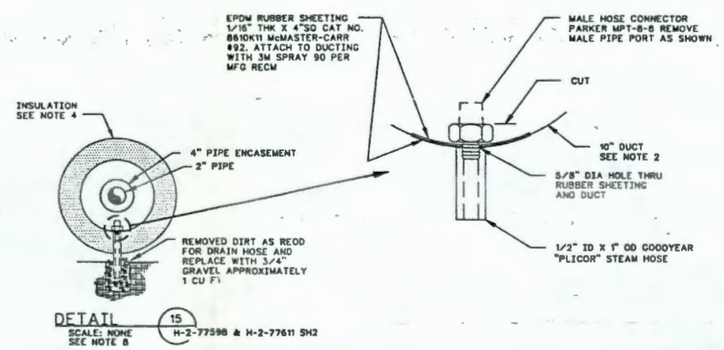

DETAIL 15
SCALE: NONE SEE NOTE 8 H-2-77598 & H-2-77611 SH2

NOTES

1. FOR GENERAL NOTES SEE DWG H-2-77596.
2. WIRE WOUND POLYESTER FILM CORE LINER CASCO FLEX AIRDUCT #CF-25 LINER ONLY C.A. SCHROEDER, INC STAPLE IN PLACE TO PLYWOOD.
3. NAIL WOOD PARTS TOGETHER IN PLACE WITH 8d GALVANIZED NAILS EXCEPT WHERE NOTED.
4. COVER ALL DUCTING, WOOD, AND FIBERGLASS CLOTH AS SHOWN WITH 3" MINIMUM OF POLYURETHANE.
5. IF FLEXIBLE DUCT BECOMES DAMAGED PRYOR TO SPRAYING POLYURETHANE, REPAIR TEARS WITH DUCT TAPE.
6. APPLY 3M SPRAY 90 ADHESIVE TO CARBON STEEL PIPE PER MFR RECOMMENDATION AND ALLOW TO DRY 3 OR 4 MINUTES BEFORE ATTACHING SPACERS.
7. SPACE AT 2'-0" CENTERS ON STRAIGHT PIPE AND AT 6" CENTERS ON PIPE BENDS.
8. SPACE DRAIN FITTINGS & HOSE AS SHOWN BETWEEN EACH SET OF SUPPORTS - APPROX 2'-0" FROM LOW END.
9. ALL PLYWOOD AND LUMBER SHALL BE WOLMANIZED (CCA) PRESSURE - TREATED WOOD MEETING AWPA STANDARD P-5 AND FEDERAL STANDARD TT-W-550. USE WILL BE .25 LBS/CUBIC FOOT OF WOOD IN ACCORDANCE WITH AWPA STD C-2.
10. POLYESTER FILM CORE LINER MUST BE PLACED AROUND PIPE BEFORE SUPPORTS ARE PERMANENTLY INSTALLED.
11. COAT DIRECT BURIED PIPE PER CONSTR SPEC B-714-C2 COATING SHALL EXTEND 1'-0" INSIDE EXPANSION VOID.

OFFICIAL RELEASE BY WHC
DATE APR 04 1989

EDT = 101089

IMPACT LEVEL 2

DRAWING TRACEABILITY LIST			
NUMBER	TITLE	NUMBER	TITLE
		H-2-77573	DRAWING LIST
		NEXT USED ON	REFERENCES

REVISIONS				
BY-DATE	BY-DATE	REV BY DATE	DESCRIPTION	REV
APPROVAL	KEH APPROVAL			
COMMENT REVIEW				

MICROFILMED

WHC APPROVAL — DATE

U.S. DEPARTMENT OF ENERGY
RICHLAND OPERATIONS OFFICE
KAISER ENGINEERS HANFORD COMPANY

PIPING EXPANSION VOID DETAILS

PROJECT TITLE: GROUT VAULT PAIR 218-E-16-102&103

PROJ B-714	WO ER1060	JOB 242300	
SCALE SHOWN	BLDG 218-E-16	INDEX 8511	
DRAWING NUMBER H-2-77607	SHEET 1	OF 1	REV 0

KEH/CAD 1 TPLT SCF

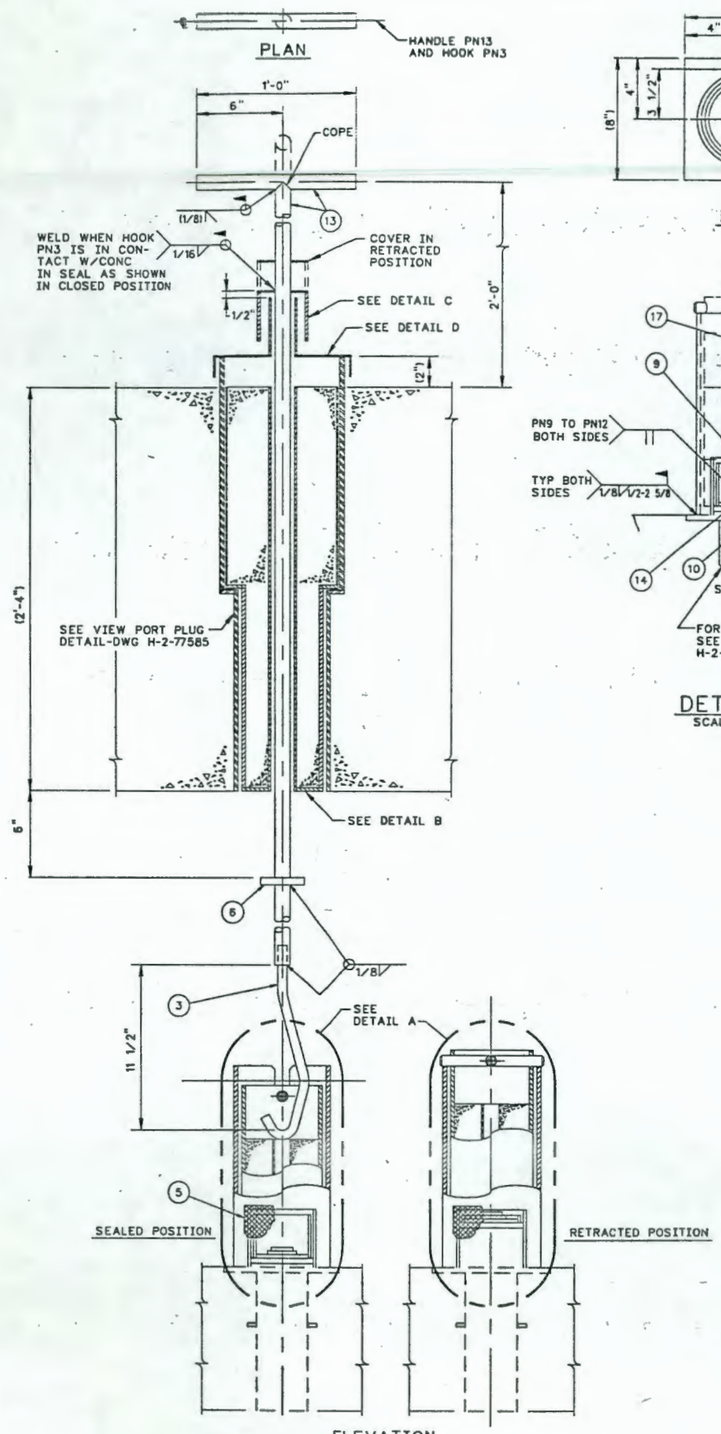

ELEVATION
1 ASSEMBLY
SCALE: 3"=1'-0"

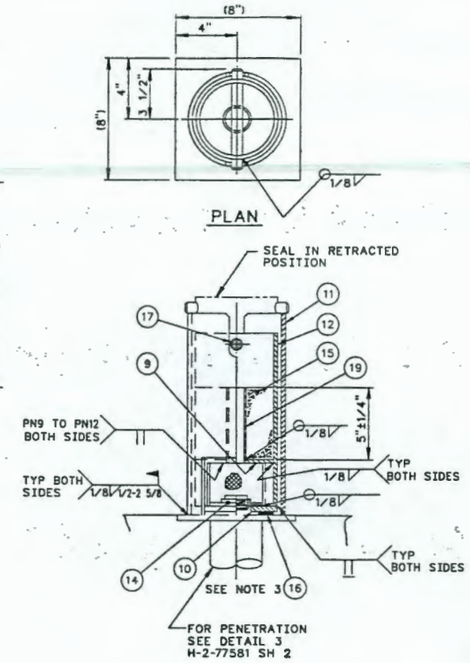

DETAIL A
SCALE: 3"=1'-0"

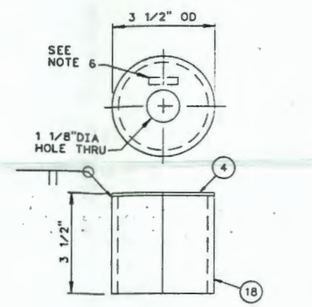

DETAIL C
SCALE: 6"=1'-0"

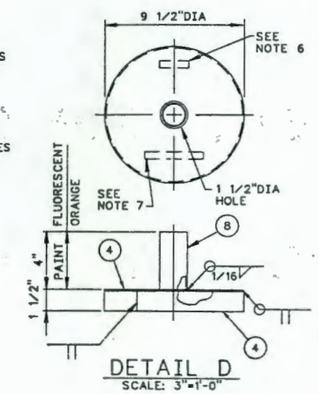

DETAIL D
SCALE: 3"=1'-0"

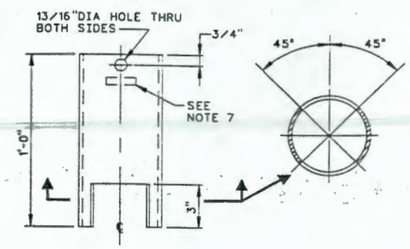

12 TUBE
SCALE: 3"=1'-0"

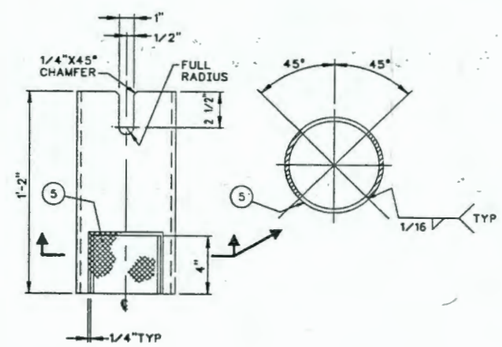

11 GUIDE
SCALE: 3"=1'-0"

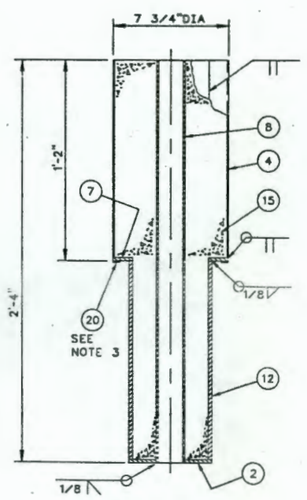

DETAIL B
SCALE: 3"=1'-0"

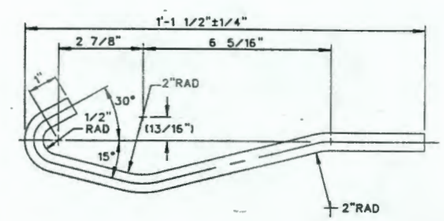

3 HOOK
SCALE: 6"=1'-0"

QTY	PN	DESCRIPTION	MATERIAL
X	1	ASSEMBLY	
1	2	PLATE, 1/4"THK X 5 9/16"OD X 2"ID	ASTM A36
1	3	HOOK, BAR, ROUND 5/8"	ASTM A108 GR 1020
AR	4	12 GAUGE SHEET (.1046)	ASTM A569
AR	5	WIRE CLOTH 6 X6 X.063 NO 9220T39 McMASTER-CARR CAT#92	GALVANIZED STEEL
1	6	PLATE 1/2"THK X 3"OD X 1 1/8"ID	ASTM A36
1	7	PLATE, 1/4"THK X 7 3/4"OD X 5"ID	ASTM A36
AR	8	PIPE 1 1/2" SCHED 80	ASTM A106 GR B
1	9	PLATE 1/4"THK X 5"DIA W/1 11/32"DIA HOLE ON ℄	ASTM A36
1	10	PLATE 3/8"THK X 5 9/16"OD X 2"ID	ASTM A36
1	11	GUIDE, PIPE, 6"SCHED 40	ASTM A53 TYPE S GR B
AR	12	PIPE, 5"SCHED 40	ASTM A53 TYPE S GR B
AR	13	PIPE, 3/4"SCHED 80	ASTM A106 GR B
1	14	CHECK VALVE, 2" 150# 3.51N H_2O CRACKING PRESS	CHECK ALL MFG CO 2"FIV-SS-T-1/8
AR	15	SHIELDING (APPROX WT 143 LBS)	CONCRETE-COMMERCIAL
1	16	GASKET 1/4"THK X 5"OD X 3"ID	NEOPRENE RUBBER 35-45 DUROMETER
1	17	ROD, 3/4"DIA X 7"LONG	ASTM A108 GR 1020
1	18	PIPE, 3"SCHED 40	ASTM A53 TYPE S GR B
1	19	PIPE, 1"SCHED 40	ASTM A106 TYPE S GR B
1	20	GASKET, 1/8"THK X 7 3/4"OD X 6 3/4"ID	NEOPRENE, GARLOCK #8312

GENERAL NOTES:

1. FABRICATION, MATERIALS & CLEANING SHALL BE IN ACCORDANCE WITH CONSTRUCTION SPEC B-714-C2
2. TOLERANCES UNLESS OTHERWISE NOTED SHALL BE FRACIONAL ±1/16" ANGULAR ±1/2°
3. BOND GASKET PN16 TO PLATE PN10, BOND GASKET PN20 TO PLATE PN7 WITH 3M FORMULA 1300 ADHESIVE.
4. BREAK ALL SHARP EDGES & CORNERS TO .010 MINIMUM.
5. ESTIMATED WEIGHT OF DRAIN SEAL, LESS GUIDE (PN11) 32LBS.
6. PAINT STENCILED MARKING USING 1/4" HIGH BLACK LETTERS ON YELLOW AS FOLLOWS: H-2-77608, REV 0
7. PAINT STENCILED MARKING, USING 1/2" HIGH LETTERS BLACK ON YELLOW AS FOLLOWS: ASSY#1-WT 105LBS SEAL PLUG WT 32LBS

OFFICIAL RELEASE BY WHC
DATE APR 04 1989

EDT = 101089

IMPACT LEVEL 2

NUMBER	TITLE	REFERENCES
H-2-77573	DRAWING LIST	

DRAWING TRACEABILITY LIST — NEXT USED ON

BY-DATE	BY-DATE	REV BY DATE	DESCRIPTION	REV
APPROVAL	KEH APPROVAL		REVISIONS	

MICROFILMED — COMMENT REVIEW

WHC APPROVAL — U.S. DEPARTMENT OF ENERGY, RICHLAND OPERATIONS OFFICE — KAISER ENGINEERS HANFORD COMPANY

PIPING DRAIN SEAL ASSEMBLY & DETAILS

PROJECT TITLE: GROUT VAULT PAIR 218-E-16-102&103

DRAWN BY	DJ KOLAR	3-31-88
DESIGNED BY	DJ KOLAR	3-31-88
CAD FILE	B077608A	
CAD SIZE	28-DEC-ACD2-9.13-NN	

PROJ. B-714 — WO ER1060 — JOB 242500
SCALE SHOWN — BLDG 218-E-16 — INDEX 0402
DRAWING NUMBER H-2-77608 — SHEET 1 — OF 1 — REV 0

KEHCAD

9011794

QTY	PN	DESCRIPTION	MATL/REF
X	1	ASSEMBLY	
2	2	SAFE-LINE WIRE ROPE CLIP	McMASTER-CARR CAT#92 PG#482 #3489T27
2	3	WIRE ROPE THIMBLE	McMASTER-CARR CAT#92 PG#482 #3868T42
1	4	PIPE 4" SCHED 40	ASTM A53 TYPE S GR B
1	5	PLATE 1/4"THK X 6 1/2" O.D.	ASTM A36
1	6	PLATE 1/4"THK X 1"WIDE X LENGTH AS REQD	ASTM A36
1	7	PLATE 1/4"THK X 4" O.D.	ASTM A36
1	8	EYE BOLT 1/4" DIA	McMASTER-CARR CAT#92 PG#409 #8891T12
1	9	ROD 1/4"DIA X LENGTH AS REQD	ASTM A108 GR 1020
AR	10	SHIELDING	CONCRETE
			~~McMASTER-CARR #3853T57~~
1	12	GASKET 6 1/4"O.D. X 4 3/4"I.D. X 1/8"THK	GARLOCK 900
AR	13	GASKET CEMENT	3M FORMULA EL-1300 ADHESIVE

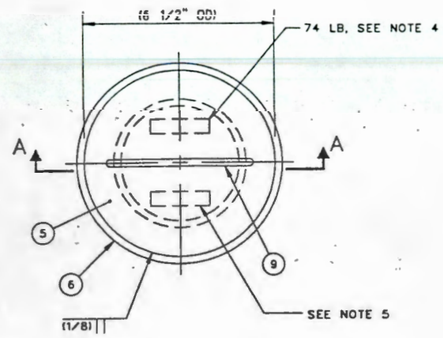

PLAN

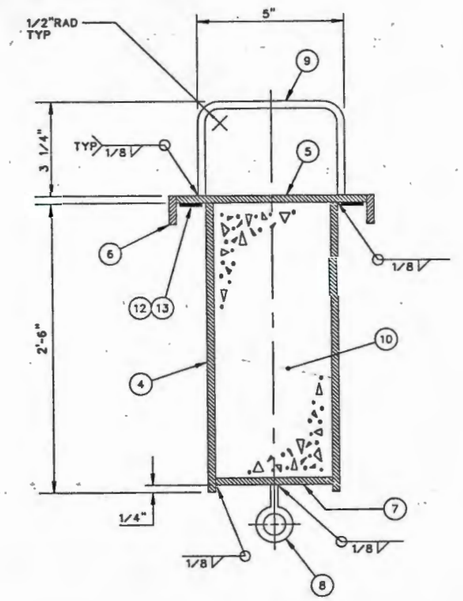

SECTION A-A

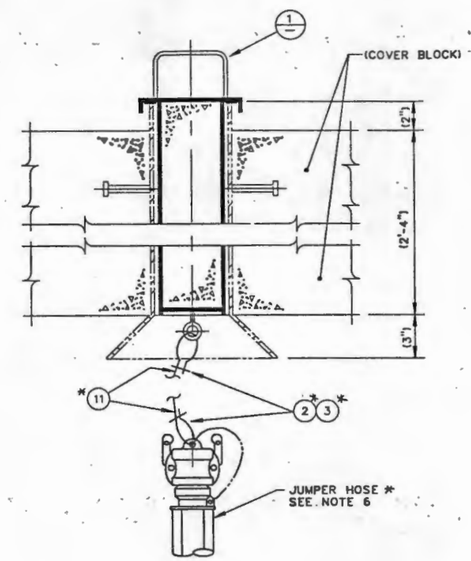

DETAIL 2 (H-2-77600)
SCALE: NONE

1 ASSEMBLY
SCALE: 6"=1'-0"

NOTES

1. MATERIALS FABRICATION AND CLEANING SHALL BE IN ACCORDANCE WITH CONSTRUCTION SPEC. B-714-C2.
2. TOLERANCES UNLESS OTHERWISE NOTED SHALL BE FRACTIONAL ±1/16"
3. PAINT ASSEMBLY 1 WITH HIGH VISIBILITY YELLOW IAW CONSTRUCTION SPEC B-714-C2.
4. PAINT STENCILED MARKING USING 1/2" HIGH BLACK LETTERS AS FOLLOWS: WT. 74 LBS
5. PAINT STENCILED MARKING USING 1/4" HIGH BLACK LETTERS AS FOLLOWS: H-2-77609, REV 0
6. REPLACE PART #'S 24, 25, 26, 61, 62 ON DWG H-2-98442 WITH NEW 8' LONG HELICAL CORRUGATIONS HOSE, 1" MPT BOTH ENDS, FLEXONICS 401-U-SST; QUICK DISCONNECT 1" COUPLING, 100 STAINLESS STEEL WITH 1" PLUG, 10W, STAINLESS STEEL BY P-T COUPLING CO INC.
7. (*) ASTERISK INDICATES EQUIPMENT TO BE FURNISHED AND INSTALLED BY OTHERS.

OFFICIAL RELEASE BY WHC DATE APR 04 1989

EDT = 101089

IMPACT LEVEL 3

WHC APPROVAL BY JR Burge	DATE 7/26/89	U.S. DEPARTMENT OF ENERGY RICHLAND OPERATIONS OFFICE
PROJ ENGR SCOTT	12-28-88	KAISER ENGINEERS HANFORD COMPANY
CAD ENGR H. HENRIKSON	7-26-1988	M PIPING HOSE HANDLE DETAILS
APPROVED BY W.M/RM ITEN	7-27-1988	
SAFETY L.H/AG MINISTER	7-21-1988	
APPROVED BY CRL/JR COLLINS	7-21-1988	
SCHEDULE BY L.HALL	7-17-1988	PROJECT TITLE GROUT VAULT PAIR 218-E-16-102&103
DRAWN BY DJ KOLAR	3-30-1988	PROJ B-714 / WO ER1060 / JOB 242500
DESIGNED BY DJ KOLAR	3-30-1988	SCALE SHOWN / BLDG 218-E-16 / INDEX 0402
CAD FILE ~~80772609A~~		DRAWING NUMBER H-2-77609 / SHEET 1 / OF 1 / REV 0
CAD EDIT ~~H-2-77609-0-13-KH~~		~~KEHCAD~~

NUMBER	TITLE	NUMBER	TITLE
	DRAWING TRACEABILITY LIST	H-2-77573	DRAWING LIST
		NEXT USED ON	REFERENCES

BY-DATE	BY-DATE	REV BY DATE	DESCRIPTION	REV
APPROVAL	KEH APPROVAL		REVISIONS	
COMMENT REVIEW				

MICROFILMED

9011735095

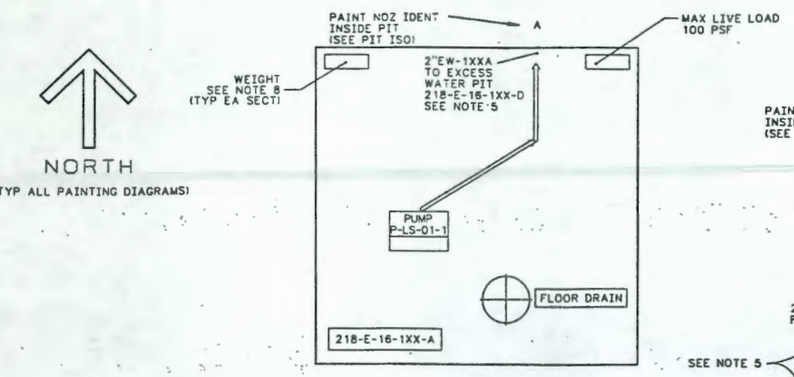

NORTH
(TYP ALL PAINTING DIAGRAMS)

NEAR TERM LEACHATE PUMP PIT
218-E-16-1XX-A

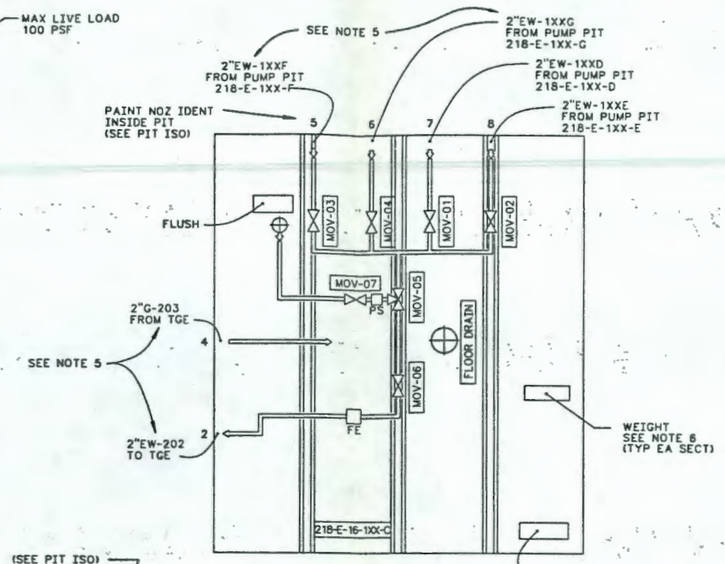

VAULT PIT
218-E-16-1XX-C

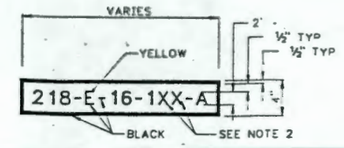

PIT IDENT

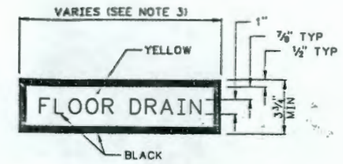

FLOOR DRAIN
AND OTHER DESCRIPTIONS AS REQUIRED

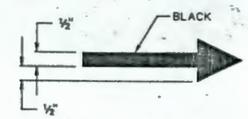

FLOW IDENT

TYPICAL PAINT DETAIL

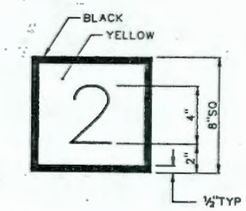

NOZZLE IDENTIFICATION

NOTES:

1. PAINT ALL PIT IDENTIFICATIONS AND PIT COVER FLOW DIAGRAMS PER SPEC B-714-C2 EXCEPT AS OTHERWISE NOTED ON THIS DWG.
2. SUBSTITUTE APPROPRIATE VAULT NUMBER IN PLACE OF "XX".
3. BLOCK OPENING VARIES WITH DEPTH AND WIDTH OF WORDS USED FOR DESCRIPTION.
4. SUBSTITUTE APPROPRIATE PUMP NUMBER IN PLACE OF "XX".
5. ON TOP OF COVER PAINT NOZZLE IDENTIFICATION IN 1" BLACK LETTERS AS FOLLOWS: NOZZLE NUMBER, LINE DESIGNATION, LINE NUMBER & DESTINATION.
6. SEE DWG H-2-77584 SH 1 FOR CALCULATED COVER BLOCK WEIGHTS. PAINT EACH COVER BLOCK WEIGHT WITH 2" HIGH BLACK LETTERS ON 4" WIDE YELLOW BACKGROUND WITH 1/2" BLACK BORDER.
7. SEE DWG H-2-77590 SH 1 FOR CALCULATED COVER BLOCK WEIGHTS. PAINT EACH COVER BLOCK WEIGHT WITH 2" HIGH BLACK LETTERS ON 4" WIDE YELLOW BACKGROUND WITH 1/2" BLACK BORDER.
8. SEE DWG H-2-77586 SH 1 OF 2 FOR CALCULATED COVER BLOCK WEIGHTS. PAINT EACH COVER BLOCK WEIGHT WITH 2" HIGH BLACK LETTERS ON 4" WIDE YELLOW BACKGROUND WITH 1/2" BLACK BORDER.

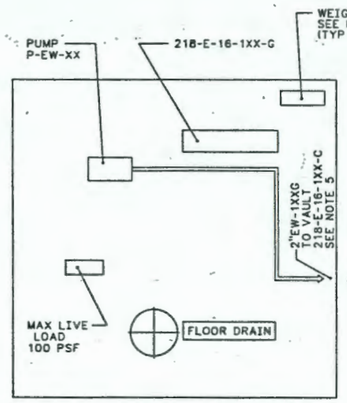

EXCESS WATER PIT
PIT 218-E-16-1XX-G

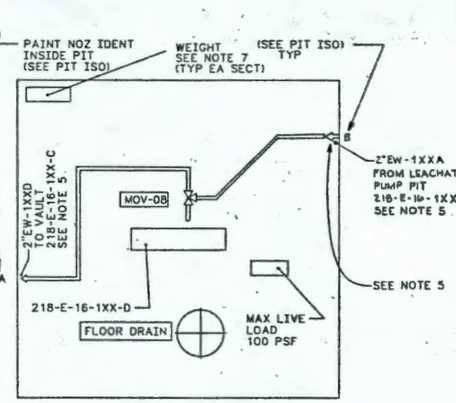

EXCESS WATER PIT
PIT 218-E-16-1XX-D

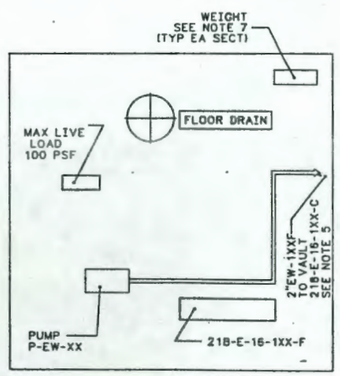

EXCESS WATER PIT
PIT 218-E-16-1XX-F

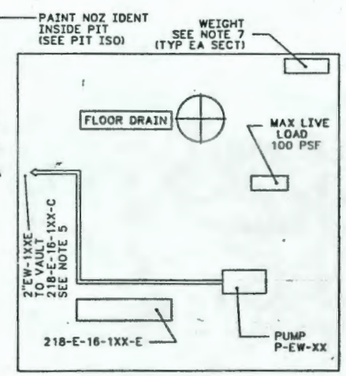

EXCESS WATER PIT
PIT 218-E-16-1XX-E

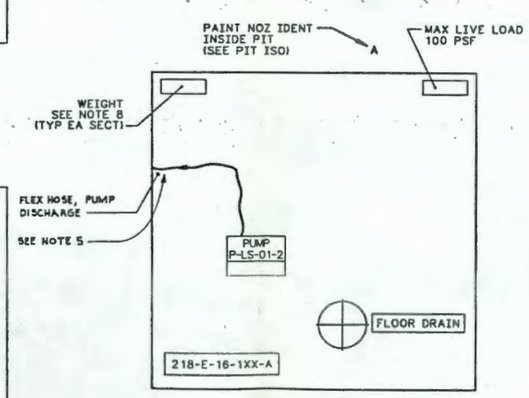

LONG TERM LEACHATE PUMP PIT
218-E-16-1XX-A

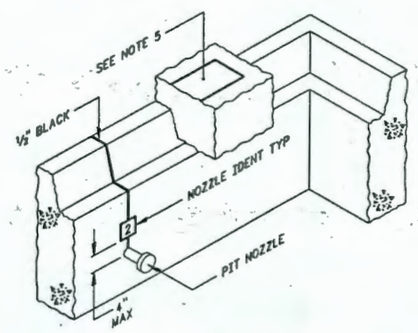

PIT ISOMETRIC

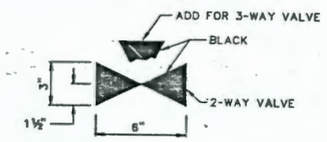

VALVE

OFFICIAL RELEASE BY WHC
DATE APR 04 1989
ECT # 101057

IMPACT LEVEL 3

NUMBER	TITLE
	DRAWING TRACEABILITY LIST

NUMBER	TITLE
H-2-77573	DRAWING LIST
REFERENCES	NEXT USED ON

BY-DATE	BY-DATE	REV BY DATE	DESCRIPTION	REV
APPROVAL	KEH APPROVAL			
REVISIONS				
COMMENT REVIEW				

MICROFILMED

WHC APPROVAL BY S.R. BRIGGS DATE 12/29/88
PROJ ENGR J.D. COLLINS 7-29-88
QA H. HENDRICKSON 7-29-88
APPROVED BY W.M. ROBERT M. ITEN 7-27-88
SAFETY A.G. MINISTER 7-21-88
APPROVED BY CNZ JR. COLLINS 7-19-88
CHECKED BY L. HALL 7-19-88
DRAWN BY BANKEMPER 3-29-1988
DESIGNED BY D.MILTON 3-29-1988

U.S. DEPARTMENT OF ENERGY
RICHLAND OPERATIONS OFFICE
KAISER ENGINEERS HANFORD COMPANY

PIPING
PIT COVER
PAINTING DIAGRAMS

PROJECT TITLE: GROUT VAULT PAIR 218-E-16-102&103

PROJ	WO	JOB
B-714	ER1080	242500

SCALE	BLDG	INDEX
NONE	218-E-16	0402

DRAWING NUMBER	SHEET	OF	REV
H-2-77610	1	1	0

H277610A: C 12/29/88

8509796

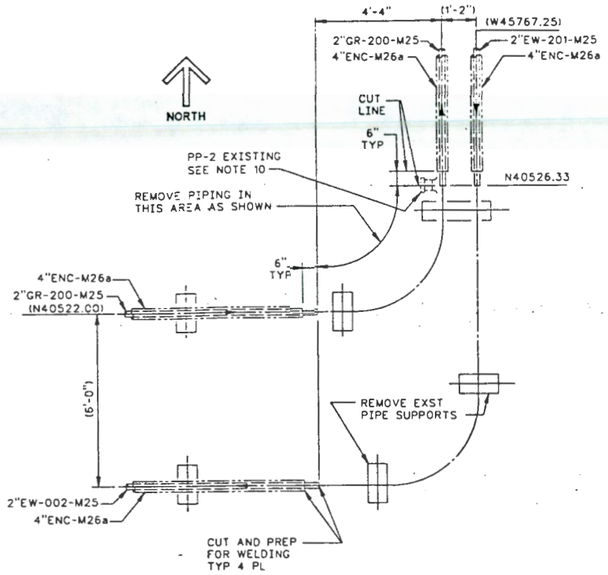

SEE NOTE 2 ON DWG H-2-77611 SH 2

DETAIL 1 H-2-77596 SH 1
SCALE:1/2"=1'-0"

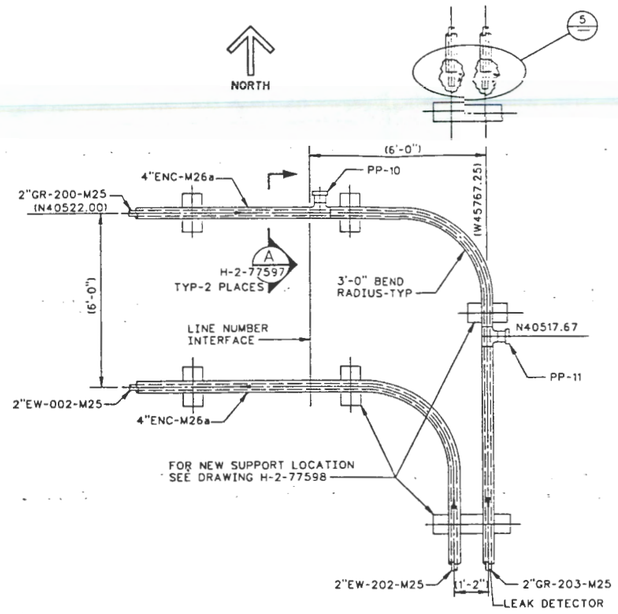

SEE NOTE 3 ON DWG H-2-77611 SH 2

DETAIL 2 H-2-77596 SH 1
SCALE:1/2"=1'-0"

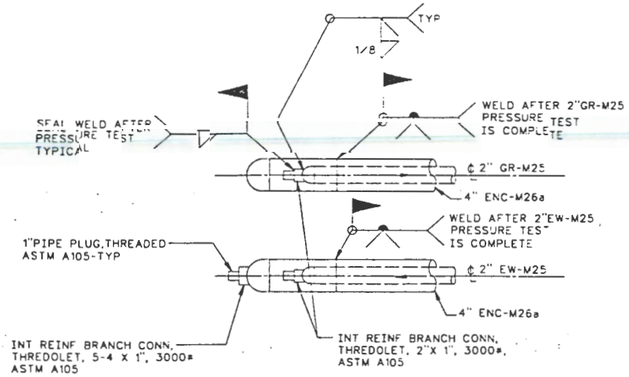

SEE NOTE 6 ON DWG H-2-77611 SH2

DETAIL 5 H-2-77596 SH1 H-2-77611 SH2
SCALE: 1 1/2"= 1'-0"
(FOR TRUE ORIENTATION SEE PIPING PLAN)

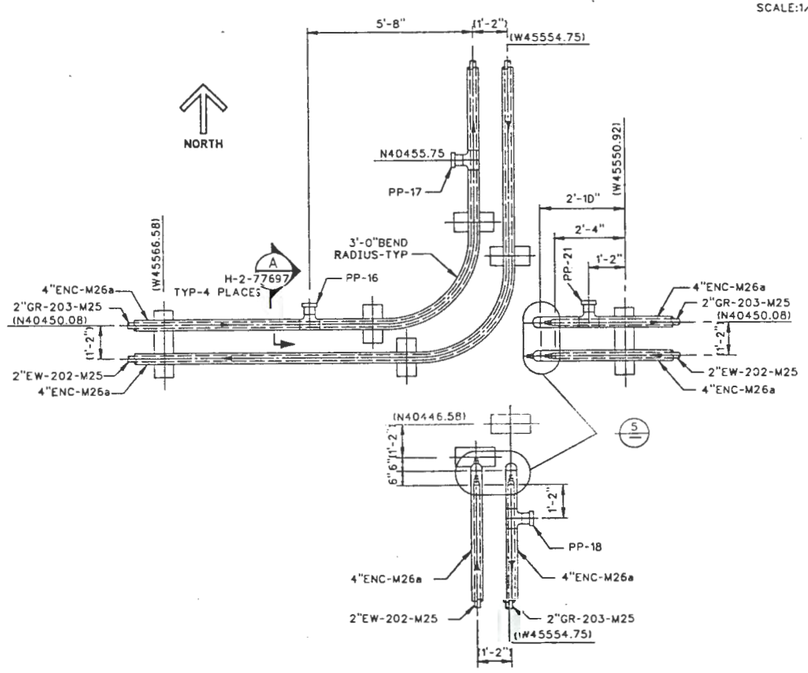

SEE NOTE 4 ON DWG H-2-77611 SH 2

DETAIL 3 H-2-77596 SH 1
SCALE:1/2"=1'-0"

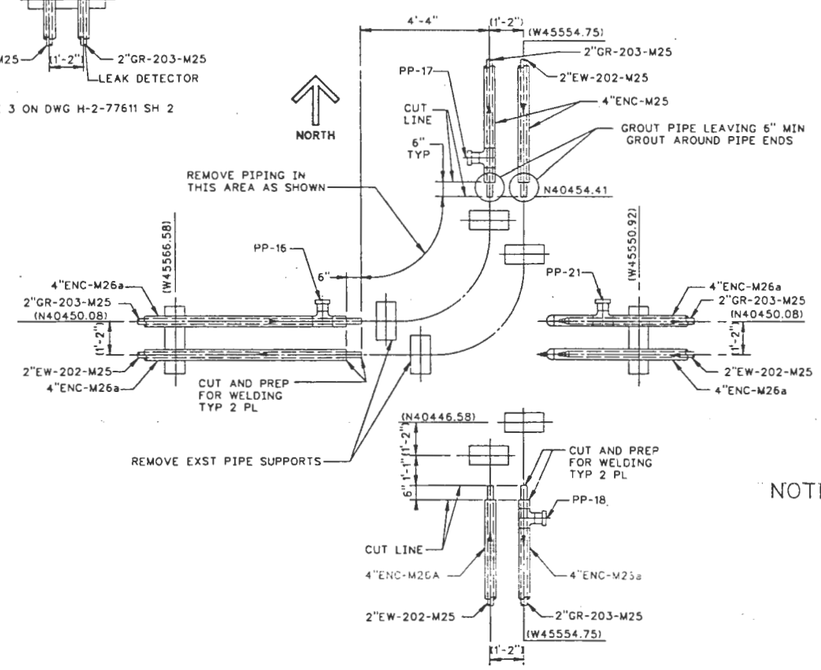

SEE NOTE 5 ON DWG H-2-77611 SH2

DETAIL 4 H-2-77596
SCALE:1/2"=1'-0"

NOTES:

1. FOR GENERAL NOTES SEE DRAWING H-2-77596.

OFFICIAL RELEASE BY WHC
DATE APR 04 1989

EDT # 101089

IMPACT LEVEL 2

NUMBER	TITLE	NUMBER	TITLE
	DRAWING TRACEABILITY LIST	NEXT USED ON	REFERENCES
		H-2-77573	DRAWING LIST

BY-DATE	BY-DATE	REV BY DATE	DESCRIPTION	REV
APPROVAL	KEH APPROVAL		REVISIONS	
COMMENT REVIEW				

MICROFILMED

		DATE
WHC APPROVAL		4/4/89
DESIGNED	H. HENRIKSON	7-29-1988
APPROVED	RM ITEN	7-29-1988
SAFETY	AC MINISTER	7-21-1988
APPROVED	JR COLLINS	7-21-1988
CHECKED BY	L. HALL	7-21-1988
DRAWN BY	FG RITCH	8-10-1988
REVISED	FG RITCH	8-10-1988
CAD FILE	B077611A	
CAD CODE	25:DEC:ACD2:9.13:NN	

UC DEPARTMENT OF ENERGY
RICHLAND OPERATIONS OFFICE
KAISER ENGINEERS HANFORD COMPANY

PIPING PLAN AND DETAILS

PROJECT TITLE: GROUT VAULT PAIR 218-E-16-102-&103

PROJ	B-714	WO	ER1060	JOB	242500
SCALE	SHOWN	BLDG	218-E-16	INDEX	0402
DRAWING NUMBER	H-2-77611	SHEET 1	OF 2	REV 0	

KEHCAD

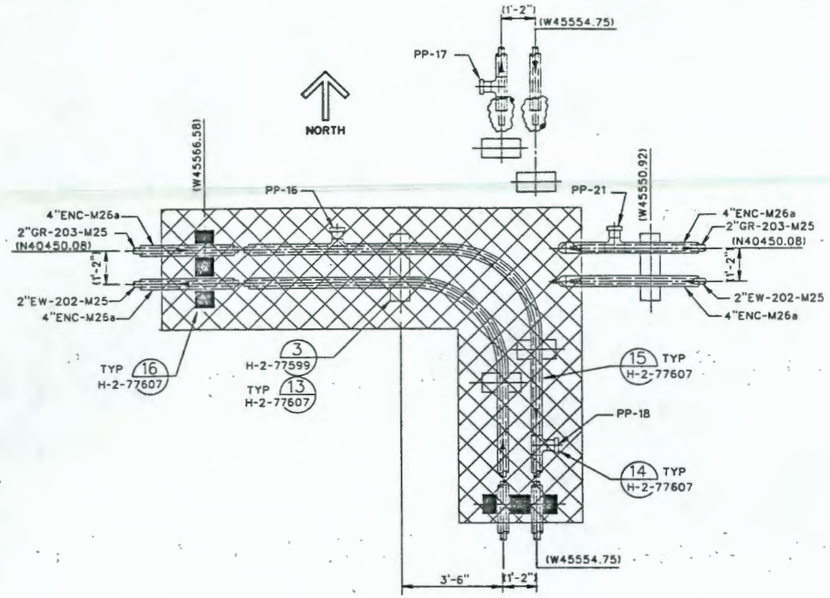

SEE NOTE 7

DETAIL 6 H-2-77596
SCALE:1/2"=1'-0"

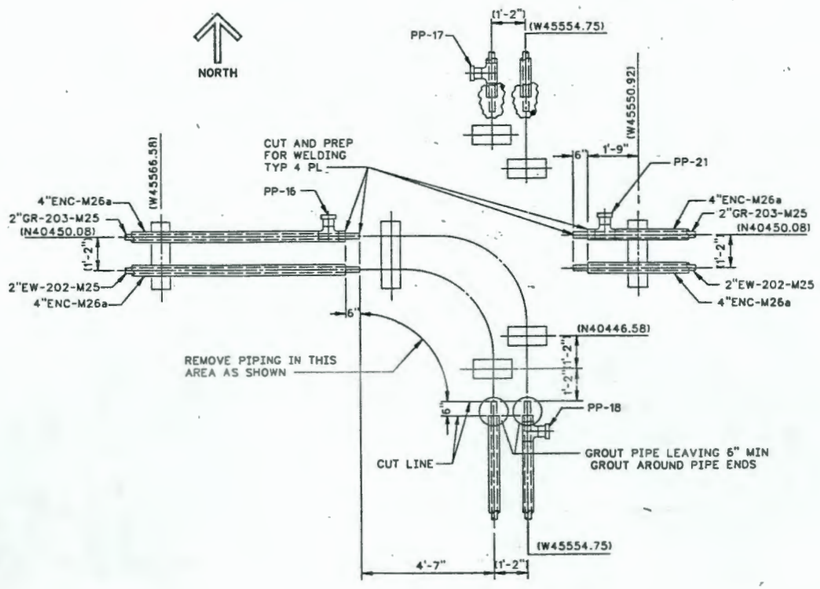

SEE NOTE 8

DETAIL 7 H-2-77596
SCALE:1/2"=1'-0"

NOTES:

1. FOR GENERAL NOTES SEE DRAWING H-2-77596.
2. THIS DETAIL SHOWS HOW THE GROUT LINE 2"GR-200-M25 AND THE EXCESS WATER LINE 2"EW-002-M25 FROM THE TRANSPORTABLE GROUT FACILITY IS DISCONNECTED FROM GROUT LINE 2"GR-201-M25 AND EXCESS WATER LINE 2"-EW-201-M25 ROUTED TO VAULT 101.
3. THIS DETAIL SHOWS HOW THE GROUT LINE 2"GR-200-M25 AND THE EXCESS WATER LINE 2"EW-002-M25 COMING FROM THE TRANSPORTABLE GROUT FACILITY ARE CONNECTED TO THE PIPING ROUTED TO VAULT 102. IT ALSO SHOWS CAPS INSTALLED ON LINES 2"GR-201-M25 & 2"EW-201-M25. THE CAPS ARE TO SEAL THESE LINES UNTIL THEY ARE REQUIRED FOR FUTURE USE.
4. THIS DETAIL SHOWS GROUT FEED LINE 2"GR-203-M25 AND EXCESS WATER LINE 2"EW-202-M25 BEING ROUTED TO VAULT 102. IT ALSO SHOWS THE CAPED EXTENTIONS GOING TO VAULT 103 AND TO FUTURE VAULTS 120 AND 121. EVERYTHING DELINEATED IN DETAIL 3 IS INCLUDED IN THE CONTRACT.
5. THIS DETAIL SHOWS WORK THAT WILL BE PERFORMED BY THE GOVERNMENT IN THE FUTURE AND IS NOT IN THE CONTRACT. THIS DETATIL SHOWS THE WORK WHICH IS REQUIRED TO DISCONNECT THE PIPING FROM VAULT 102 WHEN IT IS TO BE CLOSED. THE DETAIL SHOWS REMOVAL OF THE PIPING CONNECTING THE VAULT, IT ALSO REMOVES THE CAP ON THE GROUT LINE AND EXCESS WATER LINE GOING TO VAULT 103.
6. THIS IS A TYPICAL DETAIL SHOWING THE INSTALLATION OF CAPS ON TERMINATED ENCASED PIPE LINES.
7. THIS DETAIL SHOWS WORK THAT WILL BE PERFORMED BY THE GOVERNMENT IN THE FUTURE AND IS NOT IN CONTRACT. THE WORK INCLUDES CONNECTING THE GROUT FEED LINE 2"GR-203-M25 AND THE EXCESS WATER LINE 2"EW-202-M25 TO THE RESPECTIVE LINE ROUTED TO VAULT 103. IT ASLO SHOWS THE DISCONNECTED LINES BEING FILLED WITH CLEAN GROUT.
8. THIS DETAIL SHOWS WORK TO BE PERFORMED BY THE GOVERNMENT IN THE FUTURE AND IS NOT INCLUDED IN CONTRACT. IT SHOWS THE REMOVAL OF THE GROUT AND EXCESS WATER LINES CONNECTING VAULT 103. THESE PIPES ARE TO BE REMOVED AFTER THE VAULT HAS BEEN FILLED WITH GROUTED WASTE AND PREPARED FOR CLOSURE. IT ALSO SHOWS THE CAPS REMOVED FROM THE PIPES EXTENDING THE PIPING TO FUTUTE VAULTS.
9. THIS DETAIL SHOWS WORK TO BE PERFORMED BY THE GOVERNMENT IN THE FUTURE AND IS NOT INCLUDED IN CONTRACT. THE DETAIL SHOWS THE GROUT AND EXCESS WATER LINES 2"GR-203-M25 AND 2"EW-202-M25 CONNECTED TO THE EXTENTION PIPING GOING TO FUTURE VAULT.
10. UNPLUG EXISTING TRACETEK CABLE AT EXISTING PULL POINT PP-2, AND REMOVE BACK TO PULL POINT PF-1 WHICH IS AROUND ELBOW JUST NORTH OF TGF. PULL NEW TRACETEK CABLE IN ANNULUS FROM PP-1 TO PP-10, PP-10 TO PP-11 ETC PER SPECIFICATION B-714-C2 SECTION 16400.

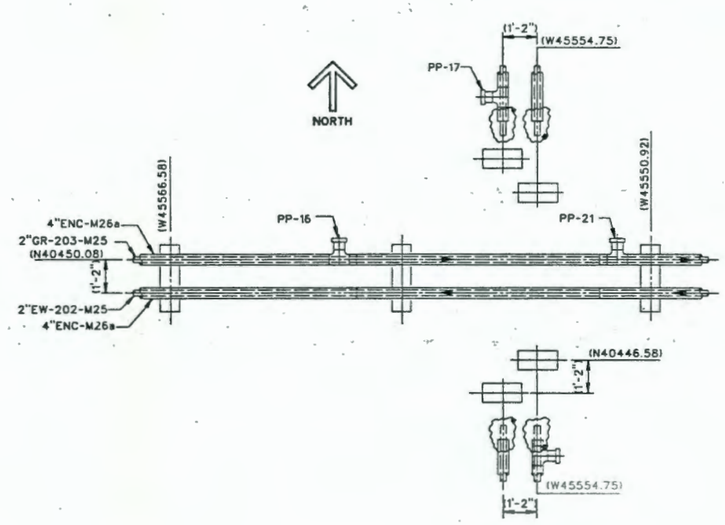

SEE NOTE 9

DETAIL 8 H-2-77596
SCALE:1/2"=1'-0"

OFFICIAL RELEASE BY WHC
DATE APR 04 1989

EDT # 101089

IMPACT LEVEL 2

NUMBER	TITLE
H-2-77573	DRAWING LIST

DRAWING TRACEABILITY LIST — REFERENCES — NEXT USED ON

BY-DATE	BY-DATE	REV BY DATE	DESCRIPTION	REV
APPROVAL	KEH APPROVAL		REVISIONS	

MICROFILMED — COMMENT REVIEW

WHC APPROVAL	DATE 4/4/89	U.S. DEPARTMENT OF ENERGY RICHLAND OPERATIONS OFFICE	
		KAISER ENGINEERS HANFORD COMPANY	
PROJ ENGR / BY J.R. HENRIKSON	12-28-1988 / 1-23-1989	M PIPING PLAN AND DETAILS	
APPROVED BY W.JM/RM ITEN	1-23-1989 / 1-27-1989		
DRAFT JLH/AG MINISTER	2-21-1988		
APPROVED BY CRZ/JR COLLINS	2-21-1988		
DESIGN BY L. HALL	2-10-1988	PROJECT TITLE GROUT VAULT PAIR 218-E-16-102-&103	
DRAWN BY R.J. LAMOUREUX	6-10-1988	PROJ B-714	WO ER1060 / JOB 242500
DESIGNED BY R.J. LAMOUREUX	6-10-1988	SCALE SHOWN	BLDG 218-E-16 / INDEX 0402
CAD FILE B077611B		DRAWING NUMBER H-2-77611	SHEET 2 / OF 2 / REV 0
CALCOD ZB:DEC;ACD2:9.13:NN			

KEHCAD

9011785059 8

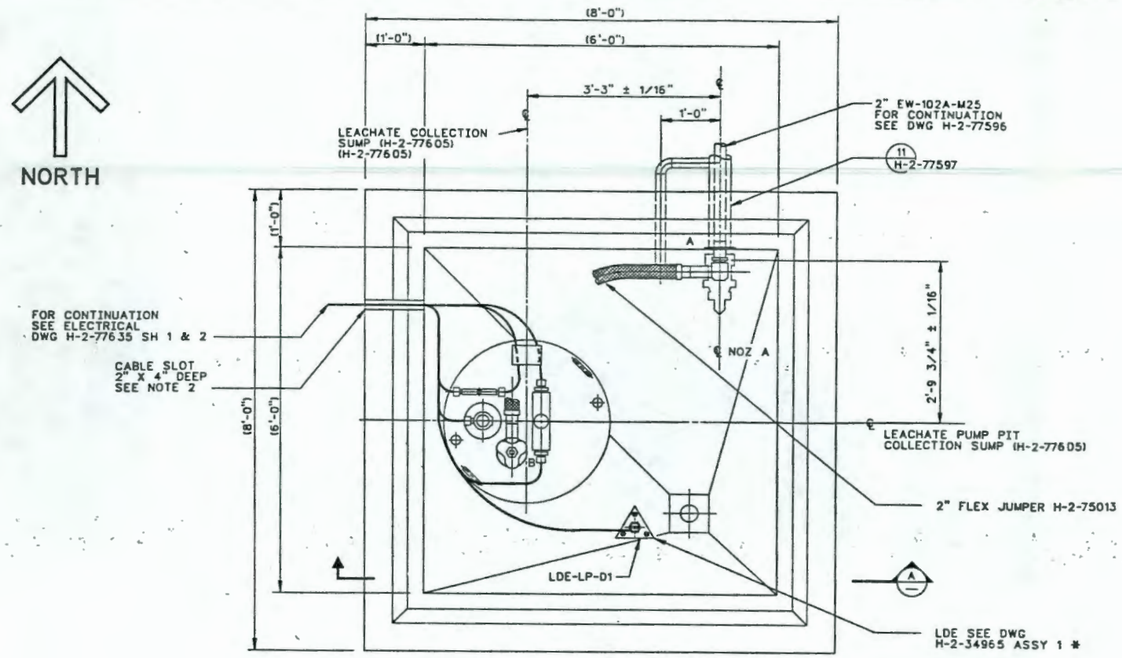

PLAN (COVER BLOCKS REMOVED FOR CLARITY)
SCALE: 1"=1'-0"

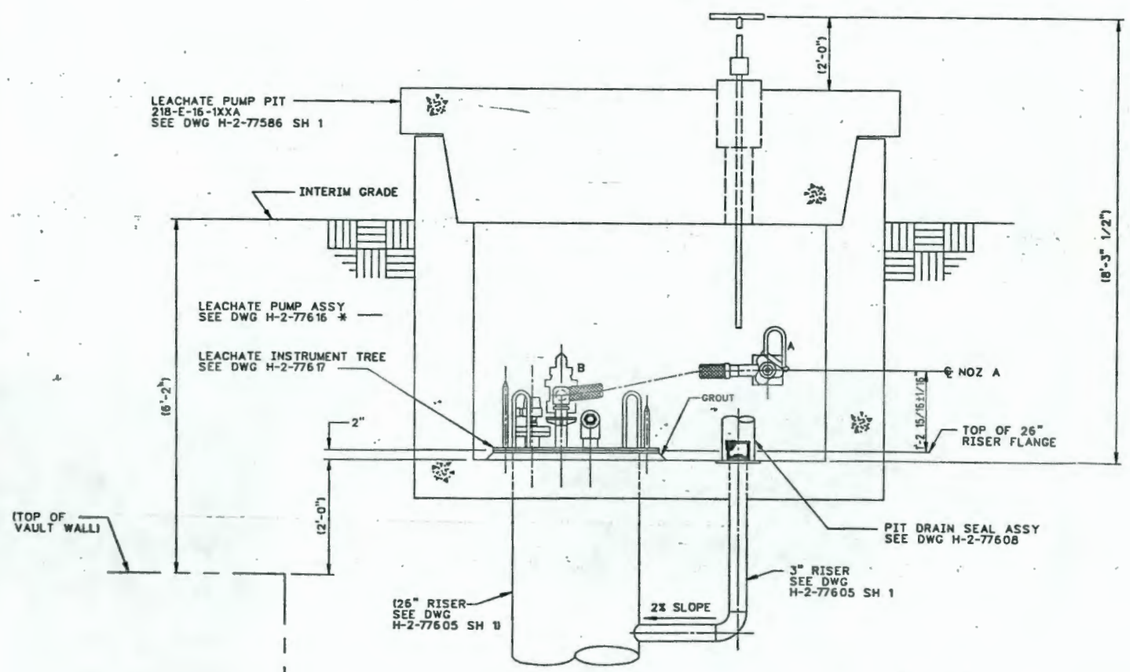

SECTION A
SCALE: 1"=1'-0"

NOTES:

1. FOR GENERAL NOTES SEE H-2-77596.
2. PACK CABLE SLOT WITH DUCT SEAL INSTALL PER MANUFACTURES SPECIFICATIONS.
3. SEE H-2-77610 FOR LEACHATE PUMP PIT COVER PAINTING DIAGRAM.
4. (*) ASTERISK INDICATES EXISTING EQUIPMENT TO BE RELOCATED (BY OTHERS) FROM THE PREVIOUS GROUT FILLED CONCRETE VAULT.
5. SUBSTITUTE APPROPRIATE VAULT NUMBER IN PLACE "XX".

OFFICIAL RELEASE BY WHC DATE APR 04 1989

EDT # 101089

Rev 0 1-13-89

IMPACT LEVEL 2

DRAWING TRACEABILITY LIST		REFERENCES	
NUMBER	TITLE	NUMBER	TITLE
		H-2-77573	DRAWING LIST
		NEXT USED ON	

REVISIONS				
BY-DATE	BY-DATE	REV BY DATE	DESCRIPTION	REV
APPROVAL	KEH APPROVAL			
COMMENT REVIEW				

MICROFILMED

WHC APPROVAL 1/10/89	DATE	U.S. DEPARTMENT OF ENERGY RICHLAND OPERATIONS OFFICE	
DESIGN AGENT BY S.R. BRILLS	12-28-1988	KAISER ENGINEERS HANFORD COMPANY	
PROJ ENG BY J.D. CLEVELAND	12-28-1988	PIPING LEACHATE PUMP PIT JMPR ARR/JMPR ASSY	
DESIGN LEAD BY H HENRIKSON	7-21-1988		
APPROVED BY WJM RM ITEN	7-21-1988		
SAFETY AG WINISTER JLH	7-21-1988		
APPROVED BY CRZ SR COLLINS	7-21-1988		
RECORDED BY L HALL	7-21-1988	PROJECT TITLE GROUT VAULT PAIR 218-E-16-102&103	
DRAWN BY DK MILTON	3-2-1988	PROJ B-714	WO ER1060	JOB 242500
DETAILED BY DK MILTON	3-2-1988	SCALE SHOWN	BLDG 218-E-16	INDEX 0402
CAD FILE B077612A		DRAWING NUMBER H-2-77612	SHEET 1	OF 1	REV 0
CALCD 28:DEC:ACD2:9.13-NN				

KEHCAD 1

9011178R507799

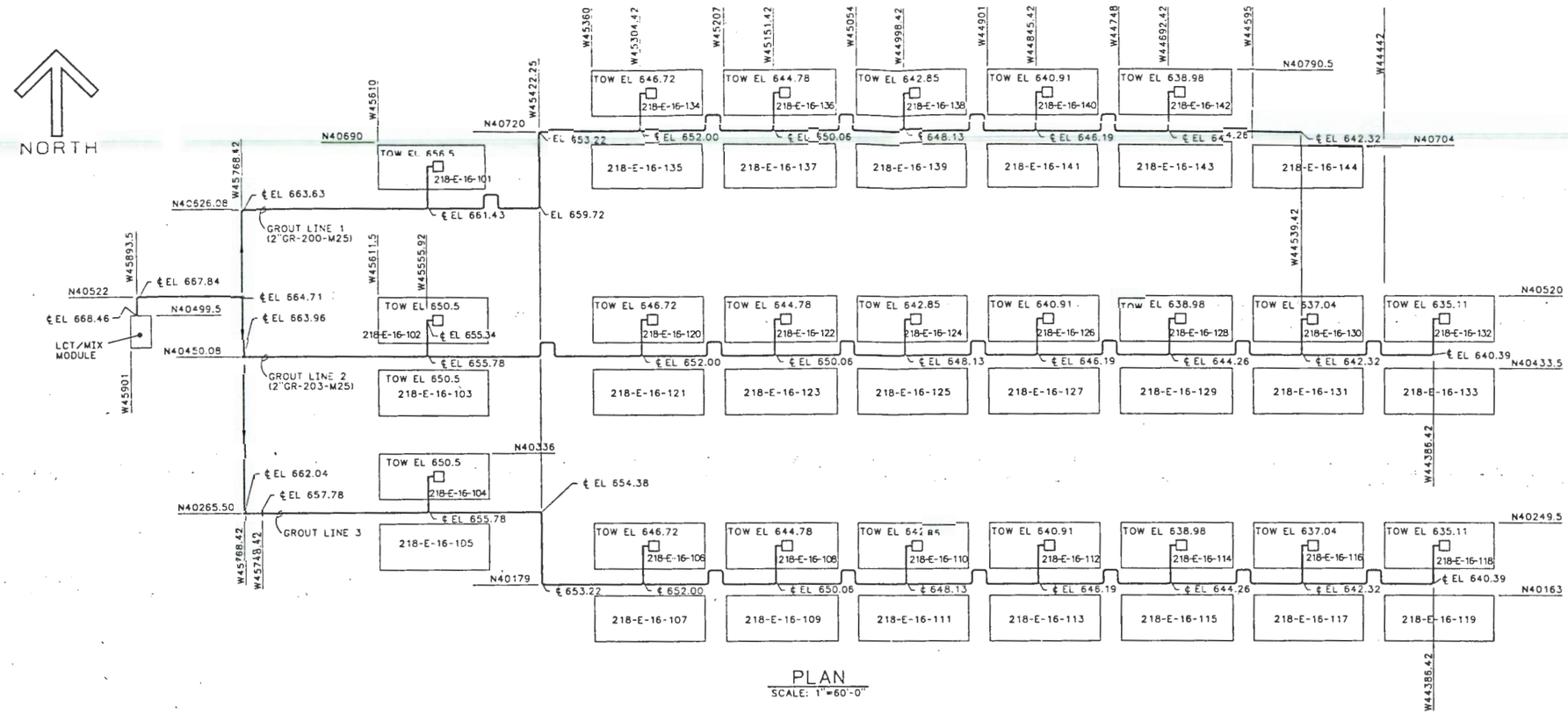

PLAN

SCALE: 1"=60'-0"

NOTES:

1. TOW = TOP OF WALL
2. VAULT 101 WAS INSTALLED ON PROJECT B-566.
3. VAULTS 102 & 103 ARE TO BE INSTALLED ON PROJECT B-714.

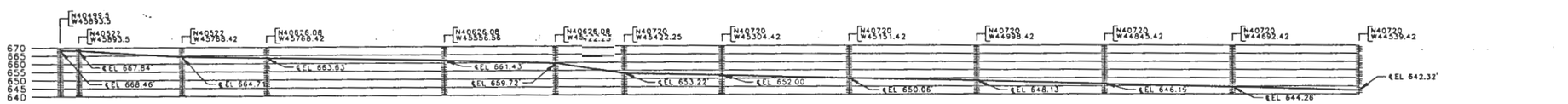

GROUT LINE 1 (2"GR-200-M25)

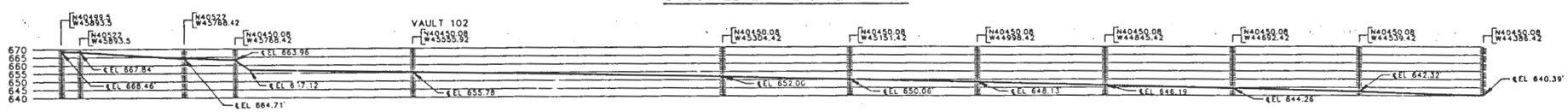

GROUT LINE 2 (2"GR-203-M25)

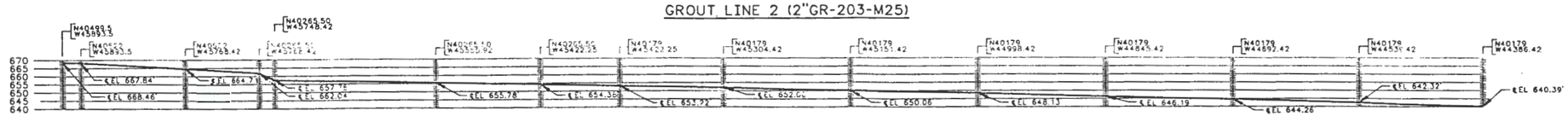

GROUT LINE 3

PROFILE GROUT LINES 1, 2 & 3

SCALE: HORIZ 1"=60'-0"
VERT 1"=30'-0"

OFFICIAL RELEASE BY WHC
DATE APR 04 1989

EDT # 101089

IMPACT LEVEL 2

WHC APPROVAL BY J.R.B.	DATE 12/20/88	U.S. DEPARTMENT OF ENERGY RICHLAND OPERATIONS OFFICE	
		KAISER ENGINEERS HANFORD COMPANY	
PROJ ENGR J.E. BREED	12-28-88	M	PIPING HYDRAULIC DIAG
APPROVED BY ROBERT M. ITEN	7-26-88		
SAFETY A.G. MINISTER	7-22-88		
APPROVED BY CR2 F. PORTER	7-22-88	PROJECT TITLE GROUT VAULT PAIR 218-E-16-102 & 103	
CHECKED BY L. HALL	7-22-88	PROJ B-714	WO FR1060	JOB 242500
DRAWN BY RH BANKEMPER / SA GREGG	5-21-1988	SCALE SHOWN	BLDG 218-E-16	INDEX 0401
DESIGNED BY RH BANKEMPER	5-21-1988	DRAWING NUMBER H-2-77615	SHEET 1	OF 1	REV 0

NUMBER	TITLE
DRAWING TRACEABILITY LIST	

NUMBER	TITLE
H-2-77573	DRAWING LIST
NEXT USED ON	REFERENCES

MICROFILMED	BY-DATE	BY-DATE	REV BY DATE	DESCRIPTION	REV
APPROVAL	KEH APPROVAL			REVISIONS	
COMMENT REVIEW					

H277615A
C 12/21/88

INSTRUMENT SYMBOL LEGEND

LEGEND

- MAIN PROCESS
- FUTURE
- ELECTRICAL
- —L— LEAK DETECTION CABLE
- SOFTWARE LINK
- ---D--- DATA COMMUNICATION HIGHWAY
- ENCASED LINE
- CHECK VALVE
- MOTOR OPERATED VALVE (MOV), 3 WAY WITH 3 LIMIT SWITCHES
- MOTOR OPERATED VALVE (MOV), 2 WAY WITH 2 LIMIT SWITCHES
- HOSE CONNECTON
- DRAIN
- FLANGE
- FLEX HOSE
- PIPE REMOTE CONNECTOR
- MC — MOTOR CONTROLLER
- LEVEL ELEMENT
- VACUUM PUMP (PV) OR FAN (F) (AS LABELED)
- EXCESS WATER PUMP (P)
- CCTV CAMERA & LIGHT SOURCE
- LEAK DETECTOR ELEMENT
- TEMPERATURE ELEMENT
- RADIATION ELEMENT
- E/I — VOLTAGE TO CURRENT CONVERTER
- TE — AMBIENT TEMPERATURE ELEMENT
- ▲ SEE NOTE 11
- △ SEE NOTE 12

- PLC CRT DISPLAY PORTABLE INSTRUMENT HOUSE (PIH) CONTROL ROOM
- LOCAL MOUNTED INSTRUMENT
- PANEL MOUNTED INSTRUMENT TRANSPORTABLE GROUT EQUIPMENT (TGE) CONTROL ROOM
- PANEL MOUNTED INSTRUMENT, PORTABLE INSTRUMENT HOUSE (PIH) CONTROL ROOM
- PANEL REAR MOUNTED INSTRUMENT, PORTABLE INSTRUMENT HOUSE (PIH) CONTROL ROOM
- PLC CRT DISPLAY, TRANSPORTABLE GROUT EQUIPMENT (TGE) CONTROL ROOM
- 1 — PLC INTERLOCK SCHEDULE SEE SH 2
- 17 — ELECTRICAL INTERLOCK
- PLC HARDWARE INPUT TERMINAL PANEL
- PLC HARDWARE OUTPUT TERMINAL PANEL

ABBREVIATIONS OTHER THAN INSTRUMENT SYMBOL LETTERS

ARM	— AREA RADIATION MONITOR
ATM	— ATMOSPHERE
CAM	— CONTINUOUS AIR MONITOR
CASS	— COMPUTER AUTOMATED SURVEILLANCE SYSTEM
E/I	— VOLTAGE TO CURRENT CONVERTER
LCT/MM	— LIQUID COLLECTION TANK/MIXER MODULE
TGE	— TRANSPORTABLE GROUT EQUIPMENT
VEAM	— VAULT EXHAUST AIR MONITOR
PIH	— PORTABLE INSTRUMENT HOUSE
CCTV	— CLOSED CIRCUIT TELEVISION
PLC	— PROGRAMMABLE LOGIC CONTROLLER
EL	— ENCASED LINE
LS	— LEACHATE SUMP
VPS	— VOLTAGE POWER SUPPLY

INSTRUMENT SYMBOL LETTER IDENTIFICATION CHART

	FIRST LETTER		SUCCEEDING LETTERS		
SYMBOL	MEASURED OR INITIATING VARIABLE	MODIFIER	READOUT OR PASSIVE FUNTION	OUTPUT FUNCTION	MODIFIER
A			ALARM		
AN			ANALYZER		
C				CONTROLLER	
D		DETECTION		DRIVER	
E			ELEMENT		
EL		LIGHT SOURCE			
F	FLOW				
H	HAND (MANUALLY INITIATED)				HIGH
I	CURRENT		INDICATOR		
J	POWER				
K			RELAY		
L	LEVEL OR LEAK		LIGHT		LOW
M			MONITOR		
P	PRESSURE				
Q	TROUBLE	TOTALIZE			
R	RADIATION		RECORDER		
S				SWITCH	
SD	SHUTDOWN				
SM	SMOKE				
ST	STATUS				
T	TEMPERATURE			TRANSMITTER	
(1) U	MULTIVARIABLE				
X	TELEVISION	FAILURE			
Y				COMPUTER	
Z	POSITION				

NOTE: NUMBERS IN PARENTHESIS REFER TO SPECIFIC GENERAL NOTES.

PLC HARDWARE TERMINAL PANEL IDENTIFIER

- FIRST LINE
- SECOND LINE
- THIRD LINE

FIRST LINE

XX XXX
- XXX — IDENTIFICATION NUMBER
- XX — INSTRUMENT IDENTIFICATION LETTERS (SEE LETTER IDENTIFICATION CHART)

SECOND LINE

AI-XXX	ANALOG INPUT
AO-XXX	ANALOG OUTPUT
DI-XXX	DISCRETE INPUT
DO-XXX	DISCRETE OUTPUT

XXX — IO RACK IDENTIFICATION

THIRD LINE

SX-X
- X — CHANNEL NUMBER
- SX — SLOT NUMBER

PLC CRT DISPLAY IDENTIFIER

- XXXX — INSTRUMENT SYMBOL LETTER (FIRST THRU FOURTH CHARACTERS)
- XXXX — INSTRUMENT NUMBER (FIFTH THRU EIGHTH CHARACTERS)

INSTRUMENT IDENTIFIER

XX 1XX-XX
- XX — INSTRUMENT SYMBOL LETTERS
- 1XX — INSTRUMENT NUMBER
- XX — VAULT NUMBER STARTING WITH 102 (WHERE REQUIRED)

LINE IDENTIFICATION

2"-SN-000-MX
- 2" — LINE SIZE
- SN — SERVICE
- 000 — LINE NUMBER
- MX — MATERIAL CODE

ENC	— ENCASEMENT
EW	— EXCESS WATER
GR	— GROUT
RW	— RAW WATER
SN	— SUPERNATANT

EQUIPMENT DESIGNATOR

VP	— VAULT PIT
GV	— GROUT VAULT
LP	— LEACHATE PIT
P	— PUMP

VAULT NUMBERING SEQUENCE

101	— FIRST VAULT
1XX	— SUCCEEDING VAULTS STARTING WITH 102

GENERAL NOTES:

1. USE OF FIRST-LETTER U FOR MULTIVARIABLE IN LIEU OF A COMBINATION OF FIRST-LETTERS.
2. ALL NON-MODULATING CONTROL VALVES TO HAVE POSITION LIMIT SWITCHES FOR CRT GRAPHIC AND STATUS INDICATION.
3. CASS ALARMS WILL BE GROUPED AS FOLLOWS:
   - A) ALL LEACHATE SUMP LEAK DETECTORS
   - B) ALL GROUT ENCASED LINE LEAK DETECTORS
   - C) ARM, CAM AND VEAM HIGH RADIATION
   - D) ARM, CAM AND VEAM MONITOR FAILURE & CAM & VEAM SAMPLE LOW FLOW
   - E) ALL VAULT PIT & EXCESS WATER PITS LEAK DETECTORS
   - F) VAULT HIGH & LOW PRESSURE
   - G) ALARM POWER SUPPLY
4. ALL MICROPROCESSOR CRT DISPLAY DATA, INCLUDING PROCESS INDICATIONS, ALARMS AND EQUIPMENT STATUS INDICATIONS, SHALL BE CONFIGURED SUCH THAT ANY COMBINATION OF THESE DATA POINTS MAY BE, AT SCHEDULED INTERVALS OR ON OPERATOR COMMAND, SENT TO THE PRINTER FOR PRODUCTION OF A HISTORICAL RECORD.

   UPON AN ABNORMAL PROCESS CONDITION, ALL RELATED DATA POINTS SHALL AUTOMATICALLY BE SENT TO THE PRINTER FOR PRODUCTION OF HISTORICAL RECORD.
5. ALL PROCESS VARIABLES DESIGNATED AS RECORDERS BY THE SUCCEEDING LETTER "R" (SUCH AS LR-01, FOR EXAMPLE) SHALL, IN ADDITION TO THE VARIOUS STANDARD CRT DISPLAYS, BE CONFIGURED FOR HISTORICAL TRENDING.
6. THE TGE CONTROL ROOM SHALL HAVE PROVISIONS FOR OPERATION OF UP TO THREE PIH'S. THE PIH'S SHALL BE INDENTIFIED BY PIH-1, PIH-2, OR PIH-3.
7. AVERAGE TEMPERATURE IS TO BE CALCULATED ONLY FROM THERMOCOUPLES SUBMERGED BELOW THE EXCESS WATER/GROUT LEVEL. SUBMERGED THERMOCOUPLES SHALL BE DETERMINED BY USE OF SIGNAL INPUT FROM THE EXCESS WATER/GROUT LEVEL ELEMENT.
8. AREA RADIATION MONITOR (ARM) NUMBERING STARTS WITH 02 DUE TO DELETION OF THE NUMBER 01 JUMPER PIT AREA RADIATION MONITOR.
9. THIS IS THE LEACHATE SUMP ARRANGEMENT FOR VAULT 218-E-1XX DURING THE VAULT FILLING SEQUENCE. THIS ARRANGEMENT CONSISTS OF 2 ASSEMBLIES; (1) THE LEACHATE SUMP PUMP ASSEMBLY WITH A HIGH-HIGH LEVEL ELEMENT LE-LS-01 AND PUMP P-LS-01-1, (2) THE LEACHATE SUMP INSTRUMENT TREE ASSEMBLY WITH LEAK DETECTOR LDE-LS-1XX, LEVEL ELEMENT LE-LS-1XX AND TWO THERMOCOUPLES TE-LS-1XX-1 AND TE-LS-1XX-2. (LDE-LS-1XX READOUT WILL BE DISABLED DURING THE FILL SEQUENCE), AND LONG TERM LEACHATE SUMP PUMP P-LS-1XXA AND P-LS-1XXB.
10. THIS IS THE LEACHATE SUMP ARRANGEMENT FOR VAULT 218-E-1XX FOR LONG TERM STORAGE. AFTER THE GROUT IN THE VAULT HAS HARDENED AND THE EXCESS WATER HAS BEEN PUMPED OUT, ASSEMBLY (1) IN NOTE 9 IS REMOVED AND ASSEMBLY (2) IN NOTE 9 REMAINS PERMANENTLY IN PLACE. (LDE-LS-1XX READOUT WILL BE REINSTATED)
11. EQUIPMENT WITH SYMBOL ▲ IS NEW. ALL OTHER EQUIPMENT IS EXISTING.
12. DISPLAY IDENTIFIER NOTED WITH SYMBOL △ SHALL BE RE-IDENTIFIED FROM THE PREVIOUS DISPLAY IDENTIFIER SHOWN.
13. DRAWINGS H-2-77618, SH 1-12 (P&ID'S) ARE FOR INFORMATION OF FLOWS AND PROCESSES. THE REMAINDER OF THE CONSTRUCTION DRAWINGS DELINEATE THE WORK TO BE PERFORMED UNDER THE CONTRACT.
14. SEE DRAWING H-2-98460 FOR CAM DETAILS.

OFFICIAL RELEASE BY WHC DATE APR 04 1989

5-28-89 EWO

EDT # 101089

IMPACT LEVEL 2

DRAWING TRACEABILITY LIST			
NUMBER	TITLE	NUMBER	TITLE
H-2-98460	INSTM CONTINUUS AIR MONITOR	H-2-77573	DRAWING LIST
		REFERENCES	
		NEXT USED ON H-2-77573	

REVISIONS				
BY-DATE	BY-DATE	REV BY DATE	DESCRIPTION	REV
APPROVAL	KEH APPROVAL			
COMMENT REVIEW				

MICROFILMED

WHC APPROVAL	SA BRIGGS	12-28 1988
PROJ	JS CLOUD	12-28 1988
SA AREA UNIT	WH HENRIKSON	12-8 1988
APPROVED BY	RM ITEN	12-7 1988
SAFETY	AG MINSTER	12-7 1988
APPROVED BY	HJS/D SUBLETT	12-7 1988
ENGRS BY	RC SWAN	5-12 1988
DRAFT BY	GF MCKEE	3-21 1989
REVISED BY	KE WALTERS	3-21 1989

U.S. DEPARTMENT OF ENERGY
RICHLAND OPERATIONS OFFICE
KAISER ENGINEERS HANFORD COMPANY

PIPING & INSTM DIAGRAM UNDERGROUND VAULT

PROJECT TITLE: GROUT VAULT PAIR (218-E-16-102 & 103)

PROJ	B-714	WO	ER1060
SCALE	NONE	BLDG	218-E-16
DRAWING NUMBER	H-2-77618	SHEET 1	OF 12

9011785 0801

INTERLOCK SCHEDULE

(1) UPON DETECTION OF A LIQUID LEAK IN THE ENCASED GROUT TRANSPORT LINE, THE FOLLOWING SHALL OCCUR:

A) SHUTDOWN AND CIRCUIT DE-ENERGIZATION OF THE GROUT PUMP.

B) IF GROUT PUMP WAS IN OPERATION, INITIATION OF THE AUTOMATIC FLUSH/TRANSPORTABLE GROUT EQUIPMENT (TGE) SHUTDOWN SEQUENCE.

(2) UPON DETECTION OF LIQUID IN THE VAULT PIT, THE FOLLOWING SHALL OCCUR:

A) SHUTDOWN AND CIRCUIT DE-ENERGIZATION OF THE GROUT PUMP AND INITIATION OF THE TGE SHUTDOWN SEQUENCE.

B) SHUTDOWN AND CIRCUIT DE-ENERGIZATION OF EXCESS WATER PUMPS P-EW-01, -02, -03, AND -04.

(3) UPON DETECTION OF A LIQUID LEAK IN THE LEACHATE PIT THE FOLLOWING SHALL OCCUR:

A) SHUTDOWN AND CIRCUIT DE-ENERGIZATION OF THE GROUT PUMP, LEACHATE SUMP PUMP AND EW PUMP.

B) IF GROUT PUMP WAS IN OPERATION, INITIATION OF THE AUTOMATIC FLUSH/TRANSPORTABLE GROUT EQUIPMENT (TGE) SHUTDOWN SEQUENCE.

(4) UPON DETECTION OF HIGH RADIATION FROM ANY MONITOR OR DETECTION OF HIGH OR LOW VAULT PRESSURE, A RED WARNING LIGHT MOUNTED ON THE PIH SHALL BE ENERGIZED.

(5) UPON DETECTION OF A HIGH RADIATION CONDITION BY EITHER

1) THE CONTINUOUS AIR MONITOR (CAM).

2) THE AREA RADIATION MONITOR (ARM)

THE FOLLOWING SHALL OCCUR:

A) SHUTDOWN AND CIRCUIT DE-ENERGIZATION OF THE GROUT PUMP. FOLLOWING A TIME-DELAYED INTERVAL WITHOUT PUMP RESTART, THE AUTOMATIC FLUSH/TGE SHUTDOWN SEQUENCE SHALL BE INITIATED.

B) SHUTDOWN AND CIRCUIT DE-ENERGIZATION OF EXCESS WATER PUMPS P-EW-01, -02, -03, AND -04.

(6) UPON DETECTION OF EXHAUST AIR HIGH RADIATION CONDITION BY THE FUTURE VAULT EXHAUST AIR MONITOR (VEAM), THE FOLLOWING SHALL OCCUR:

A) SHUTDOWN OF THE FUTURE VAULT EXHAUSTER

B) SHUTDOWN AND CIRCUIT DE-ENERGIZATION OF THE GROUT PUMP. FOLLOWING A TIME-DELAYED INTERVAL WITHOUT PUMP RESTART, THE AUTOMATIC FLUSH/TGE SHUTDOWN SEQUENCE SHALL BE INITIATED.

(7) UPON DETECTION OF VAULT HIGH GROUT LEVEL OR HIGH EXCESS WATER LEVEL, THE FOLLOWING SHALL OCCUR:

A) SHUTDOWN AND CIRCUIT DE-ENERGIZATION OF THE GROUT PUMP.

B) IF GROUT PUMP WAS IN OPERATION, INITIATION OF THE AUTOMATIC FLUSH/TGE SHUTDOWN SEQUENCE.

C) SHUTDOWN OF EXCESS WATER PUMPS P-EW-01, -02, -03 AND -04. PUMP CIRCUITS TO REMAIN ENERGIZED FOR POSSIBLE MANUAL STARTUP.

(8) UPON DETECTION OF GROUT HIGH TEMPERATURE, THE FOLLOWING SHALL OCCUR:

A) SHUTDOWN AND CIRCUIT DE-ENERGIZATION OF THE GROUT PUMP.

B) IF GROUT PUMP WAS IN OPERATION, INITIATION OF THE AUTOMATIC FLUSH/TRANSPORTABLE GROUT EQUIPMENT (TGE) SHUTDOWN SEQUENCE.

C) SHUTDOWN AND CIRCUIT DE-ENERGIZATION OF EXCESS WATER PUMPS P-EW-01, -02, -03 AND -04.

(9) UPON SHUTDOWN INTERLOCK TRIP FROM TGE, THE FOLLOWING SHALL OCCUR:

A) SHUTDOWN AND CIRCUIT DE-ENERGIZATION OF EXCESS WATER PUMPS P-EW-01, -02, -03 AND -04.

(10) UPON A HIGH LEVEL INTERLOCK TRIP FROM THE LCT/MM THE FOLLOWING SHALL OCCUR:

A) SHUTDOWN AND CIRCUIT DE-ENERGIZATION OF EXCESS WATER PUMPS P-EW-01, -02, -03 AND -04.

(11) UPON ACTIVATION OF SUBMERSIBLE PUMP P-EW-03 STARTUP SEQUENCE, VALVES MOV-03 & -06 SHALL BE AUTOMATICALLY OPENED WHILE MOV-01, -02 & -04 ARE AUTOMATICALLY CLOSED. MOV-05 SHALL BE PROPERLY POSITIONED TO PUMP OUT OF THE VAULT. FINALLY THE OPERATOR WILL BE PROMPTED TO START THE PUMP. IF ANY OF THE ABOVE CONDITIONS IS NOT SATISFIED, PUMP OPERATION WILL BE PROHIBITIED. PUMPS P-EW-01, 02 & 04 ARE SIMILIAR IN OPERATION.

(12) UPON DETECTION OF LIQUID IN AN EXCESS WATER PIT. THE FOLLOWING SHALL OCCUR:

A) SHUTDOWN AND CIRCUIT DE-ENERGIZATION OF EXCESS WATER PUMPS P-EW-01, -02, -03 AND -04.

(13) UPON DETECTION OF HIGH PRESSURE IN THE VAULT, THE FOLLOWING SHALL OCCUR:

A) SHUTDOWN AND CIRCUIT DE-ENERGIZATION OF THE GROUT PUMP. FOLLOWING A TIME-DELAYED INTERVAL WITHOUT PUMP RESTART, THE AUTOMATIC FLUSH/TGE SHUTDOWN SEQUENCE SHALL BE INITIATED.

(14) UPON DETECTION OF LOW PRESSURE IN THE VAULT, THE FOLLOWING SHALL OCCUR:

A) SHUTDOWN AND CIRCUIT DE-ENERGIZATION OF THE GROUT PUMP AND INITIATION OF THE TGE SHUTDOWN SEQUENCE.

B) SHUTDOWN OF VAULT EXHAUST SYSTEM, UNTIL NORMAL OPERATING PRESSURE IS OBTAINED, FOLLOWED BY THE AUTOMATIC RESTART OF THE EXHAUST SYSTEM.

(15) UPON DETECTION OF HIGH LIQUID LEVEL IN THE LEACHATE SUMP AS DETECTED BY LE-LS-1XX. WITH THE FOLLOWING CONDITIONS SATISFIED THE LEACHATE PIT SUMP PUMP WILL START:

A) THE LEACHATE PIT SUMP PUMP IN THE AUTOMATIC MODE AND MOV-8 IS IN THE "TO VAULT" MODE.

WHEN THE LIQUID HAS BEEN PUMPED DOWN AND THE LEVEL ELEMENT DETECTS LOW LEVEL THE LEACHATE SUMP PUMP WILL BE DE-ENERGIZED.

(16) UPON DETECTION OF HIGH-HIGH LIQUID LEVEL IN THE LEACHATE SUMP, DURING THE VAULT FILLING SEQUENCE, AS DETECTED BY THE LDE, THE FOLLOWING SHALL OCCUR:

A) SHUTDOWN AND CIRCUIT DE-ENERGIZATION OF THE GROUT PUMP.

B) IF GROUT PUMP WAS IN OPERATION, INITIATION OF THE AUTOMATIC FLUSH/TRANSPORTABLE GROUT EQUIPMENT (TGE) SHUTDOWN SEQUENCE.

C) SHUTDOWN OF EXCESS WATER PUMPS P-EW-01, -02, -03 AND -04. PUMP CIRCUITS TO REMAIN ENERGIZED FOR POSSIBLE MANUAL STARTUP AFTER SHUTDOWN.

(17) (17) UPON SHUTDOWN OR NON-RUNNING CONDITION OF FUTURE VAULT EXHAUSTER, THE FOLLOWING SHALL OCCUR:

A) SHUTDOWN OR DISABLING OF FUTURE VEAM RECORD SAMPLE PUMP PV-06.

B) SHUTDOWN AND DE-ENERGIZATION OF THE GROUT PUMP.

C) IF GROUT PUMP WAS IN OPERATION, INITATION OF THE AUTOMATIC FLUSH/TRANSPORTABLE GROUT EQUIPMENT (TGE) SHUTDOWN SEQUENCE.

(18) EXCESS WATER LOW FLOW ALARM SHALL BE ENABLED ONLY IF ONE OF THE EXCESS WATER PUMPS IS RUNNING.

(19) UPON ACTIVATION OF GROUT PUMP PUMPING GROUT TO THE VAULT, A YELLOW WARNING BEACON LIGHT MOUNTED ON THE PIH SHALL BE ENERGIZED.

(20) UPON HIGH MOTOR TEMPERATURE, OVERCURRENT OR PUMP MOTOR SEAL LEAK MOTOR SHALL SHUTDOWN. TYPICAL FOR P-EW-01, -02, -03, -04 AND P-LS-01-1.

RADIATION MONITORS ALARM SIGNAL CHARTS

AREA RADIATION MONITOR (ARM, RAN-02)

TERMINAL BOARD NO.	TERM NO.	RADIATION		OPERATION/PWR	
		NORM	HIGH	NORM	FAIL
TB-B	1	-	-	ON	OFF
	7	ON	OFF	-	-

CONTINUOUS AIR MONITOR (CAM, RAN-03)

CONNECTOR NUMBER	PIN NO.	RADIATION		OPERATION/PWR		SAMPLE FLOW	
		NORM	HIGH	NORM	FAIL	NORM	LOW
J-CAM-01-5	A	-	-	ON	OFF	-	-
	C	OFF	ON	-	-	-	-
	F	-	-	-	-	OFF	ON

VAULT EXHAUST AIR MONITOR (VEAM (FUTURE), RAN-04, RAN-05 & RECORD SAMPLER)

CONNECTOR NUMBER	PIN NO.	RADN 04		RADN 05		OPNL/PWR 04		OPN/PWR 05		SAMPLE FLOW 04		SAMPLE FLOW 05		SAMPLE FLOW 06		ENCL TEMP	
		NORM	HIGH	NORM	HIGH	NORM	FAIL	NORM	FAIL	NORM	LOW	NORM	LOW	NORM	LOW	NORM	H/L
J-VEAM-01-5	A	-	-	-	-	-	-	-	-	-	-	-	-	ON	OFF	-	-
	B	-	-	-	-	-	-	-	-	-	-	ON	OFF	-	-	-	-
	C	-	-	-	-	-	-	-	-	ON	OFF	-	-	-	-	-	-
	D	-	-	ON	OFF	-	-	-	-	-	-	-	-	-	-	-	-
	E	-	-	-	-	-	-	ON	OFF	-	-	-	-	-	-	-	-
	F	ON	OFF	-	-	-	-	-	-	-	-	-	-	-	-	-	-
	G	-	-	-	-	ON	OFF	-	-	-	-	-	-	-	-	-	-
	H	-	-	-	-	-	-	-	-	-	-	-	-	-	-	ON	OFF

NOTE:

FOR GENERAL NOTES AND LEGENDS, SEE SHEET 1.

OFFICIAL RELEASE BY WHC DATE APR 04 1989

3-28-89 REV 0

EDT # 101089

IMPACT LEVEL 2

WHC APPROVAL JSR BARGER 3/30/89	DATE 12-28-1988	U.S. DEPARTMENT OF ENERGY RICHLAND OPERATIONS OFFICE
		KAISER ENGINEERS HANFORD COMPANY
DESIGN SUD CLOUD 3/30/89	12-28-1988	PIPING & INSTM DIAGRAM UNDERGROUND VAULT
DR WH HENRIKSON	12-8-1988	
CHECKED RM ITEN	12-7-1988	
SAFETY AG MINISTER	12-7-1988	
CHANGE AUTH HJS/C SUBLETT	12-7-1988	PROJECT TITLE GROUT VAULT PAIR (218-E-16-102 & 103)
DESIGNED RC SWAN	5-17-1988	PROJ B-714 / WO ER1060 / JOB
DRAWN PA SMITH	3-15-1988	SCALE NONE / BLDG 218-E-16 / SYSTEM 7004
DESIGNED KE WALTER	3-10-1988	DRAWING NUMBER H-2-77618 / SHEET 2 / 12 / REV 0

BY-DATE	BY-DATE	REV DATE	DESCRIPTION	REV
APPROVAL	KEH APPROVAL		REVISIONS	
COMMENT REVIEW				

NUMBER	TITLE
DRAWING TRACEABILITY LIST	

NUMBER	TITLE
DRAWING LIST	
REFERENCES	
NEXT USED ON H-2-77573	

MICROFILMED

H2776.3A2 C 01/05/89

9011785 0802

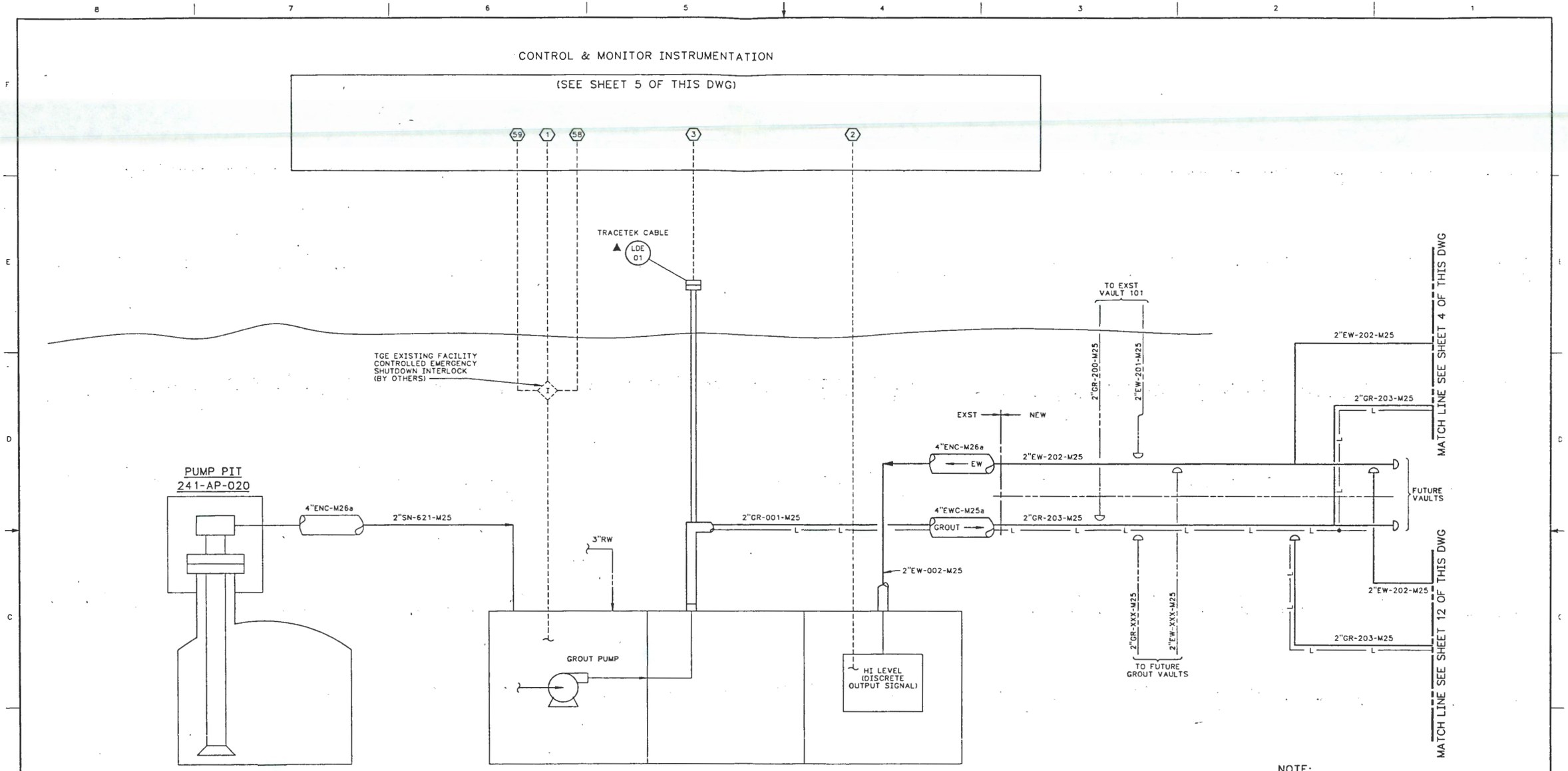

NOTE:
FOR GENERAL NOTES AND LEGENDS, SEE SHEET 1.

OFFICIAL RELEASE BY WHC
DATE APR 04 1989

1-8-89 REV 0

EDT # 101089

IMPACT LEVEL 2

WHC	12-28 1988	U.S. DEPARTMENT OF ENERGY RICHLAND OPERATIONS OFFICE
		KAISER ENGINEERS HANFORD COMPANY
CLOUD	12-28 1988	PIPING & INSTM DIAGRAM UNDERGROUND VAULT
WH HENRIKSON	12-8 1988	
RM ITEN	12-7 1988	
AG MINISTER	12-7 1988	
HJS/CJ SUBLETT	12-7 1988	GROUT VAULT PAIR (218-E-16-102 & 103)
RC SWAN	3-12 1988	PROJ B-714 ER1060
PA SMITH	3-10 1988	SCALE NONE 218-E-16
KE WALTER	3-10 1988	DRAWING NUMBER H-2-77618 SHEET 3 REV 12

BY-DATE	BY-DATE	REV DATE	DESCRIPTION	REV
APPROVAL	KE-1 APPROVAL		REVISIONS	
COMMENT REVIEW				

NUMBER	TITLE
DRAWING TRACEABILITY LIST	

NUMBER	TITLE
DRAWING LIST REFERENCES	
NEXT USED ON H-2-77573	

H27701 Rev 3
C 01/05/89

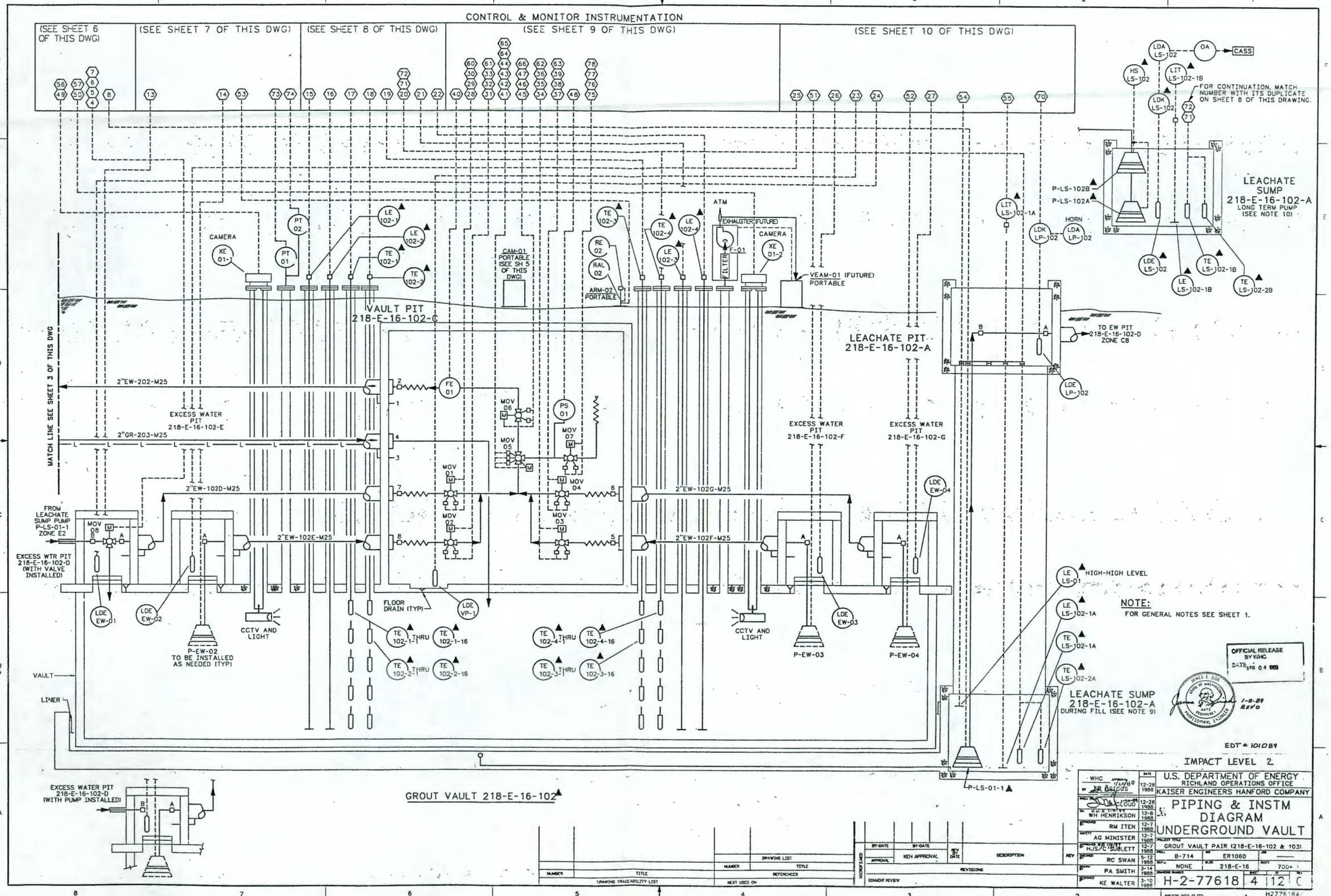

9011785080 4

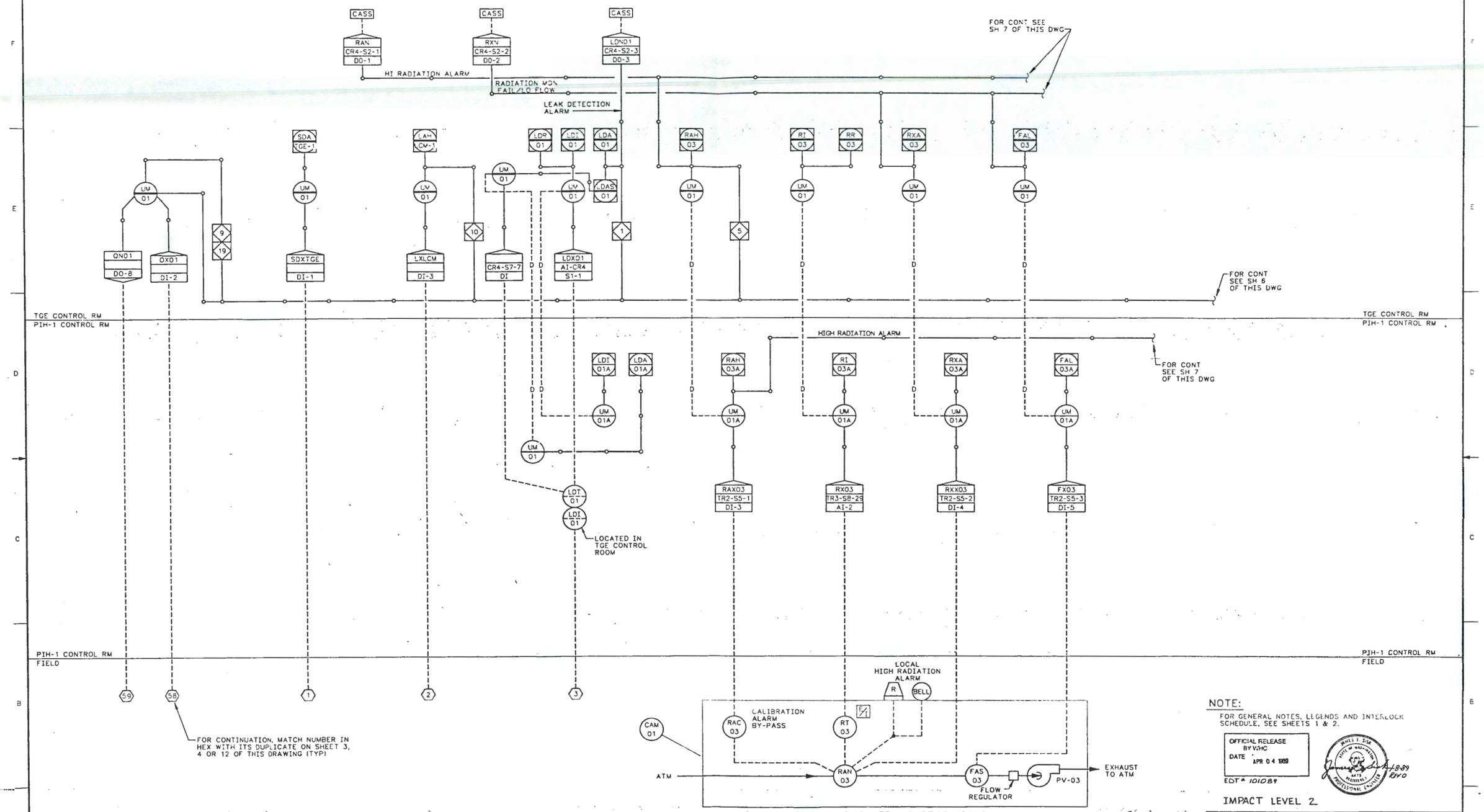

CONTINUOUS AIR MONITOR (CAM)

SEE NOTE 14

NOTE:

FOR GENERAL NOTES, LEGENDS AND INTERLOCK SCHEDULE, SEE SHEETS 1 & 2.

OFFICIAL RELEASE BY WHC
DATE APR 04 1989
EDT # 101089

IMPACT LEVEL 2

WHC	12-28-1988	U.S. DEPARTMENT OF ENERGY RICHLAND OPERATIONS OFFICE
		KAISER ENGINEERS HANFORD COMPANY
WH HENRIKSON	12-8-1988	PIPING & INSTM DIAGRAM UNDERGROUND VAULT
RM ITEN	12-7-1988	
AG MINISTER	12-7-1988	
HJS /C SUBLETT	12-7-1988	GROUT VAULT PAIR (218-E-18-102 & 103)
RC SWAN	5-12-1988	B-714 / ER1060
PA SMITH	3-15-1988	NONE / 218-E-16 / 7004
KE WALTER	3-15-1988	H-2-77618 / 5 / 12 / 0

DRAWING LIST

NUMBER	TITLE

DRAWING TRACEABILITY LIST

REFERENCES

NEXT USED ON H-2-77573

BY-DATE	BY-DATE	REV DATE	DESCRIPTION	REV
APPROVAL	KEH APPROVAL			

REVISIONS

COMMENT REVIEW

H2776181A5
C 01/05/89

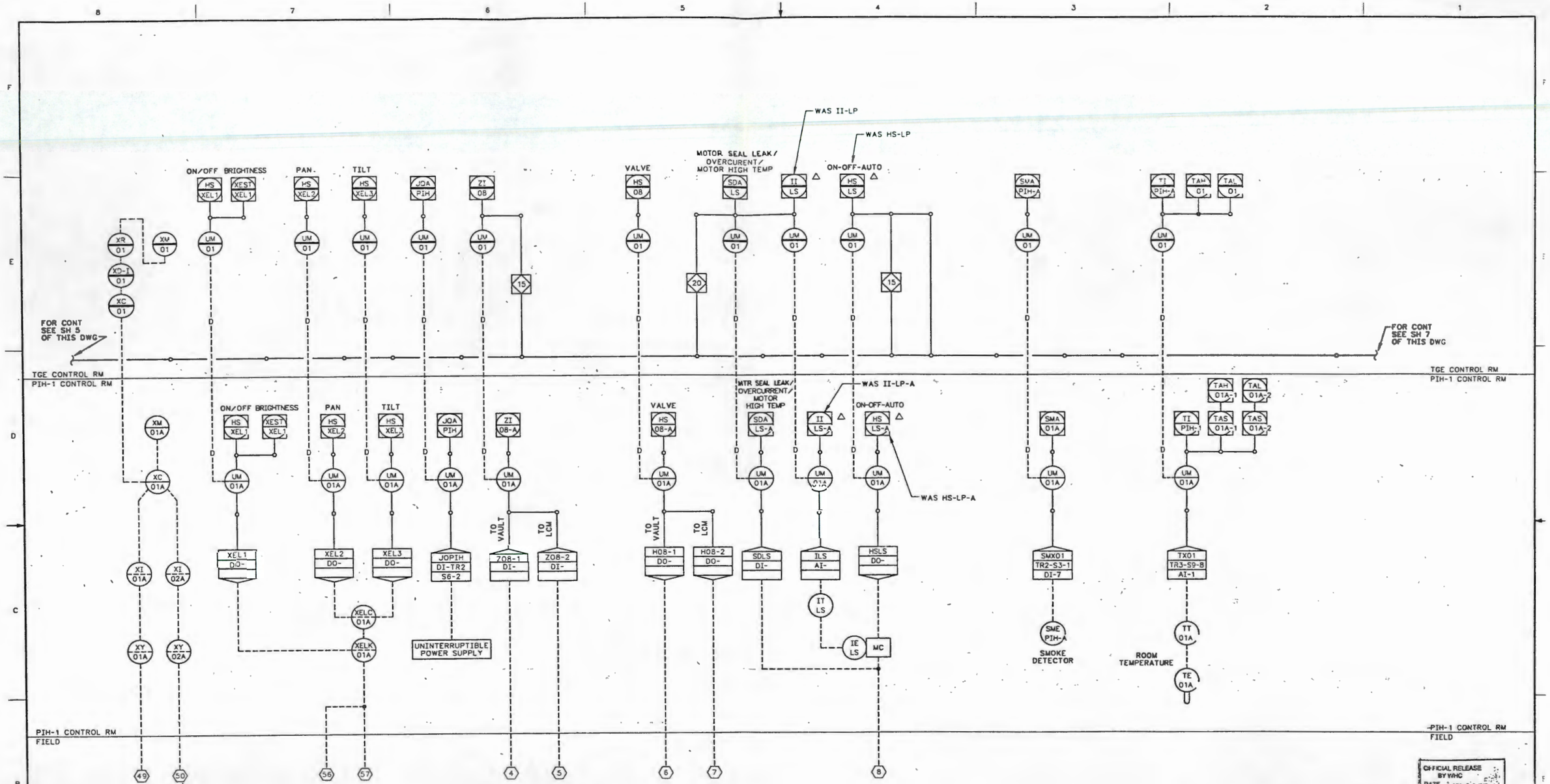

OFFICIAL RELEASE BY WHC DATE APR 04 1989

NOTE:
FOR GENERAL NOTES, LEGENDS AND INTERLOCK SCHEDULE, SEE SHEET 1 & 2.

EDT = 101089

3-28-89 REV 0

IMPACT LEVEL 2

WHC	12-28-1988	U.S. DEPARTMENT OF ENERGY RICHLAND OPERATIONS OFFICE
	12-28-1988	KAISER ENGINEERS HANFORD COMPANY
WH HENRIKSON	12-8-1988	M PIPING & INSTM DIAGRAM UNDERGROUND VAULT
RM ITEN	12-7-1988	
AG MINISTER	12-7-1988	
HJS / C SUBLETT	12-7-1988	GROUT VAULT PAIR (218-E-16-102 & 103)
RC SWAN	5-17-1988	B-714 / ER1060
PA SMITH	3-15-1988	NONE / 218-E-16 / 70014
KE WALTER	3-15-1988	H-2-77618 / 6 / 12

NUMBER	TITLE
DRAWING TRACEABILITY LIST	

NUMBER	TITLE
DRAWING LIST	
REFERENCES	
NEXT USED ON	H-2-77573

BY-DATE	BY-DATE	BY-DATE	DESCRIPTION	REV
APPROVAL	KEH APPROVAL		REVISIONS	
COMMENT REVIEW				

H2776 (GA) C 01/05/89

9011785 0806

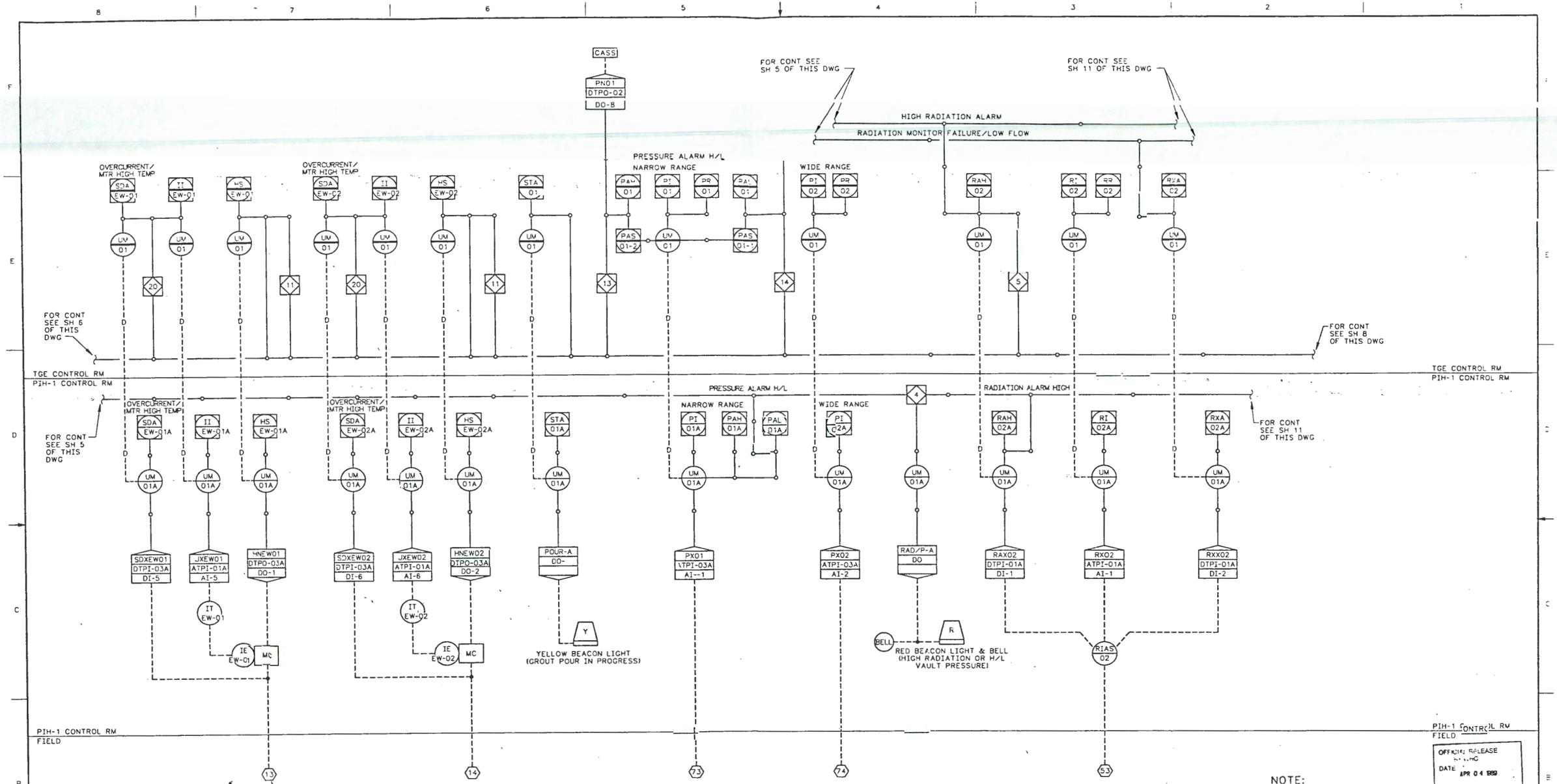

NOTE:

FOR GENERAL NOTES, LEGENDS AND INTERLOCK SCHEDULE, SEE SHEETS 1 & 2.

OFFICIAL RELEASE DATE APR 04 1989

EDT # 101089

IMPACT LEVEL 2

WHC	12-28-1988	U.S. DEPARTMENT OF ENERGY RICHLAND OPERATIONS OFFICE
	12-28-1988	KAISER ENGINEERS HANFORD COMPANY
WH HENRIKSON	12-8-1988	PIPING & INSTM DIAGRAM UNDERGROUND VAULT
RJ ITEN	12-7-1988	
AG MI	12-7-1988	
HJS SUBLETT	12-7-1988	PROJECT TITLE: GROUT VAULT PAIR (218-E-16-102 & 103)
RC SWAN	5-17-1988	PROJ B-714 / SYS ER1060
PA SMITH	3-15-1988	SCALE NONE / BLDG 218-E-16
KE WALTER	3-15-1988	DRAWING NUMBER H-2-77618

BY-DATE	BY-DATE	REV BY DATE	DESCRIPTION	REV
APPROVAL	KEH APPROVAL		REVISIONS	
COMMENT REVIEW				

NUMBER	TITLE
DRAWING TRACEABILITY LIST	

NUMBER	TITLE
DRAWING LIST	
REFERENCES	
NEXT USED ON	H-2-77573

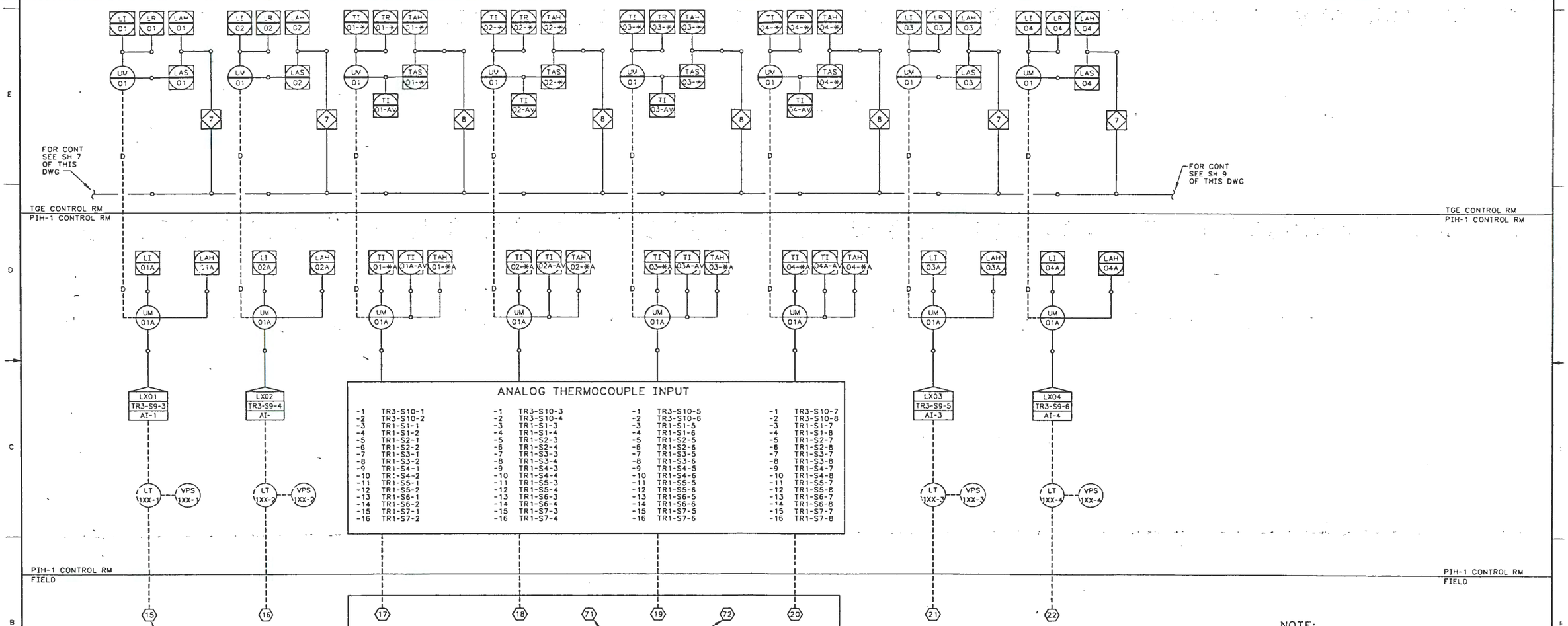

ASTERISK (*) USED IN LIEU OF THERMOCOUPLE NUMBER (1 THRU 16). FOR EXAMPLE: TC #12 ON TI01-* BECOMES TI01-12

NOTE:

FOR GENERAL NOTES, LEGENDS AND INTERLOCK SCHEDULE, SEE SHEETS 1 & 2.

OFFICIAL RELEASE BY WHC DATE APR 04 1989

EDT # 101089

1-8-89 REVD

IMPACT LEVEL 2

WHC	12-28-1988	U.S. DEPARTMENT OF ENERGY RICHLAND OPERATIONS OFFICE
		KAISER ENGINEERS HANFORD COMPANY
PROJ ENGR	12-28-1988	PIPING & INSTM DIAGRAM UNDERGROUND VAULT
WH HENRIKSON	12-8-1988	
RM ITEN	12-7-1988	
AG MINISTER	12-7-1988	
HJS / JC SUBLETT	12-7-1988	PROJECT TITLE: GROUT VAULT PAIR (218-E-16-102 & 103)
RC SWAN	5-17-1988	PROJ B-714 / WO ER1060
FA SMITH	3-15-1988	SCALE NONE / BLDG 218-E-16
KE WALTER	3-15-1988	DRAWING NUMBER H-2-77618 / SHEET 8 / REV 12

NUMBER	TITLE
DRAWING TRACEABILITY LIST	

NUMBER	TITLE
DRAWING LIST	
REFERENCES	
NEXT USED ON	H-2-77573

BY-DATE	BY-DATE	BY DATE	DESCRIPTION	REV
APPROVAL	KEH APPROVAL		REVISIONS	
COMMENT REVIEW				

WORKPLANNED

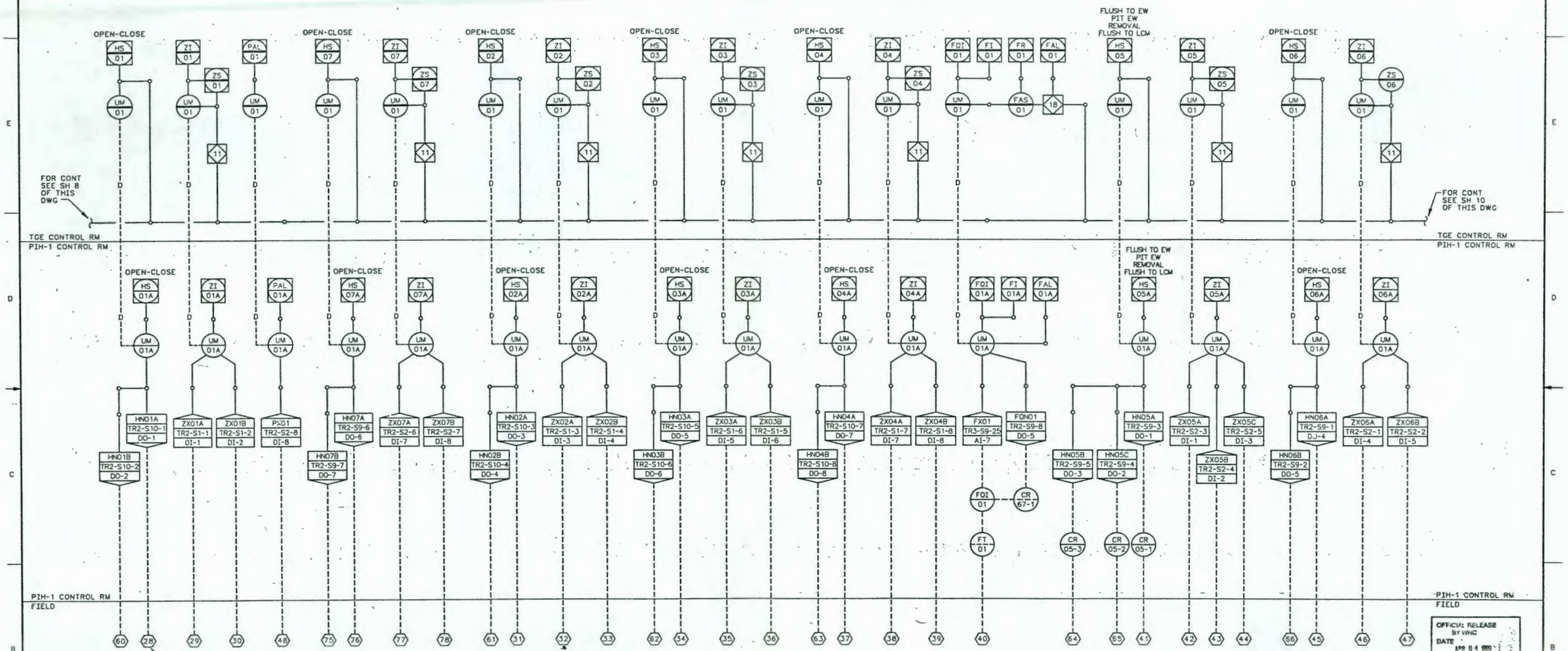

OFFICIAL RELEASE BY WHC
DATE APR 04 1989

NOTE:

FOR GENERAL NOTES, LEGENDS AND INTERLOCK SCHEDULE, SEE SHEETS 1 & 2.

EDT # 101089

IMPACT LEVEL 2

WHC	12-28 1988	U.S. DEPARTMENT OF ENERGY RICHLAND OPERATIONS OFFICE	
		KAISER ENGINEERS HANFORD COMPANY	
	12-28 1988	PIPING & INSTM DIAGRAM UNDERGROUND VAULT	
WM HENRIKSON	12-8 1988		
RM ITEN	12-7 1988		
AG MINISTER	12-7 1988		
HJS 'C' SUBLETT	12-7 1988	GROUT VAULT PAIR (218-E-16-102 & 103)	
RC SWAN	5-17 1988	B-714	ER1060
PA-SMITH	3-15 1988	NONE	218-E-16 / 7504
KE WALTER	3-15 1988	H-2-77618	9 / 12 / 0

NUMBER	TITLE	NUMBER	TITLE
			DRAWING LIST
			REFERENCES
	DRAWING TRACEABILITY LIST	NEXT USED ON	H-2-77573

BY-DATE	BY-DATE	REV DATE	DESCRIPTION	REV
APPROVAL	KEH APPROVAL		REVISIONS	
COMMENT REVIEW				

H277618A9

8501180906

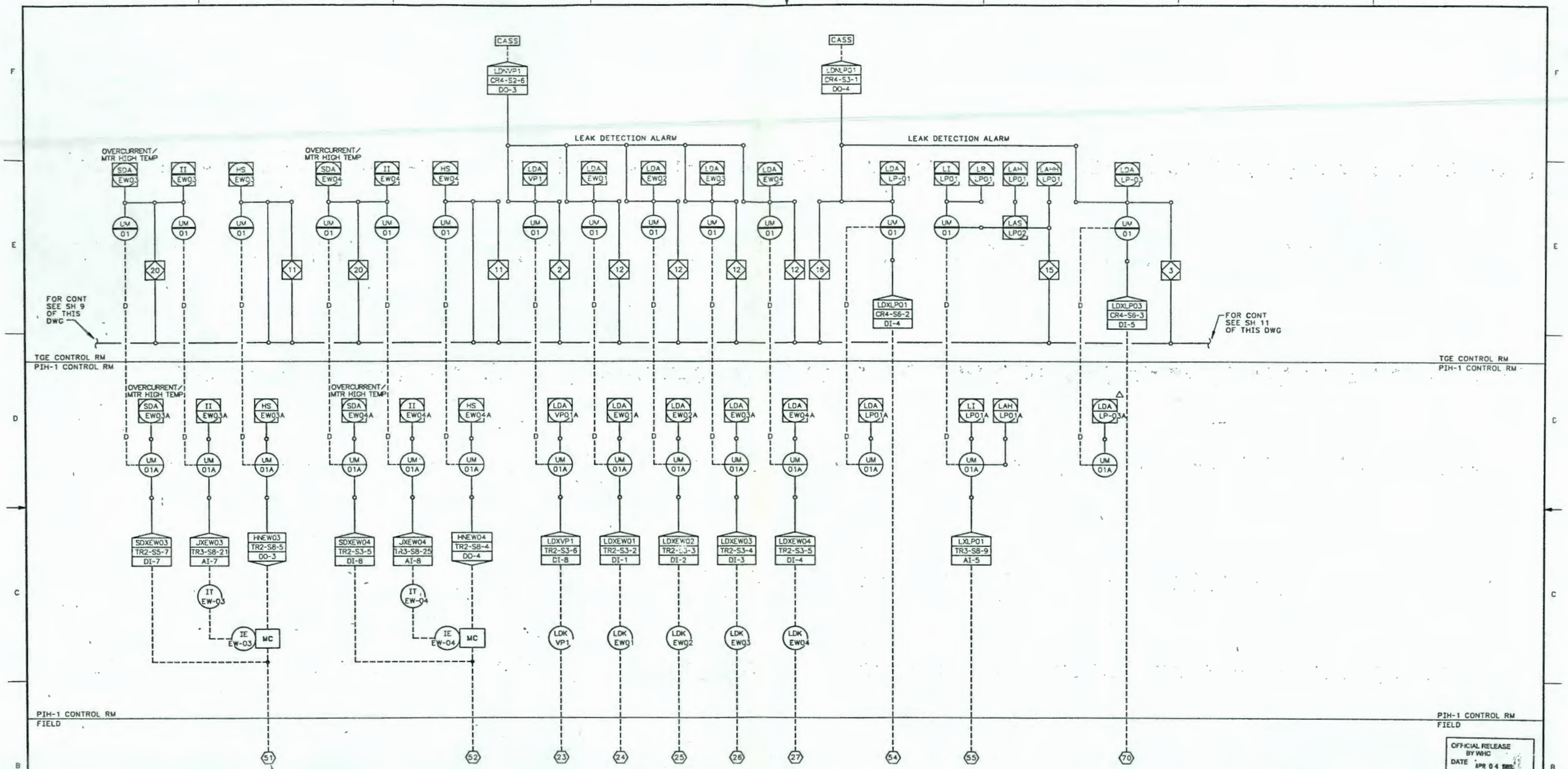

OFFICIAL RELEASE BY WHC DATE APR 04 1989

NOTE:

FOR GENERAL NOTES, LEGENDS AND INTERLOCK SCHEDULE, SEE SHEETS 1 & 2.

EDT = 101089

IMPACT LEVEL 2

WHC	12-28-1988	U.S. DEPARTMENT OF ENERGY RICHLAND OPERATIONS OFFICE
	12-28-1988	KAISER ENGINEERS HANFORD COMPANY
WH HENRIKSON	12-6-1988	PIPING & INSTM DIAGRAM UNDERGROUND VAULT
RW ITEN	12-7-1988	
AG MINISTER	12-7-1988	
HJS SUBLETT	12-7-1988	GROUT VAULT PAIR (218-E-16-102 & -103)
RC SWAN	5-17-1988	B-714 / ER1060
PA SMITH	3-15-1988	NONE / 218-E-16 / 7004
KE WALTER	3-15-1988	H-2-77618 SHEET 10 OF 12

NUMBER	TITLE	REFERENCES
DRAWING TRACEABILITY LIST		NEXT USED ON H-2-77573

DRAWING LIST

NUMBER	TITLE

BY-DATE	BY-DATE				REV
APPROVAL	NEH APPROVAL	DATE	DESCRIPTION		
REVISIONS					

COMMENT REVIEW

H2776180 C 01/05/89

9011785080

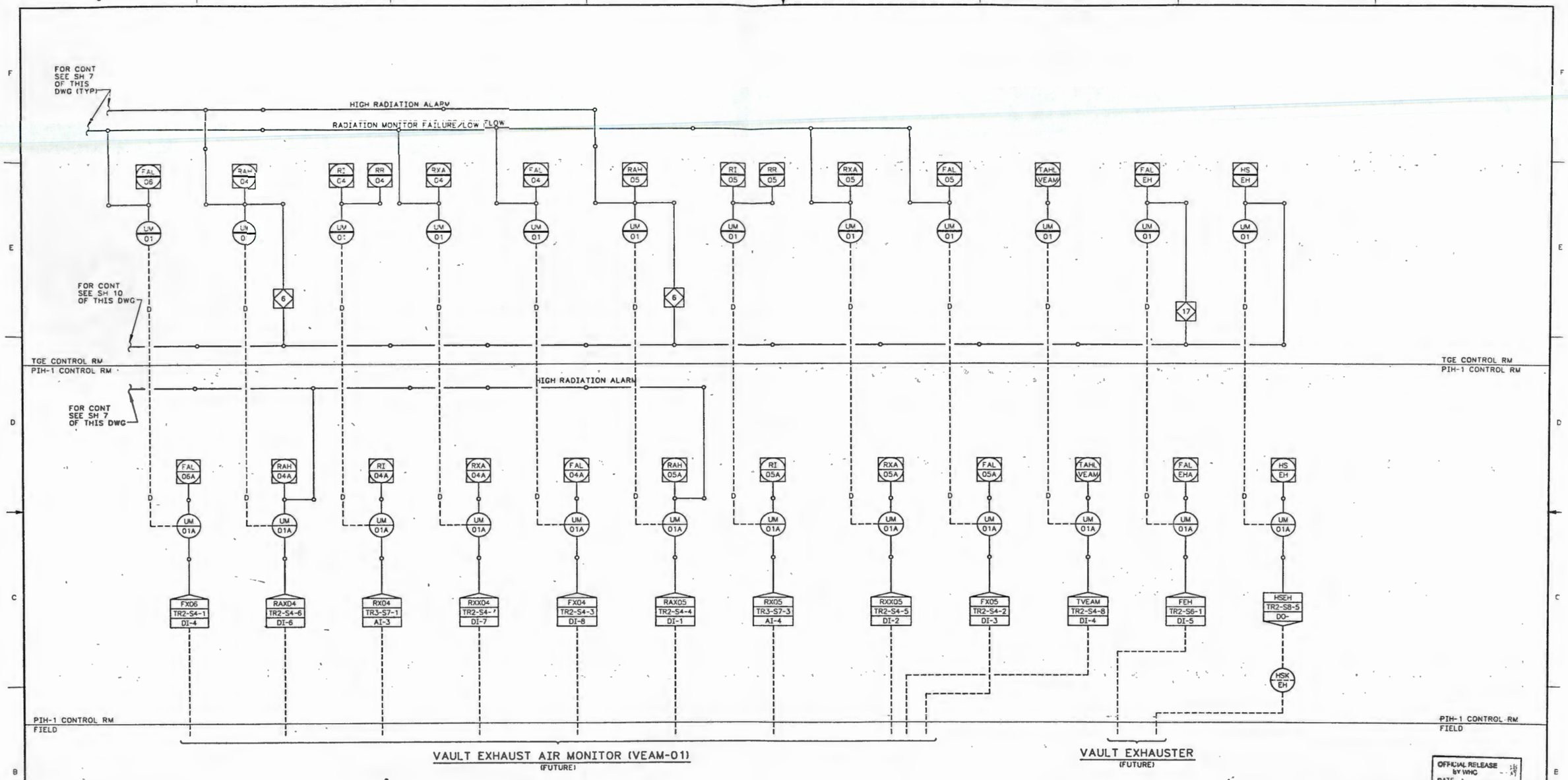

OFFICIAL RELEASE BY WHC DATE APR 04 1990

NOTE:
FOR GENERAL NOTES, LEGENDS AND INTERLOCK SCHEDULE, SEE SHEETS 1 & 2.

EDT # 101089

IMPACT LEVEL 2

WHC	12-28 1988	U.S. DEPARTMENT OF ENERGY RICHLAND OPERATIONS OFFICE
	12-28 1988	KAISER ENGINEERS HANFORD COMPANY
WH HENNIKSON	12-6 1988	PIPING & INSTM DIAGRAM UNDERGROUND VAULT
RM ITEN	12-7 1988	
AG WINISTER	12-7 1988	
HJS SUBLETT	12-7 1988	GROUT VAULT PAIR (218-E-16-102 & -103)
RC SWAN	5-17 1989	B-714 / ER1060
BM BURNSIDE	3-23 1988	NONE / 218-E-16
KE WALTER	3-15 1988	H-2-77618 / 11 / 12 / 0

DRAWING LIST

NUMBER	TITLE

DRAWING TRACEABILITY LIST

NUMBER	TITLE
REFERENCES	
NEXT USED ON	H-2-77573

BY-DATE	BY-DATE	REV	DESCRIPTION
APPROVAL	KEH APPROVAL -		
COMMENT REVIEW			

REVISIONS

H27761811

1180508 11 1 7 0 6

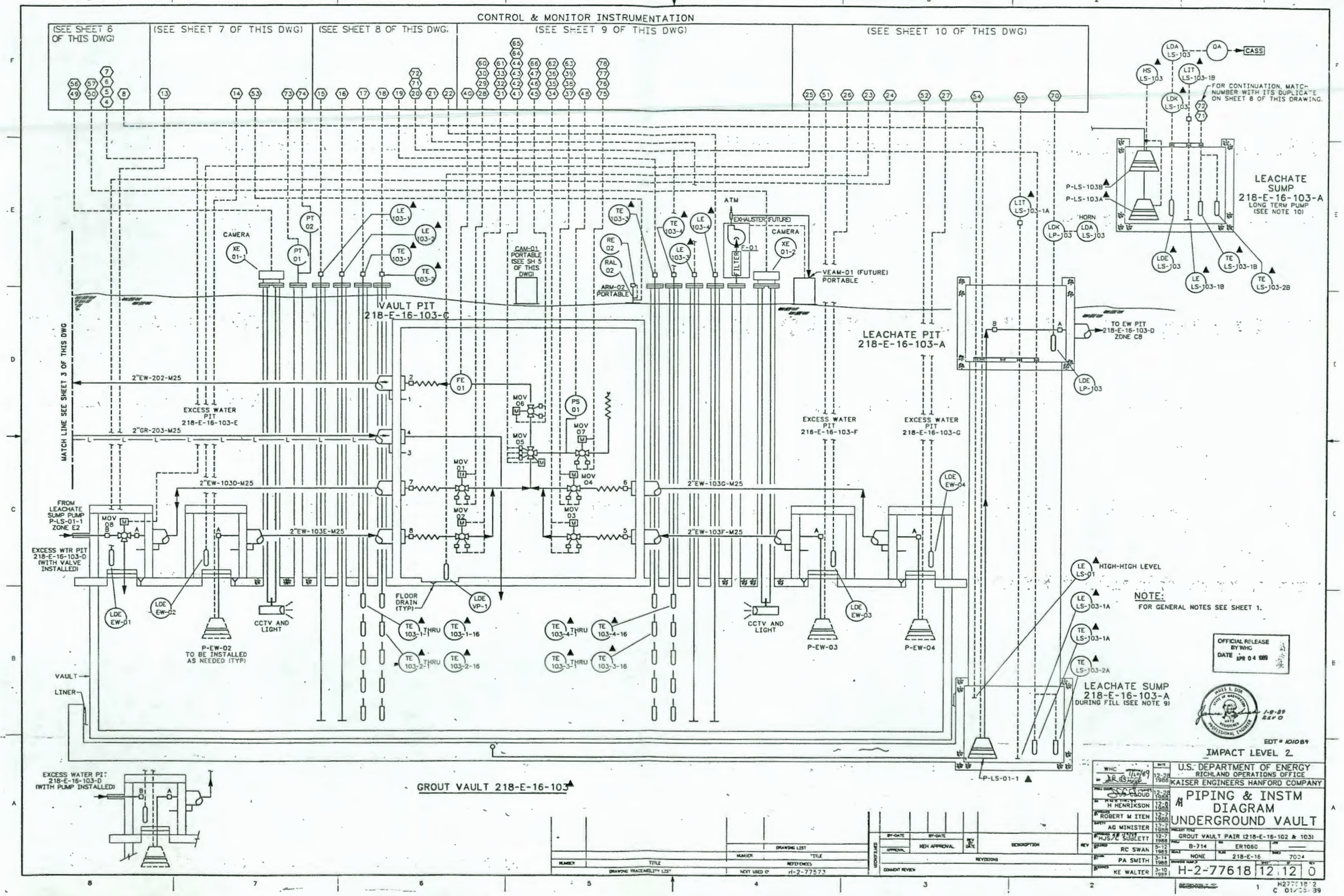

8501178 2
9011106

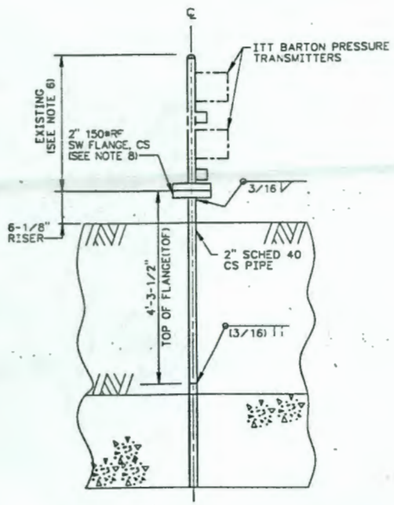

DETAIL 1
SCALE: 3/4"=1'-0"
VAULT PRESSURE TRANSMITTER PENETRATION RISER

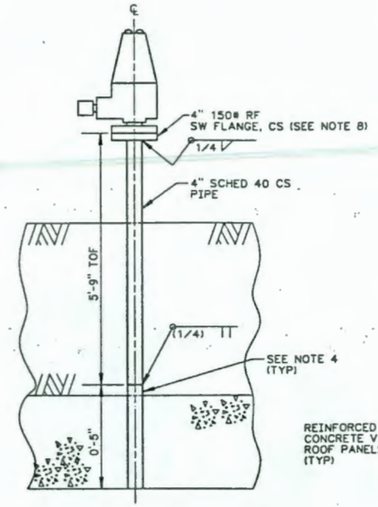

DETAIL 2
SCALE: 3/4"=1'-0"
LEVEL PROBE PENETRATION RISER

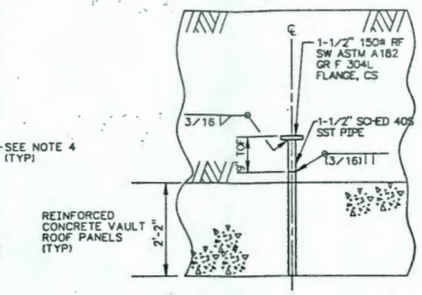

DETAIL 3
SCALE: 3/4"=1'-0"
THERMOCOUPLE PROBE PENETRATION RISER
SEE NOTE 3

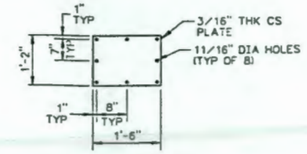

TOP VIEW

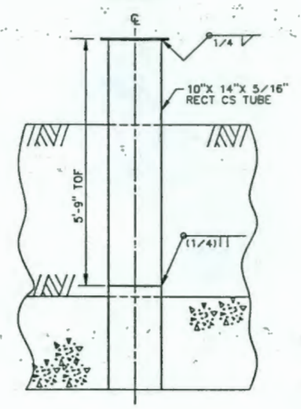

DETAIL 4
SCALE: 3/4"=1'-0"
TELEVISION CAMERA PENETRATION RISER

NOTES:

1. VAULT PRESSURE TRANSMITTER PENETRATION LOCATION AS SHOWN IS OFFSET. ACTUAL LOCATION IN THIS VIEW WOULD BE DIRECTLY BEHIND VAULT GROUT/WATER LEVEL PROBE.
2. FOR PLAN VIEW SHOWING INSTRUMENT LOCATIONS SEE DRAWING H-2-77635.
3. SEE DRAWING H-2-77620, SH 2 FOR INSTALLATION DETAILS.
4. THREE INCH LONG PIPE RISER STUB PROVIDED BY VAULT ROOF PANEL FABRICATOR.
5. CCTV CAMERA ASSEMBLY, PAN/TILT UNIT AND CABLES WITH BULKHEAD CONNECTORS ARE EXISTING. SEE DWG H-2-96584 FOR VENDOR INFORMATION
6. RELOCATE (BY OTHERS) FROM VAULT 218-E-16-101 AND BOLT TO RISER FLANGE USING (4) 5/8"-11UNC-2A X 2 1/2" LONG HEAVY HEX BOLTS WITH 5/8"-11UNC-2B HEAVY HEX NUT.
7. SET PAN/TILT LIMITS AS FOLLOWS FOR SIDE MOUNTED UNIT:
   A. SET TILT UP LIMIT TO 10°MAX (VERY IMPORTANT LIMIT)
   B. SET TILT DOWN LIMIT TO 90°
   C. SET PAN CW & CCW LIMITS TO 359°AND 1°.
8. BOLT LEVEL PROBE ASSY TO RISER USING (8) 5/8"-11UNC-2A X 3" L HEAVY HEX BOLTS WITH 5/8"-11UNC-2B HEAVY HEX NUT.
9. ALL DIMENSIONS ARE NOMINAL (±3/16").
10. PROVIDE A SPACER ASSEMBLY EVERY 1 FOOT BETWEEN FLANGE AND WEIGHT STEM.
11. ATTACH #14 STRANDED BARE COPPER GROUND WIRE WITH RING TONGUE CRIMP CONNECTOR. ATTACH AS SHOWN AND WITH SPACER, SEE DETAIL 6. CLAMP TO WEIGHT AS SHOWN.
12. THE 4 LEVEL SENSING ELEMENTS PER VAULT SHALL BE DREXELBROOK ENGINEERING CO M-700-9000-479. IT SHALL HAVE AN ACTIVE PROBE LENGTH OF 33'-9" WITH A TOTAL PROBE INSERTION LENGTH OF 42'-2". IT SHALL HAVE AN 8'-2" 304SS INACTIVE SECTION. THE WEIGHT SHALL BE A 752-287-4 MADE OF 316 SS. IT SHALL BE ASSEMBLED AS SHOWN ON SH 2 WITH A GROUND WIRE AND STAND-OFFS. IT SHALL INTERFACE WITH EXISTING DREXELBROOK TRANSMITTER, POWER SUPPLY AND CABLE ALSO FOUND ON ABOVE P.O. EACH OF THE 4 LEVEL SENSORS SHALL BE CONSTRUCTED AND TAGGED PER LEVEL ASSEMBLY ON SHEET 2.
13. ATTACH A 4"L X 3.96" DIA LEAD DONUT TO THE FLANGE AS SHOWN.

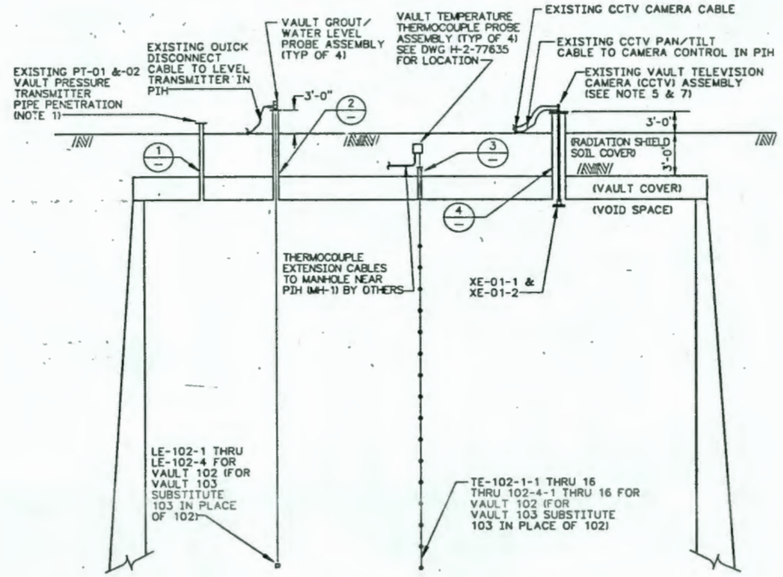

VAULT SECTION A
SCALE: 3/16"=1'-0"
SEE NOTE 2
H-2-77635

OFFICIAL RELEASE BY WHC
DATE APR 04 1989

1-9-89 REV 0

EDT # 101084

IMPACT LEVEL 3

DRAWING TRACEABILITY LIST			
NUMBER	TITLE	NUMBER	TITLE
		H-2-77573	DRAWING LIST
		REFERENCES	
		NEXT USED ON H-2-77573	

REVISIONS				
BY-DATE	BY-DATE	REV BY DATE	DESCRIPTION	REV
WHC APPROVAL	KEH APPROVAL			

COMMENT REVISE

MICROFILMED

		DATE
WHC APPROVAL		12-28 1988
PROJ ENGR		12-28 1988
DR	H HENRIKSON	12-8 1988
APPROVED	ROBERT M MEN	12-7 1988
SAFETY	AG MINISTER	12-7 1988
APPROVED BY	HJS/J SUBLETT	12-7 1988
DESIGNED BY	JES/RC SWAN	5-16 1988
DRAWN BY	PA SMITH	4-15 1988
DESIGNED BY	HJ STEFFENS	4-14 1988

U.S. DEPARTMENT OF ENERGY
RICHLAND OPERATIONS OFFICE
KAISER ENGINEERS HANFORD COMPANY

INSTM
VAULT MTD INSTM
INSTL DETAILS

PROJECT TITLE: GROUT VAULT PAIR (218-E-16-102 & 103)

PROJ	EO	JOB
B-714	ER1060	—

SCALE	BLDG	SHEET
AS NOTED	218-E-16	5931

DRAWING NUMBER	SHEET	OF	REV
H-2-77619	1	2	C

~~DEFORAS~~

H277619A1
C 01/04/8

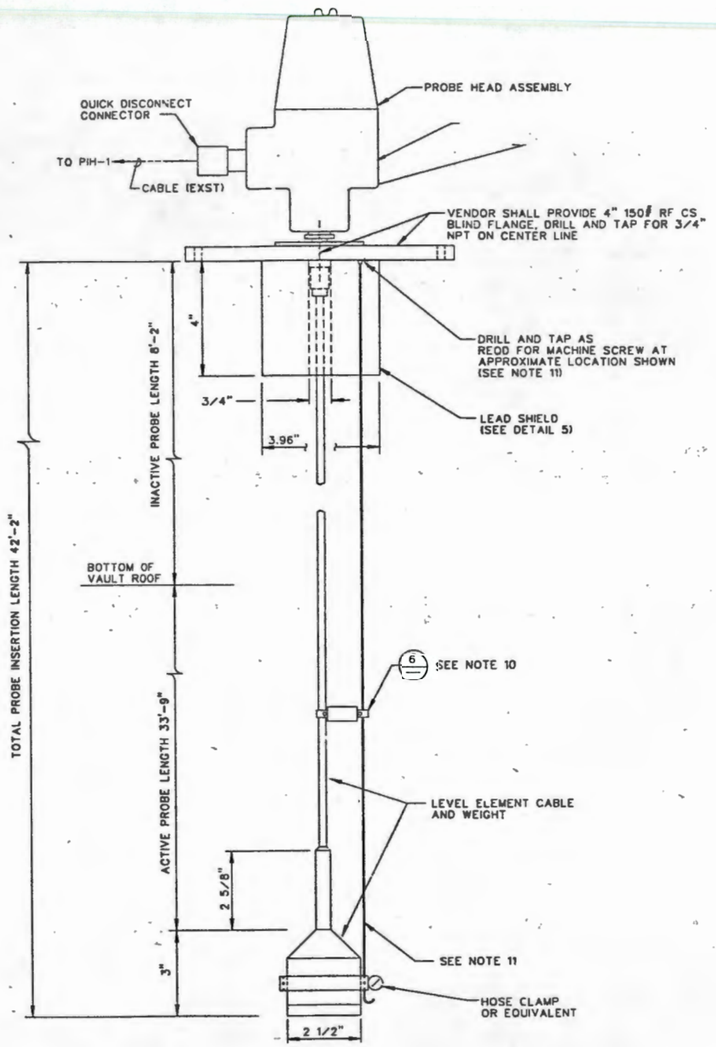

LEVEL ELEMENT ASSEMBLY
NTS
(SEE NOTE 12 & 13)
TAGGING: LE-102-1,LE-102-2,LE-102-3 & LE-102-4 FOR VAULT 102
LE-103-1,LE-103-2,LE-103-3 & LE-103-4 FOR VAULT 103

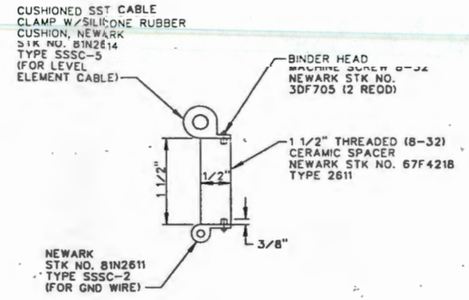

DETAIL 6
SCALE: FULL

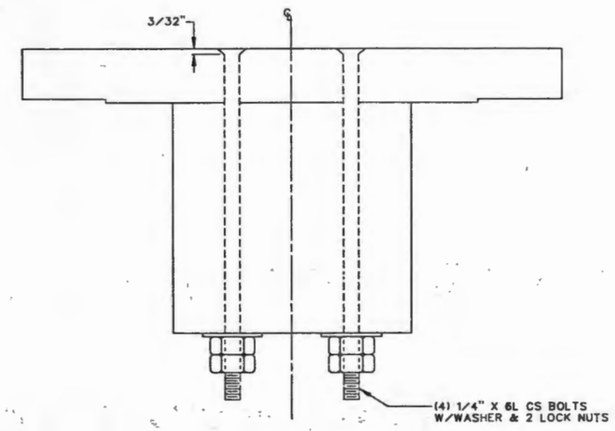

DETAIL 5
SCALE: FULL

NOTE:
1. SEE SHEET 1 FOR NOTES

OFFICIAL RELEASE BY WHC
DATE 1-28-89

1-8-89
REV 0

EDT = 101089

IMPACT LEVEL 3

WHC		DATE	U.S. DEPARTMENT OF ENERGY RICHLAND OPERATIONS OFFICE
		12-28-1988	KAISER ENGINEERS HANFORD COMPANY
PROJ. ENGR	JD CLOUD	12-28-1988	M NSTM VAULT MTD LEVEL ASSY
DA	H HENRIKSON	12-8-1988	
APPROVED BY	RM ITEN	12-7-1988	
SAFETY	AG MINISTER	12-7-1988	PROJECT TITLE GROUT VAULT PAIR (218-E-16-102 & 103)
APPROVED BY	HJS O'SUBLETT	12-7-1988	
CHECKED BY	RC SWAN	5-12-1988	PROJ B-714 / WO ER1060 / JOB
DRAWN BY	PA SMITH	4-15-1988	SCALE 1/2 SQ. & AS NOTED / BLDG 218-E-16 / INDEX 5901
DESIGNED BY	HJ STEFFENS	4-14-1988	DRAWING NUMBER H-2-77619 / SHEET 2 / SH 2 / REV 0

NUMBER	TITLE
	DRAWING TRACEABILITY LIST

NUMBER	TITLE
H-2-77573	DRAWING LIST
	REFERENCES
NEXT USED ON	H-2-77573

BY-DATE	BY-DATE	REV BY DATE	DESCRIPTION	REV
APPROVAL	KEH APPROVAL		REVISIONS	
COMMENT REVIEW				

MICROFILMED

H2776192A2
C 01/20/89

9011785084

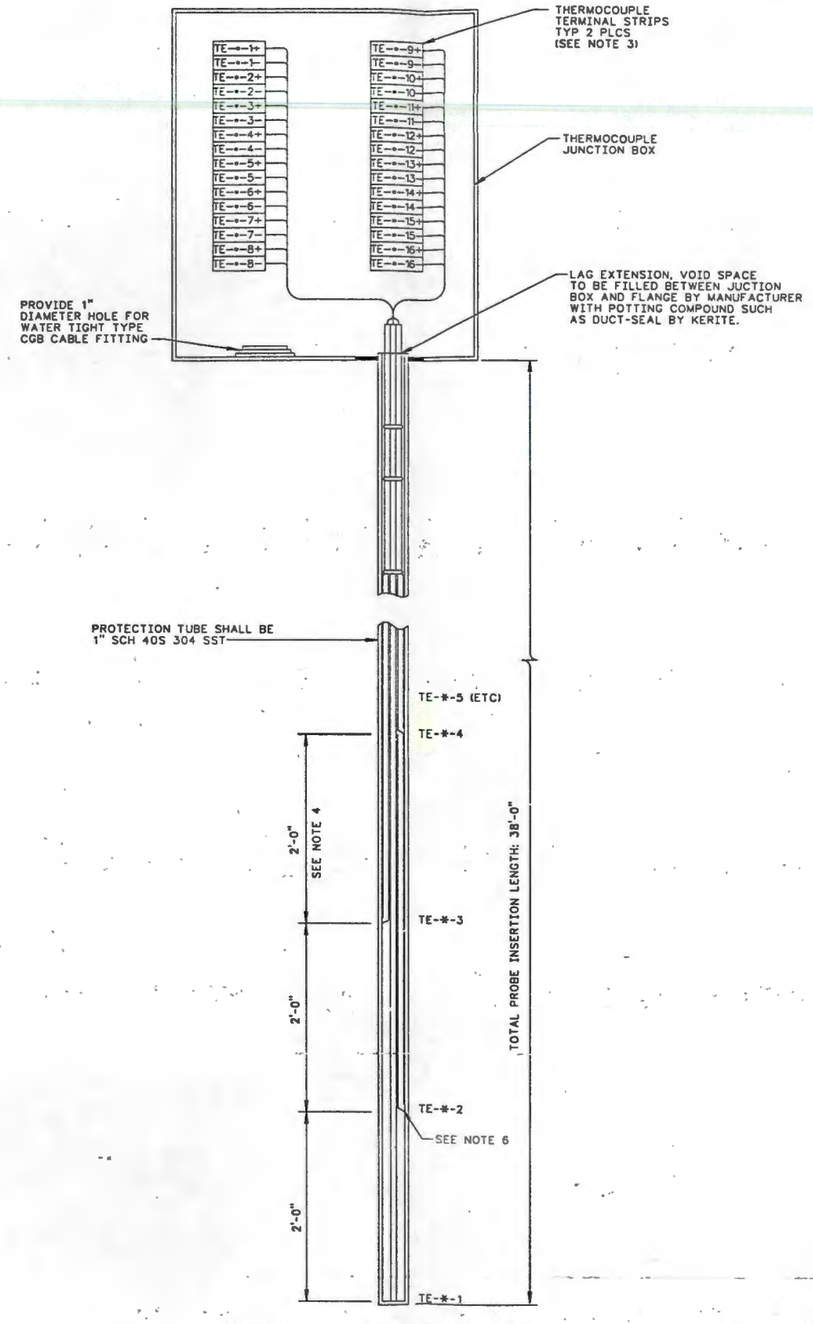

THERMOCOUPLE PROBE ASSEMBLY

*- USED IN LIEU OF 102-1, 102-2, 102-3 & 102-4 FOR VAULT 102
*-USED IN LIEU OF 103-1, 103-2, 103-3 & 103-4 FOR VAULT 103
(SEE NOTE 1,2 & 3)

NOTES:

1. SEE CONSTRUCTION SPECIFICATION B-714-C2, Y102 FOR THERMOCOUPLE ASSEMBLY.
2. FOUR COMPLETE ASSEMBLIES OF THERMOCOUPLE PROBES ARE REQUIRED FOR EACH VAULT.
3. THERMOCOUPLE ASSEMBLIES AS SUPPLIED BY VENDOR SHALL HAVE PROTECTION TUBE. THERMOCOUPLE JUNCTION BOX SHALL BE SUITABLE FOR BURIAL WITH 2 THERMOCOUPLE TERMINAL STRIPS. ALL THERMOCOUPLE LEADS SHALL BE CONNECTED TO APPROPRIATE TERMINAL ON TERMINAL STRIPS. TERMINAL STRIPS SHALL HAVE CHROMEL (+) AND ALUMEL (-) TERMINALS.
4. EQUAL SPACING OF 2'-0" BETWEEN ALL 16 THERMOCOUPLES. TOTAL ACTIVE LENGTH IS 30'-0".
5. ALL DIMENSIONS ARE NOMINAL (±3/16").
6. PLACE A CRUMPLED 2" SQUARE PIECE OF ALUMINUM FOIL AT THE BOTTOM OF EACH TUBE FOR BETTER HEAT TRANSFER.

OFFICIAL RELEASE BY WHC
DATE APR 04 1989

EDT = 101089

IMPACT LEVEL 3

VENDOR INFORMATION

WHC APPROVAL BY JR Evans	DATE 12-28 1988	U.S. DEPARTMENT OF ENERGY RICHLAND OPERATIONS OFFICE	
PROJ ENGR BY CDLEBOUD	12-28 1988	KAISER ENGINEERS HANFORD COMPANY	
DR BY H HENRIKSON	12-8 1988	INSTM VAULT MTD INSTM T/C ASSEMBLY	
APPROVED BY ROBERT M ITEN	12-7 1988		
SAFETY AG MINISTER	12-7 1988		
APPROVED BY (PROJ) HJS/C SUBLETT	12-7 1988	PROJECT TITLE GROUT VAULT PAIR (218-E-16-102 & 103)	
ENGINEER BY RC SWAN	5-17 1988	PROJ B-714	WO ER1060	JOB 242500
DRAWN BY PA SMITH	4-15 1988	SCALE NONE	BLDG 218-E-15	INDEX 590'
DESIGNED BY HJ STEFFENS	4-14 1988	DRAWING NUMBER H-2-77620	SHEET 1	OF 2	REV 0

NUMBER	TITLE
	DRAWING TRACEABILITY LIST

NUMBER	TITLE
H-4-77573	DRAWING LIST
REFERENCES	
NEXT USED ON H-4-77573	

BY-DATE	BY-DATE	REV BY DATE	DESCRIPTION	REV
APPROVAL	KEH APPROVAL		REVISIONS	
COMMENT REVIEW				

MICROFILMED

H277620A*
C 01/04/89

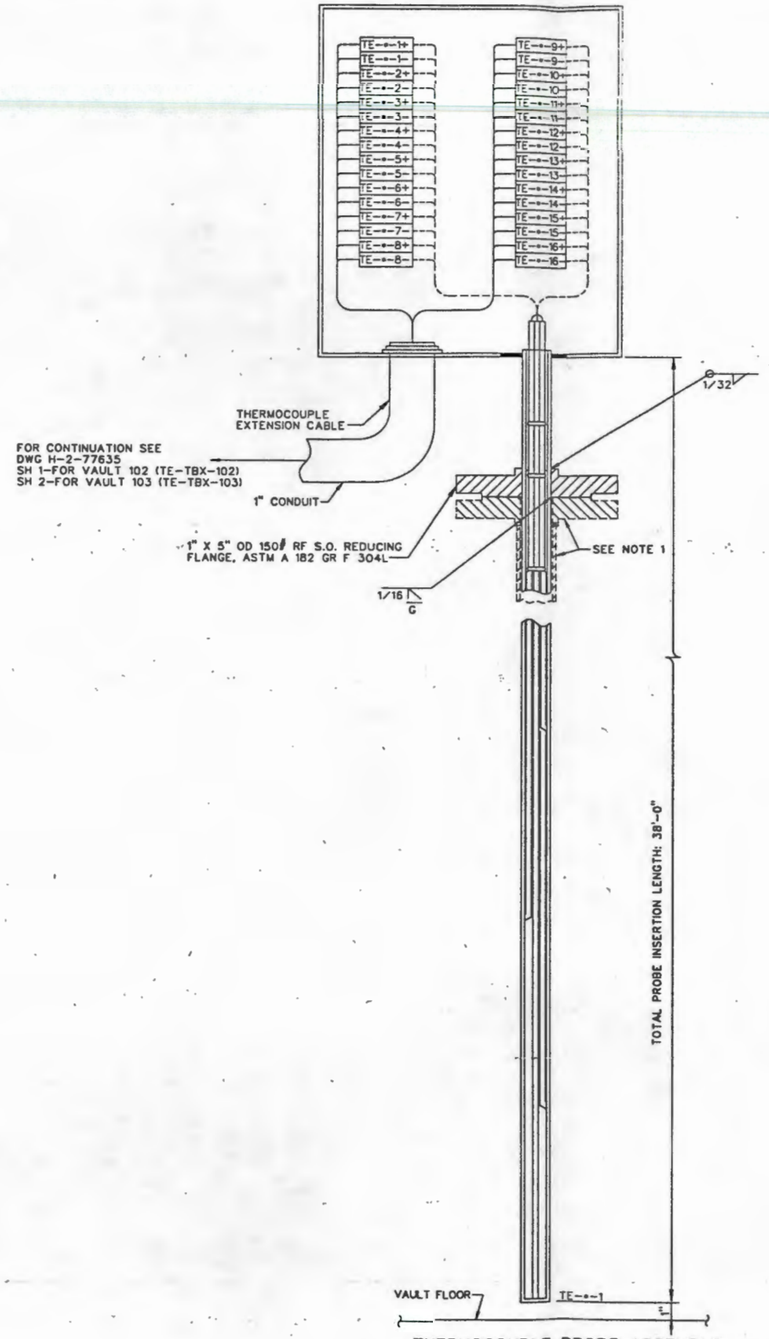

THERMOCOUPLE PROBE ASSEMBLY

TE-102-1, TE-102-2, TE-102-3 & TE-102-4 FOR VAULT 102
TE-103-1, TE-103-2, TE-103-3 & TE-103-4 FOR VAULT 103

NOTES:

1. FOR FLANGE AND PIPE DETAILS SEE DETAIL 3 ON DRAWING H-2-77619, SH 1.
2. BOLT THERMOCOUPLE ASSY TO RISER USING (4) 1/2"-13UNC-2A X 2-1/2" L HEAVY HEX BOLTS WITH 1/2"-13UNC-2B HEAVY HEX NUT.

OFFICIAL RELEASE BY WHC DATE APR 04 1989

EDT # 101089

IMPACT LEVEL 3

DRAWING TRACEABILITY LIST			
NUMBER	TITLE		

REFERENCES	
NUMBER	TITLE
H-4-77573	DRAWING LIST
NEXT USED ON H-4-77573	

REVISIONS				
BY-DATE	BY-DATE	REV BY DATE	DESCRIPTION	REV
APPROVAL	KEH APPROVAL			
COMMENT REVIEW				

MICROFILMED

WHC APPROVAL BY JR Bruggs 7/10/89	DATE 12-28 1988	U.S. DEPARTMENT OF ENERGY RICHLAND OPERATIONS OFFICE
PROJ ENGR JR CLOUD	12-28 1988	KAISER ENGINEERS HANFORD COMPANY
DA H H HENRIKSON	12-8 1988	INSTM VAULT MTD INSTM T/C ASSEMBLY
APPROVED BY ROBERT M ITEN	12-7 1988	
SAFETY AG MINSTER	12-7 1988	PROJECT TITLE GROUT VAULT PAIR (218-E-16-102 & 103)
APPROVED BY HJS/W SUBLETT	12-7 1988	PROJ B-714 NO ER1060 JOB
CHECKED BY RC SWAN	5-17 1988	SCALE NONE BLDG 218-E-16 INDEX 5901
DRAWN BY PA SMITH	4-15 1988	DRAWING NUMBER H-2-77620 SHEET 2 OF 2 REV
DESIGNED BY HJ STEFFENS	4-14 1988	

~~REDRAWN~~ H277620A2 C 01/03/89

9011785086

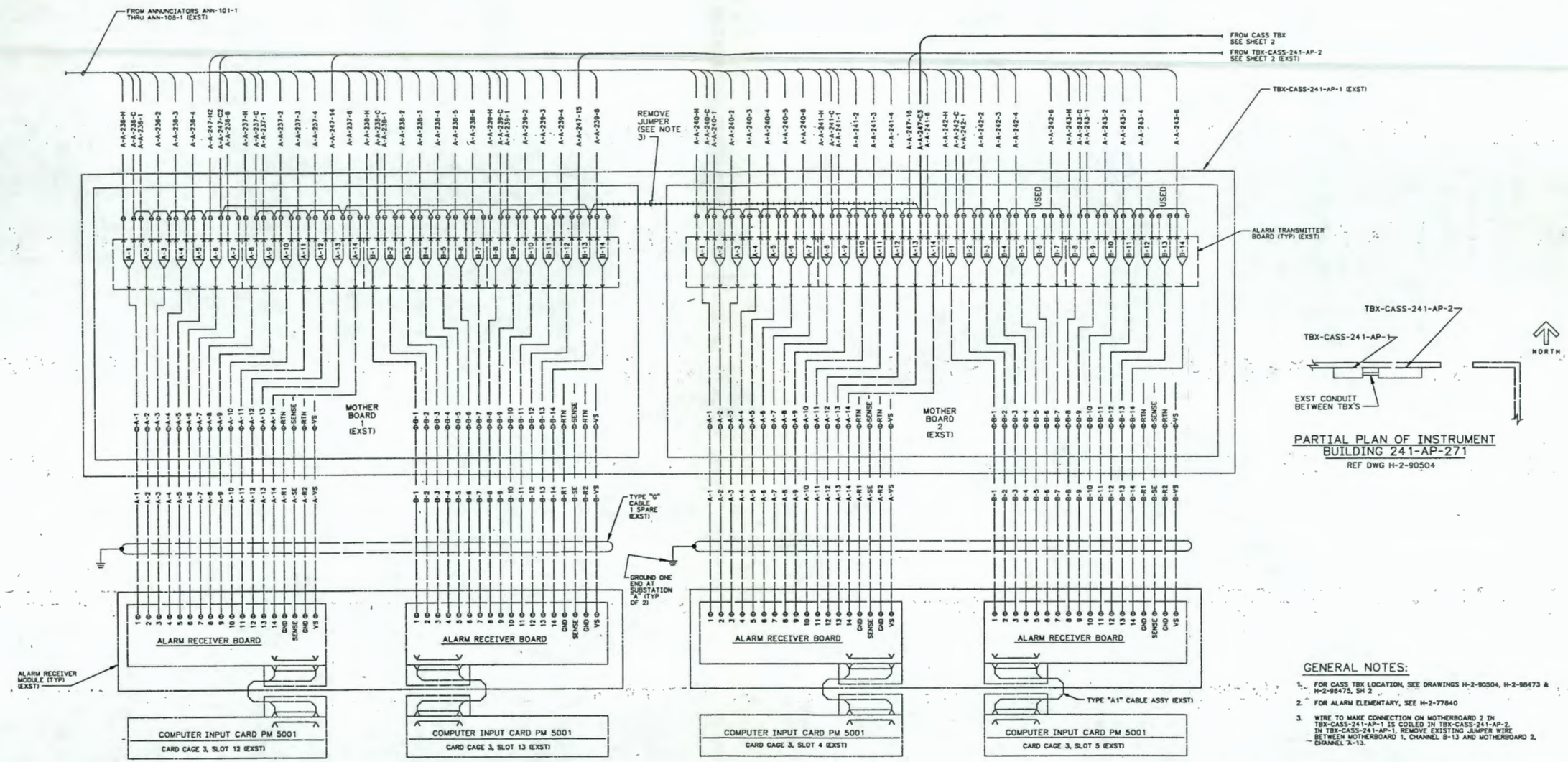

PARTIAL PLAN OF INSTRUMENT BUILDING 241-AP-271

REF DWG H-2-90504

CASS ALARM INTERFACE CONNECTION DIAGRAM A

BLDG 241-AP-271

REF DWG H-2-90507, SH 1 & H-2-98471, SH 1

GENERAL NOTES:

1. FOR CASS TBX LOCATION, SEE DRAWINGS H-2-90504, H-2-98473 & H-2-98475, SH 2
2. FOR ALARM ELEMENTARY, SEE H-2-77840
3. WIRE TO MAKE CONNECTION ON MOTHERBOARD 2 IN TBX-CASS-241-AP-1 IS COILED IN TBX-CASS-241-AP-2. IN TBX-CASS-241-AP-1, REMOVE EXISTING JUMPER WIRE BETWEEN MOTHERBOARD 1, CHANNEL B-13 AND MOTHERBOARD 2, CHANNEL A-13.

OFFICIAL RELEASE BY WHC
DATE APR 04 1989

1-8-89 REV 0

EDT # 101089

IMPACT LEVEL 2

DRAWING TRACEABILITY LIST			
H-2-98471	SH 1-INSTM CASS AL INTFC CONN DIAG	H-2-98475	SH 2-ELEC DETAILS
H-2-90507	SH 1-INSTM CASS AL INTFC CONN DIAG	H-2-98504	INSTM CASS AL INTFC EOPT ARR
H-2-98473	ELEC SITE & VAULT PLAN & DETAILS	H-2-77573	DRAWING LIST
NUMBER	TITLE	NUMBER	TITLE
		REFERENCES	
		NEXT USED ON	H-2-77573

REV	DESCRIPTION	REV BY DATE	BY-DATE	BY-DATE
	REVISIONS		KEH APPROVAL	APPROVAL
				COMMENT REVIEW

MICROFILMED

		DATE
WHC APPROVAL BY		12-28-1989
PROJ.		12-28-1989
DR.	H HENRIKSON	12-8-1989
APPROVED BY	ROBERT M ITEN	12-7-1989
SAFETY	AG MINISTER	12-7-1989
APPROVED BY	HJS/D SUBLETT	12-7-1989
CHECKED BY	RC SWAN	5-17-1988
DRAWN BY	PA SMITH	4-25-1988
DESIGNED BY	HJ STEFFENS	4-25-1988

U.S. DEPARTMENT OF ENERGY
RICHLAND OPERATIONS OFFICE
KAISER ENGINEERS HANFORD COMPANY

INSTM CASS ALARM INTERFACE CONNECTION DIAGRAM

PROJECT TITLE: GROUT VAULT PAIR (218-E-16-102 & 103)

PROJ.	NO	JOB
B-714	ER1060	

SCALE	BLDG	INDEX
NONE	241-AP,218-E-16	

DRAWING NUMBER	SHEET	OF
H-2-77621	1	2

H277621A1
C 01/03/89

~~DESTROYED~~

9011718

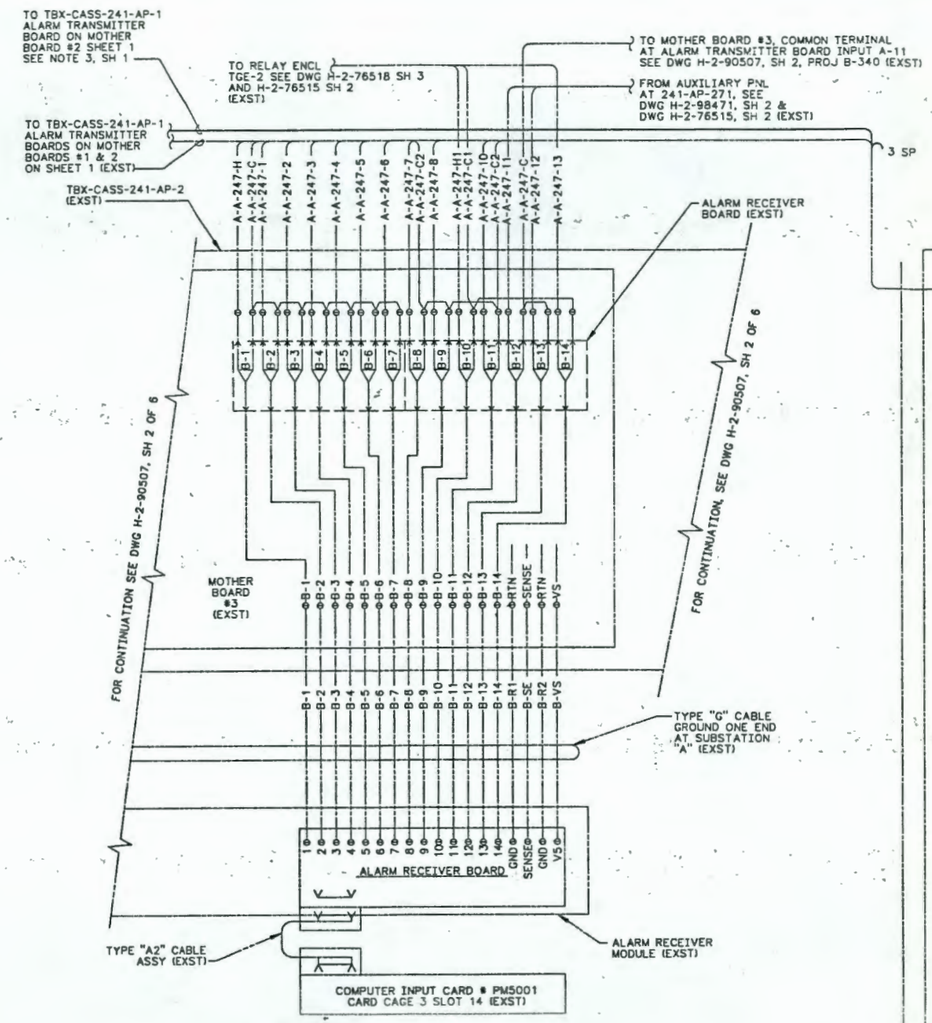

CASS ALARM INTERFACE CONNECTION DIAGRAM B

BLDG 241-AP-271

REF DWG H-2-90507, SH 2 & H-2-98471, SH 2

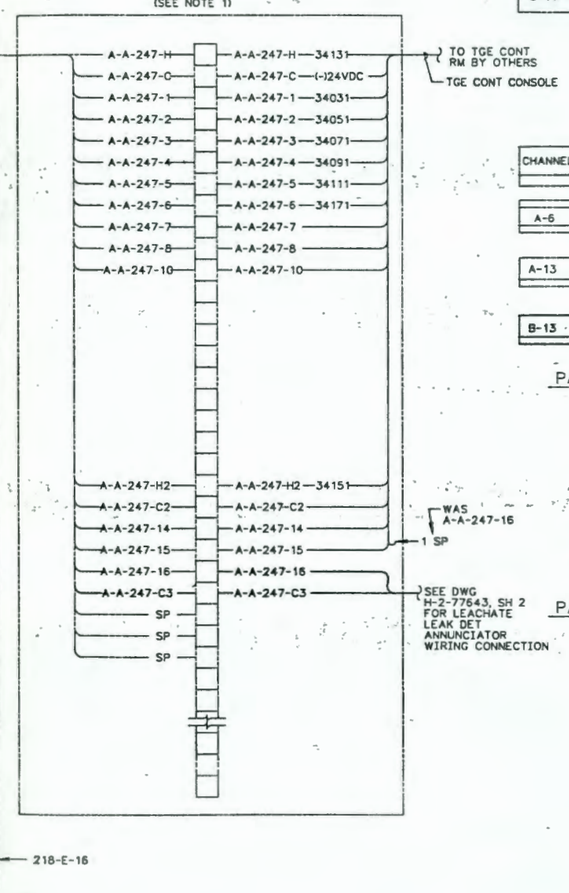

CHANNEL	CASS ALARM	CASS WIRE	TGE WIRE	ANNUNCIATOR WIRE
B-1	TGE LOSS OF 480V PRIMARY POWER	A-A-247-H,-C	34131,-24VDC	NONE
B-2	TGE BACKFLOW HIGH RADIATION	A-A-247-1	34031	NONE
B-3	TGE FILTRATION MODULE MOTOR PIT HIGH RADIATION	A-A-247-2	34051	NONE
B-4	TGE EXHAUST STACK HIGH RADIATION	A-A-247-3	34071	NONE
B-5	TGE MIXER MODULE HIGH-LOW PRESSURE	A-A-247-4	34091	NONE
B-6	TGE LCT/MM TK/SUMPS HIGH LEVEL	A-A-247-5	34111	NONE
B-7	TGE COMPOSITE ALARMS ACTIVATION	A-A-247-6	34171	NONE
B-8	TGE AREA RADIATION MONITOR/ CONTINUOUS AIR MONITOR/VAULT EXHAUST AIR MONITOR-HIGH RADIATION	A-A-247-7	64351	NONE
B-9	TGE AREA RADIATION MONITOR/ CONTINUOUS AIR MONITOR/VAULT EXHAUST AIR MONITOR-FAILURE & LOW FLOW	A-A-247-8	64371	NONE
B-10	TRANSPORTABLE GROUT EQUIPMENT RELAY CABINET POWER SUPPLY	A-A-247-H1,-C1	NONE	A-7-H, A-7-N
B-11	TGE VAULT PRESSURE HIGH OR LOW	A-A-247-10	64431	NONE
B-12	AP FARM PUMP PIT02D LEAK DETECTOR FAILURE	A-A-247-11	NONE	ANN-AUX-42
B-13	TRANSPORTABLE GROUT EQUIPMENT LINE SN-621 LEAK DETECTOR FAILURE	A-A-247-12	NONE	ANN-AUX-43
B-14	AP FARMS-SEISMIC DISTURBANCE DETECTED	A-A-247-13	NONE	A-7-1

CASS ALARM INTERFACE ENCLOSURE TBX-CASS-241-AP-2

241-AP-271 BLDG

MOTHERBOARD 3

REF DWG H-2-98471, SH 2

CHANNEL	CASS ALARM	CASS WIRE	TGE WIRE	ANNUNCIATOR WIRE
A-6	TGE STANDBY GENERATOR OPERATING	A-A-247-H2,-C2	34151	NONE
A-13	TGE ENCASED LINE LEAK DETECTORS	A-A-247-14	64391	NONE
B-13	VP,EW & LEACH SUMP LDK	A-A-247-15	64471	NONE

PARTIAL OF CASS ALARM INTERFACE ENCLOSURE TBX-CASS-241-AP-1

241-AP-271 BLDG

MOTHERBOARD 1

REF DWG H-2-98471, SH 2

CHANNEL	INTERFACED ALARM	CASS WIRE	ANNUNCIATOR WIRE
A-13	GROUT GENERAL ALARM	A-A-247-16,-C3	ANN-1

PARTIAL OF CASS ALARM INTERFACE ENCLOSURE TBX-CASS-241-AP-1

241-AP-271 BLDG

MOTHERBOARD 2

REF DWG H-2-98471, SH 2

NOTES:

1. FOR GENERAL NOTES, SEE SHEET 1.

OFFICIAL RELEASE BY WHC DATE APR 04 1989

EDT = 101089

1-8-89 REV 0

IMPACT LEVEL 2

WHC APPROVAL BY	12/8/87	DATE 12-28-1988	U.S. DEPARTMENT OF ENERGY RICHLAND OPERATIONS OFFICE
			KAISER ENGINEERS HANFORD COMPANY
PROJECT ENGINEER		12-28-1988	INSTM CASS ALARM INTERFACE CONNECTION DIAGRAM
DS ENGINEER H HENRIKSON		12-8-1988	
APPROVED BY ROBERT M ITEN		12-7-1988	
SAFETY AG MINISTER		12-7-1988	
APPROVED BY HJS/O SUBLETT		12-7-1988	PROJECT TITLE GROUT VAULT PAIR (218-E-16-102 & 103)
CHECKED BY RC SWAN		5-17-1988	PROJ. B-714 / WO ER1060 / JOB
DRAWN BY PA SMITH		4-25-1988	SCALE NONE / BLDG 241-AP,218-E-16 / DWG 1603
DESIGNED BY HJ STEFFENS		4-25-1988	DRAWING NUMBER H-2-77621 / SHEET 2 / 2

NUMBER	TITLE	NUMBER	TITLE
H-2-98471	SH 2-INSTM CASS AL INTFC CONN DIAG	H-2-77573	DRAWING LIST
H-2-90507	SH 2-INSTM CASS AL INTFC CONN DIAG		

DRAWING TRACEABILITY LIST — REFERENCES — NEXT USED ON H-2-77573

REV	DESCRIPTION	REV BY DATE	BY-DATE	CY-DATE
			APPROVAL	KEH APPROVAL

REVISIONS

MICROFILMED — COMMENT REVIEW

H277621AL C 01/ 3/89

901175081

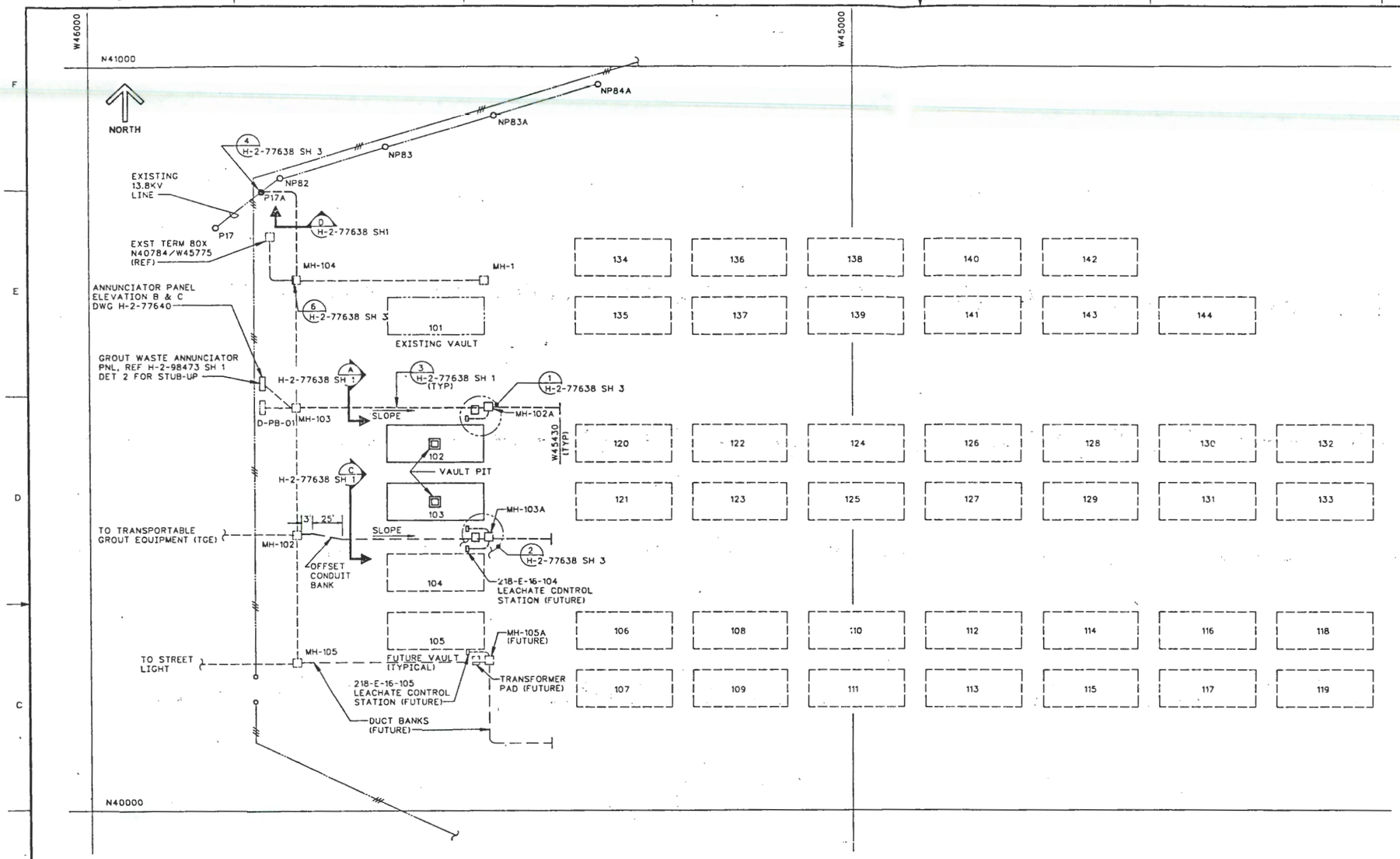

PLAN
SCALE: 1"=60'-0"

NOTES:
1. ABBREVIATIONS ARE PER ANSI Y1.1, UNLESS OTHERWISE NOTED.

OFFICIAL RELEASE BY WHC
DATE APR 04 1989

EDT # 101084

1-7-89
REV 0

IMPACT LEVEL 2

WHC APPROVAL		DATE	U.S. DEPARTMENT OF ENERGY RICHLAND OPERATIONS OFFICE
BY SR BRIGGS		12-28 1988	KAISER ENGINEERS HANFORD COMPANY
PROJ ENGR BY		12-28 1988	ELECTRICAL SITE PLAN
DR A REVISED BY	JE BREED	7-13 1988	
APPROVED BY	RM ITEN	7-13 1988	
SAFETY BY	D PARTHREE	7-11 1988	
APPROVED BY	MAC SUBLETT	7-11 1988	
SUPERVISOR BY	RJ HARMAN	7-5 1988	PROJECT TITLE: GROUT VAULT PAIR 218-E-16-102 & 103
DRAWN BY	JL BRINKLEY	3-10 1988	PROJ B-714 / WO ER1060 / JOB 242500
VERIFIED BY	WC ATKINS	3-15 1988	SCALE SHOWN / BLDG 218-E-16 / SHEET 7301
CAD FILE	B077634A		DRAWING NUMBER H-2-77634 / SHEET 1 / SH 1 / REV 0
CAD DIR	KGRM:ACD:9.0:NN		

NUMBER	TITLE
H-2-98473	ELEC SITE & VAULT PLAN & DET
H-2-77573	DRAWING LIST

DRAWING TRACEABILITY LIST — REFERENCES — NEXT USED ON

BY-DATE	BY-DATE	REV BY DATE	DESCRIPTION	REV
APPROVAL	KEH APPROVAL		REVISIONS	
COMMENT REVIEW				

MICROFILMED

KEHCAD 110021

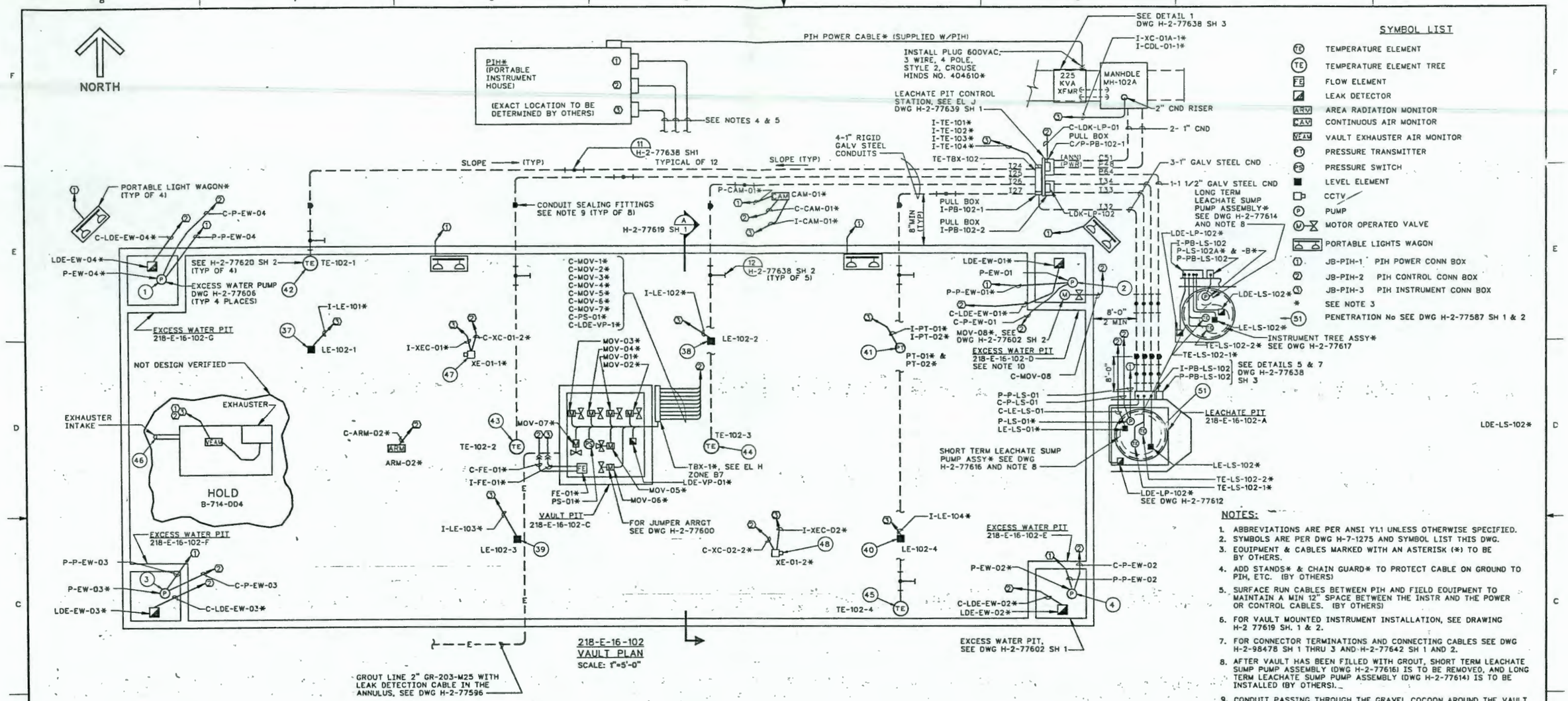

SYMBOL LIST

- TE — TEMPERATURE ELEMENT
- TE — TEMPERATURE ELEMENT TREE
- FE — FLOW ELEMENT
- LEAK DETECTOR
- ARM — AREA RADIATION MONITOR
- CAM — CONTINUOUS AIR MONITOR
- VEAM — VAULT EXHAUSTER AIR MONITOR
- PT — PRESSURE TRANSMITTER
- PS — PRESSURE SWITCH
- LEVEL ELEMENT
- CCTV
- P — PUMP
- M — MOTOR OPERATED VALVE
- PORTABLE LIGHTS WAGON
- 1 — JB-PIH-1 PIH POWER CONN BOX
- 2 — JB-PIH-2 PIH CONTROL CONN BOX
- 3 — JB-PIH-3 PIH INSTRUMENT CONN BOX
- * — SEE NOTE 3
- 51 — PENETRATION No SEE DWG H-2-77587 SH 1 & 2

NOTES:

1. ABBREVIATIONS ARE PER ANSI Y1.1 UNLESS OTHERWISE SPECIFIED.
2. SYMBOLS ARE PER DWG H-7-1275 AND SYMBOL LIST THIS DWG.
3. EQUIPMENT & CABLES MARKED WITH AN ASTERISK (*) TO BE BY OTHERS.
4. ADD STANDS* & CHAIN GUARD* TO PROTECT CABLE ON GROUND TO PIH, ETC. (BY OTHERS)
5. SURFACE RUN CABLES BETWEEN PIH AND FIELD EQUIPMENT TO MAINTAIN A MIN 12" SPACE BETWEEN THE INSTR AND THE POWER OR CONTROL CABLES. (BY OTHERS)
6. FOR VAULT MOUNTED INSTRUMENT INSTALLATION, SEE DRAWING H-2 77619 SH. 1 & 2.
7. FOR CONNECTOR TERMINATIONS AND CONNECTING CABLES SEE DWG H-2-98478 SH 1 THRU 3 AND H-2-77642 SH 1 AND 2.
8. AFTER VAULT HAS BEEN FILLED WITH GROUT, SHORT TERM LEACHATE SUMP PUMP ASSEMBLY (DWG H-2-77616) IS TO BE REMOVED, AND LONG TERM LEACHATE SUMP PUMP ASSEMBLY (DWG H-2-77614) IS TO BE INSTALLED (BY OTHERS).
9. CONDUIT PASSING THROUGH THE GRAVEL COCOON AROUND THE VAULT & LEACHATE PIT TO HAVE SEALING FITTINGS INSTALLED. CONDUIT SEALING FITTINGS TO BE CROUSE HINDS TYPE EYS, SEALED WITH CHICO X FIBER AND CHICO A COMPOUND INSTALLED PER MANUFACTURERS RECOMMENDATIONS.
10. PUMP P-EW-01 OR MOV-8 MAY BE INSTALLED IN EXCESS WATER PITS 218-E-16-102D AND 218-E-16-1030 BUT NOT BOTH IN THE SAME PIT AT THE SAME TIME.

NOT DESIGN VERIFIED — HOLD B-714-004 HOLDING FOR EXHAUSTER DESIGN BY WHC.

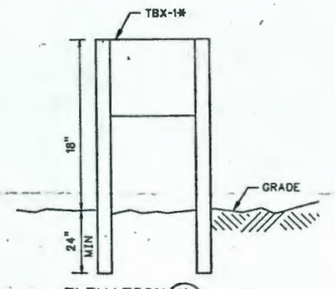

ELEVATION H
SCALE: NONE

OFFICIAL RELEASE BY WHC DATE APR 14 1989

IMPACT LEVEL 2
EDT # 102073

WHC	APPROVAL	DATE	U.S. DEPARTMENT OF ENERGY RICHLAND OPERATIONS OFFICE
BY JR BRIGGS	RJ Briggs	4/10/89	KAISER ENGINEERS HANFORD COMPANY
PROJ ENGR	J Cloud	12-28-1988	
DR & MAINTAIN	JE BREED	12-28-1988	M ELECTRICAL VAULT PLAN 218-E-16-102
APPROVED BY	RW ITEN	7-10-1988	
SAFETY	D PARTHREE	7-11-1988	
APPROVED BY	WCAC SUBLETT	7-11-1988	
CHECKED BY	RJ HARMAN	7-5-1988	PROJECT TITLE GROUT VAULT PAIR 218-E-16-102 & 103
DRAWN BY	JL BRINKLEY	3-23-1988	PROJ B714 / WO ER1060 / JOB 242500
DESIGNED BY	WC ATKINS	3-23-1988	SCALE SHOWN / BLDG 218-E-16 / INDEX 7301
CAD FILE	B077635A		DRAWING NUMBER H-2-77635 / SHEET 1 / OF 2 / REV 0
CAD CODE	3M-ACD2-9.0-NN		

NUMBER	TITLE
H-2-98478	SH 1-3, ELEC CONN SCHED
H-2-77573	DRAWING LIST

DRAWING TRACEABILITY LIST — REFERENCES — NEXT USED ON

REV	DESCRIPTION	REV BY DATE	APPROVAL	BY-DATE	BY-DATE
			KEH APPROVAL		

REVISIONS — COMMENT REVIEW — MICROFILMED

KEHCAD

9011785 0820

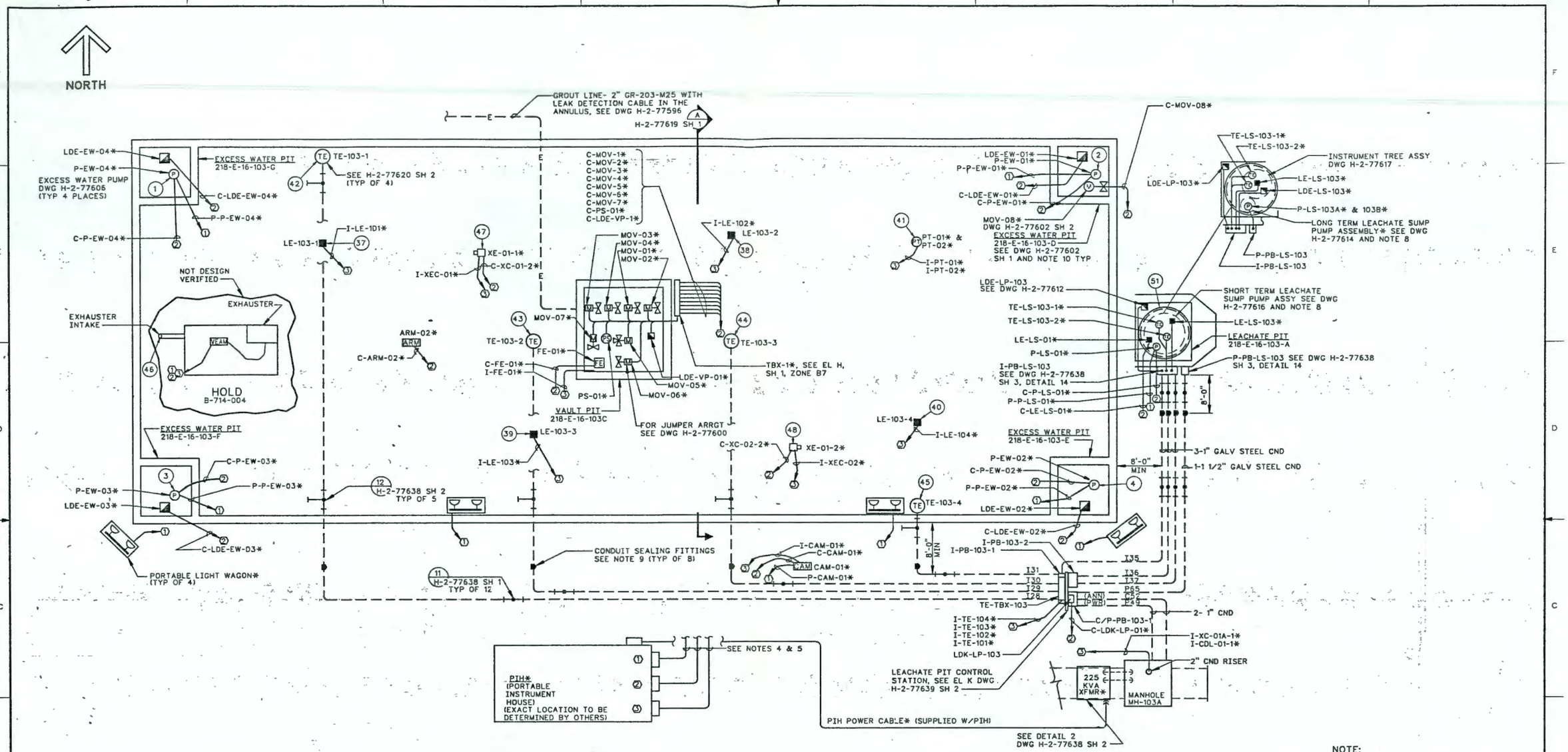

218-E-16-103
VAULT PLAN
SCALE: 1"=5'-0"

NOTE:

1. SEE SHEET 1 FOR NOTES & SYMBOL LIST.

OFFICIAL RELEASE BY WHC
DATE APR 14 1989

4-5-89 REV 0

IMPACT LEVEL 2
EDT # 102073

WHC	APPROVAL JRG	DATE 11/16/88	U.S. DEPARTMENT OF ENERGY RICHLAND OPERATIONS OFFICE
BY SR BRIGGS		12-28-1988	KAISER ENGINEERS HANFORD COMPANY
PROJ ENGR LC LOW		12-28-1988	ELECTRICAL VAULT PLAN 218-E-16-103
DR DSN REVIEW BY JE BREED		7-14-1988	
APPROVED BY RM ITEN		7-13-1988	
SAFETY D PARTHREE		7-11-1988	
APPROVED BY RCA C SUBLETT		7-11-1988	PROJECT TITLE GROUT VAULT PAIR 218-E-16-102 & 103
DESIGNED BY RJ HARMAN		7-5-1988	
DRAWN BY JL BRINKLEY		3-23-1988	PROJ B714 / WO ER1060 / JOB 242500
DETAILED BY WC ATKINS		3-22-1988	SCALE SHOWN / BLDG 218-E-16 / INDEX 7301
CAD FILE B077635A			DRAWING NUMBER H-2-77635 / SHEET 2 / OF 2 / REV 0
CAD PGM EXP=DGM=ACD2-0 D=N			

NUMBER	TITLE	NUMBER	TITLE
	DRAWING TRACEABILITY LIST		DRAWING LIST / REFERENCES
		NEXT USED ON	

BY-DATE	BY-DATE	REV BY DATE	DESCRIPTION	REV
APPROVAL	KEH APPROVAL		REVISIONS	
COMMENT REVIEW				

MICROFILMED

KEHCAD

901178501

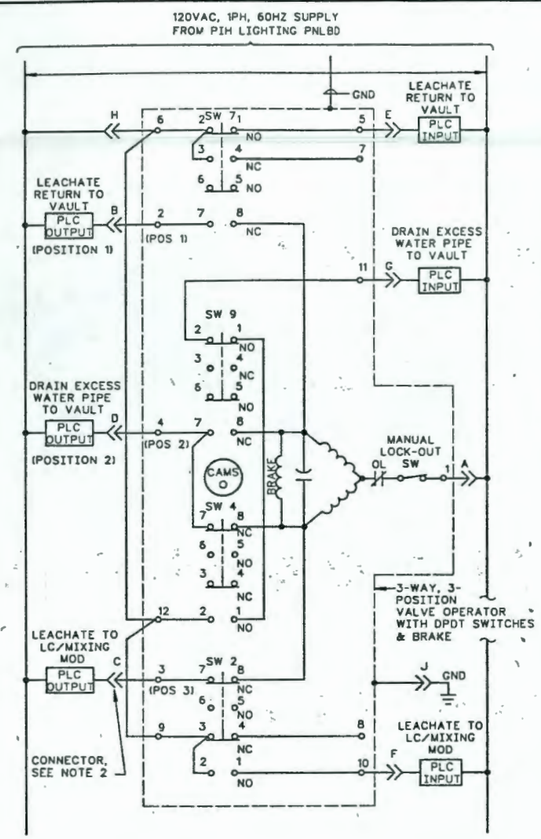

VALVE ACTUATOR LIMIT SWITCH OPERATION					
LIMIT SW NUMBER	CONTACT	POSITION 1	POSITION 2	POSITION 3	FUNCTION
SW-7	1-2				POS IND
	3-4				NOT USED
	5-6				NOT USED
	7-8				MOT CONT
SW-9	1-2				POS IND
	3-4				NOT USED
	5-6				NOT USED
	7-8				MOT CONT
SW-4	1-2				POS IND
	3-4				NOT USED
	5-6				NOT USED
	7-8				MOT CONT
SW-2	1-2				POS IND
	3-4				NOT USED
	5-6				NOT USED
	7-8				MOT CONT

LINE INDICATES CONTACT CLOSED

VALVE POSITIONS		
POSITION 1	POSITION 2	POSITION 3
LEACHATE RETURN TO PUMP	DRAIN EXCESS WATER PIPE TO VAULT	LEACHATE TO LC/MIXING MOD

EW DIVERTER VALVE MOV-08
3-WAY 3 POSITION MOTOR OPERATED VALVE
ELEMENTARY DIAGRAM
PREFIX WIRE NUMBERS WITH MOV-08

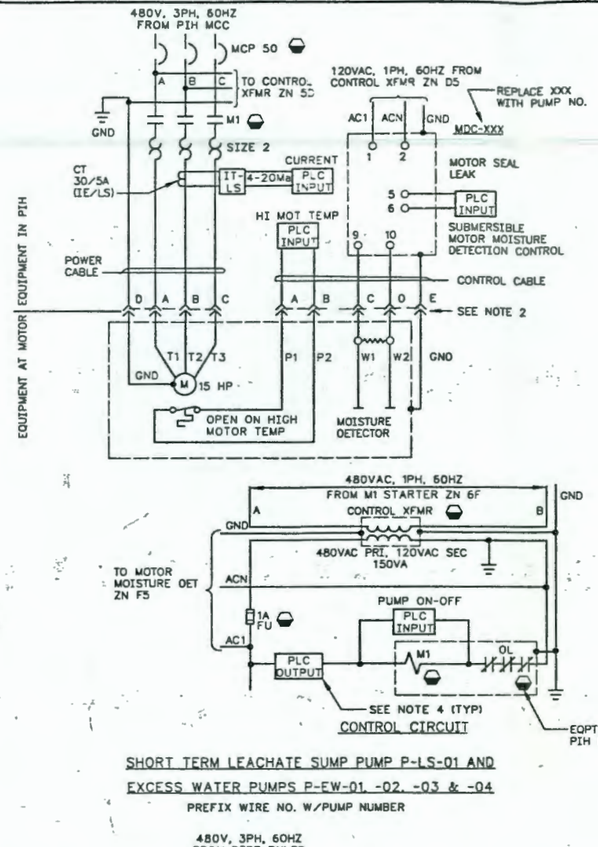

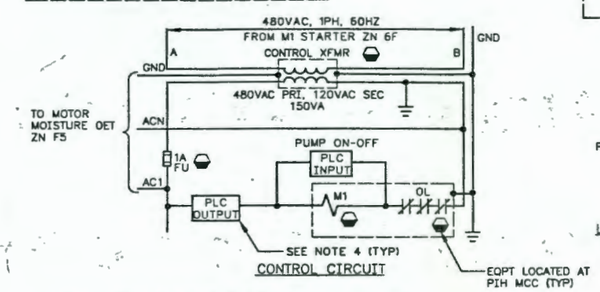

CONTROL CIRCUIT

SHORT TERM LEACHATE SUMP PUMP P-LS-01 AND EXCESS WATER PUMPS P-EW-01, -02, -03 & -04
PREFIX WIRE NO. W/PUMP NUMBER

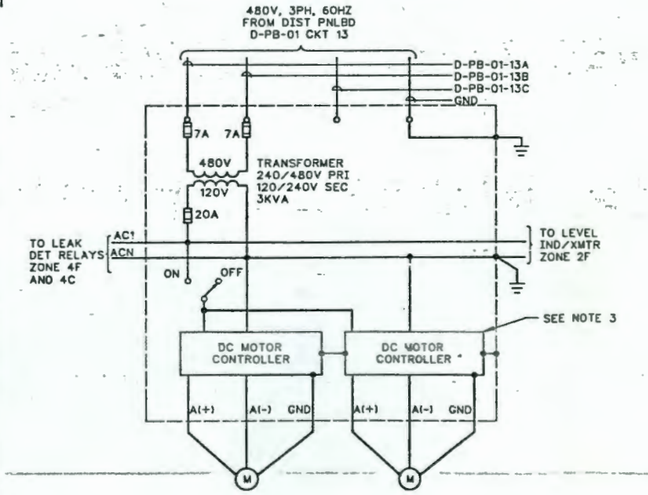

LONG TERM LEACHATE SUMP PUMPS
P-LS-102A & P-LS-102B
ELEMENTARY DIAGRAM
(PREFIX WIRE NUMBERS WITH PUMP NUMBERS)

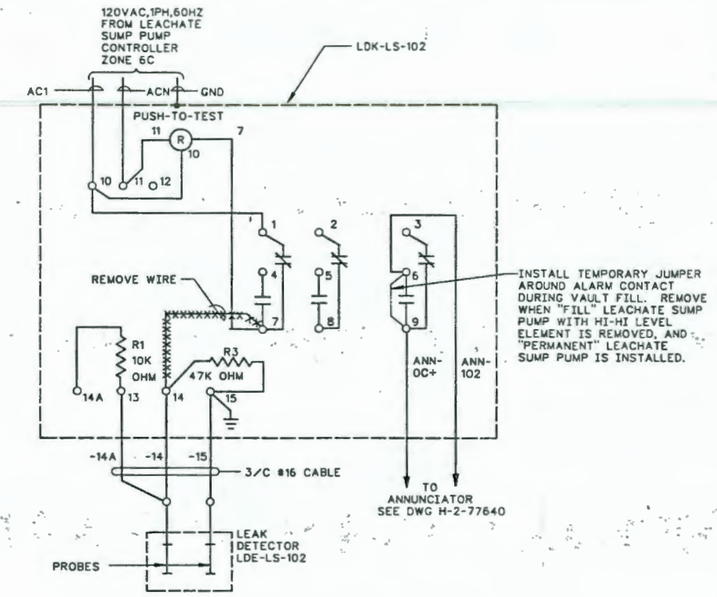

LEACHATE SUMP LEAK DETECTION CONNECTION DIAGRAM
(PREFIX PROBE WIRE NUMBERS WITH LDK-LS-102)

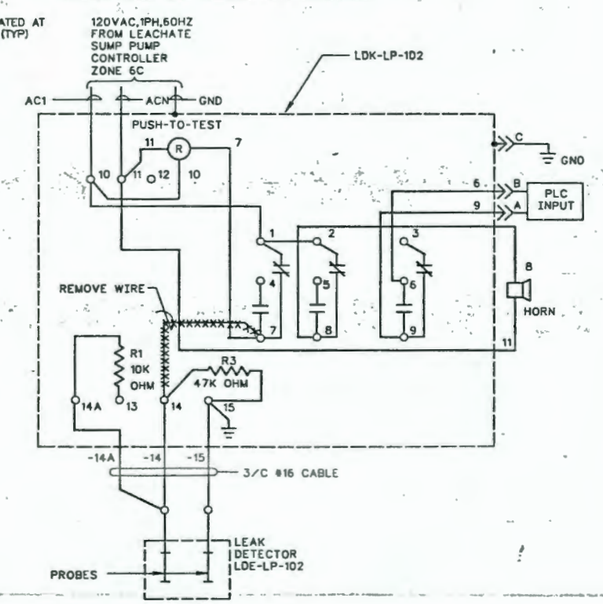

LEACHATE PIT LEAK DETECTION CONNECTION DIAGRAM
(PREFIX WIRE NUMBERS WITH LDK-LP-102)

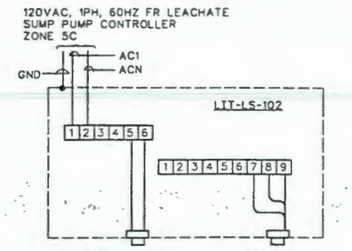

LEACHATE SUMP LEVEL IND XMTR
CONNECTION DIAGRAM

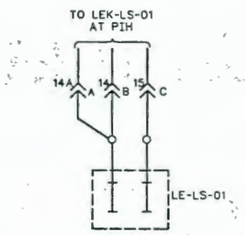

LEACHATE SUMP
HIGH-HIGH LEVEL
DETECTION CONN DIAG
(PREFIX WIRE NUMBERS W/LEK-LS-01)

ABBREVIATIONS:

PLC - PROGRAMMABLE LOGIC CONTROLLER
MCP - MOTOR CIRCUIT PROTECTOR
CLF - CURRENT LIMITING FUSE

NOTES:

1. ABBREVIATIONS ARE PER ANSI Y1.1 UNLESS OTHERWISE NOTED.
2. FOR CONNECTOR AND CABLE CONNECTIONS SEE CONNECTOR SCHEDULE DWG H-77642 SH 1 & 2 .
3. LONG TERM LEACHATE SUMP PUMPS P-LS-102A & P-LS-102B AND P-LS-103A & P-LS-103B; TO BE TURNED ON AND HAVE THE SPEED OF THE TWO RESPECTIVE PUMPS SYNCHRONIZED PRIOR TO INSTALLATION IN THE SUMP. AFTER INSTALLATION THEY ARE TO BE SIMULTANEOUSLY OPERATED WITH THE COMMON ON/OFF SWITCH.
4. FOR PLC PROGRAMMING SEE P&ID DWG H-2-77618 SH 2.

OFFICIAL RELEASE BY WHC
DATE APR 14 1989

IMPACT LEVEL 2
EOT #102073

DRAWING TRACEABILITY LIST			
NUMBER	TITLE	NUMBER	TITLE
H-2-77573	DRAWING LIST		
		REFERENCES	
		NEXT USED ON	

REVISIONS				
BY-DATE	BY-DATE	REV BY DATE	DESCRIPTION	REV
APPROVAL	KEH APPROVAL			
COMMENT REVIEW				

MICROFILMED

WHC	U.S. DEPARTMENT OF ENERGY RICHLAND OPERATIONS OFFICE	
KAISER ENGINEERS HANFORD COMPANY		
ELECTRICAL ELEM & CONN DIAG VAULT 102		
PROJECT TITLE: CROUT VAULT PAIR 218-E-16-102 & 103		
PROJ B-714	WO ER1060	JOB 242500
SCALE NONE	BLDG 218-E-16	INDEX 7302,8002
DRAWING NUMBER H-2-77636	SHEET 1	OF 4	REV 0

KEHCAD

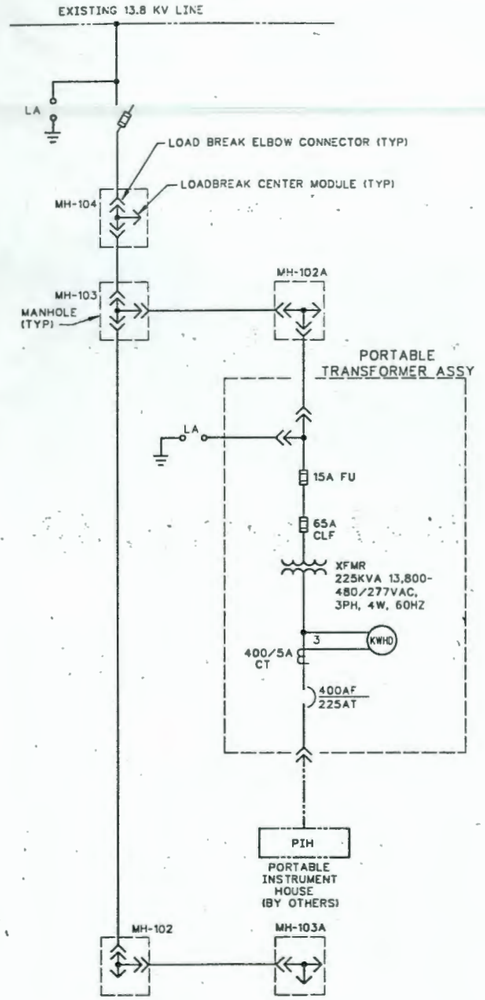

ONE-LINE DIAGRAM

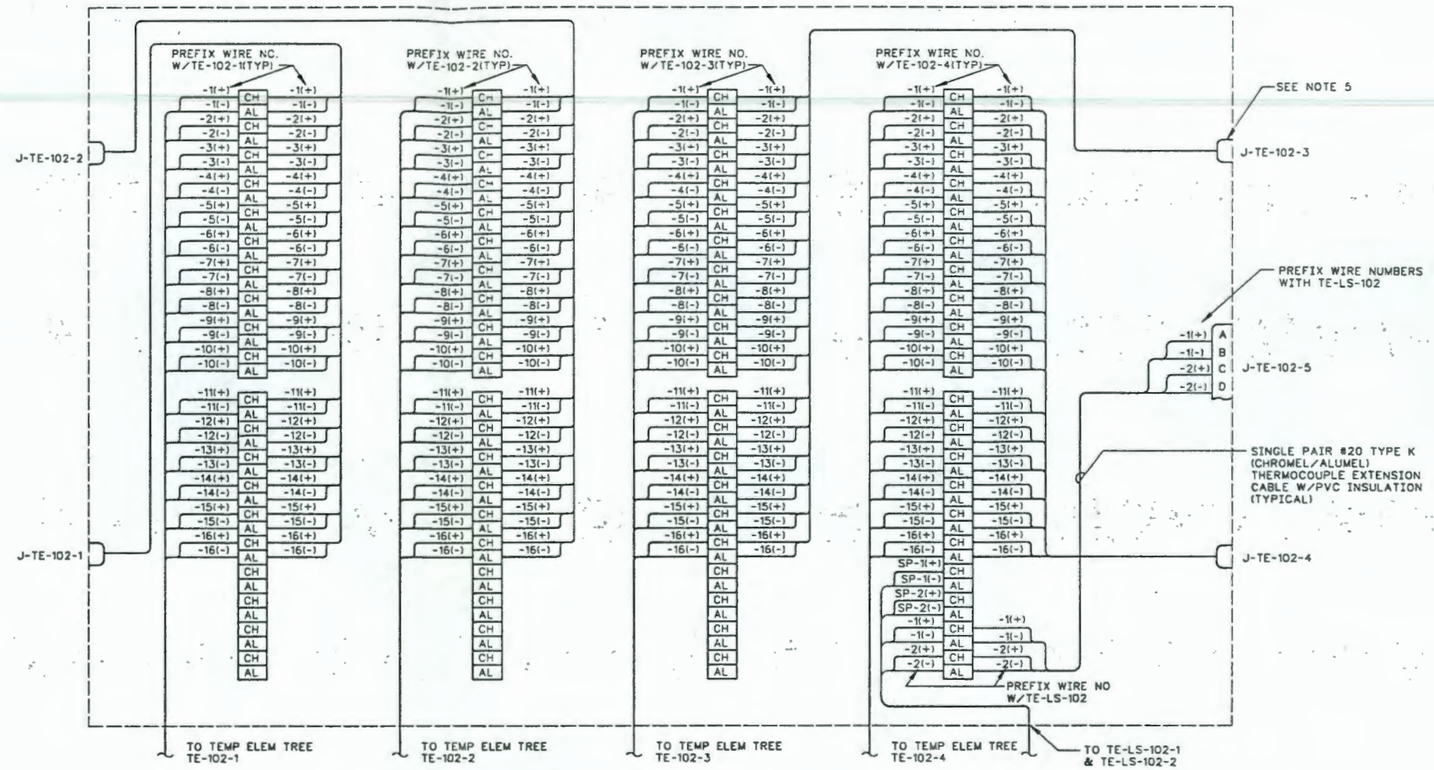

TE TERM BOX TE-TBX-102 CONNECTION DIAGRAM

NOTES:

SEE SHEET 1 FOR NOTES AND ABBREVIATIONS.

OFFICIAL RELEASE EVENTS DATE APR. 1-4 1989

EDT # 102073

IMPACT LEVEL 2

WHC		U.S. DEPARTMENT OF ENERGY RICHLAND OPERATIONS OFFICE
SR BRIGGS	12-20 1988	KAISER ENGINEERS HANFORD COMPANY
SJ GLOUD	12-20 1988	ELECTRICAL ELEM & CONN DIAG VAULT 102
JE BREED	7-14 1988	
RM ITEN	7-13 1988	
D PARTHREE	7-11 1988	
RC SUBLETT	7-11 1988	
RJ HARMAN	7-11 1988	GROUT VAULT PAIR 218-E-16-102 &103
LS JONES	12-1 1988	
WC ATKINS	1-6 1989	B-714 / ER1060 / 242500
B0776366		NONE / 218-E-16 / 7302,8002 720
		H-2-77636 / 2 / 4 / C

BY-DATE	BY-DATE	REV BY DATE	DESCRIPTION	REV
APPROVAL	KEH APPROVAL		REVISIONS	
COMMENT REVIEW				

NUMBER	TITLE
DRAWING TRACEABILITY LIST	

NUMBER	TITLE
DRAWING LIST	
REFERENCES	
NEXT USED ON	

KENGAD

7850823

901106

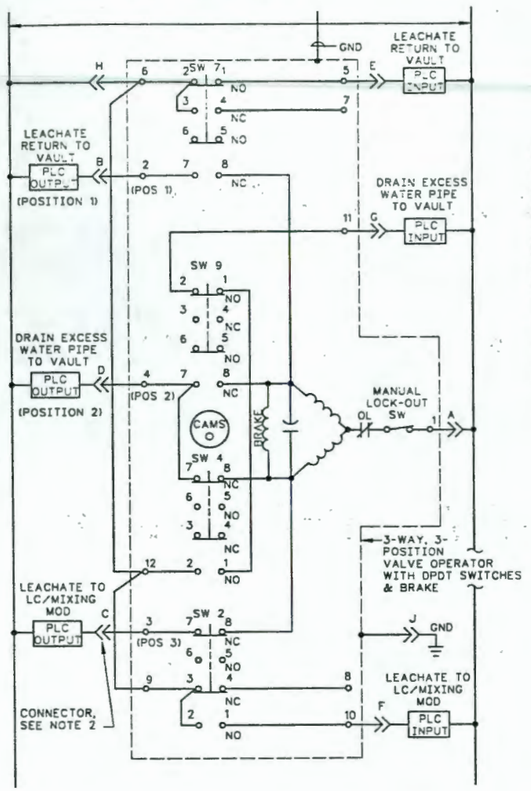

VALVE ACTUATOR LIMIT SWITCH OPERATION					
LIMIT SW NUMBER	CONTACT	POSITION 1	POSITION 2	POSITION 3	FUNCTION
SW-7	1-2				POS IND
	3-4				NOT USED
	5-6				NOT USED
	7-8				MOT CONT
SW-9	1-2				POS IND
	3-4				NOT USED
	5-6				NOT USED
	7-8				MOT CONT
SW-4	1-2				POS IND
	3-4				NOT USED
	5-6				NOT USED
	7-8				MOT CONT
SW-2	1-2				POS IND
	3-4				NOT USED
	5-6				NOT USED
	7-8				MOT CONT

LINE INDICATES CONTACT CLOSED

VALVE POSITIONS		
POSITION 1	POSITION 2	POSITION 3
LEACHATE RETURN TO PUMP	DRAIN EXCESS WATER PIPE TO VAULT	LEACHATE TO LC/MIXING MOD

EW DIVERTER VALVE MOV-08
3-WAY 3 POSITION MOTOR OPERATED VALVE
ELEMENTARY DIAGRAM
PREFIX WIRE NUMBERS WITH MOV-08

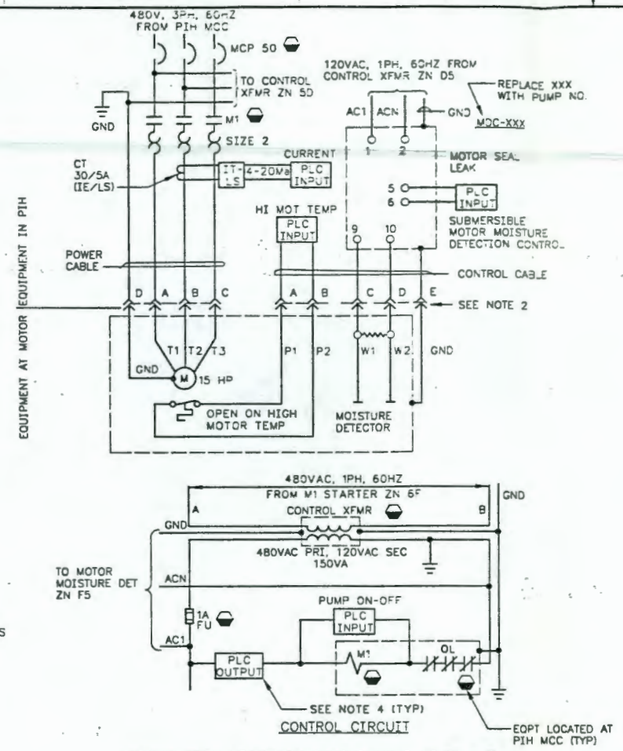

SHORT TERM LEACHATE SUMP PUMP P-LS-01 AND
EXCESS WATER PUMPS P-EW-01, -02, -03 & -04
PREFIX WIRE NO. W/PUMP NUMBER

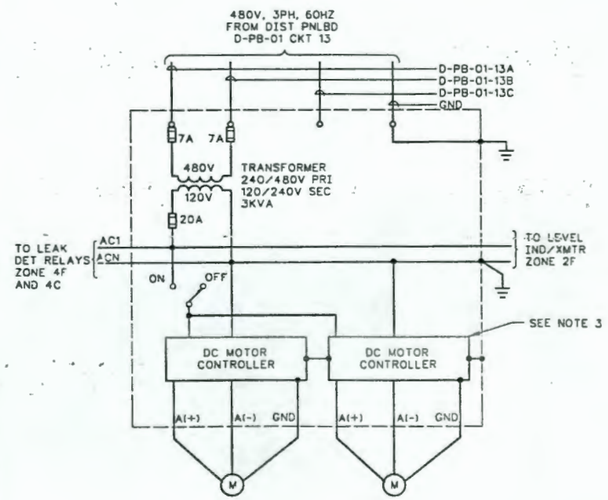

LONG TERM LEACHATE SUMP PUMPS
P-LS-103A & P-LS-103B
ELEMENTARY DIAGRAM
(PREFIX WIRE NUMBERS WITH PUMP NUMBERS)

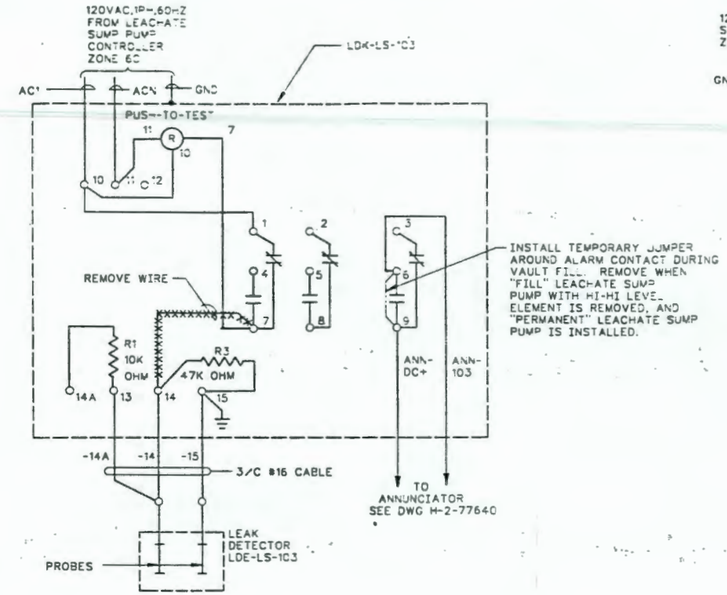

LEACHATE SUMP LEAK DETECTION CONNECTION DIAGRAM
(PREFIX PROBE WIRE NUMBERS WITH LDK-LS-103)

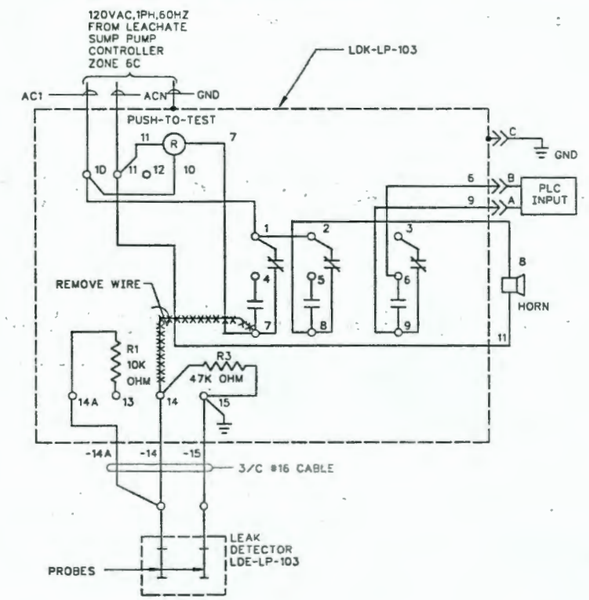

LEACHATE PIT LEAK DETECTION CONNECTION DIAGRAM
(PREFIX WIRE NUMBERS WITH LDK-LP-103)

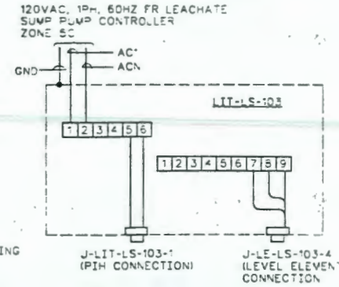

LEACHATE SUMP LEVEL IND XMTR
CONNECTION DIAGRAM

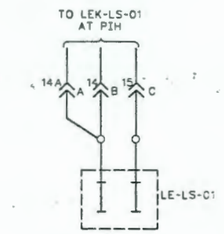

LEACHATE SUMP
HIGH-HIGH LEVEL
DETECTION CONN DIAG
(PREFIX WIRE NUMBERS W/LEK-LS-01)

NOTES:

SEE SHEET 1 FOR NOTES AND ABBREVIATIONS.

4-5-89 REV 0

OFFICIAL RELEASE BY WHC DATE APR 14 1989

IMPACT LEVEL 2
EDT # 102073

DRAWN D ELLIOTT	U.S. DEPARTMENT OF ENERGY RICHLAND OPERATIONS OFFICE KAISER ENGINEERS HANFORD COMPANY		
CHECKED R HARMAN			
LEAD ENGR WC ATKINS	ELECTRICAL ELEM & CONN DIAG VAULT 103		
SUBC MGR C SUBLETT			
SAFETY AG MINISTER			
ENGR SC ASHWORTH			
DA	GROUT VAULT PAIR 218-E-16-102 & 103		
SIZE F	BLDG NO 218-E-16	INDEX NO 7302, 8002	DWG NO H-2-77636	REV NO 0
SCALE NONE	JOB NO ER9090	SHEET 3 OF 4	

NUMBER	TITLE	NUMBER	TITLE
DRAWING TRACEABILITY LIST		REFERENCES	
NEXT USED ON			

REV NO.	DESCRIPTION	BY	DATE	APPROVALS
REVISIONS				

CAD FILE B077636C CAD CODE 2J:IBM:ACD2:9.0:NN

~~KE-IGAD~~

9 0 1 1 0 6 7 3 5 0 8 2 4

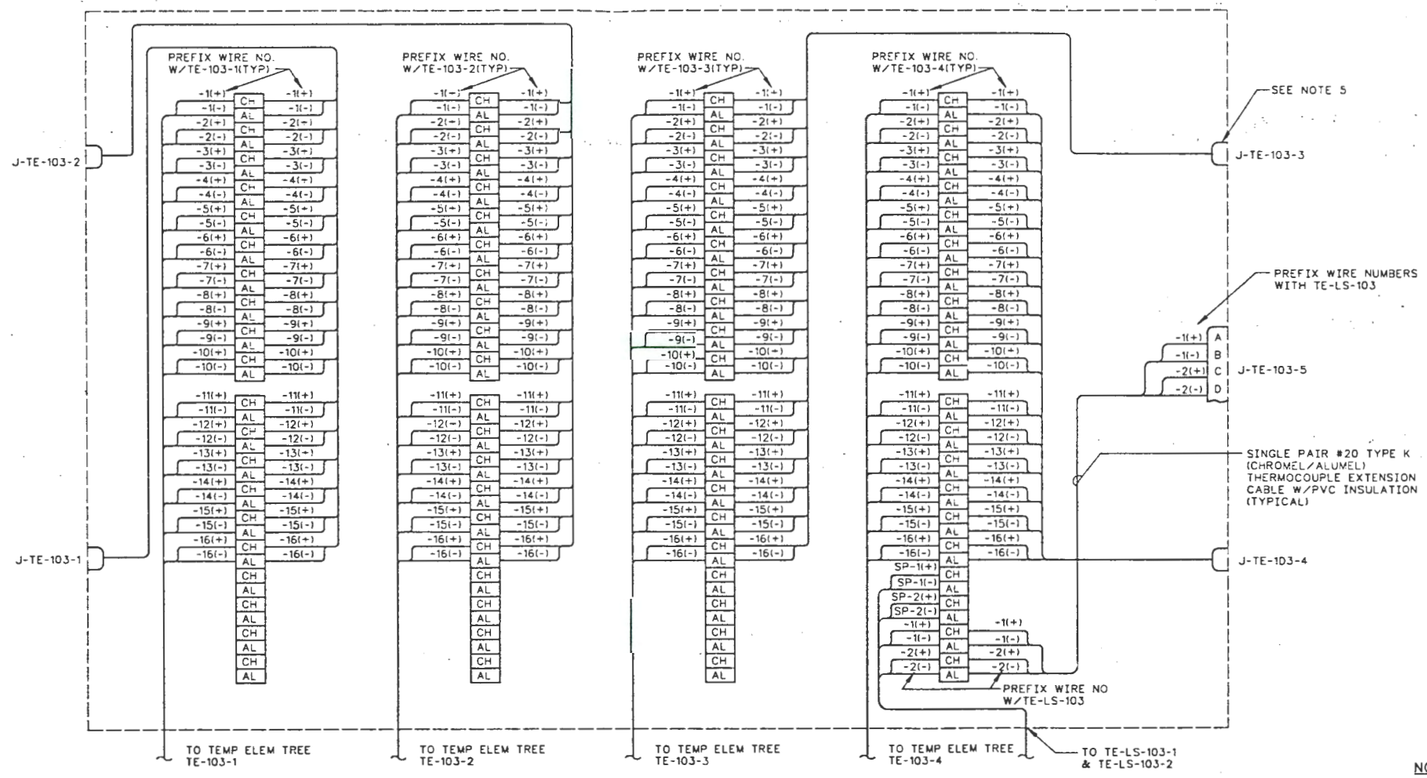

TE TERM BOX TE-TBX-103 CONNECTION DIAGRAM

NOTES:

SEE SHEET 1 FOR NOTES AND ABBREVIATIONS.

OFFICIAL RELEASE DATE APR 14 1989

1-7-89 Rev 0

NUMBER	TITLE	NUMBER	TITLE
DRAWING TRACEABILITY LIST		REFERENCES	
		NEXT USED ON	

REV NO.	DESCRIPTION	BY	DATE	APPROVALS
REVISIONS				

CAD FILE 80776360 CAD CODE 2J:IBV-ACD2:90:NN

DRAWN D ELLIOTT
CHECKED R HARMAN
LEAD ENGR WC ATKINS
DISC ENGR C SUBLETT
SAFETY AG MINISTER
ENVIR SC ASHWORTH
QA
REVIEWED
APPROVED
FOR W&C

IMPACT LEVEL 2 EDT 102073

U.S. DEPARTMENT OF ENERGY
RICHLAND OPERATIONS OFFICE
KAISER ENGINEERS HANFORD COMPANY

ELECTRICAL
ELEM & CONN
DIAG VAULT 103

PROJECT GROUT VAULT PAIR 218-E-16-102 & 103

SIZE	BLDG NO	DWG NO	DWG NO	REV NO
F	218-E -16	7302. 8002	H-2-77636	0

SCALE NONE JOB NO ER9090 SHEET 4 OF 4

~~KE-CAD~~

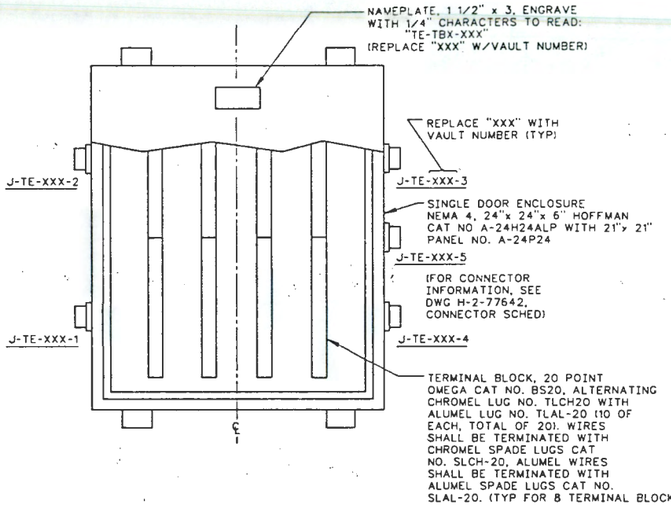

DETAIL 1
TE TERMINAL BOX
H-2-77639

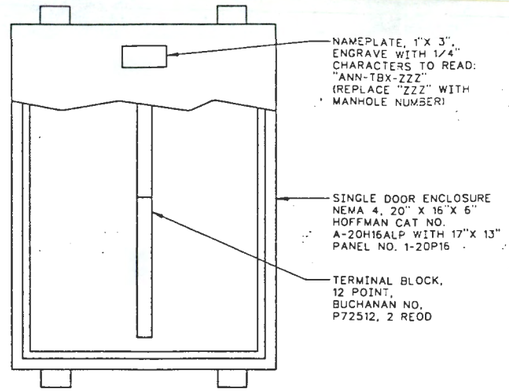

DETAIL 3
ANN TERMINAL BOX
H-2-77638 SH 2

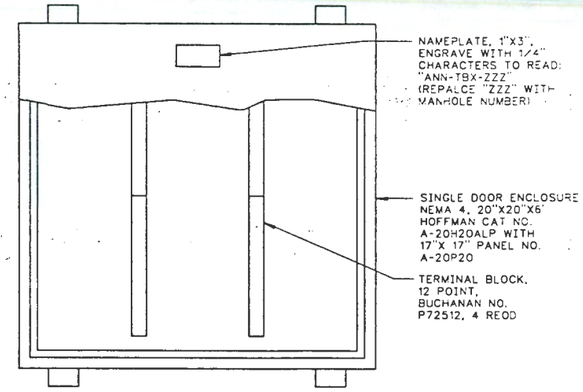

DETAIL 5
ANN TERMINAL BOX
H-2-77638 SH 2

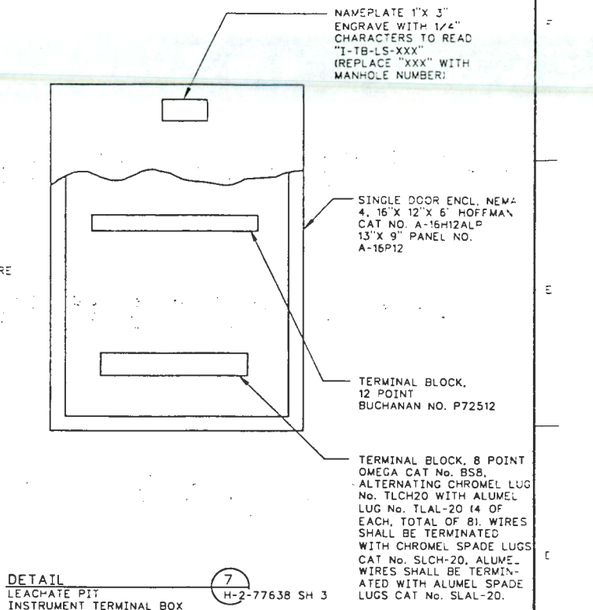

DETAIL 7
LEACHATE PIT
INSTRUMENT TERMINAL BOX
H-2-77638 SH 3

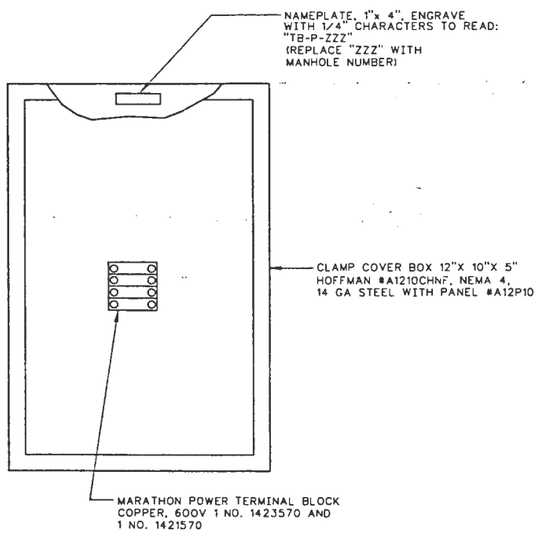

DETAIL 2
MANHOLE POWER TERM BOX
H-2-77638 SH 2

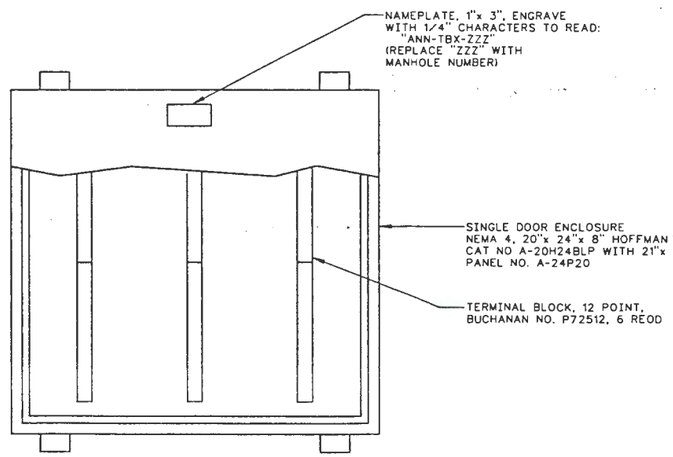

DETAIL 4
ANN TERMINAL BOX
H-2-77638 SH 2

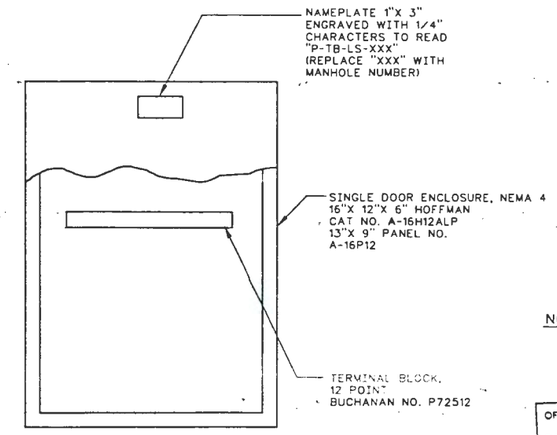

DETAIL 6
LEACHATE PIT
POWER TERMINAL BOX
H-2-77638 SH 3

NOTES:

1. ABBREVIATIONS ARE PER ANSI Y1.1 UNLESS OTHERWISE NOTED.

OFFICIAL RELEASE BY WHC
DATE APR 04 1989

EDT # 101089

IMPACT LEVEL 2

NUMBER	TITLE	REFERENCES
DRAWING TRACEABILITY LIST		NEXT USED ON
H-2-77573	DRAWING LIST	

BY-DATE	BY-DATE	REV BY DATE	DESCRIPTION	REV
APPROVAL	KEH APPROVAL		REVISIONS	
COMMENT REVIEW				

MICROFILMED

		DATE
WHC APPROVAL		10/89
BY SR BRIGGS		12-28 1988
PROJ. ENGR.	H. AMIN	12-28 1988
DESIGN ENGR.		7-14 1988
	JE BREED	7-15 1988
APPROVED BY	RM ITEN	7-15 1988
SAFETY	D PARTREE	7-11 1988
APPROVED BY		7-11 1988
QA	G SUGLETT	7-5 1988
CHECKED BY	RJ HARMAN	1-22 1988
DRAWN BY	JL BRINKLEY	1-22 1988
DESIGNED BY	WC ATKINS	1-22 1988
CAD FILE	B077637A	
CAD DEV	2U:IBM:AC02:9.0:NN	

U.S. DEPARTMENT OF ENERGY
RICHLAND OPERATIONS OFFICE
KAISER ENGINEERS HANFORD COMPANY

ELECTRICAL TERMINAL BOX DETAILS

PROJECT TITLE: GROUT VAULT PAIR 218-E-16-102 & 103

PROJ	NO	JOB
B-714	ER1060	242500
SCALE: NONE	BLDG: 218-E-16	INDEX

DRAWING NUMBER: H-2-77637 SHEET 1 OF 1

KEHCAD

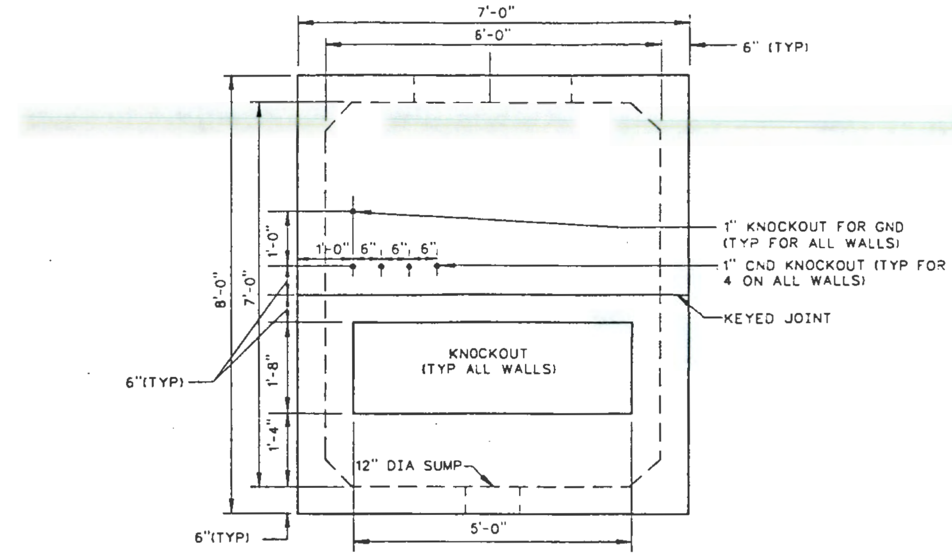

TYPICAL MANHOLE EXTERIOR WALL

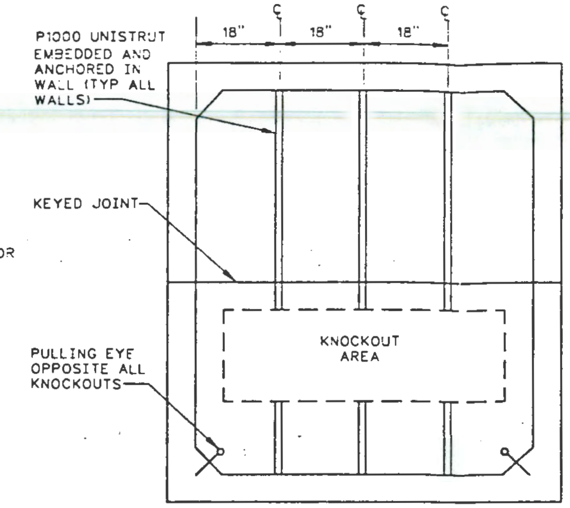

TYPICAL MANHOLE INTERIOR WALL

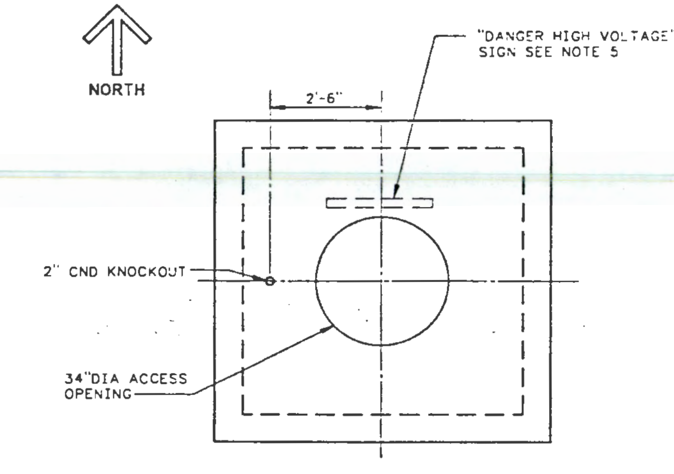

TYPICAL MANHOLE COVER PLAN

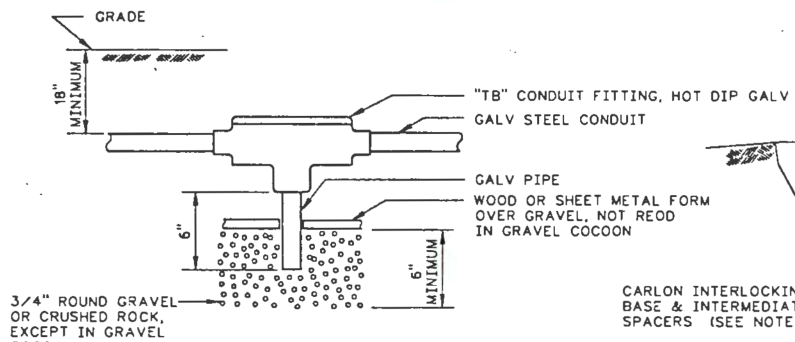

DETAIL 11 — CONDUIT DRAIN — H-2-77635 SH1 & 2

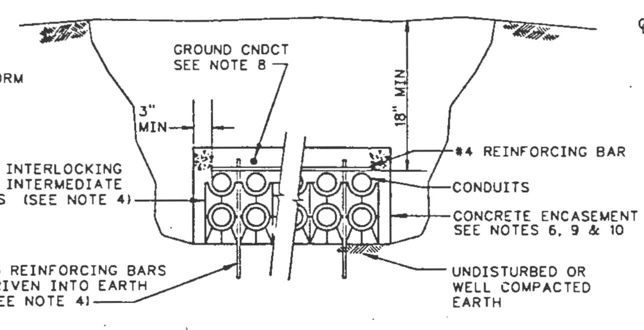

SECTION H — TYP ARRANGEMENT FOR CND SUPPORTS & REBAR IN DUCTBANKS

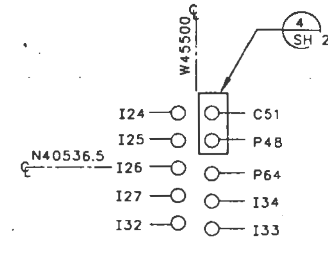

DETAIL 9 — SH 3 — LEACHATE PIT CONTROL STATION 102 STUB-UP

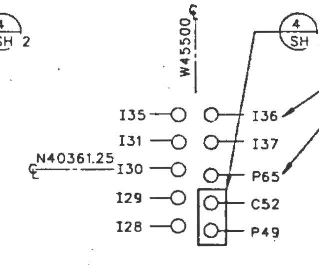

DETAIL 10 — SH 3 — LEACHATE PIT CONTROL STATION 103 STUB-UP

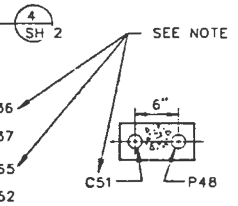

SECTION K — SH 3 — LEACHATE PIT CONTROL STATION 102 TO MH-102A

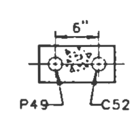

SECTION J — SH 3 — MH-103A TO LEACH PIT CONTROL STATION 103

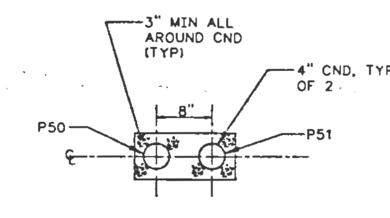

SECTION D — H-2-77634

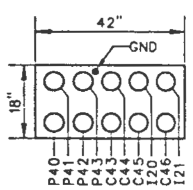

SECTION A — MH-103 TO MH-102A — H-2-77634

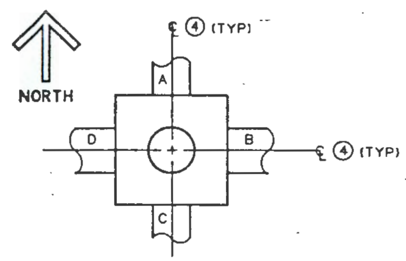

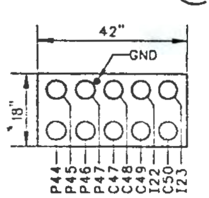

SECTION C — MH-102 TO MH-103A — H-2-77634

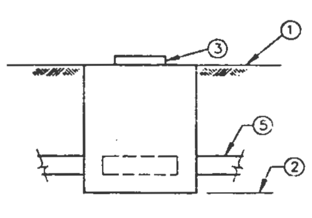

DETAIL 8 — SEE TABULATION — SH 3

ITEM	6' x 6' x 7' MANHOLE TABULATION*		102*	103*	102A	103A
	MANHOLE NO		102*	103*	102A	103A
(1)	GRADE ELEVATION		670'-0"	670'-0"	656'-4"	656'-4"
(2)	BOTTOM MANHOLE ELEVATION		659'-8"	659'-2"	648'-4"	648'-4"
(3)	46"OD x 7"HGT MH RING & COV				1	1
(4)	DUCTBANK COORDINATES (SEE PLAN FOR ORIENTATION)	A	W45729.58	W45729.58	———	W45479
		B	N40368.33	N40539.5	N40539.5	N40357.5
		C	W45729.58	W45729.58	W45479	
		D	N40368.33	N40539.5	N40539.5	N40357.5
(5)	TOP OF DUCTBANK	A	663'-0"	662'-6	———	651'-8'
		B	663'-0"	662-6"	651'-8"	651'-8"
		C	663'-0"	662'-6"	651-8'	———
		D	663'-0"	662'-6"	651'-8"	651'-8"

* FOR EXST MANHOLE INFO, SEE TABULATION ON H-2-98475 SH 3 (MH 102 & 103 FOR REF ONLY)

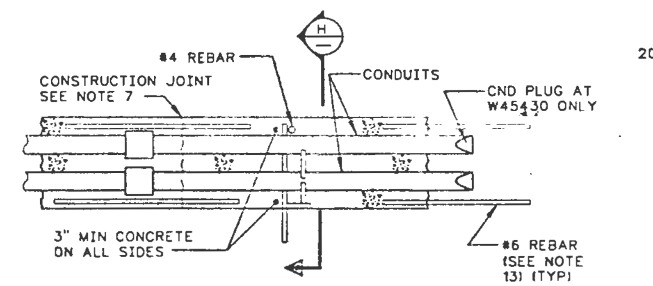

DETAIL 3 — TYP DUCT BANK — H-2-77634

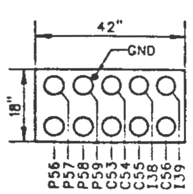

SECTION L — EAST OF MH-102A — SH 3

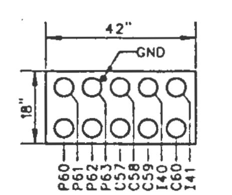

SECTION M — EAST OF MH-103A — SH 3

NOTES:

1. ABBREVIATIONS ARE PER ANSI Y1.1 UNLESS OTHERWISE NOTED.
2. DUCTS SHALL BE SLOPED A MINIMUM OF 3" PER 100' TO DRAIN INTO A MANHOLE OR CONDUIT DRAIN EXCEPT AS OTHERWISE NOTED.
3. ALL CONDUITS SHALL HAVE A MINIMUM OF 3" SPACING EDGE TO EDGE ALL AROUND.
4. SPACING OF CONDUIT SUPPORTS AND REINFORCING BARS SHALL NOT EXCEED 8'-0". LENGTH VERTICAL BARS SHALL BE AS REQUIRED FOR FIRM ANCHORAGE. THE HORIZONTAL REINFORCING BARS SHALL BE WIRE TIED OR WELDED TO THE VERTICAL DRIVEN BARS. INSTALLATION OF 3 CONDUITS SHALL BE SIMILAR TO THE DETAIL SHOWN EXCEPT THAT THE VERTICAL BARS SHALL BE PLACED AT THE OUTER EDGES OF THE CONDUIT ASSEMBLY.
5. "DANGER HIGH VOLTAGE" SIGN, 14"X 10", MCMASTER CARR CAT NO. 5731T492 TO BE HUNG FROM THE CEILING OF ALL MANHOLES HAVING 13.8 KV IN THEM USING EXPANSION ANCHORS & MOUNTED AT A LOCATION SO THEY WILL BE CONSPICUOUS WHEN MANHOLE COVER IS REMOVED.
6. THE CONCRETE SHALL DEVELOP A MINIMUM COMPRESSIVE STRENGTH OF 3000 PSI IN 28 DAYS. THE MAXIMUM SIZE OF COARSE AGGREGATE SHALL BE 3/4".
7. AT CONSTRUCTION JOINTS IN ENCASEMENTS, EXCEPT THOSE FOR STEEL CONDUIT, 4' LENGTHS OF #6 REINFORCING BARS SHALL BE PLACED IN EACH CORNER OF THE ENCASEMENT, A MINIMUM OF 2" FROM THE OUTSIDE EDGES AND CENTERED ACROSS THE JOINT.
8. A GROUNDING CABLE SHALL BE INSTALLED IN ENCASEMENTS UNLESS SPECIFIED OTHERWISE. THE CONDUCTOR SHALL BE 5/8" DIAMETER, 7 STRAND SPECIAL LOW CARBON GRADE STEEL CABLE. CABLE COATING SHALL BE CLASS B ZINC IN ACCORDANCE WITH ASTM A 475. THIS CONDUCTOR SHALL BE USED FOR INTERCONNECTION OF GROUNDING GRIDS AND FOR GROUNDING OF CONDUIT RISERS, CABLE SHIELDS, ETC. IT SHALL NOT BE USED FOR THE EQUIPMENT
9. CONCRETE ENCASEMENT REQUIREMENT FOR RIGID NON-METALLIC CONDUIT SHALL BE DELETED FOR CONDUITS APPROVED OR SHOWN ON THE CONSTRUCTION DRAWINGS FOR DIRECT BURIAL IN ACCORDANCE WITH NFPA-NEC 70, ARTICLES 300-5 AND 347.
10. THE CONCRETE CURE REQUIREMENT - BACKFILL OPERATION MAY BEGIN 72 HOURS AFTER CONCRETE POUR. MINIMUM CONCRETE COMPRESSIVE STRENGTH PRIOR TO BACKFILL IS 1500 PSI.
11. WHEN TRANSFORMER IS TO BE MOVED TO NEXT MANHOLE, ELBOW/CABLE ASSEMBLY SHALL BE DISASSEMBLED AND THE CABLE SHALL BE REMOVED FROM CONDUIT FOR REUSE AT NEXT XFMR LOCATION. WHEN CABLE HAS BEEN REINSTALLED THROUGH CONDUIT AT NEXT MANHOLE AT NEW XFMR LOCATION, CABLE SHALL BE RE-CONNECTED TO ELBOW PER LOAD BREAK ELBOW MANUFACTURER RECOMMENDATIONS (BY OTHERS).
12. GROUND CABLES ROUTED WITH DUCT BANKS SHALL BE CONNECTED TOGETHER TO MAKE ONE CONTINUOUS GROUND CABLE WITH CADWELD CONNECTORS IN EACH MANHOLE. FASTEN GROUND CABLES TO FRAMING CHANNEL SUPPORTS USING UNISTRUT 5/8" O.D. TUBE CLAMP CATALOG NUMBER P2014. CADWELD CONNECTORS SHALL BE INSTALLED IN ACCORDANCE WITH MANUFACTURER'S INSTRUCTIONS.
13. AT END OF EXTENDED DUCT BANK AT W45430 #6 REBAR IS TO PROTRUDE APPROX 2 FT BEYOND CONCRETE SO THAT WHEN DUCT BANK IS CONTINUED REBAR CAN BE INCORPORATED INTO NEW CONCRETE ENCASEMENT.
14. CONDUIT NUMBERS PREFIXED WITH "P" ARE POWER CONDUITS "C" ARE CONTROL CONDUITS, "I" ARE INSTRUMENT CONDUITS. SEE WIRE RUN LIST DWG H-2-77641.
15. FOR XFMR FEEDER CABLES, CABLE IS TO BE ROUTED THROUGH 4" DIRECT BURIED CONDUIT SHOWN IN DETAILS 1 & 2, SHEET 3 BEFORE ASSEMBLY WITH ELBOW IN MANHOLE.
16. INSULATED PROTECTIVE CAPS AS PROVIDED BY THE LOADBREAK CENTER MODULE MANUFACTURER SHALL BE INSTALLED ON ALL UNUSED BUSHINGS.
17. SHIELDED CABLE SHALL HAVE STRESS CONE TERMINATIONS MADE IN ACCORDANCE WITH THE INSTRUCTIONS OF THE CABLE MANUFACTURER. THE OUTSIDE LAYER OF TAPE SHALL BE APPLIED TO SHED WATER.
18. THE GROUNDING CONDUCTOR FOR THE 13.8KV LINE SHALL BE NO. 6 BIRMINGHAM WIRE GAUGE, GRADE EBB IRON WIRE WITH CLASS B ZINC COATING. CABLE SHIELD GROUNDS AT THE STRESS CONES SHALL BE CONNECTED TO THE LIGHTNING ARRESTER GROUND.
19. IN PREPARATION FOR FINAL BACKFILL DISCONNECT AND UNPLUG CABLES IN I-TB-LS-102, P-TB-LS-102, I-TB-LS-103 AND P-TB-LS-103 AND PULL BACK TO I-PB-LS-103, P-PB-LS-103, I-PB-LS-103, AND P-PB-LS-103. MOVE TOP 24"X30" PLATE TO TOP OF UNISTRUT AFTER EXTENDING UNISTRUT 13'-6" IN HEIGHT. INSTALL NEW CONDUITS I35B, I36B, I37B, AND P65; I32B, I33B, I34B AND P64B. PULL CABLES BACK INTO CONDUITS AND TERMINAL BOXES AND RECONNECT AS PREVIOUSLY TERMINATED (BY OTHERS).
20. AFTER PULLING LEVEL PROBE CABLE THRU CGB FITTING INTO TERMINAL BOX, INSTALL CONNECTOR THAT WAS REMOVED FROM LEVEL PROBE (SEE DRAWING H-2-77617 NOTE 12) WITH CABLE GRIP ON CABLE COMING FROM LEVEL PROBE AND RECONNECT AS PREVIOUSLY TERMINATED. INSTALL AND TERMINATE CONNECTOR BACK ON TO SHORTEND CABLE. RECONNECT AS PREVIOUSLY TERMINATED.

OFFICIAL RELEASE BY WHC DATE APR 04 1989

GREGORY P. McDONALD — STATE OF WASHINGTON — REGISTERED PROFESSIONAL ENGINEER — 1-7-89 REV 0

EDT # 101089

IMPACT LEVEL 2

NUMBER	TITLE
H-2-98475	ELECTRICAL DETAILS
H-5-881 SH 21	ELEC STD VENTILATED POLE RISER-STL CND
H-2-77573	DRAWING LIST

REFERENCES — DRAWING TRACEABILITY LIST — NEXT USED ON

REVISIONS: BY-DATE | KEH APPROVAL | REV BY DATE | DESCRIPTION | REV — COMMENT REVIEW — MICROFILMED

WHC APPROVAL	1/4/89
BY SR BRIGGS	12-28 1988
PROJ ENGR	12-28 1988
QA JE BREED	7-14 1988
APPROVED BY RM ITEN	7-13 1988
SAFETY D PARTHREE	7-11 1988
APPROVED BY C SUBLETT	7-11 1988
CHECKED BY RJ HARMAN	7-8 1988
DRAWN BY J.L BRINKLEY	3-31 1988
DESIGNED BY W.C ATKINS	3-31 1988
CAD FILE B077638A	
CAD CODE 2JTBV-ACD2-9-0-NN	

U.S. DEPARTMENT OF ENERGY
RICHLAND OPERATIONS OFFICE
KAISER ENGINEERS HANFORD COMPANY

ELECTRICAL MANHOLE & CONDUIT DETAILS

PROJECT TITLE: GROUT VAULT PAIR 218-E-16-102 & 103

PROJ 8714 | WO ER1060 | JOB 242500
SCALE NONE | BLDG 218-E-16 | INDEX 73[illegible]
DRAWING NUMBER H-2-77638 | SHEET 1 | OF 3

KEHCAD

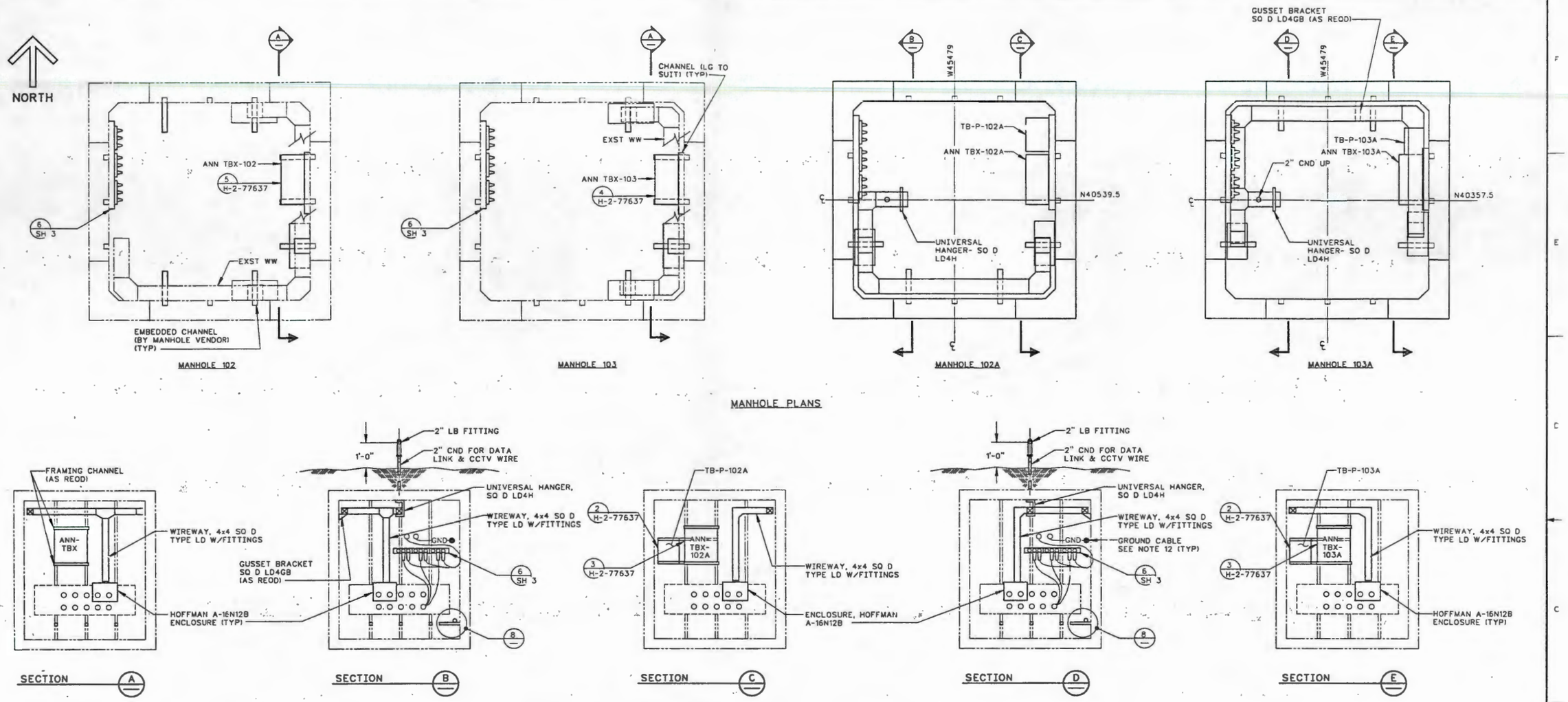

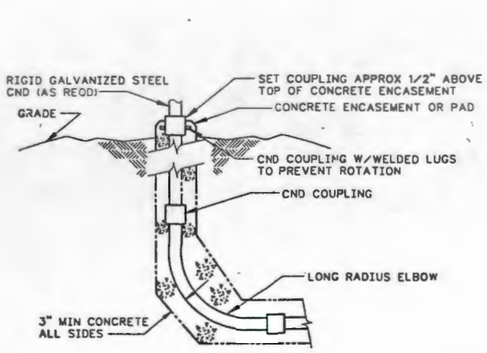

DETAIL 13 SH 1 & 3
CONDUIT STUB-UP ONE LAYER SHOWN, SIMILAR FOR 2 LAYERS OF CONDUIT

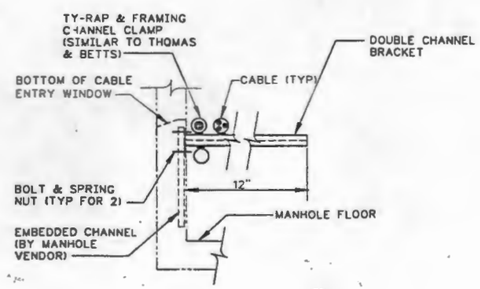

DETAIL 8
METHOD OF CABLE SUPPORT IN MANHOLE TYPICAL

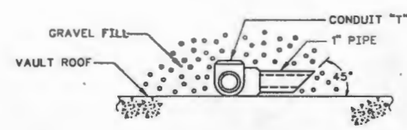

DETAIL 12 H-2-77635 SH 1 & 2
VAULT ROOF CONDUIT DRAIN

NOTES:
1. FOR NOTES SEE SHEET 1.

OFFICIAL RELEASE BY WHC
DATE APR 04 1989

EDT = 101089

IMPACT LEVEL 2

1-7-89 Rev 0

DRAWING LIST			
NUMBER	TITLE	NUMBER	TITLE
DRAWING TRACEABILITY LIST		REFERENCES	
		NEXT USED ON	

MICROFILMED	BY-DATE	BY-DATE	REV BY DATE	DESCRIPTION	REV
APPROVAL	KEH APPROVAL		REVISIONS		
COMMENT REVIEW					

		DATE
WHC APPROVAL		12-29 1988
BY SR BRIGGS		12-29 1988
PROJ ENGR		12-28 1988
DR. PREP	JE BREED	7-18 1988
APPROVED BY	RM ITEN	7-18 1988
SAFETY	D PARTHREE	7-18 1988
APPROVED BY		7-18 1988
PROJ MGR	C SUBLETT	7-18 1988
REVIEWED BY	RJ HARMAN	7-18 1988
DRAWN BY	JL BRINKLEY	5-16 1988
DETAILED BY	TJ SALIMBENE	5-16 1988
CAD FILE	B077638B	
FILE SPEC	2J-IBM-AC02-9.0-NN	

U.S. DEPARTMENT OF ENERGY
RICHLAND OPERATIONS OFFICE
KAISER ENGINEERS HANFORD COMPANY

ELECTRICAL MANHOLE & CONDUIT DETAILS

PROJECT TITLE: GROUT VAULT PAIR 218-E-16-102 & 103

PROJ	NO	JOB
B714	ER1060	242500

SCALE	BLDG	ZONE
NONE	218-E-16	

DRAWING NUMBER: H-2-77638 SHEET 2 OF 3 REV 0

~~KEH CAD~~

9011170582

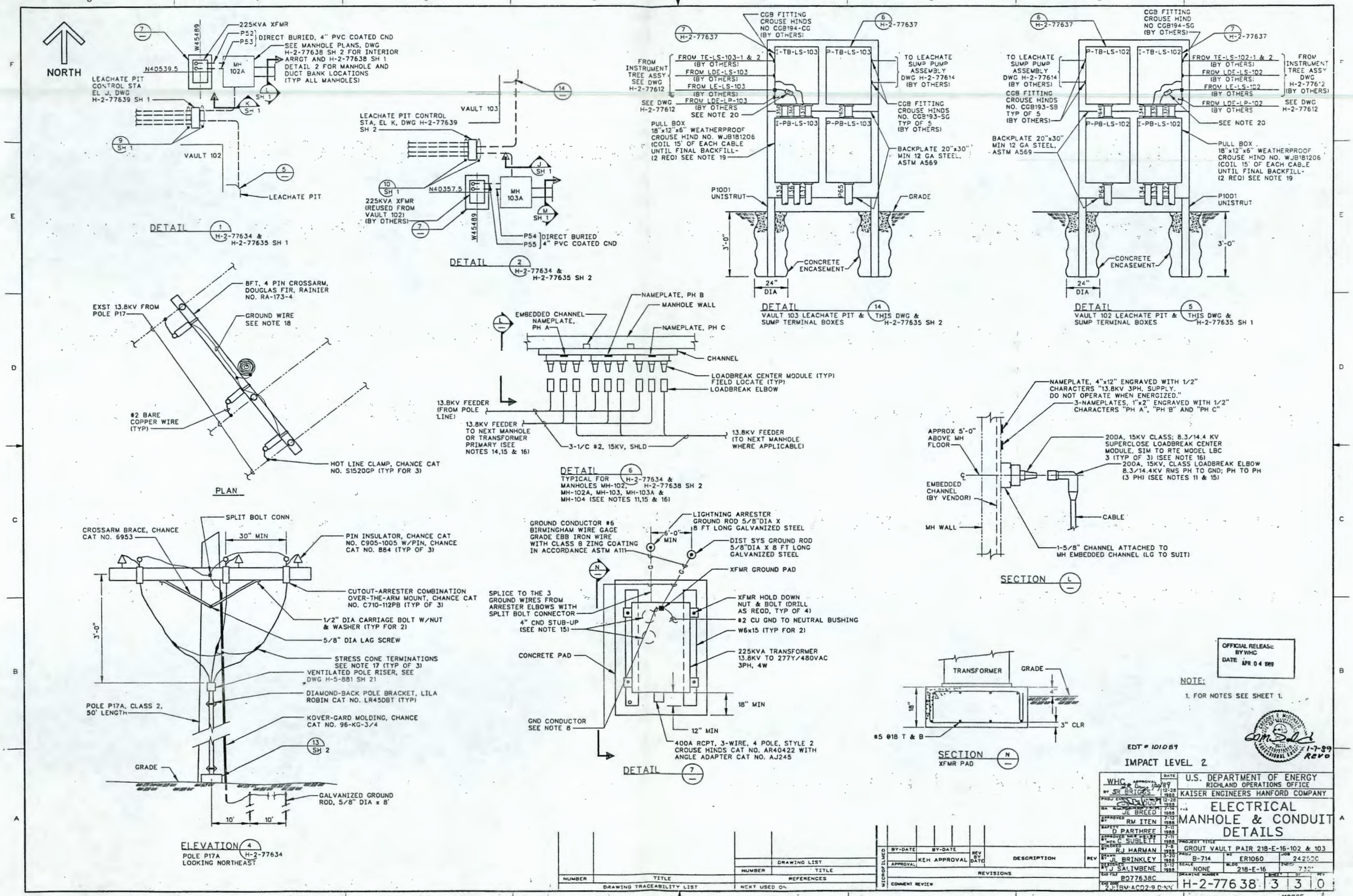

OFFICIAL RELEASE BY WHC DATE APR 04 1989

NOTE:

1. FOR NOTES SEE SHEET 1.

EDT # 101089

IMPACT LEVEL 2

WHC APPROVAL SR Briggs 12/28/89	DATE	U.S. DEPARTMENT OF ENERGY RICHLAND OPERATIONS OFFICE
BY SR BRIGGS	12-28 1988	KAISER ENGINEERS HANFORD COMPANY
PROJ ENGR CONDUD	12-28 1988	ELECTRICAL MANHOLE & CONDUIT DETAILS
GA ENGINEER JE BREED	7-14 1988	
APPROVED BY RM ITEN	7-13 1988	
SAFETY D PARTHREE	7-11 1988	
APPROVED BY HEA C SUBLETT	7-11 1988	
DESIGNED BY RJ HARMAN	7-8 1988	PROJECT TITLE GROUT VAULT PAIR 21B-E-16-102 & 103
DRAWN BY JL BRINKLEY	5-20 1988	PROJ B-714 / WO ER1060 / JOB 242500
REVISED BY VJ SALIMBENE	5-12 1988	SCALE NONE / BLDG 218-E-16 / INDEX 730
CAD FILE B077638C		DRAWING NUMBER H-2-77638 / SHEET 3 / OF 3 / REV 0
CAD CODE 2J:TBV-AC02-9 D-NN		

NUMBER	TITLE
DRAWING TRACEABILITY LIST	

NUMBER	TITLE
DRAWING LIST	
REFERENCES	
NEXT USED ON	

BY-DATE	BY-DATE	REV BY DATE	DESCRIPTION	REV
APPROVAL	KEH APPROVAL			
COMMENT REVIEW			REVISIONS	

MICROFILMED

KEHCAD 11002E

901106

7850829

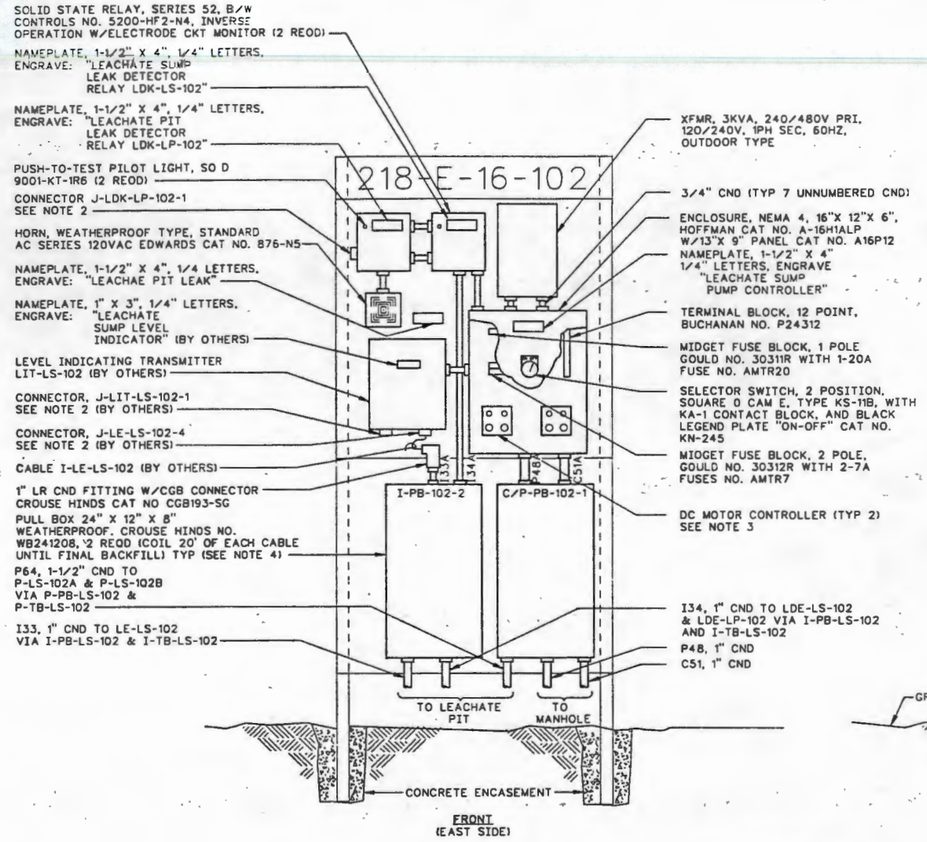

FRONT
(EAST SIDE)

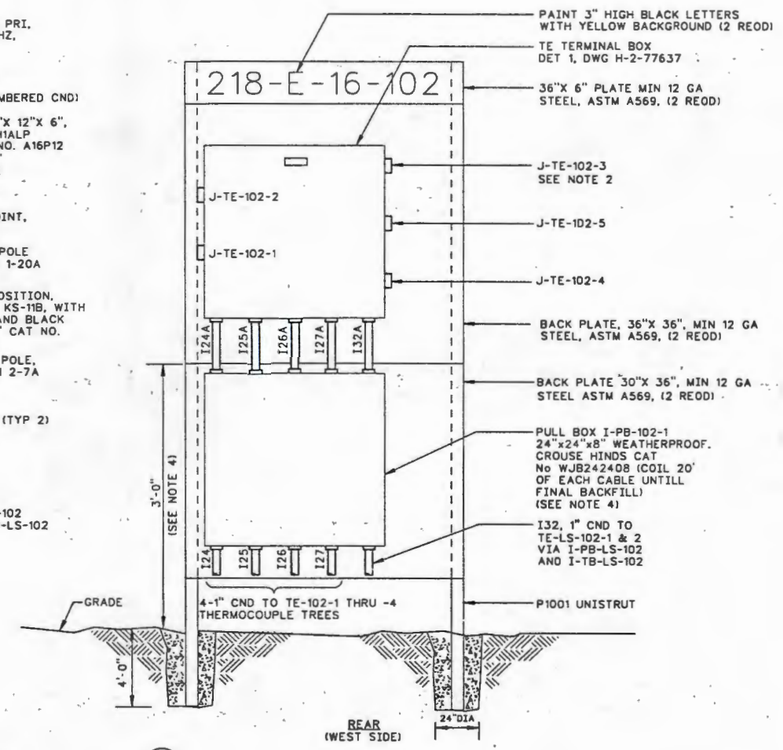

REAR
(WEST SIDE)

ELEVATION
(SEE DWG H-2-77638 SH 3 DETAIL 9 FOR CONDUIT STUB-UPS)

J
H-2-77638 SH 3

NOTES:

1. ABBREVIATIONS ARE ANSI Y1.1 UNLESS OTHERWISE NOTED.
2. SEE CONNECTOR SCHEDULE, DWG H-2-77642 FOR CONNECTOR & CABLE INFORMATION.
3. DC MOTOR CONTROLLERS TO BE REMOVED FROM PUMPS (PN 9, DWG H-2-77614) AND INSTALLED IN NEMA 4 ENCLOSURE AS SHOWN, ONE CONTROLLER FROM EACH PUMP (BY OTHERS).
4. IN PREPARATION FOR FINAL BACKFILL, DISCONNECT ALL CABLES AND PULL CABLES BACK TO I-PB-102-1, I-PB-102-2, AND C/P-PB-102-1. MOVE 36"x36" MOUNTING PLATES WITH EQUIPMENT AND VAULT IDENTIFICATION SIGNS TO THE TOP OF THE UNISTRUT AFTER EXTENDING UNISTRUT 13'-6" IN HEIGHT. INSTALL NEW CONDUITS I24A, I25A, I26A, I27A, I32A, I33A, I34A, C51A AND P48A. PULL CABLES BACK INTO CONDUITS AND RECONNECT AS PREVIOUSLY TERMINATED. (BY OTHERS)
5. IN PREPARATION FOR FINAL BACKFILL, DISCONNECT ALL CABLES AND PULL CABLES BACK TO I-PB-103-1, I-PB-103-2 AND C/P-PB-103-1. MOVE 36" X 36" MOUNTING PLATES WITH EQUIPMENT AND VAULT IDENTIFICATION SIGNS TO THE TOP OF THE UNISTRUT AFTER EXTENDING UNISTRUT 13'-6" IN HEIGHT. INSTALL NEW CONDUITS I28A, I29A, I30A, I31A, I35A, I36A, I37A, C52A AND P49A. PULL CABLES BACK INTO CONDUITS AND RECONNECT AS PREVIOUSLY TERMINATED. (BY OTHERS)

OFFICIAL RELEASE BY WHC
DATE APR 04 1989

EDT# 101051

1-7-89
REV 0

IMPACT LEVEL 2

WHC APPROVAL	DATE	U.S. DEPARTMENT OF ENERGY RICHLAND OPERATIONS OFFICE
BY SR BRIGGS	12-28-1988	KAISER ENGINEERS HANFORD COMPANY
PROJ ENGR	12-28-1988	ELECTRICAL LEACHATE CONTROL STA 102 DETAILS
DR/DP	7-14-1988	
BY JE BREED	7-13-1988	
APPROVED BY RM ITEN	7-11-1988	
SAFETY D PARTHREE	7-11-1988	
APPROVED BY WCAC SUBLETT	7-11-1988	
CHECKED BY RJ HARMAN	7-6-1988	PROJECT TITLE GROUT VAULT PAIR 218-E-16-102 & 103
DESIGN BY JL BRINKLEY	4-4-1988	PROJ B-714 / WO ER1060 / JOB 242500
DESIGNED BY WC ATKINS	4-4-1988	SCALE NONE / BLDG 218-E-16 / INDEX 730177500
CAD FILE 8077639A		DRAWING NUMBER H-2-77639 / SHEET 1 / OF 2
CAD CODE 2J12W-ACD2-9.0-NN		

NUMBER	TITLE	NUMBER	TITLE
	DRAWING TRACEABILITY LIST	H-2-77573	DRAWING LIST
		NEXT USED ON	REFERENCES

BY-DATE	BY-DATE	REV BY DATE	DESCRIPTION	REV
APPROVAL	KEH APPROVAL		REVISIONS	
COMMENT REVIEW				

MICROFILMED

KEHCAD

850830
901178

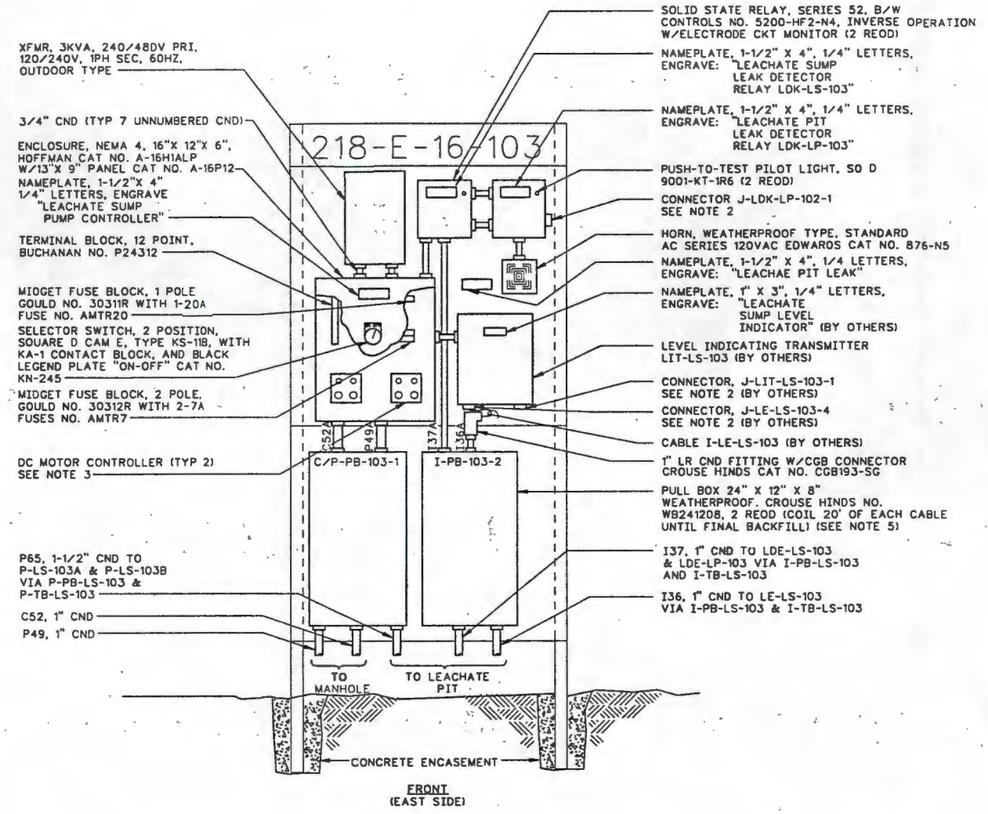

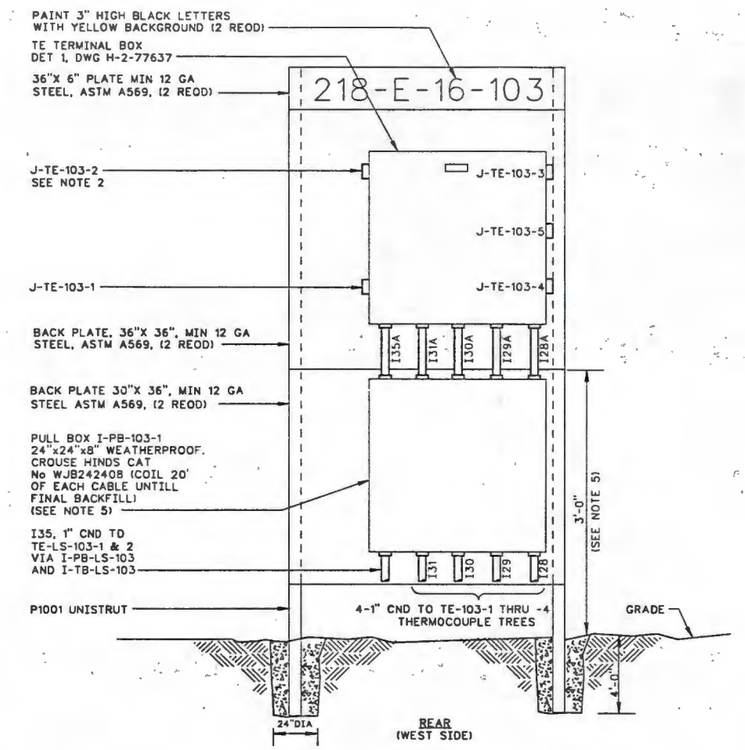

ELEVATION (K)
(SEE DWG H-2-77638 SH 3 DETAIL 10 FOR CONDUIT STUB-UPS) H-2-77638 SH 3

NOTE:
FOR NOTES, SEE SH 1.

OFFICIAL RELEASE BY WHC DATE APR 04 1989

EDT # 101089

1-7-89 REV 0

IMPACT LEVEL 2

WHC APPROVAL BY SD BRIGGS	DATE 12/28/1988	U.S. DEPARTMENT OF ENERGY RICHLAND OPERATIONS OFFICE	
PREP.	12-28-1988	KAISER ENGINEERS HANFORD COMPANY	
DA ENGINEER	7-13-1988	M ELECTRICAL LEACHATE CONTROL STA 103 DETAILS	
APPROVED BY JE BREED	7-13-1988		
APPROVED BY RM ITEN	7-11-1988		
SAFETY D PARTHREE	7-11-1988		
APPROVED WCH P.S.E.B. BY/CAC SUBLETT	7-11-1988	PROJECT TITLE GROUT VAULT PAIR 218-E-16-102 & 103	
CHECKED BY RJ HARMAN	7-5-1988		
DRAWN BY JL BRINKLEY	4-4-1988	PROJ B-714	WO ER1060 / JOB 242500
DESIGNED BY WC ATKINS	4-4-1988	SCALE NONE	BLDG 218-E-16 / TRADE 7401/7501
CAD FILE B077639B		DRAWING NUMBER H-2-77639	SHEET 2 OF 2
CAD CODE 2J:TBM:ACD2:9.0:NN			

NUMBER	TITLE	NUMBER	TITLE
DRAWING TRACEABILITY LIST		DRAWING LIST / REFERENCES	
		NEXT USED ON	

REV	DESCRIPTION	REV BY DATE	BY-DATE	BY-DATE
	REVISIONS		APPROVAL	KEH APPROVAL
COMMENT REVIEW				

MICROFILMED

KEHCAD

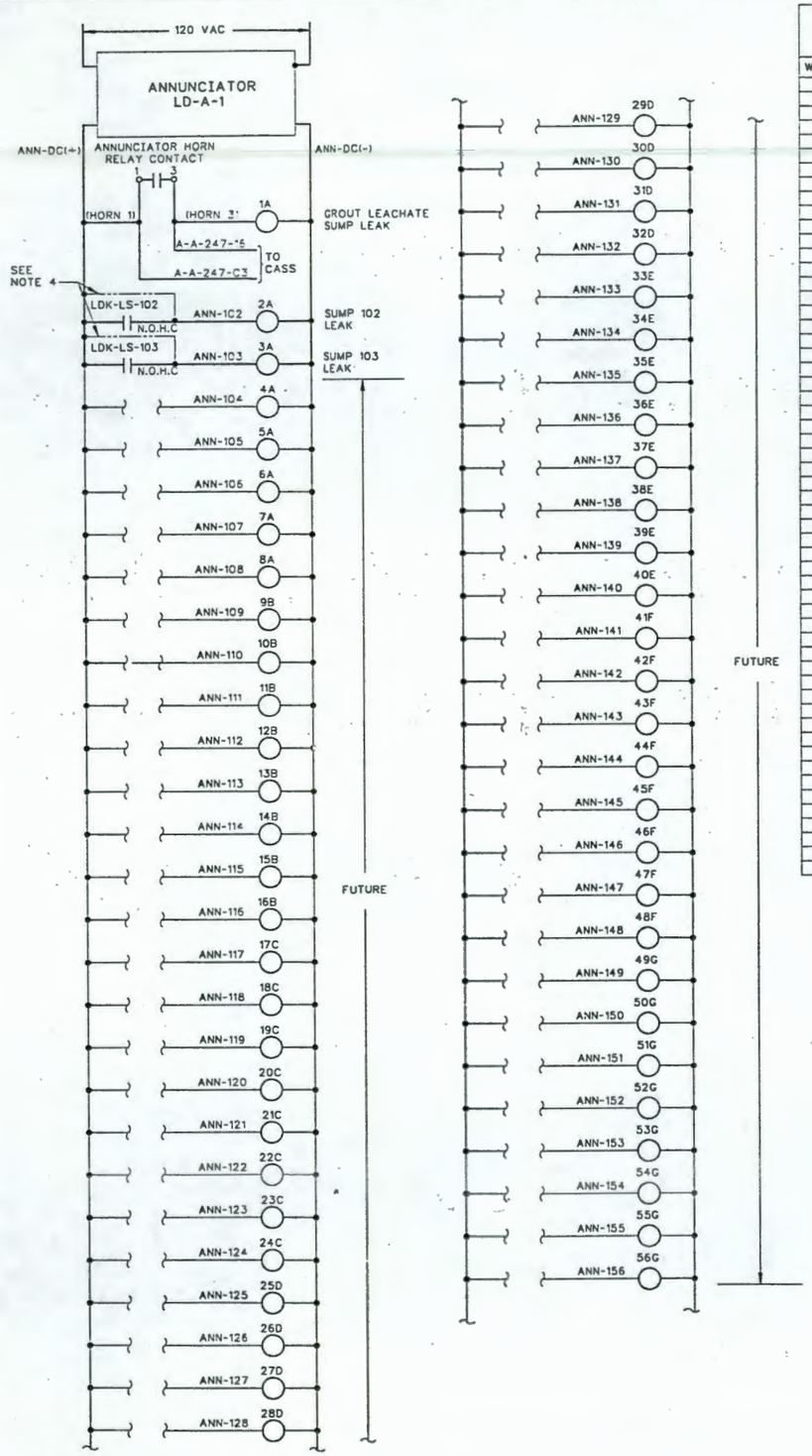

ELEMENTARY DIAGRAM

ANNUNCIATOR WINDOW ENGRAVING CHART
(SEE NOTE 2)

WINDOW	ENGRAVE
1A	GROUT LEACHATE SUMP LIQUID DETECTED
2A	102A SUMP LIQUID DETECTED
3A	103A SUMP LIQUID DETECTED
4A	
5A	
6A	
7A	
8A	
9B	
10B	
11B	
12B	
13B	
14B	
15B	
16B	
17C	
18C	
19C	
20C	
21C	
22C	
23C	
24C	
25D	
26D	
27D	
28D	
29D	
30D	
31D	
32D	
33E	
34E	
35E	
36E	
37E	
38E	
39E	
40E	
41F	
42F	
43F	
44F	
45F	
46F	
47F	
48F	
49G	
50G	
51G	
52G	
53G	
54G	
55G	
56G	

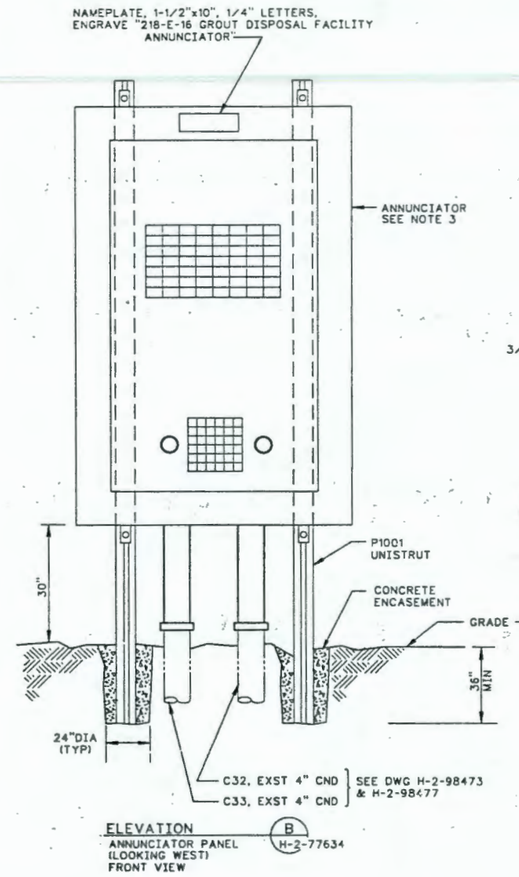

ELEVATION (B) H-2-77634
ANNUNCIATOR PANEL (LOOKING WEST) FRONT VIEW

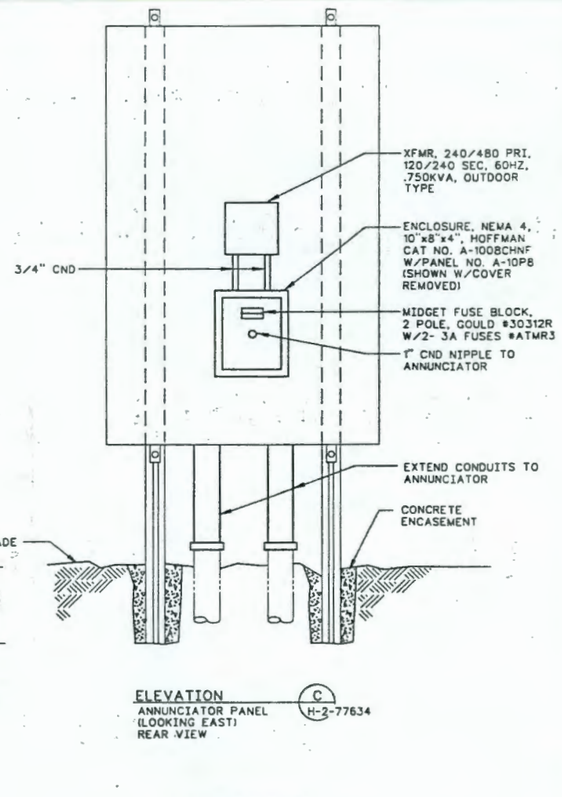

ELEVATION (C) H-2-77634
ANNUNCIATOR PANEL (LOOKING EAST) REAR VIEW

1A	2A	3A	4A	5A	6A	7A	8A
9B	10B	11B	12B	13B	14B	15B	16B
17C	18C	19C	20C	21C	22C	23C	24C
25D	26D	27D	28D	29D	30D	31D	32D
33E	34E	35E	36E	37E	38E	39E	40E
41F	42F	43F	44F	45F	46F	47F	48F
49G	50G	51G	52G	53G	54G	55G	56G

ANNUNCIATOR WINDOW ARRANGEMENT

ABBREVIATIONS:
N.O.H.C.: NORMALLY OPEN HELD CLOSED.

NOTES:
1. ABBREVIATIONS ARE PER ANSI Y1.1-1972.
2. ENGRAVING ON ANNUNCIATOR WINDOWS SHALL BE 1/4" LETTERS.
3. FOR DESCRIPTION OF ANNUCIATOR, SEE CONSTRUCTION SPECIFICATION B714-C2, SECTION 16400.
4. INSTALL TEMPORARY JUMPER AROUND ALARM CONTACTS DURING VAULT FILL. REMOVE WHEN "FILL" LEACHATE SUMP PUMP WITH HI-HI LEVEL ELEMENT IS REMOVED, AND "PERMANENT" LEACHATE SUMP PUMP IS INSTALLED.

OFFICIAL RELEASE BY WHC
DATE APR 04 1989

EDT # 101089

1-7-89 REV 0

IMPACT LEVEL 2

DRAWING TRACEABILITY LIST			
NUMBER	TITLE	NUMBER	TITLE
		H-2-98477	ELEC WIRE RUN LIST
		H-2-98473	ELEC SITE & VAULT PLAN & DET
		H-2-77573	DRAWING LIST
		REFERENCES	
		NEXT USED ON	

REVISIONS					
BY-DATE	BY-DATE	REV BY DATE	DESCRIPTION	REV
APPROVAL	KEH APPROVAL			

MICROFILMED
COMMENT REVIEW

WHC APPROVAL 1-7-89
BY JR BRIGGS 12-28-1988
PROJ ENG JW CLOUD 12-28-1988
SA PROJ ENGR JE BREED 12-28-1988
APPROVED BY RM ITEN 7-13-1988
DATE D PARTHREE 7-11-1988
APPROVED BY MGR C SUBLETT 7-11-1988
CHECKED BY RJ HARMAN 7-5-1988
DRAWN BY JL BRINKLEY 7-27-1988
DESIGNED BY WC ATKINS 7-27-1988
CAD/EI B077640A
CAD DATA 7-01-89 M-AC02-9.0-NN

U.S. DEPARTMENT OF ENERGY
RICHLAND OPERATIONS OFFICE
KAISER ENGINEERS HANFORD COMPANY

ELECTRICAL
ELEM DIAG
LEAK DET ANN

PROJECT TITLE: GROUT VAULT PAIR 218-E-16-102 & 103
PROJ B-714 | BLDG ER1060 | JOB 242500
SCALE NONE | BLDG 218-E-16 | SHEET 7501,7502
DRAWING NUMBER H-2-77640 | SHEET 1 | OF 1 | REV 0

KEHCAD

7850832
9011178

WIRE RUN NO.	NO. OF WIRES	SIZE OF WIRE	TYPE OF WIRE	FROM	VIA	TO	WIRE NUMBERS
GWD50	3-1/C	2	6	POLE P17A	P50	MH 104(LBC)	PH-A, PH-B, PH-C
GWD51	3-1/C	2	6	MH 104(LBC)	EXST P14	MH 103(LBC)	PH-A, PH B, PH-C
GWD52	3-1/C	2	6	MH 103(LBC)	P40	MH 102A(LBC)	PH-A, PH-B, PH-C
GWD53	3-1/C	2	6	MH 102A(LBC)	P53	225KVA TRANSFORMER	PH-A, PH-B, PH-C
GWD54	3-1/C	2	6	MH 103(LBC)	EXST P8	MH 102(LBC)	PH-A, PH-B, PH-C
GWD55	3-1/C	2	6	MH 102(LBC)	P44	MH 103A(LBC)	PH-A, PH-B, PH-C
GWD56	2-25/C	14	9	ANN-TBX-103 (MH 103)	MH 103, EXST C12, MH 102	ANN-TBX-102 (MH 102)	ANN-103 THRU -119,-121,-123,-125,-127,-129,-131,-133,-153 THRU -156,(4)-DC+,(18) SPARE
GWD57	16PR	20	4	TE-102-1 JB	I24, I-PB-102-1, I24A	TE-TBX-102	TE-102-1-1(+) & (-) THRU TE-102-1-16(+) & (-)
GWD58	16PR	20	4	TE-102-2 JB	I25, I-PB-102-1, I25A	TE-TBX-102	TE-102-2-1(+) & (-) THRU TE-102-2-16(+) & (-)
GWD59	16PR	20	4	TE-102-3 JB	I26, I-PB-102-1, I26A	TE-TBX-102	TE-102-3-1(+) & (-) THRU TE-102-3-16(+) & (-)
GWD60	16PR	20	4	TE-102-4 JB	I27, I-PB-102-1, I27A	TE-TBX-102	TE-102-4-1(+) & (-) THRU TE-102-4-16(+) & (-)
GWD61	4PR	20	7	I-TB-LS-102	I32B, I-PB-LS-102, I32, I-PB-102-1, I32A	TE-TBX-102	TE-LS-102-1(+),-1(-),-2(+),-2(-),-SP-1(+),-SP-1(-),-SP-2(+),-SP-2(-)
GWD62	25/C	14	9	ANN-TBX-103 (MH 103)	MH 103, C43, MH 102A	ANN-TBX-102A (MH 102A)	ANN-102,-120,-122,-124,-126,-128,-130,-132,-135,-137,-139,-141,-143,-144,-151,-152,(2)-DC+,(7) SPARE
GWD63	-	-	8	I-TB-LS-102	I33B, I-PB-LS-102, I33, I-PB-102-2, I33A, CABLE CONNECTOR	LIT-LS-102	LIT-LS-102-10,-11 (CABLE INSTALLATION BY OTHERS)
GWD64	3/C	16	2	I-TB-LSL102	I34B, I-PB-LS-102, I34, I-PB-102-2, I34A	LDK-LS-102	LDK-LS-102-14,-14A,-15
GWD65	1	COAX	3	MH 102A WW(CCTV XMTR)	MH 102A WW, I20, MH 103 WW (SEE NOTE 1)	MH 103 WW	I-XC-01A-3
GWD66	2	COAX	3	MH 102A(CCTV XMTR)	MH 102A WW, I20, MH 103 WW, EXST I5, MH 102 WW, EXST I3,	TGE CONTROL ROOM	I-XC-01A-4,-5
					MH 101 WW, EXST I1, SPARE TBX, EXST CND (SEE NOTE 1)		
GWD67	3	COAX	3	MH 103A(CCTV XMTR)	MH 103A WW, I22, MH 102 WW (SEE NOTE 1)	MH 102 WW	I-XC-01A-6,-7,-8
GWD68	6 PR	24	5	MH 102A(DATA LINK)	MH 102A WW, I20, MH 103 WW (SEE NOTE 1)	MH 103 WW	CDL-01-1(+),-1(-),-1(SH) THRU -6(+),-6(-),-6(SH)
GWD69	2-6 PR	24	5	MH 102A(DATA LINK)	MH 102A WW, I20, MH 103 WW, EXST I5, MH 102 WW, EXST I3,	TGE CONTROL ROOM	CDL-01-1(+),-1(-),-1(SH) THRU -6(+),-6(-),-6(SH)
					MH 101 WW, EXST I1, SPARE TBX, EXST CND (SEE NOTE 1)		
GWD70	3-6 PR	24	5	MH 103A(DATA LINK)	MH 103A WW, I22, MH 102 WW (SEE NOTE 1)	MH 102 WW	CDL-01-1(+),-1(-),-1(SH) THRU -6(+),-6(-),-6(SH)
GWD71	4/C	12	2	TB-P-102A (MH 102A)	MH 102A, P48, C/P-PB-102-1, P48A	(102) LEACHATE SUMP PUMP CONTROLLER	D-PB-01-13A,-13B,-13C,GND
GWD72	2/C	12	2	LDK-LS-102	C51A, C/P-PB-102-1, C51, MH 102A	ANN-TBX-102A (MH 102A)	ANN-DC+,ANN-102
GWD73	16PR	20	4	TE-103-1 JB	I28, I-PB-103-1, I28A	TE-TBX-103	TE-103-1-1(+) & (-) THRU TE-103-1-16(+) & (-)
GWD74	16PR	20	4	TE-103-2 JB	I29, I-PB-103-1, I29A	TE-TBX-103	TE-103-2-1(+) & (-) THRU TE-103-2-16(+) & (-)
GWD75	16PR	20	4	TE-103-3 JB	I30, I-PB-103-1, I30A	TE-TBX-103	TE-103-3-1(+) & (-) THRU TE-103-3-16(+) & (-)
GWD76	16PR	20	4	TE-103-4 JB	I31, I-PB-103-1, I31A	TE-TBX-103	TE-103-4-1(+) & (-) THRU TE-103-4-16(+) & (-)
GWD77	4PR	20	7	I-TB-LS-103	I35B, I-PB-LS-103, I35, I-PB-103-1,I35A	TE-TBX-103	TE-LS-103-1(+),-1(-),-2(+),-2(-),-SP-1(+),-SP-1(-),-SP-2(+),-SP-2(-)
GWD78	25/C	14	9	ANN-TBX-102 (MH 102)	MH 102, C47, MH 103A	ANN-TBX-103A (MH 103A)	ANN-103,-104,-106,-108,-110,-112,-114,-116,-118,-121,-123,-125,-127,-129,-131,-133,-153,-154,
							(2)-DC+,(5) SPARE
GWD79	-	-	8	I-TB-LS-103	I36B, I-PB-LS-103, I36, I-PB-103-2, I36A, CABLE CONNECTOR	LIT-LS-103	LIT-LS-103-10,-11 (CABLE INSTALLATION BY OTHERS)
GWD80	3/C	16	2	I-TB-LS-103	I37B, I-PB-LS-103, I37, I-PB-103-2, I37A	LDK-LS-103	LDK-LS-103-14,-14A,-15
GWD81	2/C	16	2	ANNUNCIATOR	EXST C33, MH 103, EXST C12, MH 102, EXST C8, MH 101, EXST C5	CASS TBX	A-A-247-16, -C3
GWD82	3	12	1	P-TBX-103 (MH 103)	EXST C33, GROUT FACILITY ANNUN, CND NIPPLE	FUSE ENCLOSURE	D-PB-01-13B,-13C,GND
GWD83	3-25/C	14	9	ANN-TBX-103 (MH 103)	EXST C32	GROUT FACILITY ANNUNCIATOR	ANN-102 THRU -156, (6)-DC+,(14) SPARE
GWD84	3	12	1	FUSE ENCLOSURE	NIPPLE	ANNUNN TRANSFORMER	B,C,GND
GWD85	3	12	1	ANNUN TRANSFORMER	NIPPLE, FUSE ENCLOSURE, NIPPLE	GROUT FACILITY ANNUNCIATOR	AC1,ACN,GND
GWD86	2	12	1	ANNUN HORN RELAY TB	ANNUNCIATOR	ANNUN WINDOW 1A	HORN 1, HORN 2
GWD87	4/C	12	2	TB-P-103A (MH 103A)	MH 103A, P49, C/P-PB-103-1, P49A	(103) LEACHATE SUMP PUMP CONTROLLER	D-PB-01-13A,-13B,-13C,GND
GWD88	2/C	12	2	LDK-LS-103	C52A, C/P-PB-103-1, C52, MH 103A	ANN-TBX-103A (MH 103A)	ANN-DC+,ANN-103
GWD89	4/C	12	2	P-TBX-103(MH 103)	MH 103, P41, MH 102A	TB-P-102A(MH 102A)	D-PB-01-13A,-13B,-13C,GND
GWD90	4/C	12	2	P-TBX-103(MH 103)	MH 103, EXST P6, MH 102	TB-P-102(MH 102)	D-PB-01-13A,-13B,-13C,GND
GWD91	4/C	12	2	P-TBX-102(MH 102)	MH 102, P45, MH 103A	TB-P-103A(MH 103A)	D-PB-01-13A,-13B,-13C,GND
GWD92	2-3/C	12	2	P-TB-LS-102	P64B P-PB-LS-102, P64, C/P-PB-102, P64A	(102) LEACHATE SUMP PUMP CONTROLLER	P-LS-102A-A(+)-A(-)-GND; P-LS-102B-A(+)-A(-)-GND
GWD93	2-3/C	12	2	P-TB-LS-103	P65B, P-PB-LS-103, P65, C/P-PB-103, P65A	(103) LEACHATE SUMP PUMP CONTROLLER	P-LS-103A-A(+)-A(-)-GND; P-LS-103B-A(+), A(-)-GND
GWD94	3	12	1	(102) LEACHATE SUMP PUMP CONT	3/4" NIPPLE	(102) 3KVA XFMR PRIMARY	D-PB-01-13A, -13B, GND
GWD95	3	12	1	(102) 3KVA XFMR SECONDARY	3/4" NIPPLE	(102) LEACHATE SUMP PUMP CONTROLLER	AC1, ACN, GND
GWD96	3	12	1	(102) LEACHATE SUMP PUMP CONT	3/4" NIPPLE	LDK-LS-102	AC1, ACN, GND
GWD97	3	12	1	LDK-LS-102	3/4" NIPPLE	LDK-LP-102	AC1, ACN, GND
GWD98	3	12	1	LDK-LP-102	3/4" NIPPLE	(102) HORN	LDK-LP-102-9, -11
GWD99	3/C	16	2	LDK-LP-102	3/4" NIPPLE, LDK-LS-102, I34A, IP-102-2, I34, I-PB-LS-102, I34B	I-TB-LS-102	LDK-LP-102-14,-14A,-15
GWD100	3	12	1	(102) LEACHATE SUMP PUMP CONT	3/4" NIPPLE	LIT-102	AC1, ACN, GND (CONDUIT & CABLE INSTALLATION BY OTHERS)
GWD101	3	12	1	(103) LEACHATE SUMP PUMP CONT	3/4" NIPPLE	(103) 3KVA TRANSFORMER PRIMARY	D-PB-01-13A, D-PB-01-13B,-GND
GWD102	3	12	1	(103) 3KVA XFMR SECONDARY	3/4" NIPPLE	(103) LECHATE SUMP PUMP CONTROLLER	AC1, ACN, GND
GWD103	3	12	1	(103) LEACHATE SUMP PUMP CONT	3/4" NIPPLE	LDK-LS-103	AC1, ACN, GND
GWD104	3	12	1	LKD-LS-103	3/4" NIPPLE	LDK-LP-103	AC1, ACN, GND
GWD105	3	12	1	(103) LEACHATE SUMP PUMP CONT	3/4" NIPPLE	LIT-LS-103	AC1, ACN, GND (CONDUIT & CABLE INSTALLATION BY OTHERS)
GWD106	3	12	1	LDK-LP-103	3/4" NIPPLE	(103) HORN	LDK-LP-103-9,-11
GWD107	3/C	16	2	LDK-LP-103	3/4" NIPPLE, LDK-LS-103, I37A, IP-103-2, I37, ITB-LS-103, I37B	I-TB-LS-103	LDK-LP-103-14,-14A,-15
GWD108	1	5/8"DIA	10	225KVA XFMR GND PAD	P52	MH-102A GROUND GRID	GND
GWD109	1	5/8"DIA	10	225KVA XFMR GND PAD	P54	MH-103A GROUND GRID	GND (CABLE INSTALLATION BY OTHERS)
GWD110	3-1/C	2	6	MH-103A (LBC)	P55	225KVA TRANSFORMER	PH A, PH B, PH C (CABLE INSTALLATION BY OTHERS)

CONDUIT SCHEDULE

CND NO.	CND SIZE	WIRE RUN NUMBERS
P40	4"	GWD52
P41	4"	GWD89
P42	4"	SPARE
P43	4"	SPARE
P44	4"	GWD55
P45	4"	GWD91
P46	4"	SPARE
P47	4"	SPARE
P48	1"	GWD71
P48A	1"	GWD71
P49	1"	GWD87
P49A	1"	GWD87
P50	4"	GWD50
P51	4"	SPARE
P52	4"	GWD108
P53	4"	GWD53
P54	4"	GWD109
P55	4"	GWD110
P56	4"	SPARE
P57	4"	SPARE
P58	4"	SPARE
P59	4"	SPARE
P60	4"	SPARE
P61	4"	SPARE
P62	4"	SPARE
P63	4"	SPARE
P64	1-1/2"	GWD92
P64A	1-1/2"	GWD92
P65	1-1/2"	GWD93
P65A	1-1/2"	GWD93
P6*	4"	GWD90
P8*	4"	GWD54
P14*	4"	GWD51
C5*	2"	GWD81
C8*	4"	GWD81
C12*	4"	GWD56,GWD81
C32*	4"	GWD83
C33*	4"	GWD81,GWD82
I1*	2"	GWD66,GWD69
I3*	4"	GWD66,GWD69
I5*	4"	GWD66,GWD69

CONDUIT SCHEDULE

CND NO.	CND SIZE	WIRE RUN NUMBERS
C43	4"	GWD62
C44	4"	SPARE
C45	4"	SPARE
C46	4"	SPARE
C47	4"	GWD78
C48	4"	SPARE
C49	4"	SPARE
C50	4"	SPARE
C51	1"	GWD72
C51A	1"	GWD72
C52	1"	GWD88
C52A	1"	GWD88
C53	4"	SPARE
C54	4"	SPARE
C55	4"	SPARE
C56	4"	SPARE
C57	4"	SPARE
C58	4"	SPARE
C59	4"	SPARE
C60	4"	SPARE
I20	4"	GWD65,GWD66,GWD68,GWD69
I21	4"	SPARE
I22	4"	GWD67,GWD70
I23	4"	SPARE
I24	1"	GWD57
I24A	1"	GWD57
I25	1"	GWD58
I25A	1"	GWD58
I26	1"	GWD59
I26A	1"	GWD59
I27	1"	GWD60
I27A	1"	GWD60
I28	1"	GWD73
I28A	1"	GWD73
I29	1"	GWD74
I29A	1"	GWD74
I30	1"	GWD75
I30A	1"	GWD75
I31	1"	GWD76
I31A	1"	GWD76
I32	1"	GWD61
I32A	1"	GWD61
I32B	1"	GWD61
I33	1"	GWD63
I33A	1"	GWD63
I33B	1"	GWD63
I34	1"	GWD64, GWD99
I34A	1"	GWD64, GWD99
I34B	1"	GWD64, GWD99
I35	1"	GWD77
I35A	1"	GWD77
I35B	1"	GWD77
I36	1"	GWD79
I36A	1"	GWD79
I36B	1"	GWD79
I37	1"	GWD80, GWD107
I37A	1"	GWD80, GWD107
I37B	1"	GWD80, GWD107
I38	4"	SPARE
I39	4"	SPARE
I40	4"	SPARE
I41	4"	SPARE

*FOR EXST CONDUITS SEE SITE PLAN H-2-98473 & WIRE RUN LIST H-2-98477

NOTES:

1. SEE DRAWINGS H-2-77642 SH 1 & 2 FOR ADDITIONAL DATA LINK AND CCTV CABLE INFORMATION.

TYPE OF WIRE

1. 1/C XHHW/THHN
2. TYPE TC, 600V ROCKBESTOS FIREWALL III
3. COAXIAL CABLE TYPE RG11, BELDEN NO. 8238
4. 16 PR #20 TYPE K THERMOCOUPLE EXTENSION WIRE, ROCKBESTOS FIREWALL III
5. 6 SH PR #24 STRANDED COMPUTER CABLE, BELDEN NO. 9731
6. 15KV SHIELDED POWER CABLE
7. 4 PR #20 TYPE K THERMOCOUPLE EXTENSION WIRE, ROCKBESTOS FIREWALL III
8. LEVEL PROBE COMES COMPLETE WITH CONNECTING CABLE AND ASSOCIATED CONNECTORS FOR BOTH ENDS
9. 25/C #14 ALPHA XTRA GUARD 2
10. 5/8"DIA, 7 STRAND, SPECIAL LOW CARBON GRADE STEEL CABLE. CABLE COATING SHALL BE CLASS B ZINC IN ACCORDANCE WITH ASTM A475.

ABBREVIATIONS

LBC - LOADBREAK CENTER MODULE

NUMBER	TITLE
H-2-98477	ELEC WIRE RUN LIST
H-2-98473	ELEC SITE & VAULT PL & DET
H-2-77573	DRAWING LIST

REFERENCES — NEXT USED ON — DRAWING TRACEABILITY LIST (NUMBER / TITLE)

MICROFILMED | BY-DATE | APPROVAL | BY-DATE | KEH APPROVAL | REV BY DATE | DESCRIPTION | REV — REVISIONS — COMMENT REVIEW

OFFICIAL RELEASE BY WHC DATE APR 04 1989

EDT = 101089

IMPACT LEVEL 2

1-7-89 REV 0

WHC APPROVAL	1/1989	U.S. DEPARTMENT OF ENERGY RICHLAND OPERATIONS OFFICE
BY SR BRIGGS	12-28 1988	KAISER ENGINEERS HANFORD COMPANY
PROJ ENGR CLOUD	12-28 1988	ELECTRICAL WIRE RUN LIST
QA JE BREED	7-14 1988	
APPROVED BY RM ITEN	7-13 1988	
SAFETY D PARTHREE	7-11 1988	
APPROVED C SUBLETT	7-11 1988	PROJECT TITLE: GROUT VAULT PAIR 218-E-16-102 & 103
CHECKED BY RJ HARMAN	7-11 1988	PROJ B-714 / WO ER1060 / JOB 242500
DRAWN BY JL BRINKLEY	7-5 1988	SCALE NONE / BLDG 218-E-16 / INDEX 7305
DESIGNED BY JL BRINKLEY	6-30 1988	DRAWING NUMBER H-2-77641 / SHEET 1 / OF 1 / REV 0
CAD FILE B077641A		
CAD CODE 2J:IRV:ACD2:9.0:NN		

KE-CAD

CONNECTOR SCHEDULE (SEE NOTE 9)

EQUIPMENT				CONNECTING CABLE						EQUIPMENT		
DEVICE	NAME	CONN NO	CONN TYPE	CABLE NO	CONN NO	CONN TYPE	CABLE	CONN NO	CONN TYPE	NAME	CONN NO	CONN TYPE
VAULT TEMPERATURE ELEMENT TREES TE TERMINAL BOX DWG H-2-77637 DETAIL 1	TE-102-1 (TE-102-1-1 THRU -16)	J-TE-102-1 TE TERM BOX	PV-72L18-32SL W/CAP & CHAIN SEE NOTE 3	I-TE-101	EXISTING CABLES TO BE USED FROM PREVIOUS VAULT SEE DWG H-2-98478 SH 1 FOR CABLES AND CONNECTIONS TO PORTABLE INSTR HOUSE. (BY OTHERS)							
	TE-102-2 (TE-102-2(1 THRU 16)	J-TE-102-2 TE TERM BOX	PV-72L18-32SL W/CAP & CHAIN SEE NOTE 3	I-TE-102								
	TE-102-3 (TE-102-3(1 THRU 16)	J-TE-102-3 TE TERM BOX	PV-72L18-32SL W/CAP & CHAIN SEE NOTE 3	I-TE-103								
	TE-102-4 (TE-102-4(1 THRU 16)	J-TE-102-4 TE TERM BOX	PV-72L18-32SL W/CAP & CHAIN SEE NOTE 3	I-TE-104								
EXCESS WATER REMOVAL PUMPS DWG H-2-77606	P-EW-01 (BY OTHERS)	J-P-P-EW-01-1	CA-3101E-24-22P-F80 W/CAP & CHAIN (NIC)	P-P-EW-01	J-P-P-EW-01-2	CA-3106F-24-22S-F80 W/CAP & CHAIN	4/C #10 TYPE TC X 125' LG ROCKBESTOS FIREWALL III	J-P-P-EW-01-3	CA-3106F-24-22P-F80 W/CAP & CHAIN	PORTABLE INSTR HOUSE	J-P-P-EW-01-4 (JB-PIH-1)	CA-3102E-24-22S-F80 W/CAP & CHAIN (NIC)
		J-C-P-EW-01-1	CA-3101E-24-16S-8P-F80 W/CAP & CHAIN (NIC)	C-P-EW-01	J-C-P-EW-01-2	CA-3106F-16S-8S-F80 W/CAP & CHAIN	5/C #16 TYPE TC X 125' LG ROCKBESTOS FIREWALL III	J-C-P-EW-01-3	CA-3106F-16S-8P-F80 W/CAP & CHAIN		J-C-P-EW-01-4 (JB-PIH-2)	CA-3102E-16S-8S-F80 W/CAP & CHAIN (NIC)
	P-EW-02 (BY OTHERS)	J-P-P-EW-02-1	CA-3101E-24-22P-F80 W/CAP & CHAIN (NIC)	P-P-EW-02	J-P-P-EW-02-2	CA-3106F-24-22S-F80 W/CAP & CHAIN	4/C #10 TYPE TC X 125' LG ROCKBESTOS FIREWALL III	J-P-P-EW-02-3	CA-3106F-24-22P-F80 W/CAP & CHAIN		J-P-P-EW-02-4 (JB-PIH-1)	CA-3102E-24-22S-F80 W/CAP & CHAIN
		J-C-P-EW-02-1	CA-3101E-24-16S-8P-F80 W/CAP & CHAIN (NIC)	C-P-EW-02	J-C-P-EW-02-2	CA-3106F-16S-8S-F80 W/CAP & CHAIN	5/C #16 TYPE TC X 125' LG ROCKBESTOS FIREWALL III	J-C-P-EW-02-3	CA-3106F-16S-8P-F80 W/CAP & CHAIN		J-C-P-EW-02-4 (JB-PIH-2)	CA-3102E-16S-8S-F80 W/CAP & CHAIN (NIC)
	P-EW-03 (BY OTHERS)	J-P-P-EW-03-1	CA-3101E-24-22P-F80 W/CAP & CHAIN (NIC)	P-P-EW-03	J-P-P-EW-03-2	CA-3106F-24-22S-F80 W/CAP & CHAIN	4/C #10 TYPE TC X 125' LG ROCKBESTOS FIREWALL III	J-P-P-EW-03-3	CA-3106F-24-22P-F80 W/CAP & CHAIN		J-P-P-EW-03-4 (JB-PIH-1)	CA-3102E-24-22S-F80 W/CAP & CHAIN (NIC)
		J-C-P-EW-03-1	CA-3101E-24-16S-8P-F80 W/CAP & CHAIN (NIC)	C-P-EW-03	J-C-P-EW-03-2	CA-3106F-16S-8S-F80 W/CAP & CHAIN	5/C #16 TYPE TC X 125' LG ROCKBESTOS FIREWALL III	J-C-P-EW-03-3	CA-3106F-16S-8P-F80 W/CAP & CHAIN		J-C-P-EW-03-4 (JB-PIH-2)	CA-3102E-16S-8S-F80 W/CAP & CHAIN (NIC)
	P-EW-04 (BY OTHERS)	J-P-P-EW-04-1	CA-3101E-24-22P-F80 W/CAP & CHAIN (NIC)	P-P-EW-04	J-P-P-EW-04-2	CA-3106F-24-22S-F80 W/CAP & CHAIN	4/C #10 TYPE TC X 125' LG ROCKBESTOS FIREWALL III	J-P-P-EW-04-3	CA-3106F-24-22P-F80 W/CAP & CHAIN		J-P-P-EW-04-4 (JB-PIH-1)	CA-3102E-24-22S-F80 W/CAP & CHAIN (NIC)
		J-C-P-EW-04-1	CA-3101E-24-16S-8P-F80 W/CAP & CHAIN (NIC)	C-P-EW-04	J-C-P-EW-04-2	CA-3106F-16S-8S-F80 W/CAP & CHAIN	5/C #16 TYPE TC X 125' LG ROCKBESTOS FIREWALL III	J-C-P-EW-04-3	CA-3106F-16S-8P-F80 W/CAP & CHAIN		J-C-P-EW-04-4 (JB-PIH-2)	CA-3102E-16S-8S-F80 W/CAP & CHAIN (NIC)
LEACHATE SUMP LEVEL DWG H-2-77617 & H-2-77616	LE-LS-102 (LEACH LEVEL)	J-LE-LS-102-1	SEE NOTE 2	I-LE-LS-102	J-LE-LS-102-2	———	SEE NOTE 2	J-LE-LS-102-3	SEE NOTE 2	LIT-LS-102 XMTR	J-LE-LS-102-4	SEE NOTE 2
	LIT-LS-102 (XMTR) (BY OTHERS)	J-LIT-LS-102-1	CA-3102E-16S-5P-F80 W/CAP & CHAIN (BY OTHERS)	C-LIT-101	EXISTING CABLE TO BE USED FROM PREVIOUS VAULT SEE DWG H-2-98478 SH 2 FOR CABLE & CONN TO PORTABLE INSTR HOUSE (BY OTHERS)							
LEACHATE PIT LEAK DWG H-2-77612	LDK-LP-102 (LEAK DET RELAY)	J-LDK-LP-102-1	CA-3102E-14S-7P-F80 W/CAP & CHAIN	C-LDK-LP-01	J-LDK-LP-01-2	CA-3106F-14S-7S-F80	3/C #16 TYPE TC X 125' LG ROCKBESTOS FIREWALL III	J-LDK-LP-01-3	CA-3106F-14S-7P-F80	PORTABLE INSTR HOUSE	J-LDK-LP-01-4 (JB-PIH-2)	CA-3102E-14S-7S-F80 W/CAP & CHAIN (NOT IN CONTRACT)
LEACHATE SUMP PUMP DWG H-2-77616	P-LS-01 (BY OTHERS)	J-P-P-LS-01-1(PWR)	CA-3101E-24-22P-F80 W/CAP & CHAIN (BY OTHERS)	P-P-LS-01(PWR)	J-P-P-LS-01-2	CA-3106F-24-2S-F80 W/CAP & CHAIN	4/C #10 TYPE TC X 125' LG ROCKBESTOS FIREWALL III	J-P-P-LS-01-3	CA-3106F-24-22P-F80 W/CAP & CHAIN	PORTABLE INSTR HOUSE	J-P-P-LS-01-4 (JB-PIH-1)	CA-3102E-24-22S-F80 W/CAP & CHAIN (NOT IN CONTRACT)
		J-C-P-LS-01-1(CONT)	CA-3101E-16S-8P-F80 W/CAP & CHAIN (BY OTHERS)	C-P-LS-01(CONT)	J-C-P-LS-01-2	CA-3106F-16S-8S-F80 W/CAP & CHAIN	5/C #16 TYPE TC X 125' LG ROCKBESTOS FIREWALL III	J-C-P-LS-01-3	CA-3106F-16S-8P-F80 W/CAP & CHAIN		J-C-P-LS-01-4 (JB-PIH-2)	CA-3102E-16S-8S-F80 W/CAP & CHAIN (NOT IN CONTRACT)
LEACHATE SUMP HIGH HIGH LEVEL DWG H-2-77616	LE-LS-01 (BY OTHERS)	J-LE-LS-01-1	CA-3101E-14S-7P-F80 (BY OTHERS)	C-LE-LS-01	J-LE-LS-01-2	CA-3106F-14S-7S-F80	3/C #16 TYPE TC X 125' LG ROCKBESTOS FIREWALL III	J-LE-LS-01-3	CA-3106F-14S-7P-F80	PORTABLE INSTR HOUSE	J-LE-LS-01-4 (J-PIH-2)	CA-3102-14S-7S-F80 (NOT IN CONTRACT)
EV DIVERTER VALVE MOV-8 DWG H-2-77603	MOV-8 (PWR & CONTROL) (BY OTHERS)	J-MOV-8-1	CA-3101E-24A24P-F80 (BY OTHERS)	C-MOV-8	J-MOV-8-2	CA-3106F-24A24S-F80	9/C #12 TYPE TC X 125' LG ROCKBESTOS FIREWALL III	J-MOV-8-3	CA-3106F-24A24P-F80	PORTABLE INSTR HOUSE	J-MOV-8-4 (JB-PIH-2)	CA-3102-24A24S-F80 (NOT IN CONTRACT)
DATA LINK H-2-98468 SH 2	EXST CONN J-CDL-01-1 ON PIH(J-PIH-3) SEE DWG H-2-98478 SH 2			EXST CABLE I-CDL-01-1 SEE DWG H-2-98478 SH 2 (BY OTHERS)						MANHOLE MH-102A WW (CONT Z 7D)		
	MANHOLE MH-102A WW	———	———	I-CDL-01-3	J-CDL-01-5	CA-PV76L-14-18P W/TYPE S BACKSHELL	6 TW SH PR #24 BELDEN NO. 9731 (LENGTH AS REQD)	J-CDL-01-6	CA-PV71L-14-18S W/TYPE S BACKSHELL	MANHOLE MH-103 WW (SEE NOTES 4 & 5)	———	———
	MANHOLE MH-102A WW	———	———	I-CDL-01-4	J-CDL-01-7	CA-PV76L-14-18P W/TYPE S BACKSHELL	6 TW SH PR #24 BELDEN NO. 9731 (LENGTH AS REQD)	———	———	TO TGE CONTROL ROOM (SEE NOTES 5 & 6)	———	———
	MANHOLE MH-102A WW	———	———	I-CDL-01-5	J-CDL-01-9	CA-PV76L-14-18P W/TYPE S BACKSHELL	6 TW SH PR #24 BELDEN NO. 9731 (LENGTH AS REQD)	———	———	TO TGE CONTROL ROOM (SEE NOTES 5 & 6)	———	———
CLOSED CIRCUIT TELEVISION H-2-98468 SH 1	EXST CONN J-XC-01A-1 ON PIH(J-PIH-3) SEE DWG H-2-98478 SH 1			EXST CABLE I-XC-01A-1 SEE DWG H-2-98478 SH 1 (BY OTHERS)						MANHOLE MH-102A WW (CONT Z 7D)		
	MANHOLE MH-102A WW	———	———	I-XC-01A-3	J-XC-01A-5	PL-259	COAX CABLE RG-11 BELDEN #8238 LENGTH AS REQD	J-XC-01A-6	PL-259	MANHOLE MH-103 WW (SEE NOTE 7)		
	MANHOLE MH-102A WW	———	———	I-XC-01A-4	J-XC-01A-7	PL-259	COAX CABLE RG-11 BELDEN #8238 LENGTH AS REQD	J-XC-01A-8	PL-259	TO TGE CONTROL ROOM (SEE NOTES 8)		
	MANHOLE MH-102A WW	———	———	I-XC-01A-5	J-XC-01A-9	PL-259	COAX CABLE RG-11 BELDEN #8238 LENGTH AS REQD	J-XC-01A-10	PL-259	TO TGE CONTROL ROOM (SEE NOTES 8)		

NOTES:

1. ABBREVIATIONS ARE PER ANSI Y1.1 UNLESS OTHERWISE NOTED.
2. LEVEL PROBE COMES COMPLETE WITH CONNECTING CABLE AND ASSOCIATED CONNECTORS FOR BOTH ENDS (BY OTHERS).
3. THERMOCOUPLE CONNECTORS TO HAVE CHROMEL PINS ITT CANNON NO. 030-1832-0000 AND SOCKETS NO. 031-1014-000 IN POSITIONS A,C,E,G,J,L,N,R,T,V,X,Z,b,d,f & h. ALUMEL PINS ITT CANNON NO. 030-1831-000 AND SOCKETS NO. 031-1013-000 IN POSITIONS B,D,F,H, K,M,P,S,U,W,Y,a,c,e,g & j.
4. CABLE C-CDL-01-3 TO BE CONNECTED TO EXISTING CABLE C-CDL-01-2 AT MANHOLE MH-103 WHICH CONTINUES TO TGE CONTROL ROOM SEE DWG H-2-98478 SH 2.
5. ALL DATA LINK CONNECTORS TO BE ENCAPSULATED WITH GENERAL ELECTRIC RTV-125 N SIL SEALANT
6. CABLES I-CDL-01-4 & I-CDL-01-5 BETWEEN MANHOLE MH-103-A AND TGE CONTROL ROOM TO BE SPLICED AT MANHOLES MH-103 AND MH-102 USING ITT CANNON PV-7614-18P CONNECTORS WITH TYPE S BACKSHELL AT BOTH MANHOLES.
7. CABLE I-XC-01A-3 TO BE CONNECTED TO EXISTING CABLE I-XC-01A-2 AT MANHOLE MH-103 WHICH CONTINUES TO TGE CONTROL ROOM USING ADAPTER NO. PL-258. SEE DWG H-2-98478 SH 1.
8. CABLES I-XC-01A-4 & I-XC-01A-5 TO BE SPLICED AT MANHOLE MH-103 AND USING MH-102 CONNECTORS NO. PL-259 & ADAPTER NO. PL-258.
9. ALL CONNECTORS ARE ITT CANNON EXCEPT THE CCTV CONNECTORS WHICH ARE KING ELECTRONICS.
10. DATA LINK CABLES I-CDL-01-6,-7 & -8 TO END AT MANHOLE MH-102 WIREWAY.
11. ONE OF THE DATA LINK CABLES TO BE CONNECTED TO ONE OF THE EXISTING DATA LINK CABLES AT MANHOLE MH-102 WHICH CONTINUES TO TGE CONTROL ROOM. SEE DWG H-2-98478 SH 2 (BY OTHERS).
12. CCTV CABLES I-XC-01A-6, -7, & -8 TO END AT MANHOLE MH-102 WIREWAY FOR CONNECTIONS TO FUTURE VAULTS.
13. ONE OF THE CCTV CABLES TO BE CONNECTED TO ONE OF THE EXISTING CCTV CABLES AT MANHOLE MH-102 USING ADAPTER NO. PL-258 WHICH CONTINUES TO TGE CONTROL ROOM. SEE DWG H-2-98478 SH 1 (BY OTHERS).

CONNECTOR TERMINATION CHART

DEVICE	CONNECTOR NO	WIRE PREFIX NO.	A	B	C	D	E	F	G	H	J	K	L	M
VAULT TEMPERATURE ELEMENTS	J-TE-102-1 J-TE-102-2 J-TE-102-3 J-TE-102-4	TE-102-1 TE-102-2 TE-102-3 TE-102-4	1(+) 1(+) 1(+) 1(+)	1(-) 1(-) 1(-) 1(-)	2(+) 2(+) 2(+) 2(+)	2(-) 2(-) 2(-) 2(-)	3(+) 3(+) 3(+) 3(+)	3(-) 3(-) 3(-) 3(-)	4(+) 4(+) 4(+) 4(+)	4(-) 4(-) 4(-) 4(-)	5(+) 5(+) 5(+) 5(+)	5(-) 5(-) 5(-) 5(-)	6(+) 6(+) 6(+) 6(+)	6(-) 6(-) 6(-) 6(-)
DATA LINK	J-CDL-01-5,-6,-7, & -9	CDL-D1	1(+)	1(-)	1 SH	2(+)	2(-)	2 SH	3(+)	3(-)	3 SH	4(+)	4(-)	4 SH
LEACHATE SUMP LEVEL	J-LE-LS-102-1-1,-2,-3,-4 J-LIT-LS-102-1	LE-LS-102 LIT-LS-102	BY MFGR (+)	(-)	SHLD									
LEACHATE PIT LEAK	J-LDE-LP-102-1, 2, 3 & 4	LDK-LP-102	6	9	GND									
LEACHATE SUMP PUMP	J-P-P-LS-01-1 THRU -4 J-C-P-LS-01-1 THRU -4	P-P-LS-01 C-P-LS-01	T1 P1	T2 P2	T3 W1	GND W2	GND							
EW DIVERTER VALVE MOV-8	J-MOV-8-1 THRU -4	MOV-8	1	2	3	4	5	10	11	6	GND	———	———	———
LEACHATE SUMP HIGH HIGH LEVEL	J-LE-LS-01-1 THRU -4	LE-LS-01	14A	14	15									
EXCESS WATER REMOVAL PUMPS	J-P-P-EW-01-1 THRU -4 J-C-P-EW-01-1 THRU -4	P-P-EW-01 C-P-EW-01	T1 P1	T2 P2	T3 W1	GND W2	GND							
	J-P-P-EW-02-1 THRU -4 J-C-P-EW-02-1 THRU -4	P-P-EW-02 C-P-EW-02	T1 P1	T2 P2	T3 W1	GND W2	GND							
	J-P-P-EW-03-1 THRU -4 J-C-P-EW-03-1 THRU -4	P-P-EW-03 C-P-EW-03	T1 P1	T2 P2	T3 W1	GND W2	GND							
	J-P-P-EW-04-1 THRU -4 J-C-P-EW-04-1 THRU -4	P-P-EW-04 C-P-EW-04	T1 P1	T2 P2	T3 W1	GND W2	GND							

DEVICE	N	P	R	S	T	U	V	W	X	Y	Z	a	b	c	d	e	f	g	h	j
VAULT TEMPERATURE ELEMENTS	7(+) 7(+) 7(+) 7(+)	7(-) 7(-) 7(-) 7(-)	8(+) 8(+) 8(+) 8(+)	8(-) 8(-) 8(-) 8(-)	9(+) 9(+) 9(+) 9(+)	10(-) 10(-) 10(-) 10(-)	10(+) 10(+) 10(+) 10(+)	10(-) 10(-) 10(-) 10(-)	11(+) 11(+) 11(+) 11(+)	11(-) 11(-) 11(-) 11(-)	12(+) 12(+) 12(+) 12(+)	12(-) 12(-) 12(-) 12(-)	13(+) 13(+) 13(+) 13(+)	13(-) 13(-) 13(-) 13(-)	14(+) 14(+) 14(+) 14(+)	14(-) 14(-) 14(-) 14(-)	15(+) 15(+) 15(+) 15(+)	15(-) 15(-) 15(-) 15(-)	16(+) 16(+) 16(+) 16(+)	16(-) 16(-) 16(-) 16(-)
DATA LINK	5(+)	5(-)	5 SH	6(+)	6(-)	6 SH														

NUMBER	TITLE

DRAWING TRACEABILITY LIST

NUMBER	TITLE
H-2-98478 SH 1 & 2	ELEC CONNECTOR SCHEDULE
H-2-77573	DRAWING LIST

REFERENCES — NEXT USED ON

MICROFILMED

BY-DATE	BY-DATE	REV BY DATE	DESCRIPTION	REV
APPROVAL	KEH APPROVAL			

REVISIONS

COMMENT REVIEW

OFFICIAL RELEASE BY WHC DATE APR 14 1989

[Professional engineer seal: GREGORY P. McDONALD, STATE OF WASHINGTON, 4-5-89 REV 0]

IMPACT LEVEL 2

EDT # 102073

	DATE
WHC APPROVAL	4/10/89
BY JR BRIGGS	12-28 1988
PROJ ENGR JC CLOUD	12-28 1988
QA JE BREED	7-14 1988
APPROVED BY RM ITEN	7-13 1988
SAFETY D PARTHREE	7-11 1988
APPROVED BY WCAC SUBLETT	7-11 1988
CHECKED BY RJ HARMAN	7-8 1988
DRAWN BY LS JONES	3-29 1988
DESIGNED BY WC ATKINS	3-29 1988
CAD FILE B077642A	

U.S. DEPARTMENT OF ENERGY
RICHLAND OPERATIONS OFFICE
KAISER ENGINEERS HANFORD COMPANY

ELECTRICAL CONN SCHEDULE VAULT 218-E-16-102

PROJECT TITLE: GROUT VAULT PAIR 218-E-16-102 & 103

PROJ	WO	JOB
B-714	ER1060	242500
SCALE NONE	BLDG 218-E-16	INDEX 7302.8002

DRAWING NUMBER H-2-77642 SHEET 1 OF 2 REV 0

KEHCAD 11D02E

901178 5083 4

CONNECTOR SCHEDULE (SEE NOTE 9)

EQUIPMENT				CONNECTING CABLE						EQUIPMENT		
DEVICE	NAME	CONN NO	CONN TYPE	CABLE NO	CONN NO	CONN TYPE	CABLE	CONN NO	CONN TYPE	NAME	CONN NO	CONN TYPE
VAULT TEMPERATURE ELEMENT TREES TE TERMINAL BOX DWG H-2-77637 DETAIL 1	TE-103-1(1 THRU 16)	J-TE-103-1 TE TERM BOX	PV-72L18-32SL W/CAP & CHAIN SEE NOTE 3	I-TE-101	EXISTING CABLES TO BE USED FROM PREVIOUS VAULT SEE DWG H-2-98478 SH 1 & H-2-77642 SH 1 FOR CABLES AND CONNECTIONS TO PORTABLE INSTR HOUSE (BY OTHERS)							
	TE-103-2 (TE-103-2-1 THRU 16)	J-TE-103-2 TE TERM BOX	PV-72L18-32SL W/CAP & CHAIN SEE NOTE 3	I-TE-102								
	TE-103-3 (TE-103-3-1 THRU 16)	J-TE-103-3 TE TERM BOX	PV-72L18-32SL W/CAP & CHAIN SEE NOTE 3	I-TE-103								
	TE-103-4 (TE-103-4-1 THRU 16)	J-TE-103-4 TE TERM BOX	PV-72L18-32SL W/CAP & CHAIN SEE NOTE 3	I-TE-104								
EXCESS WATER REMOVAL PUMPS DWG H-2-77606	P-EW-01 (BY OTHERS)	J-P-P-EW-01-1	CA-3101E-24-22P-F80 W/CAP & CHAIN (NIC)	P-P-EW-01	EXISTING CABLES TO BE USED FROM PREVIOUS VAULT SEE SHEET 1 FOR CABLES AND CONNECTIONS TO PORTABLE INSTR HOUSE (BY OTHERS).							
		J-C-P-EW-01-1	CA-3101E-24-16S-8P-F80 W/CAP & CHAIN (NIC)	C-P-EW-01								
	P-EW-02	J-P-P-EW-02-1	CA-3101E-24-22P-F80 W/CAP & CHAIN (NIC)	P-P-EW-02								
		J-C-P-EW-02-1	CA-3101E-24-16S-8P-F80 W/CAP & CHAIN (NIC)	C-P-EW-02								
	P-EW-03	J-P-P-EW-03-1	CA-3101E-24-22P-F80 W/CAP & CHAIN (NIC)	P-P-EW-03								
		J-C-P-EW-03-1	CA-3101E-24-16S-8P-F80 W/CAP & CHAIN (NIC)	C-P-EW-03								
	P-EW-04	J-P-P-EW-04-1	CA-3101E-24-22P-F80 W/CAP & CHAIN (NIC)	P-P-EW-04								
		J-C-P-EW-04-1	CA-3101E-24-16S-8P-F80 W/CAP & CHAIN (NIC)	C-P-EW-04								
LEACHATE SUMP LEVEL DWG H-2-77617 & H-2-77616	LE-LS-103 (LEACH LEVEL) LIT-LS-103 (XMTR) (BY OTHERS)	J-LE-LS-103-1 J-LIT-LS-103-1 (XMTR) (BY OTHERS)	SEE NOTE 2 CA-3102E-16S-5P-F80 W/CAP & CHAIN	I-LE-LS-103 C-LIT-101	J-LE-LS-103-2 EXISTING CABLE TO BE USED FROM PREVIOUS VAULT SEE DWG H-2-98478 SH 2 FOR CABLE & CONN TO PORTABLE INSTR HOUSE (BY OTHERS)	—	SEE NOTE 2	J-LE-LS-103-3	—	—	J-LE-LS-103-4	SEE NOTE 2
LEACHATE PIT LEAK DWG H-2-77612	LDK-LP-103 (LEAK DET RELAY)	J-LDK-LP-103-1	CA-3101E-14S-7P-F80 W/CAP & CHAIN	C-LDK-LP-01	EXISTING CABLE TO BE USED FROM PREVIOUS VAULT SEE SHEET 1 FOR CABLE & CONNECTIONS TO PORTABLE INSTRUMENT HOUSE (BY OTHERS)							
LEACHATE SUMP PUMP DWG H-2-77616	P-LS-01 (BY OTHERS)	J-P-P-LS-01-1(PWR)	CA-3101E-24-22P-F80 W/CAP & CHAIN (NIC)	P-P-LS-01(PWR)	EXISTING CABLE TO BE USED FROM PREVIOUS VAULT SEE SHEET 1 FOR CABLE & CONNECTIONS TO PORTABLE INSTRUMENT HOUSE (BY OTHERS)							
		J-C-P-LS-01-1(CONT)	CA-3101E-46S-8P-F80 W/CAP & CHAIN (NIC)	C-P-LS-01(CONT)								
LEACHATE SUMP HIGH HIGH LEVEL DWG H-2-77616	LE-LS-01 (BY OTHERS)	J-LE-LS-01-1	CA-3101E-14S-7P-F80	C-LE-LS-01	EXISTING CABLE TO BE USED FROM PREVIOUS VAULT SEE SHEET 1 FOR CABLE & CONNECTIONS TO PORTABLE INSTRUMENT HOUSE (BY OTHERS)							
EV DIVERTER VALVE MOV-8 DWG H-2-77603	MOV-8 (PWR & CONTROL) (BY OTHERS)	J-MOV-8-1	CA-3101E-24A24P-F80 (BY OTHERS)	C-MOV-8	EXISTING CABLE TO BE USED FROM PREVIOUS VAULT SEE SHEET 1 FOR CABLE & CONNECTIONS TO PORTABLE INSTRUMENT HOUSE (BY OTHERS)							
DATA LINK (SEE NOTES 10 & 11)	MANHOLE 103A WW	—	—	I-CDL-01-6	J-CDL-01-10	CA-PV76L-14-18P W/TYPE S BACKSHELL	6 TW SH PR #24 BELDEN NO. 9731 (LENGTH AS REQD)	J-CDL-01-11	CA-PV71L-14-18S W/TYPE S BACKSHELL	MANHOLE MH 102 WW SEE NOTE 5		
	MANHOLE 103A WW	—	—	I-CDL-01-7	J-CDL-01-12	CA-PV76L-14-18P W/TYPE S BACKSHELL	6 TW SH PR #24 BELDEN NO. 9731 (LENGTH AS REQD)	J-CDL-01-13	CA-PV71L-14-18S W/TYPE S BACKSHELL	MANHOLE MH 102 WW SEE NOTE 5		
	MANHOLE 103A WW.	—	—	I-CDL-01-8	J-CDL-01-14	CA-PV76L-14-18P W/TYPE S BACKSHELL	6 TW SH PR #24 BELDEN NO. 9731 (LENGTH AS REQD)	J-CDL-01-15	CA-PV71L-14-18S W/TYPE S BACKSHELL	MANHOLE MH 102 WW SEE NOTE 5		
CLOSED CIRCUIT TELEVISION (SEE NOTES 12 & 13)	MANHOLE 103A WW	—	—	I-XC-01A-6	J-XC-01A-11	PL-259	COAX CABLE RG-11 BELDEN #8238 (LENGTH AS REQD)	J-XC-01A-12	PL-259	MANHOLE MH 103 WW		
	MANHOLE 103A WW	—	—	I-XC-01A-7	J-XC-01A-13	PL-259	COAX CABLE RG-11 BELDEN #8238 (LENGTH AS REQD)	J-XC-01A-14	PL-259	MANHOLE MH 103 WW		
	MANHOLE 103A WW	—	—	I-XC-01A-8	J-XC-01A-15	PL-259	COAX CABLE RG-11 BELDEN #8238 (LENGTH AS REQD)	J-XC-01A-16	PL-259	MANHOLE MH 103 WW		

CONNECTOR TERMINATION CHART

DEVICE	CONNECTOR NO	WIRE PREFIX NO.	A	B	C	D	E	F	G	H	J	K	L	M	N	P	R	S	T	U	V	W	X	Y	Z	a	b	c	d	e	f	g	h	j
VAULT TEMPERATURE ELEMENTS	J-TE-103-1	TE-103-1	1(+)	1(-)	2(+)	2(-)	3(+)	3(-)	4(+)	4(-)	5(+)	5(-)	6(+)	6(-)	7(+)	7(-)	8(+)	8(-)	9(+)	10(-)	10(+)	10(-)	11(+)	11(-)	12(+)	12(-)	13(+)	13(-)	14(+)	14(-)	15(+)	15(-)	16(+)	16(-)
	J-TE-103-2	TE-103-2	1(+)	1(-)	2(+)	2(-)	3(+)	3(-)	4(+)	4(-)	5(+)	5(-)	6(+)	6(-)	7(+)	7(-)	8(+)	8(-)	9(+)	10(-)	10(+)	10(-)	11(+)	11(-)	12(+)	12(-)	13(+)	13(-)	14(+)	14(-)	15(+)	15(-)	16(+)	16(-)
	J-TE-103-3	TE-103-3	1(+)	1(-)	2(+)	2(-)	3(+)	3(-)	4(+)	4(-)	5(+)	5(-)	6(+)	6(-)	7(+)	7(-)	8(+)	8(-)	9(+)	10(-)	10(+)	10(-)	11(+)	11(-)	12(+)	12(-)	13(+)	13(-)	14(+)	14(-)	15(+)	15(-)	16(+)	16(-)
	J-TE-103-4	TE-103-4	1(+)	1(-)	2(+)	2(-)	3(+)	3(-)	4(+)	4(-)	5(+)	5(-)	6(+)	6(-)	7(+)	7(-)	8(+)	8(-)	9(+)	10(-)	10(+)	10(-)	11(+)	11(-)	12(+)	12(-)	13(+)	13(-)	14(+)	14(-)	15(+)	15(-)	16(+)	16(-)
LEACHATE SUMP LEVEL	J-LE-LS-103-1-1,-2,-3,-4	LE-LS-103	BY MFGR (+)	(-)	SH																													
	J-LIT-LS-103-1-1	LIT-LS-103																																
LEACHATE PIT LEAK	J-LDE-LP-103-1,-2,-3 & -4	LDK-LP-103	6	9	G																													
DATA LINK	J-CDL-01-11 THRU -16.	CDL-01	1(+)	1(-)	1 SH	2(+)	2(-)	2 SH	3(+)	3(-)	3 SH	4(+)	4(-)	4 SH	5(+)	5(-)	5 SH	6(+)	6(-)	6 SH														
LEACHATE SUMP PUMP	J-P-P-LS-01-1	P-P-LS-01	T1	T2	T3	GND																												
	J-C-P-LS-01-1	C-P-LS-01	P1	P2	W1	W2	GND																											
EW DIVERTER VALVE MOV-8	J-VOV-8-1	MOV-8	1	2	3	4	5	10	11	6	GND	—	—	—																				
LEACHATE SUMP HIGH HIGH LEVEL	J-LE-LS-01-1	LE-LS-01	14A	14	15																													
EXCESS WATER REMOVAL PUMPS	J-P-P-EW-01-1	P-P-EW-01	T1	T2	T3	GND																												
	J-C-P-EW-01-1	C-P-EW-01	P1	P2	W1	W2	GND																											
	J-P-P-EW-02-1	P-P-EW-02	T1	T2	T3	GND																												
	J-C-P-EW-02-1	C-P-EW-02	P1	P2	W1	W2	GND																											
	J-P-P-EW-03-1	P-P-EW-03	T1	T2	T3	GND																												
	J-C-P-EW-03-1	C-P-EW-03	P1	P2	W1	W2	GND																											
	J-P-P-EW-04-1	P-P-EW-04	T1	T2	T3	GND																												
	J-C-P-EW-04-1	C-P-EW-04	P1	P2	W1	W2	GND																											

SEE SHEET 1 FOR NOTES.

OFFICIAL RELEASE BY WHC DATE APR 14 1989

4-5-89 REV 0

IMPACT LEVEL 2

EOT # 102073

WHC APPROVAL		DATE	U.S. DEPARTMENT OF ENERGY RICHLAND OPERATIONS OFFICE
BY JR BRIGGS		12-28-1988	KAISER ENGINEERS HANFORD COMPANY
PROJ ENGR	JP CLOED	12-28-1988	ELECTRICAL CONN SCHEDULE VAULT 218-E-16-103
DR ENGINEER	JE BREED	7-11-1988	
APPROVED BY	RM ITEN	7-11-1988	
SAFETY	D PARTHREE	7-11-1988	
APPROVED BY WCAC	SUBLETT	7-11-1988	
CHECKED BY	RJ HARMAN	7-11-1988	PROJECT TITLE: GROUT VAULT PAIR 218-E-16-102 & 103
DRAWN BY	LS JONES	7-11-1988	PROJ B-714 BD ER1060 JOB 242500
REVISED BY	WC ATKINS	3-29-1988	SCALE NONE BLDG 218-E-16 INDEX 7302,8002
CAD FILE	B077642B		DRAWING NUMBER H-2-77642 SHEET 2 OF 2 REV 0
CAD SYSTEM	ACCO-0.0-AN		

BY-DATE	BY-DATE	REV BY DATE	DESCRIPTION	REV
APPROVAL	KEH APPROVAL		REVISIONS	
COMMENT REVIEW				

MICROFILMED

NUMBER	TITLE
DRAWING TRACEABILITY LIST	

NUMBER	TITLE
DRAWING LIST	
REFERENCES	
NEXT USED ON	

KEHCAD 11002E

D-PB-01-13A
D-PB-01-13B
D-PB-01-13C
GND
SPARE
AC1
ACN
GND
AC1
ACN
SPARE
P-LS-102A-A(+)
P-LS-102A-A(-)
GND
P-LS-102B-A(+)
P-LS-102B-A(-)

LEACHATE SUMP PUMP P-LS-102A & B MOTOR CONTROLLER

ANN-103	ANN-105	ANN-102
ANN-104	ANN-107	ANN-120
ANN-106	ANN-109	ANN-122
ANN-108	ANN-111	ANN-124
ANN-110	ANN-113	ANN-126
ANN-112	ANN-115	ANN-128
ANN-114	ANN-117	ANN-130
ANN-116	ANN-119	ANN-132
ANN-118	ANN-155	ANN-135
ANN-121	ANN-156	ANN-137
ANN-123	ANN-DC+	ANN-139
ANN-125	ANN-DC+	ANN-141
ANN-127	ANN-134	ANN-143
ANN-129	ANN-136	ANN-144
ANN-131	ANN-138	ANN-151
ANN-133	ANN-140	ANN-152
ANN-153	ANN-142	ANN-DC+
ANN-154	ANN-145	ANN-DC+
ANN-DC+	ANN-146	SPARE
ANN-DC+	ANN-147	SPARE
SPARE	ANN-148	SPARE
SPARE	ANN-149	SPARE
SPARE	ANN-150	SPARE
SPARE	SPARE	SPARE

ANN-TBX-103

ANN-103	ANN-105
ANN-104	ANN-107
ANN-106	ANN-109
ANN-108	ANN-111
ANN-110	ANN-113
ANN-112	ANN-115
ANN-114	ANN-117
ANN-116	ANN-119
ANN-118	ANN-155
ANN-121	ANN-156
ANN-123	ANN-DC+
ANN-125	ANN-DC+
ANN-127	SPARE
ANN-129	SPARE
ANN-131	SPARE
ANN-133	SPARE
ANN-153	SPARE
ANN-154	SPARE
ANN-DC+	SPARE
ANN-DC+	SPARE
SPARE	SPARE
SPARE	SPARE
SPARE	SPARE
SPARE	SPARE

ANN-TBX-102

ANN-103
ANN-104
ANN-106
ANN-108
ANN-110
ANN-112
ANN-114
ANN-116
ANN-118
ANN-121
ANN-123
ANN-125
ANN-127
ANN-129
ANN-131
ANN-133
ANN-153
ANN-154
ANN-DC+
ANN-DC+
SPARE
SPARE
SPARE
SPARE

ANN-TBX-103A

ANN-102
ANN-120
ANN-122
ANN-124
ANN-126
ANN-128
ANN-130
ANN-132
ANN-135
ANN-137
ANN-139
ANN-141
ANN-143
ANN-144
ANN-151
ANN-152
ANN-DC+
ANN-DC+
SPARE
SPARE
SPARE
SPARE
SPARE
SPARE

ANN-TBX-102A

D-PB-01-13A
D-PB-01-13B
D-PB-01-13C
GND
SPARE
AC1
ACN
GND
AC1
ACN
SPARE
P-LS-103A-A(+)
P-LS-103A-A(-)
GND
P-LS-103B-A(+)
P-LS-103B-A(-)

LEACHATE SUMP PUMP P-LS-103A & B MOTOR CONTROLLER

LDK-LS-102-14A	TE-LS-102-1(+)(CH)
LDK-LS-102-14	TE-LS-102-1(-)(AL)
LDK-LS-102-15	TE-LS-102-2(+)(CH)
SPARE	TE-LS-102-2(-)(AL)
SPARE	SPARE (CH)
SPARE	SPARE (AL)
LDK-LP-102-14A	SPARE (CH)
LDK-LP-102-14	SPARE (AL)
LDK-LP-102-15	
SPARE	
SPARE	
SPARE	

I-TB-LS-102

LDK-LS-103-14A	TE-LS-103-1(+)(CH)
LDK-LS-103-14	TE-LS-103-1(-)(AL)
LDK-LS-103-15	TE-LS-103-2(+)(CH)
SPARE	TE-LS-103-2(-)(AL)
SPARE	SPARE (CH)
SPARE	SPARE (AL)
LDK-LP-103-14A	SPARE (CH)
LDK-LP-103-14	SPARE (AL)
LDK-LP-103-5	
SPARE	
SPARE	
SPARE	

I-TB-LS-103

P-LP-103A-A(+)
P-LP-103A-A(-)
P-LP-103A-GND
SPARE
SPARE
SPARE
P-LP-103B-A(+)
P-LP-103B-A(-)
P-LP-103B-GND
SPARE
SPARE
SPARE

P-TB-LS-103

REPLACE "ZZZ" W/MANHOLE NUMBER

TB-P-ZZZ

D-PB-01-13A
D-PB-01-13B
D-PB-01-13C
GND

MANHOLE POWER TERMINAL BOX

P-LP-102A-A(+)
P-LP-102A-A(-)
P-LP-102A-GND
SPARE
SPARE
SPARE
P-LP-102B-A(+)
P-LP-102B-A(-)
P-LP-102B-GND
SPARE
SPARE
SPARE

P-TB-LS-102

OFFICIAL RELEASE BY WHC DATE APR 04 1989

EDT # 101089

IMPACT LEVEL 2

1-7-89 Rev 0

NUMBER	TITLE
	DRAWING TRACEABILITY LIST

NUMBER	TITLE
H-2-77573	DRAWING LIST
REFERENCES	
NEXT USED ON	

MICROFILMED

BY-DATE	BY-DATE	REV BY DATE	DESCRIPTION	REV
APPROVAL	KEH APPROVAL			

REVISIONS

COMMENT REVIEW

WHC	APPROVAL	DATE
BY SR BRIGGS		12-28-1988
PRINCIPAL		12-28-1988
DR. NAME		7-14-1988
APPROVED BY JC BREED		7-13-1988
APPROVED BY RM ITEN		7-11-1988
DATE		7-11-1988
APPROVED BY D PARTHREE		7-11-1988
APPROVED BY C SUBLETT		7-5-1988
DR. CODE		7-5-1988
DRAWN BY RJ HARMAN		5-13-1988
DR. CODE		5-13-1988
DRAWN BY JL BRINKLEY		5-13-1988
DR. CODE		5-13-1988
DRAWN BY WC ATKINS		5-13-1988
DWG FILE B077643A		
DWG CODE 2J1TBV-A202:9.0-NN		

U.S. DEPARTMENT OF ENERGY
RICHLAND OPERATIONS OFFICE
KAISER ENGINEERS HANFORD COMPANY

ELECTRICAL TERMINAL BOX CONNECTION DIAG

PROJECT TITLE	GROUT VAULT PAIR 218-E-16-102 & 103		
PROJ	B-714	WO ER1060	JOB 242500
SCALE NONE	BLDG 218-E-16		INDEX 7352.8002
DRAWING NUMBER H-2-77643		SHEET 1	NO. OF SHEETS 2

KEHCAD

9011178506

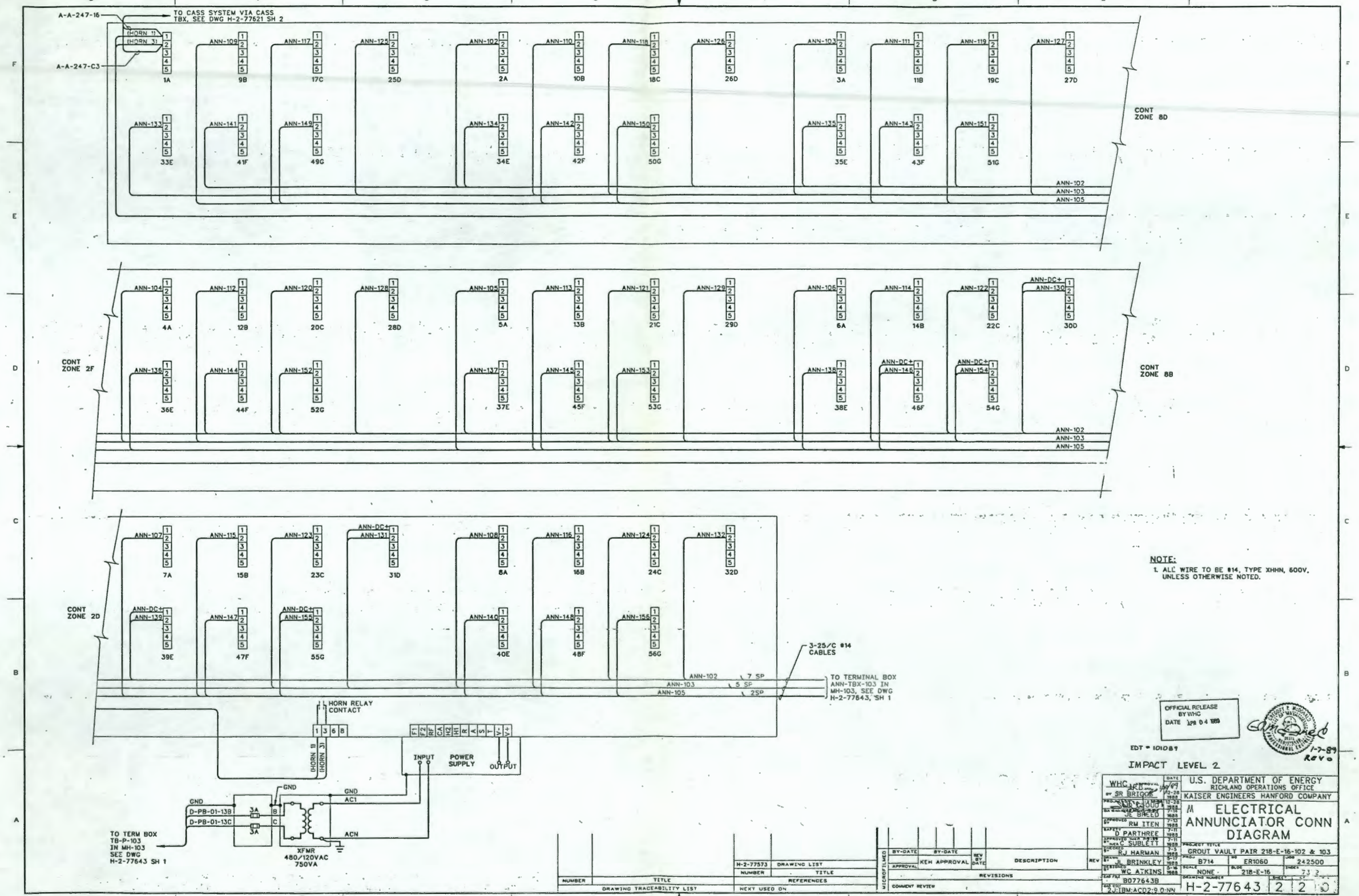

NOTE:
1. ALL WIRE TO BE #14, TYPE XHHN, 600V, UNLESS OTHERWISE NOTED.

OFFICIAL RELEASE BY WHC
DATE APR 04 1989

EDT = 101087

IMPACT LEVEL 2

1-7-89 REV 0

WHC APPROVAL		DATE
BY SR BRIGGS		12-29 1988
PROJ ENGR	JL BRIDGES	12-28 1988
SA ENGINEER	JL BRIDGES	7-11 1988
APPROVED BY	RM ITEN	7-11 1988
SAFETY	D PARTHREE	7-11 1988
APPROVED NWA PROJ	C SUBLETT	7-11 1988
CHECKED BY	RJ HARMAN	7-11 1988
DRAWN BY	JL BRINKLEY	5-16 1988
DESIGNED BY	WC AITKINS	5-16 1988
CAD FILE	B077643B	
CAD SYS	2U:IBM:ACD2:9.0:NN	

U.S. DEPARTMENT OF ENERGY
RICHLAND OPERATIONS OFFICE
KAISER ENGINEERS HANFORD COMPANY

ELECTRICAL ANNUNCIATOR CONN DIAGRAM

PROJECT TITLE: GROUT VAULT PAIR 218-E-16-102 & 103

PROJ	WO	JOB
B714	ER1060	242500

SCALE	BLDG	INDEX
NONE	218-E-16	73 3

DRAWING NUMBER: H-2-77643 REV 2 2 0

NUMBER	TITLE
H-2-77573	DRAWING LIST

DRAWING TRACEABILITY LIST

NUMBER	TITLE

REFERENCES

NEXT USED ON

BY-DATE	BY-DATE	REV BY DATE	DESCRIPTION	REV
APPROVAL	KEH APPROVAL			

REVISIONS

COMMENT REVIEW

MICROFILMED

T1002E

B50837

B71106

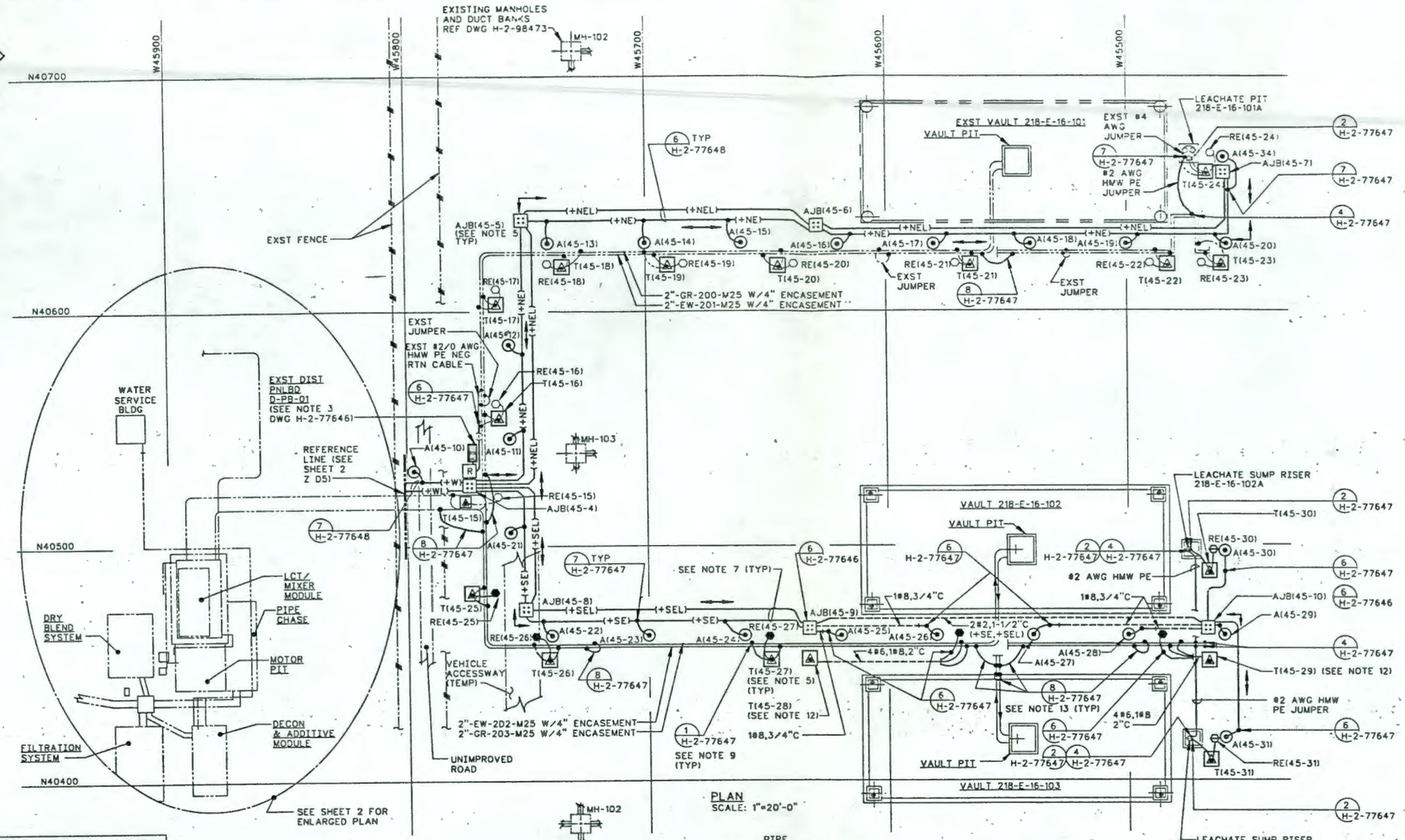

PLAN
SCALE: 1"=20'-0"

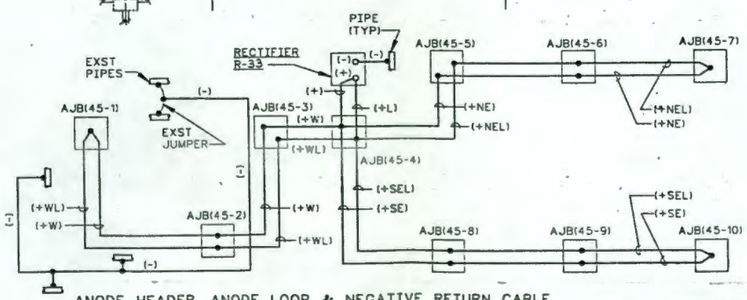

ANODE HEADER, ANODE LOOP & NEGATIVE RETURN CABLE CONNECTION DIAGRAM

SYMBOL LIST

SYMBOL	DESCRIPTION (SEE NOTE 1)
	VERTICAL PREPACKAGED ANODE SEE DETAIL 5, DWG H-2-77647
	HORIZONTAL REFERENCE ELECTRODE SEE DETAIL 1, DWG H-2-77648
	REF ELECTRODE, INSTALL VERT AT MID-POINT OF RISER PIPE AND 12 IN. FROM RISER PIPE
	ANODE JUNCTION BOX (AJB) SEE DETAILS 1,2,3 & 6, DWG H-2-77646 AND NOTE 4
R	RECTIFIER R-33 SEE DETAIL 4, DWG H-2-77646
OR	CABLE MARKER SEE DETAIL 5, DWG H-2-77648 AND NOTE 8
—(+)—	ANODE HEADER CABLE, # 2 AWG WITH HMW PE INSULATION INSERT APPROPRIATE ABBREVIATION: W=WEST; NE=NORTHEAST; SE=SOUTHEAST
—(+L)—	ANODE LOOP CABLE, # 2 AWG WITH HMW PE INSULATION INSERT APPROPRIATE ABBREVIATION: W=WEST; NE=NORTHEAST; SE=SOUTHEAST
—(-)—	NEGATIVE RETURN CABLE, # 2 AWG WITH HMW PE INSULATION
	EXISTING
TEST STA ENCLOSURE, TEST STA, PIPE TEST CONDUCTORS	NEW TEST STATION & NEW PIPE TEST CONDUCTORS SEE DETAIL 1, 2 & 3, DWG H-2-77648 AND NOTES 4 & 13
TEST STA ENCLOSURE, TEST STA, REF ELECTRODE, PIPE TEST CONDUCTORS	NEW TEST STATION, EXST PIPE TEST CONDUCTORS & EXST REF ELECTRODES SEE DETAIL 1, 2 & 3, DWG H-2-77648 AND NOTE 3
	RIGID METAL CONDUIT END BUSHING

NOTES:

1. SEE CONSTRUCTION SPECIFICATION B-714-C2 FOR MATERIAL DESCRIPTION AND INSTALLATION INSTRUCTIONS UNLESS OTHERWISE NOTED.
2. ABBREVIATIONS ARE PER ANSI Y1.1 UNLESS OTHERWISE NOTED.
3. REMOVE EXISTING METAL POSTS USED FOR SUPPORT OF EXISTING COILED PIPE TEST CONDUCTORS AND INSTALL TEST STATION ENCLOSURES, APPROXIMATELY WHERE SHOWN DIRECTLY ABOVE POINT OF PIPE TEST CONDUCTOR EARTH EMERGENCE. SEE DWG H-2-98479 & SK-2-44557 FOR DESIGN OF EXISTING INSTALLATION OF PIPE TEST CONDUCTORS AND REFERENCE ELECTRODES.
4. TEST STATION ENCLOSURES T(45-25) THRU T(45-31) AND ANODE JUNCTION BOX ENCLOSURES AJB(45-8), (45-9) & (45-10) SHALL HAVE 25' OF CABLE COILED INSIDE TO PERMIT ENCLOSURES TO BE RAISED TO GRADE LEVEL AT FINAL BACKFILL.
5. ANODE JUNCTION BOX ENCLOSURES AND TEST STATION ENCL SHALL BE LOCATED AT COORDINATES SHOWN IN TABLE EXCEPT THEY MAY BE MOVED IN ANY DIRECTION SUBJECT TO APPROVAL BY THE KEH FIELD ENGINEER. FINAL LOCATION SHALL BE DETERMINED AT TIME OF INSTALLATION.
6. ANODES SHALL BE INSTALLED AT COORDINATES SHOWN IN TABLE EXCEPT THEY MAY BE MOVED IN ANY DIRECTION SUBJECT TO APPROVAL BY THE KEH FIELD ENGINEER.
7. ANODE HEADER AND LOOP CABLES SHALL BE ROUTED DIRECTLY OVER ANODE LOCATIONS WHERE PRACTICABLE.
8. CABLE MARKERS SHALL BE INSTALLED WHERE SHOWN DIRECTLY OVER THE CABLES.
9. EXOTHERMICALLY WELD TWO #6 AWG PIPE TEST CONDUCTORS TO THE PIPE AS SHOWN IN DET 1 & 2 ON H-2-77647. WRAP ONE OF THE PIPE TEST CONDUCTORS WITH WHITE TAPE AND THE OTHER WITH RED TAPE AT TERMINATION IN TEST STATION. EXOTHERMICALLY WELD TWO #6 AWG PIPE TEST CONDUCTORS TO ANY FOREIGN PIPE OR OTHER PIPES AS DIRECTED BY THE KEH FIELD ENGINEER. WRAP EACH OF THE TWO PIPE TEST CONDUCTORS WITH BLUE TAPE AT TERMINATION IN TEST STATION. MAINTAIN A 12 INCH SEPARATION BETWEEN CONDUCTOR CONNECTIONS ON THE PIPE. IDENTIFY EACH PIPE TEST CONDUCTOR PER THE REQUIREMENTS IN CONSTRUCTION SPECIFICATION B-714-C2, SEE DETAILS 1 & 2 ON DWG H-2-77648.
10. CHIP APPROX A 6" DIAMETER AREA OF CONCRETE, 1" DEEP AROUND THE TEST LEADS THAT EMERGE FROM THE CONCRETE SHOWN ON SHEET 2, ZONE C7. CUT THE CONDUCTORS AS CLOSE TO THE CONCRETE AS PRACTICAL AND FILL CHIPPED AREA WITH GROUT. PAINT NEW GROUT WHITE TO MATCH EXISTING CONCRETE.
11. TAPE END AND COIL THE #2/0 AWG NEGATIVE RETURN CABLE FROM PIPE 2"-W-C1-P01 (2"-SN-621-M25) INSIDE TEST STATION ENCLOSURE T(45-10). SEE SHEET 2, ZONE D6.
12. INSTALL CONDUIT SEALING FITTING IN TEST STATION ENCLOSURES T(45-28) AND T(45-29) SIMILAR TO DETAIL 6 ON DWG H-2-77646.

(NOTES CONTINUED IN Z B3)

13. DO NOT CONNECT PIPE TEST CONDUCTORS OR PIPE JUMPERS TO THE PIPE INSIDE ANY PIPE EXPANSION VOID.

OFFICIAL RELEASE BY WHC DATE APR 04 1989

NACE CORROSION SPECIALIST NAME DATE DWG REV NO.

3-3-89 REVD

EDT # 101089

IMPACT LEVEL 3

ANODE LOCATION TABLE (SEE NOTE 6)

NUMBER	COORDINATES	
A(45-1)	N40532	W45920
A(45-2)	N40532	W45884
A(45-3)	N40484	W45912
A(45-4)	N40444	W45908
A(45-5)	N40425	W40896
A(45-6)	N40427	W45876
A(45-7)	N40462	W45855
A(45-8)	N40502	W45855
A(45-9)	N40532	W45840
A(45-10)	N40532	W45800
A(45-11)	N40547	W45757
A(45-12)	N40585	W45757
A(45-13)	N40631	W45740
A(45-14)	N40631	W45700
A(45-15)	N40631	W45660
A(45-16)	N40631	W45620
A(45-17)	N40631	W45580
A(45-18)	N40631	W45540
A(45-19)	N40631	W45500
A(45-20)	N40631	W45460
A(45-21)	N40506	W45757
A(45-22)	N40458	W45740
A(45-23)	N40458	W45700
A(45-24)	N40458	W45660
A(45-25)	N40458	W45620
A(45-26)	N40458	W45580
A(45-27)	N40458	W45540
A(45-28)	N40458	W45500
A(45-29)	N40458	W45460
A(45-30)	N40494	W45460
A(45-31)	N40414	W45460
A(45-32)	N40550	W45882
A(45-33)	N40514	W45889
A(45-34)	N40666	W45460

ANODE JUNCTION BOX ENCL LOCATION TABLE (SEE NOTE 5)

NUMBER	COORDINATES	
AJB(45-1)	N40527	W45917
AJB(45-2)	N40428	W45880
AJB(45-3)	N40527	W45862
AJB(45-4)	N40527	W45774
AJB(45-5)	N40632	W45760
AJB(45-6)	N40632	W45630
AJB(45-7)	N40660	W45470
AJB(45-8)	N40465	W45760
AJB(45-9)	N40465	W45540
AJB(45-10)	N40465	W45473

TEST STATION ENCLOSURE LOCATION TABLE (SEE NOTE 5)

NUMBER	COORDINATES	
T(45-25)	N40480	W45773
T(45-26)	N40446	W45740
T(45-27)	N40446	W45650
T(45-28)	N40446	W45640
T(45-29)	N40446	W45473
T(45-30)	N40492	W45473
T(45-31)	N40424	W45473

DRAWING TRACEABILITY LIST

NUMBER	TITLE
SK-2-44557	ELEC CATH PROT TEST WIRE INSTALLATION
H-2-98479	ELEC CATH PROT TEST WIRE INSTALLATION

REFERENCES

NUMBER	TITLE
H-2-98880	SITE GRADING/PAVING PLAN
H-2-98807 SH. 1 - SH. 3	INTERCONNECTING PIPE CHASE PLANS, SECTIONS & DETAILS
H-2-98842	MODULE INTCON PIPING SECT & DET
H-2-98473	ELEC SITE & VAULT PLANS & DET
H-2-78455	CIVIL SITE PLAN
H-2-98837	MODULE INTCON PIPING LAYOUT
H-2-98610	ELEC DUCT BANK SITE PLAN LAYOUT
H-2-98806	CONCRETE ENCASEMENT FOR UGND PIPE
H-2-76525	ELEC CATH PROT PLANS & DETAILS
SK-2-44557	ELEC CATH PROT TEST WIRE INSTL
H-2-98479	ELEC CATH PROT TEST WIRE INSTL
H-2-77573	DRAWING LIST

NEXT USED ON H-2-77573

APPROVAL	BY-DATE	BY-DATE	REV BY DATE	DESCRIPTION	REV
		KEH APPROVAL			

REVISIONS

COMMENT REVISED

MICROFILMED

WHC APPROVAL BY MD NORAHY — DATE 8/24/88

PROJ ENGINEER JP CLOUD 8/11-2/88

DA & W PROJECT ENGINEER JE BRELD 8-3/1989

APPROVED BY RM TIEN 8-3/1989

BAYER D PARTHREE 8-1/1988

APPROVED BY ARC C SUBLETT 8-1/1988

CHECKED BY CONTRACTOR GP MCDONALD 7-25/1988

DRAWN BY JL BRINKLEY 8-10/1988

REVISED BY WC ATKINS 8-10/1988

U.S. DEPARTMENT OF ENERGY
RICHLAND OPERATIONS OFFICE
KAISER ENGINEERS HANFORD COMPANY

ELECTRICAL CATHODIC PROTECTION PLAN

PROJECT TITLE: CROUT VAULT PAIR 218-E-16-102 & 103

PROJ: B-714 | NO: ER1060 | JOB:

SCALE: SHOWN | BLDG: 218-E-16 | INDEX: 7801

CAD FILE: B077645A

CAD CODE: 2JDECIAC02:9.DWG

DRAWING NUMBER: H-2-77645 | SHEET: 1 | OF: 2 | REV: 0

KEHCAD

9011785036

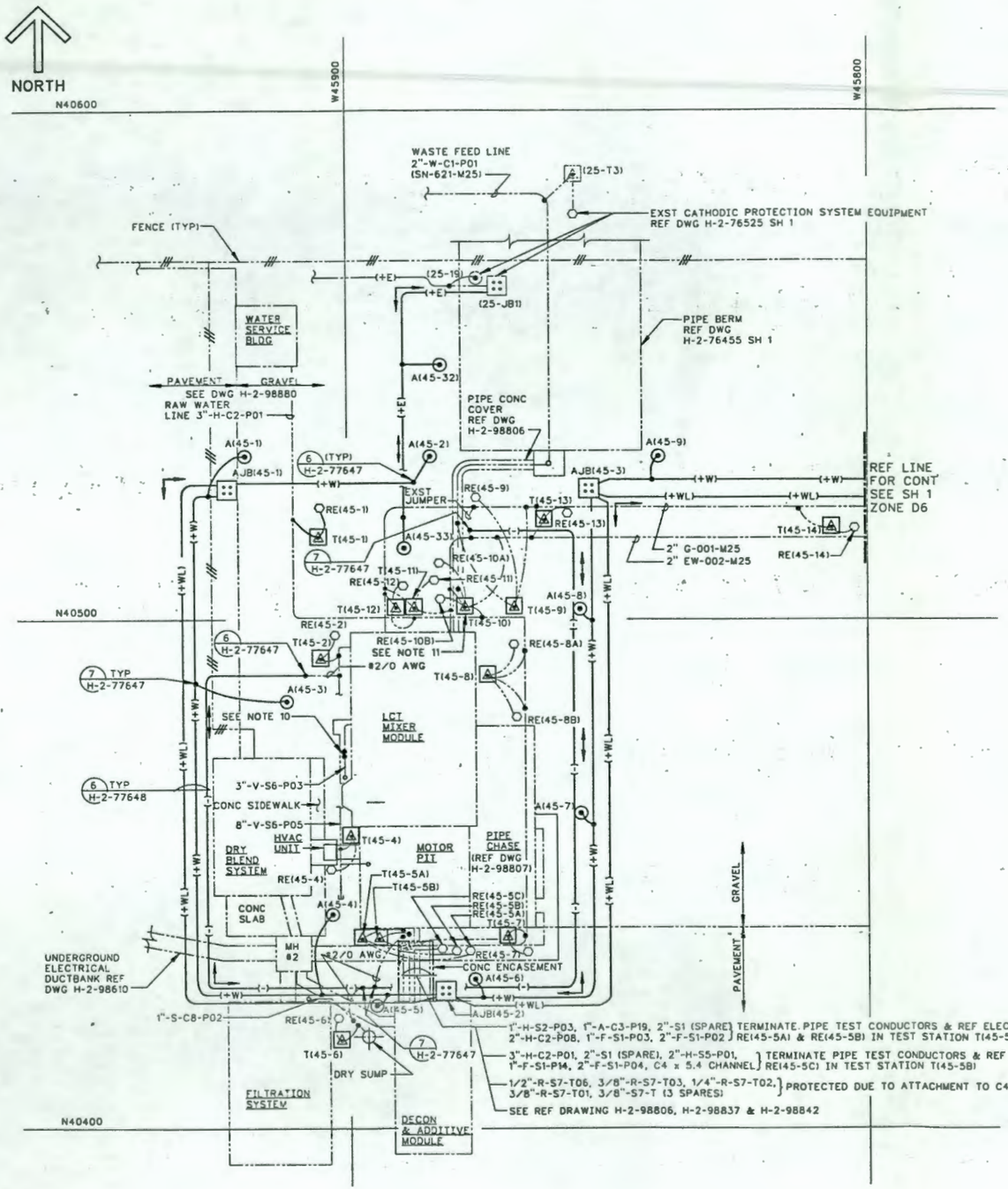

PLAN
SCALE: 1"=10'-0"

PIPES CATHODICALLY PROTECTED BY
PROJECT B-714

PIPE SIZE & IDENTIFICATION	USE	ASSOCIATED TEST STATION
3"-H-C2-P01	RAW WATER	T(45-1), T(45-12), T(45-10), T(45-8), T(45-7), T(45-5B)
2"-H-C2-P08	RAW WATER	T(45-5A)
1"-A-C3-P19	COMPRESSED AIR	T(45-5A)
2"-S1	SPARE	T(45-5B)
2"-S1	SPARE	T(45-5A)
1"-F-S1-P03	DECON SOLUTION	T(45-5A)
2"-F-S1-P02	DECON SOLUTION	T(45-5A)
1"-F-S1-P14	DECON SOLUTION	T(45-5B)
2"-F-S1-P04	DECON SOLUTION	T(45-5B)
1"-H-S2-P03	RAW WATER	T(45-5A)
2"-H-S5-P01	RAW WATER	T(45-5B)
3/8"-S7-T	3 SPARE	T(45-5B)
3/8"-R-S7-T01	ADDITIVES	T(45-5B)
1/4"-R-S7-T02	ADDITIVES	T(45-5B)
3/8"-R-S7-T03	ADDITIVES	T(45-5B)
1/2"-R-S7-T06	ADDITIVES	T(45-5B)
1"S-C8-P02	VENTILATION	T(45-6)
8"V-S6-P05	VENTILATION	T(45-2),T(45-4)
4"/2" G-001-M25 (GR-200-M25)	GROUT DISCHARGE (VAULT 101)	T(45-12), T(45-11), T(45-9), T(45-13), T(45-14), T(45-15), T(45-16), T(45-17), T(45-18), T(45-19), T(45-20), T(45-21), T(45-22), T(45-23)
4"/2" EW-002-M25 (EW-201-M25)	EXCESS WATER (VAULT 101)	T(45-10), T(45-11), T(45-13), T(45-14), T(45-16), T(45-17), T(45-18), T(45-19), T(45-20), T(45-21), T(45-22), T(45-23)
4"/2" GR-203-M25	GROUT DISCHARGE (VAULT 102)	T(45-25), T(45-26), T(45-27), T(45-28), T(45-29)
4"/2" EW-202-M25	EXCESS WATER (VAULT 102)	T(45-25), T(45-26), T(45-27), T(45-28), T(45-29)
LEACHATE TK 101 18" RISER PIPES	LEACHATE COLLECTION	T(45-24)
LEACHATE TK 101 4" RISER PIPE	LEACHATE COLLECTION	T(45-24)
LEACHATE TK 102 24" RISER PIPE	LEACHATE COLLECTION	T(45-30)
LEACHATE TK 103 24" RISER PIPE	LEACHATE COLLECTION	T(45-31)

NOTE:

1. SEE SHEET 1 FOR NOTES, SYMBOL LIST AND REFERENCE DRAWINGS.

NACE CORROSION SPECIALIST
NAME [illegible] 2877
DATE 13-12-88
DWG REV NO. 0

OFFICIAL RELEASE BY WHC
DATE APR 04 1989

EDT # 101089

IMPACT LEVEL 3.

WHC APPROVAL	DATE	U.S. DEPARTMENT OF ENERGY RICHLAND OPERATIONS OFFICE
BY MJ NORTHY	11-4 1988	KAISER ENGINEERS HANFORD COMPANY
PROJ ENGR JB SCOTT	11-4 1988	ELECTRICAL CATHODIC PROTECTION PLAN
DR JE BREED	8-3 1988	
APPROVED BY RM ITEN	8-3 1988	
SAFETY D PARTHREE	8-3 1988	
APPROVED BY ARS C SUBLETT	8-3 1988	
BY CHECK GP MCDONALD	7-29 1988	PROJECT TITLE GROUT VAULT PAIR 218-E-16-102 & 103
BY DRN JL BRINKLEY	6-13 1988	PROJ B-714 / WO ER1060 / JOB /
BY DESIGN WC ATKINS	6-10 1988	BLDG 218-E-16 / INDEX 7801
CAD FILE B077645B		SCALE SHOWN / DRAWING NUMBER H-2-77645 / SHEET 2 / OF 2 / REV 0
CAD CODE ACD2:9.0INN		~~KEHCAD~~

NUMBER	TITLE
DRAWING TRACEABILITY LIST	

NUMBER	TITLE
DRAWING LIST	
REFERENCES	
NEXT USED ON	

BY-DATE	BY-DATE	REV BY DATE	DESCRIPTION	REV
APPROVAL	KEH APPROVAL		REVISIONS	
COMMENT REVIEW				

MICROFILMED

9011706

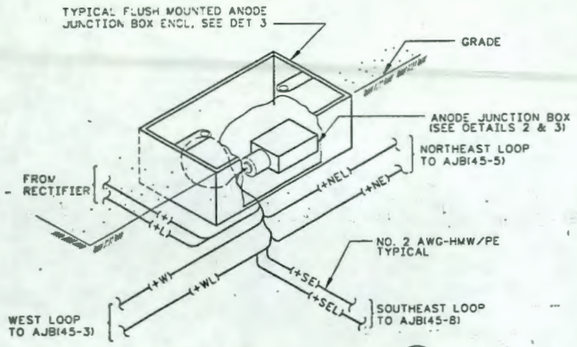

DETAIL 1 (H-2-77645 SH 1 & 2)
TYPICAL FLUSH MOUNTED ANODE JUNCTION BOX ENCL INSTALLATION AJB(45-4) SHOWN, OTHERS SIMILAR

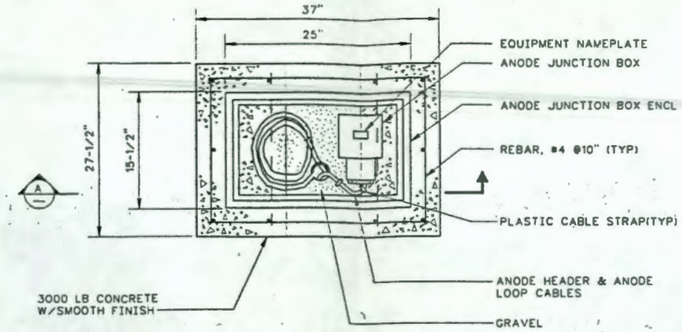

PLAN VIEW
(COVER REMOVED FOR CLARITY)

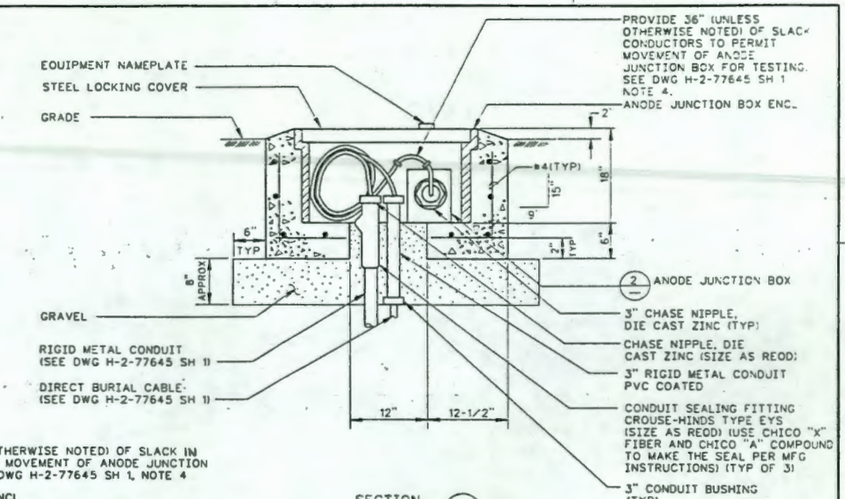

SECTION A

DETAIL 6
FLUSH MOUNTED ANODE JUNCTION BOX ENCLOSOURE AJB(45-9) OR AJB(45-10)

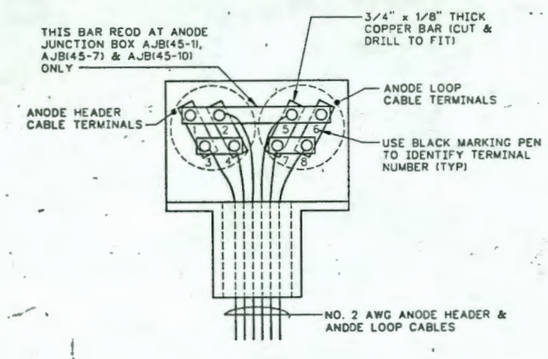

DETAIL 2
ANODE JUNCTION BOX TYPICAL CONNECTION DIAGRAM

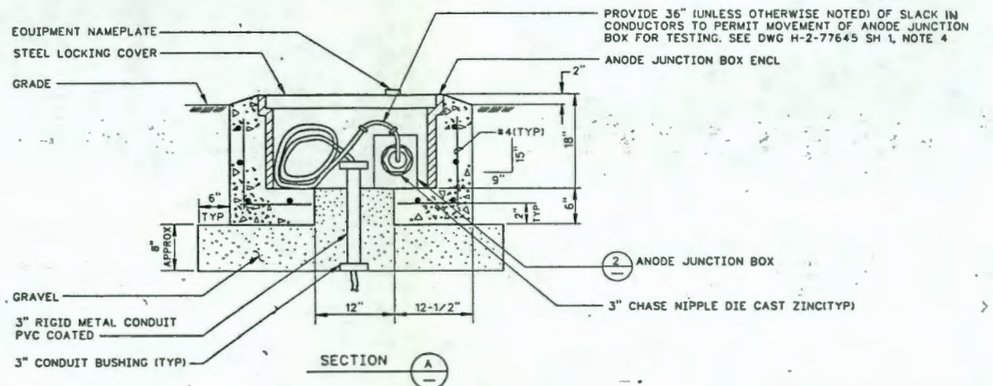

SECTION A

DETAIL 3
TYPICAL FLUSH MOUNTED ANODE JUNCTION BOX ENCL

NOTES:

1. SEE CONSTRUCTION SPECIFICATION B-714-C2 FOR MATERIAL DESCRIPTION AND INSTALLATION INSTRUCTIONS.
2. ABBREVIATIONS ARE PER ANSI Y1.1 UNLESS OTHERWISE NOTED.
3. PROVIDE AND INSTALL (1) 100AF, 20AT, 3P MOLDED CASE CIRCUIT BREAKER IN EXISTING DISTRIBUTION PANELBOARD D-PB-01 CIRCUIT SPACE 9. MATCH EXISTING CIRCUIT BREAKER TYPE. ADD "CP RECTIFIER R-33" TO PANELBOARD DIRECTORY CIRCUIT SPACES 7,9 & 11.

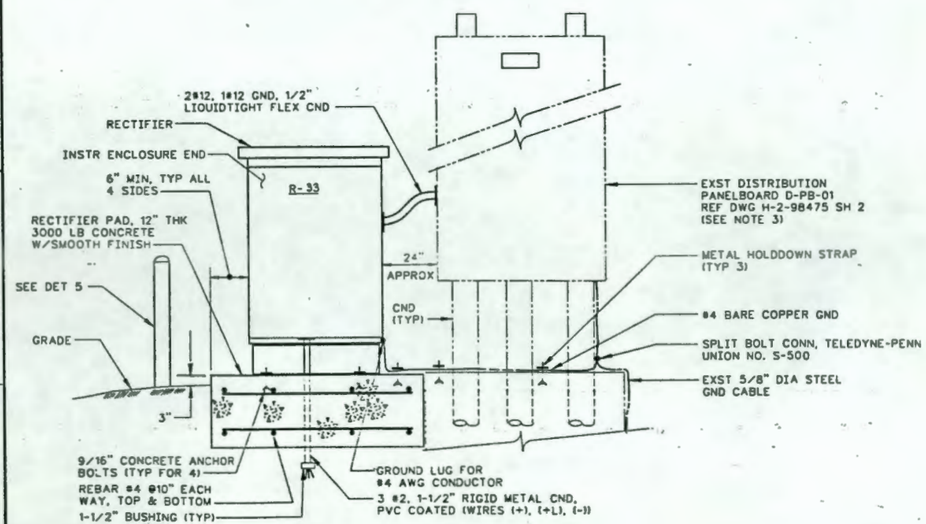

DETAIL 4 (H-2-77645 SH 1)
RECTIFIER INSTALLATION

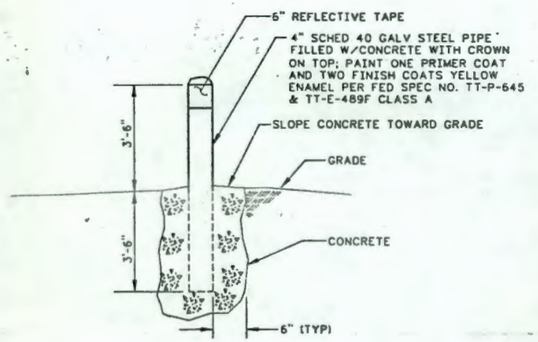

DETAIL 5
GUARD POST TYP FRONT & BACK EDGE OF RECTIFIER

NACE CORROSION SPECIALIST
NAME
DATE
DWG REV NO. 0

OFFICIAL RELEASE BY WHC DATE APR 04 1989

EDT # 101089

IMPACT LEVEL 3

H-2-98475	SH 2- ELECTRICAL DETAILS		
H-2-77573	DRAWING LIST		
NUMBER	TITLE	NUMBER	TITLE
DRAWING TRACEABILITY LIST		REFERENCES	
		NEXT USED ON H-2-77572	

REV	DESCRIPTION	BY-DATE	BY-DATE	REV BY DATE
	REVISIONS	APPROVAL	KEH APPROVAL	

MICROFILMED
COMMENT REVIEW

WHC APPROVAL BY MD NORTHY
PROJ ENGR JS CLOUD
SAFETY JE BREED
APPROVED BY RW ITEN
SAFETY D PARTHREE
APPROVED BY WS C SUBLETT
CHECKED BY GP MCDONALD
DRAWN BY JLB LS JONES
REVIEWED BY WC ATKINS
CAD FILE B077646A
CAD DWG 2JDEC-ACD2-9.0-NX

U.S. DEPARTMENT OF ENERGY - RICHLAND OPERATIONS OFFICE
KAISER ENGINEERS HANFORD COMPANY

ELECTRICAL CATHODIC PROTECTION DETAILS

PROJECT TITLE: GROUT VAULT PAIR 218-E-16-102 & 103
PROJ B-714 | WO ER1060 | JOB —
SCALE NONE | BLDG 218-E-16 | INDEX 7801
DRAWING NUMBER H-2-77646 | SHEET 1 | OF 1 | REV 0

KE-1CAD

9011106 7850840

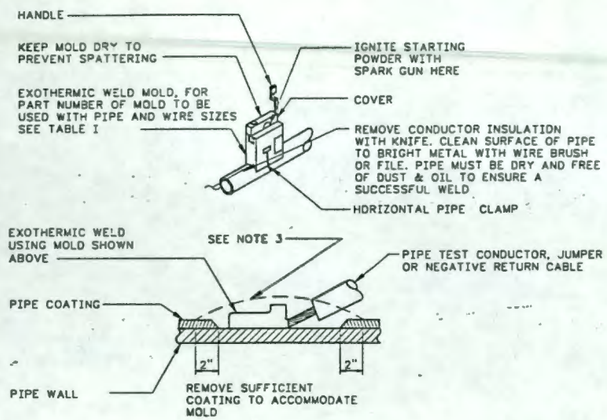

DETAIL 1
TYP HORIZONTAL EXOTHERMIC WELD

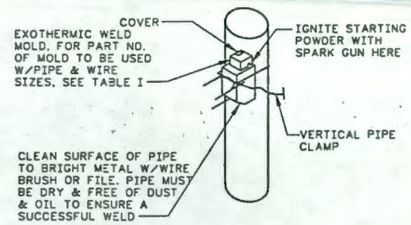

DETAIL 2
TYP VERTICAL EXOTHERMIC WELD

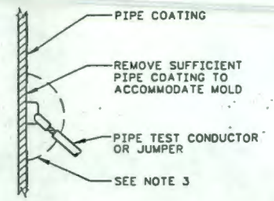

TABLE I			
CNDCT SIZE	PIPE SIZE	WELDER PART NO	WELD METAL
#4	4" HORIZ	CAHAA-1LB	CA-15
#6	4" HORIZ	CAHAA-1H	CA-15
#4	24" VERT	CAVST-1L	CA-25
#6	24" VERT	CAVST-1H	CA-15

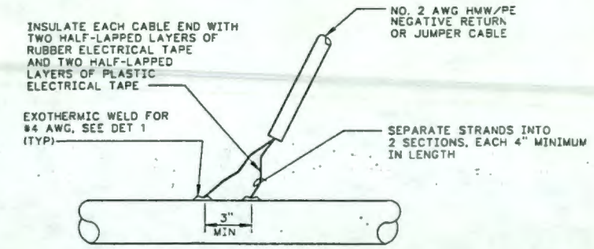

DETAIL 4
CONNECTION OF NEGATIVE RETURN OR JUMPER CABLE TO PIPE

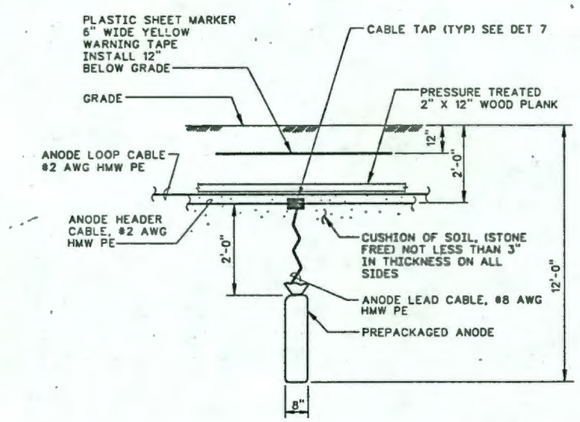

DETAIL 5
VERTICALLY INSTALLED ANODE

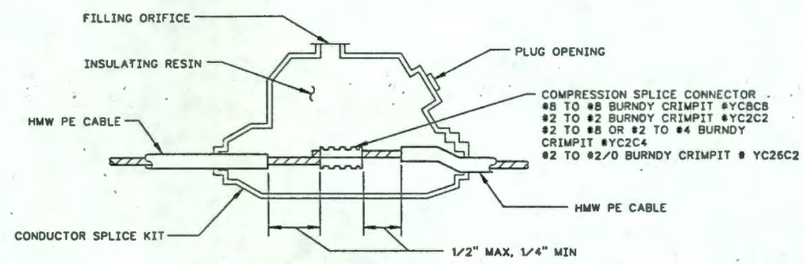

DETAIL 6
CABLE SPLICE

NOTES:

1. SEE CONSTRUCTION SPECIFICATION B-714-C2 FOR MATERIAL DESCRIPTION AND INSTALLATION INSTRUCTIONS.
2. ABBREVIATIONS ARE ANSI Y1.1 UNLESS OTHERWISE NOTED.
3. WELD AND SURROUNDING PIPE COATING SHALL BE COATED WITH ONE LAYER OF COLD APPLIED COAL TAR, KOPPERS CO. BITUMASTIC #50 FOLLOWED BY A 9"x 9" LAYER OF WOVEN GLASS FIBER FABRIC OWENS-CORNING "GLASFAB" OR PERMA GLAS-MESH. TYPE 213 ASPHALT SATURATED COTTON MEMBRANE FABRIC. THE FABRIC SHALL BE WORKED INTO THE COAL TAR. AN ADDITIONAL LAYER OF COAL TAR FOLLOWED BY ADDITIONAL FABRIC SHALL BE APPLIED. A FINAL COAT OF COAL TAR SHALL COMPLETE THE INSTALLATION. IF PIPE IS COATED, THE PATCH SHALL OVERLAP THE COATING ALL AROUND A MINIMUM OF 2". IF PIPE IS BARE, THE PATCH SHALL OVERLAP ALL EXPOSED COPPER WIRE & WELD MATERIAL A MINIMUM OF 2".

DETAIL 8
JUMPER BETWEEN PIPES

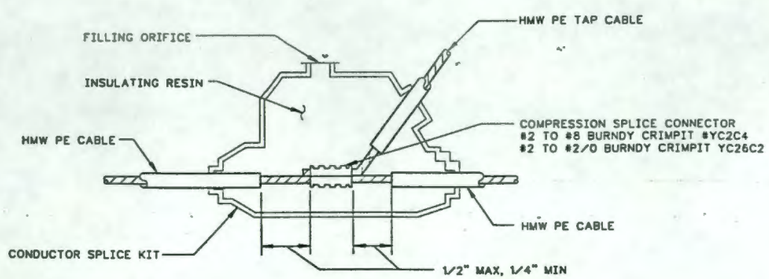

DETAIL 7
CABLE TAP

NACE CORROSION SPECIALIST
NAME [illegible] 2377
DATE 3-30-88
DWG REV NO. 0

OFFICIAL RELEASE BY WHC
DATE APR 04 1988

EDT = 101089

3-31-89 REV 0

IMPACT LEVEL 3

WHC APPROVAL BY MD NORTHY	DATE 11-4-1988	U.S. DEPARTMENT OF ENERGY RICHLAND OPERATIONS OFFICE	
PROJ ENGR JP CLOUD	11-4-1988	KAISER ENGINEERS HANFORD COMPANY	
DR JE BREED	8-3-1988	ELECTRICAL CATHODIC PROTECTION DETAILS	
APPROVED BY RM ITEN	8-3-1988		
SAFETY D PARTHREE	8-1-1988		
APPROVED BY ARS C SUBLETT	8-1-1988		
SUPERVISOR, ENGINEERING TOP MCDONALD	8-1-1988	PROJECT TITLE GROUT VAULT PAIR 218-E-16-102 & 103	
DESIGN LS JONES	3-25-1988	PROJ B-714	NO ER1060
DESIGNED BY WC ATKINS	3-25-1988	SCALE NONE	BLDG 218-E-16
CAD FILE B077647A		DRAWING NUMBER H-2-77647	SHEET 1 OF 1 REV 0
CAD DWG K:TBV:ACD:9.0:NN			

NUMBER	TITLE	NUMBER	TITLE
		H-2-77573	DRAWING LIST
DRAWING TRACEABILITY LIST		REFERENCES	
		NEXT USED ON H-2-77573	

BY-DATE	BY-DATE	REV BY DATE	DESCRIPTION	REV
APPROVAL	KEH APPROVAL		REVISIONS	
COMMENT REVIEW				

MICROFILMED

~~KEHCAD~~ 11002E

9011785041

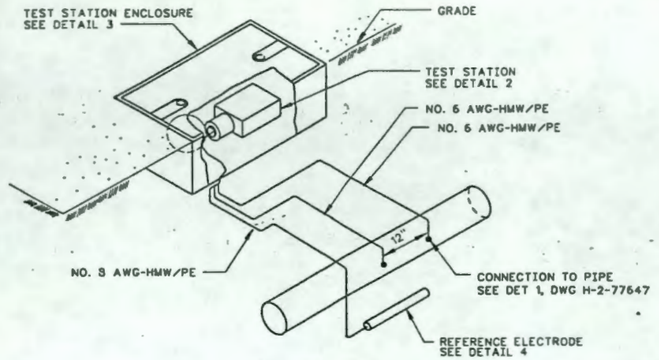

DETAIL 1
TYPICAL FLUSH MOUNTED TEST STATION INSTALLATION
H-2-77645 SH 1 & SH 2

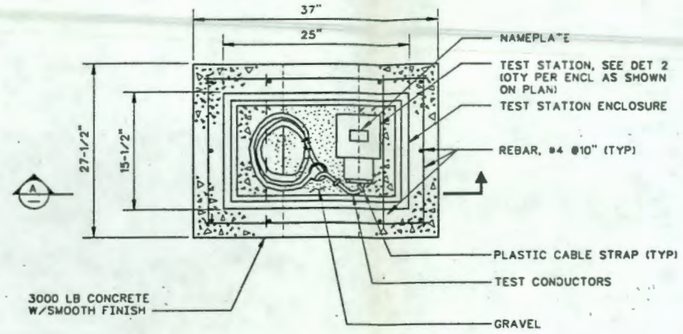

PLAN VIEW
(COVER REMOVED FOR CLARITY)

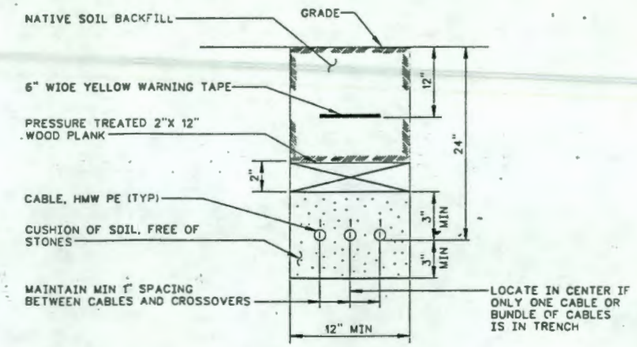

DETAIL 6
DIRECT BURIED CABLES

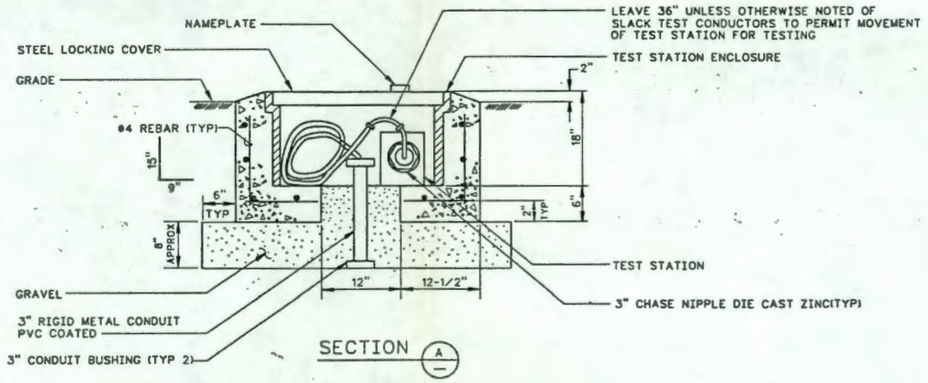

SECTION A

DETAIL 3
TYPICAL FLUSH MOUNTED TEST STATION INSTALLATION

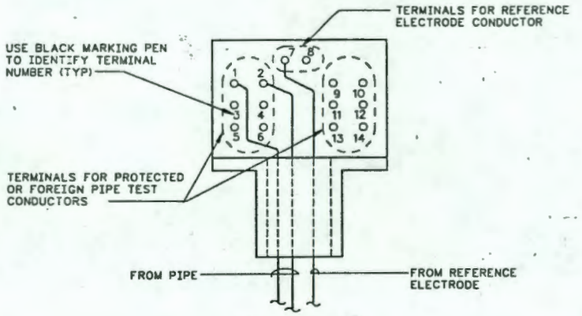

DETAIL 2
TEST STATION TYP CONNECTION DIAGRAM

NOTE: EACH TEST STATION WILL ACCOMMODATE TEST CONDUCTORS FROM A MAXIMUM OF (6) PIPES AND (2) REFERENCE ELECTRODES

NOTES:

1. SEE CONSTRUCTION SPECIFICATION B-714-C2 FOR MATERIAL DESCRIPTION AND INSTALLATION
2. ABBREVIATIONS ARE PER ANSI Y1.1 UNLESS OTHERWISE

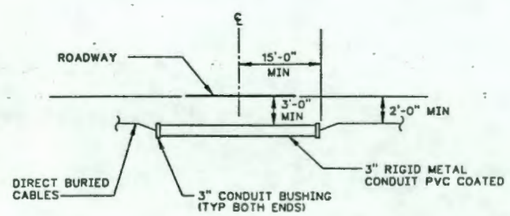

DETAIL 7
TYPICAL ANODE HEADER & ANODE LOOP CABLE INSTALLATION UNDER ROAD
H-2-77645 SH 1

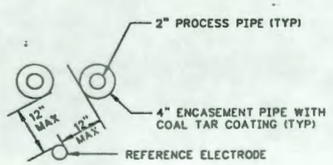

DETAIL 4
TYP LOCATION OF REFERENCE ELECTRODE

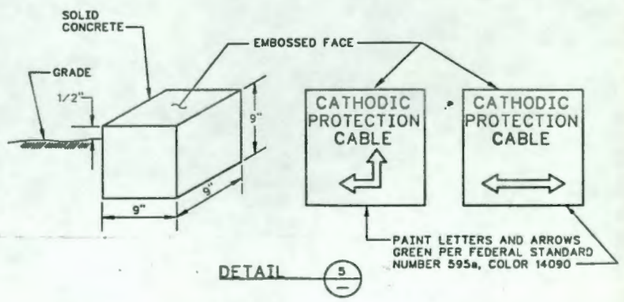

DETAIL 5

NACE CORROSION SPECIALIST
NAME
DATE
DWG REV NO. 0

OFFICIAL RELEASE BY WHC
DATE APR 04 1989

EDT # 101089

IMPACT LEVEL 3

WHC APPROVAL	DATE	U.S. DEPARTMENT OF ENERGY RICHLAND OPERATIONS OFFICE	
BY MD NORTH	8-1-88	KAISER ENGINEERS HANFORD COMPANY	
PROJ ENGINEER JP CROOD	8-1-88	M ELECTRICAL CATHODIC PROTECTION DETAILS	
GA/M/ENGINEER JE BREED	8-1-88		
APPROVED BY RM ITEM	8-1-88		
SAFETY D PARTHREE	8-1-88		
APPROVED AES C SUBLETT	8-1-88		
STRUCTURAL ENGINEER GP MCDONALD	8-1-88	PROJECT TITLE CROUT VAULT PAIR 218-E-16-102 & 103	
DRAWN ALS LS JONES	8-1-88	PROJ B-714 NO ER1060 JOB	
REVIEWED WC ATKINS	8-1-88	SCALE NONE BLDG 218-E-16 INDEX 7801	
CAD FILE B077645A		DRAWING NUMBER H-2-77648 SHEET 1 OF 1 REV 0	
CAD SOFT K-IBM ACD-9.0-NN			

NUMBER	TITLE	NUMBER	TITLE
		H-2-77573	DRAWING LIST
			REFERENCES
DRAWING TRACEABILITY LIST		NEXT USED ON	

BY-DATE	BY-DATE	REV BY DATE	DESCRIPTION	REV
APPROVAL	KEH APPROVAL		REVISIONS	
COMMENT REVIEW				

MICROFILMED

9011706

7950842

EQUIPMENT AND INSTRUMENT IDENTIFICATION

LOCAL PANEL MOUNTED — PT W10

INSTRUMENT MOUNTED ON EQUIPMENT OR PIPING — PI W10

RADIATION ELEMENT WHICH MONITORS TWO OR MORE LINES — RE

PANEL MOUNTED INSTRUMENT (REAR OF PANEL) — TSH W10

VIDEO DISPLAY — FIC W06

ALARM AND/OR INTERLOCK SWITCH (PLC SOFTWARE) — LSL F11

COMPUTATION FUNCTION (PLC SOFTWARE) — FDY W06 — SUBTRACT

SOFTWARE LINK

INSTRUMENT ELECTRIC SIGNAL

MECHANICAL INTERLOCK

NUCLEAR, SONIC OR THERMAL RADIATION SIGNAL

INSTRUMENT AIR SIGNAL

INDICATES ITEM SUPPLIED BY VENDOR WITH MAJOR EQUIPMENT ITEM(S) OR SYSTEM

VENDOR SUPPLIED PACKAGE — P — P — P

INPUT TO OR OUTPUT FROM SYSTEM — TO LIQUID WASTE SYSTEM — H-2-55XXX

INPUT TO OR OUTPUT FROM P&ID SHEET — TO EVAPORATOR — H-2-95XXX

SIGNAL TO OR FROM INSTRUMENT ON P&ID SHEET — TR-W27 — H-2-95XXX

INSTRUMENT AIR SUPPLY — IAS — H-2-95XXX

CENTRIFUGAL PUMP

METERING FEED PUMP (DIAPHRAGM OR PISTON)

PROGRESSIVE CAVITY PUMP — M

ROTARY LOBE BLOWER

CENTRIFUGAL FAN

Y STRAINER — X-STR-XXX — SIZE — UNIQUE NO.

MOISTURE TRAP — T

FILTER, VENDOR SUPPLIED — F

FILL PORT

SHAFT COUPLING

REDUCER

FILTER, PRESSURE REGULATOR — F/R

FILTER, REGULATOR, LUBRICATOR — FRL- XXX — UNIQUE NO.

DIAPHRAGM SEAL

THERMOWELL

FLOW ORIFICE

VENTURI TUBE

BUTTERFLY VALVE OR DAMPER

GATE VALVE

CYLINDER

REGULATOR, VENDOR SUPPLIED — R

BACKPRESSURE CONTROL VALVE

GLOBE VALVE

DIAPHRAGM VALVE

PLUG VALVE

PINCH VALVE

NEEDLE VALVE

BALL VALVE

CHECK VALVE

3- OR 4-WAY VALVE

4-WAY VALVE, MANUAL OPERATOR

SAFETY RELIEF VALVE OR CONSERVATION VENT — PRESSURE — VACUUM

AUTOMATIC VALVE FAILURE POSITION — FC
- FA - FAIL AS IS
- FC - FAIL CLOSED
- FO - FAIL OPEN
- FST - FAIL STRAIGHT THROUGH

INLINE DEVICE

JUMPER CONNECTOR, VERTICAL — V

JUMPER CONNECTOR, HORIZONTAL — H

JUMPER CONNECTOR, VERTICAL STUB — VS

REMOTE FLANGE

REDUCED PRESSURE BACKFLOW PREVENTER — BF XXX

PRIMARY PROCESS LINE

PIPE LINE WITH INSULATION

SECONDARY PROCESS OR INSTRUMENT LINE

PROCESS LINE WITH JACKET

ELECTRIC HEAT TRACED PROCESS LINE

DIRECTION OF FLOW

TYPICAL AIRLINE CONTINUITY THROUGH WALL NOZZLE — H — 1/2 A-C3-T34 — 1/2 A-C3-T35

SOLENOID VALVE ACTUATOR — S

MOTOR VALVE ACTUATOR — M

DIAPHRAGM VALVE ACTUATOR

VANE OR RACK-AND-PINION VALVE ACTUATOR

ELECTRIC MOTOR — M

QUICK DISCONNECT

SWAGELOK TEE WITH PLUG

QUICK DISCONNECT WITH BALL CHECK VALVES

VIBRATION ISOLATOR — VB-XXX — UNIQUE #

FLANGE OR NOZZLE IDENTIFICATION — X

JUNCTION, PIPE SPECIFICATION CLASS — S4 — C1

HOSE — X-HS-XXX — SIZE — HOSE — UNIQUE #

5 VALVE MANIFOLD — X-MN-XXX — SIZE — UNIQUE #

DOUBLE ACTING SOLENOID — S — FY — S

TYPICAL INSTRUMENT PACKAGE SUPPLIED WITH EACH AUTOMATIC 2-WAY VALVE (PNEUMATIC ACTUATOR WITH ELECTRIC OVERRIDE) — IAS — FY W12 — VENT — S — ZS W12 — A — B — F.C. — FV W12

EXAMPLE:
- ZS-W12 A = CONTACT CLOSES WHEN VALVE IS FULLY OPEN
- ZS-W12B = CONTACT CLOSES WHEN VALVE IS FULLY CLOSED

FOR VALVES WITH MULTIPLE POSITIONS A LIMIT SWITCH IS PROVIDED FOR EACH POSITION ZS-W12 A, B, OR C ETC.

INTERLOCK WITH PLC INPUT OF INTERNAL COIL ADDRESS — IXXX

ALARM — A

PLC OUTPUT WITH OUTPUT ADDRESS — QXXX

LOCAL ALARM WITH PLC OUTPUT ADDRESS — A — QXXX — LOCAL

INSTRUMENT TAG IDENTIFICATION

PROCESS VARIABLE

- A - ANALYTICAL
- D - DENSITY
- E - VOLTAGE
- F - FLOW
- FD - FLOW DIFFERENTIAL
- FR - FLOW RATIO
- H - HAND
- I - CURRENT
- L - LEVEL
- P - PRESSURE
- PD - DIFFERENTIAL PRESSURE
- R - RADIATION
- S - SPEED
- T - TEMPERATURE
- U - MULTI VARIABLE
- W - WEIGHT
- X - MISCELLANEOUS
- Z - POSITION OR LIMIT
- SP - SET POINT
- CAM - CONTINUOUS AIR MONITOR
- PR - PRESSURE REGULATING

DEVICE TYPE

- C - CONTROLLER
- E - SENSING ELEMENT
- FY - FUNCTION GENERATOR
- I - INDICATOR
- IC - INDICATOR CONTROLLER
- O - ORIFICE
- Q - TOTALIZER
- R - RECORDER
- S - SWITCH
- S - WITH NO PREFIX IS A SAMPLE POINT
- SH - SWITCH HIGH
- SHH - SWITCH HIGHER THAN SH
- SHL - SWITCH HIGH & LOW
- SL - SWITCH LOW
- SLL - SWITCH LOWER THAN SL
- T - TRANSMITTER
- V - VALVE
- Y - TRANSDUCER OR SOLENOID VALVE
- CV - CONTROL VALVE

SYSTEM CODES

- A - AIR
- F - FLUSH/DECON
- H - RAW WATER
- M - MATERIAL HANDLING
- R - REAGENT
- V - VENTILATION (HVAC)
- W - WASTE MATERIAL

DEVICE TAG

PROCESS VARIABLE — DEVICE TYPE — XXX XXX — LOOP NUMBER * — SYSTEM CODE

EXAMPLE:

PRESSURE — SWITCH LOW — PSL A01 — LOOP NUMBER — AIR SYSTEM

* LOOP NO. MAY HAVE SINGLE LETTER OR NUMBER SUFFIX TO DISTINGUISH BETWEEN SIMILAR BUT SEPARATE LOOPS.

PIPE LINE IDENTIFICATION

X-X-X-XXX
- PIPE SIZE
- PIPING CODE
- SPECIFICATION CLASS
- PIPE (P) OR TUBING (T)
- UNIQUE NO.

EXAMPLE: 2-W-S6-P01
- 2" NOM. PIPE
- WASTE
- SPECIFICATION CLASS S6
- PIPE
- UNIQUE NO.

PIPING CODES

- A - AIR & INSTR.
- F - DECON SOLUTIONS
- H - RAW WATER
- M - MATERIAL TRANSFER
- R - REAGENT
- V - HVAC VENTILATION
- W - WASTE
- CL - CHILLED WATER
- S - SANITARY WATER

HAND VALVE IDENTIFICATION

EXAMPLE: X-XX XX-XXX — 2-BA 60-101
- SIZE
- VALVE TYPE
- SYSTEM CODE
- UNIQUE NO.

VALVE TYPE

- BA - BALL
- BF - BUTTERFLY
- CK - CHECK
- DP - DIAPHRAGM
- GL - GLOBE
- NR - NEEDLE REGULATOR
- PL - PLUG

SYSTEM CODE

FIRST DIGIT	SECOND DIGIT
1 - AIR, REFRIGERANT	0 - BUTT WELD
2 -	1 - BUTT WELD X SCREWED
3 - pH ADJUSTMENT (CAUSTIC)	2 - SCREWED X SCREWED
4 - ADDITIVES	3 - 3-WAY
5 - RAW WATER	4 - SWAGELOK
6 - WASTE, GROUT	5 - SPECIAL
7 - VENTILATION	6 - FLANGED
8 - DECONTAMINATION	7 - SOCKET WELD X SOCKET WELD
9 - LUBRICATION	8 - SOCKET WELD X SCREWED
	9 - SPECIAL

INTERLOCK LEGEND

- CXXX — REAL PLC OUTPUT
- IXXX — REAL PLC INPUT
- AOXXX — AUXILIARY PLC OUTPUT
- AIXXX — AUXILIARY PLC INPUT
- LINE XXXX — ELEMENTARY WIRING DIAGRAM LINE NUMBER (INDICATES INTERLOCK IS NOT IN PLC)

OFFICIAL RELEASE DATE JUL 09 1999

CONSTANT DIFFERENTIAL REGULATOR — FC XXX

IMPACT LEVEL 4
EDT NO. 100838

ROCKWELL REVIEW COPY ON FILE
SUBMITTAL NO. 205-Q
DATE 12-15-97

U. S. DEPARTMENT OF ENERGY
Richland Operations Office

LEGEND
PIPING AND INSTRUMENTATION DIAGRAM

PROJECT TITLE: TRANSPORTABLE GROUT EQUIPMENT FACILITY

PROJ B-475 — NO — JOB
SCALE NONE — BLDG 243-G1-G9 — INDEX 7004
DRAWING NUMBER H-2-95878 — SHEET 1 — OF 1 — REV -

DESIGNED BY — DRAWN BY J. MILLER

NUMBER	TITLE
	DRAWING TRACEABILITY LIST

NUMBER	TITLE
H-2-98814	DRAWING LIST
REFERENCES	
NEXT USED ON	

BY-DATE	BY-DATE	REV BY DATE	DESCRIPTION	REV
APPROVAL	APPROVAL			

REVISIONS

COMMENT REVIEW

MICROFILMED

9011785083

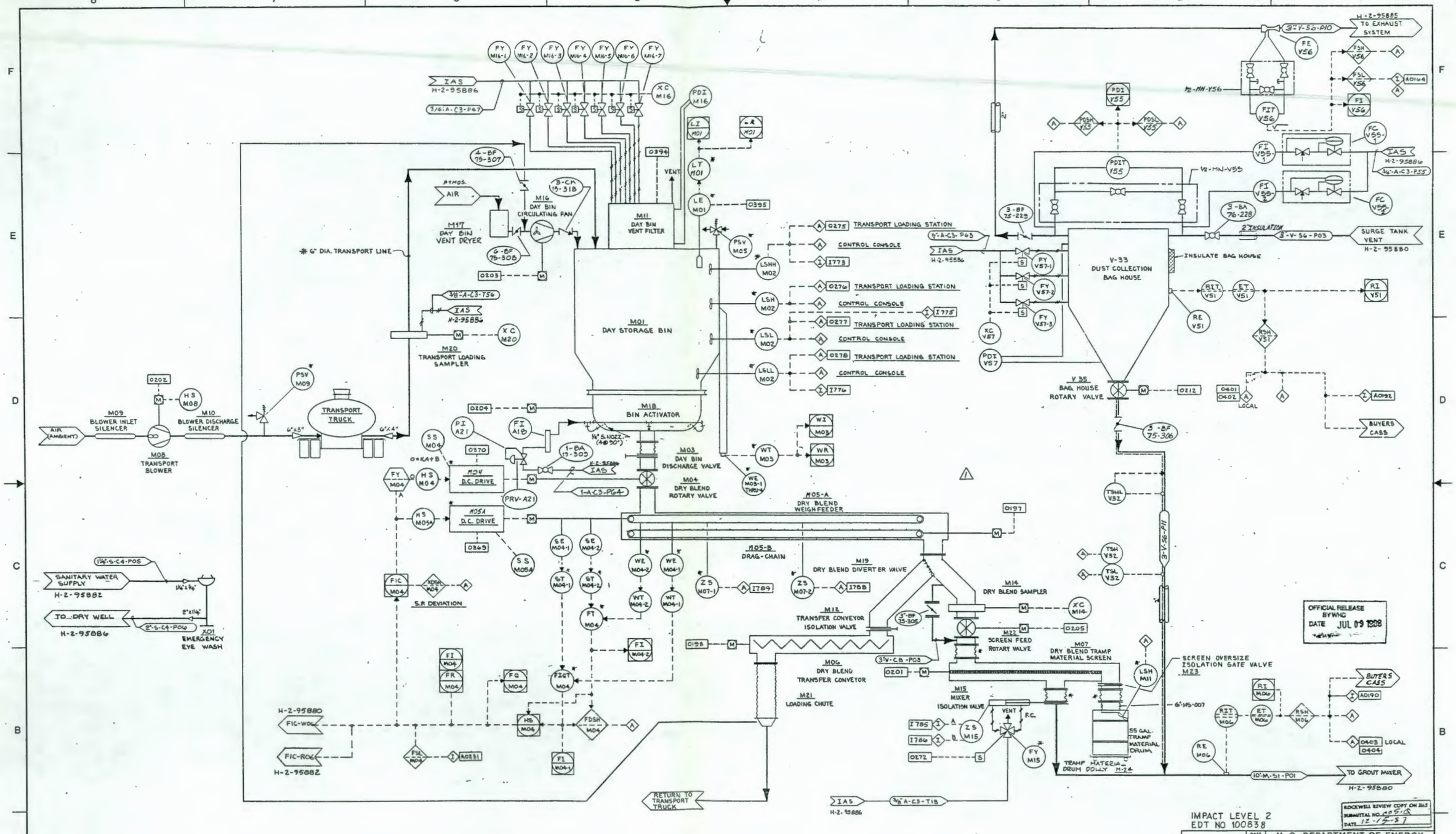

IMPACT LEVEL 2
EDT NO 100838

U. S. DEPARTMENT OF ENERGY Richland Operations Office	
DRY BLEND SYSTEM PIPING AND INSTRUMENTATION DIAGRAM	
PROJECT TITLE TRANSPORTABLE GROUT EQUIPMENT FACILITY	
PROJ B-475	
SCALE NONE	BLDG 243-G2
DRAWING NUMBER H-2-95879	SHEET 1 OF 1 REV 1
DESIGNED BY N/A	
DRAWN BY M.R. LINKOUS 7-21-86	
APPROVED BY N/A	
SAFETY N/A	
WHC APPROVAL BY J.D. Vanselow	DATE 7/1/88

REV	DESCRIPTION	BY-DATE	APPROVAL
1	REV. PER ECN 106001	NAH 10-4-89	GHV 10/4/89

REVISIONS
COMMENT REVIEW

NUMBER	TITLE
H-2-95814	DRAWING LIST

DRAWING TRACEABILITY LIST
REFERENCES
NEXT USED ON H-2-95800 882, 885, 886

ROCKWELL REVIEW COPY ON FILE
SUBMITTAL NO. 405-G
DATE 12-15-87

MICROFILMED

9011785084

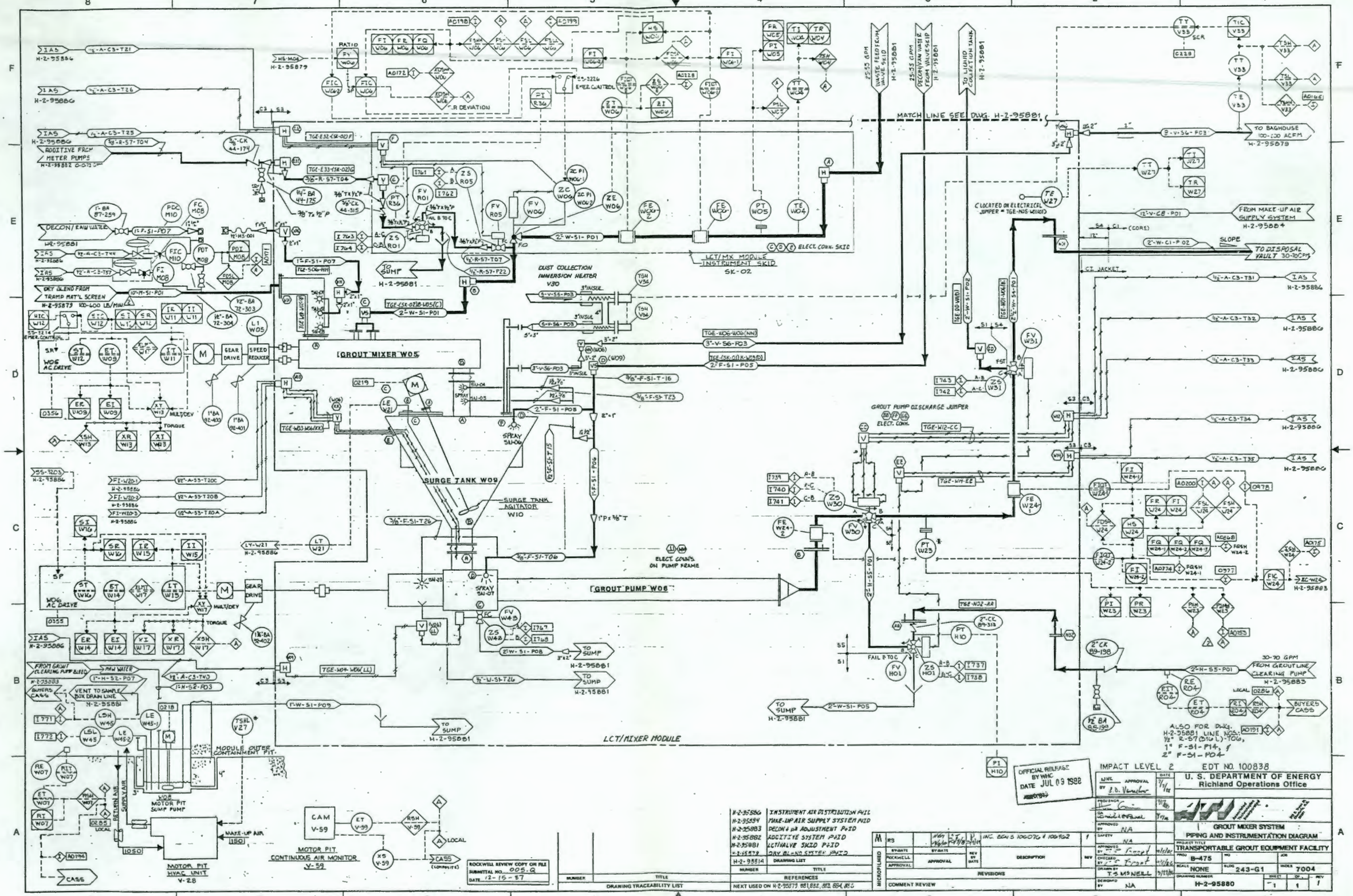

9011785084 5

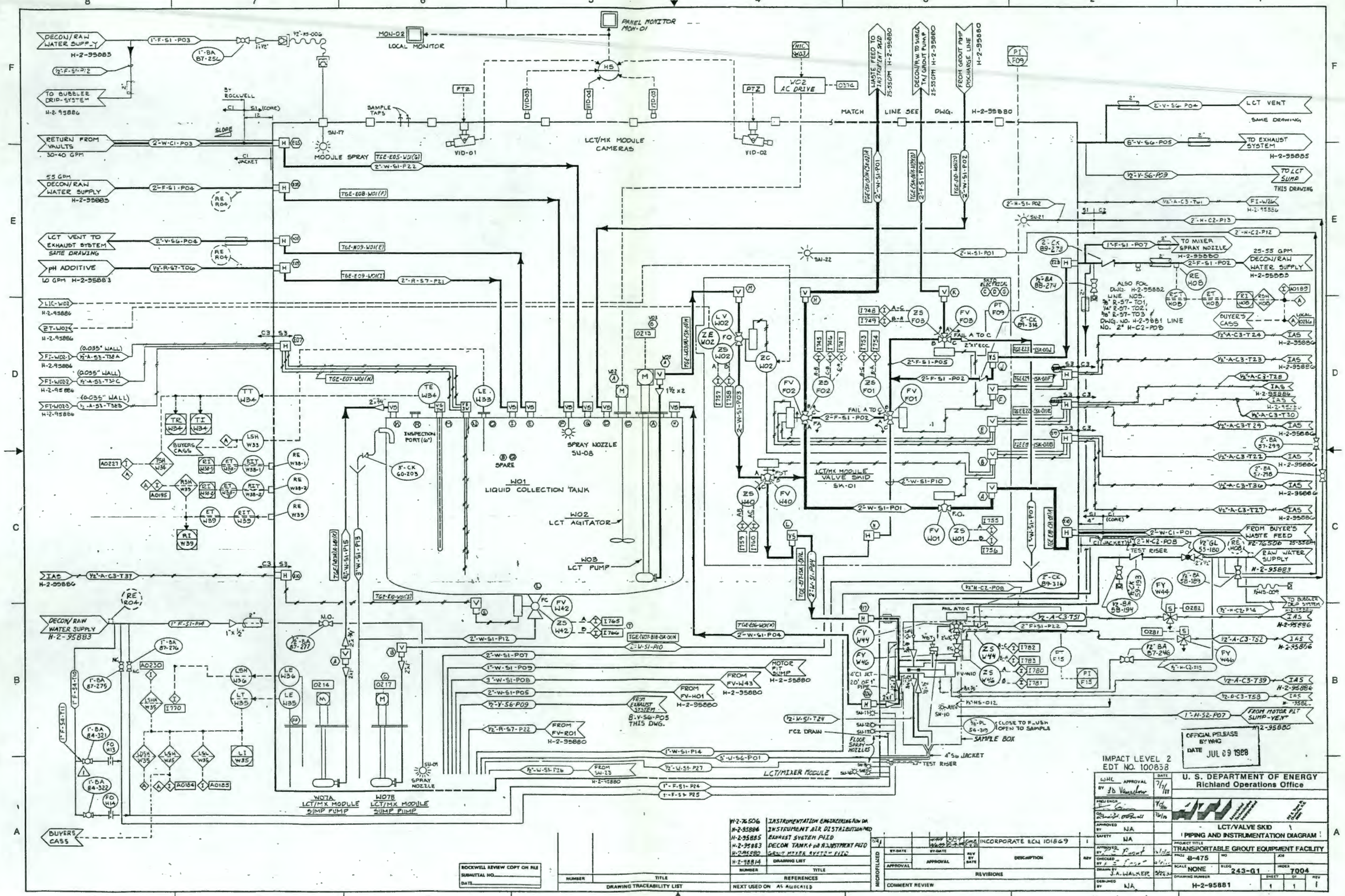
DECON/RAW WATER SUPPLY
H-2-95883
TO BUBBLER DRIP SYSTEM
H-2-95886
RETURN FROM VAULTS
30-40 GPM
55 GPM DECON/RAW WATER SUPPLY
H-2-95883
LCT VENT TO EXHAUST SYSTEM
SAME DRAWING
pH ADDITIVE
10 GPM H-2-95883
PANEL MONITOR MON-01
MON-02
LOCAL MONITOR
SAMPLE TAPS
MODULE SPRAY
VID-01
VID-02
LCT/MX MODULE CAMERAS
WASTE FEED TO INSTRUMENT SKID
25-55GPM H-2-95880
DECON/RAW TO SURGE TK/GROUT PUMP
25-55GPM H-2-95880
FROM GROUT PUMP DISCHARGE LINE
H-2-95880
MATCH LINE SEE DWG. H-2-95880
LCT VENT
SAME DRAWING
TO EXHAUST SYSTEM
H-2-95885
TO LCT SUMP
THIS DRAWING
TO MIXER SPRAY NOZZLE
H-2-95880
25-55 GPM DECON/RAW WATER SUPPLY
H-2-95883
ALSO FOR DWG. H-2-95882 LINE NOS. 3/8" R-57-T01, 1/4" R-57-T02, 3/8" R-57-T03
DWG. NO. H-2-9881 LINE NO. 2" H-C2-P08
BUYERS CASS
INSPECTION PORT (6")
SPRAY NOZZLE SU-08
SPARE
W01 LIQUID COLLECTION TANK
W02 LCT AGITATOR
W03 LCT PUMP
LCT/MX MODULE VALVE SKID SK-01
LCT/MIXER MODULE
FROM BUYER'S WASTE FEED
RAW WATER SUPPLY
H-2-95883
TEST RISER
SAMPLE BOX
FROM MOTOR PIT SUMP-VENT
H-2-95880
DECON/RAW WATER SUPPLY
H-2-95883
W07A LCT/MX MODULE SUMP PUMP
W07B LCT/MX MODULE SUMP PUMP
MOTOR PIT SUMP
H-2-95880
FROM EXHAUST SYSTEM
8-V-56-P05
THIS DWG.
FROM FV-W43
H-2-95880
FROM FV-H01
H-2-95880
FROM FV-R01
H-2-95880
FROM SU-23
H-2-95880
FLOOR SPRAY NOZZLES
SPRAY NOZZLE
4"Sch JACKET
2" TEST RISER
FC2 DRAIN
CLOSE TO FLUSH
OPEN TO SAMPLE
BUYERS CASS
OFFICIAL RELEASE BY WHC
DATE JUL 09 1988
IMPACT LEVEL 2
EDT NO. 100838
U. S. DEPARTMENT OF ENERGY
Richland Operations Office
LCT/VALVE SKID
PIPING AND INSTRUMENTATION DIAGRAM
TRANSPORTABLE GROUT EQUIPMENT FACILITY
PROJ 8-475
SCALE NONE
BLDG 243-G1
INDEX 7004
DRAWING NUMBER H-2-95881
SHEET 1 OF 1 REV 1
DRAWN BY J.A. WALKER
DESIGNED BY N.A.
APPROVED BY N.A.
SAFETY N.A.
INCORPORATE ECN 101869
COMMENT REVIEW
ROCKWELL REVIEW COPY ON FILE
SUBMITTAL NO.
DATE
DRAWING TRACEABILITY LIST
NUMBER TITLE
REFERENCES
NEXT USED ON AS ALLOCATED
H-2-76506 INSTRUMENTATION ENGINEERING FLOW DIA
H-2-95884 INSTRUMENT AIR DISTRIBUTION PID
H-2-95885 EXHAUST SYSTEM PID
H-2-95863 DECON TANK & pH ADJUSTMENT PID
H-2-95880 GROUT MIXER SYSTEM PID
H-2-95814 DRAWING LIST
MICROFILMED

8501846

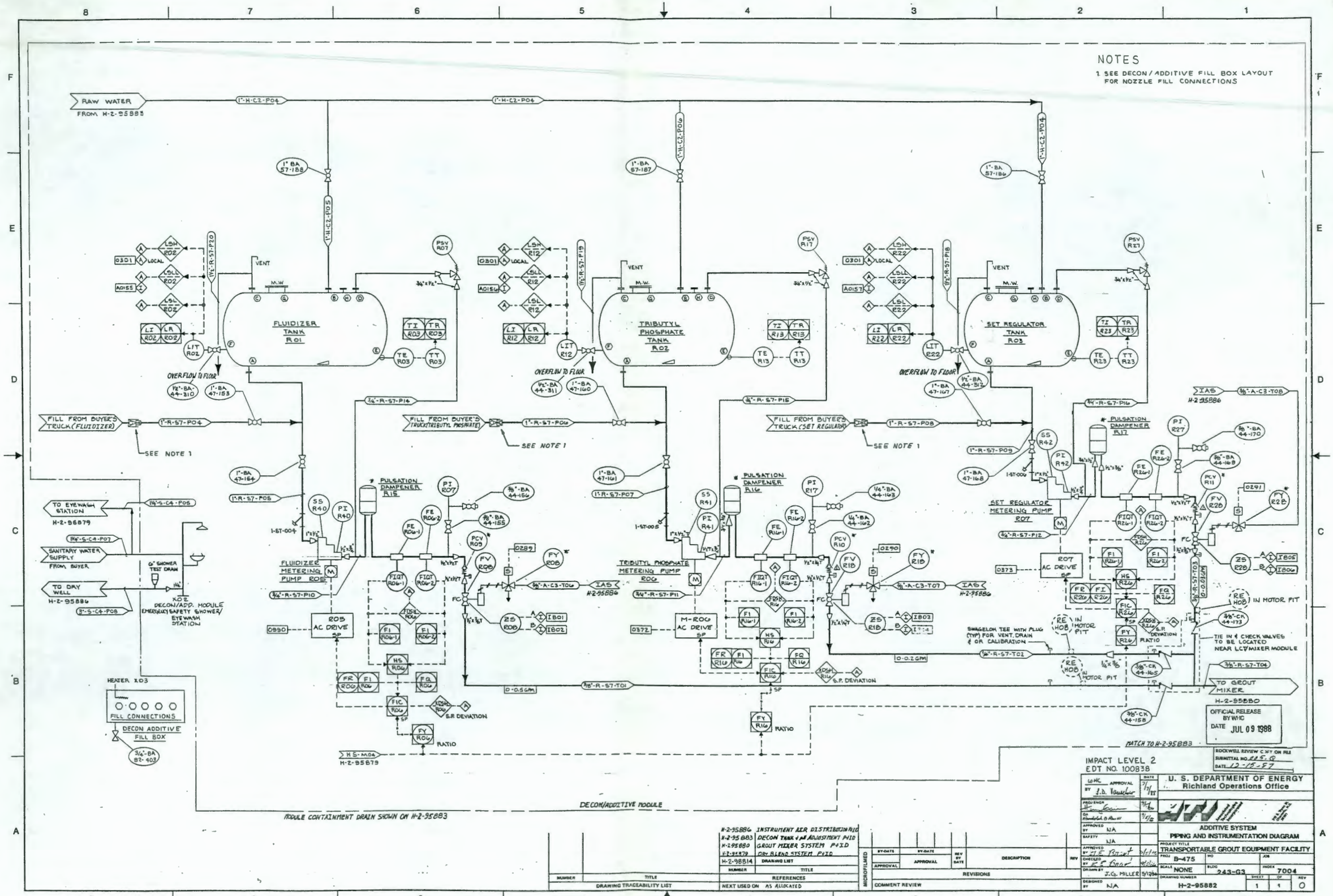
NOTES
1. SEE DECON/ADDITIVE FILL BOX LAYOUT FOR NOZZLE FILL CONNECTIONS
RAW WATER
FROM H-2-95883
1"-H-C2-P04
1"-H-C2-P05
1" BA 57-188
1"-BA 57-187
1"-BA 57-186
FLUIDIZER TANK R01
TRIBUTYL PHOSPHATE TANK R02
SET REGULATOR TANK R03
VENT
M.W.
OVERFLOW TO FLOOR
FILL FROM BUYER'S TRUCK (FLUIDIZER)
FILL FROM BUYER'S TRUCK (TRIBUTYL PHOSPHATE)
FILL FROM BUYER'S TRUCK (SET REGULATOR)
SEE NOTE 1
* PULSATION DAMPENER R15
* PULSATION DAMPENER R16
* PULSATION DAMPENER R17
FLUIDIZER METERING PUMP R05
TRIBUTYL PHOSPHATE METERING PUMP R06
SET REGULATOR METERING PUMP R07
R05 AC DRIVE
M-R06 AC DRIVE
R07 AC DRIVE
TO EYEWASH STATION
H-2-95879
SANITARY WATER SUPPLY FROM BUYER
TO DRY WELL
H-2-95886
DECON/ADD. MODULE EMERGENCY SAFETY SHOWER/ EYEWASH STATION
HEATER X03
FILL CONNECTIONS
DECON ADDITIVE FILL BOX
B/R DEVIATION
RATIO
S.P. DEVIATION
SWAGELOK TEE WITH PLUG (TYP) FOR VENT, DRAIN & OR CALIBRATION
RE HOB IN MOTOR PIT
TIE IN & CHECK VALVES TO BE LOCATED NEAR LCV MIXER MODULE
TO GROUT MIXER
H-2-95880
IAS
H-2-95886
MATCH TO H-2-95883
DECON/ADDITIVE MODULE
MODULE CONTAINMENT DRAIN SHOWN ON H-2-95883
OFFICIAL RELEASE BY WHC
DATE JUL 09 1988
ROCKWELL REVIEW C.M.Y. ON FILE
SUBMITTAL NO. 14.5.0
DATE 12-15-87
IMPACT LEVEL 2
EDT NO. 100838
U. S. DEPARTMENT OF ENERGY
Richland Operations Office
ADDITIVE SYSTEM
PIPING AND INSTRUMENTATION DIAGRAM
TRANSPORTABLE GROUT EQUIPMENT FACILITY
B-475
NONE
243-G3
7004
H-2-95882
J.G. MILLER
N/A
DRAWING TRACEABILITY LIST
H-2-95886 INSTRUMENT AIR DISTRIBUTION P&ID
H-2-95883 DECON TANK & pH ADJUSTMENT P&ID
H-2-95880 GROUT MIXER SYSTEM P&ID
H-2-95879 DRY BLEND SYSTEM P&ID
H-2-95814 DRAWING LIST
NEXT USED ON AS ALLOCATED
COMMENT REVIEW
REVISIONS

9011785847

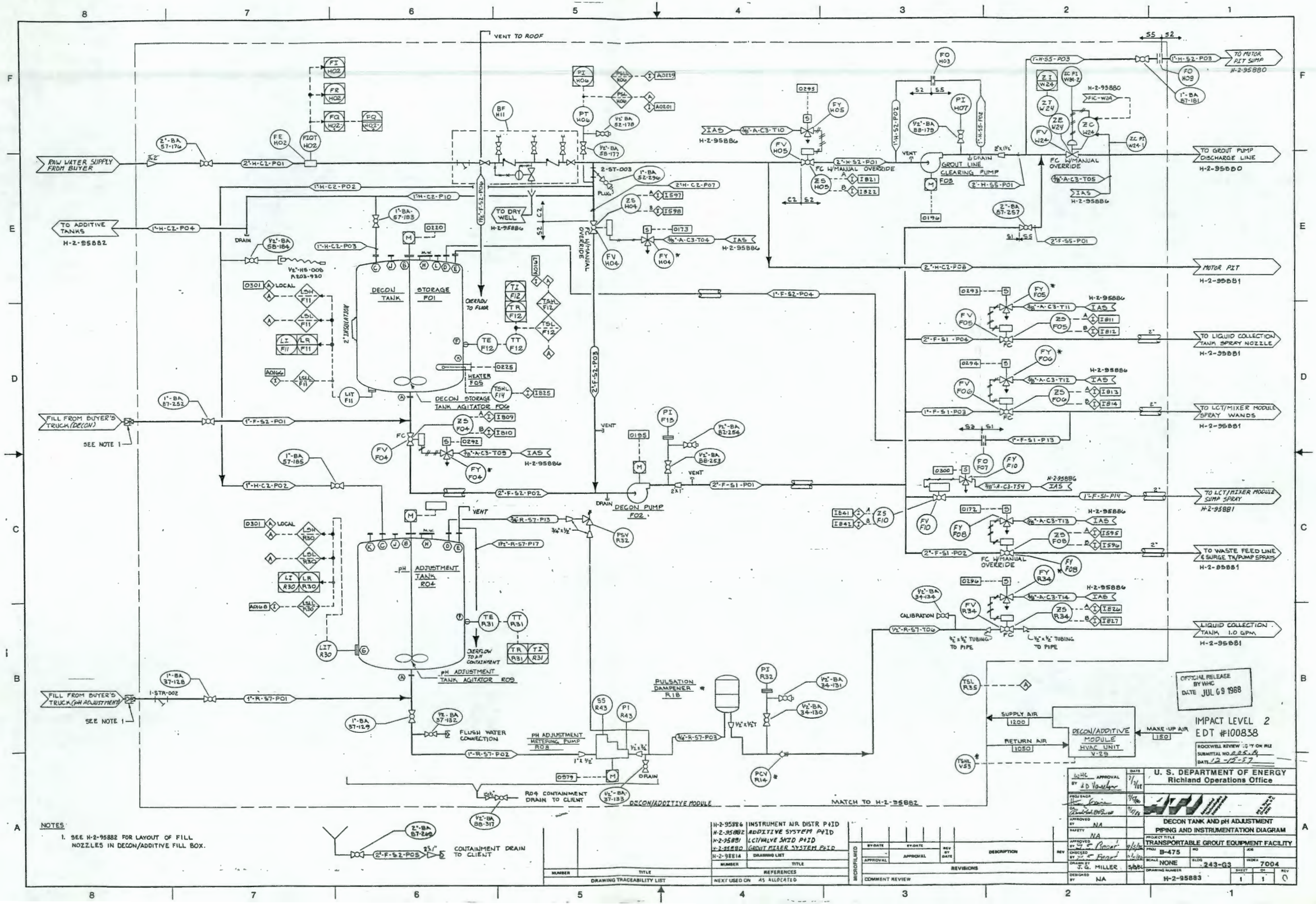

NOTES

1. SEE H-2-95882 FOR LAYOUT OF FILL NOZZLES IN DECON/ADDITIVE FILL BOX.

9011785084 8

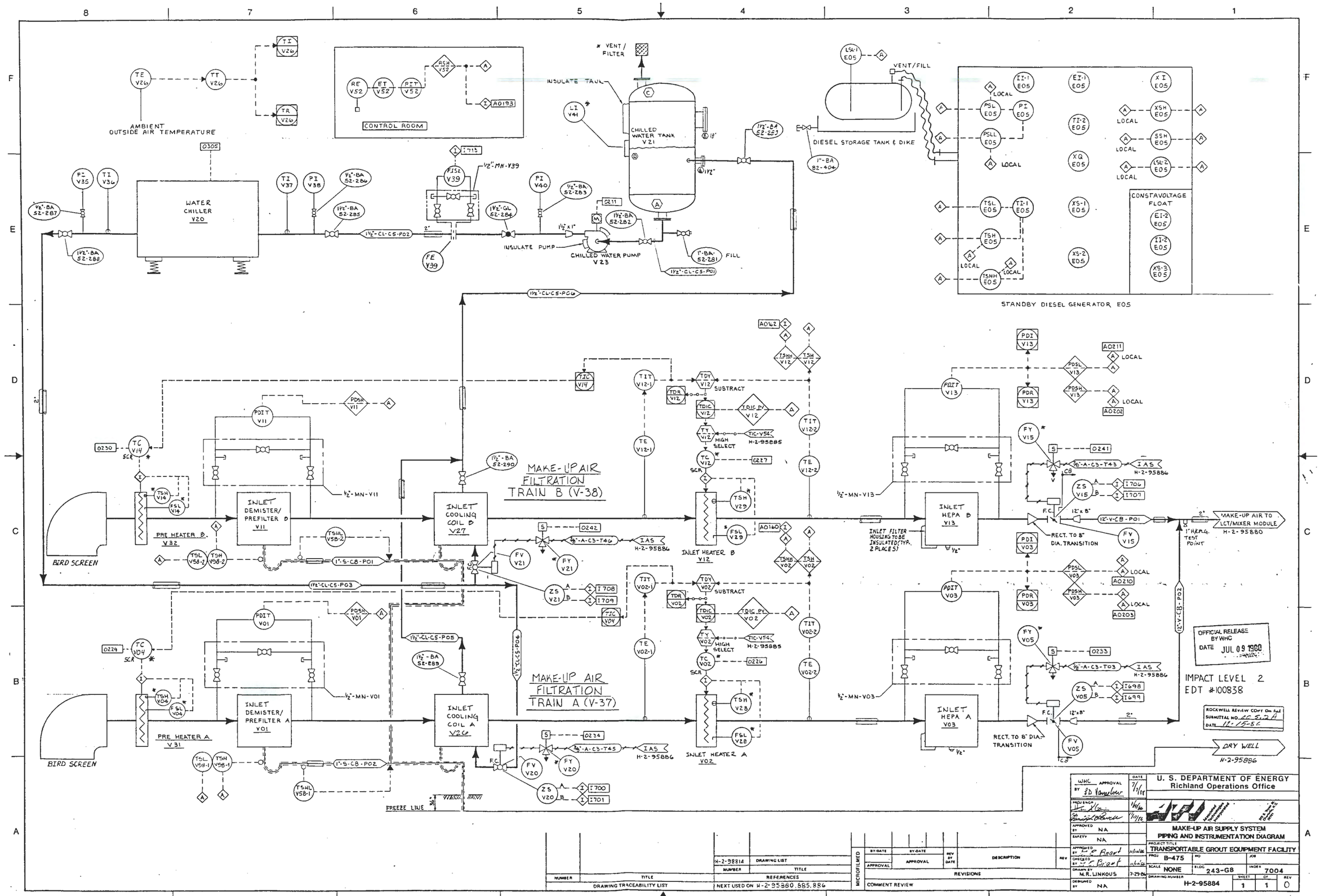
AMBIENT OUTSIDE AIR TEMPERATURE
CONTROL ROOM
WATER CHILLER V20
CHILLED WATER TANK V21
INSULATE TANK
VENT/FILTER
DIESEL STORAGE TANK & DIKE
VENT/FILL
STANDBY DIESEL GENERATOR E05
CONSTAVOLTAGE FLOAT
INSULATE PUMP
CHILLED WATER PUMP V23
FILL
MAKE-UP AIR FILTRATION TRAIN B (V-38)
MAKE-UP AIR FILTRATION TRAIN A (V-37)
PRE HEATER B V32
PRE HEATER A V31
BIRD SCREEN
INLET DEMISTER/ PREFILTER B V11
INLET DEMISTER/ PREFILTER A V01
INLET COOLING COIL B V27
INLET COOLING COIL A V26
INLET HEATER B V12
INLET HEATER A V02
INLET HEPA B V13
INLET HEPA A V03
INLET FILTER HOUSING TO BE INSULATED (TYP. 2 PLACES)
RECT. TO 8" DIA. TRANSITION
MAKE-UP AIR TO LCT/MIXER MODULE H-2-95880
DRY WELL H-2-95886
FREEZE LINE
SUBTRACT
HIGH SELECT
OFFICIAL RELEASE BY WHC DATE JUL 09 1980
IMPACT LEVEL 2
EDT #100838
ROCKWELL REVIEW COPY On file
U. S. DEPARTMENT OF ENERGY
Richland Operations Office
MAKE-UP AIR SUPPLY SYSTEM
PIPING AND INSTRUMENTATION DIAGRAM
TRANSPORTABLE GROUT EQUIPMENT FACILITY
B-475
NONE
243-GB
7004
M.R. LINKOUS
NA
H-2-95884
1
1
0
DRAWING TRACEABILITY LIST
H-2-98814
NEXT USED ON H-2-95880, 885, 886
COMMENT REVIEW
REVISIONS

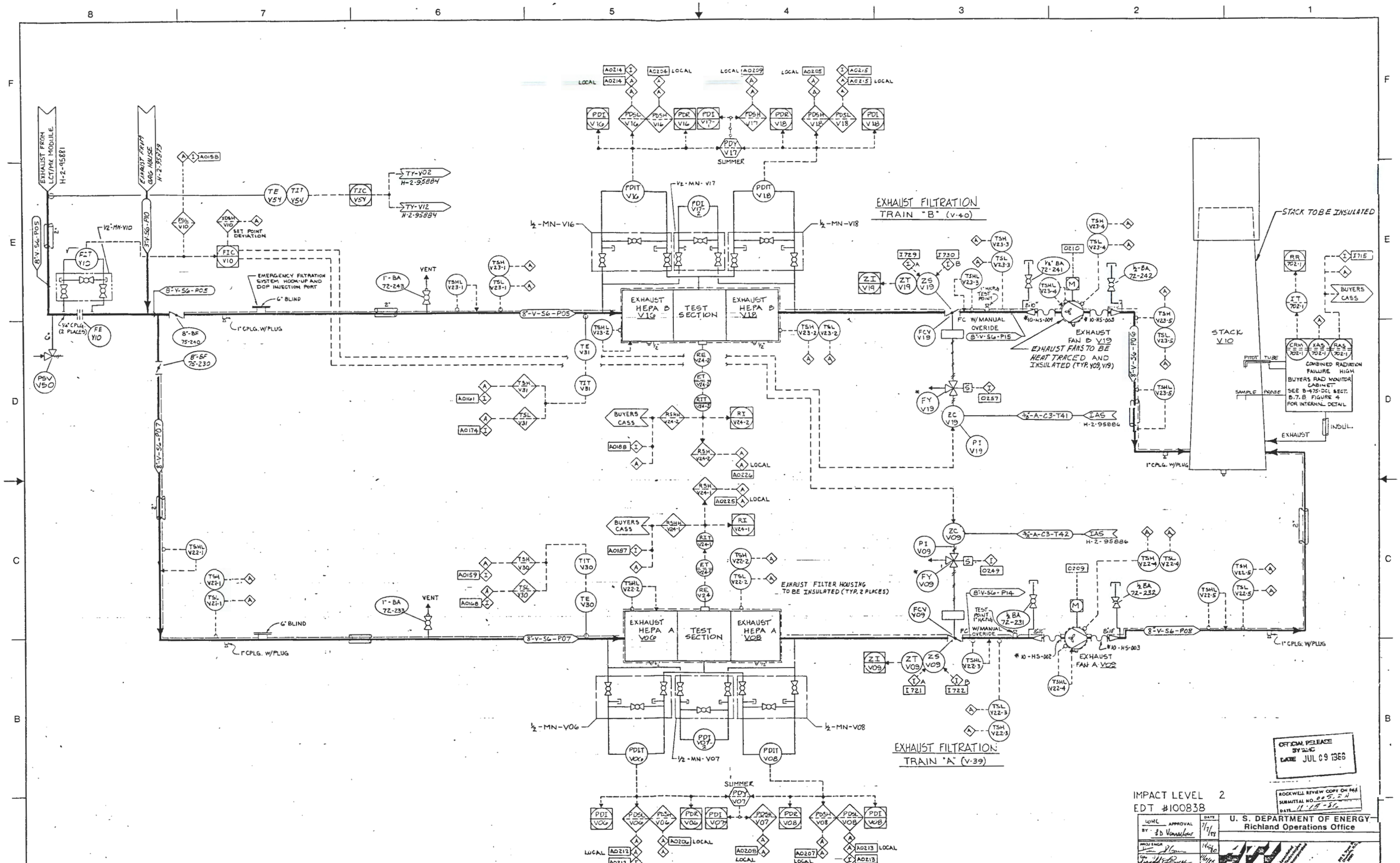
EXHAUST FILTRATION TRAIN "B" (V-40)
EXHAUST FILTRATION TRAIN "A" (V-39)
EXHAUST HEPA B V16
TEST SECTION
EXHAUST HEPA B V18
EXHAUST HEPA A V06
TEST SECTION
EXHAUST HEPA A V08
EXHAUST FAN B V19
EXHAUST FAN A V02
STACK V10
STACK TO BE INSULATED
EXHAUST FANS TO BE HEAT TRACED AND INSULATED (TYP. V09, V19)
EXHAUST FILTER HOUSING TO BE INSULATED (TYP. 2 PLACES)
EMERGENCY FILTRATION SYSTEM HOOK-UP AND DOP INJECTION PORT
EXHAUST FROM LCT/MX MODULE H-2-95881
EXHAUST FROM BAG HOUSE H-2-95879
COMBINED RADIATION FAILURE HIGH
BUYERS RAD MONITOR CABINET
SEE B-475-DCL SECT. B.7.B FIGURE 4 FOR INTERNAL DETAIL
BUYERS CASS
SUMMER
LOCAL
EXHAUST
INSUL.
OFFICIAL RELEASE
DATE JUL 09 1998
ROCKWELL REVIEW COPY ON FILE
IMPACT LEVEL 2
EDT #100838
U. S. DEPARTMENT OF ENERGY
Richland Operations Office
EXHAUST SYSTEM
PIPING & INSTRUMENTATION DIAGRAM
TRANSPORTABLE GROUT EQUIPMENT FACILITY
B-475
NONE
243-G8
7004
H-2-95885
NA
DRAWING TRACEABILITY LIST
H-2-98814 DRAWING LIST
REFERENCES
NEXT USED ON H-2-95879, 81, 84, 86
MICROFILMED
REVISIONS
COMMENT REVIEW

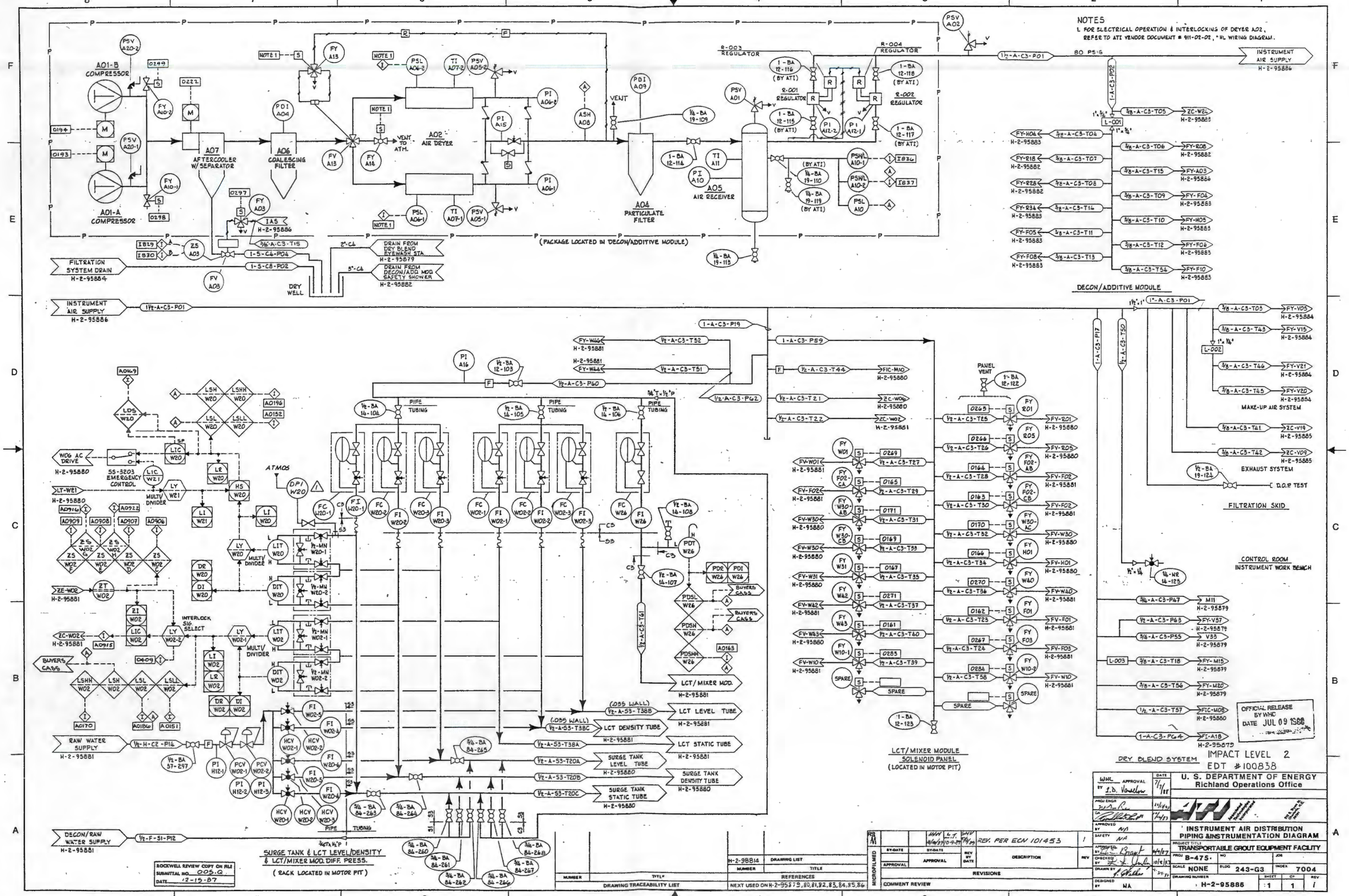

5085 I
9 0 1 1 7 8 5

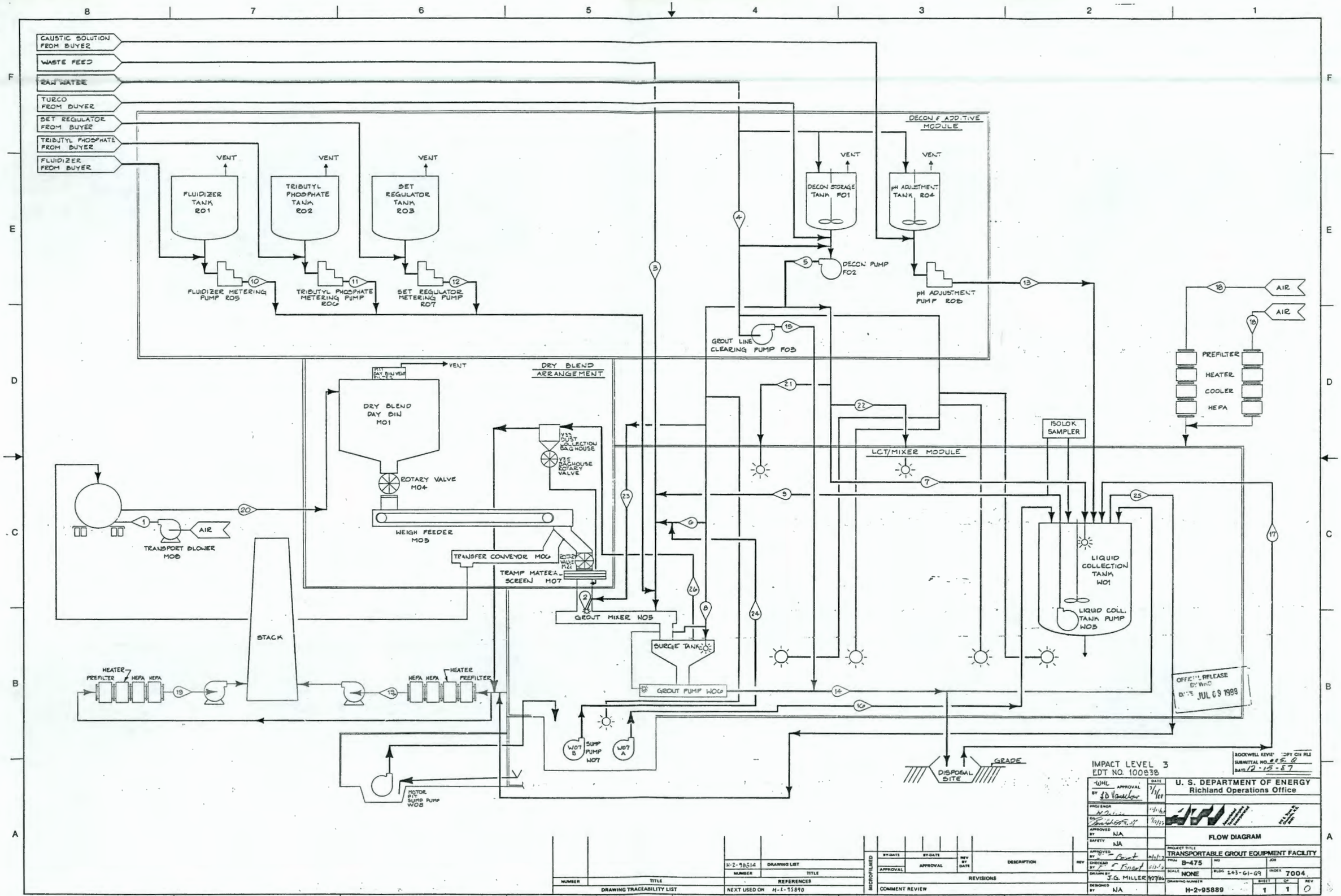

IMPACT LEVEL 3
EDT NO. 100838

ROCKWELL REVIEW COPY ON FILE
SUBMITTAL NO. 005.0
DATE 12-15-87

WHC APPROVAL BY J.D. Vanskor	DATE 7/1/88	U. S. DEPARTMENT OF ENERGY Richland Operations Office
PROJ ENGR		
DS		
APPROVED BY NA		FLOW DIAGRAM
SAFETY NA		PROJECT TITLE TRANSPORTABLE GROUT EQUIPMENT FACILITY
APPROVED BY		PROJ B-475 WO JOB
CHECKED BY		SCALE NONE BLDG 243-61-69 INDEX 7004
DRAWN BY J.G. MILLER	5/27/86	DRAWING NUMBER H-2-95889 SHEET 1 OF 1 REV 0
DESIGNED BY NA		

NUMBER	TITLE
DRAWING TRACEABILITY LIST	

NUMBER	TITLE
H-2-98514	DRAWING LIST
REFERENCES	
NEXT USED ON H-2-95890	

BY-DATE	BY-DATE	REV BY DATE	DESCRIPTION	REV
APPROVAL	APPROVAL		REVISIONS	
COMMENT REVIEW				

MICROFILMED

9011178502

UNIT FLOW DATA

		1 TRANSPORT BLOWER DISCHARGE	2 DRY BLEND TO MIXER	3 LIQUID WASTE TO MIXER	4 RAW WATER SUPPLY	5 RAW WATER	5 DECON SOLUTION	6 RAW WATER FEED	6 DECON SOLUTION	7 RAW WATER TO LCT	8 RAW WATER TO SPRAYS	8 DECON SOLUTION TO SPRAYS	9 LCT TO MIXER OR STORAGE	10 FLUIDIZER TO MIXER	11 TRIBUTYL PHOSPHATE TO MIXER	12 SET REGULATOR TO MIXER	13 pH ADJUSTMENT	14 GROUT TO DISPOSAL	14 DECON SOLUTION RECIRC.	15 GROUT LINE CLEARING PUMP DISCHARGE	16 SUMP PUMP	17 DISPOSAL SITE DRAINABLE WATER TO LCT	18 SUPPLY AIR
FLOW	MIN.	1000 SCFM	100 LB./MIN.	25 GPM	—	25 GPM	25 GPM	25 GPM	25 GPM	55 GPM	25 GPM	25 GPM	25 GPM	0	0	0	1.0 GPM	30 GPM	30 GPM	30 GPM	25 GPM	30-40 GPM	600 SCFM
	MAX.	1000 SCFM	600 LB./MIN.	55 GPM	70 GPM	55 GPM	55 GPM	55 GPM	55 GPM				55 GPM	0.5 GPM	0.03 GPM	0.2 GPM		70 GPM	55 GPM	70 GPM			600 SCFM
PRESSURE	MIN.	14.5 PSIG	AMBIENT	60 PSIG	20 PSIG	150 PSIG	150 PSIG	150 PSIG	150 PSIG	150 PSIG	150 PSIG	150 PSIG	20 PSIG	2 PSIG	2 PSIG	2 PSIG	15 PSIG	20 PSIG	—	300 PSIG	20 PSIG	—	AMBIENT
	MAX.			130 PSIG	115 PSIG								70 PSIG	10 PSIG	10 PSIG	10 PSIG		350 PSIG					
TEMP. (°F)	MIN.	150	-20	50	40	40	175	40	175	40	40	175	50	70	70	70	70	40	100	40	50	AMBIENT	-20
	MAX.	285	115	180	80	80	185	80	185	80	80	185	185	80	80	80	80	180	185	80	185		115
SPECIFIC GRAVITY	MIN.	—	41 *	1.0	1	1	1.0	1	1.0	1	1	1.0	1	~1	~1	~1	1.3	1.24	1	1	1	1	—
	MAX.		69 *	1.5			1.2		1.2			1.2	1.5					1.86	1.2		1.5		
pH	MIN.	—	—	7	8	8	3	8	3	8	8	3	3	—	—	—	14	7	3	8	3	7	—
	MAX.	—	—	14			13		13			13	14					14	13		14	14	
VISCOSITY CP.	MIN.	—	—	1	1	1	1	1	1	1	1	1	1	2-3	4	1-2	20	—	1	1	1	1	—
	MAX.	—	—	50			4		4			4	50				80		4		50		

* BULK DENSITY – LBS./FT³

		19 EXHAUST AIR TO FAN	20 DRY BLEND UNLOADING	21 DECON SPRAY TO MIXER MODULE	22 DECON SPRAY TO MIXER MODULE	23 WATER SPRAY TO MIXER	24 SUMP TO STORAGE	25 LCT VENT	26 SURGE TANK VENT
FLOW	MIN.	710 SCFM	0 LB./MIN.				25 GPM	—	70 ACFM
	MAX.	710 SCFM	1800 LB./MIN.						150 ACFM
PRESSURE	MIN.	-17" W.G.	14.5 PSIG				15 PSIG	(-) 2" W.G.	—
	MAX.								
TEMP. (°F)	MIN.	50	-20	40	40	40	50	—	212
	MAX.	120	115	185	185	80	185		270
SPECIFIC GRAVITY	MIN.	—	41 *	1	1	1	1	—	—
	MAX.		69 *	1.2	1.2		1.5		
pH	MIN.	—	—	3	3	8	3	—	—
	MAX.			13	13		14		
VISCOSITY CP.	MIN.	—	—	1	1	1	1	—	—
	MAX.			4	4		50		

PROCESS FLOW DATA

	2 DRY BLEND TO MIXER	3 LIQUID FEED TO MIXER	10 FLUIDIZER TO MIXER	11 TRIBUTYL PHOSPHATE TO MIXER	12 SET REGULATOR TO MIXER	14 GROUT TO DISPOSAL		
TOTAL FLOW - LB/MIN	100 - 600	208 - 688	0 - 4.2	0 - 0.25	0 - 1.67	310 - 1086		
LIQUID FLOW - GPM	—	25 - 55	0 - 0.5	0 - 0.03	0 - 0.2	30 - 70		
DENSITY - G/CM³	0.66 - 1.10	1.0 - 1.5	1.0	1.0	1.0	1.24 - 1.86		
PRESSURE - PSIG	—	60 - 130	2 - 10	2 - 10	2 - 10	20 - 350		
TEMP - °F	(-)20 - 115	50 - 180	70 - 80	70 - 80	70 - 80	40 - 180		
pH	—	7 - 14	—	—	—	7 - 14		
VISCOSITY - CP	—	1 - 50	2-3	4	1-2	—		
STREAM COMPOSITION - WT. FRAC.								
1. LIQUID FEED	—	1.0	—	—	—	0.41 - 0.76		
$ZrO_2 \cdot 2H_2O$		0 - 0.7 M						
NaF		0 - 2.5 M						
NaOH		0 - 2.5 M						
NH_3		0 - 0.4 M						
$NaAlO_2$		0 - 2.0 M						
$NaNO_2$		0 - 3.0 M						
$NaNO_3$		0 - 3.0 M						
Na_2CO_3		0 - 0.5 M						
Na_3PO_4		0 - 1.0 M						
Na_2SO_4		0 - 1.0 M						
H_2O		50 - 100%						
Undissolved Solids		0 - 0.2 (VOL)						
2. DRY BLEND	1.0	—	—	—	—	0.24 - 0.59		
Portland Cement	0.2 - 0.5							
Fly Ash	0.3 - 0.8							
Attapulgite Clay	0.0 - 0.2							
Red Pottery Clay	0.0 - 0.1							
Calcium Hydroxide	0.0 - 0.2							
3. TRIBUTYL PHOSPHATE	—	—	—	1.0	—	0 - <0.001		
4. FLUIDIZER	—	—	1.0	—	—	0 - <0.02		
5. SET REGULATOR	—	—	—	—	1.0	0 - <0.01		

OFFICIAL RELEASE BY WHC DATE JUL 05 1988

ROCKWELL REVIEW EXPT ON FILE
SUBMITTAL NO. 185.8
DATE 12-15-87

IMPACT LEVEL 3 EDT NO. 100838

		DATE
WHC APPROVAL BY J.D. Vanzelow		7/1/88
PROJ ENGR		11/4/87
DATE		11/4/87
APPROVED BY	NA	
SAFETY	NA	
APPROVED BY		11/4/87
CHECKED BY		5/20/87
DRAWN BY	J.G. MILLER	3/26/87
DESIGNED BY	NA	

U. S. DEPARTMENT OF ENERGY
Richland Operations Office

FLOW DIAGRAM DATA SHEET

PROJECT TITLE: TRANSPORTABLE GROUT EQUIPMENT FACILITY

PROJ	NO	JOB
B-475		

SCALE	BLDG	INDEX
NONE	241-G1-G9	7004

DRAWING NUMBER	SHEET	OF	REV
H-2-95890	1	1	C

NUMBER	TITLE
	DRAWING TRACEABILITY LIST

NUMBER	TITLE
H-2-93814	DRAWING LIST
NEXT USED ON H-1-95881	REFERENCES

MICROFILMED

BY-DATE	BY-DATE	REV BY DATE	DESCRIPTION	REV
APPROVAL	APPROVAL		REVISIONS	
COMMENT REVIEW				

9011785053

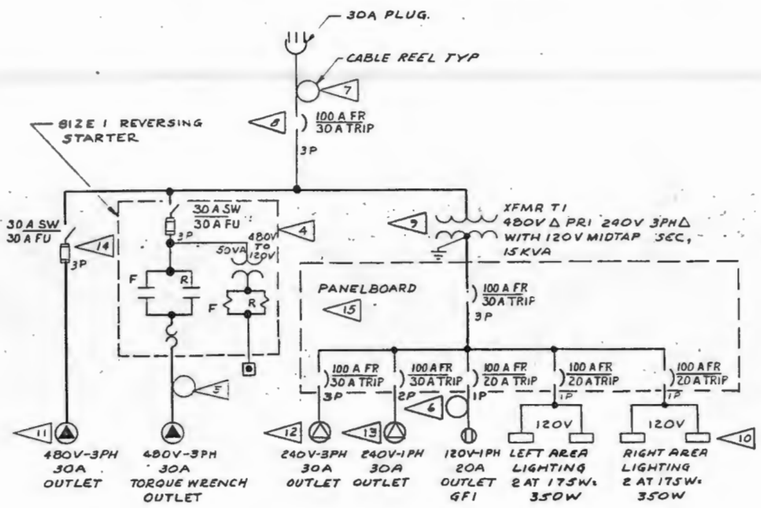

ELECTRICAL ONE LINE DIAGRAM

NOTE: MAXIMUM TOTAL CONNECTED LOAD 24 AMPERES

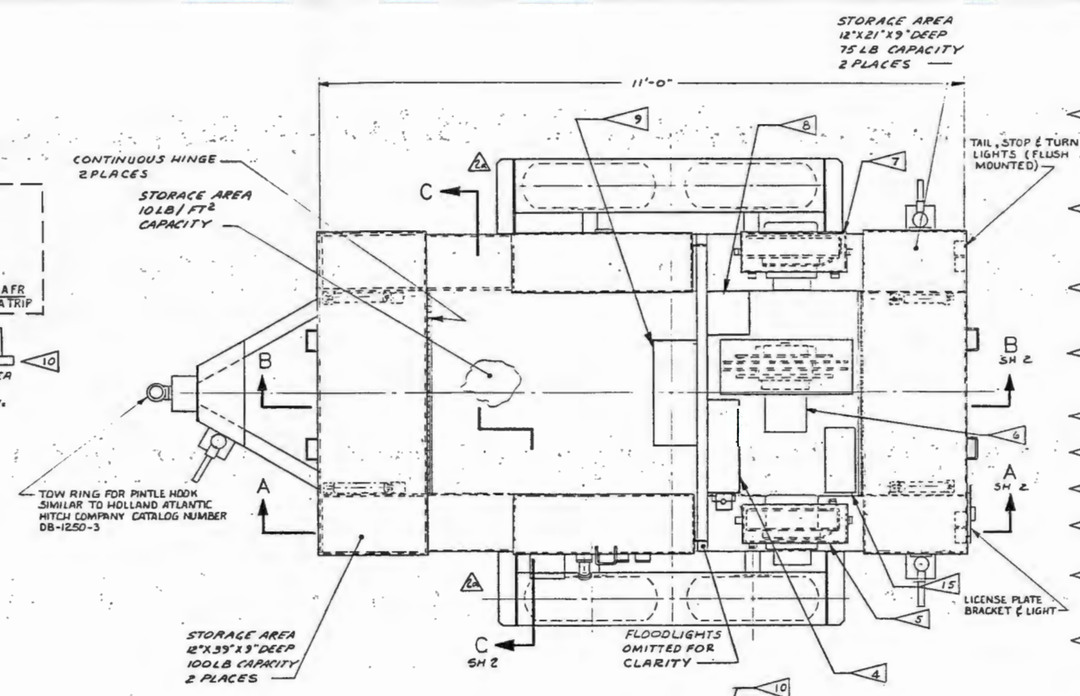

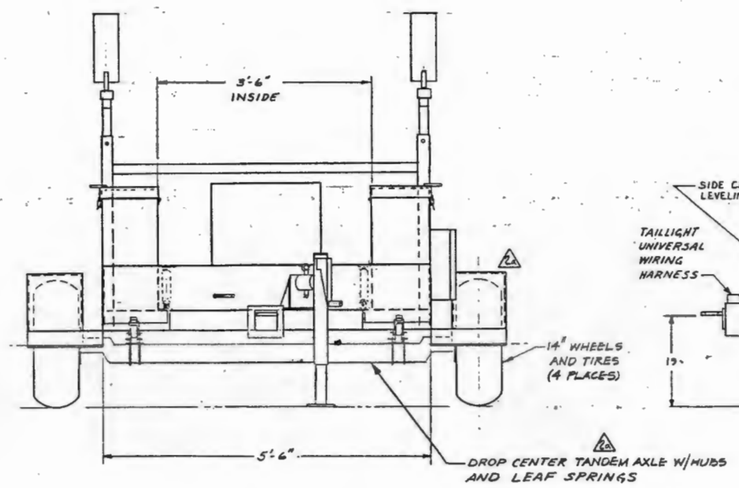

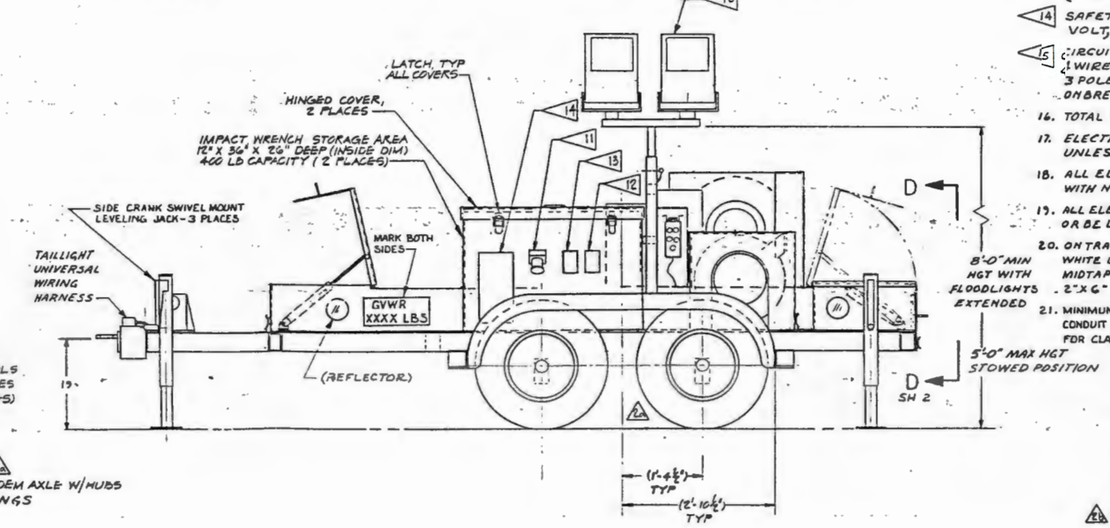

1 TRAILER

NOTES:

1. ABBREVIATIONS ARE IN ACCORDANCE WITH ANSI Y1.1.
2. DESIGN AND FABRICATION SHALL BE IN ACCORDANCE WITH SPECIFICATION B566-B-P4 AND THIS DRAWING.
3. ALL PRODUCTS NAMED ON THIS DRAWING ARE FOR ILLUSTRATING DESIRED PERFORMANCE CRITERIA AND ARE NOT TO ACT AS OR DEFINE A SOLE SOURCE. THE VENDOR MAY PROPOSE ALTERNATIVES TO MATERIALS, COMPONENTS, DESIGNS OR METHODS DESCRIBED (ALL EQUIPMENT SHALL BE SUITABLE FOR HOSE DIRECTED WATER).
4. COMBINATION DISCONNECT SWITCH AND REVERSING STARTER, NEMA 4, SIZE 1 WITH CONTROL TRANSFORMER AND FUSES, COMPLETE WITH PENDANT MOUNTED PUSHBUTTON STATION, FORWARD AND REVERSE MOMENTARY CONTACTS AND 10 FEET OF EXTENSION CORD. SQUARE D CAT. NO. 3 CW-14.
5. CABLE REEL, AERO-MOTIVE CAT. NO. 1041-02-204 WITH 50 FEET OF 4C #10 CABLE 600 VOLT AND SAFETY YELLOW WOODHEAD TURN & HI-AMP LOCKING CAP 4 WIRE, 30 AMP, 250/600 VOLT CONNECTOR WITH CAP AND CHAIN. GRAYBAR CAT. 36. NO 2909 REEL SHALL HAVE A REMOVABLE COVER (TORQUE WRENCH OUTLET)
6. CABLE REEL, AERO-MOTIVE CAT. NO. 1164-16-303 WITH 100 FEET OF 3C #12 CABLE 600 VOLT AND 120 VOLT 20 AMP GFI DUPLEX RECEPTACLE IN FS BOX WITH WEATHERPROOF COVER.
7. CABLE REEL, AERO-MOTIVE CAT. NO. 1041-02-304 WITH 50 FEET OF 4C #10 CABLE 600 VOLT AND 30 AMP, 3 WIRE, 4 POLE, 600 VOLT PLUG WITH CORD GRIP AND BUSHING CROUSE-HINDS CAT. NO. APJ 3485 (INCOMING POWER).
8. ENCLOSED CIRCUIT BREAKER, 100 AF/30 AT, 3 POLE, 480 VOLT, WESTINGHOUSE CAT. NO. WFDN100.
9. XFMR, 3PH, 480V Δ PRI, 240V Δ SEC WITH 120V MIDTAP, 15 KVA. WTHPRF, ITE NO. 31F1R015.
10. FLOODLIGHT, 4 REQ'D, 175 WATT METAL HALIDE WITH YOKE, SHOCK MOUNT, AND 180° SWIVEL MOUNT.
11. RECEPTACLE ASSEMBLY, 30 AMP, 3 WIRE, 4 POLE, 600 VOLT WITH SPRING COVER. CROUSE-HINDS CAT. NO. ARE 3422 (480 VOLT, 3 PHASE OUTLET).
12. RECEPTACLE, 3 POLE, 4 WIRE GROUNDING, 30 AMP, 250 VOLT, 3 PHASE PER NEMA L15-30R. CROUSE-HINDS CAT. NO. 6520 WITH FS BOX AND WEATHERPROOF COVER. (240 VOLT, 3 PHASE OUTLET).
13. RECEPTACLE, 2 POLE, 3 WIRE GROUNDING, 30 AMP, 250 VOLT, PER NEMA L6-30R. CROUSE-HINDS CAT. NO. 6340 WITH FS BOX AND WEATHERPROOF COVER (240 VOLT, SINGLE PHASE OUTLET).
14. SAFETY SWITCH-FUSIBLE, 30 AMP, 3 POLE, 600 VOLT, SQUARE D CAT. NO. H361DS W/DUAL ELEMENT FUSES.
15. CIRCUIT BREAKER PANELBOARD, 240 VOLT AC, 3 PHASE 4 WIRE TYPE WITH 30 AMP, 3 POLE MAIN; 1-30 AMP, 3 POLE; 1-30 AMP, 2 POLE; 3-20 AMP, SINGLE POLE BOLT ON BREAKERS, AND FOUR BLANK SPACES, NEMA 4.
16. TOTAL WEIGHT OF STORED ITEMS WILL BE 1535 LB.
17. ELECTRICAL SYMBOLS ARE PER H-7-1275 UNLESS OTHERWISE NOTED.
18. ALL ELECTRICAL WORK TO BE PERFORMED IN ACCORDANCE WITH NATIONAL ELECTRICAL CODE NFPA-70, 1984 EDITION.
19. ALL ELECTRICAL EQUIPMENT SHALL BEAR THE U.L. LABEL OR BE LISTED FOR THE INTENDED SERVICE.
20. ON TRANSFORMER PART NO. 9, ADD A RED NAMEPLATE WITH WHITE LETTERS ENGRAVED "WARNING SECONDARY HAS 120V MIDTAP (RED LEG DELTA)". NAMEPLATE APPROXIMATELY 2"X6" W/1/4" HIGH CHARACTERS.
21. MINIMUM WIRE SIZE TO BE 12 AWG TYPE THHN OR THWN. MINIMUM CONDUIT SIZE TO BE ½" GALVANIZED STEEL (CONDUIT NOT SHOWN FOR CLARITY).

VENDOR INFORMATION

IMPACT LEVEL 4

NUMBER	TITLE
H-7-1275	ELECTRICAL SYMBOL LIST
H-2-98405	DRAWING LIST

DRAWING TRACEABILITY LIST — REFERENCES: NEXT USED ON H-2-98405

REV	BY-DATE	BY-DATE	BY-DATE	DESCRIPTION
				a) 103744 & b) 103779 TO INCORPORATE ECN
M				AS-BUILT FOR PROJ B566
				a) DFC B-566B-5, 2 & 1.2; b) DFC B-566B-11, 2 & 3

MICROFILMED — WHC APPROVAL — KEH APPROVAL — COMMENT REVIEW

RHO APPROVAL

U. S. DEPARTMENT OF ENERGY
Richland Operations Office
KAISER ENGINEERS HANFORD COMPANY

TRANSPORTABLE IMPACT WRENCH STATION ASSEMBLY

PROJECT TITLE: GROUTED WASTE DISPOSAL FACILITIES

PROJ B566-B WO C6FB54 JOB 2813 D2
SCALE 1"=1'-0" BLDG 218-E-16 SHEET 2700/7201
DRAWN BY W.J. MURPHY
DESIGNED BY D. SAENZ
DRAWING NUMBER H-2-98430 SHEET 1 OF 2 REV 2

9011178508 54

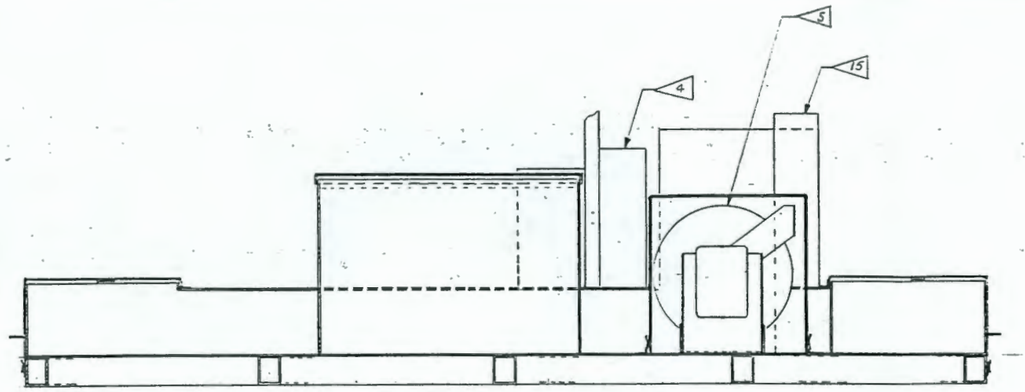

SECTION A-A (FROM SH 1)
SCALE: 1½"=1'-0"

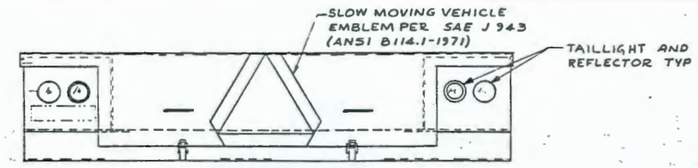

VIEW D-D (FROM SH 1)
SCALE: 1½"=1'-0"

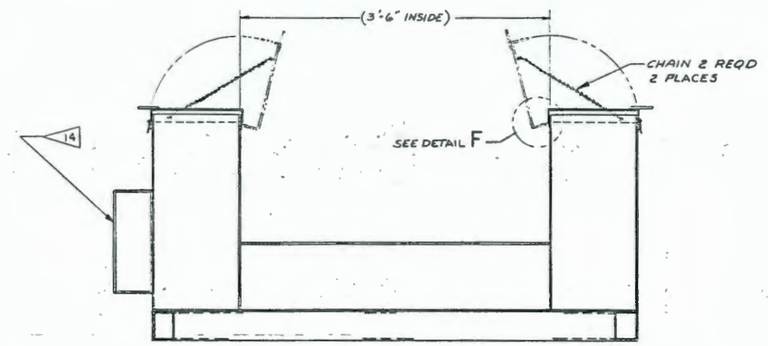

SECTION C-C (FROM SH 1)
SCALE: 1½"=1'-0"

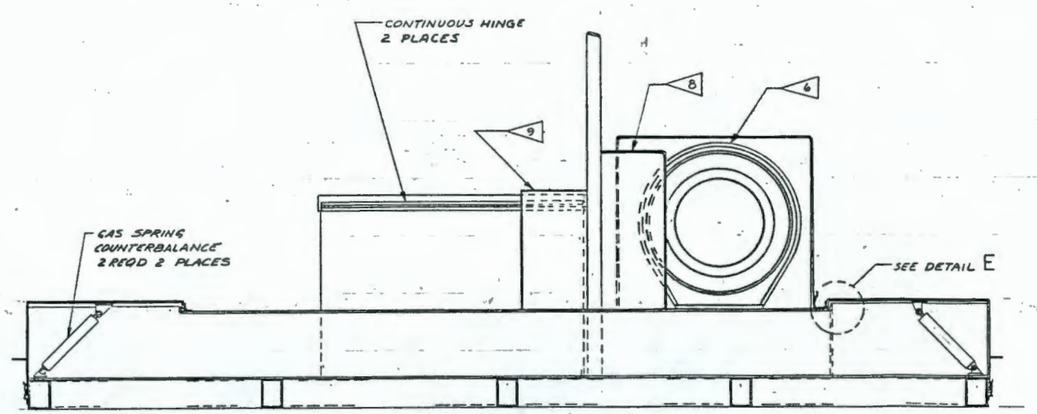

SECTION B-B (FROM SH 1)
SCALE: 1½"=1'-0"

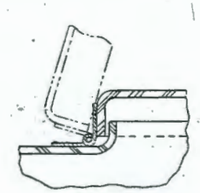

DETAIL E
SCALE: FULL

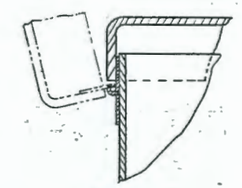

DETAIL F
SCALE: FULL

VENDOR INFORMATION

IMPACT LEVEL 4

RHO APPROVAL BY	DATE	U. S. DEPARTMENT OF ENERGY Richland Operations Office
		KAISER ENGINEERS HANFORD COMPANY
PROJECTION		TRANSPORTABLE IMPACT WRENCH STATION SECTIONS & DETAILS
DR		
APPROVED BY		
SAFETY		PROJECT TITLE GROUTED WASTE DISPOSAL FACILITIES
APPROVED BY		
CHECKED BY		PROJ B 566-B WO C6F854 JOB 2B13D2
DRAWN BY		SCALE SHOWN BLDG 218-E-16 MODEL 2700/7201
DESIGNED BY D SAENZ		DRAWING NUMBER H-2-98430 SHEET 2 OF 2 REV 2

REV	DESCRIPTION	BY	DATE
2	INC ECN 103779		
1	AS-BUILT FOR PROJ B-566B		

REVISIONS

WHC APPROVAL	KEH APPROVAL	
COMMENT REVIEW		

NUMBER	TITLE
	DRAWING TRACEABILITY LIST

NUMBER	TITLE
	DRAWING LIST
	REFERENCES
NEXT USED ON H-2-98430, SH 1	

MICROFILMED

9011785085

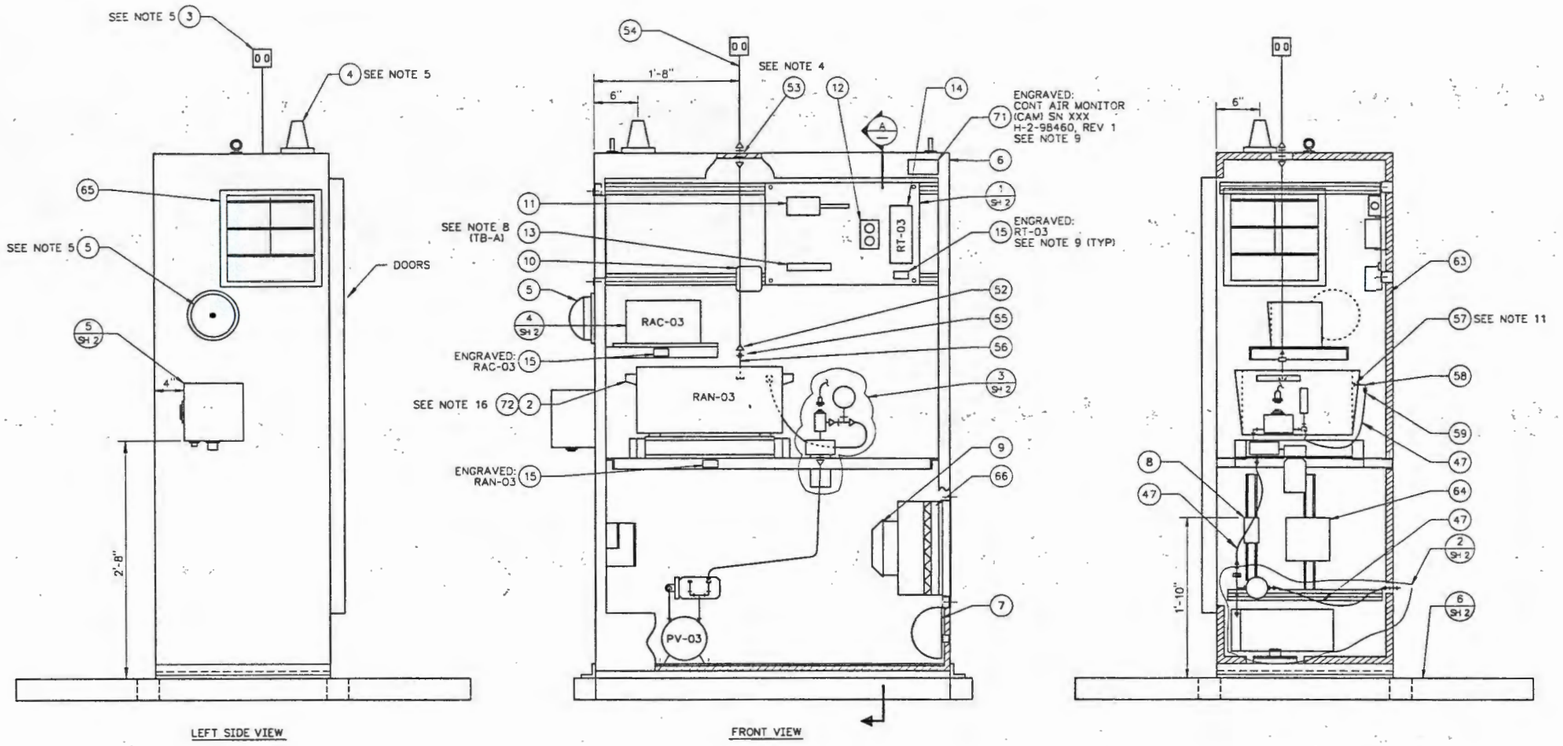

1 CAM-01 ASSEMBLY
FRONT VIEW
SHOWN WITH DOORS REMOVED

MATERIAL LIST

QTY	PN	DESCRIPTION	MATERIAL/REF
X	1	CAM-01 ASSEMBLY (CONTINUOUS AIR MONITOR SYSTEM)	
1	2	RADIATION MONITOR, (RAN-03) BETA/GAMMA WITH ALARM LIGHT AND BELL	EBERLINE AMS-3 SEE NOTES 5 & 10
1	3	AIR SAMPLE INLET FITTING, RELOCATED FROM RADIATION MONITOR	SEE PN 2 ABOVE
1	4	RADIATION ALARM BEACON, RELOCATED FROM RADIATION MONITOR	SEE PN 2 ABOVE
1	5	RADIATION ALARM BELL RELOCATED FROM RADIATION MONITOR	SEE PN 2 ABOVE
1	6	ENCLOSURE, NEMA 12, 72 1/16"H X 48 1/16"W X 24 1/16"D WITH DRIP SHIELD KIT	H-2-92067 PN 11 & HOFFMAN ENG CO PN 48
1	7	HEATER, 120VAC, 250W, WITH COVER	CHROMALOX EH-122"
1	8	SWITCH, ON/OFF, FOR VACUUM PUMP, WITH MOTOR PROTECTING HEATER IN NEMA 1 BOX	ALLEN-BRADLEY CAT NO 600-TAX4
2	9	FAN, WITH GAURD & MTG HARDWARE, 120VAC, 1 PH	H-2-92067 PN 25 & 26
1	10	THERMOSTAT WITH OUTLET BOX, COVER & HARDWARE, FOR PN 7	H-2-92497 PN 43, 3", 30, 24, 21 & 15
1	11	TEMP SWITCH, +15 TO +140° F ADJ RANGE, SURFACE MTG BOX WITH COVERED TERMINALS, FOR PN 9	DELAVAL #MLIH-H202
1	12	DUPLEX INSTRUMENT OUTLET, 20A WITH BOX & COVER, TWIST LOCK TYPE	MIDLAND ROSS EVERLOK #8773 (HPS-E-14-35)
2	13	TERMINAL BLOCK, (TB-A & TB-B) 10 POSITION, WIRE RANGE 8-20AWG, INSULATED, WITH WIRE PROTECTOR	AVERAGE CORP BUCHANAN #TSB1217PA10DS
1	14	CONVERTER, (RT-03) 0-10MV INPUT, 4-20MA OUTPUT, 120VAC POWER	ACROMAG INC 160T-M-X-U-1-C
3	15	NAMEPLATE, SIZE "C" ENGRAVED AS SHOWN	HPS I-2-7

CONTINUED ON SHEET 2

NOTES:

1. SEE SHEET 3 FOR WELDING, PAINTING & WIRING SPECIFICATIONS.
2. DRILL 1/4"D HOLE FOR MOUNTING 4 PLACES AS SHOWN. POSITION CONNECTOR BOX ON ENCLOSURE (PN 6) TO MARK MOUNTING HOLE LOCATIONS.
3. ALL EQUIPMENT SHALL BE AS SHOWN ON MATERIAL LIST OR APPROVED EQUAL.
4. DRILL OR PUNCH HOLE IN TOP OF ENCLOSURE FOR BULKHEAD UNION (PN 53). HOLE MUST BE ACCURATELY LOCATED TO ALIGN WITH SAMPLE INLET ON RADIATION MONITOR.
5. ALARM BELL (PN 5), ALARM BEACON (PN 4) & AIR SAMPLE INLET FITTING (PN 3) SHALL BE REMOVED FROM RADIATION MONITOR (PN 2) & INSTALLED ON ENCLOSURE AS SHOWN.
6. CALIBRATION OF FLOW SWITCH (PN 20) REQUIRED PRIOR TO SERVICE. SET TO DEACTIVATE AT 1.5 TO 1.7 SCFM.
7. ALL DIMENSIONS ARE NOMINAL.
8. PROVIDE IDENTIFICATION MEANS FOR TERMINAL STRIP & TERMINALS. TERMINAL STRIP WITH EXPOSED TERMINALS MUST BE PROVIDED WITH PROTECTIVE COVER.
9. NAMEPLATE (PN 15 & 71) SHALL BE 1/16" THICK LAMINATED PLASTIC STOCK WITH WHITE SURFACE & BLACK CORE. USE 4-40 X 3/8" LONG, BINDING HEAD, SELF-TAPPING MACHINE SCREWS OR PULL STEM RIVETS TO FASTEN PLATES TO THE SURFACE. CONTACT ADHESIVE OR A SILICON ADHESIVE MAY BE USED WHERE SCREWS ARE NOT DESIRABLE. ENGRAVING LETTERING SIZE SHALL BE 3/16" HIGH.

NOTES CONTINUED ON SHEET 3

ABBREVIATIONS

ABBREVIATIONS USED ARE FOUND IN AMERICAN NATIONAL STANDARDS INSTITUTE (ANSI) Y-1.1-1972 OR AS FOLLOWS:

CAM - CONTINUOUS AIR MONITOR
FS - FLOW SWITCH
K - RELAY
mV - MILLIVOLT
NEMA - NATIONAL ELECTRICAL MANUFACTURERS ASSOCIATION
PV - PUMP, VACUUM
RAN - RADIATION ANALYZER (MONITOR)
RT - RADIATION TRANSMITTER
TDK - TIME DELAY RELAY
3PDT - THREE POLE DOUBLE THROW
AK - ALARM RELAY

NUMBER	TITLE
	DRAWING TRACEABILITY LIST

NUMBER	TITLE
	REFERENCES
NEXT USED ON	H-2-98405

NUMBER	TITLE
H-2-92497 SH 1 & 2	GEN STACK SAMP/MON BASIC CABINET ASSY
H-2-92070	GEN STACK SAMP/MON FILTER ASSY REV 2
H-2-92067	CABINET ASSY, SH1 REV 3 GENERIC STACK SAMPLER/MONITOR
H-2-92490	GEN STACK SAMP/MON SAMP EXT ASSY
H-2-73810	INSTM ANNULUS UNIT ENCL ASSY REV 2
H-2-98405	DRAWING LIST

REV	BY-DATE	BY-DATE	REV BY DATE	DESCRIPTION
2	M 12-15-88	RHC 12-15-88 RRC 12-23-88	MAK 8-4 1988	ALE 8-3 1988, a) AS-BUILT FOR PROJ B-5668 ECN B-5668-113,2 C1,2
1	M WHC FJM 3-11 1988	ECH 3-11 1988 DP 3-8 1988 HH 3-8 1988 RMT	CS 3-8 1988 KJS GPM KEW 2-22 1988	B-566-B-17, 28, 67 & 78. INCORPORATING DFCS GENERAL REVISION

MICROFILMED: WHC APPROVAL — KEH APPROVAL

REVISIONS

COMMENT REVIEW

		DATE
RHO APPROVAL BY	GD CAMPBELL	11-24 1986
PROJ ENGR	JR MILLS FOR ECH	12-5 1986
DA	WH BRAYMEN	9-30 1986
APPROVED BY	ROBERT M ITEN	9-30 1986
SAFETY	D PARTHREE	9-30 1986
APPROVED BY	HJS C SUBLETT	9-29 1986
DRAWN BY	JES RC SWAN	9-29 1986
DRAWN BY	PA SMITH	8-14 1986
DESIGNED BY	KE WALTER	8-14 1986

U.S. DEPARTMENT OF ENERGY
RICHLAND OPERATIONS OFFICE
KAISER ENGINEERS HANFORD COMPANY

INSTM CONTINUOUS AIR MONITOR ASSEMBLY

PROJECT TITLE: GROUTED WASTE DISPOSAL FACILITIES

PROJ	NO	JOB
B-5668	C6F854	240874

SCALE	BLDG	INDEX
1 1/2"=1'-0"	218-E-16	590'

DRAWING NUMBER	SHEET	OF	REV
H-2-98460	1	3	2

KEH-GAP

H298460C
C 08/04/88

9011785085 6

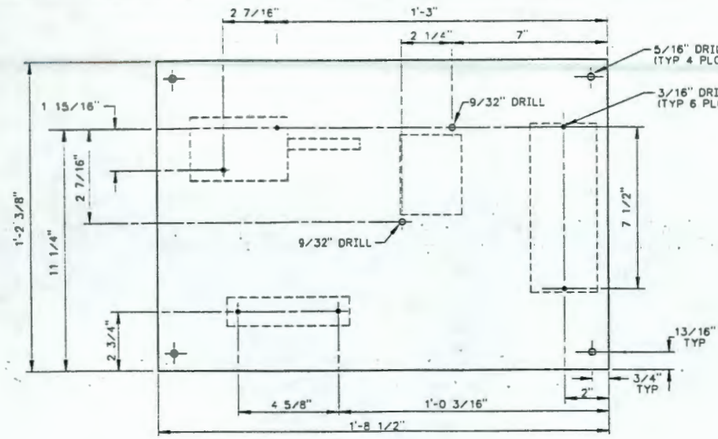

DETAIL 1 SH 1

MOUNTING PLATE
MATERIAL: 1/8" THICK STEEL PLATE ASTM A-36
FINISH: SEE SPECIFICATIONS ON SH 3
SCALE: 3/8"=1"

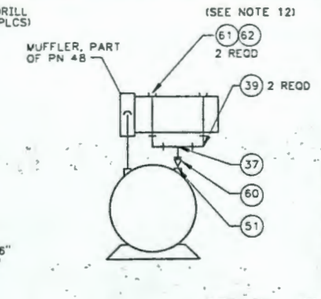

DETAIL 2 SH 1

VACUUM PUMP PV-03 ASSEMBLY
SCALE: NONE

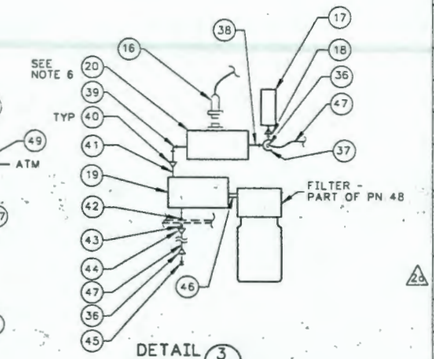

DETAIL 3 SH 1

AIR FLOW REGULATOR AND FLOW SWITCH ASSEMBLY
SCALE: NONE

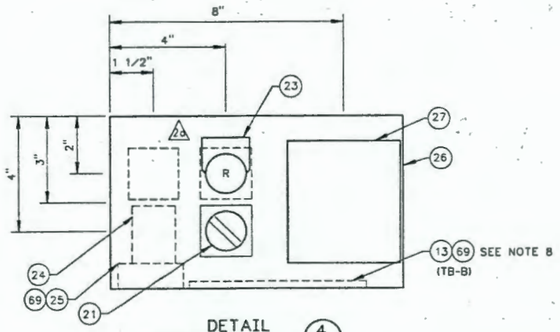

DETAIL 4 SH 1

RADIATION MONITOR ALARM BY-PASS CONTROL (RAC)
(SEE WIRING DIAGRAM SH 3)
SCALE: 1/2"=1"

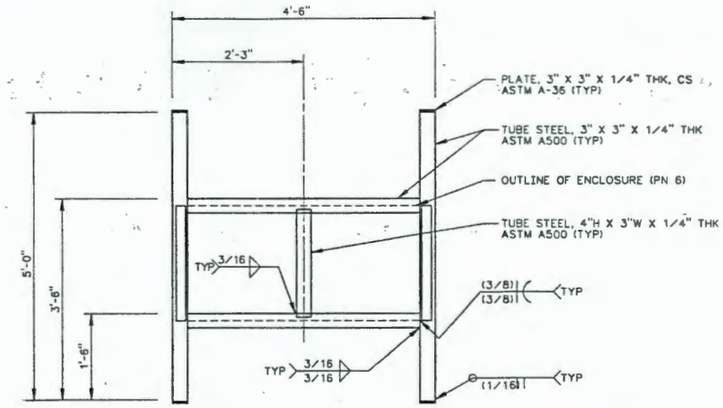

PLAN

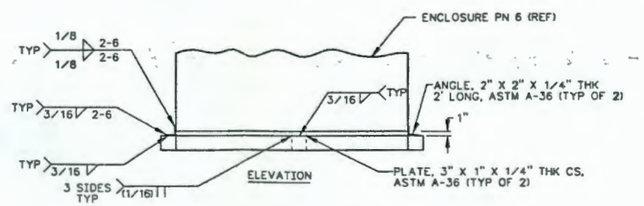

DETAIL 6 SH 1

BASE FRAME
FINISH: SEE SPECIFICATIONS ON SHEET 3
SCALE: 1" = 1'-0"

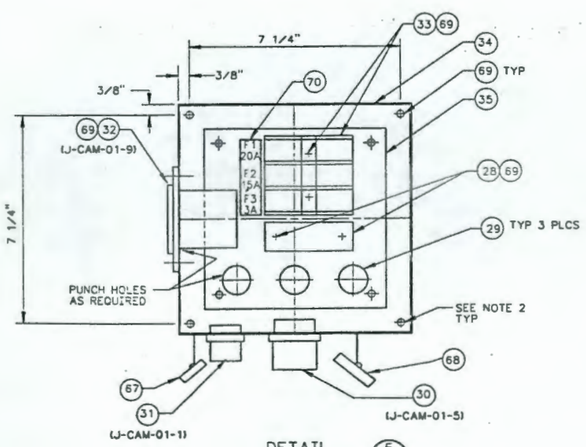

DETAIL 5 SH 1

CONNECTOR BOX
(SEE WIRING DIAG SH 3)
SCALE: 1/2"=1"
SHOWN WITH COVER REMOVED

MATERIAL LIST (CONT FROM SHEET 1)

QTY	PN	DESCRIPTION	MATERIAL/REF
1	16	CONNECTOR PLUG, 3 PIN WITH CABLE CLAMP, FOR PN 20	ITT CANNON MS3106-10SL-3S AND MS3057-3A
1	17	VACUUM GAUGE, 0-30" MERCURY, 1/2" NPT PROCESS CONNECTION	MARSH #J4605
1	18	REDUCING BUSHING, 1/2" X 1/4" NPT	COML, CS, GALV
1	19	FLOW REGULATOR ASSEMBLY, FOR VACUUM SERVICE, 0-4 CFM, 1/8" NPT	EBERLINE #RAP-1R
1	20	FLOW SWITCH, (FS-03) 1-75 CFM ADJ RANGE, 1/2" NPT INLET & OUTLET, 316 SST BODY WITH 3 PIN RECEPTACLE	TRANSAMERICA DELAVAL INC GEMS #FS-10798-25372
1	21	KEY OPERATED SELECTOR SWITCH, 3 POSITION, SPRING RETURN TO CENTER, WITH LEGEND PLATE ENGRAVED AS FOLLOWS: "RESET" IN AREA Z, "OFF" IN AREA O, AND "START" IN AREA Y, 5/32" ENGRAVING	HONEYWELL MICROSWITCH #PTKHB2331B-F99
	22		
1	23	SAME AS PN 22 ABOVE EXCEPT LEGEND PLATE ENGRAVED: "RAN ALARM BYPASSED"	SEE PN 22 ABOVE
1	24	RELAY (K) 3PDT, 10A CONTACTS, 120 VAC COIL, 11 PIN OCTAL TYPE PLUG IN CASE	POTTER BRUMFIELD #KRP14AG
1	25	SOCKET TERMINAL BASE FOR PN 24, 11 PIN OCTAL SOCKET	POTTER BRUMFIELD #27E123
1	26	CABINET, 6"H X 10"W X 7"D FOR RADIATION ALARM BYPASS COMPONENTS	BUD INDUSTRIES INC MINIBOX #SC 2130
1	27	TIME DELAY RELAY, PANEL MTD, 1-10 MINUTE ADJUSTABLE RANGE 120 VAC ON-DELAY (TDK)	EAGLE SIGNAL DIV #HP 54A600
1	28	POWER BLOCK FOR FIVE #12 NEUTRAL WIRES	MARATHON SPECIAL PROD #1421552
3	29	RIGID GALVANIZED STEEL CONDUIT NIPPLE 3/4" X 2" LONG, EACH WITH TWO INSULATED BUSHINGS AND TWO SEALING LOCKNUTS	COML
1	30	CONNECTOR, ENVIRONMENTAL, 9 CONDUCTOR, MALE, #16 WIRE, BOX MTD (J-CAM-01-5)	ITT CANNON MS3102E-22-20-S
1	31	CONNECTOR, ENVIRONMENTAL, 3 CONDUCTOR, FEMALE, #16 WIRE, BOX MTD (J-CAM-01-1)	ITT CANNON MS3102E-10SL-3-S
1	32	CONNECTOR, POWER, 4 POLE 4 WIRE WITH WEATHERPROOF LIFT COVER PLATE AND GASKET, MALE (J-CAM-01-9)	HUBBEL TWIST-LOK #74CM50
1	33	FUSE BLOCK, 3 POLE 30 AMP 300 VAC WITH 3A, 15A & 20A TYPE SC FUSES	BUSS TYPE SC #2899 WITH SC3, SC15 & SC20
1	34	ENCLOSURE, WATER & DUST TIGHT, 8"H X 8"W X 6"D WITHOUT KNOCKOUTS	HOFFMAN ENG CO #A886GIE
1	35	PANEL, 6 1/4" X 6 1/4" FOR PN 34 ABOVE	HOFFMAN ENG CO #A-8N8P
2	36	HOSE CONNECTOR, 1/2" MNPT TO 3/8" HOSE	CAJON 88-MHC-6S
2	37	TEE, 1/2" NPT, SCH 40	COML, CS, GALV
1	38	NIPPLE, 1/2" NPT, CLOSE, SCH 40	COML, CS, GALV
3	39	STREET ELBOW, 90°, 1/2" NPT	COML, CS, GALV
1 PR	40	REDUCING BUSHING, 1/8" X 1/2" NPT	COML, CS, GALV
1	41	NIPPLE, 1/8" NPT, CLOSE, SCH 40	COML, CS, GALV
1	42	CONNECTOR, BULKHEAD, MALE, 1/4" NPT X 3/8" TUBE	SWAGELOK B-600-11-4
1	43	ADAPTER, MALE, 3/8" TUBE X 3/8" NPT	CAJON B-6-TA-1-6
1	44	HOSE CONNECTOR, 3/8" FNPT TO 3/8" HOSE	CAJON B-6-FHC-6S
1	45	QUICK DISCONNECT, STEM ASSY, 1/2" NPT, FEMALE	SWAGELOK B-QCB-S-8PF

CONTINUED ON SHEET 3

FOR NOTES SEE SHEET 1 AND 3

NUMBER	TITLE
DRAWING TRACEABILITY LIST	

NUMBER	TITLE
DRAWING LIST	
REFERENCES	
NEXT USED ON H-2-98460, SH 1	

REV	BY-DATE	BY-DATE	REV BY DATE	DESCRIPTION
2	MAK 8-4 1988	ALE 8-3 1988		AS-BUILT FOR PROJ B-566B a) ECN B-566B-113.2 D7E1.2
1	WHC FJM 3-11 1988	ECH 3-11 1988 HH 3-8 1988 / DP 3-8 1988 RMI	CS 3-8 1988 KEW / HJS PAS 3-1 1988 KEW	B-566-B-17, 28, 67 & 78. INCORPORATING OFC'S GENERAL REVISION

REVISIONS

WHC APPROVAL — KEH APPROVAL

COMMENT REVIEW

RHO APPROVAL BY GD CAMPBELL	DATE 11-24 1986	U.S. DEPARTMENT OF ENERGY RICHLAND OPERATIONS OFFICE	
PROJ ENGR JR MILLS FOR ECH	12-5 1986	KAISER ENGINEERS HANFORD COMPANY	
DR WH BRAYMEN	9/30 /86	INSTM CONTINUOUS AIR MONITOR DETAILS	
APPROVED BY ROBERT M ITEN	9/30 /86		
SAFETY D PARTHREE	9/30 /86		
APPROVED BY HJS C SUBLETT	9/29 /86	PROJECT TITLE GROUTED WASTE DISPOSAL FACILITY	
CHECKED BY JFS RC SWAN	9/26 /86	PROJ B-566B / KW C6F854 / JOB 240874	
DRAWN BY PA SMITH	8-6 1986	SCALE AS SHOWN / BLDG 218-E-16 / DRAWN 5901	
DESIGNED BY KE WALTER	8-5 1986	DRAWING NUMBER H-2-98460 / SHEET 2 / OF 3 / REV 2	

KEHCAD — H298460C1 C 08/04/88

7850857
9011

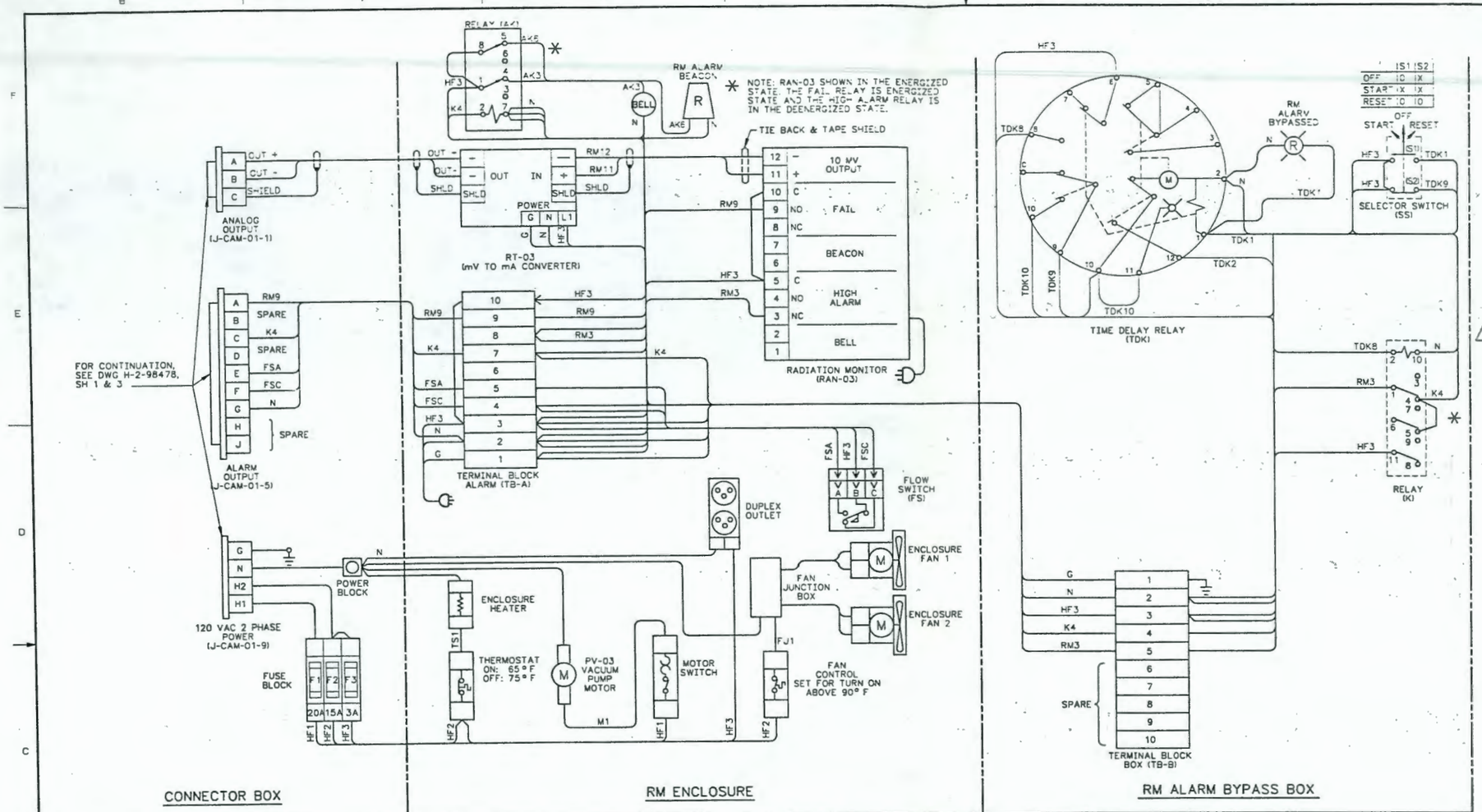

CAM-01 WIRING DIAGRAM ⚠1

SEE SPECIFICATIONS PART 3 BELOW

MATERIAL LIST (CONTINUED FROM SHEET 2)

QTY	PN	DESCRIPTION	MATERIAL/REF
1	46	REDUCING NIPPLE, 1/4" NPT X 3/8" NPT	CAJON B-6-MBN-4
AR	47	VACUUM HOSE, 11/32" ID NEOPRENE RUBBER	COV.
1	48	VACUUM PUMP, (PV-03) ROTARY VANE, OIL LESS, MTD ON 3/4 HP 120 VAC 1 PH MOTOR, 1-10 CFM, WITH MUFFLER & FILTER	GAST MFG CO MODEL 1022-V103-G272X SEE NOTE 14
1	49	CONNECTOR, BULKHEAD, FEMALE, 1/2" NPT X 1/2" TUBE	SWAGELOK B-810-71-8
1	50	HOSE CONNECTOR, MALE, 3/8" NPT X 3/8" HOSE	CAJON B-6-MHC-6S
1	51	NIPPLE, 3/8" NPT X 1 1/2" LONG, SCH 40	COV., CS, GALV
1	52	CONNECTOR, 1/2" TUBE TO 1/4" NPT, SST	SWAGELOK SS-810-1-4, SEE NOTE 3
1	53	BULKHEAD TUBING UNION, 1/2" TUBE, SST	SWAGELOK SS-810-61
AR	54	TUBING, 1/2" OD X 0.035" WALL, SST	COV., SEE NOTE 3
1	55	PIPE UNION, 1/4" NPT, 150 LB, SST	COV., SEE NOTE 3
1	56	PIPE NIPPLE, 1/4" NPT X 2" LONG, SCH 40 SST	COV., SEE NOTE 3
1	57	REDUCING ADAPTER, 1/4" MNPT TO 1/8" MNPT	CAJON B-4-HRN-2
1	58	ELBOW, 90° 1/4" NPT	COV., CS, GALV
1	59	HOSE CONNECTOR 1/4" NPT TO 3/8" HOSE	CAJON B-4-MHC-6S
1	60	REDUCING BUSHING, 3/8" NPT X 1/2" NPT	COV., CS, GALV
2	61	QUICK DISCONNECT, BODY ASSY, 1/2" NPT	SWAGELOK B-QC8-B-8PM
2	62	DUST CAP, QUICK DISCONNECT	SWAGELOK PP-QC8-DC
AR	63	INSULATION, INCOMBUSTIBLE, 1" TK, FOIL ON ONE SIDE, 1.0 LBS/CU FT MIN DENSITY	JOHNS-MANVILLE MICROLITE FLEX BLANKET W/FSK
1	64	ALARM RELAY (AK) AND BOX ASSEMBLY, 5 AMPS, DPDT	P&B KRP 11AY-120V, H-2-92497 SH 1 & 2, PN 14,23,32,33 & 34
1	65	SHUTTER ASSEMBLY	LOUVERS & DAMPERS, INC. SF-295,12" X 12
1	66	FILTER ASSEMBLY	H-2-92070 SH 1
1	67	PROTECTIVE METAL CAP WITH CHAIN FOR PN 31	ITT CANNON MS25043-100
1	68	PROTECTIVE METAL CAP WITH CHAIN FOR PN 30	ITT CANNON MS25043-220
AR	69	MISC SCREWS, BOLTS, NUTS & WASHERS	COV.
1	70	NAMEPLATE, SIZE "C" ENGRAVED AS SHOWN	HPS [illegible]
1	71	NAMEPLATE, SIZE "F", 1" HIGH X 4 1/2" WIDE, ENGRAVED WITH 5/16" HIGH LETTERS AS SHOWN. ENGRAVE APPROPRIATE SERIAL NO. IN PLACE OF XXX	HPS [illegible]
1	72	TIE-DOWN STRAP, 8" LONG, WIDE NYLON WED, 2000 LB BUCKLE RATING; FOR PN 2 ABOVE	Mc MASTER-CARR CAT NO. 3699T3[illegible]

NOTES:

11. REMOVE EXISTING HOSE CONNECTOR FROM REAR OF MONITOR AND REPLACE WITH NEW HOSE CONNECTOR AND FITTINGS PART NUMBERS 57, 58 & 59.
12. CAP PART NUMBER 61 WITH PART NUMBER 62
13. PIPE JOINT SEALANT FOR THREADED JOINTS. ONE OF THE FOLLOWING SHALL BE USED:
    - CHEMTRON "GOLDEN" #7298
    - CRANE PACKING COMPANY "JC-30"
    - LAKE CHEMICAL CO. "SLIC-TITE" WITH TEFLON
    - GENERAL SEALANTS, INC. #JS600
14. MOTOR SHALL BE WIRED FOR 120VAC SERVICE ACCORDING TO MANUFACTURER'S INSTRUCTIONS.
15. ALL CABINET PENETRATIONS SHALL BE SEALED WITH GENERAL ELECTRIC RTV 102 OR EQUAL SEALANT.
16. PN 2 TO BE FASTENED DOWN TO SHELF WITH PN 72.

SPECIFICATIONS

1.0 WELDING

1.1 QUALIFICATIONS

WELDING PERSONNEL SHALL BE QUALIFIED ACCORDING TO AMERICAN SOCIETY OF MECHANICAL ENGINEERS (ASME) SECTION IX.

1.2 PROCEEDURE AND INSPECTION

WELDING PROCEDURES AND VISUAL INSPECTION SHALL BE IN ACCORDANCE TO AMERICAN WELDING SOCIETY (AWS) D1.1-86 AND D1.3-81.

2.0 FINISHING

CARBON STEEL SURFACES SHALL BE CLEAN AND FREE FROM RUST SCALE. SURFACES SHALL BE PRETREATED AS DETAILED IN MILITARY SPECIFICATIONS DOD-P-15328, 0.5 MIL. SURFACES SHALL BE PAINTED AS DETAILED IN FEDERAL SPECIFICATIONS TT-P-645, 1.5 MIL, FOR PRIME COAT, TT-E-489, CLASS A 1.5 MIL FOR THE SECOND COAT; AND TT-E-489 CLASS A 1.5 MIL FOR THE FINISH COAT. COLOR OF ARM SHALL BE YELLOW, NO 13655, IN ACCORDANCE WITH FEDERAL STANDARD 595A. COLOR OF CAM SHALL BE BATTLESHIP GRAY, NO 1640 IN ACCORDANCE WITH FEDERAL STANDARD 595A.

3.0 ELECTRICAL WIRING

ALL WIRING WITHIN THE CAM ENCLOSURE SHALL BE COPPER CONDUCTOR IN ACCORDANCE WITH LATEST EDITION OF NFPA 70, THE NATIONAL ELECTRICAL CODE.

ALL INSTRUMENT SIGNAL WIRING SHALL NOT BE SMALLER THAN NO 18 AWG STRANDED TINNED COPPER WIRE UNLESS OTHERWISE RECOMMENDED BY THE INSTRUMENT MANUFACTURER.

ALL WIRES OVER 5 INCHES LONG SHALL BE IDENTIFIED ON EACH END WITH IMPRINTED TUBULAR PLASTIC WIRE MARKERS. REFERENCE WIRE MARKER MANUFACTURERS ARE ECP CORP, CLEVELAND, OHIO OR FLOYTAG, SEATTLE, WASHINGTON.

WIRING DIAGRAM H-2-98460, SHEET 3, IS A STANDARD FORMAT. IF THE MANUFACTURER'S WIRING INSTRUCTIONS FOR THE RADIATION MONITOR OR TRANSMITTER CONFLICT WITH THIS DIAGRAM, THE MANUFACTURER'S RECOMMENDATIONS SHALL BE FOLLOWED.

⚠1 ALL POWER AND ALARM WIRING SHALL BE SEPARATED FROM THE LOW LEVEL (RM 11 & RM 12) SIGNAL WIRING BY NOT LESS THAN 6 INCHES. IF POWER OR ALARM WIRING MUST CROSS THE LOW LEVEL (RM 11 & RM 12) SIGNAL WIRING, IT SHOULD DO SO AT A RIGHT ANGLE.

ALL ELECTRICAL EQUIPMENT SHALL BE GROUNDED IN ACCORDANCE WITH NFPA 70.

ALL INSTRUMENTS REQUIRING ELECTRICAL POWER SHALL BE WIRED WITH A 3/C #14 COPPER WIRE, TYPE WO OR SJO CABLE. LENGTH OF CABLE SHALL BE AS REQUIRED BUT NOT LONGER THAN 24 INCHES. PLUGS AND RECEPTACLES SHALL BE TWIST-LOCK TYPE AS MANUFACTURED BY MIDLAND ROSS/RUSSELLSTOLL OR EQUAL. POWER CABLES FOR EQUIPMENT ⚠1 MOUNTED ON PULL OUT SHELVES MAY BE LONGER THAN 24 INCHES IF REQUIRED.

WHERE PRACTICAL, ALL WIRES SHALL BE RUN TOGETHER IN PARALLEL TO FORM A UNIFORM CABLE. THE CABLE SHALL BE BOUND WITH CABLE TIES AT A UNIFORM SPACING OF APPROXIMATELY 6 INCHES, OR CLOSER, AS REQUIRED. CABLES SHALL BE SECURELY FASTENED TO PANEL AND/OR FRAMEWORK.

ELECTRICAL EQUIPMENT AND MATERIALS SHALL BE LISTED FOR THE INTENDED SERVICE BY UNDERWRITERS LABORATORIES, INC. (UL) OR OTHER QUALIFIED TESTING LABORATORY AND SHALL BEAR THE MARK OF THE TESTING LABORATORY. IN THE ABSENCE OF A MARK, A CERTIFICATION OF APPLICABLE LISTING MAY BE SUBMITTED. LISTING OR MARKING BY UL OR OTHER QUALIFIED TESTING LABORATORY IS NOT REQUIRED FOR ELECTRICAL EQUIPMENT AND MATERIAL THAT IS SPECIFIED BY MANUFACTURER'S PART NUMBER ON THE CONTRACT DRAWINGS OR IN THE SPECIFICATION.

PRESSURE TYPE (CRIMP-ON) SOLDERLESS CONNECTORS SHALL BE USED FOR ALL SCREW FASTENED CONTACT POINTS. THE CONNECTORS SHALL BE RATED FOR THEIR INTENDED USE. SPLICING OF WIRES WITHIN BUNDLES SHALL BE AVOIDED. WHERE SPLICING OF SINGLE-RUN WIRES IS NEEDED, CRIMP-ON BUTT SPLICE CONNECTORS SHALL BE USED. WIRE NUTS SHALL NOT BE USED.

4.0 PIPE, TUBING AND FITTINGS

4.1 PIPE AND FITTINGS

STAINLESS STEEL, 30 PSIG MAXIMUM OPERATING PRESSURE, 100 F MAXIMUM OPERATING TEMPERATURE, 35 PSIG TEST PRESSURE. STAINLESS STEEL PIPE SHALL BE TYPE 316 OR 304 IN ACCORDANCE WITH ASTM A 312 AND ASTM A 269, GRADES TP 316 AND TP 304L. FITTINGS SHALL BE TYPE 316 OR 304, SCHEDULE 40, THREADED TYPE IN ACCORDANCE WITH ANSI 1.20.1. SCREWED JOINTS SHALL BE PREPARED WITH PIPE SEALANT CONTAINING TEFLON. USE LAKE CHEMICAL CO. "SLIC-TITE" WITH TEFLON.

4.2 TUBING AND FITTINGS

TUBING SHALL BE 300 SERIES SEAMLESS STAINLESS STEEL ACCORDING TO ASTM A 269. MINIMUM WALL THICKNESS SHALL BE .035". 30 PSIG MAXIMUM OPERATING PRESSURE, 100 F MAXIMUM OPERATING TEMPERATURE, 35 PSIG TEST PRESSURE. FITTINGS SHALL BE FLARELESS TYPE. REFERENCE MANUFACTURER: SWAGELOK, CRAWFORD FITTINGS CORP., OR PARKER A-LOK.

NUMBER	TITLE	NUMBER	TITLE
	DRAWING TRACEABILITY LIST		DRAWING LIST
			REFERENCES
			NEXT USED ON H-2-98460, SH 1

REV	BY-DATE	BY-DATE	REV BY DATE	DESCRIPTION
2	HBA 8-23-88	RK 11/88	ZDC 12-2-88	MAK 8-3 1988 / ALE 8-3 1988 — AS-BUILT FOR PROJ B5668 F3-6,E6 a) ECN B5668-113,Z C4,D3
1	WHC FJM 3-11 1988	ECH 3-11 1988 HH 3-8 1988	DP 3-8 1988 RMI	CS 3-8 1988 KEW — HJS PAS 2-9 1988 KEW — B-566-B-17, 28, 67 & 78. INCORPORATING DFC'S GENERAL REVISION

MICROFILMED — WHC APPROVAL — KEH APPROVAL — REVISIONS — COMMENT REVIEW

RHO APPROVAL BY GD CAMPBELL	DATE 11-24 1986	U.S. DEPARTMENT OF ENERGY RICHLAND OPERATIONS OFFICE	
		KAISER ENGINEERS HANFORD COMPANY	
PROJ ENGR JR MILLS FOR ECH	12-5 1986	M INSTM CONTINUOUS AIR MONITOR WIRING DIAG	
DR WA BRAYMAN	9-30 1986		
APPROVED BY ROBERT M ITEN	9-30 1986		
SAFETY D PARTHREE	9-30 1986	PROJECT TITLE GROUTED WASTE DISPOSAL FACILITY	
APPROVED BY HJS C SUBLETT	9-29 1986	PROJ B-5668	WO C6F854 / JOB 240874
APPROVED BY HJS RC SWAN	9-29 1986	SCALE NONE	BLDG 218-E-16 / INDEX 5903
DRAWN BY PA SMITH	8-8 1986	DRAWING NUMBER H-2-98460	SHEET 3 / OF 3 / REV 2
DESIGNED BY KE WALTER	8-5 1986		

H29846023 C 08/19/86

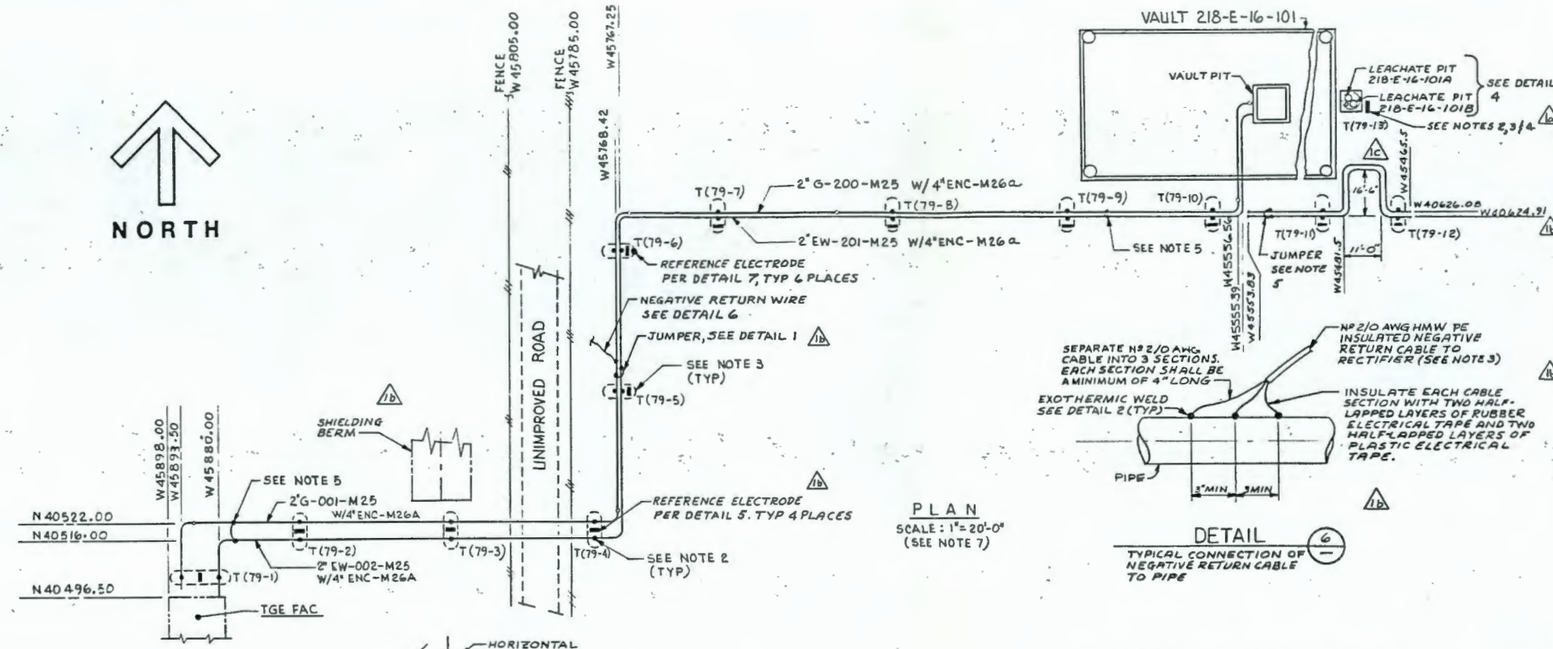

PLAN
SCALE: 1" = 20'-0"
(SEE NOTE 7)

DETAIL 6
TYPICAL CONNECTION OF NEGATIVE RETURN CABLE TO PIPE

NOTES:

1- ALL INSTALLATIONS SHALL BE IN ACCORDANCE WITH NFPA-70, LATEST EDITION

2- TEST BOXES WILL NOT BE INSTALLED AT THIS TIME. CADWELD TWO WIRES TO THE PIPE AT EACH LOCATION INDICATED ON THE DRAWING. ONE NO 12 AWG THWN INSULATED RED AND ONE NO 6 AWG THWN INSULATED WHITE, SEE DETAIL 2 & 5 MAINTAIN 12" SEPARATION BETWEEN TEST LEAD WELDS.

3- INSTALL A TEMPORARY 4 FT. METAL POST THAT WILL EXTEND 2 FT. ABOVE FINISHED GRADE FOR THE PROTECTION OF THE NEGATIVE RETURN CABLE, THE TEST WIRES AND THE REFERENCE ELECTRODE WIRE. THE NEGATIVE RETURN CABLE AND THE TEST WIRES SHALL BE TAGGED WITH THE PIPE NUMBER AND THE REFERENCE ELECTRODE WIRE SHALL BE TAGGED WITH THE PIPE NUMBER OF THE PIPE THAT IS CLOSEST TO IT. EACH CONDUCTOR SHALL HAVE HEAT SHRINK TUBING INSTALLED OVER THE ENDS TO PROVIDE PROTECTION FROM DAMAGE AND MOISTURE AND SHALL BE SPIRALED AND TAPED TO THE METAL POST.

4- INSTALL A PERMANENT HORIZONTAL REFERENCE ELECTRODE WHERE SHOWN. EACH REFERENCE ELECTRODE SHALL BE COPPER-COPPER SULFATE HARCO CORP., PART Nº IHRP-802 WITH 50' OF NUMBER 10 HMW/PE INSULATED GREEN CONDUCTOR ROUTED WITH TEST LEADS.

5- ALL JUMPER CABLES BETWEEN PIPES SHALL BE NO 4 AWG HMW PE UNLESS OTHERWISE NOTED. JUMPER CABLE BETWEEN PIPES SHALL BE INSTALLED IN ACCORDANCE WITH DETAIL NO 1

6- TEST WIRES SHALL NOT BE INSTALLED IN TRAFFIC AREAS OR ROADWAY. IF SUCH CONDITION EXIST IT SHALL BE MOVED TO NEW LOCATION.

7- FOR PIPING INSTALLATION SEE DRAWINGS H-2-98435, H-2-98449 AND H-2-98451.

8- INSTALL REFERENCE ELECTRODES IN ACCORDANCE WITH MANUFACTURER'S INSTALLATION INSTRUCTIONS.

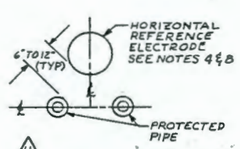

DETAIL 7 (SECTION VIEW)
SCALE: NONE
REFERENCE ELECTRODE INSTALLATION

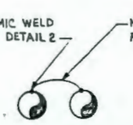

NOTES: DEPTH OF PIPES VARIES.
EACH JUMPER CABLE SHALL HAVE A SEPARATE EXOTHERMIC WELD TO EACH PIPE

TYPICAL JUMPER CONNECTION BETWEEN PIPES
DETAIL 1
SCALE: NONE

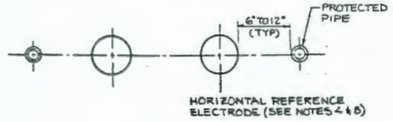

DETAIL 5 (SECTION VIEW)
SCALE: NONE
REFERENCE ELECTRODE INSTALLATION.

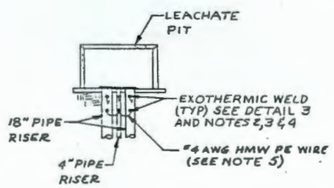

LEACHATE PIT PIPE RISERS
DETAIL 4
SCALE: NONE

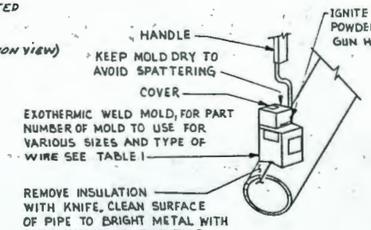

WELD AND SURROUNDING PIPE COATING SHALL BE COATED WITH ONE LAYER OF COLD APPLIED COAL TAR, KOPPERS CO "BITUMASTIC 50" FOLLOWED BY A 9"x9" LAYER OF WOVEN GLASS FIBER OWENS-CORNING "GLASFAB." GLASS FIBER SHALL BE WORKED INTO THE COAL TAR. ADDITIONAL LAYER OF COAL TAR FOLLOWED BY ADDITIONAL GLASS FIBER SHALL BE APPLIED. A FINAL COAT OF COAL TAR SHALL COMPLETE THE PATCH. IF PIPE IS COATED THE PATCH SHALL OVERLAP THE COATING ALL AROUND A MINIMUM OF 2". IF PIPE IS BARE THE PATCH SHALL OVERLAP ALL EXPOSED COPPER WIRE AND WELD MATERIAL A MINIMUM OF 2"

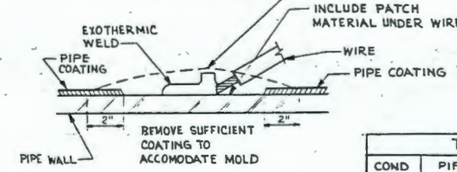

TYPICAL HORIZONTAL EXOTHERMIC WELD
DETAIL 2
SCALE: NONE

TABLE I			
COND SIZE	PIPE CONN	HELDER PART NO	WELD METAL
# 4	4" HORIZ	CAHAA-1LB	CA15
# 6	4" HORIZ	CAHAA-1H	CA15
#12 *	4" HORIZ	CAHAA-1G	CA15
# 4	4" VERT	CAVST-1LB	CA15
# 6	4" VERT	CAVST-1HB	CA15
#12 *	4" VERT	CAVST-1GB	CA15
# 4	18" VERT	CAVST-1L	CA15
# 6	18" VERT	CAVST-1H	CA15
#12 *	18" VERT	CAVST-1G	CA15

* IN SLEEVE CAB-133-1H

WELD & SURROUNDING PIPE COATING SHALL BE COATED WITH ONE LAYER OF COLD APPLIED COAL TAR, KOPPERS CO "BITUMASTIC 50" FOLLOWED BY 9"x9" LAYER OF WOVEN GLASS FIBER, OWENS-CORNING "GLASFAB." GLASS FIBER SHALL BE WORKED INTO THE COAL TAR. ADDITIONAL LAYER OF COAL TAR FOLLOWED BY ADDITIONAL GLASS FIBER SHALL BE APPLIED. A FINAL COAT OF COAL TAR SHALL COMPLETE THE PATCH. IF PIPE IS COATED, THE PATCH SHALL OVERLAP THE COATING ALL AROUND A MIN OF 2". IF PIPE IS BARE THE PATCH SHALL OVERLAP ALL EXPOSED COPPER WIRE AND WELD MATERIAL A MIN OF 2"

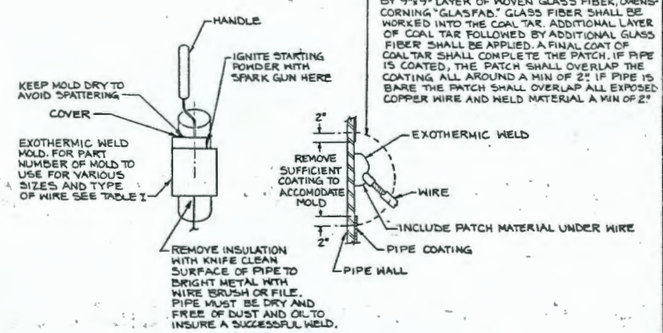

TYPICAL VERTICAL EXOTHERMIC WELD
DETAIL 3
SCALE: NONE

NUMBER	TITLE
	DRAWING TRACEABILITY LIST

NUMBER	TITLE
H-2-98405	DRAWING LIST
	REFERENCES
NEXT USED ON	H-2-98405

REV	DATE	DESCRIPTION	BY-DATE	BY-DATE
1	MAR 4/96	AS-BUILT FOR PROJ B5668 E3,4,B3,4,B6 a) DFC-5668-B50 E D1,2,F23, E5,6,A7,8,C67 b) DFC-5668-B44 E D1,2,D3,4,5,6 a) DFC-5668-A7 E E1,2	KEN APPROVAL	

REVISIONS

COMMENT REVIEW

Rockwell APPROVAL BY	DATE
JSC Campbell	3/4/96
PROJ ENGR EC Hanlecht	3/4/96
PM LM Gracyk	3/4/96
APPROVED BY DES	3/7/96
SAFETY	3/7/96
APPROVED BY	3/7/96
CHECKED BY GP McDONALD	3/4/96
DRAWN BY RG GRIFFIN	3/5/96
DESIGNED BY WC ATKINS	3/4/96

U.S. DEPARTMENT OF ENERGY
Richland Operations Office
KAISER ENGINEERS HANFORD COMPANY

ELEC CATHODIC PROTECTION TEST WIRE INSTL

PROJECT TITLE: GROUTED WASTE DISPOSAL FACILITIES

PROJ	WO	JOB
B-5668	CK6167	RB13H2
SCALE SHOWN	BLDG 218-E-16	INDEX 7801

DRAWING NUMBER H-2-98479 SHEET 1 OF 1 REV 1

MICROFILMED

9011785809

DETAIL	ELEV.
A1	672.77
A2	672.50
A3	672.22

DETAIL "A1"
DETAIL "A2"
DETAIL "A3"
SCALE: 1/2" = 1'-0

SECTION "1-1"
SCALE: 1" = 1'-0

NEW PAVEMENT
EXIST. POLE
UNDERGROUND ELECTRICAL LINES REF. SK-2-57855 SH. 2
℄ 20' ROAD N40510
N40500
3" R.W. - REF H-2-76481 SH. 2
N40490
N40488.25
INTERFACE N40482
N40478
ELECTRICAL SUB-STATION H-2-98801
W46056
2 GUARD POSTS
FUEL TANK H-2-98801
STAND-BY GENERATOR H-2-98801
40' RAD
20' RAD
FOR GRADING THIS AREA SEE DWG. H-2-98800
ELECTRICAL HAND HOLE
ELECT M.H. #3
ELECTRICAL EQUIPMENT MODULE (22'x28') H-2-95906
ELECT M.H. #1
EXISTING ELECTRICAL TERMINAL BOXES
N40450
N40441
N40440
CONTROL MODULE (24' x 28') H-2-95906
CONTRACTOR TO CONNECT SANITARY WATER & SEWER TO CONTROL MODULE AS REQ'D (SEE NOTE 1)
N40407
N40405
4" PVC SANITARY SEWER. INV. EL. 666.25' REF. SK-2-57855 SH. 1 & 2
N40400
2"x1½ RED.
B.O.P. INV EL. 667.5'
2" PVC SANITARY WATER. B.O.P. EL. 664.5'. REF. SK-2-57855 SH. 1 & 2 & H-2-76481 SH. 2.
1½" CLASS CA SANITARY WATER (BY AT: CONTR. FOR F.O.# 203-987)
N40378
EXISTING 2½" ASPHALTIC PAVEMENT
UNDERGROUND CONDUIT BANK SEE DWG H-2-98610
6" ϕ SCH. 40 PIPE x 5'-0" FILL W/ CONCR. PAINT YELLOW
GRADE
F.O. 1½" x 0'-4" @ 90° (4 REQ'D)
1'-6ϕ CONCR.
TYP. GUARD POST
SCALE: 3/4" = 1'-0

NOTE
1. ANY LINES ABOVE FREEZE LINE ARE TO BE INSULATED AND HEAT TRACED.

SERVICE TRAILER
TGL MODULE ROOF WILL BE LAID ON TOP OF SLABS #1 TO #6
TRUCK ACCESS
ONE WAY
TRUCK DISCHARGE HOOK-UP
℄ EMERGENCY DRY BLEND DISCHARGE
DRY BLEND SYSTEM H-2-98802
STAIRWAY
EYEWASH STA.
DRY BLEND TRANSF AIR HOOK-UP
CONC. PAD FOR CONTROL PANEL & EYE WASH REF. H-2-98802
ELECT M.H. #2
EYE WASH DRAIN 2" CLASS CA SLOPE 1/8"/FT. AS REQ'D
SUPPLY 1½ CLASS CA
6 GUARD POSTS @ EQ. SPCS AS SHOWN @ W45926.0
FILTRATION SYSTEM H-2-98801
DRY SUMP
DECON & ADDITIVE MODULE H-2-98801
EMERGENCY SHOWER & EYE WASH STATION
2 GUARD POSTS @ FILL STATION
REF ENDN DWG NO. (TYP. U.N.O.)
HVAC
PAVEMENT
GRAVEL
DETAIL "A2"
PERMANENT CRANE LOCATION MARKER (TYP 3 PLCS)
DIRECTION OF CRANE TRAVEL (INSTALLATION)
INSTALL: PT. #1 REMOVAL PT. #3 (CRANE-℄ ROTATION) N40682.66, W45914.5
LCT/MIXER MODULE H-2-98795
℄ CHIMNEY W45897.08
MOTOR PIT
INSTALL PT. #3 REMOVAL PT. #1 (CRANE-℄ ROTATION) N40671, W45861
DIRECTION OF CRANE TRAVEL (REMOVAL)
DETAIL "B"
REMOVABLE SHIELDING SLAB IDENTIFICATION NOS. (TYP.) SEE DWG. H-2-98796 FOR DETS.
PIPE CHASE
SAMPLE PIT LOAD OUT
TOP OF EXISTING SLOPE
EXISTING PAVEMENT: 2½" ASPHALTIC CONCRETE ON A 2½" LEVELING COURSE & 4" CRUSHED GRAVEL SUB-BASE. REF H-2-76455 SH. 1 OF 2.
℄ 18' ROAD W45829
INTERFACE W45845
GROUT DISCH. LINE REF. H-2-98633
EXCESS WATER RETURN REF. H-2-98633
℄ EL. 667.0'
UNDERGROUND ELECT. LINES W45815
SECURITY FENCE - W45805
ACCESS ROUTE

H-2-98438	SUPPORT PLANS & DETAILS GROUT & EXCESS WTR	H-2-98610	U/G CONDUIT BANK
H-2-98435	GROUT & EXCESS WATER LINES-PLAN	H-2-98602	DRY BLEND SYSTEM - FDN & DETS.
H-2-76481	PIPING PLAN RAW & SANITARY WATER	H-2-98801	DECON/ADD'MOD., FILTRATION SYS., EMERG. GEN. & ELECT. SUB-STA. - FDNS. & DETS.
H-2-76480	PIPING PLAN SUPERNATANT LINES	H-2-98800	SITE GRADING / PAVING PLAN
H-2-76455	CIVIL SITE PLAN	H-2-98796	LCT/MIXER MOD & MTR PIT - SHIELD SLABS
H-2-56635	PLOT PLAN PROCESS WATER SYSTEM	H-2-98795	LCT/MIXER MOD & MTR PIT - FDN & DETS
H-2-55900	PLOT PLAN	H-2-95906	CONTROL/ELECT. EQUIP. MOD.-FDN & DETS.
H-2-44500	KEY PLAN AREA MAP 200-EAST A P	H-2-98814	DRAWING LIST
NUMBER	TITLE	NUMBER	TITLE
	DRAWING TRACEABILITY LIST		REFERENCES
		NEXT USED ON	END ITEM

BY-DATE	BY-DATE	REV BY DATE	DESCRIPTION	REV
APPROVAL	APPROVAL		REVISIONS	
COMMENT REVIEW				

MICROFILMED

OFFICIAL RELEASE BY WHC DATE JUL 09 1988

IMPACT LEVEL 3
EDT # 100838

ROCKWELL REVIEW COPY ON FILE
SUBMITTAL NO. 005-K
DATE 9-12-89

KEY PLAN

U. S. DEPARTMENT OF ENERGY
Richland Operations Office

SITE PLAN

PROJECT TITLE: TRANSPORTABLE GROUT EQUIPMENT FACILITY

WHC APPROVAL BY	DATE 7/7/88	PROJ. B-475	WO
PROJ. ENGR.	7/6/88	SCALE 1/8"-1'-0"	BLDG. 243-G1-G9
DESIGN ENGR.	7/7/88	DRAWING NUMBER H-2-98655	INDEX 0110
APPROVED BY N.A.			SHEET 1 OF 1 REV 0
SAFETY N.A.			
APPROVED BY	6-2-88		
CHECKED BY	6-2-88		
DRAWN BY	7/6/88		
DESIGNED BY	7/7/88		

9011785060

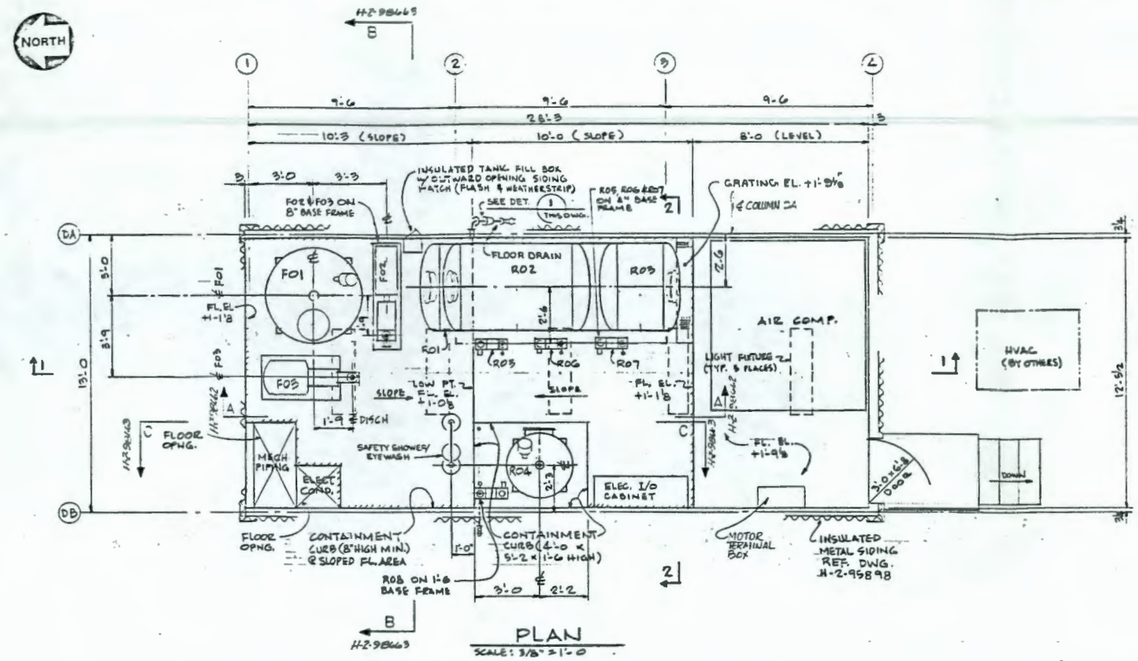

PLAN
SCALE: 3/8" = 1'-0

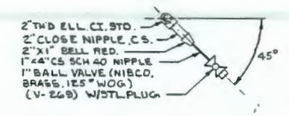

DETAIL 1 (THIS DWG)
N.T.S.
(LKG. EAST)

NOTES:

1. ℄ OF PUMP SUCTIONS ARE TO BE BELOW BOTTOM OF THEIR FEED TANKS.
2. ALL TANKS AND VESSELS SHALL BE OF STAINLESS STEEL, DESIGNED AND FABRICATED PER ASME SECT. VIII, DIVISION 1 REQUIREMENTS.
3. REFERENCE DRAWINGS H-2-95898 & H-2-95899 FOR STRUCTURAL AND ARCHITECTURAL DETAILS.
4. REFERENCE DRAWING H-2-98801 FOR LOCATION AND FOUNDATION.
5. FOR ITEMS TO BE "INSTALLED-ONLY" BY FABRICATOR, SEE ATI REQUISITION 203-901.
6. REFERENCE DRAWINGS H-2-98662 & H-2-98663 FOR GENERAL PIPING ARRANGEMENT.

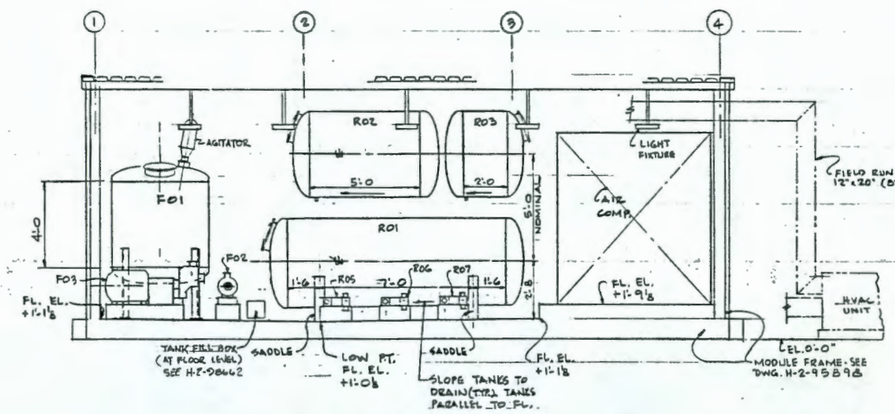

SECTION "1-1"
SCALE: 3/8" = 1'-0

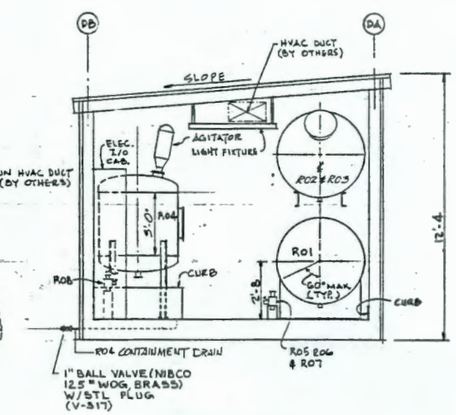

SECTION "2-2"
SCALE: 3/8" = 1'-0

LEGEND:

R01 - FLUIDIZER TANK, 1000 GALS. (4'-0 ϕ)
R02 - TRIBUTYL PHOSPHATE TANK, 500 GALS. (4'-0 ϕ)
R03 - SET REGULATOR TANK, 250 GALS. (4'-0 ϕ)
R04 - pH ADJUSTMENT TANK, 200 GALS. (3'-6 ϕ)
R05 - FLUIDIZER METERING PUMP
R06 - TRIBUTYL PHOSPHATE METERING PUMP
R07 - SET REGULATOR METERING PUMP
R08 - pH ADJUSTMENT METERING PUMP
F01 - DECON STORAGE TANK, 500 GALS. (4'-6 ϕ)
F02 - DECON PUMP
F03 - GROUT LINE CLEANING PUMP

THIS DWG. SUPERSEDES DWG. H-2-98661 REV. 0

OFFICIAL RELEASE BY WHC
DATE JUL 05 1989

IMPACT LEVEL 2
EDT # 100853

ROCKWELL REVIEW COPY ON FILE
SUBMITTAL NO. 5907-E
DATE 9-3-87

WHC APPROVAL BY JD Vanderlaan	DATE 7/6/88	U. S. DEPARTMENT OF ENERGY Richland Operations Office	
PROJ ENGR	7/6/87		
QA	7/6/87		
APPROVED BY		DECON & ADDITIVE MODULE GENERAL ARRANGEMENT	
SAFETY			
APPROVED BY	1-14-87	PROJECT TITLE TRANSPORTABLE GROUT EQUIPMENT FACILITY	
CHECKED BY	11-13-87	PROJ. B-475 / WO / JOB	
DRAWN BY M.L. RIBAW	12-8-86	SCALE SHOWN / BLDG 243-G3 / INDEX 5907	
DESIGNED BY W.H. ALLEN	12-8-86	DRAWING NUMBER H-2-98660 / SHEET 1 / OF 1 / REV C	

MICROFILMED	BY-DATE	BY-DATE	REV BY DATE	DESCRIPTION	REV
	APPROVAL	APPROVAL		REVISIONS	
	COMMENT REVIEW				

NUMBER	TITLE	NUMBER	TITLE
	DRAWING TRACEABILITY LIST	H-2-98814	DRAWING LIST
		NEXT USED ON H-2-95898, H-2-98662 & 98663	REFERENCES

9 0 1 1 7 8 5 0 8 6 1

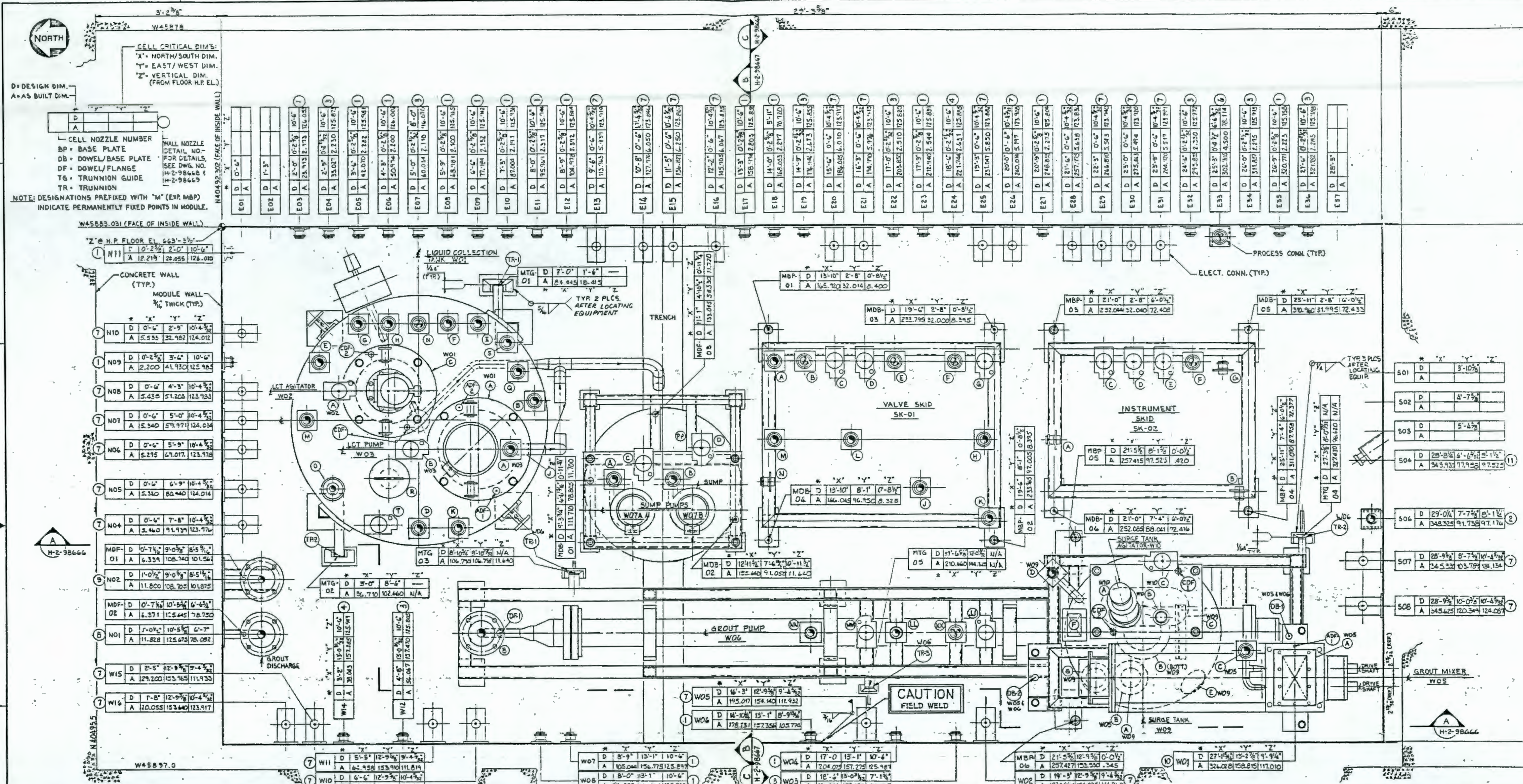

EQUIPMENT-CELL CRITICAL DIMENSIONS

W01

NOZZ.	*	"X"	"Y"	"Z"
A	D	6'-6"	5'-9	5'-10⅛"
	A	77.950	68.885	69.595
B	D	7'-11"	4'-6"	5'-5⅛"
	A	95.140	54.070	64.918
C	D	4'-3"	4'-3"	5'-10⅛"
	A	51.202	50.995	69.800
D	D	5'-0"	7'-9"	5'-5⅛"
	A	60.010	92.807	65.010
E	D	2'-6"	3'-6"	5'-5⅛"
	A	30.351	41.951	64.977
F	D	5'-9"	2'-6"	5'-5⅛"
	A	69.224	29.864	64.928
G	D	3'-6"	2'-6"	5'-5⅛"
	A	42.415	29.964	64.998
H	D	4'-3"	2'-6"	5'-5⅛"
	A	51.316	29.995	64.985
I	D	6'-6"	2'-6"	5'-5⅛"
	A	78.200	30.003	64.942
J	D	N/A	N/A	N/A
	A	N/A	N/A	N/A
K	D	6'-0"	7'-9"	5'-5⅛"
	A	72.005	92.833	64.995
L	D	N/A	N/A	N/A
	A	N/A	N/A	N/A
M	D	2'-2"	5'-0"	5'-5⅛"
	A	26.370	59.850	64.960
N	D	5'-0"	2'-6"	5'-5⅛"
	A	60.285	29.936	64.962
O	D	2'-10"	6'-9"	5'-10⅛"
	A	34.500	80.685	70.155
—	D	—	—	—
	A	—	—	—
Q	D	7'-6"	3'-9"	5'-5⅛"
	A	90.157	45.172	64.980
R	D	4'-3"	6'-6"	5'-10⅛"
	A	51.230	77.805	70.100
S	D	7'-3"	3'-0"	5'-5⅛"
	A	86.640	36.418	64.940
T	D	4'-0"	7'-8"	5'-7⅛"
	A	47.978	91.651	67.140
ADF-1	D	6'-11¾"	6'-10 5/32"	5'-9⅞"
	A	84.140	81.710	N/A
ADF-2	D	6'-0 [illegible]"	4'-7 [illegible]"	5'-9⅞"
	A	72.030	56.155	N/A
CDF-1	D	4'-8⅝"	5'-2 9/32"	5'-9⅞"
	A	56.840	62.100	N/A
CDF-2	D	3'-9⅜"	3'-3 23/32"	5'-9⅞"
	A	45.615	39.805	N/A
TR-1	D	7'-0"	1'-6"	2'-0⅝"
	A	84.445	18.364	24.230
TR-2	D	3'-0"	8'-6"	2'-0⅝"
	A	36.710	102.469	24.355

W09

NOZZ.	*	"X"	"Y"	"Z"
A	D	22'-11"	11'-7⅝"	5'-11¼"
	A	275.045	139.697	70.336
B	D	25'-2⅝"	10'-5⅝"	3'-0½"
	A	278.387	125.748	36.174
C	D	N/A	N/A	5'-7⅞"
	A	N/A	N/A	66.857
D	D	20'-11⅝"	8'-11¾"	6'-7"
	A	253.665	108.053	78.194
E	D	N/A	N/A	N/A
	A	N/A	N/A	N/A
F	D	N/A	N/A	N/A
	A	N/A	N/A	N/A
CDF-1	D	24'-1⅝"	8'-10⅝"	5'-7⅝"
	A	290.175	106.925	67.024
CDF-2	D	22'-5⅝"	10'-5⅝"	5'-7⅝"
	A	270.160	126.000	66.640

SK-02

NOZZ.	*	"X"	"Y"	"Z"
A	D	20'-10"	5'-6"	6'-9½"
	A	249.910	66.080	81.350
B	D	25'-5 [illegible]"	7'-0"	9'-4⅜"
	A	308.850	83.515	112.370
C	D	22'-3"	3'-6"	6'-11 9/32"
	A	267.209	41.931	83.215
D	D	23'-0"	3'-6"	6'-11 9/32"
	A	276.176	41.968	83.250
E	D	23'-9"	3'-6"	6'-11 9/32"
	A	285.142	41.837	83.311
F	D	24'-6"	3'-6"	6'-8 1/32"
	A	294.099	41.882	79.990
G	D	25'-3"	3'-6"	7'-2¾"
	A	303.080	42.715	86.840

SK-01

NOZZ.	*	"X"	"Y"	"Z"
A	D	14'-0"	3'-6"	4'-6 [illegible]"
	A	167.818	42.209	54.088
B	D	14'-9"	3'-6"	2'-11 [illegible]"
	A	176.838	42.004	35.525
C	D	15'-6"	3'-6"	3'-2 [illegible]"
	A	185.828	42.152	38.672
D	D	16'-3"	3'-6"	3'-2 [illegible]"
	A	194.796	42.158	38.660
E	D	17'-0"	3'-6"	2'-11 [illegible]"
	A	203.786	41.880	35.455
F	D	18'-6"	3'-6"	2'-11 [illegible]"
	A	221.817	41.977	35.520
G	D	19'-3"	3'-6"	3'-2 [illegible]"
	A	230.890	42.149	38.600
H	D	19'-3 [illegible]"	5'-6"	4'-8½"
	A	231.350	66.260	56.465
J	D	17'-7 [illegible]"	6'-8 [illegible]"	4'-8½"
	A	211.950	80.995	56.593
K	D	19'-4½"	7'-5 [illegible]"	4'-9 [illegible]"
	A	232.109	89.730	57.275
L	D	15'-10⅞"	5'-6"	5'-2½"
	A	191.005	66.059	62.299
M	D	14'-0"	5'-6"	4'-8½"
	A	168.170	66.057	56.525
N	D	13'-8 [illegible]"	6'-6 [illegible]"	3'-2½"
	A	164.655	78.765	38.495

W06

NOZZ.	*	"X"	"Y"	"Z"
A	D	23'-2⅞"	10'-5⅝"	2'-7½"
	A	278.552	125.665	31.184
B	D	6'-7½"	10'-5⅝"	3'-1 1/16"
	A	79.495	125.930	37.067
C	D	N/A	N/A	N/A
	A	N/A	N/A	N/A
D	D	N/A	N/A	N/A
	A	N/A	N/A	N/A
TR-1	D	8'-10¼"	8'-10 [illegible]"	0'-5"
	A	106.790	106.795	5.120
TR-2	D	27'-3⅜"	8'-0 [illegible]"	0'-5"
	A	327.430	96.620	5.005
JJ	D	19'-3"	10'-5⅝"	6'-1 [illegible]"
	A	230.901	125.790	73.975
TR-3	D	17'-6⅝"	12'-0 [illegible]"	0'-5"
	A	210.660	144.325	4.850
KK	D	18'-6"	10'-5⅝"	5'-11"
	A	221.701	125.705	71.020
LL	D	17'-0"	10'-5⅝"	5'-10"
	A	203.861	125.681	70.035
MM	D	16'-5"	10'-5⅝"	6'-1 [illegible]"
	A	196.881	125.623	73.440
NN	D	14'-10¼"	10'-5⅝"	7'-7¾"
	A	178.425	126.305	91.805
DF-1	D	7'-0 [illegible]"	10'-5⅝"	3'-0 [illegible]"
	A	84.885	126.105	36.942
DB-1	D	27'-0⅛"	10'-6⅝"	5'-8"
	A	323.905	126.725	67.915
DB-2	D	20'-6⅛"	11'-7¾"	5'-8"
	A	246.065	139.748	68.020

W05

NOZZ.	*	"X"	"Y"	"Z"
A	D	27'-1 [illegible]"	11'-7⅝"	7'-5"
	A	325.925	139.866	88.756
B	D	22'-11"	11'-7⅝"	6'-4¾"
	A	275.040	139.731	75.867
C	D	25'-10 [illegible]"	10'-11 [illegible]"	8'-3¾"
	A	310.465	131.665	99.525
DB-1	D	27'-0⅛"	10'-6⅝"	5'-8"
	A	323.945	126.725	67.915
DB-2	D	20'-6⅛"	11'-7⅝"	5'-8"
	A	246.065	139.718	68.020
ADF-1	D	27'-1 [illegible]"	10'-9 [illegible]"	7'-4¾"
	A	325.945	130.105	88.515

W07-A & B

NOZZ.	*	"X"	"Y"	"Z"
A	D	9'-11"	6'-6¼"	1'-11 [illegible]"
	A	118.950	78.165	23.084
B	D	11'-5"	6'-6¼"	1'-11 [illegible]"
	A	136.895	78.365	22.942
C	D	10'-8"	6'-1½"	1'-6 [illegible]"
	A	128.150	73.625	18.515
D	D	12'-2"	5'-8½"	1'-6 [illegible]"
	A	145.905	68.645	18.545

W10

NOZZ.	*	"X"	"Y"	"Z"
A	D	N/A	N/A	N/A
	A			
B	D	23'-7 [illegible]"	10'-0⅞"	5'-11 [illegible]"
	A	284.365	120.645	70.485
C	D	23'-8⅝"	8'-7⅝"	7'-0 [illegible]"
	A	285.053	104.505	83.763
	D			
	A			

W02

NOZZ.	*	"X"	"Y"	"Z"
A	D	3'-0"	4'-3"	7'-11⅞"
	A	36.585	51.103	94.845
	D			
	A			

W03

NOZZ.	*	"X"	"Y"	"Z"
A	D	7'-4"	5'-9"	7'-6 [illegible]"
	A	88.240	68.520	90.120
B	D	4'-9½"	5'-9"	8'-11 [illegible]"
	A	57.031	68.680	106.715

FOR GENERAL NOTES, SEE DWG. H-2-98668.

IMPACT LEVEL 3 EDT NO. 100887

REFERENCES

NUMBER	TITLE
H-2-95893	STRUCT./ARCH.-LCT/MX MODULE-PLAN
H-2-98670	PIPING LAYOUT-LCT/MX MODULE-PLAN
H-2-98814	DRAWING LIST

NEXT USED ON H-2-98666, 668, 669

DRAWING TRACEABILITY LIST (NUMBER / TITLE)

MICROFILMED — APPROVAL — COMMENT REVIEW — REVISIONS (REV / DESCRIPTION / BY-DATE APPROVAL / REV BY DATE)

OFFICIAL RELEASE BY WHC DATE JUL 09 1986

ROCKWELL REVIEW COPY ON FILE SUBMITTAL NO. 5.6 DATE 12/15/86

WHC APPROVAL BY LD Vanselow 7/7/86

PROJ ENGR — 7/24/86

QA — 7/24/86

APPROVED BY N/A

SAFETY N/A

APPROVED BY — 11-?

CHECKED BY — 11-3-86

DRAWN BY — 7-11-86

DESIGNED BY — 7-11-?

U. S. DEPARTMENT OF ENERGY
Richland Operations Office

EQUIPMENT ARRANGEMENT
LCT/MX MODULE DWG. 1 OF 5

PROJECT TITLE: TRANSPORTABLE GROUT EQUIPMENT FACILITY

PROJ B-475 | SCALE 1"=1'-0" | BLDG 243-G1 | INDEX 8404

DRAWING NUMBER H-2-98665 | SHEET 1 OF 1 | REV 0

9011785086 2

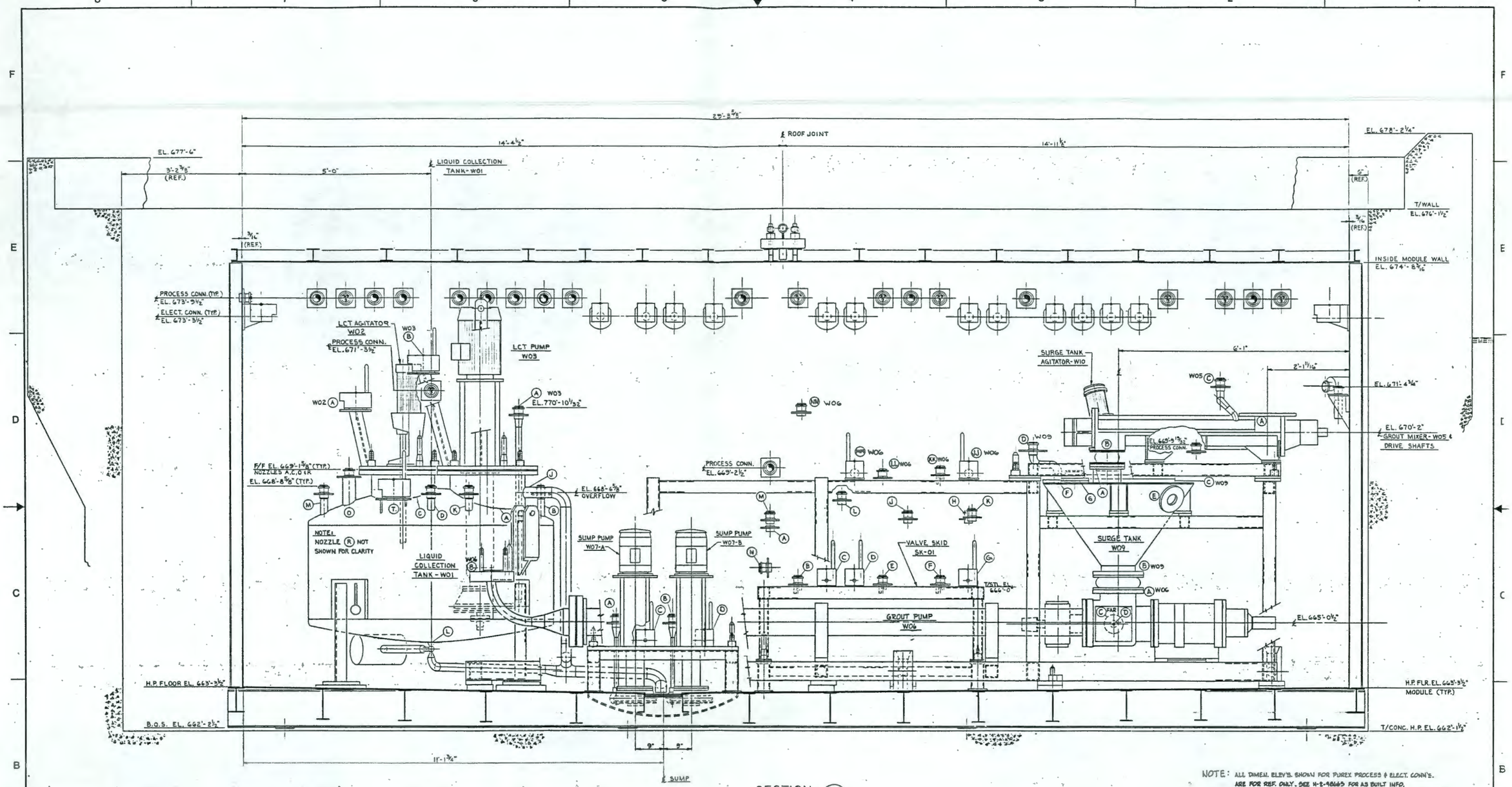

SECTION (A) H-2-98665

NOTE: ALL DIMEN. ELEV'S. SHOWN FOR PUREX PROCESS & ELECT. CONN'S. ARE FOR REF. ONLY. SEE H-2-98665 FOR AS BUILT INFO.

OFFICIAL RELEASE BY WHC DATE JUL 19 1988

IMPACT LEVEL 3
EDT # 100887

ROCKWELL REVIEW COPY ON FILE
SUBMITTAL NO. 102-6
DATE 12-18-86

WHC APPROVAL BY J.D. Vanderbur	DATE 7/1/88	U. S. DEPARTMENT OF ENERGY Richland Operations Office	
PROJ ENGR	7/11/86		
CM	7/11/86		
APPROVED BY		EQUIPMENT ARRANGEMENT LCT/MX MODULE DWG. 2 OF 5	
SAFETY			
APPROVED BY J.D. Rice	11/6	PROJECT TITLE TRANSPORTABLE GROUT EQUIPMENT FACILITY	
CHECKED BY	11/11/86	PROJ B-475 / NO / JOB	
DRAWN BY	9-5-86	SCALE 1-1-0" / BLDG 243-G1 / INDEX 8404	
DESIGNED BY	7-9-86	DRAWING NUMBER H-2-98666 / SHEET 1 / OF 1 / REV 0	

NUMBER	TITLE
	DRAWING TRACEABILITY LIST

NUMBER	TITLE
H-2-98665	EQUIP. ARRANGEMENT-LCT/MX MODULE
H-2-98814	DRAWING LIST

REFERENCES
NEXT USED ON
END ITEM

MICROFILMED

BY-DATE	BY-DATE	REV BY DATE	DESCRIPTION	REV
APPROVAL	APPROVAL		REVISIONS	
			COMMENT REVIEW	

901178506863

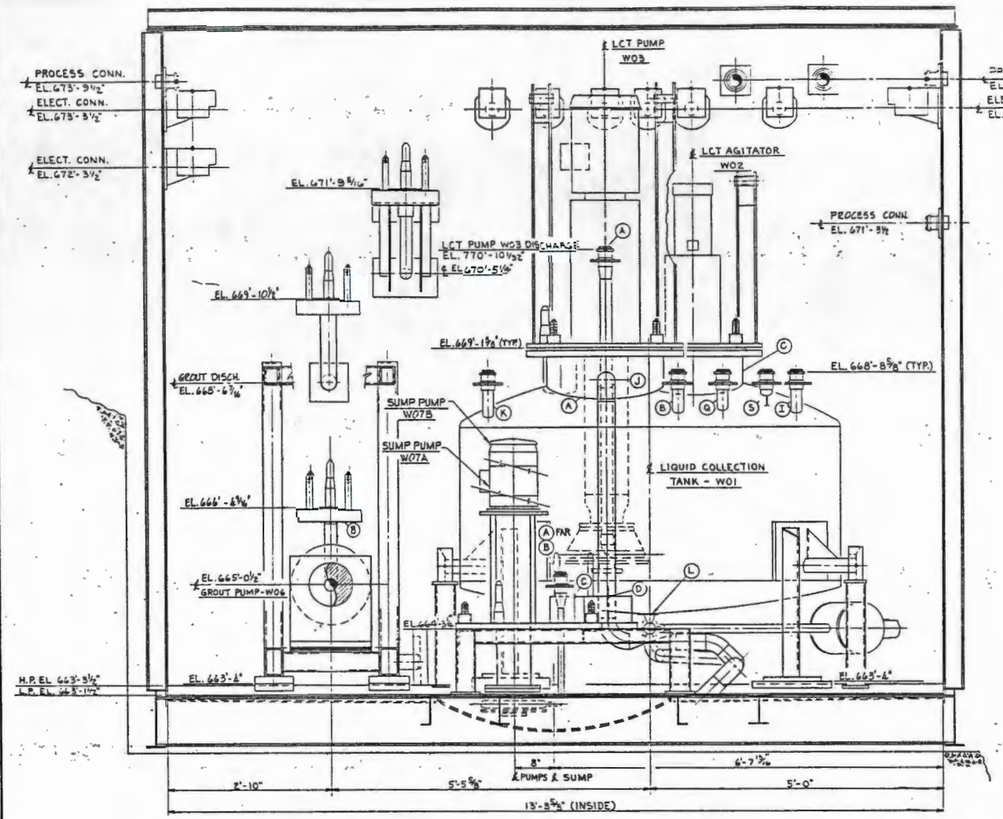

SECTION B H-2-98665

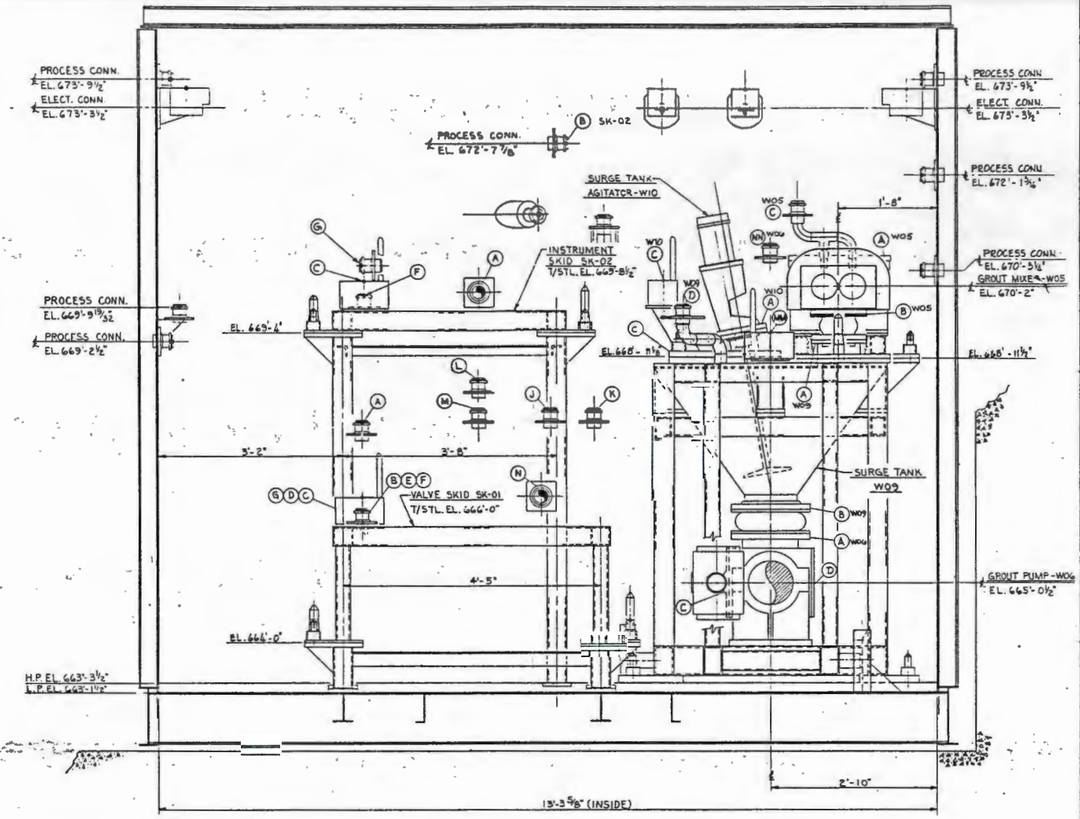

SECTION C H-2-98665

NOTE: ALL DIMEN. ELEV'S. SHOWN FOR PUREX PROCESS & ELECT. CONN'S. ARE FOR REF. ONLY. SEE H-2-98665 FOR AS-BUILT INFO.

OFFICIAL RELEASE BY WHC DATE JUL 09 1999

IMPACT LEVEL 3
EDT #100887

ROCKWELL REVIEW COPY ON FILE
SUBMITTAL NO. 065-6
DATE 12-18-86

NORTH CAROLINA PROFESSIONAL SEAL 11571 ENGINEER BENJAMIN E. BROWN

WHC APPROVAL BY S.D. Vanderloo	DATE 7/9/99	U. S. DEPARTMENT OF ENERGY Richland Operations Office	
PROJ ENGR	11/24/86		
QA Gordon O'Rourke	11/24/86		
APPROVED BY N/A		EQUIPMENT ARRANGEMENT LCT/MX MODULE	DWG. 3 OF 5
SAFETY N/A			
APPROVED BY W. D. Rice	11/24/86	PROJECT TITLE TRANSPORTABLE GROUT EQUIPMENT FACILITY	
CHECKED BY E. J. Jenkins	11/24/86	PROJ B-475 / BLDG 243-G1	JOB / INDEX 8404
DRAWN BY M. Kimbrow	9-12-86	SCALE 1-1-0"	
DESIGNED BY R. J. Stelle	7-8-86	DRAWING NUMBER H-2-98667	SHEET 1 OF 1 REV

NUMBER	TITLE
	DRAWING TRACEABILITY LIST

NUMBER	TITLE
H-2-98665	EQUIP ARRANGEMENT-LCT/MX MODULE
H-2-98814	DRAWING LIST

REFERENCES — NEXT USED ON — 2ND ITEM

MICROFILMED

BY-DATE	BY-DATE	REV BY DATE	DESCRIPTION	REV
APPROVAL	APPROVAL			

REVISIONS

COMMENT REVIEW

9011178506

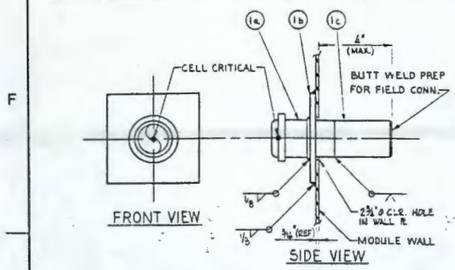

DETAIL ITEM (1)
19 REQ'D
(8 SPARES: E03, E11, E12, N11, E27, E35, W07, W08)
(SEE DETAIL I FOR E18)
(SEE DETAIL III FOR MORE INFO. ON E05, E06 & E17)

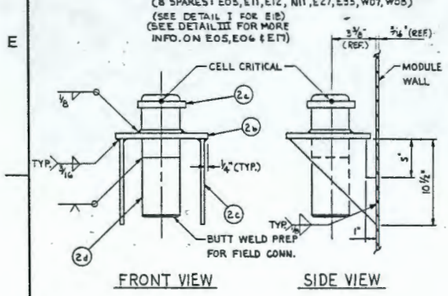

DETAIL ITEM (2)
1 REQ'D

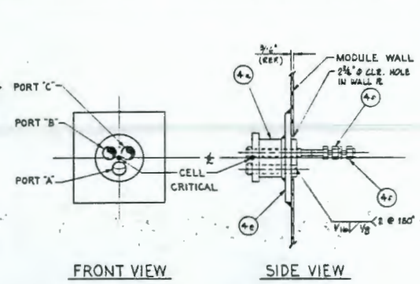

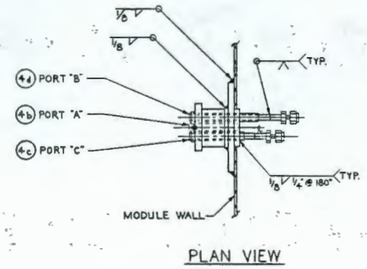

DETAIL ITEM (4)
2 REQ'D

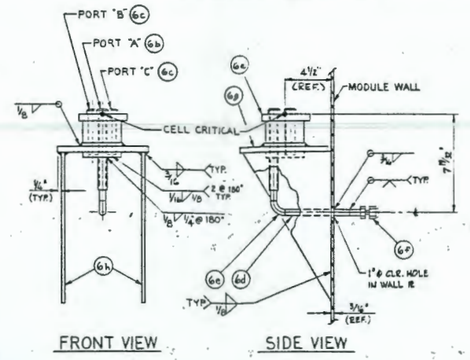

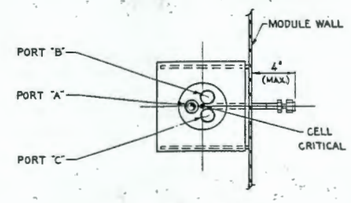

DETAIL ITEM (6)
1 REQ'D

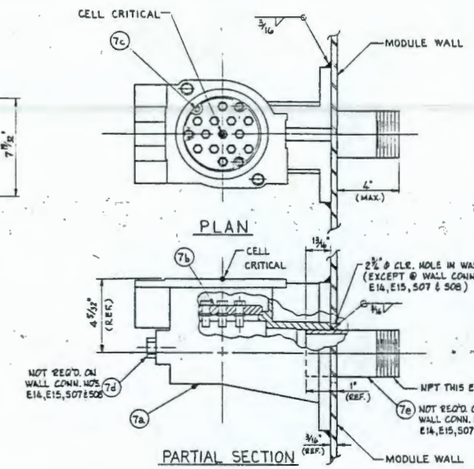

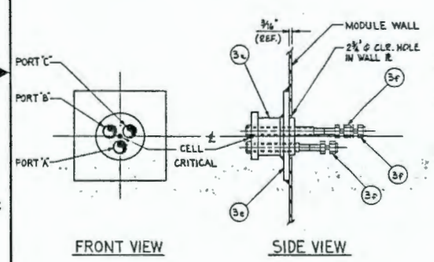

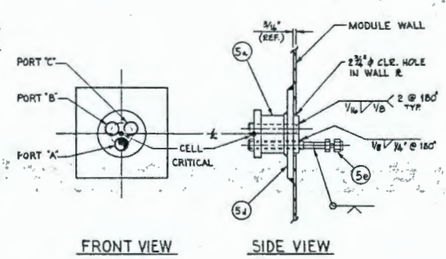

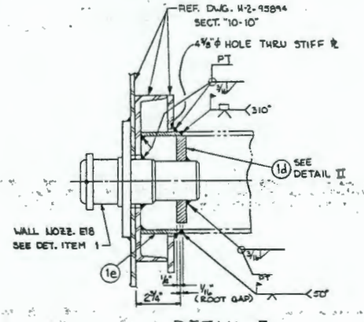

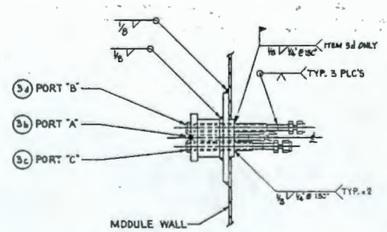

DETAIL ITEM (3)
9 REQ'D
NOTE: WALL CONN. NO'S. E04, E34, & E36 ARE SPARES

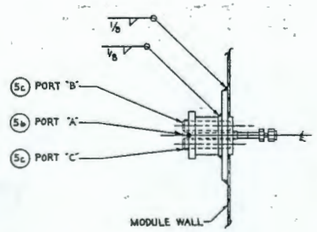

DETAIL ITEM (5)
NOT REQ'D

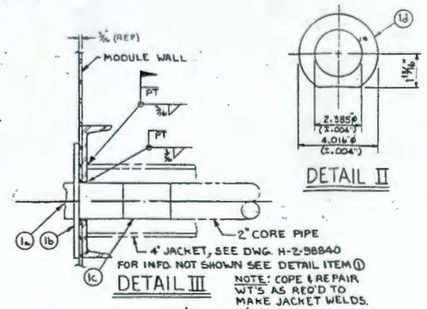

ELECTRICAL WALL CONNECTOR SCHEDULE			
WALL CONN. NO.	ELECTRICAL WIRING DIAGRAM DWG. NO.	ELECTRICAL JUMPER NO.	REFERENCE/ SERVICE
E14	H-2-98589	TGE-E14-W07 (C)	SUMP PUMP MTR'S.
E15	H-2-98508	TGE-E15-W07 (PP)	SUMP LEVEL
E20	H-2-98505	TGE-E20-(SK-01) C	VALVE SKID
E21	↓	TGE-E21-(SK-01) D	↓
E25	↓	TGE-E25-(SK-01) G	↓
E29	H-2-98506	TGE-E29-(SK-02) C	INSTRUMENT SKID
E30	↓	TGE-E30-(SK-02) D	↓
E31	↓	TGE-E31-(SK-02) E	↓
S07	H-2-98540	TGE-S07-W10 (C)	SURGE TK. AGIT. MTR.
S08	H-2-98507	TGE-S08-W10 (B)	LEVEL
W02	↓	TGE-W02-JJ	FV-W43
W05	H-2-98541	TGE-W05-W06 (MM)	STRIP HEATERS
W11	H-2-98504	TGE-W11-BB	GROUT DISCHARGE
W15	↓	TGE-W15-FF	↓
W16	↓	TGE-W16-GG	↓
N04	H-2-98507	TGE-N04-W01 (T)	FV-W42
N05	H-2-98508	TGE-N05-W01 (O)	LSH-W33
N06	H-2-98539	TGE-N06-W03 (B)	LCT PUMP MOTOR
N07	H-2-98508	TGE-N07-W01 (M)	LCT TANK (TEMP.)
N08	H-2-98541	TGE-N08-W02 (A)	LCT AGIT. MOTOR
E16	H-2-98540	TGE-E16-W07 (D)	SUMP PUMP MOTOR

DETAIL ITEM (7)
26 REQ'D
(5 SPARES: E13, E26, E28, W10 & N10)

GENERAL NOTES

1. DIMENSIONAL TOLERANCES AND ALL WORK PERFORMED WILL BE IN ACCORDANCE WITH A.T.I. FABRICATION AND ASSEMBLY OF THE LIQUID COLLECTION TANK/MIXER MODULE SPECIFICATION # 203-M-012.
2. ALL P.PING TO BE IN ACCORDANCE WITH A.T.I. SPECIFICATION # 203-M-002.
3. ALL WALL CONNECTIONS TO BE PERPENDICULAR TO THE "X, Y & Z" AXIS ± 1/32".

BILL OF MATERIAL				
ITEM NO./ EQUIP. NO	QTY.	DESCRIPTION	REMARKS	
W01	1	LIQUID COLLECTION TANK (LCT)	H-2-98711	
W02	1	LCT AGITATOR ASSEMBLY	H-2-98706	
W03	1	LCT PUMP ASSEMBLY	H-2-98705	
W05	1	GROUT MIXER ASSEMBLY	H-2-98709	
W06/W09	1	GROUT PUMP/ SURGE TANK ASSEMBLY	H-2-98708	
W07-A1B	1	SUMP PUMPS ASSEMBLY	H-2-98704	
W10	1	SURGE TANK AGITATOR ASSEMBLY	H-2-98710	
SK-01	1	VALVE SKID ASSEMBLY	H-2-98703	
SK-02	1	INSTRUMENT SKID ASSEMBLY	H-2-98702	
1	—	2" HORIZONTAL WALL NOZZLE ASSEMBLY	SEE DETAIL I	
1a	1	2" PUREX NOZZLE *	H-2-32446-3	
1b	1	KICK PLATE	H-2-98819-5	
1c	1	2" SCH. 40S PIPE NIPPLE x 2 3/32" LG., E.F.W.	ASTM A312 TP 304L SST	
1d	1	1/2" PLATE (SEE DETAIL II)	ASTM A240, 304L SST	
1e	1	4"ϕ SCH. 40 PIPE	ASTM A106, GRB C.S.	
2	—	2" VERTICAL WALL NOZZLE ASSEMBLY	SEE DETAIL 2	
2a	1	2" PUREX NOZZLE *	H-2-32446-3	
2b	1	KICK PLATE	H-2-98819-5	
2c	1	FLAT BAR 6" x 1/4" x 10 1/2" (CUT) S.S.T.	304 ASTM A276	
2d	1	2" SCH. 40S PIPE NIPPLE x 6" LG., E.F.W.	ASTM A312 TP 304L S.S.T.	
3	—	2"-3 WAY HORIZONTAL WALL NOZZLE ASSEMBLY	SEE DETAIL 3	
3a	1	2"-3 WAY PUREX NOZZLE *	H-2-32447-3	
3b	1	1/2" PIPE INSERT (4.43" LG.) *		-4
3c	1	1/2" PIPE INSERT (5.43" LG.) *		-5
3d	1	1/2" PIPE INSERT (6.43" LG.) *		-6
3e	1	KICK PLATE	H-2-98819-5	
3f	3	1/2" x 1/2" TUBE TO MALE PIPE CONNECTOR	SWAGELOK# SS-810-1-8W	
4	—	2"-3 WAY HORIZONTAL WALL NOZZLE ASSEMBLY	SEE DETAIL 4	
4a	1	2"-3 WAY PUREX NOZZLE *	H-2-32447-3	
4b	1	1/2" BLANK INSERT (3.25" LG.) *		-8
4c	1	1/2" PIPE INSERT (4.43" LG.) *		-4
4d	1	1/2" PIPE INSERT (5.43" LG.) *		-5
4e	1	KICK PLATE	H-2-98819-5	
4f	2	1/2" x 1/2" TUBE TO MALE PIPE CONNECTOR	SWAGELOK# SS-810-1-8W	
5	—	2"-3 WAY HORIZONTAL WALL NOZZLE ASSEMBLY	SEE DETAIL 5	
5a	1	2"-3 WAY PUREX NOZZLE *	H-2-32447-3	
5b	1	1/2" PIPE INSERT (4.43" LG.) *		-4
5c	2	1/2" BLANK INSERT (3.25" LG.) *		-8
5d	1	KICK PLATE	H-2-98819-5	
5e	1	1/2" x 1/2" TUBE TO MALE PIPE CONNECTOR	SWAGELOK# SS-810-1-8W	
6	—	2"-3 WAY VERTICAL WALL NOZZLE ASSEMBLY	SEE DETAIL 6	
6a	1	2"-3 WAY PUREX NOZZLE *	H-2-32447-3	
6b	1	1/2" PIPE INSERT (6.43" LG.) *		-6
6c	2	1/2" BLANK INSERT (3.25" LG.) *		-8
6d	1	1/2" SCH. 40S PIPE NIPPLE x 4" LG., E.F.W.	ASTM A312 TP 304L S.S.T.	
6e	1	1/2" - 90° L.R. ELBOW - SCH. 40S, B.W.	ASTM A403 WP-W304L S.S.T.	
6f	1	3/8" x 1/2" TUBE TO MALE PIPE CONNECTOR	SWAGELOK# SS-600-1-8W	
6g	1	KICK PLATE	H-2-98819-5	
6h	1	FLAT BAR 6" x 1/4" x 10 1/2" (CUT) S.S.T.	304 ASTM A276	
7	—	ELECTRICAL WALL CONNECTOR ASSEMBLY	SEE DETAIL 7	
7a	1	WALL RECEPTACLE HOUSING - PUREX TYPE *	H-2-68724-2	
7b	1	13 POINT INSULATING PLATE ASSEMBLY *	H-2-32403-2	
7c	1	INSULATING PLATE KEY PIN *	H-2-90152-9	
7d	1	1" PIPE PLUG, THR'D, SQ. HEAD - 2000# CLASS	ASTM A105 C.S.	
7e	1	2" SCH. 40 PIPE NIPPLE x 5" LG.	ASTM A53 GR. B, C.S.	

IMPACT LEVEL 2 EDT #100853

OFFICIAL RELEASE BY WHC DATE JUL 09 1988

ROCKWELL REVIEW COPY ON FILE
SUBMITTAL NO. 3-5
DATE 12/14/88

DRAWING TRACEABILITY LIST		
NUMBER	TITLE	REFERENCES
H-2-98665	EQUIP. ARRANGEMENT-LCT/MX MODULE	
H-2-98814	DRAWING LIST	
NEXT USED ON H-2-95894 & H-2-98840		

MICROFILMED

REVISIONS			
BY-DATE APPROVAL	BY-DATE APPROVAL	REV BY DATE	DESCRIPTION	REV
COMMENT REVIEW			

U. S. DEPARTMENT OF ENERGY
Richland Operations Office

EQUIPMENT ARRANGEMENT
LCT/MX MODULE-DETAILS & B/M DWG. 4 OF 5

PROJECT TITLE: TRANSPORTABLE GROUT EQUIPMENT FACILITY

PROJ	NO	JOB
B-475		
SCALE NONE	BLDG 243-G1	INDEX 8404
DRAWING NUMBER H-2-98668	SHEET 1 OF 1	REV 0

APPROVAL BY S.D. Vanselous 7/1/88
PROJ ENGR 7/1/88
DES 7/1/88
APPROVED BY 7/1/88
SAFETY 7/1/88
APPROVED BY 11/30/88
CHECKED BY 11/30/88
DRAWN BY 10-7-88
DESIGNED BY 10-7-88

9011178506

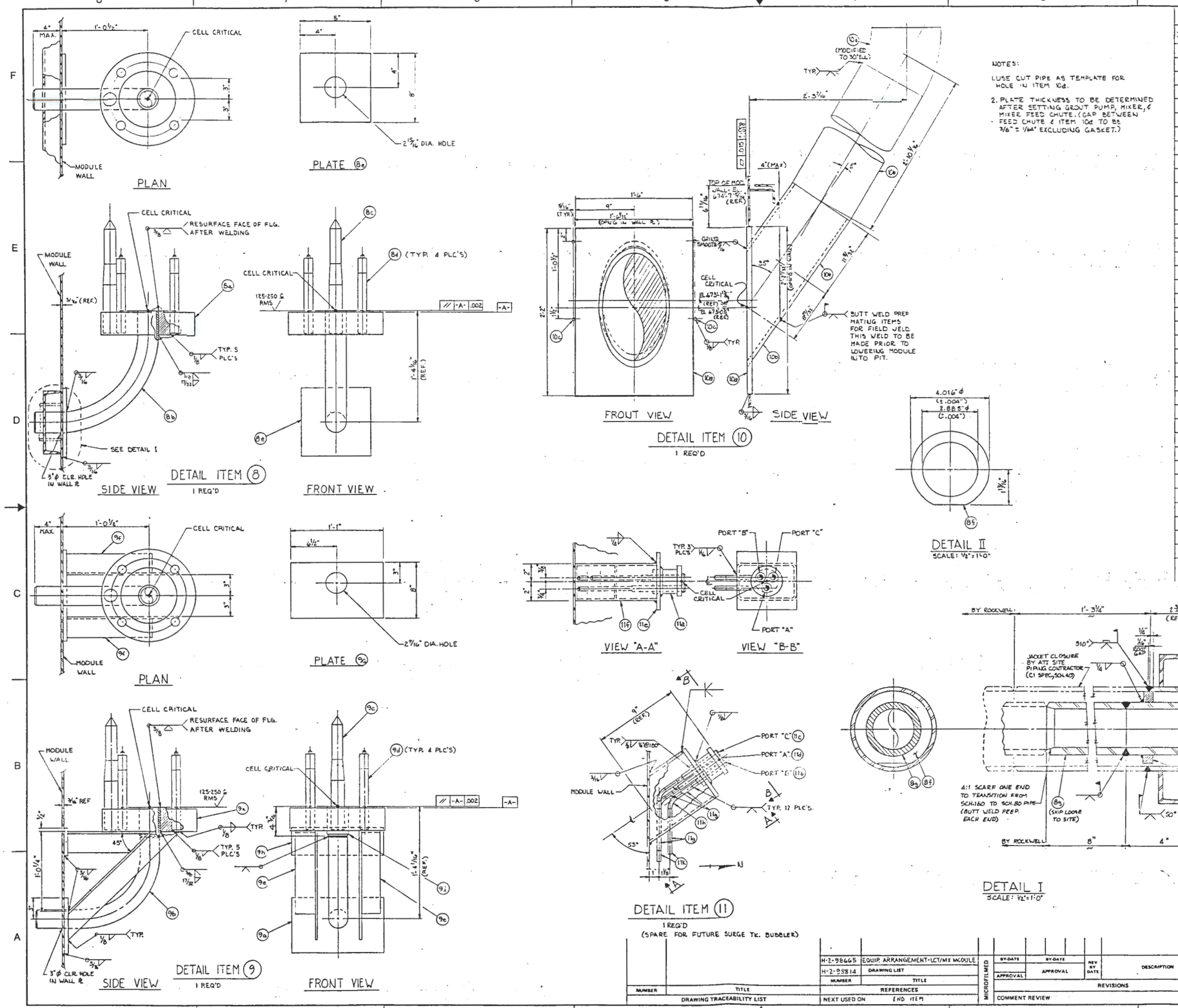

NOTES:

1. USE CUT PIPE AS TEMPLATE FOR HOLE IN ITEM 10d.
2. PLATE THICKNESS TO BE DETERMINED AFTER SETTING GROUT PUMP, MIXER, & MIXER FEED CHUTE. (GAP BETWEEN FEED CHUTE & ITEM 10d TO BE 3/8" ± 1/64" EXCLUDING GASKET.)

BILL OF MATERIAL

ITEM NO.	QTY.	DESCRIPTION	REMARKS
8	—	PROCESS WALL CONNECTOR ASSEMBLY	SEE DETAIL 8
8a	1	SPECIAL FLANGE	H-2-98824-1
8b	1	2½"-90° S DIA. BEND W/6" TANGENT, PLAIN ENDS SCH. 160S (FIELD TO MODIFY PER DETAIL ASSEMBLY)	ASTM-A312 TP304L SST SEAMLESS
8c	1	DOWEL	H-2-98819-6
8d	4	STUD	H-2-98818-3
8e	1	PL ½" x 8" x 8"	304L SST ASTM-A240
8f	1	½" PL (SEE DETAIL II)	ASTM A240, 304L SST
8g	8"	2½" ϕ SCH. 160 PIPE	ASTM A312, TP304L SST
9	—	PROCESS WALL CONNECTOR ASSEMBLY	SEE DETAIL 9
9a	1	SPECIAL FLANGE	H-2-98824-1
9b	1	2"-90° S DIA. BEND W/8" TANGENT, PLAIN ENDS, SCH. 40S (FIELD TO MODIFY PER DETAIL ASSEMBLY)	ASTM-A312 TP 304L SST, EFW
9c	1	DOWEL	H-2-98819-6
9d	4	STUD	H-2-98818-3
9e	2	∠ 3" x 3" x ¼" x 1'-6 3/16" LG.	304L SST ASTM-A276
9f	2	∠ 3" x 3" x ¼" x 1'-0 9/16" LG.	↓
9g	1	PL ⅛" x 8" x 1'-1"	304L SST ASTM-A240
9h	1	FLAT BAR - 4" x ¼" x 1'-1"	304 SST ASTM-A276
9i	1	2½" SCH. 160S PIPE x 4¾" LG., BEVEL ONE END	ASTM-A312 TP 304L SST SEAMLESS
10	—	FEED CHUTE WALL CONN. ASS'Y	SEE DETAIL 10
10a	1	PL ⅜" x 18" x 2'-2" LG. SST	ASTM A240 304L (SEE NOTE 1)
10b	A.R.	10" SCH. 80S, E.F.W.	ASTM A312 TP 304L SST
10c	4	ROUND BAR ½" ϕ x 3" LG., SST	ASTM A276, 304 L
10d	1	10" 45° ELL, SCH. 80S	ASTM A403, WPW304L SST
11	—	2"-3 WAY HORIZONTAL WALL NOZZLE ASS'Y	SEE DETAIL 11
11a	1	2"-3 WAY PUREX NOZZLE *	H-2-32447-3
11b	1	1½" PIPE INSERT (4.45" LG.) *	H-2-32447-4
11c	1	½" PIPE INSERT (5.43" LG.) *	H-2-32447-5
11d	1	½" PIPE INSERT (6.45" LG.) *	H-2-32447-6
11e	1	KICK PLATE	H-2-98819-5
11f	1	TS 6 x 4 x ¼	ASTM A554, 304 SST
11g	A.R.	½" SCL. 40S PIPE	ASTM A312, TP 304L SST
11h	3	½" 90° ELBOW - SCL. 40S (MODIFY TO 55°)	ASTM A403, WPW304L SST
11k	3	½" PIPE TO ½" TUBE WELD ADAPTER	CAJON # 304L-8-MPW-A-BTSW

NUMBER	TITLE
H-2-98665	EQUIP. ARRANGEMENT-LCT/MX MODULE
H-2-98814	DRAWING LIST

DRAWING TRACEABILITY LIST — REFERENCES — NEXT USED ON — END ITEM

MICROFILMED

BY-DATE	BY-DATE	REV BY DATE	DESCRIPTION	REV
APPROVAL	APPROVAL			

REVISIONS

COMMENT REVIEW

		DATE
W.H.C. APPROVAL BY J.D. Vanderbeer		7/7/88
PROJ ENGR		11/4/86
QA		11/4/86
APPROVED BY		
SAFETY		
APPROVED BY		11/11/86
CHECKED BY		11/11/86
DRAWN BY		10-7-86
DESIGNED BY		10-7-86

OFFICIAL RELEASE BY WHC DATE JUL 09 1988

IMPACT LEVEL 2, EDT # 100853

ROCKWELL REVIEW COPY ON FILE SUBMITTAL NO. 00 5 B DATE 12-18-86

U. S. DEPARTMENT OF ENERGY
Richland Operations Office

"EQUIPMENT ARRANGEMENT LCT/MX MODULE-DETAILS & B/M DWG. 5 OF 5"

PROJECT TITLE: TRANSPORTABLE GROUT EQUIPMENT FACILITY

PROJ: B-475 | WO: | JOB: | SCALE: NONE | BLDG: 243-G1 | UNDER: 8404 | DRAWING NUMBER: H-2-98669 | SHEET 1 OF 1 | REV 0.

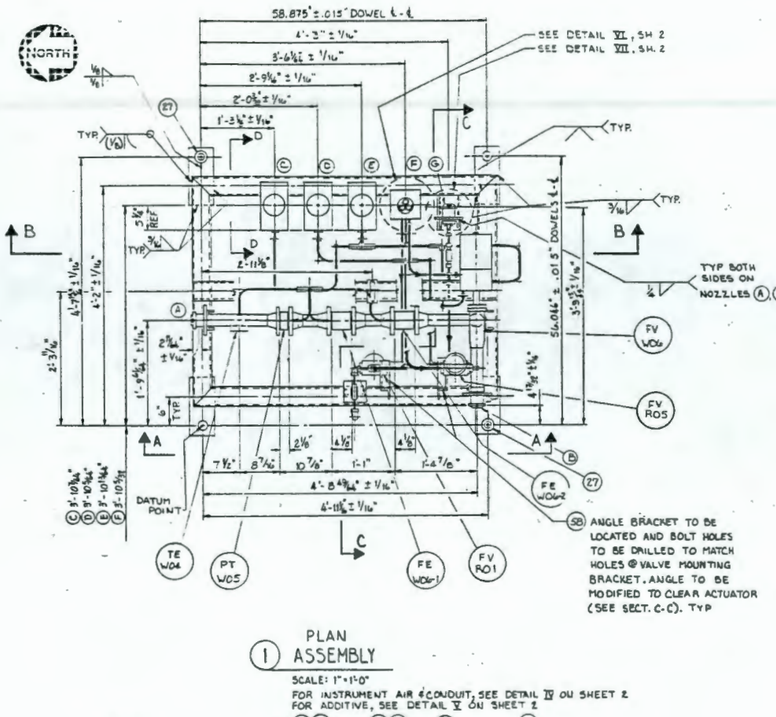

1 PLAN ASSEMBLY

SCALE: 1" = 1'-0"

FOR INSTRUMENT AIR & CONDUIT, SEE DETAIL IV ON SHEET 2
FOR ADDITIVE, SEE DETAIL V ON SHEET 2

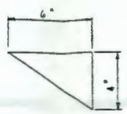

30 GUSSET

SCALE: 1/4" = 1"
4 REQ'D

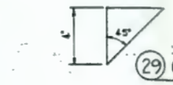

29 GUSSET

SCALE: 1/8" = 1"
2 REQ'D

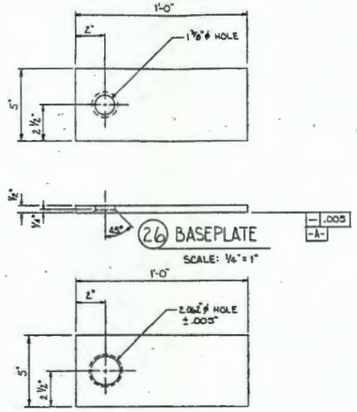

26 BASEPLATE

SCALE: 1/4" = 1"

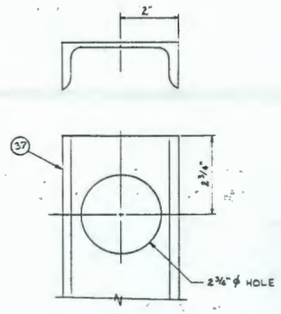

DETAIL I

SCALE: 1/2" = 1"

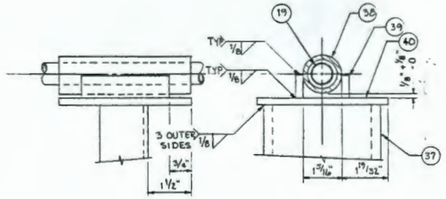

DETAIL II

SCALE: 1/2" = 1"

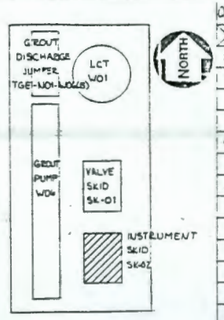

KEY PLAN

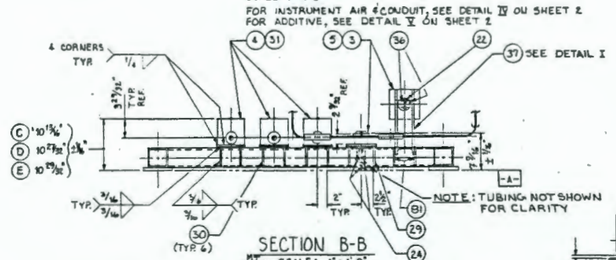

SECTION B-B

SCALE: 1" = 1'-0"

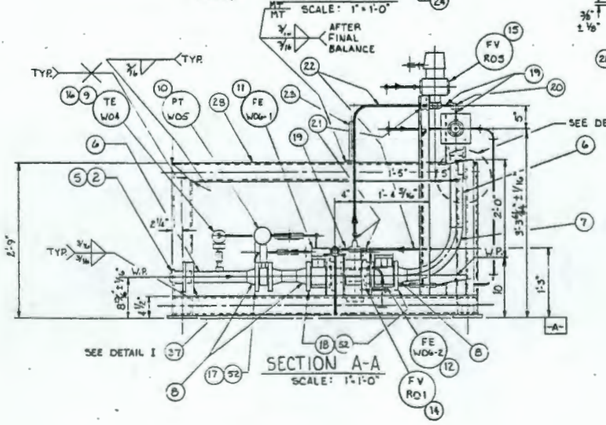

SECTION A-A

SCALE: 1" = 1'-0"

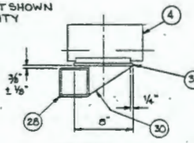

SECTION D-D

SCALE: 1/8" = 1"

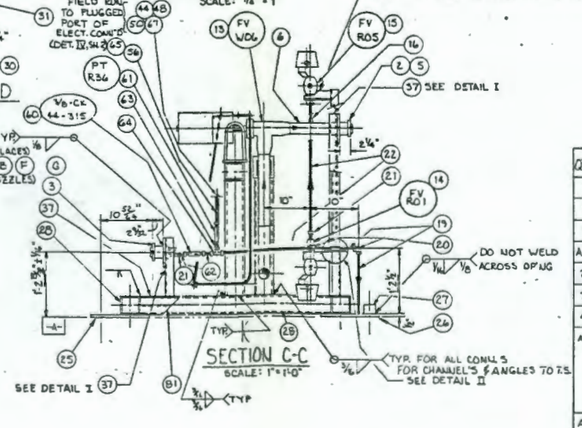

SECTION C-C

SCALE: 1" = 1'-0"

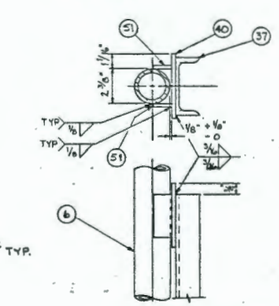

DETAIL III

SCALE: 1/4" = 1"

QTY	PT NO	DESCRIPTION	MATERIAL/REF
X	1	ASSEMBLY, APPROX. WT. = 763 #	———
2	2	2" MALE CONNECTOR NOZZLE	H-2-32446-3 *
1	3	2" 3-WAY MALE CONNECTOR NOZZLE	H-2-32447-1 *
3	4	LOWER ELECT. EQUIP CONN., 13 PT.	H-2-32801-3 X
4	5	KICKPLATE	H-2-98819-5
4'	6	2" SCH. 40S EFW PIPE, SST	ASTM A312, TP 304L
1	7	2" 90° S DIA BEND, SCH. 40S EFW SST PIPE	↓
6	8	2" 300# RF W.N. FLG. SST, ANSI B16.5, 125-250 MICRONINCHES RMS FACE SURFACE	ASTM A182, 304L, GR F
1	9	TE-W04 W/ 3/4" S.W. THERMOWELL	ATI P.O.# 203-716 *
1	10	PT-W05 (SUPPLIED W/ GASKETS)	ATI P.O.# 203-715 *
1	11	FE-W06-1 W/GASKET	ATI P.O.# 203-718 *
1	12	FE-W06-2 W/GASKET	ATI P.O.# 203-718 *
1	13	FV-W06, 2" GLOBE CONTROL VALVE	ATI P.O.# 203-921 *
1	14	FV-R01, 1/2" 3-WAY BALL VALVE	ATI P.O.# 203-919 *
1	15	FV-R05, 1/2" 2-WAY BALL VALVE	ATI P.O.# 203-919 *
2	16	3/4" H/CPLG. 3000# FORGED SST, SW	ASTM A182, F304L
8	17	5/8" STUD BOLT COARSE THREAD SERIES, ANSI B21.1, CLASS 2A TOLERANCE, 5 1/2" LG	ASTM A193, GR. B8
16	18	5/8" STUD BOLT COARSE THREAD SERIES, ANSI B21.1, CLASS 2A TOLERANCE, 7 3/4" LG	↓
3'	19	1/2" SCH. 40S EFW PIPE, SST	ASTM A312, TP 304L
3	20	1/2" 90° ELL, 3000# FORGED SST, SW	ASTM A182, F304L
4	21	TUBE TO MALE PIPE WELD CONN, 3/8" T x 1/2" P	SWAGELOK SS-600-1-8W
8'	22	3/8" TUBE x .035" WALL, SST	ASTM A213, TP 304L
1	23	LIFTING BAIL	H-2-98820-3
3	24	TUBE TO MALE PIPE WELD, 90° ELL, 1/2" x 1/2"	SWAGELOK SS-810-2-8W
2	25	BASEPLATE, FLAT BAR 5" x 1/2" x 12"	ASTM A36, CS
2	26	BASEPLATE, FLAT BAR 5" x 1/2" x 12"	↓
2	27	FREE-LUT RETAINING CUP	H-2-98819-2
30'	28	TUBE STEEL, 4" x 4" x 3/16"	ASTM A500, GR. B
2	29	GUSSET - FLAT BAR 4" x 1/4" x 4"	ASTM A36, CS
6	30	GUSSET - FLAT BAR 4" x 1/4" x 6"	↓
3	31	PLATE, 3/8" x 6" x 8", 1/8" RAD. 4 CORNERS	↓
AR	32	INSTRUMENT SIGNAL WIRE, TWISTED SHIELDED PAIRS OF #16 AWG, 19 STRAND CONCENTRIC BARE COPPER W/ TINNED COPPER DRAIN WIRE, ALUMINUM MYLAR TAPE SHIELD W/ 100 % COVERAGE, INNER AND OVERALL JACKET OF 90°C, PVC.	B-475-DC1, REV. 2 & 10, 11, 2
AR	33	WIRE, SINGLE CONDUCTOR, STRANDED COPPER, #14 AWG, 600 VOLT. BLACK THHN	COMM'L
AR	34	WIRE, SINGLE CONDUCTOR, STRANDED COPPER, #16 AWG, 600 VOLT.	SUPPLIED BY MAG. METER VENDOR
AR	35	INSTRUMENT SIGNAL CABLE, 2 CONDUCTOR # 20 STRANDED WIRE WITH INNER & OUTER SHIELD	SUPPLIED WITH MAG METERS
2	36	3-WAY CONN. PORT PLUG	H-2-32447-8 *
9'	37	C4 x 5.4	ASTM A36, CS
1	38	1" PIPE NIPPLE x 4 1/2" LG., PBE, SCH. 40S, EFW, SST	ASTM A312, TP 304L
2	39	FLAT BAR, 3/4" x 1/4" x 3"	ASTM A36, CS
1	40	FLAT BAR, 4 1/2" x 1/4" x 4 1/2"	↓
1	41	MALE CONNECTOR, 1/2" NPT x 1/2" TUBE	SWAGELOK SS-810-1-8
17'	42	1/2" TUBE x .049" WALL, SST	ASTM A213, TP 304 L
2	43	MALE CONNECTOR, 1/8" NPT x 1/2" TUBE	SWAGELOK SS-810-1-2
25'	44	CONDUIT, RIGID 3/4", TBE	GALV. STL
3	45	FLUSH BUSHING, 2" x 3/4"	CROUSE-HINDS REG62
3	46	UNION, RIGID CONDUIT, 3/4"	CROUSE-HINDS UNF205
	47	— DELETED —	
1	48	CONDUIT OUTLET BODY, 3/4" ELL	CROUSE-HINDS GUAN 26
	49	— DELETED —	
2	50	3" O-RING GASKET	CROUSE-HINDS GASK 456
2	51	FLAT BAR, 1 1/4" x 1/4" x 3"	ASTM A276, SST
48	52	5/8" NUT - SEMI-FIN. HEAVY HEX ND., ANSI B18.2 COARSE THREAD SERIES, ANSI B21, CLASS 2B	ASTM A194, GR. B SST

QTY	PT. NO.	DESCRIPTION	MATERIAL/REF.
1	53	1/2" 304 L SST PIPE CONN. INSERT x 4 3/16" LG ASTM-A276	H-2-32447-4 *
1	54	1/2" 304 L SST PIPE CONN. INSERT x 5 1/16" LG ASTM-A276	H-2-32447-5 *
2	55	1/2" 304 L SST PIPE CONN. INSERT x 6 3/16" LG ASTM-A276	H-2-32447-6 *
AR	56	3/4" LIQUID-TIGHT FLEX CONDUIT	COMM'L.
2	56A	3/4" LIQUID-TIGHT CONDUIT FITTING-STRAIGHT	T&B 5333
2	56B	3/4" LIQUID-TIGHT CONDUIT FITTING-45°	T&B 5343
4	56C	3/4" LIQUID-TIGHT CONDUIT FITTING-90°	T&B 5353
AR	57	INSTRUMENT SIGNAL WIRE, TWISTED SHIELDED (2) CONDUCTOR OF #16 AWG, 19 STRAND CONCENTRIC BARE COPPER W/ TINNED COPPER DRAIN WIRE, ALUMINUM MYLAR TAPE SHIELD W/ 100 % COVERAGE, INNER AND OVERALL JACKET OF 90°C, PVC.	COMM'L. ↓
AR	58	ANGLE, 2" x 2" x 1/4"	ASTM A36, CS
3	59	RING TOUNGE CONNECTOR	T&B E6-10

ROCKWELL REVIEW COPY ON FILE
SUBMITTAL NO. 5.5
DATE 12/16/86

OFFICIAL RELEASE BY WHC
DATE JUL 09 1988

ROCKWELL REVIEW COPY ON FILE
SUBMITTAL NO. 1.05.11
DATE 1/29/87

IMPACT LEVEL 2, EDT #100838

WHC APPROVAL BY S.D. Vanskin — DATE 7/9/88

U. S. DEPARTMENT OF ENERGY
Richland Operations Office

PROJ ENGR — DATE 7/9/88
DS — DATE 11/3/86
APPROVED BY — DATE
SAFETY — DATE
APPROVED BY — DATE 11/3/86
CHECKED BY — DATE 11/6/86
DRAWN BY F.D. Hulse — DATE 9/12/86
DESIGNED BY — DATE 9-5-86

EQUIPMENT JUMPER ASSEMBLY
INSTRUMENT SKID, SK-02

PROJECT TITLE: TRANSPORTABLE GROUT EQUIPMENT FACILITY

PROJ B-475 — JOB
SCALE NOTED — BLDG 243-G1 — INDEX 4750/8405
DRAWING NUMBER H-2-98702 — SHEET 1 — OF 2 — REV 0

NUMBER	TITLE
H-2-98506	ELEMENTARY WIRING DIAGRAM
H-2-98665	EQUIP. ARRGT., LCT/MI MODULE
H-2-95897	EQUIPMENT SUPPORT DETAILS
H-2-98814	DRAWING LIST

DRAWING TRACEABILITY LIST — NEXT USED ON H-2-98670

BY-DATE	BY-DATE	REV BY DATE	DESCRIPTION	REV
APPROVAL	APPROVAL		REVISIONS	
COMMENT REVIEW				

MICROFILMED

9011785067

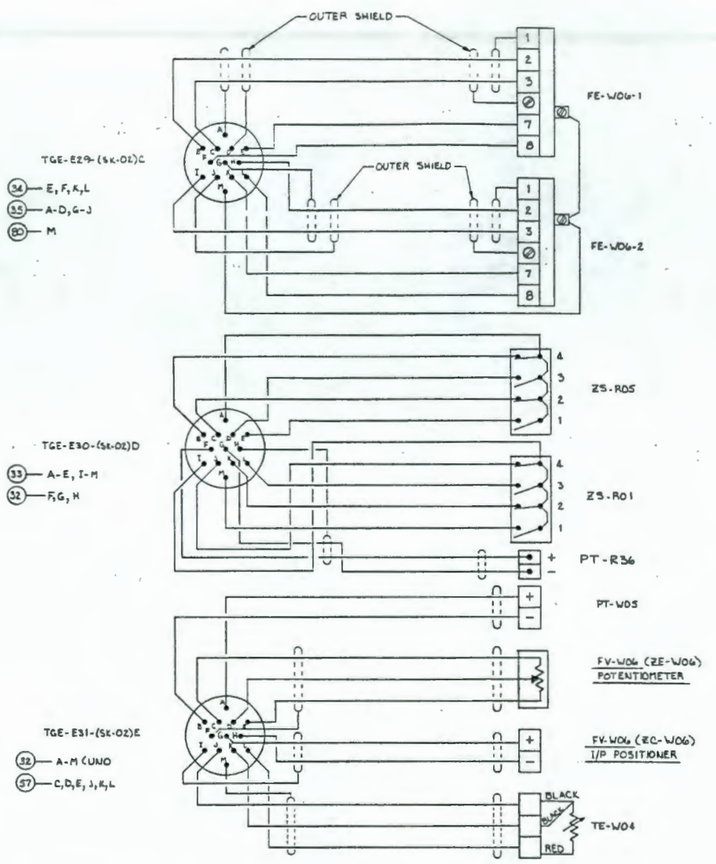

WIRING DIAGRAM
SCALE: NONE

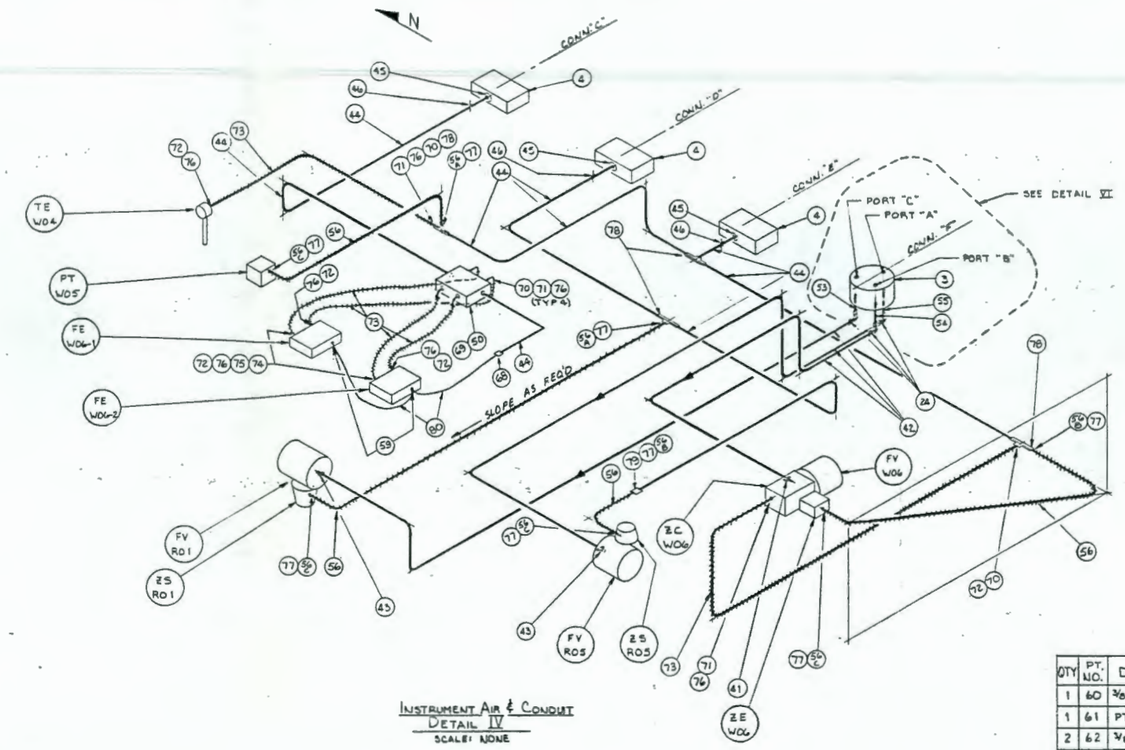

INSTRUMENT AIR & CONDUIT
DETAIL IV
SCALE: NONE

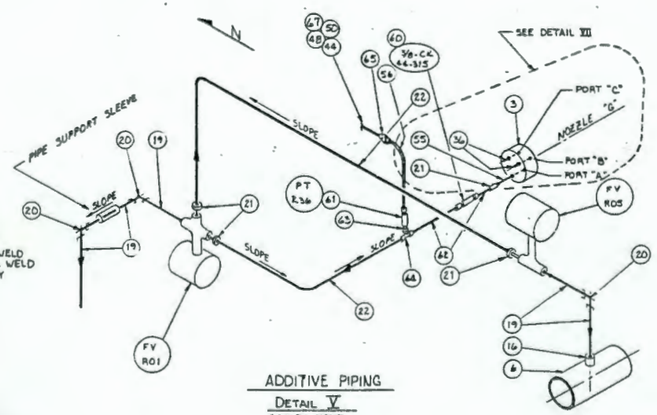

ADDITIVE PIPING
DETAIL V
SCALE: NONE

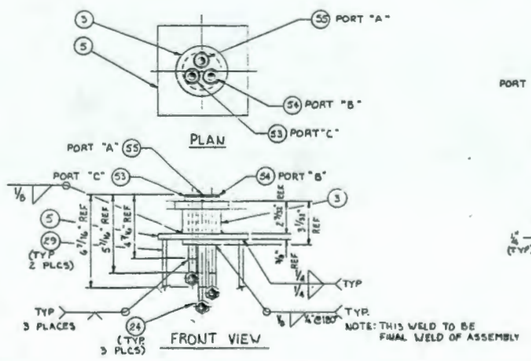

DETAIL VI - NOZZLE (F)
SCALE: 1/4" = 1"

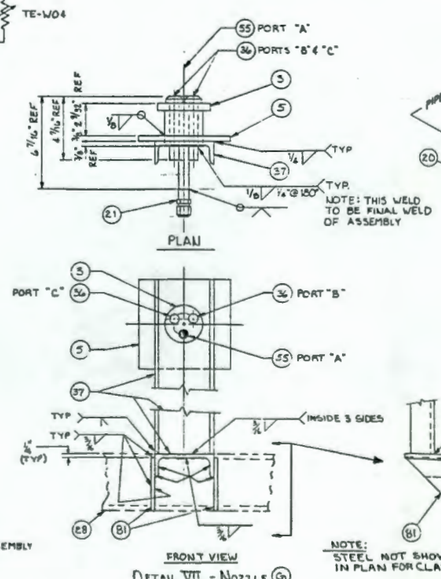

DETAIL VII - NOZZLE (G)
SCALE: 1/4" = 1"

NOTE: STEEL NOT SHOWN IN PLAN FOR CLARITY

GENERAL NOTES:

1. ALL PIPING MATERIALS SHALL BE IN ACCORDANCE WITH A.T.I. PIPING SPECIFICATION NO. 203-M-002.
2. PIPING AND DUNNAGE SHALL BE FABRICATED AND ASSEMBLED IN ACCORDANCE WITH A.T.I. FABRICATION AND ASSEMBLY OF THE LIQUID COLLECTION TANK / MIXER MODULE SPECIFICATION NO. 203-M-012.
3. ALL PARTS WITH AN ASTERISK (*) IN THE MATERIAL / REF. COLUMN WILL BE SUPPLIED BY A.T.I.

QTY	PT. NO.	DESCRIPTION (CONT.)	MATL/ REF.
1	60	3/8-CK-44-315, WUPRO CHECK VALVE (SS-CK-44-B-2)	R-203-923 *
1	61	PT-R36, PRESSURE TRANSMITTER	R-303-717 *
2	62	3/8" PORT CONNECTOR	SWAGELOK SS-601-PC
1	63	TUBE TO MALE PIPE (NPT) ADAPTER	CAJON SS-6-TA-1-8
1	64	UNION TEE, 3/8"	SWAGELOK SS-600-3
1	65	3/4" LIQUID-TIGHT ADAPTER	T & B 5273
1	67	1" x 3/4" FLUSH BUSHING	CROUSE-HINDS RE-32
1	68	3/4 LIQUID TIGHT STRAIN RELIEF CORD CONNECTOR STRAIGHT W/NEOPRENE BUSH	CROUSE-HINDS CGB-293
1	69	CONDUIT OUTLET BODY	CROUSE-HINDS GUP 215
6	70	FLUSH BUSHING 3/4" x 1/2"	T & B 601
6	71	1/2" LIQUID TIGHT CONDUIT FITTING INSULATED THROAT 90°	T & B 5352
6	72	1/2" LIQUID TIGHT CONDUIT FITTING INSULATED THROAT - STRAIGHT	T & B 5332
10'	73	1/2" LIQUID TIGHT FLEX CONDUIT	COMM'L.
2	74	1/2" RIGID CLOSE NIPPLE	
2	75	1/2" RIGID COUPLER	
11	76	1/2" SEALING RING	T & B 5302
8	77	3/8 SEALING RING	T & B 5303
4	78	CONDUIT OUTLET BODY 3/4" (WITH 5302)	CROUSE HINDS-GUAT 240-RING GASKET
1	79	3/4 RIGID COUPLER	COMM'L
AR	80	#6 AWG, STRANDED, GREEN GROUND WIRE, 90° C PVC	B-475-DC1, REV 2 8.10.11.2
2	81	PLATE, 1/8" x 3 3/4" x 8 - MODIFY AS REQD.	ASTM A36

OFFICIAL RELEASE BY WHC
DATE JUL 09 1988

ROCKWELL REVIEW COPY ON FILE
SUBMITTAL NO. 55
DATE 12/16/86

IMPACT LEVEL 3
EDT #100838

WHC APPROVAL BY J.D. Vanderkam	DATE 7/1/88	U. S. DEPARTMENT OF ENERGY Richland Operations Office	
PROJ ENGR	7/29/8	ATI	
	7/21/8	EQUIPMENT JUMPER ASSEMBLY INSTRUMENT SKID, SK-02	
APPROVED BY N/A		PROJECT TITLE TRANSPORTABLE GROUT EQUIPMENT FACILITY	
SAFETY N/A		PROJ B-475	WO
APPROVED BY	11/17/86	SCALE NOTED	KLOC 243-G1
CHECKED BY	11-14-86	DRAWING NUMBER H-2-98702	SHEET 2 OF 2 REV 0
DRAWN BY	9/16/86		
DESIGNED BY	6-8-86		

NUMBER	TITLE
H-2-98814	DRAWING LIST
NEXT USED ON	REFERENCES
4-1-91670	

DRAWING TRACEABILITY LIST

BY-DATE	BY-DATE	REV BY DATE	DESCRIPTION	REV
APPROVAL	APPROVAL		REVISIONS	
COMMENT REVIEW				

MICROFILMED

8 9 6 0 8 5 0 1 1 7 4 0 6

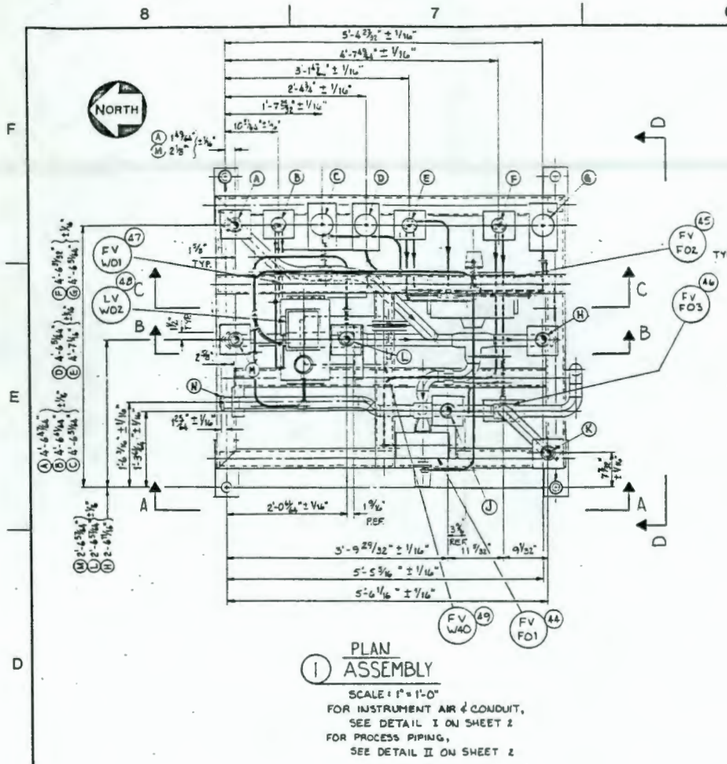

1 PLAN ASSEMBLY

SCALE: 1" = 1'-0"

FOR INSTRUMENT AIR & CONDUIT, SEE DETAIL I ON SHEET 2

FOR PROCESS PIPING, SEE DETAIL II ON SHEET 2

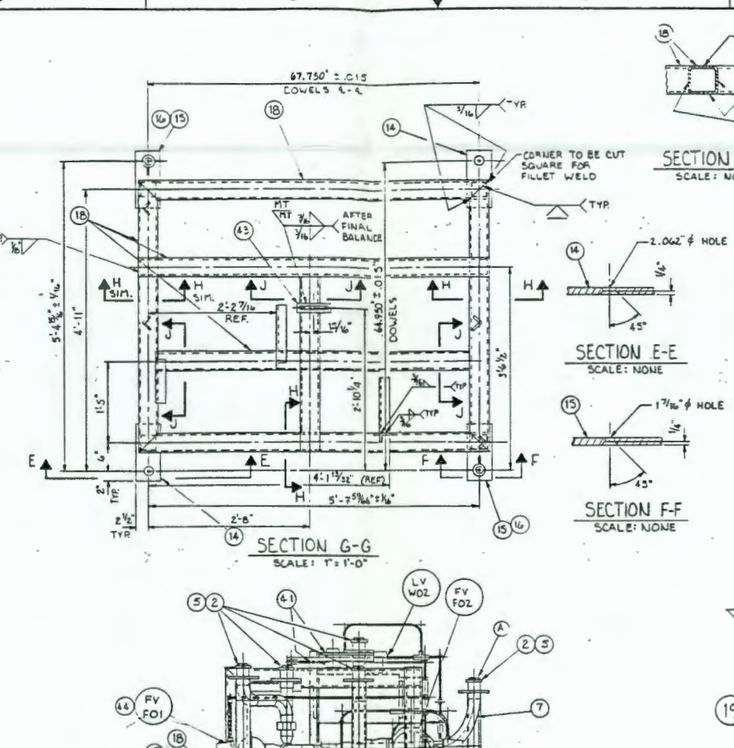

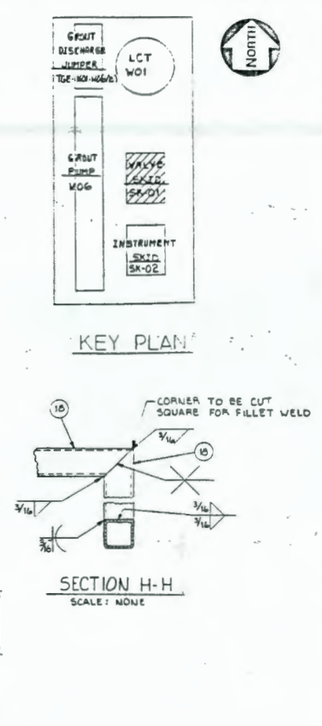

KEY PLAN

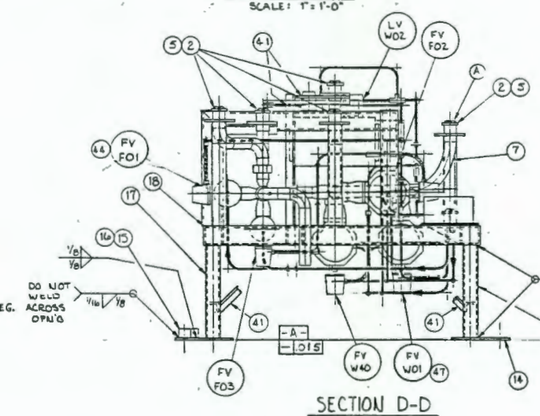

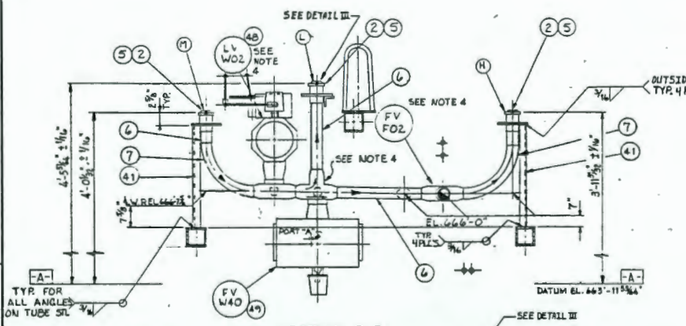

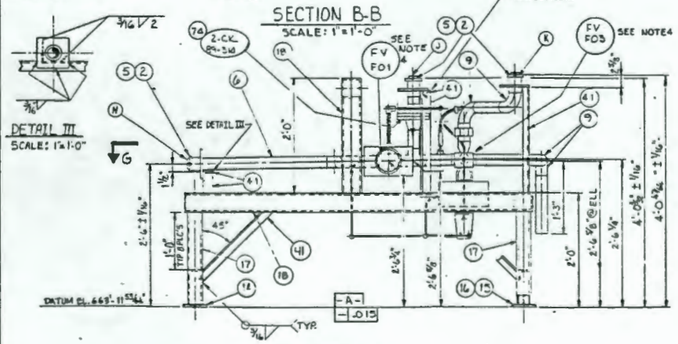

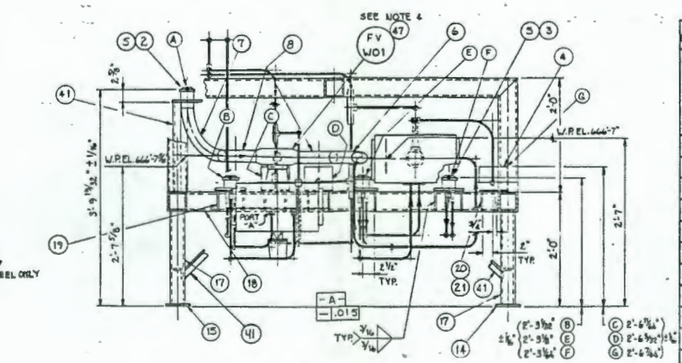

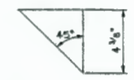

19 GUSSET

SCALE: 1/4" = 1"

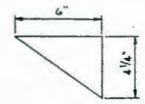

20 GUSSET

SCALE: 1/4" = 1"

QTY	PT. NO.	DESCRIPTION (CONT.)	MATL./REF.
AR	56	INSTRUMENT SIGNAL WIRE, TWISTED SHIELDED 3 CONDUCTOR OF #16 AWG, 19 STRAND CONCENTRIC BARE COPPER W/ TINNED COPPER DRAIN WIRE, ALUMINUM-MYLAR TAPE SHIELD W/ 100% COVERAGE, INNER AND OVERALL JACKET OF 90°C PVC.	
AR	57	3/4" ϕ LIQUID-TIGHT FLEXIBLE METAL CONDUIT	COMM'L.
7	58	3/4" ϕ LIQUID-TIGHT CONDUIT FITTING-STRAIGHT W/ SST SEALING RING (SR)	T&B # 5333
4	59	3/4" ϕ LIQUID-TIGHT CONDUIT FITTING-90°, NYLON INSULATED	T&B # 5373
3	60	CONDUIT OUTLET BODY, 3/4" TEE	CROUSE-HINDS GUAD 36
1	61	UNION, RIGID CONDUIT, 1" MALE x FEMALE	CROUSE-HINDS UNY-305
1	62	1/2" ϕ LIQUID-TIGHT CONDUIT FITTING-STRAIGHT NYLON INSUL. CONNECTOR	T&B # 5362
AR	63	1/2" ϕ LIQUID-TIGHT FLEXIBLE METAL CONDUIT	COMM'L.
1	64	MALE ENLARGER 1/2" TO 3/4".	T&B # 1245
1	65	90° UNION ELL, RIGID CONDUIT, 3/4" x 3/4"	CROUSE-HINDS UNL-205
1	66	FLUSH BUSHING, 2" x 3/4"	CROUSE-HINDS RE-62
1	67	3/4" ϕ LIQUID-TIGHT CONDUIT FITTING-STRAIGHT NYLON INSULATED	T&B # 5363

CONT. ON SHEET 2

QTY	PT. NO.	DESCRIPTION	MATL./REF.
X	1	ASSEMBLY, TOTAL APPROX WT. 1435 #	
7	2	2" MALE PUREX CONN. NOZZLE	H-2-32446-3 *
3	3	2" 3-WAY MALE PUREX CONN. NOZZLE	H-2-32447-3 *
3	4	LOWER ELECTRICAL EQUIP. CONN.	H-2-32401-2 *
10	5	KICK PLATE	H-2-98819-5
12'	6	2" PIPE, SCH. 40S, EFW, SST	ASTM A312, TP 304L
3	7	2" 90° 5 DIA. BEND, SCH 40S EFW PIPE, SST, B.W.	▼
2	8	2" 45° 5 DIA. BEND, SCH. 40S EFW PIPE, SST, B.W.	▼
6	9	2" 90° LR ELL, SCH. 40S	ASTM A403, GR. WP, 304L
1	10	2" STD. TEE, SCH. 40S	▼
2	11	CPV O-SEAL UNION, 2" TAIL PIECE # 5SR-B 304L SST, SCH. 40S, ASTM A479	ATI P.O. # 203-942 *
2	12	CPV O-SEAL UNION, 2" T-D PIECE # 5SF-B 304L SST, SCH. 40S, ASTM A479	*
2	13	CPV O-SEAL UNION, 2" ADJT # SON-B 1117 L CS, PLATED	▼ *
2	14	PLATE, 1/2" x 5" x 12", #4 FINISH	ASTM A36, CS
2	15	PLATE, 1/2" x 5" x 12", #4 FINISH	▼
2	16	FREE NUT RETAINER	H-2-98819-2
7'	17	TUBE STL, 3" x 3" x 3/16"	ASTM A500, GR. B
43'	18	TUBE STL, 4" x 4" x 3/16"	▼
6	19	GUSSET PLATE, 1/4" x 4 3/8" x 4 3/8" (▱ CUT)	ASTM A36, CS
6	20	GUSSET PLATE, 1/4" x 4 1/8" x 6" (▱ CUT)	
3	21	PLATE, 3/16" x 6" x 8" w/ 1/8" RAD. CORNERS	▼
AR	22	INSTRUMENT SIGNAL WIRE, TWISTED SHIELDED PAIR OF #16 AWG, 19 STRAND CONCENTRIC BARE COPPER W/ TINNED COPPER DRAIN WIRE, ALUMINUM MYLAR TAPE SHIELD W/ 100% COVERAGE, INNER AND OVERALL JACKET OF 90°C, PVC.	B-475-DC1 REV. 2 8.10.11.2
AR	23	WIRE, * SINGLE CONDUCTOR, STRANDED COPPER, #12 AWG, 600 VOLT.	
2	24	FLUSH BUSHING, 2" x 1"	CROUSE-HINDS RE-63
3	25	CONDUIT OUTLET BODY, 1" TEE	CROUSE-HINDS GUAD 36
	26	- DELETED	
6	27	3" O-RING GASKET	CROUSE-HINDS GASK-4SB
8'	28	CONDUIT, RIGID 1" TBE	GALV. STL
15'	29	CONDUIT, RIGID 3/4" TBE	▼
	30		
5	31	FLUSH BUSHING, 1" x 3/4"	CROUSE-HINDS RE 32
	32		
2	33	UNION, RIGID CONDUIT, 1"	CROUSE-HINDS UNF 305
2	34	UNION, RIGID CONDUIT, 3/4"	CROUSE-HINDS UNF 205
1	35	3/4" LIQUID-TIGHT ADAPTER	T+B # 5273
8	36	PIPE TO TUBE WELD ADAPTER, 1/2" IPS-1/2" TUBE	CAJON 304L-6-MPW-A-8TSW
50'	37	TUBING, 1/2" x .049" WALL, SST	ASTM A213, TP 304 L
9	38	MALE CONNECTOR, TUBE TO MNPT 1/2" TUBE x 1/4" NPT	SWAGELOK SS-810-1-4
	39	- DELETED	
1	40	TUBE SOCKET WELD UNION TEE, 1/4"	CAJON 304L-8-TSW-3
29	41	ANGLE, 2" x 2" x 1/4"	ASTM A36, CS
	42	- DELETED -	
1	43	LIFTING BAIL	H-2-98820-5
1	44	FV-F01, 2" - 3 WAY BALL VALVE, B.W	ATI P.O. # 203-919 *
1	45	FV-F02, 2" - 3 WAY PLUG VALVE, B.W.	ATI P.O. # 203-920 *
1	46	FV-F03, 2" - 3 WAY BALL VALVE, B.W.	ATI P.O. # 203-919 *
1	47	FV-W01, 2" - 2 WAY PLUG VALVE, B.W	ATI P.O. # 203-920 *
1	48	LV-W02, 2" - 2 WAY PLUG VALVE, B.W	ATI P.O. # 203-920 *
1	49	FV-W40, 2" - 3 WAY PLUG VALVE, B.W.	ATI P.O. # 203-920 *
1	50	3-WAY CONN. PORT PLUG	H-2-32447-8 *
2	51	2" 45° LR ELL, SCH. 40S, SST	ASTM A403, GR. WP, 304L
2	52	"O" RING FOR PT. # 11, 12, 13-AIRP # 227, EDPM	ATI P.O. # 203-942 *
2	53	1/2" 304 L SST PIPE CONN. INSERT x 4 3/16" LG. - ASTM A276	H-2-32447-4 *
3	54	1/2" 304L SST PIPE CONN. INSERT x 5 7/16" LG. - ASTM A276	H-2-32447-5 *
3	55	1/2" 304L SST PIPE CONN. INSERT x 6 7/16" LG. - ASTM A276	H-2-32447-6 *

IMPACT LEVEL 3 EDT #100887

WHC APPROVAL BY S.D. Vanderlaar	DATE 7/1/88	U. S. DEPARTMENT OF ENERGY Richland Operations Office
PROJ ENGR.	1/6/87	
DG	1/6/87	
APPROVED BY		EQUIPMENT JUMPER ASSEMBLY VALVE SKID, SK-01
SAFETY N/A		
APPROVED BY	11/3/87	PROJECT TITLE TRANSPORTABLE GROUT EQUIPMENT FACILITY
CHECKED BY	12/11/86	PROJ B-475 NO. JOB
DRAWN BY	9/8/86	SCALE NOTED BLDG 243-G1 UNIT 4750/8405
DESIGNED BY	8/18/86	DRAWING NUMBER H-2-98703 SHEET 1 OF 2 REV 0

OFFICIAL RELEASE BY WHC DATE JUL 09 1988

ROCKWELL REVIEW COPY ON FILE DOCUMENTAL NO. 105.16 DATE 1-29-87

NUMBER	TITLE	REFERENCES
H-2-98505	ELEMENTARY WIRING DIAG. LCT/MIX MOD.	
H-2-96665	ARRGT LCT/MIX MODULE PLAN	
H-2-98814	DRAWING LIST	
NUMBER	TITLE	NEXT USED ON H-2-98670

DRAWING TRACEABILITY LIST

BY-DATE	BY-DATE	REV BY DATE	DESCRIPTION	REV
APPROVAL	APPROVAL			

REVISIONS

COMMENT REVIEW

MICROFILMED

9011750869

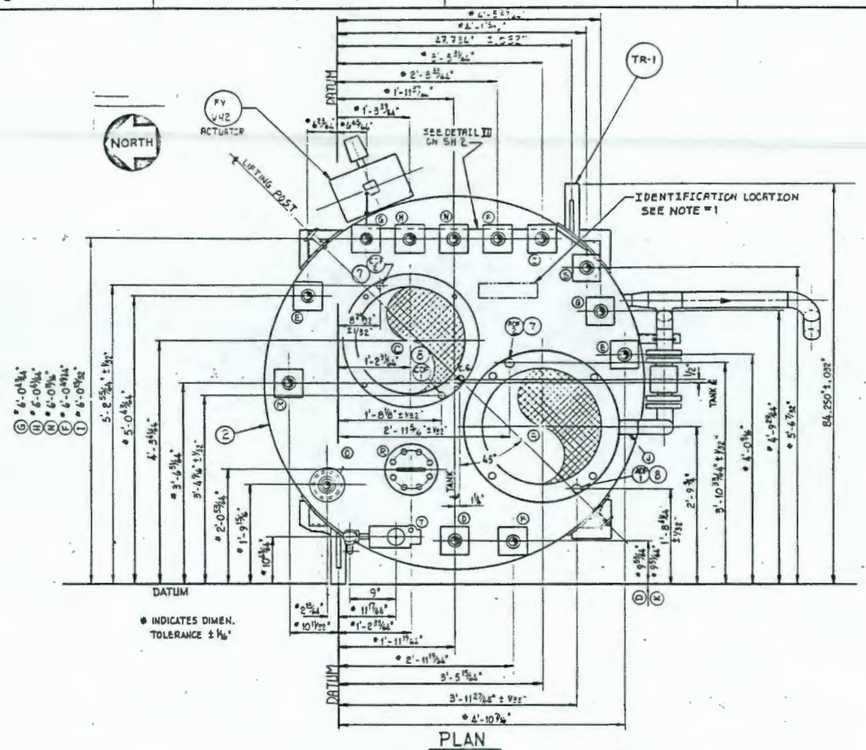

PLAN

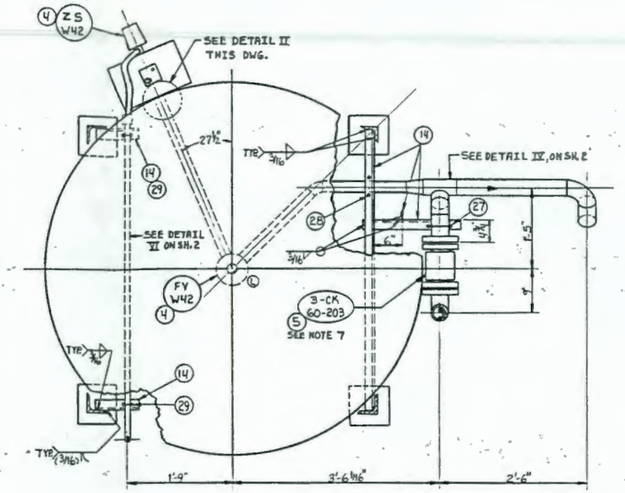

SECTION "A-A"
SCALE: 1" = 1'-0"

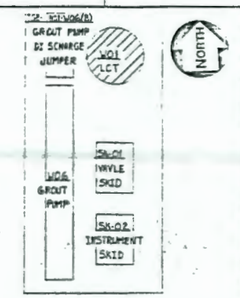

KEY PLAN

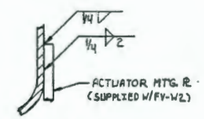

DETAIL II
SCALE: N.T.S.

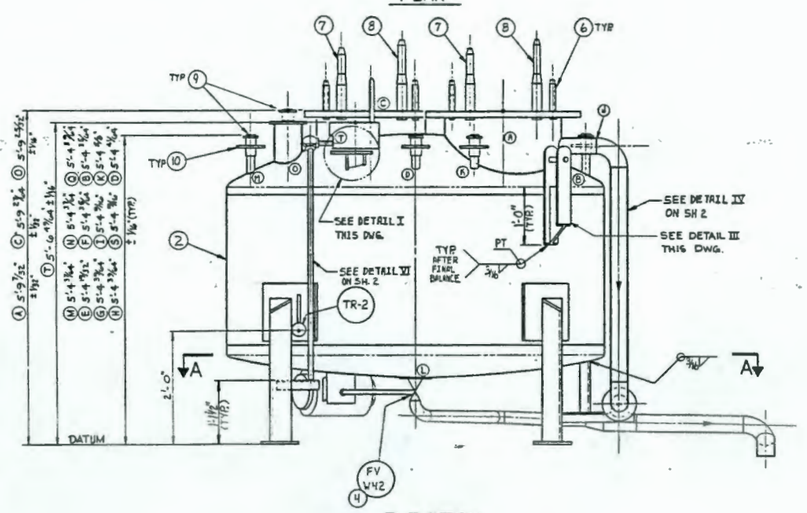

ELEVATION
① ASSEMBLY
SCALE: 1" = 1'-0"

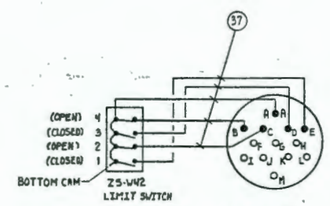

WIRING DIAGRAM
(H-2-98507)

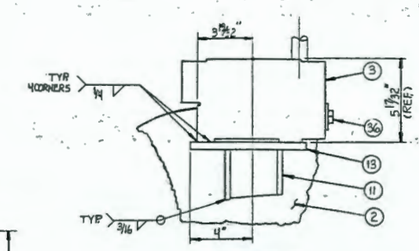

DETAIL I
SCALE: N.T.S.

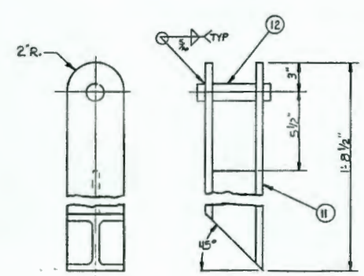

DETAIL III
2 REQ'D.
SCALE: N.T.S.

QTY	PT. No.	DESCRIPTION	MATERIAL/REF
X	1	ASSEMBLY (APPROX. TOTAL WT 35±2T)	—
1	2	LIQUID COLLECTION TANK - W01	A.T.I. RO#203-902
1	3	LOWER EQUIP. ELECT. CONNECTOR - 19 PIN	H-2-32401-3 *
1	4	2" FLUSH BOT. BALL VALVE, TAG No. FV-W42	A.T.I. RO# 203-940 *
1	5	3" CHECK VALVE, TAG No. 3-CK-60-203	A.T.I. RO#R-203-944 *
8	6	1¼" Ø STUD, WELD TYPE	A.T.I. RO# R-203-920 H-2-98819-4 *
2	7	2" Ø SHORT DOWEL, WELD TYPE	A.T.I. RO# R-203-920 H-2-98819-5 *
2	8	2" Ø LONG DOWEL, WELD TYPE	A.T.I. RO# R-203-920 H-2-98819-5 *
15	9	2" FUREX MALE CONNECTOR NOZZLE	H-2-32446-3 *
12	10	KICK PLATE	H-2-98819-5
5'-0"	11	W4x13	ASTM A36, C.S.
2	12	1¼" ROUND BAR x 5" LG.	
1	13	FLAT BAR 6" x 3/8" x 8" LG, W/1½" R 4 CORNERS	
10'-0"	14	ANGLE 2" x 2" x 1/4"	
8	15	STUD BOLT, 5/8-11 UNC-2A x 3¾" LG.	ASTM A193, GR. B-7 ELECT. STL. ZINC PLATED
16	16	HEAVY HEX NUT, 5/8-11 UNC-2B	ASTM A194, GR. 2H ALLOY STL.
2	17	3"-150# R.F.S.O. FLG S.S.T.	ASTM A182, F304L
2	18	GASKET, 3"-150# SPIRAL WOUND (304 S.S. W/FLEXICARB FILLER)	FLEXITALLIC TYPE CG, ⅛" THK.
7'-6"	19	3" SCH. 40S PIPE, E.F.W., S.S.T.	ASTM A312, TP304L
3'-6	20	2" SCH. 40S PIPE, E.F.W., S.S.T.	
1	21	2"-90° B.W. ELL, SCH. 40, S.S.T.	ASTM A403, WP-W304L
1	22	2"-45 B.W. ELL, SCH. 40, S.S.T.	
1	23	3"x2" B.W. ECC. REDUCER, SCH. 40S	
1	24	3" B.W. TEE, SCH. 40, S.S.T.	
3	25	3"-90° B.W. ELL, SCH. 40, S.S.T.	
1	26	3"-45° B.W. ELL, SCH. 40, S.S.T.	
1	27	3" U-BOLT W/HEX NUTS	LTT GRINNELL FIG. 137
1	28	2" U-BOLT W/HEX NUTS	
2	29	¾" U-BOLT W/HEX NUTS	
11'-0"	30	¾" Ø RIGID CONDUIT	GRY. C.S.
1	31	1½ ¾" FLUSH BUSHING	COMM'L.
1	32	CONDUIT OUTLET BODY, ¾" ELL	CROUSE-HINDS GUAN 26
1	33	¾" LIQUID-TIGHT ADAPTER	T&B #5273
AR	34	¾" Ø LIQUID-TIGHT FLEXIBLE CONDUIT	COMM'L.
1	35	¾" LIQUID-TIGHT CONDUIT FITTING, STRAIGHT W/S.STL. SEALING RING, A.R.	T&B #5333
1	36	2" SQ. HD. PIPE PLUG	COMM'L.
AR	37	STRANDED (COPPER, SINGLE CONDUCTOR WIRE, 19 AWG, 600 THWN	COMM'L.
10'-0"	38	½" O.D. x .049" WALL TUBING S. STL.	ASTM A213, TP304L
1	39	½", ¾" MALE CONNECTOR	SWAGE LOK 304L-810-1-4
1	40	3" O-RING GASKET	CROUSE-HINDS GASK-A56

GENERAL NOTES:

1. DUNNAGE SHALL BE FABRICATED AND ASSEMBLED IN ACCORDANCE WITH A.T.I. FABRICATION AND ASSEMBLY OF THE LIQUID COLLECTION TANK/MIXER MODULE SPECIFICATION No. 203-M-012.
2. ALL PARTS WITH AN ASTERISK(*) IN THE MATERIAL/REF COLUMN WILL BE SUPPLIED BY A.T.I..
3. USE LIFTING YOKE # H-2-98821-1, BY A.T.I..
4. ALL DIMENSIONS MEASURED FROM DATUMS TO HAVE ± 1/16" TOLERANCE.
5. ASSEMBLY TO BE FABRICATED IN ACCORDANCE WITH A.T.I. FABRICATION & ASSEMBLY OF THE LIQUID COLLECTION TANK/MIXER MODULE SPECIFICATION No. 203-M-012.
6. PIPING TO BE IN ACCORDANCE WITH A.T.I. SPECIFICATION No. 203-M-002.
7. DRILL ¼" Ø HOLE THRU DISC ON THE VERTICAL ℄ AT THE BOTTOM OF DISC.
8. BOLT HOLES TO STRADDLE FLANGE CENTERLINES.

OFFICIAL RELEASE BY WHC
DATE JUL 09 1989

IMPACT LEVEL 3
EDT. #100887

ROCKWELL REVIEW COPY ON FILE
SUBMITTAL NO.
DATE

WHC APPROVAL BY J.D. Vanderbeek	DATE 7/1/88	U. S. DEPARTMENT OF ENERGY Richland Operations Office	
PROJ ENGR			
DSR		EQUIPMENT JUMPER ASSEMBLY - LIQUID COLLECTION TANK-W01	
APPROVED BY		PROJECT TITLE TRANSPORTABLE GROUT EQUIPMENT FACILITY	
SAFETY		PROJ B-475 / BLDG 243-G1	JOB / INDEX 2500
APPROVED BY	11/14/87	SCALE AS NOTED	DRAWING NUMBER H-2-98711 / SHEET 1 / OF 2 / REV 0
CHECKED BY	12/4/87		
DRAWN BY L.L. DEAN	11/12/87		
DESIGNED BY	8/5/86		

NUMBER	TITLE
H-2-98507	ELEMENTARY WIRING DIAGRAM
H-2-98663	EQUIPMENT ARRANGEMENT-LCT/MIX. MOD.
H-2-98814	DRAWING LIST

DRAWING TRACEABILITY LIST — REFERENCES — NEXT USED ON H-2-98670

BY-DATE	BY-DATE	REV BY DATE	DESCRIPTION	REV
APPROVAL	APPROVAL		REVISIONS	
COMMENT REVIEW				

MICROFILMED

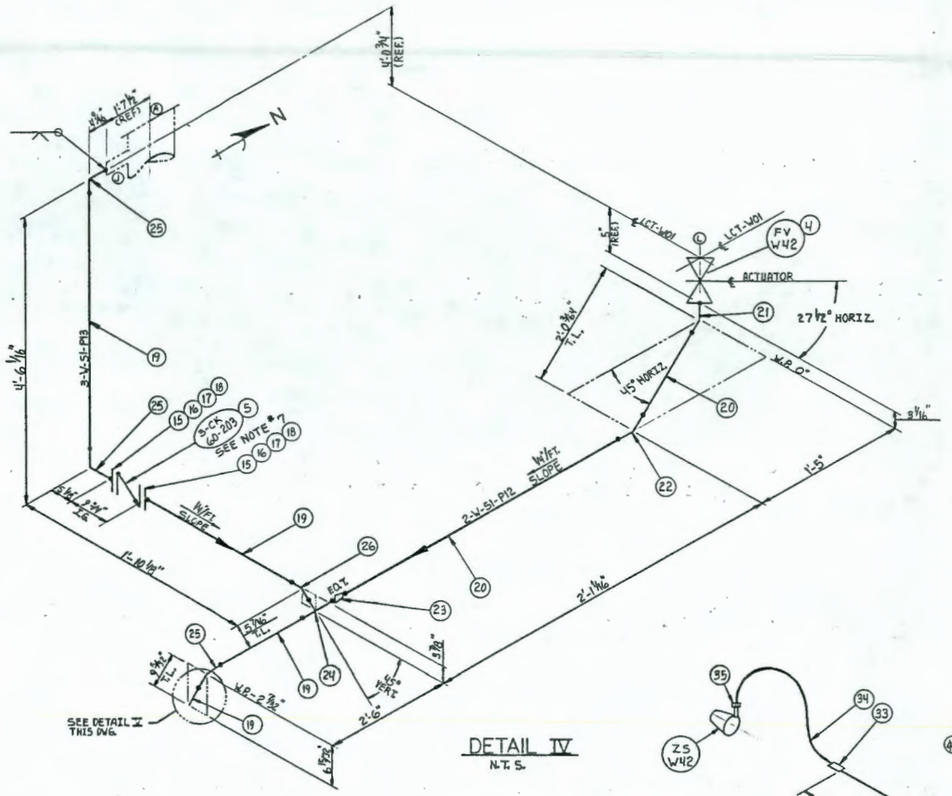

DETAIL IV
N.T.S.

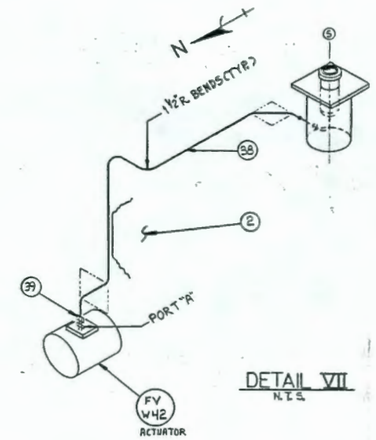

DETAIL VII
N.T.S.

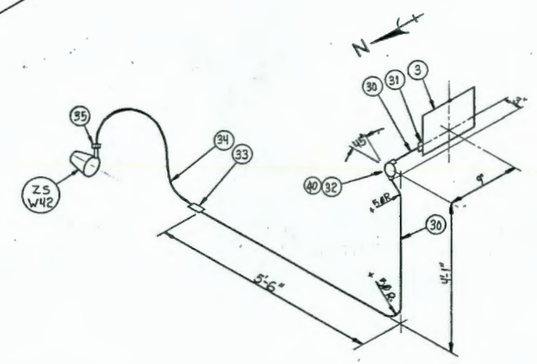

DETAIL VI
N.T.S.

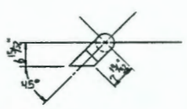

DETAIL V
N.T.S.

OFFICIAL RELEASE BY WHC DATE JUL 09 1988

IMPACT LEVEL 3
EDT #100857

ROCKWELL REVIEW COPY ON FILE
SUBMITTAL NO.
DATE

WHC APPROVAL BY J.D. Vanderlow	DATE 7/7/88	U. S. DEPARTMENT OF ENERGY Richland Operations Office	
PROJ ENGR			
DN	1/5/87		
APPROVED BY			
SAFETY		EQUIPMENT JUMPER ASSEMBLY LIQUID COLLECTION TANK-WO1-DETAILS	
APPROVED BY	11/19/87	PROJECT TITLE TRANSPORTABLE GROUT EQUIPMENT FACILITY	
CHECKED BY	12/4/87	PROJ B-475	WO / JOB
DRAWN BY L.L. DERN	11/12/87	SCALE AS NOTED / BLDG 243-G1	INDEX 2500
DESIGNED BY	9/5/86	DRAWING NUMBER H-2-98711	SHEET 2 OF 2 REV 0

NUMBER	TITLE
	DRAWING TRACEABILITY LIST

NUMBER	TITLE
H-2-98507	ELEMENTARY WIRING DIAGRAM
H-2-98665	EQUIPMENT ARRANGEMENT-CTM & MCB
H-2-98814	DRAWING LIST
REFERENCES	
NEXT USED ON H-2-98670	

BY-DATE	BY-DATE	REV BY DATE	DESCRIPTION	REV
APPROVAL	APPROVAL		REVISIONS	
COMMENT REVIEW				

MICROFILMED

1 8 0 8 7 1

9 0 1 1 7 8 5 0 0 6

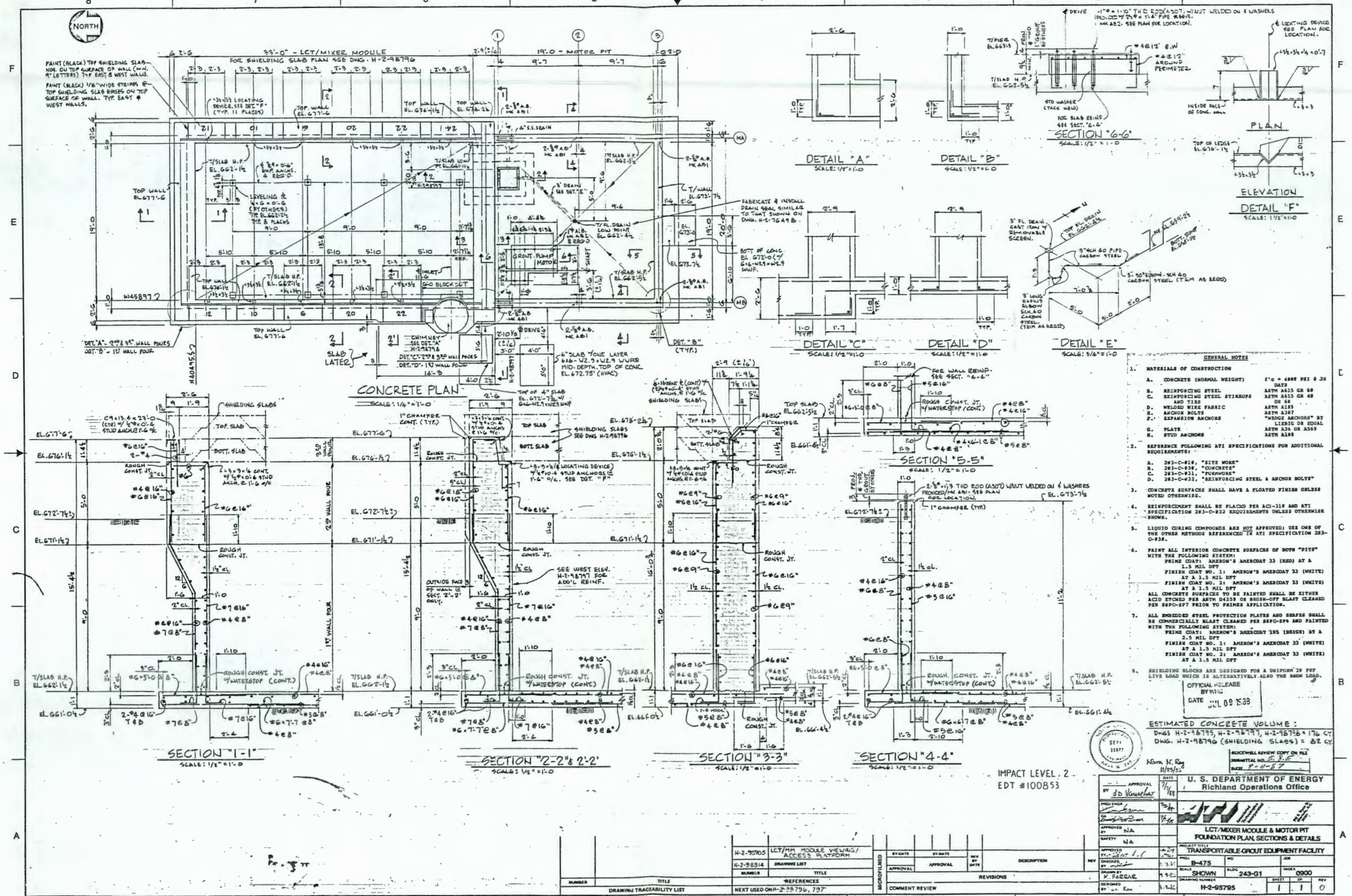
NORTH
33'-0" - LCT/MIXER MODULE
19'-0 - MOTOR PIT
CONCRETE PLAN
SCALE: 1/4" = 1'-0
DETAIL "A"
SCALE: 1/2" = 1'-0
DETAIL "B"
SCALE: 1/2" = 1'-0
SECTION "6-6"
SCALE: 1/2" = 1'-0
PLAN
ELEVATION
DETAIL "F"
SCALE: 1/2" = 1'-0
DETAIL "C"
SCALE: 1/2" = 1'-0
DETAIL "D"
SCALE: 1/2" = 1'-0
DETAIL "E"
SCALE: 3/4" = 1'-0
SECTION "1-1"
SCALE: 1/2" = 1'-0
SECTION "2-2" & 2'-2'
SCALE: 1/2" = 1'-0
SECTION "3-3"
SCALE: 1/2" = 1'-0
SECTION "4-4"
SCALE: 1/2" = 1'-0
SECTION "5-5"
SCALE: 1/2" = 1'-0
GENERAL NOTES
1. MATERIALS OF CONSTRUCTION
A. CONCRETE (NORMAL WEIGHT) f'c = 4000 PSI @ 28 DAYS
B. REINFORCING STEEL ASTM A615 GR 60
C. REINFORCING STEEL STIRRUPS AND TIES ASTM A615 GR 40 OR 60
D. WELDED WIRE FABRIC ASTM A185
E. ANCHOR BOLTS ASTM A307
F. EXPANSION ANCHORS "WEDGE ANCHORS" BY LIEBIG OR EQUAL
G. PLATE ASTM A36 OR A569
H. STUD ANCHORS ASTM A108
2. REFERENCE FOLLOWING ATI SPECIFICATIONS FOR ADDITIONAL REQUIREMENTS:
A. 283-C-818, "SITE WORK"
B. 283-C-836, "CONCRETE"
C. 283-C-831, "FORMWORK"
D. 283-C-832, "REINFORCING STEEL & ANCHOR BOLTS"
3. CONCRETE SURFACES SHALL HAVE A FLOATED FINISH UNLESS NOTED OTHERWISE.
4. REINFORCEMENT SHALL BE PLACED PER ACI-318 AND ATI SPECIFICATION 283-C-832 REQUIREMENTS UNLESS OTHERWISE SHOWN.
5. LIQUID CURING COMPOUNDS ARE NOT APPROVED; USE ONE OF THE OTHER METHODS REFERENCED IN ATI SPECIFICATION 283-C-838.
6. PAINT ALL INTERIOR CONCRETE SURFACES OF BOTH "PITS" WITH THE FOLLOWING SYSTEM:
PRIME COAT: AMERON'S AMERCOAT 33 (RED) AT A 1.5 MIL DFT
FINISH COAT NO. 1: AMERON'S AMERCOAT 33 (WHITE) AT A 1.5 MIL DFT
FINISH COAT NO. 2: AMERON'S AMERCOAT 33 (WHITE) AT A 1.5 MIL DFT
ALL CONCRETE SURFACES TO BE PAINTED SHALL BE EITHER ACID ETCHED PER ASTM D4259 OR BRUSH-OFF BLAST CLEANED PER SSPC-SP7 PRIOR TO PRIMER APPLICATION.
7. ALL EMBEDDED STEEL PROTECTION PLATES AND SURFES SHALL BE COMMERCIALLY BLAST CLEANED PER SSPC-SP6 AND PAINTED WITH THE FOLLOWING SYSTEM:
PRIME COAT: AMERON'S AMERCOAT 385 (BEIGE) AT A 2.5 MIL DFT
FINISH COAT NO. 1: AMERON'S AMERCOAT 33 (WHITE) AT A 1.5 MIL DFT
FINISH COAT NO. 2: AMERON'S AMERCOAT 33 (WHITE) AT A 1.5 MIL DFT
8. SHIELDING BLOCKS ARE DESIGNED FOR A UNIFORM 20 PSF LIVE LOAD WHICH IS ALTERNATIVELY ALSO THE SNOW LOAD.
OFFICIAL RELEASE BY WHC
DATE JUL 09 1998
ESTIMATED CONCRETE VOLUME:
DWGS H-2-98795, H-2-98797, H-2-98798 = 176 CY
DWG. H-2-98796 (SHIELDING SLABS) = 82 CY
IMPACT LEVEL 2
EDT #100853
U. S. DEPARTMENT OF ENERGY
Richland Operations Office
LCT/MIXER MODULE & MOTOR PIT
FOUNDATION PLAN, SECTIONS & DETAILS
TRANSPORTABLE GROUT EQUIPMENT FACILITY
B-475
SHOWN
243-G1
0900
H-2-98795
DRAWING LIST
H-2-98814
LCT/MM MODULE VIEWING/ ACCESS PLATFORM
REFERENCES
NEXT USED ON H-2-98796, 797
DRAWING TRACEABILITY LIST
REVISIONS
COMMENT REVIEW
MICROFILMED

9011178506

NOTES:

1. MAXIMUM SLAB WEIGHT = 15,750 LBS.
2. SLAB SURFACE PREPARATION AND PAINTING REQUIREMENTS:
   a) CONCRETE SURFACES PER NOTE 6 OF DWG H-2-98795.
   b) STEEL SURFACES PER NOTE 7 OF DWG H-2-98795.
3. TOLERANCE ON SLAB CROSS-SECTIONAL DIMENSIONS SHALL BE HELD ± 1/16".
4. INSTALLATION SEQUENCE NOTED IN SECTION "1-1".
5. FOR ADDITIONAL NOTES SEE DWG H-2-98795.
6. INSTALLATION SEQUENCE SHALL START WITH SLAB NO. 1 AND ASCEND THRU NO. 27. REMOVAL SEQUENCE SHALL START WITH SLAB NO. 27 AND DESCEND THRU NO. 1. FOR LAYDOWN AREA SEE DWG. H-2-98655.
7. COMPLETED AND FULLY CURED SHIELDING SLABS SHALL BE PROOF LOADED BY THE ADDITION OF A TWO TON "DEADMAN" IN THE VICINITY OF EACH LIFTING DEVICE.

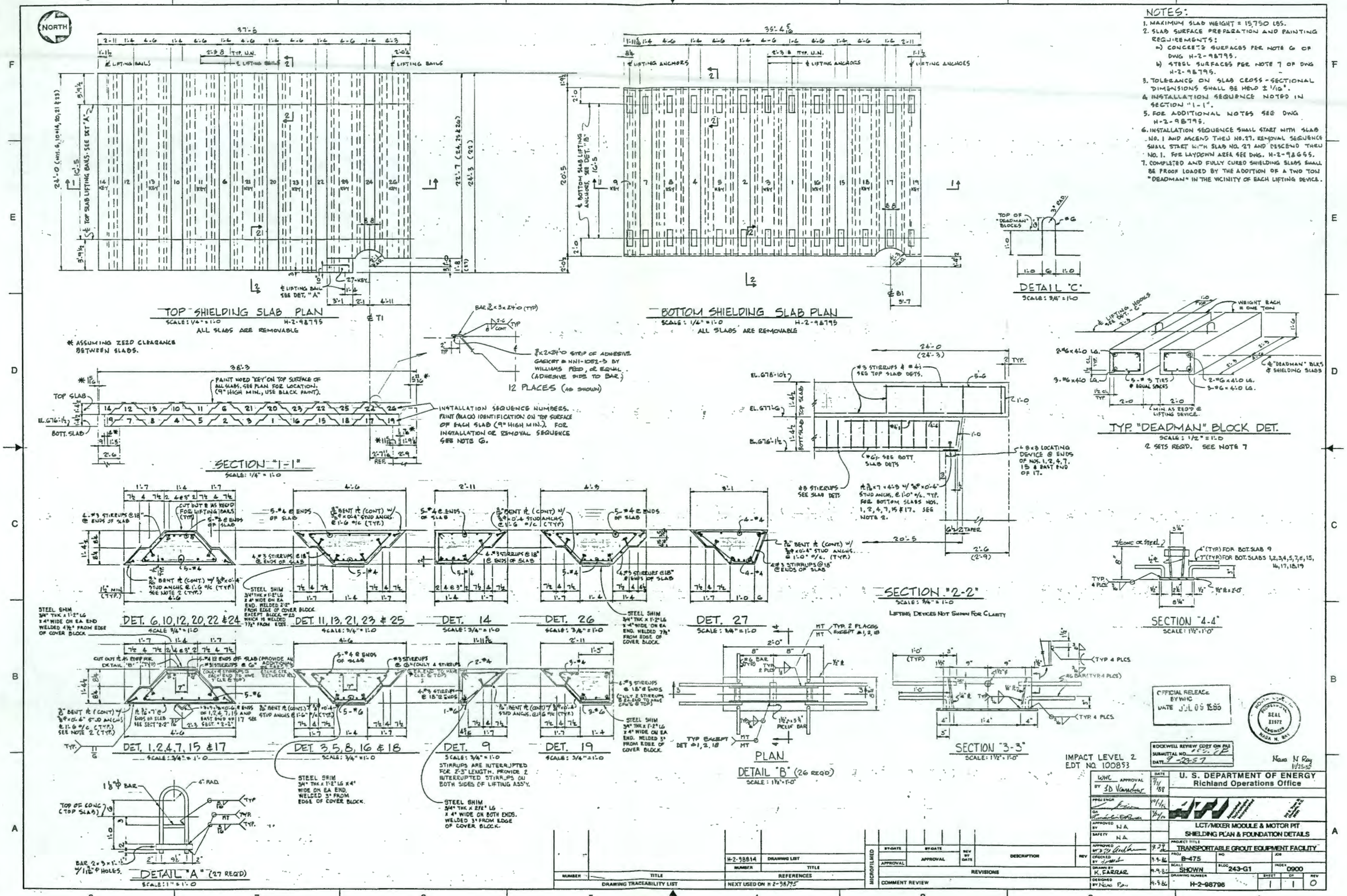

7850873

7110106

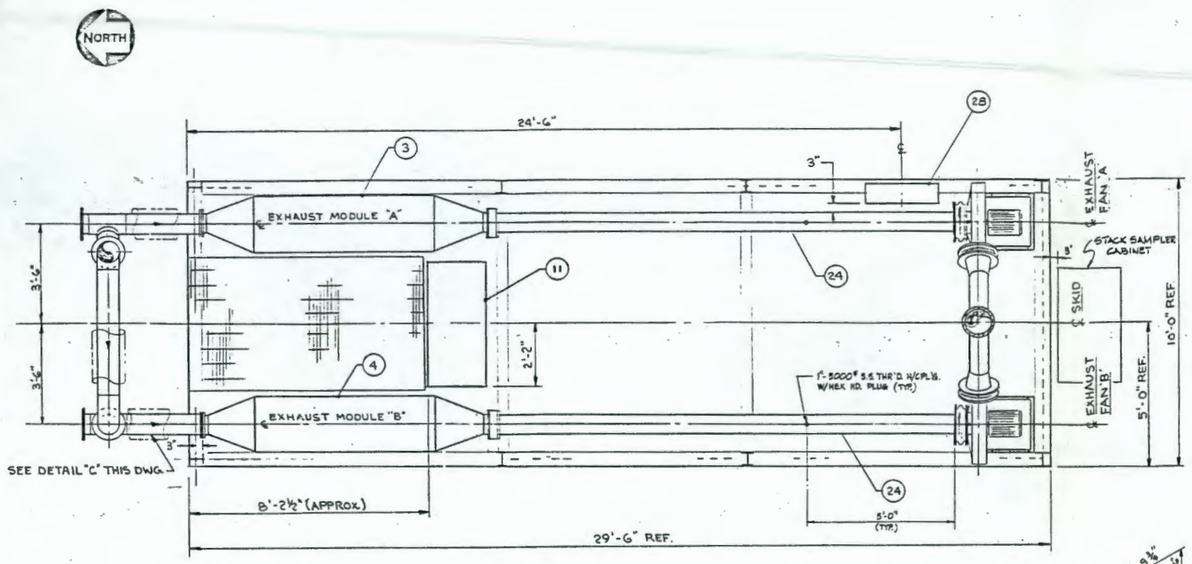

SECTION A-A

SEE DWG. H-2-98828
SCALE: ½" = 1'-0"

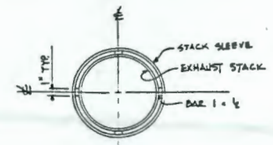

PLAN

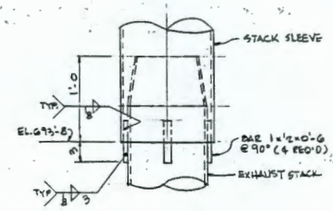

ELEVATION
DETAIL "A"
SCALE: 1½" = 1'-0" H-2-98828

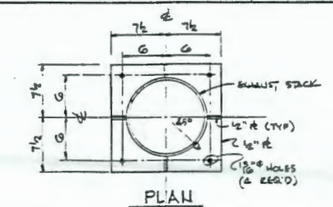

PLAN

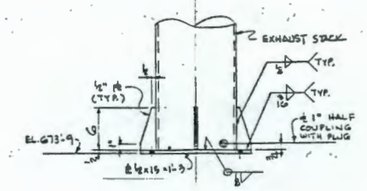

ELEVATION
DETAIL "B"
SCALE: 1½" = 1'-0" H-2-98828

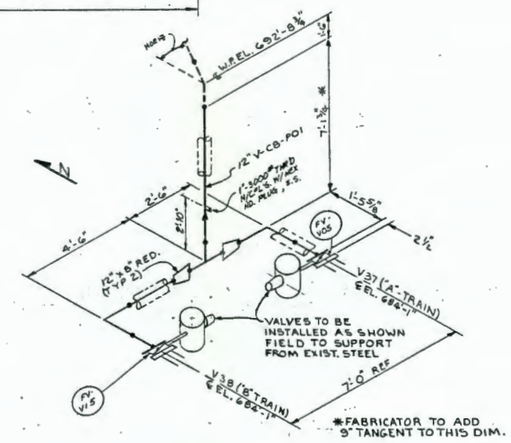

DETAIL "D"
DWG. H-2-98828
N.T.S.

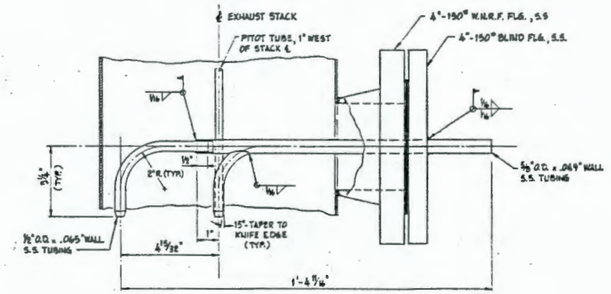

DETAIL "F"
SCALE: ⅜" = 1" H-2-98828

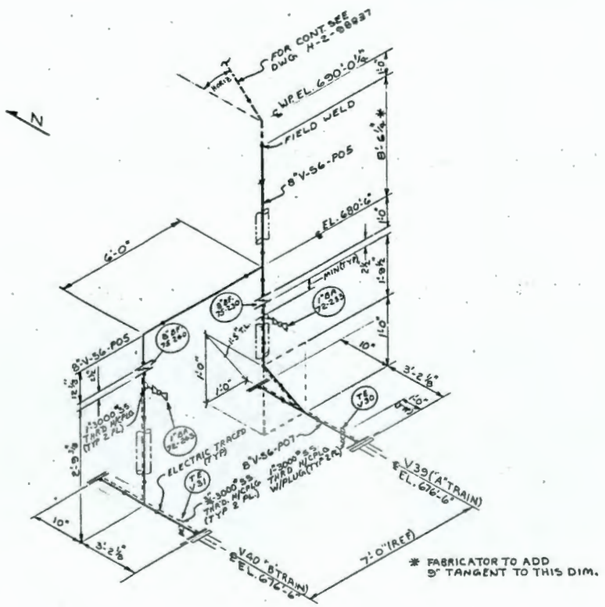

DETAIL "C"
DWG. H-2-98828 + 29
N.T.S.

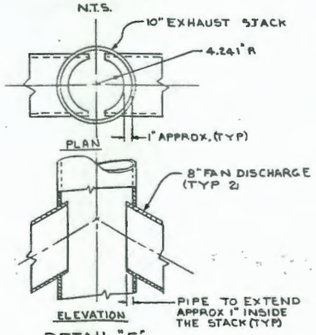

DETAIL "E"
H-2-98828
N.T.S.

OFFICIAL RELEASE BY WHC
DATE JUL 09 1988

ROCKWELL REVIEW COPY ON FILE
SUBMITTAL NO. RR-237-H
DATE 8-18-89

IMPACT LEVEL 2
EDT NO. 100853

WHC APPROVAL BY LD Woodward	DATE 7/9/88	U. S. DEPARTMENT OF ENERGY Richland Operations Office
PROJ ENGR	4/6/88	
DESIGN ENGR	4/4/88	
APPROVED BY		FILTRATION SYSTEM PIPING, SECTIONS & DETAILS
SAFETY		
APPROVED BY	3/14/88	PROJECT TITLE TRANSPORTABLE GROUT EQUIPMENT
CHECKED BY	3/13/88	PROJ B-475 / WO / JOB
DRAWN BY D. O'KEEF	4/4/88	SCALE AS NOTED / BLDG 243-A8 / INDEX 8900
DESIGNED BY D. O'KEEF	4/4/88	DRAWING NUMBER H-2-98829 / SHEET 1 / OF 1 / REV 0

NUMBER	TITLE
	DRAWING TRACEABILITY LIST

NUMBER	TITLE
H-2-98814	DRAWING LIST
REFERENCES	
NEXT USED ON H-2-98828	

BY-DATE	BY-DATE	REV BY DATE	DESCRIPTION	REV
APPROVAL	APPROVAL		REVISIONS	
COMMENT REVIEW				

MICROFILMED

9011106 0508874

APPENDIX 4B

PLANT OPERATING PROCEDURES

APPENDIX 4B

PLANT OPERATING PROCEDURES

The procedures contained in this appendix are only representative of those to be maintained by Westinghouse Hanford Company. The U.S. Department of Energy-Richland Operations Office (DOE-RL) monitors to ensure that each of its contractors, as necessary, develops, maintains, operates by, and complies with appropriate procedures. Each contractor's procedures are reviewed by DOE-RL for equivalency to the predecessor's procedures. Thus the procedures quoted herein are only examples of the procedures that will be used at the Hanford Site. At any given time, specified procedures are maintained by DOE-RL's responsible contractors and are available for review.

The procedure type in this appendix is defined as follows:

TO - Tank Farm Operating Procedure.

Appendix 4B contains the following plant operating procedures:

TO-390-100	TRANSFER DRY BLEND AT TGE
TO-390-103	SAMPLE DRY BLEND AT TGE
TO-390-107	PREPARE TGE/PIH SYSTEMS FOR STARTUP
TO-390-110	OPERATE TGE COMPUTER SYSTEM
TO-390-137	OPERATE TGE MIXER AND PUMP SYSTEM FROM RAW WATER
TO-390-142	OPERATE TGE MIXER AND PUMP SYSTEM FROM WASTE FEED
TO-390-147	STARTUP/SHUTDOWN TGE INSTRUMENT AIR SYSTEM
TO-390-152	OPERATE TGE PROCESS VENTILATION SYSTEM
TO-390-157	SAMPLE TGE LIQUID COLLECTION TANK CONTENTS
TO-390-162	TRANSFER TGE/VAULT WASTE STREAMS
TO-390-164	ADJUST pH OF TGE LCTW01 CONTENTS
TO-390-166	PRECHARGE TGE ADDITIVES/LINES
TO-390-170	FILL TGE DECON/ADDITIVES MODULE TANKS
TO-390-172	DECONTAMINATE TGE SYSTEMS
TO-390-174	OPERATE TGE SPRAY AND FLUSH SYSTEMS
TO-390-178	SHUTDOWN TGE MIXER/PUMP OPERATION
TO-390-196	PERFORM SURVEILLANCE OF GROUT SYSTEMS DURING OPERATIONS
TO-390-198	RESPOND TO ALARMS

TRANSFER DRY BLEND AT TGE

I. SYSTEM DESCRIPTION

This procedure provides instructions for the transfer of dry blend from the transport trailer to day storage bin M01 and from day storage bin M01 to the transport trailer.

Dry blend is mixed and stored at the Dry Material Facility (DMF). It is loaded into the transport trailer and then transported to the Transportable Grout Equipment (TGE) site. The dry blend is then unloaded at the TGE for grout processing.

Before processing of another campaign of grout can begin, dry blend remaining in day storage bin M01 or dry blend which has gone out of specification will be transferred into the transport trailer and properly disposed of.

This procedure is TGE specific. Refer to TO-390-005 and TO-390-030 for referencing additional tasks with the transport trailers, specifically top access trailers.

None of the constituents in the dry blend are radioactive nor carcinogenic.

Equipment involved is:

- Blower Inlet Silenced (M09)
- Transport Blower (M08)
- Blower Discharge Silence (M10)
- Day Storage Bin (M01)
- Day Bin Circulating Fan (M16)
- Day Bin Vent Filter (M11)
- Day Bin Discharge Valve (M03)
- Dry Blend Rotary Valve (M04)
- Dry Blend Weighfeeder and Drag Chain (M05-A and B)
- Transfer Conveyor Isolation Valve (M12)
- Dry Blend Transfer Conveyor (M06)
- Loading Chute (M21)
- Diverter (M19)
- Day Bin Activator (M18)
- Tramp Material Screen (M07)
- Transport Trailers HO-645746 and HO-645747.

9011178508377

OCM

II. PRESTART CONDITION

The computer control system and data logging computer are powered up and on line per TO-390-107.

There is no HOLD on graphics screen 5.

The instrument air system is on line.

III. SAFETY

Warning - Take care when dealing with any tank or line pressurization. Do not look into open piping, or cap lines with rags, hands, etc.

Safety glasses are required due to pressurization in lines.

Always verify that the blow-down valve V5BD is open and pressure gages are at zero before accessing top of trailer.

Use only safe access (Dry Material Facility unloading platform, portable roll out platform, etc.) for accessing top of trailer. Do not use the trailer ladder to access top of trailer. Do not stand on trailer top except when accessing from center of Dry Material Facility unloading platform.

When opening hatches, open hold-down clamp with safety catch, last.

Do not touch transport blower M08 discharge pipe. It will become hot during operation of the blower.

Do not stand between trailer and fence when trailer is in motion. Assist in spotting trailer from the front of tractor cab only.

Chock trailer when unhitched from cab.

Applicable Safety Documents - Provisions of Standard Requirements and Procedures, RHO-GM-MA-2, Section 61-02.5 (GEN-0), Radiation Work Permit (RWP) F-28, Industrial Safety Manual, WHC-CM-4.3, Vol. 1 and 2, Tank Farm Safety Rules, Accident Prevention Standards, and Emergency Plan for Tank Farms, RHO-MA-111.5, apply to all work performed under this procedure.

IV. TOOLS AND SUPPLIES

Rubber Mallet
Rod
Hard Hat
Respiratory Protection
Leather Gloves
DRY BLEND TRANSFER SHEET

V. TABLE OF CONTENTS

	PAGE
A. TRANSFER FROM TRANSPORT TRAILER TO M01	4
B. TRANSFER FROM M01 TO TRANSPORT TRAILER	9
FIGURE 1 - TRANSPORT LOADING CONTROL STATION	12
FIGURE 2 - DAY BIN WEIGHT LEVEL CROSS REFERENCE	13
DRY BLEND TRANSFER SHEET	14
ATTACHMENT - TRAILER SPECIFICATIONS AND VIEWS	15

VI. PROCEDURE

NOTE - Refer to Figure 1 for diagram of the Transport Loading Control Station.

A. TRANSFER FROM TRANSPORT TRAILER TO M01

WARNING

DO NOT STAND BETWEEN TRAILER AND FENCE WHEN TRANSPORT TRAILER IS IN MOTION. ASSIST IN SPOTTING TRAILER FROM THE FRONT OF TRACTOR CAB ONLY.

1. If requested by transport trailer driver, assist in spotting trailer for proper hose hook up.

2. Ensure driver gives completed DRY BLEND TRANSFER SHEET to the Control Room operator.

NOTE - Steps 3-5 will be performed by the Control Room operator.

3. Verify adequate space in bin M01 by filling out applicable TRANSFER SHEET sections.

NOTE - Refer to Figure 2 for additional information on verifying adequate bin M01 space.

4. If TRANSFER VALUE on the TRANSFER SHEET is negative, notify field operator of inadequate space.

5. When bin space becomes available, notify field operator to continue preparation for transfer of trailer contents to bin M01. Record delayed initial bin weight on TRANSFER SHEET.

6. Ensure hose and hose coupling are clean, dry, and free of material.

A. TRANSFER FROM TRANSPORT TRAILER TO M01 (Cont.)

WARNING

ENSURE BLOW-DOWN VALVE V5BD IS OPEN BEFORE GOING ON TOP OF TRAILER AND THAT PRESSURE IS 0 psig.

7. Ensure trailer top hatches are closed and clamped.

8. Ensure the following trailer valves are closed:

VALVE	FUNCTION
V1AL	Air Line
V2PD	Product Discharge
V3PD	Product Discharge
V4PD	Product Discharge
V5BD	Blow-Down

9. Connect transport blower M08 discharge hose to air piping outlet and to trailer air inlet hose.

10. Remove cap from trailer discharge line.

11. Connect outlet hose to bin M01 fill pipe and to trailer discharge line.

NOTE - When valve V1AL is open 45 degrees, it is 1/2 open. Valve V1AL is fully open when handle is aligned with the piping.

12. Open trailer air line valve V1AL 45 degrees.

13. If bin fan M16 is operating, contact Control Room to stop fan.

NOTE - Transport blower M08 will not start if bin fan M16 is operating.

14. Notify personnel in area, via PAX phone, blower M08 will be starting.

15. Start transport blower M08 by pressing START button on the TRANSPORT LOADING CONTROL STATION.

A. TRANSFER FROM TRANSPORT TRAILER TO M01 (Cont.)

WARNING

DO NOT TOUCH THE TRANSPORT BLOWER M08 DISCHARGE PIPE DURING OPERATION. IT WILL BECOME HOT.

KEEP ALL PERSONNEL CLEAR OF TANK RELIEF VALVE V6RL DISCHARGE. VALVE V6RL IS SET TO ACTIVATE AT 15.5 psig.

16. Ensure that vent filter M11 begins backpulsing. See graphic 5. After 15 min, if backpulsing has not started, notify supervision.

17. When trailer tank pressure gage reads 14.5 psig, open trailer product discharge valve V2PD.

NOTE - Unloading of the trailer can be started with trailer tank pressure as low as 12-13 psig. For the most efficient flow of product, 14.5 psig should be maintained. Pressurization above 14.5 psig risks setting off the trailer pressure relief valve. Fine tuning of this air line valve during unloading should be minimized. If a change is necessary, the adjustment should be made and then the valve should be left alone. This will help prevent plugging of product discharge lines.

18. Monitor tank pressure gage on trailer. Adjust air line valve V1AL to maintain 14.5 psig tank pressure.

CAUTION

Minimize time of flowing air through an empty compartment as this increases physical stress on discharge hose.

19. Switch flows to empty all three compartments of the trailer by first opening fully a new product discharge valve and then closing the previous product discharge valve.

NOTE - An empty compartment can be identified by noting a sudden pressure drop in both tank and line pressure, and by increased discharge hose vibration.

20. Repeat unloading sequence for each compartment/product discharge valve to finally ensure trailer is empty.

9011785088 2

A. TRANSFER FROM TRANSPORT TRAILER TO M01 (Cont.)

21. Stop transport blower M08 by pressing STOP button on the TRANSPORT LOADING CONTROL STATION.

NOTE - When transport blower M08 stops, bin fan M16 should start and run for 15 min.

22. Notify Control Room operator that unloading is complete.

NOTE - Steps 23-25 will be performed by the Control Room operator.

23. Evaluate if there is a significant discrepancy between trailer contents on TRANSFER SHEET and material placed in bin M01. See graphic 5. If there is no discrepancy, proceed to Step 31.

24. If significantly more material was loaded into the day bin than stated on the TRANSFER SHEET, notify supervision. Proceed to Step 31.

25. If significantly less material was loaded into the day bin than stated on the TRANSFER SHEET, notify the field operator that the trailer interior needs to be inspected.

26. Open blow-down valve V5BD to vent trailer tank and line pressure to 0 psig, as indicated on the trailer tank pressure and line pressure gages.

WARNING

KEEP PERSONNEL AWAY FROM TRAILER BLOW-DOWN PIPING DISCHARGE TO AVOID INJURY FROM BLOWING PARTICLES.

---

27. Disconnect air inlet hose to trailer.

WARNING

WHEN OPENING HATCHES, OPEN HOLD-DOWN CLAMP, WITH SAFETY CATCH, LAST.

---

28. Open hatches in each of the compartments to identify trapped material.

9011178508 3

A. TRANSFER FROM TRANSPORT TRAILER TO M01 (Cont.)

CAUTION

Do not extend rod on inside of trailer into discharge throat as air pad material in throat may be damaged.

29. Use rubber mallet on trailer exterior or rod in trailer interior to free material. If material cannot be freed, notify supervision.

30. After material has been freed, unload material per Steps 7-21, then continue.

31. Stop transport blower M08.

NOTE - Air line valve V1AL is to remain open while venting trailer tank.

32. Open blow-down valve V5BD to vent trailer tank and line pressure to 0 psig, as indicated on the tank pressure and line pressure gages.

33. Disconnect all hoses and store in proper locations.

34. Replace trailer discharge line end cap.

35. Close the following trailer valves:

VALVE	FUNCTION
V1AL	Air Line
V2PD	Product Discharge
V3PD	Product Discharge
V4PD	Product Discharge
V5BD	Blow-Down

36. Notify driver that trailer is secure and ready for transport.

37. Ensure that circulating fan M16 starts and vent filter M11 backpulsing continues when transport blower stops. See graphic 5.

38. Return completed TRANSFER SHEET to supervision.

NOTE - Supervision will file TRANSFER SHEET in Campaign Log.

B. TRANSFER FROM M01 TO TRANSPORT TRAILER

WARNING

DO NOT STAND BETWEEN TRAILER AND FENCE WHEN TRANSPORT TRAILER IS IN MOTION. ASSIST IN SPOTTING TRAILER FROM THE FRONT OF TRACTOR CAB ONLY.

1. If requested by transport trailer driver, assist in spotting trailer for proper loading chute M21 alignment.

WARNING

ENSURE BLOW-DOWN VALVE V5BD IS OPEN BEFORE GOING ON TOP OF TRAILER AND THAT PRESSURE IS 0 psig.

WHEN OPENING HATCHES, OPEN HOLD-DOWN CLAMP, WITH SAFETY CATCH, LAST.

2. Open hatch for specific compartment loading on top of trailer tank.

NOTE - Trailer can be loaded singularly from central hatch.

3. Position diverter M19 to direct dry blend to transfer conveyor M06, by pulling on eastern side of pull chain.

4. Lower loading chute M21 into the open hatch of the transport trailer.

5. Open transfer conveyor isolation valve M12.

NOTE - Isolation valve M12 is open when valve stem is extending out past hand-wheel.

6. Notify Control Room operator that transport trailer is ready for filling.

B. TRANSFER FROM M01 TO TRANSPORT TRAILER (Cont.)

NOTE - Steps 7-16 will be performed by the Control Room operator.

WARNING

NOTIFY FIELD PERSONNEL THAT FIELD EQUIPMENT WILL BE STARTING BEFORE OPERATING.

---

7. Switch FIC-M04 to MANUAL mode and enter an output value of 0. See graphic 5.

8. Place dry blend system in MANUAL operation mode. See graphic 5.

9. Start transfer conveyor M06. See graphic 5.

10. Start drag chain W05-B, then weighfeeder W05-A. See graphic 5.

11. Start rotary valve M04. See graphic 5.

12. Start bin activator M18. See graphic 5.

13. Increase dry blend feed rate to 300 lb/min on FIC-M04 by increasing output value. See graphic 5.

14. Monitor system for indications that system is emptying. Watch for the following:
    - The bin M01 weight on WI-M03 indicates zero (0) lb. See graphic 5.
    - The dry blend flow on FI-M04 indicates zero (0) lb/min. See graphic 5.
    - FQ-M04 stops totalizing flow. See graphic 4.

CAUTION

In the event the day bin contains more than 20 tons of material, monitor flow output and go to Step 16 upon 20 tons of flow.

---

15. Operate system 5 min after FQ-M04 stops totalizing dry blend flow. See graphic 4.

B. TRANSFER FROM M01 TO TRANSPORT TRAILER (Cont.)

16. Stop transfer conveyor M06 and ensure that the following have stopped. See graphic 5.
    - Rotary Valve M04
    - Weighfeeder M05-A
    - Drag Chain M05-B
    - Bin Activator M18.

17. Position diverter M19 to direct dry blend to tramp material screen M07.

18. Close isolation valve M12, as evidenced by valve stem retracted with the hand-wheel.

NOTE - Isolation valve M12 is closed when valve stem is retracted flush with the hand-wheel.

19. Raise loading chute M21 from transport trailer and secure.

20. Close and latch transfer hatch.

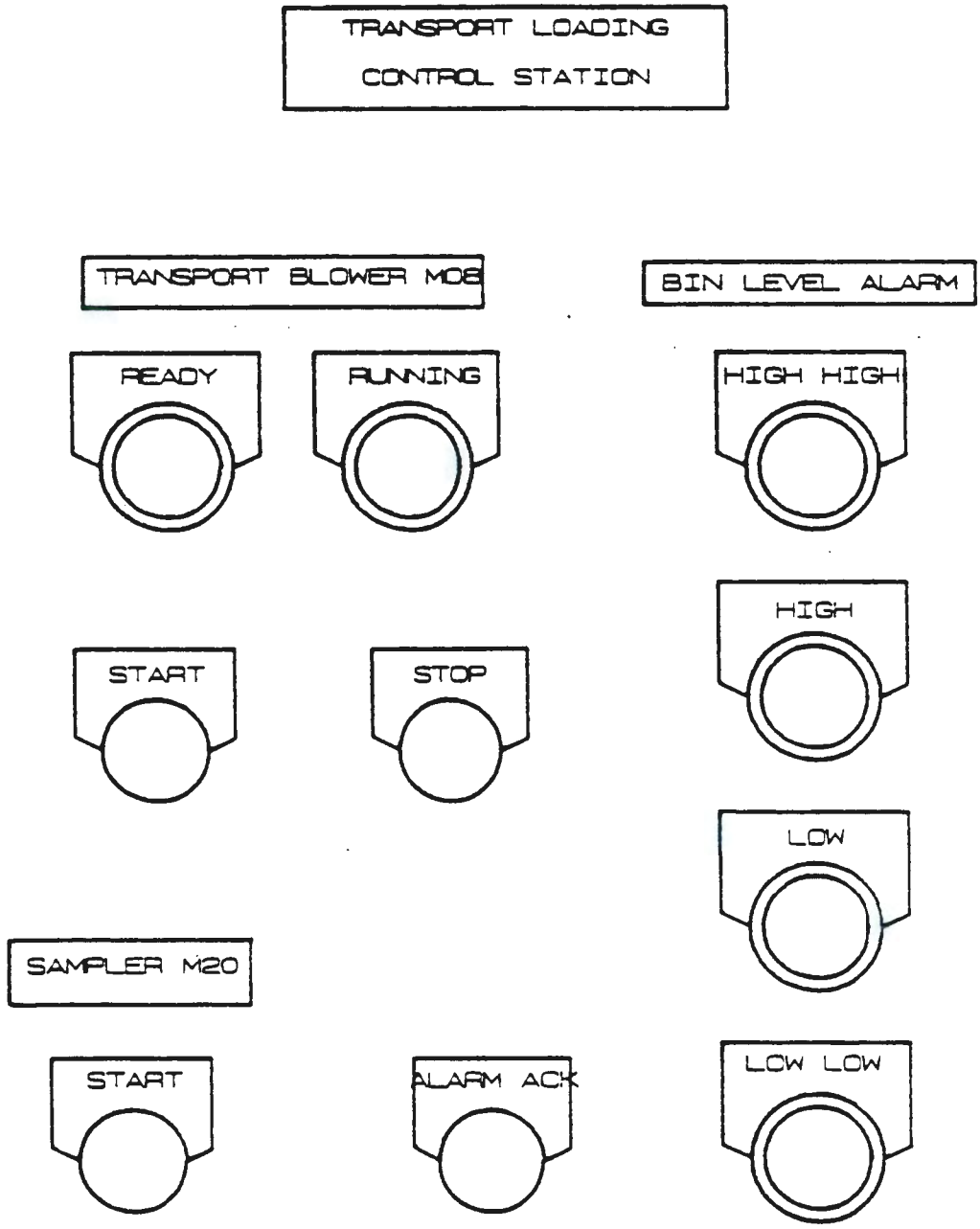

FIGURE 1 - TRANSPORT LOADING CONTROL STATION

DAY BIN
WEIGHT/LEVEL CROSS REFERENCE

% LEVEL LE-M01 POUNDS WI-M03

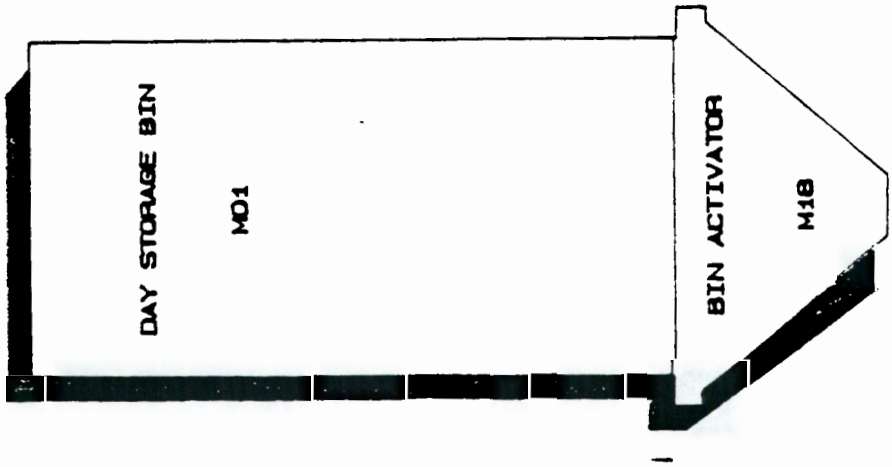

FIGURE 2 - DAY BIN WEIGHT LEVEL CROSS REFERENCE

DRY BLEND TRANSFER SHEET

TRANSFER TRAILER ID: HO-64-5746 HO-64-5747
(circle one)

DRY MATERIAL FACILITY DATA DATE_____

START BLENDED STORAGE BIN WEIGHT (WI-202B) _____ x 1000 lbs (1)

START TIME FOR FILLING TRAILER (0000-2400) _____ hrs

FINAL BLENDED STORAGE BIN WEIGHT (WI-202B) _____ x 1000 lbs (2)

WEIGHT OF BLEND IN TRAILER ((1) - (2)) _____ x 1000 lbs (3)

SAMPLE NUMBER(s) _____

LOADOUT TOTALIZER VALUE (FQ-203) _____ x 1000 lbs

HATCHES CLOSED AND TRAILER READY FOR TRANSPORT _____
(operator signature)

TRANSPORTATION DATA DATE_____

HATCHES UNOPENED/TRANSPORTED WITHOUT INCIDENT _____
(driver signature)

TRANSPORTABLE GROUT EQUIPMENT DATE_____

INITIAL BIN WEIGHT (GRAPHIC 5) _____lbs (4)

AVAILABLE BIN WEIGHT (140,000 - (4)) _____lbs (5)

TRANSFER VALUE ((5) - (3)) _____lbs (6)

DELAYED INITIAL BIN WEIGHT (GRAPHIC 5) _____lbs

END TIME FOR COMPLETING TRANSFER (0000-2400) _____hrs

SAMPLE NUMBER(s)_____

SUPERVISION REVIEW_____ _____
(signature) (date)

ATTACHMENT

TRAILER SPECIFICATIONS AND VIEWS

TRAILER SPECIFICATIONS

SPECIFIC

Trailer #1	ID Number	HO-645746
	Serial Number	4FL013312
	License Number	E-18762
Trailer #2	ID Number	HO-645747
	Serial Number	4FL013313
	License Number	E-18763

GENERAL

Manufacturer:	FRUEHAUF
Contact:	Bulk Tank Division (402) 333-4900
Local Rep:	(Spokane) Pete Edwards (509) 535-3007
Description:	Pressure Bulk Haul Tank Trailer
Model Number:	HAB-F2-J 1000
Purchase Date:	3/85
Material Shell:	5454-H32
Max Load:	58,000 lb
Capacity:	1000 cubic feet
Press. Design:	15 psig
Tested At:	22 psig
Relief Set:	15.5-15.75 psig

ASSOCIATED TRACTOR IDENTIFICATION

Tractor #1	ID Number	HO-68E-4364
	License Number	E-18798
Tractor #2	ID Number	HO-68E-4374
	License Number	E-18815

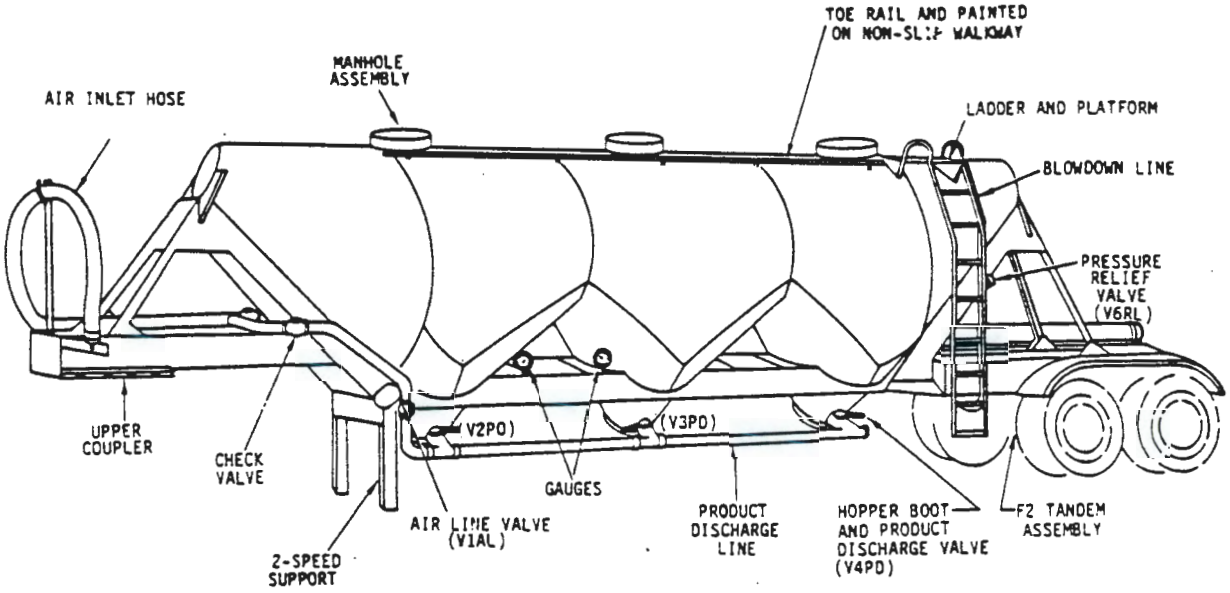

TRAILER, UNLOADING SIDE VIEW

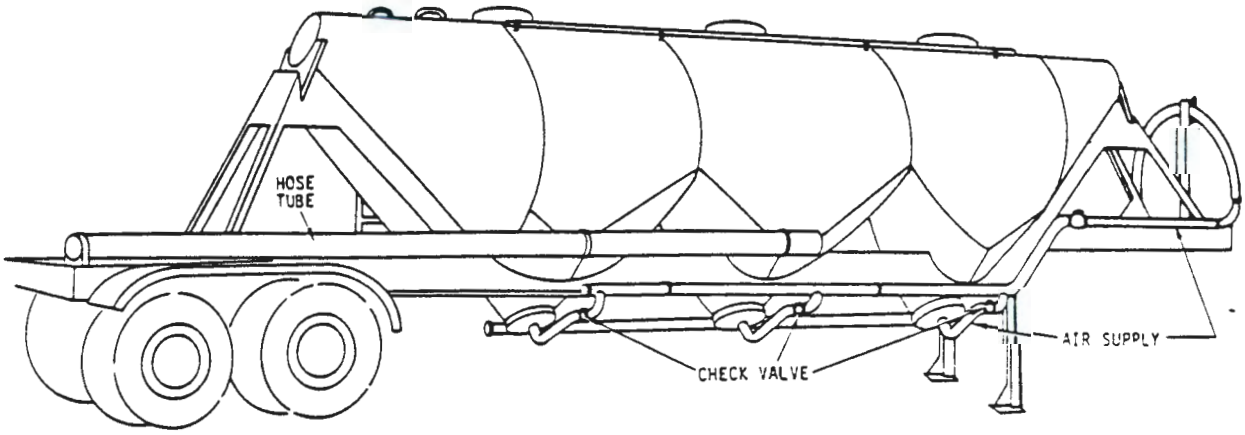

TRAILER, CURBSIDE VIEW

ATTACHMENT - TRAILER SPECIFICATIONS AND VIEWS (Cont.)

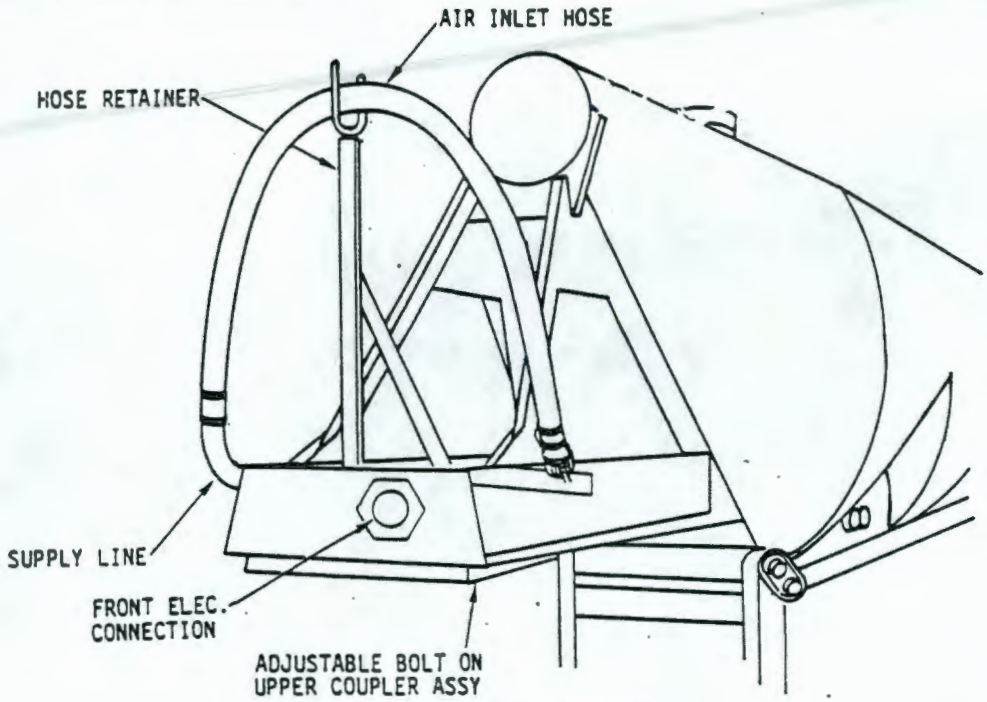

AIR INLET HOSE CONNECTIONS

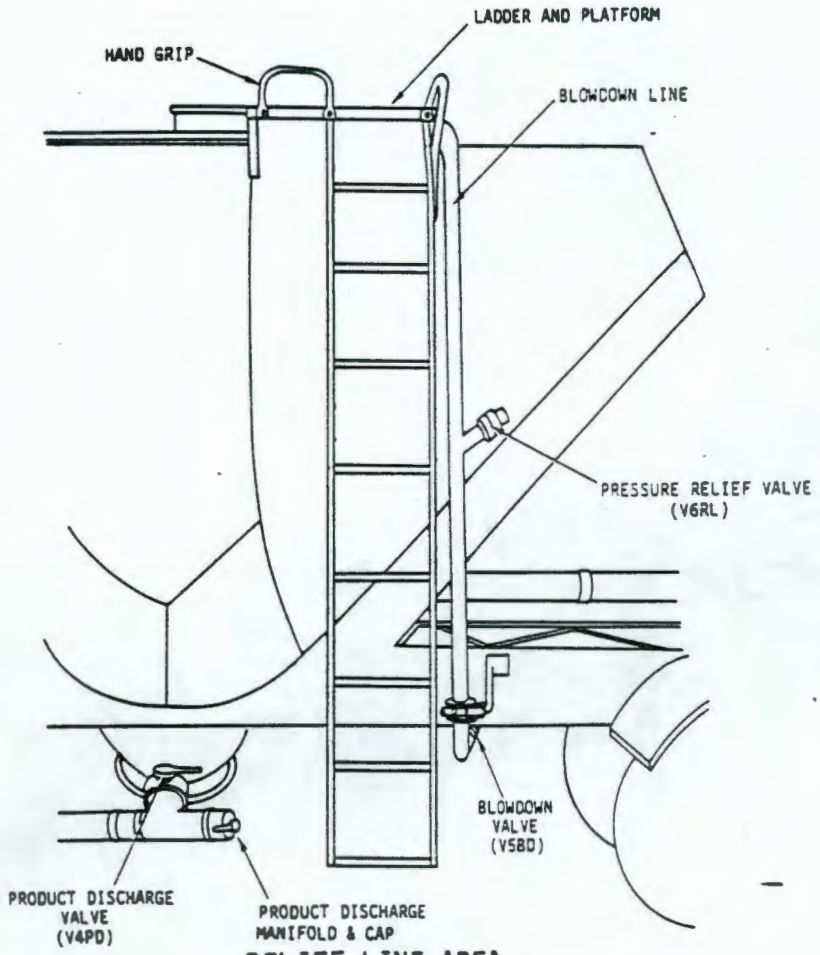

RELIEF LINE AREA

ATTACHMENT - TRAILER SPECIFICATIONS AND VIEWS (Cont.)

9011785089 3

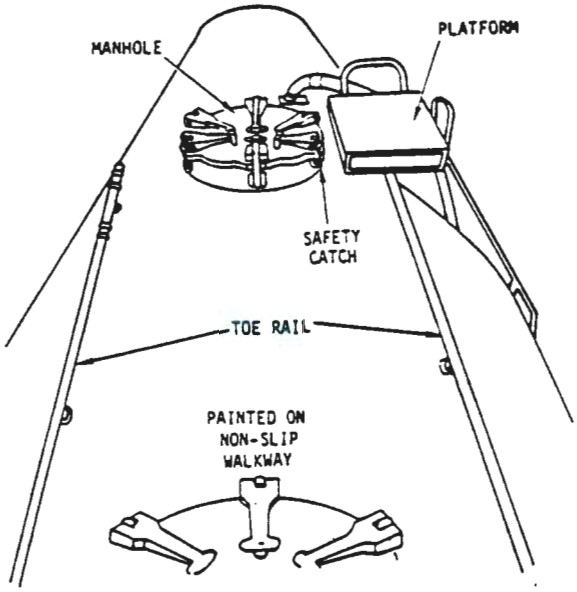

TOP VIEW

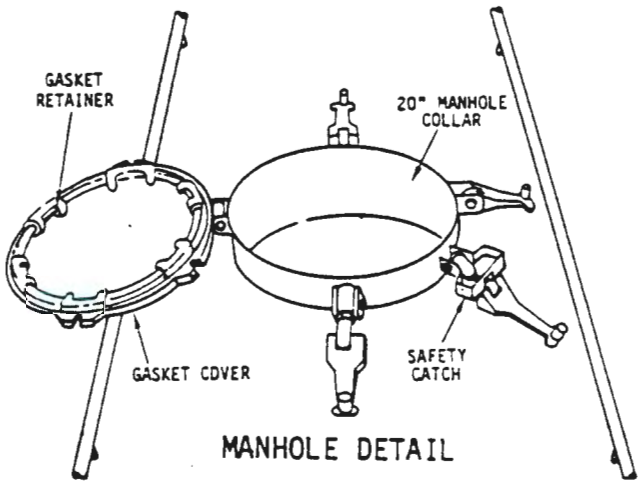

MANHOLE DETAIL

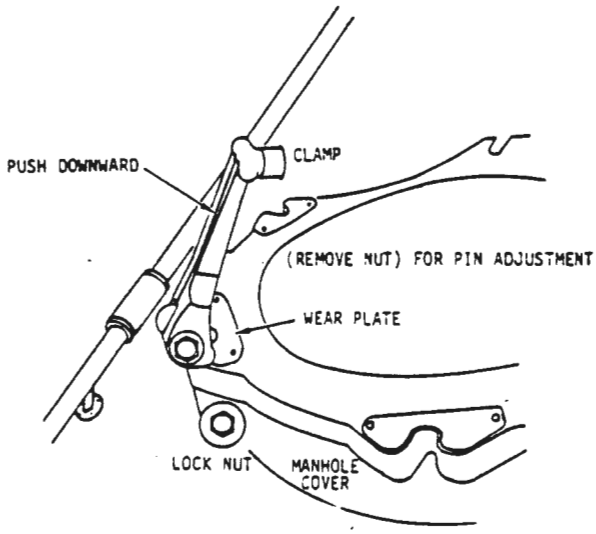

COVER HOLDDOWNS

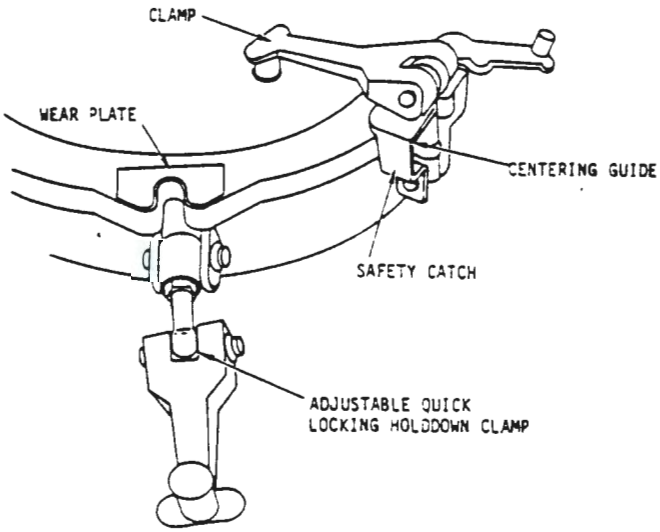

HOLDDOWN CLEARANCE

TRAILER SPECIFICATIONS AND VIEWS (Cont.)

SAMPLE DRY BLEND AT TGE

I. SYSTEM DESCRIPTION

This procedure provides instructions for sampling dry blend at the Transportable Grout Equipment (TGE) facility using the automatic samplers M20 and M14. Also detailed are instructions for taking a grab sample from day storage bin M01. If a grab sample out of the transport trailer is desired, refer to Essential Material Sampling Procedure, ESP-G-080-00107, method A II.

Equipment involved is:

- Transport Loading Sampler (M20)
- Day Storage Bin (M01)
- Manway Pressure Hatch (PSV, M05)
- Day Bin Circulating Fan (M16)
- Day Bin Vent Filter (M11)
- Day Bin Discharge Valve (M03)
- Dry Blend Rotary Valve (M04)
- Dry Blend Weigh Feeder and Drag Chain (M05-A and -B)
- Dry Blend Sampler (M14).

II. PRESTART CONDITION

Supervision has received an engineering Process Memo requesting sampling be performed.

III. SAFETY

Warning - If operations are performed in a dusty environment, wear felt dust mask to minimize breathing of dust particles.

None of the dry materials are toxic or corrosive.

Exercise extreme care when performing any operation on top of day storage bin M01. Ensure all personal effects are secure. Do not have more than 35 people on stairway at the same time.

Caution - Do not use any solvents or acids for cleaning sample container. Do not flush sample container with water. Use a water-damp, clean rag for best results.

SECURITY RELATED
ODM

III. SAFETY (Cont.)

Applicable Safety Documents - Provisions of Standard Requirements and Procedures, RHO-GM-MA-2, Section 61-02.5 (GEN-0), Radiation Work Permit (RWP) F-28, Industrial Safety Manual, WHC-CM-4.3, Vol 1 and 2, Tank Farm Safety Rules, Accident Prevention Standards, and Emergency Plan for Tank Farms, RHO-MA-111.5, apply to all work performed under this procedure.

IV. TOOLS AND SUPPLIES

Heavy String/Cable (length as needed)
Sample Cartons or Cans (2-lb size, cardboard carton or aluminum cans)
Sample Containers
Dry Material Sampler (see Figure 2)
SAMPLE Labels
Masking Tape
Plastic Bags
Permanent Black Marking Pens
Damp Rags
TO-020-044, PERFORM LOCK AND TAG
TO-390-105, OBTAIN SAMPLE SERIAL NUMBER/MONITOR RECORDS - TGE DISPATCHER

V. TABLE OF CONTENTS

	PAGE
A. SAMPLE TRAILER LOADOUT USING SAMPLER M20	3
B. SAMPLE DAY BIN LOADOUT USING SAMPLER M14	4
C. SAMPLE DAY BIN USING GRAB SAMPLE	5
FIGURE 1 - TRANSPORT LOADING CONTROL STATION	7
FIGURE 2 - DRY MATERIAL SAMPLER	8

V1. PROCEDURE

A. SAMPLE TRAILER LOADOUT USING SAMPLER M20

NOTE - Controls for automatic sampler M20 are located on the TRANSPORT LOADING CONTROL STATION. See Figure 1.

1. Ensure a clean, dry sample container is attached to the sampler discharge hose and latched in place. Ensure vent screw is closed.

2. Verify material is being unloaded out of the trailer into the day storage bin M01.

   a. Check that the unloading hose is vibrating slightly with a slug-flow of solids during transfer.

   b. If unable to verify, request Control Room operator to check material transfer into bin M01 by noting material level change per graphic 5.

3. Ensure sampler M20 timer is set at 7.5 min.

4. Turn sampler M20 power switch to ON. Verify the POWER indicator light is lit. If light is not lit, notify supervision.

5. Press sampler M20 START button. Verify that the SOLENOID indicator light is lit. If light is not lit, notify supervision.

NOTE - Sampler will automatically shut off when time set on timer expires.

6. After transport trailer is unloaded, unlatch sample container and remove from sampler discharge hose.

7. Pour sample container contents into a plastic bag. Seal bag as airtight as possible by knotting the bag and/or using tape.

NOTE - SAMPLE labels are to be prepared and attached per TO-390-105.

8. Place the bag into a prelabeled sample carton or can and seal with tape.

A. SAMPLE TRAILER LOADOUT USING SAMPLER M20 (Cont.)

CAUTION

Do not use any solvents or acids for cleaning sample container. Do not flush sample container with water. Use a water-damp, clean rag for best results.

9. Clean and dry the sample container.

10. Attach sample container to sampler discharge hose and latch in place.

11. Store the sample in a cool, dry location before shipping.

12. Record all applicable data relative to this sample per TO-390-105.

B. SAMPLE DAY BIN LOADOUT USING SAMPLER M14

1. Ensure a clean, dry sample container is attached to the sampler discharge hose and latched in place. Ensure vent screw is closed.

2. Ensure the timer is set to 0 min on sampler M14 control box.

3. Turn the sampler M14 power switch to ON. Verify the POWER indicator light is lit. If light is not lit, notify supervision.

4. Position the manual cycle switch to ON. Verify the MOTOR indicator light is lit. If the light is not lit, notify supervision.

5. After approximately 5 min, unlatch the sample container from the sampler discharge hose.

6. Pour sample container contents into a plastic bag. Seal bag as airtight as possible by knotting the bag and/or using tape.

NOTE - SAMPLE labels are prepared and attached per TO-390-105.

7. Place the bag into a prelabeled sample carton or can and seal with tape.

B. SAMPLE DAY BIN LODAOUT USING SAMPLER M14 (Cont.)

CAUTION

Do not use any solvents or acids for cleaning sample container. Do not flush sample container with water. Use a water-damp, clean rag for best results.

8. Clean and dry the sample container.

9. Attach sample container to sampler discharge hose and latch in place.

10. Store the sample in a cool, dry location before shipping.

11. Record all applicable data relative to this sample per TO-390-105.

C. SAMPLE DAY BIN USING GRAB SAMPLE

WARNING

EXERCISE EXTREME CARE WHEN PERFORMING ANY OPERATION ON TOP OF STORAGE BIN. ENSURE ALL PERSONAL EFFECTS ARE SECURE. DO NOT HAVE MORE THAN 35 PEOPLE ON STAIRWAY AT THE SAME TIME.

NOTE - Refer to Figure 2 for dry material sampler diagram.

1. Lock and tag out transport blower M08 and circulating fan M18 in the OFF position per TO-020-044.

NOTE - Transport blower M08 is located in the motor control center.

2. Open relief cover/manway inspection hatch.

3. Attach string/cable to sampler and lower into material.

4. Manipulate string/cable so that sampler captures as much material as possible.

5. Pull up sampler, detach string/cable, and transfer sampler to plastic bag. Seal bag as airtight as possible by knotting the bag and/or using tape.

C. SAMPLE DAY BIN USING GRAB SAMPLE (Cont.)

NOTE - SAMPLE labels are prepared and attached per TO-390-105.

6. Place the bag into a prelabeled sample carton or can and seal with tape.

CAUTION

Do not slam the relief cover/manway inspection hatch. Carefully close the hatch.

---

7. Clean off any material that may have fallen on hatch rim. Close the hatch.

8. Ensure that the vacuum relief disk in hatch has resealed by inserting hand into top opening and checking disk movement.

   a. Insert hand into top opening.

   b. Check disk movement by gently pressing upward on disk.

   NOTE - Disk should raise freely approximately 2 in. and then fall back to sealed position.

   c. If disk does not raise, notify supervision.

9. Store the sample in a cool, dry location before shipping.

10. Remove lock and tag from transport blower M08 and circulating fan M18 per TO-020-044.

11. Record all applicable data relative to this sample per TO-390-105.

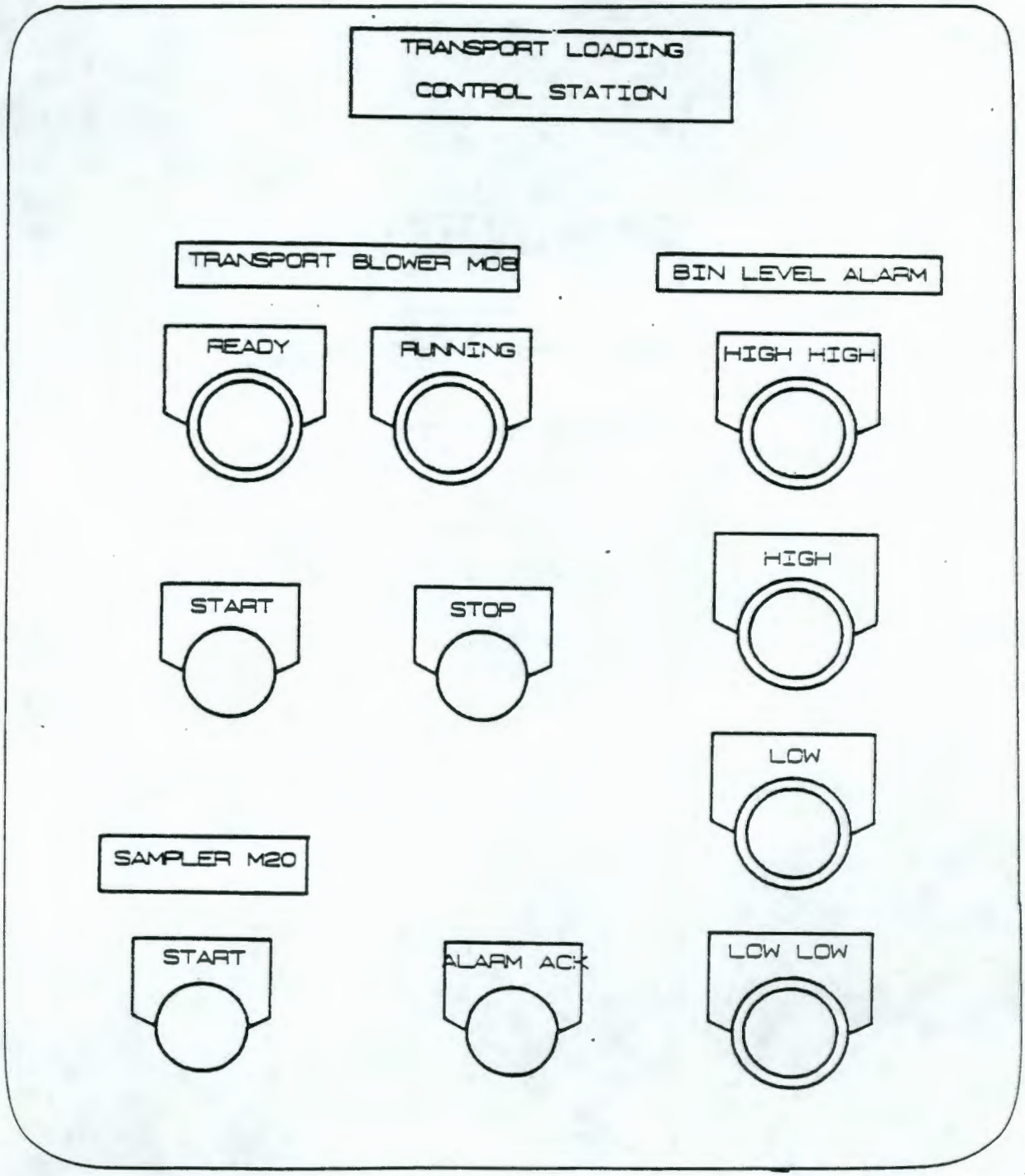

FIGURE 1 - TRANSPORT LOADING CONTROL STATION

9011178509 01

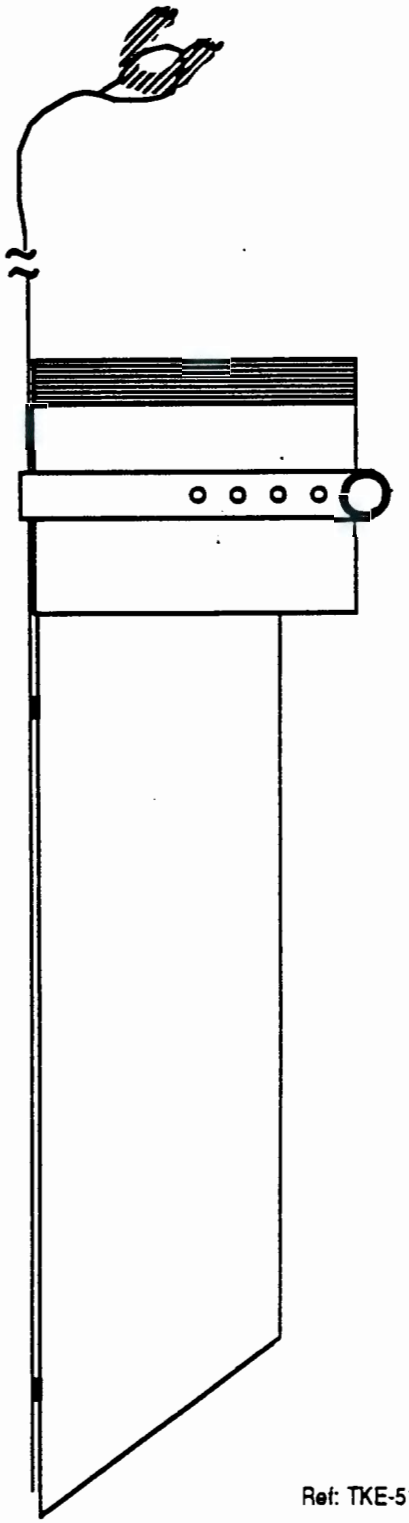

Ref: TKE-5119

FIGURE 2 - DRY MATERIAL SAMPLER

PREPARE TGE/PIH SYSTEMS FOR STARTUP

I. SYSTEM DESCRIPTION

This procedure provides instructions for preparing the Transportable Grout Equipment (TGE) and vault Portable Instrument House (PIH) facilities for startup. It involves set-up and checkout of equipment, pre-operation alignment of valves, and documentation of formulation parameters. Completion of these tasks will verify system readiness after being shut down or in the standby mode.

Tasks for final valving configuration are detailed in TO-390-137 or TO-390-142. General instructions for operating the CIMSTAR color graphics monitors and monochrome systems monitors are noted in TO-390-110 and TO-390-198.

This procedure is essentially a checksheet. While specific tasks are detailed below, additional tasks for all systems are noted on the STARTUP PREPARATION CHECKSHEET.

II. PRESTART CONDITION

Proper software is in place in both programmable controller central processing units (CPUs)in all four CIMSTAR computers and in the AT data logging computer, and all computer systems are properly configured as confirmed by supervision.

Supervision has notified Quality Engineering and Process Engineering of impending startup of TGE and PIH facilities.

Supervision has directed activities in this procedure in total or in part depending upon the stand down condition of the facility.

III. SAFETY

Applicable Safety Documents - Provisions of Standard Requirements and Procedures, RHO-GM-MA-2, Section 61-02.5 (GEN-0), Radiation Work Permit (RWP) F-28, Industrial Safety Manual, WHC-CM-4.3, Vol 1 and 2, Tank Farm Safety Rules, Accident Prevention Standards, and Emergency Plan for Tank Farms, RHO-MA-111.5, apply to all work performed under this procedure.

9011178509 03

ORIGINALLY RELEASED
CDM

IV. TOOLS AND SUPPLIES

STARTUP PREPARATION CHECKSHEET
GROUT FORMULATION DATA SHEET
TO-390-065, OPERATE TK-102-AP MIXER PUMP P-102-3
TO-390-147, START UP/SHUT DOWN TGE INSTRUMENT AIR SYSTEM

V. TABLE OF CONTENTS

	PAGE
A. PREPARE COMPUTER SYSTEM	3
Prepare Programmable Logic Controller	3
Prepare CIMSTAR Operator Interface Computers	3
Prepare CASS/LCCS System	4
Prepare TGE Uninterruptable Power Supply	4
Prepare PIH Uninterruptable Power Supply	4
Set Emergency Control Switches	5
B. PREPARE INSTRUMENT AIR SYSTEM	5
C. PREPARE VENTILATION SYSTEM	6
D. PREPARE ADDITIVES SYSTEM	6
E. PREPARE DRY BLEND SYSTEM	6
F. PREPARE LIQUID WASTE FEED SYSTEM	8
G. PREPARE WATER FEED SYSTEM	8
H. PREPARE PUMP/MIXER SYSTEM	9
I. PREPARE DECON/pH ADJUSTMENT SYSTEM	10
J. PREPARE STANDBY GENERATOR SYSTEM	10
K. PREPARE PIH/VAULT INTERFACE SYSTEMS	11
L. COMPLETE STARTUP PREPARATION CHECKSHEET	11
M. COMPLETE GROUT FORMULATION DATA SHEET	11
STARTUP PREPARATION CHECKSHEET	12
GROUT FORMULATION DATA SHEET	29

VI. PROCEDURE

A. PREPARE COMPUTER SYSTEM

Prepare Programmable Logic Controller (PLC)

1. Ensure power switches to Control Processing Units (CPU) 1-3 are on, and key switches are set to MEMORY PROTECT and RUN.

2. Ensure power switches to Redundant Processing Units (RPU) are on with key switches in AUTO and RUN.

3. Ensure all field input/output (I/O) racks power supplies are switched on.

Prepare CIMSTAR Operator Interface Computers

NOTE - The 19-in. color monitor will be referred to as the graphics monitor. The 12-in. monochrome monitor will be referred to as the systems monitor.

4. Ensure the key switch setting on the CIMSTAR multifunction cards is set to position #1.

5. Turn on the graphic and system monitors using the POWER ON switch on the front.

6. Press the following three keys simultaneously on the CIMSTAR keyboard: CTRL-ALT-DEL.

7. Press any key when VUMASTER appears on the graphics monitor.

8. Enter the following commands at the prompt on the systems monitor to set CIMSTAR clock if values are incorrect:

   - C: (return)
   - CD/DIAG (return)
   - SETUP (return).

   a. Use the cursor down key to move the arrow on the screen to the time or date line as necessary.

A. PREPARE COMPUTER SYSTEM (Cont.)

8. b. Obtain official time from CASS operator on already set-up CIMSTAR and enter proper parameters.

NOTE - Once on the TIME line, the parameter displayed is initially HRS. Pressing the cursor DOWN key again will display SEC. The same procedure on the DATE line will show DAY, MON, and YR. Once the desired parameter is displayed, then the value can be changed by using the cursor LEFT key and cursor RIGHT key.

c. Press S to save new values after corrected parameters are entered.

9. Enter the following commands at the prompt on the systems monitor to activate graphic control screen interface:

- C: (return) - only if Step 8 bypassed
- 1 (return).

10. Repeat Steps 4-9 for each CIMSTAR computer.

11. Ensure alarm and data logging printers are loaded with paper.

12. Monitor alarm printer for print quality and replace ribbon if necessary.

Prepare CASS/LCCS System

13. Ensure both the CASS and LCCS modems beneath the printer panel are switched on, as noted by the lit power indicator.

14. Switch the CASS/LCCS terminal and printer on, and ensure paper is loaded into printer.

Prepare TGE Uninterruptable Power Supply (UPS)

15. Ensure the TGE UPS Main AC breaker is closed (on).

16. Ensure the TGE UPS battery disconnect circuit breaker and the input AC circuit breaker on the systems status panel are closed (on), and the UPS on-line light is illuminated.

Prepare PIH Uninterruptable Power Supply (UPS)

17. Ensure PIH UPS is on-line as noted by lit power indicator.

18. Complete STARTUP PREPARATION CHECKSHEET, Section A, Computer System.

A. PREPARE COMPUTER SYSTEM (Cont.)

Set Emergency Control Switches

19. Position all valve and motor controllers on the emergency control panel to AUTO.

20. Position all motor position switches on emergency control panel to forward (FWD).

B. PREPARE INSTRUMENT AIR SYSTEM

NOTE - In this section of the CHECKSHEET, gagged refers to clogged up relief valve discharge.

1. Align valves per CHECKSHEET, Section B, Instrument Air System.

2. If supervision directs, reverse positions for the following valves to use alternate control regulator, R-002:

   - HV-115
   - HV-116
   - HV-117
   - HV-118.

NOTE - The control regulator system is redundant, containing separate flow paths for regulator R-001 and R-002. Initial valve alignment permits airflow through R-001.

3. Ensure area and fan screen are clean and free of debris.

4. Ensure both air compressor lobe caps are in place.

5. Ensure field power disconnects are switched on.

6. Ensure air receiver A05 is depressurized by opening drain valve HV-113.

7. Complete remaining CHECKSHEET items.

C. PREPARE VENTILATION SYSTEM

1. Align valves per CHECKSHEET, Section C, Ventilation System.

2. Ensure motor disconnect is on for chilled water pump V23, and jog pump to verify it freely rotates, see graphic 8.

3. Ensure inlet air screens and general area are free of debris.

4. Ensure all field instrumentation, heat tracing, and insulation are secure and undamaged.

5. Verify by viewing through sight glass indicator that chilled water tank is filled approximately 50%.

6. Complete remaining CHECKSHEET items.

D. PREPARE ADDITIVES SYSTEM

1. Start up instrument air system per TO-390-147.

2. Align valves per CHECKSHEET, Section D, Additives System.

3. Press the RESET button for the set regulator pump, fluidizer pump, and tributyl phosphate pump AC drive controls, located in the motor control center.

4. Ensure all field instrumentation is secure and undamaged.

5. Ensure there is no indication of line nor tank leakage for the fluidizer, tributyl phosphate, or set regulator tank and pumping system within the decon/additive module.

6. Ensure area is clean and free of debris.

E. PREPARE DRY BLEND SYSTEM

1. Ensure instrument air system is on-line, see graphic 15.

2. Ensure the empty 55-gal container is in place at the discharge of the dry blend tramp material screen M07, and insert within it the high-level probe LSH-M11.

3. Position the dry blend diverter valve M19 to direct dry blend to the dry blend tramp material screen M07.

E. PREPARE DRY BLEND SYSTEM (Cont.)

4. Align remaining valves per CHECKSHEET, Section E, Dry Blend System.

CAUTION

Notify all personnel in area of equipment start before jogging any equipment.

---

5. Ensure motor control center and field disconnects are on, and use manual switch controls and computer controls to jog the following equipment for free rotation:

• Transport Blower	M08
• Day Bin Circulating Fan	M16
• Bin Activator	M18
• Weight Feeder Drives	M04A, M05A
• Dry Blend Rotary Valve	M04
• Screen Feed Rotary Valve	M22
• Dry Blend Screener	M07
• Bag House Rotary Valve	V35.

6. Enter a set point of 235 °F and control mode to AUTO for TIC-V33, see graphic 5.

7. Ensure weight feeder and day bin load cells are free of debris and any material/ice buildup.

8. Ensure general area is clean and free of debris.

9. Inspect day bin vent dryer through glass inspection port and ensure that the dryer is filled with nonexpended desiccant, as noted by its blue-purple color.

10. Ensure field instrumentation is secure and undamaged.

11. Ensure day bin pressure relief valve is free by raising it several inches.

12. Ensure day bin filter discharge vents are closed.

F. PREPARE LIQUID WASTE FEED SYSTEM

1. Align valves for recirculation per Step 1 of the CHECKSHEET, Section F, Liquid Waste Feed System.

2. Ensure breaker disconnects for waste feed pump P-102-1 and mixer pump/rotation motor P-102-3 are on at 241-AP Tank Farm Control Room.

3. Ensure mixer pump rotation motor was prepared for startup per TO-390-065.

4. Verify proper jumper placement on 272-AW routing board within 102-02D, and 102-02A pits for allowing recirculation back into tank AP-102 per Figure 1 in CHECKSHEET, Section F, Liquid Waste Feed System.

5. Notify 241-AP Tank Farm Control Room, Evaporator Control Room, and CASS 2750-E personnel that TGE will be cycling on and off the waste feed pump and mixer pump.

6. Ensure no leak detection alarms are in for AP-102 tank.

7. Ensure AP-102 tank ventilation is operating.

8. Ensure there are no AP-102 alarms nor interlocks bypassed.

9. Complete Recirculation Setup in CHECKSHEET and obtain approval from supervision.

10. Start waste feed pump P-102-1 and run for approximately 10 sec to confirm proper operation, see graphic 2.

11. If not running, start mixer pump P-102-3, then rotation motor RM-102-3, and run both for approximately 10 sec to confirm proper operation, see graphic 2.

12. Align valves per Prestart Setup section of CHECKSHEET.

G. PREPARE WATER FEED SYSTEM

1. Ensure valves are aligned within TGE water service building to allow flow of raw water to TGE per Figure 2 in CHECKSHEET, Section G, Raw Water Feed System.

2. Ensure sanitary water hose is not connnected to the raw water line.

9011785059010

G. PREPARE WATER FEED SYSTEM (Cont.)

3. Ensure water service building is clean, free of debris, has no indication of line leakages, and the heating system is operating if applicable.

4. Confirm pressure in raw water and sanitary water line pressure are above 100 psig per gages in line noted on Figure 2, and that remaining instrumentation is secure and undamaged.

5. Align valves per CHECKSHEET, Section G, Raw Water Feed System.

6. Ensure breaker is on for grout clearing pump F03 and jog to ensure free rotation.

7. Ensure area of raw water piping is clean and free of debris, with no apparent indication of line leakage.

H. PREPARE PUMP/MIXER SYSTEM

1. Ensure breakers are on and jog the following equipment to ensure free rotation as noted by the red running signal obtained on the graphic screen:

EQUIPMENT	NUMBER	GRAPHIC
LCT Agitator	W02	3
Sump Pumps	W07A, B, & W08	3
LCT Pump	W03	3
Grout Mixer	W05	4
Grout Pump	W06	4
Surge Tank Agitator	W10	4

CAUTION

Do not run equipment for more than a few seconds as damage to internal components may occur.

2. Place controllers in MANUAL to close modulating valves LV-W02 and FV-W06.

3. Position flow valves FV-F02 and FV-W30 to B-C to switch from A-C to A-B.

H. PREPARE PUMP/MIXER SYSTEM (Cont.)

4. Align valves per CHECKSHEET, Section H, Pump/Mixer System.

5. Inspect LCT/mixer module with video cameras to ensure area is clean, free of debris, and with no apparent leaks.

I. PREPARE DECON/pH ADJUSTMENT SYSTEM

1. Open raw water valve HV-183 and fill decon tank F01 to approximately 95%, see graphic 7 and/or local level indicator.

2. Align valves per CHECKSHEET, Section I, Decon/pH Adjustment System.

3. Ensure breaker disconnect is on for following equipment.

EQUIPMENT	NUMBER
Decon Tank Heater	F05
Decon Tank Agitator	F06
pH Adjustment Tank Agitator	F09
Decon Pump	F02
pH Adjustment Pump	R08

4. Jog agitators and pumps to ensure free rotation, see graphic 7.

5. Ensure pH adjustment dike drain and area are free of debris and that there is no indication of leakage.

J. PREPARE STANDBY GENERATOR SYSTEM

1. Inspect diesel tank level and notify supervision to fill if necessary.

2. Ensure area is clean and free of debris with no apparent oil and diesel leaks.

3. Ensure all generator field instrumentation is secure and undamaged.

4. Complete STARTUP PREPARATION CHECKSHEET, Section J, Standby Generator System.

9011178509 12

K. PREPARE PIH/VAULT INTERFACE SYSTEMS

1. Verify proper cabling between vault and PIH and request Maintenance to install any cabling not attached per Figure 3 of the STARTUP PREPARTION CHECKSHEET, Section K, PIH/Vault Interface Systems.

2. Ensure protective caps are in place for all connections not attached with cables.

3. Ensure PIH breaker disconnects for HVAC and power panel are ON with all other disconnects OFF.

L. COMPLETE STARTUP PREPARATION CHECKSHEET

1. Ensure campaign number is recorded on each page of the STARTUP PREPARATION CHECKSHEET.

2. Notify supervision if equipment fails to rotate freely or is damaged, or if unable to verify a CHECKSHEET item.

3. Note any unusual conditions on the COMMENT section of CHECKSHEET.

4. Pass completed CHECK SHEET to supervision for approval, and file approved copy in Campaign Log.

M. COMPLETE GROUT FORMULATION DATA SHEET

1. Transfer data from supervision (via process memos, internal letters, etc.) to a GROUT FORMULATION DATA SHEET.

2. When completed, pass to supervision for approval, and file approved SHEET in Campaign Log.

STARTUP PREPARATION CHECKSHEET

GROUT CAMPAIGN #_____

Operator(s) shall record their initials and date on lines when they have verified step.

Section A.	**COMPUTER SYSTEM**	OPERATOR
1.	CPU 1, 2, and 3 powered up and on-line	_____
2.	CPU key switches set	_____
3.	RPU powered up and on-line	_____
4.	RPU key switches set	_____
5.	I/O racks (Control Room) powered up and on-line	_____
6.	I/O racks (Decon Module) powered up and on-line	_____
7.	I/O racks (Motor Pit) powered up and on-line	_____
8.	I/O racks (Ventilation Module) powered up and on-line	_____
9.	I/O racks (PIH) powered up and on-line	_____
10.	CIMSTARS 1, 2, 3, and 4 key switches set	_____
11.	CIMSTARS 1, 2, 3, and 4 powered up	_____
12.	System monitors 1, 2, 3, and 4 indicate operator menu	_____
13.	Graphic monitors 1, 2, 3, and 4 indicate graphic screen	_____
14.	Alarm and CASS/LCCS printers powered up	_____
15.	CASS/LCCS terminal and modem powered up	_____
16.	Printer ribbons adequate and paper loaded	_____
17.	TGE uninterruptable power supply on-line	_____
18.	PIH uninterruptable power supply on-line	_____
19.	Emergency controller set in AUTO or FWD	_____

STARTUP PREPARATION CHECKSHEET

GROUT CAMPAIGN #_____

Section B. **INSTRUMENT AIR SYSTEM**

1. Valve Lineup List

VALVE NUMBER	DESCRIPTION	POSITION	OPERATOR
HV-109	System vent	CLOSE	_____
HV-110	A10 isolation	OPEN	_____
HV-113	Receiver tank A05 drain	CLOSE	_____
HV-114	Air receiver supply isolation	OPEN	_____
HV-115	R-001 supply isolation	OPEN	_____
HV-116	R-001 discharge	OPEN	_____
HV-117	R-002 supply isolation	CLOSE	_____
HV-118	R-002 discharge	CLOSE	_____
HV-125	Control Room work bench air	CLOSE	_____
HV-500	A04 particualte filter drain	CLOSE	_____
HV-501	Sol. particulate filter drain	CLOSE	_____
HV-109	A04 particulate filter vent	CLOSE	_____
FV-A03	Separator blow down control	CLOSE	_____
PSV-A01	A05 pressure relief	NOT GAGGED	_____
PSV-A02	Distributor pressure relief	NOT GAGGED	_____
PSV-A05-1	A02 pressure relief	NOT GAGGED	_____
PSV-A05-2	A02 pressure relief	NOT GAGGED	_____
PSV-A18-1	A01-A compressor relief valve	NOT GAGGED	_____
PSV-A18-2	A01-B compressor relief valve	NOT GAGGED	_____

3. Area clean and free of debris _____

4. Dry fan screen clear of debris _____

5. Air compressors' lobe caps in place _____

6. Air compressors motor disconnects (Field) ON _____

7. Air receiver blown down/not pressurized _____

STARTUP PREPARATION CHECKSHEET

GROUT CAMPAIGN #_____

Section C. **VENTILATION SYSTEM**

1. Valve Lineup List

VALVE NUMBER	DESCRIPTION	POSITION	OPERATOR
HV-230	Exhaust Train A isolation	OPEN	_____
HV-231	Exhaust fan inlet test port isolation	CLOSE	_____
HV-232	Exhaust fan outlet test port isolation	CLOSE	_____
HV-233	Vent	CLOSE	_____
HV-240	Exhaust Train B isolation	OPEN	_____
HV-241	Exhaut fan inlet test port isolation	CLOSE	_____
HV-242	Exhaust fan outlet test port isolation	CLOSE	_____
HV-243	Vent	CLOSE	_____
HV-280	Chilled water tank inlet	OPEN	_____
HV-281	Chilled water tank drain	CLOSE	_____
HV-282	Chilled water pump suction	OPEN	_____
HV-283	PI-V40 isolation	OPEN	_____
HV-284	Chilled water pump discharge	OPEN	_____
HV-285	Chiller inlet	OPEN	_____
HV-286	PI-V38 isolation	OPEN	_____
HV-287	PI-V35 isolation	OPEN	_____
HV-288	Chiller outlet	OPEN	_____
HV-289	Cooler V26 outlet	OPEN	_____
HV-290	Cooler V27 outlet	OPEN	_____
MN-V01	Manifold valve assembly PDISH-V01: Low pressure side isolation	OPEN	_____
	High pressure side isolation	OPEN	_____
	Equalizer	CLOSE	_____

STARTUP PREPARATION CHECKSHEET

GROUT CAMPAIGN #_____

Section C. **VENTILATION SYSTEM (Cont.)**

1. Valve Lineup List

VALVE NUMBER	DESCRIPTION	POSITION	OPERATOR
MN-V03	Manifold valve assembly PDIT-V03: Low pressure side isolation	OPEN	_____
	High pressure side isolation	OPEN	_____
	Equalizer	CLOSE	_____
MN-V06	Manifold valve assembly PDIT-V06: Low pressure side isolation	OPEN	_____
	High pressure side isolation	OPEN	_____
	Equalizer	CLOSE	_____
MN-V08	Manifold valve assembly PDIT-V08: Low pressure side isolation	OPEN	_____
	High pressure side isolation	OPEN	_____
	Equalizer	CLOSE	_____
MN-V10	Manifold valve assembly FIT-V-10: Low pressure side isolation	OPEN	_____
	High pressure side isolation	OPEN	_____
	Equalizer	CLOSE	_____
MN-V11	Manifold valve assembly PDISH-V11: Low pressure side isolation	OPEN	_____
	High pressure side isolation	OPEN	_____
	Equalizer	CLOSE	_____
MN-V13	Manifold valve assembly PDIT-V13: Low pressure side isolation	OPEN	_____
	High pressure side isolation	OPEN	_____
	Equalizer	CLOSE	_____
MN-V16	Manifold valve assembly PDIT-V16: Low pressure side isolation	OPEN	_____
	High pressure side isolation	OPEN	_____
	Equalizer	CLOSE	_____

STARTUP PREPARATION CHECKSHEET

GROUT CAMPAIGN #_____

Section C. **VENTILATION SYSTEM (Cont.)**

1. Valve Lineup List

VALVE NUMBER	DESCRIPTION	POSITION	OPERATOR
MN-V18	Manifold valve assembly PDIT-V18:		
	Low pressure side isolation	OPEN	_____
	High pressure side isolation	OPEN	_____
	Equalizer	CLOSE	_____
MN-V39	Manifold valve assembly FISL-V39:		
	Low pressure side isolation	OPEN	_____
	High pressure side isolation	OPEN	_____
	Equalizer	CLOSE	_____

2. Area clean and free of debris _____
3. Bird screens on air inlet ducts free of debris _____
4. Instrumentation secure/undamaged _____
5. Insulation and heat tracing secure _____
6. Chilled water tank V21 filled _____
7. Chilled water pump rotates freely _____

STARTUP PREPARATION CHECKSHEET

GROUT CAMPAIGN #_____

Section D. **ADDITIVES SYSTEM**

1. Valve Lineup List

VALVE NUMBER	DESCRIPTION	GRAPHIC	POSITION	OPERATOR
FV-R01	Additive block and bleed to sump	6	C-B	_____
FV-R05	Additive feed	6	CLOSE	_____
HV-175	BFP test point	N/A	CLOSE	_____
Fluidizer System				
HV-153	Fill connection isolation	N/A	CLOSE	_____
HV-154	Pump inlet	N/A	CLOSE	_____
HV-155	PI-R07 isolation	N/A	OPEN	_____
HV-156	PI-R07 test point	N/A	CLOSE	_____
HV-188	Raw water input	N/A	CLOSE	_____
FV-R08	Pump outlet	6	CLOSE	_____
Tributyl Phosphate System				
HV-160	Fill connection isolation	N/A	CLOSE	_____
HV-161	Pump inlet	N/A	CLOSE	_____
HV-162	PI-R17 isolation	N/A	OPEN	_____
HV-163	PI-R17 test point	N/A	CLOSE	_____
HV-187	Raw water input	N/A	CLOSE	_____
FV-R18	Pump outlet	6	CLOSE	_____
Set Regulator System				
HV-167	Fill connection isolation	N/A	CLOSE	_____
HV-168	Pump inlet	N/A	CLOSE	_____
HV-169	PI-R27 isolation	N/A	OPEN	_____
HV-170	PI-R27	N/A	CLOSE	_____
HV-186	Raw water input	N/A	CLOSE	_____
FV-R28	Pump outlet	6	CLOSE	_____

9011170586 9

STARTUP PREPARATION CHECKSHEET

GROUT CAMPAIGN #_____

Section D. ADDITIVES SYSTEM (Cont.)	OPERATOR
2. Pumps' AC drive RESET buttons pressed	_____
3. Instrumentation on-line/secure	_____
4. Any indication of leakage examined/repaired	_____
5. Area clean and free of debris	_____

STARTUP PREPARATION CHECKSHEET

GROUT CAMPAIGN #_____

Section E. **DRY BLEND SYSTEM**

1. Valve Lineup List

VALVE NUMBER	DESCRIPTION	GRAPHIC	POSITION	OPERATOR
Dry Blend Transfer Subsystem				
M03	Day bin discharge valve	N/A	OPEN	_____
M12	Transfer conveyor isolation valve	N/A	CLOSE	_____
M15	SS mixer isolation valve	5	CLOSE	_____
HV-305	Screen feed rotary valve bypass	N/A	TBD	_____
BF-307	Transport truck chute vacuum butterfly valve	N/A	CLOSE	_____
BF-308	Day bin circulating fan inlet butterfly valve	N/A	100% OPEN	_____
Dust Collection Baghouse Subsystem				
HV-228	V-33 supply isolation	N/A	OPEN	_____
HV-229	V-33 discharge isolation	N/A	OPEN	_____
HV-306	Rotary valve drain	N/A	OPEN	_____
MN-V55	Manifold valve Assembly PDIT-V55: Low pressure isolation	N/A	OPEN	_____
	High pressure isolation	N/A	OPEN	_____
	Equalizer	N/A	CLOSE	_____
MN-V56	Manifold valve assembly FIT-V56: Low pressure isolation	N/A	OPEN	_____
	High pressure isolation	N/A	OPEN	_____
	Equalizer	N/A	CLOSE	_____

STARTUP PREPARATION CHECKSHEET

GROUT CAMPAIGN #_____

Section E. DRY BLEND SYSTEM (Cont.)	OPERATOR
2. Tramp material collection drum in place	_____
3. TIC-V33 heater set point entered	_____
4. Weigh feeder and day bin load cells free of debris/ice	_____
5. Area clean and free of debris	_____
6. Day bin vent dryer filled with nonexpended desiccant	_____
7. Instrumentation secure/undamaged	_____
8. Day bin pressure relief/manway hatch free	_____
9. Day bin vent filter vents closed	_____

9011785092 2

STARTUP PREPARATION CHECK SHEET PAGE 10/18

GROUT CAMPAIGN # _____

Section F. LIQUID WASTE FEED SYSTEM

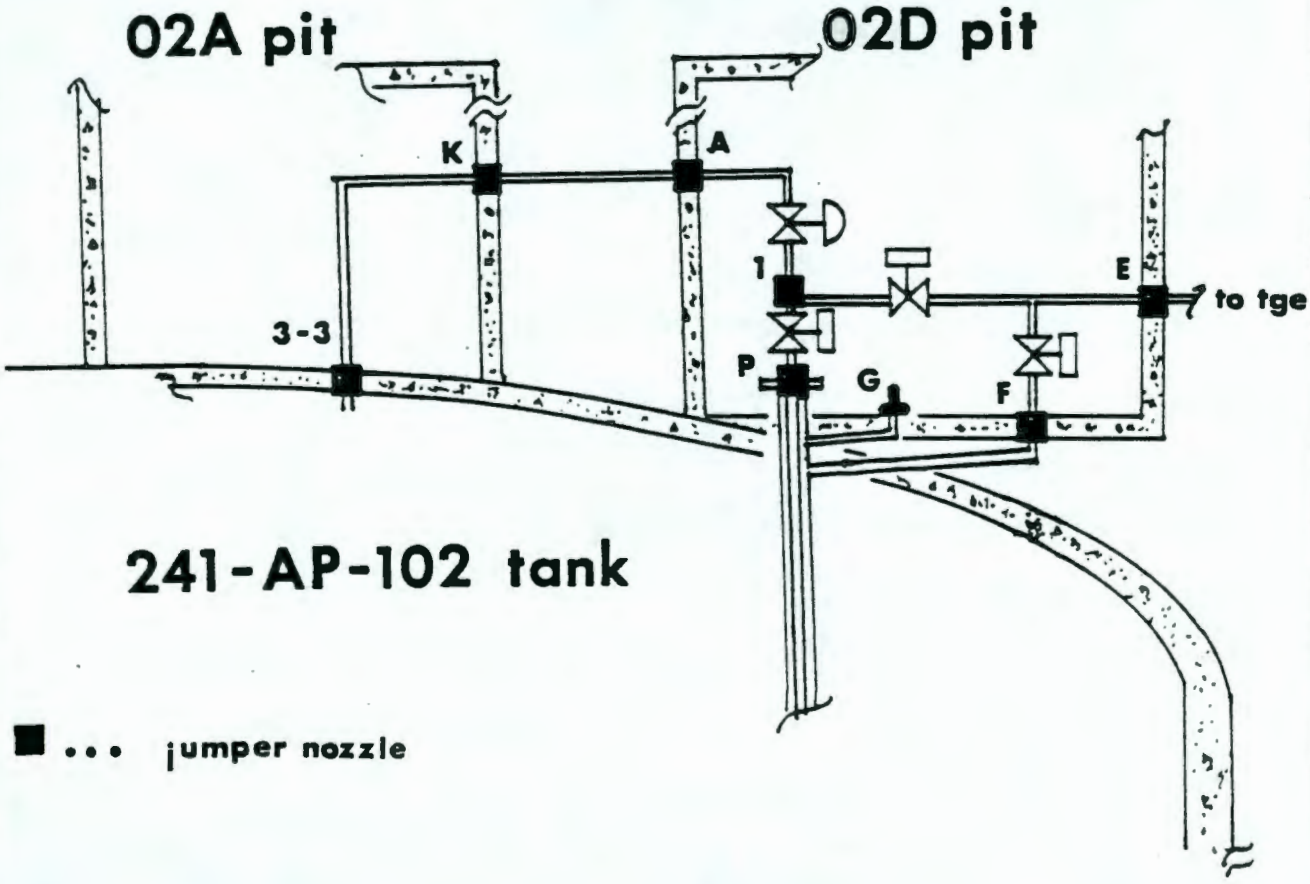

FIGURE 1 102-AP JUMPERS

STARTUP PREPARATION CHECKSHEET

GROUT CAMPAIGN #_____

Section F. **LIQUID WASTE FEED SYSTEM (Cont.)**

Recirculation Setup for Pump Jogging

1. Valve Lineup List

VALVE NUMBER	DESCRIPTION	GRAPHIC	POSITION	OPERATOR
DOV-622-1	Recirculation control	2	0% CLOSE	_____
POV-622-2	Pump discharge	2	OPEN	_____
POV-622-3	Waste feed supply	2	CLOSE	_____
POV-622-4	Supply line drain	2	OPEN	_____
FV-W01	Waste feed isolation	3	CLOSE	_____

2. Motor control center disconnects ON for all motors _____
3. Jumper routing confirmed per Figure 1 _____
4. CASS (2750E), AP Tank Farm, and Evaporator personnel notified _____
5. Leak detection in pits 02A and 02D operable _____
6. Tank 241-AP-102 ventilation operating _____
7. Alarms, interlock bypasses examined with no effects _____

Supervision approval _____ Date _____

Prestart Setup

8. Valve Lineup List

VALVE NUMBER	DESCRIPTION	GRAPHIC	POSITION	OPERATOR
DOV-622-1	Recirculation control	2	100% CLOSE	_____
POV-622-2	Pump discharge	2	CLOSE	_____
POV-622-3	Waste feed supply	2	CLOSE	_____
POV-622-4	Supply line drain	2	OPEN	_____
FV-W01	Waste feed isolation	3	CLOSE	_____

9. Waste feed pump P-102-1 OFF _____

9011785092 4

STARTUP PREPARATION CHECK SHEET PAGE 12/18

GROUT CAMPAIGN # _____

Section G. RAW WATER FEED SYSTEM

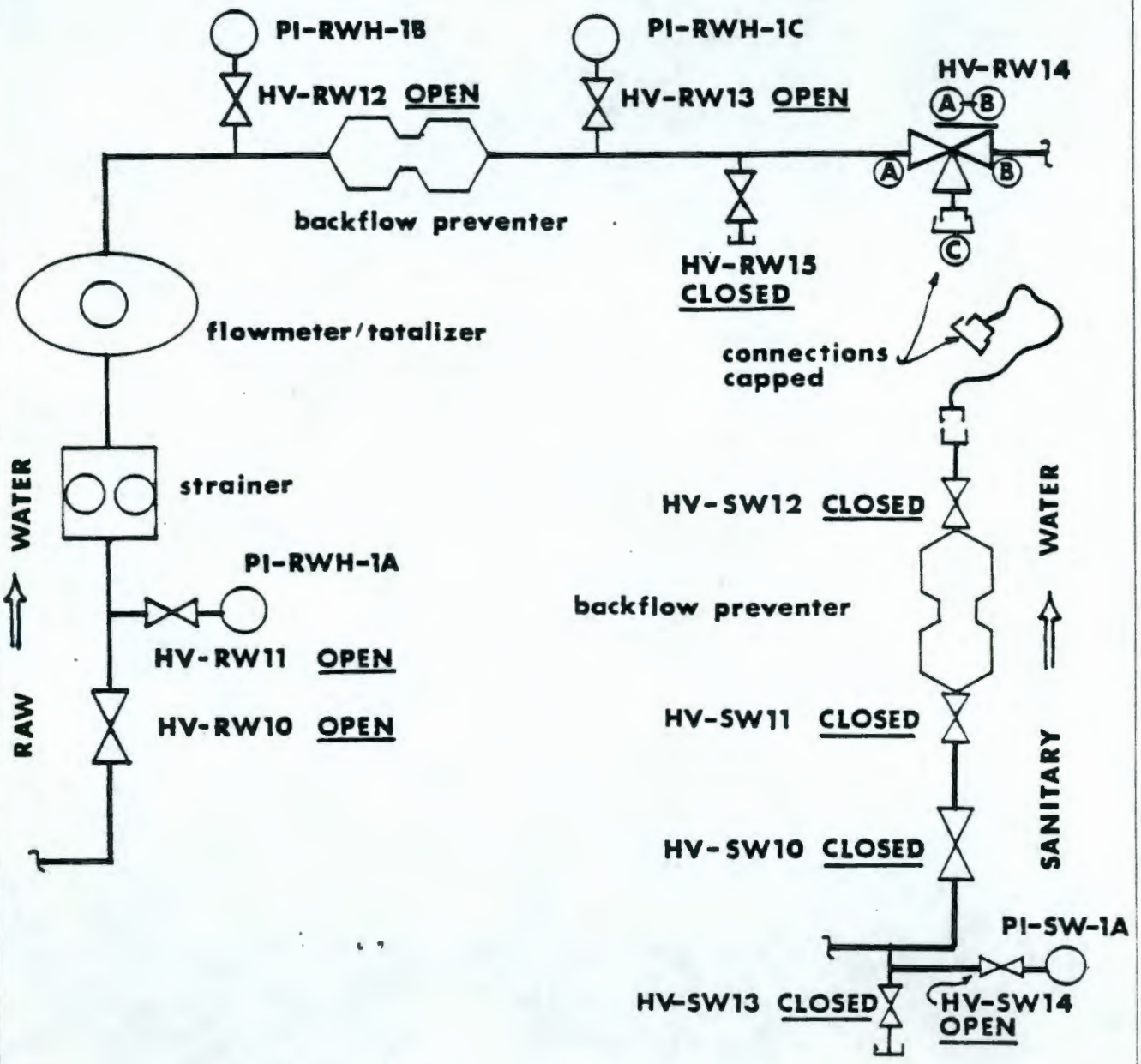

FIGURE 2 RAW WATER PIPING

STARTUP PREPARATION CHECKSHEET

GROUT CAMPAIGN #_____

Section G. **RAW WATER FEED SYSTEM (Cont.)**

1. Valve Lineup List

VALVE NUMBER	DESCRIPTION	GRAPHIC	POSITION	OPERATOR
HV-176	Raw water supply	N/A	OPEN	_____
HV-177	PT-H06 isolation	N/A	OPEN	_____
HV-178	PT-H06 test point	N/A	CLOSE	_____
HV-180	Flush to Isolok sampler	N/A	CLOSE	_____
HV-181	Clearing pump disch. bleed	N/A	CLOSE	_____
HV-183	Raw water to decon tank	N/A	CLOSE	_____
HV-184	Raw water hose station	N/A	CLOSE	_____
HV-185	Raw water to pH adj. tank	N/A	CLOSE	_____
HV-186	Raw water to set reg. tank	N/A	CLOSE	_____
HV-187	Raw water to TBP tank	N/A	CLOSE	_____
HV-188	Raw water to fluidizer tank	N/A	CLOSE	_____
HV-189	BFP test	N/A	CLOSE	_____
HV-194	BFP test	N/A	CLOSE	_____
HV-246	Raw water to sampler	N/A	CLOSE	_____
HV-253	PI-F13 isolation	N/A	CLOSE	_____
HV-254	PI-F13 vent	N/A	CLOSE	_____
HV-257	Decon to Grout line	N/A	CLOSE	_____
HV-259	Raw water to mixer inlet	N/A	CLOSE	_____
HV-260	Decon/raw water to bubbler	N/A	CLOSE	_____
HV-261	Decon/raw water to bubbler	N/A	CLOSE	_____
HV-262	Decon/raw water to bubbler	N/A	CLOSE	_____
HV-275	Floor spray nozzle isol.	N/A	CLOSE	_____
HV-276	Floor spray nozzle isol.	N/A	CLOSE	_____
HV-277	Floor spray nozzle isol.	N/A	CLOSE	_____
HV-296	Strainer to blowdown valve	N/A	CLOSE	_____
HV-297	Raw water to surge tank bub.	N/A	CLOSE	_____
HV-298	Deluge spray nozzle isol.	N/A	CLOSE	_____
HV-299	Deluge spray nozzle isol.	N/A	CLOSE	_____

STARTUP PREPARATION CHECKSHEET

GROUT CAMPAIGN #_____

Section G. **RAW WATER FEED SYSTEM (Cont.)**

1. Valve Lineup List

VALVE NUMBER	DESCRIPTION	GRAPHIC	POSITION	OPERATOR
FV-F04	Decon tank outlet	7	CLOSE	_____
FV-F05	Decon/raw water to LCT	7	CLOSE	_____
FV-F06	Decon to spray nozzles	7	CLOSE	_____
FV-F08	Raw water to sprays	7	CLOSE	_____
FV-F10	Decon to sump sprays	7	CLOSE	_____
FV-H04	Raw water to decon pump	7	CLOSE	_____
FV-H05	Raw water to Grout line clearing pump	7	CLOSE	_____

2. Sanitary water disconnected from raw water line _____

3. Raw water service building area clean, free of debris, heating operable if applicable, with no apparent piping leakage _____

4. Satisfactory raw and sanitary water pressure and instrumentation secure _____

5. TGE decon/raw water area clean, free of debris, with no apparent pipe leakage _____

6. Grout clearing pump rotates freely _____

STARTUP PREPARATION CHECKSHEET

GROUT CAMPAIGN #_____

Section H. PUMP/MIXER SYSTEM

1. Valve Lineup List

VALVE NUMBER	DESCRIPTION	GRAPHIC	POSITION	OPERATOR
FV-V01	Decon to liquid feed	3	A-C	_____
FV-F02	Liquid feed line	3	A-B	_____
FV-F03	Decon to surge tank spray	3	A-C	_____
FV-H01	Grout clearing block/bleed	4	B-C	_____
LV-W02	LCT level	3	CLOSE	_____
FV-W06	Liquid feed	4	CLOSE	_____
FV-W30	Grout pump discharge	4	A-B	_____
FV-W31	Grout line	4	A-C	_____
FV-W40	LCT recirculation	3	A-C	_____
FV-W43	Grout pump drain	4	CLOSE	_____

2 Area clean, free of debris, with no apparent leaks _____

3. Rotating equipment jogged _____

Section I. PREPARE DECON/pH ADJUSTMENT SYSTEM

1. Valve Lineup List

VALVE NUMBER	DESCRIPTION	GRAPHIC	POSITION	OPERATOR
FV-R34	pH adjust outlet	7	CLOSE	_____
HV-183	Raw water to decon tank	N/A	CLOSE	_____

2. Pumps F02 and R08 and agitators rotate freely _____

3. Area clean, free of debris, with no apparent leaks _____

4. Decon tank F01 level approximately 95% with raw water _____

Section J. PREPARE STANDBY GENERATOR SYSTEM

1. Diesel tank filled _____

2. Area clean, free of debris, with no apparent leaks _____

3. Field instrumentation secure and undamaged _____

STARTUP PREPARATION CHECKSHEET

GROUT CAMPAIGN #_____

Section K. PREPARE PIH/VAULT INTERFACE SYSTEMS

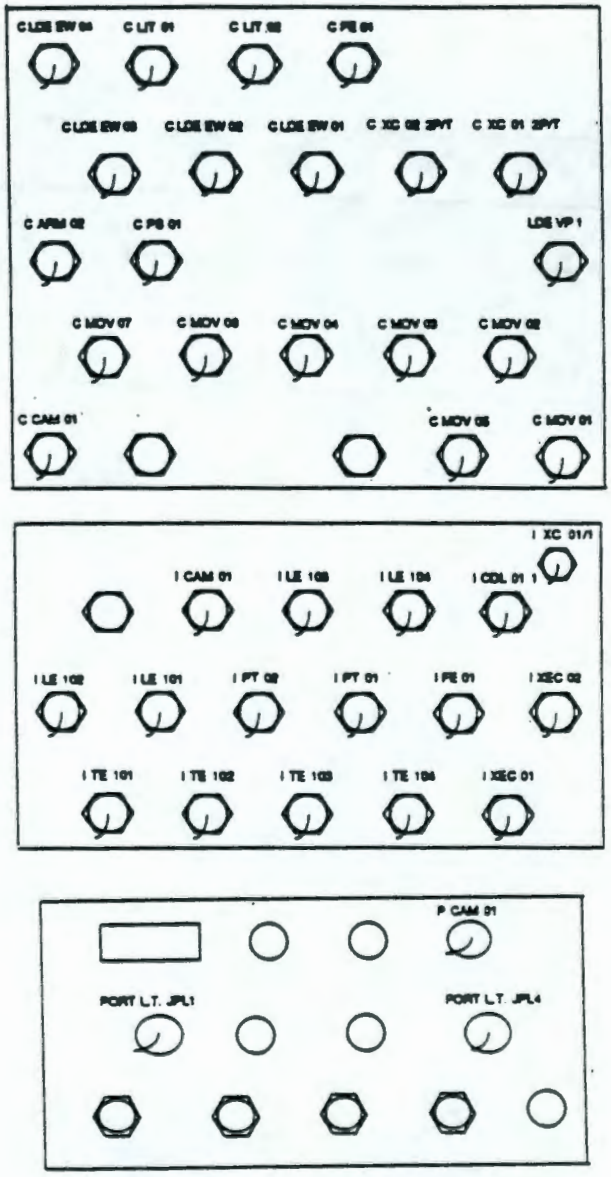

FIGURE 3 PIH CABLING ATTACHMENTS

	OPERATOR
1. Cabling attached with remaining connector caps in place	_____
2. HVAC and power panel breakers ON	_____
3. PIH building HVAC and lighting operable	_____

9011178509 29

STARTUP PREPARATION CHECKSHEET

GROUT CAMPAIGN #_____

COMMENTS

_____

_____

_____

_____

_____

_____

SUPERVISION APPROVAL _____ DATE _____

GROUT FORMULATION DATA SHEET

CAMPAIGN NUMBER _____ VAULT ALIGNMENT _____

1. DRY BLEND FORMULATION

MATERIAL	WEIGHT %
_____	_____
_____	_____
_____	_____
_____	_____

2. WATER GROUT SETTINGS

DRY BLEND FEED RATE (FIC-M04)	_____	lb/min
WASTE FEED FLOW RATE (FIC-W06)	_____	lb/min
LIQUID FEED TO DRY BLEND RATIO	_____	gal/k lb
TRIBUTYL PHOSPHATE TO DRY BLEND RATIO	_____	gal/M lb
FLUIDIZER TO DRY BLEND RATIO	_____	gal/M lb
SET REGULATOR TO DRY BLEND RATIO	_____	gal/M lb

3. WASTE FEED GROUT SETTINGS

DRY BLEND FEED RATE (FIC-M04)	_____	lb/min
WASTE FEED FLOW RATE (FIC-W06)	_____	lb/min
LIQUID FEED TO DRY BLEND RATIO	_____	gal/k lb
TRIBUTYL PHOSPHATE TO DRY BLEND RATIO	_____	gal/M lb
FLUIDIZER TO DRY BLEND RATIO	_____	gal/M lb
SET REGULATOR TO DRY BLEND RATIO	_____	gal/M lb

4. FORMULATION FOR AUTO SHUTDOWN ON RAW WATER

DRY BLEND FEED RATE	_____	lb/min
LIQUID FEED/DRY BLEND RATIO	_____	gal/k lb
RAW WATER FLOW RATE	_____	gpm

7. AUTOMATIC SPRAY

ENABLED _____

8. SPECIAL INSTRUCTIONS

_____

_____

_____

SUPERVISION APPROVAL _____ DATE _____

9011178509 31

1

This page intentionally left blank.

OPERATE TGE COMPUTER SYSTEM

I. SYSTEM DESCRIPTION

This procedure provides instructions for using the general keystrokes for interfacing with the CIMSTAR graphic monitors. All acitivities described in this procedure are performed in the Transportable Grout Equipment (TGE) Control Room or the Portable Instrument House (PIH).

The TGE control system contains all logic, power switching, and interlock operations within a General Electric Series 6 Programmable Logic Controller (PLC). Linked to this PLC as four separate windows, are four General Electric CIMSTAR computers. Each computer contains the identical VUMASTER software for communicating with the PLC and then displaying a graphic representation of process states.

This procedure details the tasks for interfacing with the CIMSTAR graphic monitors. All graphics are displayed on a 19-in. color monitor, called the graphics monitor. Command menus and alarm tables are displayed on the 12-in. monochrome monitor, called the system monitor.

Since each CIMSTAR interfaces directly with the PLC, a change made on one computer will be reflected on all four graphic monitors. The exception here is that the PIH computer cannot change any TGE equipment, valving, or instrumentation parameters. Any attempt to control any TGE variable from the PIH computer will result in a communication error.

Refer to TO-390-107, PREPARE TGE SYSTEMS FOR STARTUP, and TO-390-198, RESPOND TO ALARMS, for additional information and task details on the CIMSTAR computer system.

II. PRESTART CONDITION

The computer systems are prepared for operation per TO-390-107.

III. SAFETY

Applicable Safety Documents - Provisions of Standard Requirements and Procedures, RHO-GM-MA-2, Section 61-02.5 (GEN-0), Radiation Work Permit (RWP) F-28, Industrial Safety Manual, WHC-CM-4.3, Vol 1 and 2, Tank Farm Safety Rules, Accident Prevention Standards, and Emergency Plan for Tank Farms, RHO-MA-111.5, apply to all work performed under this procedure.

ORIGINALLY RELEASED
ODM

9011178509 33

IV. TOOLS AND SUPPLIES

None

V. TABLE OF CONTENTS

		PAGE
A.	MOVE TO AND WITHIN GRAPHIC DISPLAYS	3
B.	START AND STOP EQUIPMENT	4
C.	OPEN AND CLOSE 2-PORT VALVES	4
D.	OPEN AND CLOSE 3-PORT VALVES	5
E.	POSITION MODULATED VALVES	5
F.	CHANGE MODE FOR 2-POSITION SWITCHES	5
G.	CHANGE CONTROLLER PARAMETERS (NON-RAMP)	6
H.	RAMP CONTROLLER PARAMETERS	6

VI. PROCEDURE

A. MOVE TO AND WITHIN GRAPHIC DISPLAYS

WARNING

DO NOT ADJUST ANY PARAMETER VALUES ON GRAPHIC DISPLAY 14, CONTROLLER TUNING. THIS WILL MODIFY CONTROL VALVE ACTION AND INFLUENCE GROUT QUALITY.

NOTE - Steps 1 and 2 describe two methods for moving to a different graphic display using the system monitor.

1. Use OPERATOR MENU.

   a. From the OPERATOR MENU on the system monitor, press the F8 function key.

   b. Using the numeric keys, enter the number of the display you wish to view.

   c. Press the RETURN Key.

2. Simultaneously press the ALT key and a numeric key (from 2-10).

NOTE - The respective graphic display will then appear.

- This method only works for displays 2-10.

- Steps 3 and 4 describe two methods for moving within a graphic display using the system monitor.

3. Use the PROGRESSIVE DATA download cursor.

   a. From the OPERATOR MODE MAIN MENU on the system monitor, press the F10 function key.

   NOTE - This action will highlight the first violet letter programmed for data input on the graphic display, usually A.

   b. To move through the display to the desired download point indicated by a data download letter or number, continue pressing the F10 function key.

   NOTE - On some displays there are more than 26 download points (violet in color), so numbers are also used.

9011785093

A. MOVE TO AND WITHIN GRAPHIC DISPLAY (Cont.)

4. Use QUICK FIND DATA download cursor by simultaneously pressing the ALT key and the desired data download letter or number.

NOTE - The cursor will immediately move to that point and highlight the letter or number.

B. START AND STOP EQUIPMENT

1. Move the download cursor to the violet letter located near the component on the graphic display.

NOTE - Those components with AUTOMATIC and MANUAL modes typically must be switched to MANUAL mode before the normal MANUAL STOP/START download cursor is useful.

2. Start the equipment by pressing F4 function key and number 1, or simultaneously pressing ALT key and F10 function key.

3. Stop the equipment by pressing F4 function key and number 0, or simultaneously pressing ALT key and F9 function key.

C. OPEN AND CLOSE 2-PORT VALVES

1. Move the download cursor to the violet letter located near the valve on the graphic display.

2. Open the valve by pressing F4 function key and number 1, or simultaneously pressing ALT key and F10 function key.

3. Close the valve by pressing F4 function key and number 0, or simultaneously pressing ALT key and F9 function key.

NOTE - The valve will change color to indicate its new position. Red for open and green for closed.

D. OPEN AND CLOSE 3-PORT VALVES

1. Move the download cursor to the violet letter located next to the arrow indicating the desired valve position.

2. Change position of valve port by either pressing the F4 function key and 1, or simultaneously pressing ALT key and F10 function key.

NOTE - The arrows show the possible valve positions.

- The three ports comprising the valve will change colors to indicate the new position. The two ports which are open will be red and the one closed port will be green.

E. POSITION MODULATED VALVES

1. Move the download cursor to the violet letter located next to the OUTPUT value of the controller which controls the valve.

2. Down load a value equal to the desired position of the valve (0 to 100%) by pressing F4 function key, entering the number, and pressing the RETURN key.

NOTE - The valve does not change color to indicate position. However, the valve's position is shown, in some cases, as a numeric indication above or below the valve.

F. CHANGE MODE FOR 2-POSITION SWITCHES

1. Move the download cursor to the violet letter located next to the desired switch.

2. Down load a value of 0 to select the first mode or selection shown, or a value of 1 to select the second choice, by either pressing the F4 function key and then the number or pressing ALT F10 for 1 and ALT F9 for 0.

3. For those switches with only one possible choice (such as AUTO STARTUP or RAMP), down load a value of 1 to activate the indicated function, and a value of 0 to deactivate.

9011785093 7

G. CHANGE CONTROLLER PARAMETERS (NON-RAMP)

1. Change the value of the RATIO, SET POINT, or OUTPUT parameters by moving the download cursor to the small blue box located next to the parameter.

2. Down load the new value for the parameter and verify that the correct value is displayed on the controller by pressing the F4 function key, entering the number, and then pressing the RETURN key.

H. RAMP CONTROLLER PARAMETERS

NOTE - The SET POINT and OUTPUT values of a controller can also be ramped up or down utilizing the RAMP KEYPAD.

- When RAMP is enabled, normal adjusting of SET POINT (SP) and OUTPUT (OUT) through the download function (F4) is disabled.

1. Activate the RAMP KEYPAD by moving the download cursor to the small blue box located next to the RAMP switch of the desired controller.

2. Down load a value of 1 to activate the RAMP KEYPAD and associate its keys with the selected controller by pressing the F4 function key, then enter 1.

3. Press and hold the appropriate key on the RAMP KEYPAD until the value shown on the graphic screen reaches the desired value.

NOTE - There may be as much as a 1-2 sec delay in the response of the value on the screen. However, the value being utilized in the PLC for actual control will change almost instantly.

4. After the desired value is reached, disable the RAMP KEYPAD by down loading a value of 0 at the RAMP download cursor.

NOTE - If not already disabled, an automatic timer will disable the keypad 5 min after being activated.

OPERATE TGE MIXER AND PUMP SYSTEM FROM RAW WATER

I. SYSTEM DESCRIPTION

This procedure provides instructions for starting the grout processing system using raw water from the raw water supply header and then switching to liquid waste feed. Initial startup will use local control (of the flow controller) for the raw water feed. Control will be switched to remote (ratio control) after the process is lined out and before converting to liquid waste feed.

This procedure will be used only according to supervision instructions. Normal startup operations will follow the system shutdown and will be performed per TO-390-142 and only use waste feed.

The major purpose of this procedure is to verify grout processing capability with nonradioactive material after leaving the STANDBY mode.

The operation flow path for startup using this procedure is:

- Precharge waste feed line with raw water
- Start processing water grout
- Stop water-grout processing and switch to waste feed processing.

The process will be controlled and monitored from the Control Room.

Equipment involved:

- Grout Mixer (W05)
- Surge Tank (W09)
- Grout Pump (W06).

II. PRESTART CONDITION

The instrument air system has been started per TO-390-147.

The process ventilation system has been started per TO-390-152.

All systems were prepared per TO-390-107, including the GROUT FORMULATION DATA SHEET.

All Motor Control Center (MCC) controls were set to ON and AUTO positions with RESET buttons pressed on the variable speed drive controllers in the MCC.

III. SAFETY

Applicable Safety Documents - Provisions of Standard Requirements and Procedures, RHO-GM-MA-2, Section 61-02.5 (GEN-0), Radiation Work Permit (RWP) F-28, Industrial Safety Manual, WHC-CM-4.3, Vol 1 and 2, Tank Farm Safety Rules, Accident Prevention Standards, and Emergency Plan for Tank Farms, RHO-MA-111.5, apply to all work performed under this procedure.

IV. TOOLS AND SUPPLIES

Valve Skid
Instrument Skid
GROUT FORMULATION DATA SHEET
TO-390-174, OPERATE TGE SPRAY AND FLUSH SYSTEMS

V. TABLE OF CONTENTS

	PAGE
A. SET UP INITIAL CONDITIONS	3
B. PERFORM RAW WATER PRECHARGE TO LIQUID WASTE FEED LINE	4
C. START GROUT PROCESS	5
D. PERFORM CONVERSION OF DRY BLEND FEED TO LIQUID WASTE FEED	8

VI. PROCEDURE

A. SET UP INITIAL CONDITIONS

1. Verify level in liquid collection tank W01 is less than 200 gal as indicated on LIC-W02, see graphic 3. If not, notify supervision.

2. Open manual valve HV-297 raw water to surge tank bubbler.

3. Establish a drip rate of approximately 1 drip/sec on following dripper flow indicators with the noted valves:

VALVE	INDICATOR
HVC-W02-1	FI-W02-4
HVC-W02-2	FI-W02-5
HVC-W20-1	FI-W20-4
HVC-W20-2	FI-W20-5
HVC-W20-3	FI-W20-6

4. Enter raw water formulation for automatic shutdown per completed GROUT FORMULATION DATA SHEET in Campaign Log, see graphic 17.

5. Enter a set point of 235 °F on TIC-V33, dust collection strip heater controls, see graphic 5.

6. Set TIC-V33 to AUTOMATIC, see graphic 5.

7. Start dust collection strip heater V30, see graphic 5.

8. Verify that baghouse V33 air pulse is enabled when the dust collection strip heater V30 is energized, see graphic 5.

9. Notify 242-A Evaporator Control Room operator, AP Tank Farm Control Room operator, and CASS personnel that the TGE systems will be starting up to produce grout.

10. If directed by supervision, start mixer pump P-102-3 and rotation motor RM-102-3, see graphic 2.

11. Reset all totalizers to zero, see graphic 19.

A. SET UP INITIAL CONDITIONS (Cont.)

12. Verify all totalizers go to zero, see graphic 16.

NOTE - Waste feed flow totalizer FQ-W06 may not reset to zero because of inaccurate flow indication by the magnetic flow meter during no flow.

13. Disable all totalizer resets except FQ-W06, see graphic 19.

14. Set up minitrending as directed by supervision or as appropriate.

15. Set input for FIC-W06 to FE-W06-1 and input for LIC-W20 to LE-W21, see graphic 15.

B. PERFORM RAW WATER PRECHARGE TO LIQUID WASTE FEED LINE

1. Position the following valves as indicated to allow water flow to waste feed line:

VALVE	POSITION	GRAPHIC
FV-H04	OPEN	7
FV-F08	OPEN	7
FV-F01	A-B	3
FV-F02	A-C	3

2. Ensure POV-622-2 is closed and stage valves for waste feed to TGE, see graphic 2.

3. Close DOV-622-1 80%, see graphic 2.

4. Open FV-W01 to backcharge approximately 200-225 gal of water to the liquid waste feed line, see graphic 3. Use flow totalizer FQ-H02 to determine the quantity charged, see graphic 7 or 16.

5. When water has been backcharged, close DOV-622-1 100%, see graphic 2.

6. Close FV-W01, see graphic 3.

B. PERFORM RAW WATER PRECHARGE TO LIQUID WASTE FEED LINE (Cont.)

7. Stop water flow to waste feed line by positioning the following valves:

VALVE	POSITION	GRAPHIC
FV-F01	A-C	3
FV-F02	A-B	3
FV-F08	CLOSE	7
FV-H04	CLOSE	7

8. Monitor LCT/mixer module valve skid with video cameras. Notify supervision of any leaks.

9. Record on Routine Log Sheet amount of backcharged water.

C. START GROUT PROCESS

1. Set dry blend flow controller FIC-M04 to MANUAL mode and adjust the output to 0% motor speed, see graphic 5.

2. Set FIC-M04 set point to flow rate specified for the raw water grout as noted on the GROUT FORMULATION DATA SHEET and leave in MANUAL mode, see graphic 5.

3. Set the input for FIC-W06 to FE-W06-1, see graphic 15.

4. Ensure liquid feed flow controller FIC-W06 is in MANUAL/LOCAL. Ensure FV-W06 is closed by adjusting FIC-W06 output to 100%, see graphic 4.

5. Set liquid feed flow controller FIC-W06 set point and ratio to feed rate and ratio specified for the raw water grout as noted on the GROUT FORMULATION DATA SHEET, see graphic 4.

6. Set grout pump W06 START switch to AUTOMATIC mode, see graphic 4.

7. Set the input for LIC-W20 to LE-W21, see graphic 15.

8. Set surge tank W09 level controller LIC-W20 to MANUAL mode, see graphic 4.

C. START GROUT PROCESS (Cont.)

9. Adjust the manual output on level controller LIC-W20 to 50% output (pump speed), see graphic 4.

10. Set level controller LIC-W20 set point at 28 gal, see graphic 4.

11. Position valve FV-W31 to A-B, see graphic 4.

12. Position the following valves as indicated:

VALVE	POSITION	GRAPHIC
FV-H04	OPEN	7
FV-F08	OPEN	7
FV-F01	A-B	3
FV-F02	B-C	3

13. Set grout mixer W05 speed controller HIC-W12 to 75% output and start grout mixer W05, see graphic 4.

14. Start surge tank agitator W10, see graphic 4.

15. Adjust liquid feed flow controller FIC-W06 manual output to achieve flow rate specified for raw water grout as noted on the GROUT FORMULATION DATA SHEET, see graphic 4.

16. Switch flow controller FIC-W06 to AUTOMATIC mode, see graphic 4.

17. When the level in surge tank W09 reaches the set point of 28 gal, ensure that grout pump W06 starts and level controller LIC-W20 switches to AUTOMATIC mode.

18. Ensure that surge tank W09 level controller LIC-W20 controls the grout pump speed to maintain the level at set point, see graphic 4.

19. If fluidizer is specified in the GROUT FORMULATION DATA SHEET, start fluidizer metering pump R05, see graphic 6.

20. If TBP is specified in the GROUT FORMULATION DATA SHEET, start TBP metering pump R06, see graphic 6.

21. If set regulator is specified in the GROUT FORMULATION DATA SHEET, start set regulator metering pump R07, see graphic 6.

C. START GROUT PROCESS (Cont.)

22. Verify that dry blend is in AUTO mode, see download data point L, graphic 5.

23. Verify FIC-M04 is in MANUAL mode, see graphic 5.

24. Set output on flow controller FIC-M04 to 25% output, see graphic 5.

25. Notify personnel in field, via PAX phone, that dry blend feed equipment will be starting.

26. Start the automatic dry blend system sequence, see graphic 5. Ensure the following actions occur, see download data point M:

    - Mixer isolation valve M15 remains open, see graphic 5
    - Dry blend tramp material screen M07 starts, see graphic 5
    - Screen feed rotary valve M22 starts, see graphic 5
    - Bin activator M18 starts, see graphic 5
    - Dry blend rotary valve M04 starts, see graphic 5
    - Drag chain M0-5 starts, see graphic 5
    - Dry blend weigh feeder M05-A starts, see graphic 5.

27. When flow rate is within 50-75 lb/min of set point, switch FIC-M04 to AUTOMATIC mode, see graphic 5.

28. Start baghouse rotary valve V-35, see graphic 5.

29. Ensure the following dry blend flow rates are correct per GROUT FORMULATION DATA SHEET:

    - FI-M04 dry blend flow rate
    - FI-W06 liquid feed flow rate
    - FI-R06/R16/R26 additive flow rate(s).

30. Ensure differential pressure indicator PDI-M08 reads between 2-4 in. water column, see graphic 8. If reading is not between 2-4 in., manually adjust screen feed rotary valve bypass damper valve HV-305.

31. Ensure that FI-V56 airflow rate reads between 100-200 ACFM, see graphic 5. If reading is not between 100-200 ACFM, manually adjust dust collection baghouse damper valve HV-229.

D. PERFORM CONVERSION OF DRY BLEND FEED TO LIQUID WASTE FEED

CAUTION

If a problem develops which prevents a process restart within 8 min, discontinue this procedure and perform a system raw water flush per TO-390-174. This is necessary to prevent grout from setting up in the equipment and lines.

1. Stop the dry blend feed, see download data point M, graphic 5. Ensure dry blend feed stops.

2. Set level controller LIC-W20 to MANUAL mode. Adjust the output to 50% pump speed, see graphic 4.

NOTE - Grout pump W06 will stop.

3. Set liquid feed flow controller FIC-W06 set point to feed rate and ratio specified for the raw water grout as noted on the GROUT FORMULATION DATA SHEET, see graphic 4.

4. Position the following valves as indicated:

VALVE	POSITION	GRAPHIC
FV-F02	A-B	3
FV-F01	A-C	3
FV-H04	CLOSE	7
FV-F08	CLOSE	7

5. Open valve POV-622-2, see graphic 2.

6. Adjust valve DOV-622-1 to 40% closed and ensure valves are staged to TGE, see graphic 2.

7. Start waste feed pump P-102-1, see graphic 2.

8. Open valve FV-W01, see graphic 3.

9. Adjust controller HIC-622-1 output, see graphic 2, until waste feed header pressure is approximately 95 psig as indicated on PI-W05, see graphic 4.

10. Reset totalizer FQ-W06 to zero, see graphic 19.

D. PERFORM CONVERSION OF DRY BLEND FEED TO LIQUID WASTE FEED (Cont.)

11. Reset the set point for dry blend feed controller FIC-M04 to flow rate specified for liquid waste grout as noted on the GROUT FORMULATION DATA SHEET, see graphic 5.

12. Set FIC-M04 to MANUAL and adjust output to 30%, see graphic 5.

13. Position FIC-W06 to MANUAL/LOCAL and its set point to 20 gpm, see graphic 4.

14. Adjust output to 30% on FIC-W06. When flow rate is near set point, switch FIC-W06 to AUTOMATIC, see graphic 4.

15. Start dry blend feed system, see graphic 5. When flow rate is within 50-75 lb/min of set point, switch FIC-M04 to AUTOMATIC to obtain the desired set point. Ensure liquid feed flow controller FIC-W06 maintains proper set point and FIC-W06 goes to REMOTE mode, see graphic 4.

16. When level in surge tank W09 reaches set point of LIC-W20, ensure grout pump W06 starts and level controller LIC-W20 switches to AUTOMATIC mode, see graphic 4.

17. Ensure level controller LIC-W20 controls speed of grout pump W06 to maintain level at set point, see graphic 4.

18. Start baghouse rotary valve V35, see graphic 5.

19. Enable the grout system periodic spray, see graphic 15.

NOTE - Refer to TO-390-174 for more information on periodic spray.

20. Ensure surge tank agitator W10 is on, see graphic 4.

This page intentionally left blank.

OPERATE TGE MIXER AND PUMP SYSTEMS FROM WASTE FEED

I. SYSTEM DESCRIPTION

This procedure provides instructions to start the grout processing system on radioactive liquid waste feed from 241-AP-102 waste feed tank. This is the primary procedure for operating the grout processing system and should always be used when starting from a shutdown mode, unless otherwise directed by supervision.

The operational flow path for startup with this procedure is as follows:

- Precharge waste feed line with water, if line does not contain waste feed
- Initiate waste feed processing.

The precharge will provide approximately 4 min of lag time before actual waste feed contacts the mixer.

The grout process startup is to be accomplished with the liquid feed flow controller and additives flow controllers (where required) in remote control. Prestart conditions will be set such that startup of the dry blend system will initiate the grout production process.

The dry blend system, liquid waste feed system, raw water supply system, additives system (formulation dependent) and the grout process system are involved in this process. Support systems include the process ventilation system and the instrument air system.

The grout process system includes valve skid SK-01, instrument skid SK-02, grout mixer W05, surge tank W09, grout pump W06, all contained within the LCT/mixer module.

The process is operated from the Control Room.

II. PRESTART CONDITION

All systems were prepared per TO-390-107, including the GROUT FORMULATION DATA SHEET.

The instrument air system has been started per TO-390-147.

The process ventilation system has been started per TO-390-152.

All Motor Control Center (MCC) controls are in ON or AUTO positions, with RESET buttons pressed on variable speed drive controllers in MCC.

III. SAFETY

Applicable Safety Documents - Provisions of Standard Requirements and Procedures, RHO-GM-MA-2, Section 61-02.5 (GEN-0), Radiation Work Permit (RWP) F-28, Industrial Safety Manual, WHC-CM-4.3 Vol. 1 and 2, Tank Farm Safety Rules, Accident Prevention Standards, and Emergency Plan for Tank Farms, RHO-MA-111.5, apply to all work performed under this procedure.

IV. TOOLS AND SUPPLIES

GROUT FORMULATION DATA SHEET
TO-390-137, OPERATE TGE MIXER AND PUMP SYSTEM FROM RAW WATER

V. TABLE OF CONTENTS

	PAGE
A. SET UP INITIAL CONDITIONS	3
B. START UP GROUT PROCESS	4

VI. PROCEDURE

A. SET UP INITIAL CONDITIONS

1. Evaluate whether the liquid waste feed line is precharged back to POV-622-3. If not, precharge with necessary amount of water per TO-390-137.

NOTE - If POV-622-4, POV-622-2, or DOV-622-1 are open, then the line has drained back into AP-102 tank.

2. If precharging does not occur, note on Routine Log Sheet in Comment section amount of material estimated in waste feed line.

3. Verify level in liquid collection tank W01 is less than 200 gal as indicated on LIC-W02, see graphic 3. If not, notify supervision.

4. Position the following valves to ensure a drip rate of approximately one drip/sec on the dripper flow indicators:

VALVE	INDICATOR
HVC-W02-1	FI-W02-4
HVC-W02-2	FI-W02-5
HVC-W20-1	FI-W20-4
HVC-W20-2	FI-W20-5
HVC-W20-3	FI-W20-6

5. Enter the raw water formulation for automatic shutdown, per completed GROUT FORMULATION DATA SHEET in Campaign Log, see graphic 17.

6. Enter a set point of 235 °F on TIC-V33, dust collection strip heater controls, see graphic 5.

7. Set TIC-V33 to AUTOMATIC mode, see graphic 5.

8. Start dust collection strip heater V30, see graphic 5.

9. Verify when dust collection strip heater V30 is energized, baghouse V33 air pulse is enabled, see graphic 5.

A. SET UP INITIAL CONDITIONS (Cont.)

10. Position the following valves as indicated:

VALVE	POSITION	GRAPHIC
FV-F02	A-B	3
FV-W40	A-C	3
POV-622-3	OPEN	2
POV-622-4	CLOSE	2

11. Set input for FIC-W06 to FE-W06-1 and input for LIC-W20 to LE-W21, see graphic 15.

12. Notify 242-A Evaporator Control Room operator, Tank Farm Control Room operator, and CASS personnel that TGE systems will be starting up to produce grout.

13. If directed by supervision, start the mixer pump P-102-3 and then the rotation motor RM-102-3, see graphic 2.

14. Reset all totalizers to 0, see graphic 19.

15. Verify all totalizers go to zero, see graphic 16.

NOTE - Waste feed flow totalizer FQ-W06 may not reset to zero because of inaccurate flow indication by the magnetic flow meter during no flow.

16. Disable all totalizer resets, except FQ-W06, see graphic 19.

17. Set up minitrending as directed by supervision.

B. START UP GROUT PROCESS

1. Set dry blend flow controller FIC-M04 to MANUAL control. Set output at 0% speed, see graphic 5.

2. Set FIC-M04 set point at flow rate specified for liquid waste grout as noted in the GROUT FORMULATION DATA SHEET and leave in MANUAL control, see graphic 5.

3. Set liquid feed flow controller FIC-W06 set point to feed rate and ratio specified for liquid waste grout as noted in GROUT FORMULATION DATA SHEET, see graphic 4.

B. START UP GROUT PROCESS (Cont.)

4. Set liquid feed flow rate controller FIC-W06 in MANUAL/LOCAL mode, with an output of 100%, and a set point of 20 gpm, see graphic 4.

5. Set grout pump W06 START switch to AUTOMATIC mode, see graphic 4.

6. Set surge tank W09 level controller LIC-W20 to MANUAL mode, see graphic 4.

7. Adjust manual output on LIC-W20 to 50% output, see graphic 4.

8. Set level controller LIC-W20 set point at 28 gal, see graphic 4.

9. Position valve FV-W31 to A-B, see graphic 4.

10. Open valve POV-622-2, see graphic 2.

11. Adjust DOV-622-1 to 40% closed, see graphic 2.

12. Start waste feed pump P-102-1, see graphic 2.

13. Open valve FV-W01, see graphic 3.

14. Adjust controller HIC-622-1 output, see graphic 2, until waste feed header pressure is approximately 95 psig as indicated on PI-W05, see graphic 4.

15. Reset totalizer FQ-W06 to zero, see graphic 19.

16. Set grout mixer W05 speed controller HIC-W12 at 75% speed, and start grout mixer W05, see graphic 4.

17. Start surge tank agitator W10, see graphic 4.

18. If fluidizer is specified in GROUT FORMULATION DATA SHEET, start fluidizer metering pump R05, see graphic 6.

19. If TBP is specified in GROUT FORMULATION DATA SHEET, start TBP metering pump R06, see graphic 6.

20. If set regulator is specified in GROUT FORMULATION DATA SHEET, start set regulator metering pump R07, see graphic 6.

21. Adjust the output of FIC-W06 to raise the flow to 20 gpm, then place FIC-W06 in AUTOMATIC, see graphic 4.

B. START UP GROUT PROCESS (Cont.)

22. Verify dry blend is in AUTO mode, download point L, see graphic 5.

23. Verify FIC-M04 is in MANUAL mode, see graphic 5.

24. Set output on flow controller FIC-M04 to 25% output, see graphic 5.

25. Notify personnel in field, via PAX phone, that dry blend feed equipment will be starting.

26. Start the automatic dry blend system sequence, see graphic 5. Ensure the following actions occur, see download data point M:

    - Mixer isolation valve M15 remains open, see graphic 5
    - Dry blend tramp material screen M07 starts, see graphic 5
    - Screen feed rotary valve M22 starts, see graphic 5
    - Bin activator M18 starts, see graphic 5
    - Dry blend rotary valve M04 starts, see graphic 5.

27. When flow rate is within 50-75 lb/min of set point, switch FIC-M04 to AUTOMATIC mode, see graphic 5.

28. Start baghouse rotary valve V-35, see graphic 5.

29. Ensure the following dry blend flow rates are correct per GROUT FORMULATION DATA SHEET, see graphic 4:

    - FI-M04 dry blend flow rate
    - FI-W06 liquid feed flow rate
    - FI-R06/R16/R26 additive flow rate(s).

30. Ensure differential pressure indicator PDI-M08 reads between 2-4 in. water column, see graphic 8. If reading is not between 2-4 in., manually adjust screen feed rotary valve bypass damper valve HV-305.

31. Ensure that FI-V56 airflow rate reads between 100-200 ACFM, see graphic 5. If reading is not between 100-200 ACFM, manually adjust dust collection baghouse damper valve HV-229.

32. Enable grout system periodic auto spray, see graphic 15.

START UP/SHUT DOWN TGE INSTRUMENT AIR SYSTEM

I. SYSTEM DESCRIPTION

This procedure provides instructions for startup or shutdown of the instrument air system. Activities described in this procedure are performed at the Decon/Additive Module in the Control Room.

The instrument air system provides filtered and dehumidified air to operate valving and instrumentation at the facility. The system is comprised of two ITT pneumotive oil-less air-cooled compressors working as a tandem/backup system. It also includes a Zurn dual tower desiccant dryer and an air receiver storage tank.

Compressors A01-A and A01-B are cycled back and forth automatically by the programmable logic controller, and as air demands require. Controls exist for starting and stopping only the dual system as a whole. The operators are not required to switch compressors.

The Zurn dryer A02 automatically controls airflow through a dried desiccant bed, recharges desiccant beds, and cycles air flows as appropriate.

The air receiver tank A05 has 400-gal capacity. This tank is designed to maintain a surge capacity of instrument air for smooth instrument operation. It also provides a backup for safe shutdown in the event of a power failure.

Equipment involved:

- Air compressors A01-A and A01-B
- Air dryer A02
- Air receiver tank A05.

II. PRESTART CONDITION

Valves have been aligned and system checked per TO-390-107.

III. SAFETY

Warning - Notify all personnel in Decon/Additive Module to wear appropriate hearing protection before starting compressor.

Applicable Safety Documents - Provisions of Standard Requirements and Procedures, RHO-GM-MA-2, Section 62-02.5 (GEN-0), Radiation Work Permit (RWP) F-28, Industrial Safety Manual, WHC-CM-4.3, Vol 1 and 2, Tank Farm Safety Rules, Accident Prevention Standards, and Emergency Plan for Tank Farms, RHO-MA-111.5, apply to all work performed under this procedure.

IV. TOOLS AND SUPPLIES

None

V. TASK/ACTIVITY INDEX

	PAGE
A. START UP/SHUT DOWN INSTRUMENT AIR COMPRESSOR	3
Start Up Instrument Air Compressor	3
Shut Down Instrument Air Compressor	3

VI. PROCEDURE

A. START UP/SHUT DOWN INSTRUMENT AIR COMPRESSOR

Start Up Instrument Air Compressor

WARNING

NOTIFY ALL PERSONNEL IN DECON/ADDITIVE MODULE TO DON HEARING PROTECTION BEFORE STARTING THE AIR COMPRESSOR.

1. Request field operator to check for the following:
   - Motor disconnects are on for both compressors
   - All protective guards are in place and not interfering with compressor operation.

2. Check with field operator that above items are complete. If a problem exists, notify supervision.

3. Enable air compressor A01, see graphic 15.

Shut Down Instrument Air Compressor

4. Disable air compressor A01, see graphic 15.

This page intentionally left blank.

OPERATE TGE PROCESS VENTILATION SYSTEM

I. SYSTEM DESCRIPTION

This procedure provides instructions for operating the process ventilation system or for the switchover of inlet or exhaust filter trains. Activities described in this procedure are performed in the Control Room.

The Transportable Grout Equipment (TGE) process ventilation system is comprised of two air supply exhaust line systems. Each line system will be referred to hereafter as train, hence the following trains:

- Makeup Air Train A (East Train)
- Makeup Air Train B (West Train)
- Exhaust Air Train A (East Train)
- Exhaust Air Train B (West Train).

Each makeup air train contains an inlet duct with a bird screen, preheater, demister/prefilter, cooler, heater, high efficiency particulate air (HEPA) filter, and damper flow control valve.

Each exhaust air train contains a dual HEPA filter assembly with a test section, damper flow control valve, and exhaust fan. Both exhaust trains discharge through a common stack.

Because the exhaust fans are on the discharge piping side, air is not blown into the liquid collection tank/mixer module, but pulled through it. This maintains a negative air pressure inside the module.

An ancillary Freon-cooled water chiller system is provided to maintain low cooling water temperatures.

Equipment involved:

- Preheaters (V31, V32)
- Demisters/Prefilters (V01, V11)
- Coolers (V26, V27)
- Heaters (V02, V12)
- HEPAs (V03, V06, V08, V13, V16, V18)
- Stack (V10)
- Stack Sampler
- Exhaust Fans (V09, V19).

OFFICIALLY RELEASED
OCM

II. PRESTART CONDITION

The instrument air system has been started up per TO-390-147.

Valves and equipment have been positioned per TO-390-107.

The TGE Environmental Protection personnel have been notified that ventilation system is to be started.

III. SAFETY

Applicable Safety Documents - Provisions of Standard Requirements and Procedures, RHO-GM-MA-2, Section 61-02.5 (GEN-0), Radiation Work Permit (RWP) F-28, Industrial Safety Manual, WHC-CM-4.3, Vol 1 and 2, Tank Farm Safety Rules, Accident Prevention Standards, and Emergency Plan for Tank Farms, RHO-MA-111.5, apply to all work performed under this procedure.

IV. TOOLS AND SUPPLIES

None

V. TABLE OF CONTENTS

	PAGE
A. ENTER SET POINT VALUES	3
B. START UP SYSTEM	3
C. SWITCH INLET TRAINS	4
D. SWITCH EXHAUST TRAINS	5

VI. PROCEDURE

A. ENTER SET POINT VALUES

1. Set the following controllers to AUTOMATIC mode and enter the indicated set point values, see graphics 8, 9, and 10.

CONTROLLER	GRAPHIC	VALUE
TIC-V04	9	40 °F
TIC-V02	9	15 °F
TIC-V54	9 or 10	100 °F
TIC-V14	10	40 °F
TIC-V12	10	15 °F
FIC-V10	8	600 cfm

B. START UP SYSTEM

1. Enable either inlet train A or inlet train B, see graphic 8.

2. Ensure the following actions occur. If they do not, notify supervision.
   - Valve FV-V20 or FV-V21 opens, depending upon the inlet train enabled
   - Valve FV-V05 or FV-V15 opens, depending upon the inlet train enabled.

3. Start the chilled water pump, see graphic 8.

4. Enable either exhaust train A or exhaust train B, see graphic 8.

5. Ensure the following actions occur. If they do not, notify supervision.
   - Preheater V31 or V32 starts, depending upon the inlet train enabled
   - Heater V02 or V12 starts, depending upon the inlet train enabled
   - Valve FCV-V09 or FCV-V19 should adjust, depending upon the exhaust train enabled
   - Exhaust Fan V09 or V19 should start, depending upon the exhaust train enabled.

B. START UP SYSTEM (Cont.)

6. Check displayed values for the following instruments. If any values are too close to set points, switch trains and notify supervision.

INSTRUMENT	GRAPHIC	VALUE
PDI-V03/V13	8	2.0 in. WG
PDI-V06/V16	8	4.0 in. WG
PDI-V07/V17	8	5.0 in. WG
PDI-V08/V18	8	1.0 in. WG
RI-V24-1/V24-2	11	100.0 mR/h

7. Position HV-284 to obtain 20 gpm as noted on local FISL-V39.

8. Notify RPT that ventilation system has started up.

   a. Request RPT to verify that stack sampler has started.

   b. If stack sampler has not started, notify supervision and request RPT to start up stack sampler.

C. SWITCH INLET TRAINS

1. Enable desired inlet train, see graphic 8.

2. Ensure the following actions occur. If they do not, notify supervision.

   - Valve FV-V20 or FV-V21 opens, depending upon the inlet train enabled
   - Preheater V31 or V32 starts
   - Heater V02 or V12 starts
   - Valve FV-V05 or FV-V15 opens, depending upon the inlet train enabled.

3. Disable the inlet train which is no longer desired, see graphic 8.

4. Check displayed value for pressure drop across inlet HEPA PDI-V03 or PDI-V13 as appropriate. If the value is too close to the alarm set point, notify supervision.

D. SWITCH EXHAUST TRAINS

1. Enable desired exhaust train, see graphic 8.

2. Ensure the following actions occur. If they do not, notify supervision.
   - Valves FCV-V09 and FCV-V19 are modulating
   - Exhaust fans V09 and V19 are running
   - Either valve FCV-V09 or FCV-V19 (whichever is in the disabled train) should become disabled.

3. Disable the exhaust train which is no longer desired, see graphic 8.

4. Check displayed values for the following instruments. If any value is too close to the alarm or interlock set point, notify supervision.

INSTRUMENT	GRAPHIC	VALUE
PDI-V06/V16	8	4.0 in. WG
PDI-V07/V17	8	5.0 in. WG
PDI-V08/V18	8	1.0 in. WG
RI-V24-1/V24-2	11	100.0 mR/h

This page intentionally left blank.

SAMPLE TGE LIQUID COLLECTION TANK CONTENTS

I. SYSTEM DESCRIPTION

This procedure provides instructions for sampling TGE liquid collection tank (LCT) W01 contents resulting from the Phosphate Sulphate Waste (PSW) campaign. Sampling can be performed either when grout processing is occurring or while processing is stopped.

Analysis of LCT W01 contents enables determination of the need for treatment before processing or pumping contents from the tank.

Activities described in this procedure are performed primarily in the motor pit.

II. PRESTART CONDITION

To ensure a representative sample, the LCT W01 must contain at least 300 gal.

LCT W02 has been running for at least 15 min.

Special RWP is in place.

Instrument air system is operating per TO-390-147.

Sample labels have been filled out per TO-390-105.

III. SAFETY

Applicable Safety Documents - Provisions of Standard Requirements and Procedures, RHO-GM-MA-2, Section 61-02.5 (GEN-0), Radiation Work Permit (RWP) F-28, Industrial Safety Manual, WHC-CM-4.3 Vol. 1 and 2, Tank Farm Safety Rules, Accident Prevention Standards, and Emergency Plan for Tank Farms, RHO-MA-111.5, apply to all work performed under this procedure.

ORIGINALLY PRINTED
ODM

IV. TOOLS AND SUPPLIES

100-mL Plastic Sample Bottles
Cardboard Cartons
Labels for Sample Bottles
One Pair of Two-Way Radios
French Can
Ice Chest
French Can Lid Opener
TO-390-105, OBTAIN SAMPLE SERIAL NUMBER/MAINTAIN RECORDS - TGE DISPATCHER

V. TABLE OF CONTENTS

	PAGE
A. ALIGN VALVES AND SET UP SYSTEM	3
B. PERFORM LCT SAMPLING	3
Position Sample Bottles	3
Obtain Sample	5
Flush Sampler and Lines	6
Remove Samples	7
FIGURE 1 - ISOLOK STATION CONTROL PANEL	9

VI. PROCEDURE

A. ALIGN VALVES AND SET UP SYSTEM

1. Position the following valves as shown:

VALVE	POSITION	FUNCTION	GRAPHIC
LV-W02	CLOSE	LCT Lever Control	3
FV-W44	A-C	Sample Line Flush Block and Bleed	3
HV-246	CLOSE	Sample Box Spray	N/A
HV-180	CLOSE	Raw Water Supply	N/A
HV-189	CLOSE	BFP Test Point	N/A
HV-194	CLOSE	BFP Test Point	N/A
FV-W42	CLOSE	LCT Drain	3
HV-176	OPEN	Raw Water Supply	N/A
HV-177	OPEN	PT-H06 Isolation	N/A
HV-178	CLOSE	PT-H06 Test Point	N/A
HV-253	OPEN	PI-F13 Isolation	N/A
HV-254	CLOSE	PI-F13 Test Point	N/A

2. Enable Isolok station, see graphic 15.

NOTE - While Isolok station is enabled, the following equipment will be inoperable from the Control Room:
- Valves FV-W40, W02, H04, and F08
- Decon Pump F02
- LCT Pump W03.

B. PERFORM LCT SAMPLING

NOTE - Instructions for maintaining sampling records are found in TO-390-105.

Position Sample Bottles

NOTE - The steps in this task are performed at the Isolok sampler in the Isolok sampler station.

1. Open French can.

9011178509657

B. PERFORM LCT SAMPLING (Cont.)

2. Place labeled sample bottle and appropriate cardboard carton lined with plastic bag within the French can.

3. Close French can.

4. Connect sealed transfer assembly canister to sample box sealed flange.

5. Rotate canister counterclockwise 60° to lock the canister in place.

6. Place both hands into the gloves of the sample box.

7. Remove transfer box lid and hang it on the hooks located at the inside top of sample box.

8. Lift spring-loaded pin on handle of locking collar, rotate handle counterclockwise until pin drops into the OPEN position hole.

WARNING

USE CARE WHEN LIFTING HATCH, IT IS HEAVY.

---

9. Using lifting handle, open access hatch of the flange.

10. Pick up sample bottle and remove its cap.

11. Place sample bottle in sample bottle holder.

WARNING

USE CARE WHEN CLOSING HATCH. KEEP FINGERS CLEAR AND WATCH FOR PINCH POINTS.

---

12. Close flange hatch.

13. Lift spring-loaded pin and rotate locking handle clockwise to lock access hatch.

14. Place transfer box lid over transfer assembly.

15. Direct the sampler fill tube into the mouth of the sample bottle.

16. Remove hands from the gloves of the sample box.

9011785096B

B. PERFORM LCT SAMPLING (Cont.)

Obtain Sample

17. Move to the Isolok station in the motor pit.

WARNING

STAY AS FAR AWAY AS POSSIBLE FROM THE SAMPLE BOX WHILE OBTAINING SAMPLE. THIS IS REQUIRED TO KEEP RADIATION EXPOSURES AS LOW AS POSSIBLE.

---

18. Position valve LV-W02 to SAMPLE RECIRC position.

19. Start LCT pump W03 by pressing the START button on the Isolok Station Control Panel. See FIGURE 1.

NOTE - Enabling the Isolok station will automatically disable high radiation interlock function of the motor pit low range radiation monitor RE-W06.

20. After LCT pump W03 has been running for at least 5 min, operate sampler using the Isolok sampler START button located at the Isolok station control panel.

NOTE - This should yield a sample volume of 100 mL.

WARNING

WHILE PERFORMING WORK AROUND SAMPLE BOX, TAKE CARE TO REDUCE BOTH THE RISK OF CONTAMINATION AND THE RADIATION DOSE BEING RECEIVED.

---

21. Place both hands into gloves of the sample box.

22. Direct sample tubing to the sample box drain.

23. Screw caps onto sample bottles.

24. If spillage of radioactive liquid occurs, wash the contaminated area using spray nozzle located in sample box.

    a. Open manual valve HV-246.

    b. After spraying is complete, close manual valve HV-246.

9011178509669

B. PERFORM LCT SAMPLING (Cont.)

Flush Sampler and Lines

25. Stop LCT pump W03 by pressing the STOP button on the Isolok Station Control Panel.

26. Position the following valves:

VALVE	POSITION
FV-H04	OPEN
FV-F08	OPEN
FV-W44	B-A

27. Reset flush water totalizer FQ-H02-2.

28. Position valve LV-W02 to SAMPLE SUPPLY FLUSH position.

29. Open valve FV-W46.

NOTE - The line from the sampler back to LCT pump W03 is now being flushed.

30. When flow totalizer FQ-H02-2 indicates 30 gal, position valve LV-W02 to SAMPLE RETURN FLUSH and reset totalizer.

NOTE - The flush water is now forced to flush the other section of the line from the sampler back to LCT W01.

31. Press the Isolok sampler START button.

NOTE - The seals in the sampler are now being flushed.

32. When flow totalizer FQ-H02-2 indicates 15 gal, close valve FV-F08.

33. Close valve FV-H04.

B. PERFORM LCT SAMPLING (Cont.)

Remove Samples

34. Remove transfer box lid and place it on hooks located at the inside top of sample box.

35. Open access hatch.

WARNING

DO NOT OPEN ACCESS HATCH WHILE SPRAY NOZZLE IS IN OPERATION. CONTAMINATED WATER MAY LEAK INTO THE TRANSFER ASSEMBLY CANISTER.

---

36. Remove filled sample bottles from sample bottle holder.

37. Place sample bottles within the plastic bag and cardboard carton, cover cardboard carton.

38. Close access hatch.

39. Lift spring-loaded pin on handle of locking collar and rotate handle clockwise until pin drops into CLOSE position hole.

40. Remove hands from sample box gloves.

41. Rotate French can counterclockwise 60° to release it from access flange.

42. Open French can using French can lid opener.

43. Request RPT to survey inside of French can and sample carton. Decontaminate as needed.

44. Remove sample carton from French can and place in ice chest containing absorbent material.

45. Request RPT to survey and release sample carton and ice chest for shipping.

46. Transport ice chest can to aboveground storage location for B Plant pickup.

47. Close manual valve HV-194.

48. Flush sampler discharge port by opening manual valve HV-180 to the fully OPEN position, and then immediatley close valve.

9011178509.71

B. PERFORM LCT SAMPLING (Cont.)

49. Open manual valve HV-194.

50. Is spillage of radioactive liquid occurs, wash the contaminated area using spray nozzle located in sample box by performing the following:

    a. Open manual valve HV-246.

    b. After spraying is complete, close manual valve HV-246.

51. From the Control Room, disable the Isolok station, see graphic 3.

NOTE - This will cause the following to occur:

- Motor pit radiation alarm/interlock reactivates
- Valves FV-W40, W02, H04, and F

  LCT pump W03 and decon pump F02 become operable from the Control Room
- All controls on the Isolok station become inoperable.

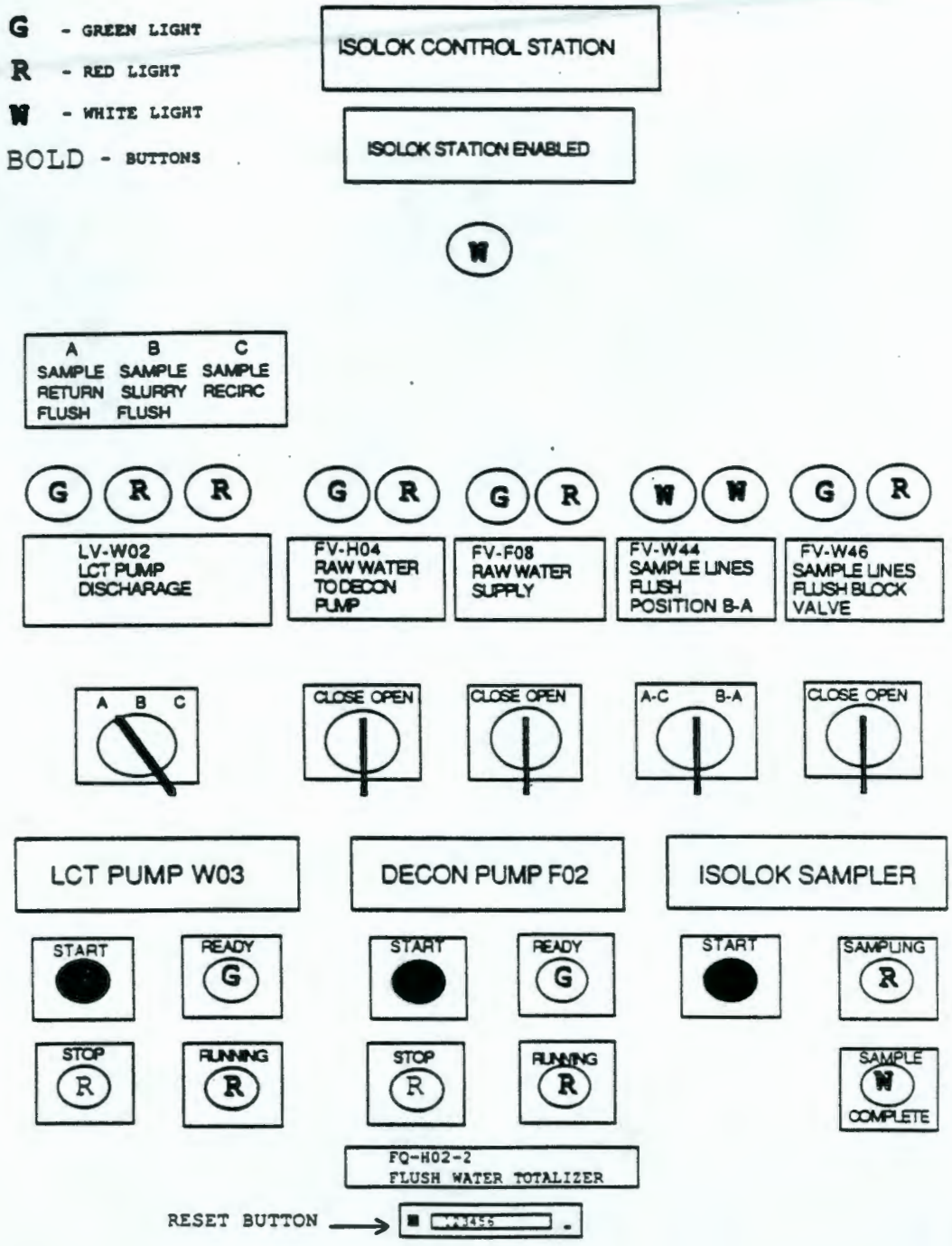

FIGURE 1 - ISOLOK STATION CONTROL PANEL

Document No.	Rev/Mod	Page
TO-390-157	A-1	9

9011785097 3

This page intentionally left blank.

PLANT OPERATING PROCEDURE

TANK FARM Operation

GROUT Syster

TRANSFER TGE/VAULT WASTE STREAMS

I. SYSTEM DESCRIPTION

This procedure provides instructions to transfer waste streams generated from grouting operations at the Grout Disposal Facility. Task instructions are detailed for transfers between the following facilities: 241-AP-102 Tank, the Transportable Grout Equipment (TGE) Liquid Collection Tank (LCT), and the Vault.

This procedure covers three specific transfers and includes instructions, schematics and log sheets for the following:

- Transfer LCT to AP-102
- Transfer Vault Excess Water to LCT
- Transfer Vault Excess Water to AP-102
- Transfer Leachate to Vault.

Transfer of the LCT to AP-102 is controlled from the TGE Control Room. All other transfers are controlled at the vault, either in the field or through the Portable Instrument House (PIH).

This procedure does not include verification and instruction steps for waste stream flow from AP-102 to the TGE, nor grout flow from the TGE to the Vault. Procedural steps for these process flow streams are noted in TO-390-107, TO-390-137 and TO-390-142.

This procedure does not include verification and instruction steps for transfers between double-shell tanks AP-102 and AP-104. Steps for these transfers are noted on TO-270-010.

This procedure follows the requirements established by the General Tank Farm Transfer Procedure, TO-025-001.

II. PRESTART CONDITIONS

Specific prestart conditions for each transfer are noted in the specific task description.

Supervision has given direction for initiation of any transfer effort.

OFFICIALLY RELEASED
ODM

III. SAFETY

Warning - Materials being transferred are caustic, radioactive, thermally hot, and under pressure. Maximize distance between transfer lines and pits during transfers.

Applicable Safety Documents - Provisions of Standard Requirements and Procedures, RHO-GM-MA-2, Section 61-02.5 (GEN-0), Radiation Work Permit (RWP) F-28, Industrial Safety Manual, WHC-CM-4.3 Vol 1 and 2, Tank Farm Safety Rules, Accident Prevention Standards, and Emergency Plan for Tank Farms, RHO-MA-111.5, apply to all work performed under this procedure.

IV. TOOLS AND SUPPLIES

TRANSFER LCT TO AP-102 TRANSFER LOG SHEET
TRANSFER EXCESS WATER TO LCT TRANSFER LOG SHEET
TRANSFER EXCESS WATER TO AP-102 VIA LCT TRANSFER LOG SHEET
TRANSFER LEACHATE TO VAULT TRANSFER LOG SHEET.

V. TASK/ACTIVITY INDEX

	PAGE
A. TRANSFER LCT TO AP-102	3
B. TRANSFER EXCESS WATER TO LCT	5
C. TRANSFER EXCESS WATER TO AP-102 VIA LCT	7
D. TRANSFER LEACHATE TO VAULT	10
E. PERFORM FINAL FLUSH TO AP-102	11
Flush LCT Pump to Sump	11
Flush Sump to AP-102	12
FIGURE 1 - TRANSFER LCT TO AP-102 TRANSFER SCHEMATIC	14
FIGURE 2 - TRANSFER EXCESS WATER TO LCT TRANSFER SCHEMATIC	15
FIGURE 3 - TRANSFER EXCESS WATER TO AP-102 VIA LCT TRANSFER SCHEMATIC	16
FIGURE 4 - TRANSFER LEACHATE TO VAULT TRANSFER SCHEMATIC	17
TRANSFER LCT TO AP-102 TRANSFER LOG SHEET	18
TRANSFER EXCESS WATER TO LCT TRANSFER LOG SHEET	21
TRANSFER EXCESS WATER TO AP-102 VIA LCT TRANSFER LOG SHEET	24
TRANSFER LEACHATE TO VAULT TRANSFER LOG SHEET	29
TRANSFER FLUSH LOG SHEET	31

VI. PROCEDURE

A. TRANSFER LCT TO AP-102

1. Verify the following for input to the TRANSFER LCT TO AP-102 TRANSFER LOG SHEET:
   - Waste feed flow from AP-102 is not in progress
   - Instrument air and ventilation systems are on line
   - The LCT W01 was sampled and contents adjusted to meet Tank AP-102 chemical and temperature specifications
   - Proper AP Farm process jumpers are in place per TRANSFER LCT TO AP-102 TRANSFER SCHEMATIC, Figure 1, and confirmed with routing board at 272-AW
   - Prestart valving is aligned per TRANSFER LCT TO AP-102 TRANSFER LOG SHEET
   - Initial Material Balance data is recorded and sufficient space in AP-102 confirmed
   - Changes to hydrostatic head are calculated and verified below 717 in. water gage.

2. Ensure all ventilation and leak detection systems on the AP Farm panels are functional and without alarms.

3. Before continuing, complete the TRANSFER LCT TO AP-102 TRANSFER LOG SHEET and obtain all prestart approvals. File LOG SHEET in Campaign Log.

4. If not running, start LCT agitator W02 and ensure contents are agitated for 15 min before transferring.

5. Open LCT level control valve LV-W02, see graphic 3.

CAUTION

Do not allow pump to operate under dead-headed conditions.

---

6. Start LCT Pump W03, see graphic 3.

7. Monitor LCT and AP-102 level changes. If flow, level, or temperature values exceed limits established on TRANSFER LOG, notify supervision.

8. Ensure LCT pump stops approximately 2 min after LSLL-W02 alarm is indicated, see graphic 3.

A. TRANSFER LCT TO AP-102 (Cont.)

9. Stop LCT agitator, see graphic 3.

10. Record gallons remaining in LCT on TRANSFER LOG, see graphic 3.

11. Ensure/position the following valves to add flush water to the LCT via the tank spray nozzle, see graphic 7:

VALVE	POSITION
FV-F05	OPEN
FV-F06	CLOSE
FV-F10	CLOSE
FV-F08	CLOSE
FV-F04	CLOSE
FV-H05	CLOSE

12. Reset raw water totalizer, see graphic 19.

13. Open valve FV-H04. After approximately 300 gal are added to the LCT, close FV-H04, see graphic 7.

NOTE - The decon pump F02 may be started to boost water flow rate. The pump is stopped before closing FV-H04.

14. Record gallons of flush water added to LCT on TRANSFER LOG.

15. Start LCT agitator W02, see graphic 3.

NOTE - The contents should be allowed to mix for approximately 5 min before transferring.

16. Start LCT pump W03, see graphic 3.

17. Monitor LCT level change, and verify LCT pump stops approximately 2 min after LSLL-W02 alarm is indicated, see graphic 3.

18. Stop LCT agitator, see graphic 3.

19. Record flush water gallons remaining in LCT on TRANSFER LOG, see graphic 3.

20. Complete remaining sections of TRANSFER LOG SHEET, and pass to supervision for approval. File TRANSFER LOG SHEET in Campaign Log.

B. TRANSFER EXCESS WATER TO LCT

1. Verify the following for input to the TRANSFER EXCESS WATER TO LCT TRANSFER LOG SHEET:
   - LCT Pump W03 stopped and locked out
   - Instrument air and ventilation systems are on line
   - Proper vault jumpers are in place per TRANSFER EXCESS WATER TO LCT TRANSFER SCHEMATIC, Figure 2, and confirmed with Routing Board at 272-AW.
   - Prestart valving is aligned per TRANSFER EXCESS WATER TO LCT TRANSFER LOG SHEET
   - Initial Material Balance data is recorded
   - Chemical truck filled with water, with proper hose fitting is standing by vault.

2. Ensure vault breather filter is in place.

3. Ensure all leak detection systems on the alarm summary screen are functional and without alarms.

4. Before continuing, complete the TRANSFER EXCESS WATER TO LCT TRANSFER LOG SHEET and obtain all prestart approvals. File LOG SHEET in Campaign Log.

NOTE – The following steps are applicable for transfers from any of the four excess water pumps (P-EW-01, -02, -03, -04). Valving and jumper verifications for specific pumps are noted on the TRANSFER LOG and SCHEMATIC SHEETS.

5. Open valve MOV-06, see graphic 22.

6. Record flow totalizer value from FI-01 on TRANSFER LOG SHEET, see graphic 22.

7. Start excess water pump, see graphic 22.

8. Monitor excess water level in vault with video cameras to ensure proper pumping.

9. Monitor LCT level (see graphic 3) and verify that excess water pump automatically stops upon activation of LSHH-W02 interlock (approximately 720 gal), see graphic 22.

10. Stop excess water pump if level in LCT exceeds 750 gal and notify supervision of interlock failure.

11. Close valve MOV-06, see graphic 22.

B. TRANSFER EXCESS WATER TO LCT (Cont.)

12. If still running, stop excess water pump, see graphic 22.

CAUTION

Ensure LCT has capacity for flush water. Transfer LCT to AP-102 if required to receive 300 gal.

NOTE - Some material will flow back into the vault. This is unavoidable since the flow path from the excess water pump is all uphill.

- The following steps denote flushing from the vault to clean the excess water return line.

13. Position valve MOV-05 B-A (see graphic 22) and ensure high pressure alarm is not in on PS-01, which is the pressure switch between MOV-05 and MOV-07. If alarm is in, stop flushing and notify supervision.

14. Attach water hose from chemical truck to vault valve pit flush hose connection for water flush.

15. Position valve MOV-05 B-C, and open valves MOV-06 and MOV-07, see graphic 22.

16. Align chemical truck valves and start pump to flush water to LCT.

17. Close valve MOV-07, and then stop pump when approximately 380 gal of water have been noted to flow through line, as noted on flow totalizer FI-01 (see graphic 22).

NOTE - The excess water line is sloped back to the vault containing a holdup of approximately 80 gal. The step above ensures a flush into the system of at least 300 gal.

18. Close MOV-06, see graphic 22.

19. Position valve MOV-05 A-C to allow excess water line drainage back into vault, see graphic 22.

20. Position valve MOV-05 B-A and open MOV-07 to allow flush line drainage into vault, see graphic 22.

21. Close MOV-07, see graphic 22.

9011178509080

B. TRANSFER EXCESS WATER TO LCT (Cont.)

CAUTION

Carefully place hose back within vault pit. Hose may leak flush water when being placed back within vault pit.

22. Disconnect vault pit hose connection from chemical truck hose. Carefully place hose back within vault pit.

23. Record final data on TRANSFER LOG SHEET and obtain remaining approvals. File approved TRANSFER LOG SHEET in Campaign Log.

C. TRANSFER EXCESS WATER TO AP-102 VIA LCT

1. Verify the following for input to the TRANSFER EXCESS WATER TO AP-102 VIA LCT TRANSFER LOG SHEET:
   - Waste feed flow from AP-102 is not in progress
   - Instrument air and ventilation systems are on line
   - The LCT W01 is either empty or was sampled, and contents adjusted to meet Tank AP-102 chemical and temperature specifications
   - Proper AP Farm and Vault process jumpers are in place per TRANSFER EXCESS WATER TO AP-102 VIA LCT TRANSFER SCHEMATIC, Figure 3, and confirmed with routing board at 272-AW
   - Prestart valving is aligned per TRANSFER EXCESS WATER TO AP-102 VIA LCT TRANSFER LOG SHEET
   - Initial Material Balance data is recorded, and sufficient space in AP-102 confirmed
   - Change to AP-102 Tank hydrostatic head are calculated and verified below 717 in. water gage
   - Chemical truck filled with water is standing by vault.

2. Ensure vault breather filter is in place.

3. Ensure all grout and AP-102 tank leak detection systems on the TGE alarm summary screens are functional and without alarms.

4. Before continuing, complete the TRANSFER EXCESS WATER TO AP-102 VIA LCT TRANSFER LOG SHEET and obtain all prestart approvals. File LOG SHEET in Campaign Log.

C. TRANSFER EXCESS WATER TO AP-102 VIA LCT (Cont.)

NOTE - The following steps are applicable for transfers from any of the four excess water pumps (P-EW-01, -02, -03, -04). Valving and jumper verifications for specific pumps are noted on the TRANSFER LOG and SCHEMATIC SHEETS.

5. Record flow totalizer value from FI-01 on TRANSFER LOG SHEET, see graphic 22.

6. Set LIC-W02 to AUTOMATIC mode and enter a set point of 50%, see graphic 3.

7. Open LCT level control valve LV-W02, see graphic 3.

8. Open MOV-06 and start excess water pump, see graphic 22.

9. Start LCT agitator W02, see graphic 3.

10. Verify that liquid is being added to LCT W01 by observing LI-W02, see graphic 3.

11. When LCT level reaches 50% full, start LCT pump W03, see graphic 3.

CAUTION

Do not allow pump to operate under dead-headed conditions.

---

12. Verify that LIC-W02 and LV-W02 operate properly to maintain a 50% level in the LCT, see graphic 3.

13. Monitor excess water level in vault with video cameras and AP-102 tank levels to ensure proper pumping. Record transfer totalizer values and AP-102 levels every 1/2 hour on LOG SHEET. If level, flow, or temperature values exceed established limits noted on TRANSFER LOG, notify supervision.

14. When no more excess water remains to be pumped, as noted by the video cameras failure of LCT to maintain 50% level, close MOV-06, see graphic 22.

15. Stop excess water pump, see graphic 22.

NOTE - Some material will flow back into the vault. This is unavoidable since the flow path from the excess water pump is all uphill.

16. Change LIC-W02 to MANUAL mode, see graphic 3.

9 0 1 1 7 8 5 0 9 8 2

C. TRANSFER EXCESS WATER TO AP-102 VIA LCT (Cont.)

17. Monitor LCT level change and verify LCT pump stops approximately 2 min after LSLL-W02 alarm is indicated, see graphic 3.

18. Stop LCT agitator W02, see graphic 3.

19. Position valve MOV-05 B-A (see graphic 22) and ensure high pressure alarm is not in on PS-01, which is the pressure switch between MOV-05 and MOV-07. If alarm is in, stop flushing procedure and notify supervision.

20. Attach water hose from chemical truck to vault valve pit flush hose connection for water flush.

21. Position valve MOV-05 B-C and open valves MOV-06 and MOV-07, see graphic 22.

22. Align chemical truck valves and start pump to flush water to LCT.

23. Close valve MOV-07, stop pump when approximately 380 gal of water have been noted to flow through line, as noted on flow totalizer FI-01, see graphic 22.

NOTE - The excess water line is sloped back to the vault containing a holdup of approximately 80 gal. The step above ensures a flush into the system of at least 300 gal.

24. Close MOV-06, see graphic 22.

25. Position valve MOV-05 A-C to allow excess water line drainage back into vault, see graphic 22.

26. Position valve MOV-05 B-A and open MOV-07 to allow flush line drainage into vault, see graphic 22.

27. Close MOV-07, see graphic 22.

CAUTION

Carefully place hose back within vault pit. Hose may leak flush water when being placed back within vault pit.

---

28. Disconnect vault pit hose connection from chemical truck hose. Carefully place hose back within vault pit.

C. TRANSFER EXCESS WATER TO AP-102 VIA LCT (Cont.)

29. Start LCT agitator W02, see graphic 3.

NOTE - The contents should be allowed to mix for approximately 5 min before transferring.

30. Start LCT pump W03, see graphic 3.

31. Monitor LCT level change and verify LCT pump stops approximately 2 min after LSLL-W02 alarm is indicated, see graphic 3.

32. Stop LCT agitator, see graphic 3.

33. Record flush water gallons remaining in LCT on TRANSFER LOG, see graphic 3.

34. Complete remaining sections of TRANSFER LOG SHEET and obtain remaining approvals. File TRANSFER LOG SHEET in Campaign Log.

D. TRANSFER LEACHATE TO VAULT

1. Verify the following for input to the TRANSFER LEACHATE TO VAULT TRANSFER LOG SHEET:

   - Proper vault process jumpers are in place per TRANSFER LEACHATE TO VAULT TRANSFER SCHEMATIC, Figure 4, and confirmed with routing board at 272-AW
   - Prestart valving is aligned per TRANSFER LEACHATE TO VAULT TRANSFER LOG SHEET
   - Initial Material Balance data is recorded.

2. Ensure vault breather filter is in place.

3. Ensure all leak detection systems on the TGE alarm summary screen are functional and without alarm.

4. Before continuing, complete the TRANSFER LEACHATE TO VAULT TRANSFER LOG SHEET and obtain all prestart approvals. File LOG SHEET in Campaign Log.

NOTE - The following steps apply to either leachate pump P-LP-01 or P-LP-02. A separate TRANSFER LOG is required for each leachate pump use.

5. Start leachate pump.

D. TRANSFER LEACHATE TO VAULT (Cont.)

6. Monitor leachate pit level for liquid decrease.

7. Monitor transfer piping for leaks.

8. Record vault and pit levels on LOG SHEET every 10 min.

9. When leachate level has stabilized for several minutes at lowest level, or achieved zero percent (0%), stop leachate pump.

NOTE - Some increase in leachate level may occur upon stoppage of pump because of liquid flow back through pump line.

10. Complete remaining sections of TRANSFER LOG SHEET and obtain final approval. File approved TRANSFER LOG SHEET in Campaign Log.

E. PERFORM FINAL FLUSH TO AP-102

NOTE - These steps are to be used upon supervision direction after completion of Task A or C.

Flush LCT Pump to Sump

1. Verify flushes have occurred through normal transfer steps in Task A or C, that all appropriate data was recorded on the TRANSFER LOG, and that jumpers are still in place per TRANSFER LCT TO AP-102 TRANSFER SCHEMATIC, Figure 1.

2. Ensure the following valve positions:

VALVE	POSITION	GRAPHIC
FV-F08	CLOSE	7
FV-F10	CLOSE	7
FV-F06	CLOSE	7
FV-F05	CLOSE	7
FV-F04	CLOSE	7
FV-H04	CLOSE	7
FV-W01	CLOSE	3
FV-F02	C-A	3
FV-F01	B-A	3
FV-F03	A-C	3
FV-W40	B-A	3

3. Ensure LCT pump W03 is off, see graphic 3.

E. PERFORM FINAL FLUSH TO AP-102 (Cont.)

4. Reset raw water totalizer, see graphic 19.

5. Open valve FV-H04, see graphic 7.

6. Open valve FV-F08, see graphic 7.

7. After 10 seconds, close valves FV-F08 and FV-H04, see graphic 7.

8. Wait one minute for all lines to drain into LCT.

9. Record on Transfer Flush Log Sheet raw water totalizer value and sump level, see graphics 7 and 3.

10. Place Sump Pump W07A in MANUAL, see graphic 3.

11. Verify that LCT has less than 100 gallons, see graphic 3. If LCT level is greater than 100 gallons, stop flushing and notify supervision.

12. Open valve FV-W42 to drain LCT to sump, see graphic 3.

13. After 5 min. close valve FV-W42, see graphic 3. If any level is shown in LCT, notify supervision.

Flush Sump to AP-102

14. Verify that Steps 1-12 above were conducted.

15. Position the following valves:

FV-F01	C-A	3
FV-F02	C-A	3
FV-W01	OPEN	3
FV-W40	A-C	3
POV-622-3	CLOSE	2
POV-622-4	OPEN	2

16. Start sump pump W07B, see graphic 3.

17. Monitor sump level with video cameras to ensure proper pumping.

9011185098 6

E. PERFORM FINAL FLUSH TO AP-102 (Cont.)

18. Verify that sump pump W07B stops automatically upon low level interlock activation, see graphic 3.

19. Close valve FV-W01, see graphic 3.

20. Complete remaining section of TRANSFER FLUSH LOG SHEET and obtain final approval. File approved TRANSFER FLUSH LOG SHEET in Campaign Log.

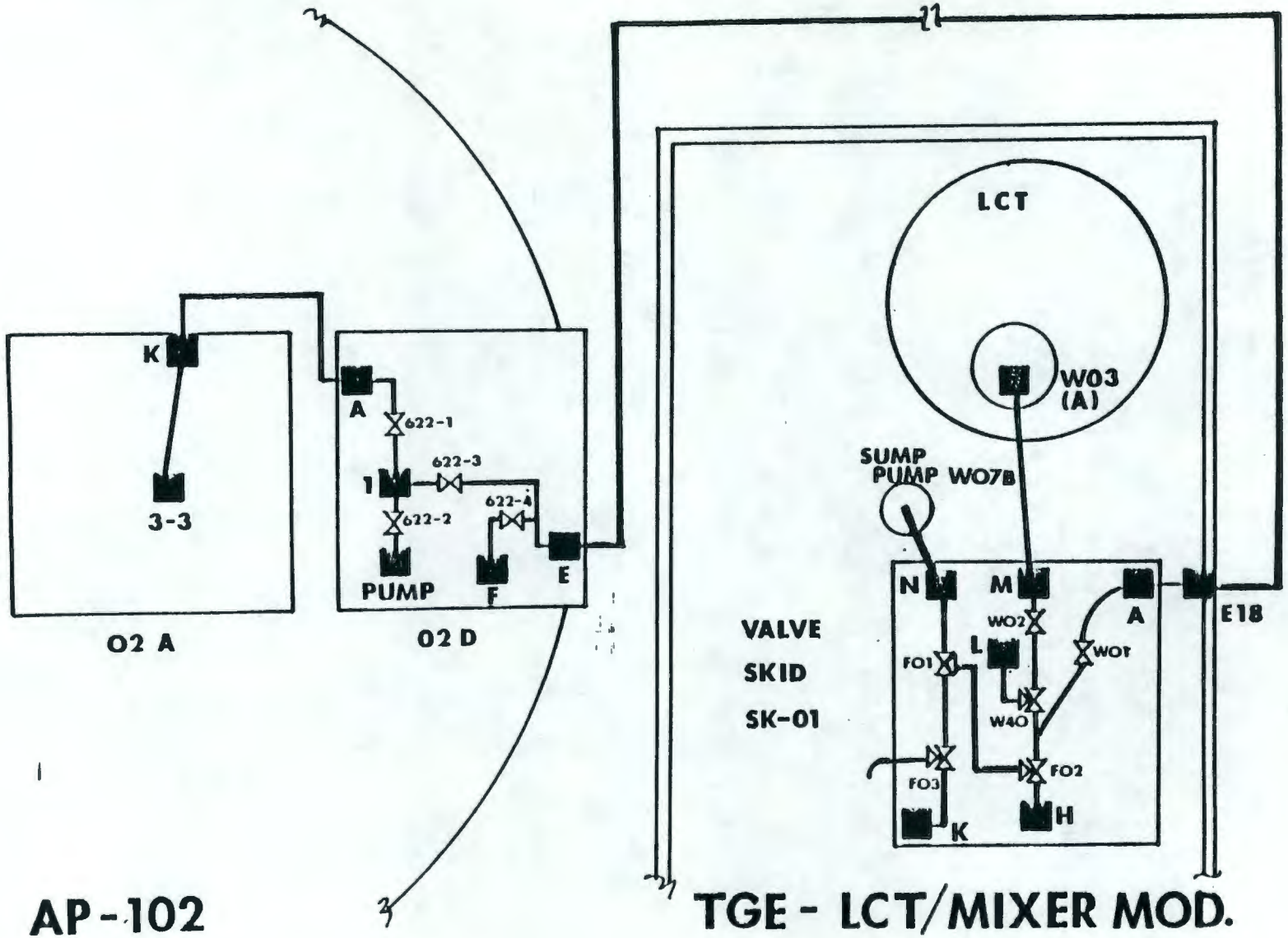

FIGURE 1 - TRANSFER LCT TO AP-102 TRANSFER SCHEMATIC

Ref: TKE6169

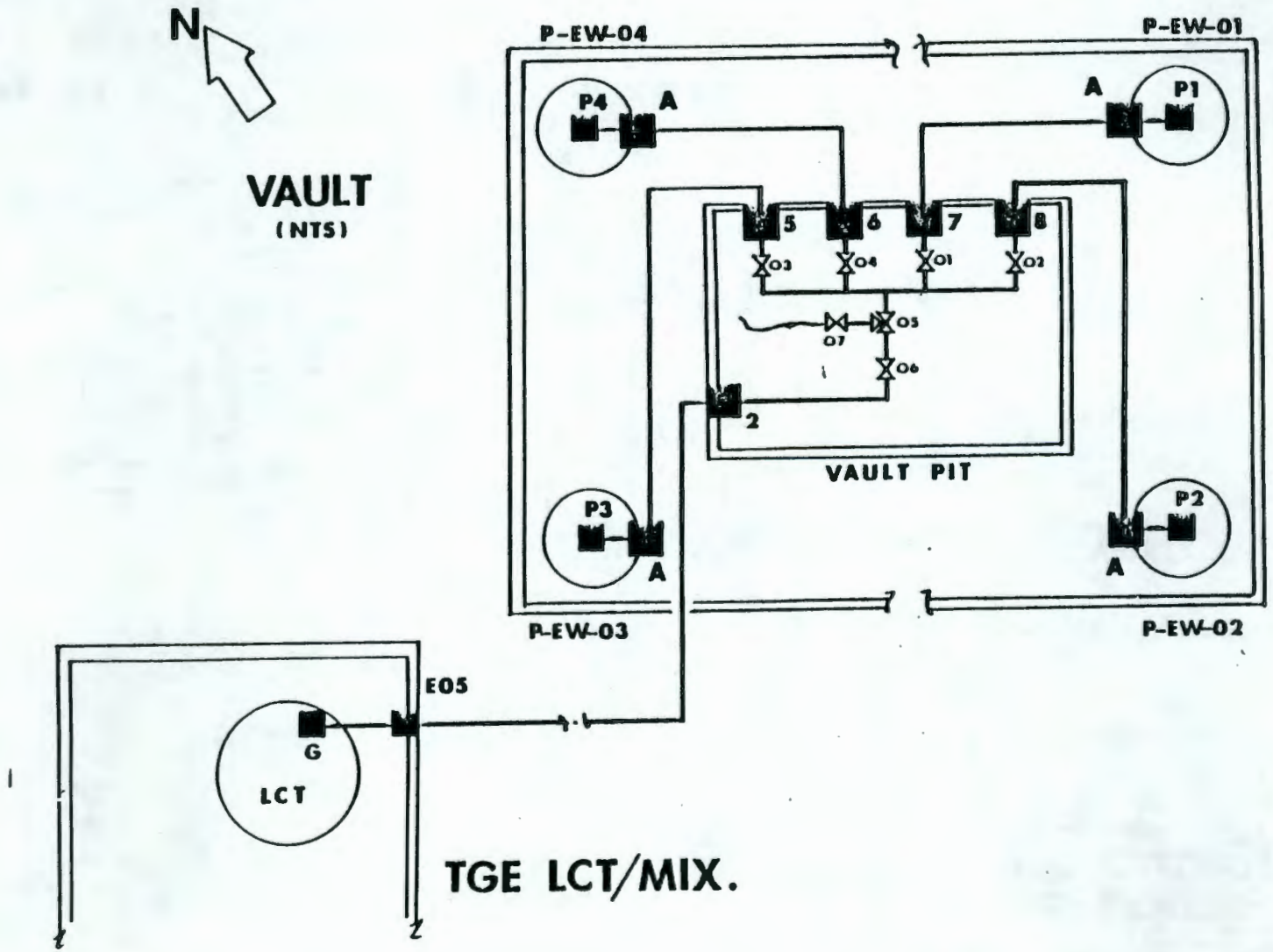

FIGURE 2 - TRANSFER EXCESS WATER TO LCT TRANSFER SCHEMATIC

Ref:TKE6170

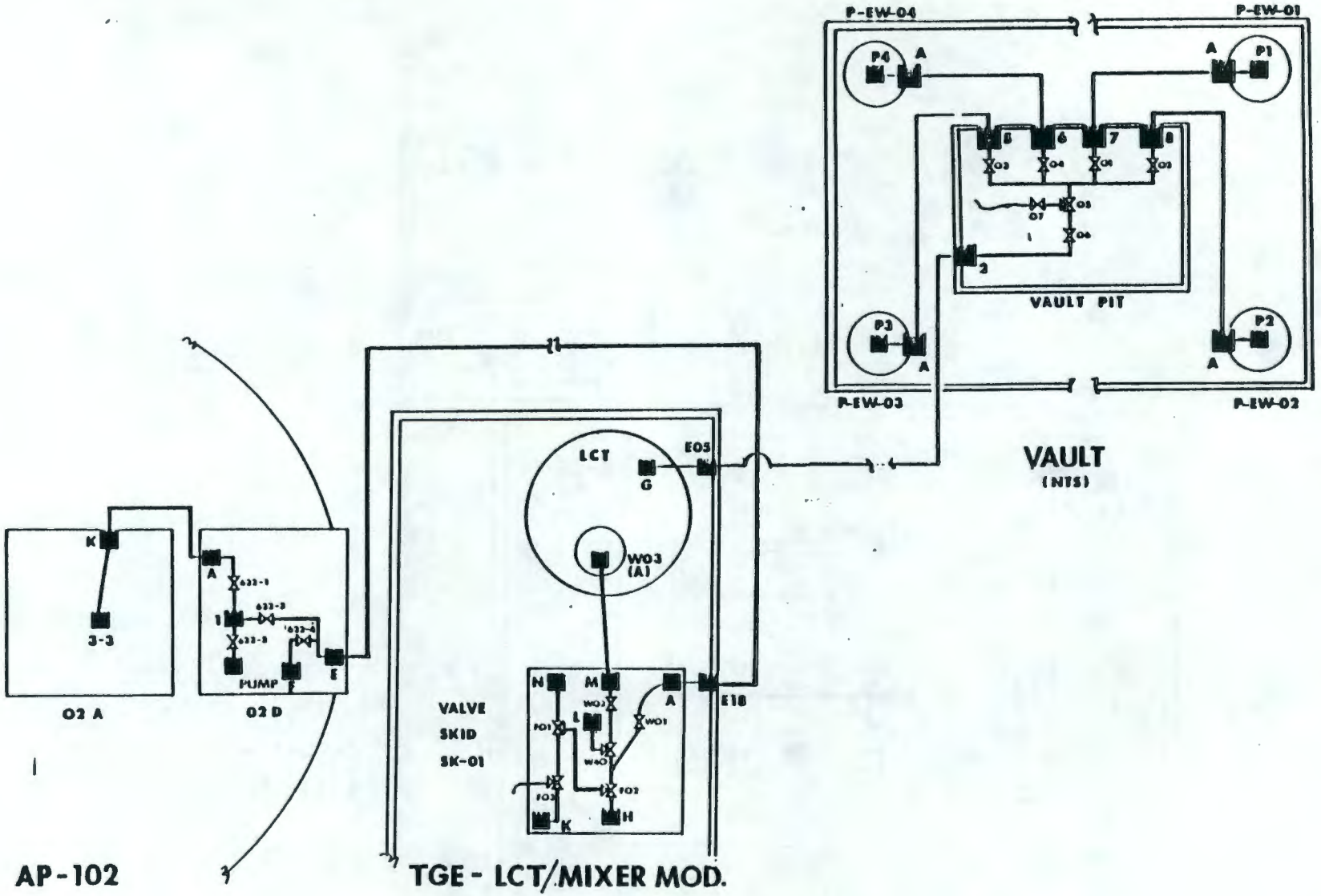

FIGURE 3 - TRANSFER EXCESS WATER TO AP-102 VIA LCT TRANSFER SCHEMATIC Ref:TKE6171

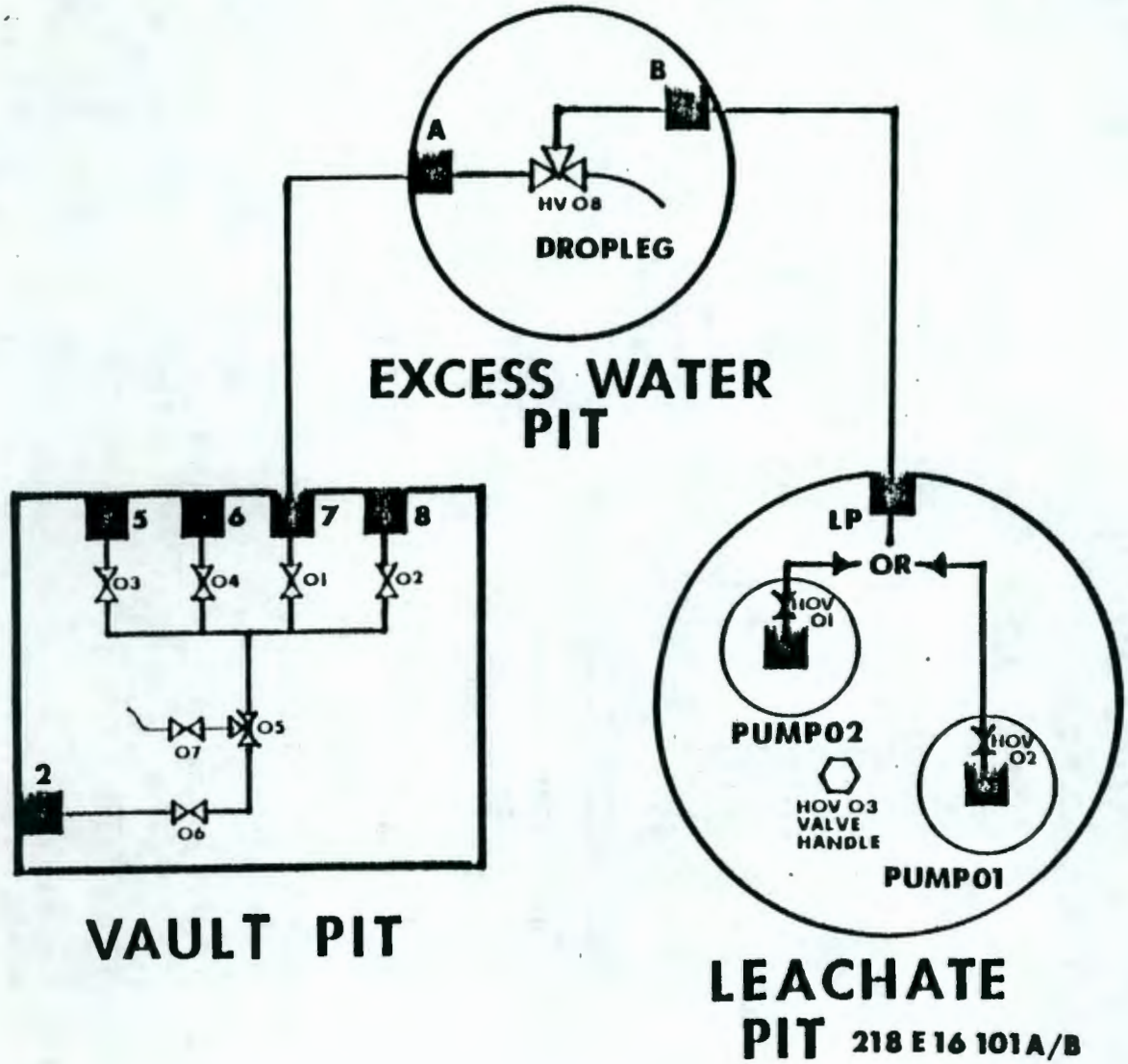

FIGURE 4 - TRANSFER LEACHATE TO VAULT TRANSFER SCHEMATIC

TRANSFER LOG SHEET Page 1 of 3
LIQUID COLLECTION TANK (LCT) TO AP-102 TANK
CAMPAIGN NUMBER _____

1. **PRESTART VALVE ALIGNMENT**

VALVE	GRAPHIC	POSITION	OPERATOR
DOV-622-1	2	0% CLOSED	_____
POV-622-2	2	CLOSED	_____
POV-622-3	2	CLOSED	_____
POV-622-4	2	OPEN	_____
LV-W02	3	0% OPEN	_____
FV-W40	3	A-B	_____
FV-F01	3	A-C	_____
FV-F02	3	C-B	_____
FV-F03	3	A-C	_____
FV-W01	3	OPEN	_____
SAMPLER STN 15		DISABLED	_____

2. **LCT CONTENTS MATERIAL EVALUATION** — **OPERATOR**

a.) Hydroxide (OH^-) concentration of _____ per Reference _____ is within AP-102 specification: .001 -.02 M _____

b.) Nitrite (NO_2^-) concentration of _____ per Reference _____ is within AP-102 specification: <.005M _____

c.) Separable Organics detected (Yes/No) ____ per Reference _____ _____

d.) Transfer Volume is _____ gallons per Reference _____ and is equal to _____ inches in AP-102 (2750 gallons = 1 inch) _____

e.) Temperature of _____ °F is within AP-102 specification: ≤ 122 °F _____

f.) Contents agitated ≥ 5 minutes _____

9011178509692

TRANSFER LOG SHEET Page 2 of 3
LIQUID COLLECTION TANK (LCT) TO AP-102 TANK
CAMPAIGN NUMBER _____

3. **AP-102 TANK EVALUATION** — **OPERATOR**

a.) Tank Level (per automatic or manual gage) of _____ inches plus Transfer Volume (2.d.) _____ inches plus flush of 0.1 inches (300 gallons) equals _____ inches and is within AP-102 specification: < 416 inches _____

b.) Maximum Hydrostatic Head for transfer is _____ in. WG per Reference _____ and is within AP-102 specification: < 717 in WG _____

c.) All Leak detection systems operable _____

d.) All Ventilation systems operable _____

e.) CASS and RPT notified _____

f.) Evaporator and Tank Farm Personnel notified _____

4. **PRESTART APPROVALS**

a.) DAY SHIFT MANAGER _____ DATE _____

b.) MANAGER _____ DATE _____

TRANSFER LOG SHEET Page 3 of 3
LIQUID COLLECTION TANK (LCT) TO AP-102 TANK
CAMPAIGN NUMBER _____

5. **TRANSFER DATA**

START TRANSFER DATE		_____
INITIAL LCT LEVEL	(gallons)	_____
INITIAL MODULE SUMP LEVEL	(gallons)	_____
START TRANSFER TIME	(0000-2400 hrs)	_____
STOP TRANSFER TIME	(0000-2400 hrs)	_____
FINAL TRANSFER LCT LEVEL	(gallons)	_____
FLUSH WATER	(gallons)	_____
FINAL FLUSH LCT LEVEL	(gallons)	_____
AP-102 FINAL LEVEL - FIC	(inches)	_____
AP-102 FINAL LEVEL - MAN	(inches)	_____
MATERIAL BALANCE DISCREPANCY	(Yes/No)	_____

6. **FINAL APPROVALS**

a.) DAY SHIFT MANAGER _____ DATE _____

b.) MANAGER _____ DATE _____

9 0 1 1 7 8 5 0 9 9 4

TRANSFER LOG SHEET Page 1 of 3
EXCESS WATER TO LIQUID COLLECTION TANK (LCT)
CAMPAIGN NUMBER _____ EXCESS WATER PUMP SOURCE _____

1. PRESTART VALVE ALIGNMENT

a.) VALVE LINEUP FOR EXCESS WATER PUMP SOURCE P-EW-01

VALVE	GRAPHIC	POSITION	OPERATOR
MOV-01	22	OPEN	_____
MOV-02	22	CLOSED	_____
MOV-03	22	CLOSED	_____
MOV-04	22	CLOSED	_____
MOV-05	22	A-C	_____
MOV-06	22	CLOSED	_____
MOV-07	22	CLOSED	_____

PROCESS BLANKS ON EWP2, EWP3, & EWP4 _____

b.) VALVE LINEUP FOR EXCESS WATER PUMP SOURCE P-EW-02

VALVE	GRAPHIC	POSITION	OPERATOR
MOV-01	22	CLOSED	_____
MOV-02	22	OPEN	_____
MOV-03	22	CLOSED	_____
MOV-04	22	CLOSED	_____
MOV-05	22	A-C	_____
MOV-06	22	CLOSED	_____
MOV-07	22	CLOSED	_____

PROCESS BLANKS ON EWP1, EWP3, & EWP4 _____

c.) VALVE LINEUP FOR EXCESS WATER PUMP SOURCE P-EW-03

VALVE	GRAPHIC	POSITION	OPERATOR
MOV-01	22	CLOSED	_____
MOV-02	22	CLOSED	_____
MOV-03	22	OPEN	_____
MOV-04	22	CLOSED	_____
MOV-05	22	A-C	_____
MOV-06	22	CLOSED	_____
MOV-07	22	CLOSED	_____

PROCESS BLANKS ON EWP1, EWP2, & EWP4 _____

d.) VALVE LINEUP FOR EXCESS WATER PUMP SOURCE P-EW-04

VALVE	GRAPHIC	POSITION	OPERATOR
MOV-01	22	CLOSED	_____
MOV-02	22	CLOSED	_____
MOV-03	22	CLOSED	_____
MOV-04	22	OPEN	_____
MOV-05	22	A-C	_____
MOV-06	22	CLOSED	_____
MOV-07	22	CLOSED	_____

PROCESS BLANKS ON EWP1, EWP2, & EWP3 _____

TRANSFER LOG SHEET Page 2 of 3
EXCESS WATER TO LIQUID COLLECTION TANK (LCT)
CAMPAIGN NUMBER _____ EXCESS WATER PUMP SOURCE _____

2. **VAULT PREPARATIONS** — **OPERATOR**

a.) Truck with at least 380 gallons of water, and proper hose fittings at site _____
b.) Excess Water Pump installed, and cabled up to Portable Instrument House (PIH) _____
c.) Excess Water Pump motor control center breaker ON with READY shown Graphic screen 22 _____
d.) Breather filter in place and in-take screen clear of debris _____
e.) Vault Leak detection devices operable _____
f.) At least one vault camera operable _____

3. **TGE PREPARATIONS** — **OPERATOR**

a.) Grout processing stopped _____
b.) Instrument air and Ventilation systems on-line _____
c.) Leak detection systems operable _____

4. **PRESTART APPROVALS**

a.) DAY SHIFT MANAGER _____ DATE _____

b.) MANAGER _____ DATE _____

9011785096 96

TRANSFER LOG SHEET Page 3 of 3
EXCESS WATER TO LIQUID COLLECTION TANK (LCT)
CAMPAIGN NUMBER _____ EXCESS WATER PUMP SOURCE _____

5. **TRANSFER DATA**

START TRANSFER DATE		_____
INITIAL TOTALIZER EXCESS WATER FLOW 1		_____
INITIAL LCT LEVEL	(gallons)	_____
START TRANSFER TIME	(0000-2400 hrs)	_____
STOP TRANSFER TIME	(0000-2400 hrs)	_____
TRANSFER TOTALIZER VALUE	(gallons)	_____
TRANSFER LCT LEVEL	(gallons)	_____
FLUSH TOTALIZER VALUE	(gallons) 2	_____
TOTAL TRANSFER 2 - 1	(gallons)	_____
FINAL LCT LEVEL	(gallons)	_____
MATERIAL BALANCE DISCREPANCY (Yes/No)		_____

6. **FINAL APPROVALS**

a.) DAY SHIFT MANAGER _____ DATE _____

b.) MANAGER _____ DATE _____

TRANSFER LOG SHEET Page 1 of 5
EXCESS WATER TO AP-102 VIA LIQUID COLLECTION TANK (LCT)
CAMPAIGN NUMBER _____ EXCESS WATER PUMP SOURCE _____

1. PRESTART VALVE ALIGNMENT

a.) TGE VALVE LINEUP

VALVE	GRAPHIC	POSITION	OPERATOR
DOV-622-1	2	0% CLOSED	_____
POV-622-2	2	CLOSED	_____
POV-622-3	2	CLOSED	_____
POV-622-4	2	OPEN	_____
LV-W02	3	0% OPEN	_____
FV-W40	3	A-B	_____
FV-F01	3	A-C	_____
FV-F02	3	C-B	_____
FV-F03	3	A-C	_____
FV-W01	3	OPEN	_____
SAMPLER STN 15		DISABLED	_____

b.) VALVE LINEUP FOR EXCESS WATER PUMP SOURCE P-EW-01

VALVE	GRAPHIC	POSITION	OPERATOR
MOV-01	22	OPEN	_____
MOV-02	22	CLOSED	_____
MOV-03	22	CLOSED	_____
MOV-04	22	CLOSED	_____
MOV-05	22	A-C	_____
MOV-06	22	CLOSED	_____
MOV-07	22	CLOSED	_____

PROCESS BLANKS ON EWP1, EWP2, & EWP4 _____

c.) VALVE LINEUP FOR EXCESS WATER PUMP SOURCE P-EW-02

VALVE	GRAPHIC	POSITION	OPERATOR
MOV-01	22	CLOSED	_____
MOV-02	22	OPEN	_____
MOV-03	22	CLOSED	_____
MOV-04	22	CLOSED	_____
MOV-05	22	A-C	_____
MOV-06	22	CLOSED	_____
MOV-07	22	CLOSED	_____

PROCESS BLANKS ON EWP1, EWP2, & EWP3 _____

9011185069 8

TRANSFER LOG SHEET Page 2 of 5
EXCESS WATER TO AP-102 VIA LIQUID COLLECTION TANK (LCT)
CAMPAIGN NUMBER _____ EXCESS WATER PUMP SOURCE _____

d.) VALVE LINEUP FOR EXCESS WATER PUMP SOURCE P-EW-03

VALVE	GRAPHIC	POSITION	OPERATOR
MOV-01	22	CLOSED	_____
MOV-02	22	CLOSED	_____
MOV-03	22	OPEN	_____
MOV-04	22	CLOSED	_____
MOV-05	22	A-C	_____
MOV-06	22	CLOSED	_____
MOV-07	22	CLOSED	_____

PROCESS BLANKS ON EWP2, EWP3, & EWP4 _____

e.) VALVE LINEUP FOR EXCESS WATER PUMP SOURCE P-EW-04

VALVE	GRAPHIC	POSITION	OPERATOR
MOV-01	22	CLOSED	_____
MOV-02	22	CLOSED	_____
MOV-03	22	CLOSED	_____
MOV-04	22	OPEN	_____
MOV-05	22	A-C	_____
MOV-06	22	CLOSED	_____
MOV-07	22	CLOSED	_____

PROCESS BLANKS ON EWP1, EWP3, & EWP4 _____

2. EXCESS WATER EVALUATION — OPERATOR

a.) Hydroxide (OH^-) concentration of _____ per Reference _____ is within AP-102 specification: .001 -.02 M _____

b.) Nitrite (NO_2^-) concentration of _____ per Reference _____ is within AP-102 specification: <.005M _____

c.) Separable Organics detected (Yes/No) ____ per Reference _____ _____

d.) Temperature of _____ °F is within AP-102 specification: ≤ 122 °F _____

e.) Estimated Excess Water volume of _____ inches of AP-102 volume per Reference _____ _____

TRANSFER LOG SHEET Page 3 of 5
EXCESS WATER TO AP-102 VIA LIQUID COLLECTION TANK (LCT)
CAMPAIGN NUMBER _____ EXCESS WATER PUMP SOURCE _____

3. **AP-102 TANK EVALUATION** — **OPERATOR**

a.) Tank Level (per automatic or manual gage) of _____ inches plus Transfer Volume (2.e.) _____ inches plus flush of 0.1 inches (300 gallons) equals _____ inches and is within AP-102 specification: < 416 inches _____

b.) Maximum Hydrostatic Head for transfer is _____ in. WG per Reference _____ and is within AP-102 specification: < 717 in WG _____

c.) All Leak detection systems operable _____

d.) All Ventilation systems operable _____

e.) CASS and RPT notified _____

f.) Evaporator and Tank Farm Personnel notified _____

4. **VAULT PREPARATIONS** — **OPERATOR**

a.) Truck with at least 380 gallons of water, and proper hose fittings at site _____

b.) Excess Water Pump installed, and cabled up to Portable Instrument House (PIH) _____

c.) Excess Water Pump motor control center breaker ON with READY shown on Graphic screen 22 _____

d.) Breather filter in place and in-take screen clear of debris _____

e.) Vault Leak detection devices operable _____

f.) One vault camera operable _____

9011785100 0

TRANSFER LOG SHEET Page 4 of 5
EXCESS WATER TO AP-102 VIA LIQUID COLLECTION TANK (LCT)
CAMPAIGN NUMBER _____ EXCESS WATER PUMP SOURCE _____

5. **LCT CONTENTS MATERIAL EVALUATION** — **OPERATOR**

a.) Hydroxide (OH^-) concentration of _____ per Reference _____ is within AP-102 specification: .001 -.02 M _____

b.) Nitrite (NO_2^-) concentration of _____ per Reference _____ is within AP-102 specification: <.005M _____

c.) Separable Organics detected (Yes/No) ____ per Reference _____ _____

d.) Temperature of _____ °F is within AP-102 specification: ≤ 122 °F _____

e.) Contents agitated ≥ 5 minutes _____

6. **TGE PREPARATIONS** — **OPERATOR**

a.) Grout processing stopped _____

b.) Instrument air and Ventilation systems on-line _____

c.) Leak detection systems operable _____

7. **PRESTART APPROVALS**

a.) DAY SHIFT MANAGER _____ DATE _____

b.) MANAGER _____ DATE _____

8. **TRANSFER DATA**

START TRANSFER DATE _____

INITIAL TOTALIZER EX. WATER (gallons) 1 _____

INITIAL LCT LEVEL (gallons) _____

INITIAL MODULE SUMP LEVEL (gallons) _____

START TRANSFER TIME (0000-2400 hrs) _____

9011178510001

TRANSFER LOG SHEET Page 5 of 5
EXCESS WATER TO AP-102 VIA LIQUID COLLECTION TANK (LCT)
CAMPAIGN NUMBER _____ EXCESS WATER PUMP SOURCE _____

8. TRANSFER DATA cont.

TRANSFER LOG

TIME(1/2 hr)	FLOW TOTALIZER	AP-102 LEVEL

STOP TRANSFER TIME (0000-2400 hrs) _____

TRANSFER TOTALIZER VALUE (gallons) 2 _____

TOTAL TRANSFER 2 - 1 (gallons) _____

AP-102 FINAL LEVEL - FIC _____

AP-102 FINAL LEVEL - MAN _____

MATERIAL BALANCE DISCREPANCY (Yes/No) _____

FLUSH WATER FROM VAULT _____

FLUSH WATER FROM TGE _____

9. FINAL APPROVALS

a.) DAY SHIFT MANAGER _____ DATE _____

b.) MANAGER _____ DATE _____

9011785100 2

TRANSFER LOG SHEET Page 1 of 2
LEACHATE TO VAULT

CAMPAIGN NUMBER _____ LEACHATE PUMP _____ LEACHATE PIT _____

1. **PRESTART VAULT VALVE ALIGNMENT**

a.)

VALVE	GRAPHIC	POSITION	OPERATOR
MOV-01	22	CLOSED	_____
MOV-02	22	CLOSED	_____
MOV-03	22	CLOSED	_____
MOV-04	22	CLOSED	_____
MOV-05	22	A-B	_____
MOV-06	22	CLOSED	_____
MOV-07	22	CLOSED	_____
HV-08	--	B-Dropleg	_____

2. **VAULT PREPARATION** — **OPERATOR**

a.) Breather filter in place and in-take screen clear of debris _____

b.) Vault Leak detection devices operable _____

c.) Leachate pump jumpered to nozzle LP with respective hand valve opened (P-LP-02 with HOV-01, or P-LP-01 with HOV-02) _____

d.) Respective Leachate pump breaker switched on _____

3. **PRESTART APPROVAL**

a.) SHIFT MANAGER _____ DATE _____

b.) MANAGER _____ DATE _____

4. **TRANSFER DATA**

START TRANSFER DATE _____

INITIAL LEACHATE PIT LEVEL (gallons) _____

INITIAL VAULT LEVEL LE-101 (gallons) _____

INITIAL VAULT LEVEL LE-102 (gallons) _____

INITIAL VAULT LEVEL LE-103 (gallons) _____

INITIAL VAULT LEVEL LE-104 (gallons) _____

START TRANSFER TIME (0000-2400 hrs) _____

TRANSFER LOG SHEET Page 2 of 2
LEACHATE TO VAULT

CAMPAIGN NUMBER _____ LEACHATE PUMP _____ LEACHATE PIT _____

4. TRANSFER DATA cont.

TRANSFER LOG

TIME (/10 min)	LE-101	LE-102	LE-103	LE-104	PIT	LEVEL

STOP TRANSFER TIME (0000-2400 hrs) _____

FINAL LEACHATE PIT LEVEL (gallons) _____

5. FINAL APPROVALS

a.) DAY SHIFT MANAGER _____ DATE _____

b.) MANAGER _____ DATE _____

9011785100 4

TRANSFER LOG SHEET
FLUSH WATER TO AP-102
CAMPAIGN NUMBER _____ DATE _____

1. **AP-102 TANK EVALUATION** — **OPERATOR**

   a.) Tank Level (per automatic or manual gage) of _____ inches plus Transfer Volume (2.e.) _____ inches plus flush of 0.1 inches (300 gallons) equals _____ inches and is within AP-102 specification: < 416 inches _____

   b.) Maximum Hydrostatic Head for transfer is _____ in. WG per Reference _____ and is within AP-102 specification: < 717 in WG _____

   c.) All Leak detection systems operable _____

   d.) All Ventilation systems operable _____

   e.) CASS and RPT notified _____

   f.) Evaporator and Tank Farm Personnel notified _____

2. **PRESTART APPROVALS**

   a.) DAY SHIFT MANAGER _____ DATE _____

   b.) MANAGER _____ DATE _____

3. **TRANSFER DATA**

   INITIAL MODULE SUMP LEVEL (gallons) _____

   START TRANSFER TIME (0000-2400 hrs) _____

   STOP TRANSFER TIME (0000-2400 hrs) _____

   FINAL SUMP LEVEL (gallons) _____

   AP-102 FINAL LEVEL - FIC (inches) _____

   AP-102 FINAL LEVEL - MAN (inches) _____

   MATERIAL BALANCE DISCREPANCY (Yes/No) _____

4. **FINAL APPROVALS**

   a.) DAY SHIFT MANAGER _____ DATE _____

   b.) MANAGER _____ DATE _____

This page intentionally left blank.

ADJUST pH OF TGE LCT W01 CONTENTS

I. SYSTEM DESCRIPTION

This procedure provides instructions for adjusting the pH of Liquid Collection Tank (LCT) W01 contents before pumping the contents. All activities described in this procedure are performed in the Control Room with the exception of manual valve alignment.

Equipment involved:

- Liquid Collection Tank (LCT) (W01)
- LCT Agitator (W02)
- pH Adjustment Tank (R04)
- pH Adjustment Metering Pump (R08).

II. PRESTART CONDITION

Supervision has requested pH adjustment of the LCT contents.

pH Adjustment Tank R04 level is equal to or greater than 7%, see graphic 7.

The instrument air system is operating.

Grout processing has been shut down.

III. SAFETY

Applicable Safety Documents - Provisions of Standard Requirements and Procedures, RHO-GM-MA-2, Section 61-02.5 (GEN-0), Radiation Work Permit (RWP) F-28, Industrial Safety Manual WHC-CM-4.3 Vol. 1 and 2, Tank Farm Safety Rules, Accident Prevention Standards, and Emergency Plan for Tank Farms, RHO-MA-111.5, apply to all work performed under this procedure.

When handling chemicals, refer to appropriate Material Safety Data Sheets (MSDS) and follow all safety precautions listed.

IV. TOOLS AND SUPPLIES

None

V. TABLE OF CONTENTS

	PAGE
A. PREPARE SYSTEM	2
B. PUMP ADJUSTMENT CHEMICAL	2

OFFICIALLY RELEASED
CDM

9011178510007

VI. PROCEDURE

A. PREPARE SYSTEM

1. Start LCT agitator W02, see graphic 3.

2. Adjust stroke on pH adjustment metering pump R08 to 100%.

3. Position the following valves as indicated:

VALVE	POSITION	DESCRIPTION	GRAPHIC
HV-128	CLOSE	pH Adjustment Tank Fill Connection Isolation	N/A
HV-129	OPEN	pH Adjustment Metering Pump Inlet	N/A
FV-R34	CLOSE	pH Adjustment Metering Pump Outlet	7
HV-185	CLOSE	Raw Water to pH Adjustment Tank	N/A
HV-130	OPEN	PI-R32 Isolation	N/A
HV-131	CLOSE	PI-R32 Test Point	N/A
FV-F08	CLOSE	Raw Water to LCT	7
FV-W42	CLOSE	LCT Drain	3

B. PUMP ADJUSTMENT CHEMICAL

1. Record the chemical, volume, and metering pump R08 run time which must be added to LCT W01, per the appropriate Process Memo, on Routine Log Sheet.

2. Start agitator R09, see graphic 7.

3. Open valve FV-R34, see graphic 7.

4. Enter the number of minutes, recorded on Log Sheet, to data download point I, see graphic 7.

5. Start pump R08, see graphic 7.

NOTE - After the run time, the pump will stop automatically.

6. After the pump has stopped running, close valve FV-R34, see graphic 7.

7. Stop agitator R09, see graphic 7.

9011178510008

PRECHARGE TGE ADDITIVES/LINES

I. SYSTEM DESCRIPTION

This procedure provides instructions for precharging, or filling, the Transportable Grout Equipment (TGE) additive feed lines with material, thereby ensuring that the additives will feed to grout mixer W05 immediately upon startup of the additive system.

The additive system is comprised of three stainless steel storage tanks, with three respective metering pumps and flow control systems. The flow control systems contain redundant flow meters to verify proper metering of material.

All activities described in this procedure are performed in the Control Room.

Equipment involved:

- Fluidizer Tank (R01)
- Tributyl Phosphate Tank (R02)
- Set Regulator Tank (R03)
- Fluidizer Metering Pump (R05)
- Tributyl Phosphate Metering Pump (R06)
- Set Regulator Metering Pump (R07).

II. PRESTART CONDITION

Supervision has recorded on the GROUT FORMULATION DATA SHEET which of the three additives (fluidizer, tributyl phosphate, or set regulator) will be required for grout production.

- If fluidizer will be used for grout production, fluidizer tank R01 level is equal to or greater than 5%, see graphic 6
- If tributyl phosphate will be used for grout production, tributyl phosphate tank R02 level is equal to or greater than 5%, see graphic 6
- If set regulator will be used for grout production, set regulator tank R03 level is equal to or greater than 5%, see graphic 6

The instrument air system is operating per TO-390-147.

Valves and systems are set up per TO-390-107.

OFFICIALLY RELEASED
ODM

III. SAFETY

Applicable Safety Documents - Provisions of Standard Requirements and Procedures, RHO-GM-MA-2, Section 61-02.5 (GEN-0), Radiation Work Permit (RWP) F-28, Industrial Safety Manual, WHC-CM-4.3 Vol. 1 and 2, Tank Farm Safety Rules, Accident Prevention Standards, and Emergency Plan for Tank Farms, RHO-MA-111.5, apply to all work performed under this procedure.

When handling chemicals, refer to appropriate Material Safety Data Sheets (MSDS) and follow all safety precautions listed.

IV. TOOLS AND SUPPLIES

GROUT FORMULATION DATA SHEET
Routine Log Sheet

V. TASK/ACTIVITY INDEX

		PAGE
A.	PRECHARGE FLUIDIZER SYSTEM LINES	3
B.	PRECHARGE TRIBUTYL PHOSPHATE SYSTEM LINES	4
C.	PRECHARGE SET REGULATOR SYSTEM LINES	5

9011178510106

VI. PROCEDURE

NOTE - Refer to the GROUT FORMULATION DATA SHEET to determine which additive is to be used.

A. PRECHARGE FLUIDIZER SYSTEM LINES

NOTE - Steps in this task can be viewed on graphic 6.

1. Set flow controller FIC-R06 to AUTOMATIC/LOCAL.

2. Enter a set point for fluidizer flow from GROUT FORMULATION DATA SHEET into the controller.

3. Start fluidizer metering pump R05.

4. Ensure the following valves automatically position as indicated:

VALVE	POSITION
FV-R08	OPEN
FV-R05	OPEN
FV-R01	A-C

5. Fill empty line for 5 min, then stop fluidizer metering pump R05. Use best estimation to fill partially filled lines.

NOTE - Partially filled lines may only require several minutes to fill.

- Additive pumps will shut down automatically if grout processing is not started in 6 min.

6. Ensure the following valves automatically position as indicated:

VALVE	POSITION
FV-R08	CLOSE
FV-R05	CLOSE
FV-R01	C-B

7. Note precharge fill time on Routine Log Sheet.

B. PRECHARGE TRIBUTYL PHOSPHATE SYSTEM LINES

NOTE - Steps in this task can be viewed on graphic 6.

1. Set flow controller FIC-R16 to AUTOMATIC/LOCAL.

2. Enter a set point for tributyl phosphate flow from GROUT FORMULATION DATA SHEET into the controller.

3. Start tributyl phosphate metering pump R06.

4. Ensure the following valves automatically position as indicated:

VALVE	POSITION
FV-R18	OPEN
FV-R05	OPEN
FV-R01	A-C

5. Fill empty line for 5 min, then stop tributyl phosphate metering pump R06. Use best estimation to fill partially filled lines.

NOTE - Partially filled lines may only require several minutes to fill.

- Additive pumps will shut down automatically if grout processing is not started in 6 min.

6. Ensure the following valves automatically position as indicated:

VALVE	POSITION
FV-R18	CLOSE
FV-R05	CLOSE
FV-R01	C-B

7. Note precharge fill time on Routine Log Sheet.

9011178510 12

C. PRECHARGE SET REGULATOR SYSTEM LINES

NOTE - Steps in this task can be viewed on graphic 6.

1. Set flow controller FIC-R16 to AUTOMATIC/LOCAL.

2. Enter a set point for set regulator flow from GROUT FORMULATION DATA SHEET into the controller.

3. Start set regulator metering pump R07.

4. Ensure the following valves automatically position as indicated:

VALVE	POSITION
FV-R28	OPEN
FV-R05	OPEN
FV-R01	A-C

5. Fill empty line for 5 min, then stop set regulator metering pump R07. Use best estimation to fill partially filled lines.

NOTE - Partially filled lines may only require several minutes to fill.

- Additive pumps will shut down automatically if grout processing is not started in 6 min.

6. Ensure the following valves automatically position as indicated:

VALVE	POSITION
FV-R28	CLOSE
FV-R05	CLOSE
FV-R01	C-B

7. Note precharge fill time on Routine Log Sheet.

This page intentionally left blank.

PLANT OPERATING PROCEDURE	TANK FARM — Operation GROUT — System

FILL TGE DECON/ADDITIVES MODULE TANKS

I. SYSTEM DESCRIPTION

This procedure provides instructions for filling the transportable grout equipment (TGE) decon/additive module tanks. Activities described in this procedure are performed inside the decon/additives module control room and outside this module at the tank fill box.

The decon/additive module tanks are as follows:

- Fluidizer Tank R01
- Tributyl Phosphate Tank R02
- Set Regulator Tank R03
- Decon Storage Tank F01
- pH Adjustment Tank R04.

There are two systems which can be used to fill the tanks in the decon/additives module:

- Unloading from a chemical tank truck
- Unloading from a drum pumping trailer.

Use of a Tank Farms chemical tank truck involves bulk unloading. This truck will be used when the raw materials being loaded into the tanks are either made up at other site locations, or are purchased commercially in bulk.

The drum pumping trailer will be used when the raw materials to be unloaded are contained within drums.

This procedure specifically details interaction with the chemical tank truck. Configuration for valving on this truck is shown in Figure 1. Refer to TO-290-070 for detail using any other tank truck.

9011785101 5

OFFICIALLY RELEASED
ODM

Release Date	Expiration	Document No.	Rev/Mod	Page
5-17-88	----	TO-390-170	A-0	1 of 14

II. PRESTART CONDITIONS

A tanker truck with discharge/suction hose and pump, or appropriate drums of liquid material with drum pumping trailer must be located next to the decon/additives module at the tank fill box.

If filling F01, decon pump F02 must not be running, see graphic 7.

The following raw water manual valves must be closed:

- HV-185
- HV-186
- HV-187
- HV-188.

III. SAFETY

Warning - Personnel working with chemicals shall wear protective gloves, apron, and face shield. Solutions being handled may contain hazardous or corrosive chemicals.

Ensure safety shower in decon/additive module is in proper working condition.

Applicable Safety Documents - Provisions of Standard Requirements and Procedures, RHO-GM-MA-2, Section 61-02.5 (GEN-0), Radiation Work Permit (RWP) F-28, Industrial Safety Manual, WHC-CM-4.3 Vol 1 and 2, Tank Farm Safety Rules, Accident Prevention Standards, and Emergency Plan forTtank Farms, RHO-MA-111.5 apply to all work performed under this procedure.

When handling chemicals, refer to appropriate Material Safety Data sheets (MSDS) and follow all safety precautions listed.

IV. TOOLS AND SUPPLIES

Leather Gloves
Apron
Face Shield
Two-Way Radios
Drum Cap Remover
ROUTINE LOG SHEET (TO-390-196)

V. TASK/ACTIVITY INDEX

	PAGE
A. FILL TANKS FROM CHEMICAL TANK TRUCK	3
B. FILL TANKS FROM PUMP TRAILER	8
FIGURE 1 - CHEMICAL TANK TRUCK SCHEMATIC	12
FIGURE 2 - DECON/ADDITIVES TANK CALIBRATION	13
FIGURE 3 - PUMP TRAILER SCHEMATIC	14

VI. PROCEDURE

A. FILL TANKS FROM CHEMCIAL TRUCK

WARNING

WEAR PROTECTIVE GLOVES, APRON, AND FACE SHIELD WHEN WORKING WITH CHEMICALS.

NOTE - These steps apply generally to all tanks in the decon/additives module. Instructions relating to a specific tank are highlighted in special notes. Refer to Figure 1 for valve locations.

1. Record pre-fill tank level on ROUTINE LOG SHEET, see grpahics 6 or 7.

2. Obtain from truck driver any specification paperwork on material and deliver it to supervision.

CAUTION

Do not proceed without authorization from supervision that tank contents are suitable for transfer.

3. Position the following tank truck valves:

VALVE	POSITION
HV-T1	CLOSED
HV-T2	OPEN
HV-T3	CLOSED
HV-T7	OPEN
HV-T8	CLOSED
HV-T9	CLOSED
HV-T10	CLOSED
HV-T11	OPEN

9011178510108

A. FILL TANKS FROM CHEMCIAL TRUCK (Cont.)

4. Connect tank truck's discharge hose to respective tank fill connection located in tank fill box.

5. Ensure the appropriate tank valves are positioned as indicated:

TANK	VALVE	POSITION
Fluidizer R01	HV-153 HV-154	OPEN CLOSED
Tributyl Phosphate R02	HV-160 HV-161	OPEN CLOSED
Set Regulator R03	HV-167 HV-168	OPEN CLOSED
Decon F01	HV-252 FV-F04 (graphic 7)	OPEN CLOSED
pH Adjustment R04	HV-128 HV-129	OPEN CLOSED

6. Request truck driver to start tank truck pump.

7. After truck pump has been started, open valve HV-T1 on tank truck.

NOTE - The discharge pressure gage is located on the discharge manifold.

8. Position valve HV-T2 on truck to 50% closed.

9. Monitor tank and piping system for leaks.

10. When high level alarm horn activates, open valve HV-T2 fully, and close valve HV-T1. Notify supervision.

A. FILL TANKS FROM CHEMICAL TRUCK (Cont.)

NOTE - Refer to TO-390-198 for appropriate alarm responses.

- Supervision will evaluate how much module tank space is left to pump remainder of tank truck contents into.

11. If any of the following occur, request truck driver to stop tank truck pump:
    - Transfer is complete (tank truck is empty)
    - Respective tank HIGH HIGH level alarm activates
    - Any indication of a leak or tank overflow.

12. When pumping operation is complete, position the tank truck valving in the order indicated:

VALVE	POSITION
HV-T10	CLOSED
HV-T3	CLOSED
HV-T11	CLOSED
HV-T1	OPEN
HV-T7	OPEN
HV-T2	OPEN
HV-T9	OPEN

NOTE - This will allow the hose to drain into the pump drip pan. Moving the hose will help the solution to drain.

- Supervision instructions will be needed for flushing hoses prior to disconnect.

13. When drainage from HV-T9 is complete, close HV-T1.

14. After flushing requirements have been completed, disconnect and return hose to storage.

15. Notify supervision for instructions on cleanup of pump drip pan.

9011178510 20

A. FILL TANKS FROM CHEMICAL TRUCK (Cont.)

16. Position the following valves for tank that was filled:

TANK	VALVE	POSITION
Fluidizer R01	HV-153 HV-154	CLOSED OPEN
Tributyl Phosphate R02	HV-160 HV-161	CLOSED OPEN
Set Regulator R03	HV-167 HV-168	CLOSED OPEN
Decon F01	HV-252 FV-F04 (graphic 7)	CLOSED CLOSED

17. Record post-fill tank level for respective tank on Routine Log Sheet, see graphics 6 or 7.

NOTE - For more information regarding tank levels, refer to Figure 2.

9011178510 21

B. FILL TANK FROM PUMP TRAILER

WARNING

WEAR PROTECTIVE GLOVES, APRON, AND FACE SHIELD WHEN WORKING WITH CHEMICALS.

NOTE - These steps apply generally to all tanks in the decon/additives module. Instructions relating to a specific tank are highlighted in special notes. Refer to Figure 3 for valve locations.

1. Record pre-fill tank level on Routine Log Sheet, see graphics 6 or 7. Ensure there is adequate space in the tank for drum contents.

2. Check paperwork on drums and forward to supervision.

CAUTION

Do not proceed without authorization from supervision stating that drum contents are suitable for pumping.

3. Connect air supply and discharge hoses to one of the drum pumps, and the other discharge hose to approriate material inlet connector in the tank fill box.

NOTE - There are three identical drum pumps, and any may be used. However, try to maintain the following configurations:

- Pump 1 - Generally neutral solutions, organics, e.g., TBP
- Pump 2 - Acidic solutions
- Pump 3 - Basic solutions.

4. Ensure air compressor power cable is plugged into outlet on decon/additive module, and receiver outlet valve HV-PT2 is open.

9011178510022

B. FILL TANK FROM PUMP TRAILER (Cont.)

5. Ensure the appropriate tank valves are positioned as indicated:

TANK	VALVE	POSITION
Fluidizer R01	HV-153 HV-154	OPEN CLOSED
Tributyl Phosphate R02	HV-160 HV-161	OPEN CLOSED
Set Regulator R03	HV-167 HV-168	OPEN CLOSED
Decon F01	HV-252 FV-F04 (graphic 7)	OPEN CLOSED
pH Adjustment R04	HV-128 HV-129	OPEN CLOSED

6. Start pump trailer air compressor by pressing the START button.

7. After system has reached operating pressure, jog the pump with the remote pump START/STOP buttons.

8. If the pump fails to turn, recheck hose connections and valving, rejog the pump. Notify supervision if pump still will not start.

9. Position the drum in reach of pump trailer winch crane.

WARNING

DO NOT MOVE ANY DRUMS THAT APPEAR TO BE BULGING OR LEAKING, NOTIFY SUPERVISION.

CAUTION

Ensure all trailer jack stands are lowered to the ground prior to raising any drum with the winch.

9011785102 7

B. FILL TANK FROM PUMP TRAILER (Cont.)

10. Inspect winch cable and grating where drum will set for damage. If damage is found, notify supervision.

11. Attach drum lifter to drum, lower winch crane cable, and hook cable to drum lifter.

WARNING

DO NOT ATTEMPT TO MOVE OR POSITION DRUM BY GRASPING WINCH CABLE.

ENSURE ALL PERSONNEL ARE CLEAR WHEN DRUM IS BEING MOVED.

12. Raise drum with winch crane hand crank, high enough to clear all travel obstructions.

13. Lock hand crank in place.

14. Swing drum into place, unlock crank handle, and slowly lower drum onto grating.

15. Slowly remove the drum top screw cap and breather cap.

16. Insert pump tube assembly into drum and attach it to pump inlet hose.

17. Check the following pump trailer valving:

VALVE	POSITION
HV-PT2	OPEN
HV-PT3	CLOSED

18. Press START button on remote switch to start pump.

19. When high level alarm horn activates, stop pump, and notify supervision.

NOTE - Refer to TO-390-198 for appropriate alarm responses.

- Supervision will evaluate how much module tank space is left to pump remainder of drum contents into.

9011785102 4

B. FILL TANK FROM PUMP TRAILER (Cont.)

20. If alarm does not activate, continue pumping drum until it is empty.

NOTE - It may be necessary to move pump tube assembly around to withdraw maximum amount of material out of drum.

21. When drum is empty, stop pump by pressing STOP button on remote switch.

22. Remove pump tube slowly and lay it on grating, allowing drainage to flow into drip pan.

23. Replace drum caps.

24. Move drum off of trailer manually, or with winch, and label and store per supervision instructions.

NOTE - Supervision will determine if more drums are to be pumped.

25. If more drums are to be pumped, repeat this Task.

26. Notify supervision when unloading operation is complete.

NOTE - Supervision will give instructions for pump trailer flushing and final storage.

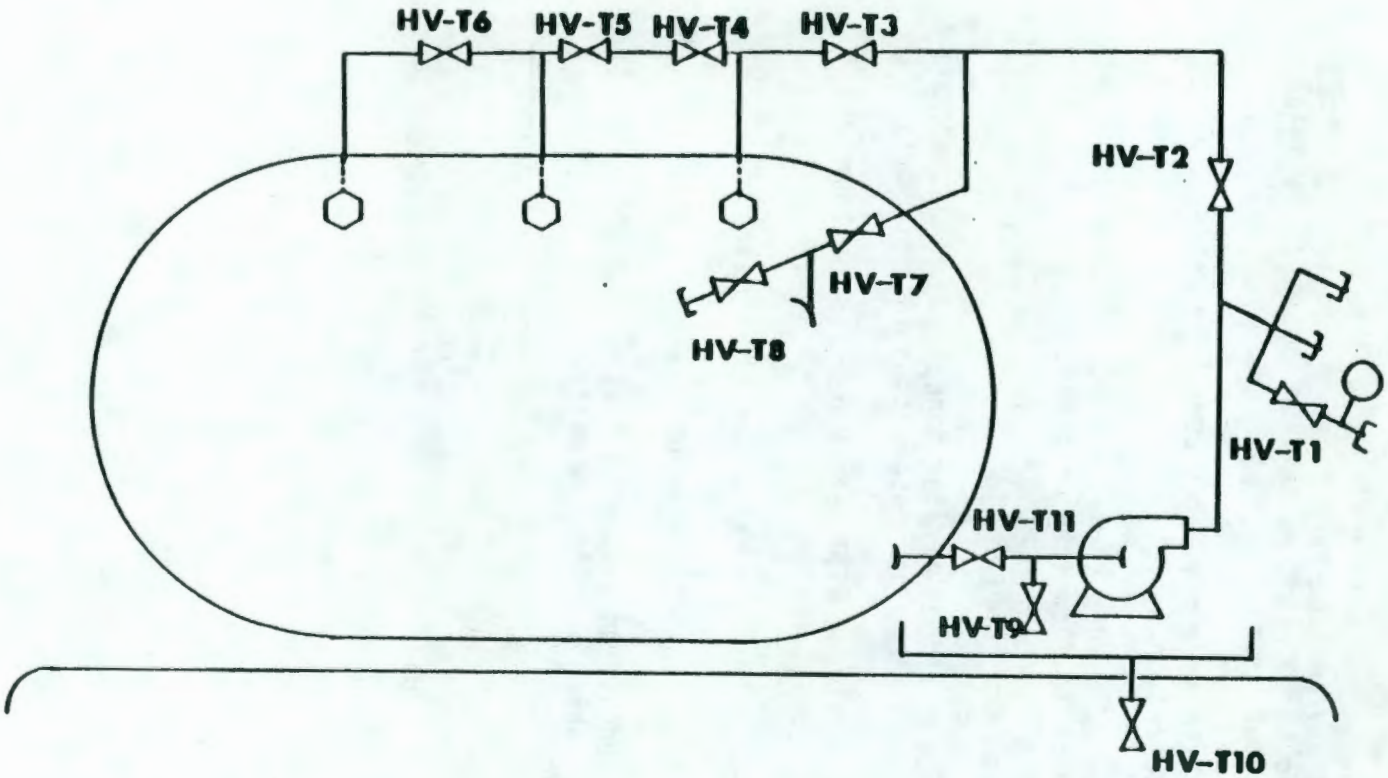

FIGURE 1 - CHEMICAL TANK TRUCK SCHEMATIC

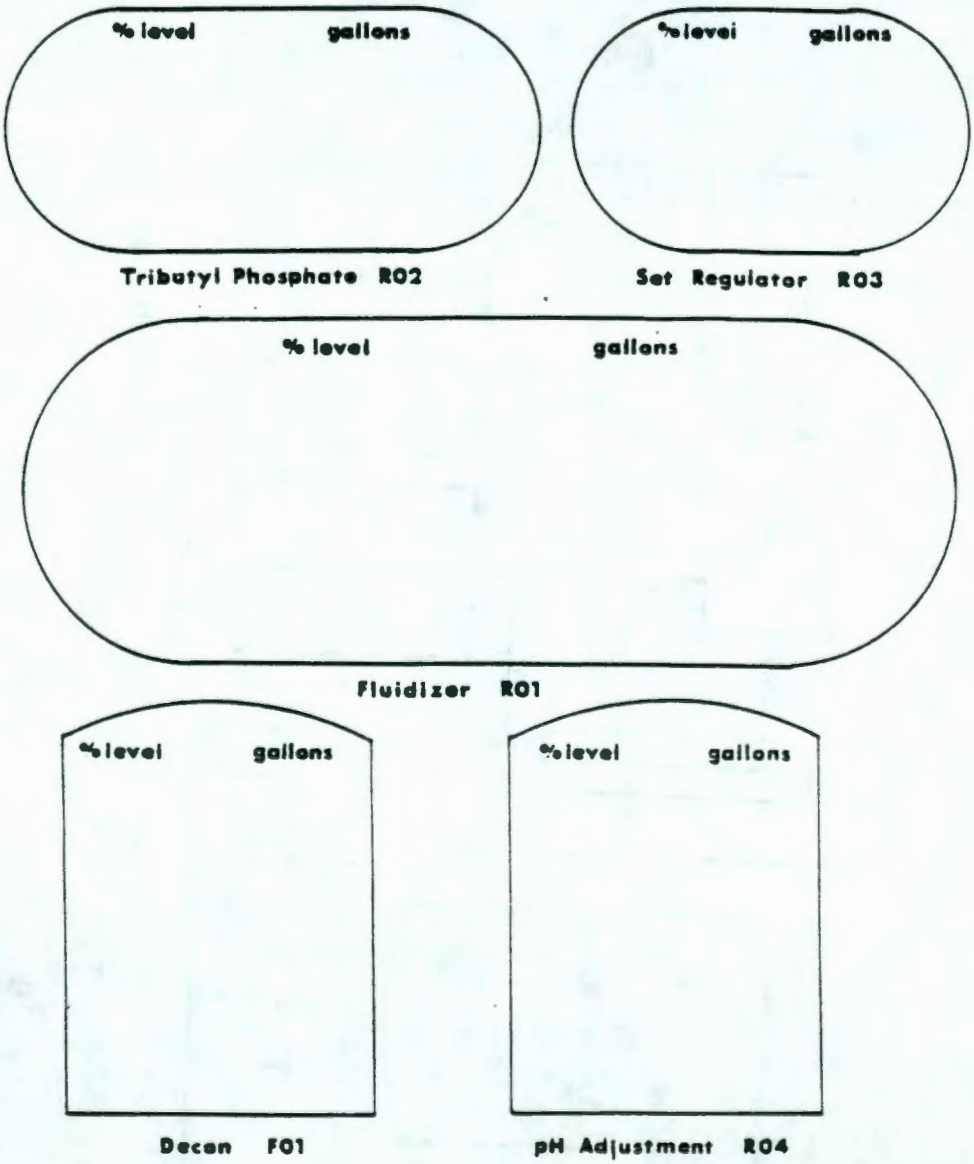

FIGURE 2 - DECON/ADDITIVES TANK CALIBRATION

9011178510 27

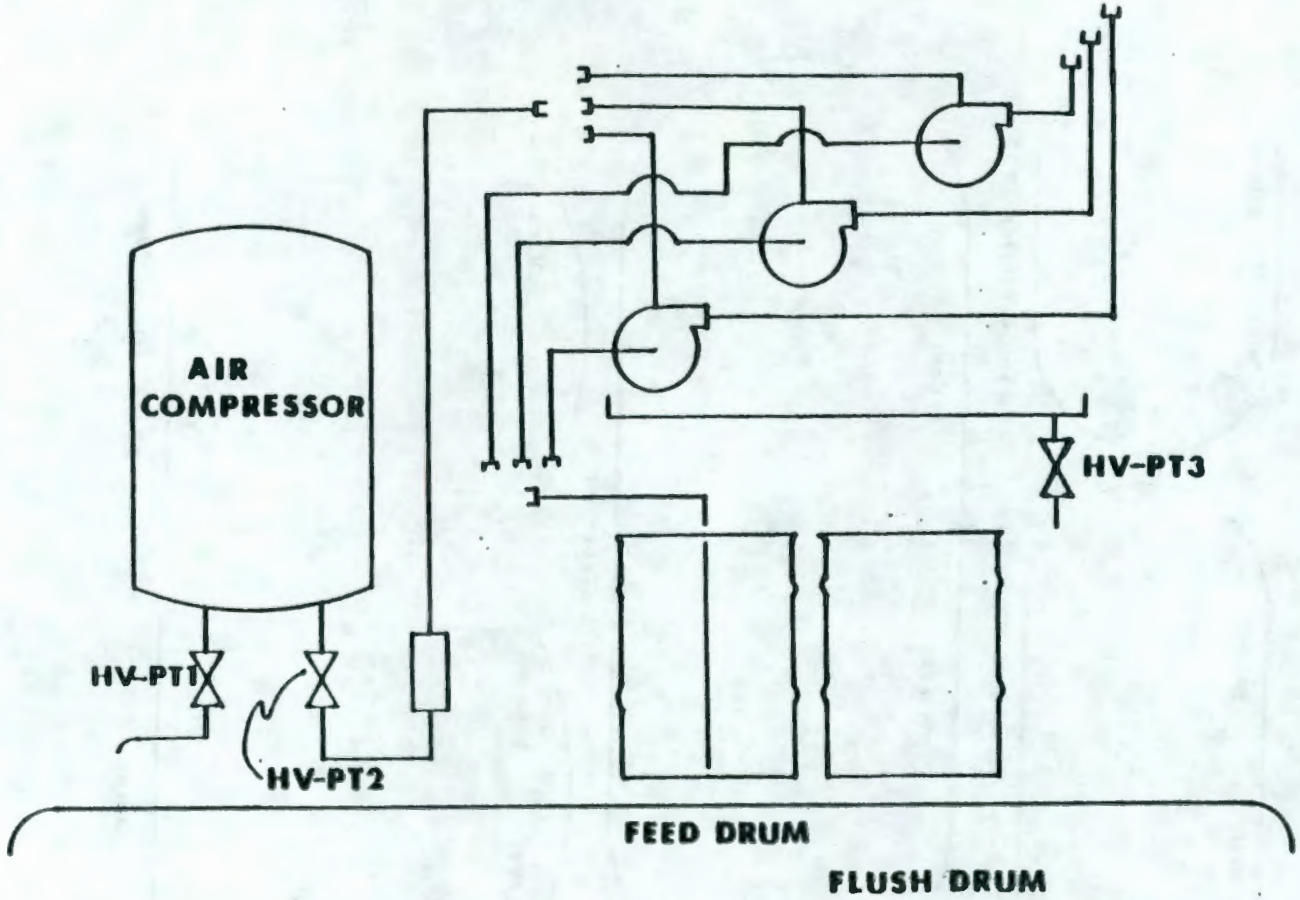

FIGURE 3 - PUMP TRAILER SCHEMATIC

DECONTAMINATE TGE SYSTEM

I. SYSTEM DESCRIPTION

This procedure provides instructions for decontaminating Transportable Grout Equipment (TGE) system and rinsing of the liquid collection tank (LCT) sample box. The system includes the grout process equipment, the grout mixer feed chute, the LCT/mixer module floor, the LCT/mixer module sump.

Water is used as the decon solution for decontaminating the equipment.

Equipment involved:

- Decon Storage Tank (F01)
- Decon Storage Agitator (F06)
- Decon Pump (F02).

II. PRESTART CONDITION

The instrument air system is on-line.

The raw water feed system is prepared for startup per TO-390-107.

Decon storage tank F01 is filled with water. Water temperature is between 175-185 °F with the agitator running, see graphic 7.

Grout processing is shut down.

Locations in the TGE systems module which require decontamination have been identified.

If using spray wands, concrete blocks have been removed from top of LCT/mixer module.

LCT-W01 has sufficient room for holding decontamination solutions.

9011785102 9

OFFICIALLY RELEASED
ODM

III. SAFETY

Caution - Do not operate decon pump F02 under dead-headed conditions.

Applicable Safety Documents - Provisions of Standard Requirements and Procedures, RHO-GM-MA-2, Section 61-02.5 (GEN-0), Radiation Work Permit (RWP) F-28, Industrial Safety Manual, WHC-CM-4.3 Vol. 1 and 2, Tank Farm Safety Rules, and Emergency Plan for Tank Farms, RHO-MA-111.5, apply to all work performed under this procedure.

IV. TOOLS AND SUPPLIES

Spray Wands and Nozzles
Two-way Radios
TO-390-157, SAMPLE TGE LIQUID COLLECTION TANK CONTENTS
TO-390-164, ADJUST pH OF LIQUID COLLECTION TANK CONTENTS

V. TABLE OF CONTENTS

	PAGE
A. DECONTAMINATE GROUT PROCESS EQUIPMENT	3
Decontaminate Process System	3
Decontaminate Feed Chute and Process System	6
B. DECONTAMINATE LCT/MIXER MODULE	6
C. DECONTAMINATE/RINSE LCT/MIXER MODULE FLOOR	7
Rinse LCT/Mixer Module Floor	7
D. RINSE GROUT EQUIPMENT EXTERNALS	8
E. DECONTAMINATE LCT/MIXER MODULE SUMP	9
F. RINSE LCT SAMPLE BOX	9

9011178510 30

VI. PROCEDURE

A. DECONTAMINATE GROUT PROCESS EQUIPMENT

Decontaminate Process System

1. Ensure the following valves are positioned as indicated:

VALVE	POSITION	DESCRIPTION	GRAPHIC
DOV-622-1	CLOSE	Recirculation Control	2
POV-622-2	CLOSE	Pump P102-1 Discharge	2
POV-622-3	CLOSE	Waste Feed Supply	2
POV-622-4	OPEN	Waste Feed Supply Line Drain	2
FV-F02	B-C	Liquid Feed Line	3
FV-W01	CLOSE	Waste Feed Isolation	3
FV-F01	A-C	Decon/Raw Water to Grout MixeR	3
FV-F03	A-B	Decon/Raw Water to Surge Tank/Grout Pump	3
LV-W02	CLOSE	LCT Level Control	3
FV-W40	A-C	LCT Recirculation	3
FV-W42	CLOSE	LCT Drain	3
FV-W44	A-C	Sample Line Flush Block and Bleed	3
FV-W46	CLOSE	Sample Line Flush	3
FV-H01	B-C	Grout Clearing Block and Bleed	4
FV-W06	CLOSE	Liquid Feed Control	4
FV-W31	A-C	Grout Line	4
FV-W30	A-B	Grout Pump Discharge	4
FV-W43	CLOSE	Grout Pump W06 Drain	4
FV-R01	B-C	Additive Block and Bleed	6
FV-R05	CLOSE	Additive Feed	6
FV-F04	OPEN	Decon Storage Tank Outlet	7
FV-F06	OPEN	Decon/Raw Water to Surge Tank Bubblers	7
FV-R34	CLOSE	pH Adjustment Metering Pump Outlet	7

(Continued on next page.)

9011178510 31

A DECONTAMINATE GROUT PROCESS EQUIPMENT (Cont.)

1. (Cont.)

VALVE	POSITION	DESCRIPTION	GRAPHIC
HV-106	OPEN	Instrument Air FC-W26 Isolation	N/A
HV-107	OPEN	Instrument Air FC-W26 Isolation	N/A
HV-183	CLOSE	Raw Water to Decon Storage Tank	N/A
HV-246	CLOSE	Decon/Raw Water to Sample Box Spray	N/A
HV-252	CLOSE	Decon Fill Connection Isolation	N/A

2. Position grout pump W06 START switch to AUTO (automatic) mode, see graphic 4.

3. Set input for LIC-W20 to LE-W21, see graphic 15.

4. Set surge tank W09 level controller LIC-W20 to MAN (manual) mode with set point at 28 gal, see graphic 4.

5. Start decon pump F02, see graphic 7.

6. Close the following manual valves:
   - HV-263
   - HV-264
   - HV-265.

7. Open and close the following manual valves to decon surge tank W09 level bubblers:

NOTE - Each valve should be left open for approximately 15 sec.

   - HV-260
   - HV-261
   - HV-262.

8. Open the following manual valves:
   - HV-263
   - HV-264
   - HV-265.

9. Stop decon pump F02, see graphic 7.

9011785103 2

A. DECONTAMINATE GROUT PROCESS EQUIPMENT (Cont.)

10. Close valve FV-F06, see graphic 7.

11. Allow 5 min for surge tank level to stabilize, then set input for LIC-W20 to LE-W20, see graphic 15.

12. Open valve FV-F08, see graphic 7.

13. Start decon pump F02, see graphic 7.

14. When the level in surge tank W09 reaches 28 gal and LIC-W20 switches to AUTO (automatic), ensure grout pump W06 starts, see graphic 4.

15. Allow decon pump F02 to operate until LSLL-F11 shuts off pump (approximately 1%).

16. Allow grout pump W06 to operate until surge tank level low-low switch shuts off pump (approximately 15 gal), see graphic 4.

17. Close valves FV-F04 and FV-F08, see graphic 7.

18. Position valve FV-F02 to A-B, see graphic 3, to initiate recirculation from the LCT through the grout system.

19. Place LIC-W02 in MAN (manual) mode and adjust its output to 0%, see graphic 3.

NOTE - LV-W02 will open to 100%.

20. Place waste flow controller FIC-W06 in MAN (manual) mode and adjust output to 50%, see graphic 4.

21. Position FV-W40 to A-B, see graphic 3.

22. Start LCT pump W03, see graphic 3.

23. When LIC-W20 reaches 28 gal, ensure grout pump W06 starts, see graphic 4.

24. Adjust FIC-W06 output to achieve 50 gpm. Then switch the controller to AUTO (automatic), see graphic 4.

25. Recirculate solution for one hour.

26. Position LIC-W20 and FIC-W06 to MAN (manual) mode, see graphic 4.

27. Stop LCT pump W03, see graphic 3.

9011785103 3

A. DECONTAMINATE GROUT PROCESS EQUIPMENT (Cont.)

28. Allow grout pump W06 to operate until LSLL-W20 stops the pump (at approximately 10 gal), see graphic 4.

Decontaminate Feed Chute and Process System

NOTE - These steps will be performed as directed by supervision.

29. Perform Steps 1-16.

30. Connect 1/2"-HS-001 to line 1"-F-S1-P07.

31. Open HV-258 to spray chute. After 2 min, close HV-258 to spray chute.

32. Perform Steps 17-28.

B. DECONTAMINATE LCT/MIXER MODULE

NOTE - Decontamination of the LCT/mixer module is performed using spray wands.

- Throughout this decontamination operation, sump pump W07A, see graphic 3, will be turning on and off due to interlocks from LSH-W35 and LSL-W35 and pumping sump contents to LCT W01.

1. Ensure valves are positioned per Task A and Steps 1-14 have been completed.

2. Open valves FV-F06 and FV-F04, see graphic 7.

3. Start decon pump F02, see graphic 7.

4. Connect decon/raw water hose 1/2"-HS-006 to the spray wand and insert wand through a module roof opening.

5. Open manual valve HV-256. Direct the jet of the spray nozzle at decontamination site while watching jet on local monitor MON-02, or while being directed by Control Room operator.

6. When the site is decontaminated, close manual valve HV-256.

7. Decontaminate additional sites as necessary by inserting wand in other locations and cycling HV-256.

8. Stop decon pump F02, see graphic 7.

9. Close valves FV-F06 and FV-F04, see graphic 7.

9 0 1 1 7 8 5 1 0 3 4

C. DECONTAMINATE/RINSE LCT/MIXER MODULE FLOOR

CAUTION

Do not use water greater than 100 °F for decontamination or rinsing, unless directed by supervision and TFPE. High humidity in the LCT/mixer module may damage the HEPA filters in the exhaust system.

1. Ensure valves are positioned per Task A, Step 1.

2. Open the following valves, see graphic 7:
   - FV-F06
   - FV-F10
   - FV-F04.

3. Ensure manual valves HV-256 and HV-277 are closed.

   a. If cover blocks are in place and manual valve HV-256 cannot be visually inspected, continue with procedure.

   b. If motor pit sump HIGH LEVEL alarm activates during rinse indicating HV-256 is open, discontinue rinsing operation and notify supervision.

4. Start decon pump F02, see graphic 7.

5. Open manual valve HV-275 to flush solution across floor to the sump.

6. When Control Room operator determines floor is adequately flushed, close manual valve HV-275.

7. Repeat Steps 5 and 6 with manual valve HV-276 until entire floor is adequately flushed.

8. Stop decon pump F02, see graphic 7.

9. Close valve FV-F04, see graphic 7.

Rinse LCT/Mixer Module Floor

10. Rinse floor with raw water by opening valve FV-H04, see graphic 7.

11. Open valve FV-F10, see graphic 7.

12. Open manual valve HV-275 to rinse the floor.

9011178510035

C. DECONTAMINATE/RINSE LCT/MIXER MODULE FLOOR (Cont.)

13. When Control Room operator determines floor is adequately rinsed, close manual valve HV-275.

14. Repeat Steps 12 and 13 with manual valve HV-276 until entire floor is adequately rinsed.

15. Close valves FV-H04 and FV-F10, see graphic 7.

D. RINSE GROUT EQUIPMENT EXTERNALS

CAUTION

Do not use water for deluging that is greater than 100 °F unless directed by supervision and TFPE.

NOTE - This task is performed using the deluge spray nozzles.

1. Ensure the following valves are closed:
   - FV-H04, see graphic 7
   - FV-H05, see graphic 7
   - Manual valve HV-180
   - Manual valve HV-189.

2. Open manual valve HV-298 to begin deluge.

3. After 10 sec, close manual valve HV-298 and open manual valve HV-299.

4. After 10 sec, position the following valves to flush across the module floor:

VALVE	POSITION	GRAPHIC
HV-299	CLOSE	NA
FV-H04	OPEN	7
FV-F10	OPEN	7
HV-276	OPEN	NA

5. After 30 sec, close manual valve HV-276 and open manual valve HV-277.

D. RINSE GROUT EQUIPMENT EXTERNALS (Cont.)

6. After 30 sec, close the following valves, see graphic 7:
   - HV-277
   - FV-H04
   - FV-F10.

E. DECONTAMINATE LCT/MIXER MODULE SUMP

1. Open valve FV-F04, see graphic 7.

2. Ensure the following manual valves are positioned as indicated:

VALVE	POSITION
HV-277	OPEN
HV-275	CLOSE
HV-276	CLOSE

3. Open valve FV-F10 and start decon pump F02, see graphic 7. Fill sump until high level switch LSH-W35 energizes.

NOTE - Sump pump W07A will start when high level switch LSH-W35 energizes. Sump pump W07A will stop when low level switch LSL-W35 energizes. See graphic 3.

4. Stop decon pump F02, see graphic 7.

5. Close valves FV-F10 and FV-F04, see graphic 7.

F. RINSE LCT SAMPLE BOX

1. Ensure manual valve HV-176 is open.

2. Open manual valve HV-246 and rinse sample box for 1 min.

3. Close manual valve HV-246.

This page intentionally left blank.

PLANT OPERATING PROCEDURE	TANK FARM Operation GROUT System

OPERATE TGE SPRAY AND FLUSH SYSTEMS

I. SYSTEM DESCRIPTION

This procedure provides instructions for operating the grout periodic spray system and for performing process system flushing.

Both the spray system and the flush system can be operated in either the AUTOMATIC or MANUAL mode.

This procedure includes two major efforts:

1. Flushing of the grout process system while producing grout.

2. Flushing during processing down-time with normal water pressure flow or from the grout clearing pump.

This process will be controlled and monitored from the TGE Control Room.

II. PRESTART CONDITION

The raw water feed system has been prepared for startup per TO-390-107.

The instrument air system is on line.

The process ventilation system is on line.

III. SAFETY

Applicable Safety Documents - Provisions of Standard Requirements and Procedures, RHO-GM-MA-2, Section 61-02.5 (GEN-0), Radiation Work Permit (RWP) F-28, Industrial Safety Manual, WHC-CM-4.3 Vol. 1 and 2, Tank Farm Safety Rules, Accident Prevention Standards, and Emergency Plan for Tank Farms, RHO-MA-111.5, apply to all work performed under this procedure.

IV. TOOLS AND SUPPLIES

TO-390-107, PREPARE TGE SYSTEMS FOR STARTUP
TO-390-147, START UP TGE INSTRUMENT AIR
TO-390-152, START UP PROCESS VENTILATION SYSTEM
ROUTINE LOG SHEET

OFFICIALLY RELEASED
ODM

9011785103 9

V. TASK/ACTIVITY INDEX

		PAGE
A.	OPERATE AUTOMATIC SPRAY SEQUENCE	3
B.	OPERATE PROCESS SPRAY SEQUENCE MANUALLY	3
C.	OPERATE PROCESS SPRAY MANUALLY	4
D.	FLUSH GROUT PROCESS EQUIPMENT TO VAULT WITH GROUT PUMP VIA LCT	4
E.	FLUSH GROUT PROCESS EQUIPMENT TO LCT WITH GROUT PUMP	6
F.	BACKFLUSH GROUT PUMP WITH CLEARING PUMP, MANUAL MODE	8
G.	FLUSH GROUT DISCHARGE LINE WITH CLEARING PUMP TO VAULT, MANUAL MODE	9
H.	BACKFLUSH GROUT PUMP WITH CLEARING PUMP, AUTOMATIC MODE	11
I.	FLUSH GROUT DISCHARGE LINE WITH CLEARING PUMP TO VAULT, AUTOMATIC MODE	12
J.	FLUSH WASTE FEED LINE TO AP-102 TANK	13

VI. PROCEDURE

A. OPERATE AUTOMATIC SPRAY SEQUENCE

1. Position the periodic spray auto enabled function to ON, see graphic 15.

NOTE - A timer will initiate the automatic spray sequence at the rate of once per hour of grout production.

2. During the spray sequence, check graphic panel board to ensure the following has occurred:
   - Valve FV-H04 opens, see graphic 7
   - Valve FV-H08 opens, see graphic 7
   - Valve FV-F03 goes to B-A position, see graphic 3
   - Valve FV-F03 remains B-A for 10 sec
   - A visual signal indicates that a process spray is in progress, see graphic 4
   - Valve FV-F03 goes to A-C position, see graphic 3
   - Valve FV-F08 closes, see graphic 7.

3. If any actions in Step 2 did not occur, notify supervision.

B. OPERATE PROCESS SPRAY SEQUENCE MANUALLY

NOTE - This section is used for situations in which spray-downs are needed during the 1-hr wait period between automatic sprays.

1. Ensure that periodic spray auto enable function is ON, see graphic 15.

2. Reset raw water totalizer, see graphic 19.

3. Position the periodic spray MANUAL INITIATE feature to ON, see graphic 15.

NOTE - The 1-hr timer for the automatic spray resets when the MANUAL INITIATE feature is used.

4. Check graphic panel board to ensure the following occurs:
   - Valve FV-H04 opens, see graphic 7
   - Valve FV-H08 opens, see graphic 7
   - Valve FV-F03 goes to B-A position, see graphic 3
   - After 10 sec, valve FV-F03 goes to the A-C position, see graphic 3
   - Valve FV-F08 closes, see graphic 7.

B. OPERATE PROCESS SPRAY SEQUENCE MANUALLY (Cont.)

5. If any of the actions in Step 4 did not occur, notify supervision.

6. Record manual spray occured and final raw water totalizer reading on the Routine Log Sheet, see graphic 19.

C. OPERATE PROCESS SPRAY MANUALLY

1. Reset raw water totalizer, see graphic 19.

2. Open valve FV-H04, see graphic 7.

3. Open valve FV-F08, see graphic 7.

4. Position valve FV-F03 to A-B, see graphic 3.

5. Monitor flow indicator FI-H02 (graphic 7) and flow totalizer FQ-H02 (graphic 14) to determine spray rate and volume.

6. Position valve FV-F03 to A-C, see graphic 3.

7. Close valve FV-V08, see graphic 7.

8. Record manual spray occured and final raw water totalizer reading on the Routine Log Sheet, see graphic 19.

D. FLUSH GROUT PROCESS EQUIPMENT TO VAULT WITH GROUT PUMP VIA LCT

CAUTION

Perform this task only when the grout processing equipment is down, i.e., not making any grout.

NOTE - Steps 3-7 add water to the LCT.

1. If the LCT is not empty before adding water, notify supervision before proceeding.

2. Reset raw water totalizer, see graphic 19.

3. Open valve FV-H04, see graphic 7.

4. Open valve FV-H05, see graphic 7.

5. Add raw water to LCT W01 to achieve 700 gal as measured by level indicator LI-W02, see graphic 3.

D. FLUSH GROUT PROCESS EQUIPMENT TO VAULT WITH GROUT PUMP VIA LCT (Cont.)

NOTE - LSH-W02 and LSH-W33 will alarm since 700 gal is above the setpoint.

6. Close valve FV-F05, see graphic 7.

7. Close valve FV-H04, see graphic 7.

8. Position valves FV-W30 and FV-W31 to A-B, see graphic 4.

9. Start mixer W05, see graphic 4.

10. Start surge tank agitator W10, see graphic 4.

11. Position pump W06 START switch to AUTOMATIC mode, see graphic 4.

12. Set level controller LIC-W20 to MANUAL Mode. Adjust LIC-W20 output to 50% pump speed, see graphic 4.

13. Set level controller LIC-W20 set point at 28 gal, see graphic 4.

14. Position valve FV-F02 to A-B, see graphic 3.

15. Position valve FV-W40 to A-B, see graphic 3.

16. Open valve LV-W02 by adjusting manual output of LIC-W02 to 0%, see graphic 3.

17. Start LCT pump W03, see graphic 3.

18. Open valve FV-W06. Adjust manual output on FIC-W06 to a flow rate of 50 gpm as indicated on FIC-W06, see graphic 4.

NOTE - If valve FV-W06 is failed open, valve LV-W02 can be controlled with LIC-W02 in MANUAL mode to provide flow rate control, graphic 3.

19. When the level in surge tank W09 reaches 28 gal, ensure pump W06 starts and level controller LIC-W20 switches to AUTOMATIC mode, see graphic 4.

20. Ensure level controller LIC-W20 maintains pump W06 speed at set point 28, see graphic 4.

21. Ensure LCT pump W03 stops 2 min after level switch LSLL-W02 is reached, see graphic 3.

22. When surge tank W09 level drops to 10 gal as indicated by LSLL-W20, ensure pump W06 stops, see graphic 4.

D. FLUSH GROUT PROCESS EQUIPMENT TO VAULT WITH GROUT PUMP VIA LCT (Cont.)

23. Close valve LV-W02 by adjusting manual output of LIC-W02 to 100%, see graphic 3.

24. Position valve FV-W40 to A-C, see graphic 3.

25. Close valve FV-W06 by adjusting manual output of FIC-W06 to 100%, see graphic 4.

26. Position valve FV-F02 to C-B, see graphic 3.

27. Stop mixer W05, see graphic 4.

28. Stop surge tank agitator W10, see graphic 4.

29. Record type of flush and final raw water totalizer reading on the Routine Log Sheet, see graphic 19.

E. FLUSH GROUT PROCESS EQUIPMENT TO LCT WITH GROUT PUMP

CAUTION

Perform this task only when the grout processing equipment is down, i.e., not making any grout.

NOTE - This task will be used in the event that a problem with the disposal system or grout line downstream of valve FV-W31 necessitates a system shutdown and prevents a system flush to the vault. The grout process system must be flushed with raw water to remove the residual grout. The flush will be diverted to the LCT.

- This process will be controlled and monitored from the Control Room.

1. Reset raw water totalizer, see graphic 19.

2. Position the following valves as indicated:

VALVE	POSITION
FV-F01	B-A
FV-F02	C-B
FV-W31	A-C

3. Start LCT agitator W02, see graphic 3,

E. FLUSH GROUT PROCESS EQUIPMENT TO LCT WITH GROUT PUMP (Cont.)

4. Start mixer W05, see graphic 4.

5. Set pump W06 START switch to AUTOMATIC mode, see graphic 4. Set level controller LIC-W20 to MANUAL mode and control set point to 28 gal, see graphic 4.

6. Open valves FV-H04 and FV-F08, see graphic 7.

7. Open valve FV-W06. Adjust manual output on FIC-W06 to a flow rate of 50 gpm as indicated on FIC-W06, see graphic 4.

8. Position switch FIC-W06 to AUTOMATIC/LOCAL mode, see graphic 4.

9. When the level in surge tank W09 reaches 28 gal, ensure pump W06 starts and level controller LIC-W20 switches to AUTOMATIC mode, see graphic 4.

10. Ensure the flush is being pumped into LCT W01 as indicated by LI-W02, see graphic 3.

NOTE - LCT W01 HIGH LEVEL alarm LSH-W02 activates at 625 gal.

11. When LCT W01 HIGH LEVEL alarm activates, close valve FV-W06 by positioning switch FIC-W06 to MANUAL mode and adjusting output to 100%, see graphic 4.

12. Position valve FV-F01 to A-C, see graphic 3.

13. Close valve FV-F08, see graphic 7.

14. When surge tank W09 level drops to 10 gal as indicated on LSLL-W20, ensure pump W06 stops, see graphic 4.

15. Position valve FV-W40 to A-B, see graphic 3.

16. Open valve FV-F08. After 15 sec, close valve FV-F08, see graphic 7.

17. Record final raw water totalizer reading on the Routine Log Sheet, see graphic 19.

F. BACKFLUSH GROUT PUMP WITH CLEARING PUMP, MANUAL MODE

1. Position switch FIC-W24 to FE-W24-2, see graphic 15.

2. Position the following valves:

VALVE	POSITION	GRAPHIC
FV-W43	OPEN	4
FV-30	C-A	4
FV-H01	A-B	4

3. Reset raw water totalizer, see graphic 19.

4. Open valve FV-H05, see graphic 7.

5. Enter a set point of 0 gpm on FIC-W24, see graphic 7.

6. Position switch FIC-W24 to AUTOMATIC mode, see graphic 7.

7. Ensure valve HV-181, flow control valve bypass, is open.

CAUTION

Do not operate grout line clearing pump F03 against deadhead conditions.

---

8. Start grout line clearing pump F03, see graphic 7.

9. Raise FIC-W24 set point to 25 gpm, see graphic 7.

NOTE - The following equipment and alarms may activate during this task:

- Motor pit sump high level alarm LSH-W45
- Motor pit sump pump W08
- Sump differential level alarm LDSH-W35
- Sump high level alarm LSH-W35
- Sump pump W07A
- Grout line low flow alarm FSL-W24.

10. When the raw water totalizer reading reaches approximately 200 gal, stop grout line clearing pump F03, see graphic 7.

F. BACKFLUSH GROUT PUMP WITH CLEARING PUMP (Cont.)

11. Close valve FV-H05, see graphic 7.

12. Position switch FIC-W24 to MANUAL mode, see graphic 7.

13. Enter an output value of 0% on FIC-W24, see graphic 7.

14. Ensure FV-W24 % open display goes to 0.

15. Position the following valves as indicated:

VALVE	POSITION	GRAPHIC
FV-W43	CLOSE	4
FV-H01	B-C	4
FV-W30	A-B	4

16. Record type of flush and final raw water totalizer reading on the Routine Log Sheet, see graphic 19.

G. FLUSH GROUT DISCHARGE LINE WITH CLEARING PUMP TO VAULT, MANUAL MODE

NOTE - This task is performed using the grout line clearing pump.

1. Position switch FIC-W24 to FD-W24-1, see graphic 15.

2. Position the following valves as indicated:

VALVE	POSITION	GRAPHIC
FV-W31	A-B	4
FV-W30	C-B	4
FV-H01	A-B	4

3. Reset raw water totalizer, see graphic 19.

4. Open valve FV-H05, see graphic 7.

5. Enter a set point of 0 gpm on FIC-W24, see graphic 7.

6. Position switch FIC-W24 to AUTOMATIC mode, see graphic 7.

7. Ensure valve HV-181 flow control valve bypass is open.

G. FLUSH GROUT DISCHARGE LINE WITH CLEARING PUMP TO VAULT, MANUAL MODE (Cont.)

CAUTION

Do not operate the grout line clearing pump against deadhead conditions.

8. Start grout line clearing pump F03, see graphic 7.

9. Raise FIC-W24 set point to 70 gpm, see graphic 7.

NOTE - The following equipment and alarms may activate during this task:

- Motor pit sump high level alarm LSH-W45
- Motor pit sump pump W08
- Sump differential level alarm LDSH-W35
- Sump high level alarm LSH-W35
- Sump pump W07A
- Grout line low flow alarm FSL-W24.

10. When the raw water totalizer reading reaches approximately 200 gal, stop grout line clearing pump F03, see graphic 7.

11. Close valve FV-H05, see graphic 7.

12. Position switch FIC-W24 to MANUAL mode, see graphic 7.

13. Enter an output value of 0% on FIC-W24, see graphic 7.

14. Ensure FV-W24 % open dispaly goes to 0, see graphic 7.

15. Ensure valve FV-H01 is positioned to B-C and valve FV-W30 is positioned to A-B, see graphic 4.

16. Record type of flush and final raw water totalizer reading on the Routine Log Sheet, see graphic 19.

H. BACKFLUSH GROUT PUMP WITH CLEARING PUMP, AUTOMATIC MODE

NOTE - This task is performed using the grout line clearing pump.

1. Enable the stage valves to CLEAR: GROUT PUMP option, see graphic 7.

2. Reset raw water totalizer, see graphic 19.

3. Enter a set point of 0 gpm on FIC-W24, see graphic 7.

4. Position switch FIC-W24 to AUTOMATIC mode, see graphic 7.

5. Ensure valve HV-181, flow control valve bypass, is open.

CAUTION

Do not operate the grout line clearing pump against deadhead conditions.

---

6. Start grout line clearing pump F03, see graphic 7.

7. Raise FIC-W24 set point to 25 gpm, see graphic 7.

NOTE - The following equipment and alarms may activate during this task:

- Motor pit sump high level alarm LSH-W45
- Motor pit sump pump W08
- Sump differential level alarm LDSH-W35
- Sump high level alarm LSH-W35
- Sump pump W07A
- Grout line low flow alarm FSL-W24.

8. When the raw water totalizer reading reaches approximately 200 gal, stop grout line clearing pump F03, see graphic 7.

9. Ensure valve FV-H05 closes, see graphic 7.

10. Position switch FIC-W24 to MANUAL mode, see graphic 7.

11. Enter an output value of 0% on FIC-W24, see graphic 7.

12. Ensure FV-W24 % open dispaly goes to 0, see graphic 7.

13. Ensure valve FV-H01 is positioned to B-C and valve FV-W30 is positioned to A-B.

14. Record type of flush and final raw water totalizer reading on the Routine Log Sheet, see graphic 19.

I. PERFORM AUTOMATIC FLUSH OF GROUT DISCHARGE LINE

1. Enable the stage valves to CLEAR: GROUT LINE option, see graphic 7.

2. Reset raw water totalizer, see graphic 7.

3. Enter a set point of 0 gpm on FIC-W24, see graphic 7.

4. Position switch FIC-W24 to AUTOMATIC mode, see graphic 7.

5. Ensure valve HV-181 flow control valve bypass, is open.

CAUTION

Do not operate the grout line clearing pump against deadhead conditions.

---

6. Start line clearing pump F03, see graphic 7.

7. Raise FIC-W24 set point to 70 gpm, see graphic 7.

NOTE - The following equipment and alarms may activate during this task:

- Motor pit sump high level alarm LSH-W45
- Motor pit sump pump W08
- Sump differential level alarm LDSH-W35
- Sump high level alarm LSH-W35
- Sump pump W07A
- Grout line low flow alarm FSL-W24.

8. When the raw water totalizer reading reaches approximately 200 gal, stop grout line clearing pump F03, see graphic 7.

9. Position switch FIC-W24 to MANUAL mode, see graphic 7.

10. Enter an output value of 0% on FIC-W24, see graphic 7.

11. Ensure FV-W24 % open dispaly goes to 0, see graphic 7.

12. Ensure valve FV-W30 is positioned to A-B and valve FV-H01 is positioned to B-C, see graphic 4.

13. Record type of flush and final raw water totalizer reading on the Routine Log Sheet, see graphic 19.

J. FLUSH WASTE FEED LINE TO AP-102 TANK

1. Ensure waste feed pump P-102-1 is OFF, see graphic 2.

2. If feed valves are not set to drain waste feed line (POV-622-3 closed with POV-622-4 open), download a 0 at the stage valves command line, see graphic 2.

3. Ensure the following valve positions:

VALVE	POSITION	GRAPHIC
DOV-622-1	CLOSED 100%	2
POV-622-2	CLOSED	2
FV-H04	CLOSED	7
FV-H05	CLOSED	7
FV-H08	CLOSED	7
FV-F04	CLOSED	7
FV-F05	CLOSED	7
FV-F06	CLOSED	7
FV-F10	CLOSED	7
FV-F03	A-C	3
FV-F01	A-C	3
FV-F02	C-A	3
FV-W40	A-C	3
FV-W01	CLOSED	3

4. Ensure no AP-102 alarms or interlocks are bypassed.

5. Ensure no AP-102 leak detection alarms are in.

6. Ensure AP-102 is on ventilation.

7. Reset raw water totalizer, see graphic 19.

8. Open valve FV-H04, see graphic 7.

9. Open valve FV-H08, see graphic 7.

10. Position valve FV-F01 B-A, see graphic 3.

NOTE - The opening of valve FV-W01 will begin flushing the waste feed line.

11. Open valve FV-W01.

C. FLUSH WASTE FEED LINE TO AP-102 TANK (Cont.)

12. When raw water flow totals approximatley 300 gal, see graphic 7 or 19, close valve FV-W01, see graphic 3.

13. Position valve FV-F01 to B-A, see graphic 3.

14. Close valve FV-F08, see graphic 7.

15. Close valve FV-H04, see graphic 7.

16. Position valve FV-W40 to A-B to remove water pressure in line, see graphic 3.

17. Record type of flush and raw water totalizer reading on the Routine Log Sheet, see graphic 19.

SHUT DOWN TGE MIXER/PUMP OPERATION

I. SYSTEM DESCRIPTION

This procedure provides instructions for a normal shutdown of the grout system. The process will first be switched from radioactive grout production to nonradioactive grout, to displace radioactive material from the equipment and grout line. A raw water flush will then be made to clear the equipment and grout line of grout. A raw water backflush of the waste feed line to the waste feed tank will be made to clear this line of any waste solids. The dry blend system, liquid waste feed system, raw water supply system, grout process system, grout mixer, grout pump and instrument, and valve skid are directly involved in this procedure.

There are two methods for normal shutdown of the grout system. One method is MANUAL shutdown, in which the operator positions valves and manipulates equipment in an orderly fashion. The other method is AUTOMATIC shutdown in which the programmable logic controller automatically activates the appropriate systems. The use of either method is will be specified by supervision.

The shutdown sequence will be controlled and monitored from the Control Room.

II. PRESTART CONDITION

The grout process system is in operation producing grout and pumping it to the vault.

A grout formulation was noted on the GROUT FORMULATION DATA SHEET for waste grout, and was entered on graphic 17 for use during an AUTOMATIC shutdown.

III. SAFETY

Applicable Safety Documents - Provisions of Standard Requirements and Procedures, RHO-GM-MA-2, Section 61-02.5 (GEN-0), Radiation Work Permit (RWP) F-28, Industrial Safety Manual, WHC-CM-4.3 Vol. 1 and 2, Tank Farm Safety Rules, Accident Prevention Standards, and Emergency Plan for Tank Farms, RHO-MA-111.5, apply to all work performed under this procedure.

OFFICIALLY RELEASED
ODM

IV. TOOLS AND SUPPLIES

GROUT FORMULATION DATA SHEET
ROUTINE LOG SHEET
TO-390-172, DECONTAMINATE TGE SYSTEM
TO-390-174, OPERATE TGE SPRAY AND FLUSH SYSTEMS

V. TABLE OF CONTENTS

	PAGE
A. PERFORM MANUAL SHUTDOWN OF GROUT SYSTEM	3
B. PERFORM AUTOMATIC SHUTDOWN OF GROUT SYSTEM	6

II. PROCEDURE

A. PERFORM MANUAL SHUTDOWN OF GROUT SYSTEM

1. Initiate a DRY BLEND AUTO STOP, see graphic 5. Ensure that valve FV-W06 closes and the liquid feed flow rate decreases to 0 gpm as indicated on FIC-W06, see graphic 4.

2. Set level controller LIC-W20 to MANUAL mode and adjust the output to 50% pump speed, see graphic 4.

3. Reset ratio on flow controller FIC-W06 to value specified for raw water grout per GROUT FORMULATION DATA SHEET, see graphic 4.

4. If running, stop mixer pump P102-3, see graphic 2.

5. Stop waste feed pump P-102-1, see graphic 2.

6. Download a 0 at stage valves command, see graphic 2.

NOTE - This closes valve POV-622-3 and opens valve POV-622-4.

7. Close valve POV-622-2, see graphic 2.

8. Ensure valve FV-F03 is positioned to A-C, see graphic 3.

9. Open valve FV-F08, see graphic 7.

10. Open valve FV-H04, see graphic 7.

11. Close valve FV-W01, see graphic 3.

12. Position valve FV-F01 to A-B, see graphic 3.

13. Position valve FV-F02 to B-C, see graphic 3.

14. Ensure liquid feed header pressure PI-W05 is greater than 20 psig, see graphic 4.

15. Reset dry blend feed controller FIC-M04 to flow rate specified for raw water grout as noted on GROUT FORMULATION DATA SHEET, see graphic 5.

16. Place FIC-M04 in MANUAL and set output to 0%, see graphic 5.

17. Initiate a DRY BLEND AUTO START, raise FIC-M04 output to desired flow rate, then switch to AUTOMATIC mode.

A. PERFORM MANUAL SHUTDOWN OF GROUT SYSTEM (Cont.)

18. Start dry blend weigh feeder M05-A, see graphic 5. Ensure valve FV-W06 opens and the raw water flow rate increases on FIC-W06 to the proper level, see graphic 4.

19. Start the baghouse rotary valve V35, see graphic 5.

20. Ensure grout pump W06 starts and level controller LIC-W20 changes to AUTOMATIC mode when level in surge tank W09 reaches set point of LIC-W20, see graphic 4.

21. Ensure level controller LIC-W20 controls speed of grout pump W06 to maintain level at set point, see graphic 4.

22. Ensure dry blend flow rate FI-M04 and liquid feed rate FI-W06 are correct, as specified for the raw water per GROUT FORMULATION DATA SHEET, see graphic 4.

23. Note reading on flow totalizer FQ-W24 and run until 600 gal of nonwaste feed grout have been produced, see graphic 14.

24. Initiate DRY BLEND SYSTEM AUTO STOP and ensure the following actions occur, see graphic 5:
    - Bag house rotary valve V35 stops
    - Dry blend weigh feeder M05-A stops
    - Drag-chain M05-B stops
    - Bin activator M18 stops
    - Screen feed rotary valve M22 stops
    - Dry blend screen M07 stops.

25. If running, stop additive metering pumps R05, R06, and R07, see graphic 6.

26. Position FIC-M04 to MANUAL mode, see graphic 5.

27. Position switch on flow controller FIC-W06 to AUTOMATIC/LOCAL mode, see graphic 4.

28. Operate process on raw water until 600 gal of raw water have been fed to grout mixer as indicated by flow totalizer FQ-W06, see graphic 14.

29. Switch liquid feed flow controller FIC-W06 to MANUAL mode and increase output to 100% to close valve FV-W06, see graphic 4.

30. Ensure grout pump W06 stops when level in surge tank W09 decreases to level switch LSLL-W20, see graphic 4.

A. PERFORM MANUAL SHUTDOWN OF GROUT SYSTEM (Cont.)

31. Stop grout mixer W05, see graphic 4.

32. Stop surge tank agitator W09, see graphic 4.

33. Position START switch on grout pump W06 to MANUAL mode, see graphic 4.

34. Position switch on surge tank W09 level controller LIC-W20 to MANUAL mode and set output to 0% pump speed, see graphic 4.

35. If directed by supervision, perform systems flushing per TO-390-174.

36. If directed by supervision, perform systems decontamination per TO-390-172.

B. PERFORM AUTOMATIC SHUTDOWN OF GROUT SYSTEM

1. Enter a cursor download on the AUTO SHUTDOWN ON RAW WATER AND FLUSH function, see graphic 17.

2. Ensure the following events occur on graphic monitor:

   - The dry blend feed system stops, see graphic 5.

NOTE - The screen rotary valve M22 and the tramp screen M07 stop and mixer isolation valve M15 closes approximately 10 sec after all other dry blend feed components have stopped to allow for dry blend run out, see graphic 5.

   - Valve FV-W06 goes to MANUAL, see graphic 4.

NOTE - Valve FV-W06 goes to MANUAL for 10 sec in order to wet any dry blend left in grout mixer W05. After the 10 sec period, the valve closes, see graphic 4

   - Grout pump W06 goes to AUTO, see graphic 4
   - The raw water grout totalizer resets to 0, see graphic 17.

NOTE - There will be an approximate 10 sec delay before the following events occur:

   - Valves POV-622-2 and POV-622-3 close, see graphic 2
   - Valve POV-622-4 opens, see graphic 2
   - Waste feed pump P-102-1 stops, see graphic 2
   - Valve FV-W01 closes, see graphic 3
   - Valve FV-F01 goes to B-A, see graphic 3
   - Valve FV-F02 goes to C-B, see graphic 3
   - Valve FV-H04 opens, see graphic 7
   - Valve FV-F08 opens, see graphic 7
   - Waste feed controller FIC-W06 input ratio changes to the value entered on graphic 17 for the FORMULATION FOR AUTO SHUTDOWN ON RAW WATER, see graphic 4
   - Dry blend feed rate controller FIC-M04 set point changes to the value entered on graphic 17 for the FORMULATION FOR AUTO SHUTDOWN ON RAW WATER, see graphic 5.

B. PERFORM AUTOMATIC SHUTDOWN OF GROUT SYSTEM (COnt.)

NOTE - There will be a 5 sec delay before the following events occur:

- The dry blend/feed system restarts, see graphic 5
- The dry blend and raw water feed controllers are maintaining set points, see graphics 4 and 5
- Grout pump W06 restarts and LIC-W20 switches to AUTO, see graphic 4
- Level controller LIC-W20 controls the speed of grout pump W06 to maintain the surge tank level at the set point, see graphic 4
- After 600 gal of grout have been produced, the dry blend feed system stops, see FQ-W24-2, graphic 16.

NOTE - The screen rotary valve M22, tramp screen M07, and additive pumps stop and the mixer isolation valve M15 closes 10 sec after all other dry blend feed components have stopped to allow for dry blend run out, then automatic grout line flushing occurs.

- Waste feed controller FIC-W06 changes to AUTO/LOCAL and the set point changes to the raw water flush flow rate entered on Graphic 17 for the FORMULATION FOR AUTO SHUTDOWN ON RAW WATER, see graphic 4
- Flush water totalizer resets, see graphic 17
- Flush water totalizer FQ-W24-2 is accumulating.

NOTE - When the flush water totalizer FQ-W24-2 reaches 600 gal, the following events will occur:

3. Ensure the following occur after the flush water totalizer reaches 600 gal:

   - Valve FV-F01 goes A-C, see graphic 3
   - Valve FV-H04 closes, see graphic 7
   - Valve FV-F08 closes, see graphic 7
   - Grout mixer W05 stops, see graphic 4.

4. Stop the surge tank agitator, see graphic 4.

5. Verify grout pump W06 stops at surge tank low level of approximately 14 gal, see graphic 4.

6. Record flush water total on the Routine Log Sheet.

7. Disable strip heater V30, see graphic 5.

8. If directed by supervision, perform additional systems flush per TO-390-174.

9. If directed by supervision, perform systems decontamination per TO-390-172.

This page intentionally left blank.

PERFORM SURVEILLANCE OF GROUT SYSTEMS DURING OPERATION

I. SYSTEM DESCRIPTION

This procedure provides instructions for performing routine surveillance of all grout processing systems during the production campaign. These systeems include feed tank AP-102 related equipment, the TGE, the PIH, and the vault.

Routine surveillance is recorded on the GROUT ROUTINE LOG SHEET.

Routine surveillance of the Dry Material Facility is conducted per TO-390-025.

Routine surveillance of the facility and accompanying vaults during STANDBY is conducted per TO-390-194.

II. PRESTART CONDITIONS

Supervision has requested surveillance to be performed after completion of STANDBY mode.

Charging of any essential materials, dry blend, waste feed, or raw water into process systems or lines.

The two exceptions to this are any water flushing through the system for verifying new vault construction configuration, or for STANDBY monitoring of idle equipment.

III. SAFETY

Warning - Do not allow more than 35 people, evenly spaced, on the dry blend tower stairway at one time.

Applicable Safety Documents - Provisions of Standard Requirements and Procedures, RHO-GM-MA-2, Section 61-02.5 (GEN-0), Radiation Work Permit (RWP) F-28, Industrial Safety Manual, WHC-CM-4.3, Vol 1 and 2, Tank Farm Safety Rules, Accident Prevention Standards, and Emergency Plan for Tank Farms, RHO-MA-111.5, apply to all work performed under this procedure.

OFFICIALLY RELEASED
ODM

IV. TOOLS AND SUPPLIES

Reproducible-type Ink Pen
GROUT ROUTINE LOG SHEET

V. TABLE OF CONTENTS

	PAGE
A. PERFORM ROUTINE MONITORING	3
Log Hourly Process Control Data	3
Log Waste Feed Tank Status	3
Log Daily Inspections	3
Log Intermittent Activities	3
Complete ROUTINE LOG SHEET	4
GROUT ROUTINE LOG SHEET	5

VI. PROCEDURE

A. PERFORM ROUTINE MONITORING

NOTE - Make all markings on GROUT ROUTINE LOG SHEET with a reproducible-type ink pen.

Log Hourly Process Control Data

1. Complete the Hourly Process Control section of the LOG SHEET at the noted times.

NOTE - Do not log data at times blacked in.

2. Refer to the noted graphic screen for the process variable.

3. If current readings do not appear consistent with past trends, process conditions, or listed OSD ranges, notify supervision.

Log Waste Feed Tank Status

4. Record level and average temperature data from CASS at the noted times, in the Waste Feed Tank Status section of the LOG SHEET.

NOTE - START and STOP refer to the time at the beginning and the end of the campaign, respectively.

5. Record the time on the two blank lines of this section for any other requested tank status data.

Log Daily Inspections

6. Record the noted data in the Daily Inspection section from field and graphic screen inspections.

Log Intermittent Activities

7. Record the noted effort in the Intermittent Activities section when it occurs.

8. If no activities have occurred, leave the section blank.

A. PERFORM ROUTINE MONITORING (Cont.)

Complete ROUTINE LOG SHEET

9. Ensure the following are listed on the LOG SHEET:
   - Proper date
   - Campaign number
   - Source vault.

NOTE - The campaign number and source vault identification can be found in the original Process Memo on file in the Campaign Log.

10. Record any other data from inspections or from supervision direction in the Comments section.

11. Pass completed LOG SHEET to supervision for approval and file in Campaign Log.

9 0 1 1 7 8 5 1 0 6 5

GROUT ROUTINE LOG SHEET

DATE _____ _____

CAMPAIGN NUMBER _____

SOURCE VAULT ____ ____

HOURLY PROCESS CONTROL LOG

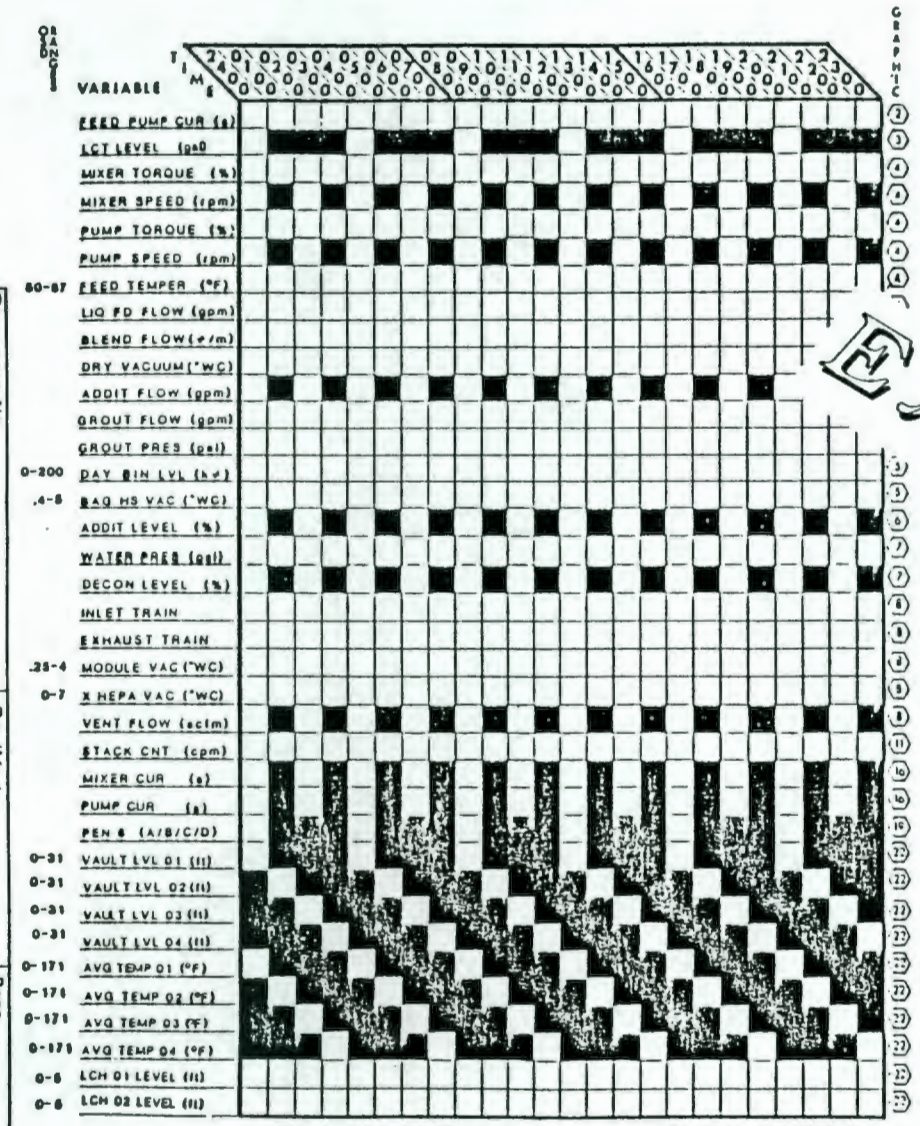

DAILY INSPECTION

BAG HOUSE DIFFERENTIAL PRESSURE READING (inches WC)	OPERATOR

AIR COMPRESSOR FILTERS NOT GAGGED (YES/NO)	OPERATOR

TOTALIZERS WASTE FEED	DRY BLEND	GROUT	OPERATOR

COMMENTS

_____

_____

_____

_____

_____

_____

_____

Example

ERMITTENT ACTIVITIES

	DESTINATION	GALLONS	TIME	OPERATOR

TRANSFER SYSTEM			TIME	OPERATOR

PRECHARGES SYSTEM	MATERIAL	GALLONS	TIME	OPERATOR

ESSENTIAL DECON/ADDITIVE MODULE MATERIALS RECEIVED MATERIAL	EST. GALLONS	TIME	OPERATOR

MANUAL SPRAY ACTIVATED TIME	OPERATOR

WASTE FEED TANK STATUS

TIME	LEVEL	LEVEL TYPE	TEMP	ALARM
START				
0100				
0500				
0900				
1300				
1700				
2100				
STOP				

_____ _____

MANAGER APPROVAL DATE

This page intentionally left blank.

RESPOND TO ALARMS

I. SYSTEM DESCRIPTION

This procedure provides instructions for the initial response to alarms activated at the Transportable Grout Equipment (TGE) facility. Alarms activated at the TGE Control Room can be generated from conditions at AP Tank Farm, the Grout Disposal Site, and TGE. This procedure details responses for all alarms signaling at the TGE facility regardless of their source.

The TGE control system is comprised of a single General Electric programmable logic controller (PLC) which is connected simultaneously to three separate operator interface computers in the TGE Control Room, and a single operator interface computer at the Grout Disposal Site in the Portable Instrument House (PIH). The PIH receives all field signals and transfers that data to the operator interface computers. The interface computers are General Electric model CIMSTARS. The CIMSTARS evaluate the field signal data and produce the alarms. In addition, several auxiliary alarm systems are activated throughout the facility.

II. PRESTART CONDITION

One or more alarms have activated.

III. SAFETY

Applicable Safety Documents - Provisions of Standard Requirements and Procedures, RHO-GM-MA-2, Section 61-02.5 (GEN-0), Radiation Work Permit (RWP) F-38, Industrial Safety Manual, WHC-CM-4.3. Vols 1 and 2, Tank Farm Safety Rules, Accident Prevention Standards, and Emergency Plan for Tank Farms, RHO-MA-111.5, apply to all work performed under this procedure.

Alarms represent abnormal operating conditions and response/recovery actions should be done with the intent to protect personnel, equipment, and the environment before returning to normal conditions. This philosophy and the unique dangers inherent in the facility operation caused the installation of an EMERGENCY STOP button. Use this button to stop all field equipment. Refer to TO-390-015, SHUT DOWN TGE/EMERGENCY STOP, for specific instructions relating to this control button. During off shifts, notify RPT supervision at PUREX for RPT support, if RPT is not immediately available.

OFFICIALLY RELEASED
ODM

IV. TOOLS AND SUPPLIES

TO-001-010, SHUT DOWN TGE - EMERGENCY SHUTDOWN
TO-001-015, SHUT DOWN TGE - EMERGENCY STOP
TO-390-152, OPERATE TGE PROCESS VENTILATION SYSTEM
TO-390-162, TRANSFER TGE/VAULT WASTE STREAMS
TO-390-174, OPERATE TGE SPRAY AND FLUSH SYSTEM

V. TABLE OF CONTENTS

	PAGE
A. RESPOND TO ALARMS	3
TGE ALARM MATRIX	4

VI. PROCEDURE

A. RESPOND TO ALARMS

WARNING

IF PERSONNEL INJURY CAN POSSIBLY OCCUR, DO NOT INITIATE SYSTEM FLUSH.

DO NOT SIT ON, LAY EQUIPMENT ON, OR PROP UP FEET ON, THE TGE CONTROL PANEL TABLE LEDGE. THIS MAY RESULT IN EQUIPMENT MALFUNCTION AND MISSING AN ACTIVATED ALARM.

DO NOT MODIFY IN ANY WAY THE KEYPAD ASSEMBLY OR HORN SYSTEM TO DEACTIVATE THE ALARM HORN.

---

1. If an alarm activates, press the ACKNOWLEDGE key on any of the auxiliary keypads and respond to alarm per attached matrix and/or appropriate procedure per Step 2.

2. Respond to the appropriate alarms using the following procedures:
   - TO-001-010
   - TO-001-015
   - TO-390-152
   - TO-390-162
   - TO-390-174.

NOTE - Unlike a conventional panel board annunciator alarm panel, the TGE computer control system has no indication of the primary alarm in an interlocked/alarmed sequence of actions, i.e., no fast out status indication. One cannot rely on the time of the alarm on the alarm summary screen, as this time may be the same or even later than the primary or secondary alarms in the sequence. Unless the alarm cause is obvious (e.g., DAY BIN HIGH HIGH) one must decipher the primary cause by viewing all the entire alarm summary screens with the knowledge of all alarm/interlock loops.

3. Acknowledge all alarm summary screen alarm lines on Operator Control Station #2 as time permits.

TGE ALARM MATRIX

NOTE - The following sample matrix alarm is detailed below:

FISL-V39 (DP64)	WATER CHILLER V20 WATER FLOW LOW	WATER FLOW THROUGH CHILLER SYSTEM 18 gpm	A: 1. Water Chiller V20 is disabled - this may activate TSHH-V02, V12 high temperature switch. O: 1. Verify all manual valves and impulse line valves are open on water system and pump V23 is on. 2. Notify supervision if flow cannot be restored as needed.

1. Alarm Tag Name - This tag name is the listing shown first on the graphic screen alarm banner line and systems monitor. It is organized in the matric alpha-numerically. This tag name is the item to look up when referencing alarm responses. It is a reference to the software alarm point designation only. It is not a part of the tag name and it is to be disregarded unless doing maintenance troubleshooting.

2. Alarm Description - This is a simplified description of the actual alarm and is displayed on both the graphic monitor and the systems monitor after the tag name.

3. Signifies - This is an expanded description of the alarm noting where practical the physical limit is reached and its potential causes. The causes are not meant to be all inclusive, but to help define the problem source.

4. Action - The action is divided into two sections, A = Automatic and O = Operator. The actions which are next to the subheading A detail automatic interlock responses conducted by the programmable controller when the alarm is activated. These actions are detailed for operator information only, no operator response is needed for them. Where applicable interlock activity is listed for either higher or lower physical conditions continuing because of the alarm conditions. These too are listed for operator information only. The actions which are next to the subheading O are the step-by-step activities that the operator performs in response to the alarm.

9011785107 0

TGE ALARM MATRIX
PANEL: CIMSTAR CONTROL STATION

ALARM TAG NAME	ALARM DESCRIPTION	SIGNIFIES	ACTION A=AUTOMATIC O=OPERATOR
A01A (DP213)	COMPRESSOR FAIL	COMPRESSOR A01A FAILED DURING STARTUP ATTEMPT OR SHUT DOWN DURING NORMAL OPERATION	A: COMPRESSOR A01B SHOULD START IF COMPRESSOR SYSTEM CALLED FOR O: 1.) ENSURE OTHER COMPRESSOR AUTOMATICALLY COMES ON-LINE, AND IF NOT INITIATE MANUAL START 2.)NOTIFY SUPERVISION IF ANY COMPRESSOR FAILS TO START WHEN CALLED
A01B (DP214)	COMPRESSOR FAIL	COMPRESSOR A01B FAILED DURING STARTUP ATTEMPT OR SHUT DOWN DURING NORMAL OPERATION	A: COMPRESSOR A01A SHOULD START IF COMPRESSOR SYSTEM CALLED FOR O: 1.) ENSURE OTHER COMPRESSOR AUTOMATICALLY COMES ON-LINE, AND IF NOT INITIATE MANUAL START 2.)NOTIFY SUPERVISION IF ANY COMPRESSOR FAILS TO START WHEN CALLED

TGE ALARM MATRIX
PANEL: CIMSTAR CONTROL STATION

ALARM TAG NAME	ALARM DESCRIPTION	SIGNIFIES	ACTION A=AUTOMATIC O=OPERATOR
CR (DP175 - 177)	CR1/CR2/CR3 RACK FAULT, PARITY ERROR, OR WATCHDOG TIMER TIME OUT	PROGRAMMABLE CONTROLLER MODULE FAILURE OR SYSTEM CONFIGURATION ERROR	A: LOSS OF CONTROL ON GRAPHIC CONTROL SCREENS MAY OCCUR AND/OR LOSS OF DATA O: 1.) VERIFY AUTOMATIC CPU SWITCHING IF APPROPRIATE 2.) VERIFY ALL APPROPRIATE CABLING IS IN PLACE 3.) IF GRAPHIC CONTROL SCREEN INTERACTION IS LOST INITIATE SYSTEM SHUTDOWN AND FLUSHING 4.)NOTIFY SUPERVISION
CR4-1 (DP878, 883,888)	CR4 RACK BAD DATA, BAD BOARD, OR OVER RANGE DATA	PIH MODULE FAILURE OR PIH SYSTEM CONFIGURATION ERROR	A: LOSS OF CONTROL ON GRAPHIC CONTROL SCREENS MAY OCCUR AND/OR LOSS OF DATA O: 1.) VERIFY PIH APPROPRIATE CABLING IS IN PLACE 2.)NOTIFY SUPERVISION
CR4-11 (DP924 - 926)	CR4 RACK POWER CABLE FAULT, PARITY ERROR, OR WATCHDOG TIMER TIME OUT	PIH MODULE FAILURE OR PIH SYSTEM CONFIGURATION ERROR	A: LOSS OF CONTROL ON GRAPHIC CONTROL SCREENS MAY OCCUR AND/OR LOSS OF DATA O: 1.) VERIFY PIH APPROPRIATE CABLING IS IN PLACE 2.)NOTIFY SUPERVISION
CR4-S8 (DP923)	CR4 RACK I/O DRIVER FAULT	PIH INPUT/OUTPUT MODULE LOOP OR MODULE FAILURE	A: LOSS OF CONTROL ON GRAPHIC CONTROL SCREENS MAY OCCUR AND/OR LOSS OF DATA O: NOTIFY SUPERVISION

9011785107 2

TGE ALARM MATRIX
PANEL CIMSTAR CONTROL STATION

ALARM TAG NAME	ALARM DESCRIPTION	SIGNIFIES	ACTION A=AUTOMATIC O=OPERATOR
CR4-S9 (DP913-915)	CR4-S9 INTERACTION WITH TR2/TR3 POWER FAULT, PARITY ERROR, RECEIVER COMMUNICATIONS ERROR I/O DRIVER FAULT	PIH MODULE FAULT OR SYSTEM CONFIGURATION ERROR	A: LOSS OF CONTROL ON GRAPHIC CONTROL SCREENS MAY OCCUR AND/OR LOSS OF DATA O: 1.) VERIFY PIH APPROPRIATE CABLING IN PLACE 2.)NOTIFY SUPERVISION
CR5-9 (DP912)	CR5 RACK [FUTURE] CR4-9/TR2/TR3 COMMUNICATION PARITY ERROR	RETURN TO NORMAL ON FUTURE RACK CR5	A: NONE O: NONE
CR5-S8 (DP920 - 921)	CR5 RACK [FUTURE] PARITY ERROR, REMOTE POWER ERROR, RECEIVER COMMUNICATION ERROR	PIH MODULE FAILURE OR CONFIGURATION ERROR FOR FUTURE CR5 RACK	A: NONE O: NONE
CR5-S10 (DP916-919)	CR5 RACK [FUTURE] PARITY ERROR, REMOTE POWER ERROR, RECEIVER COMMUNICATION ERROR, OR I/O DRIVER FAULT	PIH MODULE FAILURE OR CONFIGURATION ERROR FOR FUTURE CR5 RACK	A: NONE O: NONE

9011785107 3

TGE ALARM MATRIX
PANEL: CIMSTAR CONTROL STATION

ALARM TAG NAME	ALARM DESCRIPTION	SIGNIFIES	ACTION A=AUTOMATIC O=OPERATOR	
DR (DP184 - 185,186)	DR1/DR2 RACKS POWER CABLE FAULT, PARITY ERROR, OR WATCHDOG TIMER TIME OUT	MODULE FAILURE OR CONFIGURATION ERROR ON COMMUNICATION TO RACKS DR1 & DR2	A: O:	DATA LOSS OR LOSS OF COMPUTER CONTROL MAY OCCUR IF UNABLE TO CONTROL SYSTEM FROM GRAPHIC CONTROL SCREENS INITIATE SYSTEM SHUTDOWN AND FLUSH FROM EMERGENCY CONTROLS AND NOTIFY SUPERVISION
E04 (DP128)	UPS FAILURE	NORMAL POWER FLOW THROUGH THE TGE UNINTERRUPTABLE POWER SUPPLY WAS DISRUPTED	A: O:	NONE NOTIFY SUPERVISION
ER (DP178 - 180)	ER1/ER2/ER3 RACKS POWER CABLE FAULT, PARITY ERROR, OR WATCHDOG TIMER TIME OUT	MODULE FAILURE OR CONFIGURATION ERROR ON COMMUNICATION TO RACKS ER1, ER2, ER3	A: O:	DATA LOSS OR LOSS OF COMPUTER CONTROL MAY OCCUR IF UNABLE TO CONTROL SYSTEM FROM GRAPHIC CONTROL SCREENS INITIATE SYSTEM SHUTDOWN AND FLUSH FROM EMERGENCY CONTROLS AND NOTIFY SUPERVISION
EW PUMPS (DP929)	EXCESS WATER RETURN PUMPS DE-ENERGIZATION	POWER FLOW STOPPED TO ANY OF THE EXCESS WATER RETURN PUMPS	A: O:	NONE 1.) IF ACTION UNEXPECTED VERIFY PROPER CABLING, AND ATTEMPT RESTART 2.)NOTIFY SUPERVISION IF PUMP FAILS TO START

9011178510 74

TGE ALARM MATRIX
PANEL: CIMSTAR CONTROL STATION

ALARM TAG NAME	ALARM DESCRIPTION	SIGNIFIES	ACTION A=AUTOMATIC O=OPERATOR
FAL-01 (AP783)	EXCESS WATER RETURN FLOW LOW	FLOW RATE FROM VAULT EXCESS WATER RETURN PUMP(S) P-EW-01-04 ≤5 gpm	A: NONE O: 1.) IF ACTION UNEXPECTED VERIFY PROPER CABLING, AND ATTEMPT RESTART 2.)NOTIFY SUPERVISION IF PUMP FAILS TO START
FAL-03 (DP785)	[FUTURE] CAM RADIATION DETECTOR LOW FLOW	MONITOR FAILURE	A: NONE O: NONE
FAL-04 - 06 (DP786 - 788)	[FUTURE] VEAM RADIATION DETECTOR LOW FLOW	MONITOR FAILURE	A: NONE O: NONE
FDSH-M04 (AP29)	DRY BLEND FLOW DIFFERENTIAL HIGH	DIFFERENTIAL FLOWRATE BETWEEN FIC-M04-1 AND FIC-M04-2 ≥24 lbs/minute INDICATING INSTRUMENT MALFUNCTION	A: NONE O: IF ALARM IS NOT CLEARED WITHIN 5 MIN. INITIATE NORMAL PROCESS SHUTDOWN AND NOTIFY SUPERVISION
FDSH-R06 (AP51)	FLUIDIZER FLOWRATE DIFFERENTIAL HIGH	INSTRUMENT MALFUNCTION OR FLOWRATE DEVIATION OF ≥ 5%	A: NONE O: INITIATE NORMAL PROCESS SHUTDOWN AND NOTIFY SUPERVISION IF ALARM IS NOT CLEARED WITHIN 5 MINUTES
FDSH-R16 (AP72)	TRIBUTYL PHOSPHATE FLOWRATE DIFFERENTIAL HIGH	INSTRUMENT MALFUNCTION OR FLOWRATE DEVIATION OF ≥ 6%	A: NONE O: INITIATE A NORMAL PROCESS SHUTDOWN IF ALARM IS NOT CLEARED WITHIN 5 MINUTES

9011178510 75

TGE ALARM MATRIX
PANEL: CIMSTAR CONTROL STATION

ALARM TAG NAME	ALARM DESCRIPTION	SIGNIFIES	ACTION A=AUTOMATIC O=OPERATOR
FDSH-R26 (AP92)	SET REGULATOR FLOWRATE DIFFERENTIAL HIGH	INSTRUMENT MALFUNCTION OR FLOWRATE DEVIATION ≥7%	A: NONE O: INITIATE NORMAL PROCESS SHUTDOWN AND NOTIFY SUPERVISION IF ALARM IS NOT CLEARED WITHIN 5 MINUTES
FDSH-W06 (AP232)	LIQUID WASTE FEED FLOW DIFFERENTIAL HIGH	LIQUID FEED FLOWRATE AS METERED BY FIT-W06 AND FIQT-W06 VARIES BY ≥5% INDICATING PROBLEM WITH FEED PUMP, VALVING, OR INSTRUMENTATION	A: NONE O: 1.) EVALUATE FEED SUPPLY SYSTEMS FOR POOR PERFORMANCE OR WRONG SETTINGS, AND SLURRY PROPERTIES FOR EFFECTS THEN NOTIFY SUPERVISION 2.) INITIATE NORMAL PROCESS SHUTDOWN UPON DIRECTION FROM SUPERVISION
FDSH-W24 (AP284)	GROUT SLURRY LINE FLOWMETER DEVIATION HIGH	DEVIATION BETWEEN FLOWMETERS FIT-W24 AND FIQT-W25 ≥5% INDICATING INSTRUMENT MALFUNCTION	A: NONE O: EVALUATE WASTE FEED AND SLURRY CONDITIONS FOR UNUSUAL INDICATIONS THEN NOTIFY SUPERVISION
FISL-V39 (DP64)	WATER CHILLER V20 WATER FLOW LOW	WATER FLOW THROUGH CHILLER SYSTEM ≤18 gpm	A: 1.) WATER CHILLER V20 IS DISABLED - THIS MAY ACTIVATE TSHH-V02, V12 HIGH TEMPERATURE SWITCH O: 1.) VERIFY ALL MANUAL VALVES AND IMPULSE LINE VALVES ARE OPENED ON WATER SYSTEM AND PUMP V23 IS ON 2.)NOTIFY SUPERVISION IF FLOW CANNOT BE RESTORED AS NEEDED

TGE ALARM MATRIX
PANEL: CIMSTAR CONTROL STATION

ALARM TAG NAME	ALARM DESCRIPTION	SIGNIFIES	ACTION A=AUTOMATIC O=OPERATOR
FSH-V56 (AP206)	BAG HOUSE V33 DISCHARGE AIR FLOWRATE HIGH	AIR FLOWRATE ≥200 acfm INDICATING BROKEN OR LEAKING BAG, OR IMPROPER SETTING OF HV VALVES 305 AND 229	A: NONE O: 1.) CHECK THAT HV VALVES 305 AND 229 ARE FULL OPEN 2.) CHECK DIFFERENTIAL PRESSURE ACROSS PDI-V55 AND NOTIFY SUPERVISION IF ALARM DOES NOT CLEAR
FSH-W06 (AP241)	LIQUID WASTE FEED FLOWRATE HIGH	LIQUID FEED FLOWRATE ≥58 gpm INDICATING FLOW CONTROLLER MALFUNCTION	A: NONE O: 1.)NOTIFY SUPERVISION 2.) ADJUST FLOW CONTROLLER FIC-W06-2 SETTINGS AND IF NECESSARY TEMPORARILY PLACE IN MANUAL TO BRING FLOWRATE DOWN 3.)IF UNABLE TO CLEAR ALARM WITHIN 10 MIN. INITIATE A NORMAL PROCESS SHUTDOWN
FSH-W24 (AP291)	GROUT SLURRY LINE FLOW HIGH	SLURRY FLOWRATE ≥77 gpm INDICATING CONTROLLER SETPOINT ERROR OR INSTRUMENTATION MALFUNCTION	A: NONE O: 1.) VERIFY PROPER SETPOINTS FOR LIC-W20 AND CORRECT IF NECESSARY 2.)NOTIFY SUPERVISION
FSL-V10 (AP139)	EXHAUST AIR FLOWRATE LOW	FLOWRATE IS ≤100 scfm INDICATING CONTROLLER, FAN MALFUNCTION, OR FILTER CLOGGING	A: NONE O: SWITCH EXHAUST TRAINS NOTIFY SUPERVISION

TGE ALARM MATRIX
PANEL: CIMSTAR CONTROL STATION

ALARM TAG NAME	ALARM DESCRIPTION	SIGNIFIES	ACTION A=AUTOMATIC O=OPERATOR
FSL-V56 (AP206)	BAG HOUSE V33 DISCHARGE AIR FLOWRATE LOW	AIR FLOWRATE ≤70 acfm INDICATING PLUGGAGE IN VENTILATION SYSTEM OR IMPROPER SETTING OF HV VALVES 305 AND 229	A:1.) THE DUST COLLECTION STRIP HEATER V30 DE-ENERGIZES 2.) THE WASTE FEED VALVE FV-W01 CLOSES IF THE WASTE FEED PUMP IS ON AND HENCE SHUTS DOWN GROUT PROCESSING AFTER ALARM IS IN FOR 10 SECONDS O:MONITOR SYSTEM SHUTDOWN AND NOTIFY SUPERVISION
FSL-W06 (AP241)	LIQUID WASTE FEED FLOWRATE LOW	LIQUID FEED FLOWRATE ≤23 gpm INDICATING PROBLEM WITH FEED PUMP, VALVING, OR INSTRUMENTATION	A: NONE O: 1.)NOTIFY SUPERVISION 2.) EVALUATE FEED SYSTEM PERFORMANCE 3.) ADJUST FLOW CONTROLLER FIC-W06-2 SETTINGS AND IF NECESSARY TEMPORARILY PLACE IN MANUAL TO BRING FLOWRATE UP 4.) IF UNABLE TO CLEAR ALARM WITHIN 10 MINUTES INITIATE A NORMAL PROCESS SHUTDOWN
FSL-W24 (AP291)	GROUT SLURRY LINE FLOW LOW	SLURRY FLOWRATE ≤28 gpm INDICATING CONTROLLER SETPOINT ERROR OR INSTRUMENTATION MALFUNCTION	A: SHUTS DOWN THE DRY BLEND SYSTEM AND HENCE GROUT PROCESSING AFTER ALARM IN FOR 10 SECONDS O: MONITOR SYSTEM FOR PROPER AUTOMATIC ACTIONS AND NOTIFY SUPERVISION

TGE ALARM MATRIX
PANEL: CIMSTAR CONTROL STATION

ALARM TAG NAME	ALARM DESCRIPTION	SIGNIFIES	ACTION A=AUTOMATIC O=OPERATOR
GP RESET (DP174)	GROUT PUMP W06 ALARM LATCHED	GROUT PUMP INTERLOCKED OFF FROM PROCESS CONDITION	A: NONE O: RESET GROUT PUMP FROM GRAPHIC 15 AND IF ALARM DOES NOT CLEAR NOTIFY SUPERVISION
JP SUMP (DP930)	[FUTURE] JUMPER PIT SUMP PUMP MOTOR DE-ENERGIZED	SUMP PUMP SHUT DOWN FROM COMPUTER CONTROL OR PUMP MALFUNCTION	A: NONE O: NONE
LAH-01 - 04 (AP777 - 780)	VAULT LEVEL HIGH	LEVEL AS DETECTED BY LEVEL ELEMENTS LE-101, 102, 103, AND 104 ≥360 inches	A: 1.) GROUT PUMP W06 SHUTDOWN AND HENCE GROUT PROCESSING STOPPED WITH AUTOMATIC FLUSH INITIATED 2.) EXCESS WATER PUMPS P-EW-01-04 SHUTDOWN O: 1.) VERIFY PROPER SHUTDOWN OF SYSTEM 2.) NOTIFY SUPERVISION
LAH-LP01 -LP02 (AP781, 782)	VAULT LEACHATE PIT LEVEL HIGH	LEVEL IN EITHER LEACHATE SUMP "A" AND "B" DETECTED RESPECTIVELY BY LIT-LP-101 AND LIT-LP-102 ≥39.6 inches	A: GROUT PUMP W06 SHUTS DOWN AND HENCE SHUTTING DOWN GROUT PROCESSING AND INITIATING AUTOMATIC FLUSH SEQUENCE O: 1.) VERIFY PROPER SHUTDOWN OF SYSTEM 2.)MONITOR LEACHATE LEVEL AND EVALUATE FILL RATE 3.)NOTIFY SUPERVISION

TGE ALARM MATRIX
PANEL: CIMSTAR CONTROL STATION

ALARM TAG NAME	ALARM DESCRIPTION	SIGNIFIES	ACTION A=AUTOMATIC O=OPERATOR
LDA-02A (DP10)	PUMP PIT LEAK	FLUID LEAKAGE INTO 102AP TANK 02A PIT	A: WASTE FEED PUMP 102-1 SHUTDOWN O: NOTIFY TANK FARM PERSONNEL TO ATTEMPT RESET AND NOTIFY SUPERVISION
LDA-101 (DP716)	GROUT LINE LEAK	FLUID LEAKAGE INTO GROUT LINE (TO VAULT) ENCASEMENT	A: GROUT PUMP W06 SHUTS DOWN AND HENCE SHUTTING DOWN GROUT PROCESSING AND INITIATING AUTOMATIC FLUSH SEQUENCE O: 1.) VERIFY PROPER SHUTDOWN OF SYSTEM 2.)NOTIFY SUPERVISION
LDA-102 (DP717)	[FUTURE] GROUT LINE LEAK	FLUID LEAKAGE INTO GROUT LINE ENCASEMENT [FUTURE]	A: NONE O: NONE
LDA-102DA1 (DP6)	02D PIT LEAK	FLUID LEAKAGE INTO 102AP TANK 02D PIT	A: WASTE FEED PUMP 102-1 SHUTDOWN O: NOTIFY TANK FARM PERSONNEL TO ATTEMPT RESET AND NOTIFY SUPERVISION
LDA-621C (DP7)	WASTE FEED LINE LEAK	FLUID LEAKAGE INTO ENCASEMENT OF WASTE FEED LINE 621	A: WASTE FEED PUMP 102-1 SHUTDOWN O: NOTIFY TANK FARM PERSONNEL TO ATTEMPT RESET AND NOTIFY SUPERVISION

TGE ALARM MATRIX
PANEL: CIMSTAR CONTROL STATION

ALARM TAG NAME	ALARM DESCRIPTION	SIGNIFIES	ACTION A=AUTOMATIC O=OPERATOR
LDA-EW-01-04 (DP707 - 710)	EXCESS WATER PUMP PIT LEAK	FLUID LEAKAGE INTO EXCESS WATER PUMP PITS 218-E-16-101D, 218-E-16-101E, 218-E-16-101F, AND 218-E-16-101G AS DETECTED RESPECTIVELY BY LEVEL DETECTION ELEMENTS LDE-EW-01 THROUGH 04	A: EXCESS WATER PUMP(S) P-EW-01 THROUGH 04 SHUTDOWN O: VERIFY AUTOMATIC RESPONSES AND NOTIFY SUPERVISION
LDA-JP-1,2 (DP714, 715)	[FUTURE] JUMPER PIT LEAK	FLUID LEAKAGE INTO [FUTURE] JUMPER PIT	A: NONE O: NONE
LDA-LP-01,02 (DP711, 712)	LEACHATE PIT LEAK	HIGH LEVEL WITHIN LEACHATE SUMP "A", 218-E-16-101A AND "B", 218-E-16-101B DETECTED RESPECTIVELY BY LEAK DETECTION ELEMENT LDE-LP-101 AND LDE-LP-102	A: NONE O: NOTIFY SUPERVISION IMMEDIATELY, AND BEGIN STEPS FOR TRANSFERRING LEACHATE TO VAULT
LDA-LP-03 (DP713)	LEACHATE PIT LEAK	FLUID LEAKAGE INTO LEACHATE PUMP PIT 218-E-16-101A/B FROM LEAKING EXCESS WATER PIPING OR WEATHER INTRUSION	A: NONE O: IF PUMPING EXCESS WATER FROM VAULT STOP EXCESS WATER PUMP AND NOTIFY SUPERVISION

9011178510 81

TGE ALARM MATRIX
PANEL: CIMSTAR CONTROL STATION

ALARM TAG NAME	ALARM DESCRIPTION	SIGNIFIES	ACTION A=AUTOMATIC O=OPERATOR
LDA-VP-1 (DP706)	VAULT PIT LEAK	FLUID LEAKAGE INTO VAULT PIT 218-E-16-101C FROM LEAKING EXCESS WATER PIPING, GROUT PIPING, OR WEATHER INTRUSION	A: NONE O: 1.) STOP GROUT PROCESSING AND INITIATE WATER FLUSH, OR STOP EXCESS WATER PUMPING 2.)NOTIFY SUPERVISION
LISL-E01 (DP126)	SUBSTATION TRANSFORMER OIL LEVEL LOW	TRANSFORMER ON SUBSTATION MODULE HAS LEAKED OIL	A: NONE O: 1.) VERIFY OIL LEAKAGE BY INSPECTING MODULE AND SHUT DOWN GROUT PROCESSING OR EXCESS WATER RETURN OPERATIONS WHEN CONFIRMED 2.)NOTIFY SUPERVISION AND CORDON OFF SUBSTATION MODULE LEAKAGE
LS-622-2,3,4 (DP20 - 22)	POV FAILURE	PISTON OPERATING VALVES 622-2, 622-3, AND/OR 622-4 FAILURE TO CONTACT LIMIT SWITCHES WHEN CALLED TO CLOSE OR OPEN	A: NONE O: 1.) ATTEMPT TO CYCLE VALVES IN EITHER DIRECTION 2.) IF UNABLE TO GET PROPER OPERATION LEAVE POV 622-2 AND 622-4 IN CLOSED POSITION IF POSSIBLE, NOTIFY SUPERVISION
LSH-F11 (AP17)	DECON TANK F01 HIGH LEVEL	LEVEL IN TANK IS $\geq$ 75%.	A: LOCAL ALARM ACTIVATES O: EVALUATE IF THERE IS SUFFICIENT ROOM BEFORE CONTINUING. DO NOT FILL ABOVE 90%
LSH-M02 (DP90)	DAY STORAGE BIN M01 LEVEL HIGH	DAY BIN LEVEL AT 122,700 lbs (PSW BLEND)	A: LOCAL ALARM ACTIVATES O: MONITOR BIN LEVEL WHILE CONTINUING FILL PROCEDURE

TGE ALARM MATRIX
PANEL: CIMSTAR CONTROL STATION

ALARM TAG NAME	ALARM DESCRIPTION	SIGNIFIES	ACTION A=AUTOMATIC O=OPERATOR
LSH-M11 (DP99)	TRAMP MATERIAL DRUM LEVEL HIGH	TRAMP MATERIAL 55 GALLON DRUM IS FULL WITH OVERSIZE MATERIAL	A: NONE O: REPLACE 55 GALLON DRUM ON TRAMP MATERIAL DRUM DOLLY, COVER OLD DRUM, AND NOTIFY SUPERVISION FOR DISPOSITION
LSH-R12 (AP62)	TRIBUTYL PHOSPHATE TANK R02 LEVEL HIGH	LEVEL IN TANK IS ≥ 80%	A: LOCAL ALARM ACTIVATES O: EVALUATE IF THERE IS SUFFICIENT ROOM BEFORE CONTINUING FILL. DO NOT FILL ABOVE 90%
LSH-R22 (AP83)	SET REGULATOR TANK R03 LEVEL HIGH	LEVEL IN TANK IS ≥ 80%	A: LOCAL ALARM ACTIVATES O: EVALUATE IF THERE IS SUFFICIENT ROOM IN THE TANK BEFORE CONTINUING FILL. DO NOT FILL ABOVE 90%
LSH-R30 (AP103)	pH ADJUSTMENT TANK R04 LEVEL HIGH	LEVEL IN TANK IS ≥ 67%	A: LOCAL ALARM IS ACTIVATED O: EVALUATE IF THERE IS SUFFICIENT ROOM BEFORE CONTINUING TO FILL. DO NOT FILL ABOVE 90%
LSH-W02 (AP220)	LIQUID COLLECTION TANK W01 LEVEL HIGH	LEVEL IN TANK ≥ 70% (624 GALLONS; 75 GALLONS REMAINING TILL HIGH HIGH INTERLOCK ACTIVATES)	A: CASS IS ALARMED O: EVALUATE AMOUNT OF MATERIAL TO BE PUMPED INTO TANK BEFORE CONTINUING FILL, AND DISPOSE OF TANK CONTENTS AS DIRECTED BY SUPERVISION - UNLESS ACTIVATING FLUSH SEQUENCE

TGE ALARM MATRIX
PANEL: CIMSTAR CONTROL STATION

ALARM TAG NAME	ALARM DESCRIPTION	SIGNIFIES	ACTION A=AUTOMATIC O=OPERATOR
LSH-W20 (AP273)	SURGE TANK W09 LIQUID LEVEL HIGH	LEVEL IN TANK IS ≥ 38 GALLONS INDICATING FLOW IMBALANCE	A: NONE BUT LSHH-W20 WILL ACTIVATE AT A TANK LEVEL OF 45 GALLONS INTERLOCKING OFF EITHER THE DRY BLEND SYSTEM AND WASTE FEED VALVE FV-W01 IF FEED PUMP IS RUNNING, OR CLOSING THE DECON VALVE FV-F08 IF IN AUTOFLUSH, AUTO SHUTDOWN, OR AUTO SPRAY MODE O: 1.) EVALUATE LIC-W20 FOR PROPER SETTINGS AND INDICATIONS AND ADJUST LIC-W20 IF NECESSARY 2.) EVALUATE SLURRY OUTPUT INDICATORS, AND IF SIGNS INDICATE SYSTEM PLUGGAGE, INITIATE A NORMAL PROCESS SHUTDOWN WITH SYSTEM FLUSH AND NOTIFY SUPERVISION 3.) MONITOR SYSTEM IF LSHH-W02 ACTIVATES FOR PROPER AUTOMATIC ACTIONS AND NOTIFY SUPERVISION
LSH-W33 (DP85)	LIQUID COLLECTION TANK W01 LEVEL HIGH	LEVEL IN LIQUID COLLECTION TANK ≥660 gallons	A: CASS IS ALARMED O: EVALUATE LIQUID FLOW INTO TANK FOR APPROPRIATE SPACE BEFORE CONTINUING - UNLESS ACTIVATING FLUSH SEQUENCE

TGE ALARM MATRIX
PANEL: CIMSTAR CONTROL STATION

ALARM TAG NAME	ALARM DESCRIPTION	SIGNIFIES	ACTION A=AUTOMATIC O=OPERATOR
LSH-W35 (AP308)	LCT/MIXER MODULE SUMP LIQUID LEVEL HIGH	LCT/MIXER MODULE SUMP LEVEL ≥ 6.4 inches (18 gallons) INDICATING LEAKAGE WITHIN MODULE	A: 1.) SUMP PUMP W07A STARTS IF IT IS NOT IN MANUAL MODE AND HIGH-HIGH LCT LEVEL IS NOT ACTIVATED 2.) CASS IS ALARMED 3.) LSHH-W36 INTERLOCK WILL ACTIVATE AT A SUMP LEVEL OF 6.9 in (23 gallons) AND START SUMP PUMP W07A, AS A BACKUP INTERLOCK O: 1.) MONITOR/EVALUATE FOR LEAKAGE SOURCE USING GRAPHIC SCREENS NOTIFY SUPERVISION 2.) VERIFY SUMP PUMP W07A STARTS AUTOMATICALLY OR START MANUALLY 3.) IF SUMP PUMP W07A FAILS TO OPERATE, STOP GROUT PROCESSING, INITIATE NORMAL, SYSTEM FLUSH, LINE UP VALVING TO ROUTE SUMP PUMP W07B FLOW TO LCT, AND START SUMP PUMP W07B

9011785108 5

TGE ALARM MATRIX
PANEL: CIMSTAR CONTROL STATION

ALARM TAG NAME	ALARM DESCRIPTION	SIGNIFIES	ACTION A=AUTOMATIC O=OPERATOR
LSH-W36 (DP86)	LCT/MIXER MODULE SUMP LEVEL HIGH	SUMP LEVEL IN LCT/MIXER MODULE ≥7 inches (24 gallons)	A: SUMP PUMP W07A STARTS IF IT IS NOT IN MANUAL MODE AND HIGH-HIGH LCT LEVEL IS NOT ACTIVATED O: 1.) MONITOR/EVALUATE FOR LEAKAGE SOURCE USING GRAPHIC SCREENS NOTIFY SUPERVISION 2.) VERIFY SUMP PUMP W07A STARTS AUTOMATICALLY OR START MANUALLY 3.) IF SUMP PUMP W07A FAILS TO OPERATE, STOP GROUT PROCESSING, INITIATE NORMAL, SYSTEM FLUSH, LINE UP VALVING TO ROUTE SUMP PUMP W07B FLOW TO LCT, AND START SUMP PUMP W07B
LSH-W45 (DP87)	MOTOR PIT SUMP LEVEL HIGH	MOTOR PIT SUMP LEVEL ≥28 in INDICATING MATERIAL INTRUSION	A: 1.) CASS IS ALARMED 2.) MOTOR PIT SUMP PUMP W08 STARTS AND TRANSFERS MATERIAL INTO LCT/MIXER MODULE SUMP O: 1.) MONITOR AUTOMATIC PUMP ACTION AND START MANUALLY (GRAPHIC 3) IF IT DOES NOT START -ENSURE DISCONNECT IS "ON" AND THEN NOTIFY SUPERVISION 2.) INSPECT MOTOR PIT NOTIFY SUPERVISION IF MATERIAL INTRUSION IS UNUSUAL

9011178510886

TGE ALARM MATRIX
PANEL: CIMSTAR CONTROL STATION

ALARM TAG NAME	ALARM DESCRIPTION	SIGNIFIES	ACTION A=AUTOMATIC O=OPERATOR
LSHH-M02 (DP89)	DAY STORAGE BIN M01 LEVEL HIGH-HIGH	DAY BIN LEVEL AT 140,500 lbs (PSW BLEND)	A: 1.)TRANSPORT BLOWER M08 STOPS 2.) LOCAL ALARM ACTIVATES O: WAIT TILL ALARM CLEARS TO CONTINUE FILL PROCEDURES IF NEEDED
LSL-E05-1 (DP131)	EMERGENCY GENERATOR FUEL LEVEL LOW	FUEL LEVEL IN EMERGENCY GENERATOR DIESEL STORAGE TANK IS LOW	A: NONE O: 1.)NOTIFY SUPERVISION FOR PROCUREMENT OF ADDITIONAL FUEL 2.) IF THE SYSTEM IS BEING POWERED BY THE STANDBY EMERGENCY GENERATOR STOP ALL GROUT PROCESSING AND INITIATE IMMEDIATE WATER FLUSH
LSL-E05-2 (DP120)	EMERGENCY GENERATOR WATER LEVEL LOW	WATER LEVEL IN EMERGENCY GENERATOR STORAGE TANK IS LOW	A: NONE O: 1.)NOTIFY SUPERVISION FOR ADDITION OF WATER BY MAINTENANCE PERSONNEL 2.) IF THE SYSTEM IS BEING POWERED BY THE STANDBY EMERGENCY GENERATOR STOP ALL GROUT PROCESSING AND INITIATE IMMEDIATE WATER FLUSH
LSL-F11 (AP17)	DECON TANK F01 LOW LEVEL	LEVEL IN TANK IS $\leq$ 10%	A: DECON PUMP F02 WILL SHUT OFF 2 MINUTES AFTER ALARM, AT 1% O: IF DECON PUMP DOES NOT SHUT OFF, STOP IT AND NOTIFY SUPERVISION

9 0 1 1 7 8 5 1 0 8 7

TGE ALARM MATRIX
PANEL: CIMSTAR CONTROL STATION

ALARM TAG NAME	ALARM DESCRIPTION	SIGNIFIES	ACTION A=AUTOMATIC O=OPERATOR
LSL-M02 (DP91)	DAY STORAGE BIN M01 LEVEL LOW	DAY BIN LEVEL AT 17000 lbs (PSW BLEND)	A: LOCAL ALARM ACTIVATES O: NOTE LEVEL AND EVALUATE APPROXIMATE TIME TILL REACHING LSLL-M02 INTERLOCK, AND NOTIFY DRY MATERIAL FACILITY FOR SPEEDING UP DELIVERY AS APPROPRIATE
LSL-R12 (AP62)	TRIBUTYL PHOSPHATE TANK R02 LEVEL LOW	LEVEL IN TANK IS ≤ 8%	A: NONE O: NOTIFY SUPERVISION FOR REPLENISHING MATERIAL
LSL-R22 (AP83)	SET REGULATOR TANK R03 LEVEL LOW	LEVEL IN TANK IS ≤ 7%	A: NONE O: NOTIFY SUPERVISION TO REPLENISH MATERIAL
LSL-R30 (AP103)	pH ADJUSTMENT TANK R04 LEVEL LOW	LEVEL IN TANK IS ≤ 10%	A: THE LOW-LOW INTERLOCK ACTIVATES AT 10% AND STOPS THE pH ADJUSTMENT TANK METERING PUMP R08, AND VALVE FV-R34 CLOSES O: IF ADDITIONAL MATERIAL IS REQUIRED, NOTIFY SUPERVISION
LSL-W02 (AP220)	LIQUID COLLECTION TANK LEVEL LOW	LEVEL IN TANK IS ≤7% (161 GALLONS)	A: 1.) THE LCT PUMP W03 WILL SHUTDOWN IF THE ISOLOK SAMPLER WAS ENABLED 2.) LSLL-W02 WILL ACTIVATE INTERLOCK WHEN LEVEL IN TANK DROPS TO 5% (120 GALLONS) O: MONITOR SYSTEMS FOR PROPER AUTOMATIC RESPONSE AND NOTIFY SUPERVISION OF DISCREPANCIES

TGE ALARM MATRIX
PANEL: CIMSTAR CONTROL STATION

ALARM TAG NAME	ALARM DESCRIPTION	SIGNIFIES	ACTION A=AUTOMATIC O=OPERATOR
LSL-W20 (AP273)	SURGE TANK W09 LEVEL LOW	LEVEL IN TANK IS ≤ 25 GALLONS INDICATING FLOW IMBALANCE	A: NONE BUT LSLL-W20 WILL ACTIVATE AT A TANK LEVEL OF 10 GALLONS SHUTTING DOWN THE GROUT PUMP W06 IF RUNNING IN FORWARD DIRECTION, HENCE SHUTTING DOWN THE DRY BLEND SYSTEM AND GROUT PROCESSING O: 1.) EVALUATE WASTE FEED RATE VIA FIC-W06 AND PUMP OPERATION BY LIC-W20 TO DETERMINE CAUSE OF IMBALANCE AND ADJUST CONTROLLERS AND RELATED SYSTEMS AS NECESSARY TO INCREASE LEVEL AND CLEAR ALARM 2.) EVALUATE DRY BLEND AND MIXER INDICATORS, AND IF THEY INDICATE MATERIAL PLUGGAGE INITIATE NORMAL PROCESS SHUTDOWN WITH SYSTEM FLUSH AND NOTIFY SUPERVISION 3.) MONITOR SYSTEM IF LSLL-W20 ACTIVATES FOR PROPER AUTOMATIC ACTIONS AND NOTIFY SUPERVISION
LSL-W45 (DP88)	MOTOR PIT SUMP LEVEL LOW	LEVEL IN MOTOR PIT SUMP ≤19.5 inches	A: MOTOR PIT SUMP W08 STOPS O: VERIFY MOTOR PIT SUMP PUMP W08 STOPS AND IF NOT INITIATE MANUAL STOP CONTROL AND NOTIFY SUPERVISION

TGE ALARM MATRIX
PANEL: CIMSTAR CONTROL STATION

ALARM TAG NAME	ALARM DESCRIPTION	SIGNIFIES	ACTION A=AUTOMATIC O=OPERATOR
LSLL-M02 (DP92)	DAY STORAGE BIN M01 LEVEL LOW-LOW	DAY BIN LEVEL AT 17000 lbs (PSW BLEND)	A: 1.) IF IN AUTOMATIC MODE THE DRY BLEND SYSTEM WILL SHUTDOWN, WITH ALL GROUT PROCESSING 2.) LOCAL ALARM ACTIVATES O: VERIFY SYSTEM SHUTDOWN AND NOTIFY SUPERVISION
LSLL-R02 (AP47)	FLUIDIZER TANK R01 LEVEL LOW-LOW	LEVEL IN TANK IS ≤ 2%	A: 1.) FLUIDIZER METERING PUMP R05 STOPS 2.) VALVE FV-R08 CLOSES 3.) VALVE FV-R01 GOES TO C-B POSITION AND VALVE FV-R05 CLOSES IF NEITHER THE TRIBUTYL PHOSPHATE PUMP R06 NOR THE SET REGULATOR METERING PUMP R07 IS RUNNING O: INITIATE NORMAL PROCESS SHUTDOWN AND NOTIFY SUPERVISION IF FLOW CANNOT BE RESTORED WITHIN 5 MINUTES

9011785109 0

TGE ALARM MATRIX
PANEL: CIMSTAR CONTROL STATION

ALARM TAG NAME	ALARM DESCRIPTION	SIGNIFIES	ACTION A=AUTOMATIC O=OPERATOR
LSLL-R12 (AP63)	TRIBUTYL PHOSPHATE TANK R02 LEVEL LOW-LOW	LEVEL IN TANK IS ≤ 2%	A: 1.) TRIBUTYL PHOSPHATE METERING PUMP R05 STOPS 2.) VALVE FV-R18 CLOSES 3.) VALVE FV-R01 GOES TO THE C-B POSITION AND VALVE FV-R05 CLOSES IF NEITHER THE FLUIDIZER METERING PUMP R05 NOR THE SET REGULATOR METERING PUMP R07 IS RUNNING O: INITIATE NORMAL PROCESS SHUTDOWN AND NOTIFY SUPERVISION IF FLOW CANNOT BE RESTORED WITHIN 5 MINUTES
LSLL-R22 (AP84)	SET REGULATOR TANK R03 LEVEL LOW-LOW	LEVEL IN TANK IS ≤ 2%	A: 1.) SET REGULATOR METERING PUMP STOPS 2.) VALVE FV-R28 CLOSES 3.) VALVE FV-R01 GOES TO THE C-B POSITION AND VALVE FV-R05 CLOSES IF NEITHER THE FLUIDIZER METERING PUMP R05 NOR THE TRIBUTYL PHOSPHATE METERING PUMP R06 IS RUNNING O: INITIATE NORMAL PROCESS SHUTDOWN AND NOTIFY SUPERVISION IF FLOW IS NOT RESTORED WITHIN 5 MINUTES

TGC ALARM MATRIX
PANEL: CAMSTAR CONTROL STATION

ALARM TAG NAME	ALARM DESCRIPTION	SIGNIFIES	ACTION A=AUTOMATIC O=OPERATOR
M-A01A (DP29)	INSTRUMENT AIR COMPRESSOR A01A NO POWER	AIR COMPRESSOR A01A READY SIGNAL NOT RECEIVED BECAUSE DISCONNECT OFF OR MOTOR FAILURE	A: NONE O: ENSURE DISCONNECT ON, RESTART, AND NOTIFY SUPERVISION IF ALARM DOES NOT CLEAR
M-A01B (DP30)	INSTRUMENT AIR COMPRESSOR A01B NO POWER	AIR COMPRESSOR A01B READY SIGNAL NOT RECEIVED BECAUSE DISCONNECT OFF OR MOTOR FAILURE	A: NONE O: ENSURE DISCONNECT ON, RESTART, AND NOTIFY SUPERVISION IF ALARM DOES NOT CLEAR
M-A07 (DP58)	INSTRUMENT AIR AFTERCOOLER FAN A07 NO POWER	AFTERCOOLER FAN A07 READY SIGNAL NOT RECEIVED BECAUSE DISCONNECT OFF OR MOTOR FAILURE	A: NONE O: ENSURE DISCONNECT ON, RESTART, AND NOTIFY SUPERVISION IF ALARM DOES NOT CLEAR
M-F02 (DP31)	DECON PUMP F02 NO POWER	DECON PUMP F02 READY SIGNAL NOT RECEIVED BECAUSE DISCONNECT OFF OR MOTOR FAILURE	A: NONE O: ENSURE DISCONNECT ON, RESTART, AND NOTIFY SUPERVISION IF ALARM DOES NOT CLEAR
M-F03 (DP32)	GROUT LINE CLEARING PUMP F03 NO POWER	GROUT LINE CLEARING PUMP F03 READY SIGNAL NOT RECEIVED BECAUSE DISCONNECT OFF OR MOTOR FAILURE	A: NONE O: ENSURE DISCONNECT ON, RESTART, AND NOTIFY SUPERVISION IF ALARM DOES NOT CLEAR
M-F05 (DP52)	DECON TANK HEATER F05 NO POWER	DECON TANK HEATER F05 READY SIGNAL NOT RECEIVED BECAUSE DISCONNECT OFF OR HEATER FAILURE	A: NONE O: ENSURE DISCONNECT ON, RESTART, AND NOTIFY SUPERVISION IF ALARM DOES NOT CLEAR

TGE ALARM MATRIX
PANEL: CIMSTAR CONTROL STATION

ALARM TAG NAME	ALARM DESCRIPTION	SIGNIFIES	ACTION A=AUTOMATIC O=OPERATOR
M-F06 (DP50)	DECON TANK AGITATOR F06 NO POWER	DECON TANK AGITATOR F06 READY SIGNAL NOT RECEIVED BECAUSE DISCONNECT OFF OR MOTOR FAILURE	A: NONE O: ENSURE DISCONNECT ON, RESTART, AND NOTIFY SUPERVISION IF ALARM DOES NOT CLEAR
M-M04 (DP118)	DRY BLEND ROTARY VALVE M04 NO POWER	DRY BLEND ROTARY VALVE M04 READY SIGNAL NOT RECEIVED BECAUSE DISCONNECT OFF OR MOTOR FAILURE	A: NONE O: ENSURE DISCONNECT ON, RESTART, AND NOTIFY SUPERVISION IF ALARM DOES NOT CLEAR
M-M05A (DP117)	DRY BLEND WEIGH FEEDER M-M05A NO POWER	DRY BLEND WEIGH FEEDER M-M05A READY SIGNAL NOT RECEIVED BECAUSE DISCONNECT OFF OR MOTOR FAILURE	A: NONE O: ENSURE DISCONNECT ON, RESTART, AND NOTIFY SUPERVISION IF ALARM DOES NOT CLEAR
M-M05B (DP33)	DRAG CHAIN M-M05B NO POWER	DRAG CHAIN M-M05B READY SIGNAL NOT RECEIVED BECAUSE DISCONNECT OFF OR MOTOR FAILURE	A: NONE O: ENSURE DISCONNECT ON, RESTART, AND NOTIFY SUPERVISION IF ALARM DOES NOT CLEAR
M-M06 (DP34)	DRY BLEND TRANSFER CONVEYOR M-M06 NO POWER	DRY BLEND TRANSFER CONVEYOR M-M06 READY SIGNAL NOT RECEIVED BECAUSE DISCONNECT OFF OR MOTOR FAILURE	A: NONE O: ENSURE DISCONNECT ON, RESTART, AND NOTIFY SUPERVISION IF ALARM DOES NOT CLEAR
M-M07 (DP35)	DRY BLEND TRAMP MATERIAL SCREENER M07 NO POWER	DRY BLEND TRAMP MATERIAL SCREENER READY SIGNAL NOT RECEIVED BECAUSE DISCONNECT OFF OR MOTOR FAILURE	A: NONE O: ENSURE DISCONNECT ON, RESTART, AND NOTIFY SUPERVISION IF ALARM DOES NOT CLEAR

9011785109 3

TGE ALARM MATRIX
PANEL: CIMSTAR CONTROL STATION

ALARM TAG NAME	ALARM DESCRIPTION	SIGNIFIES	ACTION A=AUTOMATIC O=OPERATOR
M-M08 (DP36)	TRANSPORT BLOWER M08 NO POWER	TRANSPORT BLOWER M08 READY SIGNAL NOT RECEIVED BECAUSE DISCONNECT OFF OR MOTOR FAILURE	A: NONE O: ENSURE DISCONNECT ON, RESTART, AND NOTIFY SUPERVISION IF ALARM DOES NOT CLEAR
M-M16 (DP37)	DAY BIN CIRCULATING FAN M16 NO POWER	DAY BIN CIRCULATING FAN M16 READY SIGNAL NOT RECEIVED BECAUSE DISCONNECT OFF OR MOTOR FAILURE	A: NONE O: ENSURE DISCONNECT ON, RESTART, AND NOTIFY SUPERVISION IF ALARM DOES NOT CLEAR
M-M18 (DP38)	BIN ACTIVATOR M18 NO POWER	BIN ACTIVATOR M18 NO POWER READY SIGNAL NOT RECEIVED BECAUSE DISCONNECT OFF OR MOTOR FAILURE	A: NONE O: ENSURE DISCONNECT ON, RESTART, AND NOTIFY SUPERVISION IF ALARM DOES NOT CLEAR
M-22 (DP39)	SCREEN FEED ROTARY VALVE M22 NO POWER	SCREEN FEED ROTARY VALVE M22 READY SIGNAL NOT RECEIVED BECAUSE DISCONNECT OFF OR MOTOR FAILURE	A: NONE O: ENSURE DISCONNECT ON, RESTART, AND NOTIFY SUPERVISION IF ALARM DOES NOT CLEAR
M-R05 (DP121)	FLUIDIZER METERING PUMP R05 NO POWER	FLUIDIZER METERING PUMP R05 READY SIGNAL NOT RECEIVED BECAUSE DISCONNECT OFF OR MOTOR FAILURE	A: NONE O: ENSURE DISCONNECT ON, RESTART, AND NOTIFY SUPERVISION IF ALARM DOES NOT CLEAR
M-R06 (DP122)	TRIBUTYL PHOSPHATE METERING PUMP R06 NO POWER	TRIBUTYL PHOSPHATE METERING PUMP READY SIGNAL NOT RECEIVED BECAUSE DISCONNECT OFF OR MOTOR FAILURE	A: NONE O: ENSURE DISCONNECT ON, RESTART, AND NOTIFY SUPERVISION IF ALARM DOES NOT CLEAR

9011178510094

TGE ALARM MATRIX
PANEL: CIMSTAR CONTROL STATION

ALARM TAG NAME	ALARM DESCRIPTION	SIGNIFIES	ACTION A=AUTOMATIC O=OPERATOR
M-R07 (DP123)	SET REGULATOR METERING PUMP R07 NO POWER	SET REGULATOR METERING PUMP READY SIGNAL NOT RECEIVED BECAUSE DISCONNECT OFF OR MOTOR FAILURE	A: NONE O: ENSURE DISCONNECT ON, RESTART, AND NOTIFY SUPERVISION IF ALARM DOES NOT CLEAR
M-R08 (DP40)	pH ADJUSTMENT METERING PUMP R08 NO POWER	pH ADJUSTMENT METERING PUMP M-R08 READY SIGNAL NOT RECEIVED BECAUSE DISCONNECT OFF OR MOTOR FAILURE	A: NONE O: ENSURE DISCONNECT ON, RESTART, AND NOTIFY SUPERVISION IF ALARM DOES NOT CLEAR
M-R09 (DP51)	pH ADJUSTMENT TANK AGITATOR R09 NO POWER	pH ADJUSTMENT TANK AGITATOR R09 READY SIGNAL NOT RECEIVED BECAUSE DISCONNECT OFF OR MOTOR FAILURE	A: NONE O: ENSURE DISCONNECT ON, RESTART, AND NOTIFY SUPERVISION IF ALARM DOES NOT CLEAR
M-V02 (DP53)	MAKEUP AIR INLET HEATER V02 NO POWER	MAKEUP AIR INLET HEATER V02 READY SIGNAL NOT RECEIVED BECAUSE DISCONNECT OFF OR HEATER FAILURE	A: NONE O: ENSURE DISCONNECT ON, RESTART, AND NOTIFY SUPERVISION IF ALARM DOES NOT CLEAR
M-V09 (DP41)	EXHAUST FAN V09 NO POWER	EXHAUST FAN V09 READY SIGNAL NOT RECEIVED BECAUSE DISCONNECT OFF OR MOTOR FAILURE	A: NONE O: ENSURE DISCONNECT ON, RESTART, AND NOTIFY SUPERVISION IF ALARM DOES NOT CLEAR
M-V12 (DP54)	MAKEUP AIR INLET HEATER V12 NO POWER	MAKEUP AIR INLET HEATER V12 READY SIGNAL NOT RECEIVED BECAUSE DISCONNECT OFF OR MOTOR FAILURE	A: NONE O: ENSURE DISCONNECT ON, RESTART, AND NOTIFY SUPERVISION IF ALARM DOES NOT CLEAR

TGE ALARM MATRIX
PANEL: CIMSTAR CONTROL STATION

ALARM TAG NAME	ALARM DESCRIPTION	SIGNIFIES	ACTION A=AUTOMATIC O=OPERATOR
M-V19 (DP42)	EXHAUST FAN V19 NO POWER	EXHAUST FAN V19 READY SIGNAL NOT RECEIVED BECAUSE DISCONNECT OFF OR MOTOR FAILURE	A: NONE O: ENSURE DISCONNECT ON, RESTART, AND NOTIFY SUPERVISION IF ALARM DOES NOT CLEAR
M-V23 (DP43)	CHILLED WATER PUMP V23 NO POWER	CHILLED WATER PUMP V23 READY SIGNAL NOT RECEIVED BECAUSE DISCONNECT OFF OR MOTOR FAILURE	A: NONE O: ENSURE DISCONNECT ON, RESTART, AND NOTIFY SUPERVISION IF ALARM DOES NOT CLEAR
M-V30 (DP55)	DUST COLLECTION STRIP HEATER V30 NO POWER	DUST COLLECTION STRIP HEATER V30 READY SIGNAL NOT RECEIVED BECAUSE DISCONNECT OFF HEATER FAILURE	A: NONE O: ENSURE DISCONNECT ON, RESTART AND NOTIFY SUPERVISION IF ALARM DOES NOT CLEAR
M-V31 (DP56)	MAKEUP AIR PREHEATER V31 NO POWER	MAKEUP AIR PREHEATER V31 READY SIGNAL NOT RECEIVED BECAUSE DISCONNECT OFF OR PREHEATER FAILURE	A: NONE O: ENSURE DISCONNECT ON, RESTART, AND NOTIFY SUPERVISION IF ALARM DOES NOT CLEAR
M-V32 (DP57)	MAKEUP AIR PREHEATER V32 NO POWER	MAKEUP AIR PREHEATER V32 READY SIGNAL NOT RECEIVED BECAUSE DISCONNECT OFF OR MOTOR FAILURE	A: NONE O: ENSURE DISCONNECT ON, RESTART, AND NOTIFY SUPERVISION IF ALARM DOES NOT CLEAR
M-V35 (DP44)	BAGHOUSE ROTARY VALVE V35 NO POWER	BAGHOUSE ROTARY VALVE V35 READY SIGNAL NOT RECEIVED BECAUSE DISCONNECT OFF OR MOTOR FAILURE	A: NONE O: ENSURE DISCONNECT ON, RESTART, AND NOTIFY SUPERVISION IF ALARM DOES NOT CLEAR

9011178510946

TGE ALARM MATRIX
PANEL: CIMSTAR CONTROL STATION

ALARM TAG NAME	ALARM DESCRIPTION	SIGNIFIES	ACTION A=AUTOMATIC O=OPERATOR
M-W02 (DP124)	LIQUID COLLECTION TANK AGITATOR W02 NO POWER	LIQUID COLLECTION TANK W02 READY SIGNAL NOT RECEIVED BECAUSE DISCONNECT OFF OR MOTOR FAILURE	A: NONE O: ENSURE DISCONNECT ON, RESTART, AND NOTIFY SUPERVISION IF ALARM DOES NOT CLEAR
M-W03 (DP45)	LIQUID COLLECTION TANK PUMP W03 NO POWER	LIQUID COLLECTION TANK PUMP W03 READY SIGNAL NOT RECEIVED BECAUSE. DISCONNECT OFF OR MOTOR FAILURE	A: NONE O: ENSURE DISCONNECT ON, RESTART, AND NOTIFY SUPERVISION IF ALARM DOES NOT CLEAR
M-W07A (DP46)	LCT/MIXER SUMP PUMP W07A NO POWER	LCT/MIXER SUMP PUMP W07A READY SIGNAL NOT RECEIVED BECAUSE DISCONNECT OFF OR MOTOR FAILURE	A: NONE O: ENSURE DISCONNECT ON, RESTART, AND NOTIFY SUPERVISION IF ALARM DOES NOT CLEAR
M-W07B (DP47)	LCT/MIXER SUMP PUMP W07B NO POWER	LCT/MIXER SUMP PUMP W07B READY SIGNAL NOT RECEIVED BECAUSE DISCONNECT OFF OR MOTOR FAILURE	A: NONE O: ENSURE DISCONNECT ON, RESTART, AND NOTIFY SUPERVISION IF ALARM DOES NOT CLEAR
M-W08 (DP48)	MOTOR PIT SUMP PUMP W08 NO POWER	MOTOR PIT SUMP PUMP W08 READY SIGNAL NOT RECEIVED BECAUSE DISCONNECT OFF OR MOTOR FAILURE	A: NONE O: ENSURE DISCONNECT ON, RESTART, AND NOTIFY SUPERVISION IF ALARM DOES NOT CLEAR
M-W10 (DP49)	SURGE TANK AGITATOR W10 NO POWER	SURGE TANK AGITATOR W10 READY SIGNAL NOT RECEIVED BECAUSE DISCONNECT OFF OR MOTOR FAILURE	A: NONE O: ENSURE DISCONNECT ON, RESTART, AND NOTIFY SUPERVISION IF ALARM DOES NOT CLEAR

9011178510097

TGE ALARM MATRIX
PANEL: CIMSTAR CONTROL STATION

ALARM TAG NAME	ALARM DESCRIPTION	SIGNIFIES	ACTION A=AUTOMATIC O=OPERATOR
MA-102-3A (DP2)	MIXER PUMP 102-3 HOUSING LEAK	FLUID LEAKAGE INTO MIXER PUMP 102-3 HOUSING	A: MIXER PUMP 102-3 SHUTS DOWN O: 1.) VERIFY PUMP SHUTS DOWN AND IF NOT INITIATE MANUAL STOP 2.)NOTIFY SUPERVISION
MOV-01, 02, 03, 04, 06, 07 (DP718 - 723)	EXCESS WATER MOTOR OPERATED VALVE(S) MOV-01 THROUGH MOV-04, MOV-06 AND MOV-07 FAILURE	NO LIMIT SWITCHES ARE ACTIVATED FOR MOV01,02,03,04,06 OR 07 WHEN CALLED FOR TRAVEL	A: NONE, BUT EXCESS WATER PUMPING CANNOT OCCUR TILL THIS ALARM IS CLEARED O: 1.) ATTEMPT TO CYCLE VALVE(S) OPEN AND CLOSED BY SETTING UP DIFFERENT ROUTINGS 2.) IF ALARM DOES NOT CLEAR NOTIFY SUPERVISION
MR (DP187 - 189)	MR1/MR2/MR3 RACKS POWER CABLE FAILURE, PARITY ERROR, OR WATCHDOG TIMER TIME OUT	MODULE FAILURE OR SYSTEM CONFIGURATION ERROR ON MR1, MR2 OR MR3 RACKS	A: CPU CONTINUES TO OPERATE, BUT THERE MAY BE COMMUNICATIONS OR DATA LOSS WITH RACK(s) O: IF CONTROL OF GRAPHIC CONTROL SCREENS IS LOST INITIATE A SYSTEM SHUTDOWN AND FLUSH AND NOTIFY SUPERVISION
P-102-1 (DP19)	WASTE FEED PUMP 102-1 NO POWER	WASTE FEED PUMP 102-1 READY SIGNAL NOT RECEIVED BECAUSE DISCONNECT OFF OR MOTOR FAILURE	A: NONE O: ENSURE DISCONNECT ON, RESTART, AND NOTIFY SUPERVISION IF ALARM DOES NOT CLEAR
P-102-3 (DP17)	MIXING PUMP 102-3 NO POWER	MIXING PUMP 102-3 READY SIGNAL NOT RECEIVED BECAUSE DISCONNECT OFF OR MOTOR FAILURE	A: NONE O: ENSURE DISCONNECT ON, RESTART, AND NOTIFY SUPERVISION IF ALARM DOES NOT CLEAR

TGE ALARM MATRIX
PANEL: CIMSTAR CONTROL STATION

ALARM TAG NAME	ALARM DESCRIPTION	SIGNIFIES	ACTION A=AUTOMATIC O=OPERATOR	
PAH-01 (AP775)	PRESSURE IN EXCESS WATER RETURN LINE IN VAULT PIT BETWEEN MOV-05 AND MOV-07 HIGH	PRESSURE IN LINE ≥ -.10 in. WG	A: O:	NONE 1.) OPEN MOV-05 AND ENSURE ALARM CLEARS PRIOR TO OPENING MOV-07 2.)NOTIFY SUPERVISION IF ALARM FAILS TO CLEAR AFTER CYCLING VALVES
PAH-102-1 (DP12)	FEED TANK PRESSURE HIGH	PRESSURE IN WASTE FEED TANK 241-AP-102 ≥ -.25 in. WG	A: O:	MIXER PUMP 102-3 SHUTS DOWN 1.) VERIFY PRESSURE WITH TANK FARM PERSONNEL 2.)IF ALARM CLEARED AND MIXER PUMP IS NOT RUNNING, ATTEMPT RESET 3.) IF UNABLE TO GET MIXER PUMP TO RESTART, INITIATE SYSTEM SHUTDOWN AND FLUSH 4.)NOTIFY SUPERVISION
PAL-01 (AP775, DP789)	PRESSURE IN EXCESS WATER RETURN LINE IN THE VAULT PIT BETWEEN MOV-05 AND MOV-07 LOW	PRESSURE IN LINE ≤ -.5 in. WG	A: O:	NONE ATTEMPT TO CLEAR ALARM BY CYCLING VALVES IN VAULT PIT NOTIFY SUPERVISION IF ALARM DOES NOT CLEAR

9011785109 6

TGE ALARM MATRIX
PANEL: CIMSTAR CONTROL STATION

ALARM TAG NAME	ALARM DESCRIPTION	SIGNIFIES	ACTION A=AUTOMATIC O=OPERATOR
PB 1321 (DP23)	TGE EMERGENCY SHUTDOWN	PUSH BUTTON 1321 "EMERGENCY SHUTDOWN" ON THE EMERGENCY CONTROL PANEL WAS PUSHED	A: 1.) DRY BLEND FEED STOPS 2.) VALVE FV-W06 GOES TO AUTOMATIC 3.) VALVES FV-W01, P-OV-622-2, AND POV-6-22-3 CLOSE WHILE POV-622-4 OPENS 4.)WASTE FEED PUMP P-102-1 STOPS 5.) ADDITIVE FEED PUMPS R05, R06, AND R07 STOP 6.) GROUT PUMP W06 GOES TO AUTOMATIC 7.) VALVE FV-F01 GOES B-A, WHILE FV-F02 GOES C-B 8.) VALVES FV-H04 AND FV-H08 OPEN 9.) FLUSH WATER TOTALIZER RESETS 10.) RAW WATER FLUSH OF 600 GALLONS OCCURS 11.) AUTO FLUSH STOPS 12.) GROUT MIXER W05 STOPS O: VERIFY ACTIONS AND BRING SYSTEM BACK UP PER SUPERVISION DIRECTION

9011178511006

TGE ALARM MATRIX
PANEL: CIMSTAR CONTROL STATION

ALARM TAG NAME	ALARM DESCRIPTION	SIGNIFIES	ACTION A=AUTOMATIC O=OPERATOR
PB 1324 (DP24)	TGE EMERGENCY STOP	PUSHBUTTON 1324 WAS PUSHED INITIATING EMERGENCY STOP OF TGE SYSTEMS	A: 1.) STOPS: DRY BLEND WEIGHFEEDER W05-A, DRAG CHAIN M05-B, ROTARY VALVE M04, BIN ACTIVATOR M18, ROTARY VALVE M22, SCREEN M07, VALVE M15, ROTARY VALVE V-35, TRANSFER CONVEYOR M06, PUMP P-102-1, ADDITVE PUMPS R05-R07, GROUT MIXER W05, GROUT PUMP W06, AGITATOR W10, LCT AGITATOR W02, LCT PUMP W03, COMPRESSORS A01A,B, CHILLED WATER PUMP V23, FANS V09,V19, SUMP PUMP W08, TRANSPORT BLOWER, AGITATORS F06,R09, GROUT LINE CLEARING PUMP F03, LCT/MIXER MODULE SUMP PUMPS W07A AND W07B 2.) THE FOLLOWING VALVES CLOSE: FV-W01, POV-622-3, FV-H04, MIXER ISOLATION VALVE M15, FV-W42, AND FV-W46 3.) THE FOLLOWING VALVES OPEN: POV-622-2, AND POV-622-4 THE DECON TANK HEATER F05 DE-ENERGIZES O: 1.) WHEN THE DANGER IS ELIMINATED RESPOND PER TO-001-015

TGE ALARM MATRIX
PANEL: CIMSTAR CONTROL STATION

ALARM TAG NAME	ALARM DESCRIPTION	SIGNIFIES	ACTION A=AUTOMATIC O=OPERATOR
PDSH-V01 (AP111)	MAKE-UP AIR SUPPLY/PRE-FILTER V01 DIFFERENTIAL PRESSURE HIGH	DEMISTER / PREFILTER V01 DIFFERENTIAL PRESSURE ≥ 1 in. WG. INDICATING CLOGGING	A: NONE O: 1.) CYCLE VALVES OPEN AND CLOSED ON LINES TO TRANSMITTER PDIT V01 2.) IF ALARM DOES NOT CLEAR, SWITCH INLET TRAINS AND NOTIFY SUPERVISION
PDSH-V03 (AP121)	MAKE-UP AIR SUPPLY/HEPA FILTER V03 DIFFERENTIAL PRESSURE HIGH	HEPA FILTER V03 DIFFERENTIAL PRESSURE ≥ 1.8in. WG. INDICATING CLOGGING	A: LOCAL ALARMS ACTIVATE O: 1.) CYCLE VALVES OPEN AND CLOSED ON LINES TO TRANSMITTER PDIT V03 2.) IF ALARM IS NOT CLEARED WITHIN 5 MINUTES NOTIFY SUPERVISION AND SWITCH SUPPLY TRAINS
PDSH-V06 (AP130)	EXHAUST AIR HEPA FILTER V06 DIFFERENTIAL PRESSURE HIGH	HEPA FILTER V06 DIFFERENTIAL PRESSURE ≥ 4 in. WG. INDICATING CLOGGING	A: LOCAL ALARMS ACTIVATE O: CYCLE VALVES OPEN AND CLOSED ON LINES TO TRANSMITTER PDIT V06 2.) IF ALARM IS NOT CLEARED WITHIN 5 MINUTES NOTIFY SUPERVISION AND SWITCH EXHAUST TRAINS
PDSH-V07 (AP136)	EXHAUST AIR HEPA FILTERS V06/V08 COMBINED DIFFERENTIAL PRESSURE HIGH	COMBINED DIFFERENTIAL PRESSURE ≥ 5 in. WG. INDICATING CLOGGING	A: LOCAL ALARMS ACTIVATE O: 1.) CYCLE VALVES OPEN AND CLOSED ON LINES TO TRANSMITTERS PDIT-V06, V08 2.) IF ALARM IS NOT CLEARED WITHIN 5 MINUTES NOTIFY SUPERVISION AND SWITCH EXHAUST TRAINS

9 0 1 1 7 8 5 1 1 0 2

TGE ALARM MATRIX
PANEL: CIMSTAR CONTROL STATION

ALARM TAG NAME	ALARM DESCRIPTION	SIGNIFIES	ACTION A=AUTOMATIC O=OPERATOR
PDSH-V08 (AP137)	EXHAUST AIR HEPA FILTER V08 DIFFERENTIAL PRESSURE HIGH	HEPA FILTER V08 DIFFERENTIAL PRESSURE ≥ 1 in. WG. INDICATING CLOGGING	A: LOCAL ALARMS ACTIVATE O: 1.) CYCLE VALVES OPEN AND CLOSED ON LINES TO TRANSMITTER PDIT-V08 2.) IF ALARM IS NOT CLEARED WITHIN 5 MINUTES NOTIFY SUPERVISION AND SWITCH EXHAUST TRAINS
PDSH-V11 (AP147)	MAKE-UP AIR SUPPLY/PRE-FILTER V11 DIFFERENTIAL PRESSURE HIGH	PREFILTER V11 DIFFERENTIAL PRESSURE ≥ 1 in. WG. INDICATING CLOGGING	A: NONE O: 1.) CYCLE VALVES OPEN AND CLOSED ON LINES TO TRANSMITTER PDIT-V11 2.) IF ALARM DOES NOT CLEAR WITHIN 5 MINUTES SWITCH AIR SUPPLY TRAINS AND NOTIFY SUPERVISION
PDSH-V13 (AP162)	MAKE-UP AIR SUPPLY HEPA FILTER V13 DIFFERENTIAL PRESSURE HIGH	HEPA FILTER V13 DIFFERENTIAL PRESSURE ≥ 1.8in. WG. INDICATING CLOGGING	A: LOCAL ALARMS ACTIVATE O: 1.) CYCLE VALVES OPEN AND CLOSED ON LINES TO TRANSMITTER PDIT-V13 2.) IF ALARM IS NOT CLEARED WITHIN 5 MINUTES SWITCH SUPPLY TRAINS AND NOTIFY SUPERVISION
PDSH-V16 (AP171)	EXHAUST HEPA FILTER V16 DIFFERENTIAL PRESSURE HIGH	HEPA FILTER V16 DIFFERENTIAL PRESSURE ≥ 4 in. WG. INDICATING CLOGGING	A: LOCAL ALARM ACTIVATES O: 1.)CYCLE VALVES OPEN AND CLOSED ON LINE TO TRANSMITTER PDIT-V16 2.)IF ALARM IS NOT CLEARED WITHIN 5 MINUTES SWITCH EXHAUST TRAINS AND NOTIFY SUPERVISION

9011785110 3

TGE ALARM MATRIX
PANEL: CIMSTAR CONTROL STATION

ALARM TAG NAME	ALARM DESCRIPTION	SIGNIFIES	ACTION A=AUTOMATIC O=OPERATOR
PDSH-W26 (AP304)	LCT/MIXER MODULE DIFFERENTIAL PRESSURE HIGH	DIFFERENTIAL PRESSURE BETWEEN MODULE AND AMBIENT AIR ≥2 in. WG. VACUUM (LOW PRESSURE) INDICATING CONTROLLER FIC-V10 OR FIC-W26 MALFUNCTION OR SYSTEM PLUGGAGE	A: CASS IS ALARMED O: 1.) SWITCH TO ALTERNATE EXHAUST TRAINS AND NOTIFY SUPERVISION 2.)INSPECT AND CORRECT SYSTEM IN MOTOR PIT FOR CLOGGED PDT-W26 INLET, WIDE OPEN MANUAL VALVES, AND CONTROLLERS FOR PROPER SETTINGS AND ENSURE PROPER MOTOR PIT SUMP SEAL 3.)IF VACUUM INCREASES TO 3 in. WG VACUUM SHUTDOWN FACILITY AND INITIATE SYSTEM FLUSH
PDSHH - W26 (AP305)	LCT/MIXER MODULE DIFFERENTIAL PRESSURE HIGH-HIGH	DIFFERENTIAL PRESSURE BETWEEN MODULE AND AMBIENT AIR ≥7 in. WG. VACUUM (HIGH PRESSURE) INDICATING CONTROLLER FIC-V10 OR FIC-W26 MALFUNCTION OR SYSTEM PLUGGAGE	A: EXHAUST FAN V09 OR V19 SHUTDOWN DEPENDING UPON OPERATION O: SWITCH TO ALTERNATE EXHAUST TRAIN AND NOTIFY SUPERVISION

9011785110 4

TGE ALARM MATRIX
PANEL: CIMSTAR CONTROL STATION

ALARM TAG NAME	ALARM DESCRIPTION	SIGNIFIES	ACTION A=AUTOMATIC O=OPERATOR
PDSL-M08 (AP41)	DRY BLEND LINE PRESSURE DIFFERENTIAL LOW	DIFFERENTIAL PRESSURE ≤ .6 in. WG. VACUUM, INDICATING MIXER PLUGGAGE	A: DRY BLEND SYSTEM AND HENCE GROUT PROCESSING SHUTS DOWN IF ALARM IN FOR 10 SECONDS O: 1.) VERIFY SYSTEM SHUTDOWN 2.) EVALUATE RADIATION MONITORS FOR BACKFLOW AND NOTIFY SUPERVISION
PDSL-V03 (AP-121)	MAKE-UP AIR SUPPLY HEPA FILTER V03 DIFFERENTIAL PRESSURE LOW	HEPA FILTER V03 DIFFERENTIAL PRESSURE ≤ .25 in. WG., INDICATING LEAKAGE/RUPTURE OR LCT/MIXER MODULE LEAKAGE	A: LOCAL ALARMS ACTIVATE O: 1.)SWITCH EXHAUST TRAINS 2.)IF ALARM DOES NOT CLEAR INITIATE SYSTEM SHUTDOWN AND FLUSH
PDSL-V06 (AP130)	EXHAUST AIR HEPA FILTER V06 DIFFERENTIAL PRESSURE LOW	HEPA FILTER V06 DIFFERENTIAL PRESSURE ≤ .25 in. WG., INDICATING LEAKAGE/RUPTURE	A: LOCAL ALARMS ACTIVATE O: 1.)SWITCH EXHAUST TRAINS 2.)IF ALARM DOES NOT CLEAR INITIATE SYSTEM SHUTDOWN AND FLUSH
PDSL-V08 (AP137)	EXHAUST AIR HEPA FILTER V08 DIFFERENTIAL PRESSURE LOW	HEPA FILTER V08 DIFFERENTIAL PRESSURE ≤ .31 in. WG. VACUUM, INDICATING LEAKAGE/RUPTURE	A: LOCAL ALARMS ACTIVATE O: 1.)SWITCH EXHAUST TRAINS 2.)IF ALARM DOES NOT CLEAR INITIATE SYSTEM SHUTDOWN AND FLUSH
PDSL-V13 (AP162)	MAKE-UP AIR SUPPLY HEPA FILTER V13 DIFFERENTIAL PRESSURE LOW	HEPA FILTER V13 DIFFERENTIAL PRESSURE ≤ .25 in. WG., INDICATING LEAKAGE/RUPTURE OR LCT/MIXER MODULE LEAKAGE	A: LOCAL ALARMS ACTIVATE O: MONITOR DIFFERENTIAL INDICATION PDI-V13 AND SWITCH SUPPLY TRAINS IF PRESSURE DROPS BELOW .1 in.WG. NOTIFY SUPERVISION

TGE ALARM MATRIX
PANEL: CIMSTAR CONTROL STATION

ALARM TAG NAME	ALARM DESCRIPTION	SIGNIFIES	ACTION A=AUTOMATIC O=OPERATOR	
PDSL-V16 (AP171)	EXHAUST HEPA FILTER V16 DIFFERENTIAL PRESSURE LOW	HEPA FILTER V16 DIFFERENTIAL PRESSURE ≤ .25 in. WG., INDICATING LEAKAGE/RUPTURE	A: O:	LOCAL ALARMS ACTIVATE 1.)SWITCH EXHAUST TRAINS 2.)IF ALARM DOES NOT CLEAR INITIATE SYSTEM SHUTDOWN AND FLUSH
PDSL-V18 (AP173)	EXHAUST HEPA FILTER V18 DIFFERENTIAL PRESSURE LOW	HEPA FILTER V18 DIFFENTIAL PRESSURE ≤ .31 in. WG., INDICATING LEAKAGE/RUPTURE	A: O:	LOCAL ALARMS ACTIVATE 1.)SWITCH EXHAUST TRAINS 2.)IF ALARM DOES NOT CLEAR INITIATE SYSTEM SHUTDOWN AND FLUSH
PDSL-V55 (AP205)	BAG HOUSE V33 PRESSURE DIFFERENTIAL HIGH	PRESSURE DIFFERENTIAL ≤.5 in WG. INDICATING LEAKAGE AROUND BAG	A: O:	NONE NOTIFY SUPERVISION
PDSL-W26 (AP304)	LCT/MIXER MODULE DIFFERENTIAL PRESSURE LOW	DIFFERENTIAL PRESSURE BETWEEN MODULE AND AMBIENT AIR ≤.5 in WG. VACUUM (LOW PRESSURE) INDICATING CONTROLLER FIC-V10 OR FIC-W26 MALFUNCTION OR SYSTEM PLUGGAGE	A: O:	CASS IS ALARMED 1.) CHECK EXHAUST SYSTEM FLOWRATE AND PRESSURE DROPS ACROSS FILTERS, AND IF PLUGGAGE SUSPECTED SWITCH APPROPRIATE TRAINS 2.) IF ALARM DOES NOT CLEAR WITHIN 10 MINUTES INITIATE A NORMAL PROCESS SHUTDOWN AND NOTIFY SUPERVISION
PHA-102-3A (DP15)	MIXER PUMP 102-3 DISCHARGE PRESSURE HIGH	MIXER PUMP 102-3 NOZZLE(S) STARTING TO CLOG	A: O:	MIXER PUMP 102-3 SHUTS DOWN VERIFY AUTOMATIC SHUTDOWN AND NOTIFY SUPERVISION

TGE ALARM MATRIX
PANEL: CIMSTAR CONTROL STATION

ALARM TAG NAME	ALARM DESCRIPTION	SIGNIFIES	ACTION A=AUTOMATIC O=OPERATOR
PISH-E01 (DP125)	SUBSTATION TRANSFORMER TANK PRESSURE HIGH	SUBSTATION OVERHEATING	A: NONE O: NOTIFY SUPERVISION
PLA-102-3A (DP16)	MIXER PUMP 102-3 DISCHARGE PRESSURE LOW	MIXER PUMP 102-3 FAILURE	A: UPON STARTUP THERE IS A 10 MINUTE TIME DELAY BEFORE THE INTERLOCK CUTS IN AND SHUTS DOWN THE MIXER PUMP O: 1.) IF ALARM DOES NOT CLEAR WITHIN 15 SECONDS OF PUMP START SHUTDOWN PUMP AND RESTART 2.)NOTIFY SUPERVISION IF ALARM FAILS TO CLEAR AFTER PUMP START

9011178511107

TGE ALARM MATRIX
PANEL: CI'STAR CONTROL STATION

ALARM TAG NAME	ALARM DESCRIPTION	SIGNIFIES	ACTION A=AUTOMATIC O=OPERATOR
PSH-W23 (AP283)	GROUT PUMP DISCHARGE PRESSURE HIGH	DISCHARGE PRESSURE ≥350 psig INDICATING PLUGGAGE IN DISCHARGE LINE	A: NONE O: 1.) EXAMINE STATUS OF "GROUT PERIODIC SPRAY AUTO" (GRAPHIC 15), ENABLE IF NECESSARY, AND REFERENCE POP 390-174 FOR PROPER SYSTEM OPERATION 2.) EXAMINE FIC-W24 FOR PROPER SETTINGS AND INDICATIONS AND ADJUST CONTROLLER SETTINGS TO PROPER SLURRY FLOWRATE 3.)NOTIFY SUPERVISION PRESENT PRESSURE INDICATION 4.)UPDATE SUPERVISION IF PRESSURE CONTINUES TO RISE.) IF PRESSURE IS ≥450 PSIG INITIATE PROCESS SHUTDOWN AND SYSTEM FLUSH
PSHH-W23 (AP283)	GROUT PUMP W06 DISCHARGE PRESSURE HIGH-HIGH	DISCHARGE PRESSURE ≥499 psig INDICATING LINE PLUGGAGE	A: 1.) GROUT PUMP W06 SHUTS DOWN, IF RUNNING IN FORWARD DIRECTION, HENCE SHUTTING DOWN GROUT PROCESSING 2.) AFTER A 5 MINUTE TIME DELAY THE AUTOMATIC FLUSH SEQUENCE IS INITIATED O: NOTIFY SUPERVISION

9011785110 8

TGE ALARM MATRIX
PANEL: CIMSTAR CONTROL STATION

ALARM TAG NAME	ALARM DESCRIPTION	SIGNIFIES	ACTION A=AUTOMATIC O=OPERATOR
PSHL-A10-2 (DP158)	INSTRUMENT AIR PRESSURE WARNING	COMPRESSOR FAILURE/STOPPAGE, OR SYSTEM LEAK, PRESSURE ≥ 104 psig	A: 1.) LOW PRESSURE SHOULD HAVE STARTED AND LOADED PRIMARY COMPRESSOR VIA PSHL-A10-1 (NOT ALARMED) 2.) THIS SWITCH CAUSES THE SECONDARY COMPRESSOR TO START AND LOAD 3.)WHEN PSHL-A10-2 ARE NO LONGER ENERGIZED,ie BOTH COMPRESSORS ARE SHUT DOWN, THE ROLES OF PRIMARY AND SECONDARY COMPRESSORS ARE REVERSED. O: 1.) IF THE ALARM DOES NOT CLEAR WITHIN 5 MINUTES AFTER SECONDARY COMPRESSOR START NOTIFY SUPERVISION 2.) ENSURE DISCONNECTS ARE ON FOR BOTH COMPRESSORS AND THAT THERE ARE NO SYSTEM LEAKS, THEN NOTIFY SUPERVISION OF FAILURE OF PRIMARY COMPRESSOR TO MEET PRESSURE DEMANDS
PSL-A10 (DP114)	INSTRUMENT AIR PRESSURE LOW	COMPRESSOR FAILURE/STOPPAGE OR SYSTEM LEAK	A: NONE O: MONITOR SYSTEM PRESSURE AND ENSURE COMPRESSORS CYCLE PROPERLY
PSL-E05 (DP129)	EMERGENCY GENERATOR OIL PRESSURE LOW	INADEQUATE OIL LEVEL/OIL LEAKAGE EMERGENCY GENERATOR	A: NONE O: NOTIFY SUPERVISION

TGE ALARM MATRIX
PANEL: CIMSTAR CONTROL STATION

ALARM TAG NAME	ALARM DESCRIPTION	SIGNIFIES	ACTION A=AUTOMATIC O=OPERATOR
PSL-H06 (AP22)	RAW WATER SUPPLY LOW PRESSURE	PRESSURE ≤ 21 PSIG	A: DECON PUMP F02 WILL START IF PRODUCING GROUT OR IN AUTO FLUSH CYCLE O: 1.) CHECK PRESSURE GAUGES ON LINE FOR SUPPLY PRESSURE. IF LOW NOTIFY SUPERVISION 2.) CHECK ALL MANUAL VALVES TO ENSURE FULL OPEN, BLOWDOWN STRAINERS BY CYCLING STRAINER DISCHARGE VALVE, AND NOTIFY SUPERVISION IF PRESSURE DOES NOT INCREASE
PSL-W05 (AP231)	LIQUID WASTE FEED PRESSURE LOW	PRESSURE IN FEED LINE AT TGE ≤50 psig INDICATING PROBLEM WITH FEED PUMP, VALVING, OR INSTRUMENTATION	A: NONE O: 1.) IF PRESSURE DROP IS UNEXPECTED EVALUATE FEED SUPPLY SYSTEMS FOR POOR PERFORMANCE OR WRONG SETTINGS, AND SLURRY PROPERTIES FOR EFFECTS, THEN NOTIFY SUPERVISION 2.) INITIATE NORMAL PROCESS SHUTDOWN UPON DIRECTION FROM SUPERVISION
PSLL-E05 (DP132)	EMERGENCY GENERATOR OIL PRESSURE LOW-LOW	INADEQUATE OIL LEVEL/OIL LEAKAGE EMERGENCY GENERATOR	A: NONE O: NOTIFY SUPERVISION

TGE ALARM MATRIX
PANEL: CIMSTAR CONTROL STATION

ALARM TAG NAME	ALARM DESCRIPTION	SIGNIFIES	ACTION A=AUTOMATIC O=OPERATOR
RA-AP1 (DP13)	AREA RADIATION HIGH	HIGH RADIATION AT AP FARM AREA MONITOR	A: FEED PUMP 102-1 AND MIXER PUMP 102-3 SHUTDOWN O: REFERENCE RHO-MA-111.5 FOR PROPER RESPONSE TO AREA MONITORS (ARMs)/SURFACE CONTAMINATION. NOTIFY SUPERVISION AND RPT
RAH-01 (DP780)	[FUTURE] AREA RADIATION HIGH	HIGH RADIATION AT [FUTURE] AREA RADIATION MONITOR	A: NONE O: NONE
RAH-02 (DP781)	AREA RADIATION HIGH	HIGH RADIATION AT VAULT PORTABLE AREA MONITOR	A: CASS IS ALARMED O: 1) IF TRANSFERRING EXCESS WATER, STOP TRANSFER 2) IF PROCESSING GROUT INITIATE NORMAL SYSTEM SHUTDOWN AND FLUSH 3) IF IN ZONE, EVACUATE AND NOTIFY SUPERVISION AND RPT
RAH-03 (DP782)	RADIATION ANALYZER RADIATION HIGH	HIGH RADIATION AT VAULT CONTINUOUS AIR MONITOR	A: CASS IS ALARMED O: REFERENCE RHO-MA-111.5 FOR PROPER RESPONSE TO CONTINUOUS AIR MONITORS (CAMs). NOTIFY SUPERVISION AND RPT
RAH-04 (DP783)	[FUTURE] RADIATION ANALYZER RADIATION HIGH	HIGH RADIATION AT [FUTURE] VAULT EXHAUST AIR MONITOR	A: NONE O: NONE

TGE ALARM MATRIX
PANEL: CIMSTAR CONTROL STATION

ALARM TAG NAME	ALARM DESCRIPTION	SIGNIFIES	ACTION A=AUTOMATIC O=OPERATOR
RAS-702-1 (DP66)	TGE STACK RADIATION HIGH	HIGH RADIATION AT TGE DISCHARGE STACK	A: 1.) CASS IS NOTIFIED 2.) VENTILATION SYSTEM SHUTS DOWN, STOPPING DRY BLEND AND HENCE GROUT PROCESSING O: 1.)INITIATE SYSTEM FLUSH 2.)ROPE OFF AREA TO PROTECT PERSONNEL 3.)NOTIFY SUPERVISION AND RPT
RM-102-3 (DP18)	MIXER PUMP ROTATION MOTOR 102-3 NO POWER	MIXER PUMP ROTATION MOTOR 102-3 READY SIGNAL NOT RECEIVED BECAUSE DISCONNECT OFF OR MOTOR FAILURE	A: NONE O: ENSURE DISCONNECT ON, RESTART, AND NOTIFY SUPERVISION IF ALARM DOES NOT CLEAR
RMA-102-3 (DP8)	MIXER PUMP ROTATION MOTOR 102-3 SHUTDOWN	MIXER PUMP ROTATION MOTOR 102-3 STOPPAGE OR FAILURE	A: MIXER PUMP 102-3 SHUTDOWN EXCEPT FOR 10 MINUTE DELAY UPON PUMP STARTUP O: VERIFY OTHER ALARM CONDITIONS ARE CLEARED, ENSURE DISCONNECT ON, RESTART, AND NOTIFY SUPERVISION IF ALARM DOES NOT CLEAR

TGE ALARM MATRIX
PANEL: CIMSTAR CONTROL STATION

ALARM TAG NAME	ALARM DESCRIPTION	SIGNIFIES	ACTION A=AUTOMATIC O=OPERATOR
RSH-H08 (AP23)	RADIATION GROUT CLEARING WATER LINE HIGH	RADIATION ≥ .45 mr/hr, BACKFLOW OF RADIOACTIVE MATERIAL IN WATER LINE 2"-H-S5-P01	A: 1.) DRY BLEND SYSTEM SHUTS DOWN 2.) WASTE FEED VALVE FV-W01 CLOSES IF PUMPING AND ALARM IN FOR 10 SECONDS HENCE SHUTTING DOWN GROUT PROCESSING 3.) CASS IS ALARMED 4.) LOCAL ALARM ACTIVATES AT MOTOR PIT IF ALARM IN FOR 5 SECONDS O: 1.) VERIFY SYSTEM SHUTDOWN 2.) FLUSH LINE WITH RAW WATER FROM GROUT CLEARING PUMP F03 3.) CORDON OFF DECON MODULE AND NOTIFY SUPERVISION
RSH-M06 (AP40)	DRY BLEND FEED LINE RADIATION HIGH	RADIATION ≥ .45 mr/hr, BACKFLOW OF RADIOACTIVE MATERIAL INTO DRY BLEND FEED LINE	A: 1.) DRY BLEND SYSTEM AND HENCE GROUT PROCESSING SHUTS DOWN IF ALARM IN FOR 5 SECONDS 2.) CLOSES WASTE FEED VALVE FV-W01 IF PUMP RUNNING AND ALARM IN FOR 15 SECONDS 3.) CASS IS ALARMED 4.) LOCAL ALARM AT WEIGHFEEDER PLATFORM ACTIVATES O: 1.) VERIFY SYSTEM SHUTDOWN 2.) CORDON OFF DRY BLEND TOWER AND NOTIFY SUPERVISION AND RPT

TGE ALARM MATRIX
PANEL: CIMSTAR CONTROL STATION

ALARM TAG NAME	ALARM DESCRIPTION	SIGNIFIES	ACTION A=AUTOMATIC O=OPERATOR
RSH-V51 (AP195)	BAG HOUSE V33 RADIATION HIGH	RADIATION ≥99 mr/hr INDICATING CARRY OVER OF RADIOACTIVE MATERIAL THROUGH SURGE TANK VENT LINE	A: 1.) DRY BLEND SYSTEM SHUTS DOWN AFTER ALARM IN FOR 5 SECONDS 2.) WASTE FEED VALVE FV-W01 CLOSES IF WASTE FEED PUMP ON HENCE SHUTTING DOWN GROUT PROCESSING 3.) LOCAL ALARM ACTIVATES 4.) CASS IS ALARMED O: 1.) MONITOR SYSTEM SHUTDOWN 2.) CORDON OFF BAG HOUSE AREA AND NOTIFY SUPERVISION AND RPT
RSH-V52 (AP196)	CONTROL ROOM RADIATION HIGH	RADIATION ≥.49 mr/hr INDICATING RADIOACTIVE INTRUSION	A: 1.) DRY BLEND SYSTEM SHUTS DOWN AFTER ALARM IN FOR 5 SEC. 2.) WASTE FEED VALVE FV-W01 CLOSES IF WASTE FEED PUMP ON O: REFERENCE RHO-MA-111.5 FOR PROPER RESPONSES TO AREA RADIATION AND SURFACE CONTAMINATION

TGE ALARM MATRIX
PANEL: CIMSTAR CONTROL STATION

ALARM TAG NAME	ALARM DESCRIPTION	SIGNIFIES	ACTION A=AUTOMATIC O=OPERATOR
RHS-V59 (DP 137)	MOTOR PIT CAM RADIATION HIGH	RADIATION SENSED BY CAM IN MOTOR PIT	A: NONE O: 1.)NOTIFY SUPERVISION AND RPT 2.)EVALUATE MOTOR PIT 3.)FOLLOW APPROPRIATE STEPS IN RHO-MA-111.5
RSH-W07 (AP254)	RADIATION MOTOR PIT HIGH	RADIATION WITHIN MOTOR PIT ≥.49 mr/hr INDICATING RADIOACTIVE INTRUSION FROM VENTILATION, SAMPLER, SUMP, DRIVE SEALS, OR PIPING	A: 1.) DRY BLEND SYSTEM SHUTS DOWN 2.) AFTER ALARM IN FOR 10 SECONDS WASTE FEED VALVE FV-W01 CLOSES IF FEED PUMP ON, AND HENCE SHUTS DOWN ALL GROUT PROCESSING 3.) CASS IS ALARMED 4.) LOCAL ALARM ACTIVATES 5.) MOTOR PIT HVAC UNIT SHUTS DOWN O: NOTIFY SUPERVISION AND RPT THEN MONITOR SYSTEM SHUTDOWN FOR PROPER AUTOMATIC RESPONSES
RSH-W39 (AP312)	RADIATION LCT/MIXER MODULE HIGH	LCT/MIXER MODULE RADIATION ≥24 mr/hr INDICATING WASTE FEED LEAKAGE/INTRUSION INTO MODULE	A: 1.) DRY BLEND SYSTEM SHUTS DOWN AFTER ALARM IN FOR 5 SECONDS 2.) WASTE FEED VALVE FV-W01 CLOSES IF WASTE FEED PUMP ON HENCE SHUTTING DOWN GROUT PROCESSING O: 1.)NOTIFY SUPERVISION AND RPT 2.) EVALUATE RADIATION INDICATORS RIT-W38-1 AND RIT-W38-2 TO CORROBORATE RIT-W39

TGL ALARM MATRIX
PANEL: CIMSTAR CONTROL STATION

ALARM TAG NAME	ALARM DESCRIPTION	SIGNIFIES	ACTION A=AUTOMATIC O=OPERATOR
RSH-R04 (AP49)	RADIATION ADDITIVES LINE HIGH	RADIATION ≥ .45 mr/hr, INDICATING RADIOACTIVE MATERIAL BACKFLOW INTO ADDITIVES FEED LINE	A: 1.) DRY BLEND SYSTEM SHUTDOWN 2.) WASTE FEED VALVE FV-W01 CLOSES IF WASTE FEED PUMP IS RUNNING AFTER ALARM IN FOR 10 SECONDS, AND HENCE GROUT PROCESSING SYSTEMS SHUTDOWN 3.) CASS IS ALARMED 4.) LOCAL ALARM IS ACTIVATED IF ALARM IN FOR 5 SECONDS O: 1.) VERIFY SYSTEM SHUTDOWN 2.) CORDON OFF DECON MODULE AND NOTIFY SUPERVISION AND RPT
RSH - V24-1 (AP-175)	EXHAUST TRAIN "A" TEST SECTION V07 RADIATION HIGH	RADIATION ≥99 mr/hr INDICATING SPENT OR LEAKING HEPA FILTER V06	A: LOCAL ALARM ACTIVATES O: NOTIFY SUPERVISION AND RPT AND SWITCH EXHAUST TRAINS
RSH - V24-2 (AP-176)	EXHAUST TRAIN "B" TEST SECTION V17 RADIATION HIGH	RADIATION ≥99 mr/hr INDICATING SPENT OR LEAKING HEPA FILTER V16	A: LOCAL ALARM ACTIVATES O: NOTIFY SUPERVISION AND RPT AND SWITCH EXHAUST TRAINS

TGE ALARM MATRIX
PANEL: CIMSTAR CONTROL STATION

ALARM TAG NAME	ALARM DESCRIPTION	ALARM SIGNIFIES	ACTION A=AUTOMATIC O=OPERATOR
RSHH - V24-1 (AP175)	EXHAUST TRAIN "A" TEST SECTION V07 RADIATION HIGH-HIGH	RADIATION ≥120 mr/hr INDICATING SPENT OR LEAKING HEPA FILTER V06	A: 1.) DRY BLEND SYSTEM AND HENCE GROUT PROCESSING SYSTEMS SHUT DOWN IF EXHAUST TRAIN ON-LINE 2.) LOCAL ALARM ACTIVATES 3.) CASS IS ALARMED O: MONITOR SYSTEMS SHUTDOWN AND NOTIFY SUPERVISION AND RPT
RSHH - V24-2 (AP176)	EXHAUST TRAIN "B" TEST SECTION V17 RADIATION HIGH-HIGH	RADIATION ≥120 mr/hr INDICATING SPENT OR LEAKING HEPA FILTER V16	A: 1.) DRY BLEND SYSTEM AND HENCE GROUT PROCESSING SYSTEMS SHUT DOWN IF EXHAUST TRAIN ON-LINE 2.) LOCAL ALARM ACTIVATES 3.) CASS IS ALARMED O: MONITOR SYSTEMS SHUTDOWN AND NOTIFY SUPERVISION AND RPT
RXA-01 - 02 (DP775 - 776)	AREA RADIATION MONITOR FAILURE	FAILURE OF AREA RADIATION MONITORS [FUTURE] RXA-01, AND RXA-02	A: CASS IS ALARMED O: NOTIFY SUPERVISION AND RPT OF VAULT ARM FAILURE RXA-02 ONLY
RXA-03 - 05 (DP777 - 779)	RADIATION ANALYZER FAILURE	FAILURE OF VAULT RADIATION ANALYZERS RXA-03 (CAM), [FUTURE] RXA-04 (VEAM), AND [FUTURE] RXA-05 (VEAM)	A: CASS IS ALARMED O: NOTIFY SUPERVISION RPT OF RXA-03 VAULT CAM FAILURE ONLY

TGE ALARM MATRIX
PANEL: CIMSTAR CONTROL STATION

ALARM TAG NAME	ALARM DESCRIPTION	SIGNIFIES	ACTION A=AUTOMATIC O=OPERATOR
SA-102-3A (DP5)	MIXER PUMP 102-3 SHAFT STRAIN HIGH	STRAIN ON MIXER PUMP 102-3 COLUMN ≥ 2000 lbs	A: MIXER PUMP SHUTS DOWN O: 1.) VERIFY AUTOMATIC SHUTDOWN OF MIXER PUMP, AND INITIATE MANUAL STOP IF NECESSARY 2.)NOTIFY SUPERVISION
SA-UPS-01 (DP902)	TR1-S7 INPUTS BOARD BAD	TR1-S7 INPUTS BOARD FAILURE OR SYSTEM CONFIGURATION ERROR	A: SOME LOSS OF GRAPHIC CONTROL SCREEN CONTROL MAY OCCUR AS WELL AS DATA INPUT LOSS O: 1.) SHUT DOWN PROCESSING SYSTEMS AND INITIATE SYSTEM FLUSH IN THE EVENT OF GRAPHIC CONTROL SCREEN FAILURE 2.)NOTIFY SUPERVISION
SDA-102-1 (DP11)	WASTE FEED PUMP 102-1 SHUTDOWN	WASTE FEED PUMP 102-1 STOPPAGE CAUSED BY SYSTEM CONTROLS OR PUMP FAILURE	A: GROUT PROCESSING SYSTEM SHUTDOWN O: 1.) IF SHUTDOWN UNEXPECTED VERIFY CAUSE BY EVALUATING AND DISPOSITIONING OTHER ALARMS THEN RESTARTING 2.)NOTIFY SUPERVISION OF PUMP FAILURE
SDA-102-3C (DP9)	MIXER PUMP 102-3 SHUTDOWN	MIXER PUMP 102-3 STOPPAGE CAUSED BY SYSTEM CONTROLS OR MIXER PUMP FAILURE	A: NONE O: 1.) IF SHUTDOWN UNEXPECTED VERIFY CAUSE BY EVALUATING AND DISPOSITIONING OTHER ALARMS, AND THEN RESTARTING 2.)NOTIFY SUPERVISION OF PUMP FAILURE

TGE ALARM MATRIX
PANEL: CIMSTAR CONTROL STATION

ALARM TAG NAME	ALARM DESCRIPTION	SIGNIFIES	ACTION A=AUTOMATIC O=OPERATOR
SDA-AP1 (DP14)	MASTER PUMP SHUTDOWN	TANK FARM MASTER PUMP SHUTDOWN INITIATED	A: WASTE FEED PUMP 102-1 STOPS, SHUTTING DOWN GROUT PROCESSING O: INVESTIGATE CAUSE AND NOTIFY SUPERVISION
SDA-EW-01 - 04 (DP701 - 704)	EXCESS WATER PUMP SHUTDOWN	EXCESS WATER PUMP(S) EW-01 THROUGH EW-04 STOPPAGE CAUSED BY SYSTEM CONTROLS OR PUMP FAILURE	A: NONE O: EVALUATE INTERLOCKS NOTIFY SUPERVISION IF PUMP FAILED
SDA-SJP-1 (DP700)	SUMP PUMP P-JP-1 SHUTDOWN	[FUTURE] JUMPER PIT SUMP PUMP STOPPAGE	A: NONE O: NONE
SAM-01 (DP872)	PIH SMOKE DETECTOR ACTIVATED	FIRE IN PIH	A: NONE O: 1.) NOTIFY FIRE DEPARTMENT 2.) INSPECT SITE AND LEND APPROPRIATE ASSISTANCE TO EXTINGUISH FIRE OR SMOKE PROBLEM 3.)NOTIFY SUPERVISION
SSH-E05 (DP135)	EMERGENCY GENERATOR OVERSPEED	EMERGENCY GENERATOR MOTOR RUN-AWAY	A: NONE O: ENSURE GROUT PROCESSING SYSTEM IS BEING SHUTDOWN AND FLUSHED, THEN NOTIFY SUPERVISION
TA-102-3A (DP3)	MIXER PUMP 102-3 TEMPERATURE HIGH	HIGH MIXER PUMP 102-3 TEMPERATURE CAUSED BY POTENTIAL MOTOR FAILURE	A: MIXER PUMP SHUT DOWN O: VERIFY AUTOMATIC MIXER PUMP SHUTDOWN, AND INITIATE MANUAL SHUTDOWN IF AUTOMATIC STEP FAILS, THEN NOTIFY SUPERVISION

TGE ALARM MATRIX
PANEL: CIMSTAR CONTROL STATION

ALARM TAG NAME	ALARM DESCRIPTION	SIGNIFIES	ACTION A=AUTOMATIC O=OPERATOR
TAH-01-1 - 16 (AP700 701 708 709 716 717 724 725 732 733 740 741 748 749 756 & 757)	VAULT TEMPERATURE HIGH	TEMPERATURE ON VAULT THERMOCOUPLE TREE 01 AT RESPECTIVE POINT(S) 1-16 ≥ 150°F	A: NONE O: NOTIFY SUPERVISION
TAH-02-1 - 16 (AP702 703 710 711 718 719 726 727 734 725 742 743 750 751 758 & 759)	VAULT TEMPERATURE HIGH	TEMPERATURE ON VAULT THERMOCOUPLE TREE 02 AT RESPECTIVE POINT(S) 1-16 ≥ 150°F	A: NONE O: NOTIFY SUPERVISION
TAH-03-1 - 16 (AP704 705 712 713 720 721 728 729 726 727 744 745 752 753 760 & 761)	VAULT TEMPERATURE HIGH	TEMPERATURE ON VAULT THERMOCOUPLE TREE 03 AT RESPECTIVE POINT(S) 1-16 ≥ 150°F	A: NONE O: NOTIFY SUPERVISION

TGE ALARM MATRIX
PANEL: CIMSTAR CONTROL STATION

ALARM TAG NAME	ALARM DESCRIPTION	SIGNIFIES	ACTION A=AUTOMATIC O=OPERATOR
TAH-04-1 - 16 (AP 704 705 712 713 720 721 728 729 726 727 744 745 752 753 760 & 761)	VAULT TEMPERATURE HIGH	TEMPERATURE ON VAULT THERMOCOUPLE TREE 04 AT RESPECTIVE POINTS (S) 1-16 ≥ 150°F	A: NONE O: NOTIFY SUPERVISION
TDIC-V02 PV (AP112)	HEATER V02 DIFFERENTIAL TEMPERATURE LOW	TEMPERATURE ACROSS HEATER ≤ 12°F DIFFERENTIAL CAUSED BY HEATER MALFUNCTION	A: NONE O: 1.) ENSURE HEATER IS ON WITH PROPER CONTROL SETTINGS 2.) RAISE TEMPERATURE SET POINT TO EVALUATE CONTROLLER RESPONSE. 3.) IF ALARM DOES NOT CLEAR AFTER CONTROLLER MALFUNCTION, SWITCH TRAINS AND NOTIFY SUPERVISION

TGE ALARM MATRIX
PANEL: CIMSTAR CONTROL STATION

ALARM TAG NAME	ALARM DESCRIPTION	SIGNIFIES	ACTION A=AUTOMATIC O=OPERATOR	
TDIC-V12 FV (AP148)	HEATER V12 DIFFERENTIAL TEMPERATURE LOW	TEMPERATURE ACROSS HEATER ≤ 12°F DIFFERENTIAL CAUSED BY HEATER MALFUNCTION	A: O:	NONE 1.) ENSURE HEATER IS ON WITH PROPER CONTROL SETTINGS 2.) RAISE TEMPERATURE SET POINT TO EVALUATE CONTROLLER RESPONSE 3.) IF ALARM DOES NOT CLEAR AFTER CONTROLLER MALFUNCTION, SWITCH TRAINS AND NOTIFY SUPERVISION
TI-01-AV (AP765)	TEMPERATURE AVERAGE TEMPERATURE HIGH	THE AVERAGE GROUT TEMPERATURE ACROSS THERMOCOUPLE TREE 02 ≥ 150°F	A: O:	NONE NOTIFY SUPERVISION
TI-02-AV (AP766)	TEMPERATURE AVERAGE TEMPERATURE HIGH	THE AVERAGE GROUT TEMPERATURE ACROSS THERMOCOUPLE TREE 02 ≥ 150°F	A: O:	NONE NOTIFY SUPERVISION
TI-03-AV (AP767)	THERMOCOUPLE AVERAGE TEMPERATURE HIGH	THE AVERAGE GROUT TEMPERATURE ACROSS THERMOCOUPLE TREE 03 ≥ 150°F	A: O:	NONE NOTIFY SUPERVISION
TI-01-1 - 16 (DP803 804 811 812 819 820 827 828 835 836 843 844 851 852 859 & 860)	THERMOCOUPLE OPEN	OPEN ELECTRICAL CIRCUIT ON THERMOCOUPLE TREE 01 AT RESPECTIVE POINT(S) 1-16	A: O:	NONE NOTE ON DAILY LOG SHEET WHEN OCCURS

TGE ALARM MATRIX
PANEL: CIMSTAR CONTROL STATION

ALARM TAG NAME	ALARM DESCRIPTION	SIGNIFIES	ACTION A=AUTOMATIC O=OPERATOR
TI-02-1 - 16 (DP805 806 813 814 821 822 829 830 837 838 845 846 853 854 861 & 862)	THERMOCOUPLE OPEN	OPEN ELECTRICAL CIRCUIT ON THERMOCOUPLE TREE 02 AT RESPECTIVE POINT(S) 1-16	A: NONE O: NOTE ON DAILY LOG SHEET WHEN OCCURS THERMOCOUPLE OPEN ELECTRICAL CIRCUIT ON THERMOCOUPLE TREE 02 AT RESPECTIVE POINT(S) 1-16
TI-03-1 -16 (DP807 808 815 816 823 824 831 832 839 840 847 848 855 856 863 & 864)	THERMOCOUPLE OPEN	OPEN ELECTRICAL CIRCUIT ON THERMOCOUPLE TREE 03 AT RESPECTIVE POINT(S) 1-16	A: NONE O: NOTE ON ROUTINE LOG SHEET WHEN OCCURS UNDER COMMENTS SECTION AND NOTIFY SUPERVISION
TI-04-1 - 16 (DP809 810 817 818 825 826 833 834 841 842 849 850 857 858 865 & 866)	THERMOCOUPLE OPEN	OPEN ELECTRICAL CIRCUIT ON THERMOCOUPLE TREE 04 AT RESPECTIVE POINT(S) 1-16	A: NONE O: NOTE ON ROUTINE LOG SHEET WHEN OCCURS UNDER COMMENTS SECTION
TISH-E01 (DP127)	SUBSTATION TRANSFORMER OIL TEMPERATURE HIGH	HIGH OF OIL TEMPERATURE IN SUBSTATION TRANSFORMER WRONG OR INSUFFICIENT OIL OR TRANSFER FAILURE	A: NONE O: NOTIFY SUPERVISION

TGE ALARM MATRIX
PANEL: CIMSTAR CONTROL STATION

ALARM TAG NAME	ALARM DESCRIPTION	SIGNIFIES	ACTION A=AUTOMATIC O=OPERATOR
TRI-S1 - S7 (DP889 - 895)	THERMOCOUPLE INPUT BAD DATA	AMBIENT TEMPERATURE AT COLD JUNCTION COMPENSATION MODULE 20°C OR > 60°C, OR DATA IN PROCESS OF BEING UPDATED WHEN I/O REQUEST OCCURS	A: NONE O: IF ALARM DOES NOT RESET WITHIN 10 MINUTES RECORD ON ROUTINE LOG SHEET UNDER COMMENTS SECTION AND NOTIFY SUPERVISION
TR1-S1 - S7 (DP896 - 902)	THERMOCOUPLE BOARD BAD	MALFUNCTION WITHIN THERMOCOUPLE MODULE(S) S1 THROUGH S7 RESPECTIVELY ON TR1 RACK	A: NONE O: NOTIFY SUPERVISION
TRI-S1 - S7 (DP903 - 909)	THERMOCOUPLE INPUT OVERRANGE	OVERRANGE VALUE INPUT TO THERMOCOUPLE MODULE(S) S1 THROUGH S7 RESPECTIVELY ON TR1 RACK CAUSED BY SHORTED THERMOCOUPLE	A: NONE O: NOTIFY SUPERVISION

TGE ALARM MATRIX
PANEL: CIMSTAR CONTROL STATION

ALARM TAG NAME	ALARM DESCRIPTION	SIGNIFIES	ACTION A=AUTOMATIC O=OPERATOR
TR3-7 - 10 (DP874 - 877)	THERMOCOUPLE INPUT BAD DATA	AMBIENT TEMPERATURE AT COLD JUNCTION COMPENSATION MODULE 20°C OR > 60°C, OR DATA IN PROCESS OF BEING UPDATED WHEN I/O REQUEST OCCURS	A: NONE O: IF ALARM DOES NOT RESET WITHIN 10 MINUTES RECORD ON ROUTINE LOG SHEET UNDER COMMENTS SECTION AND NOTIFY SUPERVISION
TR3-7 - 10 (DP879 - 902)	THERMOCOUPLE BOARD BAD	MALFUNCTION WITHIN THERMOCOUPLE MODULE(S) S7 THROUGH S10 RESPECTIVELY ON TR3 RACK	A: NONE O: NOTIFY SUPERVISION
TRI-7 - 10 (DP884 - 887)	THERMOCOUPLE INPUT OVERRANGE	OVERRANGE VALUE INPUT TO THERMOCOUPLE MODULE(S) S7 THROUGH S10 RESPECTIVELY ON TR3 RACK CAUSED BY SHORTED THERMOCOUPLE	A: NONE O: NOTIFY SUPERVISION
TSH-E05 (DP130)	EMERGENCY GENERATOR WATER TEMPERATURE HIGH	HIGH COOLING WATER TEMPERATURE IN EMERGENCY GENERATOR FROM INADEQUATE OR IMPROPER COOLANT	A: NONE O: ENSURE GROUT SYSTEMS ARE IN PROCESS OF SHUTDOWN AND FLUSH THEN NOTIFY SUPERVISION
TSH-F12 (AP18)	DECON TANK F01 HIGH TEMPERATURE	TEMPERATURE ≥ 185°F, THERMOSTAT CONTROLLER MALFUNCTION	A: DECON TANK HEATER F05 TURNS OFF O: IF TEMPERATURE RAISES ABOVE 210°F NOTIFY SUPERVISION FOR REPAIR.

TGE ALARM MATRIX
PANEL: CIMSTAR CONTROL STATION

ALARM TAG NAME	ALARM DESCRIPTION	SIGNIFIES	ACTION A=AUTOMATIC O=OPERATOR
TSH-PIH1 (AP769)	PIH INTERIOR TEMPERATURE HIGH	TEMPERATURE WITHIN PIH≥ 90°F	A: NONE O: 1.) INSPECT AND ENSURE PIH HVAC SYSTEM ON LINE 2.)NOTIFY SUPERVISION IF HVAC SYSTEM NOT OPERATING PROPERLY 3.) IF TEMPERATURE RAISES ABOVE 110°F INSTALL TEMPORARY FANS BLOWING INTO BACK PANEL
TSH-V02 (AP120)	MAKE-UP AIR SUPPLY TRAIN "A" TEMPERATURE HIGH	AIR TEMPERATURE ≥ 130°F INDICATING WRONG SETPOINT ON TEMPERATURE CONTROLLER, COOLER SYSTEM MALFUNCTION, OR HEATER SYSTEM MALFUNCTION	A: NONE O: 1.) CHECK FOR PROPER SETPOINTS ON TIC-V30, V04 2.) IF ALARM DOES NOT CLEAR WITHIN 5 MINUTES SWITCH EXHAUST TRAINS AND NOTIFY SUPERVISION
TSH-V12 (AP161)	MAKE-UP AIR SUPPLY TRAIN "B" TEMPERATURE HIGH	AIR TEMPERATURE ≥130°F INDICATING WRONG SETPOINT ON TEMPERATURE CONTROLLER, MALFUNCTION OF COOLER V27, OR MALFUNCTION OF THE HEATER V12	A: NONE O: 1.) CHECK FOR PROPER SETPOINTS ON TIC-V30 AND TIC-V04 2.) IF ALARM DOES NOT CLEAR WITHIN 5 MINUTES SWITCH INLET AND EXHAUST TRAINS
TSH-V30 (AP178)	AIR TEMPERATURE EXHAUST TRAIN "A" HIGH	AIR TEMPERATURE ≥129°F INDICATING HEATER V02 MALFUNCTION	A: DE-ENERGIZES PREHEATER V31 AND HEATER V02 O: NOTIFY SUPERVISION
TSH-V31 (AP179)	AIR TEMPERATURE EXHAUST TRAIN "B" HIGH	AIR TEMPERATURE ≥129°F INDICATING HEATER V12 MALFUNCTION	A: 1.) DE-ENERGIZES PREHEATER V32 AND HEATER V12 O: NOTIFY SUPERVISION

TGE ALARM MATRIX
PANEL: CIMSTAR CONTROL STATION

ALARM TAG NAME	ALARM DESCRIPTION	SIGNIFIES	ACTION A=AUTOMATIC O=OPERATOR
TSH-V33 (AP186)	SURGE TANK EXHAUST AIR TEMPERATURE HIGH	AIR TEMPERATURE ≥260°F INDICATING MALFUNCTIONING HEATER V30 AND/OR CONTROLLER TIC-V33	A: NONE O: NOTIFY SUPERVISION
TSH-W04 (AP230)	LIQUID WASTE FEED TEMPERATURE HIGH	TEMPERATURE OF WASTE FEED WITHIN TGE ≥ 84°F INDICATING INSTRUMENT MALFUNCTION OR EXCESSIVE HEAT INPUT TO WASTE FEED TANK	A: NONE O: 1.) COMPARE WASTE FEED TANK TEMPERATURES AND IF TI-W04 VALUE IS COMPARABLE INITIATE A NORMAL PROCESS SHUTDOWN, AND NOTIFY SUPERVISION 2.) IF VALUES DO NOT COMPARE NOTIFY SUPERVISION
TSH-W34 (AP307)	LIQUID COLLECTION TANK W01 TEMPERATURE HIGH	TEMPERATURE OF LIQUID WITHIN LIQUID COLLECTION TANK W01 ≥ 184°F AS INDICATED BY TE-W34	A: LCT PUMP W03 STOPS O: ALLOW TANK CONTENTS TO COOL BEFORE USING LCT PUMP W03
TSH/L (DP873)	CABINET TEMPERATURE ALARM	[FUTURE] VAULT EXHAUST AIR MONITOR CABINET TEMPERATURE HIGH OR LOW	A: NONE O: NONE
TSHH-E05 (DP133)	EMERGENCY GENERATOR WATER TEMPERATURE HIGH-HIGH	HIGH TEMPERATURE OF COOLING WATER WITHIN EMERGENCY GENERATOR CAUSED BY INADEQUATE OR IMPROPER COOLANT	A: NONE O: ENSURE GROUT PROCESSING SYSTEMS ARE BEING SHUT DOWN AND FLUSHED, THEN NOTIFY SUPERVISION

TGE ALARM MATRIX
PANEL: CIMSTAR CONTROL STATION

ALARM TAG NAME	ALARM DESCRIPTION	SIGNIFIES	ACTION A=AUTOMATIC O=OPERATOR
PDSH-V17 (AP172)	EXHAUST AIR HEPA FILTERS V16/V18 COMBINED DIFFERENTIAL PRESSURE HIGH	COMBINED DIFFERENTIAL PRESSURE ≥ 5 in. WG. INDICATING CLOGGING	A: LOCAL ALARMS ACTIVATE O: 1.) CYCLE VALVES OPEN AND CLOSED ON LINES TO TRANSMITTERS PDIT V16, V18 2.) IF ALARM IS NOT CLEARED WITHIN 5 MINUTES THEN SWITCH EXHAUST TRAINS AND NOTIFY SUPERVISION
PDSH-V18 (AP173)	EXHAUST AIR HEPA FILTER V18 DIFFERENTIAL PRESSURE HIGH	HEPA FILTER V18 DIFFERENTIAL PRESSURE ≥ 1 in. WG. INDICATING CLOGGING	A: LOCAL ALARMS ACTIVATE O: 1.) CYCLE VALVES OPEN AND CLOSED ON LINES TO TRANSMITTER PDIT-V18 2.) IF ALARM IS NOT CLEARED WITHIN 5 MINUTES SWITCH EXHAUST TRAINS AND NOTIFY SUPERVISION
PDSH-V55 (AP205)	BAG HOUSE V33 PRESSURE DIFFERENTIAL HIGH	PRESSURE DIFFERENTIAL ≥4.5 in WG. INDICATING BAG PLUGGAGE	A: NONE O: NOTIFY SUPERVISION

TGE ALARM MATRIX
PANEL: CIMSTAR CONTROL STATION

ALARM TAG NAME	ALARM DESCRIPTION	SIGNIFIES	ACTION A=AUTOMATIC O=OPERATOR	
TSHH-V02 (AP120)	MAKE-UP AIR SUPPLY TRAIN "A" TEMPERATURE HIGH-HIGH	AIR TEMPERATURE ≥ 140°F INDICATING WRONG SETPOINT ON TEMPERATURE CONTROLLER, COOLER SYSTEM MALFUNCTION OR HEATER SYSTEM MALFUNCTION	A:	NONE
			O:	1.) SWITCH TRAINS AND ENSURE PROPER SETTINGS ON TDIC-V12 2.) ENSURE HEATER CONTROLS TDIC-V02 ARE SET 3.) IF ALARM DOES NOT CLEAR SHUTDOWN HEATER V02 4.) IF ALARM DOES NOT CLEAR NOTIFY SUPERVISION 5.) SHUTDOWN PROCESSING SYSTEM AND INITIATE FLUSH IF BOTH TSHH-V02 AND TSHH-V12 DO NOT CLEAR WITHIN ONE HOUR
TSHH-V12 (AP161)	MAKE-UP AIR SUPPLY TRAIN B TEMPERATURE HIGH-HIGH	AIR TEMPERATURE ≥140°F INDICATING WRONG SETPOINT ON TEMPERATURE CONTROLLER, MALFUNCTION OF COOLER V27, OR MALFUNCTION OF HEATER V12	A:	NONE
			O:	1.) SWITCH TRAINS AND ENSURE PROPER SETTING ON TDIC-V02 2.) ENSURE HEATER CONTROLS TDIC-V12 ARE PROPERLY SET 3.) IF ALARM DOES NOT CLEAR SHUTDOWN HEATER V12 4.) IF ALARM DOES NOT CLEAR, NOTIFY SUPERVISION 5.) SHUTDOWN PROCESSING SYSTEM AND INITIATE FLUSHING IF BOTH TSHH-V02 AND TSHH-V12 DO NOT CLEAR WITHIN ONE HOUR

TGE ALARM MATRIX
PANEL: CIMSTAR CONTROL STATION

ALARM TAG NAME	ALARM DESCRIPTION	SIGNIFIES	ACTION A=AUTOMATIC O=OPERATOR
TSHH-V33 (AP185)	SURGE TANK EXHAUST TEMPERATURE HIGH-HIGH	TEMPERATURE OF DUST COLLECTION STRIP HEATER V30 ON SURGE TANK EXHAUST ≥ 275°F INDICATING MALFUNCTIONING HEATER ASSEMBLY	A: DUST COLLECTION STRIP HEATER V30 DE-ENERGIZES O: NOTIFY SUPERVISION
TSHL V22-1 -5 (DP144 146 148 150 152)	EXHAUST TRAIN "A" HEAT TRACING TEMPERATURE	TRACING TEMPERATURE FAILURE, LOW: ≤110°F, OR HIGH: ≥150°F INDICATING THERMOSTAT MALFUNCTIONING ON LINES V-S6-P07, HEPA V06/V08, V-S6-P14, EXH. FAN V09, V-S6-P08	A: NONE O: SWITCH EXHAUST SYSTEM TO TRAIN "B" AND NOTIFY SUPERVISION
TSHL V23-1 -5 (DP145 147 149 151 153)	EXHAUST TRAIN "B" HEAT TRACING TEMPERATURE	TRACING TEMPERATURE FAILURE, OR LOW: ≤110°F, OR HIGH: ≥150°F INDICATING THERMOSTAT MALFUNCTIONING ON LINES V-S6-P05, HEPA V16/V18, V-S6-P15, EXH. FAN V19, OR V-S6-P06 RESPECTIVELY	A: NONE O: SWITCH EXHAUST SYSTEM TO TRAIN "A" AND NOTIFY SUPERVISION

TGE ALARM MATRIX
PANEL: CIMSTAR CONTROL STATION

ALARM TAG NAME	ALARM DESCRIPTION	SIGNIFIES	ACTION A=AUTOMATIC O=OPERATOR
TSHL V32 (DP154)	BAGHOUSE V33 HEAT TRACING TEMPERATURE	TRACING TEMPERATURE FAILURE, OR LOW: ≤110°F, OR HIGH: ≥150o°F INDICATING THERMOSTAT MALFUNCTIONING ON LINE V-S6-P11	A: NONE O: NOTIFY SUPERVISION
TSHL V58-1, V58-2 (DP142, 143)	MAKE-UP AIR SYSTEM CONDENSATE DRAINS HEAT TRACING TEMPERATURE	TRACING TEMPERATURE FAILURE, OR LOW: ≤60°F, OR HIGH: ≥120°F INDICATING THERMOSTAT MALFUNCTIONING ON LINES S-C4-P01 OR S-C4-P02 RESPECTIVELY	A: NONE O: SWITCH MAKE-UP AIR SYSTEM TO ALTERNATE TRAIN AND NOTIFY SUPERVISION
TSL-E05 (DP136)	EMERGENCY GENERATOR WATER TEMPERATURE LOW	LOW COOLING WATER TEMPERATURE OF EMERGENCY GENERATOR CAUSED BY INADEQUATE COOLANT GLYCOL MIX	A: NONE O: NOTIFY SUPERVISION
TSL-F12 (AP18)	DECON TANK F01 LOW TEMPERATURE	TEMPERATURE ≤40°F 1.) THERMOSTAT CONTROLLER MALFUNCTION 2.) HEATER NOT TURNED ON	A: NONE O: TURN ON HEATER IF THERE IS MATERIAL IN TANK, AND NOTIFY SUPERVISION IF TEMPERATURE DOES NOT RISE

TGE ALARM MATRIX
PANEL: CIMSTAR CONTROL STATION

ALARM TAG NAME	ALARM DESCRIPTION	SIGNIFIES	ACTION A=AUTOMATIC O=OPERATOR	
TSL-PIH1 (AP769)	PIH INTERIOR TEMPERATURE LOW	TEMPERATURE WITHIN PIH ≤ 55°F	A:	NONE
			O:	1.) INSPECT AND ENSURE PIH HVAC SYSTEM ON LINE 2.)NOTIFY SUPERVISION IF HVAC SYSTEM NOT OPERATING PROPERLY 3.) INSTALL TEMPORARY SPACE HEATER IF TEMPERATURE WILL FALL BELOW FREEZING WHILE PERSONNEL PUMPING OUT EXCESS WATER
TSL-R35 (DP112)	ADDITIVES/-DECON MODULE TEMPERATURE LOW	TEMPERATURE WITHIN ADDITIVES/DECON MODULE ≤75°F	A:	NONE
			O:	1.) INSPECT HVAC SYSTEM FOR MALFUNCTION 2.)NOTIFY SUPERVISION IS ALARM NOT CLEARED 3.) INSTALL TEMPORARY SPACE HEATING IN MODULE IF TEMPERATURE EXPECTED TO DROP BELOW 32°F
TSL-V30 (AP178)	AIR TEMPERATURE EXHAUST TRAIN "A" LOW	AIR TEMPERATURE ≤101°F INDICATING HEATER V02 MALFUNCTION	A:	1.) NONE
			O:	1.) SWITCH EXHAUST TRAINS 2.) EVALUATE TDIC-V02 HEATER CONTROLS TO ADJUST TEMPERATURE 3.)NOTIFY SUPERVISION
TSL-V31 (AP179)	AIR TEMPERATURE EXHAUST TRAIN "B" LOW	AIR TEMPERATURE ≤101°F INDICATING HEATER V12 MALFUNCTION	A:	NONE
			O:	1.) SWITCH EXHAUST TRAINS 2.) EVALUATE HEATER CONTROLS TO ADJUST TEMPERATURE 3.)NOTIFY SUPERVISION

TGE ALARM MATRIX
PANEL: CIMSTAR CONTROL STATION

ALARM TAG NAME	ALARM DESCRIPTION	SIGNIFIES	ACTION A=AUTOMATIC O=OPERATOR
TSL-V33 (AP186)	SURGE TANK EXHAUST AIR TEMPERATURE LOW	AIR TEMPERATURE ≤212°F INDICATING MALFUNCTIONING HEATER V30 AND/OR CONTROLLER TIC-V33	A: NONE O: NOTIFY SUPERVISION
VBA-102-3A (DP4)	MIXER PUMP 102-3 VIBRATION HIGH	HIGH VIBRATION ON MIXER PUMP 102-3 COLUMN INDICATING NOZZLE PLUGGAGE	A: MIXER PUMP 102-3 SHUTS DOWN O: VERIFY AUTOMATIC SHUTDOWN AND INITIATE MANUAL SHUTDOWN IF NECESSARY, THEN NOTIFY SUPERVISION
XA-102-1 (DP1)	SEISMIC EVENT	EARTHQUAKE OR UNUSUAL VIBRATION ≥ .05g SENSED AT SEISMIC DETECTOR IN AP TANK FARM CONTROL BUILDING	A: WASTE FEED PUMP 102-1 STOPS HENCE SHUTTING DOWN GROUT PROCESSING O: 1.) ALERT FIELD PERSONNEL TO KEEP CLEAR OF WASTE FEED LINE AND NOTIFY SUPERVISION AND RPT 2.) IF LINE FROM TGE TO THE VAULT APPEAR INTACT AND NO LEAK DETECTION ALARMS ON LINE, INITIATE SYSTEM FLUSH
XAS-702-1 (DP67)	TGE STACK RADIATION MONITOR FAILURE	EQUIPMENT MALFUNCTION ON TGE STACK RADIATION MONITOR	A: NONE O: NOTIFY SUPERVISION
XDSH-M04 (AP30)	DRY BLEND FLOW SETPOINT DEVIATION	FLOW DEVIATION OF 5% FROM SETPOINT CAUSED BY INSTRUMENT MALFUNCTION	A: NONE O: INITIATE NORMAL PROCESS SHUTDOWN AND NOTIFY SUPERVISION

TGE ALARM MATRIX
PANEL: CIMSTAR CONTROL STATION

ALARM TAG NAME	ALARM DESCRIPTION	SIGNIFICANCE	ACTION A=AUTOMATIC O=OPERATOR
XDSH-R06 (AP52)	FLUIDIZER FLOWRATE SETPOINT DEVIATION	SETPOINT DEVIATING ≥5%, INDICATING INSTRUMENT FAILURE	A: NONE O: INITIATE NORMAL PROCESS SHUTDOWN IF ALARM NOT CLEARED WITHIN 5 MINUTES, AND NOTIFY SUPERVISION
XDSH-R16 (AP73)	TRIBUTYL PHOSPHATE SETPOINT DEVIATION HIGH	SETPOINT DEVIATING ≥6%, INDICATING INSTRUMENT FAILURE	A: NONE O: INITIATE A NORMAL PROCESS SHUTDOWN IF ALARM IS NOT CLEARED WITHIN 5 MINUTES
XDSH-R26 (AP93)	SET REGULATOR FLOWRATE SETPOINT DEVIATION HIGH	SETPOINT DEVIATING ≥6.7%, INDICATING INSTRUMENT FAILURE	A: NONE O: INITIATE A NORMAL PROCESS SHUTDOWN AND NOTIFY SUPERVISION IF ALARM IS NOT CLEARED WITHIN 5 MINUTES
XDSH-V10 (AP140)	EXHAUST AIR FLOW SETPOINT DEVIATION HIGH	VENTILATION AIR FLOWRATE DEVIATION IS ≥5% INDICATING INSTRUMENT OR VALVE FAILURE	A: NONE O: MONITOR FLOWRATE TO INSURE ADEQUATE VENTILATION THROUGH SYSTEM AND NOTIFY SUPERVISION

TGE ALARM MATRIX
PANEL: CIMSTAR CONTROL STATION

ALARM TAG NAME	ALARM DESCRIPTION	SIGNIFIES	ACTION A=AUTOMATIC O=OPERATOR
XDSH-W06 (AP243)	LIQUID FEED CONTROLLER SETPOINT DEVIATION HIGH	FLOW CONTROLLER DEVIATION ≥5% INDICATING PROBLEM WITH FEED SYSTEM, VALVING, OR INSTRUMENTATION	A: XDSHH WILL SHUT DOWN THE DRY BLEND SYSTEM AND HENCE ALL GROUT PROCESSING WHEN DEVIATION REACHES 10% O: 1.)NOTIFY SUPERVISION 2.) EVALUATE FEED SYSTEM PERFORMANCE 3.) ADJUST FLOW CONTROLLER FIC-W06-2 SETTINGS AND IF NECESSARY TEMPORARILY PLACE IN MANUAL TO CLEAR ALARM 4.) IF UNABLE TO CLEAR ALARM WITHIN 10 MINUTES INITIATE A NORMAL PROCESS SHUTDOWN
XR (DP181 - 183)	XR1/XR2 RACKS POWER FAULT, PARITY ERROR, OR WATCHDOG TIMER TIMEOUT	MODULE MALFUNCTION ON XR1 AND/OR XR2 RACK OR SYSTEM CONFIGURATION ERROR	A: LOSS OF CONTROL ON GRAPHIC CONTROL SCREENS MAY OCCUR AS WELL AS DATA O: INITIATE SYSTEM SHUTDOWN AND FLUSH IF LOSS OF CONTROL OF TGE GRAPHIC SCREENS OCCURS AND NOTIFY SUPERVISION
XSH-E05 (DP134)	EMERGENCY GENERATOR OVERCRANK	EMERGENCY GENERATOR NOT COMING ON-LINE WITHIN PRESET TIME	A: NONE O: RESPOND PER RHO-MA-111.5 IF SYSTEM FLUSHING REQUIRED

TGE ALARM MATRIX
PANEL: CIMSTAR CONTROL STATION

ALARM TAG NAME	ALARM DESCRIPTION	SIGNIFIES	ACTION A=AUTOMATIC O=OPERATOR
XSH-W13 (AP259)	GROUT MIXER W05 TORQUE HIGH	MIXER TORQUE ≥120 INDICATING MIXER PLUGGAGE, OR MIXER DRIVE OR INSTRUMENTATION MALFUNCTIONING	A: NONE O: MONITOR TORQUE INDICATOR XI-W13 AND IF HIGH TORQUE EXPERIENCED DURING PROCESSING INITIATE A NORMAL GROUT PROCESS SHUTDOWN, 2.)NOTIFY SUPERVISION
XSH-W17 (AP268)	GROUT PUMP W06 TORQUE HIGH	PUMP TORQUE ≥120 INDICATING PUMP PLUGGAGE, OR PUMP DRIVE OR INSTRUMENTATION MALFUNCTIONING	A: NONE O: 1.) MONITOR TORQUE INDICATOR XI-W17 AND IF HIGH TORQUE EXPERIENCED DURING PROCESSING INITIATE A NORMAL GROUT PROCESS SHUTDOWN AND FLUSH. 2.)NOTIFY SUPERVISION
ZS-05 (DP751)	MOV-05 FAILURE	MOV-05 READY SIGNAL NOT RECEIVED CAUSED BY INSTRUMENT OR VALVE MALFUNCTION	A: NONE O: ATTEMPT TO CYCLE VALVE AND NOTIFY SUPERVISION IF ALARM DOES NOT CLEAR
ZS-A03 (DP113)	FV-A03 INSTRUMENT AIR BLOWDOWN VALVE FAILURE	FV-A03 READY SIGNAL NOT RECEIVED CAUSED BY INSTRUMENT OR VALVE MALFUNCTION	A: NONE O: NOTIFY SUPERVISION
ZS-F01 (DP77)	FV-F01 FEED LINE DECON VALVE FAILURE	FV-F01 READY SIGNAL NOT RECEIVED CAUSED BY INSTRUMENT OR VALVE MALFUNCTION	A: NONE O: ATTEMPT TO CYCLE VALVE AND NOTIFY SUPERVISION IF ALARM DOES NOT CLEAR
ZS-F02 (DP75)	FV-F02 FEED LINE DECON VALVE FAILURE	FV-V02 READY SIGNAL NOT RECEIVED CAUSED BY INSTRUMENT OR VALVE MALFUNCTION	A: NONE O: ATTEMPT TO CYCLE VALVE AND NOTIFY SUPERVISION IF ALARM DOES NOT CLEAR

TGE ALARM MATRIX
PANEL: CIMSTAR CONTROL STATION

ALARM TAG NAME	ALARM DESCRIPTION	SIGNIFIES	ACTION A=AUTOMATIC O=OPERATOR
ZS-F03 (DP76)	FV-F03 SURGE TANK DECON VALVE FAILURE	FV-F03 READY SIGNAL NOT RECEIVED CAUSED BY INSTRUMENT OR VALVE MALFUNCTION	A: NONE O: ATTEMPT TO CYCLE VALVE AND NOTIFY SUPERVISION IF ALARM DOES NOT CLEAR
ZS-F04 (DP105)	FV-F04 DECON TANK DISCHARGE VALVE FAILURE	FV-F04 READY SIGNAL NOT RECEIVED CAUSED BY INSTRUMENT OR VALVE MALFUNCTION	A: NONE O: ATTEMPT TO CYCLE VALVE AND NOTIFY SUPERVISION IF ALARM DOES NOT CLEAR
ZS-F05 (DP106)	FV-F05 LCT DECON VALVE FAILURE	FV-F05 READY SIGNAL NOT RECEIVED CAUSED BY INSTRUMENT OR VALVE MALFUNCTION	A: NONE O: ATTEMPT TO CYCLE VALVE AND NOTIFY SUPERVISION IF ALARM DOES NOT CLEAR
ZS-F06 (DP107)	FV-F06 LCT MODULE DECON VALVE FAILURE	FV-F06 READY SIGNAL NOT RECEIVED CAUSED BY INSTRUMENT VALVE MALFUNCTION	A: NONE O: ATTEMPT TO CYCLE VALVE AND NOTIFY SUPERVISION IF ALARM DOES NOT CLEAR
ZS-F08 (DP25)	FV-F08 MIXER DECON VALVE FAILURE	FV-F08 READY SIGNAL NOT RECEIVED CAUSED BY INSTRUMENT OR VALVE MALFUNCTION	A: NONE O: ATTEMPT TO CYCLE VALVE AND NOTIFY SUPERVISION IF ALARM DOES NOT CLEAR
ZS-F10 (DP115)	FV-F10 MODULE SUMP DECON VALVE FAILURE	FV-F10 READY SIGNAL NOT RECEIVED CAUSED BY INSTRUMENT OR VALVE MALFUNCTION	A: NONE O: ATTEMPT TO CYCLE VALVE AND NOTIFY SUPERVISION IF ALARM DOES NOT CLEAR
ZS-H01 (DP70)	FV-H01 GROUT LINE CLEARING VALVE FAILURE	FV-H01 READY SIGNAL NOT RECEIVED CAUSED BY INSTRUMENT OR VALVE MALFUNCTION	A: NONE O: ATTEMPT TO CYCLE VALVE AND NOTIFY SUPERVISION IF ALARM DOES NOT CLEAR

TGE ALARM MATRIX
PANEL: CIMSTAR CONTROL STATION

ALARM TAG NAME	ALARM DESCRIPTION	SIGNIFIES	ACTION A=AUTOMATIC O=OPERATOR
ZS-H04 (DP170)	FV-H04 DECON SYSTEM FLUSH VALVE FAILURE	FV-H04 READY SIGNAL NOT RECEIVED CAUSED BY INSTRUMENT OR VALVE MALFUNCTION	A: NONE O: ATTEMPT TO CYCLE VALVE AND NOTIFY SUPERVISION IF ALARM DOES NOT CLEAR
ZS-H05 (DP110)	FV-H05 GROUT CLEARING PUMP INLET VALVE FAILURE	FV-H05 READY SIGNAL NOT RECEIVED CAUSED BY INSTRUMENT OR VALVE MALFUNCTION	A: NONE O: ATTEMPT TO CYCLE VALVE AND NOTIFY SUPERVISION IF ALARM DOES NOT CLEAR
ZS-JP-1 - 2 (DP752 - 753)	[FUTURE] MOV-JP-1 AND MOV-JP-2 JUMPER PIT VALVE(S) FAILURE	[FUTURE] MOV-JP-1 AND/OR MOV-JP-2 READY SIGNAL NOT RECEIVED CAUSED BY INSTRUMENT OR VALVE MALFUNCTION	A: NONE O: NONE
ZS-M07-1,2 (DP101, 100)	WEIGH FEEDER M05-A BELT OFF TRACK	WEIGH FEEDER M05-A MALFUNCTION	A: NONE O: MONITOR DRY BLEND FEED FOR PROBLEMS, CORRECT AS NECESSARY, NOTIFY SUPERVISION IF ALARM DOES NOT CLEAR
ZS-M15 (DP98)	MIXER ISOLATION VALVE M15 FAILURE	M15 VALVE READY SIGNAL NOT RECEIVED CAUSED BY INSTRUMENT OR VALVE MALFUNCTION	A: NONE O: ATTEMPT TO CYCLE VALVE AND NOTIFY SUPERVISION IF ALARM DOES NOT CLEAR
ZS-R01 (DP82)	FV-R01 ADDITIVES TO MIXER BYPASS VALVE FAILURE	FV-R01 READY SIGNAL NOT RECEIVED CAUSED BY INSTRUMENT OR VALVE MALFUNCTION	A: NONE O: ATTEMPT TO CYCLE VALVE AND NOTIFY SUPERVISION IF ALARM DOES NOT CLEAR
ZS-R05 (DP81)	FV-R05 ADDITIVES TO MIXER VALVE FAILURE	FV-R05 READY SIGNAL NOT RECEIVED CAUSED BY INSTRUMENT OR VALVE MALFUNCTION	A: NONE O: ATTEMPT TO CYCLE VALVE AND NOTIFY SUPERVISION IF ALARM DOES NOT CLEAR

TGE ALARM MATRIX
PANEL: CIMSTAR CONTROL STATION

ALARM TAG NAME	ALARM DESCRIPTION	SIGNIFIES	ACTION A=AUTOMATIC O=OPERATOR
ZS-R08 (DP102)	FV-R08 FLUIDIZER PUMP DISCHARGE VALVE FAILURE	FV-R08 READY SIGNAL NOT RECEIVED CAUSED BY INSTRUMENT OR VALVE MALFUNCTION	A: NONE O: ATTEMPT TO CYCLE VALVE AND NOTIFY SUPERVISION IF ALARM DOES NOT CLEAR
ZS-R18 (DP103)	FV-R18 TRIBUTYL PHOSPHATE PUMP DISCHARGE VALVE FAILURE	FV-R18 READY SIGNAL NOT RECEIVED CAUSED BY INSTRUMENT OR VALVE MALFUNCTION	A: NONE O: ATTEMPT TO CYCLE VALVE AND NOTIFY SUPERVISION IF ALARM DOES NOT CLEAR
ZS-R28 (DP104)	FV-R28 SET REGULATOR PUMP DISCHARGE VALVE FAILURE	FV-R28 READY SIGNAL NOT RECEIVED CAUSED BY INSTRUMENT OF VALVE MALFUNCTION	A: NONE O: ATTEMPT TO CYCLE VALVE AND NOTIFY SUPERVISION IF ALARM DOES NOT CLEAR
ZS-R34 (DP111)	FV-R34 pH ADJUSTMENT PUMP DISCHARGE VALVE FAILURE	FV-R34 READY SIGNAL NOT RECEIVED CAUSED BY INSTRUMENT OR VALVE MALFUNCTION	A: NONE O: ATTEMPT TO CYCLE VALVE AND NOTIFY SUPERVISION IF ALARM DOES NOT CLEAR
ZS-V05 (DP60)	FV-V05 VENTILATION INLET BLOCK VALVE, TRAIN "A", FAILURE	FV-V05 READY SIGNAL NOT RECEIVED CAUSED BY INSTRUMENT OR VALVE MALFUNCTION	A: NONE O: ATTEMPT TO CYCLE VALVE AND NOTIFY SUPERVISION IF ALARM DOES NOT CLEAR
ZS-V09 (DP68)	FV-V09 EXHAUST FAN INLET DAMPER VALVE FAILURE	FV-V09 READY SIGNAL NOT RECEIVED CAUSED BY INSTRUMENT OR VALVE MALFUNCTION	A: NONE O: ATTEMPT TO CYCLE VALVE AND NOTIFY SUPERVISION IF ALARM DOES NOT CLEAR
ZS-V15 (DP62)	FV-V15 VENTILATION INLET BLOCK VALVE, TRAIN "B", FAILURE	FV-V15 READY SIGNAL NOT RECEIVED CAUSED BY INSTRUMENT OR VALVE MALFUNCTION	A: NONE O: ATTEMPT TO CYCLE VALVE AND NOTIFY SUPERVISION IF ALARM DOES NOT CLEAR

TGE ALARM MATRIX
PANEL: CIMSTAR CONTROL STATION

ALARM TAG NAME	ALARM DESCRIPTION	SIGNIFIES	ACTION A=AUTOMATIC O=OPERATOR
ZS-V19 (DP69)	FV-V19 EXHAUST FAN INLET DAMPER VALVE FAILURE	FV-V19 READY SIGNAL NOT RECEIVED CAUSED BY INSTRUMENT OR VALVE MALFUNCTION	A: NONE O: ATTEMPT TO CYCLE VALVE AND NOTIFY SUPERVISION IF ALARM DOES NOT CLEAR
ZS-V20 (DP61)	FV-V20 COOLER V26 INLET REFRIGERATION VALVE FAILURE	FV-V20 READY SIGNAL NOT RECEIVED CAUSED BY INSTRUMENT OR VALVE MALFUNCTION	A: NONE O: ATTEMPT TO CYCLE VALVE AND NOTIFY SUPERVISION IF ALARM DOES NOT CLEAR
ZS-V21 (DP63)	FV-V21 COOLER V27 INLET REFRIGERATION VALVE FAILURE	FV-V21 READY SIGNAL NOT RECEIVED CAUSED BY INSTRUMENT OR VALVE MALFUNCTION	A: NONE O: ATTEMPT TO CYCLE VALVE AND NOTIFY SUPERVISION IF ALARM DOES NOT CLEAR
ZS-W01 (DP78)	FV-W01 WASTE FEED VALVE FAILURE	FV-W01 READY SIGNAL NOT RECEIVED CAUSED BY INSTRUMENT OR VALVE MALFUNCTION	A: NONE O: ATTEMPT TO CYCLE VALVE AND NOTIFY SUPERVISION IF ALARM DOES NOT CLEAR
ZS-W02 (DP79)	LV-W02 LCT LEVEL CONTROL VALVE FAILURE	LV-W02 READY SIGNAL NOT RECEIVED CAUSED BY INSTRUMENT OR VALVE MALFUNCTION	A: NONE O: ATTEMPT TO CYCLE VALVE AND NOTIFY SUPERVISION IF ALARM DOES NOT CLEAR
ZS-W30 (DP72)	FV-W30 GROUT LINE CLEARING VALVE FAILURE	FV-W30 READY SIGNAL NOT RECEIVED CAUSED BY INSTRUMENT OR VALVE FAILURE	A: NONE O: ATTEMPT TO CYCLE VALVE AND NOTIFY SUPERVISION IF ALARM DOES NOT CLEAR
ZS-W31 (DP73)	FV-W31 GROUT DISCHARGE VALVE FAILURE	FV-W31 READY SIGNAL NOT RECEIVED CAUSED BY INSTRUMENT OR VALVE FAILURE	A: NONE O: ATTEMPT TO CYCLE VALVE AND NOTIFY SUPERVISION IF ALARM DOES NOT CLEAR

TGE ALARM MATRIX
PANEL: CIMSTAR CONTROL STATION

ALARM TAG NAME	ALARM DESCRIPTION	SIGNIFIES	ACTION A=AUTOMATIC O=OPERATOR
ZS-W40 (DP80)	FV-W40 LCT TO ISOLOK SAMPLER VALVE FAILURE	FV-W40 READY SIGNAL NOT RECEIVED CAUSED BY INSTRUMENT OR VALVE FAILURE	A: NONE O: ATTEMPT TO CYCLE VALVE AND NOTIFY SUPERVISION IF ALARM DOES NOT CLEAR
ZS-W42 (DP83)	FV-W42 LCT DRAIN VALVE FAILURE	FV-W42 READY SIGNAL NOT RECEIVED CAUSED BY INSTRUMENT OR VALVE FAILURE	A: NONE O: ATTEMPT TO CYCLE VALVE AND NOTIFY SUPERVISION IF ALARM DOES NOT CLEAR
ZS-W43 (DP84)	FV-W43 GROUT PUMP DRAIN VALVE FAILURE	FV-W43 READY SIGNAL NOT RECEIVED CAUSED BY INSTRUMENT OR VALVE FAILURE	A: NONE O: ATTEMPT TO CYCLE VALVE AND NOTIFY SUPERVISION IF ALARM DOES NOT CLEAR
ZS-W44 (DP97)	FV-W44 ISOLOK SAMPLER FLUSH BLEED VALVE FAILURE	FV-W44 READY SIGNAL NOT RECEIVED CAUSED BY INSTRUMENT OR VALVE FAILURE	A: NONE O: ATTEMPT TO CYCLE VALVE AND NOTIFY SUPERVISION IF ALARM DOES NOT CLEAR
ZS-W46 (DP96)	FV-W46 ISOLOK SAMPLER RECIRCULATION FLUSH VALVE FAILURE	FV-W46 READY SIGNAL NOT RECEIVED CAUSED BY INSTRUMENT OR VALVE FAILURE	A: NONE O: ATTEMPT TO CYCLE VALVE AND NOTIFY SUPERVISION IF ALARM DOES NOT CLEAR
------ (DP252)	NO COMMS	COMMUNICATION LINK LOST BETWEEN GRAPHIC CONTROL SCREENS ON OPERATOR STATION 1 AND PROGRAMMABLE CONTROLLER	A: NONE O: HIT ESC KEY THEN REBOOT VUMASTER AND NOTIFY SUPERVISION IF COMMUNICATION CANNOT BE RESTORED

TGE ALARM MATRIX
PANEL: CIMSTAR CONTROL STATION

ALARM TAG NAME	ALARM DESCRIPTION	SIGNIFIES	ACTION A=AUTOMATIC O=OPERATOR
------ (DP254)	NO COMMS	COMMUNICATION LINK LOST BETWEEN GRAPHIC CONTROL SCREENS ON OPERATOR STATION 2 AND PROGRAMMABLE CONTROLLER	A: NONE O: HIT ESC KEY THEN REBOOT VUMASTER AND NOTIFY SUPERVISION IF COMMUNICATION CANNOT BE RESTORED
------ (DP256)	NO COMMS	COMMUNICATION LINK LOST BETWEEN GRAPHIC CONTROL SCREENS ON OPERATOR STATION 3 AND PROGRAMMABLE CONTROLLER	A: NONE O: HIT ESC KEY THEN REBOOT VUMASTER AND NOTIFY SUPERVISION IF COMMUNICATION CANNOT BE RESTORED
------ (DP253)	NO COMMS	COMMUNICATION LINK LOST BETWEEN DATA LOGGING COMPUTER AND PROGRAMMABLE CONTROLLER	A: NONE O: NOTIFY SUPERVISION
------ (DP269)	ANALOG INPUT CARD BAD	MODULE FAILURE OR SYSTEM CONFIGURATION ERROR	A: MAY CAUSE LOSS OF CONTROL ON GRAPHIC CONTROL SCREENS OR BAD DATA INPUT TO ANALOG CONTROL INSTRUMENTS O: IF ANY CONTROL OF SCREENS ARE LOST INITIATE PROCESS SHUTDOWN AND FLUSHING, AND NOTIFY SUPERVISION