START

0035725

START

RHO-MA-116

Rockwell Hanford Operations
Energy Systems Group

Purex Technical Manual

APR 1994
RECEIVED
EPIC

Rockwell International

DOE Richland WA

PLEASE RETURN TO:
ENVIRONMENTAL DIVISION
RESOURCE CENTER

THIS PAGE INTENTIONALLY
LEFT BLANK

UNCLASSIFIED

CLASSIFICATION

DOCUMENT NO. RHO-MA-116

DATE March 1980 COPY NO.

ING FILE

Rockwell Hanford Operations
Richland, WA 99352

TITLE AND AUTHOR

PUREX TECHNICAL MANUAL

by

Research and Engineering

DISTRIBUTION

	NAME	BUILDING	AREA
	United States Department of Energy - Richland Operations Office		
1, 2	O. J. Elgert	Fed	700
	Rockwell Hanford Operations		
3	P. E. Alley	202A	200E
	R. D. Anderson	271B	200E
	W. B. Barton	202A	200E
6	D. C. Bartholomew	2750E	200E
7	D. A. Bruce	234-5	200W
8	J. S. Buckingham	222S	200W
9	B. F. Campbell	202A	200E
10	A. E. Chambers	202A	200E
11	G. W. Clark	202A	200E
12	D. J. Cockeram	2750E	200E
13	E. F. Cosgrove	271B	200E
14	M. H. Curtis	222B	200E
15	G. T. Dukelow	2750E	200E
16	K. L. Engelhardt	202A	200E
17	C. J. Evoniuk	202A	200E
18	J. B. Fecht	222B	200E
19	R. C. Forsman	202A	200E
20	P. J. Fritch	2750E	200E
21	R. G. Geier	202A	200E
22	R. D. Hammond	2750E	200E
23	D. G. Harlow	2750E	200E
24	W. M. Harty, Sr.	2750E	200E
25	R. W. Harvey	2750E	200E
26	W. F. Heine	2750E	200E
27	R. E. Heineman	2750E	200E
28	J. O. Henrie	202A	200E
29	J. O. Honeyman	2750E	200E
30	R. A. Huckfeldt	222T	200W
31	J. W. Jordan	2704Z	200W
32	F. M. Jungfleisch	222S	200W
33	J. E. Kinzer	2750E	200E
34	L. M. Knights	222B	200E
35	E. J. Kosiancic	2750E	200E
36	P. G. Lorenzini	2750E	200E
37	W. E. Matheison	271U	200W
38	J. D. McIntosh	202A	200E
39	D. L. Merrick	2750E	200E
40	J. D. Moore	202A	200E
41	J. B. Myers	202A	200E
42	B. H. Nicholson	202A	200E
43	G. C. Oberg	271U	200W
44	W. E. Ogren	202A	200E

ROUTE TO	PAYROLL NO.	LOCATION	FILES ROUTE DATE
This manual is for Final Safety Analysis Report for Purex. It was requested not to be updated or assigned to anybody. J.L. July 10-1981			

UNCLASSIFIED

CLASSIFICATION

(TO BE USED ON UNCLASSIFIED AND OFFICIAL USE ONLY DOCUMENTS)

54-6100-151 (6

THIS PAGE INTENTIONALLY
LEFT BLANK

UNCLASSIFIED
CLASSIFICATION

DOCUMENT NO. RHO-MA-116

DATE March 1980 COPY NO.

...ING FILE

Rockwell Hanford Operations
Richland, WA 99352

TITLE AND AUTHOR

PUREX TECHNICAL MANUAL

by

Research and Engineering

DISTRIBUTION

	NAME	BUILDING	AREA
Rockwell Hanford Operations (Continued)			
45	R. G. Oliver	Fed	700
46	J. V. Panesko	222T	200W
47	D. E. Place	202A	200E
48	G. J. Raab	202A	200E
49	G. W. Reddick	202A	200E
50	D. A. Reynolds	202S	200W
	R. C. Roal	2750E	200E
	J. H. Roecker	2750E	200E
53	W. C. Schmidt	202A	200E
54	W. W. Schulz	2704S	200W
55	H. P. Shaw	2750E	200E
56	J. P. Sloughter	271B	200E
57	F. J. Sobeck	202A	200E
58	C. P. Sutter	2704S	200W
59	R. J. Thompson	202A	200E
60	G. W. Upington	202A	200E
61	R. E. Van der Cook	202A	200E
62	L. E. Vestuto	CBB	700
63	R. L. Walser	202A	200E
64	B. F. Weaver	2713E	200E
65	J. C. Willi	2101M	200E
66	W. G. Wilson	2713E	200E
67	Document Control	Fed	700
Battelle-Northwest			
68	J. L. Swanson	325	PNL
69-85	Extra		

ROUTE TO	PAYROLL NO.	LOCATION	FILES ROUTE DATE

UNCLASSIFIED
CLASSIFICATION

(TO BE USED ON UNCLASSIFIED AND OFFICIAL USE ONLY DOCUMENTS) 54-6100-151 (6-77)

THIS PAGE INTENTIONALLY
LEFT BLANK

Document Number RHO-MA-116

Issue Approval:

Functional Director	3-3-80 Date
Issuing Manager	2-26-80 Date
Concurring Approval	2-27-80 Date
Concurring Approval	2/27/80 Date
Program Office Representative	2/27/80 Date

Rockwell International

Rockwell Hanford Operations
Energy Systems Group

A-6000-054 (R-7-79)

THIS PAGE INTENTIONALLY
LEFT BLANK

RHO-MA-116

PUREX TECHNICAL MANUAL

Edited by

J. D. Moore
R. L. Walser

Research and Engineering

J. J. Fritch
Report Coordination and Production

THIS PAGE INTENTIONALLY LEFT BLANK

9413275.0454

March 1980

Rockwell International
Rockwell Hanford Operations
Energy Systems Group
Richland, Washington 99352

THIS PAGE INTENTIONALLY
LEFT BLANK

PREFACE

This manual updates the content of the original Purex Technical Manual (HW-31000), altering the descriptions of the process flowsheet, process technology, and plant and equipment designs which have been changed since the original manual was issued in 1955. Not included, or only briefly noted, are those changes which, at the time this manual was published, were not fully defined. Among the latter changes are the addition of the plutonium dioxide process, the disposition of sugar denitration of the high-level waste, modifications to the backup facility acid absorbers, and the choice of organic diluent for the solvent extraction process. These and other changes should be added to the manual as soon as enough details for adequate descriptions are available.

In preparing this manual, the authors have gathered information from the original manual, from the many references cited in the text, and from personal experience or experiences of others acquired in Purex Plant operation. In recognition of their efforts, the editors gratefully acknowledge the major contributions of the following people:

C. J. Evoniuk
J. W. Gehrke
R. G. Geier
D. W. Jeppson
S. J. Larson
B. H. Nicholson
G. A. Nicholson
K. H. Oma
A. L. Pajunen
G. J. Raab
R. E. Van der Cook

THIS PAGE INTENTIONALLY
LEFT BLANK

PUREX TECHNICAL MANUAL

CONTENTS

CHAPTER 1.0 - INTRODUCTION.....1-1
1.1 Arrangement and Content.....1-1
1.2 Purex Plant Function.....1-2
1.3 Basic Chemical Principles of the Purex Process.....1-5
1.4 Purex Process Description.....1-8

CHAPTER 2.0 - PUREX PLANT DESCRIPTION.....2-1
2.1 Site Description.....2-1
2.2 Purex Processing Building, 202-A.....2-1
2.3 Outside Facilities.....2-30

CHAPTER 3.0 - EQUIPMENT DESCRIPTION.....3-1
3.1 General Guidelines.....3-1
3.2 Fuel Transport and Unloading Equipment.....3-5
3.3 Dissolvers.....3-15
3.4 Dissolver Off-Gas Equipment.....3-17
3.5 Centrifuges.....3-22
3.6 Pulse Columns and Associated Equipment.....3-25
3.7 Concentrators.....3-66
3.8 Tanks.....3-76
3.9 Pumps, Jets and Agitators.....3-108
3.10 Instrumentation.....3-133
3.11 Process Samplers.....3-203
3.12 Condensers.....3-216
3.13 Acid Absorbers.....3-226
3.14 Nitric Acid Vacuum Fractionator.....3-233
3.15 Neptunium Cycle Ion Exchange Column.....3-237
3.16 Canyon Process Ventilation System Equipment.....3-239
3.17 References.....3-240

CHAPTER 4.0 - PROCESS DESCRIPTION.....4-1
4.1 Transport of Fuel Elements.....4-1
4.2 Coating Removal and Metathesis.....4-9
4.3 Uranium Dissolution and Feed Preparation.....4-28
4.4 Solvent Extraction.....4-39
4.5 Final Uranium and Plutonium Concentration.....4-85
4.6 Backcycle Waste and Neptunium Recovery.....4-104
4.7 Solvent Treatment.....4-134
4.8 Acid Recovery and Waste Disposal.....4-148
4.9 Solid Waste Disposal.....4-173
4.10 Product Loadout and Shipment.....4-176
4.11 Aqueous Makeup.....4-199
4.12 Process Ventilation Systems.....4-222
4.13 Analytical Methods.....4-229
4.14 References.....4-255

CONTENTS (CONT.)

CHAPTER 5.0 - FUEL DISSOLUTION AND WASTE TREATMENT TECHNOLOGY....5-1
5.1 Fuel Composition and Element Design....5-1
5.2 Zirflex Processing....5-7
5.3 Treatment and Disposal of Decladding Waste....5-14
5.4 Ammonia Collection and Disposal....5-15
5.5 Dissolution of Unclad Fuel....5-18
5.6 References....5-20

CHAPTER 6.0 - SOLVENT EXTRACTION TECHNOLOGY....6-1
6.1 Process Chemistry....6-1
6.2 Process Engineering....6-115
6.3 References....6-195

CHAPTER 7.0 - URANIUM AND PLUTONIUM SOLUTIONS' CONCENTRATION TECHNOLOGY....7-1
7.1 Concentration of Uranium Solutions....7-1
7.2 Concentration of Plutonium Solutions....7-9
7.3 References....7-20

CHAPTER 8.0 - NEPTUNIUM CONCENTRATION AND ION EXCHANGE PURIFICATION TECHNOLOGY....8-1
8.1 Introduction....8-1
8.2 Neptunium Concentration....8-2
8.3 Ion Exchange Purification....8-4
8.4 General Safety Precautions....8-21
8.5 References....8-21

CHAPTER 9.0 - ACID RECOVERY AND GASEOUS FISSION PRODUCT WASTE HANDLING TECHNOLOGY....9-1
9.1 Acid Recovery Technology....9-1
9.2 Gaseous Fission Product Waste Handling Technology....9-32
9.3 References....9-39

CHAPTER 10.0 - SAFETY....10-1
10.1 Health Protection From Radiation....10-1
10.2 Radiation Intensities and Shielding....10-15
10.3 Decontamination of Surfaces....10-33
10.4 Hazards Other Than Radiation....10-44
10.5 Criticality Prevention....10-64
10.6 References....10-78

CONTENTS

CHAPTER 1.0 - INTRODUCTION

1.1 ARRANGEMENT AND CONTENT.....1-1

1.2 PUREX PLANT FUNCTION.....1-2
1.2.1 Feed Material.....1-2
1.2.2 Plutonium Product.....1-2
1.2.3 Uranium Product.....1-3
1.2.4 Neptunium Product.....1-3
1.2.5 Plant Processing Rate.....1-4

1.3 BASIC CHEMICAL PRINCIPLES OF THE PUREX PROCESS.....1-5
1.3.1 Properties of Uranium of Process Importance.....1-5
1.3.2 Properties of Plutonium of Process Importance.....1-6
1.3.3 Properties of Neptunium of Process Importance.....1-7
1.3.4 Properties of Fission Products of Process Importance.....1-7
1.3.5 Decontamination.....1-7

1.4 PUREX PROCESS DESCRIPTION.....1-8
1.4.1 Feed Preparation.....1-11
1.4.2 Solvent Extraction.....1-11
1.4.3 Solvent Treatment.....1-14
1.4.4 Backcycle Waste System.....1-15
1.4.5 Acid Recovery and Waste Treatment.....1-15

FIGURE:
1-1 Purex Process Flow Diagram.....1-9

TABLE:
1-1 Approximate Plutonium and Neptunium Processing Rates.....1-5

THIS PAGE INTENTIONALLY
LEFT BLANK

CHAPTER 1.0 - INTRODUCTION

This updated Purex Technical Manual documents the technical bases of the current Purex process and provides a physical description of the plant, equipment, and process at Hanford. Included are process, facility, and equipment changes which have occurred since the original Purex Technical Manual (HW-31000) was published in March 1955. This manual is intended for use in training and educating personnel unfamiliar with the process and as a reference handbook for personnel responsible for the startup and operation of the plant.

1.1 ARRANGEMENT AND CONTENT

Chapter 1.0 contains a summary of general information about the manual, plant, and process. It is written to provide the reader with a synoptic description of the process and to aid in reading the manual.

Chapter 2.0 describes the site, plant, and supporting facilities.

Chapter 3.0 describes the equipment currently used in the plant, and some of the reasons for equipment changes since plant startup; it also references blueprints describing the equipment in detail.

Chapter 4.0 describes the process, process control techniques and methods for correcting typical off-standard conditions.

Chapter 5.0 discusses the technology involved in fuel element decladding, uranium dissolution, and feed preparation.

Chapter 6.0 discusses the solvent extraction technology used in providing the separation of uranium, plutonium, neptunium, and fission products.

Chapter 7.0 discusses the technology associated with the concentration of uranium and plutonium aqueous solutions.

Chapter 8.0 discusses the technology associated with concentrating aqueous neptunium nitrate, final purification of neptunium using ion exchange, and safety aspects involved with the ion exchange resin.

Chapter 9.0 discusses the technology for the recovery of nitric acid and oxides of nitrogen (NO_x) from off-gases, concentration of dilute acids into higher strength acid for reuse in the plant, and treatment of gaseous, aqueous, and solid wastes.

Chapter 10.0 presents basic information concerning nuclear criticality, radiation and chemical handling safety applicable to the Purex Plant.

9413275.0460

1.2 PUREX PLANT FUNCTION

The Hanford Purex Plant, located in the 200 East Area, was designed and constructed to provide supplemental fuel reprocessing capability to separate plutonium and uranium products from irradiated fuel. The Purex (plutonium, uranium, reduction-extraction) process, developed at Oak Ridge National Laboratory (ORNL), Oak Ridge, Tennessee, as an improvement over the Redox (reduction oxidation extraction) process is used. The Purex Plant and process were designed to reprocess aluminum-clad uranium metal fuel to recover weapons-grade plutonium and depleted uranium, but have been modified to reprocess zirconium alloy (Zircaloy) clad fuel from N Reactor to recover fuels-grade plutonium, slightly enriched uranium, and neptunium. The plant is operated by Rockwell Hanford Operations (Rockwell) under the direction of the U.S. Department of Energy (DOE).

Since the Purex Plant began processing spent fuel in 1956, a variety of fuels have been reprocessed. The fuel enrichments have varied from 0.72 to 2.1% U-235; fuel exposures have varied from 300 to about 3,000 megawatt-days per ton of uranium (MWd/t); and cooling times have varied from 120 days to 7 years. Aluminum-clad and zirconium-clad fuels have been processed at Purex. Types of fuels processed include uranium metal, uranium and plutonium oxides, and thoria targets. During operations, improvements were made to increase production rates, provide diverse capability to handle various fuels, provide higher quality products, decrease environmental releases, and improve the safety of the operation. Additional changes have been made while the plant has been on standby since September 1972, and more are being developed and implemented.

Purex Plant is operated to reprocess the inventory of stored N Reactor fuel to provide plutonium for research, reactor development, safety programs, and United States defense; plus, provide slightly enriched uranium for fuel in reactors generating electricity and plutonium.

1.2.1 Feed Material

The current supply of feed to the Purex Plant is N Reactor fuel elements made of uranium metal with Zircaloy cladding. The fuel elements, consisting of tube-in-tube design, are of two enrichments: one designed with both tubes 0.947% U-235, and the other with the inner tube 0.947% U-235, and the outer tube 1.25% U-235 ("spike fuel"). The fuel element assembly is about 2.4 inches in diameter and from 15 to 26 inches in length (most being 26 inches). The fuel elements are black due to the formation of zirconium oxide on the surface during fabrication and irradiation in the reactor. The exposure of the fuel elements to be processed ranges from about 1,000 to 3,000 MWd/t. The fuel is discharged from N Reactor, stored in N Reactor or K-East or K-West basins, cooled 180 days or longer, and shipped in cask cars to Purex for processing.

About 18 tons of pressurized water reactor (PWR) fuel elements with Zircaloy cladding are scheduled to be processed also. A new head-end flowsheet will be required for processing this fuel at Purex. In addition, about 3.2 tons of aluminum-clad uranium-metal fuel elements, stored in four buckets in the Purex fuel storage basin since 1972, will be processed. This material is highly depleted uranium (0.2 to 0.3% U-235) containing 8.7 kilograms of plutonium with an approximate 26% Pu-240 content.

1.2.2 Plutonium Product

The plutonium product of the Purex Plant is a nitrate solution containing approximately 350 g Pu/ℓ and about 7M nitric acid. The uranium content is less than 2,000 parts per million (ppm) parts plutonium. Other plutonium product specifications are listed in Section 7.2. The plutonium, depending on its isotopic content, is used to make breeder reactor fuel or weapons.

1.2.3 Uranium Product

The uranium product of the Purex Plant is a concentrated uranyl nitrate hexahydrate (UNH) solution containing about 4.2 lb U/gal and less than 0.1 lb HNO_3/gal. The plutonium content is less than 10 parts per billion parts uranium. The maximum allowable fission product concentrations are as follows:

ZrNb-95	10 μCi/lb uranium
Ru-103 and RuRh-106	20 μCi/lb uranium
All others, excluding Tc-99	20 μCi/lb uranium

The maximum allowable concentrations of other impurities are:

iron	40 ppm parts uranium
chromium	16 ppm parts uranium
nickel	12 ppm parts uranium
sodium	20 ppm parts uranium
organic	Nondetectable

The uranium product solution is shipped to 224-U Building in the 200 West Area for calcination to uranium trioxide. This product is then shipped offsite for enrichment with U-235 and reuse as nuclear fuel.

1.2.4 Neptunium Product

The Purex Plant neptunium product is a nitrate solution containing about 40 g Np/ℓ, and greater than 0.3M nitric acid. At these conditions, the neptunium valence is stabilized at the (V) state. Maximum allowable actinide concentrations are:

plutonium	1.0 wt% of neptunium
uranium	1.0 wt% of neptunium
thorium	3.0 wt% of neptunium
Th-234	<25 μCi/g neptunium

Allowable ZrNb-95 and ruthenium total concentration is less than 25 μCi/g neptunium. Neptunium was shipped to Savannah River, where it was used to produce Pu-238. While awaiting demand, the neptunium solution is stored in the canyon vessel TK-J2. This tank holds about 1,200 gallons, which is equivalent to the volume produced during many years of Purex operation.

1.2.5 Plant Processing Rate

The Purex Plant processes N Reactor fuel at a nominal rate of 10 tons of uranium per day through the solvent extraction system on a campaign basis. The limiting parts of the process are the coating removal and coating waste treatment steps in the head-end. During a campaign, the batch-operated head-end is started to build up a feed inventory of about 35 tons of uranium as UNH solution in the solvent extraction feed tanks. The solvent extraction system is then started while the head-end is operated to provide a continuous feed supply. The solvent extraction system, consisting of 14 pulse columns, various feed tanks, pumps, concentrators, and associated equipment, operates as a continuous process. The plutonium and neptunium processing rates are dependent on the uranium processing rate and on the plutonium and neptunium concentrations in irradiated fuel elements. The plutonium and neptunium concentrations depend on irradiation history of the fuel elements. The neptunium content in the fuel is also dependent on the U-236 content of the uranium used in making the fuel elements. Approximate plutonium and neptunium processing rates at various irradiation levels (MWd/t) of N Reactor fuel, corresponding to a uranium processing rate of 10 tons per day, are tabulated in Table 1-1 for 0.947 and 1.15% U-235 enriched fuel.

TABLE 1-1. Approximate Plutonium and Neptunium Processing Rates

N Reactor Irradiation Level, MWd/t	Pu-240, %[a]	Processed per day at 10 tons of uranium per day	
		Neptunium, g	Plutonium, kg
0.947% U-235 enriched			
2435	12	∿300	18.3
1670	9	∿220	13.5
1030	6	∿140	9.0
1.15% U-235 enriched			
2950[b]	12	∿280	16.0
2030	9	∿240	14.4
1280	6	∿150	9.8

[a] In total plutonium.
[b] Decontaminated uranium solution is blended with this fuel to meet criticality specifications for solvent extraction processing.

1.3 BASIC CHEMICAL PRINCIPLES OF THE PUREX PROCESS

The Purex process is designed for individual separations of uranium, plutonium, neptunium, and fission products which are combined in irradiated fuel elements. The desired components are separated and purified in this solvent extraction process by controlling their relative phase distributions between aqueous solutions and an immiscible organic solvent, tributyl phosphate (TBP), dissolved in a hydrocarbon diluent, normal paraffin hydrocarbon (NPH). In the following subsections, the basic principles of the process are briefly described and the process is outlined. This section is intended only as an introduction to the process. More complete information is contained in Chapter 4.0.

1.3.1 Properties of Uranium of Process Importance

The Purex process utilizes the preferential extractability of uranyl nitrate by TBP to separate uranium from plutonium and the fission product elements.

Metallic uranium is soluble in nitric acid forming an aqueous solution of $UO_2(NO_3)_2 \cdot XH_2O$.

The salts of uranium consist chiefly of two classes: the uranous uranium at a valence state of (IV) (green color), and the uranyl, UO_2^{+2} (yellow in color with a strong greenish fluorescence). Uranium may exist in other valence states, but only the tetravalent and hexavalent forms are comparatively stable in aqueous solutions. Uranium (IV) is a strong reducing agent, and is not normally present in Purex process solutions since it is difficult to reduce UO_2^{+2} to uranium (IV). The product of uranium metal dissolution in nitric acid, $UO_2(NO_3)_2 \cdot XH_2O$, is very soluble in aqueous solutions, and in TBP. When aqueous solutions of uranyl nitrate are contacted with TBP, the uranium will distribute preferentially into the organic* phase if sufficient nitric acid is present as a salting agent in the aqueous phase. The uranium forms a complex compound $[UO_2(NO_3)_2 \cdot (TBP)_2]$ in the organic phase of TBP and hydrocarbon. Advantage is taken of this preferential distribution and the relative nonreducibility of UO_2^{+2} in accomplishing the separation of uranium from plutonium and fission products in the Purex process.

1.3.2 Properties of Plutonium of Process Importance

The Purex process utilizes the preferential extractability of the plutonium (IV) and plutonium (VI) nitrates by TBP, and the virtual nonextractability of plutonium (III) nitrate to separate plutonium from uranium and the associated fission products.

The dissolution of irradiated uranium fuel elements in nitric acid results in a solution in which the plutonium is chiefly in the (IV) valence state.

Solutions of trivalent (blue-violet), tetravalent (brown-green), pentavalent (colorless), and hexavalent (pink-orange) plutonium have been produced. Plutonium (V) is unstable, and soon disappears by disproportionation to other valence states. Plutonium (III) is more stable than plutonium (V), but in the presence of mild oxidants is converted to plutonium (IV). Both plutonium (IV) and plutonium (VI) nitrates can be made to distribute preferentially from an aqueous solution salted with nitric acid into TBP in the same manner as $UO_2(NO_3)_2$, while the plutonium (III) nitrate always favors the aqueous phase. Plutonium (IV) and plutonium (VI) form complex compounds in solution with 2 molecules of TBP. Plutonium (VI) acts as a plutonyl ion, PuO_2^{+2}, and forms a complex with 2 molecules of TBP similar to that formed by uranium. The solvent extractability of the (IV) and (VI) valence states makes possible the separation of plutonium from the fission products, while the relatively easy reduction of plutonium to the virtually nonextractable (III) valence state makes possible the separation of plutonium from uranium in the Purex process.

---

*Organic phase is often referred to as solvent or extractant as required for clarification of the text. Some aqueous streams are used as solvents or extractants of specific constituents. Supportive text of these terms should clarify meaning.

1.3.3 Properties of Neptunium of Process Importance

The Purex Plant utilizes the preferential extractability of the neptunium (IV) and neptunium (VI) nitrates by TBP, and the nonextractability of neptunium (V) to separate neptunium from plutonium, uranium, and the majority of the fission products. Further separation from fission products and thorium is attained by preferential sorption of neptunium (VI) to Amberlite IRA-97 ion exchange resin.

The dissolution of irradiated fuel elements in nitric acid results in a solution in which the neptunium is chiefly in the (V) valence state.

Neptunium (V) is the most stable state and its nitrate solution is emerald green in color.

1.3.4 Properties of Fission Products of Process Importance

Fission products such as I-131, I-129, Kr-85, C-14, and Xe-131m are volatilized from the dissolver during uranium metal dissolution. A silver reactor and acid absorbers collect part of these fission products, while the remainder is released to the atmosphere. Iodine-131 and Xe-131 have such short half-lives that they are essentially decayed prior to processing. Ruthenium-103 and -106, tritium, and Sb-125 are partially volatilized, and except for Sb-125, are essentially collected from the off-gases prior to release. Part of the Sb-125 is collected in the silver reactor, part in the backup facility acid absorption towers, and a small amount (presently unknown) is released to the atmosphere.

The fission products remaining in the metal solution are, in general, relatively inextractable into TBP, even when the aqueous phase contains a salting agent, and thus largely remain in the aqueous phase at the conditions under which plutonium and uranium are extracted. The presence of residual fluoride from the coating removal process in the uranium feed provides a "tonic" effect for increased ZrNb-95 decontamination in the first cycle of the solvent extraction system. Most of the iodine remaining in the feed is extracted into the organic stream and is later removed with the carbonate-permanganate wash.

1.3.5 Decontamination

The gamma-emitting fission products associated with irradiated uranium fuel elements are reduced by factors of 1×10^7 for uranium, $>1 \times 10^8$ for plutonium, and $>1 \times 10^8$ for neptunium. Uranium is separated from plutonium product by a factor of $>1 \times 10^7$. Plutonium is separated from uranium product by a factor of $>4 \times 10^4$.

The factor by which the concentration of radioactive contaminants is reduced is termed the decontamination factor (DF), which can be expressed mathematically as follows:

$$DF = \frac{\text{Contaminant radioactivity initially present}}{\text{Contaminant radioactivity present at step in consideration}}$$

Either the beta or gamma radiations may be used as an index of the fission product radioactivity present, and the decontamination thus determined is called the beta DF or gamma DF. A logarithmic method of expressing decontamination factors (dF) is also used, and is expressed as follows:

$$dF = \log_{10} (DF)$$

Therefore, a DF of 10^5 is equivalent to a dF of 5; a DF of 20 equals a dF of 1.3; etc.

1.4 PUREX PROCESS DESCRIPTION

Figure 1-1 is a process flow diagram of the Purex process, including feed preparation, solvent extraction, solvent treatment, neptunium ion exchange, acid recovery, and waste handling steps. Individual parts of the process are discussed in the following subsections.

This flow diagram shows the code letters usually used to identify the main process streams in the Purex process. For example, the HAF stream is the uranium-plutonium feed stream to the HA column, the first solvent extraction column in the process. The first two letters (or numeral plus one or two letters) of this code identify the equipment piece or cycle (the HA column in the preceding example). The last letter (or two-letter group) identifies the stream. Influent stream abbreviations end in F, X, R, S, or IS, which stand for feed (uranium, plutonium, or neptunium), extractant, recycle, scrub, and intermediate scrub, respectively. Effluent stream abbreviations end in P, U, N, W, D, A, or C, which stand for plutonium or product, uranium, neptunium, waste, distillate, acid, and concentrate, respectively. Effluent streams containing uranium, plutonium, and neptunium end only in P. Thus, the HAP is the effluent stream from the HA column containing uranium, plutonium, and neptunium.

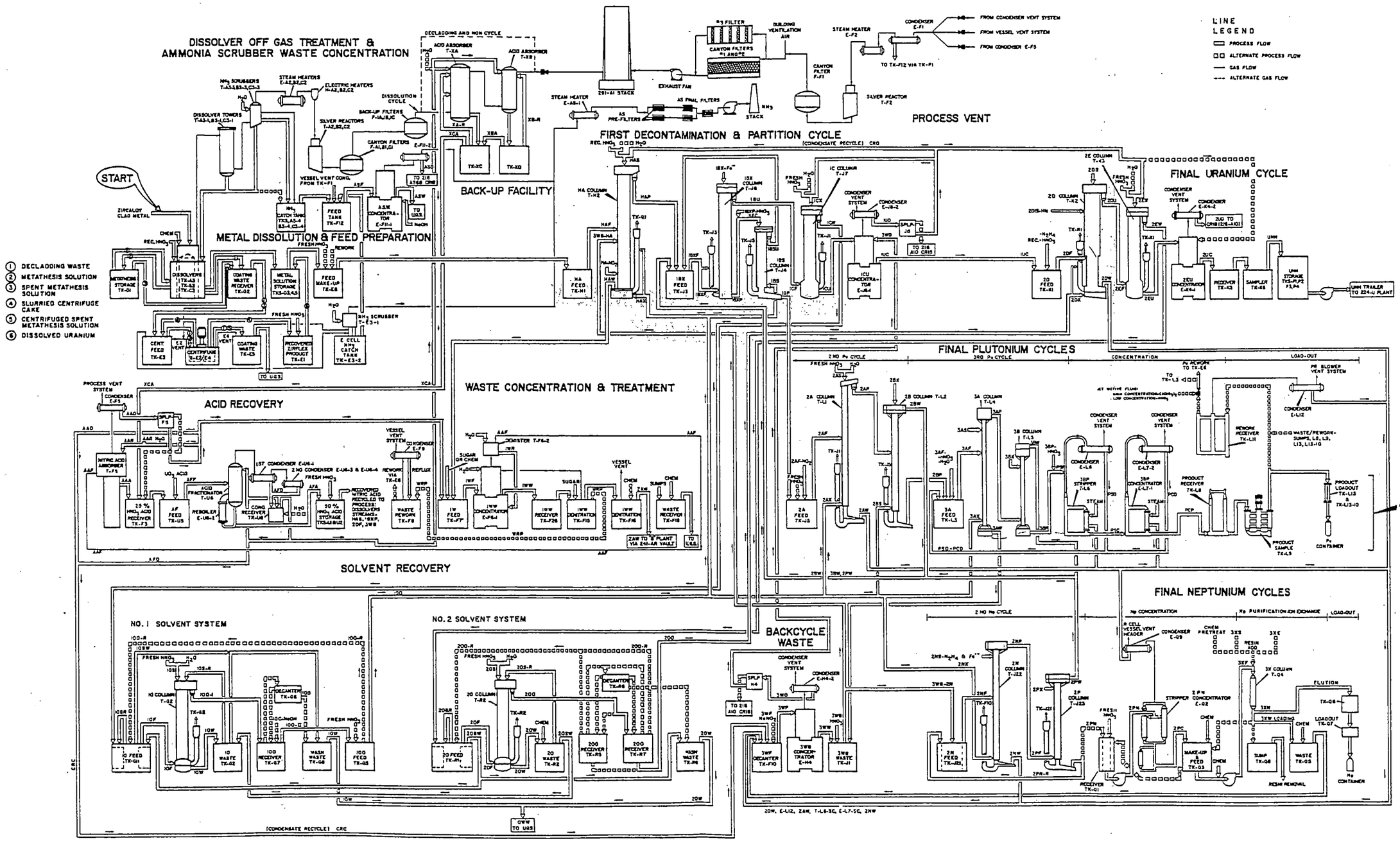

RCP 7906-6

FIGURE 1-1. Purex Process Flow Diagram.

THIS PAGE INTENTIONALLY
LEFT BLANK

1.4.1 Feed Preparation

The purpose of the feed preparation process is to prepare a solution from the irradiated fuel elements which is suitable as a feed to the solvent extraction battery. The feed preparation process includes the following steps:

- The Zircaloy jackets are removed by dissolution in a boiling solution of 5.5M ammonium fluoride and 0.5M ammonium nitrate. The resulting jacket removal waste is processed through a centrifuge to recover small amounts of uranium and plutonium which react with the fluoride during jacket removal. The waste is then reacted with caustic to remove ammonia and sent to the 242-A Evaporator for concentration to a slurry acceptable for storage in underground double-shell tanks.

- The slurried centrifuge cake and the declad fuel elements are contacted with potassium hydroxide to convert the fluoride compounds to oxide compounds (metathesis). Most of the fluoride is transferred in the waste from this operation as soluble potassium fluoride, thus minimizing the corrosion rate during cake or uranium metal dissolution and subsequent processing operations.

- The remaining uranium metal and the centrifuge cake containing plutonium, neptunium, and fission products are dissolved in 10.4M and 12.2M nitric acid, respectively, with sufficient aluminum nitrate nonahydrate to complex any residual fluoride remaining from the metathesis step.

- The dissolver solution is moved to feed tanks where it is sampled for product accountability. Any high exposure "spike" fuel is blended with decontaminated uranium solution to meet criticality specifications for processing in the solvent extraction system.

1.4.2 Solvent Extraction

Solvent extraction pulse columns are employed in the Purex process to effect the decontamination necessary to produce acceptable products. A number of cycles make up the total solvent extraction process.

1.4.2.1 First Decontamination and Partition Cycle

The first decontamination and partition cycle separates the feed into a fission product-containing aqueous stream (HAW), a uranium and neptunium aqueous stream (1CU), and a plutonium aqueous stream (1BP).

The feed solution (HAF) from the feed preparation section is continuously fed to the intermediate feed point of the HA column. This feed contains uranium, plutonium, neptunium, fission products, and nitric acid salting agent. A countercurrent flow of TBP in a hydrocarbon diluent (HAX) rises through the aqueous phase in the column, and extracts the uranium, plutonium, and neptunium into the solvent phase, but leaves the radioactive fission products quantitatively in the aqueous phase. A back-cycle waste stream (3WB) containing some product from other column waste streams and nitric acid is added to the HA column just below the feed point to provide most of the salting strength in the column. An aqueous scrub stream (HAS), introduced at the top of the column, further decontaminates the uranium, plutonium, and neptunium by washing fission products back from the solvent phase to the aqueous phase. Uranium is in the (VI) valence state, and plutonium is chiefly in the (IV) valence state in the HA column. A small stream of sodium nitrite is added near the bottom of the column to oxidize neptunium to the (VI) valence state to effect a more complete extraction into the organic. The organic stream (HAP) containing the uranium, plutonium, and neptunium overflows to the feed tank of the partition cycle.

This organic stream is mixed with four organic recycle streams (1BSU, 2BW, 3BW, 2PW) to form the 1BXF feed stream, which is pumped to the bottom of the partitioning column (1BX). An aqueous stream, containing ferrous sulfamate reductant added to the top of the 1BX column to reduce plutonium to the inextractable (III) valence state, descends through the column and carries the plutonium from the bottom of the 1BX column to the top of the 1BS column in the 1BXP stream. The small amount of uranium in this stream is scrubbed out by contacting with organic flowing up through the 1BS column. The aqueous plutonium stream (1BP) leaves the bottom of the column, then goes to the second plutonium cycle. The organic stream (1BSU) leaving the 1BS column goes back to the 1BX column feed tank.

The uranium and neptunium leave the top of the 1BX column in the organic stream, and go to the bottom of the 1C column where they are countercurrently stripped into a dilute acid scrub stream (1CX), which is then fed to the 1CU concentrator where it is concentrated as feed (1UC) for the final uranium cycle.

1.4.2.2 Final Uranium Cycle

The final uranium cycle completes the decontamination of uranium from neptunium, residual traces of radioactive fission products, and plutonium with uranium from the partition cycle.

Nitric acid and hydrazine are added to the 1UC stream to increase the salting strength and provide a holding reductant in the feed (2DF) to the 2D column. Organic, added at the bottom of the column, extracts uranium from the feed as the organic moves up through the 2D column, and overflows (2DU) to the 2E column. A scrub stream (2DIS) containing hydroxylamine nitrate as a reductant, is added to the top of the 2D column to reduce any

plutonium to the inextractable (III) valence state. The column is operated at a low organic-to-aqueous ratio (L/V) to keep the organic saturated with uranium, thus forcing fission products, neptunium, and plutonium to leave in the aqueous 2DW stream enroute to the backcycle waste.

The uranium in the 2DU stream is stripped by a dilute acid aqueous scrub stream (2EX) in the 2E column, and is then concentrated in the 2EU concentrator to form the UNH product which is shipped to the 224-U Building (UO_3 Plant) for calcination.

1.4.2.3 Second and Third Plutonium Cycles

The second and third plutonium cycles complete the decontamination of the plutonium. The aqueous product stream from the 1B scrub column (1BP) contains plutonium in the (III) valence state. This plutonium is oxidized to the (IV) valence state in the 2AF tank (TK-J5) by the addition of sodium nitrite and, sometimes, nitric acid. The oxidized solution (2AF) is fed to the center feed point of the 2A column. In the bottom section of the column, the plutonium is extracted into a TBP-NPH solution (2AX). In the upper portion of the column, the organic stream is contacted with nitric acid solution (2AS) which is fed to the top of the column to scrub fission products from the plutonium. The organic solution cascades to the bottom of the 2B column where the plutonium is transferred back into the aqueous phase by countercurrent extraction with an aqueous strip solution (2BX) containing hydroxylamine nitrate and hydrazine as a reductant and holding reductant, respectively. A second organic stream (2BS) is added near the bottom of the column to provide additional uranium decontamination.

The aqueous plutonium product from the 2B column (2BP) flows to the 3A column feed tank (TK-L3) where additional nitric acid is added to form the (3AF) feed stream which is introduced to the midpoint of the 3A column. Organic is added at the bottom, and extracts plutonium from the feed as it moves up through the 3A column to form the product stream (3AP). A scrub stream (3AS) is added to the top of the column to scrub fission products from the organic, and flows countercurrently to form the 3AW stream.

The 3AP stream containing the plutonium goes to the bottom of the 3B column, where it is stripped back into an aqueous dilute nitric scrub stream (3BX). The plutonium nitrate leaves the bottom of the 3B column as the 3BP stream. Aqueous wastes from the second and third plutonium cycles (2AW, 3AW) are routed to the backcycle waste and the organic waste streams (2BW, 3BW) are recycled to the 1BX feed tank.

The 3BP stream is butted with nitric acid to prevent plutonium polymerization during subsequent process steps. The plutonium nitrate is then stripped of organic in the 3BP stripper and concentrated to its Purex product form in the 3BP concentrator. Process condensates from the 3BP stripper and concentrator are routed to the third plutonium cycle feed tank for rework.

0013275.0471

1.4.2.4 Final Neptunium Cycle

Neptunium is collected from the backcycle waste on a batch basis and decontaminated in two solvent extraction columns and an ion exchange column. Collection of neptunium (operating Phase I) is started by diverting part of the backcycle waste concentrate (3WB) to the midpoint of the 2N column. A scrub stream (2NS) containing ferrous sulfamate reductant is then introduced at the top of the column and an organic stream (2NX) is introduced at the bottom. These streams flow countercurrently through the column while the neptunium is reduced to the extractable (IV) valence state and the plutonium is reduced to the inextractable (III) valence state.

The neptunium leaves the top of the 2N column in the organic 2NP stream, enters the 2P column where it is stripped back into dilute nitric acid, and is returned as 2PN-R to the 2N column feed tank. The major portion of the plutonium and fission products exit the 2N column in 2NW, which is routed to the backcycle waste system.

When a batch of neptunium (∿2,000 grams) is collected, the feed from the backcycle waste to the 2PN feed tank is replaced with nitric acid and the two columns are operated as Phase II for neptunium decontamination. The 2NS and 2PX scrub stream flow rates are increased somewhat, and the columns are operated until the fission product and plutonium content of the 2PN-R is reduced to an acceptable intermediate level. Most of the uranium exits the system in the organic stream leaving the 2P column (2PW) to the 1BX feed tank during Phases I and II.

When the collected neptunium is sufficiently decontaminated, Phase III is started to remove neptunium. During Phase III, the scrub stream flow rates are reduced to a minimum, nitric acid is used as feed to the 2N column, and the 2PN-R is routed to Q Cell as 2PN. In Q Cell, the 2PN is concentrated and loaded onto an ion exchange column which contains Amberlite IRA-97 ion exchange resin. The column is scrubbed with several streams to attain final fission product and plutonium decontamination and is eluted with dilute nitric acid giving a product solution containing 40 g Np/ℓ. Loading and scrub waste streams are collected, sampled, and routed to the backcycle waste system or to underground storage, depending upon product content. The forecut and after-cut from the elution step are recycled to the 2PN stripper-concentrator.

1.4.3 Solvent Treatment

The solvent treatment section of the plant reclaims the combined TBP and hydrocarbon diluent for recycle to the process. Two solvent treatment systems are employed: system 1 processes the solvent from all of the solvent extraction cycles, except for the final uranium cycle, which is processed by system 2.

Solvent treatment system 1 receives organic (1CW) from the 1C column. The organic is contacted by passing through packing in TK-G1 concurrent with a solution of sodium carbonate and potassium permanganate to remove fission products and degraded organic. The organic is then scrubbed with dilute nitric acid in the 1O column and returned to the process as HAX, 1BS, 2AX, 2BS, 3AX, and 2NX.

System 2 receives organic (2EW) from the 2E column. This liquid is treated similarly as in system 1 and returned to the process as 2DX. Since there are fewer fission products and degradation products associated with this solvent, the spent wash solutions from this system are usually transferred to system 1 for reuse.

1.4.4 Backcycle Waste System

Aqueous waste streams containing nitric acid, uranium, plutonium, neptunium, fission products from various columns in the plant and condensates from some plant condensers, are collected and concentrated in the backcycle waste system. Streams entering the backcycle waste system include, 2DW, 2AW, 3AW, and 2NW, T-L6 and E-L7-1 tube bundle steam condensates, and condensates from condensers E-F5, E-U6, E-L12, and E-Q9. The 3AW stream is fed to the backcycle waste concentrator receiver tank, while all other streams are fed to the concentrator feed tank. Part of the concentrated waste (3WB) containing high acid concentration is fed to the HA column to provide salting strength and for product recovery. The remaining 3WB is fed to the final neptunium cycle for collection of neptunium.

1.4.5 Acid Recovery and Waste Treatment

The principal aqueous process wastes from the Purex Plant receive the following treatment:

- Highly radioactive waste (HAW) containing nitric acid is concentrated, with simultaneous recovery of the acid. The concentrate is denitrated with sugar with partial recovery of the NO_x gases produced.

- Organic wash and sump wastes are made alkaline.

- Ammonia scrubber waste collected during coating dissolution and coating waste treatment is evaporated, driving off ammonia which is then absorbed and condensed with the water overheads from the evaporator. The remaining concentrated waste containing the radionuclides is periodically emptied from the evaporator and routed to underground storage.

- Process condensates from high-level waste concentration, backcycle waste concentration, acid frationation, and partition cycle concentration are recycled as scrub streams to various columns instead of being discharged to cribs (covered, rock-filled trenches). However, condensate from the final uranium cycle is discharged to a crib because of its very low fission product concentration.

- Recovery of nitric acid from dissolver off-gas NO_x is accomplished by two acid absorbers (T-XA and T-XB). This dilute nitric stream is routed to the vacuum fractionator (T-U6) with the dilute acid recovered from the high-level radioactive waste. These streams plus nitric acid recovered at the Uranium Oxide Plant are processed in the vacuum fractionator to produce a 10.4M acid, which is reused in the plant.

9413275.0473

CONTENTS

CHAPTER 2.0 PUREX PLANT DESCRIPTION

2.1 SITE DESCRIPTION.....2-1

2.2 PUREX PROCESSING BUILDING, 202-A.....2-1
2.2.1 Canyon.....2-9
2.2.2 Galleries.....2-11
2.2.3 Product Removal Room.....2-12
2.2.4 Q Cell.....2-13
2.2.5 N Cell.....2-13
2.2.6 R Cell.....2-13
2.2.7 U Cell.....2-13
2.2.8 Service Areas.....2-16
2.2.9 Laboratory.....2-16
2.2.10 Utilities.....2-18
2.2.11 Fire Protection System.....2-22
2.2.12 Ventilation.....2-23

2.3 OUTSIDE FACILITIES.....2-30
2.3.1 Air Ventilation System, 291-A.....2-30
2.3.2 293-A Building.....2-31
2.3.3 294-A Building.....2-32
2.3.4 212-A Building.....2-32
2.3.5 213-A Building.....2-32
2.3.6 Contaminated Equipment Storage Tunnels, 218-E-14 and 218-E-15.....2-32
2.3.7 Uranium Storage Tank Farm, 203-A.....2-33
2.3.8 205-A Building.....2-33
2.3.9 Acid Fractionator Building, 206-A.....2-33
2.3.10 Chemical Tank Farm, 211-A.....2-34
2.3.11 Chemical Storage Warehouse, 2714-A.....2-34
2.3.12 Low-Level Radioactive Liquid Effluent Disposal Facilities.....2-35

FIGURES:
2-1 Map of Hanford Area.....2-2
2-2 Detailed Map of 200 East Area.....2-3
2-3 Purex Area Plot Plan.....2-5
2-4 Cross Section and Ventilation Schematic Diagram of the 202-A Building.....2-7
2-5 Plan Views of the 202-A Building.....2-8
2-6 Product Removal (PR) Room--Plan View.....2-14
2-7 Q Cell Neptunium Purification Area--Plan View.....2-15
2-8 202-A Building Analytical Laboratory--Plan View.....2-17
2-9 Schematic of Ventilation System 1.....2-24

CONTENTS (Continued)

2-10 Schematic of Ventilation System 2.....2-27
2-11 Schematic of Ventilation System 3.....2-28
2-12 Schematic of Ventilation System 4.....2-29
2-13 Typical Liquid Disposal Crib.....2-36

TABLES:

2-1 Tanks in 211-A Tank Farm.....2-34

9413275.0175

CHAPTER 2.0 - PUREX PLANT DESCRIPTION

This chapter presents a general description of the buildings and other facilities constituting the Purex Plant with emphasis on architecture, general equipment layout, and utility services. Detailed descriptions of equipment are presented in Chapter 3.0.

2.1 SITE DESCRIPTION

The Purex Plant is located in the southeast corner of the 200 East Area in the center of the 570-square-mile Hanford Site (Figure 2-1) in southeastern Washington State. In the Purex Plant, irradiated fuel elements are processed for separation and recovery of uranium, plutonium, and neptunium. Major facilities in 200 East Area (Figure 2-2) include: Purex Plant; the Waste Fractionization and Encapsulation Plant (221-B and 225-B Buildings), where strontium and cesium are separated from reprocessing wastes and encapsulated; the Waste Evaporator-Crystallizer (242-A Building), used for dehydration of liquid radioactive waste; and tank farms used for storage of high-level waste salt crystals and solutions.

The Purex Plant is a complex of several buildings and support facilities. A detailed map of the plant is given in Figure 2-3.

2.2 PUREX PROCESSING BUILDING, 202-A

The 202-A Building, in which the fuels are reprocessed, is a reinforced concrete structure 1,005 feet long, 119 feet wide at its maximum, and 100 feet high, with about 40 feet of this height below grade. It consists of three main structural components: (a) a thick-walled, concrete "canyon" in which the equipment for radioactive processing is contained in cells below grade; (b) a pipe, sample, and storage gallery section; and (c) a steel-and-transite annex that houses offices, process control rooms, laboratories, and the building services. The basic features and arrangement are shown by vertical cross section and plan views in Figures 2-4 and 2-5, respectively. The portion of the canyon below grade is subdivided into a row of process equipment cells paralleled by a ventilation air tunnel and pipe tunnel through which intercell solution transfers are made. The air tunnel exhausts the ventilation air from the cells to the main ventilation filters and stack.

Running nearly the full length of the canyon building above the cells and the pipe trench is a craneway for three gantry-type maintenance cranes that are used to handle cell cover blocks, remotely remove and replace process cell equipment, and charge irradiated fuels into the dissolvers.

The galleries contain service piping to the cells, samplers for obtaining process samples, and electrical switchgear.

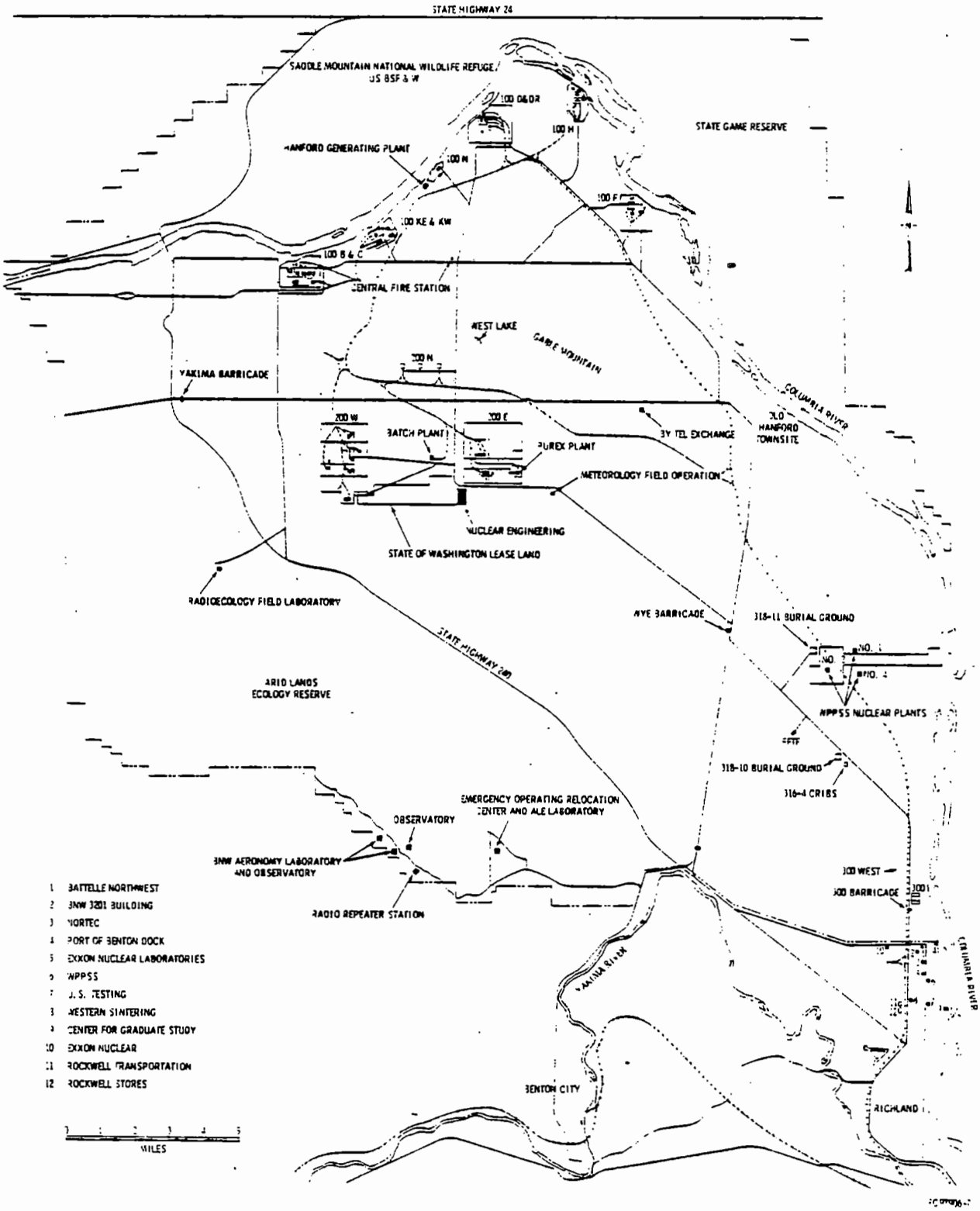

FIGURE 2-1. Map of Hanford Area.

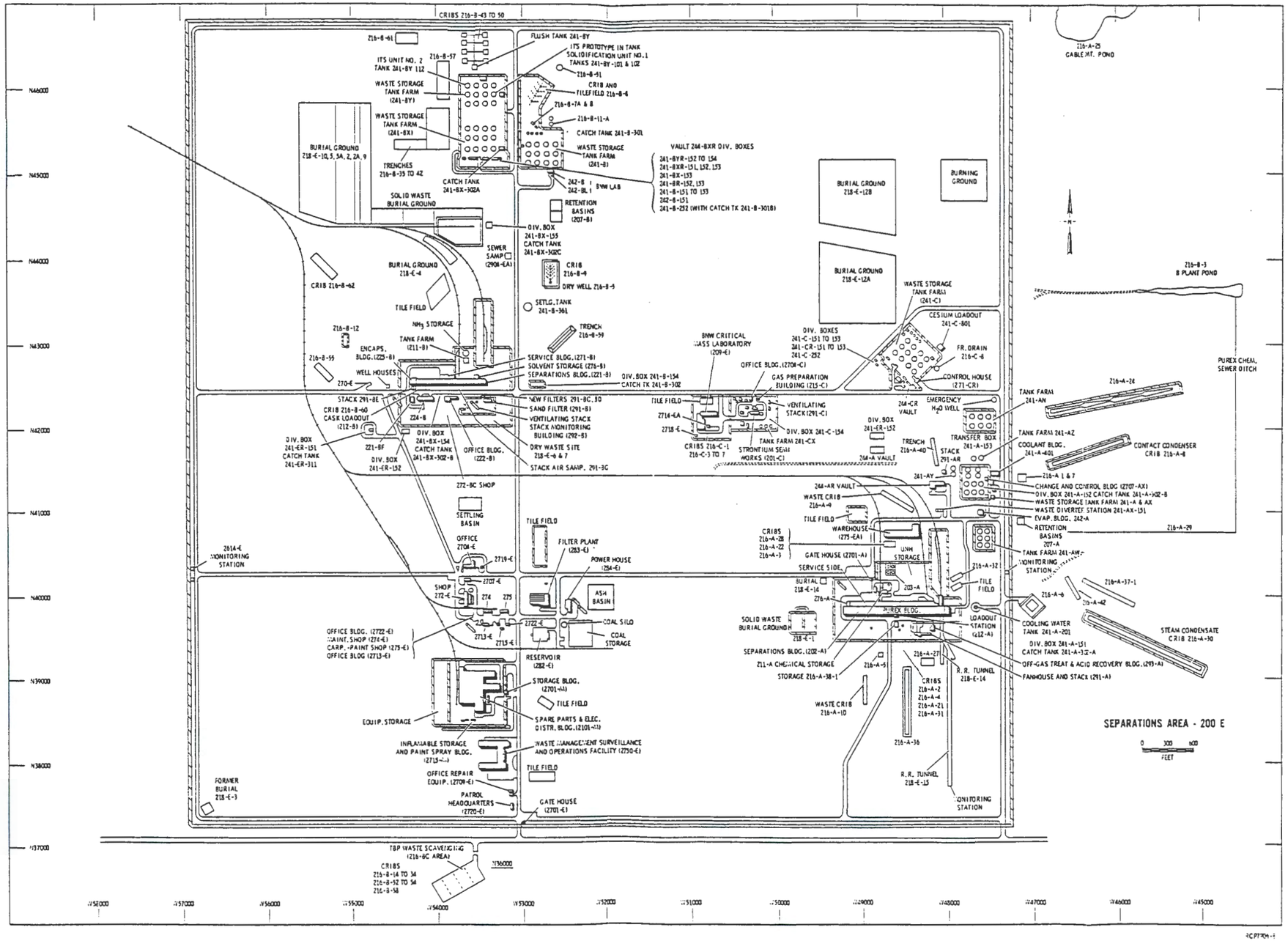

FIGURE 2-2. Detailed Map of 200-East Area.

THIS PAGE INTENTIONALLY
LEFT BLANK

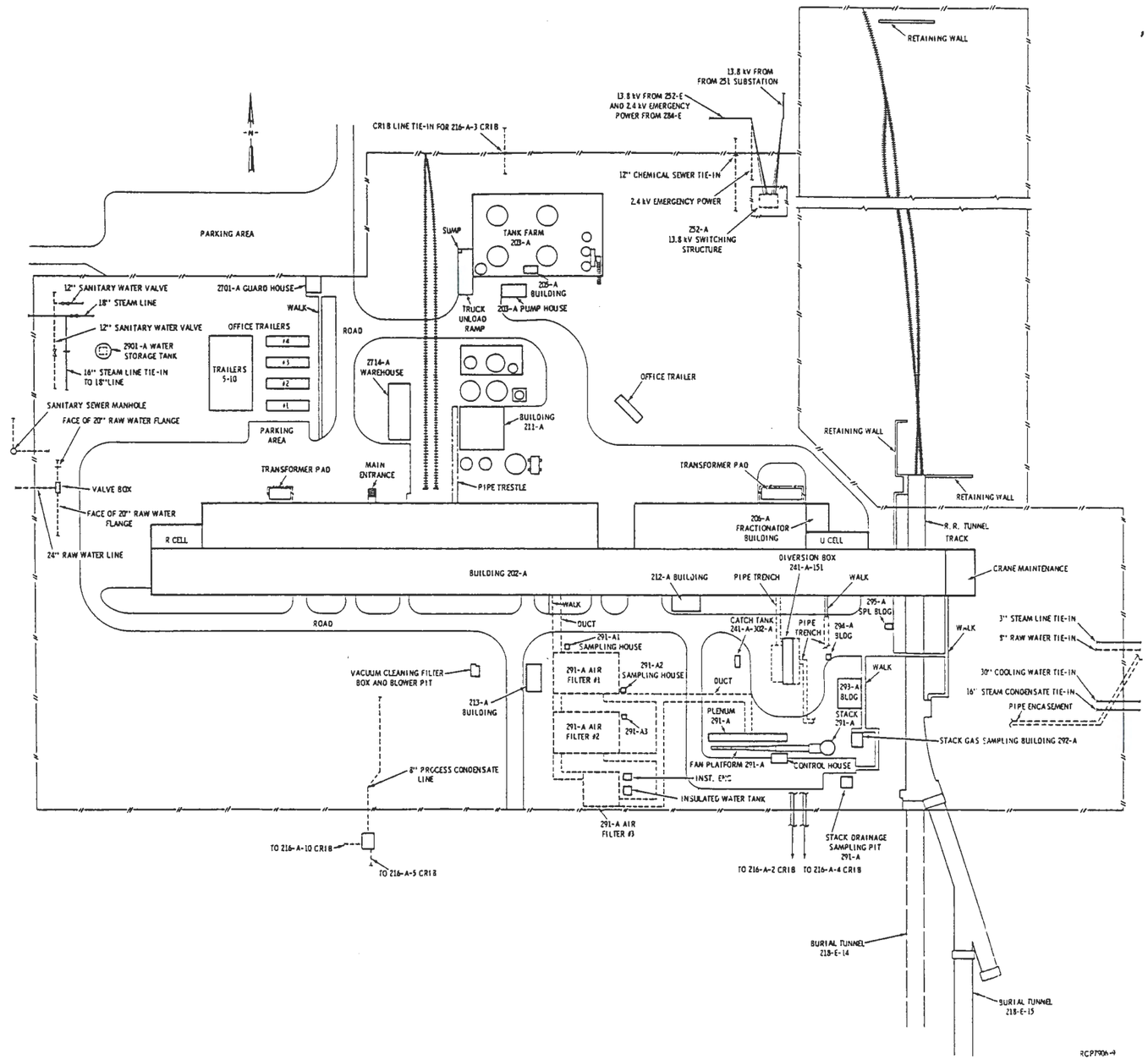

DOE-Richland, WA

FIGURE 2-3. Purex Area Plot Plan.

THIS PAGE INTENTIONALLY
LEFT BLANK

9413275.0480

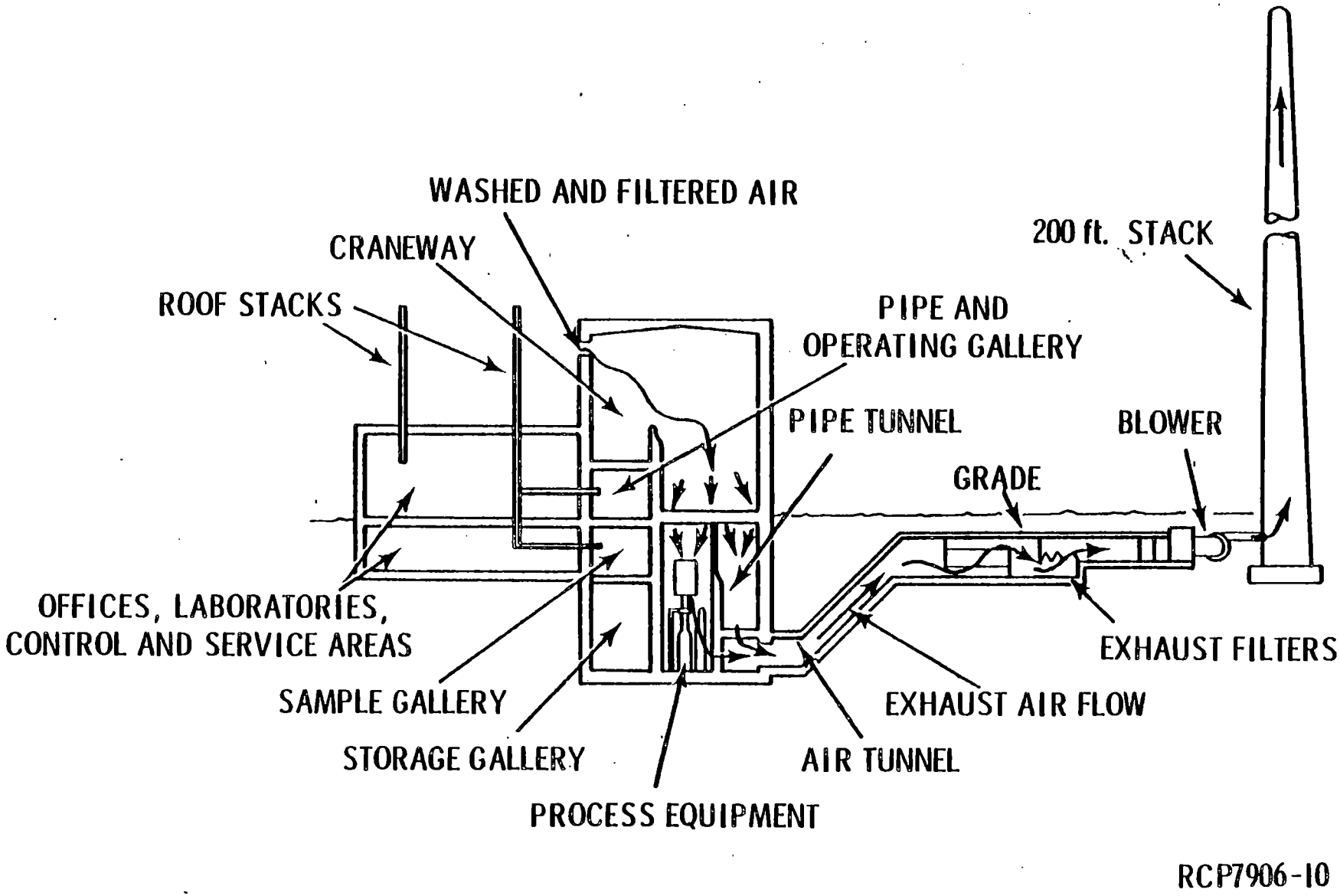

FIGURE 2-4. Cross Section and Ventilation Schematic Diagram of the 202-A Building.

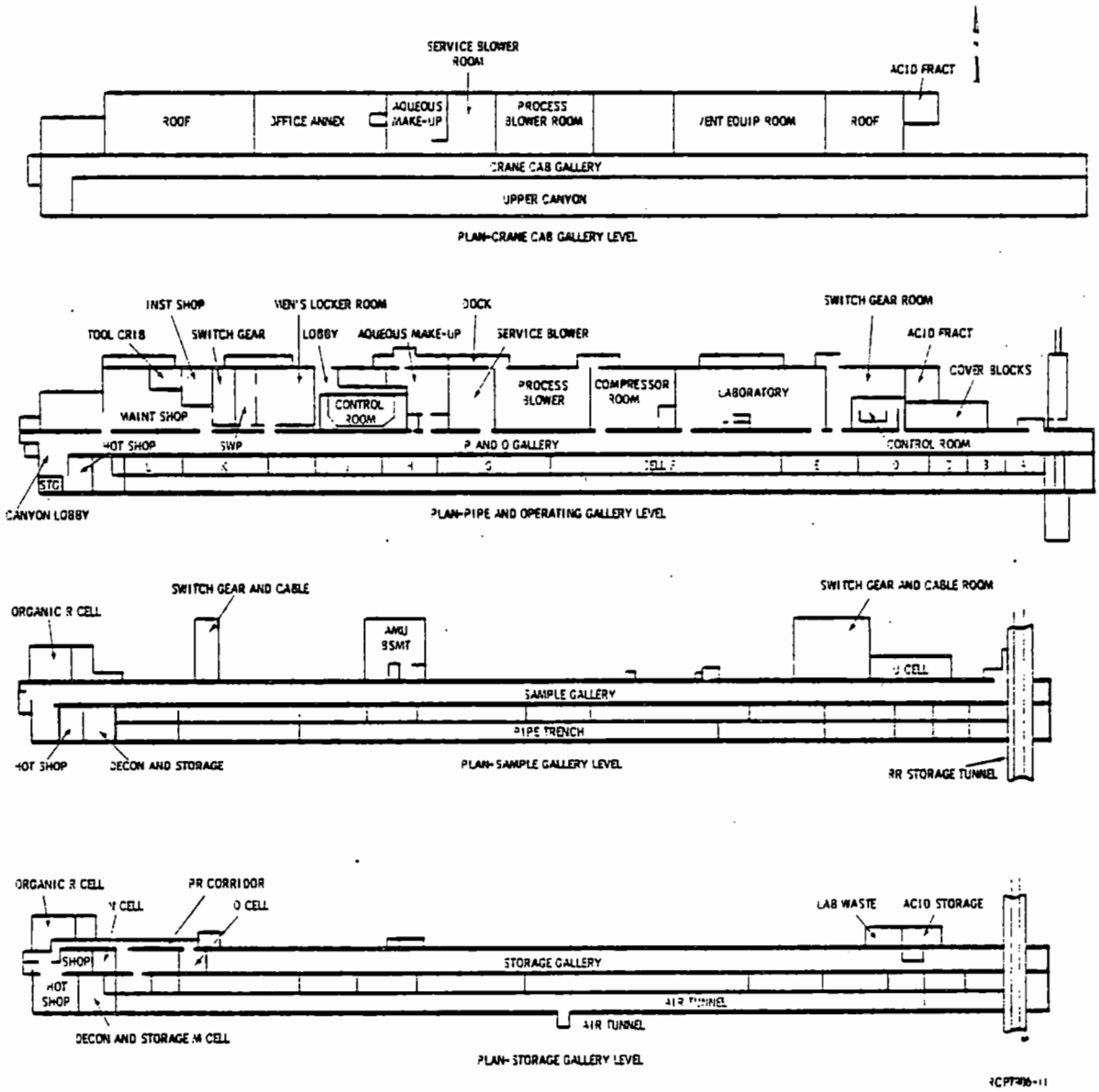

FIGURE 2-5. Plan Views of the 202-A Building.

The service section next to the galleries consists of two separate annexes. The larger annex contains the maintenance shops, offices, lunchroom, locker room, radiation zone entry lobby, blower room, a switchgear room, compressor room, central control room, and the aqueous makeup (AMU) facility. The smaller annex contains the analytical laboratory, the head-end control room, and a switchgear room. These general features are illustrated in Figure 2-5.

2.2.1 Canyon

The canyon contains a single row of 12 process cells, 813 feet long overall. The cells run east and west with each cell 14 feet wide and 39.5 feet deep; lengths of the cells vary depending on function. In Cells A, B, and C (the first three cells from east to west), fuels are chemically declad and dissolved. These cells are essentially identical in function and equipment content. In addition to the dissolver, each cell contains dissolver off-gas treatment equipment including a downdraft condenser, ammonia scrubber and absorber, steam and electric heaters, silver reactor, and filter.

Cells D and E are used for preparation of the metal solution feed for the solvent extraction columns. Also in E Cell, the coating waste is centrifuged and reacted with caustic prior to transfer to underground storage. The off-gas from the caustic reaction is water scrubbed to remove ammonia, and the centrifuge cake is metathesized and dissolved to recover uranium and plutonium.

F Cell is used for the recovery of nitric acid used in the process, for treatment of the aqueous high-level waste from the fuel processing steps, and to concentrate ammonia scrubber wastes from the dissolver and E Cell.

In G Cell, all the spent process organic solvent, except that from the second uranium cycle, is washed and prepared for reuse.

The solvent extraction processing steps are carried out in H, J, K, and L Cells, which contain the tanks, pulse columns, concentrators, and auxiliaries needed in the continuous countercurrent aqueous-organic stream flow operations.

The pool cell for storing contaminated equipment, M Cell for equipment decontamination, and the "hot" maintenance shop are located on the west end of the cell row at cell floor level. M Cell is separated from the hot shop by a 3-foot-thick concrete wall.

A 6-foot-thick concrete wall separates the cells from the galleries. The wall above the cells is 4 feet thick, and the extension of this wall upward forms a shielded cabway (crane cab gallery) for the two gantry-type 40-ton-capacity master cranes. A 40-ton-capacity slave crane, which may be operated either directly or remotely from the master crane

controls, is located on railways above the master crane level. Crane maintenance platforms are located at crane cab level on both east and west ends of the craneway.

At the east end of the canyon is the basin where irradiated fuel may be stored either dry or under water. Casks containing the fuel are brought into the canyon through a railroad tunnel running north and south on the west side of the storage basin. The tunnel, which is also the route for removing and delivering process equipment, connects to a railroad spur outside the 202-A Building.

The pipe tunnel, or "hot" pipe trench, contains an array of pipe headers connecting the cells permitting intercell solution transfers, and also contains piping for transfers to and from cells to facilities external to Purex. The pipe trench, which parallels the cells, is 30 feet deep and 12 feet wide at the top. It narrows to 11 feet as the wall between the cells and pipe trench widens from 1.5 feet to 2.5 feet. The wall between the cells and trench supports one edge of the 3-foot-thick concrete blocks which cover the cells and the 2.5-foot-thick blocks which cover the trench.

The air tunnel, which lies directly under the pipe trench, is 11 feet wide and 7.5 feet high. Through this tunnel, air from the cells is drawn to the ventilation exhaust filters and the outside stack. The south wall of the canyon at the air tunnel and pipe trench levels is 5.5 feet thick. From the canyon deck level to the master crane level, the south wall is 4 feet thick and narrows to 2.5 feet from the crane level to the roof. The roof is formed as a concrete beam 2.5 feet thick at the edges and 1 foot thick in the center. No internal trusses support the canyon roof.

2.2.1.1 Canyon Piping

Short intracell transfers between adjacent pieces of equipment are made by direct jumper piping connections within the cell. Longer transfers require jumpers to the pipe trench wall, and the connections are made via the trench piping which terminates on the trench wall opposite the equipment piece being connected. The pipe trench also contains "hot" process and servicing headers for the equipment in the cells. The pipe trench contains three spare piping systems in addition to the spare process line intended for occasional use. These spare systems are known as General Spare Systems 1, 2, and 3. System 1 consists of a series of lines bent in semiloops in the pipe trench. The ends of each semiloop penetrate the trench wall and terminate with male connectors inside the cells. Adjacent lines can be connected with short "hairpin" jumpers to accommodate most jet or pump transfers. With System 2, connectors exist on both pipe trench and cell sides of the line penetrations. By installing hairpin jumpers in the trench and cells, liquid transfers can be made as with System 1. System 3 consists of pipe stubs spaced at 40-foot horizontal intervals in the pipe trench. These stubs originate

as vertical connectors in the pipe trench and terminate with blanked ends outside the south shield wall of the building. By connecting Systems 2 and 3, it is possible to join canyon vessels to outside facilities.

2.2.1.2 Cell Washdown Nozzles

Washdown nozzles for decontamination are located in the cell walls 5 feet above the cell floors. Specially located nozzles are installed at different levels to aim at equipment with relatively high potentials for contamination. Flows from these special nozzles are controlled individually with controls separate from those of the main washdown nozzles.

2.2.1.3 Vessel and Condenser Vent Systems

Canyon vessels not used for boiling or denitration are vented to the vessel vent header which runs the length of the pipe trench. Vacuum on this header is maintained by a jet in F Cell. Boilup and denitration tanks for acid recovery and waste treatment in F Cell are exhausted through a condenser to a process vent system. All other tanks used for boiling solutions in the canyon are vented through condensers to the condenser vent header in the pipe trench. Vacuum on both boilup vent systems is maintained by separate jets located in F Cell. The jets on all three vent systems discharge to a condenser in F Cell where condensate is removed from the vent stream. Noncondensables are routed from the condenser through a heater, a silver reactor, and a filter, all in F Cell, before being discharged to the air tunnel. Vacuum on all of the vent systems is regulated by air bleed.

2.2.2 Galleries

The storage, sample, pipe and operating, and crane cab galleries parallel the north wall of the canyon and are located at different levels, one above the other. The storage gallery is 19.5 feet wide and has a floor area of 15,900 square feet, while the pipe and operating, crane cab, and the sample galleries are 20 feet wide and have floor areas of about 19,000 square feet each. The gallery locations with respect to the rest of the 202-A Building are shown in Figure 2-5.

2.2.2.1 Storage Gallery

This area is used primarily for storage of dry chemicals and spare equipment. A 5-ton-capacity elevator serves the storage and pipe and operating galleries, as well as the four floors of the aqueous makeup area.

2.2.2.2 Sample Gallery

The sample gallery contains remote equipment for taking process solution samples from the cell equipment. Samples are sent on a dumbwaiter to the sample receiving room in the analytical laboratory. A shielded

pipe chase behind the remote sampler boxes contains headers for recovered nitric acid, organic solvent, sampler drains, and sampler lines to and from cell equipment. Spares for the acid and solvent headers are also installed in the pipe chase. Unshielded lines bearing recovered solvent and process condensate are located on the wall above the pipe chase. Other facilities in the sample gallery include:

- Diaphragm-operated valves and rotameters for flow control of recovered acid, recycled process condensate, and solvent feeds to the columns.
- A centrally located dumbwaiter to convey solid waste material between the sample gallery and the outside loading dock.
- Two vacuum pumps located in the west end of the gallery for sampling air throughout the building.

9413275.0486

2.2.2.3 Pipe and Operating Gallery

The pipe and operating gallery (P and O gallery) provides space for the electrical switchgear, instrument racks, nonradioactive piping, and associated gang valves which serve the in-cell equipment. Since most of the valves are controlled from the control panels, only a few operations are required in the gallery. A few batch chemical addition tanks are located in this gallery.

Shortly after plant startup, a wall about 9 feet high was installed across the gallery opposite the middle of K Cell after the gallery west of the wall location had become contaminated. After cleanup, the wall was put in to serve as a ventilation barrier in case this area became contaminated in the future. Protective special work permit (SWP) clothing is required to be worn for entry to the area west of the wall, now known as the White Room.

2.2.2.4 Crane Cab Gallery

The crane cab gallery is located above the P and O gallery, and is the corridor of travel for the two master crane cabs. The south wall of the gallery shields the cabs and cab operators from canyon radiation. Crane maintenance platforms are located at both ends of the gallery.

2.2.3 Product Removal Room

The product removal (PR) room, which is used for filling shipping containers with plutonium nitrate solution, is located at the west end of the storage gallery adjacent to L Cell. This room is 41 feet long and 19.5 feet wide, and contains two plutonium sampler tanks (only TK-L9 is currently used) and a receiver tank shielded from the working area by concrete walls. The receiver tank (TK-L11) is used to collect various plutonium solutions for rework.

The container loading facilities and decontamination equipment are inside enclosures made of stainless steel panels containing glass windows. The equipment within the enclosures is operated from outside by extension handles on the valves. An overhead electric-powered hoist is used for handling the containers and for weighing and placing them in jackets before shipment or storage.

A doorway from the PR room provides access to L Cell for contact maintenance of the third plutonium cycle equipment. The room layout is shown in Figure 2-6.

2.2.4 Q Cell

The neptunium purification facility, known as Q Cell, is located in the west end of the storage gallery adjacent to the east wall of the PR room. As shown in Figure 2-7, Q Cell includes a control room, a shielded hot cell, a maintenance room with shielded access gloveboxes, a product loadout room, and an aqueous makeup (AMU) area. The AMU area is on a separate floor above the control room. Entry to Q Cell is from the SWP lobby.

2.2.5 N Cell

N Cell is located in the storage gallery west of the PR room. This cell was formerly used for plutonium product purification by ion exchange, but was replaced for this purpose by the L Cell third plutonium cycle. At present, N Cell is being modified for future use as a calcination facility for preparation of plutonium oxide.

2.2.6 R Cell

The equipment in R Cell is used to wash and prepare the organic waste stream from the second uranium cycle for reuse. R Cell, also designated as the "cold" solvent building, 276-A, is located at the northwest corner of the 202-A Building.

2.2.7 U Cell

U Cell, the acid storage vault, is located along the north wall of 202-A Building, just east of the head-end control room. It is constructed below grade with removable concrete blocks 1 foot above grade forming the roof. The cell has 1.5-foot-thick reinforced concrete walls and is 98 feet long, 20 feet wide, and 35 feet deep. It contains four large tanks: two for collecting and sampling low-activity laboratory waste, and two for storage of recovered nitric acid that is returned to the process through a header in the sample gallery. Entry to the cell is from the sample gallery through an electrically-operated door and an air lock, or through a hatchway at cover block level.

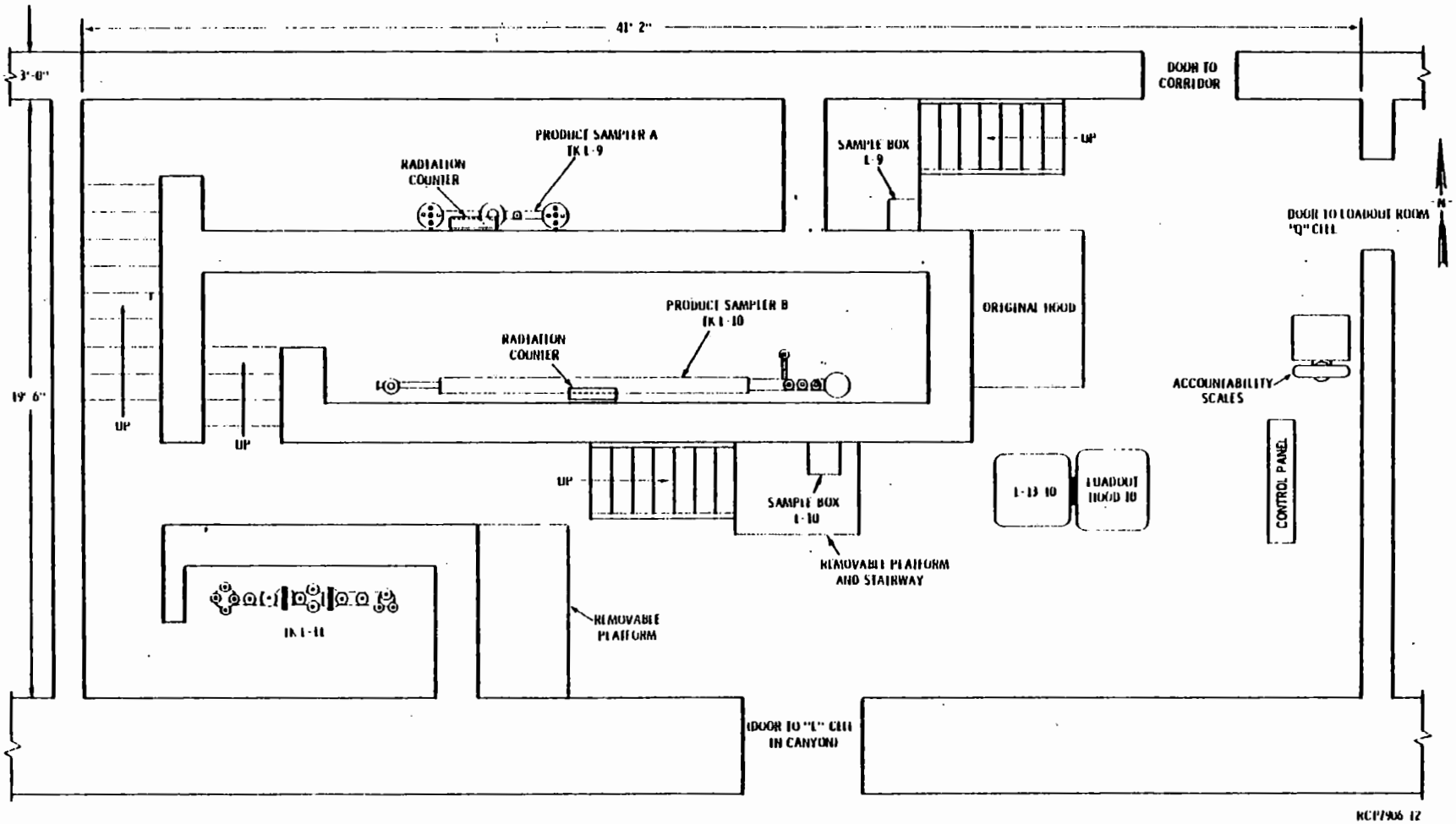

FIGURE 2-6. Product Removal (PR) Room - Plan View.

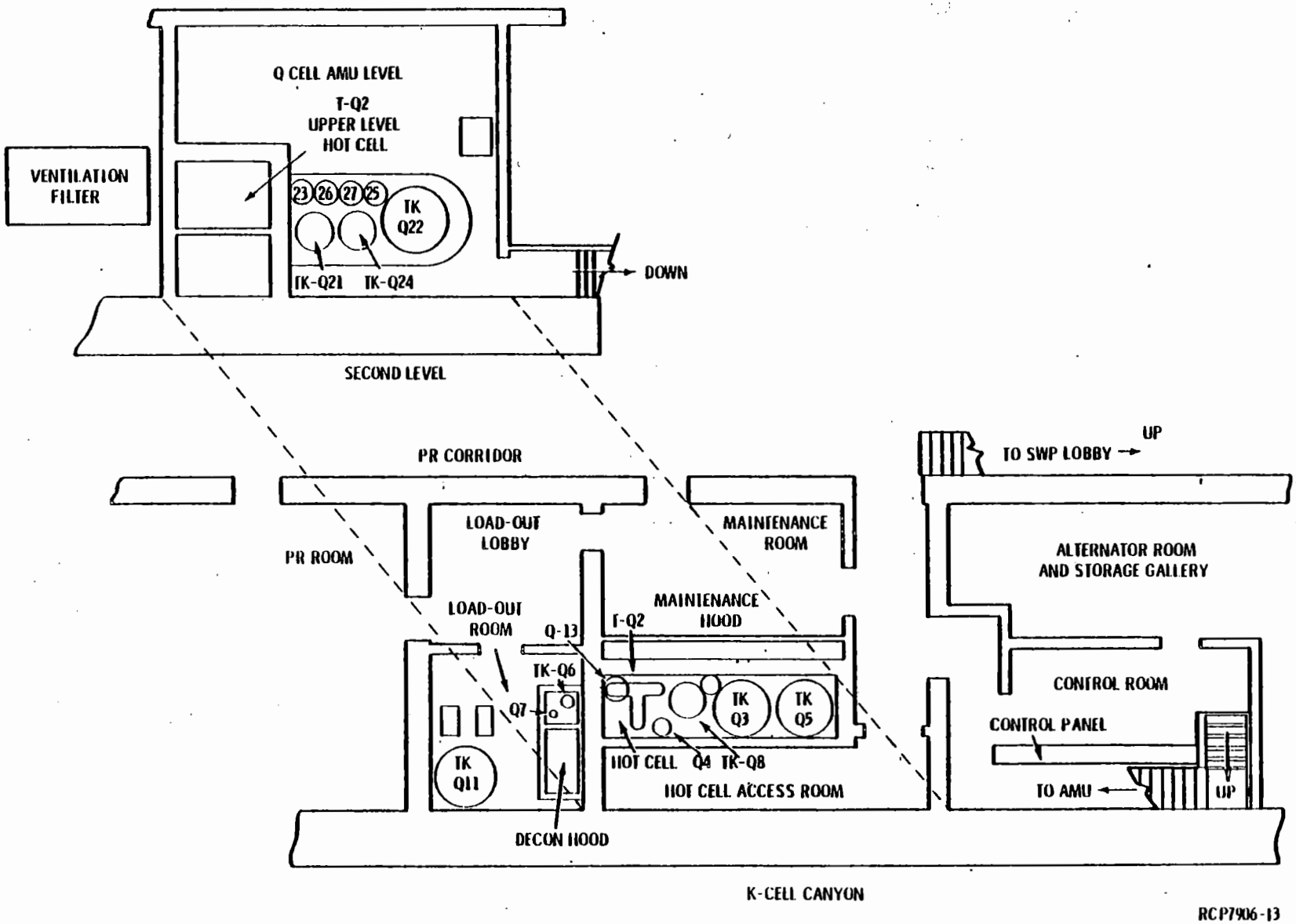

FIGURE 2-7. Q Cell Neptunium Purification Area - Plan View.

2.2.8 Service Areas

The service section of the 202-A Building lies just north of the galleries and consists of two separate annexes. The east annex is a two-level structure 216 feet long, 56 feet wide, and 34 feet high. The west annex consists of five levels 490 feet long, 56 feet wide, and 62 feet above grade at the highest point. The larger annex contains the maintenance shops, offices, lunch room, locker room, radiation zone entry lobby, ventilation supply room, switchgear room, compressor room, central control room, and AMU area. The smaller annex contains the analytical laboratory, head-end control room, and a switchgear room. A general layout of these sections is illustrated in Figure 2-5.

2.2.9 Laboratory

The Purex analytical and control laboratory, located in the western end of the east service annex, is 144 feet long and 34 feet high. The first floor, containing the laboratory work area and lunch and change rooms, is on the same level as the pipe and operating gallery. The floor and walls of the first floor are made of reinforced concrete for radiation shielding. The second floor, which houses the ventilation equipment and service piping, has transite walls. Figure 2-8 shows the layout of the laboratory work area and outside loading docks.

2.2.9.1 Laboratory Utilities

The ventilation and equipment room (ventilation loft) on the second floor of the laboratory houses all the piping, ventilation duct work, and miscellaneous equipment for servicing the laboratory. The ventilation equipment is discussed in Section 2.2.12.4. Utilities and services are supplied to the laboratory through headers routed in common raceways located in the ventilation loft. Services to each room of the laboratory are brought through the ceiling and terminated at work stations. Service branches from the main building utilities include sanitary water, instrument air, 57% nitric acid, air sampling piping, and mask breathing air. A still and two vacuum pumps are located in the ventilation loft to provide distilled water and vacuum for the laboratory.

Industrial gases including methane, oxygen, hydrogen, nitrous oxide, helium, acetylene, and propane are piped to the laboratory from a central gas cylinder station located on the laboratory's north loading dock (Dock 6).

2.2.9.2 Laboratory Waste Disposal Facilities

Packaged solid waste from the laboratory is stored in a small rectangular vault located at the end of the corridor leading to Loading Dock 5. The vault has 8-inch-thick concrete walls, and contains a lead box with 5-inch-thick walls. The highly radioactive solid wastes are stored in the lead box, while the less radioactive wastes are stored outside the box on the floor of the concrete vault. Waste is removed through doors in the box and vault and transferred to a vehicle for transportation to the waste burial grounds.

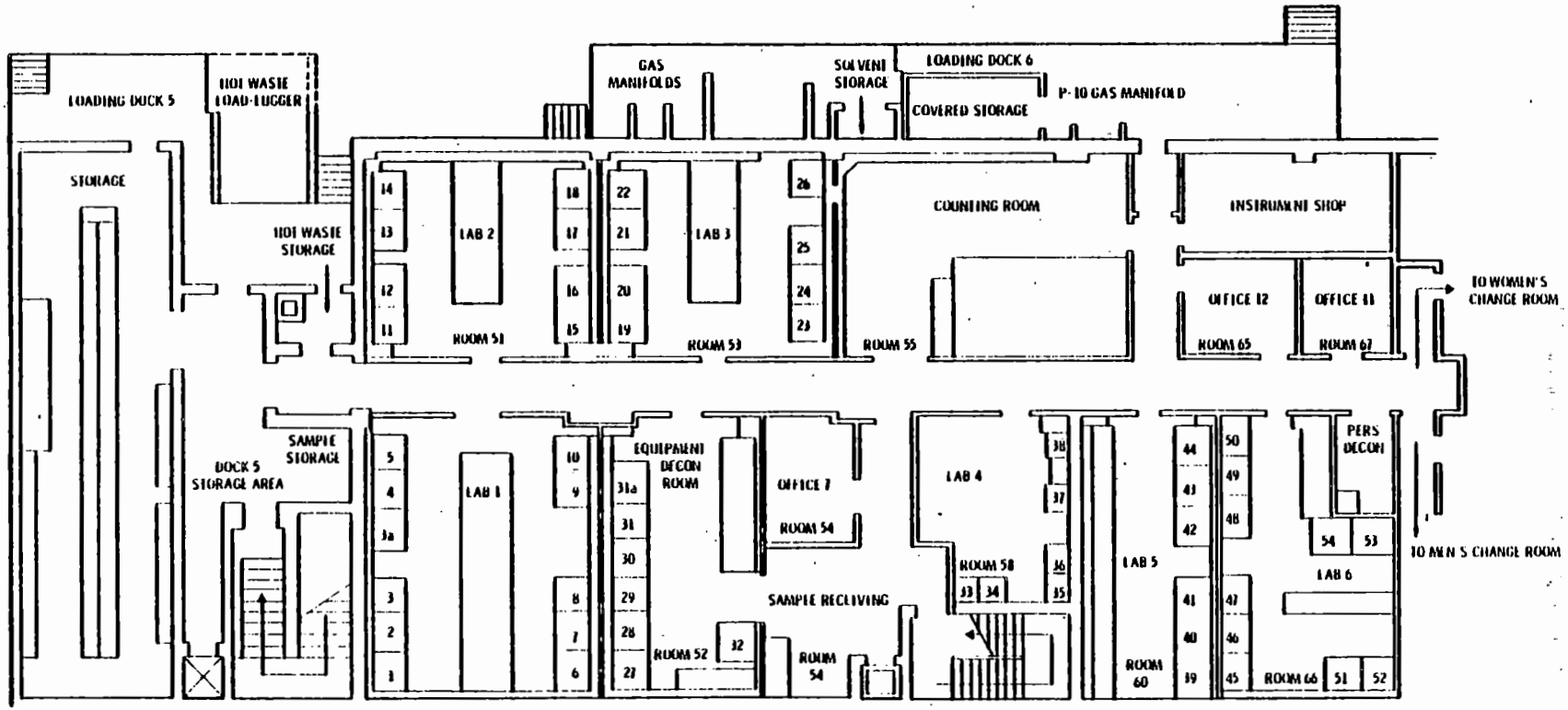

FIGURE 2-8. 202-A Building Analytical Laboratory-Plan View.

Laboratory sink drainage is collected in one of two 8,000-gallon stainless steel tanks (TK-U3 and TK-U4) located in U Cell. The tank solution is sampled, made alkaline, and jetted to underground tank storage with ultimate evaporation in the 242-A Waste Concentrator.

"Hot" liquid wastes accumulated in the decontamination room receiving and slurping hoods are routed to the acid waste accumulation tank (TK-F10) in the backcyle waste system. A water jet (aspirator) is used to slurp and dilute the waste.

2.2.10 Utilities

2.2.10.1 Steam

The powerhouse, 284-E Building, supplies steam at 225 pounds per square inch gage (psig) and 450°F to the Purex exclusion area through an 18-inch overground line. At the northwest corner of the exclusion area, the line divides into an 8- and a 16-inch line. The 8-inch line supplies high pressure steam to outside facilities such as 203-A, 211-A, and 244-AR Buildings, then enters 202-A Building where it supplies the heating and ventilation system and one end of the silver reactor steam header.

The 16-inch line divides into two 14-inch lines which enter 202-A Building at opposite ends of the P and O gallery. A loop is formed within the gallery by connecting the 14-inch lines with a 16-inch header and a 2-inch header. The 16- and 2-inch headers are maintained at 100 and 25 psig, respectively, by pressure reducing stations. The 100-psig header supplies steam jets, some tank coils, and 29-psig steam to the concentrators through individual pressure-reducing valves. The 25-psig header supplies most of the tank coils and all service outlets.

A 2-inch line branches off the 225-psig line at the east end of the building to supply the silver reactor steam header and to connect with the outside facilities' heating and ventilation steam supply.

High-pressure steam to the emergency exhaust turbine-driven fan is supplied from the 14-inch line before it enters the east end of the building. The steam turbine and off-gas heaters have first priority on high-pressure steam. If the steam demand causes the supply pressure to drop below 185 psig, other flows are throttled manually to raise the supply pressure to at least 185 psig.

While the plant is operating, about 85% of the Purex steam consumption (100,000 to 125,000 pounds per hour at full operation) is directly related to processing activities and is discharged as condensate to the 216-A-30 Crib via a radiation-monitored tank. The remaining 15% is consumed in space and water heating with condensate discharge to the chemical sewer.

2.2.10.2 Compressed Air

2.2.10.2.1 Process Air

Process air is used for purging jet transfer lines, operating vent jets, purging tank jackets, coils, and steam sparge lines, and operating sampler jets.

Process air at 100 psig is provided by two 1,000-standard cubic feet per minute (scfm)-capacity, and one 1,110-scfm-capacity two-stage air compressors. The 1,000-scfm compressors are driven by 200-hp synchronous motors, and the 1,100-scfm compressor by a 200-hp induction motor. This equipment is located in the compressor room in the annex of the 202-A Building. While two of the compressors are operated, the third is maintained in standby in case of malfunction of one of the others.

Air flows from the compressors through an aftercooler into a 4-foot-diameter by 12-foot-high air receiver. The receiver supplies air filtered to remove oil vapor to an 8-inch line. The line then divides into a 6-inch header for P and O gallery service and a 4-inch header for the sample gallery.

2.2.10.2.2 Instrument Air

Instrument air compressed to 80 psig is supplied by one of two rotary water-sealed compressors of 370-scfm capacity driven by 200-hp electric motors located in the compressor room. The second compressor is maintained on standby. The air flows from the compressors through water separators into a 4-foot-diameter by 12-foot-high receiver. The air then passes through one of two regenerative-type air dryers containing activated alumina absorbent. From the dryer, the air flows through a 4-inch line which joins at the mid-point of the 3-inch header in the P and O gallery. Subheaders furnish instrument air to the AMU area and to facilities outside the building.

2.2.10.2.3 Breathing Air

Breathing air for mask use is provided at 50-psig pressure by a water-sealed rotary compressor of 105-scfm capacity driven by a 40-hp electric motor located in the compressor room. The compressed air passes through a water separator into a receiver tank 3.5 feet in diameter by 9 feet high.

From the receiver, the air passes through a filter to a 3-inch line which branches into 2-inch headers in the sample gallery, P and O gallery, and the laboratory ventilation loft. Outlets and branch lines from these headers provide breathing air at atmospheric pressure in the laboratory, regulated shop, railroad tunnel, decontamination cell, hot shop, PR room, R Cell, crane maintenance platforms, U Cell, sample gallery, and laboratory ventilation loft.

2.2.10.3 Raw Water

Raw water drawn from the Columbia River is used for process cooling, process air and compressor cooling, fire fog supply, and cell washdown. It is supplied at 100 psig to the Purex area from the 282-E Reservoir through an underground 24-inch pipe. This pipe divides into two 20-inch lines which enter opposite ends of the P and O gallery, and connect to an 18-inch header to form a service loop. A 6-inch fire fog supply connects into each end of this header, and runs through the gallery as a separate line. Raw water to the sample gallery is supplied by a 3-inch header running the length of the gallery. This header connects to both ends of the P and O gallery 18-inch header. An 8-inch supply line to the tank farm emergency cooling water supply tank, 251-A-201, ties into the east end of the 18-inch raw water header.

Raw water requirements for Purex are about 240 million gallons per month. Essentially all raw water used at Purex is discarded to the Gable Mountain Pond (Disposal Site 216-A-25), and to B Pond (216-B-3).

2.2.10.4 Filtered Water

Filtered, sanitary, chlorinated water is used at the Purex Plant for safety showers, fire protection, drinking and toilet facilities, operating area washdown, and for making demineralized water (see Chapter 4.0 for details on the demineralized and distilled water processes). The filtered water is supplied to the Purex area through a 12-inch underground line from the 283-E Filter Plant. This line services facilities within the exclusion area, then branches to enter the 202-A Building at both ends of the P and O gallery. The gallery 12-inch header runs the length of the gallery and completes a loop.

Since this water is the source of domestic supply to the area, care must be taken to avoid contamination of the system by backup flow from a raw water system or introduction of harmful chemicals. The major headers are equipped with antisiphon valves, and connections to process systems or potentially contaminated services are avoided.

The exclusion area elevated tank, 2901-A, which holds 50,000 gallons, provides an emergency supply of filtered water in the event of a filter plant failure or a rupture in the distribution system.

Seven fire hydrants are located on the filtered water line around the building.

2.2.10.5 Main Power Supply

Electric power is supplied to Purex through the 251-W Substation which is located about 4 miles northwest of the Purex area. Incoming power to the substation is supplied by the Bonneville Power Administration by two parallel 230-kilovolt (kV) lines, with either line capable

of providing the necessary power demand. At the substation, the 230-kV power is reduced to 13.8 kV and is sent in two overhead lines to a switching station located about 200 yards north of the 202-A Building. If one line is impaired, the load is automatically switched to the other line. A third 13.8-kV line is also available, but requires manual switching at the plant.

From the switching station, the two buried 13.8-kV lines run to two 3,750-kilovolt-ampere (kVA) transformers at the northeast corner of the 202-A Building. These transformers reduce the voltage to 2.4 kV. Current from the 2.4-kV supply is delivered through two normally closed buses to the east switchgear room, then to two substations, one at the east end and one at the west end of the building. Each of these substations has two 1,000-kVA transformers and one 500-kVA transformer to convert the 2.4-kV supply to 480 volts. The 1,000-kVA transformers are used for normal service, and the 500-kVA transformers are for emergency power (see discussion of emergency service below).

2.2.10.6 Emergency Power Supply

An emergency power supply is available from the 284-E Powerhouse steam turbine generator. When the main power supply fails, this 750-kW generator automatically delivers 2.4-kV service to the emergency circuit through the Purex east switchgear room to supply the two 500-kVA transformers at the east and west transformer banks. An electrical outage of 15 to 20 seconds occurs until the emergency generator reaches full load speed, at which time the emergency circuit is automatically energized.

The following equipment is on the emergency power circuit:

A. One instrument air compressor (either)

B. Emergency lighting throughout the 202-A Building

C. Motor Control Center 1 (MCC 1)
   - One laboratory exhaust fan (either)
   - Agitator in waste denitration tank (TK-F16)
   - Instrument power and emergency lighting to 203-A and 211-A Tank Farms
   - Breathing air compressor
   - Emergency lighting in 291-A Ventilation Stack Building
   - Rectifiers for centrifuge DC brake power

D. Motor Control Center 3 (MCC3)

- One sample gallery vacuum pump (either)
- Solvent Pump R5-1
- Instrument recorder, exterior south wall of 202-A Building
- Rectifiers for centrifuge DC brake power
- White Room exhaust fan
- PR room exhaust fan (EF2-7A)

E. Motor Control Center 60 (MCC 60)

- Agitator in acid feed tank (TK-U5)
- Acid Pump U5-1
- Acid Pump U5-2
- 206-A Building lighting
- Agitator in chloride purge tank (TK-U7)

F. Instrument power panels at both ends of the 202-A Building.

2.2.11 Fire Protection System

In the 202-A Building, most of the canyon cells, especially those containing the large inventories of organic solvent (viz., G, R, H, J, and K Cells), are equipped (or will be equipped before plant startup) with a temperature-activated automatic sprinkler foam system using the Light Water Aqueous Film Forming Foam system which simultaneously applies foam to the adjoining ventilation tunnel. Detection of fire in these cells is by rate-compensated thermal detectors that sound alarms locally and at the central fire station located between 200 East and 200 West Areas. Detectors are spaced approximately every 20 feet, and are tested and supervised. Fire fighting personnel and equipment can arrive on the scene from the central fire station within 6 minutes.

Fire protection in the other canyon process cells is provided by a system of peripherally mounted spray nozzles controlled by manual gate valves. The nozzles were installed at the time of construction, and are mounted at 9- to 12-foot spacing in the cells.

Manual actuation of the systems is dependent upon the detection of abnormal conditions by "Fireye" photoelectric flame detectors, set approximately every 50 feet through the cells. The fire detection units activate alarms in the central control room and in the dispatcher's office. The Fireye detectors will be replaced, if they fail, with Fenwal "Detect-a-fire" elements, which actuate alarms when the elements reach 275°F.

Fire detectors of the products of combustion type are installed in the canyon cranes. The detectors sound an alarm in the central control room and in the central fire station. The crane electrical panels are enclosed and provided with a Halon-1301 extinguishing system connected to the fire alarm system.

Automatic sprinkler protection on standard wet and dry pipe systems is installed in the hot shop and the storage portion of the storage gallery in the canyon building. In addition, N Cell, Q Cell, and the plutonium storage area have automatic wet-pipe sprinklers with both local and 200 Area central fire station alarms. All sprinkler installations are low-temperature closed-head systems.

Automatic sprinkler protection on standard wet and dry pipe systems is also installed in the 202-A annex, including the laboratories, laboratory storage area, aqueous makeup area, offices, and shops.

2.2.12 Ventilation

The ventilation system in the 202-A Building is designed and operated to keep normal work areas free of radioactive contamination by maintaining airflow from zones with no radionuclide content into zones of progressively greater contamination potential. The ventilation air is supplied by four systems: canyon, sample gallery, service area, and laboratory.

2.2.12.1 Ventilation System 1

This system serves the areas of greatest radioactivity (the canyon and process cells), including all process vessel vents except the metal dissolvers, the ammonia scrubber waste concentrator, and all E Cell vessels except TK-E6. Figure 2-9 is a schematic diagram of Ventilation System 1.

Air which has been filtered, washed, humidified, and temperature-adjusted is supplied into the canyon at ceiling level and dispersed through ducts located above the craneway. The air then flows down to the canyon deck where it is drawn down around the cell cover blocks into each of the cells. From the cells, the air is exhausted through ports into the air tunnel, then through the 291-A Filter to the stack.

The supply air is delivered by three air-handling systems. Blowers SF-1 and SF-1A, rated at 73,000 scfm each, are located in the process blower room in the west service annex. Normally these blowers operate in parallel, throttled sufficiently to maintain the desired static pressure in the canyon. Either blower will furnish the minimum safe airflow to the canyon. A booster fan (BSF-1), which can furnish 6,640 scfm, augments the air supply to the hot shop. Blower SF-1B, rated at 19,100 scfm and located in the end of the east crane area, supplies ventilation air to the east crane maintenance platform and exhausts to the canyon.

9413275.0497

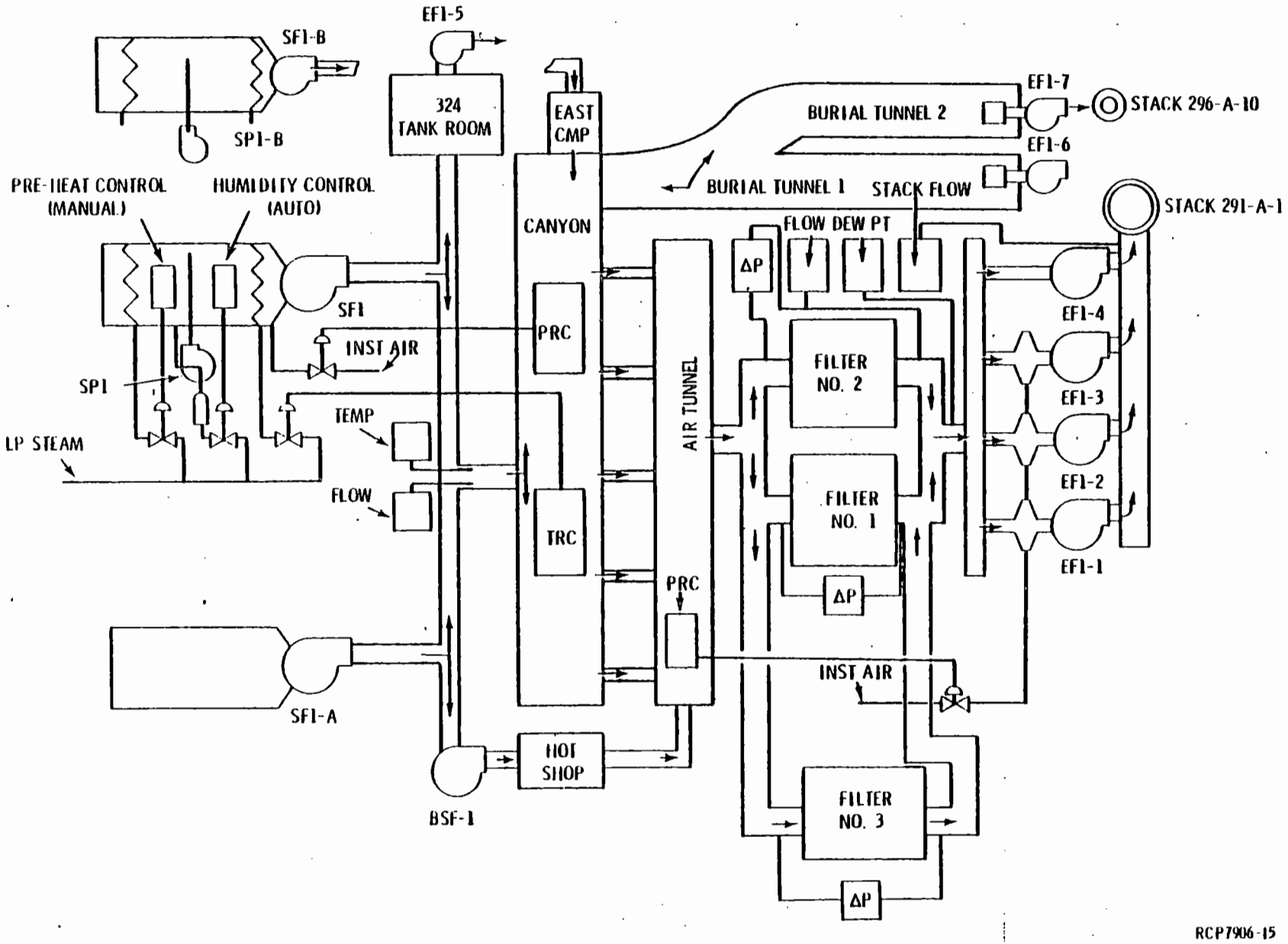

FIGURE 2-9. Schematic of Ventilation System 1.

The exhaust side of the system from the canyon air tunnel consists of two fiberglass filters and one standby high efficiency particulate air (HEPA) filter in parallel, three electric exhaust fans (EF-1-1, EF-1-2, EF-1-3), and a steam turbine fan (EF-1-4) for emergency standby, which exhaust to the 291-A-1 Stack. These four fans are mounted on a concrete platform near the base of the stack. In addition, the vent flow from the dissolver off-gas treatment facilities is discharged to the stack.

Equipment Disposal Tunnel 218-E-15 is exhausted through a high efficiency, replaceable cartridge filter to Exhaust Fan EF-1-7. Tunnel 218-E-14 vents back through its partially sealed entrance into the railroad tunnel and the canyon.

The vent system is designed to maintain safe differential pressures between the process area and the personnel-entry portions of the building, assuming that the ventilation systems in these areas are functioning properly. In the event of a power failure or loss of instrument air which shuts down the supply and exhaust blowers, the steam-driven fan (EF-1-4) automatically starts and the supply fan dampers open.

If the canyon pressure increases above 0.05 inch of water below atmospheric, the supply fans shut down with their dampers open so the pressure can be reduced. Gravity dampers (vacuum breakers) in the canyon open to admit air to prevent the canyon pressure from decreasing below 0.7 inch of water below atmospheric.

2.2.12.2 Ventilation System 2

This system services the areas of the building which are routinely occupied or entered by the work force, but are regulated because of a potential for contamination. As shown in Figure 2-10, the areas serviced by this system include the sample gallery, regulated shop, canyon lobby, PR room and corridor, N Cell, R Cell (276-A Vault), Q Cell, and U Cell.

The supply air is filtered, water-washed, temperature-adjusted, and delivered by two air-handling systems. Blowers SF-2 and SF-2A, both rated at about 40,000 scfm, are located in the process blower room and, except for R Cell and U Cell, supply the serviced areas through ducts extending to both ends of the sample gallery. The R Cell and U Cell air supply streams are delivered at atmospheric pressure through evaporative coolers and steam coil heaters, with either the heaters or coolers operating, depending upon the seasonal conditions.

From Figure 2-10, it can be seen that air from this system is exhausted through HEPA filters in five streams by five electrical motor-driven fans. A sixth fan (EF-2-7A) is maintained for emergency backup for EF-2-7, which exhausts the PR room and N and Q Cells. From the fans, each stream is vented to the atmosphere through five 70-foot-high stacks outside the building.

9413275.0499

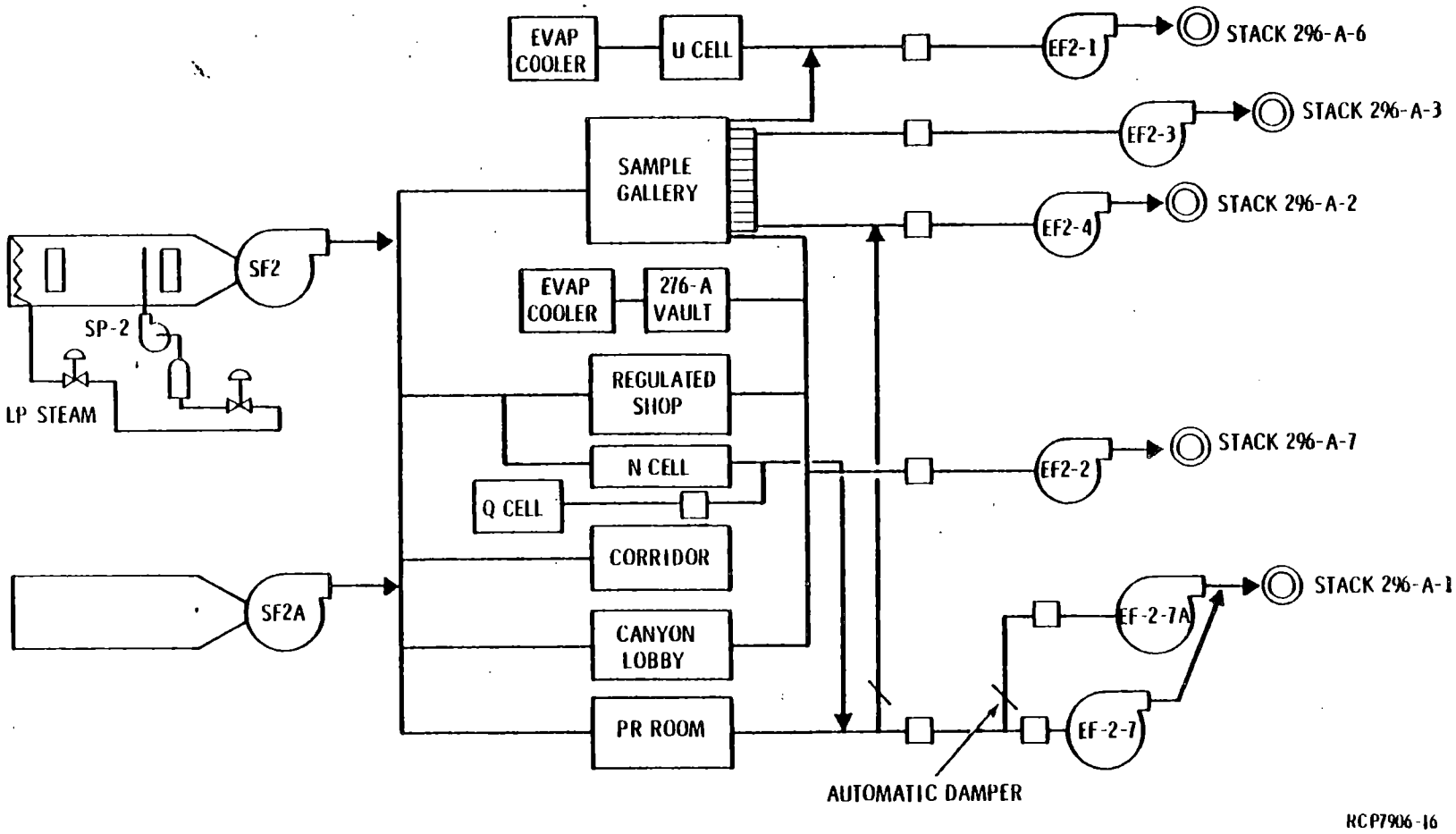

FIGURE 2-10. Schematic of Ventilation System 2.

2.2.12.3 Ventilation System 3

This system, shown schematically in Figure 2-11, services the areas considered to be uncontaminated and to have the least potential for becoming contaminated. These areas include the pipe and operating gallery, the storage gallery, the pulser motor-generator room (PIV room), the aqueous makeup levels, and the service areas (shops, offices, lunchroom, etc.) except for the analytical laboratory.

The supply air is filtered, water-washed, humidity-adjusted, and delivered by two air-handling systems. Fans SF-3 and SF-3A in the service blower room, located west of the process blower room in the west service annex, supply the serviced areas through ducts, dampers, and local area reheat coils. Each fan has a capacity of 70,000 scfm, which is approximately 50% of the required flow for the system. Booster Supply Fans BSF-6 and BSF-7 are employed to increase airflow from the PIV room to the storage gallery. Fans BSF-8 and BSF-9 recirculate PIV room air through water coil coolers to remove the heat produced by the motor-generator sets.

The exhaust side of the system contains several individual fans. All exhaust streams are presently unfiltered. However, a single stage of HEPA filters will be installed in the White Room exhaust air duct prior to plant startup. Radiation detection devices, which will automatically close the air vents if radioactive material is entrained in the exhaust air, will also be installed in the other exhaust air ducts of the P and O gallery. Several other fans not shown in Figure 2-11 are used to exhaust the office and shops areas.

2.2.12.4 Ventilation System 4

System 4 services the Purex laboratory and is largely independent of other building ventilation systems. As shown in Figure 2-12, the supply air is filtered, water-washed, humidified, and delivered by two air-handling systems. Supply Fans SF-4 and SF-4A are located in the laboratory ventilation loft, which is the floor above the laboratory. The air supply of 30,000 cfm is furnished by operating both of these identical fans in parallel. A portion of this air is used for makeup of constant-humidity air to replenish losses from the supply (furnished by two refrigeration air conditioners) to the laboratory counting room and instrument shop.

The exhaust side of the system consists of two parts. The decontamination room, laboratory hood rooms, and sample storage room are exhausted through high-efficiency filters by Fans EF4-1 and EF4-2. These fans are operated together, and are both connected to the emergency power supply. If the normal power supply is interrupted, one of the fans will be automatically switched to emergency power. The fan must be manually switched back to normal power for resumption of service. Each fan exhausts to a separate 70-foot stack (296-A5A and 296-A5B).

9413275.0501

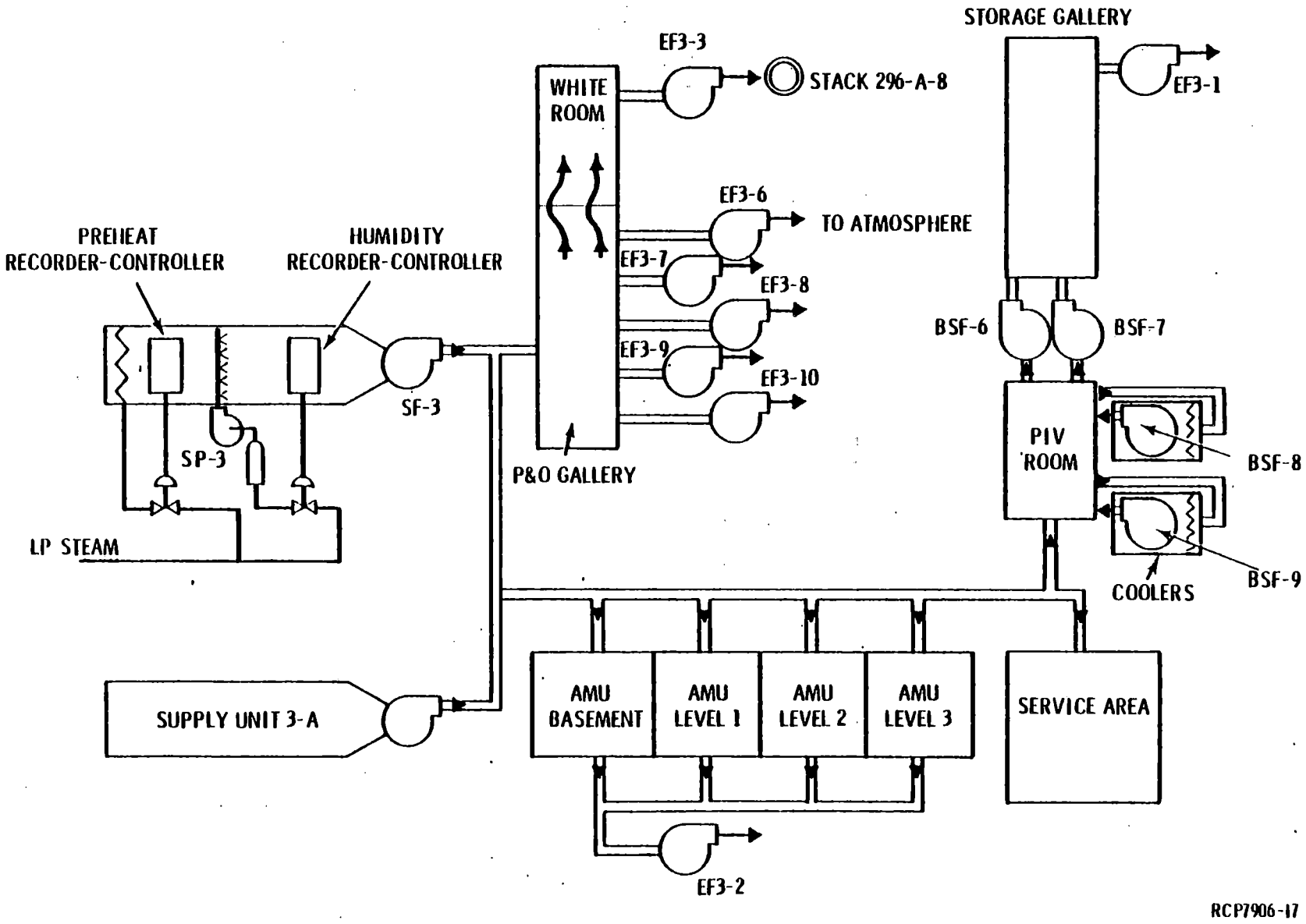

FIGURE 2-11. Schematic of Ventilation System 3.

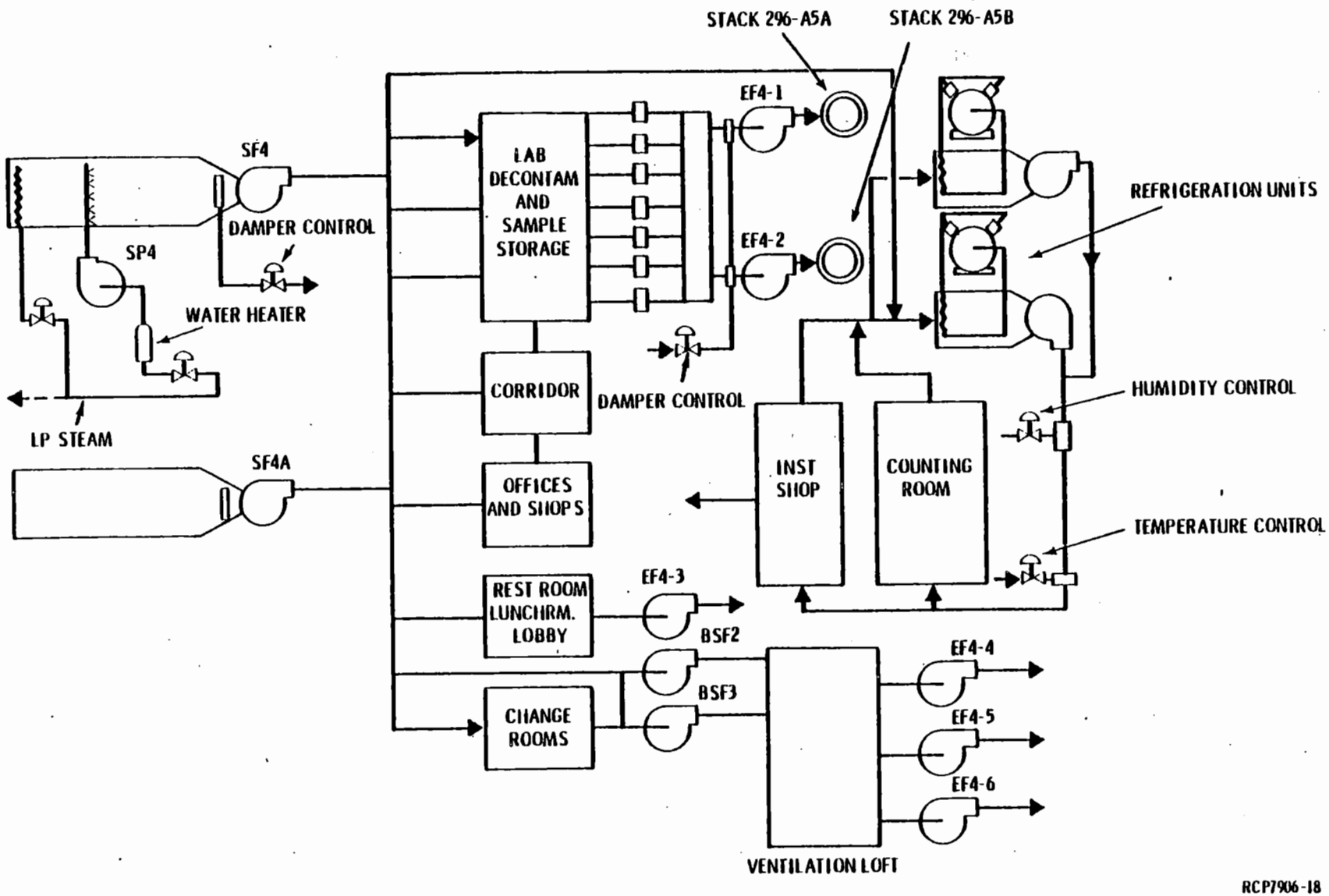

FIGURE 2-12. Schematic of Ventilation System 4.

2.3 OUTSIDE FACILITIES

In the outside vicinity of the 202-A Building are facilities for air filtration, chemical storage, solid and liquid waste disposal, cask loading, acid recovery, and office space.

2.3.1 Air Ventilation System, 291-A

The 291-A facility discharges filtered process ventilation air and gases from Purex to the atmosphere. The equipment includes the ventilation air filters, fans, stack, and stack sample house.

2.3.1.1 Ventilation Air Filters

There are three ventilation air filters located south of the 202-A Building for removal of solids from Purex process air before it is discharged to the atmosphere. The two older filters were designed to remove 99.9% of the particulates from the air stream. These two filters, operated in parallel, are similar in design but have significant differences. Each has two glass fiber bed sections--the prefilter and the cleanup filter. The overall dimensions of each filter are 82 feet long by 52 feet wide by 13 feet deep. In the northern filter (Filter 1), the prefilter is one bed, 7 feet deep, packed with 115-K Fiberglas (Owens-Corning Fiberglas Company, Inc.). In the middle filter (Filter 2), the prefilter consists of five separate layers, each packed with a different density of Fiberglas. The airflow direction is downward through Filter 1 and upward through Filter 2. The cleanup filter in each unit consists of 132 American Air Filter Company "Deep Bed Filter" units 1 inch thick with a total area of approximately 50 square feet per unit. The filters are designed for a pressure drop of 4 inches of water with air velocities of 50 feet per minute in the prefilters, and 20 feet per minute in the cleanup filters.

A third main filter (Filter 3), which could operate in parallel with the older two filters, is under construction and will be put into standby service. The filter cell, which is below grade, is about 56 feet long, 44 feet wide, and 13 feet deep. The cell is equipped with two banks of 85% ASHREA bag-type prefilters and three banks of HEPA filters, all in series. The two prefilter banks and the first bank of HEPA filters are designed to permit the upper quarter of the banks to be lowered while the remaining three-quarters of the banks stay in place. This feature permits bypassing of a bank or banks of filters in case an excessive pressure drop from particulate loading occurs across one or more of the filter banks. The final two HEPA banks cannot be lowered.

Fire screens are installed in the inlet duct to the new filter cell and in front of all the filters except the final HEPA bank. A water seal, which when filled with water will stop airflow, is in the exit air duct. The seal is automatically filled by gravity discharge from a 10,000-gallon-capacity water storage tank when fire is detected by a sensing element located in the filter cell inlet duct, or by a manually operated switch located in the 291-A Sample House 4.

Instrumentation is provided to monitor differential pressure across the filter, the individual filter banks, and the fire screen in the filter inlet duct. Differential pressure indicators and high-level alarm switches are located in Sample House 4. Differential pressures in excess of established limits are annunciated in the 202-A Building power control room.

2.3.1.2 Process Stack 291-A-1

Located immediately south of the southeast corner of the 202-A Building is Process Stack 291-A-1, which is constructed of reinforced concrete and rises to 200 feet above grade. The exhaust air rises through a free-standing 7-foot-inside-diameter, stainless steel liner. The top of the stack is capped to cover the annulus between the stack and the liner. The bottom of the liner has a dished head which drains to a collection tank. The inlet breaching for the ventilation air is baffled and is welded to the liner at an angle of 45 degrees upward.

Six 8-inch nozzles enter the liner below the ventilation air breaching. Three are for routing dissolver off-gas to the stack, while the other three are spares.

Stack gas sampling points are located near the top and bottom of the stack. Lines from these points run to Sample House 292-A, located east of the stack. Radiological sampling and monitoring equipment is located in the sample house. The stack is also equipped with flow rate and totalizing instrumentation. A wash system including a booster pump is installed to flush the inside wall of the liner.

2.3.2 293-A Building

The 293-A Building is a small reinforced concrete structure near the 291-A-1 exhaust stack. The building has four processing cells on two levels containing two absorption towers which remove some of the oxides of nitrogen from dissolver off-gas before it is released through the process stack to the environs. The oxides of nitrogen are recovered as nitric acid which is recycled for concentration and process use. The building cells and pipe pit are vented through a single-stage HEPA filter by a fan, and are exhausted to a 50-foot stack (296-A-14).

2.3.3 294-A Building

The 294-A Building, located north of the 293-A Building, consists of an above-grade steel shack over a covered below-grade cell which contains three filters, one for each of the dissolver off-gas streams from the 202-A Building. Each filter provides secondary de-entrainment of the off-gases prior to treatment in the 293-A Building.

2.3.4 212-A Building

This building, now inactive, was formerly used for delivering or withdrawing liquid radioactive waste to or from the 202-A Building. The 212-A Building is located against the outside south wall of the 202-A Building, and is constructed of steel. A roll-up door for entry of trucks transporting casks or tank trailers is located in the west end of the building.

Underground pipes connect Purex cell tanks with a shielded cubicle in the 212-A Building, where connections are made to transfer the solutions into or out of the transport vessel. The building contains tanks for makeup of chemical solutions for flushing transfer lines and casks.

2.3.5 213-A Building

The 213-A Building, located south of the 202-A Building, is a steel "Butler Building" which was formerly used for transporting liquid waste from shipping casks to Purex cells. After the solution transfer lines became permanently plugged, the solution load-in function was moved to the 212-A Building. The 213-A Building is currently used for temporary storage of contaminated dry waste.

2.3.6 Contaminated Equipment Storage Tunnels, 218-E-14 and 218-E-15

An earth-covered tunnel with two parallel branches extending southward from the 202-A Building is used for storage of large pieces of failed process equipment. The tunnel is an extension of the rail spur on which reactor fuels are delivered to the plant for chemical processing. Failed equipment, too radioactive and bulky for immediate removal from the canyon, is loaded on railroad cars which are moved southward into the tunnel branches, where the cars are uncoupled and stored. When significant decay of the radioactive fission products contaminating the equipment has occurred, the equipment may be retrieved and sent to the burial ground for permanent disposal. Railroad cars in the tunnel are moved by a remotely controlled, battery-powered locomotive.

Both tunnel branches are nominally 19 feet wide and 22 feet high. The older branch (218-E-14) is a straight extension of the main tunnel from 202-A Building, while the newer branch (218-E-15) angles off eastward from the main tunnel about 150 feet south of 202-A, then straightens and parallels the older branch. The older branch is supported by wood shoring, but steel is used to line the ceiling of the newer branch. Both branches are isolated by water-filled shielding doors. The older branch extends 358 feet south of the shielding door, while the newer branch is 1,680 feet in length.

2.3.7 Uranium Storage Tank Farm, 203-A

The 203-A Tank Farm is used for storage and shipping of uranyl nitrate-hexahydrate (UNH) product from Purex. In addition, UNH waste solutions from the UO_3 Plant are concentrated for rework, and nitric acid recovered at the UO_3 Plant is stored in the 203-A tanks. The 203-A Area is located about 100 yards north of the 202-A Building, and contains four 100,000-gallon stainless steel tanks for UNH storage, and two 7,300-gallon tanks and one 13,800-gallon tank for storage of nitric acid. A 14,000-gallon tank, which contains a steam coil and vents to a condenser, is used to concentrate waste UNH and for organic removal. Condensate from waste UNH concentration is collected in a 4,000-gallon tank.

The storage tanks are mounted on concrete pads and are surrounded by dikes which provide containment basins in the event of tank leaks.

Uranyl nitrate-hexahydrate solution is pumped from the 203-A storage tanks to tank-trailers for shipment to the UO_3 Plant. The 203-A Building, located outside the containment dike, houses the pumps and controls for solution transfers.

2.3.8 205-A Building

This structure is a transite shack containing lead-encased silica gel beds formerly used for decontamination of UNH product. The building, now unused, sits on a concrete pad located inside the 203-A Tank Farm enclosure.

2.3.9 Acid Fractionator Building, 206-A

The 206-A Building houses the vacuum fractionator and associated equipment used for concentrating nitric acid recovered from Purex and the UO_3 Plant. The concentrated acid is stored in U Cell before it is returned to the Purex process. The 206-A Building is a reinforced concrete structure located at the northwest corner of U Cell. Outside dimensions of the building are 28 feet by 35 feet by 45.5 feet above grade at its maximum height. Inside the building, a pit containing the condensate tank extends 10 feet below grade. Equipment may be removed through a port in the building ceiling normally sealed with 8-inch-thick cover blocks. On the east wall of the building are two personnel access doors secured with electrically operated locks.

2.3.10 Chemical Tank Farm, 211-A

Bulk liquid chemicals for use in the Purex process are stored in the 211-A Tank Farm, which is located north of the 202-A Building. The service, capacity, and material of construction of each tank are given in Table 2-1.

TABLE 2-1. Tanks in 211-A Tank Farm.

Tank	Service	Volume, gallons	Material
TK-10	$Cd(NO_3)_2$	4,300	309 stainless steel
TK-11	NH_4F - NH_4NO_3	100,000	304-L stainless steel
TK-12	57% HNO_3	100,000	304-L stainless steel
TK-20	50% NaOH	30,000	Carbon steel
TK-21	45% KOH	30,000	Carbon steel
TK-30	Demineralized water	100,000	Aluminum
TK-40	Hydrocarbon diluent (NPH)	65,000	Carbon steel
TK-41	Tributyl phosphate (TBP)	30,000	Carbon steel
TK-42	$AL(NO_3)_3 \cdot 9H_2O$ (ANN)	7,850	347 and 304-L stainless steel
TK-50	93% H_2SO_4	8,400	Carbon steel

Adjacent to the tanks, a building constructed from steel and transite contains pumps to supply chemicals from the tanks to the aqueous makeup area in the 202-A Building. The process water demineralizer equipment is also located in this building.

2.3.11 Chemical Storage Warehouse, 2714-A

Dry and liquid containerized chemicals for Purex are stored in the 2714-A Building, which is located north of the 202-A Building. The corrugated steel building is set on a concrete dock next to a railroad spur. A paint shop is housed in the north end of the building.

2.3.12 Low-Level Radioactive Liquid Effluent Disposal Facilities

The principal low-level radioactive liquid effluents from Purex include process cooling water, chemical sewer waste, steam condensate, process condensates, and ammonia scrubber waste condensate.

2.3.12.1 Ponds 216-A-25 and 216-B-3

Cooling water and chemical sewer liquids are usually uncontaminated and are discharged to surface ponds. Cooling water is routed through a diversion station with capability for emergency discharge to a covered, lined trench (216-A-42) in case the liquid is radioactive. Normal flow goes to a second diversion box where flow can be directed to the Gable

Mountain Pond, 216-A-25, or to the 216-B-3 Pond. Gable Mountain Pond is an artificial lake occupying about 71 acres 2.5 miles north of the 202-A Building. The 216-B-3 Pond, which also receives chemical sewer waste, is an artificial lake covering several acres about 1 mile northeast of the 202-A Building. Chemical sewer waste is routed through a diversion station with capability for proportional sampling, radiation monitoring, and emergency routing to the 216-A-42 lined trench.

2.3.12.2 Cribs

Steam and process condensates and ammonia scrubber waste condensate, which are low-activity liquids, are sent to rock-filled caverns located in various sites in the vicinity of the 202-A Building. Typically, a cavern, or crib (see Figure 2-13) consists of a perforated pipe laid at a slight slope on a bed of coarse rock covered with layers of gravel and sand. This bed is covered with paper or plastic sheeting to prevent silt from seeping into and plugging the gravel bed. The upper portion of the crib is backfilled to grade with dirt. The distributor pipe is vented to the surface through a riser pipe in the end of the distributor. Liquid waste entering the distributor pipe leaks out through the perforations and disperses throughout the porous bed. A percolation rate of 200 gal/day-ft^2 of crib is estimated for this disposal method.

Process condensate from the final uranium cycle (and occasionally from Concentrators E-J8-1 and E-H4-1) is sampled, monitored for radioactivity (alarm sounds if preset limits are exceeded) and discharged through an 8-inch-diameter stainless steel pipe in the 216-A-10 Crib located south of the west end of the 202-A Building. The distributor pipe, which is 222 feet long, is buried 30 feet below grade and is paralleled by an abandoned 8-inch-diameter vitreous clay distributor pipe. The crib runs north and south and is vee-shaped in cross section.

Steam condensate from Purex is routed through a tank south of the 202-A Building before final crib disposal. The liquid is continuously checked for radioactivity with an in-line monitor, with automatic flow diversion to Retention Trench 216-A-42 if radioactivity is detected. Crib 216-A-30 for disposal of steam condensate is located about one-fourth mile east of the 202-A Building. The crib contains two distributor pipes arranged so that either or both ends of the crib can be used. One pipe made of 15-inch-diameter, perforated, corrugated, galvanized steel extends for 700 feet along the center of the crib. Another 16-inch steel pipe parallels the first pipe for 700 feet, then angles across to the centerline of the crib and extends another 700 feet down the center of the crib.

For the final 700 feet, this pipe is made of corrugated, 15-inch-diameter steel, and is perforated for water drainage. Because of the uneven surface of the crib, the pipes are buried beneath from 4 to 18 feet of fill.

TYPICAL CRIB CROSS SECTION

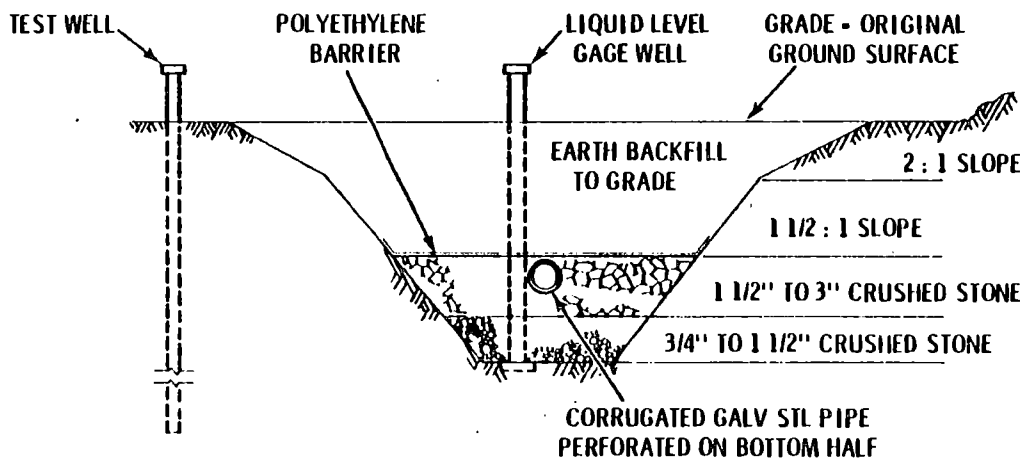

TYPICAL CRIB LONG. SECTION

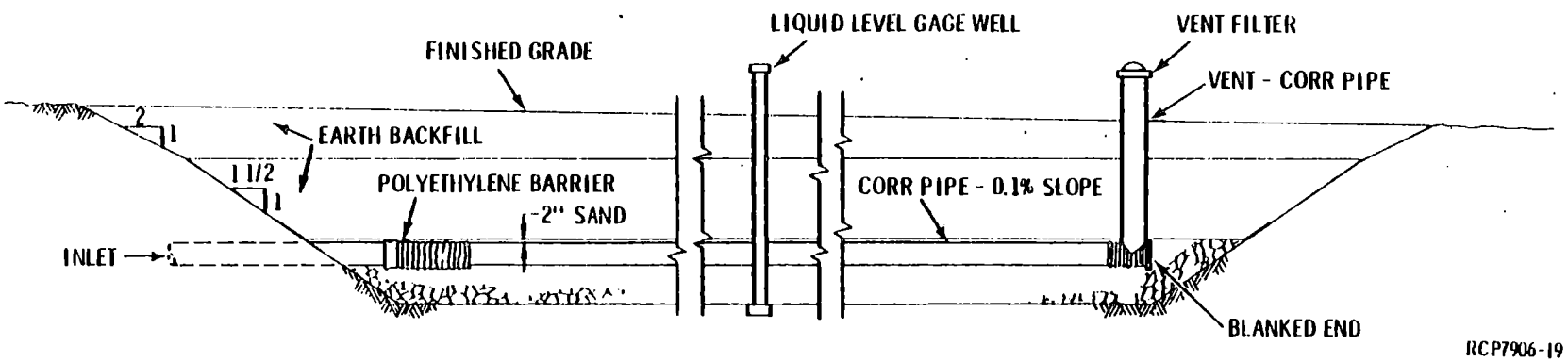

FIGURE 2-13. Typical Liquid Disposal Crib.

Ammonia scrubber waste condensate is sent to the 216-A-36B Crib located south of the 202-A Building. In this routing is a sampling station with a radioactivity monitor which alarms when preset limits are exceeded. The active portion of this crib is 500 feet long. The front 100-foot-long portion of the crib was deactivated soon after initial operation when it became too radioactively contaminated for further use. (The radionuclide content of this waste stream was significantly reduced after the off-gas discharge from the then new annular dissolvers was changed.) Liquid is discharged through a perforated 4-inch stainless steel distributor pipe which is inserted into the original 6-inch pipe used for distribution prior to deactivation of the front section of the crib. In the deactivated section, no holes exist in the inner pipe, thus preventing liquid leakage to this portion of the crib. The pipe lies about 23 feet below grade.

Steam and process condensates and acid overflow from the 203-A Area tanks were formerly sent to the 216-A-3 Crib located outside the Purex perimeter fence, north of the 203-A Tank Farm. The crib, however, is now plugged, so the liquids are batch collected, sampled, and, depending upon sample radioactivity, are routed to either the chemical sewer or Purex solvent extraction for rework.

9413275.0540

THIS PAGE INTENTIONALLY
LEFT BLANK

CONTENTS

CHAPTER 3.0 - EQUIPMENT DESCRIPTION

3.1 GENERAL GUIDELINES....3-1
- 3.1.1 Cell Equipment Identification Symbols....3-1
- 3.1.2 Definition of Terms....3-2
- 3.1.3 Process and Mechanical Requirements....3-2
- 3.1.4 Vessel Classifications....3-3

3.2 FUEL TRANSPORT AND UNLOADING EQUIPMENT....3-5
- 3.2.1 Fuel Element Canisters....3-5
- 3.2.2 Fuel Casks....3-7
- 3.2.3 Canister Handling Basket....3-7
- 3.2.4 Cask Cars....3-7
- 3.2.5 Railroad Tunnel....3-10
- 3.2.6 Car Puller....3-10
- 3.2.7 Fuel Dumping Equipment....3-10
- 3.2.8 Cranes....3-11
- 3.2.9 Impact Wrenches....3-14
- 3.2.10 Storage Basin....3-15

3.3 DISSOLVERS....3-15

3.4 DISSOLVER OFF-GAS EQUIPMENT....3-17
- 3.4.1 Dissolver Towers (T-A3-1, T-B3-1, T-C3-1)....3-18
- 3.4.2 Ammonia Scrubbers (T-A3-3, T-B3-3, T-C3-3)....3-19
- 3.4.3 Steam and Electric Heaters....3-19
- 3.4.4 Silver Reactors (T-A2, T-B2, T-C2)....3-20
- 3.4.5 Off-Gas Filters....3-21
- 3.4.6 Vacuum Control Valves....3-21
- 3.4.7 Backup Facility....3-22

3.5 CENTRIFUGES....3-22

3.6 PULSE COLUMNS AND ASSOCIATED EQUIPMENT....3-25
- 3.6.1 Column Design....3-26
- 3.6.2 Mechanical Pulse Generators....3-54
- 3.6.3 Pulse Transmission Lines....3-61
- 3.6.4 Air Pulser System....3-61

3.7 CONCENTRATORS....3-66
- 3.7.1 Uranium Concentrators, E-J8-1 and E-K4-1....3-66
- 3.7.2 Ammonia Scrubber Waste Concentrator, E-F11-1....3-69
- 3.7.3 Waste Concentrator, E-F6-1....3-71
- 3.7.4 Backcycle Waste Concentrator, E-H4-1....3-71
- 3.7.5 Stripper, T-L6, and Plutonium Concentrator, E-L7-1....3-74
- 3.7.6 Neptunium Stripper-Concentrator, T-Q2 and E-Q2....3-76

CONTENTS (Cont.)

3.8 TANKS....3-76
3.8.1 Radioactive Service Tanks....3-79
3.8.2 Nonradioactive Service Tanks....3-104

3.9 PUMPS, JETS AND AGITATORS....3-108
3.9.1 Pumps....3-112
3.9.2 Jets....3-122
3.9.3 Agitators....3-131

3.10 INSTRUMENTATION....3-133
3.10.1 Purex Plant Instruments....3-136
3.10.2 Flow Instrumentation....3-138
3.10.3 Pressure, Level, Density, and Interface Instruments...3-146
3.10.4 Thermometers (TE)....3-153
3.10.5 Ionization Chambers (RE)....3-154
3.10.6 In-Line Monitors....3-155
3.10.7 pH Meters (pHE)....3-172
3.10.8 Microphones (MK)....3-174
3.10.9 Tachometers....3-174
3.10.10 Transmitting Elements....3-175
3.10.11 Receiving and Controlling Elements....3-183
3.10.12 Diaphragm-Operated Valves....3-188
3.10.13 Solenoid Valves (EV)....3-191
3.10.14 Alarms....3-194
3.10.15 Special Instrument Control Systems....3-194

3.11 PROCESS SAMPLERS....3-203
3.11.1 General Description of Sampling Facilities....3-203
3.11.2 A-Type Sampler....3-207
3.11.3 B-Type Samplers....3-210
3.11.4 C-Type Sampler....3-214
3.11.5 Product Removal Room Samplers....3-214
3.11.6 Tank Q6 Sampler....3-216
3.11.7 Gas Samplers....3-216

3.12 CONDENSERS....3-216
3.12.1 Condensers E-J8-2, E-K4-2, E-H4-2 and E-F5....3-216
3.12.2 Process Vent Condenser E-F1....3-216
3.12.3 Condenser E-F11-2....3-218
3.12.4 Waste Rework Condenser E-F9....3-218
3.12.5 Plutonium Process Condensers E-L6, E-L7-2, and E-L12..3-222
3.12.6 Q Cell Vent Condenser E-Q9....3-222
3.12.7 U Cell Condensers E-U6-1, E-U6-3, and E-U6-4....3-222

3.13 ACID ABSORBERS....3-226
3.13.1 Canyon Nitric Acid Absorber (T-F5)....3-226
3.13.2 293-A Building Acid Absorbers (Backup Facility)....3-230

9413275.0512

CONTENTS (Cont.)

3.14 NITRIC ACID VACUUM FRACTIONATOR.....3-233

3.15 NEPTUNIUM CYCLE ION EXCHANGE COLUMN.....3-237

3.16 CANYON PROCESS VENTILATION SYSTEM EQUIPMENT.....3-239

3.17 REFERENCES.....3-240

FIGURES:

3-1 Fuel Element Canisters.....3-6
3-2 K Basin Fuel Cask.....3-8
3-3 NPR Basin Fuel Cask.....3-9
3-4 Canyon Cranes.....3-12
3-5 Dissolver Cell Equipment.....3-16
3-6 Purex G-E2 Centrifuge.....3-23
3-7 Purex G-E4 Centrifuge.....3-24
3-8 HA Column and Cartridge.....3-31
3-9 HS Column and Cartridge.....3-32
3-10 1BX Column and Cartridge.....3-33
3-11 1BS Column and Cartridge.....3-34
3-12 1C Column and Cartridge.....3-35
3-13 2D Column and Cartridge.....3-36
3-14 2E Column and Cartridge.....3-37
3-15 2A Column and Cartridge.....3-38
3-16 2B Column and Cartridge.....3-39
3-17 2N Column and Cartridge.....3-40
3-18 2P Column and Cartridge.....3-41
3-19 3A Column and Cartridge.....3-42
3-20 3B Column and Cartridge.....3-43
3-21 1O Column and Cartridge.....3-44
3-22 2O Column and Cartridge.....3-45
3-23 Typical Column Support.....3-47
3-24 Louver Plates.....3-50
3-25 Influent Stream Distributors.....3-51
3-26 Typical Pulse Column with Mechanical Pulse Generator....3-55
3-27 Mechanical Pulse Generator.....3-57
3-28 Purex Mechanical Pulse Generators.....3-58
3-29 Typical Air Pulse Delivery System to 3A or 3B Column....3-63
3-30 Air Pulse Generation System to 3A and 3B Columns.....3-64
3-31 3A and 3B Columns Air Pulse Frequency Controller Calibrations.....3-65
3-32 Concentrators E-J8-1 and E-K4-1, Perspective Cutaway....3-67
3-33 Concentrators E-J8-1 and E-K4-1.....3-68
3-34 Ammonia Scrubber Waste Concentrator E-F11-1.....3-70
3-35 Fission Product Waste Concentrator E-F6-1.....3-72
3-36 Backcycle Waste Concentrator E-H4-1.....3-73
3-37 Stripper T-L6 and Plutonium Concentrator E-L7-1.....3-75
3-38 2PN Stripper T-Q2.....3-77
3-39 2PN Concentrator E-Q2.....3-78

CONTENTS (Cont.)

FIGURES (Cont.):

3-40 5,000-Gallon Standard Tank (Typical of 21 Tanks).....3-81
3-41 1,725-Gallon Standard Tank (TK-E1, G2, R2).....3-82
3-42 15,000-Gallon Standard Tank (TK-G5, G7).....3-83
3-43 Ammonia Catch Tank (TK-A3-4, B3-4, C3-4).....3-84
3-44 Uranyl Nitrate Feed Storage Tank (TK-D3-D4).....3-85
3-45 E Cell Ammonia Catch Tank (TK-E3-2).....3-86
3-46 Vessel Vent Condensate Tank (TK-F1).....3-87
3-47 1WW Concentrator Feed-Receiver Tank (TK-F7-F26).....3-89
3-48 Tube Bundle Flush Tank (TK-F17).....3-90
3-49 Decontamination Spray Tank (TK-M1).....3-91
3-50 Hot Shop Tank (TK-M2).....3-92
3-51 Organic Contactor Tank (TK-G1, R1).....3-93
3-52 Decanter Tank (TK-F14, G6, R6).....3-94
3-53 2A Feed Tank (TK-J5).....3-96
3-54 3A Feed Tank (TK-L3).....3-97
3-55 Plutonium Tanks (TK-L8, L9, L11, L13).....3-98
3-56 Alternative PCP Sample Tank (TK-L10).....3-100
3-57 2N Feed Tank (TK-J21).....3-101
3-58 Neptunium Vessels.....3-103
3-59 Typical Canyon Pump.....3-116
3-60 Typical Steam Jet for Liquid or Gas Transfers.....3-126
3-61 Variable Flow Jet.....3-128
3-62 Typical Jet Gang Valve Assemblies.....3-130
3-63 Typical Canyon Agitator.....3-134
3-64 Typical Non-Canyon Agitator.....3-135
3-65 Electronic Rotameter -- Canyon Service.....3-140
3-66 Rotameter Systems.....3-141
3-67 Orifice System.....3-145
3-68 Pneumatic-Type Interface Monitoring System (1C and 2E Columns).....3-148
3-69 Float-Type Interface Controller Sensing Element.....3-151
3-70 Float-Type Interface Monitoring System.....3-152
3-71 Sample Station Containing Gamma and Alpha In-Line Monitors.....3-156
3-72 Schematic of Gamma and Alpha Monitoring Systems.....3-159
3-73 First Partition Cycle In-Line Monitors.....3-160
3-74 Second and Third Plutonium Cycles In-Line Monitors.....3-161
3-75 Final Uranium Cycle In-Line Monitors.....3-162
3-76 Continuous Gamma Scan Monitor -- Neptunium Anion Exchange.....3-164
3-77 Neutron Monitoring System.....3-166
3-78 Nitrite Monitoring System.....3-168
3-79 Electrodeless Conductivity Monitoring System.....3-170
3-80 Conductivity Probe.....3-171
3-81 Ammonia-Hydrogen Gas Analyzer Schematic.....3-173
3-82 Schematic Sketch of Republic Pneumatic Transmitter.....3-176

9413275.0514

CONTENTS (Cont.)

FIGURES (Cont.):

3-83 Republic Square Root Extracting Transmitter.....3-178
3-84 Schematic Sketch of Foxboro D/P Cell.....3-179
3-85 Schematic of a Pneumatic Flow Integrator.....3-187
3-86 Hammel-Dahl Throttling-Type Control Valve for Canyon Service.....3-190
3-87 Hammel-Dahl Valve Flow Characteristic Curves.....3-192
3-88 Dissolver Vacuum Control.....3-195
3-89 Concentrator Process Safety Instrumentation.....3-197
3-90 Plutonium Concentrator and Stripper Process Safety Instrumentation.....3-199
3-91 Waste Rework Tank (TK-F8) Process Safety Instrumentation.....3-201
3-92 Acid Fractionator Process Safety Instrumentation.....3-202
3-93 In-Line Blending Control System.....3-204
3-94 Sample Station With A-Type Sampler.....3-208
3-95 B-Type Bayonet Sampler.....3-212
3-96 Modified B-Type Sampler.....3-213
3-97 C-Type Sampler.....3-215
3-98 Condensers E-F5, E-H4-2, E-J8-2, and E-K4-2.....3-217
3-99 Condenser E-F1.....3-219
3-100 Condenser E-F11-2.....3-220
3-101 Condenser E-F9.....3-221
3-102 Condensers E-L6, E-L12, E-L7-2.....3-223
3-103 Vent Jet Condenser E-Q9.....3-224
3-104 Condenser E-U6-1.....3-225
3-105 Condenser E-U6-3.....3-227
3-106 Condenser E-U6-4.....3-228
3-107 Nitric Acid Absorber T-F5.....3-229
3-108 Nitric Acid Absorber T-XA.....3-231
3-109 Nitric Acid Absorber T-XB.....3-232
3-110 Nitric Acid Vacuum Fractionator.....3-235
3-111 Purex Anion Exchange Column T-Q4.....3-238

TABLES:

3-1 Canyon Equipment Identification Letters.....3-1
3-2 Solvent Extraction Columns.....3-27
3-3 Cartridge Tie Rods and Spacers.....3-28
3-4 Column Cartridge Description.....3-29
3-5 Pulse Column Disengaging Section Data.....3-53
3-6 Radioactive Service Tanks.....3-80
3-7 Aqueous Makeup Tanks.....3-105
3-8 Q Cell Aqueous Makeup Tanks.....3-106
3-9 202-A Building Pipe and Operating Gallery Tanks.....3-107
3-10 276-A Building Solvent Treatment Tanks.....3-108
3-11 Acid Recovery Tanks.....3-109
3-12 203-A Uranium Storage Tanks.....3-110

CONTENTS (Cont.)

TABLES (Cont.):

3-13 211-A Chemical Storage Tanks.....3-111
3-14 Remotely Maintained Canyon Service Pumps.....3-113
3-15 Contact-Maintained Canyon Service Pumps.....3-114
3-16 Non-Canyon Service Pumps.....3-120
3-17 Purex Service Jets -- Process Specifications and Operating Conditions of Standard Groupings.....3-123
3-18 Purex Service Jets Standard Groupings.....3-125
3-19 Purex Tank Agitators.....3-132
3-20 Instrument Legend.....3-137
3-21 Differential Pressure Transmitter Ranges.....3-149
3-22 Hammel-Dahl Valve Flow Coefficient as a Function of Valve Plug Size.....3-193
3-23 Purex Plant Sampler Locations.....3-205
3-24 Canyon Nitric Acid Absorber (T-F5) Design Data.....3-230
3-25 293-A Building Acid Absorber Design Data.....3-233
3-26 Acid Vacuum Fractionator Design Data.....3-237
3-27 3X Column Design Data.....3-239

9413275.0516

CHAPTER 3.0 - EQUIPMENT DESCRIPTION

In this chapter, functional and design descriptions of the Purex Plant process equipment are given with an emphasis on physical features important from a processing standpoint. Illustrations and tabulated information, including references to construction drawings or certified vendors' information (CVI) files, are given for most of the equipment. Descriptions of major equipment pieces are given in more detail than those for some of the auxiliaries such as instrumentation, agitators, jets, and pumps, since these latter pieces are numerous and their descriptions are relatively familiar to technical personnel.

3.1 GENERAL GUIDELINES

3.1.1 Cell Equipment Identification Symbols

Except for instrumentation, a cell equipment piece is identified by a sequential combination of letters and numbers designating its description, cell location, and cell equipment number. For example, TK-F12 designates a tank (TK) in F Cell, vessel number 12. The principal descriptive identification letters are summarized in Table 3-1 below. Instrumentation identification symbols are explained in Section 3.10.

Table 3-1. Canyon Equipment Identification Letters.

Equipment Piece	Letter
agitator	A
condenser, concentrator, heater (steam)	E
filter	F
centrifuge	G
heater (electric)	H
jet	J
jet gang valve	JGV
pulse generator	PG
pulse motor	PM
pump	P
sampler pot	SPLP
tank	TK
tower (column)	T

3.1.2 Definition of Terms

Throughout Chapter 3.0 and other parts of the manual, special terms and conventions are used for convenience in describing the physical features of equipment pieces. These terms are defined below:

- Carbon Steel. The term "carbon steel" is used generically to include all types of steel except stainless steel and special alloys. Carbon steel includes such classifications as "mild steel," "black iron," "soft iron," "structural steel," and "boiler plate."

- Insulated. Unless otherwise noted, the adjective "insulated" indicates that the vessel is covered with a 2-inch-thick layer of fiberglass. The fiberglass is protected by a shield of 0.0375-inch-thick (20-gauge) stainless steel sheet.

- Pipe and Nozzle Size. Unless specifically stated to the contrary, all piping used in process equipment fabrication is of the standard iron pipe size, Schedule 40. Likewise, pipe flanges not designed for remote maintenance are 150-psi standard, with raised faces. A "remote flange" is similar to a standard flange, except that it is equipped with aligning dowels and captive studs for remote assembly. A "connector nozzle" is one which is equipped with a Hanford remote male connector.

- Stainless Steel. Unless otherwise designated, the term "stainless steel" indicates Type 304L or Type 347 stainless steel. Type 304L is preferred and is generally specified, but Type 347 may, in certain instances, have been substituted.

3.1.3 Process and Mechanical Requirements

Major considerations in the design of Purex Plant process equipment include: (a) economical and satisfactory fulfillment of the chemical process requirements, and (b) satisfactory fulfillment of those special requirements associated with the construction and operation of radioactive processing plants. Mechanical designs satisfying these requirements are guided by specifications and general criteria which are summarized below:

- Applicable codes and specifications related to design, fabrication and quality of materials are followed. For example, process vessels are fabricated in accordance with the American Society of Mechanical Engineers (ASME) Boiler Construction Code, Section VIII; equipment piping is specified to be in accordance with the applicable American Standards Association (ASA) code; and materials are governed by American Society for Testing Materials (ASTM) Specifications, modified to suit special requirements.

- Maximum interchangeability of process equipment is provided by designing only the necessary standard sizes compatible with process requirements.

- Final acceptance of process vessels is generally based on tests, such as hydrostatic pressure tests, performed at the construction site. The type and conditions of testing are determined by the particular equipment piece.

3.1.4 Vessel Classifications

For convenience in specifying designs and construction practices, non-mechanical equipment pieces which contain a liquid or gaseous stream during Purex Plant processing are generally designated as "vessels." Vessel specifications are not directly applicable, however, to major equipment pieces, such as dissolvers, which perform a specific unit operation. Construction specifications for some of these equipment pieces are discussed in other sections of this chapter.

Vessels are divided into three classes, depending on their intended use. Detailed criteria and specifications for design and construction are followed for equipment pieces or vessels of a particular classification. The following discussion summarizes the principal vessel design features.

3.1.4.1. Class I Vessels

In the Purex Plant, Class I vessels are constructed of stainless steel and designed to contain radioactive materials. These vessels are located in the canyon, PR room and Q Cell. The vessel designs are characterized by special features required for processing radioactive materials by remote control methods. Thus, in nearly all cases, they are designed for remote maintenance. Also, they can be flushed and drained to the extent that they can be filled with liquid to wet essentially the entire interior surface, and they can be emptied without leaving appreciable liquid holdup. External and internal surfaces are free of retention pockets, cracks, and crevices.

Remote maintenance of equipment necessitates the use of special construction features to allow installation or removal by use of a remotely operated crane. Thus, the equipment piece must be: (a) provided with remote connectors for nozzles up to the 4-inch size and remote flanges for larger sizes; (b) provided with lifting bails placed so that the vessel, when suspended, will be balanced and will hang essentially in its installed position; (c) designed using dowels and aligning holes or trunnions and trunnion guides for alignment at installation; and (d) fabricated to unusually close tolerances, so that replacement equipment or parts may be readily installed.

Class I vessels are of stainless steel, all-welded construction, with carbon steel (protected with Amercoat 74) used only for necessary external attachments not in contact with the process fluid. Double butt welds are

used for pressure holding seams wherever possible, and weld quality is controlled by radiographing or by other specialized techniques, depending on weld location. Vessels are welded by Types 308L or 347 weld rod, using either the coated rod or inert gas-shielded rod-welding technique. Formed heads are specified to be solution heat-treated prior to welding, and stress relieving following welding is prohibited. Completed stainless steel assemblies are pickled in nitric acid or nitric acid-hydrofluoric acid solutions.

In general, the basic internal design pressure for Class I vessels was assumed to be 5 psig or 110% of the operating pressure, whichever is greater. The external design pressure was generally assumed to be 5 psig. However, these general specifications have been amended to cover various specific equipment types or parts, such as condensers and tank coils.

0250-5224-1MG

3.1.4.2 Class II Vessels

Class II vessels are of all-welded stainless steel construction with carbon steel used only for supports and attachments not in contact with a process fluid. Since processing or storage of highly radioactive materials is not required of these vessels, standard methods are used for their design, fabrication, and installation. For purposes of preparing detailed design and fabrication specifications, Class II vessels are divided into two groups: (a) nonradioactive process vessels (tanks) in the 202-A and 276-A Buildings, normally considered to be pressure vessels, and (b) atmospheric pressure storage tanks located in the 211-A chemical tank farm and the 203-A uranium storage tank farm.

For the design and fabrication of Class II vessels as pressure vessels, the general requirements of the ASME Boiler Construction Code are followed. Basic design pressures are taken to be an internal pressure of 15 psig or 110% of the operating pressure, whichever is greater, and an external pressure of 5 psig. With few exceptions, standard flanged and dished heads, and standard flanged connnections are used. Fabrication of Class II vessels also includes solution heat-treating of formed heads, pickling of stainless steel assemblies (or, for large vessels, internal pickling and external sandblasting) and hydrostatic and/or pneumatic testing according to code requirements.

For the design and construction of Class II storage tanks, the general requirements of the American Petroleum Institute (API) Standard 12C are followed. Designs are for the maximum internal pressure imposed by a liquid of 1.8 specific gravity, with loads due to wind pressure and earthquake forces also considered. Fabrication features of Class II storage tanks include the use of double-welded butt joints for shell-plate welds, internal cleaning by sandblasting, testing according to code, and hydrostatic testing of tank coils at 150 psig. For nitric acid storage tanks, external carbon steel attachments (e.g., reinforcing) are painted with Amercoat 55.

3.1.4.3 Class III Vessels

Class III vessels, like those of Class II, are divided into two groups: pressure vessels and atmospheric pressure storage tanks, depending on design and fabrication methods. Except for the fact that they are fabricated from carbon steel or aluminum, specifications for these two groups are similar to those for Class II vessels of the same types. Exceptions to the specifications include the storage vessels for water (Tank 223) and solvent (Tanks 40 and 41 in the 211-A tank farm), which are designed for a maximum internal pressure from a liquid of 1.0 specific gravity, rather than 1.8. Other exceptions are carbon steel caustic storage tanks, which are painted internally with a chlorinated rubber-base paint, as opposed to the specification for Class II vessels prohibiting internal painting.

3.2 FUEL TRANSPORT AND UNLOADING EQUIPMENT

Irradiated fuel elements are delivered from the reactor storage basins to the 202-A Building in shielded railroad cars. The cars enter the east end of the building through a railroad tunnel where canisters containing the fuel elements are remotely removed from fuel casks and emptied into the dissolvers with an overhead crane. This section describes the equipment used for transporting and unloading the spent fuel.

3.2.1 Fuel Element Canisters

The N Reactor fuel is stored and transported in six different types of canisters (see Figure 3-1), of which there are two main types -- short and tall. Basically, both types consist of two nominally 8-inch-diameter tubes, each flared at the top, connected together side-by-side at three points by short cylindrical bars, one at the top and two at the bottom of the canister. The top bar serves as the lifting trunnion and the lower bars as tipping trunnions. The bottom of the canister is perforated with 1-inch holes to allow water circulation around the fuel elements, and is covered with screen.

The short canisters are made of 0.09-inch-thick aluminum and are 28 inches in length. The bottom of each tube is 3/8-inch thick aluminum. There are two types of short canisters; one type (shown in Figure 3-1) has a round flare on the top of each tube, while the other type has an octagonal flare. The round-flare type is used only for handling 0.95 fuel and the octagonal flare type is used exclusively for "spike" fuel. The capacity of a short canister is 14 fuel elements (approximately 700 lb of uranium), or one tier of 7 fuel elements, positioned vertically, per tube.

The tall canisters are made of 16-guage, 300-series stainless steel, and are 71 inches long. The bottom of each tube is 1/4-inch-thick stainless steel. Each tube has a round flare on top. The tall canisters are used entirely for handling "spike" fuel and have a capacity of 42 fuel elements (approximately 1500 lb of uranium), or 3 tiers of 7 fuel elements per tube.

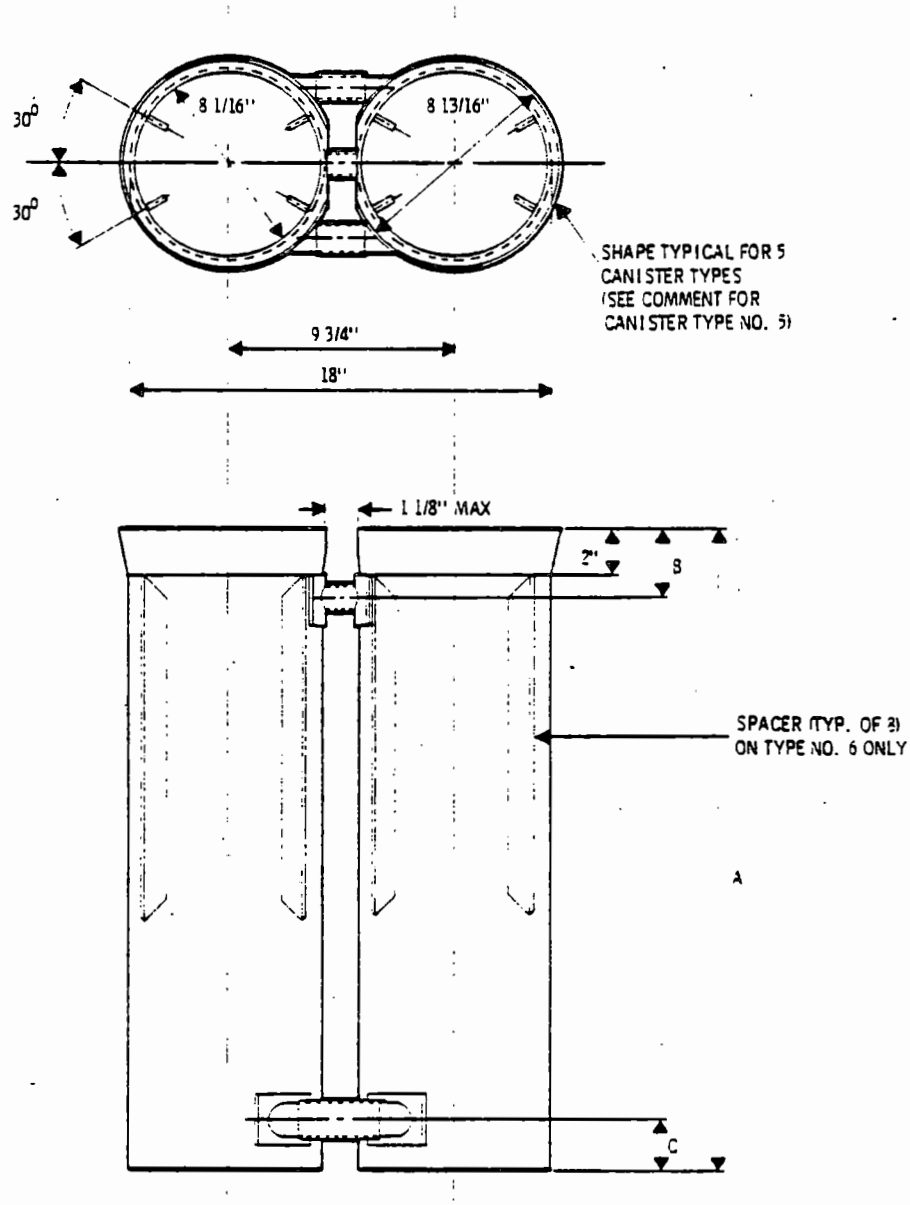

TYPE NO.	CANISTER MATERIAL	DIMENSIONS (INCHES) A	B	C	COMMENTS	DRAWING NUMBER
1	SST, ANY 300 SERIES, 16 ga	79	7.13	7.0	FEW IN EXISTENCE	H-1-37916
2	SST, ANY 300 SERIES, 16 ga	71	3.13	7.0	STD FOR SPIKE	H-1-37916
3	SST, ANY 300 SERIES, 16 ga	28	2.87	2.25		H-1-42594 SHT.'S 1,2
4	Al ALLOY 5086, 0.090 in.	28	2.87	2.25	MAJOR K BASIN LOAD	H-1-36935, SHT. 1
5	Al ALLOY 5086, 0.090 in.	28	2.87	2.25	OCTAGONAL TOP	H-1-36935 SHT.'S 1 2
					FOR SPIKE FUEL	
6	Al ALLOY 6061-T6, 0.090 in.	28.25	2.37	2.25	SALVAGED CO-	H-1-37916
					PRODUCT CANISTERS	

FIGURE 3-1. Fuel Element Canisters.

3.2.2 Fuel Casks

The fuel casks are large, heavily shielded containers used to transport canisters between the reactor basins and Purex. Two types of casks are used -- K basin casks and NPR (N Reactor) basin casks.

A K basin cask is shown in Figure 3-2. The sides and bottom of the cask are 10-inch-thick lead clad on the inside with 3/8-inch-thick carbon steel and on the outside with 1/2-inch-thick carbon steel. Tubes penetrate the sides of the cask to allow cooling water circulation around the fuel. The cask lid is 10-inch-thick lead clad with 3/4-inch carbon steel. The lid is held in place by locking cogs operated with an impact wrench. The overall dimensions of the cask are approximately 59 inches by 57 inches by 75 inches tall. The lid weighs approximately 5700 lb and the cask 39,300 lb for a total weight, empty, of approximately 45,000 lb. The cask cavity, which is divided into three sections by two carbon steel dividers, will hold three short fuel canisters.

A NPR basin cask is shown in Figure 3-3. The sides and bottom of the cask are 10-inch-thick lead, clad on the inside with 1/2-inch-thick stainless steel and on the outside with 3/4-inch carbon steel. There are penetrations in the side of the cask to allow cooling water circulation around the fuel. The cask lid is 10-inch-thick lead clad with 1/2-inch carbon steel. The lid is held in place by locking cogs operated with an impact wrench. The overall dimensions of the cask are approximately 57 inches by 78 inches by 128 inches tall. The lid weighs approximately 8250 lb and the cask 95,450 lb for a total weight, empty, of around 103,700 lb. The cask cavity, which is divided into four sections by a stainless steel insert containing 1% boron for neutron absorption, will hold four tall or 12 short canisters.

3.2.3 Canister Handling Basket

When using a NPR basin cask and short canisters to transport fuel, special baskets, called N-fuel canister carriers, are used. The use of the baskets decreases the dissolver charging time by allowing the crane operator to remove three canisters at a time from the cask, instead of having to grapple for each individual canister. A basket, rectangular in shape, is approximately 14 inches by 20 inches by 83 inches tall and is constructed of 3/16-inch carbon steel. The bottom of the basket is perforated with 1-inch holes to allow water circulation. A basket will hold three short canisters and a NPR basin cask will hold four baskets.

3.2.4 Cask Cars

Two types of railroad cars are used for transporting the fuel casks from the reactor basins to the 202-A Building. Both types are basically a rectangular water tank (for holding and cooling the fuel casks) on top of a railroad car, the difference between the two being size and capacity. The first type, called a "short" car, is a 30-foot-long flat-bed car with

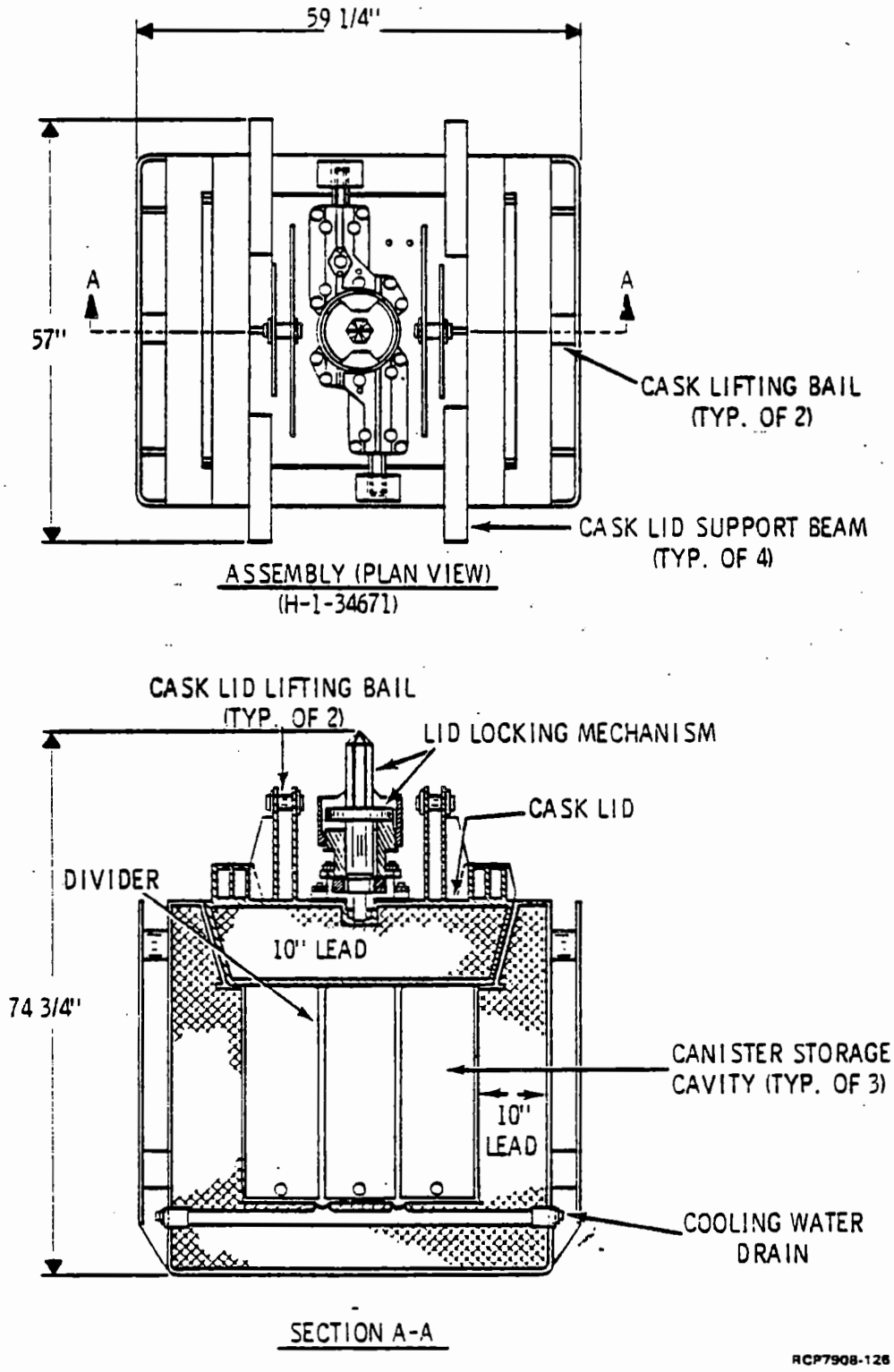

FIGURE 3-2. K Basin Fuel Cask.

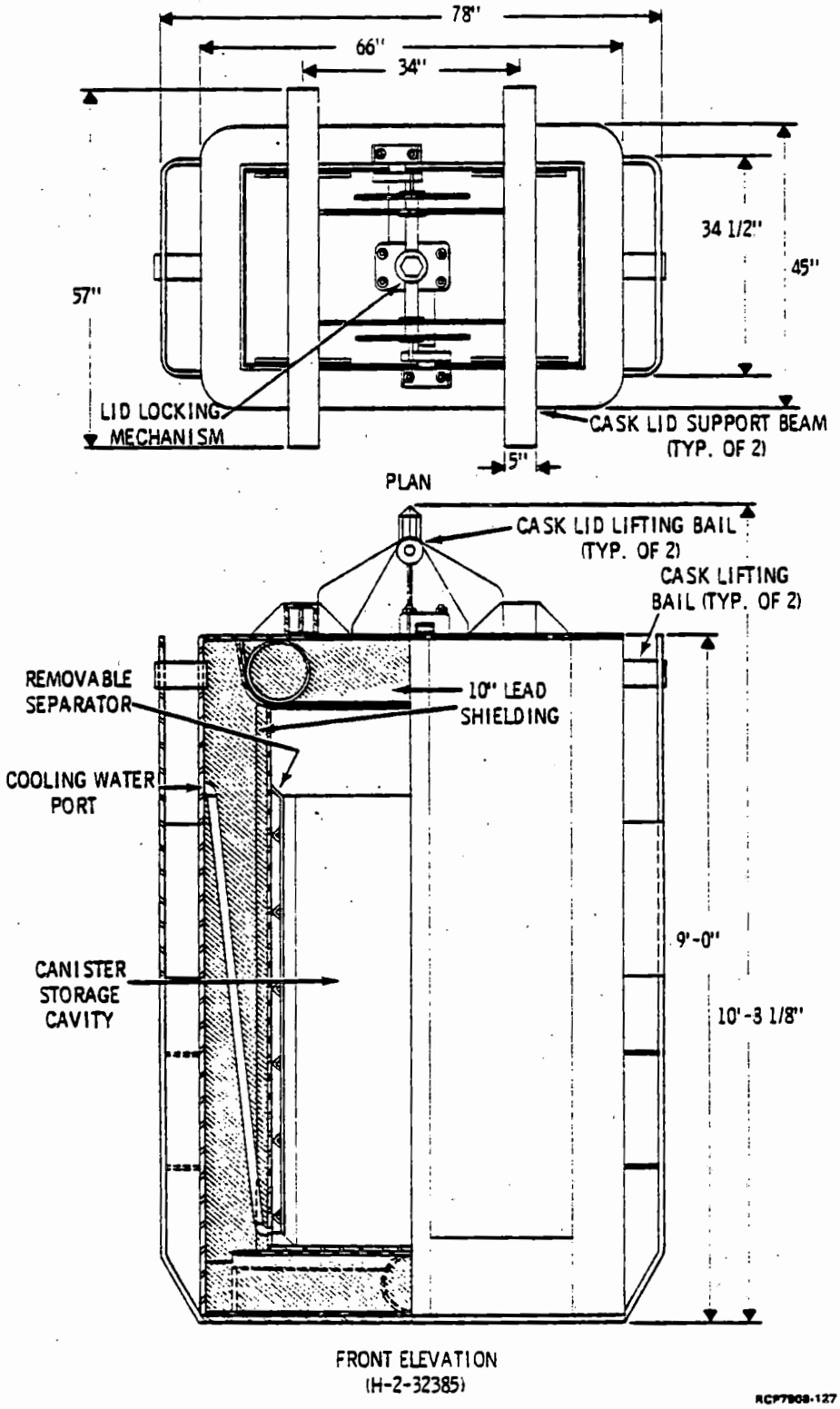

FIGURE 3-3. NPR Basin Fuel Cask.

a load capacity of 100 tons. The water tank on top will hold a single N Reactor basin cask. The second type, or "long" car, is 50 feet long and has an underslung frame carried by two six-wheel trucks. This car has a capacity of 200 tons and will hold three K Reactor basin casks. The water tanks on both car types have hinged doors on top, which are opened by a hand wheel-operated mechanism.

3.2.5 Railroad Tunnel

The railroad tunnel is the route through which the irradiated fuel and equipment for canyon use enter the 202-A Building. The tunnel runs north and south, forming a "T" on the east end of the building, and enters the building on the north side at a level approximately 15 feet below grade. A concrete tunnel enclosure extends north from the building approximately 95 feet. Located on the south end of the tunnel as it leaves the building are two burial tunnels (see Section 2.3.6). Access to the tunnel from the railroad cut is through a 19- by 32-foot vertical rolling steel door. The tunnel is separated from the canyon by a 19- by 32-foot horizontal, aluminum ventilation cover in the ceiling of the tunnel. The cover travels horizontally along rails on the sides of the railroad tunnel and is driven by six 1-hp electric motors. For ventilation control in the canyon, this cover is closed whenever the outside tunnel door is open.

As many as three cask cars may be in the tunnel at one time with the outside door closed. This will still allow crane access through the ventilation cover opening to unload and charge fuel from the first car.

3.2.6 Car Puller

The railroad cars are positioned under the horizontal ventilation cover in the railroad tunnel for equipment and fuel unloading by means of a car puller. The car puller is an arm connected to a continuous chain which travels along steel guide rails on the east wall of the tunnel. The arm has a hook on the end that can be connected to a bracket on the side of the railroad cars. The puller is driven by a reversible 15-hp electric motor through a 204 to 1 gear ratio speed reducer. The arm is hooked onto the last car into the tunnel so that a car cannot be pushed through the unopened outside door. The car puller can be operated either by the crane operator or from a local control box in the tunnel.

3.2.7 Fuel Dumping Equipment

To aid the crane operator in charging the dissolvers, two types of dumping assemblies are used. The first, used with the short fuel canisters, is basically a stainless steel cylinder, approximately 6 feet 5 inches in diameter and 2 feet 6 inches tall, with an upper lip that projects out approximately 3 inches. This assembly fits inside the top of the dissolver, with the lip of the cylinder resting on the upper lip of the dissolver.

With this arrangement, the dissolver lid can be placed on the dissolver without removing the dumping assembly. Equally spaced around the inside of the cylinder are four hook-like projections which engage the dumping trunnions on the bottom of the fuel canister when the canister is lowered into the dissolver with the crane for dumping. The four dumping positions allow an even distribution of fuel in the dissolver annulus.

The second type of dumping assembly is used with the tall fuel canisters. The stainless steel assembly, basically three vertical columns welded to a base plate, is approximately 15 inches by 24 inches by 64 inches tall. The center column has a hook-like projection, or pivot point, approximately 26 inches from the top which engages the dumping trunnions on the fuel canisters. The outer columns, 4- by 6-inch box beams, serve as guides for positioning a canister on the assembly. A 1- by 2-foot steel plate located just above and behind the pivot serves as both a canister positioning guide and lifting bail for the assembly. It also helps prevent accidently tipping the fuel canister backwards away from the dissolver and spilling the fuel. The assembly is fastened to brackets located on the outside of the dissolver approximately 15 inches below its upper lip. This puts the pivot point approximately 4 feet from the centerline of the dissolver and 2 feet above the upper lip. There are three such dumping assemblies equally spaced around the top of the dissolver. The positioning of the assemblies is such that the dissolver lid can be taken on and off with the assemblies in place.

For an added safety measure when dumping tall canisters, a special trunnion guard is used. It is roughly half a cylinder, 30 inches in diameter and 45 inches tall, that fits around the dumping assembly, preventing the accidental spilling of fuel when dumping canisters into the dissolver.

3.2.8 Cranes

The overhead cranes located in the Purex canyon are shown in perspective in Figure 3-4. There are two master cranes -- an "east" and a "west" -- plus a slave crane. The master cranes are used for the majority of the routine remote maintenance work involving the canyon equipment, and for performing the process function of charging the fuel to the dissolvers. The slave crane is used to assist a master crane in those operations which require two cranes, or to perform maintenance operations in low-radiation-level areas.

3.2.8.1 Master Cranes

The east and west master cranes are essentially identical. The bridge of each crane spans two rails 54 feet apart, 26 feet above the canyon deck, and rides on eight steel wheels with a wheel base of 18 feet. Each master crane is electrically driven by a 65-hp motor and can travel the length of the canyon at speeds of from 2 to 160 ft/min. Limit switches and rail stops are provided to prevent bridge overtravel.

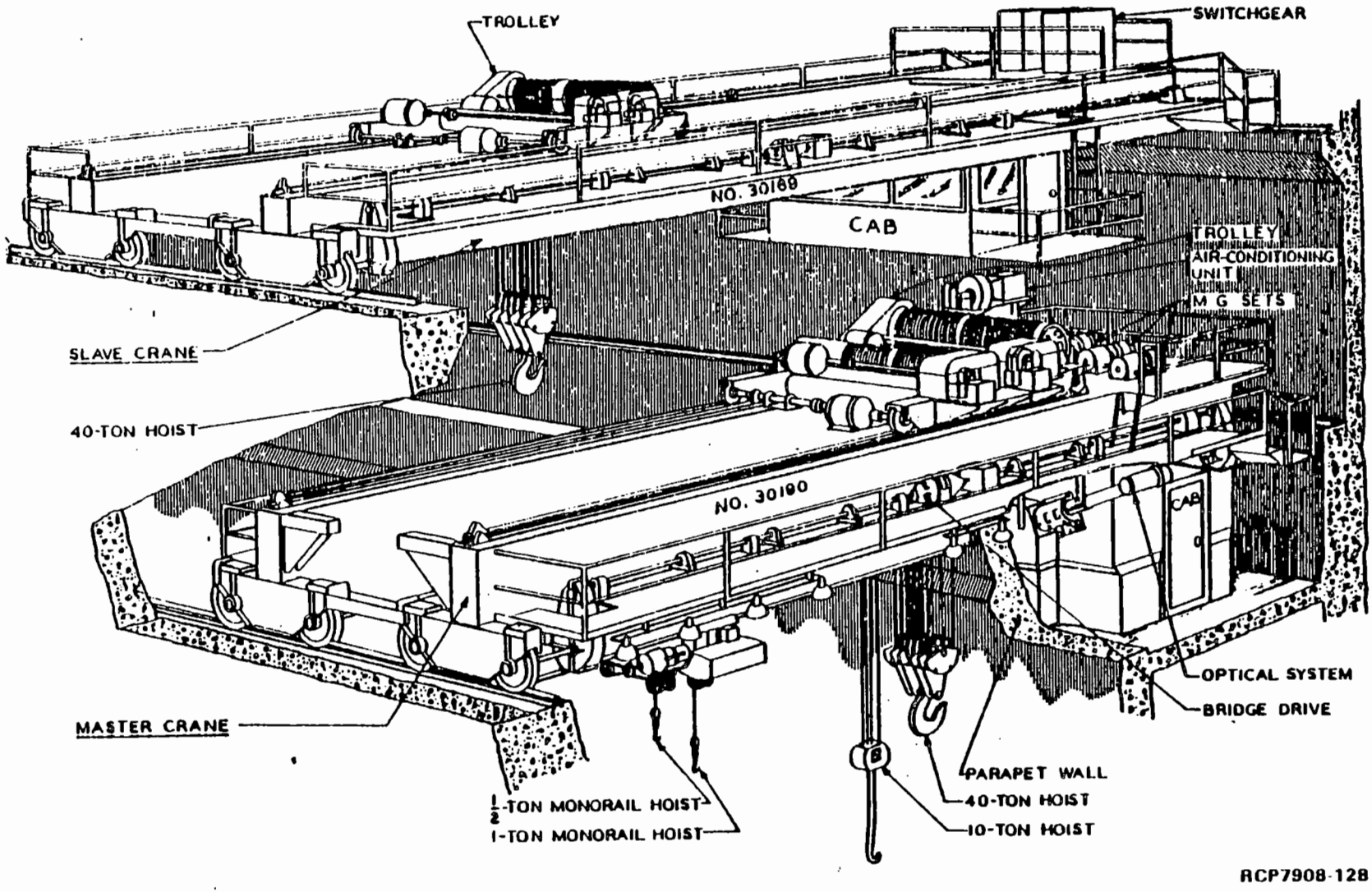

FIGURE 3-4. Canyon Cranes.

A 40-ton hoist, a 10-ton hoist, two 1-ton hoists and two 1/2-ton hoists are suspended from the crane bridge. The 40-ton and 10-ton hoists are mounted on a main trolley which spans the bridge, while the 1-ton and 1/2-ton hoists are mounted on two monorail trollies hung under the bridge girders. With this arrangement, all the hooks have three directions of movement; the bridge travels lengthwise through the canyon, the trolleys travel across the canyon, and the hoists travel vertically. In addition to this, the 10-ton hook can rotate 360° on its axis, driven by a 1/30-hp electric motor via reduction gears and an electric clutch. Hoisting speeds and trolley speeds are as follows:

Hoist Capacity, tons, (number)	Trolley Speed, ft/min	Hoisting Speed, ft/min
40 (1)	1 to 50	1/6 to 8
10 (1)	1 to 50	1/2 to 50
1 (2)	1/2 to 25	1/2 to 28
1/2 (2)	1/2 to 25	1/2 to 28

All the nonrotating hooks are set up with the throat opening towards the crane operator except for the west 1-ton hoist, which opens away from the crane operator. Limit switches are provided to prevent trolley and hoist overtravel.

The cranes are powered by Amplidyne variable-voltage, variable-speed, d.c. drive systems, which provide high torque at low speeds. Each driving motor, with the exception of those operating the monorail trolleys, has a separate a.c. motor-d.c. generator set. One motor-generator set supplies the power for both monorail trolleys, with the result that both trolleys cannot be used at the same time. The power supply for the cranes' 440-volt, 3-phase current is carried by three 4- by 4-inch steel angle irons fastened to the north wall of the canyon, approximately 9 feet above the crane rails. Spring-loaded, L-shaped, electrical contact collector shoes attached to the crane ride along the bottom on the angle iron.

A short section of five 3- by 2 1/2-inch angle irons at the east end of the canyon beneath the power conductor angles connects controls in the crane with the car puller (described in Section 3.2.6) located in the railroad tunnel. Telephone communication with the crane cab is provided by two copper wires suspended next to the canyon wall about 6 feet above the crane rails. Radio communication to the crane cab is also provided over the 202-A Building PAX telephone system.

Movements of the crane are controlled from an approximately 9- by 14-foot totally-enclosed, steel-shielded cab, which travels behind a 2-foot-thick concrete parapet wall. The cab's steel shielding is about 3 inches thick. There is an air lock on the crane cab entrance through which the crane operator must travel to enter the cab. Crane operations are observed from the cab by means of two variable-power binocular-type periscopes mounted on either side of the crane bridge. Powers of 0.75, 2.5, and 5 with the corresponding angles of vision of 68°, 25°, and 12.5° may be selected by the operator. The objective of each periscope may be moved across the canyon and rotated about its axis to permit increased vision.

There are several lights on the cranes to provide illumination for the crane operator. Beneath the bridge there are sixteen 1000-watt, 120-volt lights, eight on either side. Mounted on the main trolley are four 1500-watt, 208-volt lights. Two 500-watt, 32-volt "engineering" lights are mounted on the 1-ton hoist and can be tilted as required by the crane operator. The west crane has a 1000-watt, 120-volt spotlight mounted on both periscope objectives which rotate with the objective.

9413275.0530

3.2.8.2 Slave Crane

The slave crane is a standard industrial model with one 40-ton hoist. The bridge of the slave crane, riding on eight steel wheels, spans two rails, 18 feet directly above the rails for the master cranes. The slave crane has a wheel base of approximately 20 feet. The bridge can travel the length of the canyon at speeds of 2 to 160 ft/min and, with its 40-ton hook fully retracted, can pass over the master cranes. The 40-ton hoist is mounted on a trolley which spans the bridge. It has hoisting speeds of 1 to 22 ft/min and trolley speeds of 1 to 25 ft/min. As with the master cranes, limit switches prevent bridge, trolley, and hoist overtravel. The power pickup and drive systems of the slave crane are also similar to those of the master cranes.

The height of the slave crane places its cab above the concrete wall used to shield the master crane cab. Hence, the slave crane is operated from its cab only when working in low radiation areas. The cab is approximately 13 feet wide and 14 feet long. Large shatterproof glass windows allow the operator a direct view of the work below, so no special viewing aids are required. When being used for work in high radiation areas, the slave crane can be controlled from the master crane by means of a special umbilical cord which connects the slave crane controls to the master crane controls. To provide illumination for the work area under the slave crane, there are four 1000-watt lights mounted beneath the main trolley.

3.2.9 Impact Wrenches

An important attachment to the crane for doing remote work is the impact wrench. There are two types used at Purex -- the "Hanford" impact wrench and the standard Purex impact wrench.

The Purex wrench is used to make or break remote connections and to operate the holddown nuts on tanks, columns, and other equipment. The wrenches are attached to the 1/2-ton monorail hoists on the master cranes and can be operated either horizontally or vertically, depending on the point of suspension, which the crane operator can change by setting the wrench on the canyon deck and sliding the suspension hook along the wrench handle. A positioning device on the wrench which engages a special stop on the connector heads prevents the wrench from turning during operation.

The wrench is driven by a reversible 3/4-hp electric motor via a train of gears. It can be operated in either direction by reversing the motor rotation. The wrench will deliver a steady torque up to 400-500 ft-lb, after which the wrench will start impacting. Loose nuts, when removed from their studs, are retained in the socket of the impact wrench by a snap ring until they can be placed on dummy studs for future use. The overall dimensions of the wrench are approximately 25 inches long by 17 inches by 6 1/2 inches. The socket size on the standard Purex wrench is a 2-inch hexagon.

The second type, or Hanford impact wrench, is used exclusively to unlatch the lids on the cask cars for fuel unloading. The Hanford wrench is physically larger than the Purex wrench and uses a 3-inch hexagonal socket.

3.2.10 Storage Basin

The storage basin, which is an unlined concrete pool located on the east side of the railroad tunnel, was used for underwater storage of aluminum-clad fuel elements, which were formerly processed in the Purex Plant. At the time this manual was issued, the basin contained four buckets of aluminum-clad elements to be processed. The N Reactor fuel elements have not been, and are not planned to be, stored in the storage basin, since costly design modifications would be necessary to meet nuclear safety requirements. The fuel elements are stored in the shipping casks from which they are removed when they are charged directly to the dissolvers.

3.3 DISSOLVERS

Three dissolvers (TK-A3, TK-B3, TK-C3) of nearly identical design, located in A, B, and C Cells, respectively, are used for chemically removing the Zircaloy cladding and dissolving the uranium, plutonium, neptunium, and fission products in the fuel elements. A typical dissolver and its associated off-gas equipment is shown schematically in Figure 3-5. Equipment blueprint numbers are given for each piece of apparatus.

A dissolver, consisting basically of two annuli separated by a slotted wall, is about 285 inches tall by 111 inches in outer diameter at the bottom. All surfaces which come into contact with process vapors or

9413275.0532

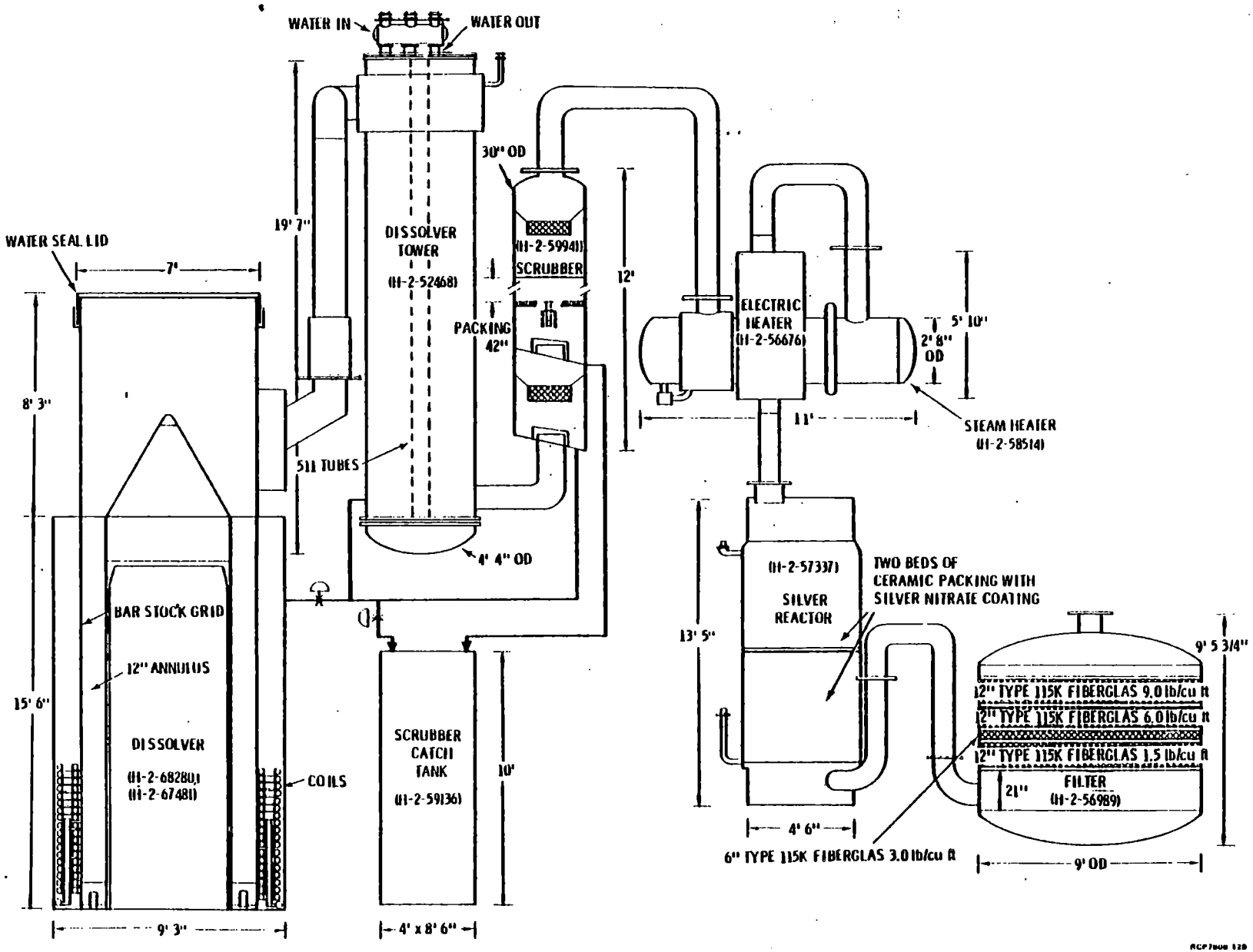

FIGURE 3-5. Dissolver Cell Equipment.

liquids are stainless steel. The 12-inch-wide inner annulus (11-inches for the new A Cell dissolver) in the bottom section of the dissolver is formed between a central, cylindrical, cadmium-jacketed, concrete neutron moderator and the slotted wall made of vertical stainless steel bars. The fuel elements are dumped onto a stainless steel distributor cone surmounting the concrete moderator and are thus distributed around the inner annulus. A raised grid of bars on the bottom of the inner (fuel) annulus supports the weight of the dumped fuel elements and protects the air and steam sparger (air-lift circulators in B and C Cell dissolvers) from the weight of the fuel.

The fuel annulus is surrounded by a 12-inch-wide (14 inches wide for A Cell dissolver) solution annulus containing heating and cooling coils made of 915 feet of 2-inch Schedule 80 pipe, a sparge ring (air-lifts in B and C dissolvers), and several dip tubes for solution transfers and instrumentation. The jet for transferring the dissolved metal solution is attached to an external nozzle on a suction leg in the solution annulus. The position of the jet is below the normal liquid level in the dissolver, since the jet suction could not overcome the hydraulic head of the liquid if the jet were installed on top of the dissolver.

Vapors generated during dissolver operation exit to a downdraft condenser (see Section 3.4.1) through a 16-inch off-gas line extending from the side of the upper section of the dissolver. The 85-inch-diameter dissolver lid is water-sealed, with a capability of holding about 8 inches of water vacuum.

The original three Purex dissolvers were pot-type vessels. Because of its design geometry, this type of dissolver could be used only for dissolving natural uranium. Starting in 1965, the pot dissolvers were replaced with annular dissolvers, which are geometrically favorable for criticality safety to allow for processing of enriched fuel. Since that time, the annular dissolvers have evolved through four designs. A dissolver of the latest design is installed in A Cell. This design differs from that of the B and C Cell dissolvers in the annuli width and the sparger type, as mentioned above. In addition, the raised grid in the fuel annulus of the A dissolver is 9 inches above the bottom of the dissolver, as compared to 11 inches for the other two dissolvers.

3.4 DISSOLVER OFF-GAS EQUIPMENT

This section describes the equipment used for the removal of some of the ammonia, oxides of nitrogen, iodine, and particulates from the dissolver off-gas stream. Figure 3-5 is a schematic of the equipment involved. Each of the three dissolvers has its own off-gas handling equipment. The order in which the equipment is described corresponds to the route followed by the dissolver off-gas after it leaves the dissolvers.

3.4.1 Dissolver Towers (T-A3-1, T-B3-1, T-C3-1)

Each dissolver tower is basically a vertical, countercurrent condenser with two main functions. First, during fuel decladding, it acts as an ammonia absorber as the condensing water vapor in the off-gas absorbs some of the ammonia in the off-gas and cools the off-gas to a temperature favorable for ammonia absorption downstream in the ammonia scrubber. Second, during fuel dissolution, the tower acts as a nitric acid absorber via the same condensation-absorption mechanism, with the condensing water vapor absorbing some of the oxides of nitrogen. The condensate from the tower can be routed to either the dissolver or an ammonia scrubber catch tank using controls in the head-end control room.

The tower itself is a cylindrical vessel 4 feet 4 inches in diameter and approximately 19 feet 7 inches long. The shell and the lower dished head are 1/4-inch-thick stainless steel; the top head is a flat stainless steel plate 1.5 inches thick. Running around the shell approximately 9 feet from the bottom is a single corregation expansion joint. The off-gas enters near the top of the tower via a 16-inch pipe attached to a distributor ring, 6 feet 6 inches in diameter and 20 inches wide, on the outside of the tower. Near the end of the 16-inch pipe is a six corrugation - close pitch expansion joint. The distributor inlets to the tower are ten 4- by 18-inch slots, spaced 15° apart, centered opposite to the point where the 16-inch line enters the distributor ring. This arrangement prevents channeling through the condenser and provides for an even flow distribution. There is a "U"-shaped spray ring adjacent to the slots for rinsing the inside of the tower. The off-gas flows shell-side downward through the condenser and leaves through a 10-inch pipe.

The tube bundle, which carries the tower cooling water, is made up of 511 stainless steel tubes, each 1 inch OD, 14 BWG, and 18 feet long. On the central 15 feet of each tube are 20 radial fins, 1/2-inch wide by 21 gauge thick, which are cut and twisted once per foot to preclude straight-line condensate and off-gas flow through the condenser. Inserted in each tube is a sealed 3/4-inch-OD tube; 14 BWG, and 18 feet long. The resulting annulus between inner and outer tube increases the (upward) water velocity through each tube. Based on the inside tube surface, the total area available for heat transfer is approximately 1675 ft^2. Based on the outside tube and fin surface, the area available for condensation is approximately 15,000 ft^2. The entire tower, except for the top plate, is insulated with 2-inch-thick fiberglass sheathed with 20-gauge stainless steel.

The tower and the ammonia scrubber (described in Section 3.4.2) are fastened to dunnage approximately 5.5 feet by 5.5 feet by 22 feet tall. The dunnage is made out of 8-inch carbon steel I beams. The tower sits inside the dunnage, while the ammonia scrubber is fastened to the outside. This entire assembly then sits on top of the dunnage supporting the ammonia scrubber catch tank, described in Section 3.8.1.

3.4.2 Ammonia Scrubbers (T-A3-3, T-B3-3, T-C3-3)

An ammonia scrubber is installed downstream of the dissolver tower to remove ammonia from the off-gas not removed by absorption in the dissolver tower. The ammonia-bearing solution from the scrubber is collected in a catch tank, described in Section 3.8.1, from where it is transferred with a steam jet to the ammonia scrubber waste concentrator feed tank, TK-F12.

The ammonia scrubber is approximately 30 inches in diameter and 12 feet tall. The top of the scrubber is a dished head, and the bottom is a flat plate at a 10° angle with the horizontal. The entire shell is constructed of 1/4-inch stainless steel. The off-gas from the dissolver tower enters the scrubber via a 10-inch line through the bottom plate and exits via a 10-inch flanged pipe on the top. As the off-gas enters the scrubber, it impinges against an 8-inch-diameter baffle plate. It is then funneled through a de-entrainment pad, 17 inches in diameter, 6 inches thick, made of 5-mil Tophet M wire with a mesh density of 10 to 12 lb/ft^3. Directly above the de-entrainment pad is a 1/2-inch spray head used for rinsing the pad.

The off-gas then goes through a chimney-baffle arrangement into the packed section of the scrubber, where the ammonia absorption takes place. The chimney-baffle allows the off-gas to enter the packed section, but will not allow the scrub water coming down off the packing to enter the de-entrainment section. Instead, the scrub water collects around the chimney and drains to the ammonia scrubber catch tank.

The packed section of the scrubber is approximately 42 inches long and consists of 18 ft^3 of 1-inch-diameter stainless steel Pall rings. The packing is supported by a metal grid covered with 3/4-inch mesh stainless steel wire cloth. Directly above the packing is a distributor plate to distribute the scrub water over the top of the packing. The plate consists of 41 weir pipes, each approximately 2 1/2 inches in diameter and 3 1/2 inches tall, fastened to a 1/4-inch stainless steel plate in three concentric circles. There is a "V" groove cut into the top of each pipe to maintain a water depth on the plate of 2 3/4 inches. The scrub water is fed to the center of the plate via a 2-inch pipe with an outlet below the water level on the plate.

Above the distributor plate, the off-gas is funneled through another de-entrainment pad, 17 inches in diameter, 4 inches thick, made of 5-mil tantalum wire with a mesh density of 12 to 19 lb/ft^3. After passing through this pad, the off-gas leaves the scrubber.

3.4.3 Steam and Electric Heaters

As shown in Figure 3-5, the dissolver off-gas leaving the ammonia scrubber is heated to 380°F by a steam heater (E-A2, -B2, -C2) and an

electric heater (H-A2, -B2, -C2) in series before entering the silver reactor (see Section 3.4.4) for removal of iodine from the gas stream. The steam heater, operated with 185-psig steam, serves as a preheater, and the electric heater provides the additional energy to raise the gas temperature to the desired level.

The steam heater is a horizontal, finned-tube, stainless steel, insulated, heat exchanger, 2 feet 8 inches O.D. by 11 feet long. The heater contains 171 steam-bearing tubes, 1 inch O.D. and 8 feet long. Each tube is finned to 2-inch O.D. over its central 6 feet with 20 longitudinal fins. The 1/4-inch-thick heater wall has an expansion joint near the gas inlet. The heater has 3/8-inch-thick dished heads and 10-inch flanged nozzles for gas inlet and outlet.

The electrical heater consists of a vertical duct made from 3/16-inch-thick stainless steel, 10 1/4 inches by 21 1/8 inches in inside cross-section by 5 feet 10 inches long. The duct, which is insulated and sheathed with stainless steel sheet metal over the insulation, contains 24 "U"-shaped resistance heating elements with a total heating capacity of 96 kW. The elements are inserted horizontally through two opposite walls of the duct. Off-gas from the steam heater enters the top of the duct through a 10-inch pipe, passes down over the heaters in the duct, exits through a 10-inch flanged pipe in the bottom, and enters the silver reactor. The electrical input to the heating elements is automatically controlled to maintain a set temperature (380°F) in the off-gas exit line from the heater.

3.4.4 Silver Reactors (T-A2, T-B2, T-C2)

Off-gas from each electrical heater enters downward through a silver reactor containing silver nitrate-coated packing, which removes iodine from the off-gas stream. The reactor vessel is 4.5 feet O.D. and about 13.5 feet tall. The top and bottom are flat 3/4-inch stainless steel plates, and the vessel shell is 3/8-inch stainless steel.

The vessel contains two beds of packing, each consisting of a 12-inch depth of 1-inch unglazed Berl saddles under a 34-inch depth of 1/2-inch unglazed Berl saddles. The two beds are separated vertically by a distance of about 2 feet, and each rests on a support made of angle iron and coarse screen. The packing is coated with silver nitrate for iodine retention. Heated off-gas enters the silver reactor through a flanged 10-inch nozzle into a plenum above the top packing bed in the top of the vessel, passes through the two packing beds, and exits from a bottom plenum through a 10-inch pipe leading to filters described in Section 3.4.5.

The reactor is heated by an external steam coil made of 2-inch Schedule 40 pipe wrapped around the side walls of the vessel. The coil, off-gas nozzles, and external surfaces of the reactor shell are insulated with the insulation covered with 20-gauge stainless steel sheet.

Two 3-inch nozzles on the top of the reactor allow regeneration of the packed beds by spraying them with silver nitrate solution. One of the nozzles extends down through the top bed and above the lower bed so the lower bed can be independently regenerated by inserting a spray nozzle on a long wand down through the extended nozzle.

The design of the silver reactors has changed since the original installation. The B Cell reactor, however, still has a single 8-foot bed of packing, a characteristic of the original reactors, instead of the two beds described above.

3.4.5 Off-Gas Filters

For removal of any remaining particulate matter, the dissolver off-gas from each silver reactor is passed through two Fiberglas (trade name of Owens-Corning Fiberglas Corporation) filter beds (F-A1, -B1, -C1, and F-1A, -1B, -1C) in series. Only the first filter bed is shown in Figure 3-5. Both beds and their containment vessels, however, are identical in design.

Each filter containment vessel is an insulated, dished-head, stainless steel tank, 9 feet in outer diameter (exclusive of insulation) by 8.75 feet high. Ten-inch flanged nozzles are located in the side wall near the bottom head, and in the top head, for gas inlet and outlet, respectively. The Fiberglas filter (Type 115K) is in four layers of different densities held between screen-covered supports. Fiberglas Type 115K has a mean fiber diameter of 0.00115 inch. As seen in Figure 3-5, the layers range in density from 1.5 lb/ft^3 at the bottom (gas inlet) with increasing density to 9 lb/ft^3 for the top (gas outlet) layer. The top layer was changed to Type 115K from the originally installed 1 inch of AA medium, which, unlike 115K, was found to be very susceptible to water damage.

One set of filters (F-A1, -B1, -C1) is located in the Purex canyon just downstream of the silver reactor, while the second set (F-1A, -1B, -1C) is in a vault (294-A Building) outside the 202-A Building in the line leading to the backup facility (see Section 3.4.7).

3.4.6 Vacuum Control Valves

The vacuum control for the dissolver is maintained by two stainless steel diaphragm-operated valves (DOVs) in the off-gas train in the canyon downstream of the canyon filters described in Section 3.4.5. One of the valves, a 6-inch plug valve, operates with low flows, and a 6-inch butterfly valve controls at high flows. Both valves are installed in a large remotely handled jumper called the "donut jumper" because of its shape. From the control valves, the off-gas train is connected to nozzles on the canyon wall with three 4-inch-diameter jumpers. The off-gas then goes through the wall, through the pipe trench, to the filter in the 294-A Building, and to either the backup facility for nitric acid recovery or directly to the 291-A1 stack.

3.4.7 Backup Facility

The backup facility equipment, added to the Purex Plant after startup, was originally intended for additional iodine removal from the dissolver off-gas in case the silver reactors broke through. Nitric acid was to be recovered in the first absorption tower (T-XA), with the second tower (T-XB) serving as a caustic scrubber for the off-gas. The first tower, however, did not remove enough nitrogen oxides, causing the caustic solution to be depleted rapidly, and resulting in a depleted caustic disposal problem. Therefore, both towers are now used for nitric acid absorbers, as well as a backup iodine removal system. When uranium metal is not being dissolved, the dissolver off-gas bypasses the backup facility since no acid recovery nor iodine removal service is needed.

The backup facility is housed in the 293-A Building, described in Section 2.3.2, and contains the two acid absorber towers and coolers, described in Section 3.13, and two acid collection tanks (TK-XC and TK-XD), described in Section 3.8.

The off-gas is pulled from the dissolver and the downstream equipment by three steam jets, which may operate singly when the backup facility is being bypassed, or in unison when pulling through the backup facility. The jets discharge into the bottom of the 291-A1 ventilation stack just above the entrance of the 202-A Building ventilation flow. The backup facility bypass is operated from the dissolver panel board.

3.5 CENTRIFUGES

Two centrifuges located in E Cell are used to remove the solids (primarily uranium tetrafluoride) from Zirflex coating waste. The solids are then metathesized to hydrated uranium dioxide, dissolved, and transferred to solvent extraction feed.

Two sizes of Bird solid-bowl centrifuges are used at the Purex Plant. The centrifuges are similar in design and construction except for bowl diameter. Principal components of a machine include: (a) a solid cylindrical bowl, (b) a vertical spindle from which the bowl is axially suspended, (c) an electric motor, direct-connected to the spindle, and (d) the outer cylindrical case, which encloses the rotating bowl. The components are rigidly supported by a structural steel frame measuring 7 feet by 10 feet by 13 feet high. The entire assembly is designed for remote operation and maintenance. All parts in contact with process solutions or fumes are stainless steel.

Centrifuge G-E2 (see Figure 3-6), the type originally installed at Purex, has a 48-inch bowl diameter, while the G-E4 machine, shown in Figure 3-7, is a modified 40-inch-bowl-diameter model like those in the Hanford B and T Plants. The centrifuges have stainless steel bowls,

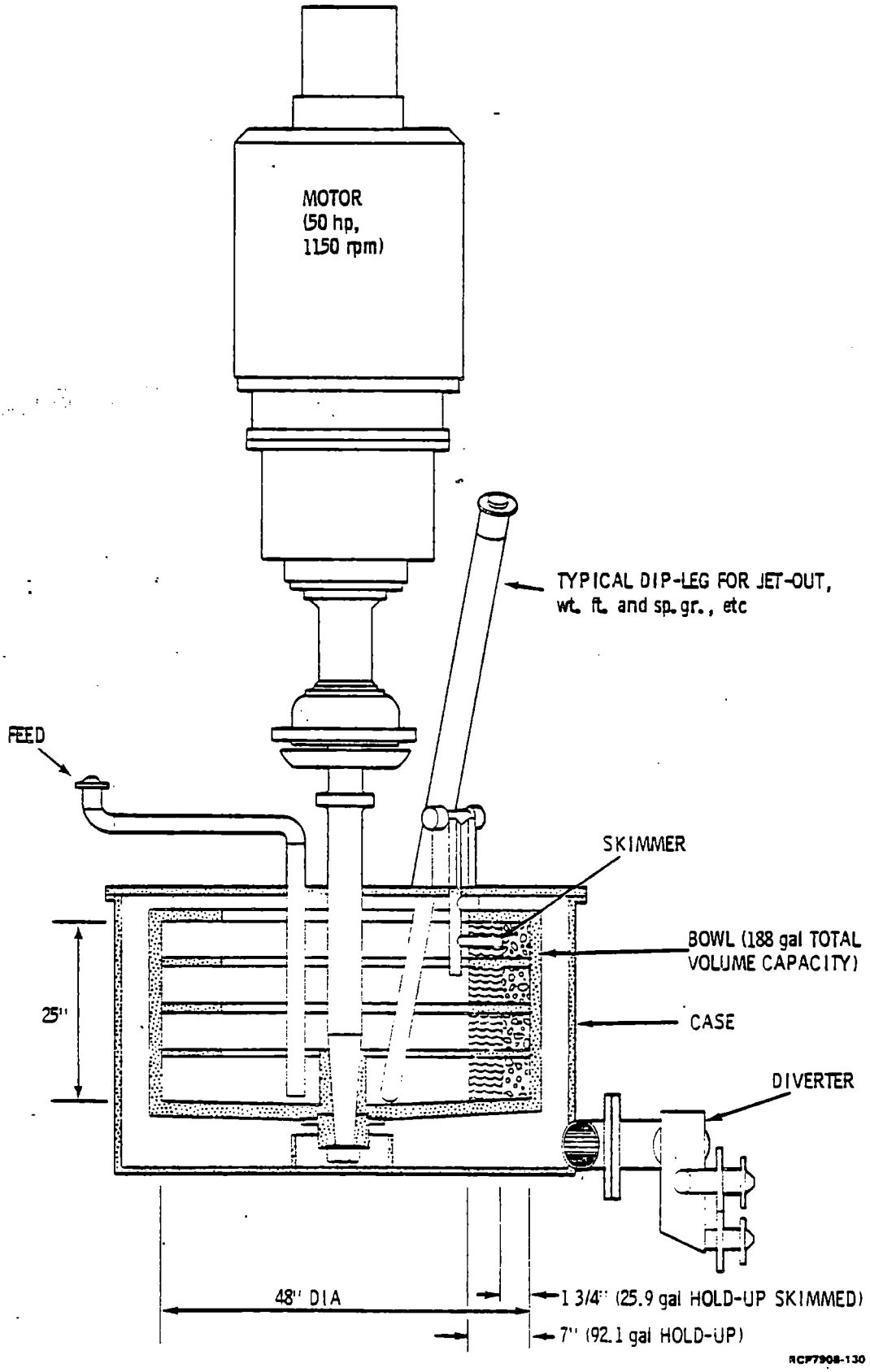

FIGURE 3-6. Purex G-E2 Centrifuge.

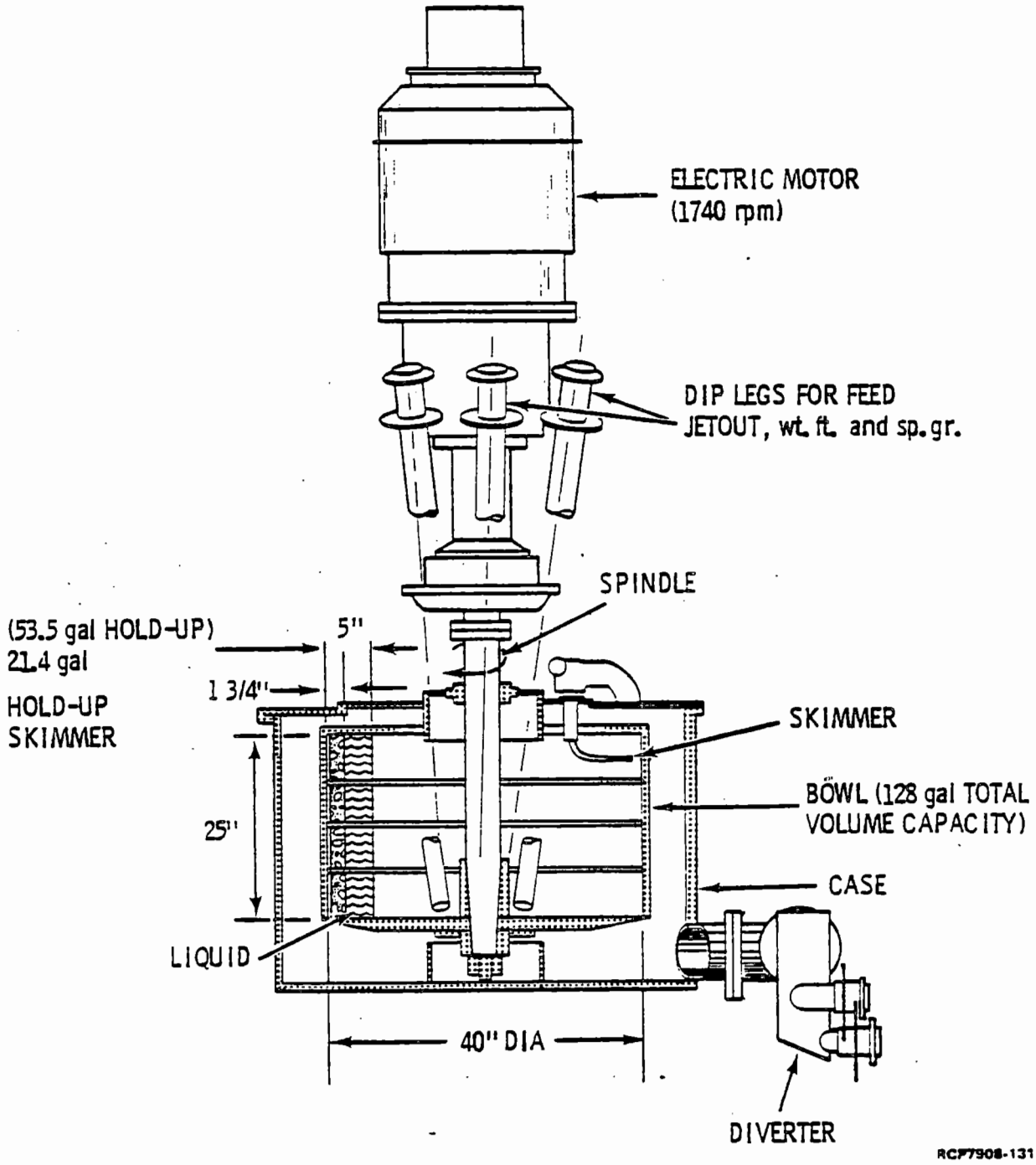

FIGURE 3-7. Purex G-E4 Centrifuge.

spinning volumes of 90 and 60 gallons, skimming speeds of 550 and 850 rpm, and exert 900 and 1740 G (force of gravity), at the working speeds of 1150 and 1750 rpm, respectively.

Important centrifuge auxiliaries include a hydraulically operated skimmer which contacts and sucks up liquid for reducing the liquid holdup in the spinning bowl at the end of centrifugation, and a high-pressure spray for dislodging or washing down the solids. In operation, centrifuge feed is introduced via a dip tube to near the bottom of the rotating bowl and flows to the bowl wall. Over an extended period of operation, solids collect on the bowl wall, while liquids escape to the centrifuge case over the bowl lip. Liquid holdup in the rotating bowl is partially removed by operation of the skimmer. Solids are removed by spraying, slurrying, and jetting.

Both centrifuges operate from a 440-volt, 60-Hz electrical supply. They are braked from their low speeds by d.c. excitation of the motor field, bringing the centrifuge to a stop, but not reversing its direction, as an a.c. braking current would.

Motor heating can be a problem during the slurrying and cleaning process, because the centrifuge is started a number of times from stop to only 10 to 80 rpm. It is essential that, at the specified frequency, the centrifuge is run long enough at slow speeds to cool off the motor, or thermal relays will shut down the machine until the motor cools. The G-E2 centrifuge motor has the capability of being run with a 550-volt, 75-Hz supply to get a 1500 rpm operation, and hence, greater throughput, but this mode is not used because it uses some of the switchgear that would be used by G-E4, which cannot tolerate a 550-volt, 75-Hz power supply.

3.6 PULSE COLUMNS AND ASSOCIATED EQUIPMENT

The pulse columns are the heart of the Purex Plant. In these columns, a solvent extraction process is used to separate uranium, plutonium, and neptunium from fission products and metallic impurities for recovery as concentrated nitrate product solutions. The organic solvent consists of 30 vol% TBP with NPH diluent.

The pulse columns are vertical contacting devices containing a series of stationary perforated plates of various designs to provide the desired mixing and flow characteristics. The plates are assembled into cartridges, which in most cases can be installed and removed remotely by the canyon crane. Pulse generators are used to transmit an up-and-down pulsing motion to the solutions to provide intimate mixing and increase the countercurrent flow of the aqueous and organic phases through the plate perforations.

The technical bases for the design and the performance characteristics of the pulse columns are discussed in Chapter 6.0. The significant design features of the pulse columns, cartridges and associated pulse generators are described in this section.

3.6.1 Column Design

The designs of the 15 pulse columns and cartridges installed in the Purex Plant (only 14 columns are used in the process as the HS column, T-H3, is bypassed) are summarized in Tables 3-2, 3-3 and 3-4. Simplified drawings of the pulse columns and cartridges are presented as Figures 3-8 through 3-22 and are discussed in Section 3.6.1.3 below. These tables and figures are based on information from the last "In-Cell Equipment Table 202-A." This table, which is maintained current and issued periodically by the drafting organization, should be consulted to determine the status of installed and spare equipment.

3.6.1.1 Design Capacity

The pulse columns were designed for a nominal instantaneous processing rate of 8.33 tons of uranium per day. However, early test operation of column prototypes, or near prototypes, demonstrated good performance over a wide throughput range with instantaneous rates extending to at least as low as 3 tons and up to 16 to 20 tons of uranium per day during short runs with unirradiated natural (cold) uranium. Subsequent equipment modifications have enabled prolonged operation at a rate of 30 tons of uranium per day, with very short operating periods at 33.3 tons of uranium per day during processing of irradiated aluminum-clad fuel. The processing rate of irradiated Zircaloy-clad fuel, however, is restricted to a maximum rate of about 10 tons of uranium per day due to head-end and waste handling capacity limitations. Operation at rates below about 7.5 tons of uranium per day is difficult due to problems in controlling the flow of many streams at this low throughput with installed equipment.

3.6.1.2 Cascade Arrangement

The columns are placed in the cells to allow gravity flow of product streams from the HA column to the 1BX feed tank (HS column is now bypassed), from the 1BX column to the 1BS and 1C columns, from the 2A column to the 2B column, from the 2D column to the 2E column, from the 2M column to the 2P column, and from the 3A to the 3B column. The relative elevations of all column tops with respect to one reference plane are listed in Table 3-2.

3.6.1.3 Column and Cartridge Drawings

Drawings of installed columns and cartridges are shown in Figures 3-8 through 3-22. The C-type (stripping) columns (1C, 2E) are essentially identical in construction. The 2D column has been modified to allow remote replacement of the cartridge. The 2D column differs from the 1D

9413275.0543

TABLE 3-2. Solvent Extraction Columns.

Column	Diam, in.	Cartridge Height ft	Interface[a] Measurement	Continuous Phase	Elev. of Column Top Above Ref. Plane,[b] ft.	Disengaging Sections	Pulse			
							Volume, in.^{3}	Amplitude, in.	Pulse Leg Diam, in.	Frequency cycles/min
1A (T-H2) Extraction Scrub	26 26	13.2 18.1	Float	Organic	35.9	Tanks	970	1.86	12	35 to 110
1S (T-H3)[c]	34	18	Float	Organic	27.6	Tank (Top) Column (Bottom)	970	1.07	12	35 to 110
1BX (T-J6)	32	31	Float	Aqueous	33.6	Tank (Top) Column (Bottom)	485	0.60	12	35 to 110
1C (T-J7)	34	18	Dip Tube	Aqueous	27.6	Tank (Top) Column (Bottom)	970	1.07	12	35 to 110
2D (T-K2) Extraction Scrub	24 32	13.9 13.2	Float	Organic	33.9	Tanks	485	1.07 0.60	12	35 to 110
2E (T-K3)	34	18	Dip Tube	Aqueous	27.6	Tank (Top) Column (Bottom)	970	1.07	12	35 to 110
1BS (T-J4)	8	13.3	Float	Aqueous	20.6	Tank (Top) Horizontal Slabs (Bottom)	44	0.84	4	25 to 100
2A (T-L1) Extraction Scrub	7	20.9 9.8	Float	Organic	38.8	Horizontal Slabs	44	1.1	4	25 to 100
2B (T-L2)	7	23	Float	Aqueous	34.6	Horizontal Slabs (Bottom) Annular (Top)	44	1.1	4	25 to 100
3A (T-L4) Extraction Scrub	4	20.3 12.6	Float	Organic	38.0	Annular	Variable[d]		1	30 to 120
3B (T-L5)	4	21.5	Float	Aqueous	31.1	Annular	Variable[d]		1	30 to 120
2N (T-J22) Extraction Scrub	7	20 11	Float	Organic	38.1	Horizontal Slab (Bottom) Annular (Top)	44	1.1	4	25 to 100
2P (T-J23)	7	19.3	Float	Aqueous	27.8	Annular (Top) Horizontal Slab (Bottom)	33	0.86	4	25 to 100
1O (T-G2)	34	26.3	Float	Organic	34.6	Tank (Top) Column (Bottom)	485	0.53	12	35 to 110
2O (T-R2)	34	26.3	Float	Organic	35.1	Tank (Top) Column (Bottom)	485	0.53	12	35 to 110

[a] Interface is at top of aqueous continuous columns and at bottom of organic continuous columns.

[b] Reference plane elevation is 674 ft 4 1/4 in.

[c] The 1S column is bypassed.

[d] The 3A and 3B columns are air pulsed. The pulse amplitude and volume are therefore functions of pulse air pressure and frequency.

TABLE 3-3. Cartridge Tie Rods and Spacers.

Column	Tie Rods		Circle Diam, in.	Tie Rods on Circle	Tie Rods Connected to Support Spiders	Spacers	
	Diam, in.	No.				Diam, in.	Schedule
HA	1	9	0 14 23	1 4 4	1 4 4	1	40
HS*	1/2	9	0 18-5/8 31	1 4 4	1 4 4	1/2	40
2D Extraction	1/2	9	0 12 21	1 4 4	1 4 4	1/2	40
2D Scrub	1/2	21	0 14 23 29	1 4 8 8	1 4 0 4	1/2	40
1C,2E 10,20	1/2	49	0 10 20 30	1 8 16 24	1 8 8 8	1/2 1/2	40 80
1BX	7/16	17	0 10 14 21-1/2 29	1 4 4 4 4	1 4 4 4 4	3/8	40
1BS 2A,2B 2N,2P 3A 3B	1 7/16 1 5/16 5/16	1 3 1 3 3	0 5 0 2-1/4 2-3/4	1 3 1 3 3	1 3 1 3 3	1 3/8 1 1/4 1/4	40 40 40 40 40

*HS column is currently bypassed

4190-3276-0514

Column Cartridge	Plate Spacing, in.	Plate Material	Plate Type	No. of Plates	Free Area, %	Nozzle Direction	Hole Diam, in.
HA Ext (T-H2)	2	SS SS	Nozzle Louver[a]	58 4	23 26	Down	3/16
HA Scrub (T-H2)	3	SS SS	Nozzle Louver[a]	61 4	23 26	Down	3/16
*HS (T-H3)	2	SS SS	Nozzle Louver	96 2	10 16	Down	1/8
1BX (T-J6)	2	SS SS	Sieve Louver[a]	138 6	23 22		1/8
1BS (T-J4)	2	SS SS	Nozzle Louver[b]	71 2	23 30	Up	3/16
1C (T-J7)		SS **Fl	Nozzle[c] Sieve[c]	74 28	23 23	Up	3/16 3/16
2A Ext (T-L1)	2	SS	Nozzle	126	23	Down	1/8
2A Scrub (T-L1)	3	SS	Nozzle	40	23	Down	1/8
2B (T-L2)	2	SS SS	Sieve Louver[f]	136 1	23 15		1/8
3A Ext (T-L4)	2	SS SS	Nozzle Louver[b]	113 3	23 21	Down	3/16
3A Scrub (T-L4)	3	SS SS	Nozzle Louver[b]	41 2	23 21	Down	3/16
3B (T-L5)	2	SS SS	Sieve Louver[b]	118 4	23 21		1/8
2D Ext (T-K2)	2	SS SS	Nozzle Louver[a]	62 4	23 17	Down	3/16
2D Scrub (T-K2)	1 1	SS **Fl SS	Sieve[e] Sieve[e] Louver[a]	64 64 3	21 23 22		0.085 3/16
2E (T-K3)		SS **Fl	Nozzle[c] Sieve[c]	74 28	23 23	Up	3/16 3/16
2N Ext (T-J22)	2	SS SS	Nozzle Louver[b]	109 2	23 23	Down	3/16
2N Scrub (T-J22)	3	SS SS	Nozzle Louver[b]	38 2	23 23	Down	3/16
2P (T-J23)	4 4 12	SS SS SS **Fl	Nozzle[d] Nozzle[d] Louver[d] Sieve[d]	18 39 1 16	10 23 23 23	Up Up	1/8 3/16 3/16
1O (T-G2)	4	**Fl	Sieve	80	23		3/16
2O (T-R2)	4	**Fl	Sieve	80	23		3/16

*HS column is currently bypassed.

**Fl is the abbreviation of Fluorothene, the trademark of Union Carbide Corp. for poly-trifluoromonochloroethylene.

Notes:

[a]Louver plates are generally located adjacent to the feed distributors and at approximately 4-foot intervals.

[b]Louver plates are located adjacent to feed distributors.

[c]The 1C column and the 2E column cartridges are composed of five different configurations as follows (from bottom up):

1. Alternate (8 each) Fluorothene sieve and SS nozzle plates; 3-inch space, sieve plate, 1/2-inch space, nozzle plate, 3-inch space, sieve plate, 1/2-inch space, nozzle plate, etc. - total height = 29 inches.
2. Alternately, two nozzle plates (14) and one sieve (7) plate; nozzle plate, 3-inch space, nozzle plate, 3-inch space, sieve plate, 1/2-inch space, nozzle plate, etc. - total height = 46 3/8 inches.
3. Similar to Item 2, but three nozzle plates (24) and one sieve (8) plate in each group. Total height = 77 inches.
4. Alternately, six nozzle plates (25), and one sieve plate (4) in each group. Two-inch spacing except 1/2-inch between sieve plate and next higher nozzle plate, - total height = 50 1/2 inches.
5. Three nozzle plates at 2-inch spacing, 2-inch space, sieve plate, 1/2-inch space, nozzle plate, - total height = 8 5/8 inches.

[d]The 2P column cartridge is composed of three different configurations as follows (from bottom up):

1. A group of 11 SS nozzle plates, 1/8-inch diameter holes, 10% free area, with 4-inch plate spacing. Total height = 3 feet 4 inches.
2. Two groups of one Fluorothene sieve plate and three SS nozzle plates, 1/8-inch diameter holes, 10% free area. Spacing; 2-inch space, Fluorothene plate, 2-inch space, nozzle plate, 4-inch space, nozzle plate, 4-inch space, nozzle plate, 2-inch space, Fluorothene plate, etc. Total height = 24 inches.
3. Groups of one Fluorothene sieve plate and three SS nozzle plates, 3/16-inch diameter holes, 23% free area. Spacing is similar to spacing in the center configuration of plates. One louver plate is located at top of cartridge. Total height approximately 13 feet 4 inches.

[e]The 2D scrub section cartridge configuration consists of alternate pairs of SS sieve and Fluorothene sieve plates.

[f]Louver plate is located 2 1/2 feet below 2BF entry.

TABLE 3-4. Column Cartridge Description.

DOE-Richland, WA

THIS PAGE INTENTIONALLY
LEFT BLANK

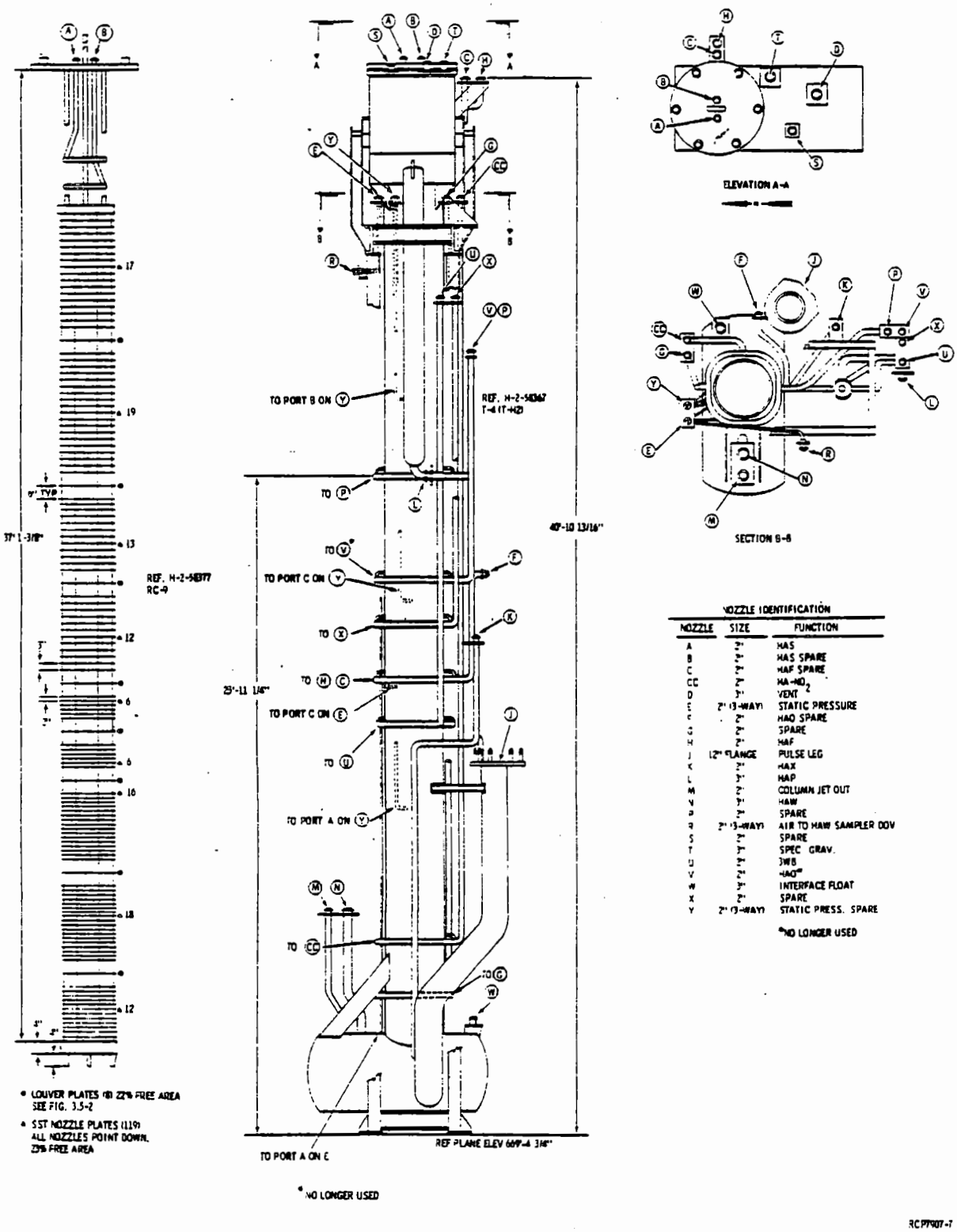

NOZZLE IDENTIFICATION

NOZZLE	SIZE	FUNCTION
A	2"	HAS
B	2"	HAS SPARE
C	2"	HAF SPARE
CC	2"	HA-NO_2
D	3"	VENT
E	2" (3-WAY)	STATIC PRESSURE
F	2"	HAO SPARE
G	2"	SPARE
H	2"	HAF
J	12" FLANGE	PULSE LEG
K	2"	HAX
L	3"	HAP
M	2"	COLUMN JET OUT
N	3"	HAW
P	2"	SPARE
R	2" (3-WAY)	AIR TO HAW SAMPLER DOV
S	2"	SPARE
T	3"	SPEC GRAV.
U	2"	3WB
V	2"	HAO*
W	3"	INTERFACE FLOAT
X	2"	SPARE
Y	2" (3-WAY)	STATIC PRESS. SPARE

*NO LONGER USED

FIGURE 3-8. HA Column and Cartridge.

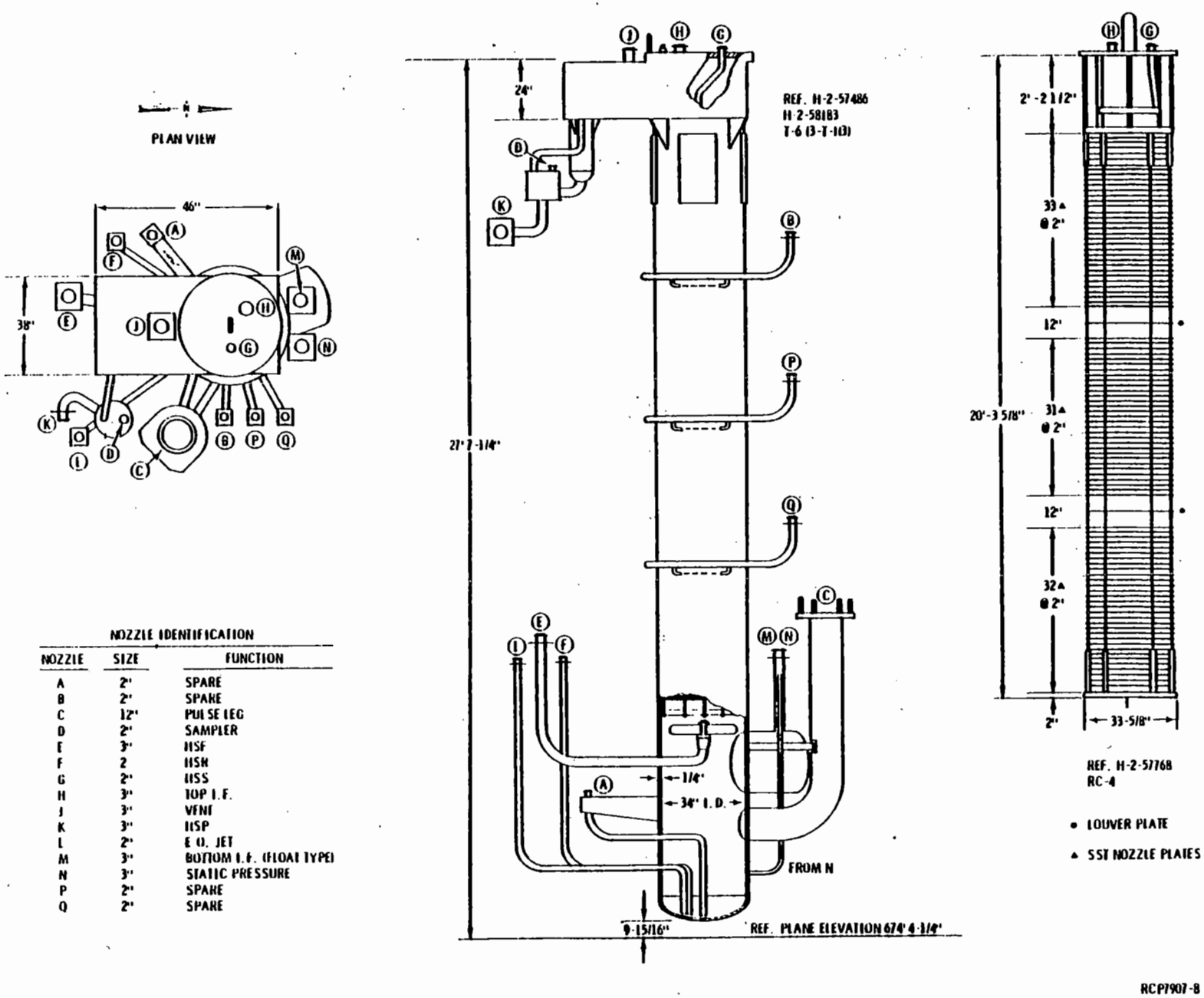

NOZZLE IDENTIFICATION

NOZZLE	SIZE	FUNCTION
A	2"	SPARE
B	2"	SPARE
C	12"	PULSE LEG
D	2"	SAMPLER
E	3"	HSF
F	2	HSR
G	2"	HSS
H	3"	TOP L.F.
J	3"	VENT
K	3"	HSP
L	2"	E.O. JET
M	3"	BOTTOM L.F. (FLOAT TYPE)
N	3"	STATIC PRESSURE
P	2"	SPARE
Q	2"	SPARE

FIGURE 3-9. HS Column and Cartridge.

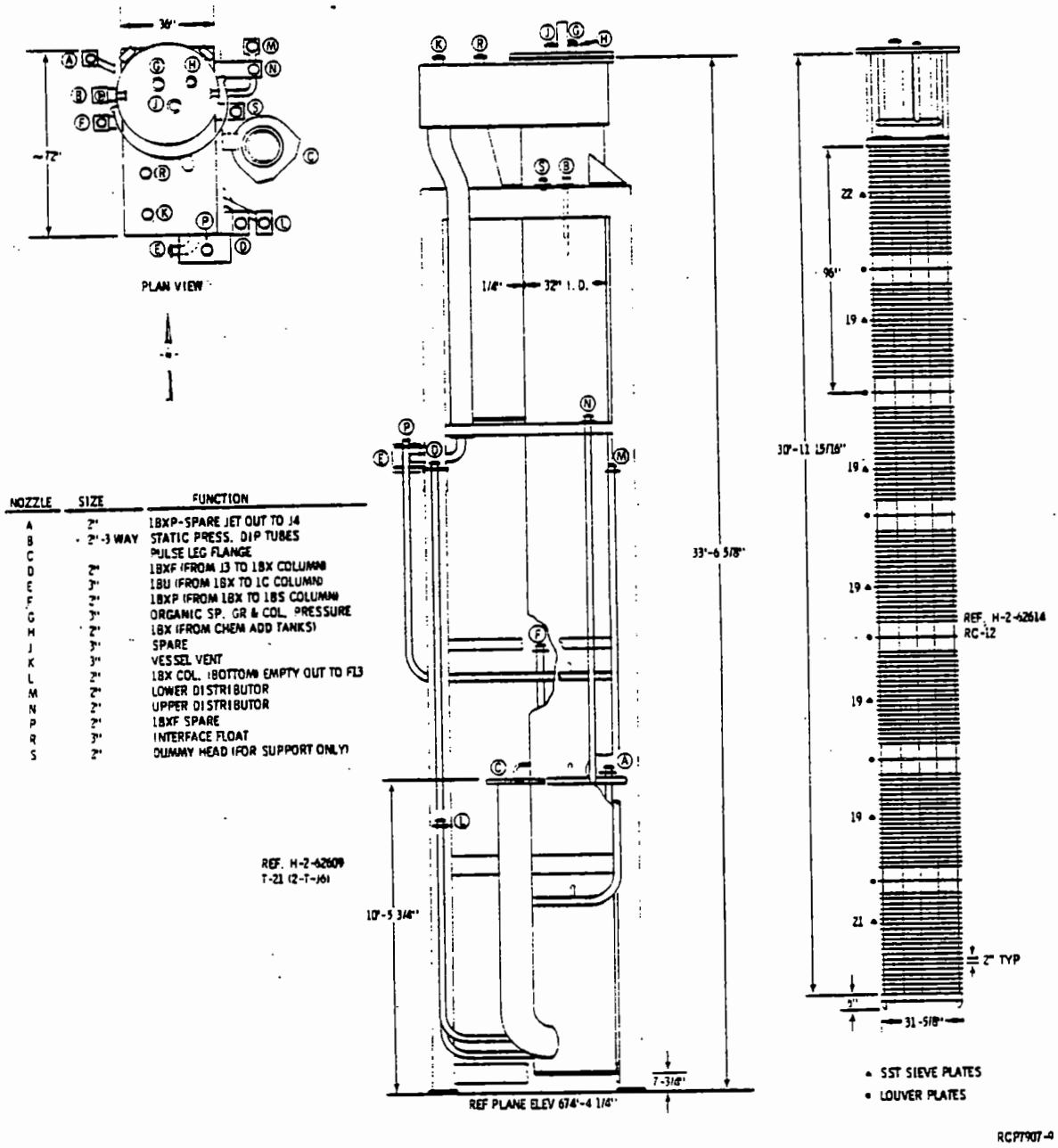

NOZZLE	SIZE	FUNCTION
A	2"	1BXP-SPARE JET OUT TO J4
B	2"-3 WAY	STATIC PRESS. DIP TUBES
C		PULSE LEG FLANGE
D	2"	1BXF (FROM J3 TO 1BX COLUMN)
E	2"	1BU (FROM 1BX TO 1C COLUMN)
F	2"	1BXP (FROM 1BX TO 1BS COLUMN)
G	2"	ORGANIC SP. GR & COL. PRESSURE
H	2"	1BX (FROM CHEM ADD TANKS)
J	2"	SPARE
K	3"	VESSEL VENT
L	2"	1BX COL. (BOTTOM) EMPTY OUT TO FL3
M	2"	LOWER DISTRIBUTOR
N	2"	UPPER DISTRIBUTOR
P	2"	1BXF SPARE
R	3"	INTERFACE FLOAT
S	2"	DUMMY HEAD (FOR SUPPORT ONLY)

FIGURE 3-10. 1BX Column and Cartridge.

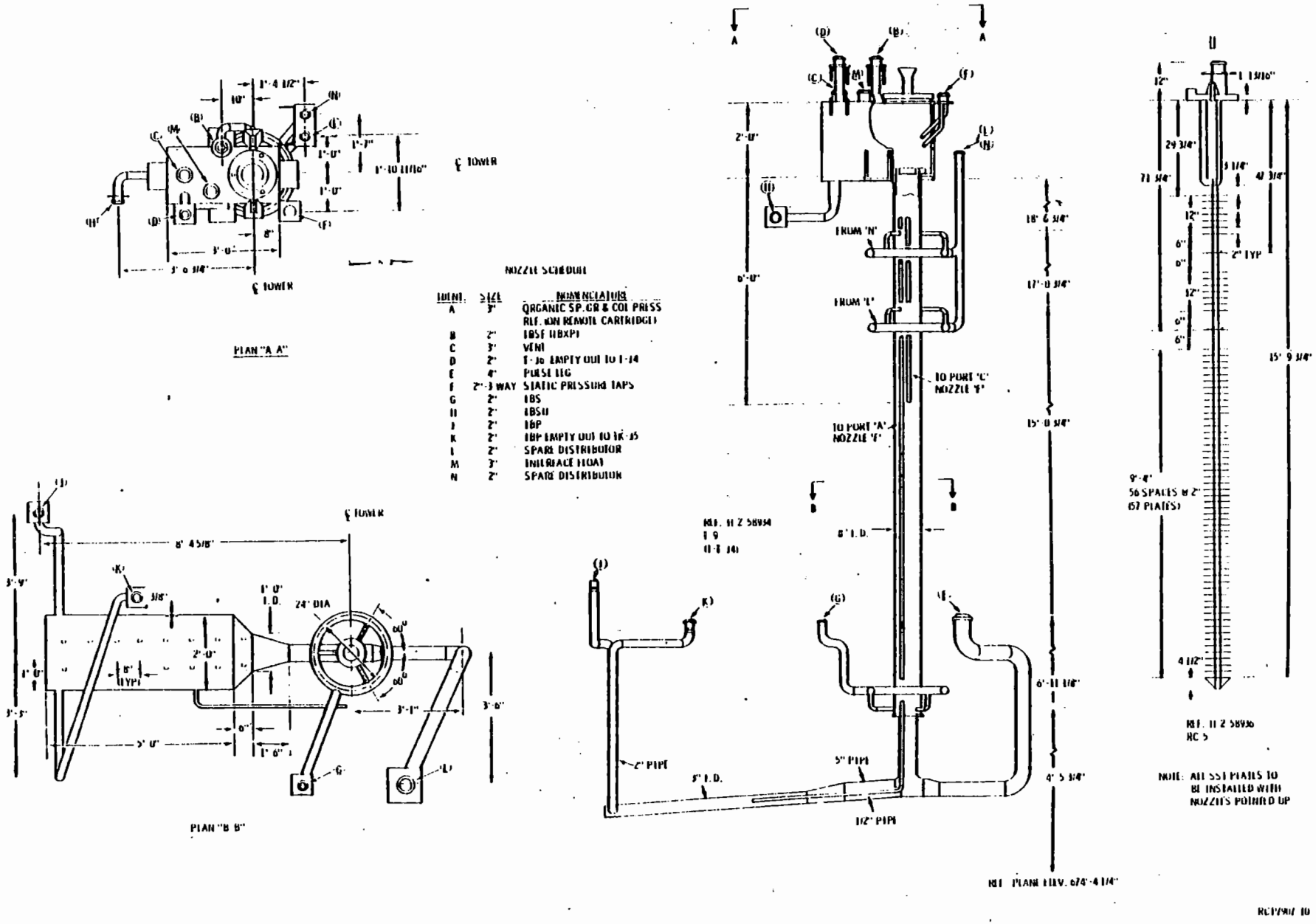

FIGURE 3-11. IBS Column and Cartridge.

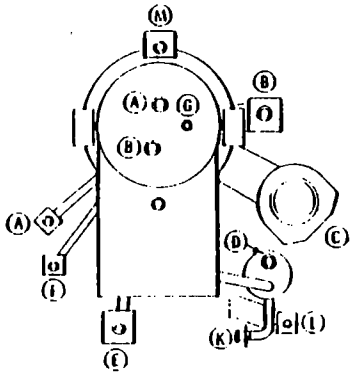

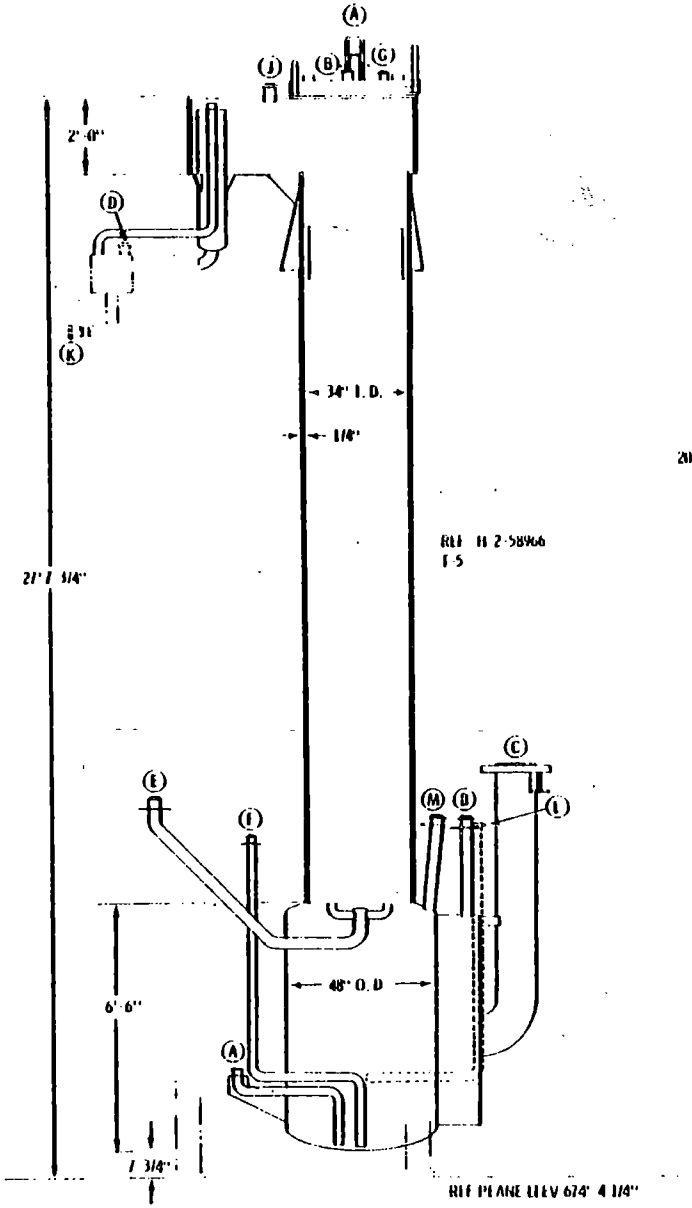

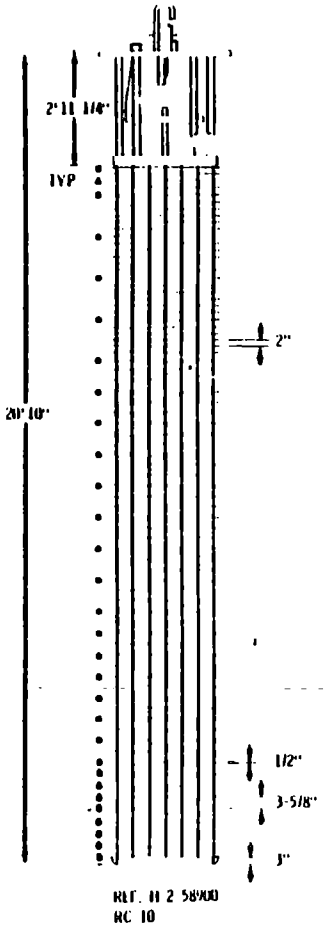

NOZZLE IDENTIFICATION

COLUMN NOZZLE	SIZE	FUNCTION
A	2"	ICU
B	3"	SPARE
C	12"	PULSE LEG
B	2"	ICW SAMPLER
E	3"	IBU
F	2"	ICU
H	3"	SPARE
J	3"	VENT
K	3"	ICW
L	2"	JET TO TK-F13
M	3"	STATIC PRESSURE
P	3"	SPARE

CARTRIDGE NOZZLE

A	3"	INTERFACE FLOAT
B	3"	INTERFACE DIP TUBES
G	2"	ICX

FIGURE 3-12. IC Column and Cartridge.

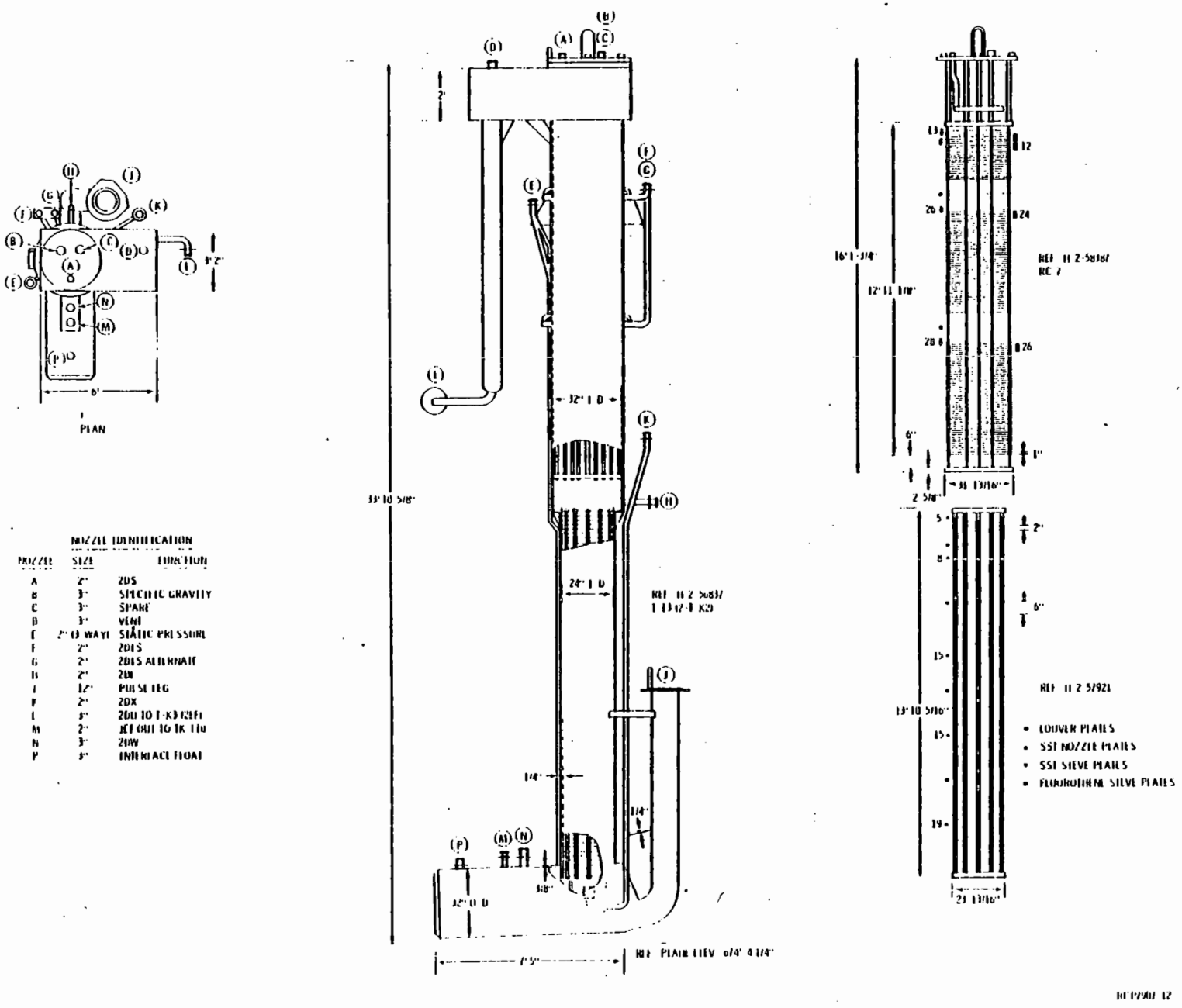

FIGURE 3-13. 2D Column and Cartridges.

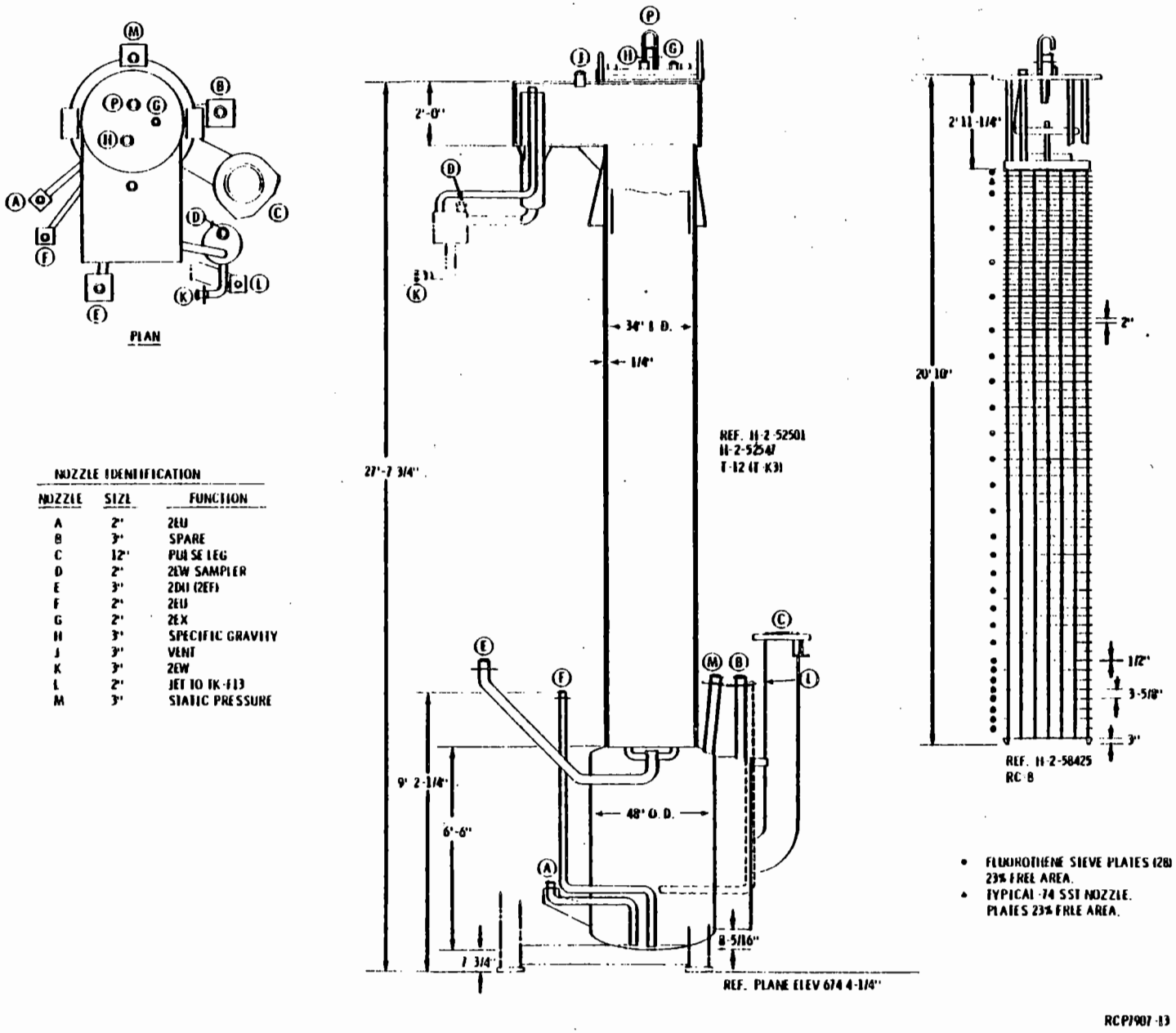

NOZZLE IDENTIFICATION

NOZZLE	SIZE	FUNCTION
A	2"	2EU
B	3"	SPARE
C	12"	PULSE LEG
D	2"	2EW SAMPLER
E	3"	2DU (2EF)
F	2"	2EU
G	2"	2EX
H	3"	SPECIFIC GRAVITY
J	3"	VENT
K	3"	2EW
L	2"	JET TO TK-F13
M	3"	STATIC PRESSURE

FIGURE 3-14. 2E Column and Cartridge.

9413275.0553

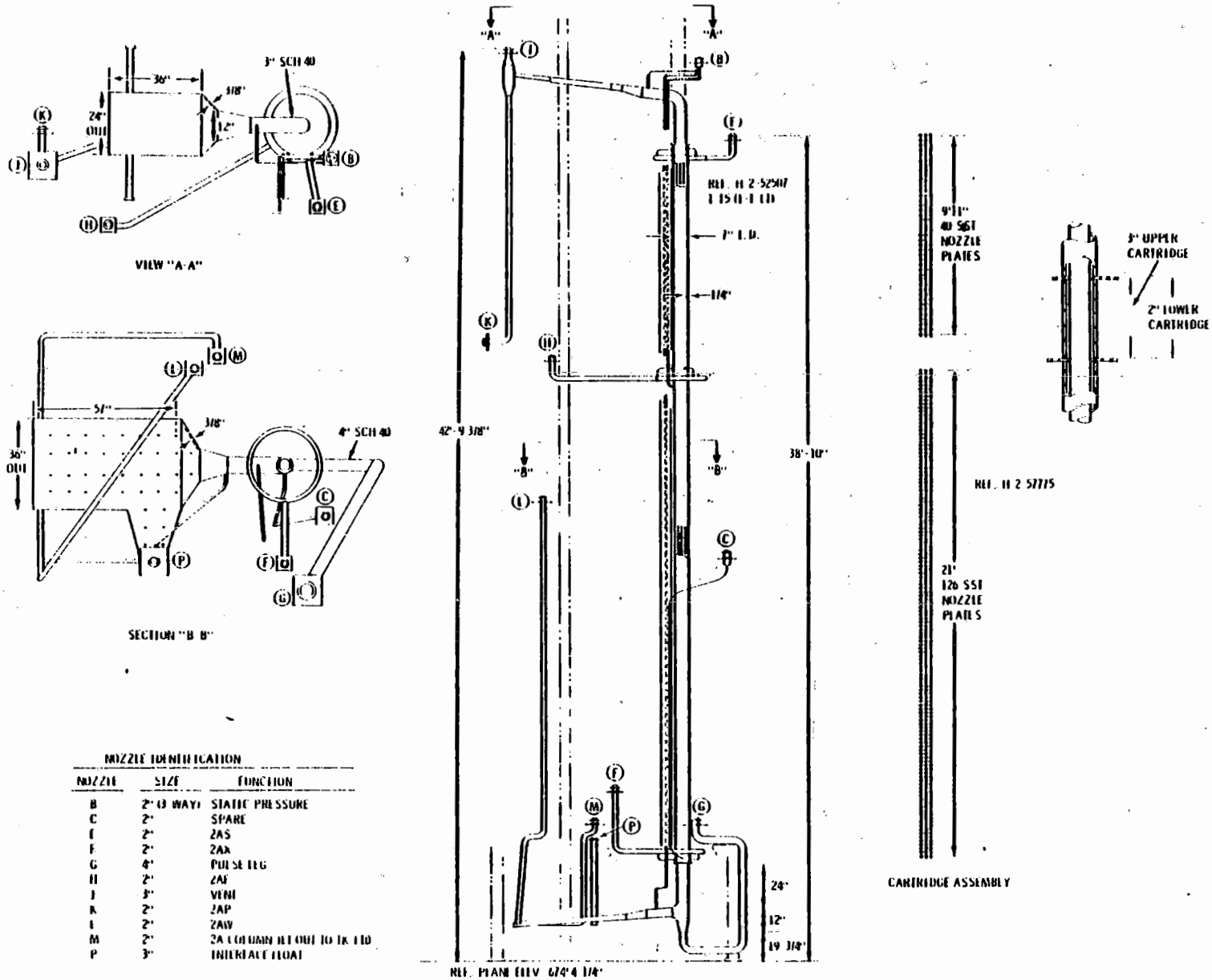

NOZZLE IDENTIFICATION

NOZZLE	SIZE	FUNCTION
B	2" (3 WAY)	STATIC PRESSURE
C	2"	SPARE
E	2"	2AS
F	2"	2AX
G	4"	PULSE LEG
H	2"	2AE
J	3"	VENT
K	2"	2AP
L	2"	2AW
M	2"	2A COLUMN RETURN TO TK 110
P	3"	INTERFACE FLOAT

FIGURE 3-15. 2A Column and Cartridge.

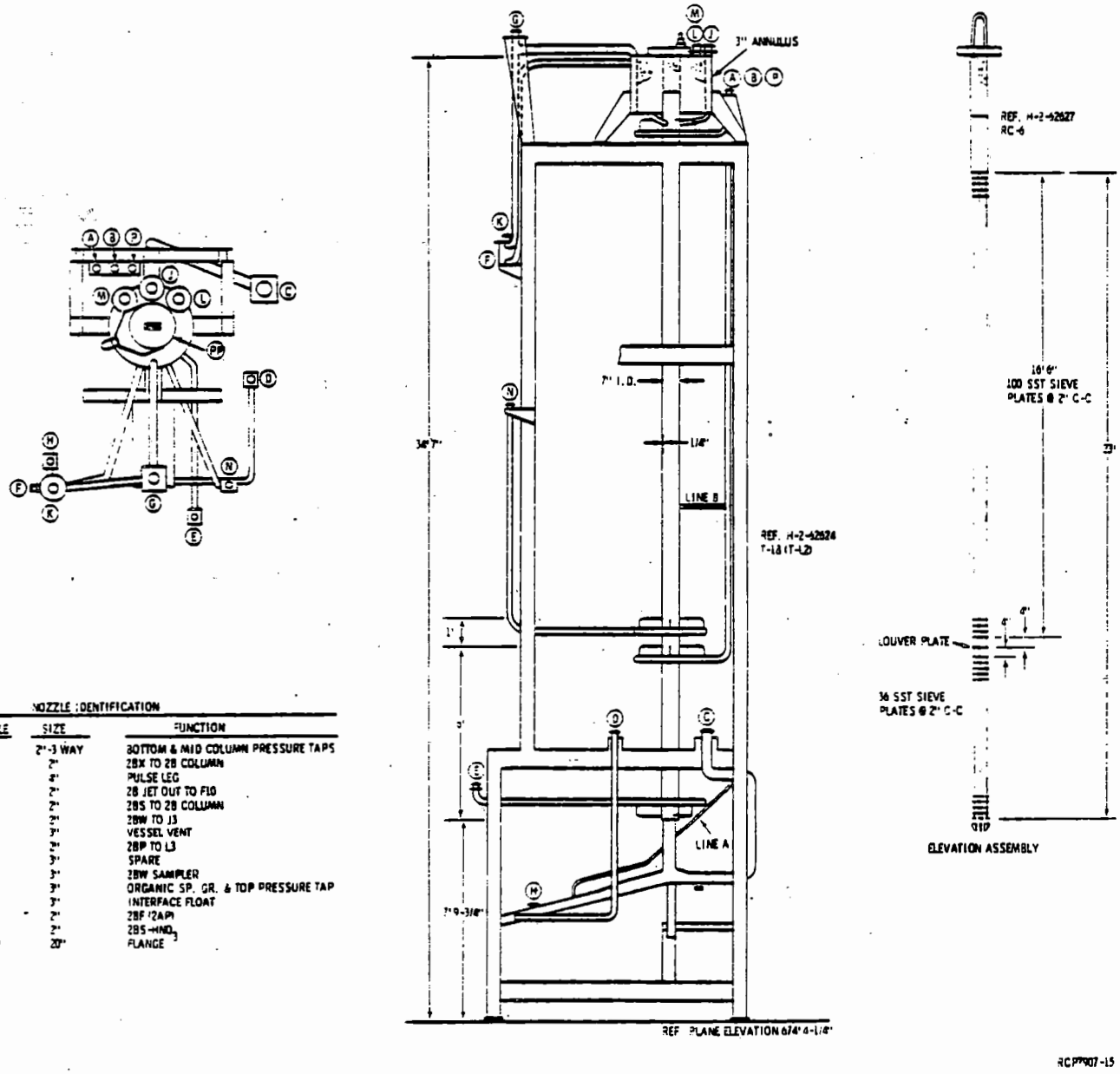

NOZZLE IDENTIFICATION

NOZZLE	SIZE	FUNCTION
A	2"-3 WAY	BOTTOM & MID COLUMN PRESSURE TAPS
B	2"	2BX TO 2B COLUMN
C	4"	PULSE LEG
D	2"	2B JET OUT TO F10
E	2"	2BS TO 2B COLUMN
F	2"	2BW TO J3
G	3"	VESSEL VENT
H	2"	2BP TO L3
J	3"	SPARE
K	3"	2BW SAMPLER
L	3"	ORGANIC SP. GR. & TOP PRESSURE TAP
M	3"	INTERFACE FLOAT
N	2"	2BF 12API
P	2"	2BS-HNO_3
PP	20"	FLANGE

FIGURE 3-16. 2B Column and Cartridge.

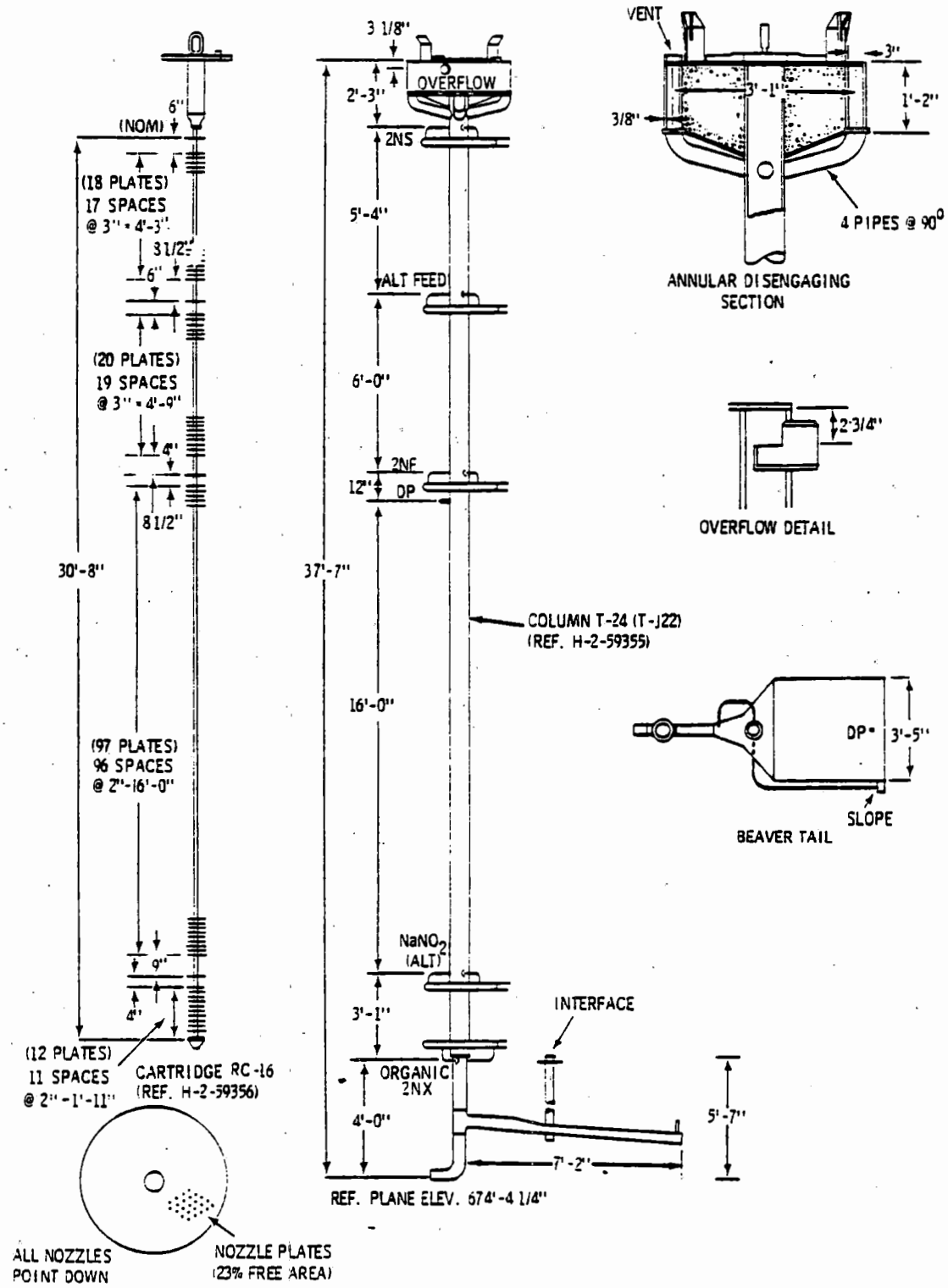

FIGURE 3-17. 2N Column and Cartridge.

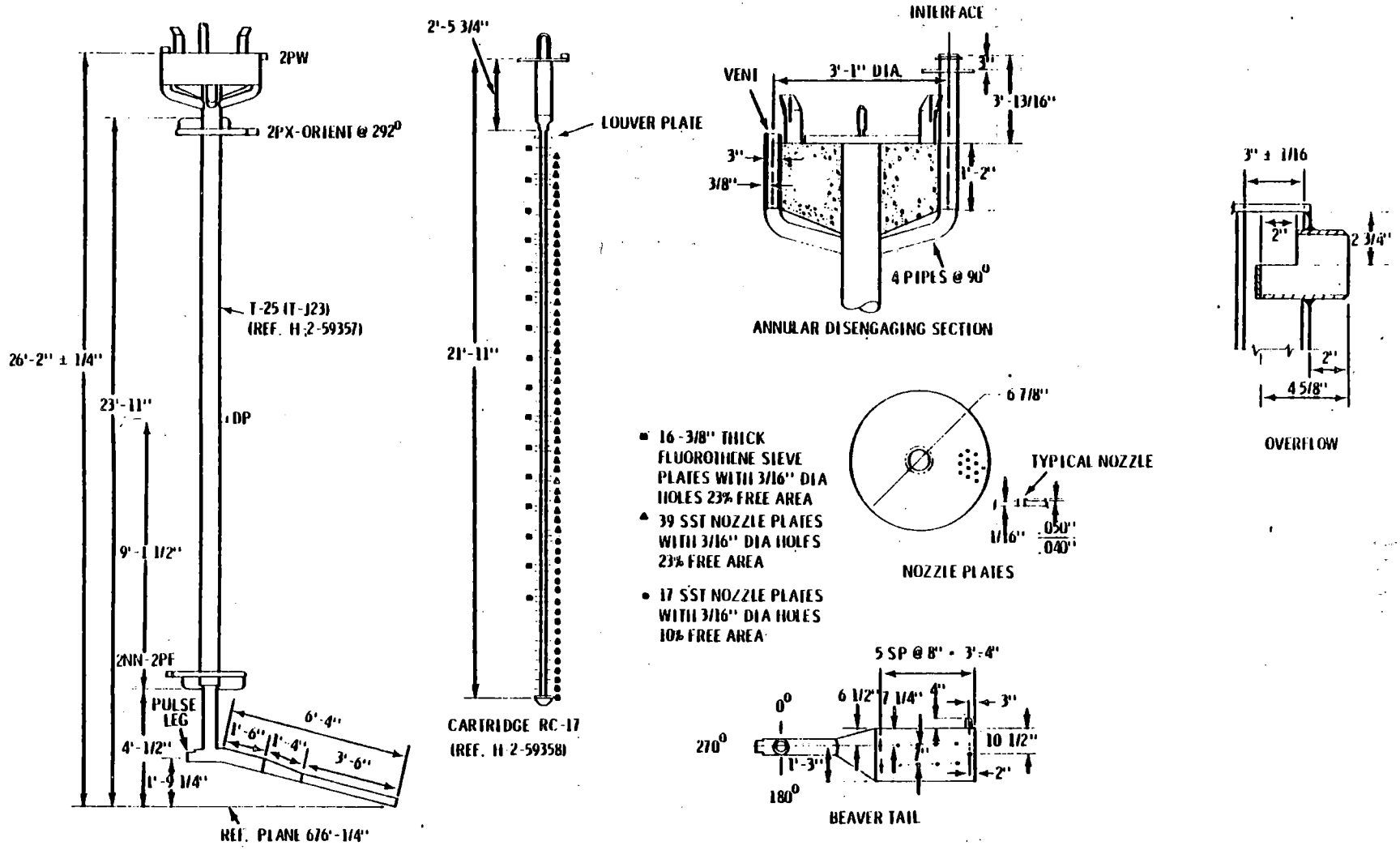

FIGURE 3-18. 2P Column and Cartridge.

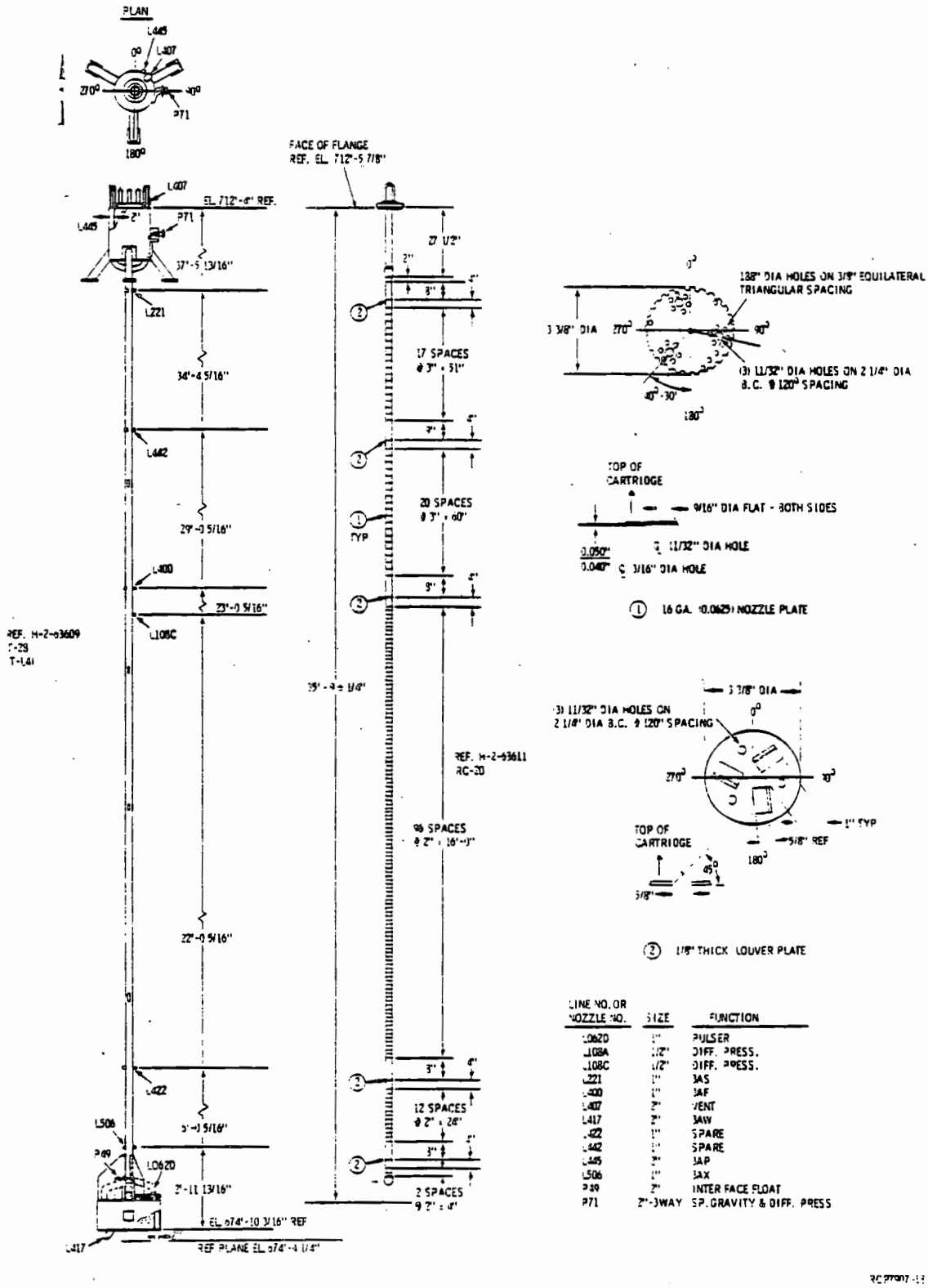

LINE NO. OR NOZZLE NO.	SIZE	FUNCTION
L062D	1"	PULSER
L108A	1/2"	DIFF. PRESS.
L108C	1/2"	DIFF. PRESS.
L221	1"	3AS
L400	1"	3AF
L407	2"	VENT
L417	2"	3AW
L422	1"	SPARE
L442	1"	SPARE
L445	2"	3AP
L506	1"	3AX
P49	2"	INTER FACE FLOAT
P71	2"-3WAY	SP. GRAVITY & DIFF. PRESS

FIGURE 3-19. 3A Column and Cartridge.

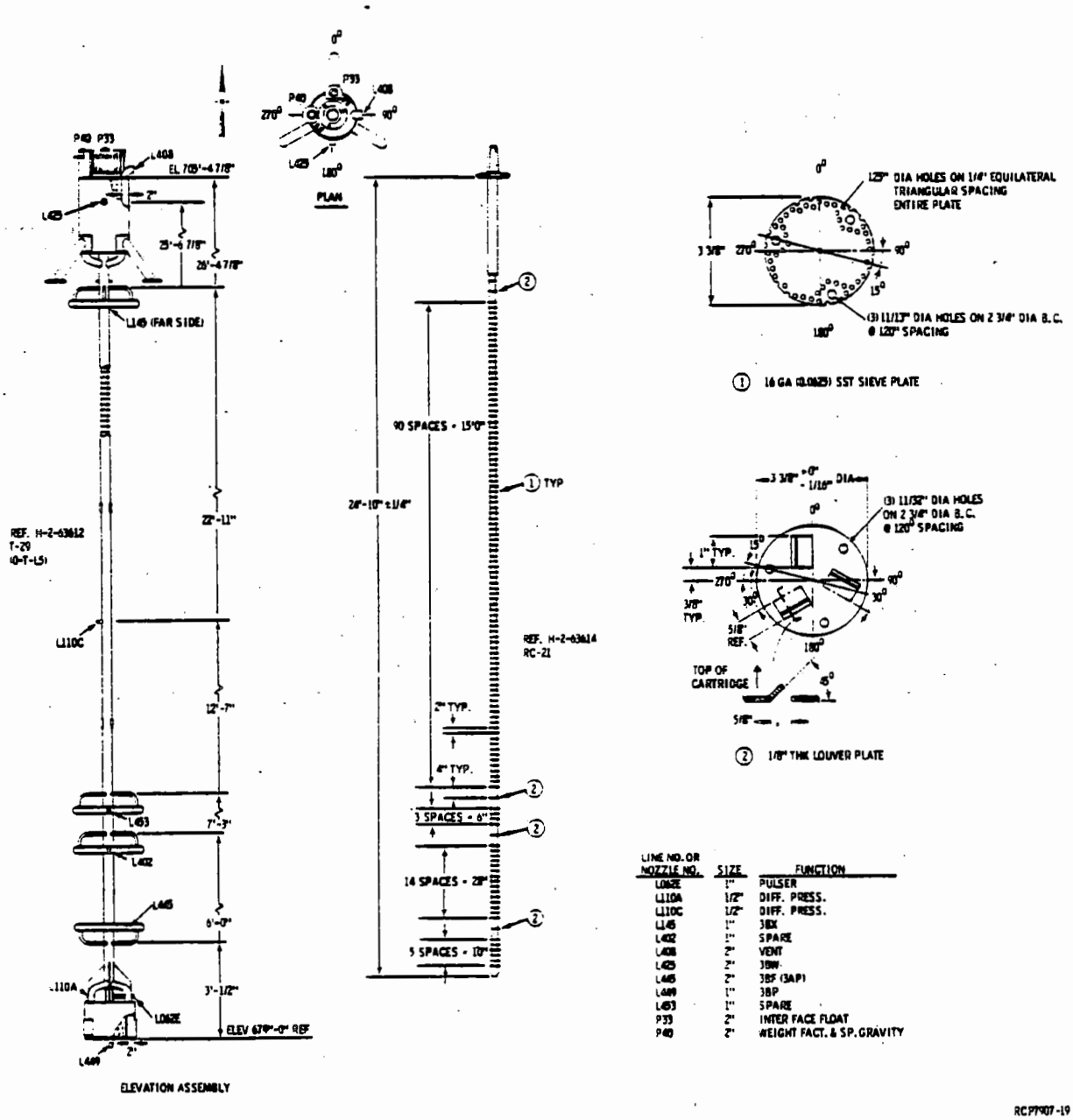

LINE NO. OR NOZZLE NO.	SIZE	FUNCTION
L062E	1"	PULSER
L110A	1/2"	DIFF. PRESS.
L110C	1/2"	DIFF. PRESS.
L145	1"	3BX
L402	1"	SPARE
L408	2"	VENT
L425	2"	3BW
L445	2"	3BF (3AP)
L449	1"	3BP
L453	1"	SPARE
P33	2"	INTER FACE FLOAT
P40	2"	WEIGHT FACT. & SP. GRAVITY

FIGURE 3-20. 3B Column and Cartridge.

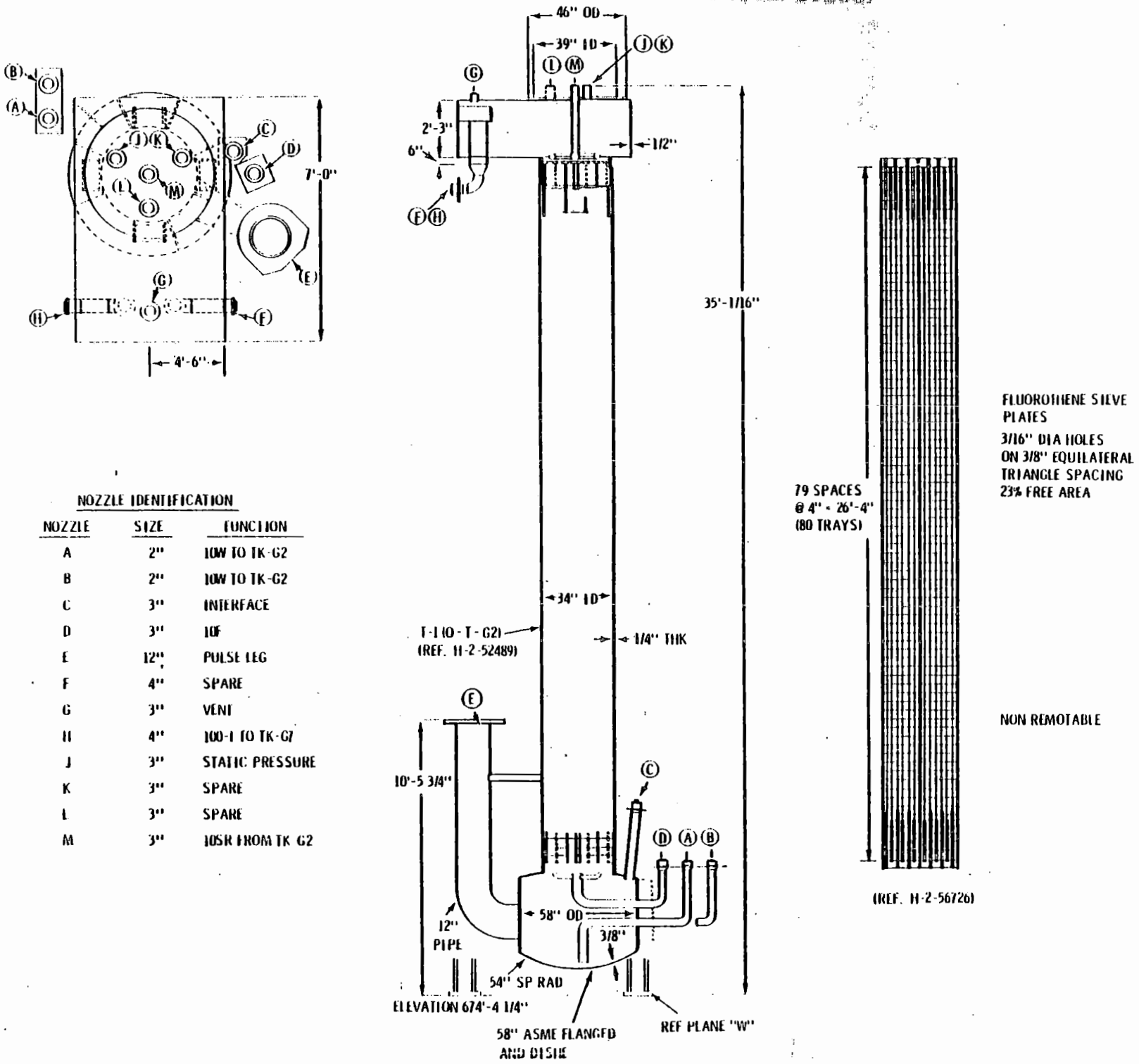

NOZZLE IDENTIFICATION

NOZZLE	SIZE	FUNCTION
A	2"	10W TO TK-G2
B	2"	10W TO TK-G2
C	3"	INTERFACE
D	3"	10F
E	12"	PULSE LEG
F	4"	SPARE
G	3"	VENT
H	4"	100-1 TO TK-G7
J	3"	STATIC PRESSURE
K	3"	SPARE
L	3"	SPARE
M	3"	10SR FROM TK G2

FIGURE 3-21. 10 m and Cartridge.

RCP7907-20

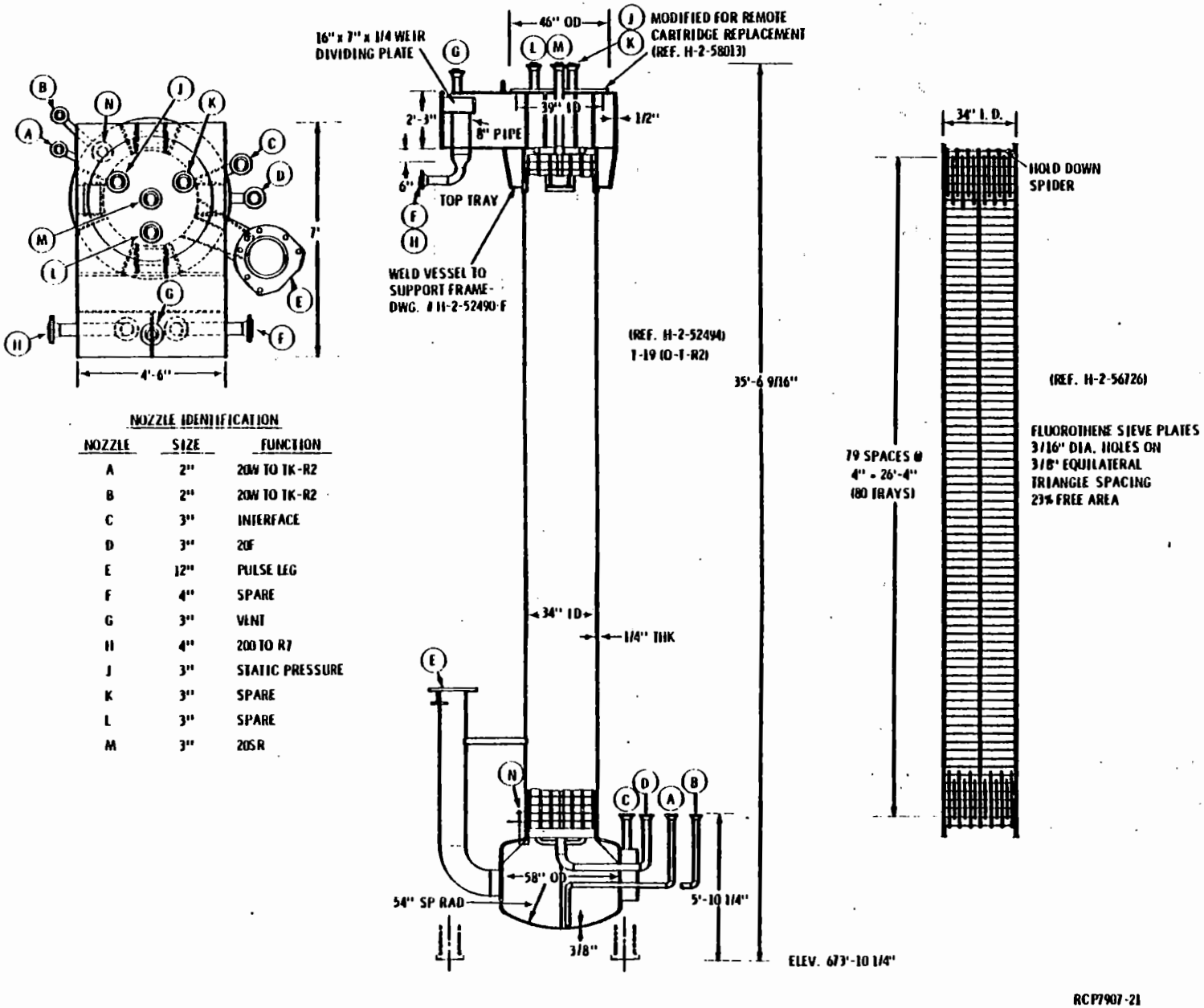

NOZZLE IDENTIFICATION

NOZZLE	SIZE	FUNCTION
A	2"	20W TO TK-R2
B	2"	20W TO TK-R2
C	3"	INTERFACE
D	3"	20F
E	12"	PULSE LEG
F	4"	SPARE
G	3"	VENT
H	4"	200 TO R7
J	3"	STATIC PRESSURE
K	3"	SPARE
L	3"	SPARE
M	3"	20SR

FIGURE 3-22. 20 Column and Cartridge.

column in having contact-maintained flanges with standard welding-neck piping connections elsewhere rather than remote maintenance flanges and connector nozzles. The 20 column piping connections are, therefore, somewhat longer than remote connector nozzles to facilitate manual access to the flange bolts.

These drawings show the basic geometry of the columns and the exact positions of the column nozzles. Details such as column bracing, supports, nozzles, kick-plates, etc. are either omitted or simplified to permit clarification of the dimensions which are of process importance. The sketch of a typical column support is shown in Figure 3-23.

The columns are constructed of Type 304-L stainless steel, with welds made with Type 347 stainless steel welding rod. The wall thickness of the column shells is 1/4 inch (0.226 inch for 3A and 3B); that of the disengaging sections ranges from 1/4 and 3/8 inch for the cylindrical and slab-type disengaging sections to 1/2 inch for the box-type and annular disengaging sections. All pipes are Schedule 40S, except the 8- and 12-inch pipes which are Schedule 10S. Standard Hanford 2-inch, 3-inch, 4-inch, and 2-inch 3-way connector nozzles are used for all pipe connections with the exception of the 2-, 3-, and 4-inch pipes of the 20 column, which use standard welding-neck flanges, and the 12-inch pulse legs, which use a special remote maintenance flange.

3.6.1.4 Cartridge Construction

The louver, nozzle and sieve plates which make up the column cartridges are supported in a horizontal position by 5/16- to 1-inch-diameter rods connected at the top and bottom of the cartridge to support "spiders." The plates are held apart by sections of 1/4- to 1-inch Schedule 40 or 80 pipe slipped over the rods. This type of construction allows removal of the cartridge from the column for modification or (more likely) replacement. All columns, except the installed 10 column, have been modified to permit remote removal of the cartridge using the Purex cranes. Removal of the 10 column cartridge would require a contact-maintenance operation to remove the top flange of the column and cut off the hold down lugs welded to the shell above the top support spider.

Table 3-3 describes the tie rods and spacers for the installed cartridges.

3.6.1.5 Plate Design

The countercurrent flow sections of the pulse columns are fitted with horizontal sieve plates (see 3.6.1.5.1) or nozzle plates (see 3.6.1.5.2) of various designs. Louver plate redistributors, described under 3.6.1.5.3 are also used in many cases. Data for column plates are summarized in Table 3-4.

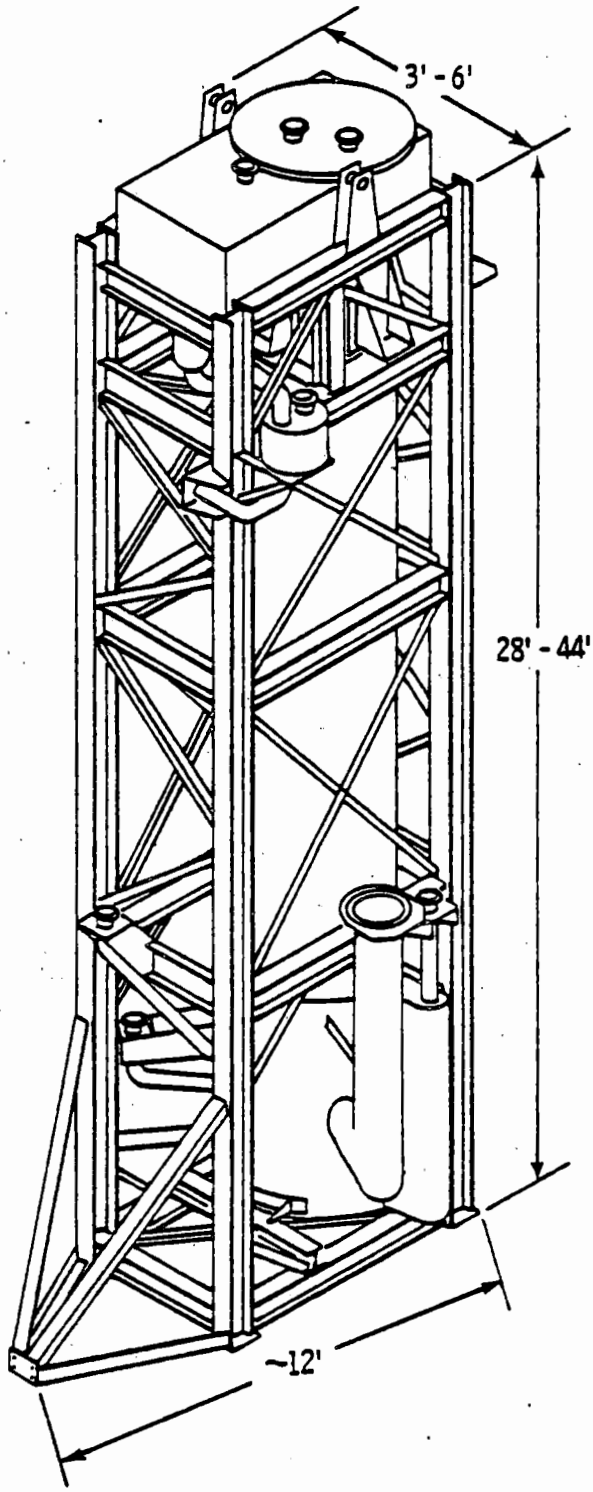

RCP7907-22

FIGURE 3-23. Typical Column Support.

3.6.1.5.1 Sieve Plates

Perforated stainless steel sieve plates are used in the 2D column scrub section, the 1BX, 2B and 3B columns. The stainless steel sieve plates used in the 2B and 3B columns have 1/8-inch-diameter holes spaced on 1/4-inch center-to-center equilateral triangles, giving a 23% free (perforated) area. The free area of the stainless steel sieve plates in the 1BX column is also 23%, but the holes are 3/16-inch diameter spaced on 3/8-inch center-to-center equilateral triangles. The stainless steel sieve plates in the 2D column have 21% free area with 0.085-inch holes on 0.170-inch equilateral triangles. The plates are spaced 2 inches apart, except in the 2D column scrub section where the spacing is 1 inch and pairs of stainless steel sieve plates are alternated with pairs of Fluorothene* sieve plates, also at 1-inch spacing. This plate combination was determined to be the best for use in the scrub section of a compound extraction scrub (A-type) column operated with a continuous organic phase (Ref. 1).

Perforated Fluorothene (an organic-phase-wetted plastic) sieve plates are used in the 1C, 1O, 2E, 2O and 2P columns in addition to the 2D column. The Fluorothene plates are 3/32 inch thick with 3/16-inch-diameter holes on 3/8-inch center-to-center equilateral triangular spacing, giving 23% free (perforated) area. The plates are spaced 4 inches apart in the 1O and 2O columns and are intermixed with stainless steel sieve (2D) or nozzle (1C, 2E, 2P) plates elsewhere (see Table 3-4 and Figures 3-12, 13, 14 and 18).

3.6.1.5.2 Nozzle Plates

The use of stainless steel nozzle plates instead of sieve plates generally results in increased column capacity and efficiency. Stainless steel nozzle plates, perforated with 1/8-inch holes on 1/4-inch center-to-center equilateral triangles (2A), 3/16-inch holes on 3/8-inch center-to-center equilateral triangles (HA, 1BS, 1C, 2N, upper 2P, 2D extraction, 2E, and 3A), or 1/8-inch holes on 3/8-inch center-to-center equilateral triangles (HS**, lower 2P, spare 1O), are also used. The free (perforated) areas of the three plate types are 23%, 23% and 10%, respectively. The nozzles are formed by cleanly punching the plate to form sharp-edged holes. The nozzles extend 0.040 to 0.050 inch from the plate surface and are installed pointing toward the column interface. The nozzle plates are 2 inches apart, except in the HA, 2A and 3A scrub sections, where the plates are 3 inches apart, and in the 1C, 2E, and lower 2P columns, where the plates are 4 inches apart.

---

*Trademark of Union Carbide Corporation for poly-trifluoromonochloroethylene.

**The HS column is currently bypassed.

3.6.1.5.3 Louver Plates

Louver-plate phase redistributors are provided at selected locations in the cartridges of the A-type columns (HA, 2D, 2N, 3A) and the 1BX column to break up channeling, and in the HS*, 1BS, and 3B columns, primarily to stabilize the column operation at high throughput rates. One louver plate is used at the top of the 2P column cartridge to achieve better mixing of the 2PX stream, and in the lower 2B column cartridge to achieve better mixing of the 2AP (2BF) and 2BS streams.

The louver plates each consist of a 1/8-inch-thick stainless steel disk with 3, 4, or 8 rectangular louvers opening upward from the disk and oriented to impart a swirling motion to the column contents (counterclockwise as seen from above) during the upward phase of the pulse movement in the column. Vertical baffles are placed in front of the louvers in the large diameter columns (HA, HS*, 1BX, 2D) to provide additional agitation. The free areas of the louver plates range from 14.7 to 30.3%. Design details of the nine different louver plates are shown in Figure 3-24. Louver plate positions are shown in Figures 3-8 through 3-11, 3-13, and 3-15 through 3-20.

3.6.1.6 Distributors

The different types of influent stream distributors, shown in Figure 3-25, are designed to provide a reasonably uniform phase distribution over the column cross section. The numbers and sizes of discharge holes or nozzles result in discharge velocities (typically 0.1 to 1.1 ft/sec at a Purex processing rate of 10 tons U/day) which are sufficiently high to cause some mixing and, hence, good distribution of the influent stream, but are not high enough to promote flooding in the column due to excessive turbulence. To limit the pressure drop across individual discharge points and thus assure relatively uniform flow rates from the several discharge holes or nozzles, the approach piping is sized for flow velocities of about 10 to 20% of the discharge velocities.

The feed distributor for the A-type 2D column (i.e., the 2DF distributor) employs 4 nozzles with a tangential orientation, sized for a relatively high discharge velocity (about 1.5 ft/sec at 10 tons U/day), to provide good mixing and blending of the incoming aqueous feed solution with the aqueous spent-scrub solution in the column. While such jet-mixer-type distributors are not used at the intermediate scrub introduction points in the columns, a similar function is accomplished by the louver plates located just below these inlets. As shown in Figure 3-25, relatively high discharge velocities are also provided by the 1BU(1CF), 1BX, 1BXF, 1BXP(1BSF), 1BX, 1CX, 1OF, and 2EX distributors.

The design of the external ring-type distributors for the 1BS stream and for all influent streams to the 2A, 2B, 2N, 2P, and 3B columns was influenced by nuclear safety considerations.

---

*The HS column is currently bypassed.

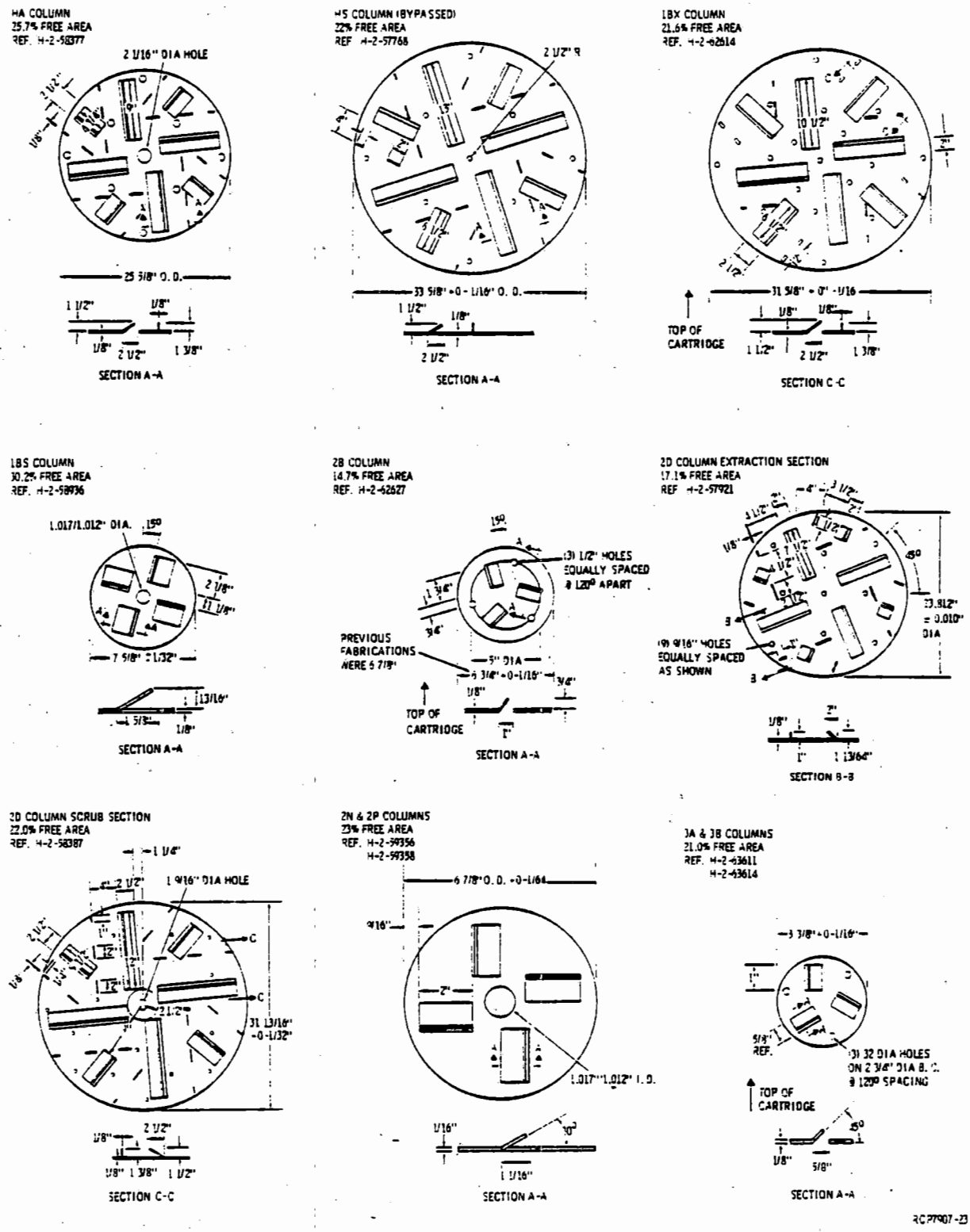

FIGURE 3-24. Louver Plates.

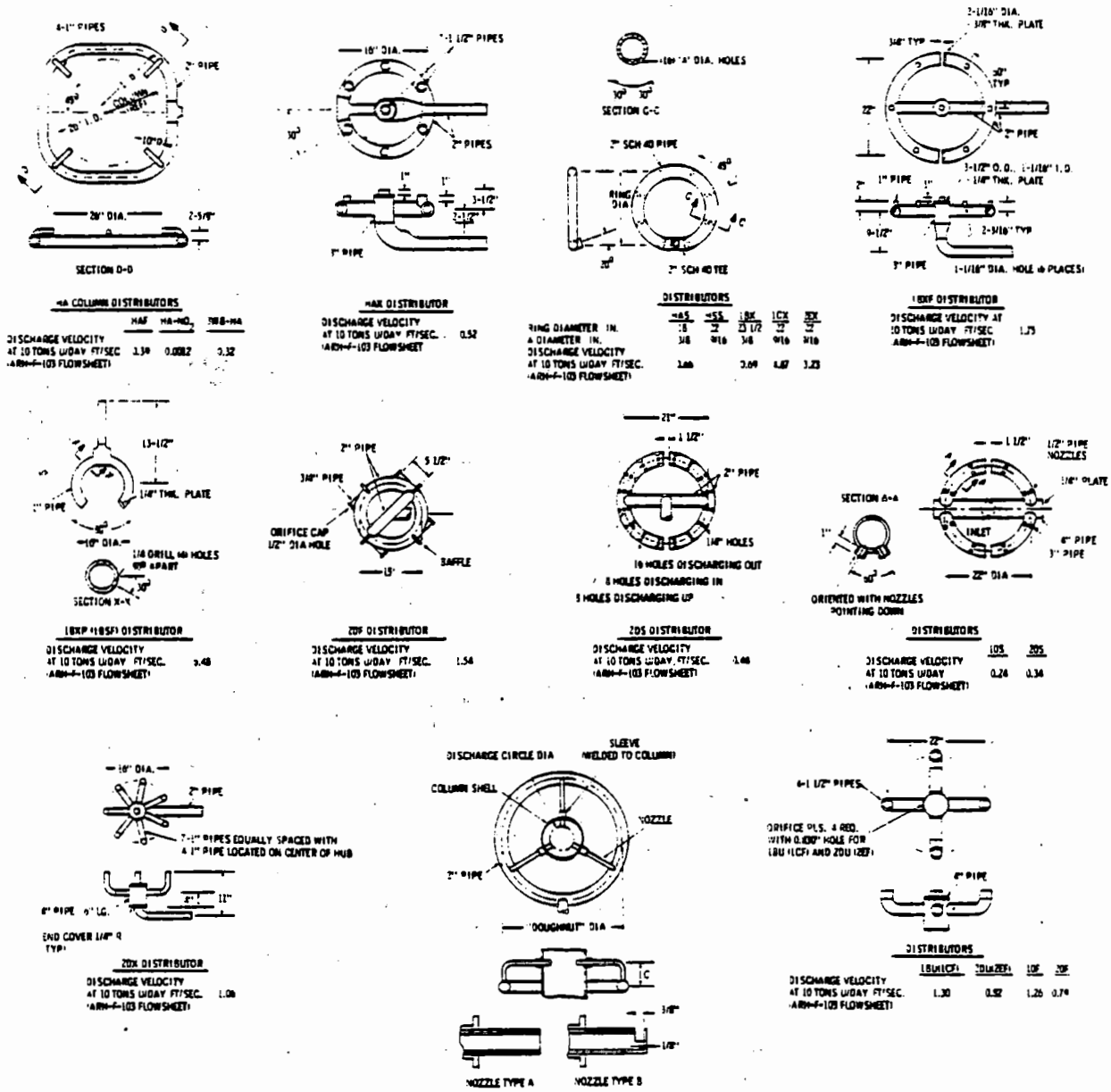

HA COLUMN DISTRIBUTORS

	HAF	HA-HO	HB-HA
DISCHARGE VELOCITY AT 10 TONS U/DAY FT/SEC (ARH-F-103 FLOWSHEET)	3.30	0.0082	3.32

HAX DISTRIBUTOR

DISCHARGE VELOCITY AT 10 TONS U/DAY FT/SEC. 0.52 (ARH-F-103 FLOWSHEET)

DISTRIBUTORS

	HAS	HSS	1BX	1CX	3BX
RING DIAMETER IN.	18	22	23 1/2	22	22
A DIAMETER IN.	3/8	9/16	3/8	9/16	3/16
DISCHARGE VELOCITY AT 10 TONS U/DAY FT/SEC. (ARH-F-103 FLOWSHEET)	3.66		3.69	4.67	3.23

1BXF DISTRIBUTOR

DISCHARGE VELOCITY AT 10 TONS U/DAY FT/SEC 1.75 (ARH-F-103 FLOWSHEET)

1BXP (1BSF) DISTRIBUTOR

DISCHARGE VELOCITY AT 10 TONS U/DAY FT/SEC. 2.48 (ARH-F-103 FLOWSHEET)

2DF DISTRIBUTOR

DISCHARGE VELOCITY AT 10 TONS U/DAY FT/SEC. 1.54 (ARH-F-103 FLOWSHEET)

2DS DISTRIBUTOR

DISCHARGE VELOCITY AT 10 TONS U/DAY FT/SEC. 3.46 (ARH-F-103 FLOWSHEET)

DISTRIBUTORS

	1DS	2DS
DISCHARGE VELOCITY AT 10 TONS U/DAY (ARH-F-103 FLOWSHEET)	0.24	0.34

2DX DISTRIBUTOR

DISCHARGE VELOCITY AT 10 TONS U/DAY FT/SEC. 1.06 (ARH-F-103 FLOWSHEET)

DISTRIBUTORS

	1BU(CF)	2DU(ZF)	1DF	2DF
DISCHARGE VELOCITY AT 10 TONS U/DAY FT/SEC. (ARH-F-103 FLOWSHEET)	1.30	0.52	1.26	0.74

DISTRIBUTORS

	HS-HO	1BX-HO	1BS	2AF	2AS	2AX	2AP(2BF)	2BS	2BX	2DIS	3NF	2NN(2PF), 2NX	2NS	2PX	3AF	3AS	3AX	3AP(3BF)	3BX
DOUGHNUT DIAMETER IN.	48	41	24	27	27	27	30	30	30	32	27	27	27	27	**	**	**	24	24
DISCHARGE CIRCLE DIAM. IN.	36 1/2	32	4	3	4	4	4	4	4	32	*	*	*	*				3 1/2	3 1/2
NOZZLE PIPE SIZE, IN.	3/8	1/2	3/4	3/4	3/4	1/2	3/4	1/2	3/4	3/4	1/2	3/4	1/2	1/2	1	1	1	1/2	1/2
NOZZLE TYPE	A	A	B	A	A	B	A	B	A	A	A	B	A	A	A	A	A	A	A
NUMBER OF NOZZLES	4	3	3	3	3	3	3	3	3	4	3	3	3	3	1	1	1	3	3
POSITION OF DOUGHNUT (ABOVE OR BELOW NOZZLES)	ABOVE	BELOW	ABOVE	BELOW	BELOW	ABOVE	BELOW	ABOVE	BELOW	BELOW	BELOW	ABOVE	BELOW	BELOW				ABOVE	BELOW
DIMENSION C IN.	2 1/8	3	3	3	3	3	3	3	3	2 1/8	3	3	3	3				3	3
DISCHARGE VELOCITY AT 10 TONS U/DAY FT/SEC (ARH-F-103 FLOWSHEET)			3.91	1.06	3.19	0.36	3.21	3.12	1.08	0.11	1.25 ***0.73 (0.63)	0.67 ***0.52 (1.22)	0.24 ***0.31 (0.12)	0.35 ***0.46 (0.18)	0.26	0.046	0.064	0.061	0.059

*DOUGHNUT EXTENDS ONLY 250°

**DISTRIBUTORS REMOVED PRIOR TO INSTALLATION

***PHASE II AND PHASE III RATES

RCP9907-26

FIGURE 3-25. Influent Stream Distributors.

3.6.1.7 Disengaging Sections

Phase-disengaging sections of all columns were designed to provide at least 3 minutes (generally 6 or more minutes) holdup time for the phases leaving the column at an instantaneous processing rate of 10 tons U/day. The designs of the disengaging sections are indicated in Figures 3-8 through 3-22.

Where safe geometry criticality control is not provided (i.e., in conjunction with the HA, HS, 1BX, 2D, 1O and 2O columns and the top of the 1BS column), rectangular box-type top disengaging sections and vertical or near-horizontal cylindrical bottom disengaging sections are used. A liquid depth of at least 18 inches is provided for good disengagement. The enlargement of the cross-sectional area in the disengaging sections over that of the adjacent plate sections permits the needed disengaging volume to be provided with a minimum expenditure of cell height, and also results in a sufficiently decreased pulse amplitude from the plate-section amplitude that does not inhibit disengagement. The cylindrical bottom end designs combine fairly simple types of construction with mechanical strength to withstand the working pressures. The relative rigidity of the cylindrical bottom end sections minimizes distortion of the transmitted pulse. Wall flexing due to pressure variations during pulsing causes the distortion. The ceilings of the bottom end sections are sloped to prevent the accumulation of air bubbles, which would partially absorb or augment the pulse.

Three-inch-deep, near-horizontal, slab-shaped ("beavertail") disengaging sections are provided for the 2A column and for the bottom of the 1BS, 2B, 2N and 2P columns. Two-inch annular disengaging sections are provided for the 3A and 3B columns, and 3-inch annular disengaging sections are used in the top of the 2B, 2N and 2P columns. The slab and annular designs are used to provide the necessary disengaging volume in a section geometrically safe from a slow neutron chain reaction.

Table 3-5 lists the volumes and holdup times for all disengaging sections. The holdup times are based on flows for an instantaneous processing rate of 10 tons U/day using the flowsheet in ARH-F-103.(Ref. 2)

3.6.1.8 Column Instrumentation

Interface position and static pressure are determined for all columns. The specific gravity of the organic stream is determined in all but the 1O, 2A, 2N, and 2P columns. The 1O and 2O columns also contain liquid-level or pressure alarms at the top of the columns to detect incipient loss of solvent to the vent system. Air-purged dip tubes are used as the sensing elements for all static pressure and specific gravity measurements and for the 1C and 2E column interface measurements. Interface floats are used in all columns except the 1C and 2E columns. The interface, specific gravity and static pressure dip tubes or interface floats are installed by

TABLE 3-5. Pulse Column Disengaging Section Data

Disengaging Section	Volume*, gallons	Flow Rate** of Disengaged Stream, gal/min	Holdup Time, min
HA Top	408	24.0	17
HA Bottom	202	10.6	19
1BX Top	141	33.0	4
1BX Bottom	61	4.0	15
1BS Top	42	4.6	9
1BS Bottom	30	3.9	7
1C Top	91	32.0	3
1C Bottom	583	27.4	21
2D Top	216	20.7	10
2D Bottom	230	5.9	39
2E Top	90	20.0	4.5
2E Bottom	583	18.4	32
2A Top	18	1.0	17
2A Bottom	21	6.2	3
2B Top	17	1.4	12
2B Bottom	19	0.4	47
3A Top	6	0.2	36
3A Bottom	4	0.8	5
3B Top	7	0.2	39
3B Bottom	7	0.1	65
1O Top	397	32.0	12
1O Bottom	265	4.0	66
2O Top	397	20.0	20
2O Bottom	316	5.6	57
2N Top	23	3.4 (2.6) (1.1)	7 (9) (21)
2N Bottom	24	4.3 (3.1) (2.1)	6 (8) (12)
2P Top	11	3.4 (2.6) (1.1)	3 (4) (10)
2P Bottom	17	1.0 (1.3) (0.5)	17 (13) (34)
HS Top	226	Bypassed	
HS Bottom	236		

*Effluent-phase volume, (a) for disengaging sections at the opposite end of the column as the interface: the volume between the nearest influent distributor and the column outlet; and (b) for interface-end sections: the volume from the midpoint between the interface dip tubes or of the float position to the outlet.

**Flow rates and holdup times for the 2N and 2P columns are listed for second neptunium cycle phases I, II and III, respectively.

removable pipe jumpers for all but the 3A column specific gravity dip tubes, which are permanently installed. More detailed descriptions of the column instrumentation are provided in Section 3.10 and Chapter 4.0.

3.6.1.9 Spare Nozzles

A spare bottom (aqueous) outlet for each column is provided to permit continued operation if the normal outlet should become plugged or otherwise inoperable. Steam jets are connected to these nozzles to permit emptying the columns.

Spare nozzles are placed on the top disengaging sections of the HA, 1BX, 2A, 2B, 2D, 1O and 2O columns. The suction leg of a steam jet may be installed in these nozzles to permit jet-out (to Tank F13 via the interface jet-out header) of excessive "crud" which may gather at the interface. Spare feed nozzles or distributors are also available on the HA, HS, 1BX, 1BS, 2D, 2N, 3A and 3B columns as indicated on Figures 3-8, 10, 11, 12, 17, 19 and 20. These spares allow some flexibility in processing. For example, spare 1BX column nozzles were used in the test of uranium (IV) as a plutonium reductant, and 2B column nozzles, which were formerly spares, are now used in the uranium decontamination flowsheet in the second plutonium cycle.

3.6.1.10 Overflow Lines

To minimize aspiration of air into the overflow line, the diameters of the organic overflow lines are 8 inches for the large diameter (26- to 34-inch) columns, 3 inches for the 7- and 8-inch-diameter columns, and 2 inches for the 4-inch-outer diameter (3A and 3B) columns. The overflow line for the 2B column is also connected to the vessel vent system. The other columns are vented through a separate nozzle to the vessel vent system directly from the top disengaging section.

3.6.2 Mechanical Pulse Generators

The pulse generators for all but two of the solvent extraction columns (the air pulsers for the 3A and 3B columns are described in 3.6.4) are reciprocating piston mechanisms. Mechanical drive components reciprocate the piston at a fixed amplitude and frequencies which can be varied to suit process requirements. The pulse is transmitted to the column through a "pulse leg" -- a pipeline, filled with essentially stagnant liquid, which connects the pulse generator to the bottom of the column. Figure 3-26 shows the location of a column relative to its mechanical pulse generator.

3.6.2.1 Design Principles and Bases

Process requirements for the pulse generators are summarized in Table 3-2. The pulse displacement volume is 33 in.^{3} for the 2P column and 44 in.^{3} for the 1BS, 2A, 2B and 2N columns. The pulse frequency is adjustable to any value within the range of 25 to 100 cycles/min. Pulse volume

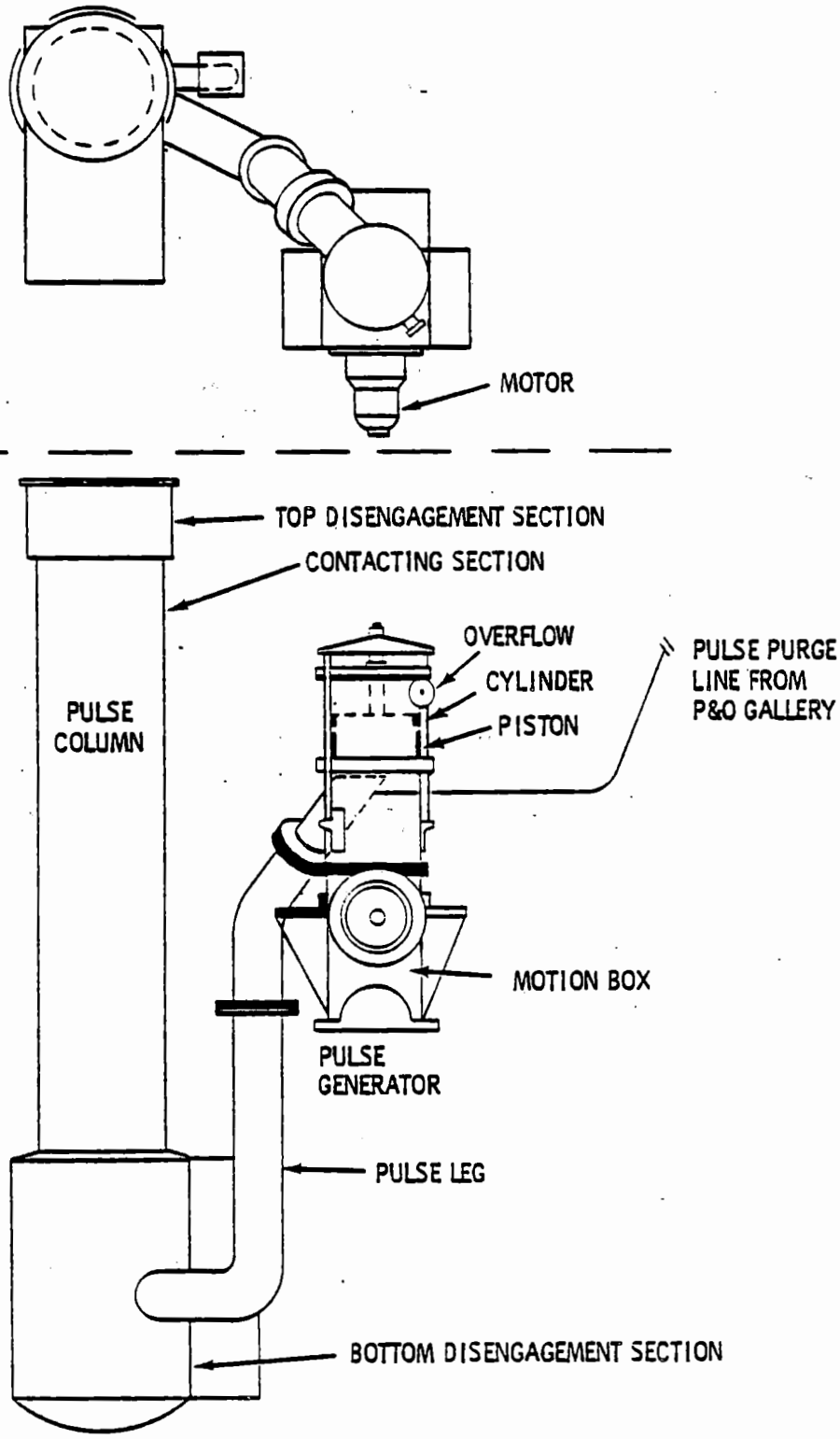

FIGURE 3-26. Typical Pulse Column with Mechanical Pulse Generator.

and frequency range for the remaining large diameter columns are 485 or 970 in.^{3} and 35 to 110 cycles/min. The stroke lengths of certain pulse generators have been modified and the outer dimensions of some of the smaller generators vary so that the units are not interchangeable. The maximum theoretical hydraulic horsepower of the pulse generators varies from 7.2 hp for the larger columns to 0.26 hp for the 1BS column.

In addition to the process requirements stated above, three major mechanical considerations guide pulse generator design:

- Reliability in remote operation. The reciprocating piston and the driving components which comprise the pulse generator must be time-proven machine elements offering maximum service life.

- Variable pulse amplitude-frequency product. Process requirements for a variable pulse amplitude-frequency product are met by operating the pulse generator piston at a fixed stroke over the frequency ranges shown in Table 3-2. This results in a simpler and cheaper design than would result from one with a variable stroke.

- Piston leakage. The leakage rate of solution from the pulse leg around the piston through the vent should be low and should be contained in the system for satisfactory operation of the pulse generator. Excessive leakage could pose a disposal problem. Also, if leakage were a large fraction of stream flows or pulse volume, and if leakage were to vary with time, the result could affect process performance. Although undesirable, constant high leakage rates could be compensated for in many cases by adjusting operating conditions.

3.6.2.2 Description of Pulse Generators

The pulse generator designed from the above considerations is a piston reciprocated by a variable speed electric motor acting through reduction gears and a conventional crank arrangement as shown in Figure 3-27. The 10 large pulse generators (designated Size 2) have cylinder bores and piston strokes of 21.2 inches and 1-3/8 inches or 2-3/4 inches, respectively. The five small pulse generators (designated Size 1) are used on the 1BS, 2A, 2B, 2N and 2P columns. These pulse generators are scaled-down models which have cylinder bores of 7.5 inches and piston strokes of 1 inch, except for the 2P column generator which has a stroke of 0.75 inch. Drawings of all mechanical pulse generators used in the Purex Plant are shown in Figure 3-28.

The pulse generator consists of three major subassemblies: the piston and cylinder, the motion box, and the power supply system.

3.6.2.2.1 Piston and Cylinder Assembly

The piston, which pulses the liquid, is a cup-shaped, stainless steel casting, machined to diameter to provide clearance in the cylinder.

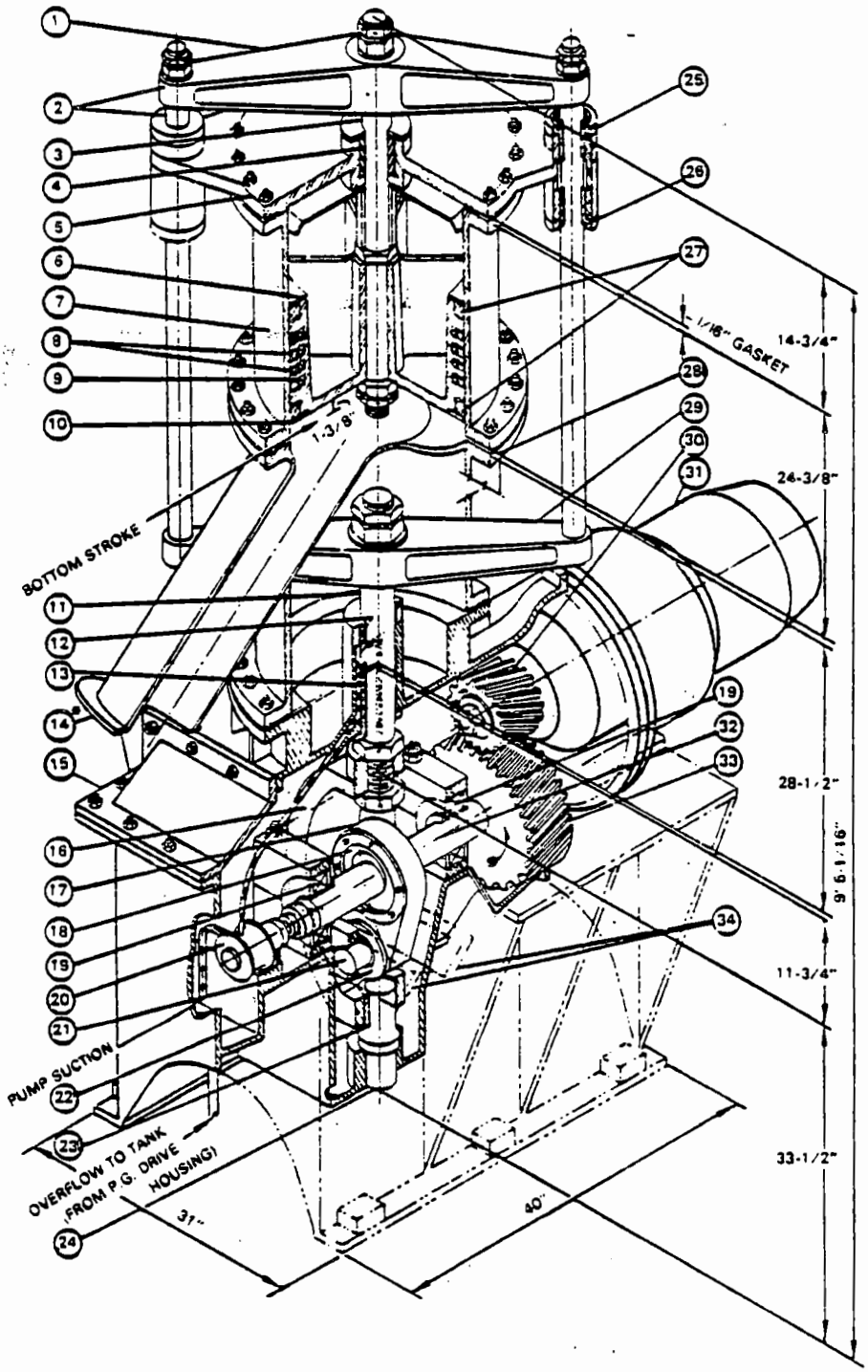

1 UPPER HORIZONTAL PISTON YOKE
2 PISTON YOKE SPACER RODS
3 PISTON ROD
4 CYLINDER COVER VAPOR SEAL BUSH
5 CYLINDER COVER
6 PISTON
7 CYLINDER
8 PISTON RINGS
9 PISTON RING EXPANDERS
10 RIDER RING CLAMP RING
11 UPPER XHEAD YOKE ROD
12 UPPER XHEAD SHAFT SEAL
13 UPPER XHEAD SHAFT BUSHING
14 PULSE LEG TRANSITION PIPE
15 DRIVE HOUSING
16 XHEAD YOKE
17 CONECTING ROD
18 ECCENTRIC BRG.
19 CRANK SHAFT BKG. (INBD-OUTBD)
20 OIL PUMP
21 ECCENTRIC PIN
22 ECCENTRIC BUSHING
23 XHEAD YOKE GUIDE BUSHING
24 XHEAD YOKE GUIDE PIN
25 PISTON YOKE SPACER ROD GUIDE BUSHING
26 HOUSING SEAL
27 PISTON RIDER RINGS
28 CYLINDER SUPPORT
29 LOWER HORIZONTAL PISTON YOKE
30 DRIVE PINION
31 ELEC DRIVE MOTOR
32 CRANKSHAFT
33 DRIVE GEAR
34 XHEAD YOKE BARS

* (14) SHOWN ROTATED 45° (HORIZONTAL PLANE) CW FROM TRUE POSITION

RCP7907-26

FIGURE 3-27. Mechanical Pulse Generator

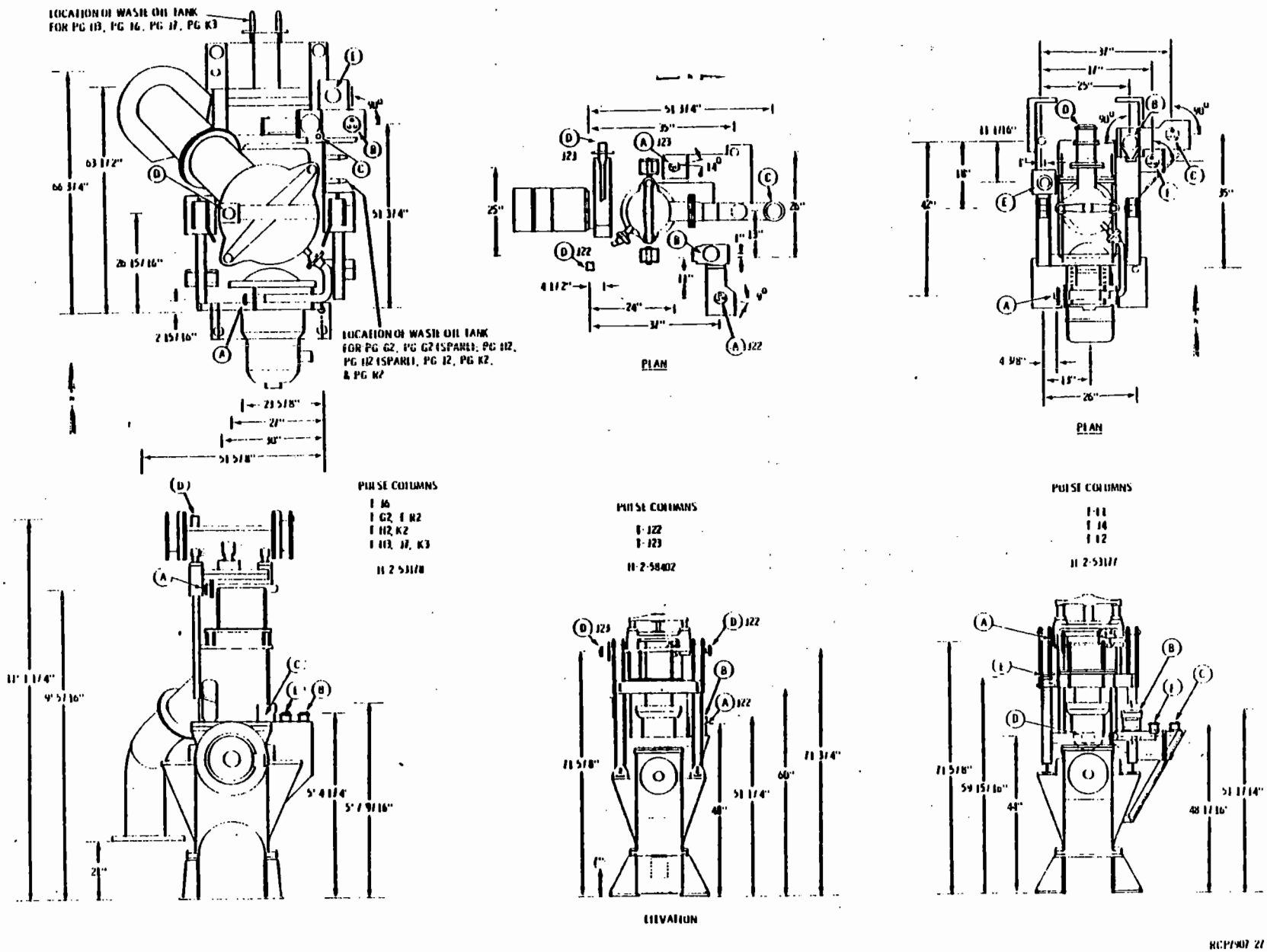

FIGURE 3-28. Purex Mechanical Pulse Generators.

Two Graphitar* No. 41 rider rings guide the piston during reciprocation. Four expanding-type Graphitar No. 41 piston rings, consisting of 3 or 6 segments, seal against fluid leakage past the piston. Expanders behind each piston ring force the ring segments against the cylinder wall with pressures varying from 1/2 to 2 psi. The ends of each expander segment are drilled for helical compression springs, which force the segments outward. A helical compression spring lying behind the piston ring is used as the expander in small pulse generators.

The flat lower face of the piston is drilled through (1/32- to 3/32-inch-diameter hole) to prevent formation of air pockets and to vent the pulse leg. Liquid which jets through the vent hole is blocked by a splash guard. The stainless steel rod extends upwards through the piston for connection to the upper horizontal piston rod yoke.

The cylinder is a welded assembly bored and honed to diameter. The lower and upper flange faces mate with the cylinder support and the cylinder cover, respectively. The cylinder support is integral with the pulse-leg transition pipe. A flanged nozzle welded to the cylinder barrel overflows piston leakage to appropriate process vessels. Centered in the cylinder cover, the Graphitar No. 41 vapor seal bushing restricts vapor and liquid leakage from the cylinder. Integral with the cylinder cover, and diametrically opposite, are two drilled housings for the yoke spacer-bar guide bushings. Upper and lower bronze bushings are pressed into each housing. Two shaft seals in each housing retain grease and exclude foreign matter.

3.6.2.2.2 Motion Box

The motion box reduces drive motor speed, translates rotary to reciprocating motion, and transmits the reciprocation to the piston. Its principal components, shown in Figure 3-27, are the drive motor, the speed reduction and motion translation system, and the lubrication system.

For the Size 2 generator, the variable speed, flange-mounted drive motor is a General Electric Co. gear-motor, rated at 15 hp, and a 190-rpm output speed with 440-volt, 3-phase, 60-Hz power supply (2-hp, 280-rpm output for Size 1).

The speed reduction and motion translation system, enclosed in the drive housing, reduces the rotary output speed of the gear-motor shaft and converts this rotation to reciprocation. Speed reduction gears consist of a single helical pinion, attached to the tapered gear-motor shaft, and a mating gear attached to the crankshaft. Double spherical roller bearings (double row ball bearings for Size 1) support the crankshaft load. The drive end (inboard) bearing is fixed in its housing to maintain gear alignment; the outboard bearing is free to slide axially in its housing for compensation of shaft thermal expansion.

*Trademark of Wickes Engineering Co., Saginaw, Michigan

The crank for motion translation is a turned eccentric shoulder integral with the crankshaft. The crank bearing, mounted on the eccentric shoulder, is a double row spherical roller bearing (ball bearing for Size 1). The connecting rod links the rotating crankshaft to the reciprocating crosshead yoke by an eccentric pin through the connecting rod bushing. The pin ends are retained by the two horizontal bars of the crosshead yoke, which is restricted to linear vertical motion. Thus, the rotation of the crankshaft generates the reciprocation of the yoke through the connecting rod link.

Moving parts enclosed in the motion box drive housing are principally oil-bath lubricated. The upper oil level in the drive housing, maintained by remote filling, is fixed by the overflow connection to an external waste-oil tank. A separate oil bath in the gear-motor housing overflows to the drive housing.

Oil is force-fed to the upper yoke rod guide bushing by the crankshaft-driven pump. Excess oil is returned to the reservoir by ports drilled in the upper crosshead yoke rod.

9413275.0575

3.6.2.2.3 Power Supply

The power supply system (not shown in Figure 3-27) delivers variable frequency a.c. power to the variable speed-drive motors. Principal components, located in the east end of the storage gallery, are a.c. motor-generator sets, one for each pulse generator, and 2 d.c. motor-generator sets for a.c. generator field excitation.

The a.c. motor-generator sets consist of the following components mounted on a common bedplate: a Fairbanks-Morse constant-speed induction motor (25-hp, 1200-rpm, 3-phase, 60-Hz, 440-volt rating for Size 2; 5 hp for Size 1) driving a Fairbanks-Morse a.c. generator (18.7-kVA, 0.8 power factor, 3-phase, 60-Hz, 480-volt output at 1,800 rpm for Size 2; 3.75 kVA for Size 1) through a Link-Belt variable speed mechanical drive. The Link-Belt drives have manually controllable no-load speed outputs of 1,850 to 560 rpm for Size 2 and 1,850 to 412 rpm for Size 1.

Three-phase power leads electrically interconnect the pulse generator drive motor and the corresponding a.c. generator output. Drive motor speed is proportional to supplied power frequency; thus, variable pulse frequency control is obtained from manual control of the Link-Belt unit output speed.

The a.c. generators require field excitation by an external source of d.c. power. Two bedplate-mounted units for this service each consist of a d.c. generator, rated for 5 kW, at 1,200 rpm and 120 volts, direct-coupled to a 7.5-hp, 3-phase, 60-Hz, 440-volt induction motor.

3.6.2.3 Operation and Performance

By factory acceptance test, pulse generator operation satisfied process requirements for variable pulse frequency and for pulse volume. Piston leakage rates (measured with 11 feet of static head at the piston, with a test solution of water plus soluble oil) were in the 0.3 to 0.6 - gal/min range for the large pulse generator, compared with the 0.5 - gal/min rates predicted by calculation. Input horsepower to the large pulse generator under test was 2.5 at 110 cycles/min. The pulse leakage rates measured in the plant have averaged 0.25 gal/min for the large pulse generators and a factor of 10 less for the small pulse generators. The weep hole in the 2B column pulse generator piston was welded shut prior to installation to reduce the pulse leakage for that column. The piston rings are dependent upon liquid in the pulse leg for lubrication. Therefore, time must be allowed for pulse leg filling before startup of the pulse generator.

3.6.3 Pulse Transmission Lines

The pulse is transmitted from the pulse generator piston to the bottom of the column through the liquid in the pulse transmission line or "pulse leg." This pulse leg must be of sufficient height to balance most of the hydrostatic head of liquid in the column, to minimize the volume of process solution leaking past and through the pulse piston, and to permit this leakage to flow by gravity to the proper receiver. The diameter of the pulse leg must be sized to prevent cavitation, as discussed in Section 6.2.7.4.

The large-diameter (26- to 34-inch) pulse columns have 12-inch-diameter pulse legs 15.5 or 17.5 feet high. The small-diameter (7- and 8-inch) columns have 4-inch-diameter pulse legs from 10 to 18 feet high. Pulse leg dimensions for all Purex columns are listed in Table 3-2.

3.6.4 Air Pulser System

Although air pulsers had previously been used for years in the 234-5 and 236-Z Buildings and other facilities both on and off the Hanford Site, the first application of air pulsers in the Purex Plant was in the 3A and 3B columns of the third plutonium cycle. The air pulsers were installed in 1971.

Air pulsing is produced from a compressed air supply located higher than the columns and controlled by valves that alternately open to let air into the pulse leg and then vent the pulse leg. The air pressure is controlled by pressure reducing valves (PRV's) to the desired value, with accumulator tanks used to minimize pressure variations. The pulse leg is normally 1-inch-diameter pipe (based on consideration of excessive friction losses in smaller pipes and pulse dampening effects in larger pipes). The pulse frequency is determined by an adjustable device with the pulse amplitude varying as a function of both frequency and pulse pressure.

3.6.4.1 Description

Pulsing of the 3A and 3B columns is produced by compressed air introduced at a controlled pressure and frequency via separate solenoid-operated valves located in a pipe and operating gallery White Room glovebox. The valves are connected to the columns by hydraulic (pulse) legs consisting of about 20 feet of 1/2-inch piping and 30 to 55 feet of 1-inch piping (see Figures 3-29 and 30). Alternate pressurization and venting of the pulse leg displaces the liquid contained therein and thus forces liquid in the column back and forth through the holes in the cartridge plates.

The air supply to each of the pulser systems from the high pressure (90 psig) air header is piped through a PRV, a pressure indicator, a diaphragm-operated valve (DOV) and a manual valve to a cylindrical accumulator tank. The 1.75-cubic-foot accumulator tank is used to minimize changes in pulse-air pressure due to pressure fluctuations in the air supply. The air pressure in the accumulator tank is measured and transmitted to a pressure recorder controller located on the central control room panel board. In the normal automatic control mode, the controller maintains the desired pressure in the accumulator by adjusting the DOV as required.

Pulse air is piped from the accumulator tank through a manual valve to the 3/4-inch model HC500-75 Hannifin valve. The Hannifin valve is operated by two solenoid valves (EV-A and EV-B) connected to a pilot air supply (Figure 3-29). Momentarily energizing the solenoid permits pilot air pressure to drive the main valve pistons apart, seating the poppets in the normal "at rest" position, which is maintained when both solenoids are de-energized. In this position, the pulse leg is vented via closed piping through the glovebox into the cell. When solenoid EV-A is energized momentarily, the space between the pistons is exhausted. Line pressure within the main valve drives the pistons together, sealing the poppets in the shifted position and applying pulse air pressure to the pulse leg. The pilot air line is equipped with oilers (shown in Figure 3-30), adjusted to supply one or two drops of oil per minute for internal lubrication of the Hannifin valve.

The operating frequency of the solenoid valves, and thus the pulse frequency, is controlled by an instrument located on the central control room panel board. The frequency control instrument includes an on-off switch and an adjustable dial for frequency control. Frequencies of 30 to 120 pulses per minute are attainable. As shown in Figure 3-31, which is based on mockup test data obtained immediately prior to plant installation, the dial reading is linearly proportional to the desired pulse frequency. During operation, both the setting and desired pulse frequency are specified on the process rate sheet.

The glovebox containing the Hannifin valves is normally not contaminated. However, due to the potential for air leaks within the box, it is vented to the west sample gallery hood exhaust system, which is filtered.

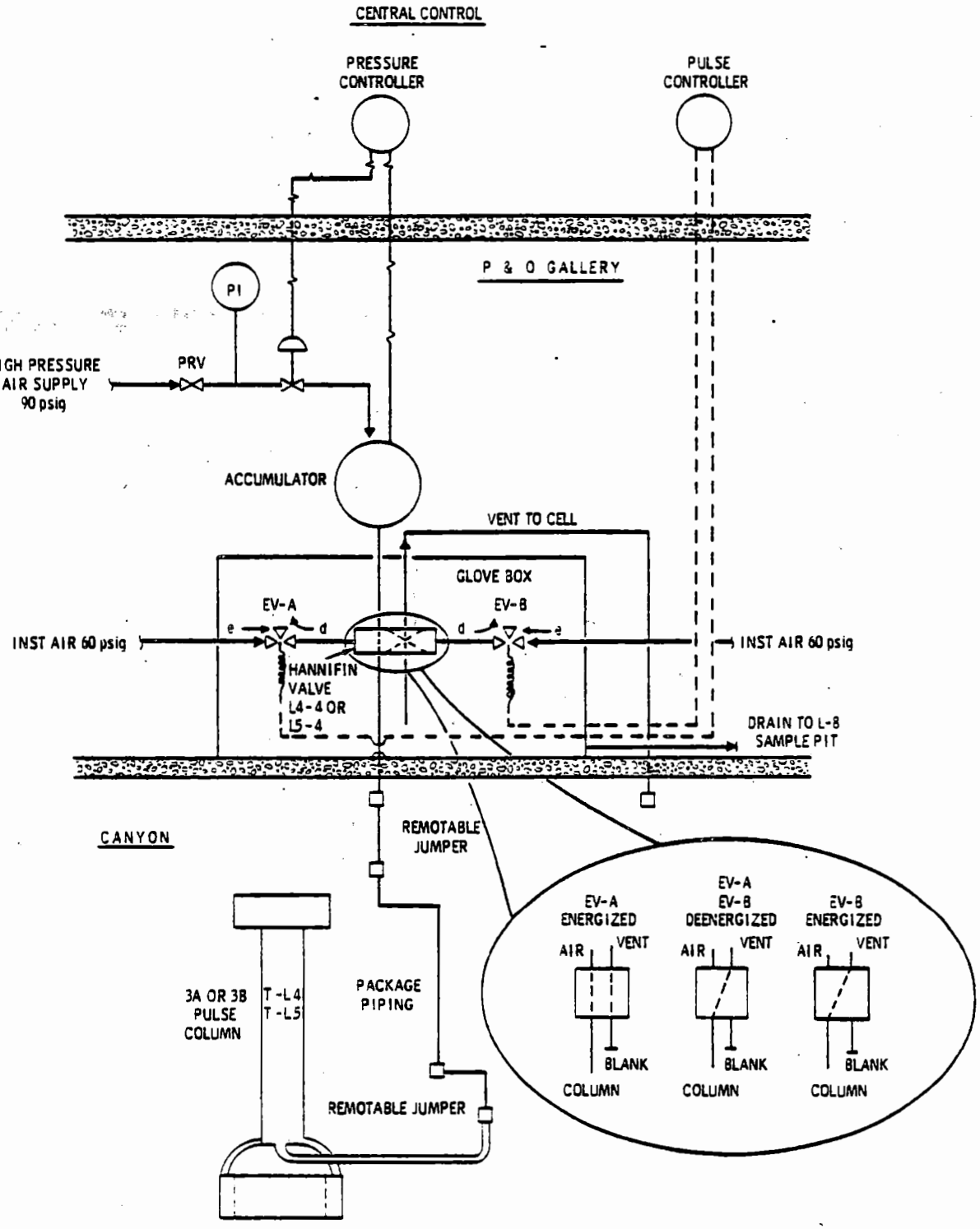

FIGURE 3-29. Typical Air Pulse Delivery System to 3A or 3B Column.

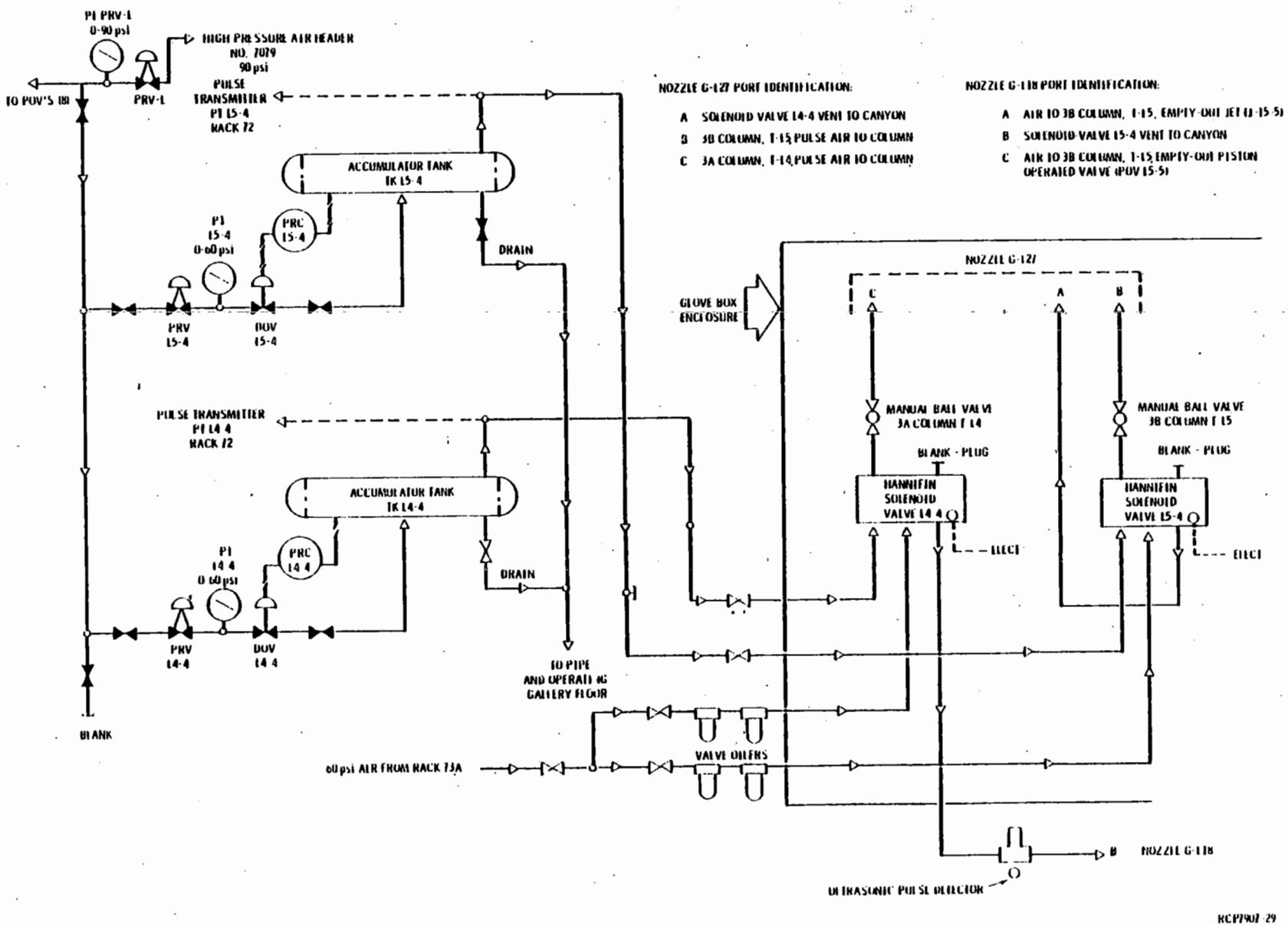

FIGURE 3-30. Air Pulse Generation System to 3A and 3B Columns.

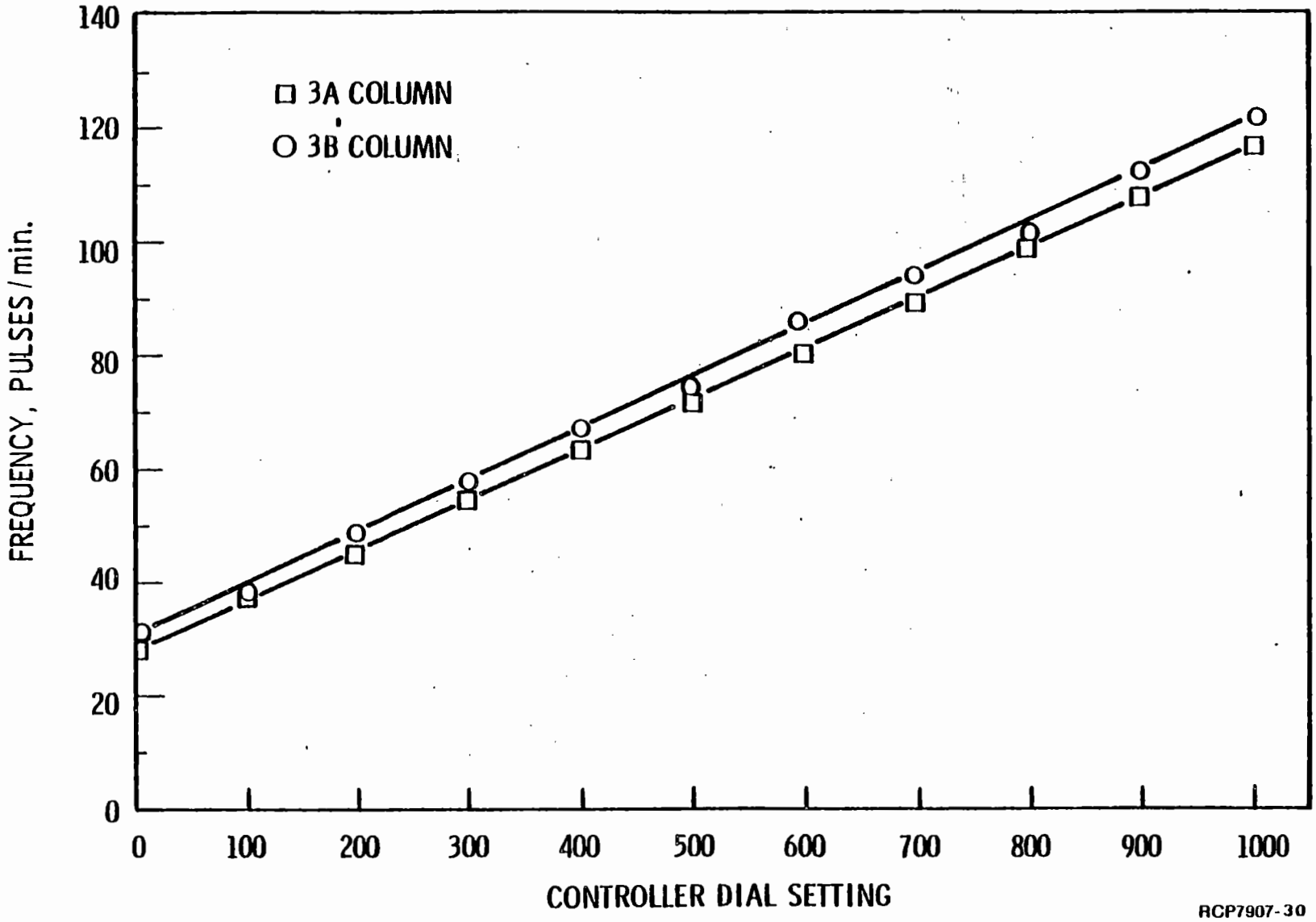

FIGURE 3-31. 3A and 3B Columns Air Pulse Frequency Controller Calibrations.

3.7 CONCENTRATORS

In the Purex process, five concentrator vessels of similar design are used for organic solvent stripping and volumetric reduction of uranium and waste solutions. Plutonium solution is concentrated in two vessels designed for criticality prevention, and a combined stripper-concentrator is used for neptunium solution concentration. Evaporation in all of the vessels is effected with steam-heated tube bundles.

3.7.1 Uranium Concentrators, E-J8-1 and E-K4-1

Organic stripping and concentration of the 1CU and 2EU uranium streams are carried out in concentrators E-J8-1 and E-K4-1, respectively. Designs of these two vessels, shown in Figures 3-32 and 3-33, are identical except for the tube bundles. Both concentrators are insulated and are made of 304-L stainless steel. Each concentrator is a vertical-tube, thermal recirculation evaporator containing two bundles of 1-inch-diameter by 10-foot-long tubes, surmounted by a 9-foot-diameter, 14-foot-high bubble-cap column and packed section. Both tube bundles in E-J8-1 and the bundle in the east section of E-K4-1 each contain 718 tubes. The west bundle in E-K4-1 contains 630 tubes.

The lower portion of the concentrator consists of a central draft tube 2 1/2 feet in diameter connected on opposite sides to two cylindrical reboilers, 4 feet 7 inches in diameter. The reboilers, which contain the removable tube bundles, are connected to the draft tube at the bottom by 21-inch-diameter pipes, and at the top by rectangular ducts which are 4 feet 7 inches wide by 6 feet high.

The stripping and de-entrainment tower is centered above the draft tube and is welded to the top of the ducts joining the reboilers and draft tube. In the tower are seven trays, each with 162 equally spaced 4-inch-diameter bubble caps. Weirs and down-comers on the trays are arranged to split the flow of liquid across the trays. In this manner, flow direction on each tray is reversed from the flows immediately above and below it. Above the top tray is a 3-foot-high section packed with 1-inch Raschig rings. Vapor leaves the top of the tower through a 16-inch flanged nozzle, which is connected to a condenser (see Section 3.12 for condenser description) mounted on top of the tower. Vessel pressurization is relieved through a seal pot attached to the side of the tower.

Operation of the concentrators is continuous. Aqueous uranium solution enters the tower, and as the solution descends from tray to tray, the solution is stripped of any entrained organic solvent by the vapors ascending through the bubble-cap trays. The stripped solution enters the central draft tube from the tower and mixes with the concentrated solution which circulates through the reboiler tubes. The boiling action inside the tubes promotes upward flow of the liquid through the tubes and the return of the liquid to the bottom of the reboilers via the central draft tube.

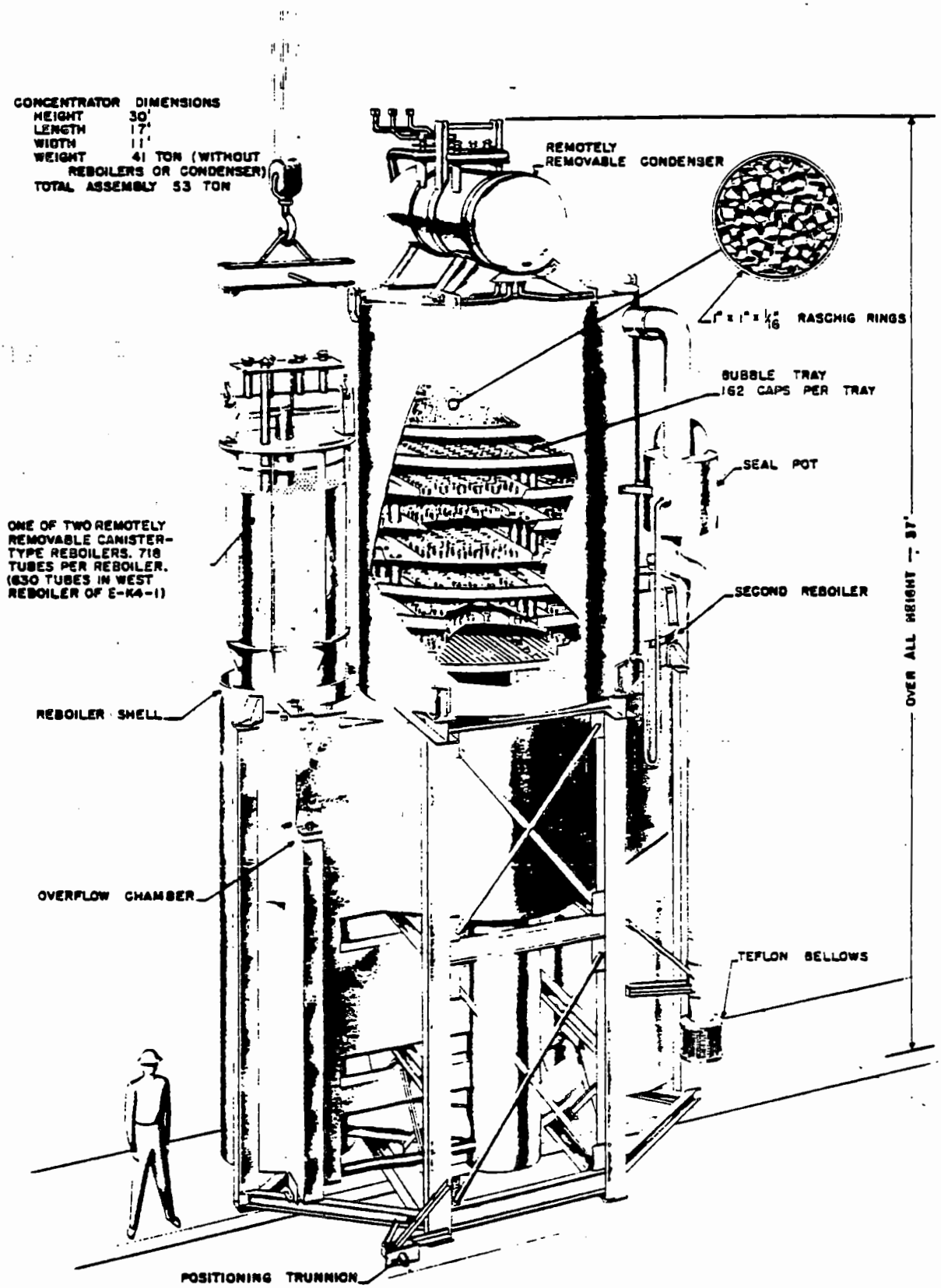

RCP7907-31

FIGURE 3-32. Concentrators E-J8-1 and E-K4-1, Perspective Cutaway.

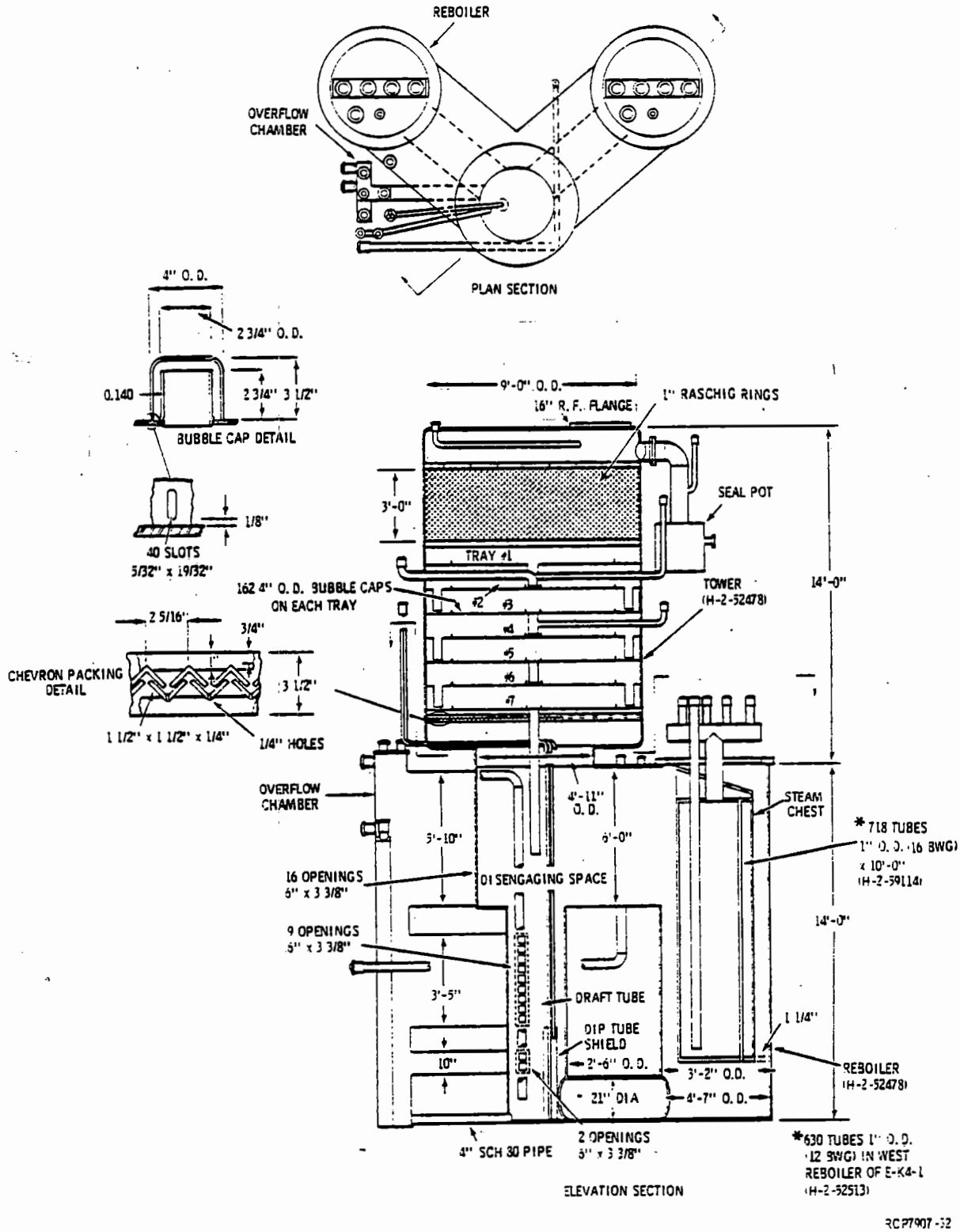

FIGURE 3-33. Concentrators E-J8-1 and E-K4-1.

Entrained droplets of uranium solution are removed by impingement from the overhead vapors to minimize uranium losses to the condensate. Part of the droplets issuing with vapor from the reboiler tubes are deflected downward to the central section of the concentrator by impingement plates above each tube bundle. De-entrainment of droplets also occurs as the vapors rise through the flooded bubble-cap trays and in the packed section at the top of the tower.

Concentrated solution overflows from the vessel through a chamber connected to the draft tube.

3.7.2 Ammonia Scrubber Waste Concentrator, E-F11-1

Ammonia scrubber waste and dissolver off-gas condensate from fuel element coating dissolution are concentrated in vessel E-F11-1, which is made of type 304-L stainless steel. The concentrator, shown in Figure 3-34, is similar in design to the E-J8-1 and E-K4-1 concentrators. Like these vessels, E-F11-1 has a central draft tube, 2 1/2 feet in diameter, in the lower portion of the concentrator connected on opposite sides to two cylindrical reboilers, each 4 1/2 feet in diameter. The reboilers are connected to the draft tube by ducts at the top and bottom. Unlike the J8 and K4 concentrators, in which the draft tubes are welded to the towers, the F11 tower is removable, being connected to the draft tube with a bolted flange.

Differences also exist between the concentrators in reboiler and draft tube design. Unlike the J8 and K4 concentrators, the bottoms of the F11 reboilers are elevated above the bottom of the draft tube, and the reboiler bottoms are dished downward for effective liquid drainage. Also, the bottom of the F11 draft tube is dished upward to the center so that liquid heel volumes will be minimized.

The internals of the two E-F11-1 reboilers are different. The east reboiler contains a tube bundle for steam heating with 687 vertical tubes 1 1/4 inches in diameter by 10 feet long. A cooling coil made of 2-inch pipe is inserted into the west reboiler. This coil was installed for use in the 1970 thoria processing campaign for concentration of thorium solution, but is no longer used. In the upper central section of the concentrator, a baffle made of 5-foot-long vertical strips of angle iron is mounted for impingement separation of liquid droplets from the rising vapor.

Concentrated waste is jet-discharged in batches to underground tank storage (via TK-F18) from a 20-inch-diameter cylindrical chamber connected to the draft tube.

The concentrator vents to the removable de-entrainment tower connected to the top of the central portion of the concentrator with an 18-inch flange and vent pipe. Since E-F11-1 has no stripping function, the tower, which is 5 1/2 feet in diameter and about 12 1/2 feet long, contains only a

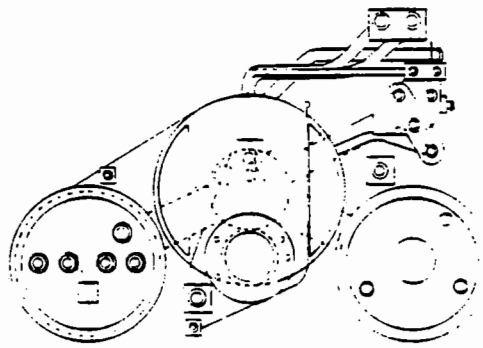

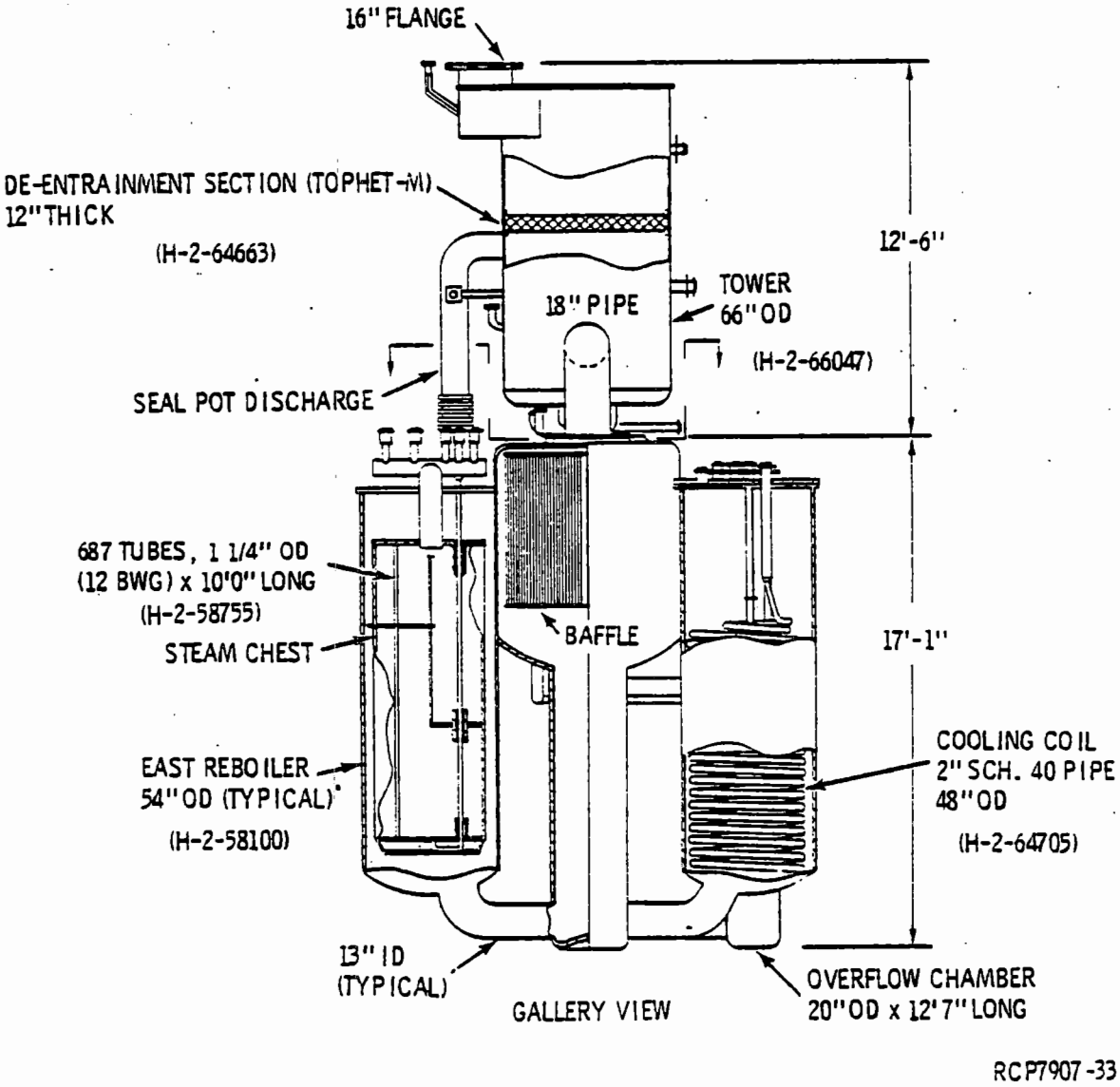

FIGURE 3-34. Ammonia Scrubber Waste Concentrator E-F11-1.

12-inch-thick de-entrainment pad made of Tophet-M wire mesh for impingement removal of liquid droplets from the overhead vapors. A seal pot for vessel pressure relief is mounted on the side of the tower.

From the tower, vapors are routed through a 16-inch flanged nozzle connected to a condenser, which is mounted on top of the tower. The condenser (E-F11-2) is described in Section 3.12.

3.7.3 Waste Concentrator, E-F6-1

In concentrator E-F6-1, shown in Figure 3-35, the high-level aqueous waste (HAW), containing nearly all of the process fission products, is boiled to recover the nitric acid and to reduce the volume of the remaining solution which must be processed in the waste management facilities.

Except for the tube bundles, the designs of the concentrator reboilers and central section are identical to the corresponding parts of E-F11-1. The east reboiler contains 630 1-inch-diameter tubes, and the west reboiler holds 687 tubes, which are 1 1/4 inches in diameter. All of the tubes are 10 feet long.

Vapor from the concentrator passes through two stages of liquid de-entrainment for fission product removal before going to the T-F5 acid absorber for recovery of nitric acid. The de-entrainment tower and seal pot assembly mounted above the concentrator are identical to those of E-F11-1, except that the de-entrainment pad in the F6 tower is made of tantalum instead of the Tophet-M used for the F11 pad. An additional de-entrainment section (T-F6-2) is located in the off-gas line above the concentrator tower. This section, which is about 6 feet high and 5 feet in diameter, contains a 10-inch-thick tantalum wire mesh de-entrainment pad.

The HAW, after addition of a sugar solution for suppression of ruthenium volatilization, becomes the 1WF stream, which is fed to the center section of the concentrator. The solution circulates upward through the inside of the tubes in the reboilers while process steam condenses on the outside of the tubes in the steam chests. Concentrated solution (1WW) overflows from the discharge chamber and is routed to TK-F26.

3.7.4 Backcycle Waste Concentrator, E-H4-1

Aqueous waste streams from second cycle uranium, plutonium, and neptunium solvent extraction systems, and condensate from the acid recovery system are concentrated for recycle in vessel E-H4-1, shown in Figure 3-36. The E-H4-1 concentrator is very similar in design to and functions the same as the uranium solution concentrators, E-J8-1 and E-K4-1. Liquid feed solution (3WF) enters the E-H4-1 concentrator through the removable stripping tower, which contains six trays, each holding 88 bubble-caps for organic stripping and vapor de-entrainment. Above the top tray, a tantalum

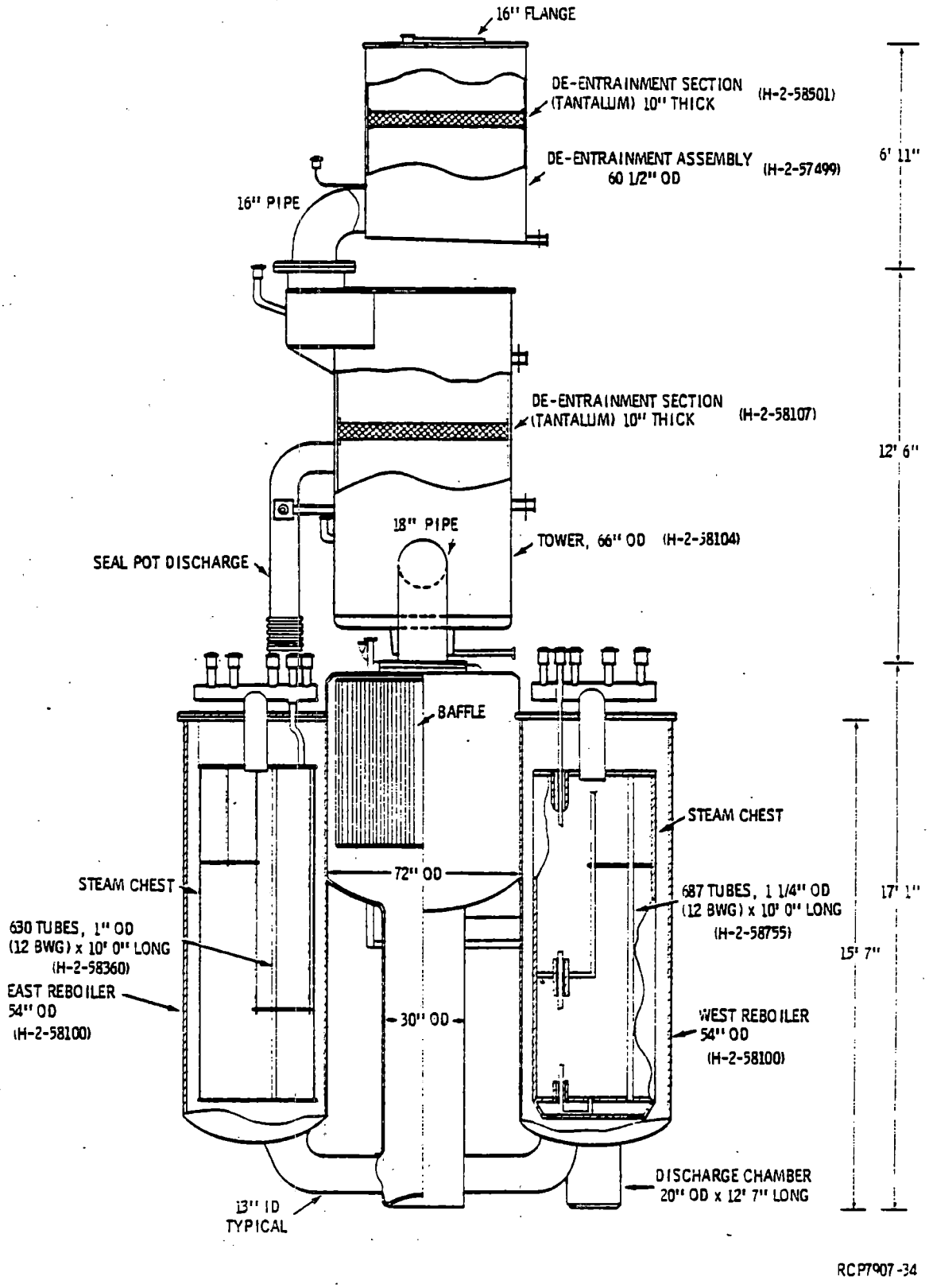

FIGURE 3-35. Fission Product Waste Concentrator E-F6-1.

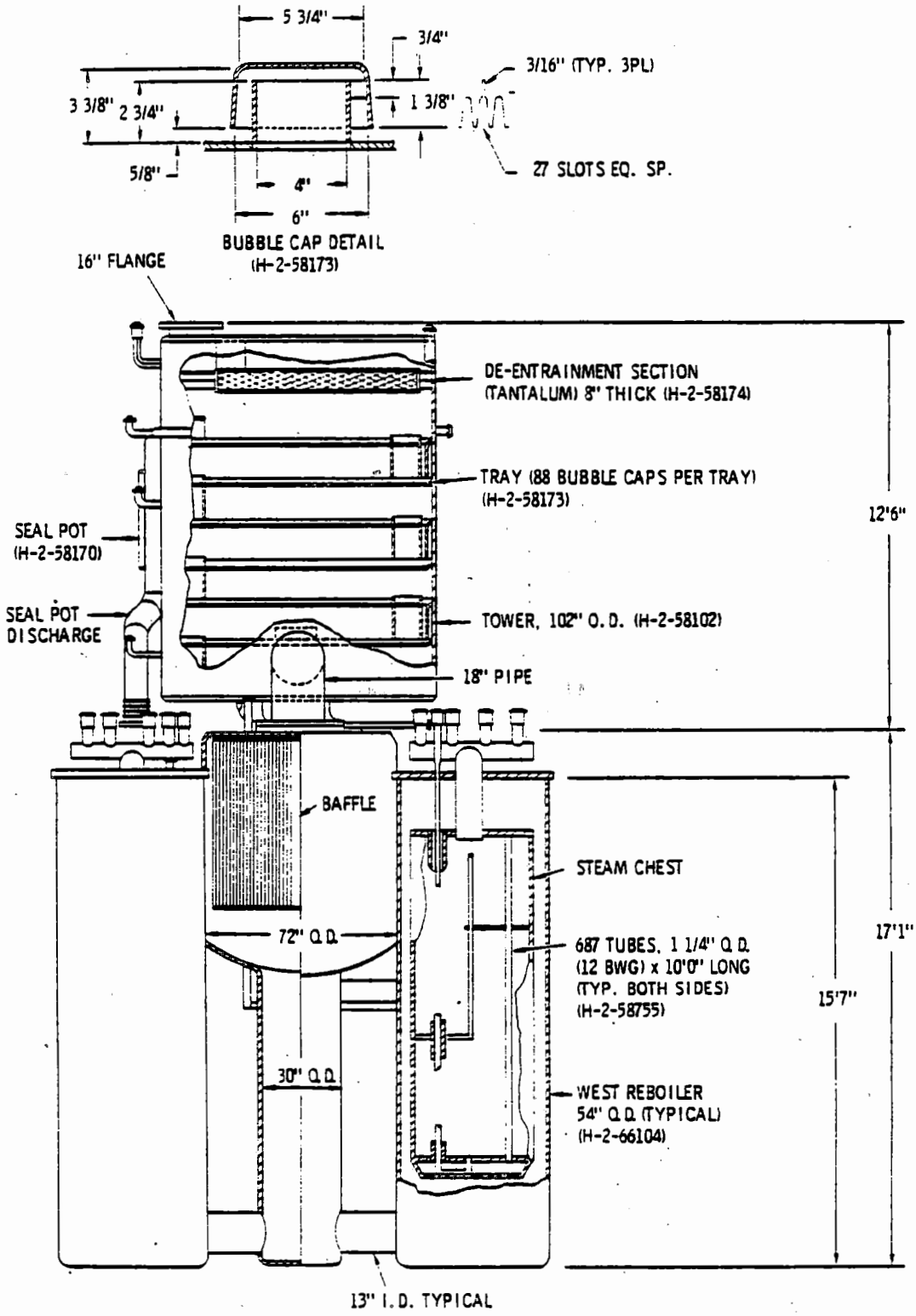

FIGURE 3-36. Backcycle Waste Concentrator E-H4-1.

wire mesh pad is mounted for de-entrainment of the vapors as they pass to the condenser (E-H4-2) mounted on top of the tower. The condenser is described in Section 3.12.

The tower, which has a seal pot attached for pressure relief, is made of 304-L stainless steel, and is 102 inches in diameter and about 11 1/2 feet high. The tower is bolted with an 18-inch flange to the top of the concentrator central section. Except for the bottom, which is flat for criticality prevention, the central section is identical to those of E-F11-1 and E-F6-1.

The two reboilers are each 54 inches in diameter and have flat bottoms for criticality prevention. Like the reboilers of concentrators E-J8-1 and E-K4-1, the H4 reboilers extend down slightly below the bottom of the central draft tube and discharge section of the concentrator. Each reboiler contains a steam chest with 687 tubes 1 1/4 inches in diameter by 10 feet long.

9413275.0589

3.7.5 Stripper, T-L6, and Plutonium Concentrator, E-L7-1

Organic is stripped from the plutonium solvent extraction product stream (PSF) after nitric acid concentration adjustment and the nitrate product is concentrated in vessel T-L6. This vessel, shown in Figure 3-37, consists of a stripping and de-entrainment tower connected to the top of a thermosyphon reboiler.

The tower is made from 3-inch-diameter titanium pipe containing an 8-foot vertical section filled with tantalum Raschig rings. Vapors rising through the tower vent to a horizontal condenser (E-L6), described in Section 3.12.

The reboiler shell, made from Type 430 stainless steel rolled tubing approximately 5 inches in diameter, contains a tube bundle with 10 tantalum tubes 3/4 inch in diameter by 72 inches long. The thermosyphon down-comer loop is made from 4-inch titanium pipe.

During operation of the stripper, feed is introduced through a nozzle above the packed section in the tower. Organic is stripped from the incoming feed by the ascending vapors from the reboiler section. The stripped product is concentrated further in the reboiler before exiting from the bottom of the reboiler and flowing to E-L7-1 for further concentration.

Concentrator E-L7-1, also shown in Figure 3-37, is used for final concentration of the plutonium nitrate product. The design of this vessel is nearly identical to that of T-L6. Unlike T-L6, however, E-L7-1 does not contain packing in its tower. In E-L7-1, the feed stream (PSC) enters the bottom of the reboiler instead of in the tower, as with T-L6. Vapors from E-L7-1 are condensed in horizontal condenser E-L7-2, described in Section 3.12.

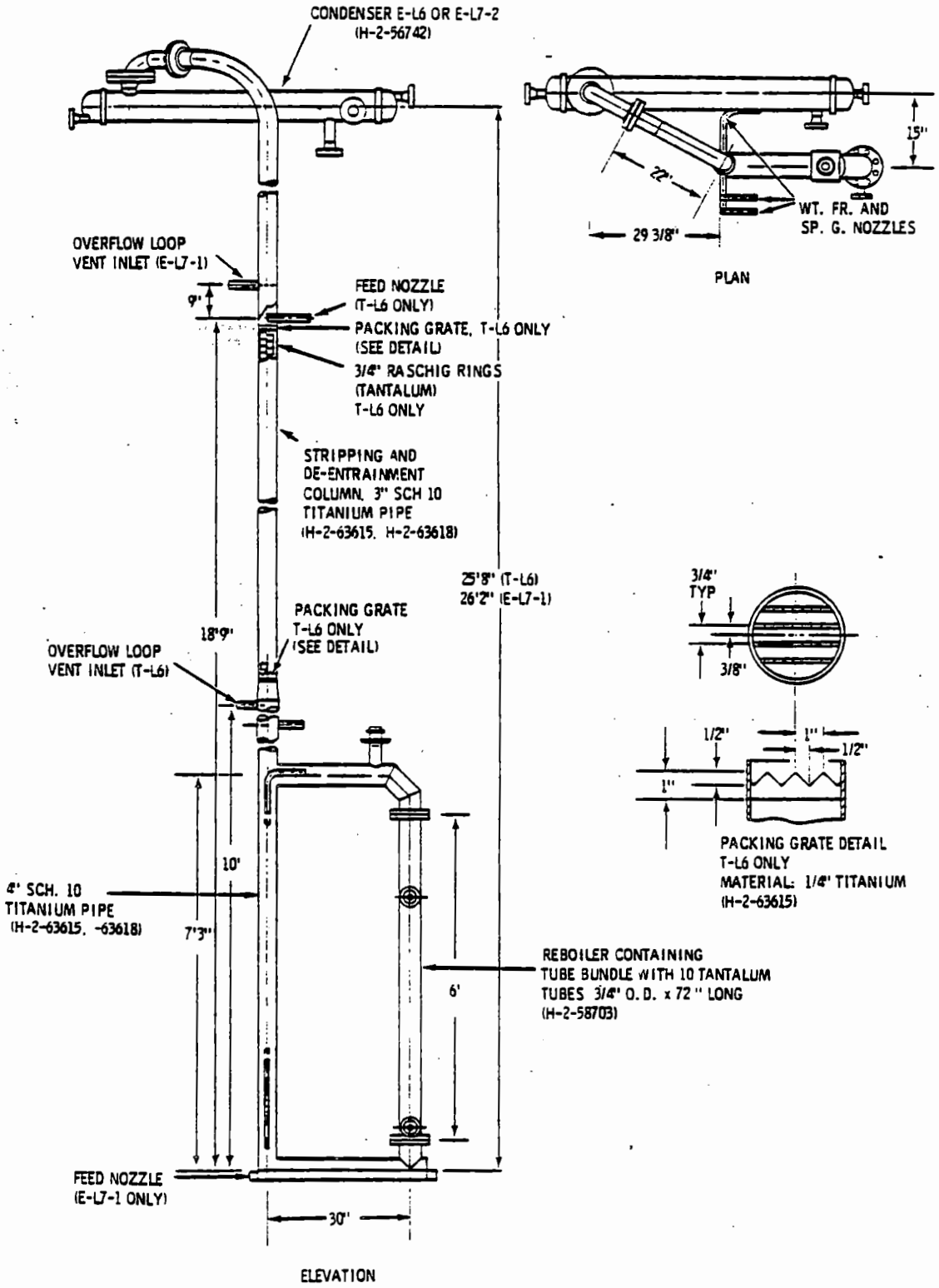

FIGURE 3-37. Stripper T-L6 and Plutonium Concentrator E-L7-1.

3.7.6 Neptunium Stripper-Concentrator, T-Q2 and E-Q2

Neptunium nitrate solution (2PN) from the 2P solvent extraction column is treated in a stripper-concentrator prior to final purification by ion exchange. Organic is removed from the 2PN in the stripper (T-Q2), which is mounted on top of the concentrator vessel (E-Q2) used for final concentration of the 2PN.

Stripper T-Q2, shown in Figure 3-38, consists of two parallel columns approximately 12 feet high. The columns are made of 6-inch pipe joined at the top and bottom by horizontal 4-inch pipe sections to form an enclosed loop. All pipe in the stripper is made of 304-L stainless steel. A 6-foot section of each column is packed with 1-inch Pall rings to promote liquid-vapor contact for organic stripping. Feed enters the stripper through a distributor nozzle above each of the packed sections. Above each nozzle is a tantalum wire mesh de-entrainment pad 6 inches thick. Column washdown nozzles are located above each de-entrainment pad.

Vapors from the stripper-concentrator vent to condenser E-Q9 (described in Section 3.12) through a 4-inch port in the top of T-Q2.

Concentrator E-Q2, shown in Figure 3-39, is made of titanium, and is connected to the bottom of T-Q2 with a 4-inch flange. E-Q2 is a one-piece thermosyphon concentrator with a tube bundle containing 13 1-inch titanium tubes. The tubes, 6 feet long, are welded in the reboiler made of 6-inch pipe. The down-comer and connecting sections forming a loop with the reboiler are made of 4-inch pipe. Concentrated neptunium nitrate (2PC) exits the bottom of E-Q2 through a 1-inch pipe to a feed makeup tank (TK-Q3) for ion exchange purification.

Flanged extensions of the concentrator titanium service lines extend through the concrete shielding wall into the Q Cell maintenance hood, where the flanges are connected to stainless steel service piping.

3.8 TANKS

Tanks are used in the Purex Plant for reaction vessels, receivers, in-process storage, and process solution makeup. Many tanks are constructed with special shapes such that the contained solution remains critically safe by geometry. Other tanks are designed to perform special functions, such as decanting and organic wash mixing. Design specifications for tanks are based on process requirements discussed in Chapter 4.0 of this manual. The tanks are described in this section with an emphasis on physical features important from a processing viewpoint. Major dimensions, material specifications, and construction details are discussed and tabulated. Detailed design data are reserved for reference drawings, which are listed in the figures and tables of this section.

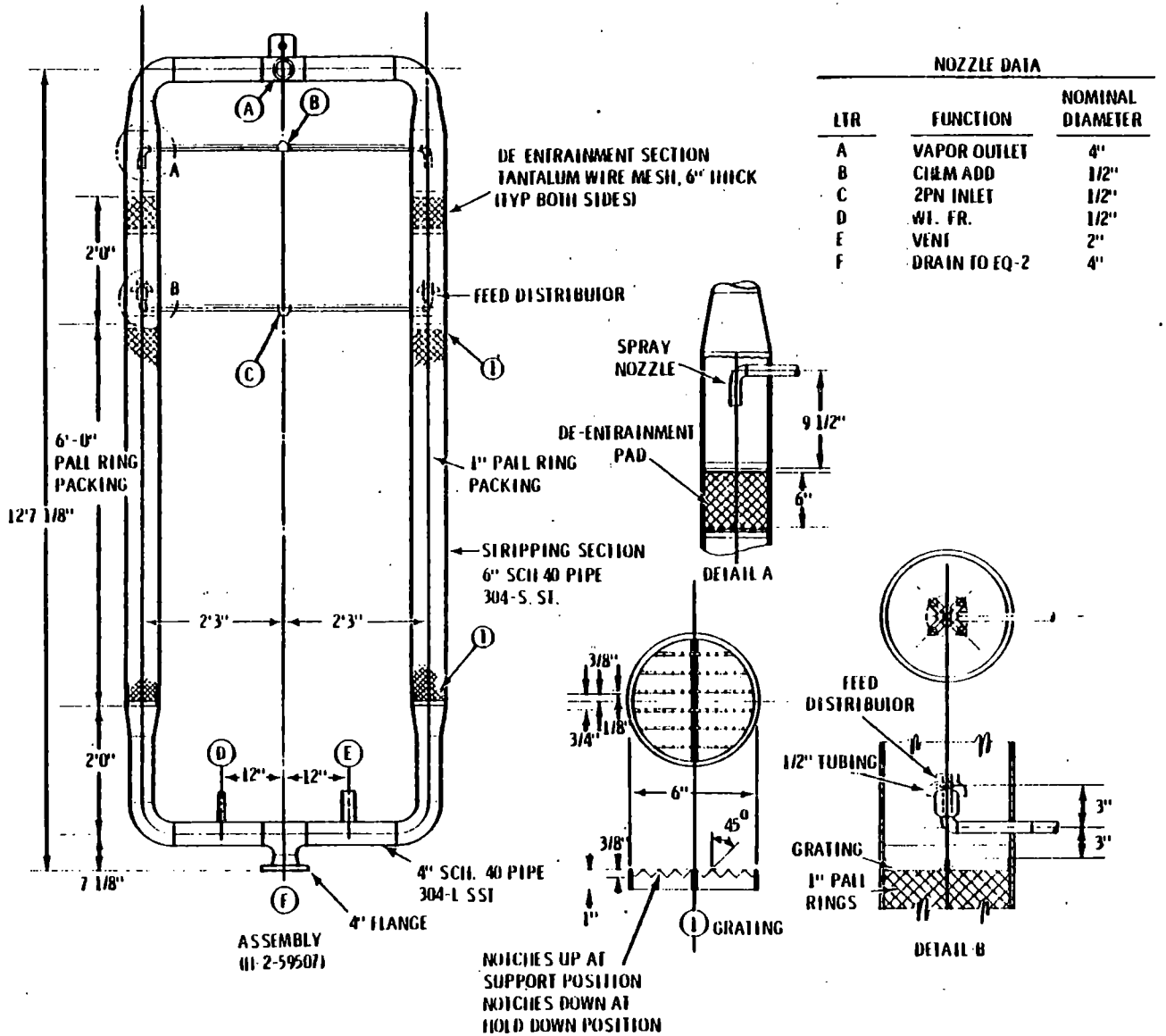

NOZZLE DATA

LTR	FUNCTION	NOMINAL DIAMETER
A	VAPOR OUTLET	4"
B	CHEM ADD	1/2"
C	2PN INLET	1/2"
D	WT. FR.	1/2"
E	VENT	2"
F	DRAIN TO EQ-2	4"

FIGURE 3-38. 2PN Stripper T-Q2.

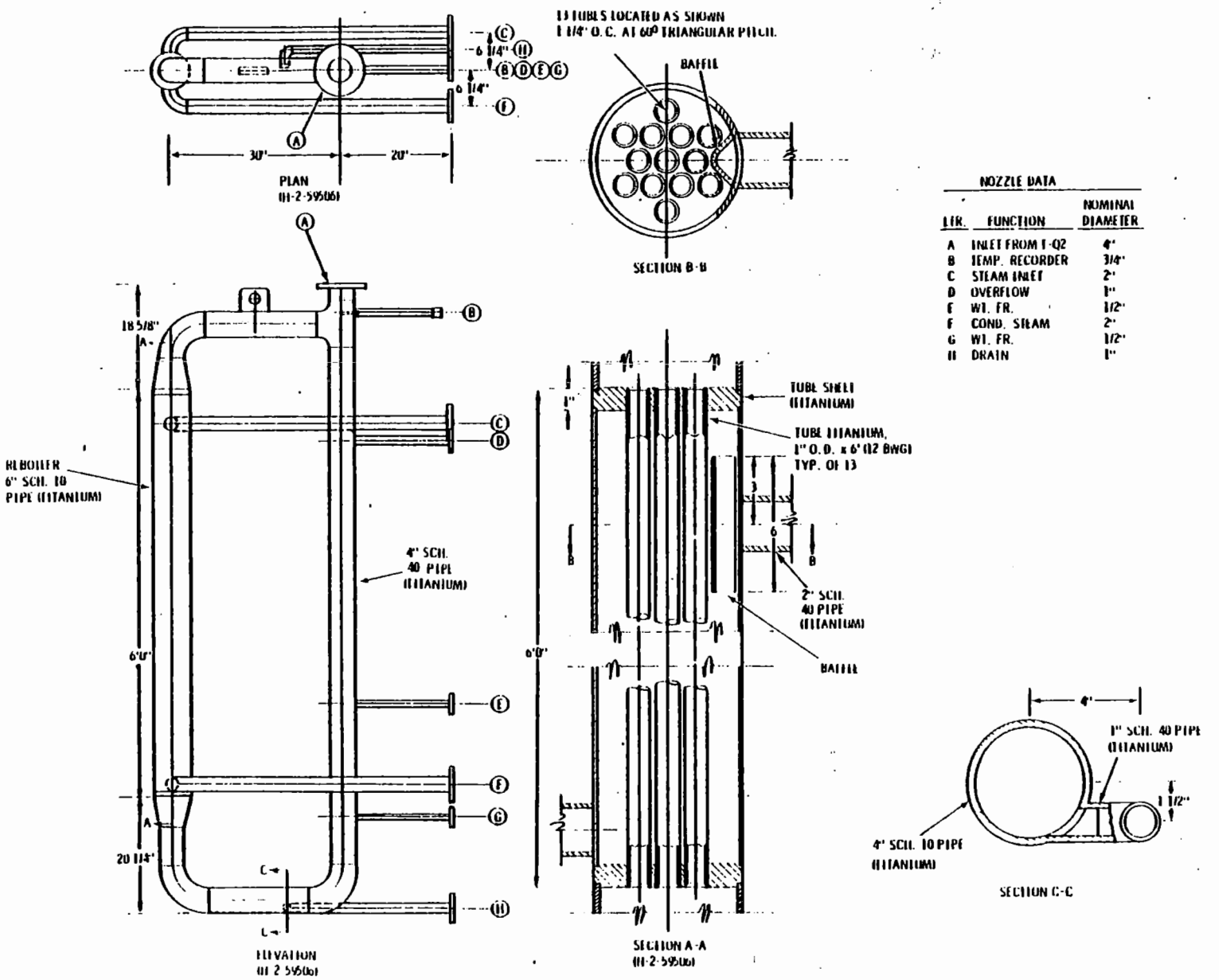

NOZZLE DATA

LTR.	FUNCTION	NOMINAL DIAMETER
A	INLET FROM T-Q2	4"
B	TEMP. RECORDER	3/4"
C	STEAM INLET	2"
D	OVERFLOW	1"
E	WT. FR.	1/2"
F	COND. STEAM	2"
G	WT. FR.	1/2"
H	DRAIN	1"

FIGURE 3-39. 2PH Concentrator E-Q2.

3.8.1 Radioactive Service Tanks

The radioactive service tanks described in this section include the vessels located in all the processing cells of the canyon, PR room, and Q Cell, except for the dissolvers (described under Section 3.3). All of these tanks are Class I vessels. A complete listing of the tanks in the canyon, PR room, and Q Cell is given in Table 3-6.

3.8.1.1 Standard Tanks

The following three types of vessels are designated as "standard" tanks for canyon use as reaction vessels, receivers, storage, and head tanks: (a) the 5,000-gallon, general purpose tank (Figure 3-40); (b) the 1,725-gallon, general purpose tank (Figure 3-41); and (c) the 15,000-gallon oval tank for solvent storage (Figure 3-42). These tanks are fabricated with cylindrical (or oval) shells welded to flanged, flat heads and contain coils for heating and cooling arranged in banks of concentric helices.

3.8.1.2 Unique Design Tanks

The tanks described below are designed to fulfill a specific process function.

- NH_3 Catch Tanks (Tanks A3-4, B3-4 and C3-4). The three identical ammonia catch tanks receive waste liquid from the ammonia scrubber in the respective dissolver off-gas system. Waste liquids are stored in the 2,200-gallon tanks before being sent to the E-F11-1 concentrator. A sketch of the tanks is shown in Figure 3-43.

- Uranyl Nitrate Storage Tank (TK-D3-D4). The D3-D4 tank, shown in Figure 3-44, is a 15,500-gallon oval tank used for storage of uranyl nitrate solution from the dissolvers prior to transfer to the HA column feed tank. The tank is divided in half by a partition which allows solutions to overflow from one-half of the tank to the other.

- E Cell NH_3 Catch Tank (TK-E3-2). The E Cell ammonia catch tank is a 250-gallon stainless steel tank for holding waste scrub liquid from the T-E3-1 ammonia scrubber. The tank, as shown in Figure 3-45, contains coils in the form of two concentric helices.

- Vessel Vent Condensate Tank (TK-F1). Condensate from the process vent condenser (E-F1) is routed to Tank F12 through Tank F1. The tank, shown in Figure 3-46, is constructed from a 10-foot length of 12-inch Schedule 10 stainless steel pipe.

TABLE 3-6. Radioactive Service Tanks.

Tank Number	Function*	Nominal Volume, gal	Reference Figure
A3-4	NH_3 Catch (c)	2,100	3-43
B3-4	NH_3 Catch (c)	2,100	3-43
C3-4	NH_3 Catch (c)	2,100	3-43
D1	Metathesis Storage (c)	5,000	3-40
D2	Coating Waste Receiver (c)	5,000	3-40
D3-D4	Metal Solution Storage (c)	15,500	3-44
D5	Metal Solution Storage (c)	5,000	3-40
E1	Recovered Zirflex Product (c)	1,725	3-41
E3	Centrifuge Feed (c)	5,000	3-40
E3-2	E Cell NH_3 Catch (c)	250	3-45
E5	Coating Waste (c)	5,000	3-40
E6	HA Feed Makeup (c)	5,000	3-40
F1	Vessel Vent Condensate (c)	55	3-46
F3	Acid Receiver (c)	5,000	3-40
F7	1W Feed (c)	4,000	3-47
F8	Waste Rework (c)	5,000	3-40
F10	3WF Decanter (c)	5,000	3-40
F12	NH_3 Scrub Concentrator Feed (c)	5,000	3-40
F13	Utility or Organic Recovery (c)	5,000	3-40
F14	Utility Decanter, Disconnected (c)	450	3-52
F15	1WW Denitration (c)	5,000	3-40
F16	1WW Denitration (c)	5,000	3-40
F17	Tube Bundle Flush (c)	1,200	3-48
F18	Sump Waste Receiver (c)	5,000	3-40
F26	1WW Receiver (c)	4,000	3-47
G1	1D Feed (c)	5,000	3-51
G2	1D Waste (c)	1,725	3-41
G5	1DD Feed (c)	15,000	3-42
G6	Decanter (c)	450	3-52
G7	1DD Receiver (c)	15,000	3-42
G8	Wash Waste (c)	5,000	3-40
H1	HA Feed (c)	5,000	3-40
J1	3WB Waste (c)	5,000	3-40
J2	Possible No Storage, Disconnected (c)	1,400	3-58 (i)
J3	1BX Feed (c)	5,000	3-40
J5	2A Feed (c)	370	3-53
J21	2N Feed (c)	320	3-57
K1	2D Feed (c)	5,000	3-40
K5	2UC Receiver (c)	5,000	3-40
K6	2UC Sampler (c)	5,000	3-40
L3	3A Feed (c)	130	3-54
L8	PCP Receiver (c)	10	3-55 (a)
L9	PCP Sampler (PR)	10	3-55 (b)
L10	Alternate PCP Sampler (PR)	14	3-56
L11	Pu Rework and Vacuum (PR)	25	3-55 (c)
L13	Pu Product Loadout (PR)	2.5	3-55 (d)
M1	Decontamination Spray (c)	4,000	3-49
M2	Decontamination (HS)	1,750	3-50
Q1	2PM Feed (Q)	12	3-58 (a)
Q3	3X Feed (Q)	110	3-58 (b)
Q5	3X Waste (Q)	600	3-58 (c)
Q6	3XN Product Receiver (Q)	25	3-58 (d)
Q7	No Product Loadout (Q)	1.5	3-58 (e)
Q8	Hot Cell Sump (Q)	46	3-58 (f)
Q11	Cooling Water Pump (Q)	315	3-58 (g)
Q13	Chemical Addition (Q)	9	3-58 (h)

*Location:
(c) Purex Canyon
(HS) Hot Shop
(PR) PR Room
(Q) Q Cell

NOZZLES	
NUMBER	SIZE
2	27"
3	4"
17	3"

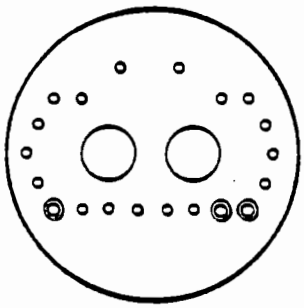

PLAN

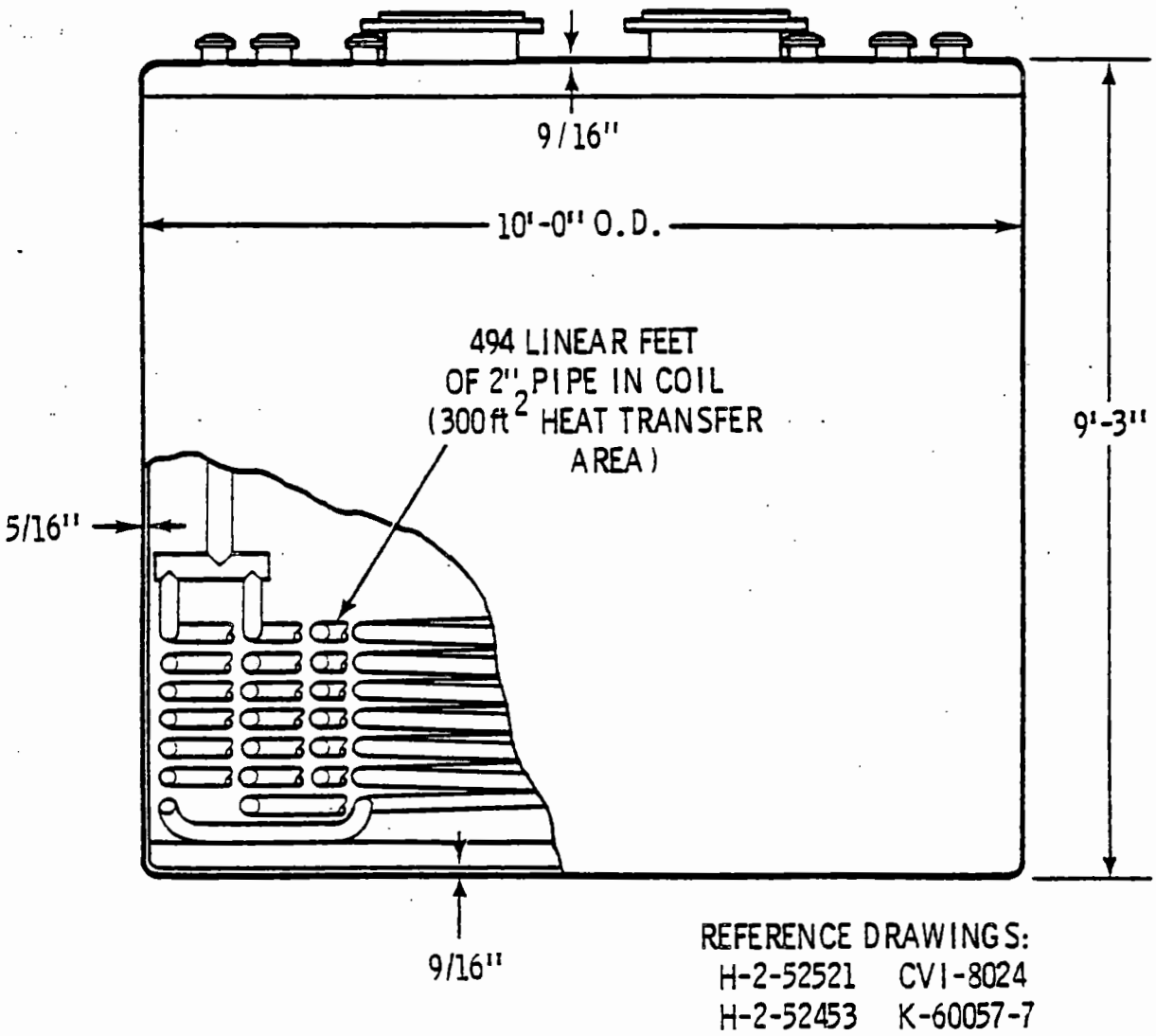

RCP7907-39

FIGURE 3-40. 5,000-Gallon Standard Tank (Typical of 21 Tanks).

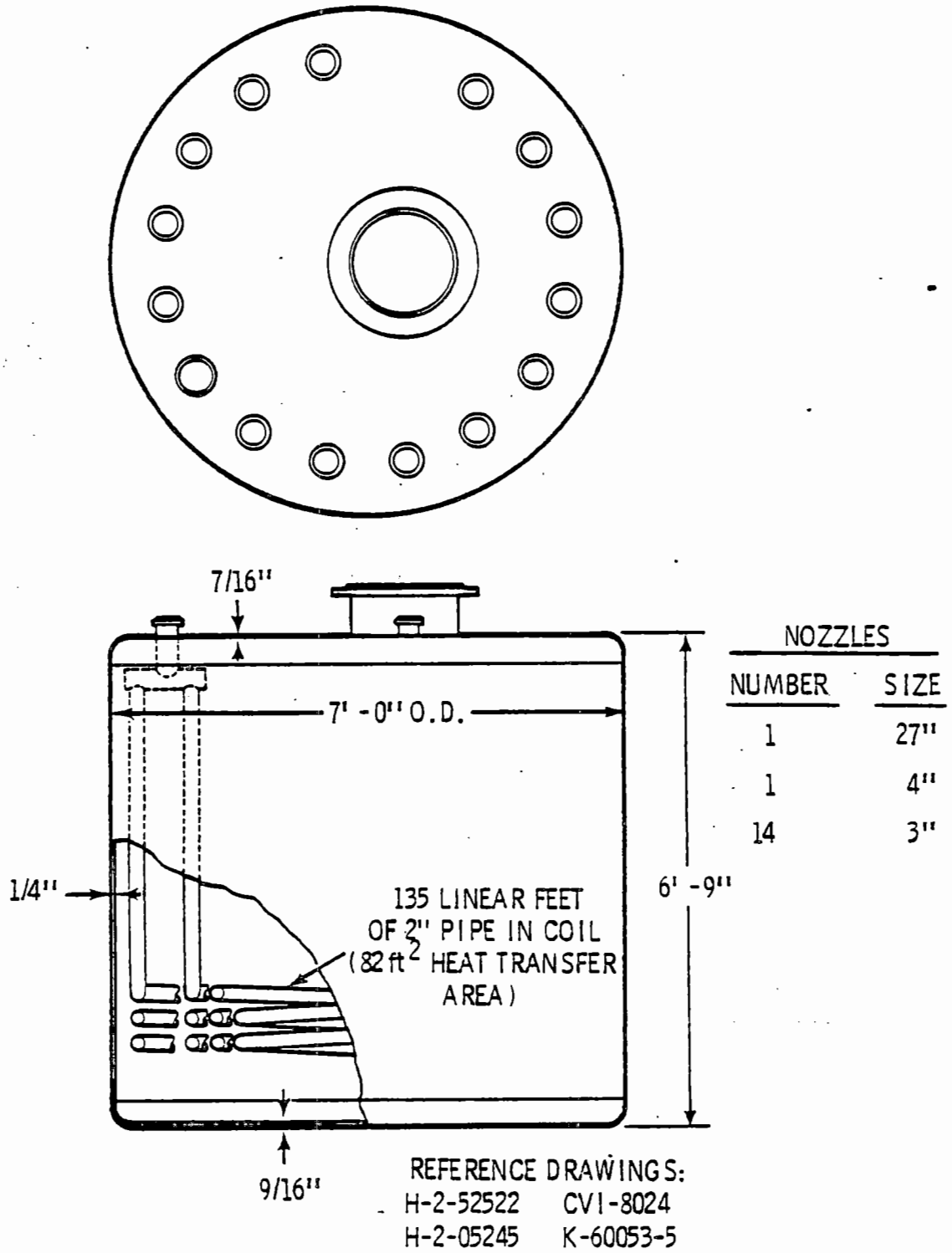

FIGURE 3-41. 1,725-Gallon Standard Tank (TK-E1, G2, R2).

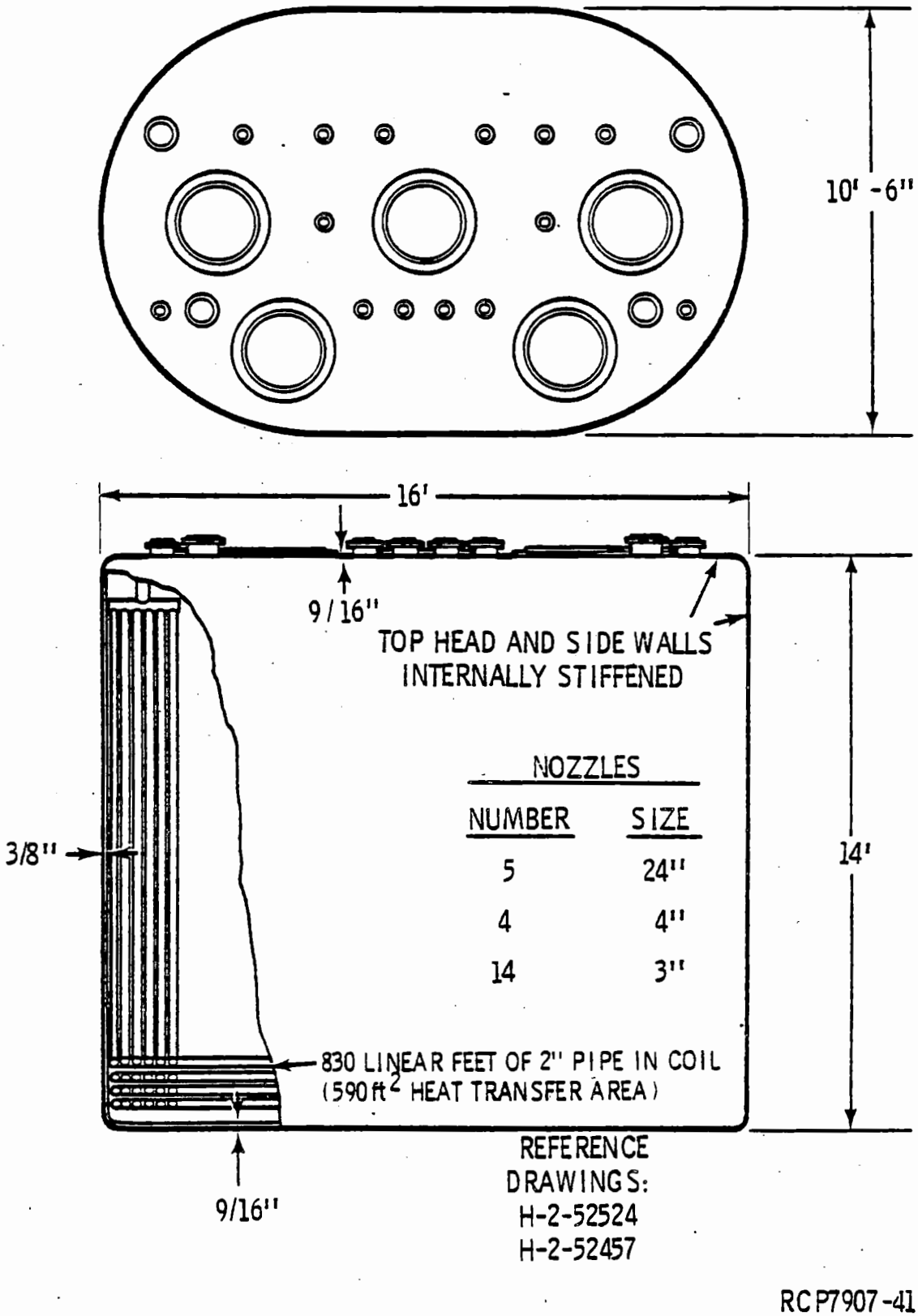

FIGURE 3-42. 15,000-Gallon Standard Tank (TK-G5, G7).

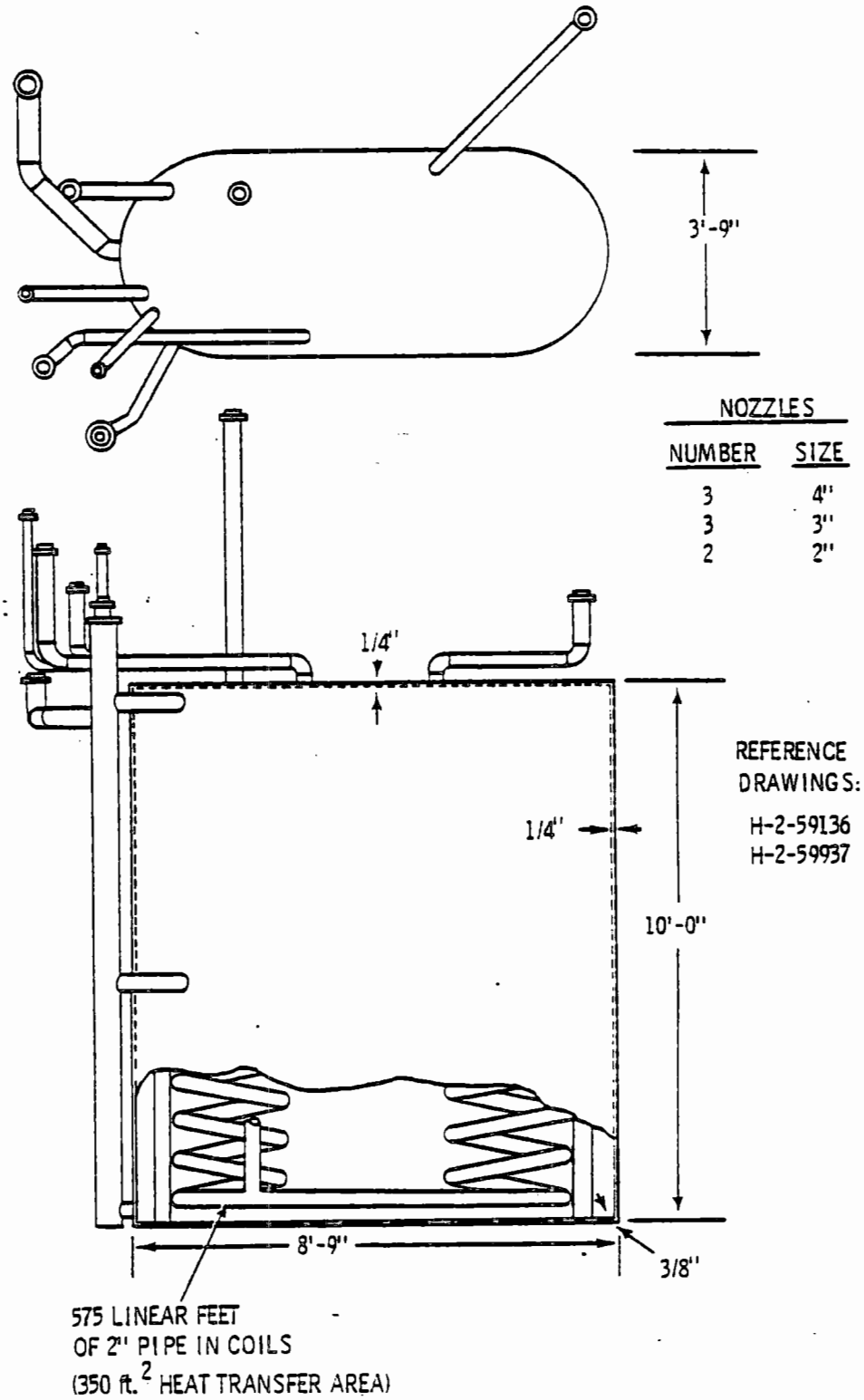

RCP7907-42

FIGURE 3-43. Ammonia Catch Tank (TK-A3-4, B3-4, C3-4).

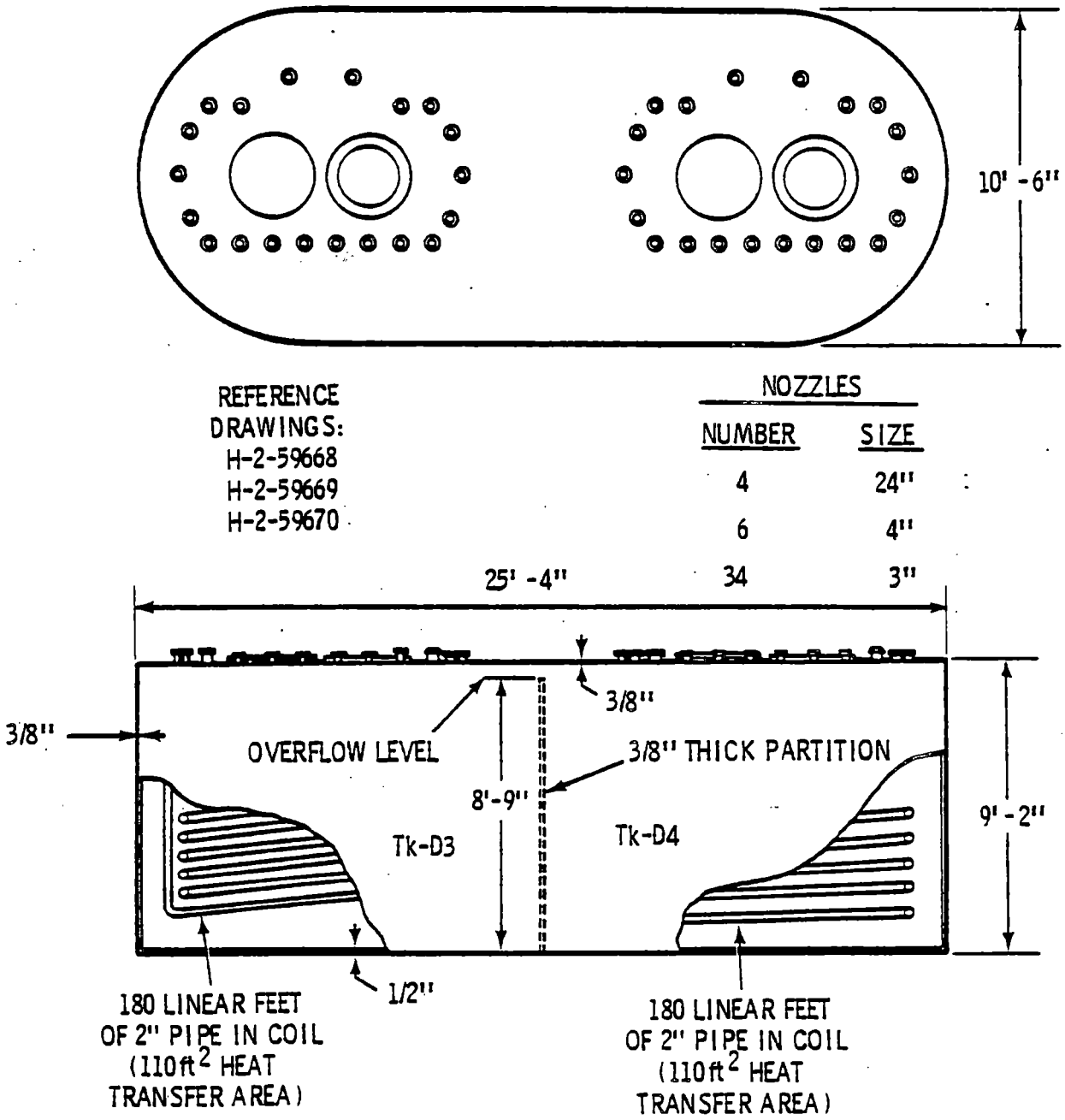

FIGURE 3-44. Uranyl Nitrate Feed Storage Tank (TK-D3-D4).

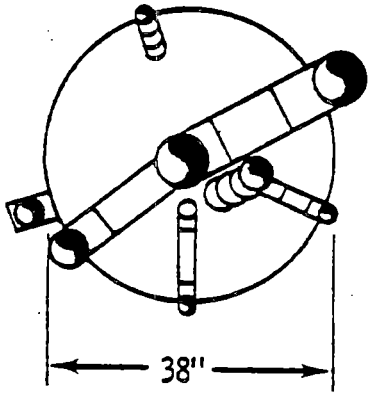

NOZZLES	
NUMBER	SIZE
2	6"
2	4"
1	3"
3	2"

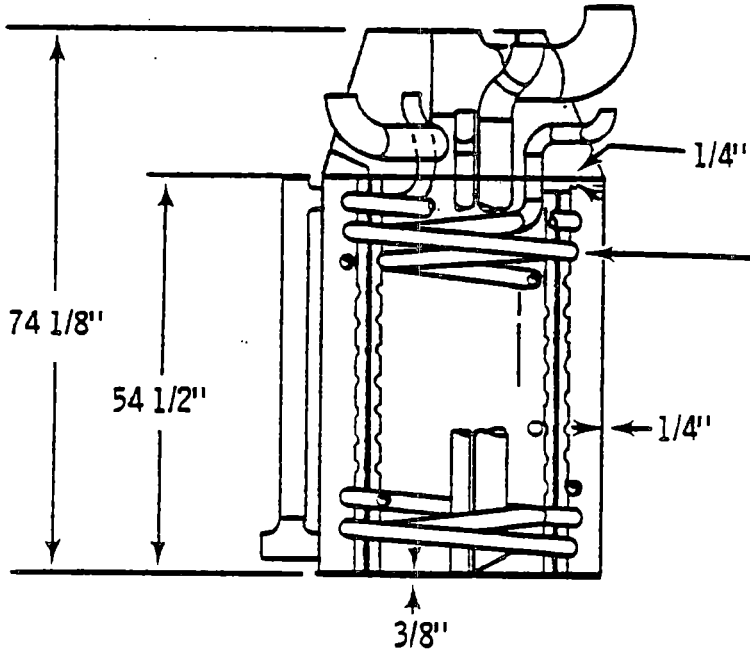

REFERENCE DRAWINGS:
H-2-63810
H-2-59942
H-2-59944

RCP7907-44

FIGURE 3-45. E Cell Ammonia Catch Tank (TK-E3-2).

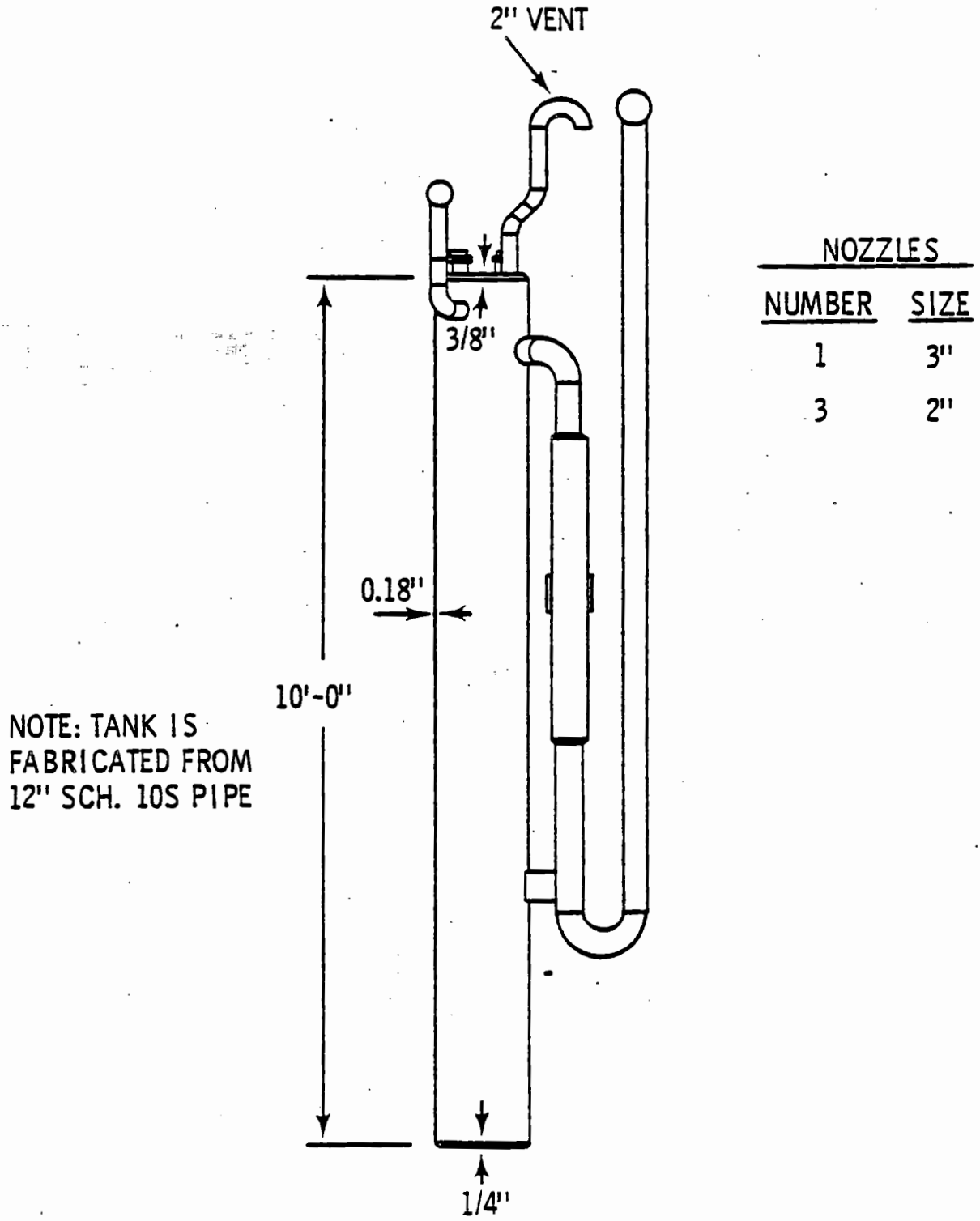

FIGURE 3-46. Vessel Vent Condensate Tank (TK-F1).

- Waste Concentrator Feed-Receiver Tanks (TK-F7-F26). Tanks F7 and F26 are two 4,000-gallon half-oval tanks placed together to form a single oval shape. The tanks, shown in Figure 3-47, are used as feed and concentrate receivers, respectively, for the 1WW concentrator E-F6-1.

- Tube Bundle Flush Tank (TK-F17). The tube bundle flush tank, shown in Figure 3-48, is a 1,200-gallon tank constructed with a large flange opening at the top and spray nozzles in the tank shell. The tank is used for decontamination of used tube bundles from the concentrators.

- Decontamination Spray Tank (TK-M1). Small vessels and pieces of equipment are decontaminated in the decontamination spray tank shown in Figure 3-49. Tank M1 is a 4,000-gallon tank equipped with a stationary internal spray nozzle system, which allows flushing of the outer surfaces of contaminated equipment pieces inserted into TK-M1.

- Hot Shop Tank (TK-M2). The hot shop tank, shown in Figure 3-50, is a 1,750-gallon vessel located in the Purex hot shop. Contaminated equipment is immersed in decontaminating solution prior to maintainence work or removal from the facility.

- Organic Contactor Tanks (TK-G1 and TK-R1). The 5,000-gallon 10F and 20F tanks (TK-G1 and TK-R1, respectively, shown in Figure 3-51) are the feed tanks for the 10 and 20 columns, but are also designed to function as co-current continuous contactors for treating the organic streams. Each tank is 10 feet OD and 9 feet 3 inches high with a shell, heads (except for nozzles), and coil similar to the standard 5,000-gallon tanks. A central cylindrical chimney (4 feet 7.75 inches ID) leaves an annular space 2 feet 8 inches wide within the tank. A packing support grate located in the annulus, 2 feet 9 inches above the tank bottom, supports a 4-foot depth of 1-inch stainless steel Raschig rings. Organic-phase and aqueous-phase distributors are located above the packing to provide co-current flow downward through the packing and into the disengaging space below the packing support. The lower portion of the cylindrical chimney is perforated to allow liquid passage to the central space where organic and aqueous pumps are located.

- Decanters (Tanks F14, G6, and R6). The utility decanter, TK-F14, and organic decanters, TK-G6, and TK-R6, shown in Figure 3-52, are used to continuously separate entrained aqueous phase from organic streams. The three decanters are similar except for minor differences in external piping and brackets. The vessels are 4 feet OD by 5 feet 10 inches high. The aqueous and organic outlets are 4-inch flanged nozzles. Adapters are attached to the nozzles with remote connectors. Liquid feed to the decanters

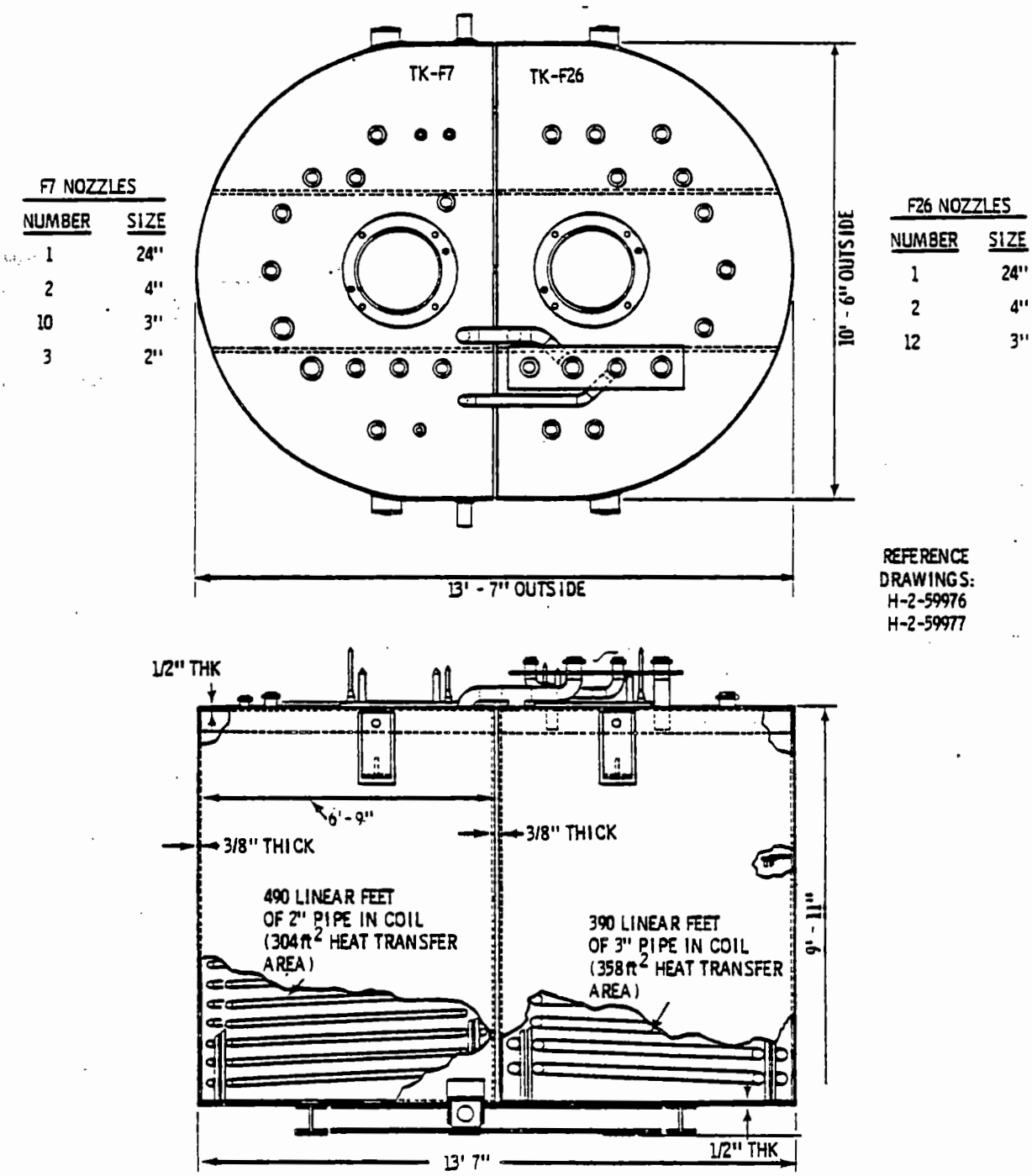

FIGURE 3-47. 1WW Concentrator Feed-Receiver Tank (TK-F7-F26).

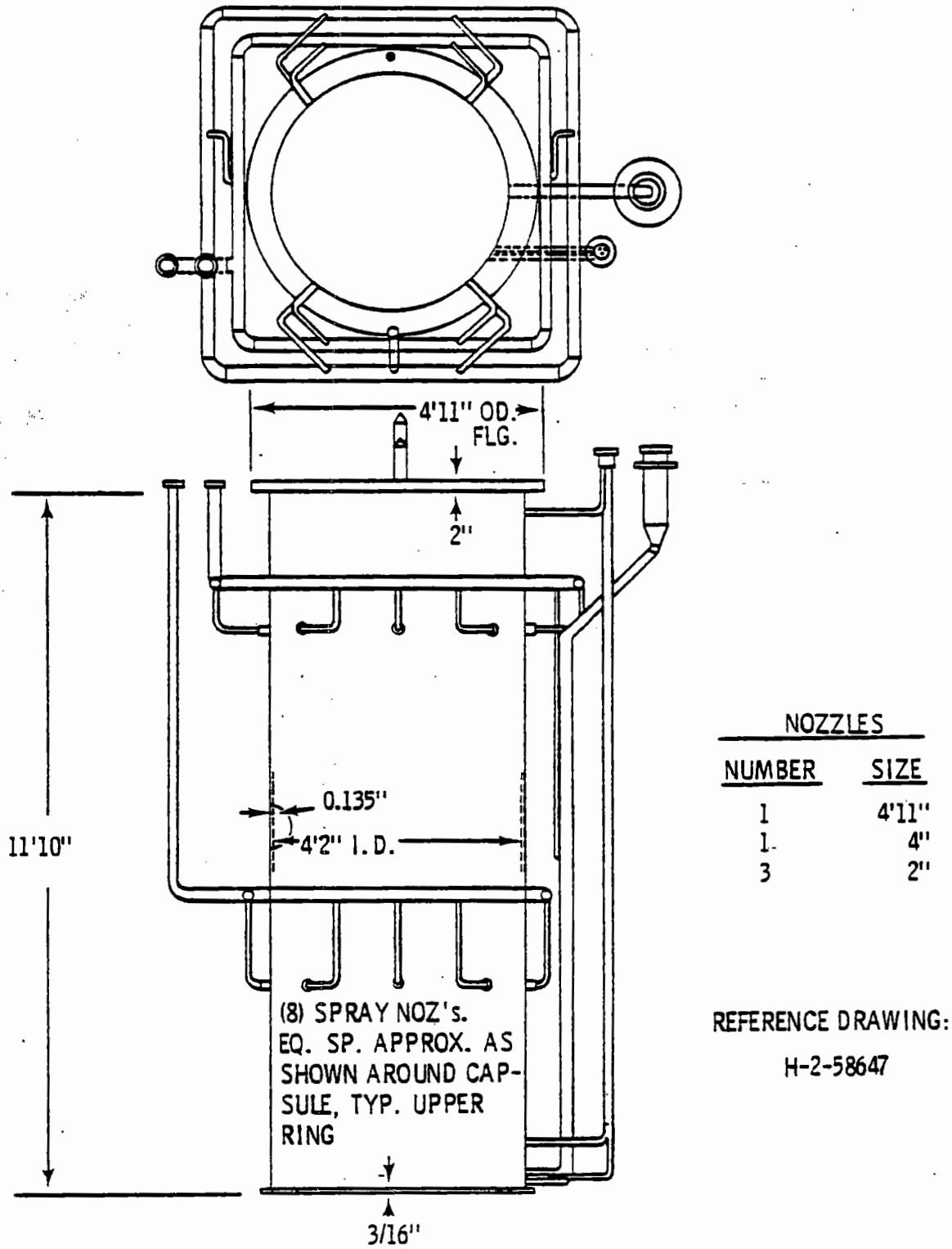

RCP7907-47

FIGURE 3-48. Tube Bundle Flush Tank (TK-F17).

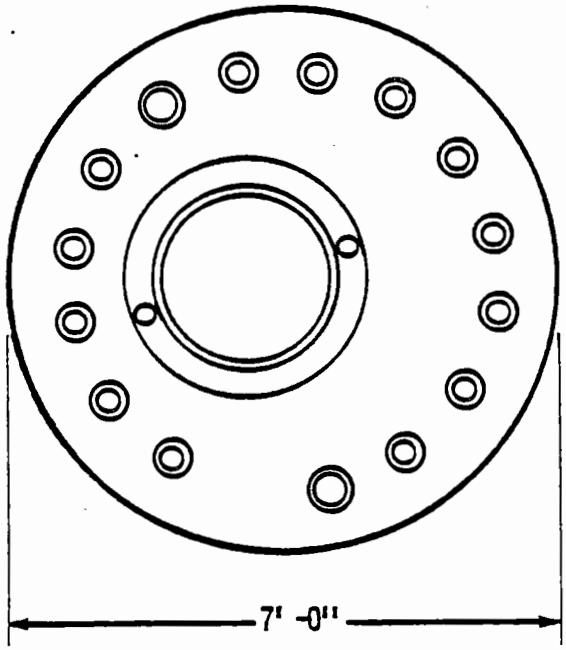

NOZZLES	
NUMBER	SIZE
1	24"
2	4"
13	3"

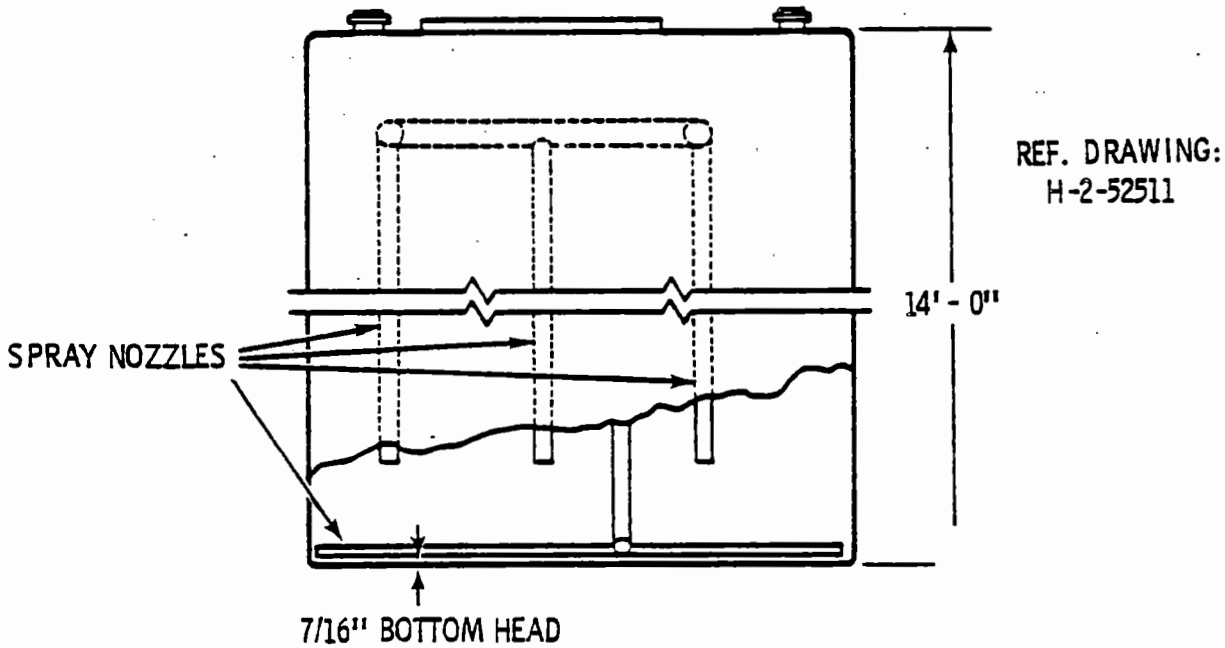

RCP7907-48

FIGURE 3-49. Decontamination Spray Tank (TK-M1).

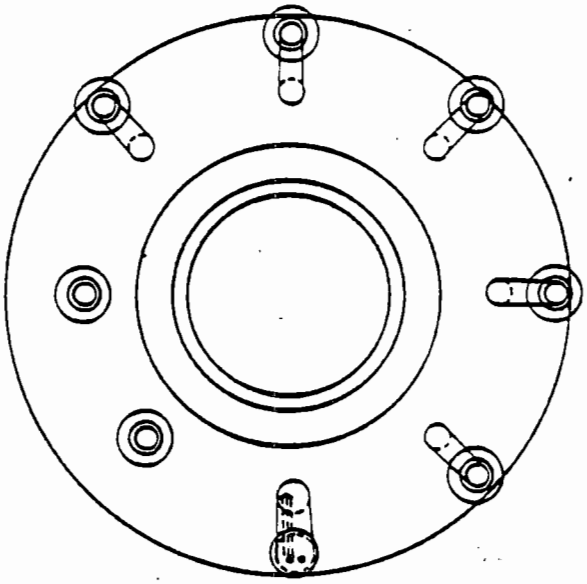

NOZZLES	
NUMBER	SIZE
1	23"
1	3"
7	2"

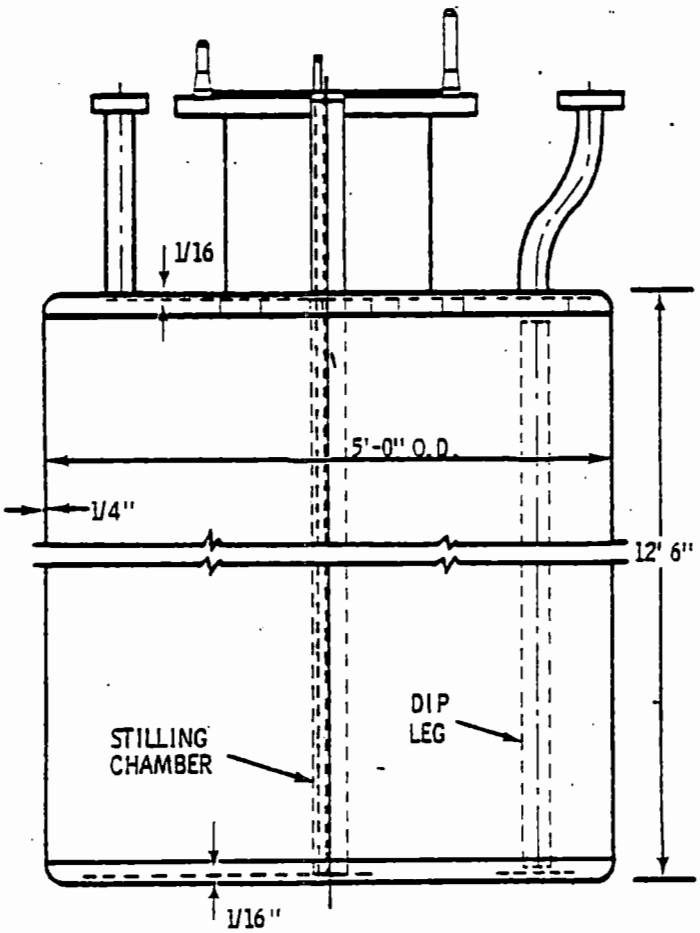

REFERENCE DRAWING:
H-2-52512

RCP7907-49

FIGURE 3-50. Hot Shop Tank (TK-M2).

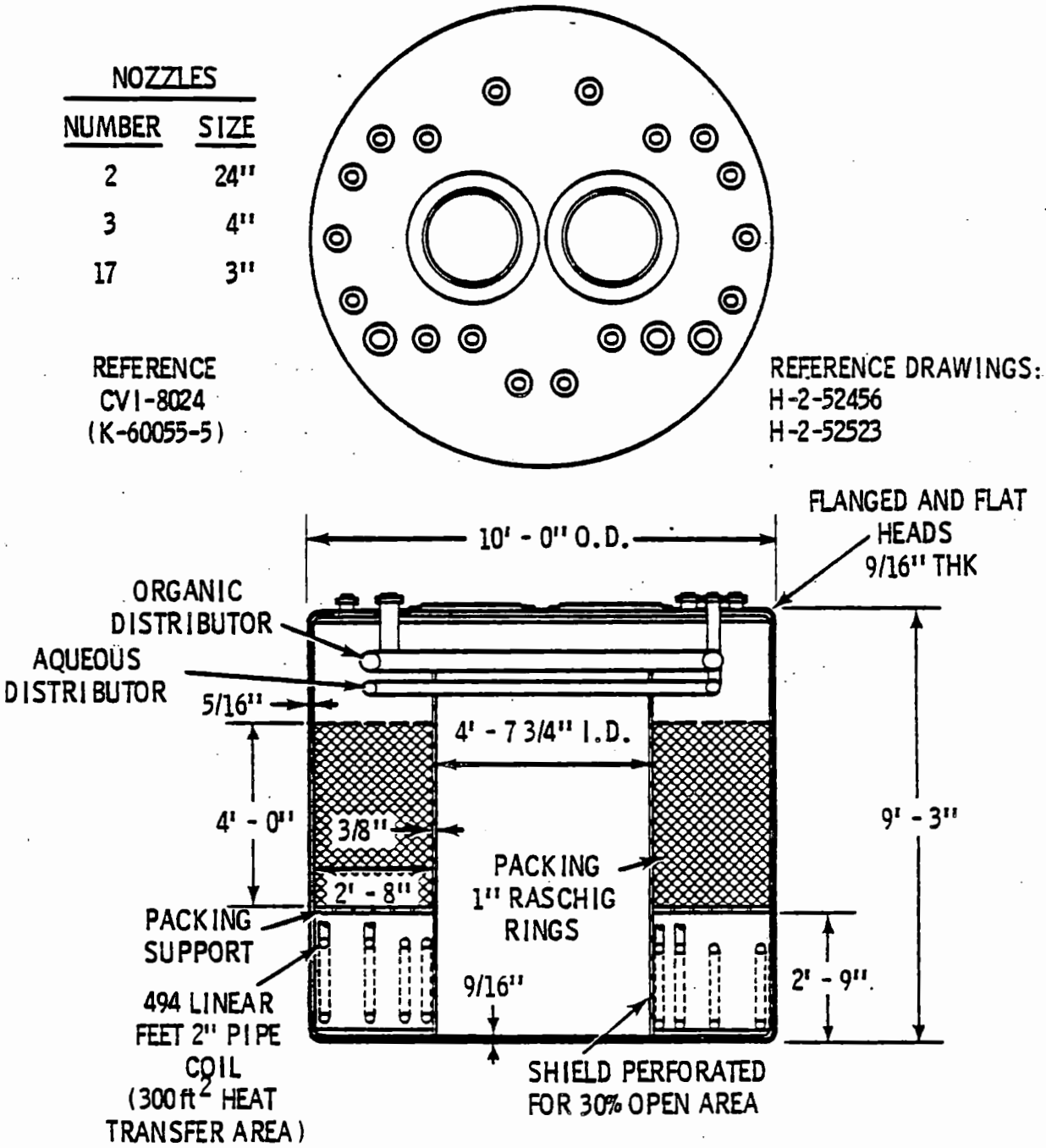

FIGURE 3-51. Organic Contactor Tank (TK-G1, R1).

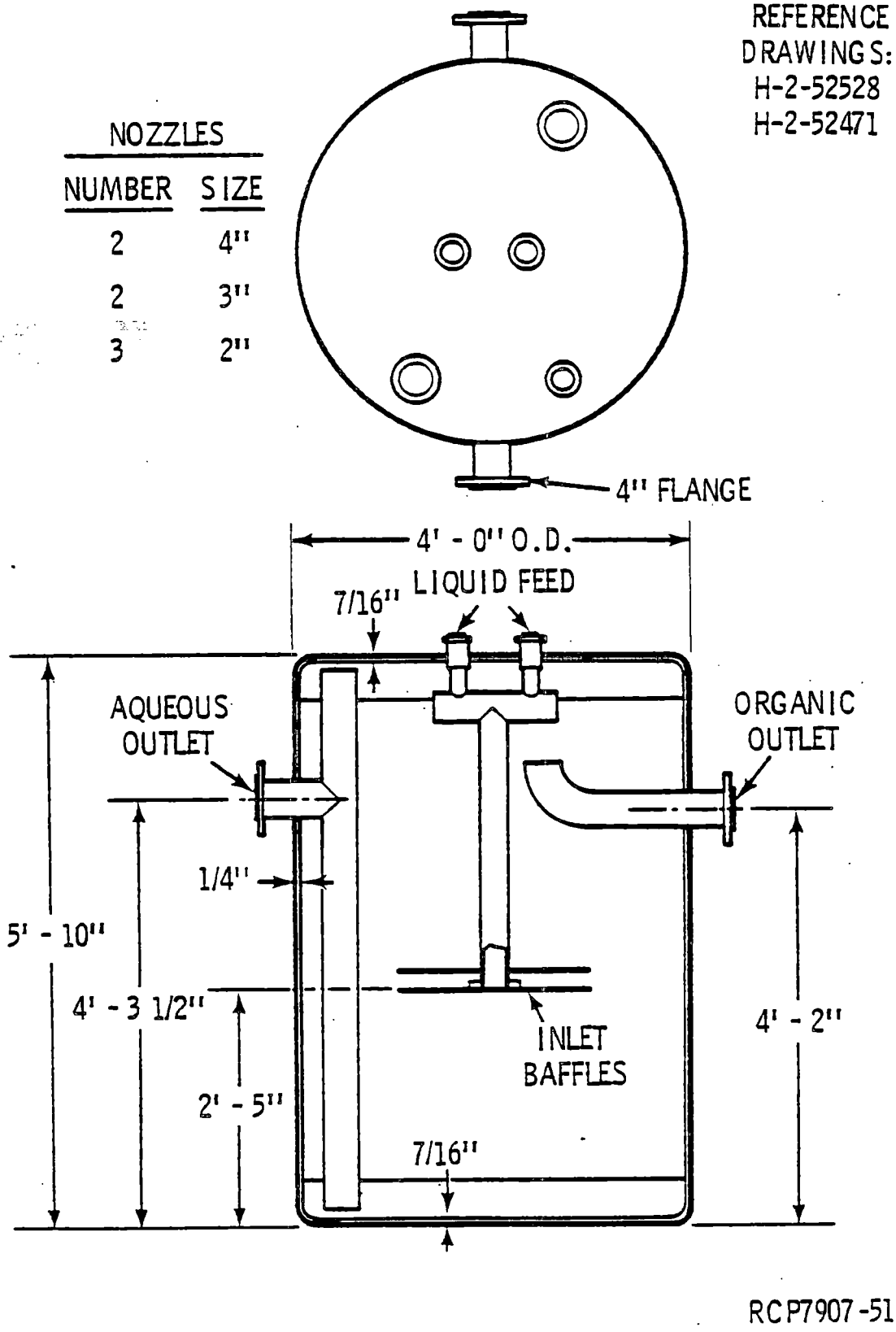

FIGURE 3-52. Decanter Tank (TK-F14, G6, R6).

is introduced to the middle of the tanks through a system of distributing baffles. The settled aqueous phase rises through a jack leg to the aqueous discharge nozzle, 4 feet 3 inches above the bottom of the tank. The organic overflows through a weir, located 5 inches above the aqueous outlet.

3.8.1.3 Final Plutonium Cycle Tanks

The vessels described in this section are used in the final plutonium cycle. Since each vessel may contain concentrated solutions of plutonium, the vessels are designed to be geometrically favorable for criticality safety. The majority of these tanks are located within L Cell and the PR room.

- 2A Feed Tank (TK-J5). The 2A feed tank, shown in Figure 3-53, is a 370-gallon annular tank lined with a concrete neutron moderator. The tank is designed for blending the 1BP to 2AF specifications prior to feeding to the 2A column. The tank contents are mixed with air by sparging. Although the tank geometry will allow for handling plutonium solutions concentrated to 450 g/ℓ, feed solutions are limited to 6 g/ℓ since the tank contents could leak to a critically unsafe sump.

- 3A Tank (TK-L3). The 3A feed tank, shown in Figure 3-54, is a 115-gallon annular tank lined with a concrete neutron moderator. The tank acts as a receiver tank for the 2B column and feed tank for the 3A column. Mixing of the tank contents is maintained by air sparging. Six 1-inch-diameter holes penetrate through the bottom of the tank under the moderator to allow drainage to the cell floor of any liquid which may leak through the annulus wall. The drainage would eliminate a potential criticality hazard which may result from an accumulation of plutonium in the concrete.

- PCP Receiver Tank (TK-L8). The plutonium concentrate product receiver tank, shown in Figure 3-55(a), is a 10-gallon tank constructed of two vertical sections of 4-inch Schedule 10 titanium pipe, 8 feet long, joined at the top and bottom by 1-inch Schedule 10 titanium pipe. Tank L8 receives concentrated plutonium solutions from the 3BP concentrator.

- PCP Sample Tank (TK-L9). The sample tank, shown in Figure 3-55(b), is a 10-gallon vessel used for sampling the contents of the PCP receiver tank (TK-L8). The sample tank is constructed of three vertical lengths of 5-inch Schedule 40 stainless steel pipe spaced 2 feet apart and interconnected by horizontal cross pieces made of 1-inch, 2 1/2-inch and 3-inch Schedule 10 pipe.

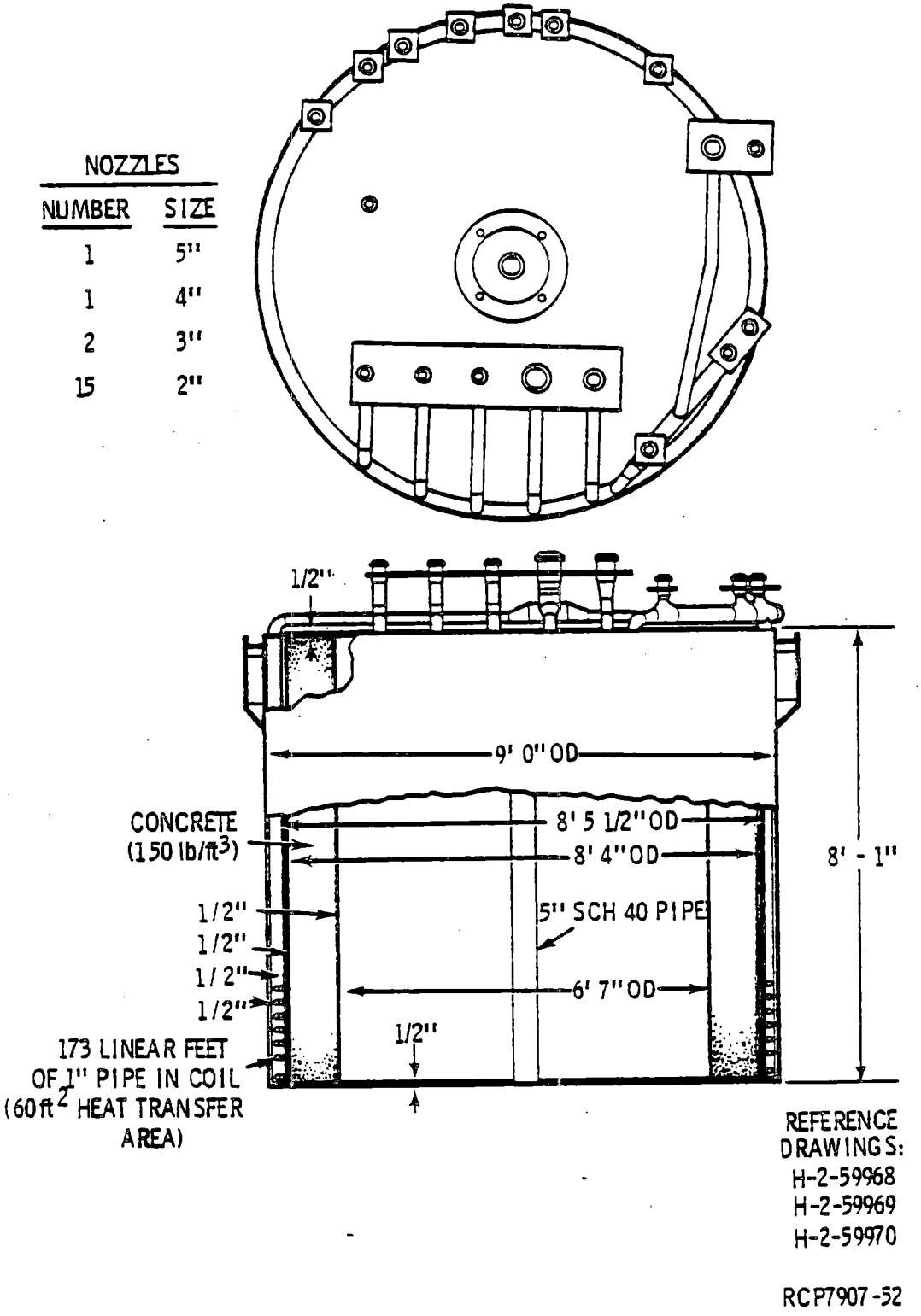

FIGURE 3-53. 2A Feed Tank (TK-J5).

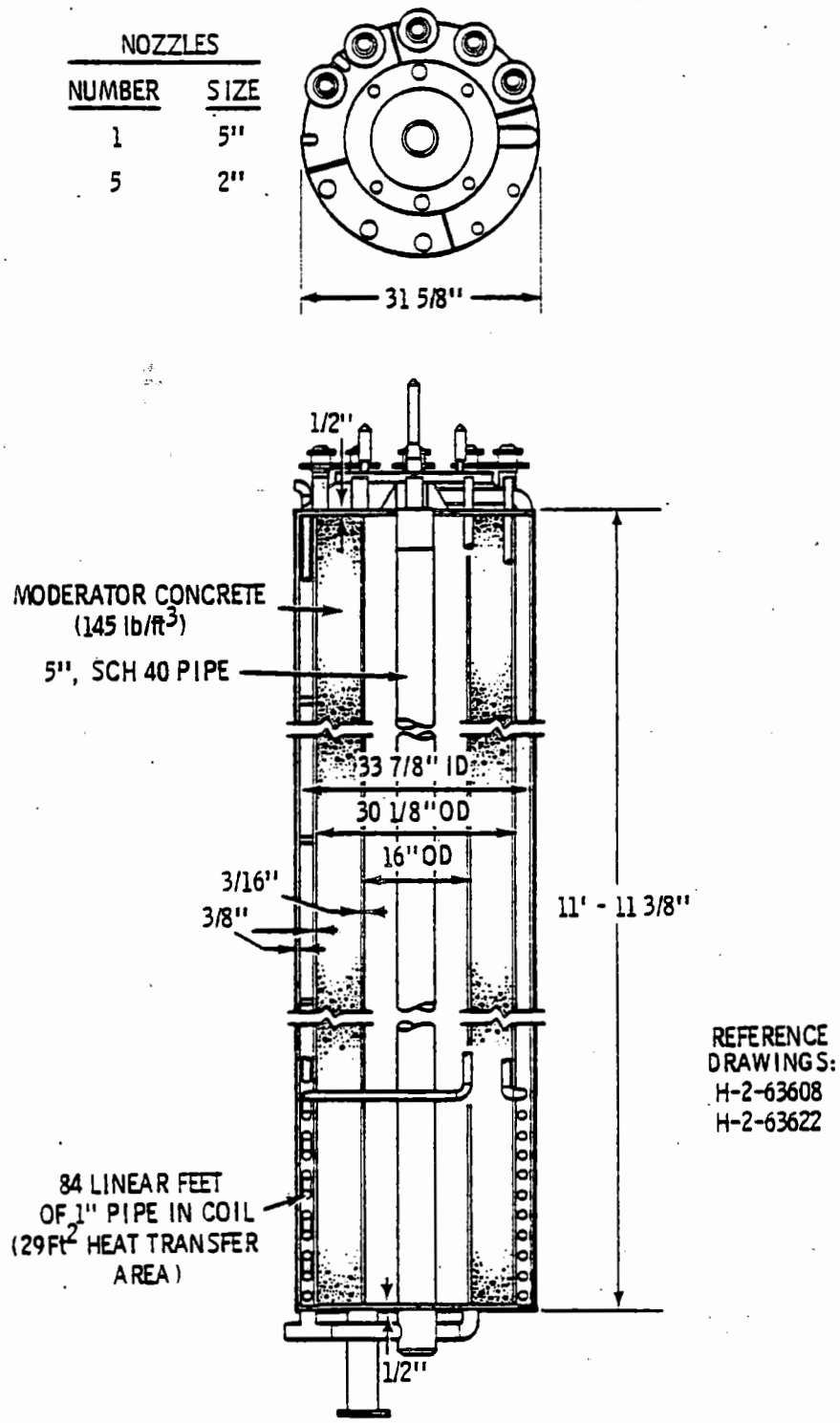

FIGURE 3-54. 3A Feed Tank (TK-L3).

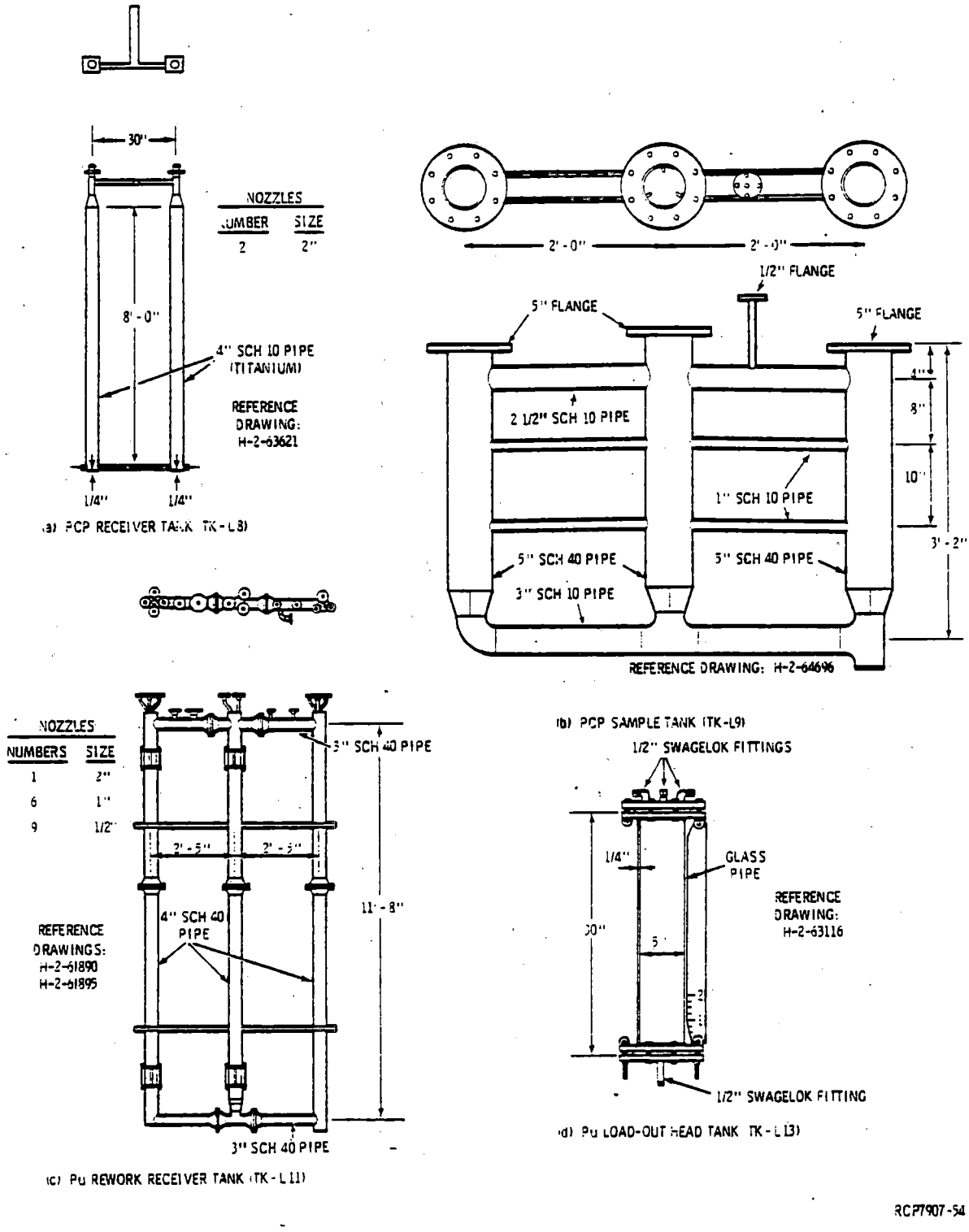

FIGURE 3-55. Plutonium Tanks (TK-L8, L9, L11, L13).

- Plutonium Rework Receiver and Vacuum Tank (TK-L11). The plutonium receiver tank, shown in Figure 3-55(c), is an auxiliary receiver tank for rework plutonium or waste solutions. In addition, the evacuated tank acts as a vacuum source to effect the transfer of liquid from TK-L8 to TK-L9. The 25-gallon-capacity tank is constructed from three lengths of 4-inch Schedule 40 stainless steel pipe spaced 29 inches apart and connected at the top and bottom by 3-inch Schedule 40 cross pieces.

- Plutonium Loadout Head Tank (TK-L13). The plutonium loadout head tank, shown in Figure 3-55(d), consists of a calibrated glass pipe used to meter the volume of plutonium product removed from the final plutonium cycle. The capacity of the loadout head tank is 2.5 gallons.

- Plutonium Container. Design of the plutonium loadout container is not complete at the time of this writing. Previously, plutonium nitrate was shipped to Z Plant in PR cans inserted into carrying containers.

  The original PR can design consisted of a 23-inch length of 6-inch Schedule 80 pipe with a rounded bottom, and shielded with a lead-cadmium jacket, which, in turn, was encased in a stainless steel jacket. The can was sealed with a solid polythene stopper held in place with a spider clamp and screw. A modified PR can used later was similar to the original except that it had no shielding.

  The carrying containers for the original cans were 22-inch OD by 32-inch-high cylinders mounted on two 6-inch channels. The PR can was centered in an upright position in the carrying container by four guide rods. A modified 55-gallon drum was used to carry the unshielded cans.

- Alternate PCP Sample Tank (TK-L10). The alternate PCP sample tank, shown in Figure 3-56, is a 14-gallon tank providing an alternate sampling system for the plutonium product. The tank is constructed from lengths of 3-inch Schedule 40 and a 5 5/8-inch-ID, 3/16-inch-wall pipe joined together horizontally end-to-end. The tank is sized such that the entire contents of the PCP receiver tank (TK-L8) can be transferred to Tank L10 prior to sampling.

3.8.1.4 Final Neptunium Cycle Tanks

The final neptunium cycle tanks are used in the recovery of neptunium from the backcycle waste. The majority of these tanks are located in Q Cell.

- 2N Feed Tank (TK-J21). The 2N feed tank is an annular 320-gallon tank lined with a concrete neutron moderator containing a centrally located standpipe pump boot, shown in Figure 3-57. The tank contents are agitated by sparged air and heated by steam coils, which run approximately 200° around the circumference of the tank.

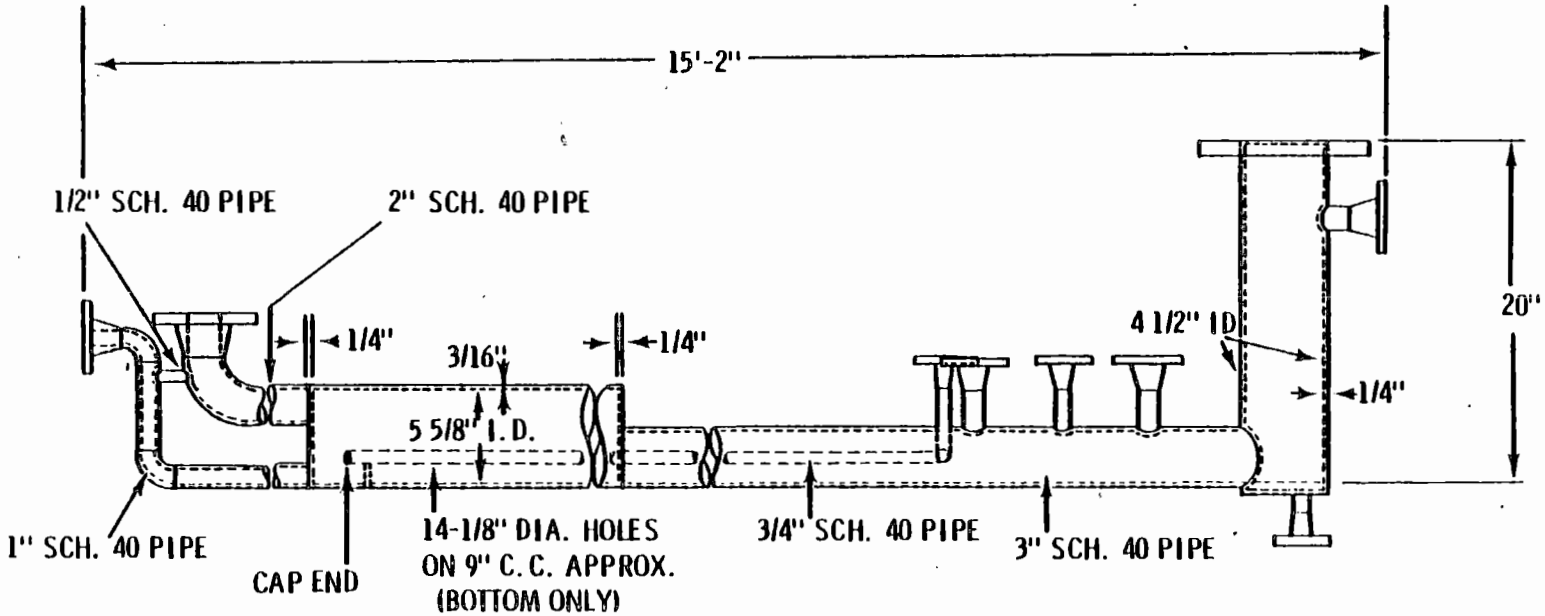

NOZZLES

NUMBER	SIZE
1	5"
1	2"
4	1"
2	3/4"
1	1/2"

REFERENCE DRAWING:

H-2-52475

RCP7907-55

FIGURE 3-56. Alternate PCP Sample Tank (TK-L10).

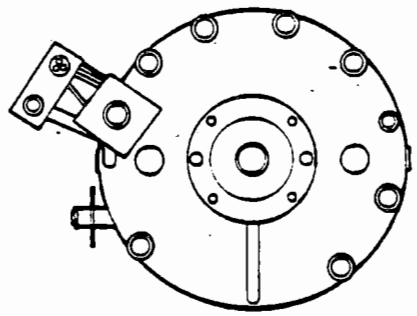

NOZZLES	
NUMBER	SIZE
1	4"
9	3"
3	2"

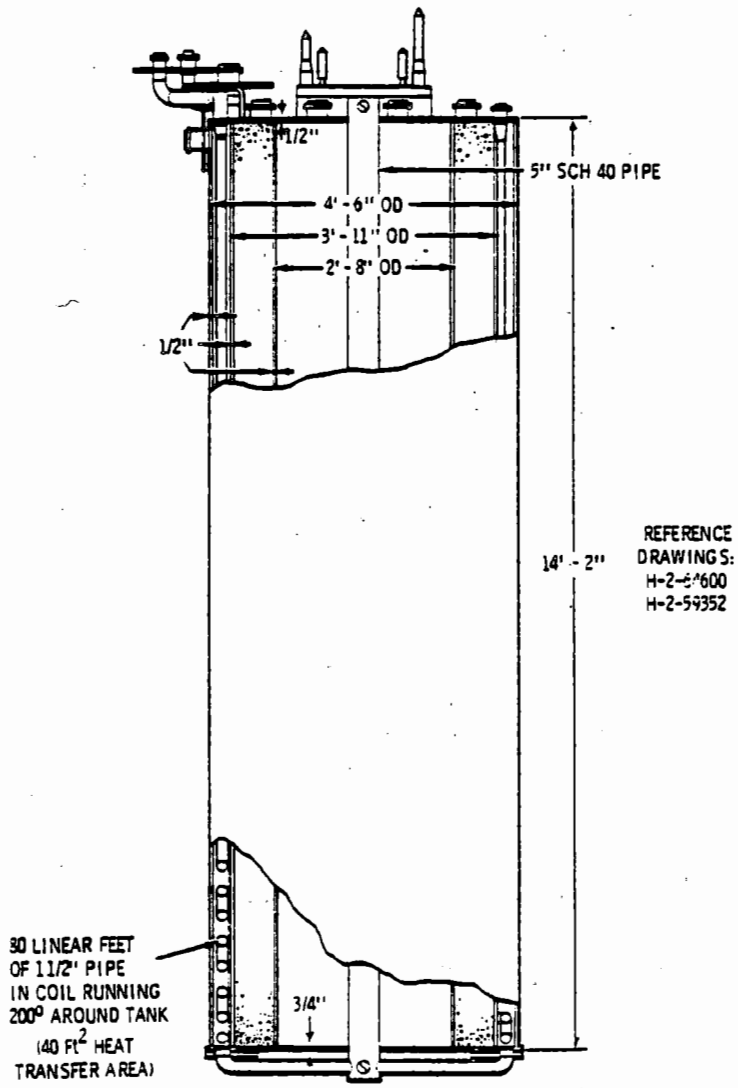

RCP7907-56

FIGURE 3-57. 2N Feed Tank (TK-J21).

- 2PN Feed Tank (TK-Q1). The 2PN feed tank, shown in Figure 3-58(a), is a 12-gallon, geometrically favorable cylindrical tank, which receives 2PN from the J Cell package and allows the 2PN stream to be mixed with nitric acid prior to being pumped to the concentrator (E-Q2). In addition, the Q1 tank acts as a surge tank between the continuous solvent extraction cycle and the concentrator. Mixing is achieved by recycling 90% of the tank contents. The remaining solution overflows by gravity to the 3X feed tank.

- 3X Feed Tank (TK-Q3). The 3X feed tank, shown in Figure 3-58(b), is a 120-gallon-capacity annular vessel containing a cadmium-lined concrete ring for a neutron barrier. A cooling coil is placed in the annulus between the inner wall of the tank and the cadmium liner of the barrier. Chemicals are added to the tank contents through a distribution ring located near the top of the annular space. The chemicals are mixed by a recirculating pump.

- 3X Waste Tank (TK-Q5). The 3X waste tank, shown in Figure 3-58(c), is a 600-gallon geometrically unfavorable tank with dished heads and a cooling coil. Tank Q5 receives all wastes from the batch washing operations, plus any flush chemicals from other equipment in Q Cell. Mixing in the tank is achieved by an air sparger. Use of a spray nozzle system for recirculation and decontamination was abandoned due to excessive amounts of entrained liquid lost to the vent system.

- 3XN Product Receiver Tank (TK-Q6). The 3XN product receiver tank is a geometrically unfavorable, flat-bottomed, 25-gallon, stainless steel tank containing a coil supplied with steam or water for temperature control and an air sparge mixing system. The tank, shown in Figure 3-58(d), is used for adjusting the valence of the neptunium product prior to loadout for shipment.

- Neptunium Loadout Head Tank (TK-Q7). The neptunium loadout head tank, shown in Figure 3-58(e), consists of a 1.5-gallon-capacity calibrated glass pipe for determining the volume of neptunium product removed from the final neptunium cycle. The ends of the glass pipe are sealed by metal flanges containing nozzles for inlet and outlet of product solution.

- Neptunium Container. Neptunium is removed from the loadout hood in 1-gallon plastic bottles. The use of these bottles may be delayed, however, with the neptunium product being pumped from TK-Q6 to TK-J2 for storage of up to several years.

- Hot Cell Sump Tank (TK-Q8). The hot cell sump tank, shown in Figure 3-58(f), is a 46-gallon geometrically unfavorable tank, which is buried in the floor of the hot cell portion of Q Cell. Tank Q8 is used for the accumulation of all sumps for sampling prior to disposal. Previously, the tank was used to receive

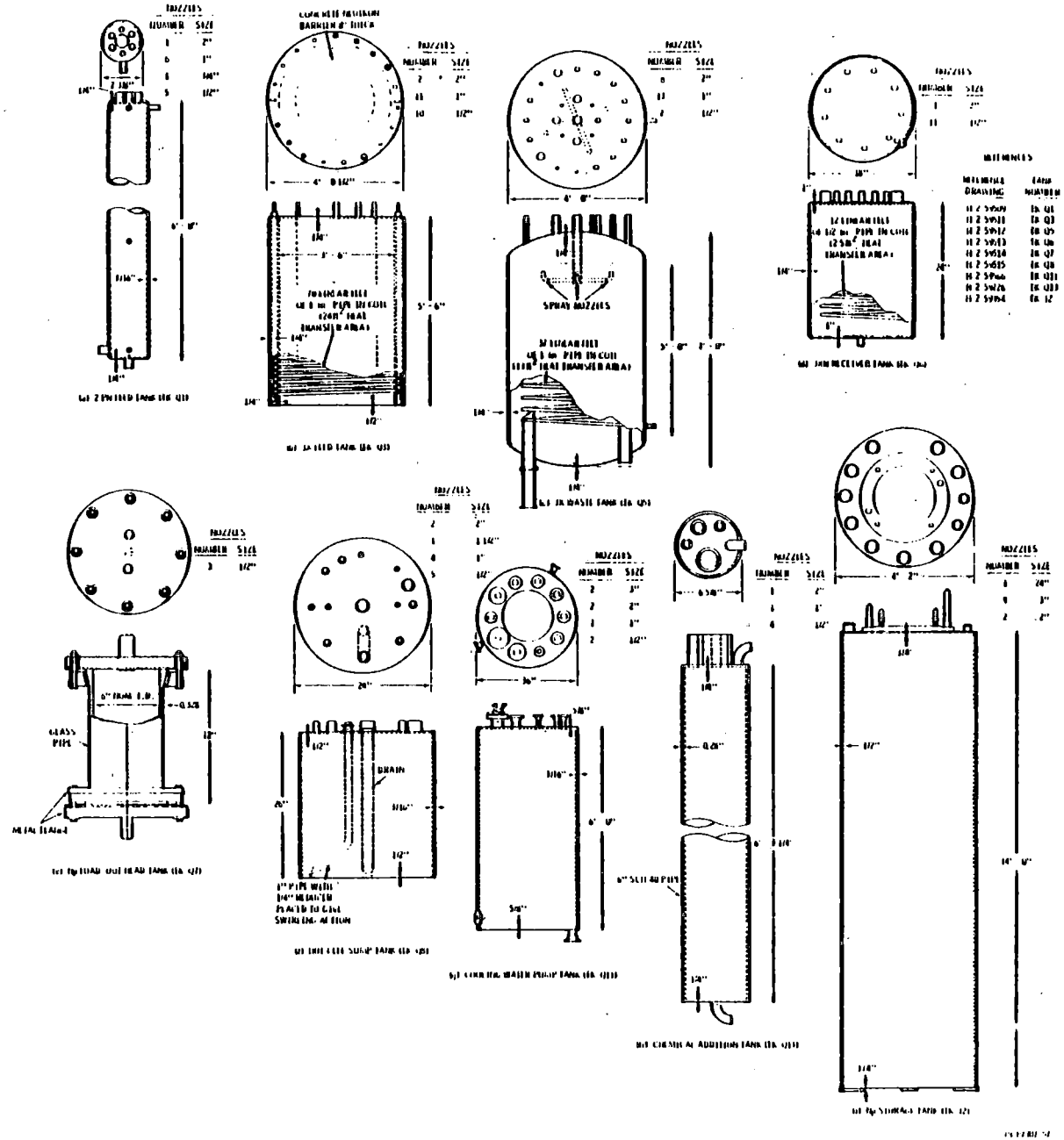

FIGURE 3-58. Neptunium Vessels.

the used resin from the 3X ion exchange column (T-Q4), but now resin will be removed in bottles for transfer to burial. A unique water swirler similar to a dentist's fountain, which was designed into the tank for agitation to aid in the removal of the resin, will now be used to remove solids which may accumulate in the tank.

- Cooling Water Pump Tank (TK-Q11). The cooling water pump tank, shown in Figure 3-58(g), is a geometrically unfavorable 315-gallon tank, used to dispose of all cooling water and AMU chemical wastes without returning these materials to the process. A dual pump system, automatically controlled by weight factor, and a temperature control system are provided to route any water collected to the Purex chemical sewer header.

- Chemical Addition Tank (TK-Q13). The chemical addition tank, shown in Figure 3-58(h), is a 9-gallon cylindrical stainless steel tank, which allows the direct addition of small volumes of wash solution to the 3X ion exchange column, bypassing the 3X feed tank.

- Neptunium Storage Tank (TK-J2). Tank J2, a 1,400-gallon cylindrical tank, is currently unused and is being considered as a storage tank for neptunium product solutions. Tank J2 is shown in Figure 3-58(i).

3.8.2 Nonradioactive Service Tanks

The tanks discussed in this section are not intended for radioactive service. Therefore, a majority of the tanks were designed and fabricated according to the criteria for Class II and Class III vessels (see Section 3.1.4).

3.8.2.1 Aqueous Makeup Tanks

Cylindrical aqueous makeup tanks are used for chemical makeup adjustment, blending, storage, and delivery of nonradioactive aqueous solutions to the process equipment. The number, use, dimensions, nominal volume, and construction material are summarized for each AMU tank in Table 3-7. Three tanks are constructed of carbon steel; one tank is aluminum and two tanks are calibrated glass-metering tanks. The remaining tanks are constructed of stainless steel and most have dished heads. The largest openings in the 2-foot-OD tanks are 4-inch flanged nozzles, but larger tanks have up to 16-inch flanged nozzles, to be used for solids addition where necessary. Certain tanks are equipped with coils, agitators and/or discharge line filters.

The AMU facilities for the Q Cell operation make Q Cell completely independent of the remainder of the Purex Plant. Seven primary tanks are included on the second level of Q Cell above the control room. In

TABLE 3-7. Aqueous Makeup Tanks.
(General Reference: H-2-67056)

Tank Number	Function	Dimensions		Nominal Volume, gal	Construction Material[b]	Reference[c]
		Diameter, ft	Height,[a] ft			
51	Resin Wash	2.5	2.2	75	SS	CVI-8285
101	$Fe(NH_2SO_3)_2$ Add.	5.0	5.0	750	SS	H-2-59450
101A	HNO_3 to TK-101	1.9	2.8	55	SS	NA
103	HN Makeup	5.0	5.0	750	SS	H-2-59450
104	$NaNO_3$ Makeup	8.0	8.0	3,000	CS	CVI-7429
105	Utility Makeup	8.0	8.0	3,000	SS	CVI-7703
106	$NaNO_2$ Makeup	5.0	5.0	750	CS	CVI-7429
107	Na_2CO_3 - $KMnO_4$ Makeup	8.0	8.0	3,000	CS	CVI-7703
108	Utility Makeup	6.5	11.0	2,700	SS	H-2-59661
150	3BX Makeup	5.5	4.0	700	SS	H-2-59452
151	$Cd(NO_3)_2$ Add.	5.5	4.0	700	SS	H-2-59452
152	$NaNO_3$ Feed	5.5	4.0	700	SS	H-2-59452
153	NaOH Add.	5.5	4.0	700	SS	H-2-59452
155	3BX Feed	4.0	4.5	425	SS	H-2-63649
156	3AS Feed	4.0	4.5	425	SS	H-2-63649
201	NaOH to TK-A3	5.0	5.0	750	SS	H-2-59450
202	NaOH to TK-B3	5.0	5.0	750	SS	H-2-59450
203	NaOH to TK-C3	5.0	5.0	750	SS	H-2-59450
204	Sugar Makeup	5.0	5.0	750	SS	H-2-59450
205	$Al(NO_3)_3$ Makeup	5.0	5.0	750	SS	H-2-59450
206	KOH Makeup	5.0	5.0	750	SS	H-2-59450
207	$NaNO_3$ Feed	8.0	8.0	3,000	SS	CVI-7703
208	Na_2CO_3 - $KMnO_4$ Feed	8.0	8.0	3,000	SS	CVI-7703
209	1BX Makeup	8.0	8.0	3,000	SS	CVI-7703
210	1BX Makeup	8.0	8.0	3,000	SS	CVI-7703
211	3AS Makeup	5.0	5.0	750	SS	H-2-59450
212	NH_4F-NH_4NO_3 Makeup	5.0	5.0	750	SS	H-2-59450
213	2BX Makeup	5.0	5.0	750	SS	H-2-59450
214	2BX Makeup	5.0	5.0	750	SS	H-2-59450
215	57% HNO_3 Metering	2.0	2.6	50	SS	NA
216	$Fe(NH_2SO_3)_2$ Metering	2.0	4.0	100	SS	CVI-7703
217	N_2H_4 Add.	2.0	4.0	100	SS	CVI-7703
218	HN Add.	2.0	4.0	100	SS	CVI-7703
219	HN Feed Tank	2.0	4.0	100	SS	CVI-7703
220	2NS Makeup Tank	5.0	5.0	750	SS	H-2-59450
220/221A	N_2H_4 Head and Metering Tank	0.5	2.0	3	G	NA
221	2NS Makeup Tank	5.0	5.0	750	SS	H-2-59450
222	HNO_3 Head Tank	5.0	5.0	750	SS	H-2-59450
223	Demin. Water Head Tank	8.0	12.0	5,000	A	CVI-7933
224	2PX Makeup Tank	5.0	5.0	750	SS	H-2-59450
224/225A	HNO_3 Metering Tank	0.5	2.0	3	G	NA
225	2PX Makeup Tank	5.0	5.0	750	SS	H-2-59450
324	Utility Makeup Tank	8.0	8.0	3,000	SS	CVI-7703

[a]Height of cylindrical section only, does not include heads

[b]Construction Materials - A - Aluminum
CS - Carbon Steel
G - Glass
SS - Stainless Steel

[c]CVI - Certified Vendor's Information
NA - Not Available

addition, a chemical addition tank (TK-Q31) for the stripper-concentrator E-Q2 is located in the sample gallery. The Q Cell AMU tanks, listed in Table 3-8, are constructed of stainless steel.

TABLE 3-8. Q Cell Aqueous Makeup Tanks.

Tank Number	Function	Dimensions		Volume, ℓ	Reference Drawing
		Diameter, in.	Height, in.		
Q21	Wash Tank	18	24	81	H-2-59516
Q22	Wash Tank	42	48	968	H-2-59517
Q23	Resin Add Tank	12	25	45	H-2-59518
Q24	$NaNO_2$ Add Tank	24	30	220	H-2-59519
Q25	ANN Add Tank	12	24	49	H-2-59520
Q26	$Fe(NH_2SO_3)_2$ Add Tank	12	24	44	H-2-59521
Q27	N_2H_4 Add Tank	12	12	18.5	H-2-59521
Q31	HNO_3 Rinse Tank	14	24	57	H-2-59547

3.8.2.2 Pipe and Operating Gallery Tanks

The dissolver drown tanks, the centrifuge spray tank, and various addition tanks are located in the pipe and operating gallery. These tanks are listed as to function, size, and material of construction in Table 3-9.

3.8.2.3 Recovery System Tanks

The tanks discussed in this section are associated with the second organic and acid recovery systems. The tanks are not intended for containment of highly radioactive materials, but the potential for contamination exists. The tanks are all made of stainless steel and designed for contact maintenance.

- Organic Recovery Tanks. The 276-A Building (solvent treatment) contains six vessels for treatment and washing of organic solvent. Three are similar to corresponding canyon vessels, except that they have standard flanged nozzles in place of remote connectors. Dimensions and reference drawings of these tanks are tabulated in Table 3-10.

TABLE 3-9. 202-A Building Pipe and Operating Gallery Tanks.

Tank Number	Function	Nominal Volume, gal	Dimensions		Construction Material[a]	Reference[b]
			Diameter, ft	Height, ft		
A3-A	Dissolver Drown	3,000	7.5	9.0	A	CVI-7704
B3-A	Dissolver Drown	3,000	7.5	9.0	A	CVI-7704
C3-A	Dissolver Drown	3,000	7.5	9.0	A	CVI-7704
B1-A	25% Caustic Add.	250	3.0	5.0	SS	H-2-56226
C2-A	$AgNO_3$ Add.	40	1.5	3.0	SS	NA
E2-A	Centrifuge Spray	90	2.0	4.0	SS	CVI-7703
E3-A	Not Used	160	3.3	2.7	SS	NA
F15-XA-1	Antifoam Add.	60	2.1	2.2	SS	NA
F15-XA-2	Not Used	10	0.54	6.0	SS	NA
G3-A	Not Used	90	2.0	4.0	SS	CVI-7703
G5-A	Organic Storage Add.	3,000	8.0	8.0	SS	CVI-8690
J6-A	Not Used (Uranium (IV) Test)	250	3.0	5.4	SS	NA
J6-B	Not Used (Uranium (IV) Test)	250	3.0	5.4	SS	NA
L3-A	3AF Add.	15	1.375	1.375	SS	H-2-56603
L9-A	Plutonium Cell Add.	20	1.1	4.0	SS	CVI-7703
M1-A	M1 Solution Add.	725	5.0	5.0	SS	CVI-8661
R1-A	Organic Blend Add.	3,000	8.0	8.0	SS	CVI-7703
R3-A	Not Used	90	2.0	4.0	SS	CVI-7703
R5-A	Organic Treatment Add.	3,000	8.0	8.0	SS	CVI-7703

[a]Construction Material
A-Aluminum
SS-Stainless Steel

[b]CVI-Certified Vendor's Information
NA-Not Available

- Acid Recovery Tanks. Vessels designed for the recovery and concentration of nitric acid are located in the Backup Facility (293-A Building) and U Cell. Dimensions and reference drawings of these tanks are shown in Table 3-11.

TABLE 3-10. 276-A Building Solvent Treatment Tanks.

Tank Number	Function	Nominal Volume, gal	Dimensions		Reference Drawing
			Diameter, ft	Height, ft	
R1	20 Feed	4,800	10.0	9.25	Fig. 3-51
R2	20 Waste	1,800	7.0	6.75	Fig. 3-41
R5	20 Receiver	9,250	10.0	14.0	H-2-54171
R6	Decanter	430	4.0	5.8	Fig. 3-52
R7	200 Receiver	9,300	10.0	14.0	H-2-54172
R8	Wash Waste	5,100	10.0	9.25	H-2-54172

9413275.0623

3.8.2.4 Chemical Storage Tanks

The chemical storage tanks are located in the 203-A uranium storage and 211-A tank farms. The storage tanks were fabricated according to the specifications for Class II or Class III vessels. The 203-A tanks are constructed of stainless steel and listed in Table 3-12. The 211-A chemical storage tanks are listed in Table 3-13.

3.9 PUMPS, JETS AND AGITATORS

The transfer of liquids is effected in the Purex Plant by pumps and jets. Remotely installed, deep-well, turbine-type pumps function in canyon areas and standard centrifugal pumps in non-canyon areas. Steam jets, operated by sequence-controlled gang valves, are used as standbys for pumps, for exhauster service, for batch transfer of process solutions, for draining sumps, and for removal of heels from process vessels. Air-operated jets are used for sampling and in a few other selected applications. A jet motivated by either cadmium nitrate solution or dilute nitric acid is used to transfer plutonium solution from TK-L11 to TK-E6. Agitators are used for blending tank contents in both the canyon and non-canyon areas.

TABLE 3-11. Acid Recovery Tanks

Tank Number	Function	Nominal Volume, gal	Dimensions		Reference
			Diameter, ft	Height, ft	
Backup Facility or 293-A Building					
XC	XA Recycle	5,000	10.0	9.25	H-2-57003
XD	XB Recycle	3,000	8.0	8.0	H-2-57004
U Cell and 206-A Building					
U1	50% HNO_3 Storage	15,000	10.5 X 16.0 (oval)	14.0	Fig. 3-42
U2	50% HNO_3 Storage	15,000	10.5 X 16.0 (oval)	14.0	Fig. 3-42
U3	Lab Waste Receiver	8,250	10.0	14.0	H-2-54171
U4	Lab Waste Receiver	8,250	10.0	14.0	H-2-54171
U5	AF Feed	9,000	10.0	14.0	CVI-10170 #13[a]
U7	Chlorine Purge	90	2.0	4.0	H-2-56264
U8	AFD Condensate	1,000	6.0	5.0	CVI-10170 #15[a]

[a]CVI - Certified Vendor's Information

9413275.0625

TABLE 3-12. 203-A Uranium Storage Tanks

Tank Number	Function	Nominal Volume, gal	Dimensions		Coil Area, ft^2	Reference Drawing
			Diameter, ft	Height, ft		
P1	Recovered UNH Storage	100,000	25	30	100	H-2-54805
P2	Recovered UNH Storage	100,000	25	30	100	H-2-54805
P3	Recovered UNH Storage	100,000	25	30	100	H-2-54805
P4	Recovered UNH Storage	100,000	25	30	100	H-2-54805
P5	Waste Storage	4,000	9	9	---	NA[a]
P6	Waste Rework	14,000	10 X 16 (oval)	14	144	H-2-58430
P13	Recovered Acid Receiver	8,000	10	14	---	H-2-54895
P14	Recovered Acid Receiver	8,000	10	14	---	H-2-54895
P15	Recovered Acid Storage	15,000	10.5 X 16 (oval)	14	---	Fig. 3-42

[a]NA - Not Available

TABLE 3-13. 211-A Chemical Storage Tanks

Tank Number	Function	Nominal Volume, gal	Dimensions		Construction[a] Material	Coil Area, ft^2	Reference Drawing
			Diameter, ft	Height, ft			
10	$Cd(NO_3)_2$ Storage	4,600	9.5	9.8	SS	---	H-2-54803
11	AFAN Storage	100,000	25	30	SS	170	H-2-60105
12	HNO_3 Storage	100,000	25	30	SS	---	H-2-54803
20, 21	NaOH-KOH Storage	30,000	15	24	CS	24	H-2-54804
30	Demin. Water Storage	100,000	25	30	A	90	H-2-54804
40	Diluent Storage	65,000	22	24	CS	---	H-2-54803
41	TBP Storage	30,000	15	24	CS	24	H-2-54803
42	$Al(NO_3)_3$ Storage	8,000	10	14	SS	21	H-2-60105
50	H_2SO_4 Storage	8,400	8	24	CS	---	H-2-58870

[a]Construction Material
A - Aluminum
CS - Carbon Steel
SS - Stainless Steel

3.9.1 Pumps

Pumps used inside and outside of the Purex canyon are described below. Although technically a non-canyon service pump, the Q Cell metering pump is described separately because of its unique design.

3.9.1.1 Canyon Service Pumps

Twenty-four deep-well turbine pumps, remotely installed and maintained, are used in the Purex canyon for handling radioactive process streams. Seven deep-well turbine pumps, designed for contact maintenance, are also classed as canyon pumps because of their location. The salient features of each of the remotely maintained and the contact-maintained pumps are given in Tables 3-14 and 3-15, respectively. The remotely maintained pumps are divided into groups on the basis of shaft lengths and the number and sizes of the stages required to meet head and capacity requirements.

3.9.1.1.1 Bases of Selection and Design

The selection of pumps for solution transfer service in the canyon is based on the following requirements:

- Head and Capacity Characteristics. Pumps are required to meet a wide range of head and capacity conditions in the processing building. Pump heads, specified in design, range from 20 to 150 feet of fluid with flow rates ranging from 5 to 200 gal/min.

- Materials of Construction. Construction materials must resist corrosion and erosion by the pumped solutions.

- Life Expectancy. A minimum expectancy of 1 year without maintenance is desired.

- Leakage. No leakage of radioactive solutions from the pump is tolerable.

- Flushing and Draining. The pump must contain no pockets that are not flushable from the discharge line and must be completely drainable through the suction port.

- Structural Strength. The pump must be strong enough to withstand impacts and strains imposed by remote-handling equipment.

Multistage, vertical, submerged, deep-well, turbine-type pumps meet the above criteria and are used for canyon service.

TABLE 3-14. Remotely Maintained Canyon Service Pumps.

Group No.	Pump Desig.	Pump Length, ft[a]	No. of Stages	Column and Shaft Size, in.	hp	Flow, gal/min	Total Head, ft	Specific Gravity
1	P-D5	9.4	4	3 and 1	3	25	55	1.52
	P-F13	↑	↑	↑	↑	22	46	↑
	P-G2	↕	↕	↕	↕	25	55	↕
	P-H1	↕	↕	↕	↕	10	50	↕
	P-J1	↓	↓	↓	↓	10	51	↓
	P-K1	9.4	4	3 and 1	3	10	51	1.52
2	P-G5-1	14.1	8	3 and 1	5	70	93	1.05
	P-G5-2	↑	↑	↑	↑	70	93	↑
	P-G5-3	↕	↕	↕	↕	20	46	↕
	P-G7-3	↓	8	3 and 1	5	20	46	1.05
	P-J2	14.1	6	2 and 1	7.5	5	65	1.25
2A	P-G7-1	5.4	4	3 and 1	5	90	105	1.05
	P-G7-2	5.4	4	3 and 1	5	90	105	1.05
3	P-F3	9.4	6	4 and 1	10	50	51	1.60
	P-F7	↑	↑	↑	↑	64.5	51	↑
	P-F10	↕	↕	↕	↕	50	51	↕
	P-F12	↕	↕	↕	↕	5	150	↕
	P-G1-1	↕	↕	↕	↕	200	21	↕
	P-J3	↓	↓	↓	↓	40	72	↓
	P-K6	9.4	6	4 and 1	10	100	108	1.60
3A	P-G1-2	6.8	6	4 and 1	10	100	108	1.60
4	P-J5	9.8	5	2 and 1	1.5	10	61	1.15
4A	P-J21	14.5	3	2 and 1	1.5	10	24	1.15
None	P-L3	12.7	3	2 and 1	3	.5	58	1.50

[a]Includes thickness of top flange.

TABLE 3-15. Contact-Maintained[a] Canyon Service Pumps.

Pump Desig.	Pump Length, ft[b]	No. of Stages	Column and Shaft Size, in.	hp	Flow, gal/min	Total Head, ft	Specific Gravity
P-R1-1	9.2	6	4 and 1	10	200	21	1.6
P-R1-2	9.2	6	4 and 1	10	100	108	1.6
P-R2	6.7	4	3 and 1	3	25	51	1.02
P-U1-1	14.0	4	4 and 1	10	84	110	1.37
P-U1-2	14.0	4	4 and 1	10	84	110	1.37
P-U2-1	14.0	4	4 and 1	10	84	110	1.37
P-U2-2	14.0	4	4 and 1	10	84	110	1.37

[a]Classed as canyon pumps only because of location.

[b]Includes thickness of top flange.

9413275.0629

3.9.1.1.2 Principles of Operation for Deep-Well Turbine Pumps

The pumped fluid enters the axial suction port at the bottom of a deep-well, turbine pump and passes directly into the eye of an impeller. The fluid is accelerated as it passes between impeller blades. The acceleration is termed an "impulse" and is due to the difference in peripheral speeds between the outer and inner ends of the impeller blades. In general, for constant shaft speeds, the acceleration is proportional to the square of the impeller diameter.

After leaving the impeller, the fluid enters a diffuser, which consists of a set of channels leading to the eye of the impeller of the second stage. Since the fluid enters the pump at the same rate it leaves, the increase in velocity head gained by successive impulses is converted to pressure head in the diffuser. The head developed by a multistage pump is approximately equal to the head developed in one stage times the number of stages.

3.9.1.1.3 Effect of Process Variables on Pump Characteristics

The head-capacity characteristics of a pump are not affected by differences in density of the fluid being pumped, but the discharge pressure and the brake horsepower at any flow rate are directly proportional to the density of the fluid. Viscosities up to 25 centipoises do not significantly affect the head developed at any flow rate compared to the head developed when pumping water.

3.9.1.1.4 Description of Canyon Pumps

An assembly drawing of a typical canyon pump is shown in Figure 3-59. The original pumps were built by the Johnston Pump Company, Los Angeles, California, but pumps are now supplied by many vendors. Each pump is supported on the vessel nozzle flange with a mounting flange. A vertical torque tube extends downward from the flange and contains the pump stages as integral parts of the column assembly. The torque tube length is determined by the depth of the vessel from which the liquid is pumped, and the number of stages is established by the required head-capacity characteristics of the pump.

Solution enters through the suction port at the lower end of the pump and passes vertically upward through each succeeding stage and then through the torque tube. It is discharged radially through a side arm at the top of the torque tube section, below the mounting flange. The side arm bends to pass vertically through the mounting flange and emerges adjacent to the pump flange. This construction was employed to reduce the overall height of the connector assembly for the discharge line connection.

The pump shaft extends concentrically through the mounting flange and torque tube and is guided by sleeve bearings lubricated by process solution. An impeller is fixed to the shaft at each stage. The pump shaft is rigidly coupled to the shaft of a vertical, hollow-shaft electric motor mounted above the pump mounting flange. The weight of the shaft assembly and axial thrust are carried by the motor bearings. A throttle bushing is provided at the point where the shaft emerges from the torque tube section. The close clearances between the shaft and the bushing restrict the flow of solution. Leakage past the throttle bushing is returned to the process vessel by gravity flow.

3.9.1.1.4.1 Diffuser Bowls and Impellers

The semi-shrouded pump impellers are cast Type 304 stainless steel. Tapered, split lock collets of Type 304 stainless steel are used to attach the impellers to the shaft.

The diffuser bowls which separate the impellers of adjacent stages are of cast Type 304 stainless steel. These diffusers act as channels to guide the discharge from the periphery of one impeller into the suction eye of the next stage. Each bowl is provided with a tongue-and-groove registered fit to ensure proper alignment of adjacent bowls. All bowls of any one group of pumps are similar and interchangeable. Sleeve bearings in each bowl, above and below the impeller, guide the shaft and serve to restrict intrastage recirculation of the pumped fluid. Tables 3-14 and 3-15 list the number of stages in each pump.

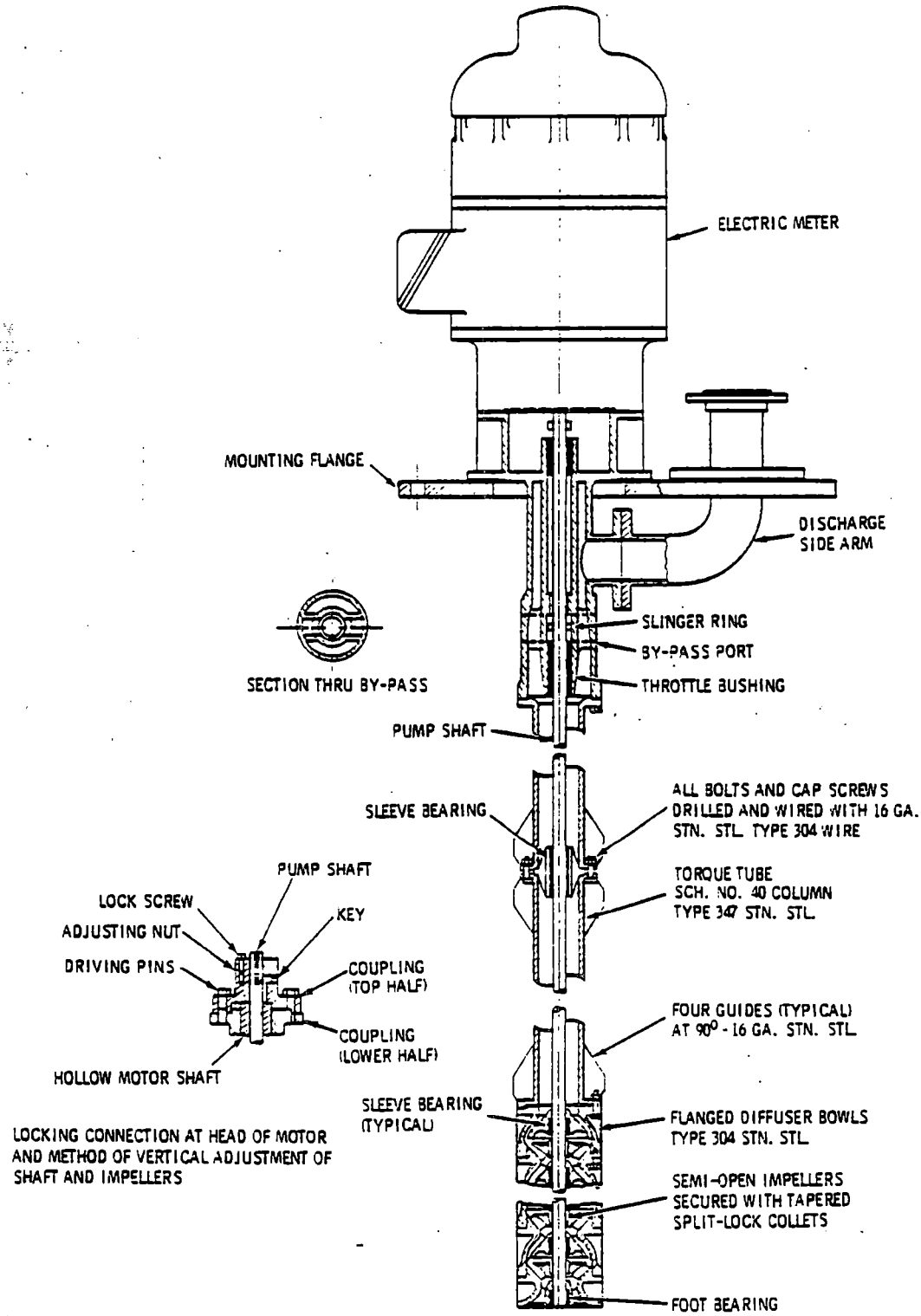

FIGURE 3-59. Typical Canyon Pump.

3.9.1.1.4.2 Torque Tube

The function of the torque tube is to support the pump stages, to protect the shaft, to retain bearings not contained in bowls, and to carry the discharge stream through the pump to the discharge nozzle. A Schedule 40, 2- to 4-inch-diameter International Pipe Standard (IPS) flanged-pipe torque tube, fabricated from Type 347 stainless steel, fixes the position of the stages from the mounting-flange head assembly and suspends the stage assembly. The length of the torque tube section depends on the depth of the vessel.

Triangular guide fins of stainless steel are welded to the torque tube above and below the torque tube flanges to guide the pump through the tank opening and to reduce the possibility of the pump catching on the tank during installation or removal.

3.9.1.1.4.3 Shaft

The vertical pump shaft runs concentrically within the torque tube. All shafts are nominally 1 inch in diameter with lengths varying from 5.4 to 14 feet. Alignment of the shaft is essential to operation of any pump and becomes of critical importance in the case of long-shafted pumps employing a number of bearings.

3.9.1.1.4.4 Bearings

Process-solution-lubricated sleeve bearings are used to guide the shaft. One sleeve bearing is mounted in the diffuser section of each bowl or stage. A large bearing, called a "foot" or suction bearing, is mounted in the suction bell at the lower end of the shaft. Additional bearings, mounted in "spiders" (bearing retainers which allow pumped solution to pass freely around them), are positioned at intervals along the shaft so that the greatest length of unsupported shaft is 5 feet. The arrangement provides a bearing above and below each impeller. In addition to adequately guiding the shaft, these bearings restrict intrastage circulation of the pumped fluid. The sleeve bearings are fabricated from CSGBF (Cleves coke, standard coal-tar pitch, gas-baked finish) graphite used in the construction of the reactors at Hanford. The bearings are manufactured by the National Carbon Company from coke produced by the Cleves Refinery of the Gulf Oil Company. The bearings are provided with diametral shaft clearances of 1.5 to 2.5 mils. To prevent scoring and accelerated wear on the bearings and shafts from lack of lubrication, the pumps must never be operated without a flooded suction.

Standard ball motor bearings are used to absorb developed axial thrust and to support the weight of the shaft and attached impellers, as well as to guide the upper portion of the shaft. The bearings are mounted in grease chambers in the motor. The chambers are packed with Shell Oil Company "Alvania No. 2," or equivalent grease, at the time of manufacture, and require no further lubrication.

3.9.1.1.4.5 Shaft Seal

A shaft seal, consisting of two throttle bushings, is provided at the mounting flange where the shaft emerges from the torque tube. The seal serves to prevent leakage of process fluids and vapors into the cell and thus prevents the spread of contamination. The throttle bushings are located at the top and bottom of a concentric sleeve surrounding the shaft. The sleeve is in an integral part of the discharge head casing. The lower, or liquid, throttle bushing is a plain sleeve bearing, fabricated from CSGBF graphite, that serves as a guide bushing in addition to restricting leakage. The upper, or vapor, throttle bushing is made from Graphitar* No. 2 and is designed as a labyrinth trap (alternate grooves and lands) to contain mists and vapors within the vessel.

The discharge case has two diametrically opposite vents or ports extending through the column, above the liquid throttle bushing. Solution which leaks past the bushing into the shaft sleeve drains through these ports back into the vessel. A slinger ring secured to the shaft near the top of the ports deflects solution rising along the shaft. The ports are located at least 2 inches above maximum liquid level in the tank.

9413275-0633

3.9.1.1.4.6 Coupling

An adjustable, cast-iron, rigid, flange-type coupling is used to connect the pump and motor shafts. The hollow motor shaft is fabricated to form one of the flanges of the coupling. The second flange is secured to the motor-shaft flange by means of extended pins or bolts, and to the pump shaft by means of a gib-head key that prevents rotation of the coupling with respect to the shaft while permitting axial freedom. An adjusting nut, threaded to the upper end of the shaft, provides for axial adjustment of the shaft and secures impellers as a unit during assembly. The nut is secured to the shaft coupling by means of a machine screw inserted axially through the nut into one of four equally spaced holes in the coupling, permitting quarter-turn adjustments of the nut. The coupling is coated with Amercoat No. 33, or equal.

3.9.1.1.4.7 Motor

The vertical, hollow-shaft, flange-mounted motors are 1750-rpm, 3-phase, 440-volt, squirrel-cage-type induction motors that are totally enclosed and fan cooled. Sizes range from 3 to 10 hp. External surfaces are protected with Amercoat No. 33, or equal.

The hollow motor shaft is machined to provide alignment fit with the pump shaft at the upper end of the motor shaft, and is relieved through the balance of the bore for ease of assembly.

---

*Trade name of Wickes Engineering Co., Saginaw, Michigan

3.9.1.1.4.8 Mounting

Each canyon pump is mounted on a circular adapter flange, which provides support for the pump, discharge-pipe, connector nozzle, and a male electrical connector. The flange is located on the tank by means of dowel pins and is fastened to the dowels with free nuts. A bail is provided for lifting the assembly.

3.9.1.2 Non-Canyon Service Pumps

There are numerous pumps in the Purex Plant used to transfer non-radioactive solutions. The pumps are located in the 202-A, 203-A, 206-A, 211-A, and 276-A facilities. Table 3-16 lists the pumps currently in use.

3.9.1.2.1 Basis of Selection

Each pump is selected to meet the following requirements:

- Performance characteristics. A pump with the proper head-suction-capacity characteristics is selected for each application.
- Corrosion resistance. The materials of construction are specified to resist corrosion by the solution to be pumped.

Standard single-stage centrifugal pumps and self-priming centrifugal pumps, operating at 1800 rpm, meet the above criteria and are used for non-canyon service.

3.9.1.2.2 Standard Centrifugal Pumps

These pumps are manufactured by several manufacturers, principally, Pacific Pumping Company, General Machinery Company, and Byron-Jackson Company. All of the pumps have single rotary mechanical seals, except the pumps for transferring from the uranium nitrate and 50% caustic storage tanks, which have double rotary mechanical seals. The pumps are of the open-impeller, single-stage horizontal, vertically-split design and operate at 1800 rpm. Their rated capacities range from 12 to 350 gal/min, and discharge heads from 30 to 150 feet.

3.9.1.2.3 Self-Priming Centrifugal Pumps

Self-priming centrifugal pumps, which must be primed before they can be operated for the first time, are used for unloading chemical solutions from drums and tank cars. These pumps, located in Building 211-A, range in rated capacity from 10 to 100 gal/min. and in discharge head from 50 to 80 feet. Suction lifts vary from 3 to 8 feet.

TABLE 3-16. Non-Canyon Service Pumps.

BUILDING NUMBER	PUMP NUMBER	SOLUTION	ORIGIN	DESTINATION	DISCHARGE HEAD, Ft.	CAPACITY Gal./Min.	SERVICE
202-A	P-101	$FE(NH_2SO_3)_3$	TK-101	TK-216	35	17	CONTINUOUS
202-A	P-103	$NH_2OH \cdot HNO_3$	TK-103	TK-218, 219	85	17	
202-A	P-104	$NaNO_3$	TK-104	TK-207	58	100	INTERMITTENT
202-A	P-105	WASH SOLUTION	TK-105	TANKS FEEDING CANYON TANKS	75	120	
202-A	P-106	$NaNO_2$	TK-106	TK-152	71	50	
202-A	P-107	Na_2CO_3-$KMnO_4$	TK-107	TK-208	72	100	
202-A	P-108	UTILITY MAKEUP	TK-108	TK-204, 205, 207, 324	35	32	
202-A	P-150	38X	TK-150	TK-155	130	10	CONTINUOUS
202-A	P-151	3AS[a] $Cd(NO_3)_2$	TK-211 TK-151	MOTIVE FLUID FOR TK-L11 TO TK-E6 JET	230	5	INTERMITTENT
202-A	P-G3A	G-3A SOLUTION	TK-G3A	CENTRIFUGE SPRAYS G-G3 AND G-G4	800 (c)	13.8	DISCONNECTED
202-A	P-E2A	TK-E2, E4 SOLUTION	TK-E2, E4	CENTRIFUGE SPRAYS G-E2 AND G-E4	800 (c)	13.8	
202-A	P-R3A	TK-R3A SOLUTION	TK-R3A	CENTRIFUGE SPRAYS G-R3 and G-R4	800 (c)	18.8	
202-A	P-Q11-1	TK-Q11 WASTE	TK-Q11	CHEMICAL SEWER	63	30	INTERMITTENT
202-A	P-Q11-2	TK-Q11 WASTE AND CONDENSATE	TK-Q11	CHEMICAL SEWER	63	30	
203-A	P-P1	UNH	UNH STORAGE TK	UNH STORAGE OR UNLOADING	38	120	
203-A	P-P3	UNH	UNH STORAGE TK	UNH STORAGE OR UNLOADING	38	120	
203-A	P-13-1	UO_3 PLANT HNO_3	TK-P15	TK-U5	110	50	
203-A	P-13-2	UO_3 PLANT HNO_3	TK-P15	TK-P6 OR TK-U5	110	50	
203-A	P-13-3	UO_3 PLANT HNO_3	TK-13, 14, 15	TK-13, 14, 15	110	30	
203-A	P-15	HNO_3	TANK CAR	TK-13, 14, 15	76	50	
206-A	P-U5-1	HNO_3	TK-U5	ACID FRACTIONATOR	67	26	CONTINUOUS
206-A	P-U5-2	HNO_3	TK-U5	ACID FRACTIONATOR	67	26	
206-A	P-U8-1	WATER	TK-U8	202-A BUILDING	140	35	
206-A	P-U8-2	WATER	TK-U8	202-A BUILDING	140	35	
211-A	P-10	$Cd(NO_3)_2$	TK-10	TK-151			
211-A	P-11-1	AFAN	AFAN TANK CAR	TK-11	82	96	INTERMITTENT
211-A	P-11-2	60% HNO_3	60% HNO_3 TANK CAR	TK-12 OR 202-A BUILDING	82	96	
211-A	P-11-3	AFAN[b]	TK-11	TK-212	81	50	
211-A	P-11-4	AFAN[b]	TK-11	TK-212	81	50	
211-A	P-12-1	60% HNO_3	TK-12	202-A BUILDING	35	12	
211-A	P-12-2	60% HNO_3					
211-A	P-21	KOH	TK-21	TK-206, 21	60	60	
211-A	P-20	50% NaOH	50% NaOH TANK CAR	TK-20	38	60	
211-A	P-21-1	50% NaOH	TK-20	202-A Bldg. OR DEMIN.	30	56	
211-A	P-21-2	50% NaOH	TK-20	202-A Bldg., DEMIN., TRUCK LOADOUT	30	56	
211-A	P-30-1	DEMIN. WATER	TK-30	TK-223 OR 211-A Bldg. PUMP SEALS	150	350	CONTINUOUS
211-A	P-30-2						
211-A	P-40-1	TBP or DILUENT	TANK CAR	TK-40 OR TK-41	32	36	INTERMITTENT
211-A	P-40-2	DILUENT	TK-40	202-A Bldg. OR DRUM LOADOUT	66	30	
211-A	P-41-1	ANN	TK-42	TK-205	76	50	
211-A	P-41-2	TBP	TK-41	202-A Bldg. OR DRUM LOADOUT	66	30	
211-A	P-50	H_2SO_4	TK-50	TK-CX4	57	12	
211-A	P-51	H_2SO_4					
276-A	P-R5-1	ORGANIC	TK-R5, R7	PROCESS	120	32	CONTINUOUS
276-A	P-R5-1-1	ORGANIC			120	32	
276-A	P-R5-2	ORGANIC			120	32	
276-A	P-R5-3	ORGANIC		TK-R6	35	32	
276-A	P-R5-4	ORGANIC		TK-R6	35	32	

(a) 3AS IS USED FOR TRANSFERRING SOLUTIONS OF LOW PLUTONIUM CONCENTRATIONS. CADMIUM NITRATE IS USED FOR TRANSFERRING SOLUTIONS OF HIGH PLUTONIUM CONCENTRATIONS.

(b) AMMONIUM FLUORIDE -- AMMONIUM NITRATE MIXTURES.

(c) POUNDS PER SQUARE INCH GAGE

RC27907-121

The pumps were manufactured by the Duriron Company, Dayton, Ohio, and are standard horizontal, self-priming, centrifugal pumps with vertical split cases. The shafts of the acid and organic unloading pumps are sealed against leakage by a single rotary mechanical seal. A double rotary mechanical seal, lubricated by water, is employed to seal the 50% caustic unloading pump.

3.9.1.3 Q Cell Metering Pump

A Pulsafeeder, which is a reciprocating, combination piston-diaphragm, positive displacement metering pump made by the Interpace Corporation of Rochester, New York, is used to transfer neptunium solution from TK-Q3 to the ion exchange column (T-Q4) for neptunium purification.

In pump operation, an electric motor drives a shaft at a constant speed through a worm gear reduction, which, through an eccentric, drives a piston in a reciprocating motion. Reciprocation of the piston in its cylinder hydraulically moves liquid (oil) against one side of a flexible, dished, elastomer diaphragm, imparting the reciprocating motion of the piston to the diaphragm. On the opposite side of the diaphragm is the pump compression head through which the process solution (neptunium nitrate) is discharged by the motion of the diaphragm. On the discharge stroke (forward motion of the piston), the diaphragm is expanded by displacement of the oil, closing the check valve in the solution inlet line to the pumping head and forcing the solution out through the outlet check valve. The diaphragm retracts to its original shape by its own elasticity during the suction stroke of the piston, closing the outlet check valve and drawing solution into the pump head.

The piston stroke length and, hence, the solution flow rate, is controlled automatically by a pneumatic signal from a flow recorder-controller which senses the output from the process solution flow meter. To control the flow rate, the pneumatic signal adjusts the position of a rod which positions the rotational center of the connecting rod that drives the piston. The controller can be adjusted to give any flow rate from 0 to 100% of the pump's flow rating. An accuracy of $\pm 1\%$ of rated capacity for delivery of the pumped solution is attainable in the range of 10 to 100% of rated capacity.

Hydraulic oil leakage past the piston is slight and is automatically replaced through a compensator valve from an oil reservoir. A second compensator valve is used for pressure relief to blow off any excess oil and, more importantly, to vent the compression cylinder to the atmosphere in case the process line is plugged or a line valve downstream of the pump is accidentally closed. An automatic air bleed valve is positioned at the highest point in the hydraulic system to continuously purge air or vapor to maintain a noncompressible transfer fluid.

3.9.2 Jets

Jets operated with steam, air and chemical solutions are used in the Purex Plant. Steam-operated jets are employed for gas transfer, sump draining, solution transfer, heel removal from process vessels, and as standby equipment for pumps. Air-operated jets are used for sampling. A jet motivated by either cadmium nitrate solution or dilute nitric acid is used to transfer plutonium from a plutonium nitrate receiver tank back to the head end of the process for rework. Variable controlled-flow steam jets are used to transfer solution from extraction columns to the uranium concentrators.

The capacities, physical dimensions, motive fluids and operating conditions of the jets in use in the Purex Plant are given in Table 3-17. The identification of the jets of each group classification is shown in Table 3-18.

3.9.2.1 Liquid-Transfer Jets

Liquid-transfer jets, used to drain sumps, remove heels from process vessels, and serve as standbys for pumps, are of standard design and are made from Type 304-L or Type 347 stainless steel. The jet connections range from 0.5- to 3-inch-diameter inlet, 0.5- to 8-inch-diameter discharge, and 0.5- to 8-inch-diameter suction. A sectional view of a typical liquid-transfer jet is shown in Figure 3-60.

Steam jets are classified into a number of groups according to capacity rating when supplied with steam at pressures between 65 and 185 psig, with 90 psig being used in the majority of cases. The jet capacities range from 1 to 240 gal/min against heads of from 40 to 50 feet. Specific gravities of the solutions handled range from 0.8 to 1.8, and static suction lifts range from 2 to 22 feet. The performance of the individual jet groupings is included in Table 3-17.

The plutonium rework solution transfer jet, supplied with 100-psig cadmium nitrate solution in nitric acid as the motive fluid, delivers a flow of 3 gal/min against a 60-foot discharge head of 1.23 specific gravity solution, with a suction lift of 20 feet of water.

3.9.2.2 Sampler Jets

Sampler jets, which are classified in Group 12, are designed for continuous small-flow delivery when supplied with 90-psig air pressure. Sampler jets have a capacity ranging from 0.026 to 0.056 gal/min against a negligible discharge head. The specific gravity of the solutions to be sampled lies between 0.8 and 1.6.

Sampler jets have 1/2-inch pipe suction, discharge, and air supply connections. All jets are fabricated from Type 347 stainless steel and have the same configuration as that shown in Figure 3-60.

	SIZE (Inches)			CAPACITY		MOTIVE FLUID PRESSURE, psig			OPERATING CONDITIONS														PROCESS REQUIREMENTS			PHYSICAL DIMENSIONS (inches) SEE SKETCH AND NOTE #2			
											EDUCTED FLUIDS									SUCTION LIFT (ft WATER)									
GROUP	SUCTION	DISCHARGE	INLET	GPM (NORMAL)	lb VAPOR/hr	STEAM	AIR	WATER	CHEMICAL SOLUTIONS	CHEMICAL VAPORS	ORGANIC SOLUTIONS	NITRATE SOLUTIONS	DEMINERALIZED WATER	NITROGEN OXIDES	OPERATING TEMP. INFLUENT (°F)	DESIGN TEMPERATURE (°F)	DISCHARGE PRESSURE (psig)	DESIGN PRESSURE (psig)	NORMAL FLOW	MAXIMUM FLOW	MINIMUM FLOW	% DEVIATION FROM NORMAL FLOW @ NORMAL OPERATION	GAS DENSITY OR SPECIFIC GRAVITY OF LIQUID AT OPERATING CONDITION	VISCOSITY AT OPERATING CONDITION (cp)	VAPOR PRESSURE AT OPERATING CONDITION (psia)	A	B	C	D
1	2	2	2	75		90			X			X			104	338	22	150	14.5	10	22	-60, +20	1.0-1.8	1-5	0.35-1.08	21	5	6	5
2	3	3	2	75		90			X			X			104	338	22	150	17.5	10	22	-33, +56	1.0-1.6	1-3	0.43	21	4	3-1/2	4
3	3	3	2	75		90 max			X			X			104		3.5						1.07			22	4-1/2	4	4-1/2
5	2	2	2	25		90			X			X			104	338	22	150	15	10	22	-52, +20	1.0-1.8	1-5	0.35-1.08	14	4-1/2	4-1/2	4-1/2
6	1	1	1	10		90			X			X			104	338	22	150	15	10	22	-50, +30	1.0-1.63	1-5	0.35-1.08	10-1/4	3-1/2	3-1/2	3-1/2
7	2	2	2	5-15		65-90			X			X			122	338	13	150	+5.2 @ 70 psig	0.8 @ 90 psig	+1.6 @ 70 psig	-57, +42	1.10	1.0	2.7	12	6	6-1/2	5
8	2	2	2	75		90					X	X			100	338	22	150	13	6	22	-39, +21	0.8-1.25	2-3	0.6-1.1	18	6	6	5
9	2	2	2	25		90					X	X			100	338	22	150	13	6	22	-39, +21	0.8-1.25	2-3	0.6-1.1	14	4-1/2	4-1/4	5
10	1	1	1	3		90			X			X			104	338	22	150	18	10	18	-0, +83	1.0-2.5	1-5	0.35-1.08	7-1/2	3-1/2	3-1/2	3-1/2
11	1	1	1	3				100	X			X			104	300	26	150	20			-42, +7	1:23	1.5	1.08	7-1/2	3-1/2	3-1/2	3-1/2
12	1/2	1/2	1/2	0.026 - 0.056			90		X			X			104	300	0	150			27'-7"		0.8-1.8	1-5	0.35-1.08	8	4	3-1/2	3-1/2
13	4	4	2	240		175			X			X			70	382	22	250	17	10	22	-37.5, +31	1.3	1-3	0.36	36	7	6	7
14	3	3	2	12-50		90							X				0									23	4-1/2	7	9-1/2
15	8	8	2		3600	85				X				X	212	330	1.5	150	4.8	0.5	6.1	-11, +18	0.051#/ft^3	0.02		47	11	13	10-1/2
16	8	8	2		4750	90				X				X	113	330	1.5	150	6.0	1.1	12.3	-100, +27	0.057#/ft^3	0.02		75	11	13	10-1/2
17	4	4	2		1125 212°F	90 max				X				X	200	338	1.5	150	5.5	0	7.5	-53, +69	0.04#/ft^3	0.01		32	8	9	6-1/2
18	1	1	1		26	90				X				X	77	338	0.5	150	9.0	3.3	25.2	-84, +19	0.08#/ft^3	0.02		17	8-1/2	8	4
19	4	4	1		1450	90 min				X				X	212	400	1.5	250	5.0	2.3	5.0	-0, +50	0.05#/ft^3	0.02		32	8	9	6-1/2
20	2	1	3/4		22	90				X				X	80	338	1.0	150	7.5	6.5	8.2	-100, +45	0.05#/ft^3	0.02		15	5	6	5
21	2	1-1/2	3/4		225	90				X				X	80	338	1.0	150	9.1	7.7	12.8	-100, +24	0.057#/ft^3	0.02		24	6	6	4-1/2
22	1/2	1/2	1/2		5.2		80			X				X	100	338	-1.4 in. WATER	150	2.6	0	3.3	-5, +18	0.068#/ft^3	0.02		8	4	5-1/2	5-1/2
25	3	3	2	83.8		90 max							X		80-160	330	2.0	150	2.3	2.3	0	-50, +0	1.0	1.0	0.36	23	5	7-1/2	10
27	4	4	2		2100		90			X				X	212	330	1.0	150	5.0			-50, +25	0.08#/ft^3	0.02		29	3	6	

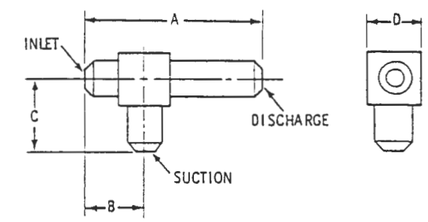

SKETCH OF TYPICAL JET

NOTES:

1. END CONNECTIONS, INLET, SUCTION AND DISCHARGE HAVE BEVEL PREPARATION FOR DIRECT WELDING TO SCHEDULE 40 PIPE IN THE SIZE LISTED UNLESS OTHERWISE STATED.
2. PHYSICAL DIMENSIONS REPRESENT MAXIMUM SIZES.
3. MATERIALS: JET IS FABRICATED FROM 18-8 STAINLESS STEEL BAR STOCK AND/OR FROM STD. PIPE FITTINGS. ACCEPTABLE STAINLESS STEEL MATERIAL GRADES, IN ORDER OF PREFERENCE ARE: 304-L, 304, 321 OR 347. ONE GRADE ONLY UTILIZED IN EACH COMPLETE JET.
4. LIQUID JETS SHALL PRODUCE A PRIMING LIFT AT LEAST AS GREAT AS THE MAXIMUM SUCTION LIFT SPECIFIED IN THE DATA.
5. REFERENCE DRAWING H-2-58078, SHEET 1 OF 2

RCP7907-122

TABLE 3-17. Purex Service Jets -- Process Specifications and Operating Conditions of Standard Groupings

DOE-Richland, WA

THIS PAGE INTENTIONALLY
LEFT BLANK

TABLE 3-18. Purex Service Jets Standard Groupings. (Reference Drawing H-2-58078, Sheet 2)

GROUP 1

Building	Jet #
202-A	J-611
	J-A3-1
	J-A3-2
	J-A3-3
	J-A3-4
	J-SA
	J-B3-1
	J-B3-2
	J-B3-3
	J-B3-4
	J-SB
	J-C3-1
	J-C3-2
	J-C3-3
	J-C3-4
	J-SC
	J-D1-1
	J-D1-2
	J-D1-3
	J-D1-5
	J-D2-1
	J-D3-2
	J-D3-3
	J-D4-1
	J-D4-2
	J-D5-1
	J-D5-2
	J-SD
	J-E1-2
	J-E5-1
	J-E5-3
	J-E6-1
	J-E6-2
	J-SE
	J-F3-3
	J-F5-1
	J-F7-2
	J-F8-5
	J-F11-1
	J-F15-1
	J-F16-3
	J-F16-4
	J-F16-6[a]

Building	Jet #
202-A	J-F18-1
	J-F18-3
	J-F26-1
	J-SFA
	J-SFB
	J-G1-2
	J-G2-1
	J-G2-2
	J-G7-1
	J-G8-2
	J-H1-2
	J-H4-1
	J-J1-2
	J-K4
	J-K5-2
	J-K6-1
	J-K6-2
	J-K6-3
	J-K6-4
	J-M1-2
	J-M1-3
	J-M2
	J-SMC
	J-R2-1
	J-R2-2
	J-R2-3
	J-R8-2
	J-R8-3
	J-R8-4
	J-S11
	J-U3
	J-U4
293-A	J-SX3-1
	J-SX3-2

GROUP 2

Building	Jet #
202-A	J-E2-2
	J-F6-2
	J-F18-4
203-A	J-SPA
	J-SPB
	J-SPC
	J-SPD
	J-SPE

GROUP 3

Building	Jet #
241-A	J-302A

GROUP 5

Building	Jet #
202-A	J-B2-1
	J-E2-1
	J-E3-5
	J-E3-6
	J-E4-3[a]
	J-F14[a]
	J-F16-5
	J-H2-2
	J-H3-3
	J-J3-1
	J-J6-3
	J-J7-3
	J-K1-2
	J-K3-3
	J-Q5-1
	J-Q5-3
	J-R1-2
	J-R1-3
	J-SMA
	J-SMB
	J-SUA-1
	J-SUA-2[a]
	J-SUA-3
	J-SUB

GROUP 6

Building	Jet #
202-A	J-E3-1
	J-E3-4
	J-WDC
	J-G2-3
	J-J1-3
	J-J4
	J-J5
	J-J6-2
	J-J21-1
	J-J22-1
	J-J23-1
	J-K1-1
	J-K2-2
	J-K5-1
	J-L1
	J-L2
	J-L4-1
	J-L5-5
	J-SLK
	J-R2-4
	J-R3
	J-R4
	J-Q3-1
	J-Q5-2
	J-Q5-4
	J-Q8-1
	J-Q8-3
	J-SQ-1
	J-SQ-2
	J-SQ-3

GROUP 7

Building	Jet #
202-A	J-H3-4[a]

GROUP 3

Building	Jet #
202-A	J-F7-1
	J-F10-1
	J-SG

GROUP 3 (Cont)

Building	Jet #
202-A	J-J2-1
	J-SJ
	J-SJ-2
	J-SK
	J-SLK
	J-R1-4

GROUP 9

Building	Jet #
202-A	J-G1-1
	J-G6
	J-SH
	J-R1-1
	J-R6
	J-SR-1
	J-SR-2

GROUP 10

Building	Jet #
202-A	J-Q2
	J-Q8-2
	J-SQ-2

GROUP 11

Building	Jet #
202-A	J-L11-2

GROUP 12

Used in approximately 50 miscellaneous sampler applications and for 2PN to TK-01 transfer.

GROUP 13

Building	Jet #
216-A	J-1
	J-2

GROUP 14

Building	Jet #
202-A	J-SI-M3

GROUP 15

Building	Jet #
293-A	JX3-1A
	JX3-1B
	JX3-1C

GROUP 16

Building	Jet #
202-A	J-F1-1

GROUP 17

Building	Jet #
202-A	J-E3-7
	J-E-Q9

GROUP 18

Building	Jet #
202-A	J-L11-1

GROUP 19

Building	Jet #
202-A	J-F1-2

GROUP 20

Building	Jet #
291-A	912-J1

GROUP 21

Building	Jet #
291-A	912-J2
	912-J3

GROUP 22

Building	Jet #
202-A	J-A3-A
	J-AB
	J-B3-A
	J-C2-A
	J-C3-A
	J-E3-A

GROUP 25

Building	Jet #
202-A	J-SI-J7
	J-J7-1
	J-J7-2

GROUP 25 (Cont)

Building	Jet #
202-A	J-SI-K3
	J-K3-1
	J-K3-2

GROUP 27

Building	Jet #
202-A	J-F1-3

NOTES:

a. These jets are not in service.

b. Jets Uncategorized: J-Q4-1, 10 scfm, steamjet
J-F11-2, 40 gpm, active fluid: water
J-U6-1 and J-U6-2 have the following specifications:

	J-U6-1	J-U6-2
Schutte and Koerting No.	52	53
Tail orifice diameter, in.	0.577	0.578
Nozzle orifice, in.	0.076	0.206

9413275.0640

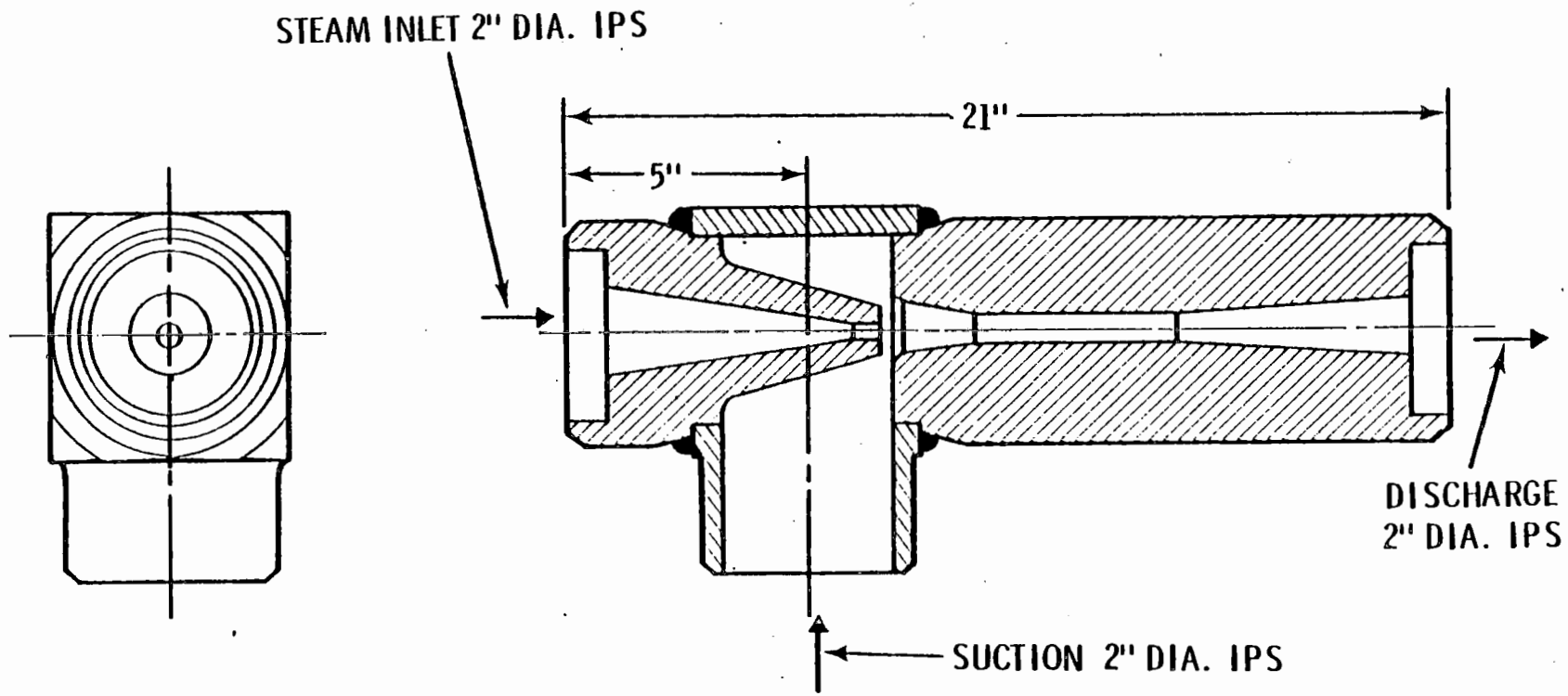

NOTE: DIMENSIONS VARY FOR DIFFERENT JETS.
THE DIMENSIONS INDICATED ARE FOR A
GROUP 1, 75 GAL./MIN. JET.

RCP7907-59

FIGURE 3-60. Typical Steam Jet for Liquid or Gas Transfers.

3.9.2.3 Gas-Transfer Jets

Steam jets are employed for gas transfer or exhauster service and are connected to the vessel vent system and the off-gas stack. The capacities of these jets, listed in Table 3-17, range up to 1600 cfm against a back pressure of 0.5 to 1.5 psig, with suction pressures ranging from 25 to 28 inches of mercury, absolute. Gas transfer jets are of standard design. They are fabricated from Type 347 stainless steel and are intended for continuous operation.

3.9.2.4 Variable Flow Jets

Four variable flow jets are used for the transfer of the 1CU and 2EU streams from the 1C and 2E extraction columns to the stripping sections of concentrators E-J8-1 and E-K4-1, respectively. Variations in the flow rates are controlled by the position of the column interface.

The jets, shown in Figure 3-61, are specially designed stainless steel ejectors manufactured by the Penberthy Injector Company. The discharge capacity of each jet is variable over a 4 to 1 range by regulation of the suction-line throttling valve, and also variable over a 3 to 1 range by adjustment of the steam flow. The capacity range is from 10 to 40 gal/min, which is accomplished by a specially designed, precision-machined nozzle and throat section. The jet is capable of operating at a constant discharge head of 25 feet with a variable suction of from minus 3 to plus 21 feet. The jet is designed to operate with the steam supply valve open at all times. If the suction valve is closed for periods up to 3 minutes and is then opened, the jet will start operation immediately.

During normal operation, the steam supply to the jet is set manually as close as possible to the required flow, and the suction throttling valve activated by the column interface position provides the fine control.

3.9.2.5 Gang Valves

Gang valves, the majority of which are two-position, are used to operate the steam jets in the Purex Plant. These automatic-sequence-operated valves admit the flow of the jet motive steam and prevent backflow of radioactive solutions into the partial vacuum created by condensation of steam in unpurged lines when the motive steam supply is shut off. The backflow is prevented by pressurizing the lines with air, thereby eliminating the vacuum which could cause the backflow.

Gang valves consist of four air-operated diaphragm valves (DOV's) with respective functions of supplying steam, air, block flow, and vent to the jet inlet. The valves are operated remotely through one of three types of manually operated controllers located in the central control room or head-end control room.

9413275.0642

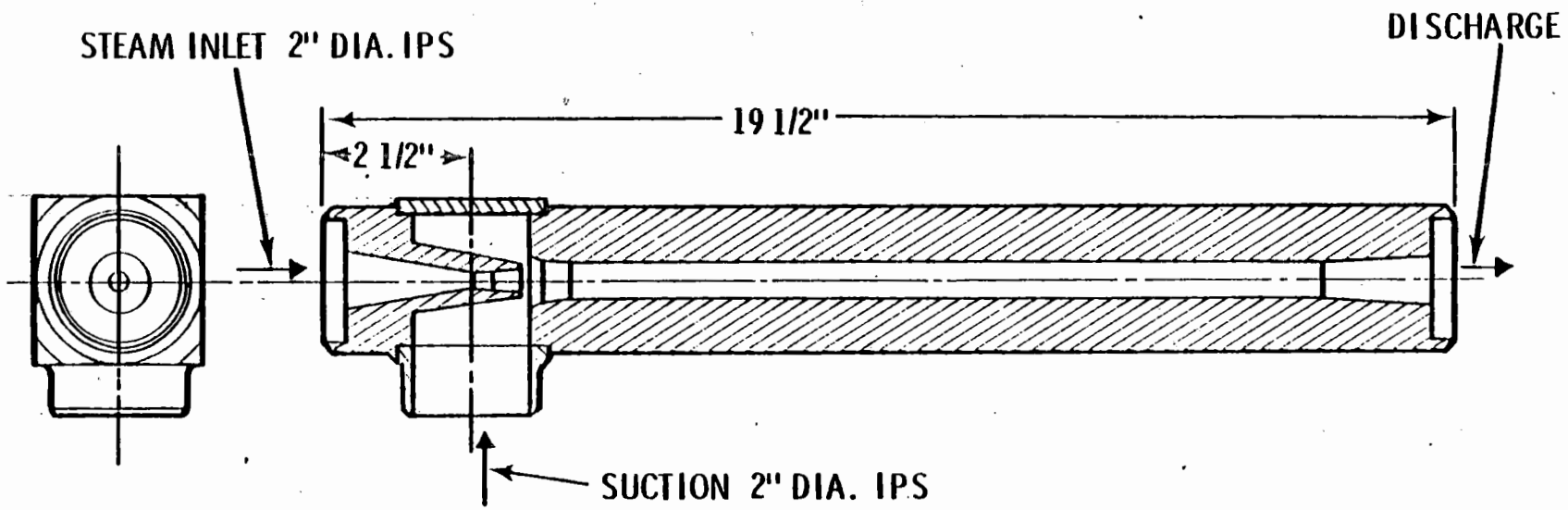

FIGURE 3-61. Variable Flow Jet.

3.9.2.5.1 Two-Position Controller -- Pneumatic Activation

The controller used to pneumatically activate the four DOV's has an "On-Off" handle. In the "Off" position, the steam, air, and shutoff (block) valves are closed, and the valve header is vented to the jet vent header. When the operating handle is turned to "On," the block valve and steam valve are opened, the vent valve is closed and the jet operates. Immediately after the handle is turned to "Off," the steam valve is closed and the air valve is opened to purge the line of steam, thereby preventing condensation and reverse flow of process solution into the steam line. Air purge time is dependent upon the length and size of the transfer lines involved. The position is held automatically for a period that may be adjusted from 10 to 90 seconds or longer before all valves return to the normal "Off" position.

The positions assumed by the four air-operated diaphragm valves corresponding to the manually set position of the remote air controller are shown below:

Manual Control Switch Position	Steam Valve	Air Valve	Block Valve	Vent Valve
On	Open	Closed	Open	Closed
Off (immediate action)	Closed	Open	Open	Closed
Off (10- to 90-second delay or longer)	Closed	Closed	Closed	Open

Figure 3-62 is a schematic diagram of the valving system.

3.9.2.5.2 Two-Position Controller -- Electrical Activation

Another type of two-position controller operates in the same manner as the pneumatic controller, except that with this controller, the DOV's are activated electrically.

Figure 3-62 contains a schematic of the electrical-controlled valving system.

3.9.2.5.3 Three-Position Controller -- Electrical Activation

Jet gang valves having three-position controllers are used in several locations. While the designs differ somewhat, the controllers all operate

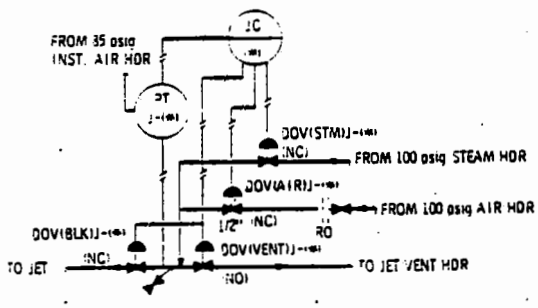

TWO POSITION CONTROLLER (PNEUMATIC)

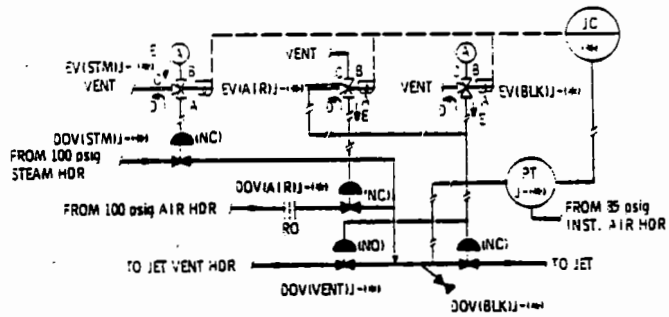

TWO POSITION CONTROLLER (ELECTRICAL)

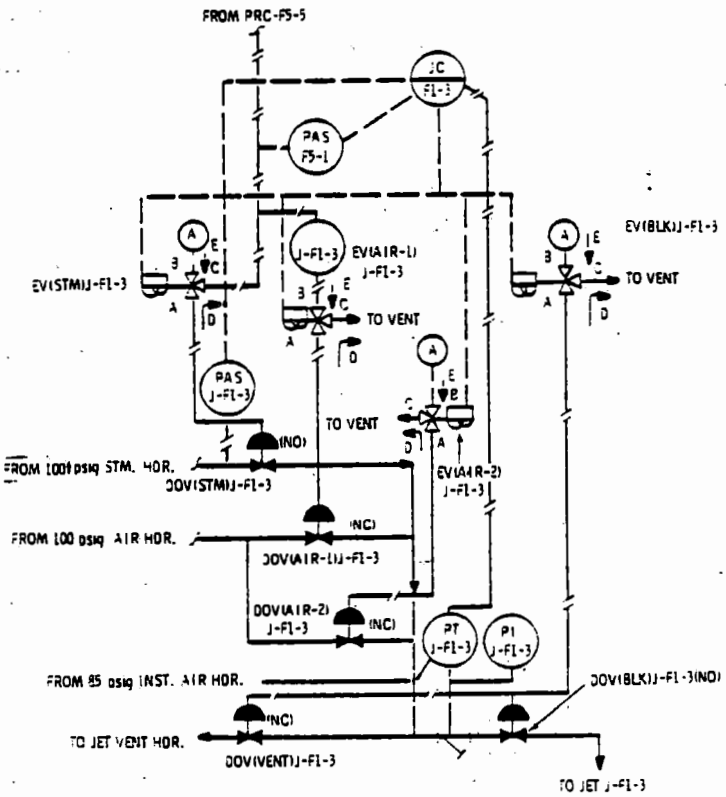

THREE POSITION CONTROLLER (ELECTRIC)

REFERENCE DRAWINGS:
H-2-63227 H-2-63236

NOMENCLATURE

A - 20 PSIG INSTRUMENT AIR
BLK - BLOCK
DOV - DIAPHRAGM OPERATED VALVE
EV - ELECTRIC VALVE
JC - JET CONTROLLER
NC - NORMALLY CLOSED
NO - NORMALLY OPEN
PAS - PRESSURE ACTIVATED SWITCH
PI - PRESSURE INDICATOR
PRC - PRESSURE RECORDER CONTROLLER
PT - PRESSURE TRANSMITTER
RO - RESTRICTING ORIFICE
ZX - PNEUMATIC REVERSING RELAY

RC27907-1

FIGURE 3-62. Typical Jet Gang Valve Assemblies.

in the same manner. When the switch handle is moved manually, the following sequence of events occur automatically:

Manual Control Switch Position	Steam Valve	Air Valve	Block Valve	Vent Valve
Steam	Open	Closed	Open	Closed
Off (immediate action)	Closed	Open	Open	Closed
Off (10- to 90-second delay)	Closed	Closed	Closed	Open
Air or Water (after switching from "Off" or "Steam")	Closed	Open[a]	Open	Closed
Off (immediately after switching from "Air" or "Water")	Closed	Closed	Closed	Open

[a]Water will not come on until air blow is finished.

Figure 3-62 shows a schematic drawing of a typical electrically activated valving system with a three-position controller.

3.9.3 Agitators

Agitators are used inside and outside of the canyon in the Purex Plant to mix and blend tank contents, to promote chemical reactions, and to improve heat transfer coefficients. These agitators are designed to provide three degrees of agitation: mild, medium, and violent. Mild mixing is described as a degree of agitation which causes no disturbance of the liquid surface other than a swirling effect. Medium agitation is that which causes waves but no breaks in the liquid surface. Violent mixing produces waves, seething, and splashing. Design differences between "canyon" and "non-canyon" agitators are based primarily on the criterion of remotability. Canyon agitators are designed with remotable electrical connectors, lifting bails, and self-lubricating seals. Non-canyon agitators, however, are selected from vendors' standard models and require no modifications for remotability.

Table 3-19 lists the agitators in both canyon and non-canyon locations in the plant and their operating characteristics.

TABLE 3-19. Purex Tank Agitators.

Tank and Agitator Number	Motor		Shaft			Impellers	
	Speed, rpm	Horsepower	Length, ft	Diameter, in.	Speed, rpm	Number	Diameter, in.
101	1150	1	6.3	1.25	1150	1	6
103	1150	1	6.3	1.25	1150	1	6
104	1750	7.5	10.1	3.5	100	1	26
105	1750	7.5	10.1	3.5	100	1	26
106	1150	1	6.3	1.25	1150	1	6
107	1750	7.5	10.1	3.5	100	1	26
108	1740	5	12.0	3.5	100	1	26
150	1155	3	4.3	1.25	1150	1	6.9
151	1140	3	4.3	1.25	1140	1	6.9
204	1155	1	6.3	1.0	1155	1	6.9
205	1155	1	6.3	1.0	1155	1	6.9
206	1155	1	10.0	1.0	1155	1	6.9
209	1750	7.5	10.0	3.5	100	1	26
210	1750	7.5	6.3	3.5	100	1	26
211	1155	1	6.3	1.0	1155	1	6.9
212	1155	1	6.3	1.0	1155	1	6.9
213	1155	1	6.3	1.0	1155	1	6.9
214	1155	1	6.3	1.0	1155	1	6.9
217	1750	NK[a]	2.5	0.5	1750	NK[a]	NK[a]
220	1150	3	5.8	1.25	1150	1	6.9
221	1150	3	5.8	1.25	1150	1	6.9
224	1160	1	5.0	1.0	1160	1	6.9
225	1150	3	6.5	1.25	1150	1	6.9
D1	600	15	8.5	2.0	600	2	9
D2	600	15	8.5	2.0	600	2	9
D3	600	15	8.5	2.0	600	2	9
D4	600	15	8.5	2.0	600	2	9
D5	600	15	8.5	2.0	600	2	9
E1	600	15	8.5	2.0	600	2	9
E2A	1750	0.5	4.5	1.0	1750	3	4
E3	600	15	8.5	2.0	600	2	9
E5	600	15	8.5	2.0	600	2	9
E6-1	600	15	8.5	2.0	600	2	9
E6-2	600	15	8.5	2.0	600	2	9
F3	600	15	8.5	2.0	600	2	9
F8	600	15	8.5	2.0	600	2	9
F10	600	15	8.5	2.0	600	2	9
F12	600	15	8.5	2.0	600	2	9
F13	600	15	8.5	2.0	600	2	9
F15	600	15	8.5	2.0	600	2	9
F16	600	15	8.5	2.0	600	2	9
F18	600	15	8.5	2.0	600	2	9
F26	600	15	8.5	2.0	600	2	9
G3A	1750	0.5	4.5	1.0	1750	3	6
G5-1	600	15	8.5	2.5	600	3	9
G5-2	600	15	8.5	2.5	600	3	9
G5A	1750	7.5	10.5	2.5	100	1	4
G7-1[b]						3	
G7-2	600	15	8.5	2.5	600	3	9
G8	600	15	8.5	2.5	600	2	9
H1	600	15	8.5	2.0	600	2	9
J1	600	15	8.5	2.0	600	2	9
J3	600	15	8.5	2.0	600	2	9
K1	600	15	8.5	2.0	600	2	9
K5	600	15	8.5	2.0	600	2	9
K6	600	15	8.5	2.0	600	2	9
M1A	1150	1	6.3	1.25	1150	1	6
R1A	1750	7.5	10.0	2.5	100	1	26
R3A	1750	0.5	4.5	1.0	1750	1	6
R5	1750	15	14.0	3.5	100	2	26
R5A	1750	7.5	10.0	2.5	100	1	26
R7	1750	15	14.0	3.5	100	2	26
R8	1750	7.5	9.3	2.5	100	2	18
Q21	1750	0.25	2.1	0.75	1750	1	4
Q22	1750	0.33	4.4	0.75	1750	2	4
U1	1750	15	13.5	3.5	100	2	21
U2	1750	15	13.5	3.5	100	2	21
U3	1750	15	14.0	3.5	100	2	26
U4	1750	15	14.0	3.5	100	2	26
U7	1750	0.33	4.9	0.75	1750	2	4

[a] Not known

[b] Tank G7-1 contains a turbomixer unit.

3.9.3.1 Canyon Agitators

Figure 3-63 is a drawing of a typical canyon agitator. With few exceptions, the agitators are driven by 15-hp electric motors with a rotational speed of 600 rpm.

The upper end of the agitator shaft passes through the hollow shaft of a vertical 440-volt, 60-Hz, 3-phase electric motor. The bore of the motor shaft is precision fitted to the agitator shaft at the top and bottom ends of the motor to provide a registered fit. This arrangement ensures concentricity and alignment during assembly.

The motor bearings guide the rotating shaft, support the weight of the agitator, and absorb axial thrust developed during operation.

A single labyrinth seal or throttle bushing fabricated from Graphitar No. 2 serves to restrict the leakage of process vapors and mists from the tank at the point of emergence of the agitator shaft.

Two or three 9-inch-diameter turbine impellers are attached to the agitator shaft.

3.9.3.2 Non-Canyon Agitators

Off-the-shelf (vendor's standard design) agitators are used in "cold" service in a variety of locations throughout the Purex Plant. Figure 3-64 is a drawing of a typical agitator.

The motor of a non-canyon agitator is supported above the tank by a steel frame. The motor speed is either 1150 or 1740 rpm. On agitators requiring no speed reduction, the motor shaft is coupled to the agitator drive shaft just below the motor. On agitators with large diameter impellers (21 to 26 inches), which must be run at 100 rpm, a speed reducer is inserted between the motor and the top of the tank.

The agitator shaft passes through a packing gland, which requires periodic lubrication, and into the tank. Near the lower end of the shaft, one or two 4-bladed propeller-type impellers are attached.

3.10 INSTRUMENTATION

Remote control of much of the Purex process, with massive radiation shielding interfaced between personnel and radioactive process areas, necessitates the use of extensive process control instrumentation. Over 600 process control instruments are employed in the Purex Plant. The instruments comprise on the order of 5,000 separate sensing, transmitting, indicating, recording, controlling, and other component elements. The purpose of this section is to describe the designs, applications, and limitations of the various instruments. The principles on which the instruments

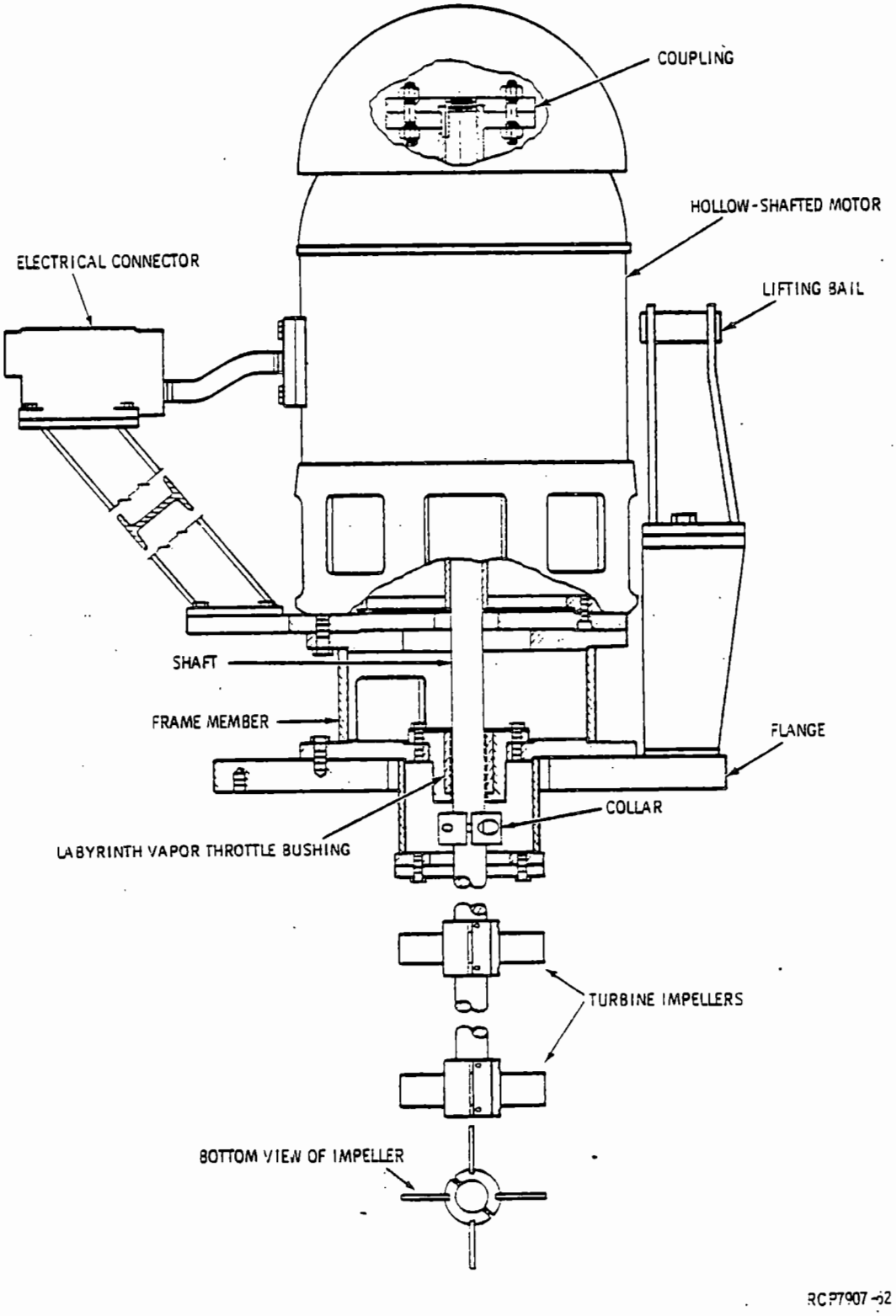

FIGURE 3-63. Typical Canyon Agitator.

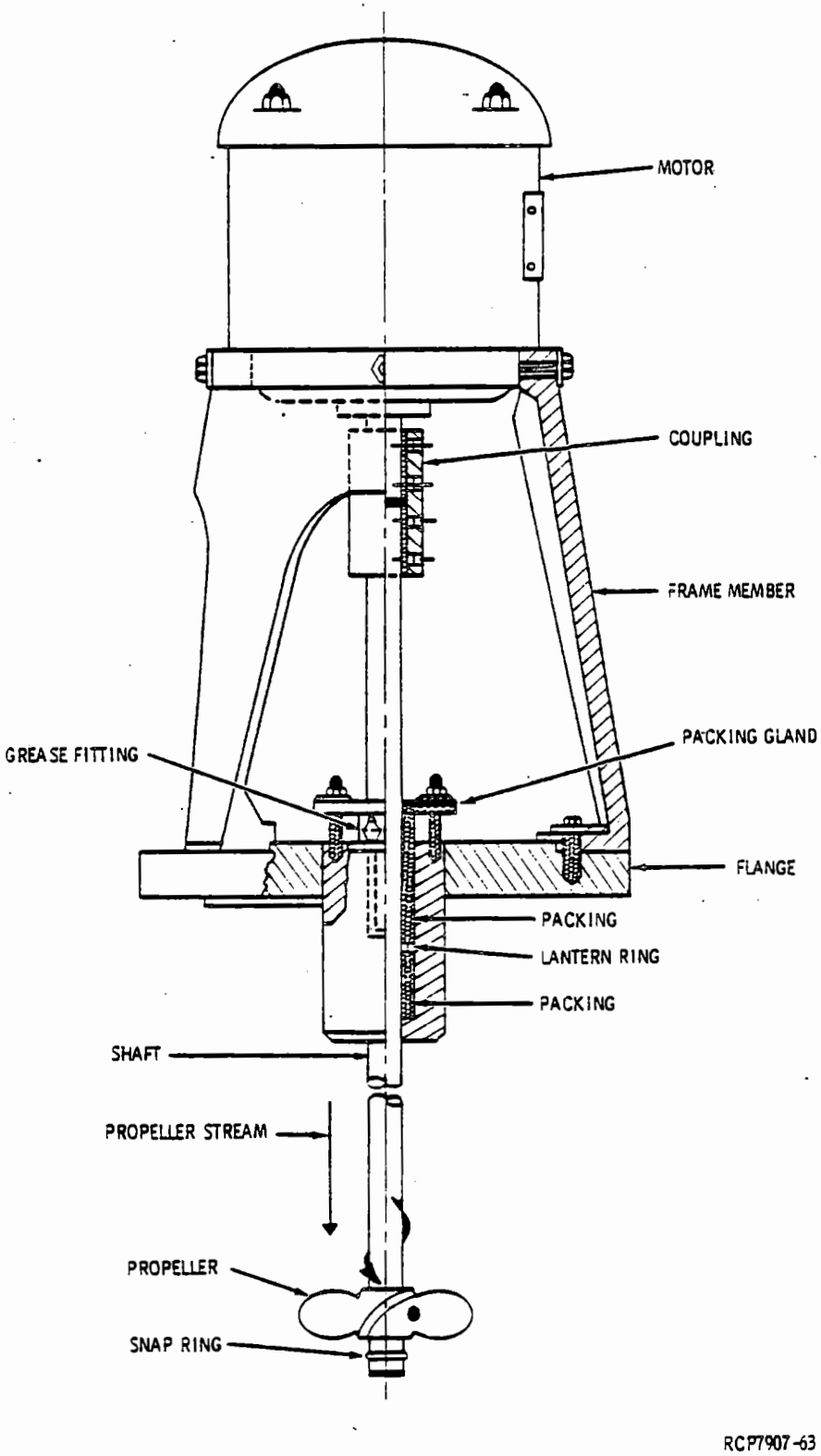

FIGURE 3-64. Typical Non-Canyon Agitator.

function are briefly explained. Characteristics such as accuracy, sensitivity, and range are given only for those instruments for which this information is readily available.

3.10.1 Purex Plant Instruments

Automatic instrumentation is used in the Purex Plant to measure and/or control the following process variables: (a) flow, (b) static and differential pressure, (c) liquid level or weight factor, (d) specific gravity, (e) temperature, (f) liquid-liquid interface position, (g) pH, (h) sound, (i) centrifuge speed, (j) iodine, neptunium, plutonium and nitrite ion concentrations, and (k) gamma, alpha, and neutron radiation.

Only infrequently can a single instrument element perform a measurement and/or control function. Generally, several of the following distinct component elements are integrated into an instrument system which carries out the intended function: an element which "senses" the variable in question; an element which transmits and often amplifies or otherwise modifies the signal from the sensing element; an element which receives the signal and indicates or records it; controlling and controlled elements, as in an automatic controller; and alarms needed to call immediate attention to some off-standard condition.

An instrument is usually identified by a sequential combination of symbols for the process variable being monitored, the instrument's function, and the cell and vessel in which the variable is being monitored. Thus, SGR-F5 designates the specific gravity recorder for the acid absorber (T-F5) in F Cell. Certain instrument identification symbols, such as those for diaphragm-operated valves (DOV's) and pressure-reducing valves (PRV's), do not include the process variable prefix, however. The instrument legend, which lists the various symbols used for functional identification of instruments throughout this chapter and on the Instrument Engineering Flow Diagrams (IEFD's), is given in Table 3-20.

The indicating and controlling portions of Purex Plant instruments are miniature type and are mounted on graphic panels which depict the flow of the process streams. The panels, by indicating clearly at which point in the process the variables are measured and/or controlled, help to avoid confusion which might otherwise result from the large number of instruments involved.

The process streams are represented on the graphic panels by the following colors:

Plutonium streams	Gold	Aqueous waste	Red
Uranium streams	Yellow	"Cold" aqueous streams	Green
Combined uranium and plutonium streams	Orange	Instrument air	Silver
Organic streams not bearing uranium or plutonium	Blue	Steam, water, and air service lines	Black
		Off-gas	Dark Red

TABLE 3-20. Instrument Legend

Symbol	Process Variable[a] Or Function Modifier	Instrument Function[b]
A	Ampere	Alarm
AMP		Amplifier
AN		Analyzer
ASP		Automatic Set Point Adjustment
B	Batch	
C	Conductivity	Controller
CVT		Converter
DM		Displacement Meter
DOV		Diaphragm Operated Valve
DP	Differential Pressure	
E	Electric	Element
F	Flow Rate	
I		Indicator
IF	Interface Location	
J		Jet
K		Relay
KK		Fire Eye (Flame Detector)
L	Liquid Level	
LS		Limit Switch
M	Manual	Meter
MCC		Motor Control Center
MK		Microphone
P	Pressure	
PB		Pushbutton
pH	Acidity	
POV		Piston Operated Valve
PRV		Pressure Reducing Valve
PU		Pulser
Q		Integrator
R	Radiation	Recorder
RO		Restricting Orifice
S	Speed	Switch
SG	Specific Gravity	
SNC		Scintillation Counter
SP		Set Point
SPK		Speaker
SRV		Safety Relief Valve
T	Temperature	Transmitter
TRV		Temperature Regulating Valve
V	Valve	Valve
VIB	Vibration	
W	Wobble	
WF	Weight Factor	
X		Reversing
Z		Pneumatic Relay

[a]If present, designated by first one to three letters of the instrument identification symbols.

[b]Designated by one to three letters. If process variable symbol is used, functional symbol follows it.

The Purex Plant has central, head-end, Q Cell, and power control rooms. The central and head-end control rooms each have a main and an auxiliary graphic panel.

The graphic panels in the central control room contain instrumentation for the solvent extraction, waste treatment, acid recovery, process vent systems, and "cold" aqueous tanks and sumps.

The head-end control room graphic panels contain instrumentation for the irradiated uranium feed preparation system, backup facility, acid fractionator, recovered nitric acid storage tanks, cell waste collection tank, and ionization chamber radiation recorders.

The power control room graphic panels contain the instrumentation required for proper ventilation of the canyon, operating gallery, laboratory, shops, and offices.

The Q Cell control room graphic panels contain the instrumentation required for operation of the neptunium purification system.

3.10.2 Flow Instrumentation

The following types of flow metering and/or control systems are used in the Purex Plant: (a) electronic rotameter, (b) pneumatic rotameter, (c) orifice meter, and (d) magnetic flow meter. The choice of system depends upon the accuracy of measurement desired, the flow rates and the range of flow rates likely to be encountered, or other particular requirements of the stream involved.

3.10.2.1 Electronic Rotameter (FT)

A specially designed, Fischer and Porter, all-stainless steel electronic rotameter is used to measure the flow of most radioactive streams within the Purex Plant canyon and sample gallery.

3.10.2.1.1 Principle of Operation

All rotameters utilize a constant differential pressure across a variable-area annular restriction to measure the flow rate of a fluid. The general equation for flow through rotameters is:

$$Q = CA\sqrt{H}$$

where

Q = flow rate;
C = orifice coefficient;
A = annulus cross-sectional area (variable);
H = fluid pressure difference (constant) across the annular restriction.

In a rotameter, the fluid whose flow rate is being measured passes upward through a vertical, truncated, conical metering tube having its maximum diameter at the top. A float inside the tube adjusts its vertical position with variation in the flow rate and, in so doing, changes the annular area between the tube and the maximum diameter of the float. As seen from the above equation, the area, specified by the float position, is directly proportional to the fluid flow rate, and with proper calibration, the float position gives a direct indication of the flow rate.

Electronic rotameters, as shown in Figure 3-65, have an armature consisting of a vertical stainless steel tube, the lower half of which is filled with a soft iron core attached to the bottom of the float. As the flow rate increases, both the float and the armature rise.

A transmitter, consisting of two inductance coils around a stainless steel flow pipe, is attached to the bottom of the metering tube. Movement of the soft iron core of the armature changes the inductances of the two coils which form an impedance bridge with an electric-to-pneumatic converter. Conversion of the electrical signal to flow rate indication is described in Section 3.10.2.1.3.

3.10.2.1.2 Description of Sensing Element

As shown in Figure 3-65, the metering tube and stainless steel coil housing of an electronic rotameter are joined together by flanges and sealed with a Teflon O-ring. The fluid passes through and around the transmitting coil and converges to pass through the metering tube, which is approximately 50 mm in active length. The metering tube has an enlarged section immediately above the active length to prevent obstruction of flow when the float is against the top stop, and also to allow purging of foreign matter to prevent the float from sticking. The lower float stop is at a point approximately 10% up the metering tube to allow backflushing of the tube. All parts in contact with process solution are Type 347 and 304L stainless steel.

3.10.2.1.3 Flow Indication and Control

A schematic drawing of the flow metering system utilizing an electronic rotameter is shown in Figure 3-66. The rotameter transmits an electrical signal proportional to the flow rate to an electric-to-pneumatic converter that is located in the central control room. The converter changes the electrical output of the rotameter to a proportional air signal, which is transmitted to a miniature recorder-controller located on the graphic panel in the control room. The recorder-controller sends an air signal to a diaphragm-operated control valve (DOV), usually installed in the same process line as the rotameter. The air signal positions the valve plug to produce the flow rate set into the recorder-controller.

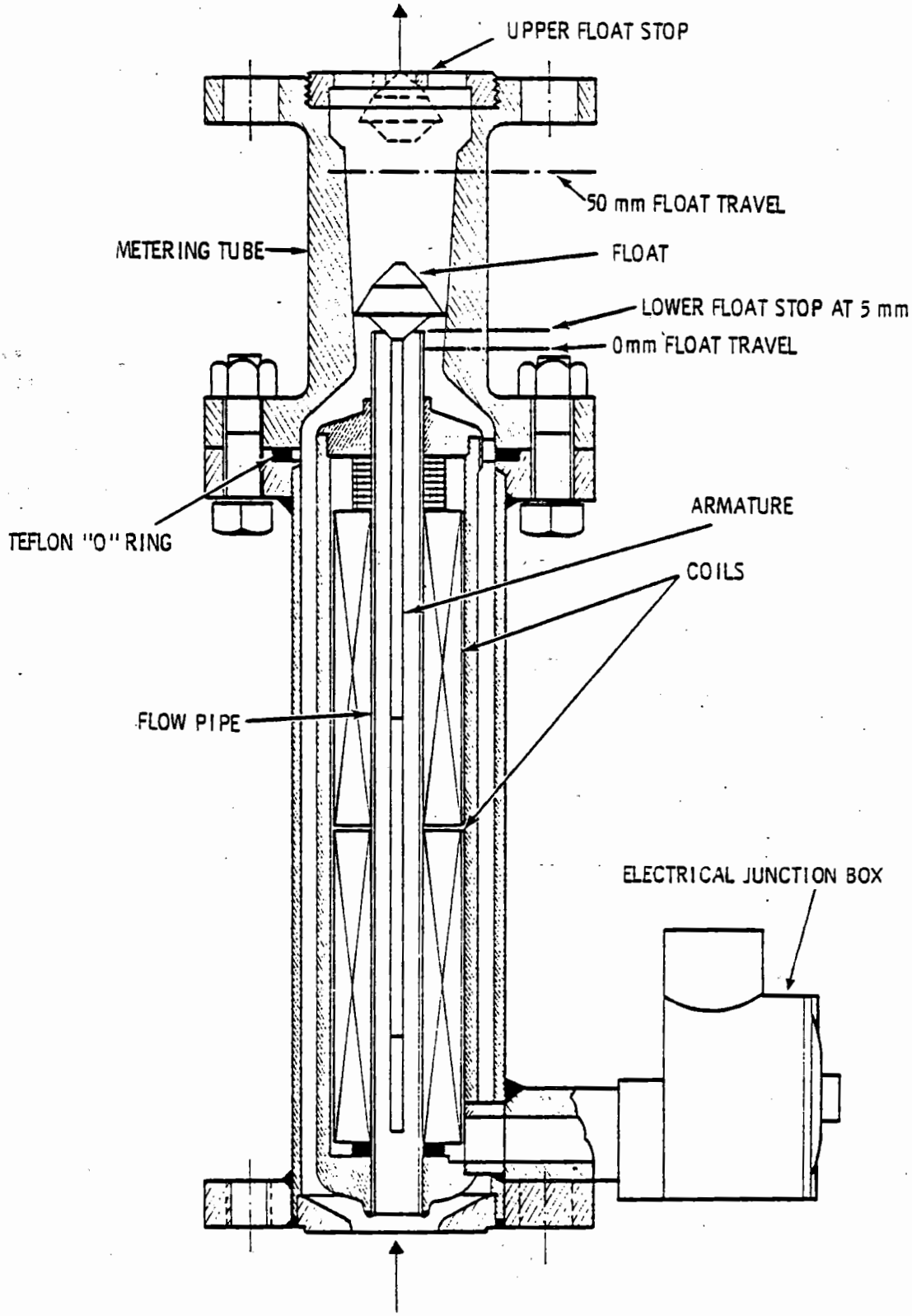

RCP7907-64

FIGURE 3-65. Electronic Rotameter -- Canyon Service.

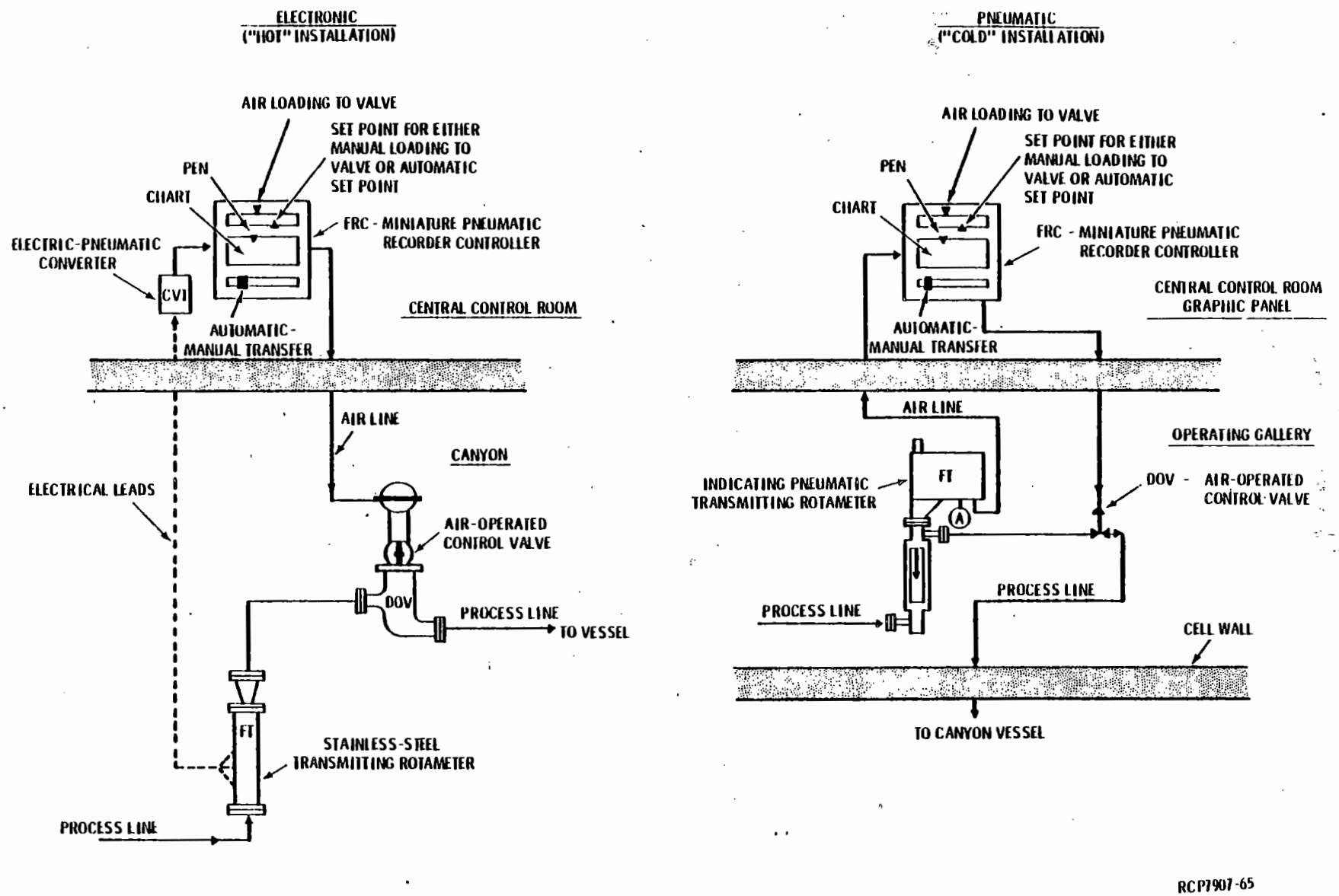

FIGURE 3-66. Rotameter Systems.

The rotameter systems that meter extraction column feeds from tanks in the canyon have solenoid valves, located in the air signal line to the control valve, that close the control valve whenever the feed pump motor circuit is de-energized. In this manner, the column contents are prevented from draining back to the feed tank.

3.10.2.1.4 Electronic Rotameter Characteristics

Rotameters having minimum flow indications as low as 0.004 gal/min and those with maximum flow indications as high as 100 gal/min are used in the Purex Plant. The rotameters generally have a maximum-to-minimum flow range of 10:1.

Flow rates can be measured with an accuracy of approximately 3% of the rotameter's range, and the instrument is sensitive to flow rate changes as low as 2% of the range.

3.10.2.2 Pneumatic Rotameters (FT)

The pneumatic transmitting rotameter is used to measure the flow rate of nonradioactive process streams when the maximum flow rate is greater than approximately 0.2 gal/min, and the instrument can be located in the pipe and operating gallery.

3.10.2.2.1 Principle of Operation

The operating principle for a pneumatic rotameter is the same as that outlined for the electronic rotameter, except for the methods of signal generation and transmission.

An armature, attached to the upper part of the float, consists of a stainless steel tube containing two cylindrical permanent magnets in the upper portion, placed so that the north-seeking poles are adjacent. An additional pair of magnets is mounted around the outside of the stainless steel tube with their south-seeking poles adjacent to the north-seeking poles of the magnets inside the armature. Thus, as the armature moves, the external magnets follow, and through a mechanical linkage system, operate a pneumatic transmitter to give an air signal proportional to float position.

3.10.2.2.2 Description of Sensing Element

The rotameter contains a glass metering tube which is fluted to guide a float designed to minimize the effects of variation in fluid viscosity. The fluid enters horizontally at the bottom of the rotameter, then flows upward through the metering tube, and leaves horizontally at the top. The stainless steel extension housing for the float armature is mounted on top of the rotameter. The magnetically coupled pneumatic flow transmitter is mounted around the extension housing.

3.10.2.2.3 Flow Indication and Control

A schematic drawing of the pneumatic rotameter metering system is shown in Figure 3-66. The rotameter transmits an air signal to a miniature recorder-controller located on the graphic panel. The controller and control valve are the same as those described for electronic rotameter systems.

3.10.2.2.4 Pneumatic Rotameter Characteristics

The pneumatic rotameters have a maximum-to-minimum flow range of 10:1, and minimum flow rate capabilities vary from 0.036 to 6.0 gal/min, depending upon the rotameter used.

The rotameters are accurate to within approximately 3% of full scale, and have sensitivities of approximately 2% of full scale.

3.10.2.3 Orifice Meters (FE)

The orifice meter system, used chiefly for steam and water flow measurements, is also used to measure the flow of several radioactive off-gas streams.

3.10.2.3.1 Principle of Operation

Orifice meters operate on the principle that the pressure drop in a fluid flowing through a restriction (orifice) of constant cross-sectional area will vary in direct proportion with the square of the flow rate. The relationship of the flow rate and pressure drop is expressed in general form by the equation:

$$Q = CA\sqrt{H}$$

where

Q = flow rate;
C = orifice coefficient;
A = cross-sectional area (constant) of the orifice;
H = pressure difference (variable) across the restriction.

The difference in hydrostatic pressure created by flow through the orifice is measured by a differential pressure transmitter with pressure-measuring taps upstream and downstream from the orifice.

3.10.2.3.2 Description of Sensing Element

The sensing element consists of a 0.1-inch-thick plate with a sharp-edged orifice positioned centrally in the pipe or duct which carries the fluid. The pressure taps on each side of the plate are located within the flanges that retain the orifice plate in the pipe or duct.

3.10.2.3.3 Flow Indication and Control

A schematic drawing of the orifice metering system is shown in Figure 3-67. A differential pressure transmitter connected to the orifice pressure taps converts the differential pressure across the orifice plate, due to fluid flow, to an air signal, which is proportional to the square of the fluid flow. The air signal is transmitted to a suitable indicating or recording device, or a recorder-controller. These devices have scales or charts calibrated in square root intervals, so they can directly express percentage of maximum flow. If the flow rate is controlled, a DOV is installed in the same process line as the orifice-plate assembly, and the position of the valve stem is regulated by a signal from the controller.

3.10.2.3.4 Orifice Meter Characteristics

The orifice meter system has a useful minimum-to-maximum flow range of 3:1. The measurement of flow rates beyond the range of a particular installation can be accomplished by either changing the size of the orifice or by changing the range of the differential pressure transmitter.

The orifice meter systems are accurate to approximately 3% of full scale, with sensitivity to flow fluctuations of approximately 2% of full scale.

3.10.2.4 Magnetic Flow Meters

Magnetic flow meters are used in the Purex Plant to monitor the flow of various chemical additions and condensate recycle streams to process vessels. At the process head-end, magnetic flow meters are used in an instrument system to control the batch quantities of sodium nitrate, aluminum nitrate, ammonium fluoride-ammonium nitrate, sodium hydroxide, potassium hydroxide, and nitric acid added to the dissolvers.

3.10.2.4.1 Principle of Operation

When an electrically conducting solution passes through a magnetic field generated by the flow meter magnet, there is induced in the solution a potential whose magnitude is directly proportional to the product of the strength of the field, the length of the segment of solution in the field, and the velocity of the solution. Since this relationship is independent of the resistance of the solution, equal potentials are developed in all conducting solutions moving at the same velocity through a fixed length of the same magnetic field. In a magnetic flow meter, where the field strength and sensing length are constant, the solution velocity, which is directly proportional to the flow rate, is also directly proportional to the electrical potential developed in the solution.

3.10.2.4.2 Description of Sensing Element

A magnetic flow meter flow transmitter consists of a non-magnetic tube through which the liquid flows, an electrically insulating liner

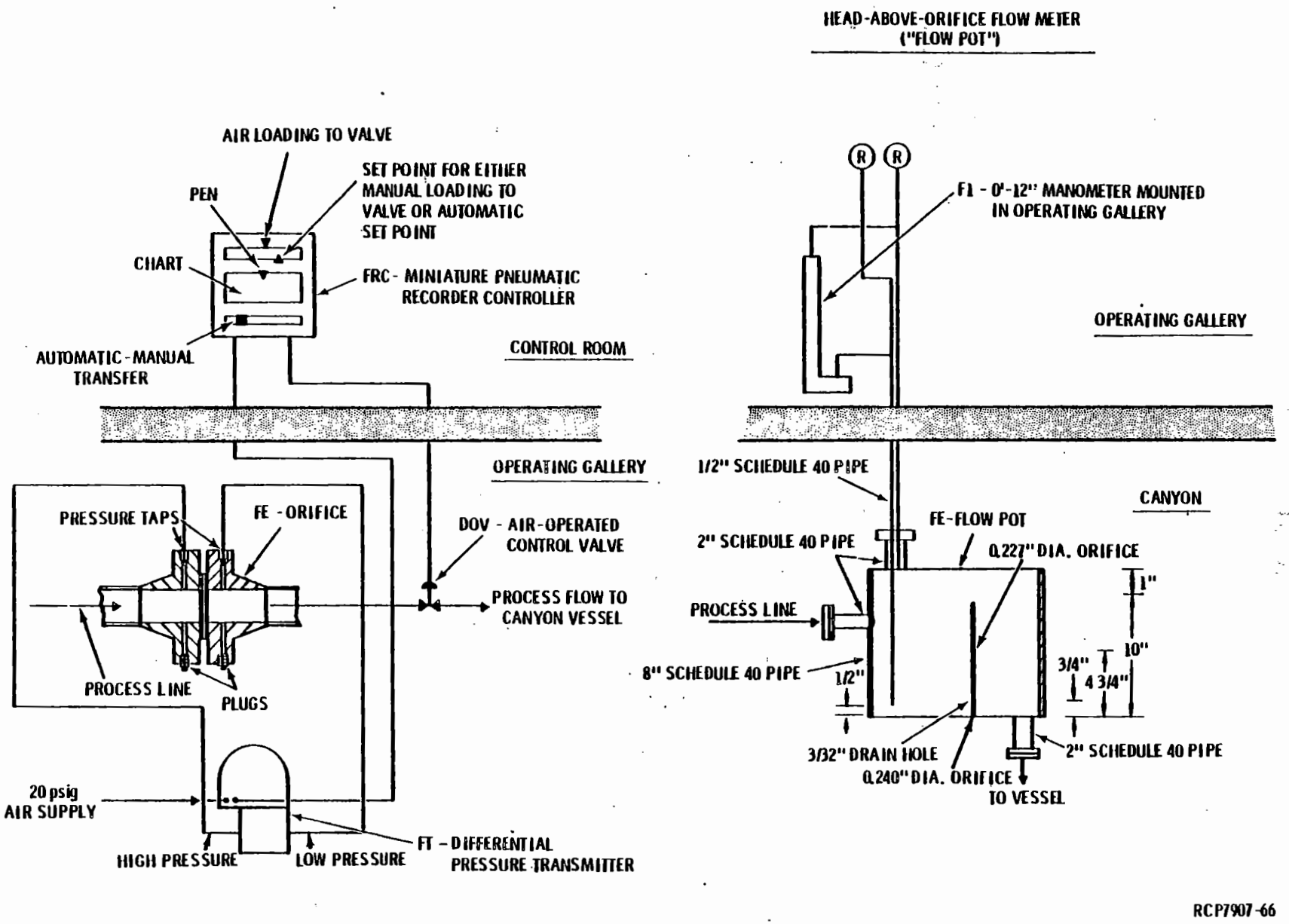

FIGURE 3-67. Orifice System.

on the inside of the tube, an electromagnet surrounding the outside of the tube which induces the magnetic field through the tube, and two metallic electrodes flush with the inside surface of the tube which contact the flowing liquid to pick up the induced potential.

3.10.2.4.3 Flow Indication and Control

For the head-end chemical addition applications, magnetic flow meters transmit electrical signals proportional to the flow rates to flow integrators located in the head-end control room. By sensing the flow rate over successive time periods, the integrator converts the signals to cumulative volume, which is indicated on a digital counter. When the total volume reaches the volume desired for the batch, the DOV in the solution addition line is closed by a batch controller connected to the flow integrator.

In other plant applications, the magnetic flow meter signal is usually transmitted to an electric-to-pneumatic converter, which in turn, is connected to a pneumatic flow indicator or recorder-controller. The recorder-controller transmits a pneumatic signal to a DOV to maintain the liquid flow rate at the value indicated by the controller set-point.

3.10.2.4.4 Magnetic Flow Meter Characteristics

The magnetic flow meter is accurate to ± 1% of full scale throughout the entire range of the entire system. The calibration is unaffected by changes in pressure, temperature, viscosity, or density of the flowing fluid.

3.10.3 Pressure, Level, Density, and Interface Instruments

3.10.3.1 Purge-Type Instruments

Purged dip tube systems are used for the measurement of weight factor, specific gravity, interface position, and solvent extraction column differential pressure.

3.10.3.1.1 Principle of Operation

Purge-type pressure measuring instruments utilize a flowing stream of air (or nitrogen) to counterbalance the hydrostatic head (pressure) of the liquid. A regulated stream of purging gas flows into the liquid through open-ended dip tubes, inserted a known distance into the vessel containing the liquid. The gas pressure required to displace the columns of liquid in the dip tubes is measured by a manometer and/or a differential pressure transmitter.

The weight factor reading is expressed in inches of water pressure required to balance the hydrostatic pressure at the lower end of the dip tube, and is directly proportional to the liquid level; i.e., liquid level equals weight factor divided by specific gravity.

Specific gravity measurements are made across a fixed liquid height between two gas-purged dip tubes. Specific gravity equals inches of water differential pressure between the dip tubes divided by the inches of vertical distance between the ends of the dip tubes.

In the 1C and 2E columns, interface position measurements are made across a fixed liquid height at the top of the column. The hydrostatic pressure developed across this fixed height is equal to the sum of the pressures developed by the heights of aqueous and organic phases multiplied by their respective specific gravities. Thus, the interface location can be determined if the specific gravity of each phase is known.

Solvent extraction differential pressure measurements, which are useful in detecting column flooding conditions, are determined by methods similar to those for measuring weight factor.

3.10.3.1.2 Interface Control System

As shown in Figure 3-68, to control the interface position at the top of a column, the interface position transmitter (IFT) sends an air signal to a recorder-controller (IFRC). The recorder-controller regulates, via an air signal, scrub stream flow or aqueous flow out of the column, thereby maintaining a given interface position.

Since the columns are pulsed, pressure variations are developed in the dip tube lines during the pulse cycle. These variations disturb the interface recorder readings, making it difficult to determine the interface positions. The pressure fluctuations are dampened, however, by the addition of 50 feet of 0.2-inch-OD copper tubing between the differential pressure transmitter and its connection to the air purge and dip tube lines.

3.10.3.1.3 Differential Pressure Transmitter Characteristics

The differential pressure transmitters (see Section 3.10.10.1 for a description) have various ranges depending on service. They can be adjusted for a range from zero to any value between the minimum-to-maximum full-scale values given in Table 3-21.

The transmitter readings are accurate to approximately 3% of full-scale value for weight factor and specific gravity systems. Since the interface position and column differential pressure systems are on pulse columns, the accuracy of measurement is approximately 10% of full-scale value. Transmitters are capable of sensing process variable fluctuations of approximately 2% of full-scale value.

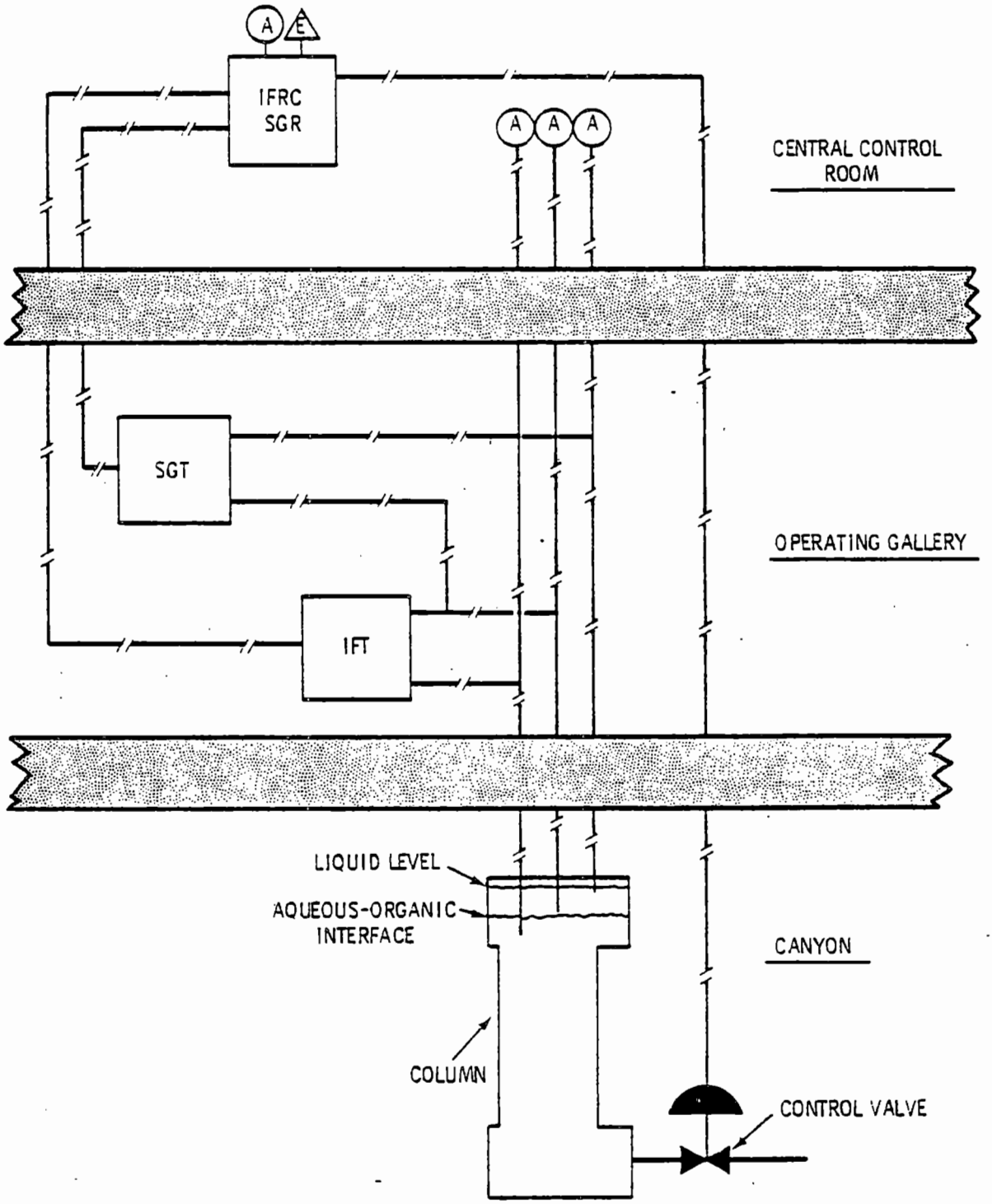

RCP7907-67

FIGURE 3-68. Pneumatic-Type Interface Monitoring System (1C and 2E Columns).

TABLE 3-21. Differential Pressure Transmitter Ranges.

Transmitter Function	Minimum Scale Value, in. of Water	Full-Scale Value, in. of Water	
		Minimum	Maximum
Weight Factor	0	25	50
	0	50	80
	0	80	129
	0	130	249
	0	250	399
Specific Gravity and Interface Position	0	1.5	10
	0	2	3.5
	0	4	20
	0	15	30
	0	40	80
Column Differential Pressure	0	1.5	10
	0	2	3.5
	0	4	20
	0	25	50
	0	50	80
	0	400	599

3.10.3.2 Liquid Level Measurement by Conductivity (LE)

Conductivity probes are used to indicate when the liquid level rises to a fixed point in the sumps in the PR room. The probe consists of two electrodes, each 4 inches long. When the sump liquid level reaches the tips of the electrodes, the liquid conducts current between the electrodes. This current actuates a relay, which in turn operates an alarm light.

3.10.3.3 Interface Position Measurements by Floats

A float-type device is used to determine the location of the aqueous-organic interface position on all of the Purex Plant solvent extraction columns except the 1C and 2E columns.

3.10.3.3.1 Principle of Operation

The difference in density between the two liquid phases at the interface of a solvent extraction column is sufficient to suspend a carefully designed and weighted float. A section of tubing containing a magnetic core is attached to the top of the float and functions as an armature. The location of the armature inside two coils is related to the coils' inductances, which change with the armature position. An electrical signal proportional to the float position defines the location of the interface.

3.10.3.3.2 Description of Sensing Element

The float, shown in Figure 3-69, consists of a 12-inch length of 1.5-inch-diameter pipe. The bottom is a double thickness of 0.03-inch-thick plate. The top is similar to the bottom except that there is a coupling mounted in the center into which an approximately 15-inch length of 0.1-inch tubing is attached. The upper 7.4 inches of the tubing contain the magnetic core (armature). The coils and coil tube surrounding the armature are identical to those used in the Type "G" electronic rotameter transmitter described in Section 3.10.2.1.

To allow liquid to contact the float and insure vertical travel, the float is surrounded by an 18.8-inch length of 2-inch-diameter Schedule 40 pipe perforated with 4 sets of 5 slots, each 1 inch wide by 3.5 inches long.

3.10.3.3.3 Float-type Interface Control System

The leads from the coil pass in a three-wire cable through a 1-inch flexible metal hose (single braid) to a 1-inch wall-type electrical connector. They connect to an electrical-pneumatic converter, which in turn is connected to an interface recorder-controller. As shown in Figure 3-70, the interface recorder-controller connects to a valve positioner recorder-controller (VPRC) which controls the aqueous outflow from the column by regulating the flow control valve.

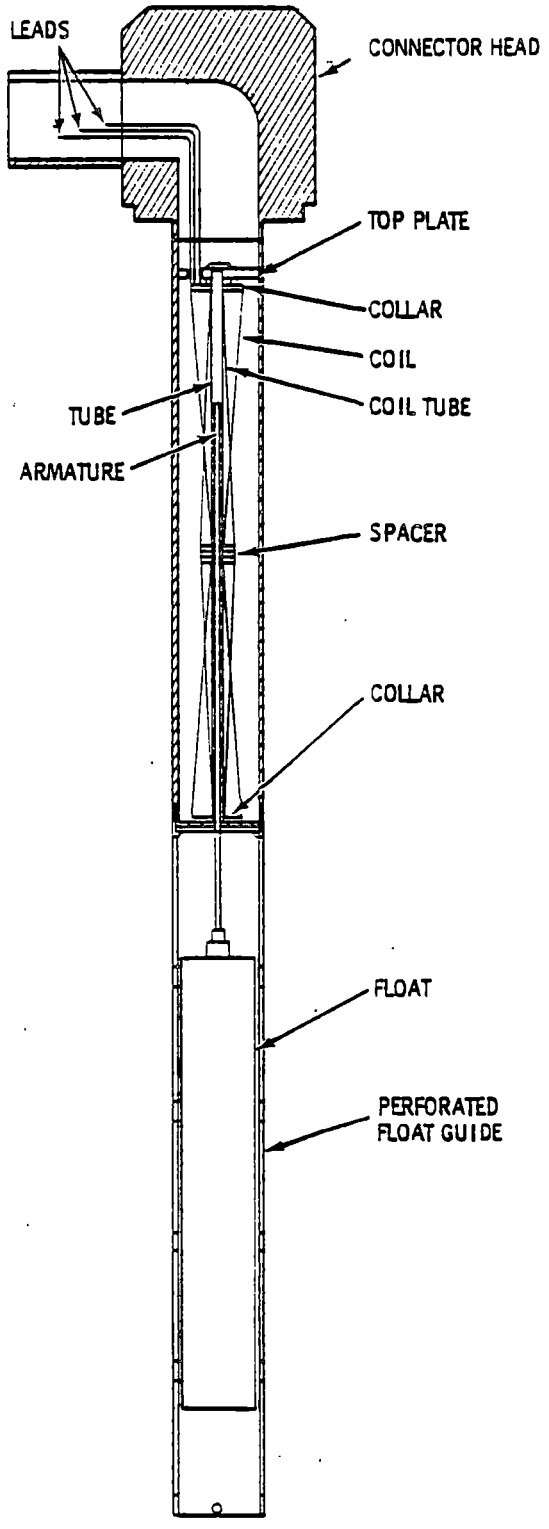

FIGURE 3-69. Float-Type Interface Controller Sensing Element.

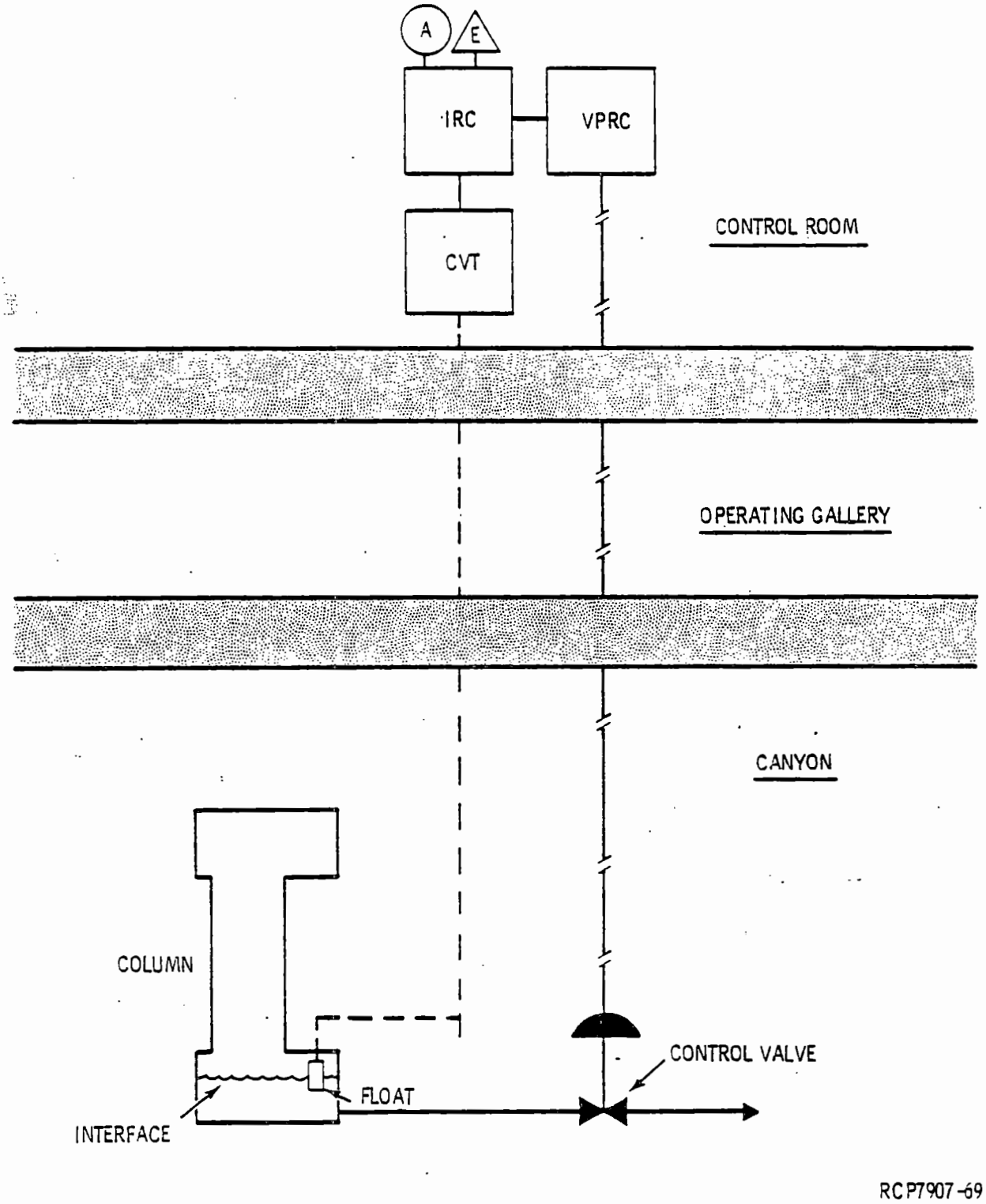

FIGURE 3-70. Float-Type Interface Monitoring System.

3.10.3.4 Bourdon Gages (PI)

Bourdon gages are used for non-remote measurement of the pressure of fluids in vessels or lines. Some Bourdon gages are used for measuring only pressure, and others can measure either vacuum or pressure.

The Bourdon tube sensing element is a curved (essentially circular) tube of elliptical cross-section, sealed at one end. The open end of the tube is connected directly to the process line or vessels. Pressure applied to the open end tends to straighten the tube; conversely, vacuum causes the tube to curl up. The movement of the closed, free end of the Bourdon tube is a function of the applied pressure.

The Bourdon tube is fabricated of bronze or 300 series stainless steel, depending on the service. The scale faces are 3.5 and 4.5 inches in diameter.

The gages are accurate to approximately 1% of full scale, and are sensitive to approximately 0.5% of full scale.

3.10.4 Thermometers (TE)

3.10.4.1 Resistance Thermometers

Resistance elements are used for all temperature measurements in radioactive zones and in those nonradioactive applications where a temperature record is needed.

Resistance elements make use of the variation in electrical resistance of a coil of nickel or platinum wire due to temperature changes. The wire comprising the resistance element is wound on an insulator and encased by a thin protective stainless steel tube. The sensing element, which is approximately 6 inches long and 0.3 inch in diameter, is installed in a stainless steel well fabricated of 0.5-inch Schedule 40 pipe mounted in a jumper assembly. The resistance value of the nickel wire elements with the range of 0 to 150°C is 504.9 ohms at 30°C, and is 45.5 ohms at 0°C for the platinum wire elements that measure up to 300°C. Nickel wire elements with operating ranges of 0 to 60, 100, and 120°C are also used.

For measuring and controlling temperatures, a resistance element is connected electrically to an electric-to-pneumatic converter to form a Wheatstone bridge. The converter sends an air signal, proportional to the temperature, to a miniature recorder or recorder-controller. In some cases, the recorder-controller sends an air signal to a steam flow recorder-controller or directly to a DOV in a cooling water line.

Resistance elements are accurate to approximately 3% of full scale, and are sensitive to temperature increments of approximately 2% of full scale.

3.10.4.2 Mercury Thermometers

Mercury thermometers with dial indicators are used for temperature measurement on nonradioactive process streams and vessels where no record is required. These thermometers function on the basis of the difference in the coefficient of expansion of mercury and the coefficient of expansion of the confining system.

The mercury-filled sensing well, made of Type 304 stainless steel, is connected by a 0.25-inch-diameter, flexible armor-covered stainless steel capillary to a Bourdon tube pressure gage calibrated for temperature readings. This gage has a 4.5-inch-diameter scale. All linkages are stainless steel. The case is compensated for ambient temperature variations.

The thermometers have ranges calibrated from 0 to 110°C or 0 to 150°C, and are accurate to approximately 3% of full scale and sensitive to temperature increments of approximately 2% of full scale.

3.10.5 Ionization Chambers (RE)

Gamma radiation detection instruments using ionization chambers serve for supplementary, approximate measurements of decontamination of the plutonium and/or uranium-containing streams, and provide an indication of the intensity of gamma radiation near selected equipment pieces. Ionization chamber monitors are mounted in sleeves in the concrete shielding wall opposite about 20 canyon vessels, including dissolvers, feed centrifuges and their feed tanks, uranium concentrators, acid concentrators, plutonium product receiver, and plutonium sampler tanks. The sleeves, which are isolated from the canyon atmosphere by a 0.2-inch-thick steel plate, terminate in the sample gallery, allowing contact maintenance of the ion chamber and cables.

Ionization chambers function in the following manner: gamma radiation from sources "seen" by the instrument enters a gas-filled chamber, causing ionization of the gas. The ionization increases the electrical conductivity of the gas. The conductivity, which is measured, is an indication of the radiation intensity.

The ionization chamber is a 5-inch-diameter plastic cylinder, 18.75 inches long, filled with argon gas. Only gamma radiation is sensed since beta rays cannot penetrate the plastic, and no "windows" for beta radiation entry are provided. An Aquadag* (graphite suspension) or boron carbide coating on the inside of the cylinder is the negative electrode. The positive electrode is an axial 0.5-inch-diameter aluminum rod.

---

*Trade name of Acheson Colloids Co., Division of Acheson Industries Inc., Port Huron, Michigan.

Each ion chamber is connected to a picoammeter and is also connected by shielded cable to a four-point electrical selector switch which allows four ion chambers to be monitored by one recorder. The output of the switch goes to an amplifier, which in turn transmits a 0- to 50-mv signal to a standard recorder.

The instrument is calibrated to indicate gamma radiation readings of from 0.003 mr/hr to 300 R/hr. The accuracy of the instruments in the system is approximately 8% of full scale. The sensitivity of the instruments in the system is approximately 5% of full scale.

3.10.6 In-Line Monitors

In-line monitors have sensing elements installed directly on or in process streams or continuously flowing sample streams for determining concentrations of specific chemical constituents or levels of specific types of radiation. Components and operating functions common to the various in-line monitors are described below. The individual monitors are described in more detail in subsequent sections.

3.10.6.1 Sampler Stations

The remote sampler stations are located in the sample gallery. These concrete and stainless steel enclosures range in external size from 63 X 30 X 18 inches for the minimum shielding of stainless steel, to 111 X 81 X 78 inches for the most heavily shielded concrete type. The enclosures contain the equipment necessary for obtaining highly radioactive samples from the streams and vessels in the canyon cells with minimum exposure to personnel. Any liquid leaks from piping or equipment are confined to the enclosures and drain to a collection vessel behind the shielding wall.

Ventilation of the enclosures is provided by a separate vent header system, which assures that airflow will be from the personnel area into the contaminated enclosure if a breach in the enclosure wall should occur.

The arrangement of a typical sampler station is shown in Figure 3-71. Each sample enclosure contains an air-operated jet for transfer of samples from the canyon vessel or stream through a sample cup and then through the jet back to the process vessel. Samples to be analyzed in the laboratory are taken from the sample cup by any one of several methods, depending on the intensity of radioactivity expected. For those enclosures which include in-line monitoring equipment, the monitor cells are inserted upstream of the sample cup.

3.10.6.2 In-Line Monitor Room

Electronic components, except for preamplifiers, located as close to the sensing head as practical, are located in an air-conditioned in-line monitor room, an uncontaminated area on the same level as the sample gallery.

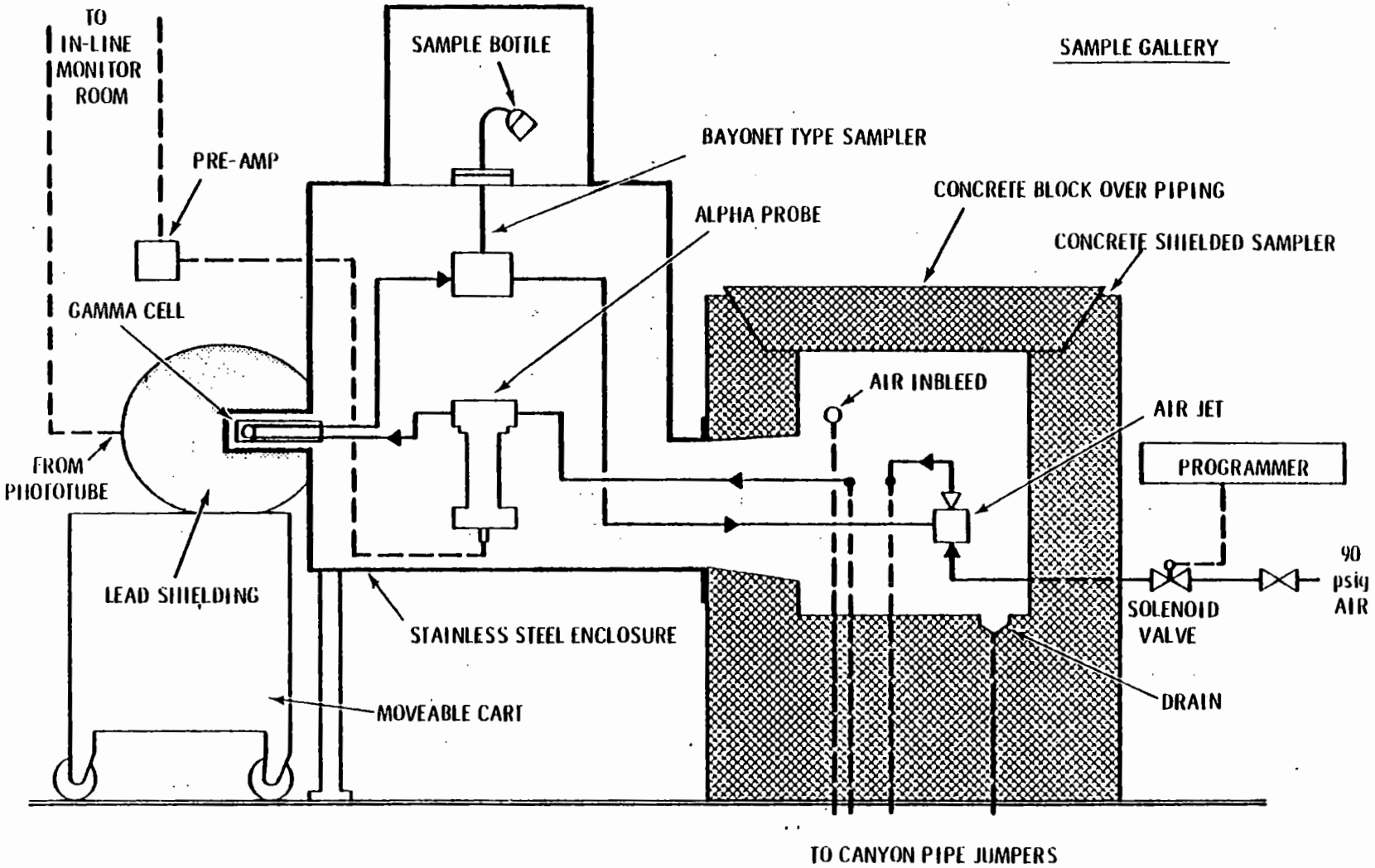

FIGURE 3-71. Sample Station Containing Gamma and Alpha In-Line Monitors.

3.10.6.3 Gamma, Alpha, and Neutron Monitor Components

All gamma, alpha, and neutron in-line monitors have specially designed sensing heads located in a sample station, remotely on a canyon vessel, or in a nonradioactive process stream. Standard module electronic components meeting AEC Specification TID-20893 are used to measure the signal from the sensor. Each system usually has a high voltage power supply (HV), amplifier (AMP), discriminator (DISC) or single channel analyzer, and linear count-rate meter (CRM), all located in the in-line monitor room. The CRM output is transmitted to a strip-chart recorder located in the central control room.

3.10.6.4 Calibration of Monitors

The gamma, alpha, and neutron monitors are calibrated, using a 128-channel analyzer mounted in the in-line monitor room. The multichannel analyzer includes provisions for data printout.

A Ba-133 source is mounted in a movable lead-shielded receptacle, and each gamma probe is placed in it and calibrated in the range of 0 - 1.0 MeV over 128 channels. After calibration, the probe is reinstalled in the monitoring position and a gamma scan of the process solution is made with the multichannel analyzer.

The alpha and neutron monitors are calibrated in place with process solution containing Pu-239.

Calibration curves have been developed for all monitors, and are periodically checked against laboratory analyses.

3.10.6.5 Scaler-Teletype System

Certain plutonium-bearing stream monitors, which have recorders located in the central control room, are also connected to a scaler-teletype system to ensure reliability and redundancy of the measurements on those streams for criticality prevention. The scaler system consists of the following components, all located in the in-line monitor room: (a) blind (no continuous visual output) scalers connected to the discriminator outputs of nine alpha and neutron monitors; (b) a blind timer for determining counting period; (c) a time-of-day clock; (d) a display scaler; (e) a teletype scanner; and (f) a timer to set the cycle timing period. The following monitors are connected to the scaler system: 1BP alpha, 1BSU alpha, 2AW alpha, 2BP alpha, 3AW alpha, 3WB neutron, three neutron monitors on the 1BX column, and the 1BXP neutron monitor.

3.10.6.6 Sodium Iodide Crystal Gamma Monitors

Gamma scintillation detectors, based on thallium-activated sodium iodide crystal sensing elements, are used for in-line gamma monitors in

the Purex Plant. Functionally, gamma rays interact with the sensor crystal to produce minute light pulses, which are converted to electrical current pulses by a photomultiplier tube optically coupled to the hermetically-sealed crystal.

3.10.6.6.1 Gamma Monitors for Zirconium-Niobium-95 and Ruthenium-Rhodium-106

The fission product concentrations of several process streams are measured by sodium iodide gamma monitors located at manual sample stations as illustrated in Figure 3-72. Each monitor has a sample cup, which holds 32 mℓ of solution, and is fabricated of Fluorothene or highly polished stainless steel to reduce background radioactivity buildup.

The sample cup is mounted in a lead container for background shielding along with a sodium iodide crystal and phototube assembly. The assembly consists of a thallium-activated sodium iodide [NaI (TI)] crystal, 2 inches thick by 1.75 inches in diameter, attached to a photomultiplier tube connected to a close-coupled pulse transformer. The signal from the transformer is transmitted to the electronic components in the in-line monitor room, and then to a recorder in the central control room. Lead collimators are placed in front of the crystal on highly radioactive streams to reduce count rates and exposure of the phototube to radiation.

During operation, the sampler jet is turned off for 5 minutes every hour to measure the cell background, which usually varies less than ± 2% during a 20- to 30-day run period. Extremely high-level gamma exposure for a long period can cause the background to rise and necessitate decontamination or replacement of the cell.

Gross gamma monitoring systems, shown in Figures 3-73, 3-74, and 3-75, count all gamma energies above 0.45 MeV, to discriminate against I-131 (0.364 MeV) and Pu-239 (0.38 and 0.41 MeV). The monitors are used to determine gamma activity (principally Zr-Nb-95) of the product streams for each cycle [HAP (organic), 1BP (aqueous), 2BP (aqueous), and 2EU (aqueous)]. There is also a monitor on the recycle organic stream (100).

Fission product concentrations from 1×10^{-1} to 1×10^{6} μCi Zr-Nb-95, plus Ru-Rh-106 per liter can be measured with the system.

3.10.6.6.2 Iodine Monitors

Gamma monitors are used to determine the effectiveness of the absorbers used for removing iodine from the dissolver off-gases. Monitors on the acid recovery systems provide an indication of the amount of I-131 discharged to the atmosphere. The gamma monitor systems are similar to those described in Section 3.10.6.6.1, except that a single-channel analyzer is used instead of a discriminator. The analyzer window is set to measure

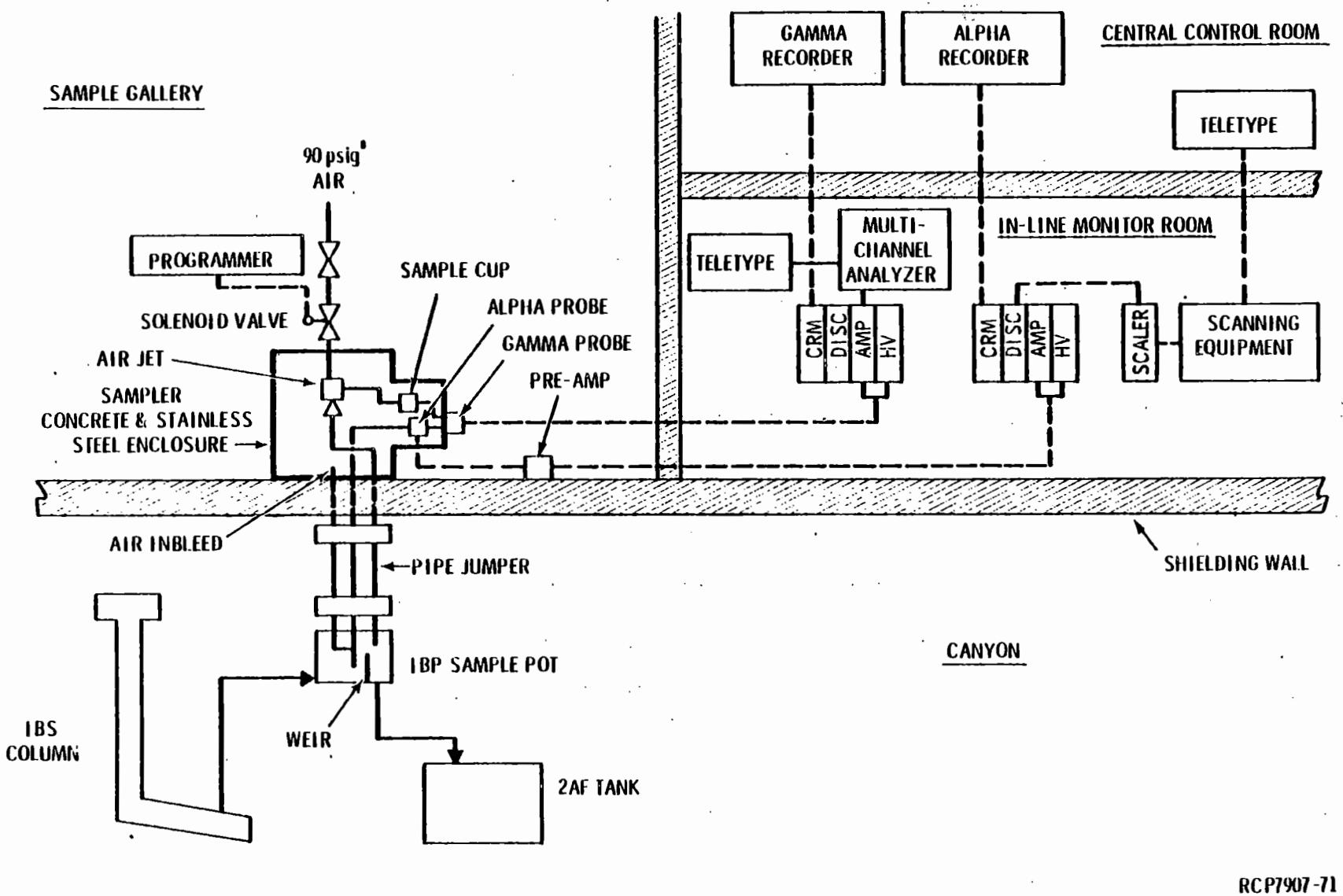

FIGURE 3-72. Schematic of Gamma and Alpha Monitoring Systems.

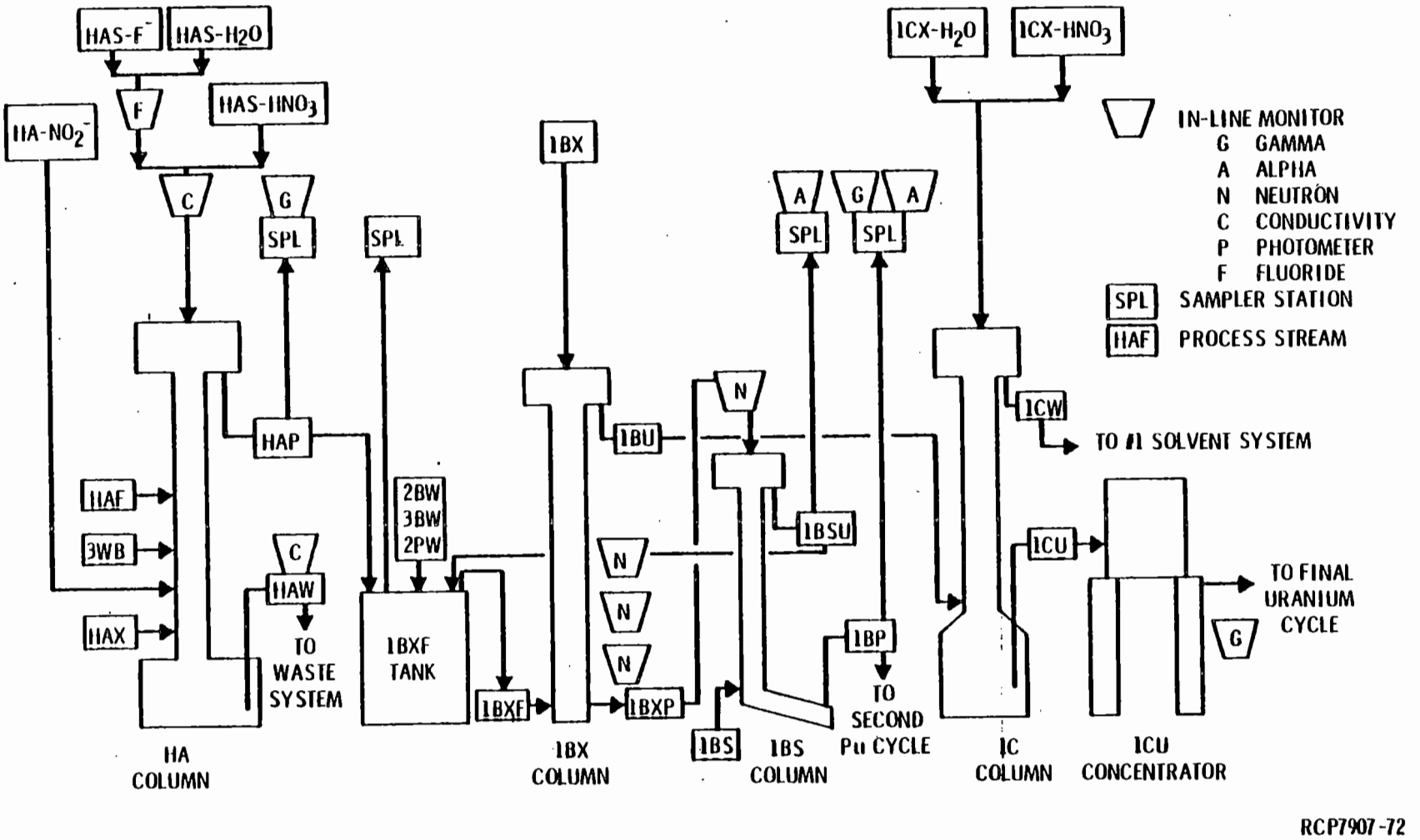

FIGURE 3-73. First Partition Cycle In-Line Monitors.

9413275.0675

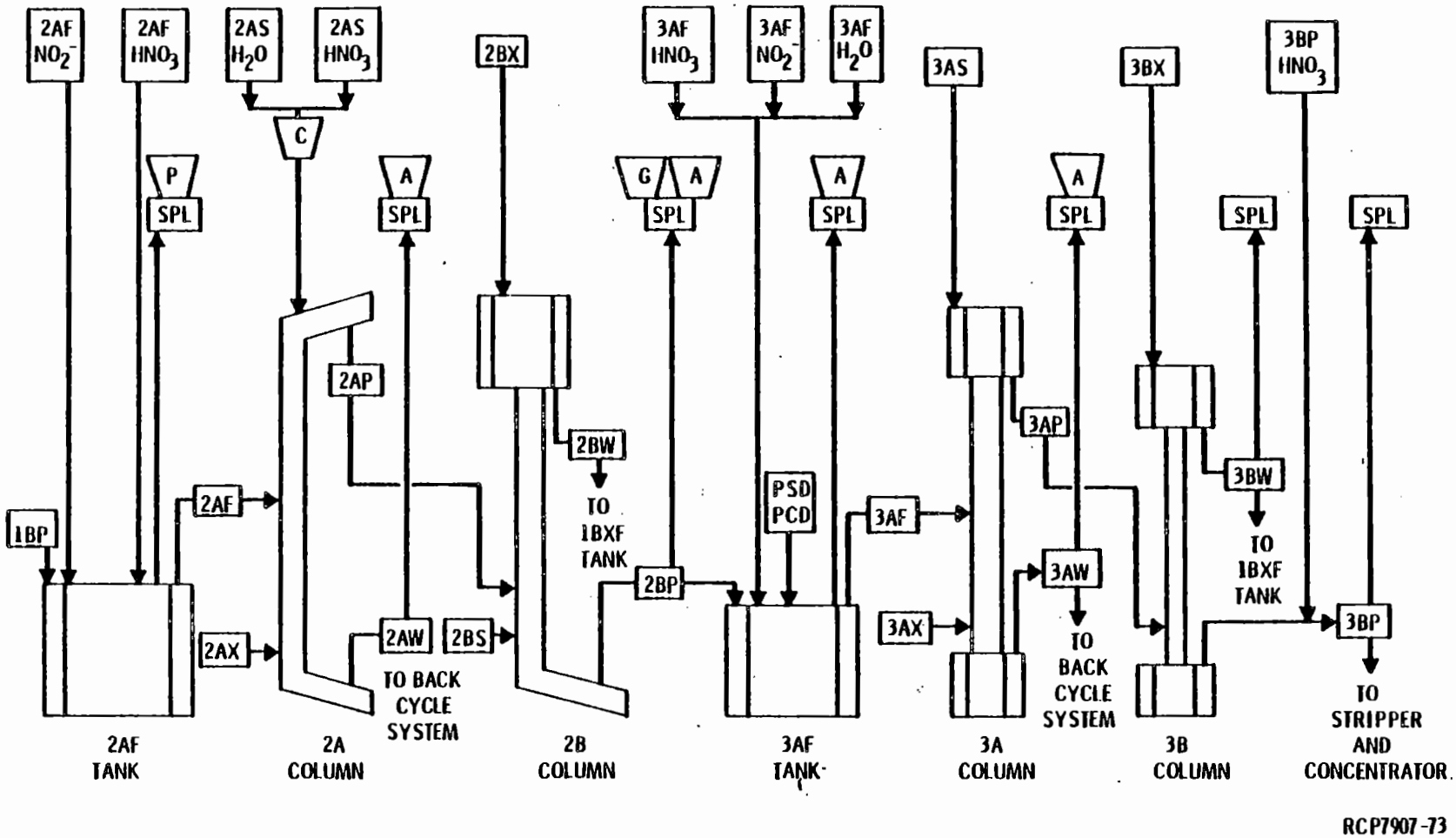

FIGURE 3-74. Second and Third Plutonium Cycles In-Line Monitors.

9413275.0676

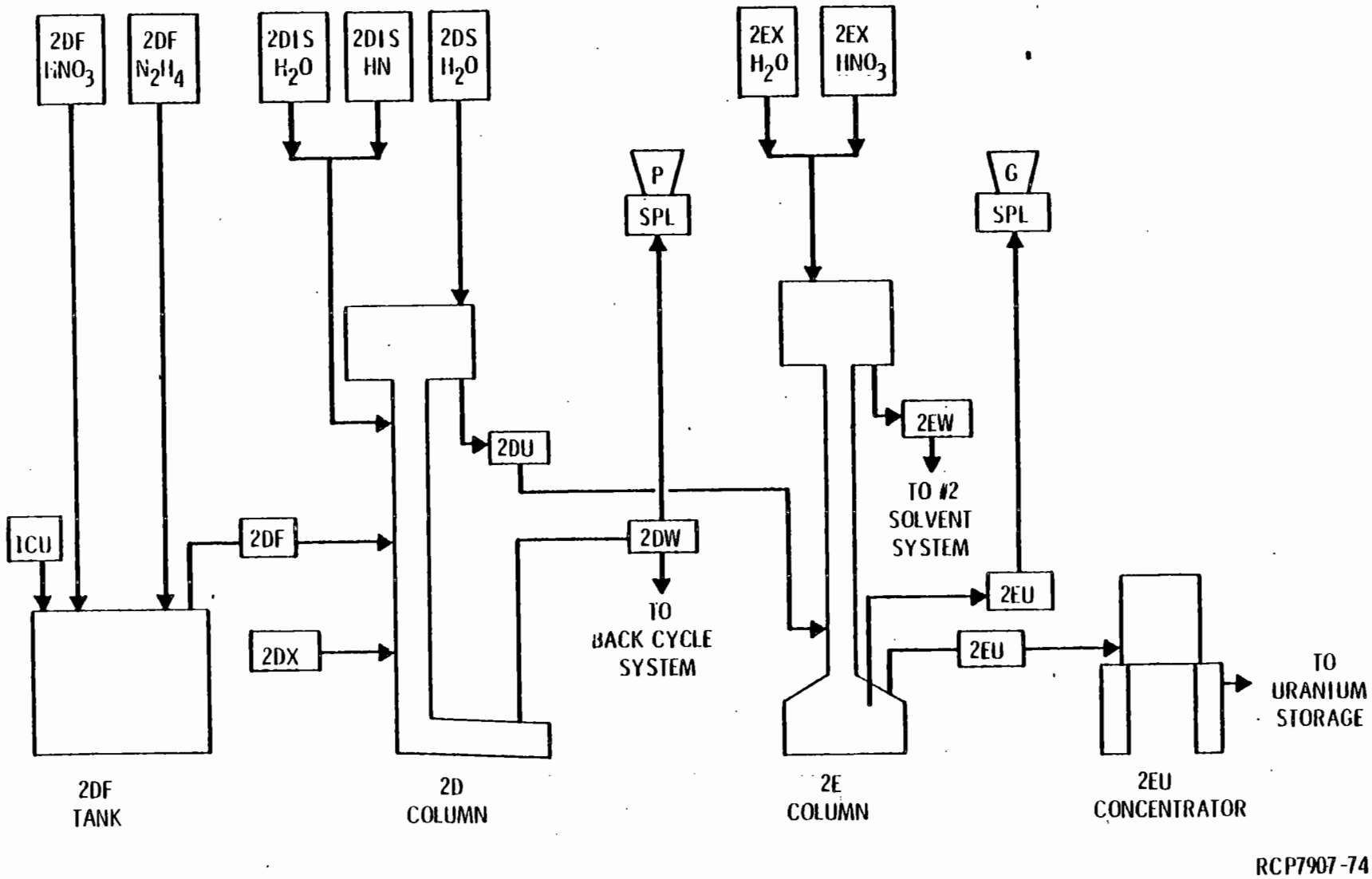

FIGURE 3-75. Final Uranium Cycle In-Line Monitors.

0.344 to 0.384 MeV, which centers the I-131 peak at 0.364 MeV. The sample cell used is a modified 1-liter stainless steel beaker coated with Fluorothene. A once-per-hour water flush of the sample cell normally keeps the cell background low. In the event that the cell background rises, an acetone flush is used.

3.10.6.6.3 Neptunium Monitor

A sodium iodide crystal gamma monitor is used to measure the neptunium content of the effluent stream from the neptunium anion exchange column (see Figure 3-76). The total product stream flows through the monitor sample cell. The monitor has, in addition to a single-channel analyzer, a baseline sweep generator that continuously varies the threshold setting of the gamma energy pulse height analyzer from 0 to 10 volts, with 1% window (senses 1% of the gamma energy range). Normal sweep time is 5 minutes. The analyzer is calibrated for 0 - 0.5 MeV over the 0 - 10 range, using a Ba-133 source. The output of the CRM goes to a variable-speed strip-chart recorder.

3.10.6.7 Alpha Monitors

The plutonium concentrations of several process streams are measured by alpha scintillation monitors located at manual sample stations typified by the one shown in Figure 3-71. The alpha monitors, located on the 1BP, 1BSU, 2AW, 2BP, 3AF, and 3AW process streams (Figures 3-73 and 3-74), are used for criticality prevention to ensure that the Pu-239 entering geometrically unfavorable vessels remains at safe levels. They are also used to monitor Pu-239 losses from certain solvent extraction columns. The alpha monitors are influenced by the Pu-239 to Pu-240 ratio, and appropriate adjustments in interpretation of the data are necessary if the ratio changes. The monitors also are applicable for monitoring U-233 concentrations when processing thorium, but different calibration curves are required.

The alpha monitoring system is shown in Figure 3-72. Each monitor has a stainless steel flow well, which encloses a scintillator consisting of 0.001-inch-thick cerium-activated surface on a 0.75-inch-thick by 3-inch-diameter Vycor* glass disc. The process stream is in direct contact with the activated surface. Alpha particles interact with the surface to produce light pulses, sensed by a photomultiplier tube, which is attached with epoxy cement to the scintillator. The signal from the phototube is amplified by a preamplifier located within 10 feet of the detector. The amplified signal is transmitted to the electronic components located in the in-line monitor room, and from there to a recorder in the central control room. Five of the monitors are also connected to the scaler-teletype system.

*Trade name of Corning Glass Works, Corning, N.Y.

9413275.0678

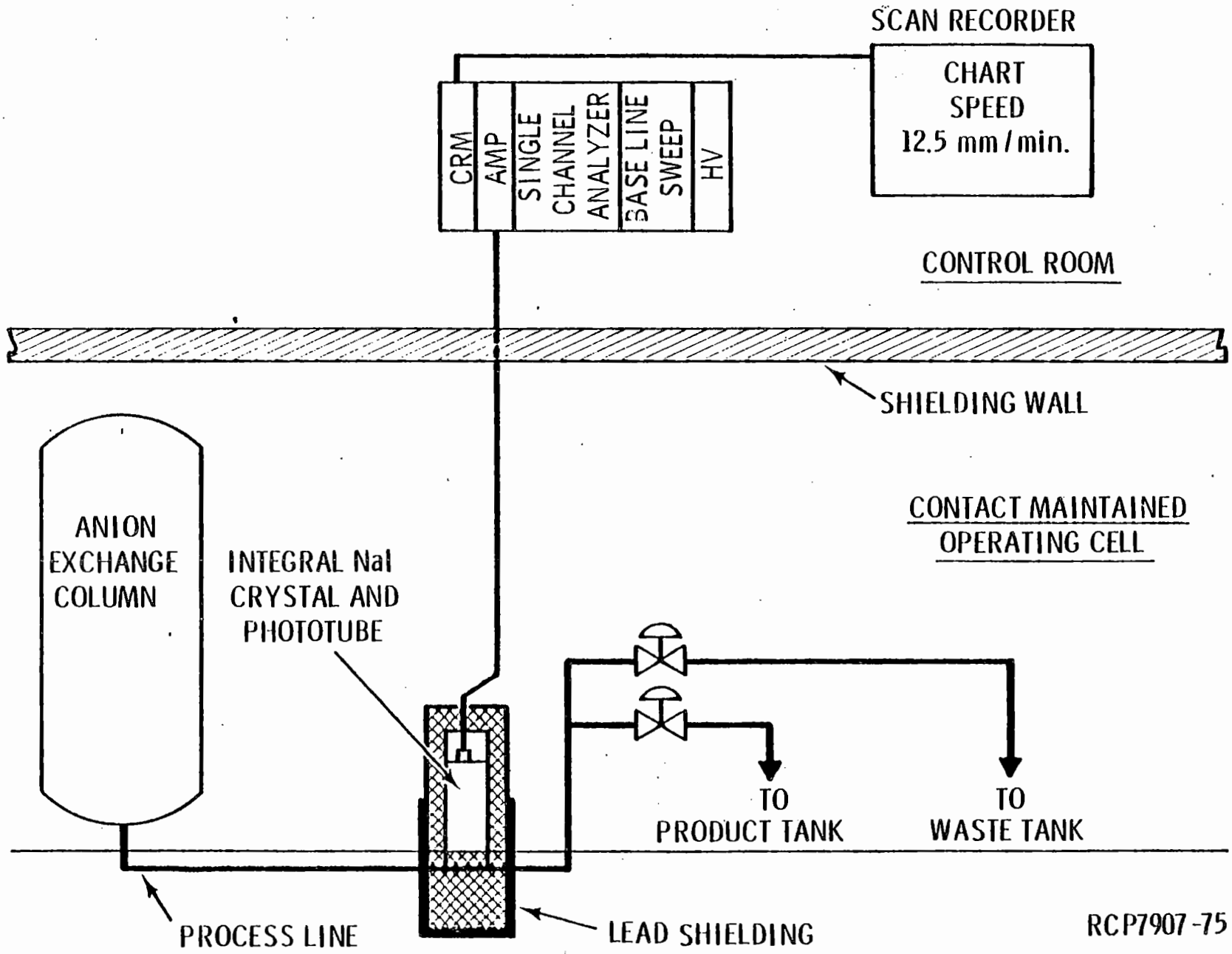

FIGURE 3-76. Continuous Gamma Scan Monitor -- Neptunium Anion Exchange.

For an alpha monitoring system, the range of measurement is 1×10^{-4} to 30 g of Pu-239/ℓ. The higher ranges require the use of a single-channel analyzer instead of a discriminator to measure only a portion of the energy spectrum, thus reducing the total counts. This technique, however, raises the lower measurable concentration level to about 0.1 g Pu-239/ℓ.

3.10.6.8 Neutron Monitors

Neutron monitors are used for the direct determination of plutonium concentrations in various process streams, and for measuring indirectly the cadmium neutron poison concentration in a cadmium nitrate solution, which is used as a jet motive fluid for transferring plutonium product solutions needing solvent extraction rework.

The neutron detection element is a tube filled with boron trifluoride (BF_3) gas. Thermal neutrons react with the boron to produce alpha particles and lithium nuclei, which ionize the gas. These ionization pulses produce electrons at the anode of the detector, resulting in current pulses which are amplified and transmitted to a count-rate meter.

3.10.6.8.1 Plutonium Concentration Measurement

The plutonium concentrations of certain process streams are measured directly by neutron monitors located externally to a vessel or a pipeline. Single monitors are located on the HAF feed tank (TK-E6), the 1BXP stream, and the 3WB waste tank (TK-J1). Three monitors are mounted 5 feet apart vertically on the lower section of the 1BX column and provide an instantaneous indication of changes in the Pu-239 concentration profile. The 1BX column monitors have reliably detected incipient loss of plutonium-uranium partitioning during routine operation.

A schematic illustration of the system is given in Figure 3-77. One or two boron trifluoride (BF_3) tubes mounted in a paraffin moderator measure the neutrons resulting primarily from (α,n) reactions in the process solution.

The neutron probes are used to measure Pu-239 concentrations of from 1×10^{-2} to 10 g/ℓ. Even though the actual count rates obtained are relatively low (2 to 1,000 counts per minute) for the Pu-239 values above, the monitors have proved quite reliable.

As in the case of alpha scintillation counters, neutron monitors are sensitive to the Pu-239 to Pu-240 ratio, and changes in the ratio must be taken into account when interpreting calibration curves.

9413275.0680

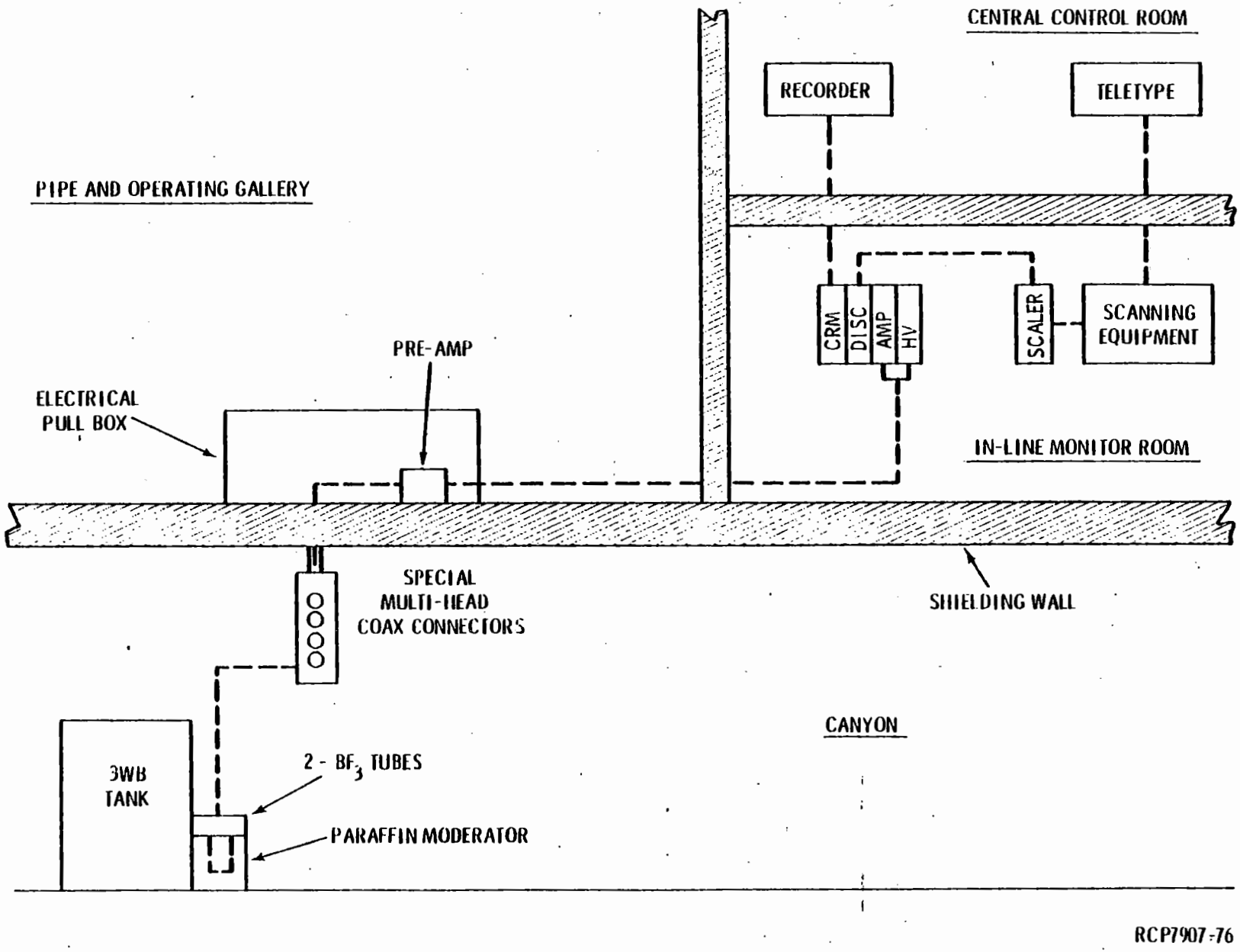

FIGURE 3-77. Neutron Monitoring System.

3.10.6.8.2 Cadmium Nitrate Monitor

A solution of cadmium nitrate, a neutron poison, is used as the motive fluid for a jet transferring out-of-specification, high concentration Pu-239 solutions to a geometrically unfavorable vessel for solvent extraction rework. The cadmium nitrate makeup tank is equipped with a neutron source, mounted with a BF_3 tube at the bottom of the tank. The BF_3 tube signal is transmitted to a preamplifier located close by, then to electronic equipment in the in-line monitor room, and finally to a recorder in the central control room.

As the cadmium nitrate concentration increases, it absorbs more neutrons, so fewer are counted. A converter between the count-rate meter and recorder reverses the signal so that an increase in the cadmium nitrate concentration causes a corresponding increase in the recorder reading (actual counts will decrease). The pump which supplies cadmium nitrate solution to the transfer jet is interlocked with the monitor so that the pump will not operate unless the cadmium nitrate concentration is above a minimum value. The range of measurement is 0 - 100 g of cadmium nitrate/ℓ.

3.10.6.9 Monitors Using Photometers

Photometers are used in the Purex Plant to determine the concentration of nitrite ion and uranium in the 2AF and 2DW streams, respectively. The photometer measures with a phototube the amount of light transmitted through a sample containing the ion whose concentration is desired. The greater the concentration of the ion, the less the amount of light transmitted through the sample.

3.10.6.9.1 Nitrite Monitors

Sodium nitrite is added to the second plutonium cycle feed (2AF) tank to convert the plutonium to the plus four valence state so that it will be extracted in the 2A column. A slight excess of nitrite is usually added to assure complete oxidation of the plutonium, but a large excess is unacceptable since it will react with the hydroxylamine nitrate-hydrazine reductants in the 2B column, possibly resulting in high plutonium losses to the 2BW stream, or, in extreme cases, possible loss of partitioning in the 1BX column.

The monitor shown in Figure 3-78 contains a photometric analyzer, which determines the 2AF sodium nitrite concentration indirectly by measuring the NO_2 gas concentration in air that is purged through a sample of the 2AF solution. An air purge can be passed through the photometer for a zero check of the instrumentation, and a calibration filter can be moved into place to check the span.

The normal range of measurement is 5×10^{-5} to 5×10^{-3} M nitrite. However, measurements as low as 1×10^{-6} M and as high as 3×10^{-2} M can be made with existing equipment by shortening the light path of the photometer cell to provide a higher range of measurement, or lengthening the path to provide a lower range of measurement.

9413275.0682

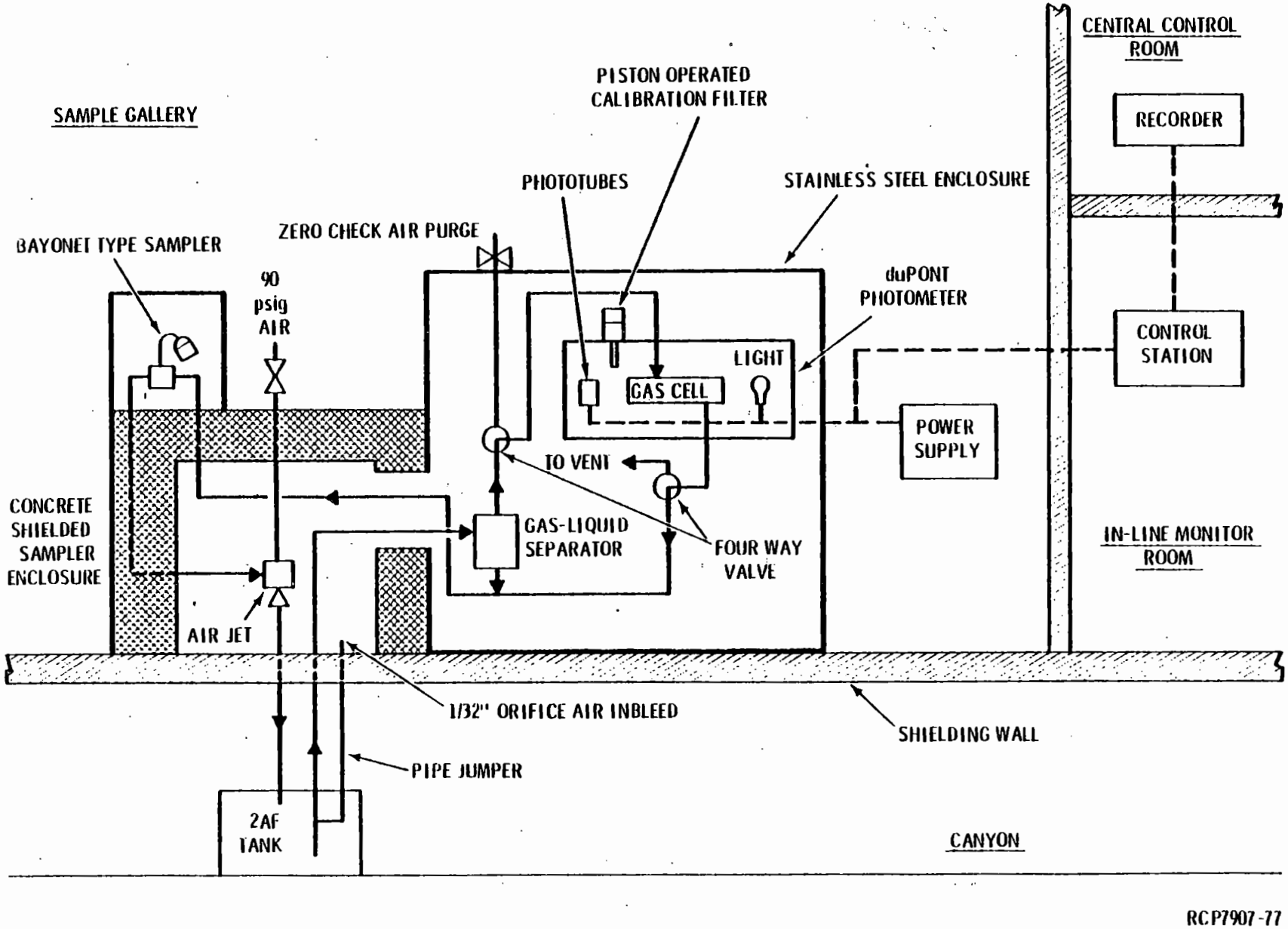

FIGURE 3-78. Nitrite Monitoring System.

3.10.6.9.2 Uranium Monitor

A single-beam filter photometer monitors the uranium concentration in the 2DW stream by measuring the light transmission through a stream sample. Filters are used in the photometer to enhance its measurement sensitivity. Although the normal range of measurement of the photometer is approximately 5 - 70 g U/ℓ, different cell window spacings can be made to increase or decrease the range.

3.10.6.10 Conductivity Monitors for Nitric Acid Determination

An electrodeless conductivity type monitor, shown in Figure 3-79, measures the nitric acid concentration in the HAS, HAW, and 2AS streams. These monitors can be operated with or without temperature compensation by means of a selector switch.

An electrodeless conductivity system measures the conductivity of a closed loop of solution as a function of the inductive coupling between two toroidal coils. The closed loop is contained in a non-conductive tube (or a metallic tube with a non-conductive lining) around which two toroidal coils are positioned.

The input toroid is energized by an oscillator. The voltage induced in the output toroid is amplified and then metered to indicate the solution conductivity, which is proportional to the ionic concentration of the solution.

A flow-through cell containing an electrodeless conductivity monitor is installed on the HAS and 2AS stream process piping in a contact-maintained area in the sample gallery. The signal from the cell is transmitted to an amplifier and recorder located in the central control room. The normal range of measurement is from 1 to 3M HNO_3.

The probe-type conductivity monitor, like that shown in Figure 3-80, is located in a pot on the HAW line in the canyon behind the concrete shielding wall. The probe contains two carbon electrodes which pass through a stainless steel plug encased in a stainless steel tube. The bottom of the tube is open to permit liquid contact with the carbon elements. The liquid completes an electrical circuit between the two probes, allowing the flow of electrical current. The magnitude of the current flow through the liquid is proportional to its ionic concentration. A screen covering the bottom of the tube prevents the entry of particulates which could short out the probe. The monitor is connected to an amplifier and recorder located in the central control room. The normal range of measurement is 0 to 6M HNO_3, but the range is adjustable.

9413275.0684

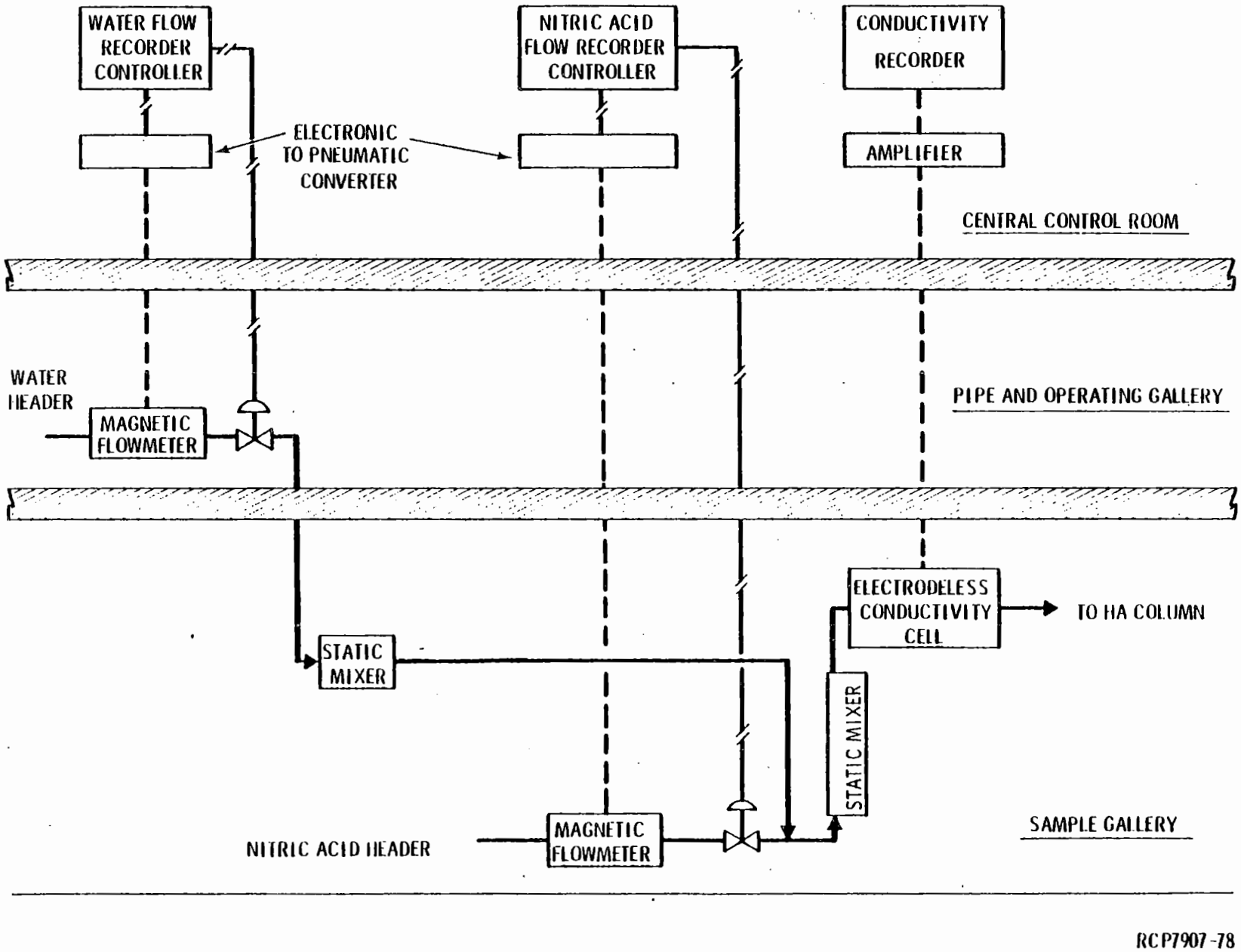

FIGURE 3-79. Electrodeless Conductivity Monitoring System.

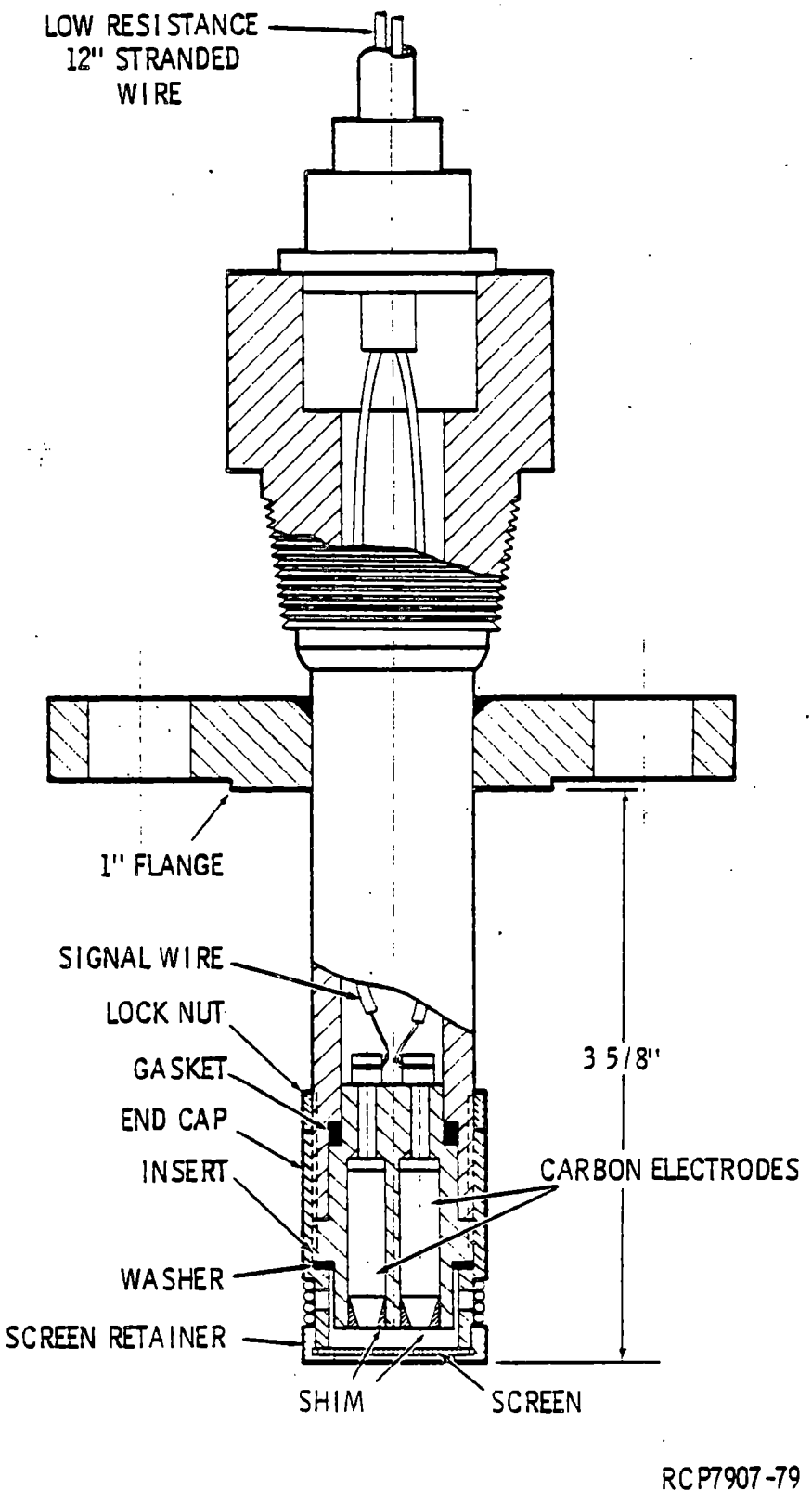

FIGURE 3-80. Conductivity Probe.

3.10.6.11 Other Monitors

Most of the liquid and gas streams leaving the Purex Plant have either a gamma, beta, or alpha monitor, depending on stream composition.

Combustible gas analyzers are located on sample streams from each of the three dissolver off-gas systems and on the vent from the dissolver decladding waste storage vessel to assist in maintaining the concentration of ammonia and hydrogen below explosive limits while operating this equipment.

For gas analyses, the sample is first drawn through an analyzer cell for a combined hydrogen and ammonia combustion analysis, then through a silica gel bed to remove the ammonia from the stream, and finally through a hydrogen analyzer cell. As shown schematically in Figure 3-81, each cell contains a reference heating filament and thermocouple and an active filament and thermocouple. Before entry of the gas sample stream, the reference and active filaments are heated to equal temperatures above the ignition point of the gas being analyzed. When the combustible gas is passed over the filament, a small portion of the gas is catalytically ignited, raising the temperature of the filament, and increasing the millivolt output of the active thermocouple. The output differential between the active and reference thermocouple, which is proportional to the combustible gas concentration in the gas sample stream, is transmitted to a calibrated meter for analysis readout.

Since both hydrogen and ammonia are ignited in the ammonia analyzer cell, the hydrogen millivolt output is fed to the ammonia meter as a bucking signal to cancel out the hydrogen portion of the signal from the ammonia analyzer cell to the ammonia meter.

3.10.7 pH Meters (pHE)

During the initial operation of the Purex Plant, the pH's of the solutions in the waste neutralizer, 10F, 10W, 20F, and 20W tanks were measured by a system of three electrodes located in a sampler mounted in the sample gallery. Although use of the equipment has been abandoned, it is discussed briefly below in the event a need for it recurs.

3.10.7.1 Principle of Operation

The pH, defined as the negative common logarithm of the concentration of hydrogen ion in a solution, is determined electrometrically by measuring the difference in potential between two electrodes immersed in the solution. One electrode is a reference electrode, i.e., a calomel electrode, whose potential is unaffected by solution pH, and the other is an electrode, i.e., a glass electrode, in which the potential varies with the solution pH.

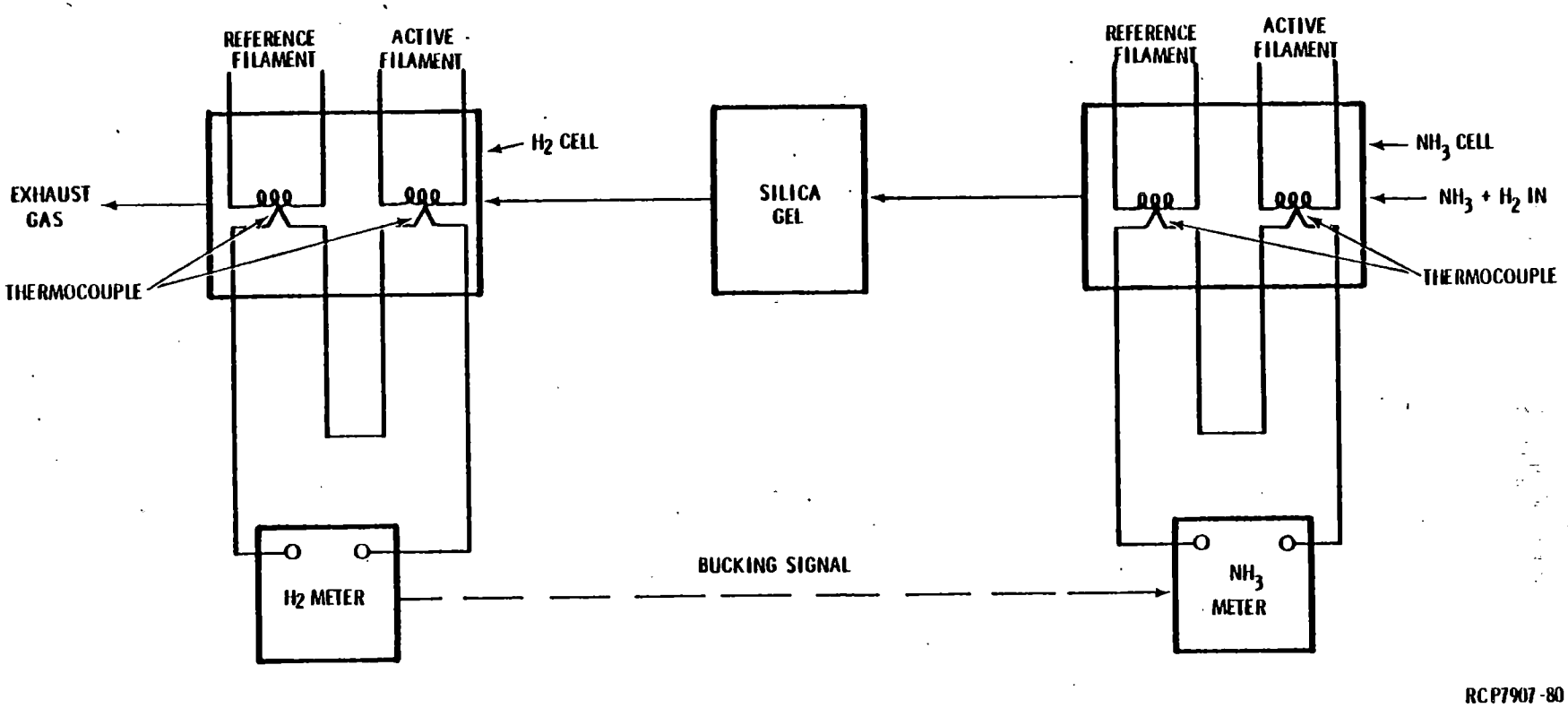

FIGURE 3-81. Ammonia-Hydrogen Gas Analyzer Schematic

3.10.7.2 Description of pH Sensing and Recording Equipment

The glass electrode consists of a glass tube approximately 0.5 inch in diameter with a bulbous glass tip. A solution of constant pH contained inside the tip makes contact with the solution whose pH is being measured by diffusion through a thin permeable glass membrane in the electrode.

The calomel reference electrode contained in a glass tube consists of mercury and mercurous chloride (calomel) in contact with saturated potassium chloride solution as an electrolyte. The reference electrode makes contact with the process solution by the slow flow of the saturated potassium chloride through a porous fiber sealed in the immersion end of the electrode.

A resistance element for temperature compensation is also immersed in the solution on some installations.

The three electrodes (including the resistance element) are connected by shielded cable through a junction box to an amplifier. The amplifier sends a 0- to 50-mv signal to an electric-to-pneumatic converter, and the air signal from the converter is sent to a miniature recorder located on a graphic panel.

The pH meters have a range of 6 to 13 pH units, and are accurate to approximately 5% of full scale. They can sense pH changes of approximately 2% of full scale.

3.10.8 Microphones (MK)

A contact microphone with a frequency response of approximately 400 to 7,000 Hz is installed in a jumper (usually with the temperature element) on each vessel that contains rotating equipment. Sound originating in the cell actuates the microphone and the signal is transmitted through a four-point selector switch through a amplifier to a speaker mounted on the panel board in the control room. From the speaker output, operating personnel may detect irregular mechanical operation (i.e., bearing failure) as well as monitor normal operation of the rotating equipment.

3.10.9 Tachometers

Tachometers are used to provide a record of the speed of rotation of the centrifuges.

The tachometer unit is an a.c., three-phase, six-pole generator. Its output is rectified, and the power produced is a measure of the speed of centrifuge rotation. After rectification, the generator output goes to both a triple-range tachometer indicator with full-scale ranges of 0 to 20, 0 to 200, and 0 to 2,000 rpm, and to an electric-to-pneumatic converter, which transmits an air signal to a miniature recorder. The tachometer is capable of measuring speeds between 10 and 1,500 rpm.

3.10.10 Transmitting Elements

Transmitters are needed for signal amplification when the distance between the sensing element and its receiver is great, and also when it is desirable to use a form of energy for transmission other than that obtained from the sensing element.

Transmitters determine the magnitude of the variable sensed, convert it to the desired energy form (such as electrical or pneumatic pressure) for transmission, amplify it, and then send it to a receiver in the control room.

3.10.10.1 Pneumatic Transmitters

Pneumatic transmitters are used to process signals transferred from the sensing element by pressurized gas (usually air). The different types of pneumatic transmitters (identified by manufacturer) used in the Purex Plant are described below.

3.10.10.1.1 Republic Transmitters (IT, SGT, FT)

Republic differential pressure pneumatic transmitters, manufactured by the Republic Flow Meters Company, Chicago, Illinois, are components of instrument systems used for measurement of pulse column top interface position, specific gravity, and on those orifice meter systems that are reset by another controller, making it necessary to convert the square root function of the orifice system to a linear function.

The Republic transmitters operate on a force balance principle. The functioning of the transmitter without the square root converter may be explained by reference to Figure 3-82.

A pressure differential transferred from the sensing element is developed across the transmitter measuring diaphragm and produces a force which acts against one end of the pivoted weigh beam. On the opposite end of the weigh beam is an air-pressurized reaction chamber diaphragm which opposes the force. The air pressure to oppose the force is regulated by the position of a throttle tip attached to the reaction chamber end of the weigh beam. The throttle tip is positioned above an air bleed nozzle in a chamber connected by pneumatic lines to the differential pressure recorder and the reaction chamber. As the differential pressure across the measuring diaphragm increases, the throttle tip approaches the bleed nozzle restricting the air bleed flow, and a back-pressure is built up in the reaction chamber. This back-pressure, which is transmitted to the recorder, also forces up the reaction diaphragm which, in turn, raises a reaction weigh beam. This beam raises up against the weigh beam attached to the measuring diaphragm, balancing the force developed by the measuring diaphragm.

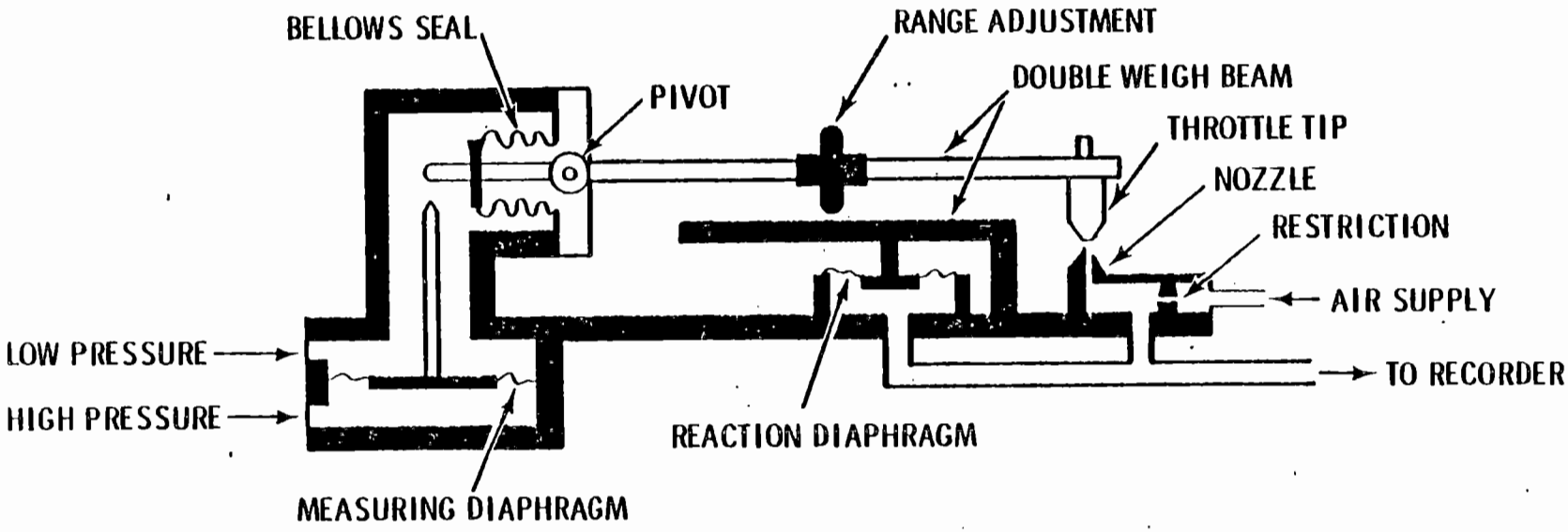

RCP7907-81

FIGURE 3-82. Schematic Sketch of Republic Pneumatic Transmitter.

The Republic square root extracting transmitter is similar in operation to the one described above, except that it produces an output pressure that varies as the square root of the differential pressure applied to the measuring diaphragm. As shown in Figure 3-83, the reaction mechanism consists of a mercury-sealed bell and an auxiliary reaction diaphragm. The mercury-sealed bell is attached to the main reaction diaphragm post and is vented to the atmosphere through the post. The lower end of the bell is submerged in mercury, which buoys up the bell, and produces an upward thrust which adds to that produced on the reaction diaphragm by the output air pressure. As the output pressure increases, however, the mercury level will be depressed around the outside of the bell and will rise inside, with a consequent decrease in buoyancy of the bell. As the bell loses buoyancy, its weight must be supported by the reaction diaphragm and, therefore, subtracts from the upward force produced by the reaction diaphragm. The bell is shaped so that the variation in buoyancy with changes in output pressure produces an output pressure proportional to the square root of the differential pressure on the measuring diaphragm.

The body and all metal parts of the transmitters in contact with the process fluid are carbon steel. The measuring and reaction diaphragms are fabricated out of synthetic rubber. The bellows seal on the measurement side of the weigh beam is stainless steel.

The total movement of the throttle tip is less than 0.002 inch. The air supply pressure from the transmitter to the recorder is 3 to 15 psig, proportional to the magnitude of the measured variable. The transmitters are accurate to within ± 1%.

3.10.10.1.2 Foxboro D/P Cell (FT, WFT, DPT, PT)

The Foxboro differential pressure pneumatic transmitter, produced by the Foxboro Company, Foxboro, Massachusetts, is used for the measurement of weight factor, differential pressure, gage pressure, and for those flow measurements where it is not necessary to change the square root function of an orifice system to a linear function.

The operating principle of the Foxboro D/P cell is essentially the same as that of the Republic transmitter. A simplified sketch of the D/P cell is shown in Figure 3-84. A differential pressure across the measuring diaphragm deflects the diaphragm, producing a force which is transmitted through a force bar to a range rod. The range rod imposes on a flexure-pivoted intermediate lever a force exactly proportional to the differential pressure on the measuring diaphragm. The intermediate lever moves a flapper plate toward or away from an air bleed nozzle and changes the pressure in the feedback bellows attached to the intermediate lever. Such changes balance the force imposed by the range rod on the intermediate lever to maintain the lever in a fixed position. The pressure in the bellows is always exactly proportional to the force applied to the range rod, which, in turn, is exactly proportional to the differential pressure on the measuring diaphragm. The pressure in the bellows is that supplied to an indicator or recorder on the graphic panel.

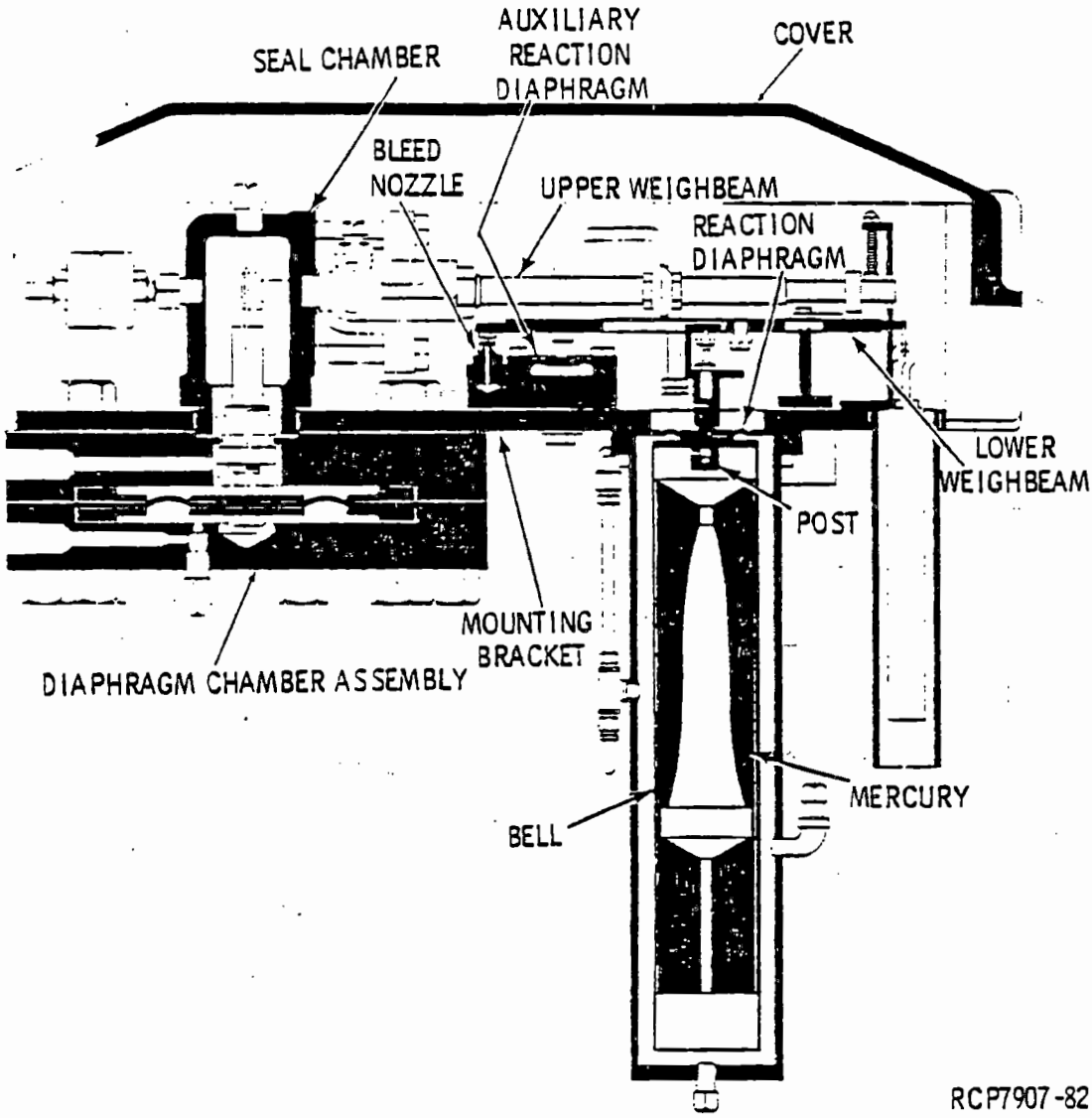

FIGURE 3-83. Republic Square Root Extracting Transmitter.

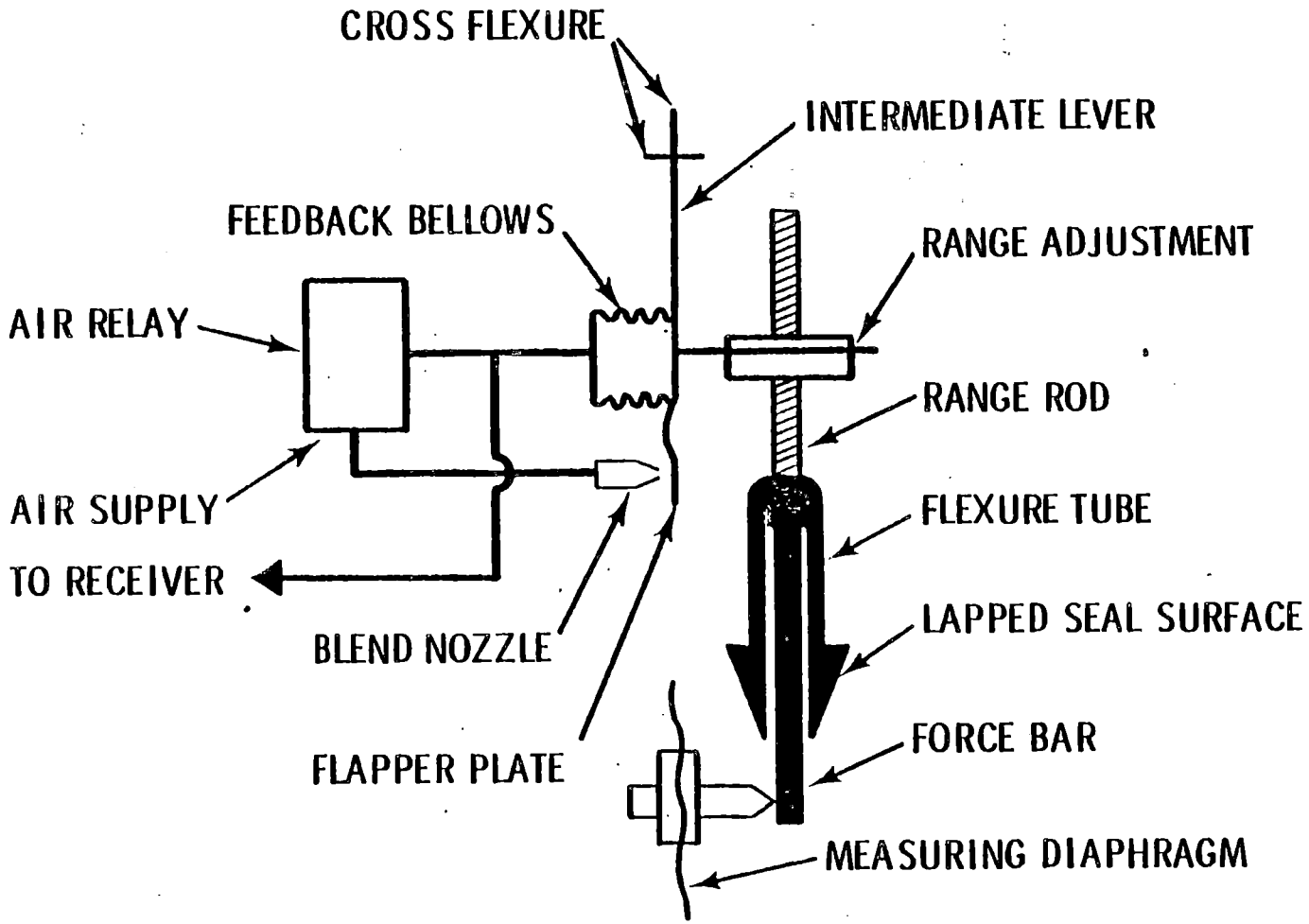

RCP7907-83

FIGURE 3-84. Schematic Sketch of Foxboro D/P Cell.

The body and all parts of the transmitter in contact with the process fluid are carbon or stainless steel depending on service. The diaphragm is fabricated of Type 316 stainless steel in all cases. The flexure tube supports the force bar and the range rod and, through a lapped surface, serves as a process line seal. There are two vent valves, one on each side of the measuring diaphragm at the top of each chamber, for venting the chambers of gases. Zero suppression is not incorporated into the instrument but can be obtained by external devices.

3.10.10.1.3 Honeywell Transmitter (PT)

A Honeywell nonindicating pneumatic pressure transmitter, manufactured by the Honeywell Process Control Division, Fort Washington, Pennsylvania, is used to measure the discharge pressure of certain pumps in locations of little or no radioactivity. The pressure is measured by a Bourdon tube gage (See Section 3.10.3.4) and is converted by a pneumatic transmitter to a 3- to 15-psig air signal. The transmitter consists of a flat spiral Bourdon tube gage, which, through mechanical linkages, is attached to the flapper assembly of the pneumatic transmitter. A relay amplifies the signal from the pneumatic transmitter and sends it to an indicator on the panel board.

3.10.10.1.4 Moore Transmitters (PT)

A Moore pneumatic pressure indicating transmitter, manufactured by Moore Products Company, Spring House, Pennsylvania, is used to measure the pressure in the steam line to the coil of the dissolver off-gas heater. A Moore Nullmatic pressure regulator is used as a pressure transmitter for measuring the pressure in jet or heating and cooling coil lines. The pneumatic pressure indicating transmitter measures the pressure with a Bourdon tube gage, which, through mechanical linkages, moves an indicator pointer and the flapper plate assembly of the pneumatic transmitter. The transmitter operates an air relay that transmits a 3- to 15-psig signal to an indicator on the panel board.

The Nullmatic pressure regulator is a pressure controller that utilizes a pneumatic "null" balance system in which the valve in the steam supply line is operated by a pilot nozzle located in the top of the regulator. Through diaphragm and spring adjustments, forces applied by the input pressure are balanced by those of the spring loading. These regulators transmit a pressure signal of the same magnitude as the signal sensed.

The pressure regulator is installed backwards to normal installation, so that air pressure is applied to close the supply valve instead of using pressure to open the valve. The air supply is connected to the regulated air output port on the regulator; the coil or jet-line pressure tap is connected to the vent port; the transmitting line to the pressure indicator on the panel board is connected to the air supply port.

3.10.10.2 Electrical Transmitters

3.10.10.2.1 Radiation Level Amplifier (RA)

A Beckman Model V amplifier, manufactured by Beckman Instruments, Incorporated, Fullerton, California, is used in conjuction with an ion chamber to measure the radiation level in a vessel or the surrounding area. In operation, the minute current developed by the radiation in the ion chamber is conducted through a very high input resistance whose magnitude (3×10^7 to 10^{11} ohms) depends on the current range. The voltage produced across this resistance charges a vibrating reed capacitance modulator oscillating at 120 Hz, which converts the voltage to an a.c. signal. The a.c. signal passes through a four-stage amplifier and is then converted back to d.c. for measurement with a picoammeter, and is recorded in the control room.

The Beckman amplifier can be changed in 13 steps from 3×10^{-13} to 3×10^{-7} amperes for full-scale deflection. A voltage drop of 0 to 50 mv d.c., caused by flow of the amplified current through a separate, fixed resistor, is transmitted to a standard potentiometer recorder, which records the radiation level being measured.

3.10.10.2.2 Count-Rate Meter (SC)

A count-rate meter is used with a scintillation element when the element is installed as a pulse-counting unit. The pulses from the preamplifier of the scintillation counter element are applied to a frequency metering circuit of the count-rate meter, which is calibrated to indicate the average pulse rate in counts per minute.

The count-rate meter has ranges of 200, 600, 2,000, 6,000, and 20,000 counts per minute. A circuit that provides a 0- to 50-mv signal is plugged into a 5-milliamp panel jack. The signal goes to an electric-to-pneumatic converter and is indicated as a count rate on a pneumatic recorder.

3.10.10.3 Electric-to-Pneumatic Converters (CVT)

Electric-to-pneumatic converters are used in the Purex Plant to convert an electrical signal to a proportional 3- to 15-psig air signal. The converters are located behind the panel boards in the central and head-end control rooms. The use of these converters allows the same type of pneumatic miniature indicator and/or recorder and/or controller to be used on the graphic panel for measuring any process variable.

3.10.10.3.1 Rotameter Converter

The converter forms an impedance bridge with an electronic rotameter (see Section 3.10.2.1) and changes the electrical signal to an air signal.

The rotameter transmitter consists of a pair of inductance coils in which a stainless steel-clad soft iron armature moves in response to flow rate. A similar pair of induction coils and an unclad soft iron armature is located in the converter. These systems are connected to form two parallel circuits with a common center lead. The outer leads are connected via a stepdown transformer to a source of alternating current, and the center lead connects to an amplifier which controls a reversible motor.

When the transmitter and receiver armatures are in corresponding positions in the coils, the impedances in the two circuits are approximately equal and no current flows through the center lead. However, as soon as the transmitter armature moves due to a flow rate change, the impedance of the transmitter coils changes and causes a small current to flow in the center lead. The amplifier detects the magnitude and phase relationship of this current, amplifies it, and uses it to energize the reversing winding of the motor. The other winding (reference) of the motor is energized from a steady source of alternating current supplied through a capacitor to provide proper phase relationship.

Through mechanical linkages, the motor operates the receiver armature, moving it vertically in or out of the receiver coils to bring the impedance bridge back into balance. The pneumatic transmitter, which sends a 3- to 15-psig air signal proportional to the flow rate to a receiving element, is attached to the receiver armature linkages.

3.10.10.3.2 Temperature Converter

The temperature converter forms a Wheatstone bridge with a resistance thermometer sensing element and changes the electrical signal to an air signal. The converter consists of detecting, amplifying, and transmitting elements. The detecting and amplifying elements contain four units: (a) a conversion stage, (b) a voltage amplifier, (c) a power amplifier, and (d) a balancing motor.

The amplifier conversion stage converts the unbalanced d.c. bridge voltage (due to resistance changes of the temperature element) to a proportional a.c. voltage. The voltage amplifier output delivers power to the balancing motor. Both the phase and the magnitude of this driving power are directly controlled by the amplifier a.c. voltage. The balancing motor senses the phase of the driving motor and balances the bridge accordingly by moving the slide wire contactor. The balancing motor also operates a gear segment linked to a pneumatic transmitter, which sends an air signal to a receiver.

3.10.10.3.3 Scintillation Converters

The scintillation converter is a potentiometer and also changes the 0- to 50-mv signal from a scintillation element amplifier to an air signal. The potentiometer compares an unknown voltage (the variable sensed

by the scintillation element) with a known voltage. The known voltage is varied until the two opposing voltages are equal, and no current flows in the balancing circuit. A detection and balancing system senses the unbalanced condition and makes the necessary corrections to rebalance the system. The balancing system and pneumatic transmitting systems are the same as described under Section 3.10.10.3.2.

3.10.11 Receiving and Controlling Elements

3.10.11.1 Indicators

Drum-type vertical gages (3 to 15 psig) are used on all weight factor (WFI) and differential pressure (DPI) instruments requiring indication on the graphic panels. Manometers are used for weight factor indication required near a vessel or on a local panel.

Round dial, Bourdon tube gages (3 to 15 psig) are used on all pressure, (PI), temperature (TI), and flow (FI) installations for indication of the variable on the graphic panel.

Standard Bourdon tube pressure gages are used for graphic panel indication of service line pressures such as steam, water, air, and instrument air. This type of gage is also used locally to measure steam, water, air, and pump discharge line pressures.

3.10.11.2 Indicator-Controllers (WFIC, FIC, PIC)

Automatic indicator-controllers are used to indicate and control weight factor, flow, and pressure systems.

The variable is measured by a bellows pressurized from 3 to 15 psig. Through linkages, the bellows operates a pneumatic control system that delivers an air signal to the controlled element to maintain the measured variable at a desired value.

The instrument is composed of two parts: a lower unit, equipped with an automatic-manual selector switch, a manual loader, and a pressure gage; and an upper unit, equipped with an indicating pointer and a control set-pointer on a vertical 0- to 100-division linear scale or a 0- to 10-division square root scale. With the selector switch set in the manual position, the controlled element is pneumatically operated by adjustment of the manual loader, and the pressure to the element is indicated on the pressure gage. With the selector switch in the automatic position, the control set-pointer is adjusted to the desired reading, and the controller automatically varies the air output to the controlled element to give the desired indicator reading. The pressure to the controlled element is indicated on the pressure gage.

3.10.11.3 Recorders (FR, WFR, SGR, TR, DPR, RR, PR)

Pneumatic signal recorders are used where it is required to have a record of a variable on the graphic panel, and the signal being received is 3- to 15-psig air. The recorder has either one or two recording pens, depending on the service. Each recording pen is operated through linkages by a 3- to 15-psig bellows receiver. A 4-inch-wide strip chart with either 0 to 100 linear or 0 to 100 square root graduation is used.

Standard potentiometer-type recorders, which measure a 0- to 50-mv d.c. signal, are used with radiation level sensors and count-rate meters. The recorder has from one to four points on one print wheel, depending on service. A 12-inch-wide chart with 0 to 100 linear graduations is used. The balancing and detecting system is the same as described for the electric-to-pneumatic converter in Section 3.10.10.3.2.

3.10.11.4 Recorder-Controllers (FRC, IRC, WFRC, SGRC, TRC, PRC)

All recorder-controllers are the miniature type and are mounted on the graphic panels in the central, head-end and Q Cell control rooms. These instruments are used to record and control flow rate, interface position, weight factor, specific gravity, temperature, and pressure.

The variable is measured by a bellows receiver pressurized from 3 to 15 psig. Through mechanical linkages, the bellows receiver operates a recording pen and a pneumatic control system that delivers an air signal to the controlled element (usually a valve), which maintains the measured variable at a desired value.

The recorder portion of the recorder-controller functions identically to the pneumatic recorder described in Section 3.10.11.3. The control set-pointer has a vernier drive and is located near the top of the recorder-controller case. When the controller is in the automatic mode, this pointer is set at the desired recorder reading as read on the lower of two scales above the recorder chart. When the controller is in the manual mode, the set-pointer is set at the air loading pressure, as read on the upper scale, to be delivered to the controlled element. The scale above the control set-pointer indicates the pressures being delivered to the controlled element when the controller is either on manual or automatic.

The controller has the following devices for improving control:

The proportional band setting, which is adjustable from 0 to 200%, determines the amount of pen movement, expressed as percent of the full-chart scale, necessary for the control air output to change from 3 to 15 psig. For example, for a proportional band setting of 50% and a chart range of 100 divisions, a control air output ranging from 3 to 15 psig

will cause a maximum pen movement of ± 25 chart divisions, with the position of this range on the chart determined by the position of the set-pointer. Without a reset adjustment on the controller, the process variable can cause the pen to stabilize at any point within its range of movement, not necessarily at the position of the set-pointer.

The reset function of the controller is a mechanism used to sense any difference between the positions of the set-pointer and measurement pen reading, thus permitting corrective adjustment of the controller air valve to bring the variable reading into coincidence with the set-pointer. With a given setting, reset rate, which is the frequency with which the variable is sensed and corrective adjustments are made, is directly proportional to the amount of deviation of the measurement pen from the control set-point. The reset function continues only as long as any deviation exists.

The reset rate is adjustable between 0.2 and 100.0 repeats per minute for FRC, IRC, and PRC, and between 0.02 and 20.0 repeats per minute for TRC, WFRC, and SGRC instruments. The reset function can only be installed in a controller that has the proportional band function.

A derivative function is also added to some of the controllers. Derivative action is proportional to the rate of change of the process variable reading and provides a greater or lesser signal to the controller air valve to bring the process under control faster whenever there is a change in variable being controlled. Depending on the service, the derivative function is adjustable between 0.008 to 8.0 repeats per minute or 0.05 to 50.0 repeats per minute. The derivative function can be installed only where there is proportional band function or proportional band plus reset functions.

On some controllers (slave) that are reset by another controller (master), a bellows is installed along with the other control functions. This bellows moves the set-pointer (which is floating free instead of being attached to a vernier drive) of the slave recorder-controller in order to maintain a given value on the master controller.

3.10.11.5 Pneumatic Flow Integrator (FIQ)

Pneumatic flow integrators are used to provide a record of the total volume of steam or water flow to a given vessel. The instrument is installed with pneumatic input from a flow transmitter, which senses the flow signal from a flow element, such as an orifice.

The integrator, shown in Figure 3-85, functions in the following manner. The process flow signal from the flow transmitter actuates the bellows in a pneumatic receiving mechanism, which is linked to an indicator pen or pointer and to a sector gear. The sector gear drives a cam shaped with a profile directly related to the instrument calibration curve. The cam is rotated to a position dictated by the pressure value transmitted by the pneumatic receiver.

A synchronous motor-driven eccentric operates a contact arm, which moves at 2.5-second intervals from a fixed position through an arc whose length is limited by striking the edge of the cam. The contact arm shaft operates a unidirectional clutch, producing rotation of the clutch output shaft each time the arm moves away from the cam. The angular length of the arm's return stroke is a measure of the process flow volume during the measurement time interval. Through a gear train, the clutch output shaft operates a mechanical digital counter, which gives the cumulative flow volume.

3.10.11.6 Electric Flow Integrator (FIQ)

Electric flow integrators are used with magnetic flow meters in the process head-end to control batches of liquid chemical solutions which are added to the dissolvers. The integrator consists of a Fischer and Porter converter, which is an a.c. self-balancing potentiometer that controls a d.c. current generator output. The converter changes the a.c. signal from the magnetic flow meter to a proportional d.c. output, which is transmitted in pulses through a frequency scaler to a digital counter, which registers the accummulated liquid flow.

Upon reaching the desired batch volume set into a register in the counter, the liquid flow is stopped by a signal from a batch controller, which is connected to the counter.

3.10.11.7 Manual Controllers (VC)

Manual controllers are used to provide 3- to 15-psig air pressure to DOV's. The controller is an adjustable pressure regulating valve with a vertical dial to indicate the output pressure. The dial has two scales: 3- to 15-psig units on the left side, and 0 to 100% (with 0% at the 3-psig value) on the right side.

3.10.11.8 Self-Acting Regulating Valves (TRV)

Self-acting regulating valves are used to control steam flow to regulate temperatures of certain lines or vessels in nonradioactive zones. The valve is actuated by a temperature sensing bulb filled with vapor, which is connected by capillary tubing to a bellows, which, in turn, is connected to the plug stem of the regulating valve. When the temperature at the sensing bulb rises, part of the liquid in the bulb vaporizes and builds up the pressure in the bellows on the valve. Increased pressure

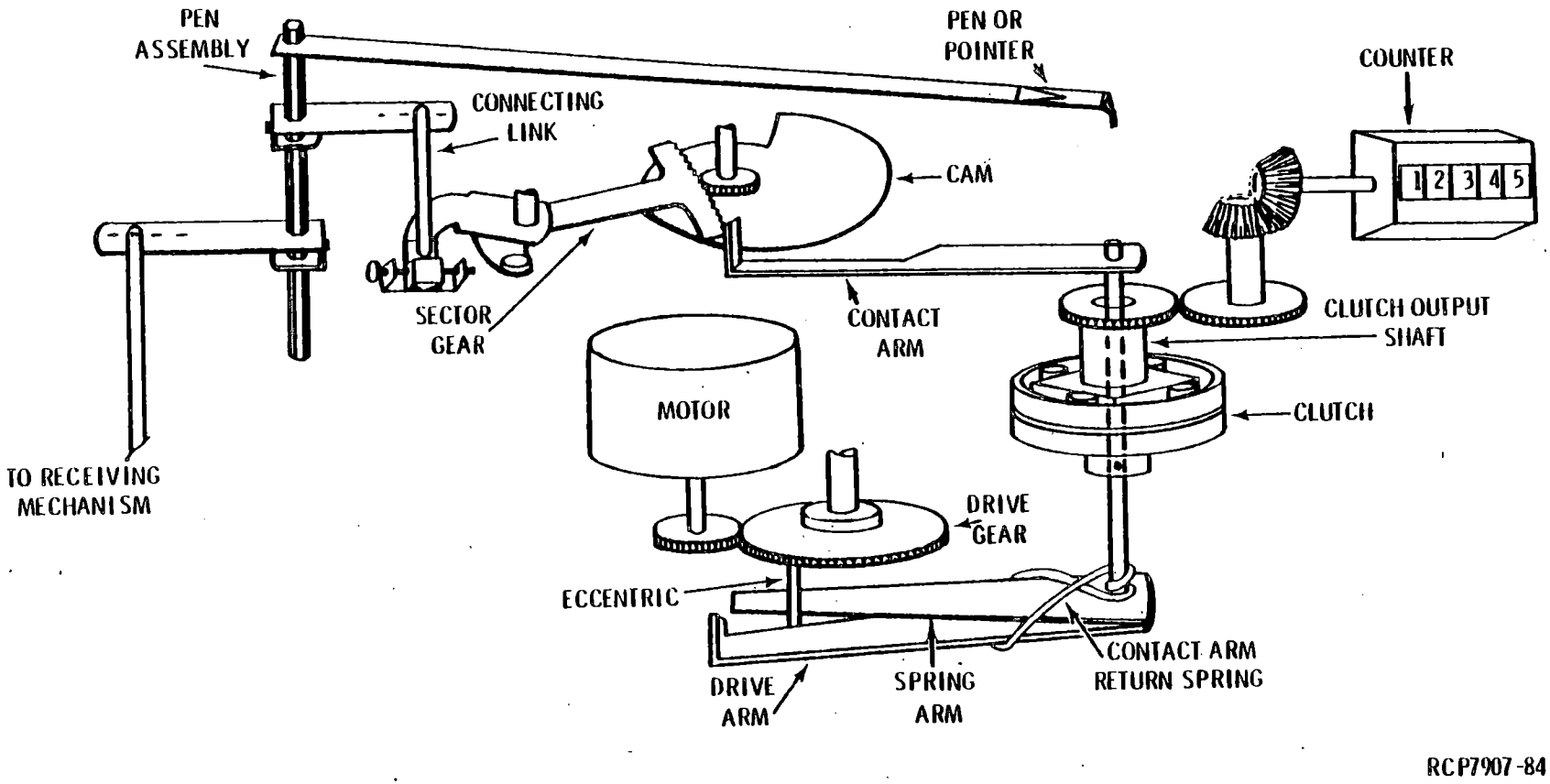

FIGURE 3-85. Schematic of a Pneumatic Flow Integrator.

in the bellows moves the plug stem so that less steam flows to the process, thus causing the temperature to fall. The temperature sensing range can be adjusted over an approximate 60° F interval.

3.10.11.9 Remote Set-Pointer Adjusting Unit (ASP)

The remote set-pointer adjusting unit is usually used on those control systems where one controller (master) resets the control set-pointer of another controller (slave). The set-pointer adjusting unit is a pneumatic converter used to adjust the set-pointer of the slave controller. It is identical in design to the slave controller except that the reset and bellows have been replaced with calibrated springs. The proportional band adjustment is calibrated in ratio settings.

The unit recieves a 3- to 15-psig air signal from a master controller, and transmits a 3- to 15-psig air signal to a bellows in the slave controller. The bellows changes the position of the set-pointer and thereby changes the variable controlled by the slave controller in such a manner that it is kept in a desired ratio to the variable controlled by the master controller.

The output signal of the ASP unit goes through an automatic-manual switch located between the unit and its recorder-controller. This switch allows the set-pointer on the slave recorder-controller to be moved automatically by the master controller or by a manual loader, which operates independently of the master controller.

In either case, the slave recorder-controller will be on automatic control and will automatically adjust the air output to keep its recording pen in agreement with the control set-pointer. The slave recorder-controller itself can also be put on automatic or manual control by adjusting an internal switching device. If the slave recorder-controller is placed on manual, its air output is controlled by moving its set-pointer pneumatically with the manual loader of the ASP switch unit.

3.10.12 Diaphragm-Operated Valves

3.10.12.1 Canyon Valves (DOV)

Diaphragm-operated valves (DOV's), most of which were manufactured by ITT Hammel-Dahl of Warwick, Rhode Island, are used on all process streams to remotely regulate fluid flow between process equipment pieces. Some of the valves are throttling and others are on-off in operation.

3.10.12.1.1 Principle of Operation

The variable air pressure from a controller is transmitted to a chamber bounded by a flexible diaphragm in the top of the DOV. The valve stem, attached to the diaphragm, moves with it in response to the

pressure variations. The moving stem, in turn, lowers the valve plug toward or raises it away from its seat, decreasing or increasing the flow orifice area and, hence, the flow rate through the valve.

Flow formulas for the valves are:

Liquid: Volumetric flow rate, gal/min = $C_v \sqrt{\frac{\Delta P}{G}}$

Steam: Mass flow rate, lb/hr = $63\ C_v \sqrt{\frac{\Delta P}{V}}$

Gas: Volumetric flow rate, $Q = 1{,}360\ C_v \sqrt{\frac{(\Delta P)P}{(460 + {}^\circ F)G}}$

where C_v is the flow coefficient of the valve and is defined as the flow of water in gal/min producing a one-psi pressure drop across the valve at any valve plug lift (flow opening). The valve flow coefficient with the plug at maximum lift (open) is proportional to the flow orifice area of the valve and is used to state the valve capacity.

Other symbols in the above equations are defined as follows:

ΔP is the pressure drop across the valve in psi.

G is the specific gravity of the liquid.

Q is the gas flow rate in cubic feet per hour at 60° F and 14.7 psia.

V is the specific volume of inlet steam in cubic feet per pound.

P is the gas inlet pressure in psia.

F is the gas temperature in degrees Fahrenheit.

3.10.12.1.2 Description

A schematic drawing of an air-operated throttling Hammel-Dahl valve is shown in Figure 3-86. The body is designed to allow complete drainage when the plug is off the seat ring. The valve has a single seat plug with provision of easy removal of both the plug and seat. A welded leaf-type stainless steel bellows is attached to the plug stem and is installed so the process solution comes in contact with only the outside of the bellows. Above the bellows seal, there is a Teflon auxiliary steam seal called a "Dahl seal," which requires a smooth-surface finish and should be installed only by the manufacturer. If both seals should fail, an opening to the atmosphere between the Dahl seal and the diaphragm chamber allows the process solution to drain to the canyon floor instead of coming up the air signal line to a nonradioactive zone. The diaphragm chamber is designed so the valve action can be changed from air-to-open to air-to-close by positioning the valve stem suspension spring adjustment nuts and changing the air signal from one side of the diaphragm to the other.

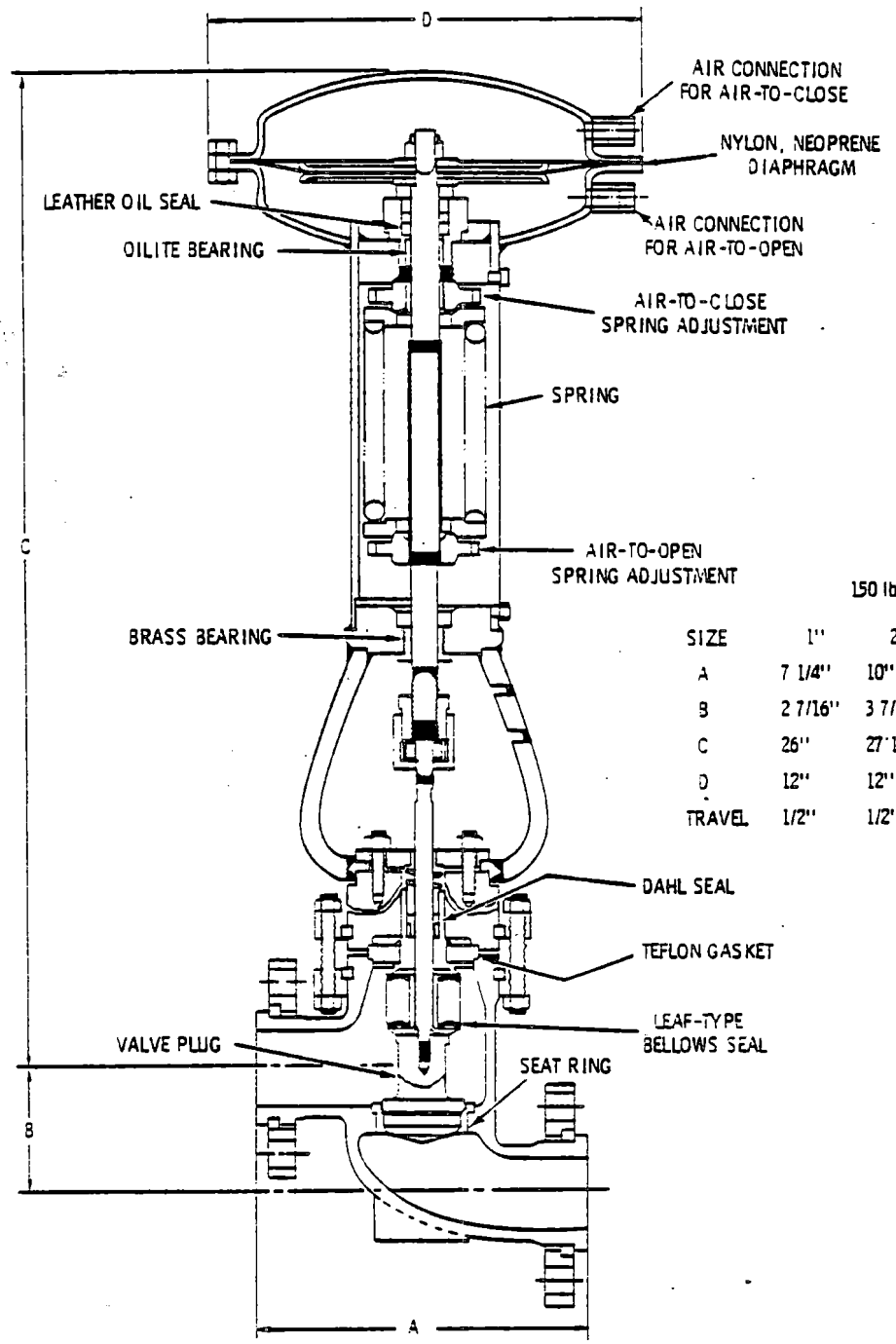

150 lb. ASA FLANGED

SIZE	1"	2"	3"	4"	6"
A	7 1/4"	10"	11 3/4"	13 7/8"	17 3/4"
B	2 7/16"	3 7/16"	4 11/16"	6 1/4"	8 1/4"
C	26"	27 1/2"	31"	32 1/2"	34 1/2"
D	12"	12"	17"	17"	17"
TRAVEL	1/2"	1/2"	1"	1"	2"

RCP7907-35

FIGURE 3-86. Hammel-Dahl Throttling-Type Control Valve for Canyon Service.

With DOV's in general, an on-off valve has a quick-opening plug and a throttling valve has a tapered plug, which can be either a linear or equal percentage-type plug. A linear plug produces a constant change in flow for a unit change in lift if the pressure drop across the valve remains constant. This type of plug is used in those cases where the pressure drop in the system is largely concentrated across the valve and where the maximum capacity of the valve is required.

An equal percentage plug produces the same percentage change in flow for any unit change in lift if the pressure drop across the valve remains constant. Generally, this plug is used in those cases where only a small pressure drop through the valve is desired. Typical characteristic curves (percent flow vs. percent lift) for constant pressure drop flow across Hammel-Dahl valves with linear and equal percentage plugs are shown in Figure 3-87.

The valve plug sizes shown in Table 3-22 are available in both the linear and equal percentage types. Flows at any given pressure drop may be calculated from these C_v values by use of the equations presented earlier in this section.

3.10.12.2 Sample Gallery Valves (DOV)

A specially designed valve is used for sample gallery installations and is similar to the valve described under 3.10.12.1, except for the following design features:

- The top works is designed only for air-to-open service.
- The overall height of the valve is reduced by making only a short pipe connection between the diaphragm chamber and the valve body. This pipe connection has a leakage drain hole to prevent process solution from being forced into the diaphragm chamber and then into the control room in case the bellows seal and Dahl seal fail.

3.10.12.3 Nonradioactive Service Valves (DOV)

Diaphragm-operated valves are used to regulate the flow of nonradioactive process streams, steam, water, and air. They are globe-type, single-seated valves designed for either air-to-open or air-to-close action. The plug stem has a standard packing gland instead of a stainless steel bellows seal.

3.10.13 Solenoid Valves (EV)

Solenoid valves are installed in air signal lines to certain diaphragm-operated control valves so that the valve can be opened or closed by an electrical signal from an alarm switch or relay which may be operated by pressure, temperature, weight factor, flow, liquid level, or power failure.

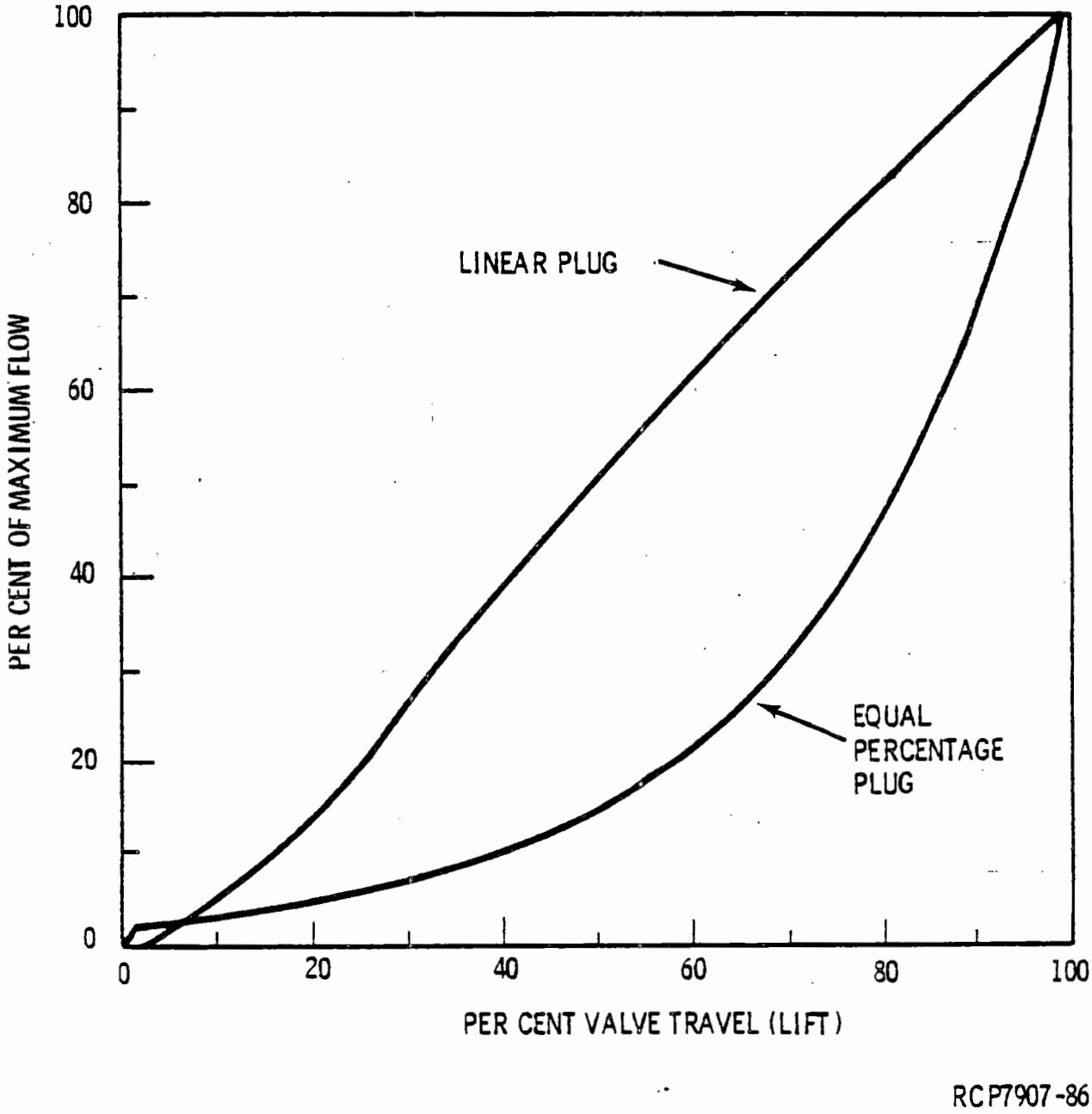

RCP7907-86

FIGURE 3-87. Hammel-Dahl Valve Flow Characteristic Curves.

TABLE 3-22. Hammel-Dahl Valve Flow Coefficient as a Function of Valve Plug Size

Nominal Valve Plug Diameter, in.	C_v* for Fully Open Position
0.19	1.0
0.25	1.6
0.38	2.5
0.5	4.0
0.75	6.3
1.0	10
1.25	16
1.5	25
2	40
2.5	63
3	100
4	160
6	360

*Flow coefficient of valve

3.10.14 Alarms

Pressure-actuated electrical switches are attached to certain signal lines connecting transmitters directly to an air-purged dip-tube system, directly to process lines, or directly to an electrical circuit. The switches operate an electrical alarm unit and are actuated by a variety of sensors, such as those for high weight factor, low weight factor, high temperature, and high specific gravity.

The alarm unit consists of a flashing light and audible alarm, both of which are off under normal operating conditions and are activated by abnormal conditions (such as those described in Section 3.10.15). A reset button, when actuated, changes the flashing light to a steady light and shuts off the audible alarm. The steady light will stay on until the abnormal condition is corrected.

3.10.15 Special Instrument Control Systems

All vessels in the plant are equipped with instrumentation to assure safe operation. The dissolvers, concentrators, and waste rework tank operate at boiling temperatures and require more than the normal complement of instrumentation. The vacuum acid fractionator and the in-line blending system are also unique equipment with special instrumentation systems. The complete instrumentation systems for these equipment pieces are described in this section.

3.10.15.1 Dissolver and Off-Gas Systems

A schematic drawing of the dissolver vacuum control instrumentation is given in Figure 3-88. The process control devices described below serve to prevent a pressure buildup in the dissolver in case of a rapid evolution of gases during the dissolution step.

A pressure transmitter (PT-*3) attached to the low pressure weight factor dip tube in the dissolver sends an air signal to a pressure recorder-controller (PRC-*3-2) and a pressure switch (PAS-*3-2). When activated by high pressure, the pressure switch signals a relay (K-*3-2), which activates the pressure alarm (PA-*3-2) and energizes an electric valve (EV-*3-6). The latter action shuts off actuating air to the DOV (DOV-*3-6), allowing it to close, thus terminating the airflow which is normally bled into the dissolver so the air load on the dissolver vent jet in the backup facility is reduced and the pressure in the dissolver is thereby reduced.

---

*is A, B, or C, depending on the dissolver in question.

9413275.0709

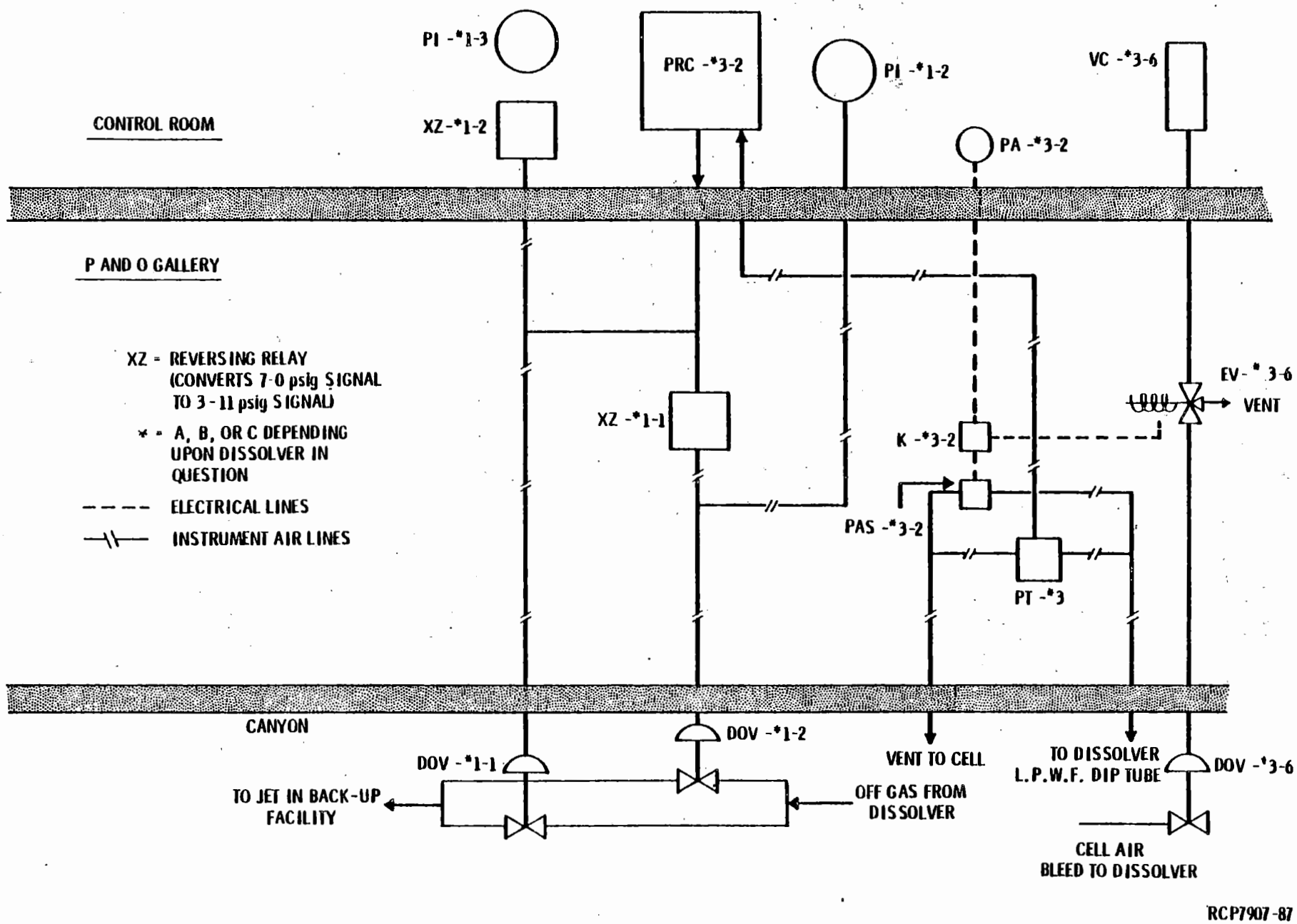

FIGURE 3-88. Dissolver Vacuum Control.

The pressure recorder-controller (PRC-*3-2) sends a signal to the following control elements: (a) to DOV-*1-1, which controls the dissolver vacuum and is normally open; (b) through pressure reversing relay XZ-*1-1 to pressure indicator PI-*1-2 and to DOV-*1-2, which is in parallel with DOV-*1-1, is normally closed, and is activated only in case of high demand; (c) through a pressure reversing relay (XZ-*1-2), which makes pressure indicator PI-*1-3 read up-scale.

The pressure reversing relay XZ-*1-1 converts pneumatic signals so the two DOV's operate compatibly with a single control signal. The pressure conversions are as follows:

Relay	Input, psig	Output, psig
XZ-*1-1	7-0	3-11
XZ-*1-2	15-3	3-15

The two DOV's act oppositely from each other to provide a fail safe system.

The DOV's, which serve to control the dissolver vessel vacuum, are located in parallel in a single jumper immediately downstream from the canyon filter. Even though the recorder-controller signals for complete closure of the valves, DOV-*1-1 is adjusted so that it is always at least one-quarter open so the dissolver is vented to the off-gas system (backup facility or stack).

3.10.15.2 Large Concentrator Pressure and Concentration Control Systems

The five large concentrators (E-J8, K4, H4, F6, and F-11) are all equipped with process safety devices designed to protect against high or low steam pressure and overconcentration, which is indicated by low weight factor and/or high temperature. The instrument system operating the safety devices is shown in Figure 3-89.

3.10.15.2.1 Steam Pressure Control

Each concentrator has identical steam flow systems to each of two chests except for E-F11-1, which has only one tube bundle. In the operation of a typical single system, a pressure switch (PAS-1) attached to the steam line entering the chest activates two relays (K-1 and K-2). When the steam pressure rises to a specified value, relay K-1 is energized and operates a high-pressure alarm light (PA-1) and de-energizes a solenoid valve (EV-2), which closes the steam valve (DOV-1). A pressure relief valve, set to operate at 29 psig, is attached to the steam line feeding the steam chest. When the steam pressure drops to a specified value, pressure switch PAS-4 is de-energized, and in turn, de-energizes solenoid valve EV-6, which closes steam condensate valve DOV-4.

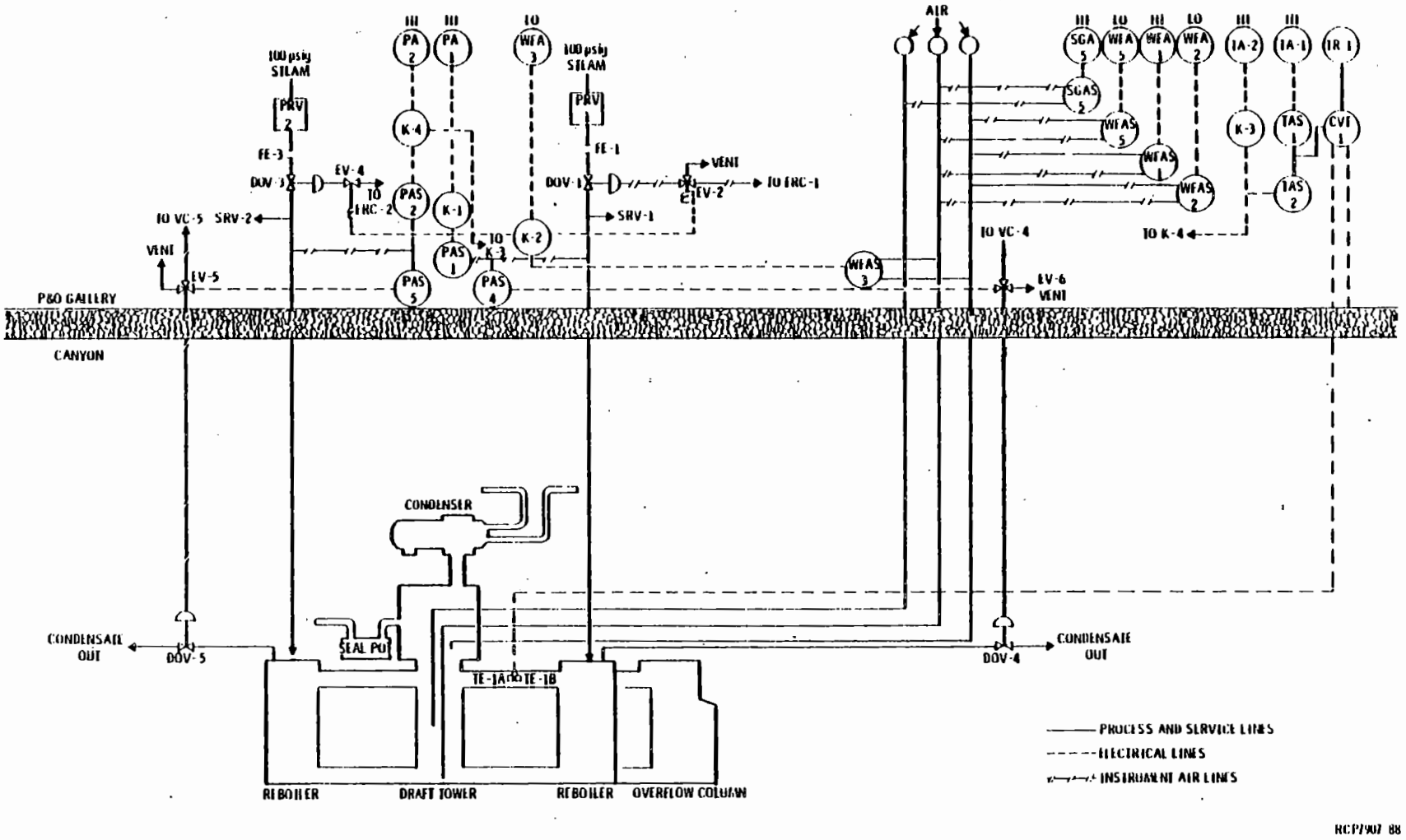

FIGURE 3-89. Concentrator Process Safety Instrumentation.

3.10.15.2.2 Temperature Control

Either of two resistance temperature elements (TE-1A or TE-1B) located in the concentrator is connected to an electric-to-pneumatic converter (CVT-1), which sends an air signal to two temperature alarm switches (TAS-1 and TAS-2) and a recorder. When the concentrator liquid temperature rises above a specified value, indicating overconcentration of the liquid, alarm switch TAS-1 operates a high temperature alarm light (TA-1). Alarm switch TAS-2, which also operates a temperature alarm light (TA-2), is set to operate at a slightly higher temperature than TAS-1, and energizes relay 3, which shuts off the steam flow to the chest.

3.10.15.2.3 Liquid Level Control

Each concentrator is equipped with liquid level alarms, which are activated by either low or high liquid level. Provision is included for shutting off the steam at low level to avoid overconcentration. The weight factor (liquid level) alarm switches, WFAS-1 (high), WFAS-1 (low), and WFAS-5 (low), are attached to the weight factor dip tubes. When the weight factor drops to a specified value, WFAS-1 (low) operates a low weight factor alarm light (WFA-2), and at a lower weight factor a second alarm light (WFA-5) is actuated. At this lower weight factor, switch WFAS-3 is also activated, operating an alarm light (WFA-3), and through a relay, de-energizing solenoid valves EV-2 and EV-4. De-energizing the solenoid valves shuts off the steam flow to the concentrator.

3.10.15.2.4 Specific Gravity Control

The concentrators are equipped with specific gravity alarm lights to warn that the specific gravity of the solution in the concentrators is abnormally high.

3.10.15.3 Plutonium Concentrator and Stripper Control Systems

The plutonium concentrator (E-L7-1) and plutonium stripper (T-L6) are equipped with process safety devices, which are activated by high and low steam pressure, low weight factor, high specific gravity and high temperature. The instrumentation system is shown in Figure 3-90.

When the steam pressure rises to 29 psig, a pressure switch (PAS-1) attached to the steam line entering the chest actuates relay K-3. The relay de-energizes solenoid valve EV-1 to close the steam valve, DOV-1, and operates a high pressure alarm light (PA-1). When the steam pressure falls to 5 psig, pressure switch PAS-2 energizes solenoid K-4, which in turn (a) de-energizes solenoid valve EV-1 to close the steam valve, DOV-1, (b) de-energizes solenoid valve EV-3 to open valve DOV-3, thus pressurizing the steam line with air, and (c) lights a low pressure alarm light (PA-2).

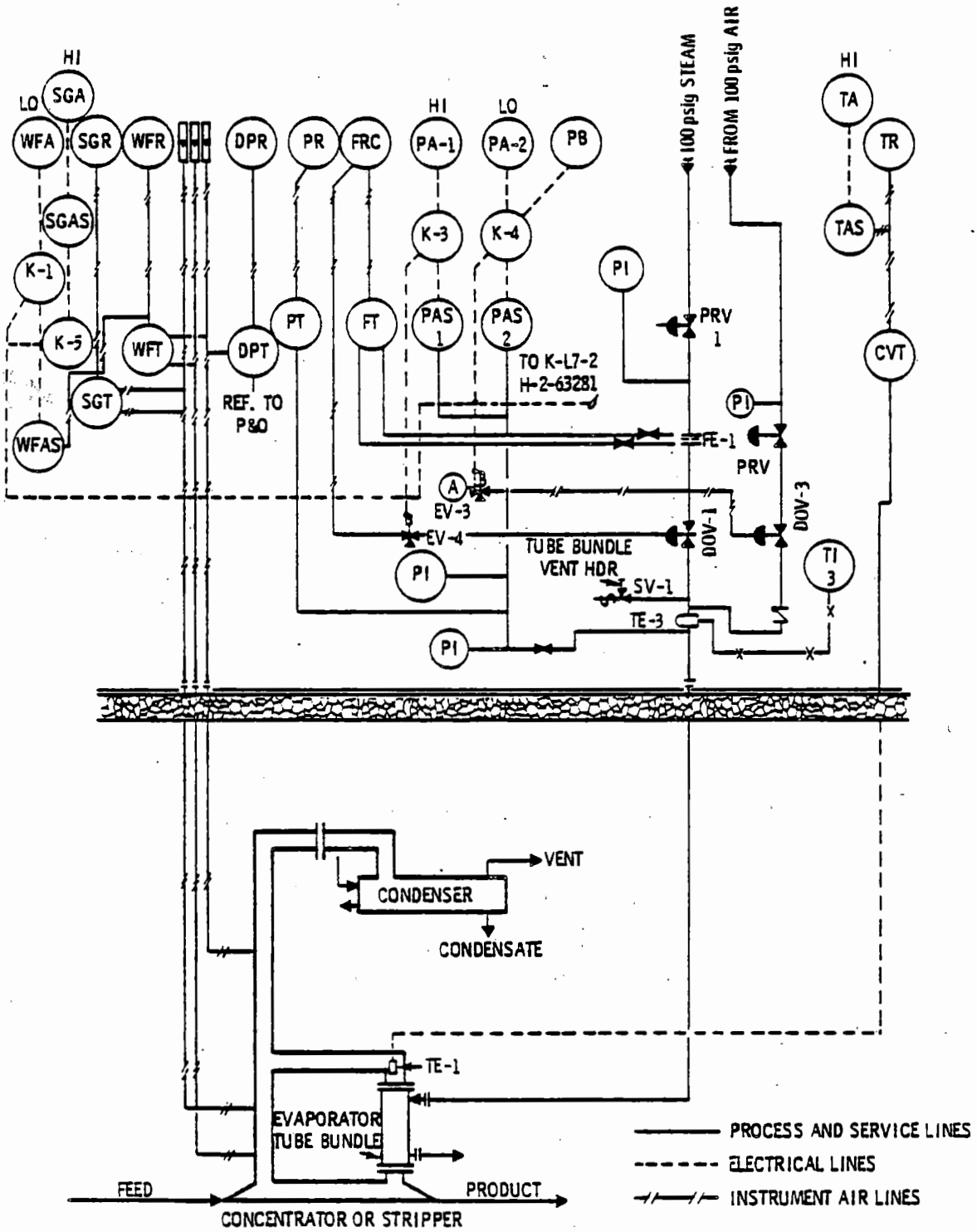

FIGURE 3-90. Plutonium Concentrator and Stripper Process Safety Instrumentation.

A weight factor alarm switch on the plutonium concentrator and the plutonium stripper lights a low weight factor alarm light at a pressure of 17 inches of water and de-energizes solenoid valve EV-1 to close steam valve DOV-1.

Temperature element TE-1 activates an alarm (TA) when the concentrator or stripper temperature exceeds 123° C.

3.10.15.4 Waste Rework Tank Process Safety Instrumentation

The waste rework tank (TK-F8) uses a steam coil for heating, and has controls on steam, water, and airflow to the coil. The instrument system operating the process safety devices is shown in Figure 3-91.

The process safety instrumentation operates as follows:

- If the pressure in the coil falls to 7 psig, the steam flow to the coil is shut off.
- If the pressure in the coil exceeds 29 psig, the steam flow to the coil is shut off.
- If the weight factor drops below 21% of chart, the steam flow to the coil is shut off.
- If the steam temperature exceeds 125° C, the steam flow to the coil is shut off.
- When the valve selector (VS-1) is turned from steam to water, a 90-second air blow is provided automatically before solenoid valve EV-2 is energized to initiate raw water flow to the coil.
- If the valve selector (VS-1) is off and steam is flowing to the coils, pressure activation switch PAS-1 opens in response to an electrical power failure or when an alarm switch is removed from the circuit, and the coil is pressurized with air.

3.10.15.5 Acid Fractionator Process Safety Instrumentation

The acid fractionator (T-U6) is equipped with two alarms which are activated by weight factor. The first (WFA-1) alarms at 63% of chart and the second (WFA-2) alarms at 90% of chart. The instrument system controlling these devices is shown in Figure 3-92.

Also shown in Figure 3-92 is the fractionator steam flow instrumentation. Medium pressure steam (100 psig) is blended with demineralized water in the appropriate proportion to produce 6-psig steam, which is fed to the steam chest of the fractionator.

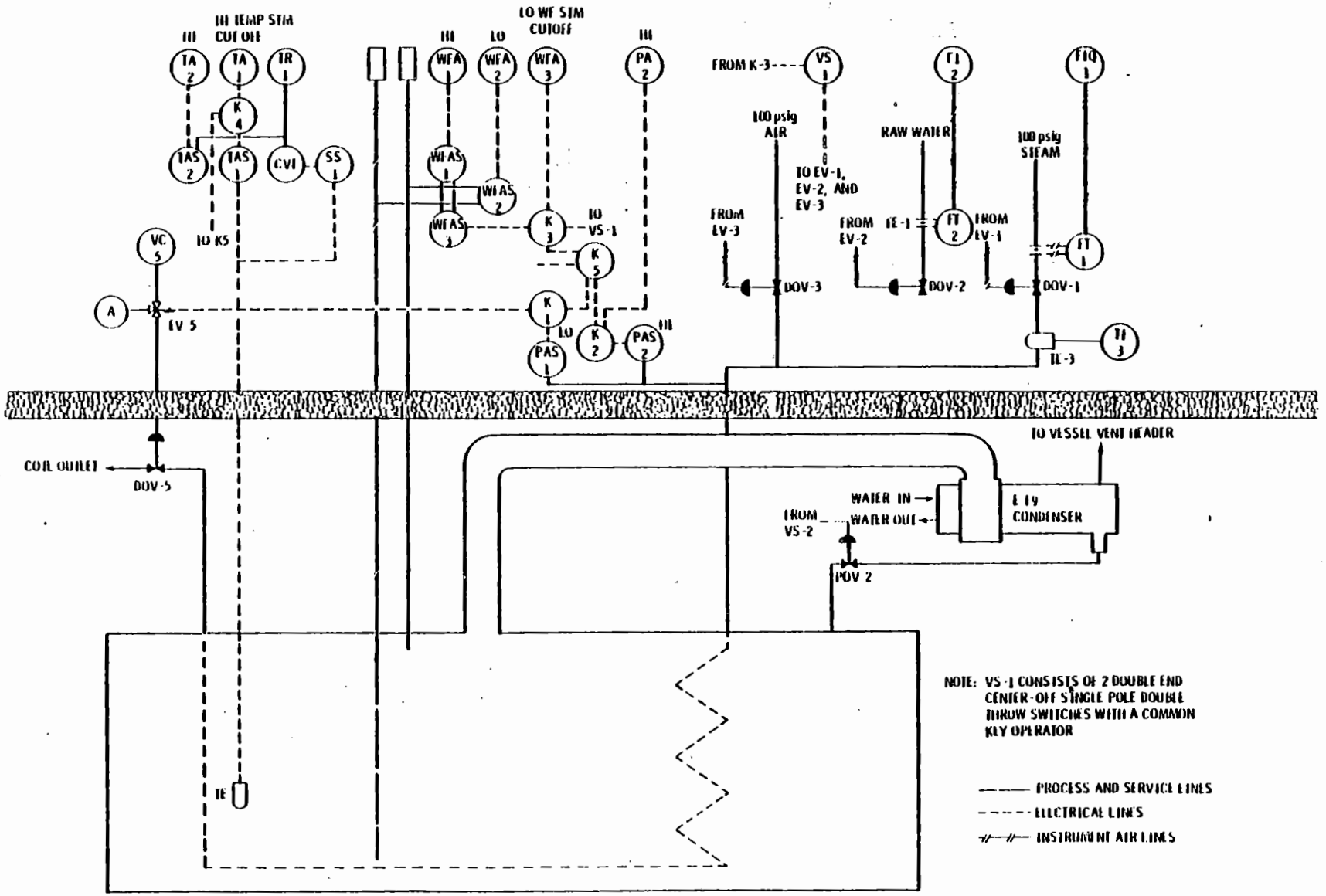

FIGURE 3-91. Waste Rework Tank (TK-F8) Process Safety Instrumentation.

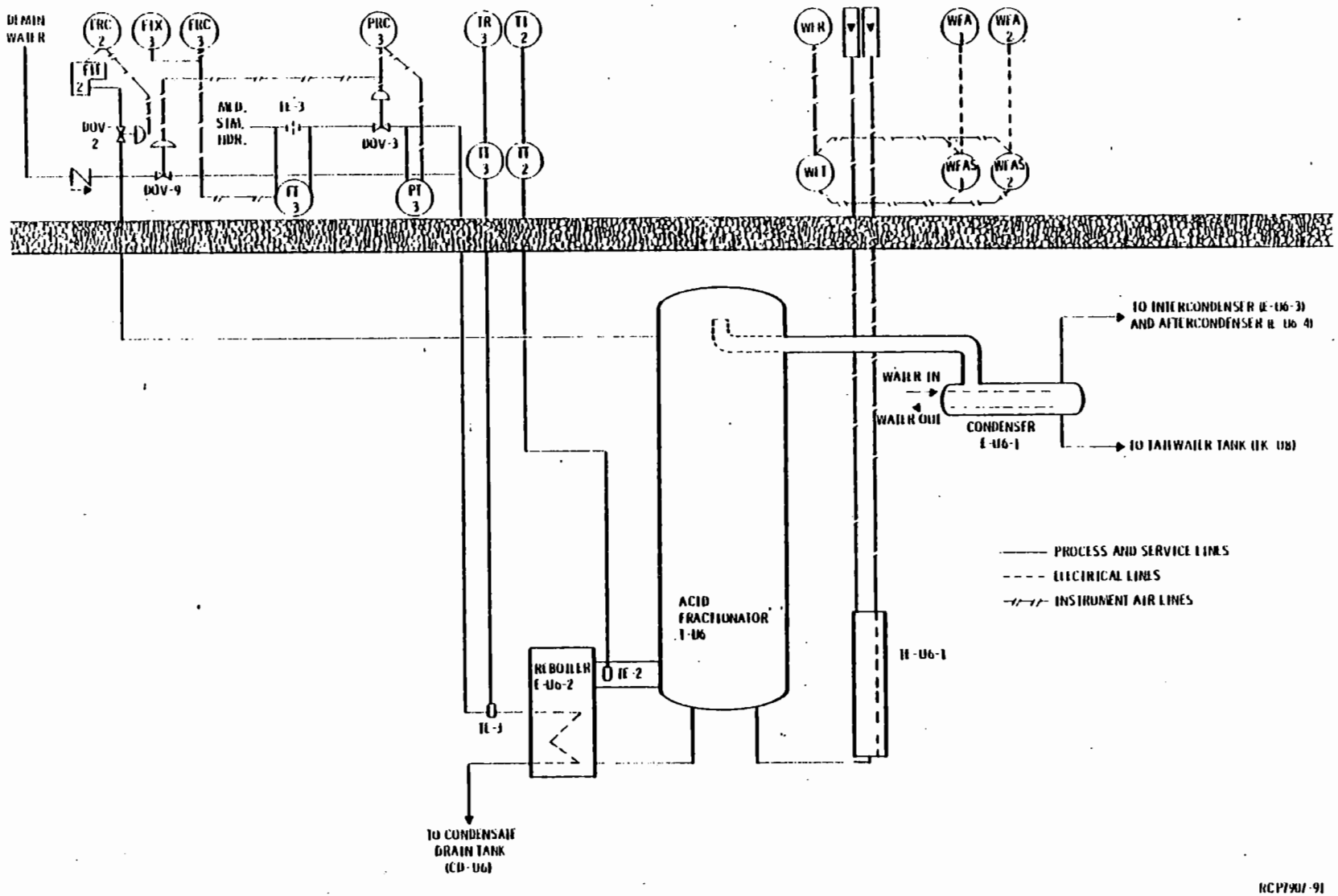

FIGURE 3-92. Acid Fractionator Process Safety Instrumentation.

3.10.15.6 In-Line Blending Control System

Nitric acid is diluted and solution is heated prior to use as the 1CX and 2EX scrub streams. These operations are controlled by the instrument system shown schematically in Figure 3-93.

The system consists of: (a) a steam injector having a steam supply controlled by a self-acting temperature-regulating valve, (b) a rotameter system which controls the demineralized water flow to the steam injector, and (c) a rotameter system which controls the nitric acid flow that is added to the stream at a point downstream from the steam injector. The mixed streams flow into a mixing tank, a sample pot, and then to the column. A temperature sensor, which actuates the temperature-regulating steam-addition valve, is located downstream from the mixing tank. A second temperature sensor, located in the sample pot, actuates a high temperature alarm light located on the graphic panel and shuts off the air to the steam supply valve in the event the stream temperature exceeds a predetermined value.

3.11 PROCESS SAMPLERS

Timely and accurate analyses of representative samples taken from selected locations in the process are prerequisite for effective process control. This section describes the equipment and methods used for remote sampling of process streams and tanks at those points where radioactivity in varying intensities is normally present. Nonradioactive streams, such as those in the chemical tank farm or AMU facility, are sampled by conventional methods, i.e., through manholes, handholes, or from spigots.

Identification of sample points, analyses required, and descriptions of analytical methods are presented in Section 4.13 of Chapter 4.0.

3.11.1 General Description of Sampling Facilities

For sampling radioactive liquids, A-, B-, and C-type, and PR room samplers are available. Samplers are also used for sampling gas streams in selected locations. All of the samplers are generally similar in that fluid transfer devices are used to transfer samples via piping from a remote sampling point to an accessible sample container. The sample stations are designed to provide support for sampler components and protection from radiation. Sampling points for liquids include tanks, cell sumps, and various process streams. The sample pots from which liquid samples are drawn consist of baffled enlargements in lines between processing vessels. Gas samples are taken from gas headers.

There are 74 locations in the plant which use A-, B-, or C-type samplers. A list of the sampler locations is given in Table 3-23. A-type samplers are for highly radioactive liquids, B-type for liquids of intermediate radioactivity, and C-type for liquids containing a low level of

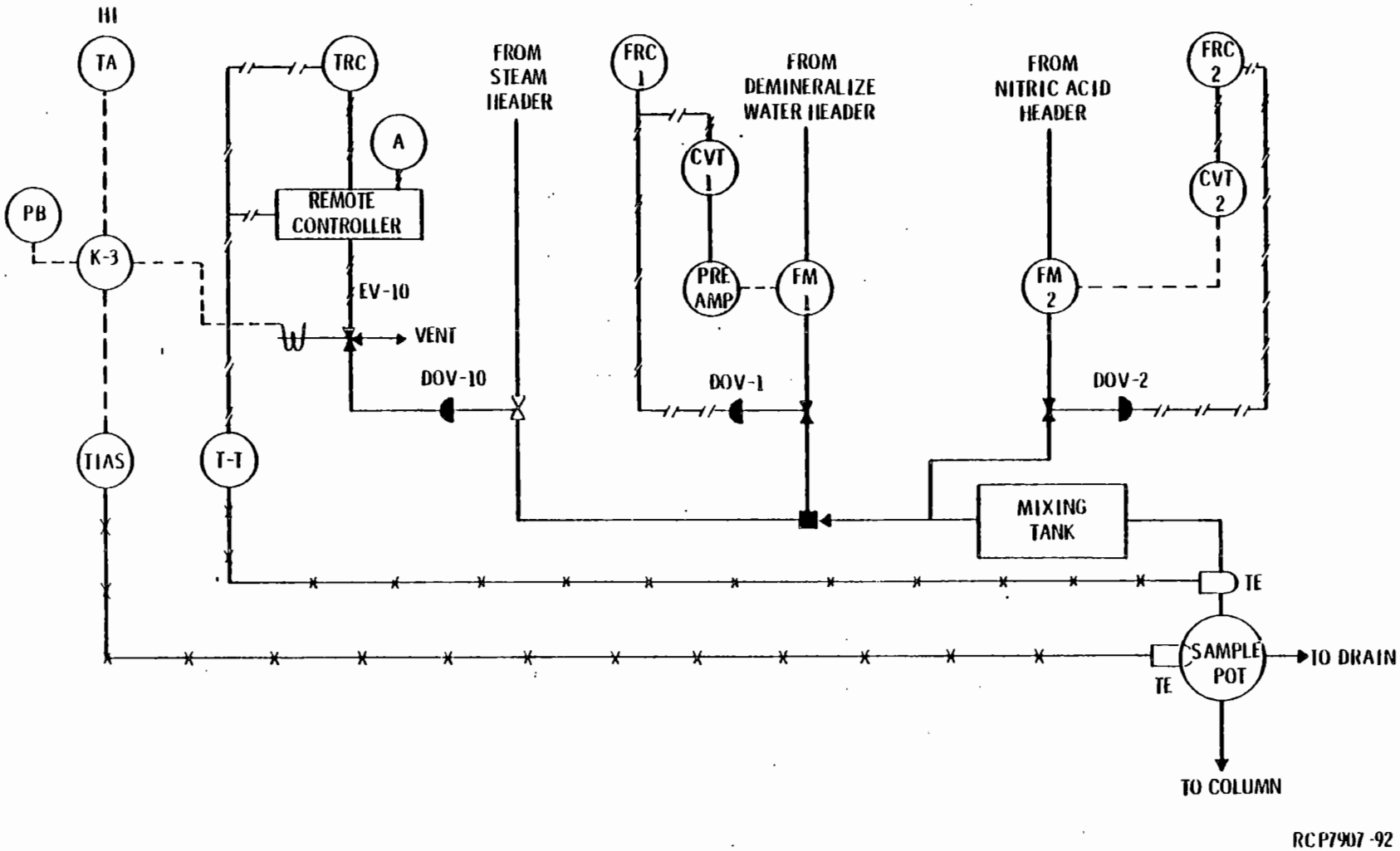

FIGURE 3-93. In-Line Blending Control System.

TABLE 3-23. Purex Plant Sampler Locations.

Sampler	Stream or Vessel Sampled	Sampler Type
A3	Dissolver Tank A3 and Sump	A
B3	Dissolver Tank B3 and Sump	A
C3	Dissolver Tank C3 and Sump	A
D2	Coating Waste Receiver Tank D2	A
D3	Metal Storage Tank D3	A
D4	Metal Storage Tank D4 and Sump	A
D5 Cave Hood	Metal Storage Tank D5	A
E1	Centrifuge Slurry Tank E1	A
E3	Centrifuge Feed Tank E3	A
E5	Coating Waste Tank E5 and Sump	A
E6	HAF Makeup Tank E6	A
F1	T-F2 to F-F1	B Mod[a]
F3	AAA Tank F3	B Mod
F5	AAD to T-F5	B Mod
F8	Waste Rework Tank F8	A
F10	3WF Tank F10	B (A Mod)[b]
F13	Utility Tank F13	A
F15	1WW Denitration Tank F15	A
F16	1WW Denitration Tank F16 and Sump	A
F18	Waste Receiver Tank F18	A
F26	1WW Receiver Tank F26 and Sump	A
G1	10 Feed Tank G1	B
G2	10 Waste Tank G2 and Sump	A
G5	100 Feed Tank G5	B Mod
G7	Storage Tank G7	B
G8	Organic Wash Waste Tank G8	B (A Mod)
H1	HA Feed Tank H1	A
H2	HAW, T-H2	A
H3	HAP, T-H2	B
H4	3WD, E-H4-2	B Mod
J1	3WB Tank J1	B
J1A	2PN Stream, T-J23 and Sump	B
J2	Tank J2	B
J3	1BXF Tank J3	B
J4	1BSU Stream, T-J4	B
J5A	1BP Stream, T-J4	B
J5B	2AF Tank J5	B
J7	1CW Stream, T-J7	B Mod
J8A	1CU Stream, T-J7	B Mod
J8B	1UD, E-J8-2	C
J21	2N Feed Tank J21	B (A Mod)
J22	2NW Stream, T-J22	B
J23	2PW Stream, T-J23	B (A Mod)

TABLE 3-23. Purex Plant Sampler Locations (Continued).

Sampler	Stream or Vessel Sampled	Sampler Type
K1	2DF Tank K1	B Mod
K2	2DW Stream, T-K2 and Sump	B
K3	2EW Stream, T-K3	B Mod
K4	2EU Stream, T-K3	B Mod
K5	2EU Receiver Tank K5	B Mod
K6	2EU Receiver Tank K6	C
L1	2A Waste Stream, T-L1 and Sump	B
L2A	2BW Stream, T-L2	B
L2B	2BP Stream, T-L2	B
L3	3AF Tank L3	B
L4	3AW Stream, T-L4	B
L5A	3BW Stream, T-L5	B
L5B	3BP Stream, T-L5	B
L6/L7	Condensate PSD/PCD	B
M1	Decontamination Tank	B
Q3	Feed Tank Q3	B
Q4	3X Column	B
Q5	Wash Waste Tank Q5	B
Q8	Sump Waste Tank Q8	B
R1	20 Feed Tank R1	C
R2	20 Waste Tank R2	C
R5	200 Receiver Tank R5	C
R7	200 Receiver Tank R7	C
R8	Wash Waste Tank R8	C
U1	Recovered Acid Storage Tank U1	C
U2	Recovered Acid Storage Tank U2	C
U3	Lab Waste Tank U3	C
U4	Lab Waste Tank U4	C
U7	Tank U7	C
U8	Tank U8 to B Plant Swamp	C

[a]B-type sampler modified to take large samples.

[b]The B (A Mod) sampler is a B-type bayonet sampler located inside of an A-type sampler enclosure.

radioactivity. All three types of samplers utilize air-operated jets to transfer samples of liquids from sampling points to sample stations located in the sample gallery, approximately 27 feet above most of the sampling points. Several of the samplers are equipped with a second jet and associated piping so that a process sump can be sampled also. Facilities are included in certain A- and B-type samplers for the installation of in-line analytical instrumentation (discussed in Section 3.10.6). Product removal room samplers utilize a pump or air jet to circulate solution so that a sample can be obtained with a four-way valve. Gas samplers use vacuum pumps for drawing samples from process gas headers in the cells to stations in the sample gallery.

3.11.2 A-Type Sampler

The A-type sampler was developed for use at the Purex Plant to simplify the handling of samples of highly radioactive liquids. This is accomplished by providing, at the sample station, facilities for accurately and remotely pipetting small-volume samples for delivery to the laboratory. A typical A-type sample station is shown in Figure 3-94.

3.11.2.1 General Description

An A-type sampler includes the following operating components, all of which (except for piping to the sample point) are located at a sample station in the sample gallery:

- One or two jet assemblies, each of which includes an air-operated sampler jet with suction and discharge piping for the recirculation of liquids from a sampling point, via a sample cup, to the jet and back to the sampling point.
- A Hanford remote pipetter for transferring measured volumes of solution from the sample cup (or cups) to dilution vials contained in shielded sample carriers.
- An in-line instrument facility, including the necessary piping and, for some stations, the instrument itself (see Section 3.10.6).

At the sample station, the components described above are supported and housed by a relatively massive structure (see Figure 3-94) of concrete, lead, and stainless steel, which separates the operating components from adjacent controls (and, therefore, the sample gallery proper) by means of shielding barricades and a ventilated hood. The sampler jets, necessary flow control valves, and associated piping are housed in a concrete pit (the valve pit) fitted with a removable cover block. Adjacent to the east of the pit, a separate concrete pit is provided for installation of an in-line instrument. To the west of the valve pit are two lead-shielded compartments, covered by a ventilated stainless steel

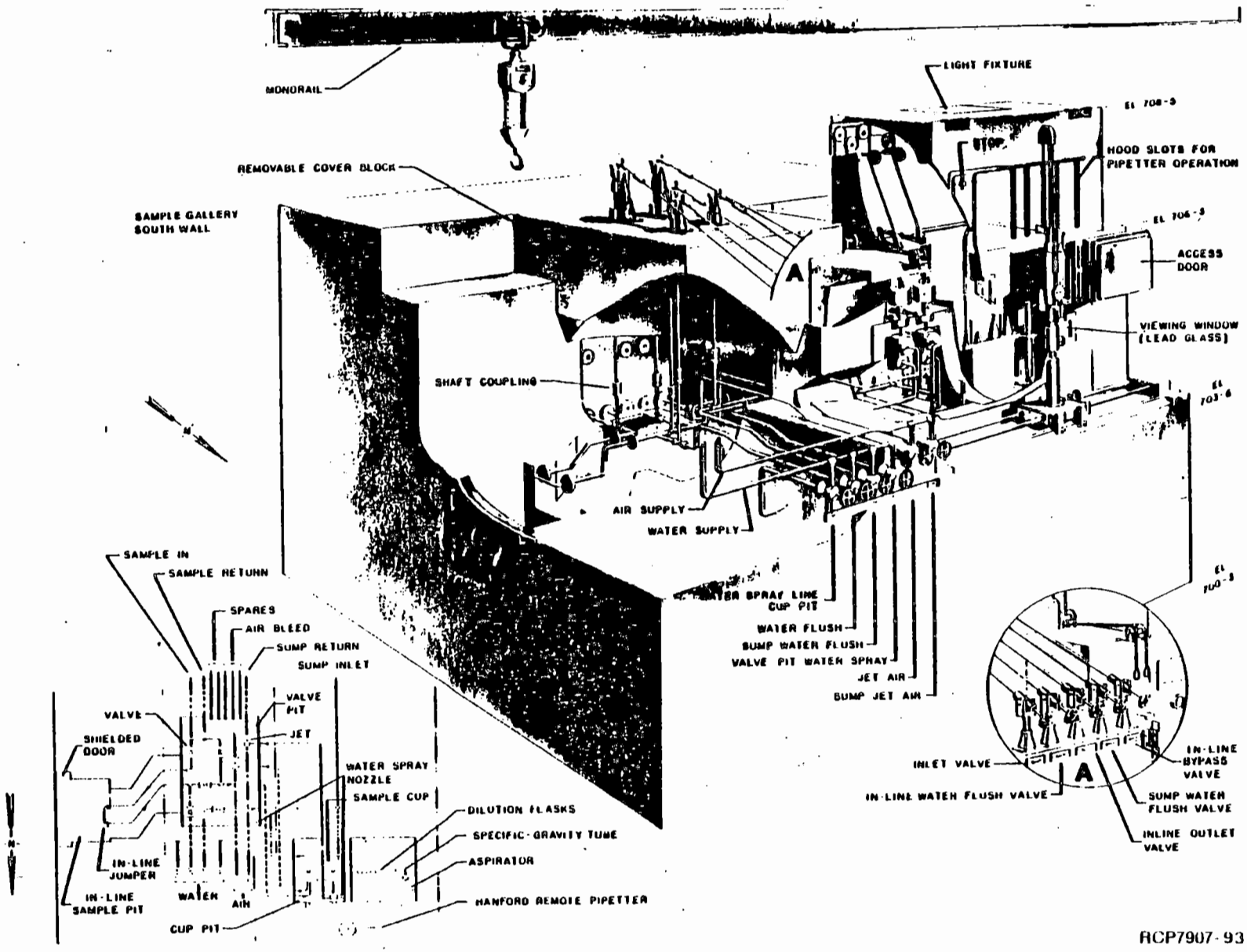

FIGURE 3-94. Sample Station With A-Type Sampler.

hood, which enclose the sampler cups and the shielded sampler carrier. Two lead-shielded doors and two lead-glass windows for access and for viewing are provided in the shielded wall of these compartments.

The Hanford remote pipetter is supported outside the lead-shielded compartments in a convenient operating position and is movable; the pipette tip and extension reach over the barricade through slots in the hood and into the compartments.

The thickness of concrete or lead shielding provided at a sample station varies between stations and between parts of a station. Concrete shielding may be from 2 to 4 feet thick; lead may be from 3 to 5 inches thick; and lead-glass viewing windows may be from 2 to 6 inches thick. During normal conditions, the shielding is sufficient to limit surface radiation to 1 mr/hr at the front of the sample station and 50 mr/hr at either side or the top. Escape of airborne contamination from the hood is prevented by use of an exhaust ventilation system.

3.11.2.2 Sampler Jet and Cup Assembly

Sampler jet and cup assemblies include an air-operated sampler jet, a sample cup, piping between these components and the sampling point, and other associated piping and valves. In general, all parts are fabricated from stainless steel. Using air to the jet at 90 psig, process solutions are recirculated at approximately 100 to 200 mℓ/min through the assembly.

The sample cup is essentially an enlargement in the jet suction line, baffled to promote mixing of the sample stream and capable of holding up to about 5 mℓ of solution. A vertical riser tube, equipped with a plug gate valve or ball valve and a removable riser cap, allows access to the sample cup for the purpose of pipetting a sample. The cup and riser cap are lead shielded. The riser cap may be raised and lowered by use of a pulley mechanism, which is controlled from a point outside the sample station shielding.

Sampler jet and cup assemblies are piped for continuous flow of liquid from the sampling cup to the suction side of the jet. A mixture of air and liquid is discharged from the jet back to the vented sampling point. The suction line and discharge lines are 0.75-inch and 0.5-inch stainless steel pipe, respectively. An air lift assists in attaining recirculation at high lifts by introducing a small quantity of air at a low point in the suction leg, thereby reducing the apparent specific gravity of the material being lifted. Piping for the jet and cup assemblies also includes lines which allow optional recirculation through an in-line instrument, if present. Valves necessary for the operation of the assembly are located in the valve pit. The use of extension handles equipped with angle drives permits operation of the valves from a point outside the sample station shielding barricades.

9413275.0724

3.11.2.3 Remote Pipetter

The remote pipetter utilizes a hydraulic syringe (Manostat, manufactured by the Manostat Corporation, New York, N.Y.) operated with a hydraulic reservoir connected, via capillary tubing, to an accurately drilled pipette tip for the transfer of measured volumes of liquids between sample cups and the dilution vials contained in shielded sample carriers. Known volumes of process liquids are drawn into or released from the pipette tip by displacement with hydraulic fluid. The hydraulic fluid flow is accurately indicated and controlled by operation of the Manostat unit.

The pipetter operating assembly is mounted on a pipette stand and guide rails outside the sample station shielding barricade. An extension arm, which carries the capillary tubing and pipette tip, reaches over the barricade. The stand and guide rails are designed to provide for regulated movement of the pipette. In order to make transfers between sample cups and shielded dilution vials, the pipette tip may be raised, lowered, or moved horizontally along a center line, which is common to these components. The sample station hood is appropriately slotted to accommodate this travel.

Sample volumes are measured by a dial-type gauge which is a part of the Manostat unit. The dial is divided into 1,000 units; one revolution on the dial represents 10 μℓ (0.01 mℓ). Volumes as small as 1 μℓ can be pipetted with an accuracy of ± 3%. The maximum volume that can be pipetted is 1,000 μℓ (1 mℓ).

3.11.3 B-Type Samplers

B-type samplers were installed at the Purex Plant for use in sampling moderately radioactive process solutions. Compared to A-type samplers, less shielding is required at the sample station and larger-sized samples are handled. No remote pipetter is used.

As indicated in Table 3-23, some A-type sample stations have been modified to accept B-type samplers. Originally, these stations contained A-type samplers to sample highly radioactive streams. Later, when plant processes were changed, these stations were used for sampling lower-level radioactive streams which, for sampling, didn't require the same amount of shielding and remote design complexity as the A-type samplers. B-type samplers were then installed in these stations for easier operation and to allow larger samples to be taken.

3.11.3.1 General Description

The B-type sampler also includes operating components and controls separated by the shielding barricades of a supporting structure. The operating components include the following:

- One or two jet assemblies practically identical with those described in Section 3.11.2.2
- An inverted J-shaped dip tube from the sample cup to a sample bottle held in place by a sample bottle carrier
- An in-line instrument facility.

The supporting structure for the components described above is made primarily of concrete, with separate pits for the sampler jets and valves, the sample cups, and, in some cases, in-line monitoring instruments. The sample-cup pit is covered by a stainless steel ventilation hood for the control of airborne contamination, while the access door to the pit is open. The other pits are covered with shielding blocks. The thickness of concrete shielding provided at a B-type sampler station varies between 6 inches and slightly over 3 feet.

3.11.3.2 B-Type Sampler Details

The B-type sampler is an inverted J-shaped dip tube as shown in Figure 3-95. The entire assembly is rigidly held together by means of air-tight screwed and gasketed joints. The lower, longer leg is inserted to a point below the operating liquid level in the sample cup, and the end of the upper, shorter leg, which terminates in a pipette tip, has a threaded adapter to receive a "bayonet" sample assembly. The bayonet assembly consists of a 5-mℓ glass serum bottle in a threaded steel shielding container. The bottle and shielding container fit over the end of the pipette tip.

The sampler functions in the following manner: while liquid is drawn through the sampler cup by the sampler jet, the negative pressure (vacuum) in the sample cup is equal to that in the pipette tip and sample bottle. As the pressure in the pipette tip increases to equalize that in the sample cup, liquid is drawn up through the dip tube into the sample bottle. By alternately starting and stopping the sampler jet, liquid sample is transferred in intermittent spurts to the sample bottle.

3.11.3.3 Modified B-Type Sampler Details

Several of the B-type samplers, as indicated in Table 3-23, have been modified so that larger volumes of samples can be taken. As shown in Figure 3-96, the J-shaped dip tube, characteristic of B-type samplers, has been replaced with 0.25-inch-diameter Tygon tubing attached to the

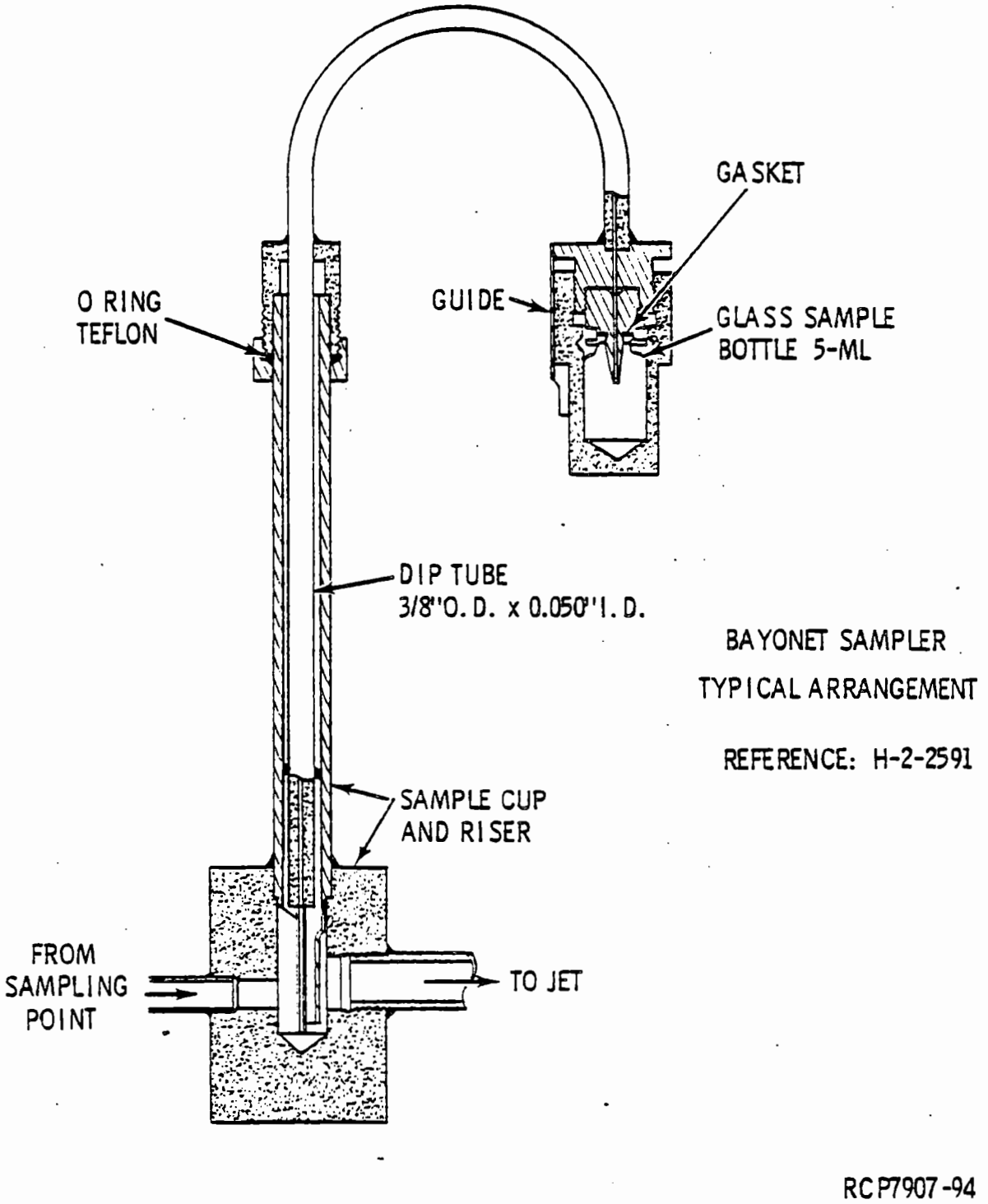

FIGURE 3-95. B-Type Bayonet Sampler.

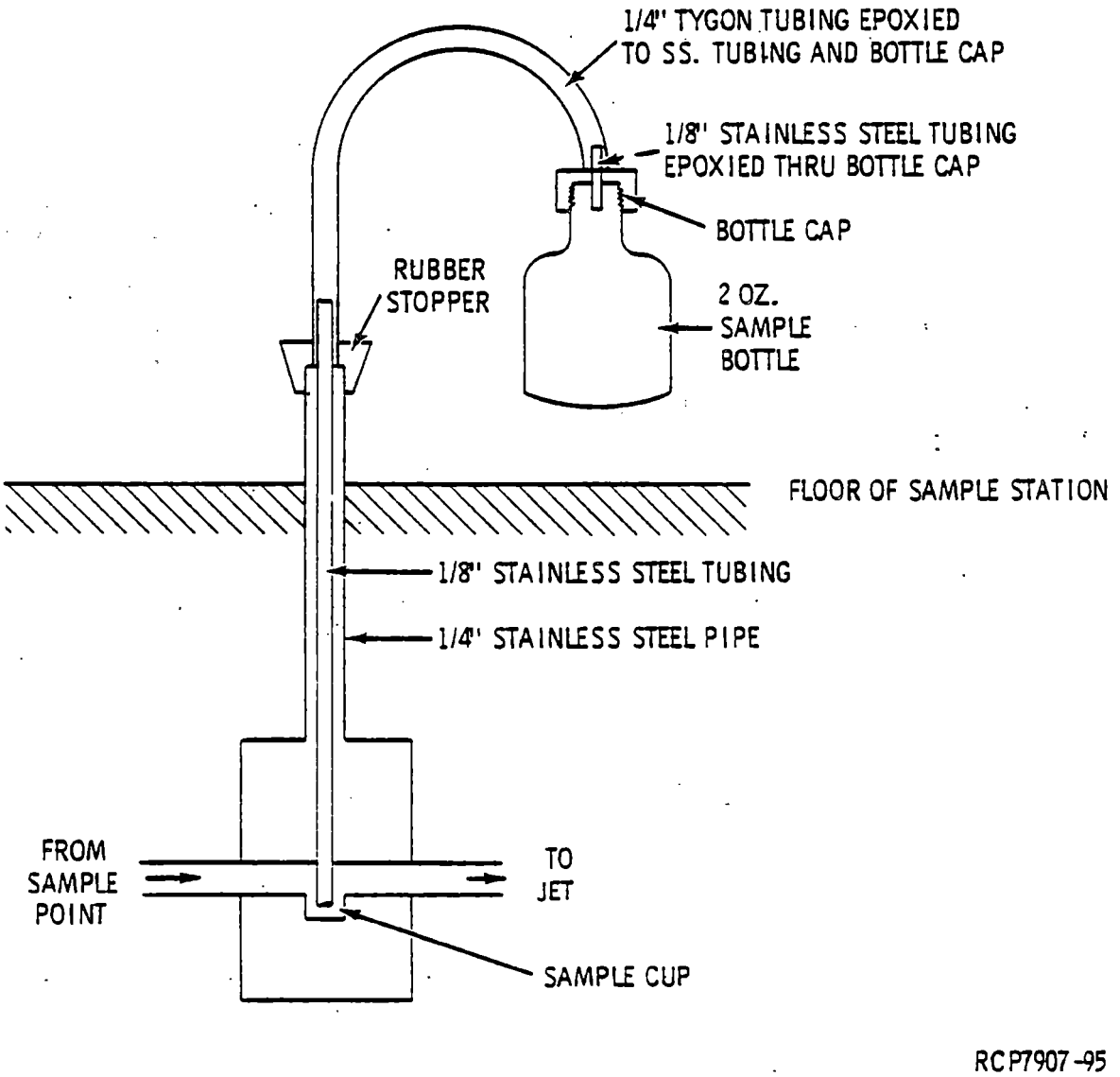

FIGURE 3-96. Modified B-Type Sampler.

stainless steel pipe extending into the sample cup. The other end of the Tygon tubing is attached to a threaded cap of a 2-ounce sample bottle. When this sample bottle is not in use, a smaller service bottle is threaded onto the cap to contain drips and close the sampler system. Recirculation of liquid in the sampler is accomplished by the same principle described for B-type samplers.

3.11.4 C-Type Sampler

C-type samplers are used for sampling slightly radioactive process solutions. Little or no shielding is required at the sample stations, which are stainless steel boxes located in the sample gallery. Samples taken with C-type samplers are relatively large compared to those taken with A- and B-type samplers. A typical C-type sampler is shown in Figure 3-97.

C-type sampler operating components include the following:

- A 120-mℓ (4-oz nominal size) glass sample bottle fitted with flexible plastic tube connections inserted in a two-hole rubber stopper.
- An air-operated jet (without sample cup) piped to transfer liquids from the sampling point, via the sample bottle, and back to the sampling point, using an air bleed.

Valves necessary for operation include one each in the sample bottle inlet and outlet lines, and one for control of air to the jet.

3.11.5 Product Removal Room Samplers

Sample stations are provided in the PR room for sampling Tanks L9 and L11. Tank L9 is the sample tank for plutonium nitrate product from Tank L8. Tank L11 collects various PR room and third plutonium cycle solutions, including SLL and SLK Sumps, stripper T-L6 and concentrator E-L7 flushes, out-of-specification product, and PR room hood flushes.

In Tank L9, samples are taken using an air jet to circulate solution through a four-way valve. As liquid flows through the valve, the valve is given a quarter of a turn, trapping some liquid. The liquid drains down into a 1-ounce plastic bottle attached to the bottom opening of the valve. The valve is vented at the top to allow the liquid sample to flow into the bottle. The valve is given a sufficient number of one-quarter turns to provide the desired sample volume.

The procedure for sampling Tank L11 is similar to that for Tank L9, except that an electric recirculation pump is used instead of the air jet. The full sample bottles are loaded out of the sampling hood, sealed in ice cream cartons, and shipped to the laboratory for analysis.

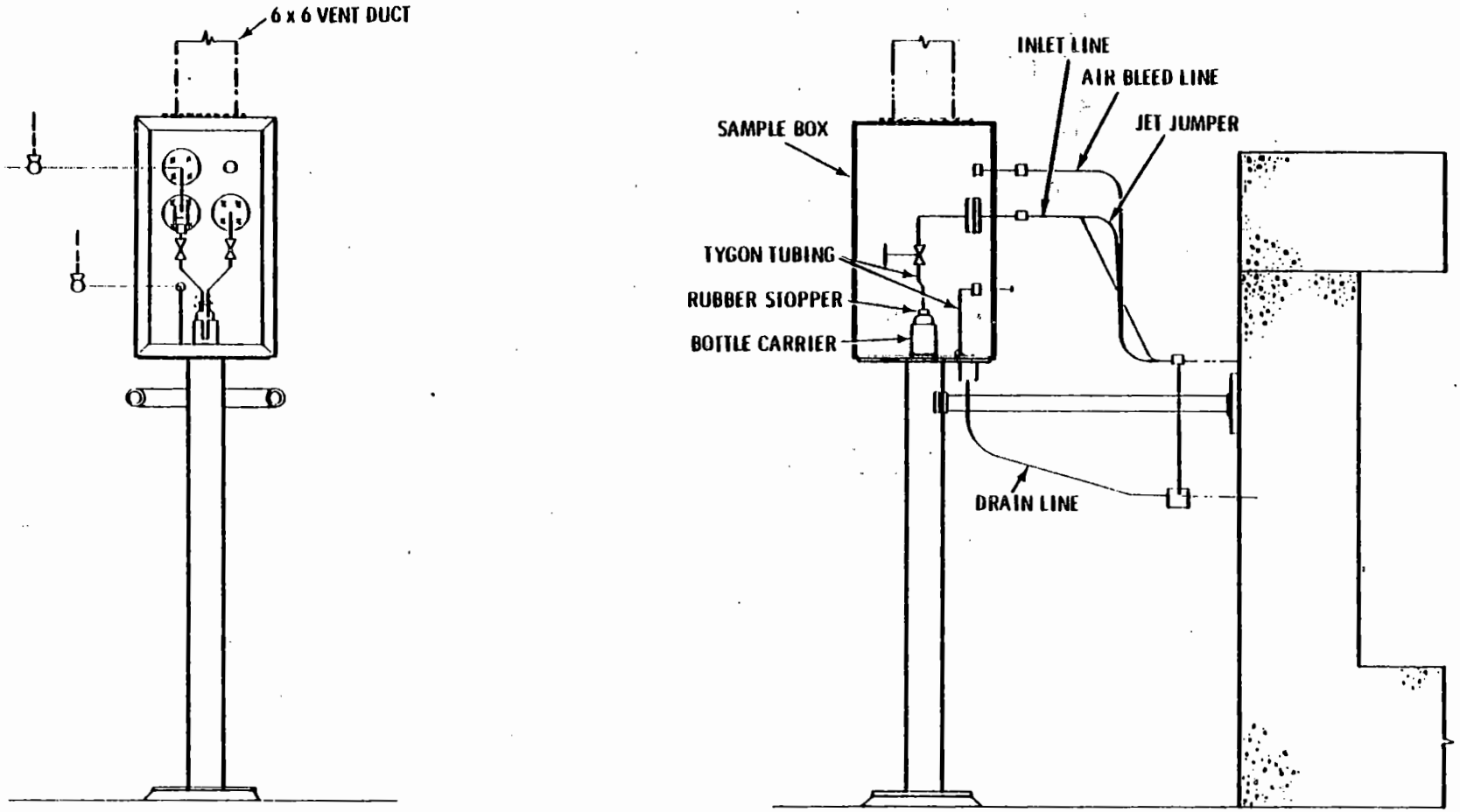

TYPICAL FRONT VIEW

TYPICAL SIDE VIEW

REFERENCE: H-2-52954

RCP7907-96

FIGURE 3-97. C-Type Sampler.

3.11.6 Tank Q6 Sampler

Samples are obtained from Tank Q6 with the same type of sampling equipment used with Tank L11.

3.11.7 Gas Samplers

Gas samplers are used for sampling process off-gases. The concentrations of radioactivity, in terms of particulate matter and radioactive gases, are determined by analysis of components which are absorbed or filtered from a representative volume of the off-gas stream.

A gas sampler consists of a jet for transfer of the off-gas sample from the sample point to the analyzers, which are located at sample stations in the sample gallery. Sample stations are available for taking samples from: (a) the dissolver off-gas system, (b) the vessel vent and condenser vent headers, and (c) the E Cell ammonia-hydrogen scrubber system.

3.12 CONDENSERS

Condensers of various sizes and configurations are used in nearly all phases of the Purex process. They are of a tube-and-shell design, with all surfaces that contact process fluids made of 300 series stainless steel.

3.12.1 Condensers E-J8-2, E-K4-2, E-H4-2 and E-F5

Except for very minor design differences, condensers E-J8-2, E-K4-2, and E-H4-2 connected to concentrators E-J8-1, E-K4-1, and E-H4-1, respectively, and condenser E-F5 connected to the nitric acid absorber, T-F5, are identical. As shown in Figure 3-98, these condensers are 10 1/2 feet long and 37 inches in diameter. All are insulated with fiberglass blanket.

The condensers are mounted horizontally over the concentrator towers. Each condenser contains 568 horizontal 1-inch-diameter tubes which carry cooling water. Heat transfer area, based on the inside diameter of the tubes, is 1,047 square feet. Tube sheet baffles are arranged so that cooling water makes six segmental passes through the condenser before discharge.

Overhead vapors from the concentrator enter the condenser through a 16-inch inlet pipe into an enlarged diameter section of the shell. Four baffles are arranged to promote crossflow of the vapors in the shell.

3.12.2 Process Vent Condenser E-F1

Condenser E-F1, which serves to condense steam from the three process vent jets and some vapors from the process vent system, differs in design

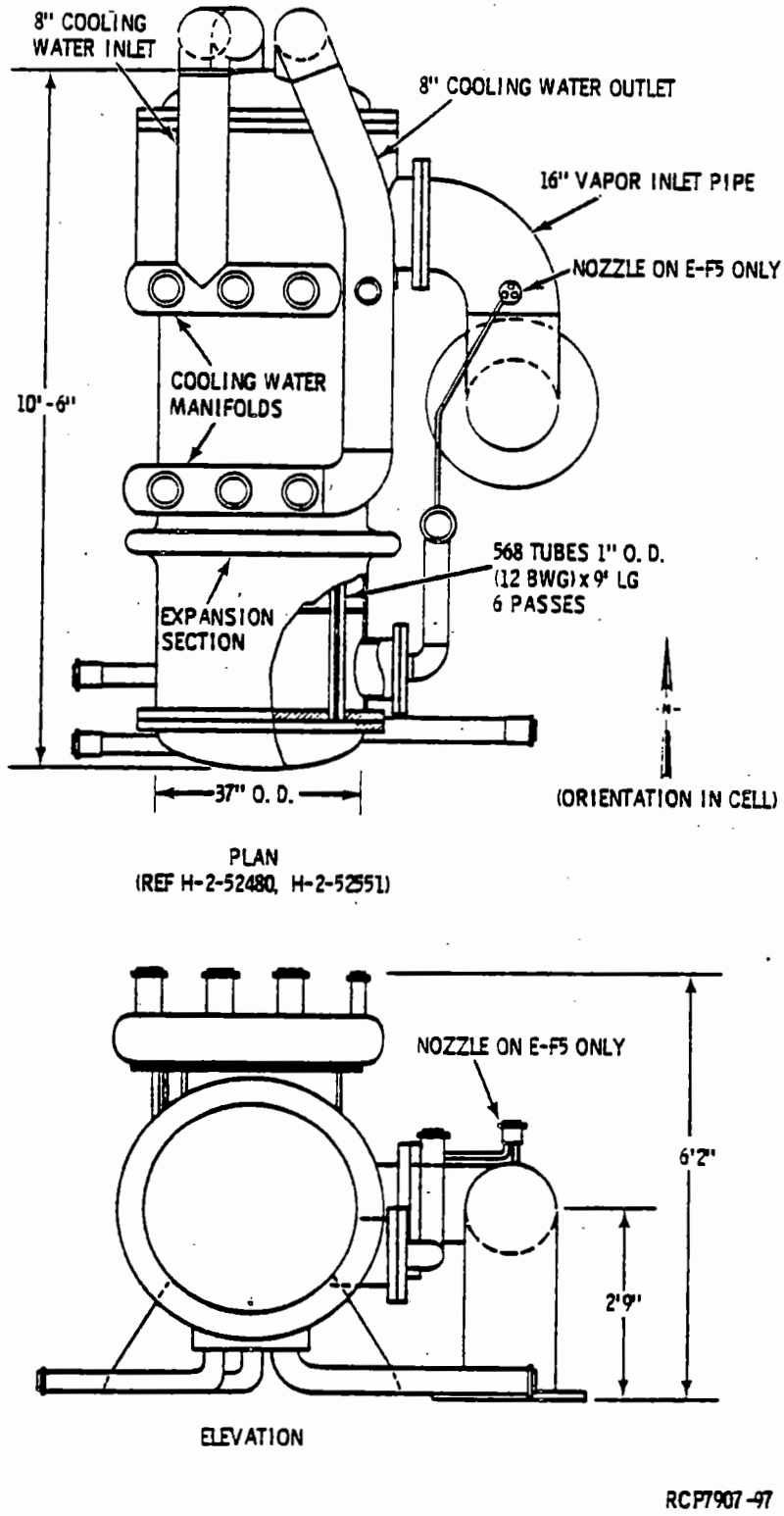

FIGURE 3-98. Condensers E-F5, E-H4-2, E-J8-2, and E-K4-2.

from the condensers described previously only in the vapor inlet and outlet nozzle configurations. Jet steam and vapors from the canyon cell vessel vent system, the condenser vent system (from E-J8-2, E-K4-2, E-H4-2, E-L7-2, and E-L6), and from condenser E-F5, enter E-F1 through an 8-inch, three-nozzle manifold in the side of the condenser, as shown in Figure 3-99. Noncondensible vapors and particulates not removed in E-F1 leave the condenser through a 10-inch nozzle and are routed to the process vent steam heater, E-F2.

3.12.3 Condenser E-F11-2

Water vapor from concentration of ammonia scrubber waste is condensed in E-F11-2, which is mounted over the tower of concentrator E-F11-1. Ammonia in the vapor is absorbed in the condensate, which collects on the shell side of the condenser. The condenser, shown in Figure 3-100, is similar in external design to those described in Section 3.12.1. Like those condensers, the shell of E-F11-2 is 10 1/2 feet long, and the cooling water manifolds and vapor inlet pipe are identical to those of the other large concentrator condensers. Internally, E-F11-2 contains 1,060 horizontal tubes, 3/4 inch in diameter by 10 feet long, which carry the cooling water. Four baffles direct the vapor in a crossflow pattern outside the tubes.

The ammonia-containing condensate drains through a weir pot connected to the side of the condenser. The weir pot in the drain keeps 20% of the heat transfer area of the tubes submerged in condensate in order to subcool the condensate to increase its affinity for absorbing ammonia vapor. A portion of the condensate (up to 15 gal/min) is pumped back into the shell side of the condenser on the opposite end from the vapor inlet. This spray scrubs most of the residual ammonia from the vapor stream before the vapor is routed to the ammonia vent system.

Unlike the condensers described previously, E-F11-2 is not insulated.

3.12.4 Waste Rework Condenser E-F9

Vapor from boiling product-bearing waste solution in TK-F8 is condensed in vessel E-F9, and the condensate is either routed to TK-F7 or refluxed to TK-F8. Condenser E-F9, shown in Figure 3-101, has an outer shell 10 feet long by 18 inches in diameter, which is insulated with a layer of fiberglass blanket. Like the large concentrator condensers described in 3.12.1, the vapor inlet to E-F9 enters an enlarged section of the shell containing an impingement baffle. Segmented baffles around the tubes cause crossflow of the vapors as they pass over the tubes.

The condenser tube bundle contains 108 1-inch-diameter horizontal tubes which transfer the cooling water. The tube sheet is sectioned so the water makes four tube passes before it discharges from the condenser.

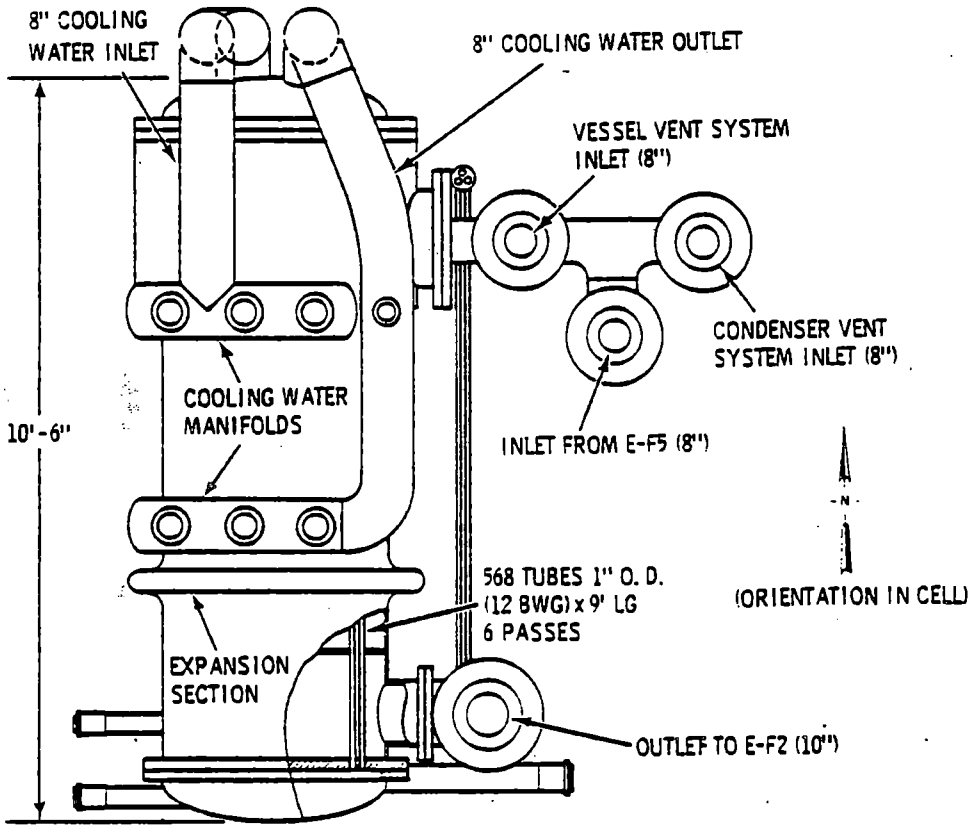

PLAN
(REF. H-2-52480, H-2-63152)

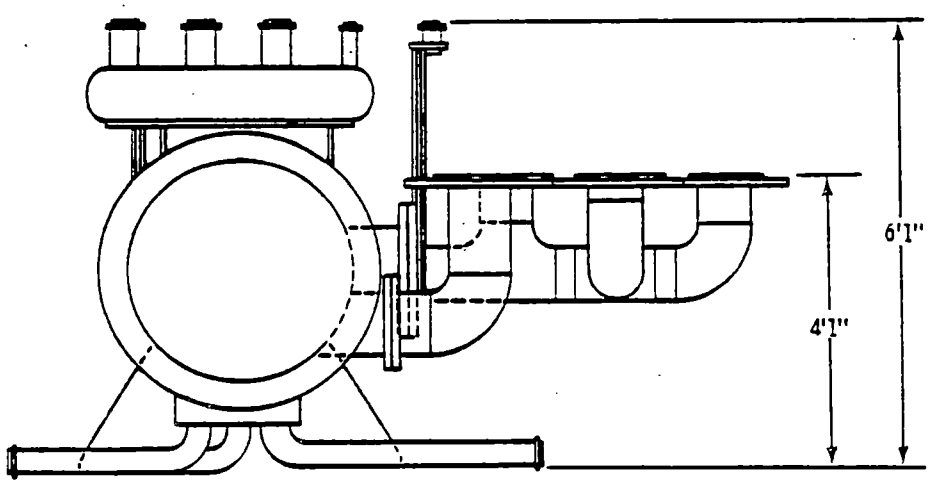

ELEVATION

RCP7907-98

FIGURE 3-99. Condenser E-F1.

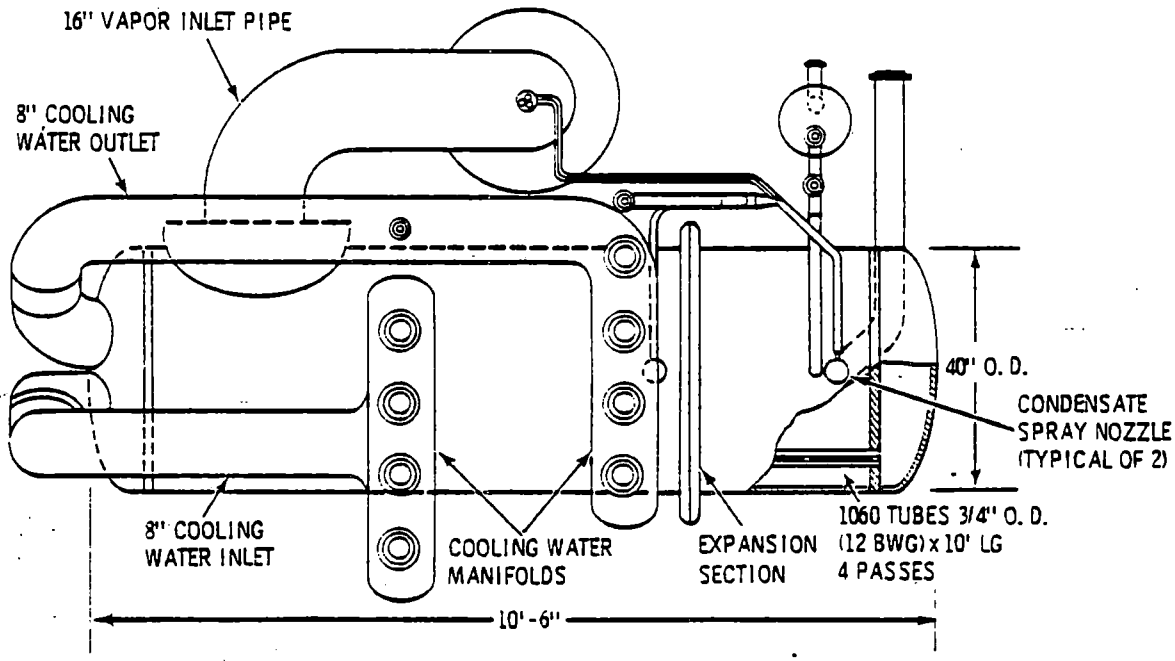

PLAN
(REF. H-2-62616, H-2-64804)

(ORIENTATION IN CELL)

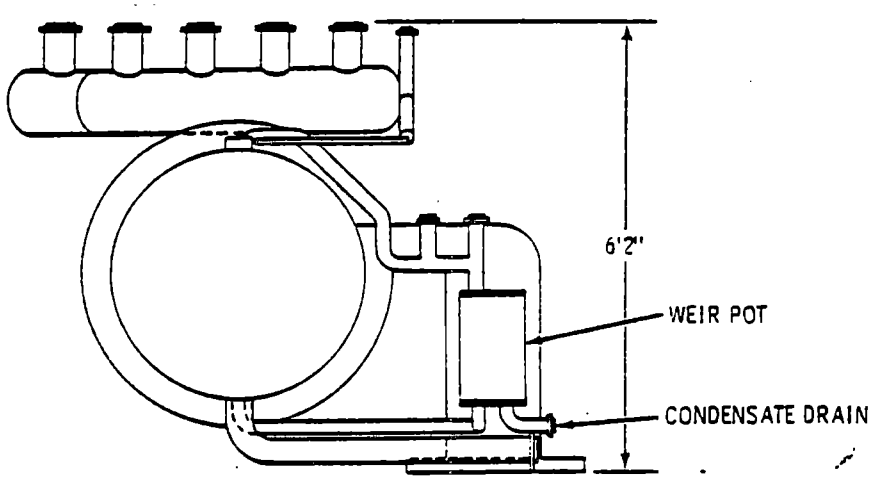

ELEVATION

RCP7907-99

FIGURE 3-100. Condenser E-F11-2.

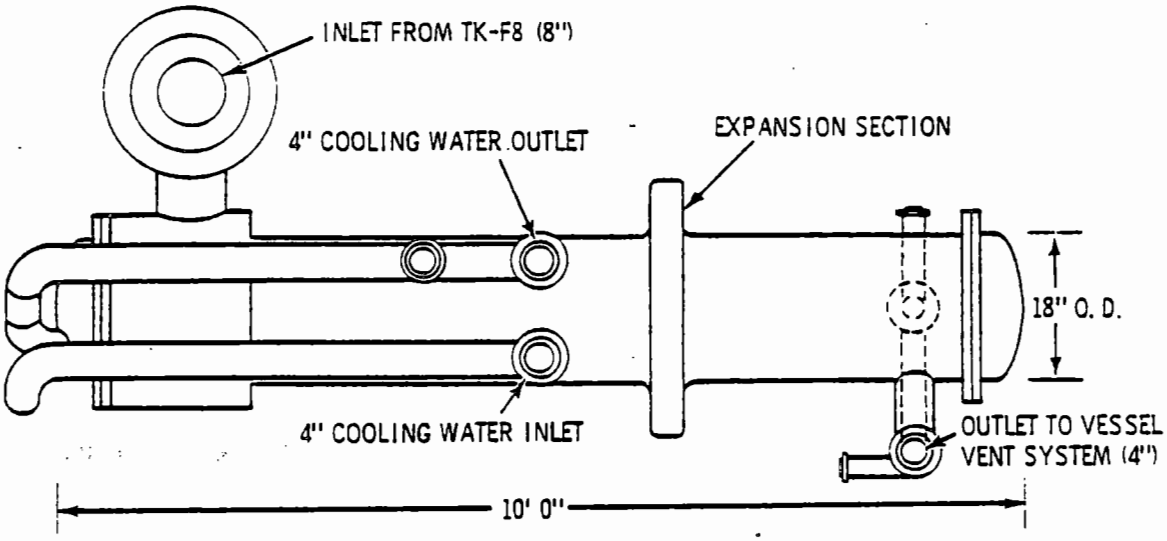

PLAN

(REF H-2-52481, H-2-52538)

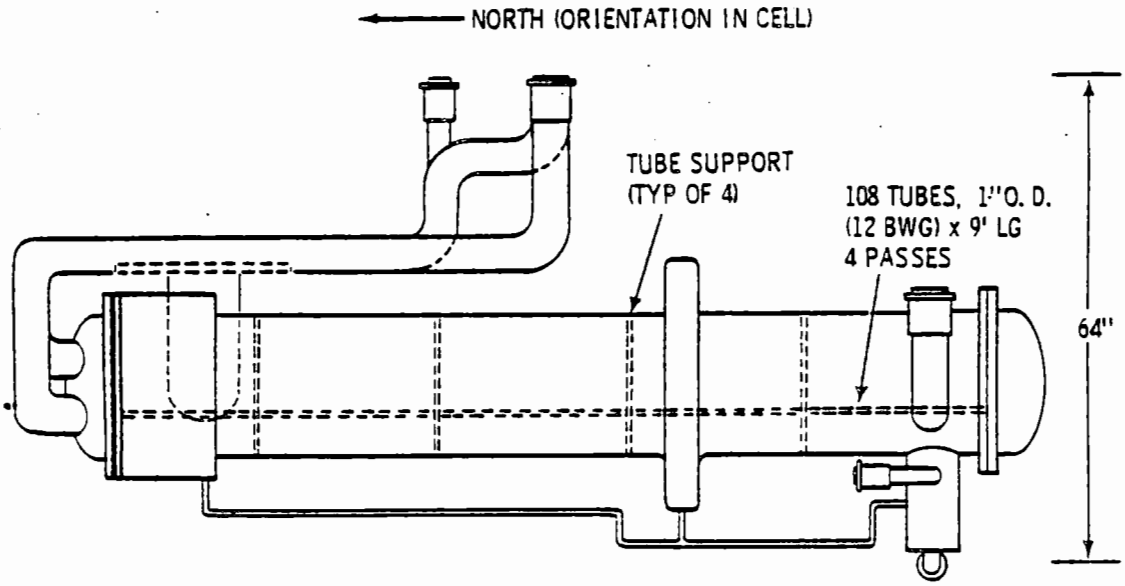

ELEVATION

RCP7907-100

FIGURE 3-101. Condenser E-F9.

3.12.5 Plutonium Process Condensers E-L6, E-L7-2, and E-L12

Condensers E-L6 and E-L7-2 condense the overhead vapors from plutonium stripper T-L6 and plutonium concentrator E-L7-1, respectively. Condenser E-L12 condenses steam from the vacuum jet for the plutonium rework receiver vessel, TK-L11. As shown in Figure 3-102, the designs of E-L6 and E-L7-2 are identical, while E-L12 differs only in the sizes of the vapor inlet and condensate drain nozzles.

Each condenser is 75 inches long with a shell made of 6-inch pipe. Ten horizontal tubes, 1 inch in diameter, carry the cooling water. Four baffles inside the shell direct the vapor in a crossflow pattern through the condenser.

3.12.6 Q Cell Vent Condenser E-Q9

Condenser E-Q9 condenses vapor from the neptunium stripper-concentrator and condenses steam from the jet which vents the Q hot cell vessels. The condenser shell, as shown in Figure 3-103, is 64 inches long and is made from Schedule 40 8-inch pipe. Unlike other condensers described previously, the tube sheets of E-Q9 are welded to both the condenser shell and heads. Also, all entrant and effluent lines attached to E-Q9 are welded in place, rather than being joined with flanges as with the other condensers.

Fifteen horizontal 1-inch-diameter tubes for cooling water flow are contained in the condenser. Four baffles inside the shell direct the vapors across the tubes for cooling and condensation.

3.12.7 U Cell Condensers E-U6-1, E-U6-3, and E-U6-4

Condensers E-U6-1, E-U6-3, and E-U6-4 are used to handle the off-gas from the vacuum fractionator, T-U6, and jet steam for evacuating T-U6. The three condensers are connected in series, with E-U6-1 attached to T-U6, and followed successively by E-U6-3 and E-U6-4, as shown in Figure 4-16 in Chapter 4.0. Overhead vapor from the vacuum fractionator is condensed in E-U6-1, while steam from the two-stage jet vacuum system for the fractionator is condensed in E-U6-3 and E-U6-4.

Condenser E-U6-1, shown in Figure 3-104, is about 19 feet long and 42 inches in diameter. Fractionator overheads enter the condenser through a 24-inch nozzle near the end of the shell. Inside the shell, the vapors contact a tube bundle containing 1,246 horizontal tubes 3/4 inch in diameter, which carry cooling water. The water makes six passes before it discharges to the cooling water header.

Steam from jet ejector J-U6-1 enters condenser E-U6-3 through a 1-inch nozzle in one end of the head. The steam enters and is condensed in 14 horizontal tubes 3/4 inch in diameter. Cooling water passes in

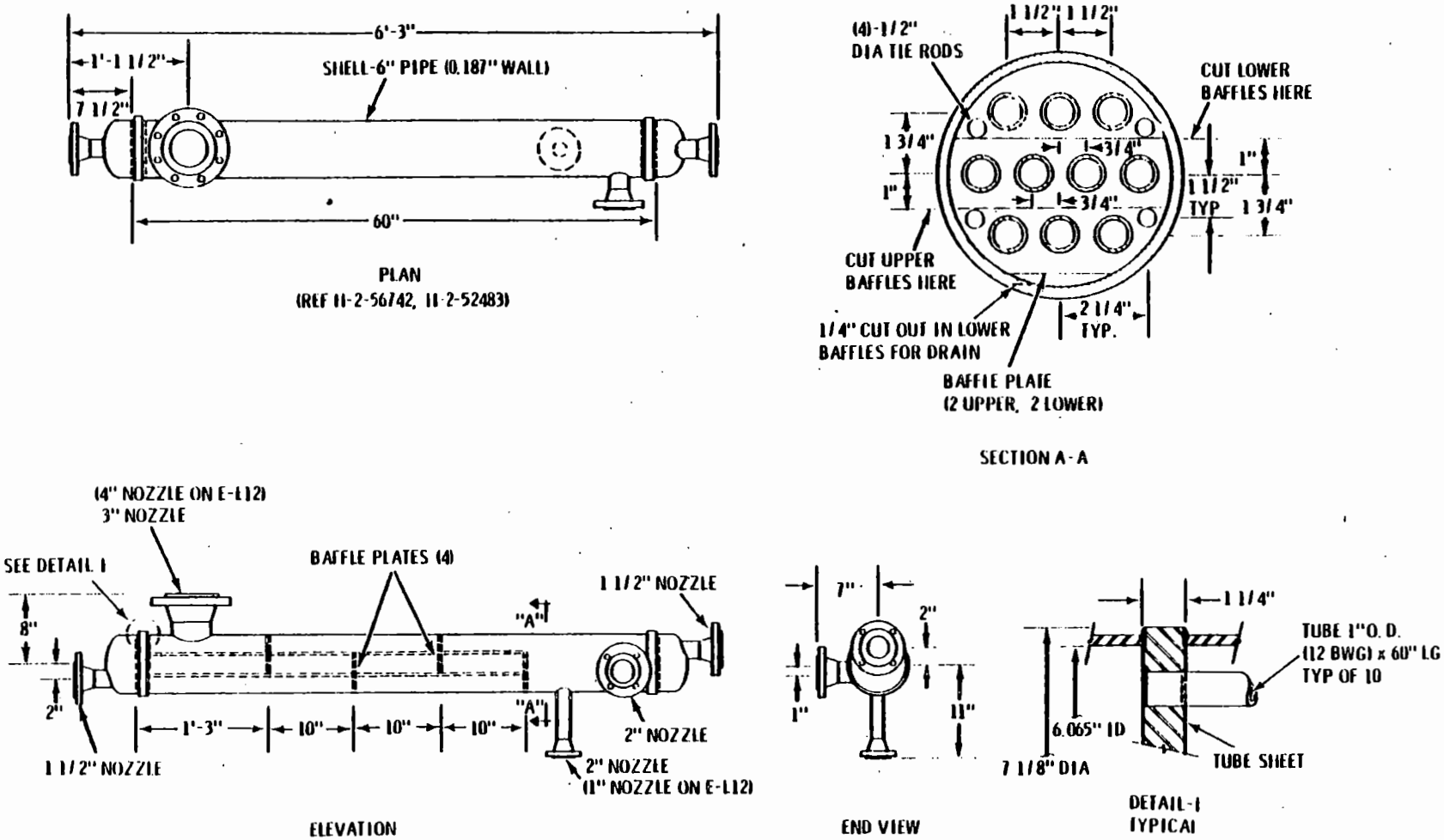

FIGURE 3-102. Condensers E-L6, E-L12, E-L7-2.

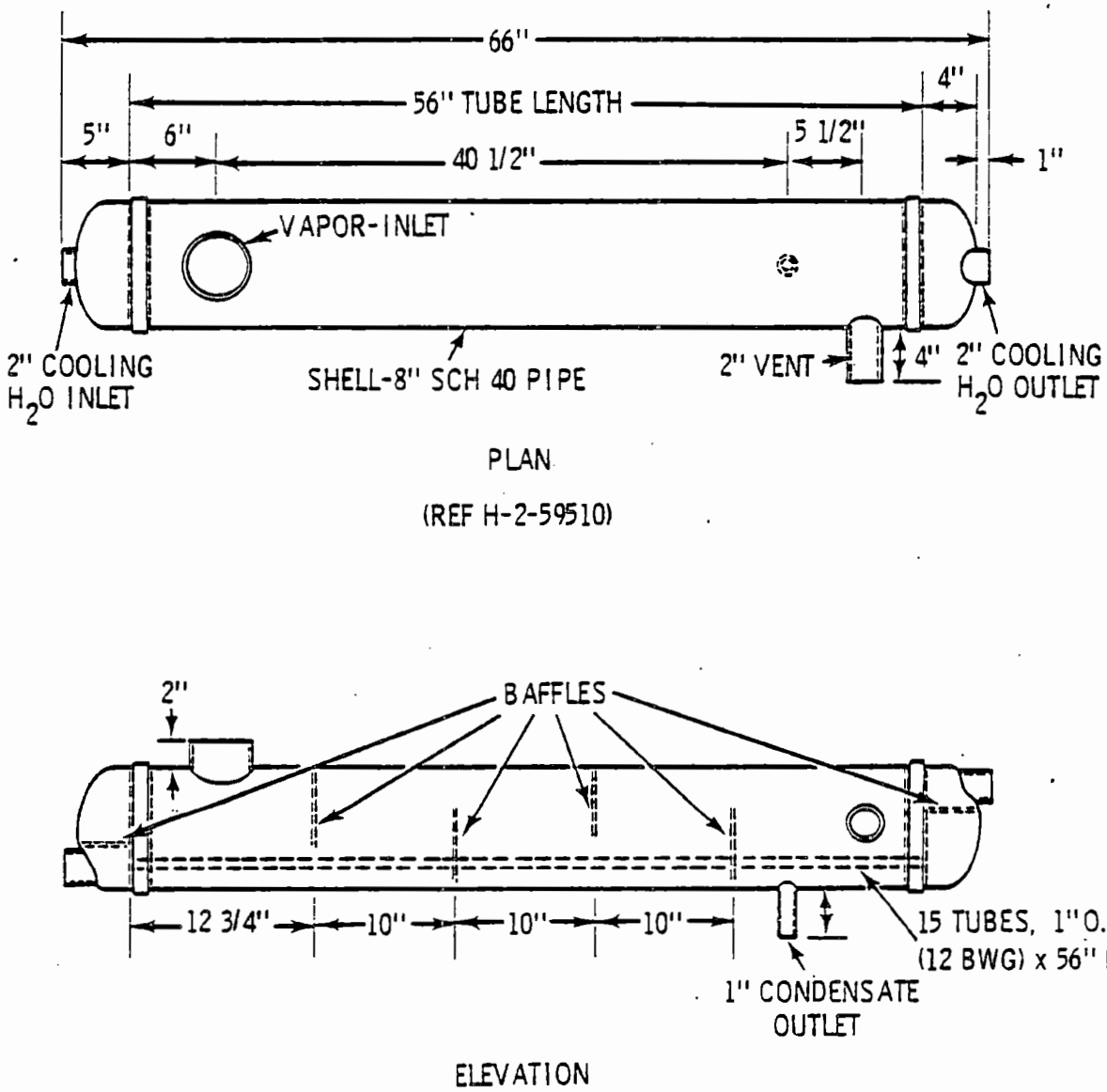

RCP7907-102

FIGURE 3-103. Vent Jet Condenser E-Q9.

9413275.0739

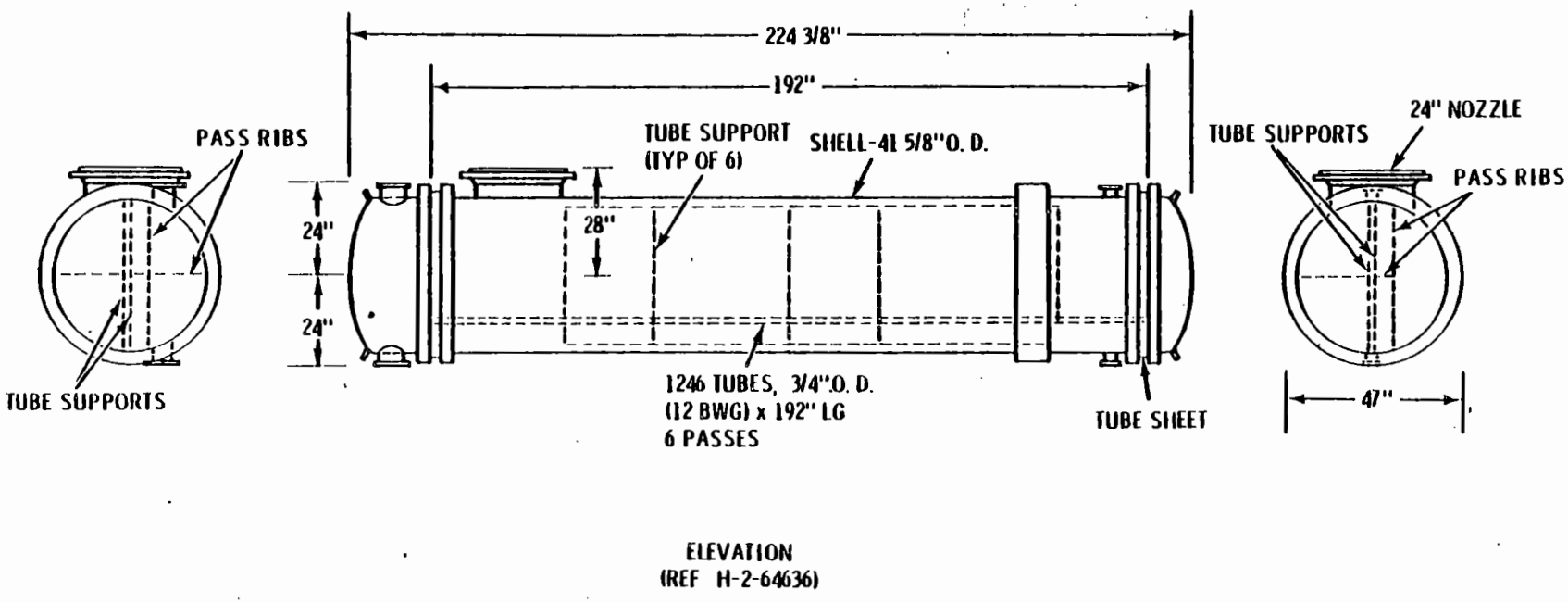

RCP7907-103

FIGURE 3-104. Condenser E-U6-1.

crossflow outside the tubes. As shown in Figure 3-105, the condenser is about 74 inches long with a 5-inch-diameter shell. Vacuum on the condenser is provided by ejector J-U6-2.

Condenser E-U6-4 condenses steam from J-U6-2, and noncondensibles discharge to the U Cell vessel system. The condenser (see Figure 3-106) is about 11 feet long with a 5-inch-diameter shell. As in E-U6-3, steam is condensed in 14 horizontal tubes, 3/4 inch in diameter, and cooling water is directed in crossflow by baffles on the shell side.

3.13 ACID ABSORBERS

Three bubble-cap towers are used in the Purex Plant for the recovery of nitric acid. One tower (T-F5), located in F Cell, recovers acid which is vaporized in the 1WW waste concentrator (E-F6-1). The remaining two towers (T-XA and T-XB) are located in the 293-A Building (backup facility). The XA and XB absorbers are installed in series and absorb nitrogen oxides generated in the dissolvers during metal dissolution. All three absorbers use water or dilute nitric acid as the liquid absorbent. Acid recovered in each absorber is routed through Tank F3 to the vacuum fractionator (E-U6) for concentration.

3.13.1 Canyon Nitric Acid Absorber (T-F5)

The F5 nitric acid absorber, shown in Figure 3-107, originally functioned as an acid fractionator with a reboiler attached to the bottom. This function, however, was replaced when the acid vacuum fractionator (T-U6) was installed in the Purex Plant. The absorber is a 20-foot-high tower divided into two sections. The 3-foot 6-inch-diameter lower section, formerly used for fractionation, contains 8 trays spaced 12 inches apart. Each tray holds 59 3-inch-OD bubble caps set over 2-inch-OD by 2 9/16-inch-high vapor risers, and overflow weirs 1.5 inches high. Three lines formerly used for draining chloride-bearing acid from the fractionator are attached to the bottom of plates 3, 4, and 5 respectively.

The upper absorption section of the tower increases in diameter to 10 feet and contains 7 trays spaced 12 inches apart. Each tray in the upper section is constructed with 156 5-inch-OD bubble caps set over 3.5-inch-OD by 2 1/4-inch-high vapor risers, and overflow weirs 1.75 inches high. Vapor from the waste concentrator enters T-F5 via a 16-inch-diameter line at the bottom of the upper tower section (between trays 8 and 9). Absorption water, recycled from the absorber condenser (E-F5), enters the absorber through a nozzle in the top of the tower. Vapor from the absorber leaves the top of the tower through a 16-inch line.

Operation of the acid absorber is described in Section 4.8.1.3.

The F5 absorber was constructed according to Class I vessel specifications (see Section 3.1.4.1). All parts, excluding external supports,

9413275.0741

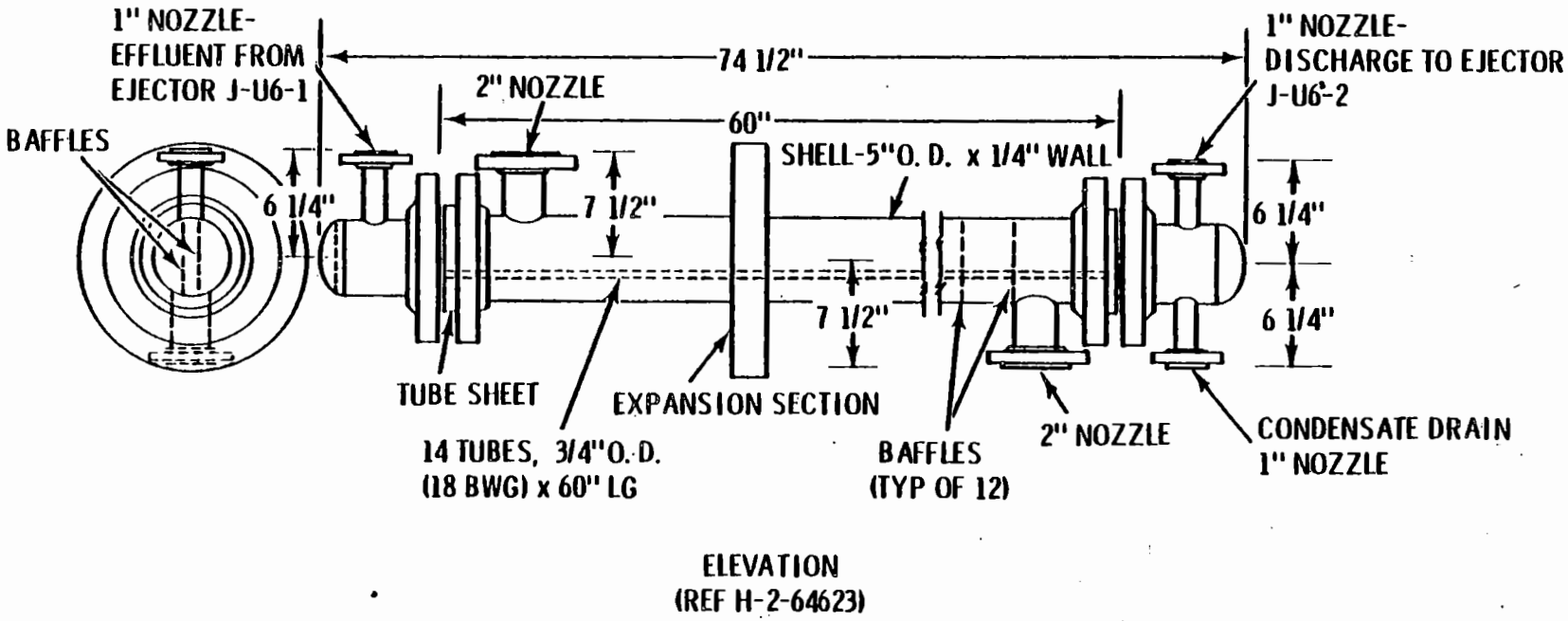

FIGURE 3-105. Condenser E-U6-3.

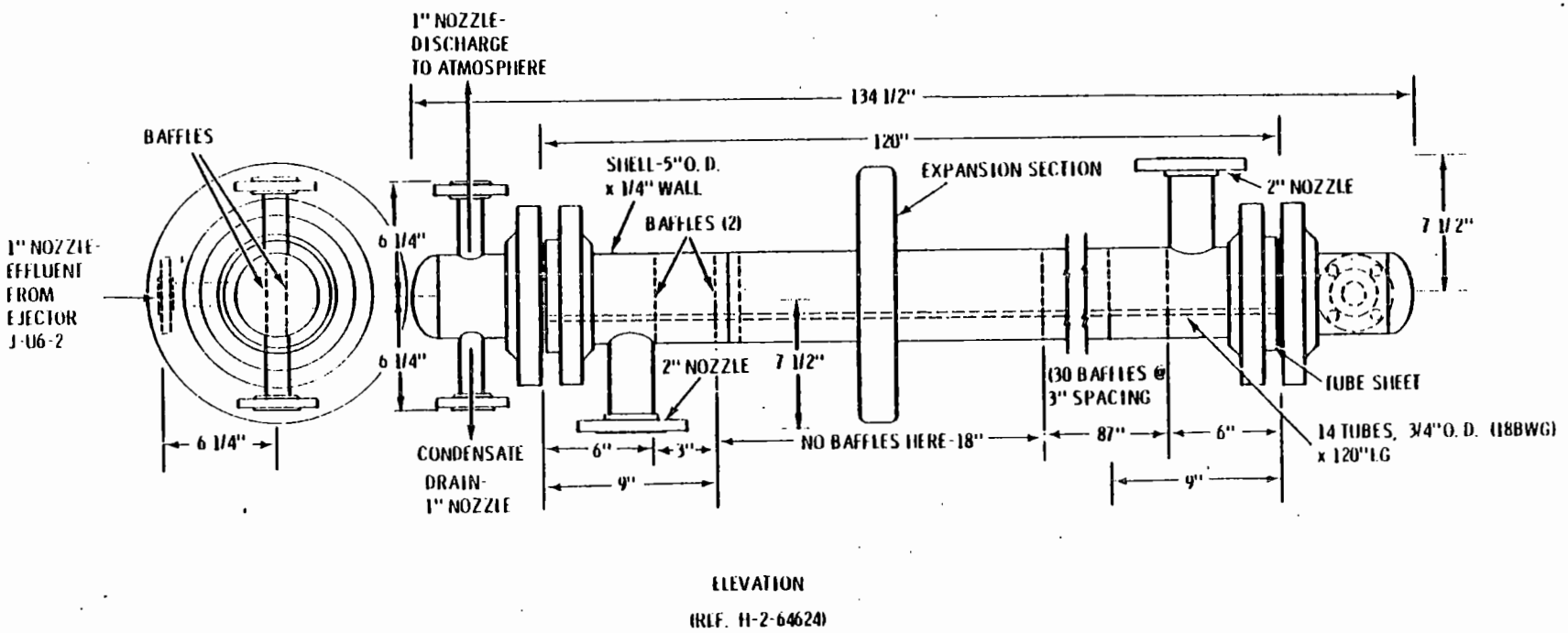

FIGURE 3-106. Condenser E-U6-4.

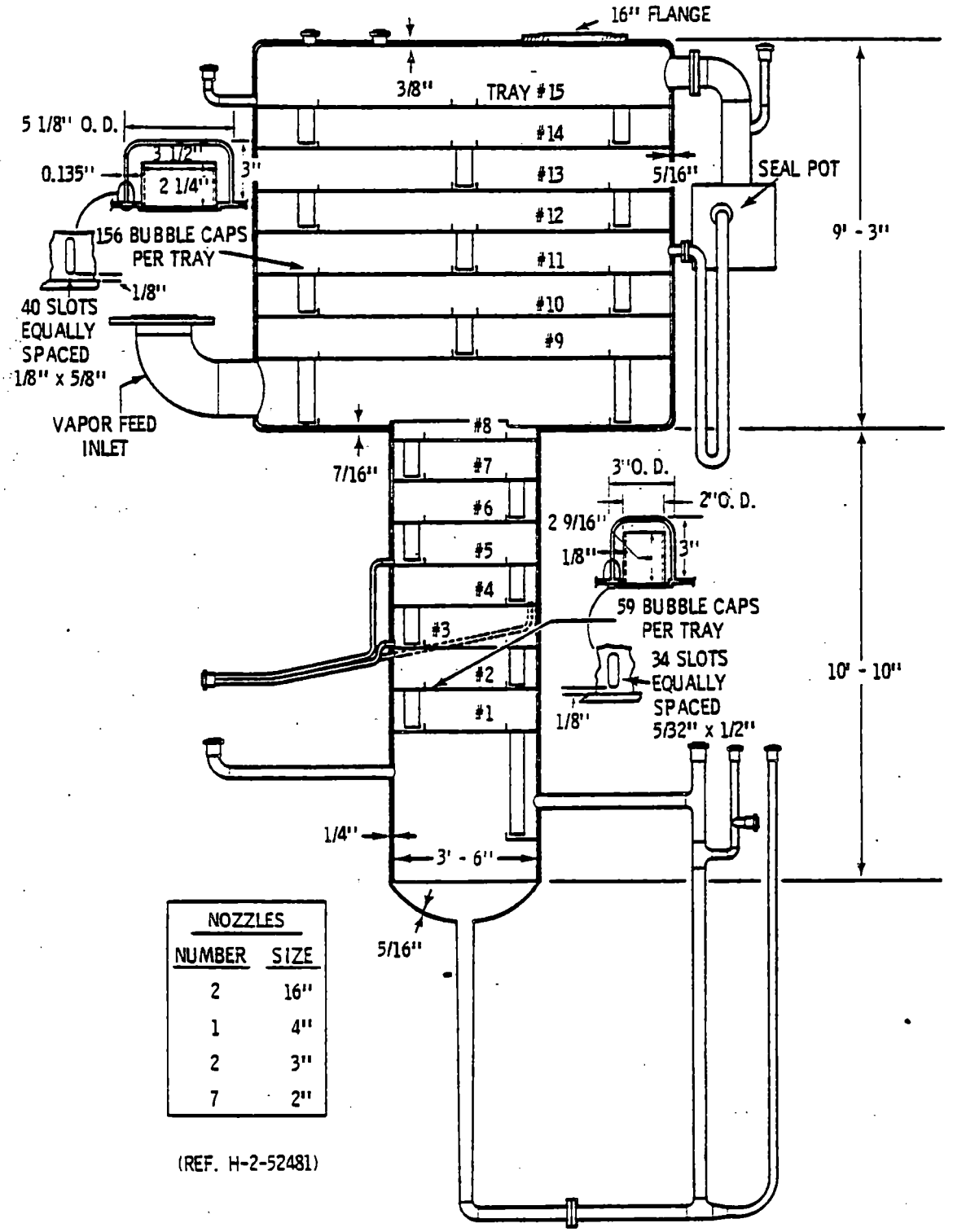

FIGURE 3-107. Nitric Acid Absorber T-F5.

are fabricated of Type 304L stainless steel with one-mil surface finish on both sides. The design data for the F5 acid absorber are summarized in Table 3-24.

TABLE 3-24. Canyon Nitric Acid Absorber (T-F5) Design Data.*

Shell Working Pressure	40 in. of water, vacuum
Shell Design Pressure	5 psig internal
	5 psig external
Shell Working Temperature	208°F
Shell Design Temperature	450°F
Specific Gravity of Contents	1.3
Corrosion Allowance	None
Radiographed	Yes
Construction Specifications	HWS-5540

*H-2-52535 F Construction Drawing, "Chemical Equipment Class I Vessel - 10'-0" x 26'-1" Tower - T-F5."

9413275-0744

3.13.2 293-A Building Acid Absorbers (Backup Facility)

Two absorbers (T-XA and T-XB) for recovering nitric acid are located in the 293-A Building. Operation of the absorbers is described in Section 4.3.6.2. The XA absorber, shown in Figure 3-108, is a 6-foot-diameter by 22-foot-high column containing 8 trays spaced 2 feet apart. Each of the top 5 trays holds 33 6-inch bubble caps while the bottom 3 trays contain 27 6-inch bubble caps. Bubble caps are constructed from 6-inch-OD caps with serrated edges set over 4-inch-OD by 2.75-inch-high risers. Each tray also has an overflow weir 2.75 inches high. Routings to liquid coolers are provided between the top five plates. The coolers, which are heat exchangers, reduce the liquid temperature, thereby increasing the absorption capacity of the liquid. Liquid is taken from a plate, cooled and routed to the next lower plate. Liquid feed points are located at the top of the column and between trays 3 and 4. Gas is fed to the bottom of the column, exits from the top, and is then routed to the bottom of the XB absorber.

The XB absorber, as shown in Figure 3-109, is a 4-foot 6-inch-OD by 20-foot-high column with 8 trays spaced 2 feet apart. Each tray contains 22 6-inch bubble caps set on a 4-inch-OD vapor riser, and a 1.5-inch-high overflow weir. The XB column is a simple counterflow absorber with liquid entering at the top and gas at the bottom.

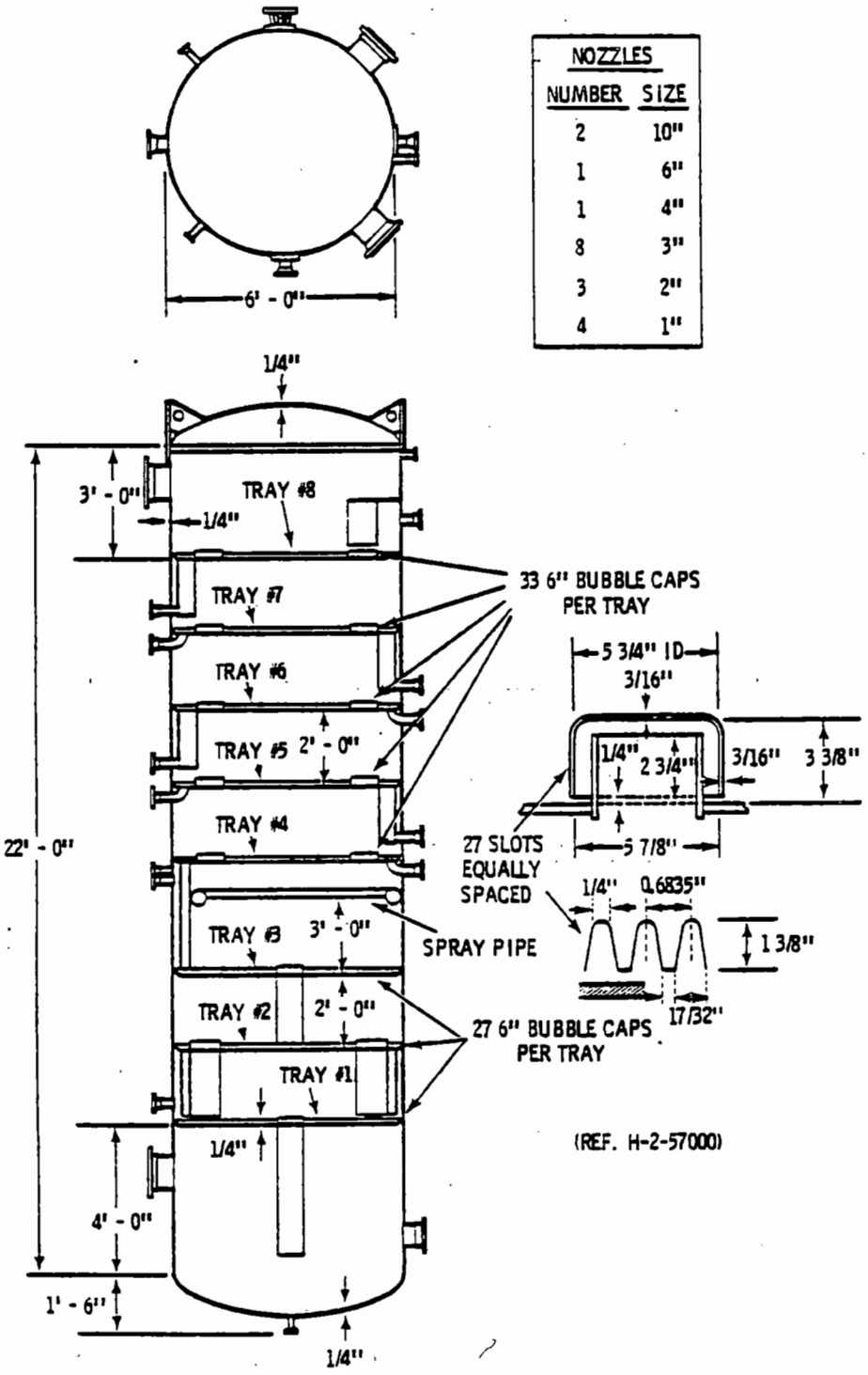

FIGURE 3-108. Nitric Acid Absorber T-XA.

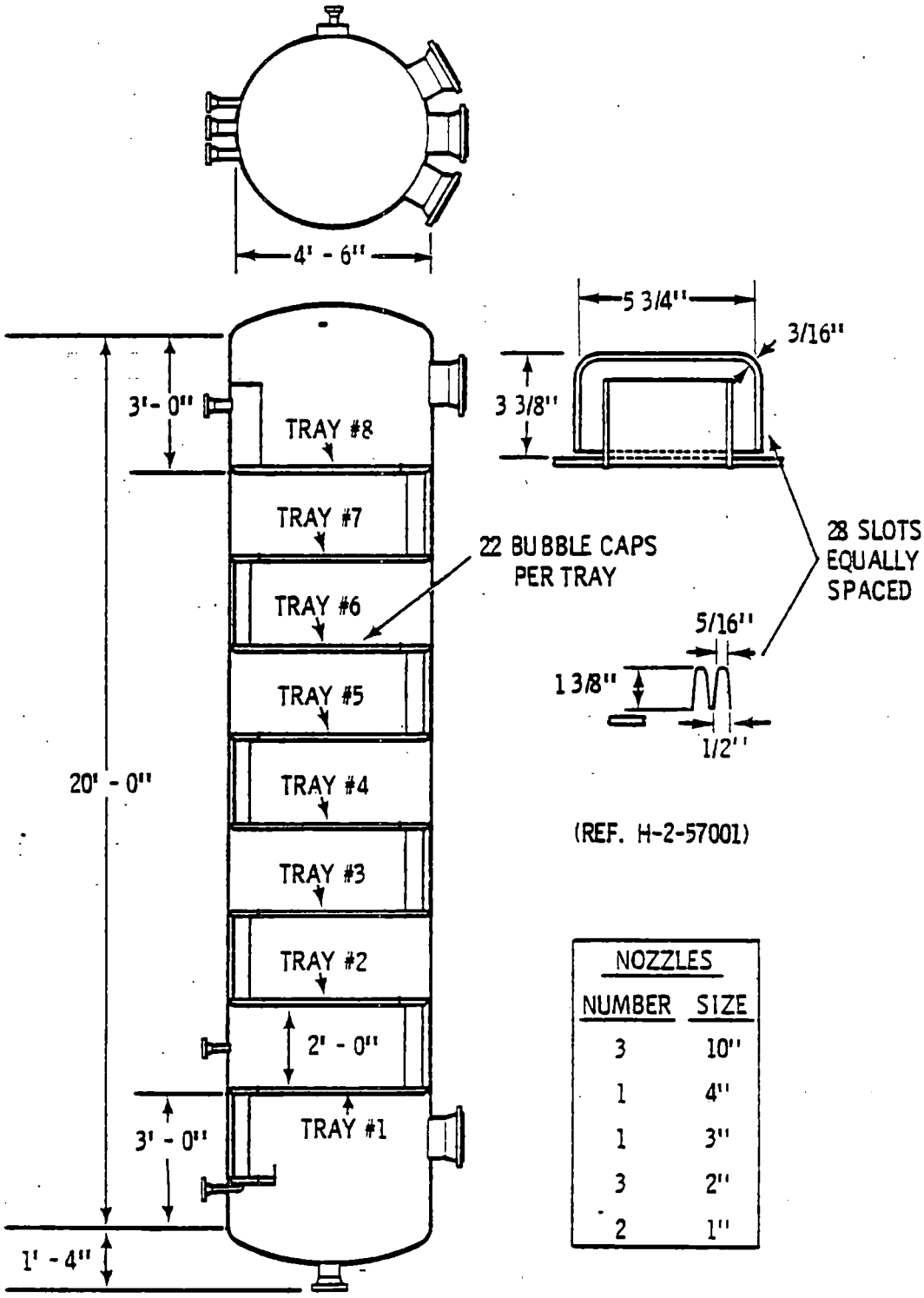

FIGURE 3-109. Nitric Acid Absorber T-XB.

The XA and XB acid absorbers are fabricated from Type 304L stainless steel and designed for contact maintenance. The design data used to construct the XA and XB columns are summarized in Table 3-25.

TABLE 3-25. 293-A Building Acid Absorber Design Data.*

Design Pressures	Full of liquid and 0.5 psig, vacuum
Design Temperature	150°F
Specific Gravity of Contents	1.2
Corrosion Allowance	0.06 in.
Radiographed	No
Specifications	HWS-5776, Revision I

*H-2-57002 Construction Drawing, "Nitric Acid Absorber."

3.14 NITRIC ACID VACUUM FRACTIONATOR

The nitric acid vacuum fractionator (T-U6) receives as feed dilute nitric acid from the acid absorber (T-F5), the backup facility (XCA stream), and the UO_3 Plant via Tank U5. The composite feed nitric acid concentration is 20 wt%, and the nitric acid product is 50 wt%. The fractionator is located in the 206-A Building, which is north of the main Purex processing building (202-A). Operation of the fractionator is described in Section 4.8.1.4 of Chapter 4.0.

The vacuum fractionator is shown in Figure 3-110. It consists of an insulated tower 8 feet OD and about 35 feet high, fabricated from 3/8-inch plate. The tower is enclosed by dished heads and contains 14 trays spaced 18 inches apart. Each tray has 86 bubble caps located on an 8-inch equilateral triangular pitch. The bubble caps are 6.75 inches OD surmounting 4.75-inch-OD risers. The two types of overflow weirs used on the trays are also shown in Figure 3-110.

The fractionator was fabricated from Type 304L stainless steel and was designed for contact maintenance. The design data used in the construction of the unit are summarized in Table 3-26.

Liquid feed from Tank U5 enters the tower through one of three lines which feed trays 8, 9, and 10, respectively. Liquid leaves the tower via one of two nozzles at the bottom, such that a portion of the liquid returns to the reboiler and the remainder goes to the product tank (TK-U1 or TK-U2).

THIS PAGE INTENTIONALLY
LEFT BLANK

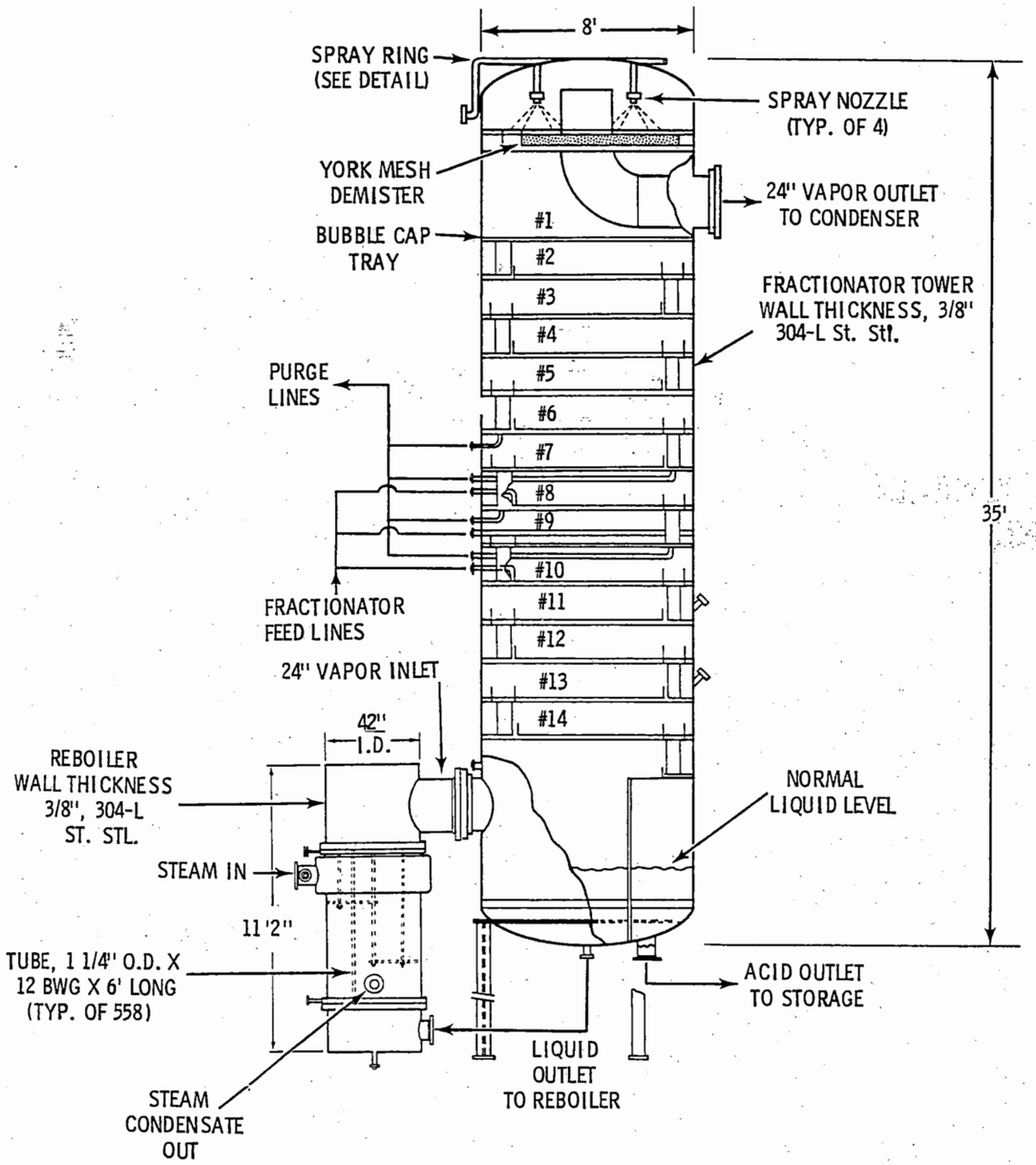

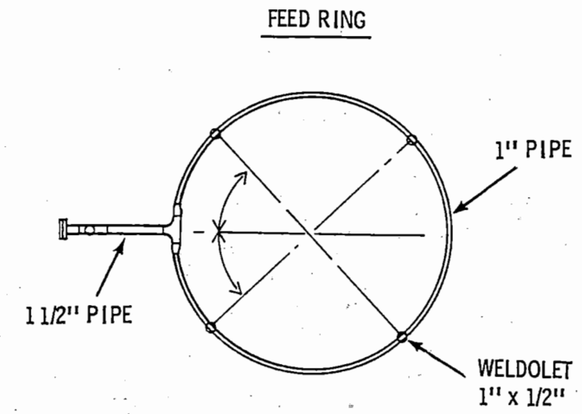

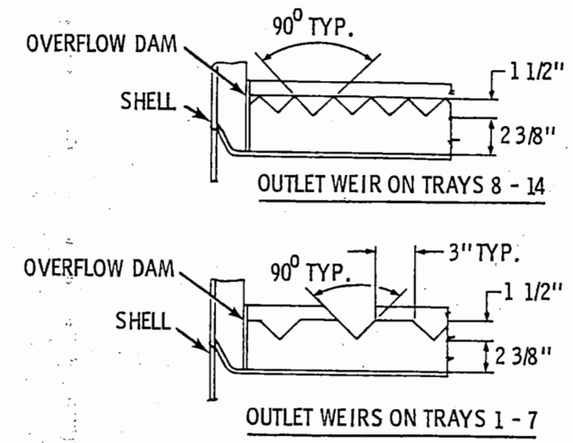

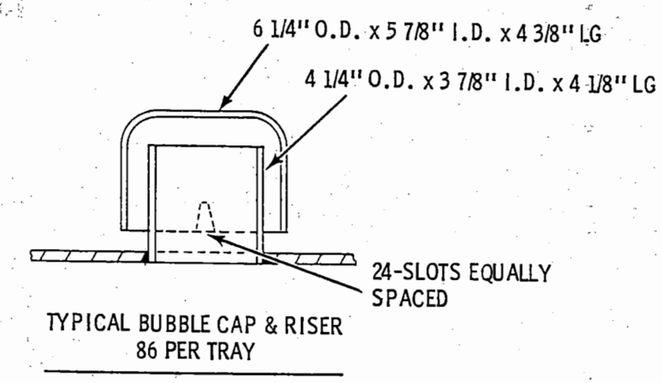

REFERENCE DRAWINGS

H-2-58732
H-2-58736 SHEET 1
H-2-58736 SHEET 2
H-2-63288

RCF7907-109

FIGURE 3-110. Nitric Acid Vacuum Fractionator.

DOE-Richland, WA

THIS PAGE INTENTIONALLY
LEFT BLANK

TABLE 3-26. Acid Vacuum Fractionator Design Data.

Design Pressure	Full Vacuum
Operating Pressure	100 mm mercury
Differential Pressure	30 to 35 in. of water
Design Temperature	205°F
Operating Temperature	125°F (Top) 170°F (Bottom)
Reboiler Heat Transfer Coefficient	218 Btu/hr-ft^2-°F
Corrosion Allowance	0.06 in., all surfaces

The reboiler, shown in Figure 3-110, is a vertical 42-inch-ID cylindrical vessel. Condensing steam on the outside of 558 1 1/4-inch-OD tubes on a 1 9/16-inch equilateral triangular pitch supplies the heat for fractionation.

Vapor from the reboiler enters the fractionator through a 24-inch-diameter nozzle at the bottom, and vapor leaves the tower to condenser E-U6-1 (described in Section 3.12.7) through a 24-inch-diameter nozzle at the top.

Four drain lines for purging chloride-bearing nitric acid from the fractionator are located under trays 6-9, respectively, and exit through the side of the tower.

3.15 NEPTUNIUM CYCLE ION EXCHANGE COLUMN

A fixed bed ion exchange column is used to perform the final purification of neptunium in the Purex Plant. The 3X column (T-Q4), located in Q Cell, is loaded with the nitrate form of the anion exchange resin, Amberlite IRA-97, to process nitric acid solutions containing neptunium. Operation of the column is described in Section 4.6.2.

The 3X ion exchange, shown in Figure 3-111, is a 6-inch-ID stainless steel pipe 10.5 feet long, with a 1-inch annular heating-cooling jacket surrounding the pipe. Plain Dutch twill screens, 24 by 110 mesh, have been flanged into the top and bottom of the column to provide a resin section approximately 9.5 feet long. A sonic probe used to determine the level of the resin inside the column during operating periods is inserted into the top of the column via a flanged connection. Temperature and pressure control systems are incorporated with the operation of this equipment. A pressure relief system, which includes a 100-psig rupture disc, serves as a safety device against possible pressurization of the column. A degassing system, composed of a steam jet connected

9413275.0750

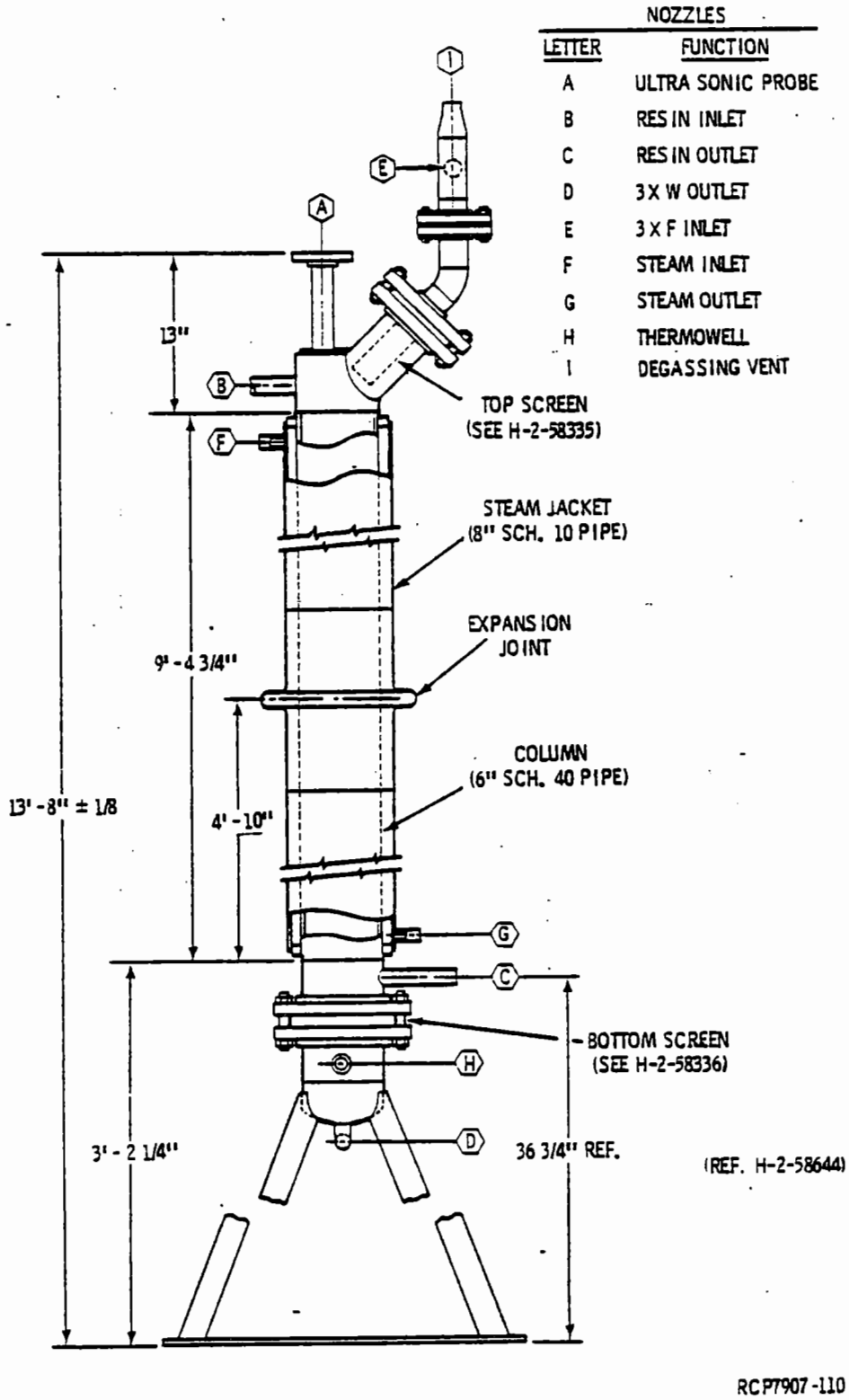

FIGURE 3-111. Purex Anion Exchange Column T-Q4.

to the top of the column, allows the removal of any gas formed within the resin during operation. Resin is remotely added through a nozzle near the top of the column, and removed through a nozzle near the bottom.

The components of the 3X column are constructed of Type 304L stainless steel. Design data for the 3X column and steam jacket are listed in Table 3-27.

TABLE 3-27. 3X Column Design Data.

Column	
Normal Operating Pressure	100 psig
Design Pressure	200 psig
Operating Temperature	59° to 176°F
Design Temperature	300°F
Fluid	Resin and Aqueous Nitrate Solution
Steam Jacket	
Normal Operating Pressure	90-psig water 30-psig steam
Design Pressure	90 psig
Design Temperature	300°F

The column was hydrostatically pressure tested to 400 psig while the jacket was tested to 180 psig. All welds were in accordance with HWS-8242, and examined using carpenters' blue chalk during hydrostatic pressure tests.

3.16 CANYON PROCESS VENTILATION SYSTEM EQUIPMENT

The canyon process ventilation system, described in Section 4.12, is supplied by three subsystems. The vessel vent header, operated by the J-F1-1 jet, vents most of the process vessels in the canyon. The canyon condensers, except for E-F5, are vented by J-F1-2; and E-F5, which vents the acid absorber, is vented by J-F1-3. Gaseous and particulate effluents exhausted by the three jets are treated in the canyon process ventilation equipment. After this treatment, the remaining effluents are discharged to the 202-A Building air ventilation system (see Section 2.3.1), where the air is filtered and vented to the atmosphere through the 291-A-1 stack.

In addition to the three vent jets, which are described in Section 3.9.2, the canyon process vent system equipment consists sequentially of a condenser (E-F1), described in Section 3.12.2, a steam heater (E-F2), a silver reactor (T-F2), and a filter (F-F1). The steam heater and filter are of the same design as the steam heaters and filters in the dissolver off-gas systems, described in Section 3.4. The silver reactor differs in design from the A and C Cell silver reactors only in the method of heating. Instead of being heated with an external steam coil, as are the dissolver off-gas system reactors, the canyon ventilation silver reactor is steam-heated through an insulated external jacket.

3.17 REFERENCES

1. Hesson, G. M., et. al., "Organic Continuous Pulse Column Cartridge for Purex A-Type Columns," HW-49181, General Electric Company, Richland, Washington, March 22, 1957.

2. Jeppson, D. W., "Purex Flowsheet Reprocessing N Reactor Fuels," ARH-F-103, Atlantic Richfield Hanford Company, Richland, Washington, November 24, 1976.

9113275.0752

CONTENTS

CHAPTER 4.0 - PROCESS DESCRIPTION

4.1 TRANSPORT OF FUEL ELEMENTS..... 4-1
4.1.1 Fuel Element Shipping..... 4-2
4.1.2 Fuel Handling and Dissolver Charging Procedures.... 4-6

4.2 COATING REMOVAL AND METATHESIS..... 4-9
4.2.1 Cladding Dissolution..... 4-11
4.2.2 Metathesis Reaction..... 4-12
4.2.3 Dissolver Metathesis Rinse..... 4-12
4.2.4 Coating Waste Handling and Uranium Recovery..... 4-15
4.2.5 Off-Gas Treatment..... 4-20
4.2.6 Process Control and Off-Standard Conditions..... 4-24
4.2.7 Process Safety and Criticality Prevention -- Coating Removal..... 4-25

4.3 URANIUM DISSOLUTION AND FEED PREPARATION..... 4-28
4.3.1 Head-End Process Flow Diagram..... 4-30
4.3.2 Complexing of Fluoride Ions..... 4-30
4.3.3 Uranium Dissolution Process Variables..... 4-32
4.3.4 Dissolver Rinse..... 4-33
4.3.5 Metal Storage and Feed Preparation..... 4-34
4.3.6 Off-Gas Treatment..... 4-34
4.3.7 Process Control and Off-Standard Conditions..... 4-36
4.3.8 Process Safety and Criticality Prevention..... 4-39

4.4 SOLVENT EXTRACTION..... 4-39
4.4.1 First Decontamination and Partition Cycle..... 4-40
4.4.2 Final Uranium Cycle..... 4-48
4.4.3 Final Plutonium Cycles..... 4-52
4.4.4 Solvent Extraction Startup Procedures..... 4-57
4.4.5 Solvent Extraction Shutdown..... 4-58
4.4.6 Mechanical Pulsers..... 4-59
4.4.7 Air Pulsers..... 4-59
4.4.8 Pulse Column Interface Control..... 4-61
4.4.9 1CU Concentrator Operation..... 4-62
4.4.10 Process Safety and Criticality Prevention..... 4-64
4.4.11 Process Control..... 4-67

4.5 FINAL URANIUM AND PLUTONIUM CONCENTRATION..... 4-85
4.5.1 Properties and Compositions of Uranium Product Solutions..... 4-85
4.5.2 Special Chemical Problems..... 4-85
4.5.3 Uranium Concentration Process..... 4-87
4.5.4 Properties and Compositions of Plutonium Product Solutions..... 4-95
4.5.5 Chemistry of Plutonium Nitrate..... 4-97
4.5.6 Plutonium Concentration Process..... 4-98

4.6 BACKCYCLE WASTE AND NEPTUNIUM RECOVERY..... 4-104
4.6.1 Neptunium Recovery Cycle..... 4-105
4.6.2 Neptunium Purification..... 4-115
4.6.3 Backcycle Waste System..... 4-128

4.7 SOLVENT TREATMENT..... 4-134
4.7.1 Solvent Impurities..... 4-134
4.7.2 Solvent Washing..... 4-137
4.7.3 Replacement of Solvent Losses..... 4-142
4.7.4 Routine Flushing of Equipment..... 4-143
4.7.5 Off-Standard Conditions..... 4-144
4.7.6 Process Safety..... 4-145
4.7.7 Alternate Solvent Treatment Methods..... 4-147

4.8 ACID RECOVERY AND WASTE DISPOSAL..... 4-148
4.8.1 Acid Recovery..... 4-149
4.8.2 Waste Treatment and Disposal..... 4-165

4.9 SOLID WASTE DISPOSAL..... 4-173
4.9.1 Solid Nonradioactive Wastes..... 4-173
4.9.2 Solid Radioactive Waste..... 4-173
4.9.3 Monitoring of Solid Waste..... 4-174
4.9.4 Solid Waste Disposal Process Safety and Criticality Prevention..... 4-174

4.10 PRODUCT LOADOUT AND SHIPMENT..... 4-176
4.10.1 Uranium Product Handling..... 4-176
4.10.2 Plutonium Product Handling..... 4-184
4.10.3 Neptunium Product Handling..... 4-195

4.11 AQUEOUS MAKEUP..... 4-199
4.11.1 Aqueous Chemical Data..... 4-199
4.11.2 Makeup and Distribution Facilities..... 4-204
4.11.3 Process Water..... 4-210
4.11.4 Chemical Handling..... 4-214

4.12 PROCESS VENTILATION SYSTEMS..... 4-222
4.12.1 Process Vent System Flowsheet..... 4-223
4.12.2 Condenser and Vessel Vent Systems Operation..... 4-223
4.12.3 Iodine Removal by Silver Reactor..... 4-227
4.12.4 291-A Stack Operations..... 4-227
4.12.5 Q Cell Process Vent System..... 4-228
4.12.6 Ammonia Scrubber Vent System..... 4-229

4.13 ANALYTICAL METHODS..... 4-229
4.13.1 Definition of Terms..... 4-229
4.13.2 Physical Property Determinations..... 4-230
4.13.3 Chemical Determinations..... 4-231
4.13.4 Radiochemical Determinations..... 4-231
4.13.5 Explanation of Tables..... 4-233

9413275.0254

4.14 REFERENCES..... 4-255

FIGURES:

4-1 Purex Process Flow Diagram..... 4-3
4-2 Coating Removal and Uranium Dissolution Process Flow Diagram..... 4-10
4-3 Tank D5 Sampling System..... 4-31
4-4 First Decontamination and Partition Cycle Process Flow Diagram..... 4-41
4-5 Final Uranium Cycle Process Flow Diagram..... 4-49
4-6 Final Plutonium Solvent Extraction Cycles Process Flow Diagram..... 4-53
4-7 Uranium Concentration Process Flow Diagram..... 4-88
4-8 Plutonium Concentration Process Flow Diagram..... 4-96
4-9 Second Neptunium Cycle Process Flow Diagram..... 4-106
4-10 Second Neptunium Cycle -- Phase I, II, III Operation Flow Diagram..... 4-107
4-11 Neptunium Purification Process Flow Diagram..... 4-117
4-12 Backcycle Waste Process Flow Diagram..... 4-129
4-13 Solvent Treatment Systems 1 and 2 -- Process Flow Diagrams..... 4-138
4-14 Waste Concentration and Handling Flow Diagram..... 4-150
4-15 Nitric Acid Absorber Flow Diagram..... 4-158
4-16 Vacuum Fractionator and U Cell System Flow Diagram..... 4-162
4-17 203-A UNH Storage Area Process Piping and Flow Diagram..... 4-177
4-18 UNH Shipping Trailer Loading and Unloading Routes..... 4-179
4-19 PR Room Process Flow Diagram..... 4-185
4-20 Neptunium Product Handling Process Flow Diagram..... 4-196
4-21 AMU Floor Plans..... 4-205
4-22 AMU Area Elevations..... 4-206
4-23 Process Vent System Flow Diagram..... 4-224

TABLES:

4-1 Zirflex Decladding Streams..... 4-13
4-2 Metathesis Streams..... 4-14
4-3 Head-End Waste Disposal Streams..... 4-16
4-4 Centrifuged Uranium Metathesis and Dissolution Streams..... 4-17
4-5 Ammonia Scrubber Water and Ventilation System Steam Condensate Concentration and Disposal Streams..... 4-23
4-6 Dissolver Charging and Decladding - Off-Standard Conditions..... 4-26
4-7 Uranium Dissolution, Feed Preparation, and Dissolver Off-Gas Treatment Streams..... 4-29
4-8 Dissolver Solution Compositions for Dissolution of Fuel Enriched to 0.947% U-235..... 4-33

4-9 Uranium Dissolution - Off-Standard Conditions..... 4-38
4-10 First Decontamination and Partition Cycle Streams.... 4-42
4-11 Final Uranium Cycle Process Streams..... 4-50
4-12 Final Plutonium Cycle Process Streams..... 4-54
4-13 First Decontamination Cycle - Off-Standard Conditions..... 4-70
4-14 Partition Cycle - Off-Standard Conditions..... 4-72
4-15 Final Uranium Cycle - Off-Standard Conditions..... 4-74
4-16 Second Plutonium Cycle - Off-Standard Conditions..... 4-76
4-17 Third Plutonium Cycle - Off-Standard Conditions..... 4-78
4-18 Physical Properties and Compositions of Uranium Streams..... 4-86
4-19 Uranium Concentration - Off-Standard Conditions..... 4-93
4-20 Physical Properties and Compositions of Plutonium Streams..... 4-95
4-21 Plutonium Concentration - Off-Standard Conditions.... 4-103
4-22 Second Neptunium Cycle Process Streams - Phase I..... 4-108
4-23 Second Neptunium Cycle Process Streams - Phase II.... 4-111
4-24 Second Neptunium Cycle Process Streams - Phase III... 4-112
4-25 Second Neptunium Cycle - Off-Standard Conditions..... 4-116
4-26 Neptunium Concentration and Purification - Q Cell Streams..... 4-118
4-27 Backcycle Waste System Process Streams - Phase I..... 4-130
4-28 Backcycle Waste System Process Streams - Phases II, III..... 4-131
4-29 Solvent System Streams..... 4-139
4-30 Solvent Treatment - Off-Standard Conditions..... 4-146
4-31 High-Level Waste Concentration and Sugar Denitration Streams..... 4-151
4-32 Waste Concentration - Off-Standard Conditions..... 4-155
4-33 Nitric Acid Absorption Streams..... 4-159
4-34 Acid Absorber - Off-Standard Conditions..... 4-160
4-35 Vacuum Fractionator Streams..... 4-163
4-36 Acid Fractionator - Off-Standard Conditions..... 4-166
4-37 Purex Plant Aqueous Effluents..... 4-169
4-38 Aqueous Makeup Stock Solution Specifications..... 4-200
4-39 Aqueous Makeup Process Stream Specifications..... 4-201
4-40 Essential Materials Consumption..... 4-202
4-41 Miscellaneous Essential Material Requirements..... 4-203
4-42 First Level Aqueous Makeup Tanks and Their Uses..... 4-207
4-43 Second Level Aqueous Makeup Tanks and Their Uses..... 4-208
4-44 Third Level Aqueous Makeup Tanks and Their Uses..... 4-209
4-45 Q Cell Aqueous Makeup Tanks and Their Uses..... 4-211
4-46 Comparison of Impurity Concentrations in Filtered Water to Process Water Specifications..... 4-212
4-47 Demineralizer Operating Parameters..... 4-213
4-48 Physical Measurements..... 4-235
4-49 Chemical Measurements..... 4-236
4-50 Radiochemical Measurements..... 4-247

9413275.0756

CHAPTER 4.0. PROCESS DESCRIPTION

This chapter gives a detailed description of the Purex process including fuel dissolution, solvent extraction separations, product concentration and loadout, waste treatment and disposal, and solvent and acid recovery. Figure 4-1 is a schematic diagram showing the entire Purex process. Also included in the chapter is a section devoted to descriptions of the methods used in laboratory analysis of the various Purex process stream samples.

Chapters 5.0 - 9.0 are devoted to discussions of the technological bases associated with each major element of the Purex process.

4.1 TRANSPORT OF FUEL ELEMENTS

Reactor fuel elements are delivered to Purex in heavily shielded railroad cars on a regular schedule during plant operating periods. A shipment may require up to six cars, but generally includes only enough to provide one or two dissolver charges at a time. The N Reactor fuel is transported to Purex in several different types of canisters and two different kinds of casks, depending on which 100 Area fuel storage basin it is delivered from. The handling equipment of the KE and KW storage basins requires that the fuel be shipped in short canisters and casks. Fuel stored at the N basin, however, can be shipped to Purex in the original tall NPR casks, which accomodate either short or tall canisters. The N basin is also capable of handling the short cask used at KE and KW basins. A detailed discussion of the shipping and transport equipment can be found in Chapter 3.0, Section 3.2.

In this transaction between different Hanford contractors (UNC Industries, Incorporated and Rockwell), the responsibilities are clearly defined to achieve safe handling of the fuel and positive identification of the fuel being transferred. Positive identification also contributes to the safe operation of the Purex Plant, as this information is required to plan dissolver charge sizes and other operating criteria. The information describing the fuels in reactor basin storage is required in advance of any shipment to Rockwell, and includes the following:

- Enrichment level
- Date of discharge from the reactor
- Basin storage position
- Number of pieces per canister
- Uranium content of each piece

- Net weight of each canister
- Total exposure of the fuels
- Reactor power level.

Plant input accountability is provided by this information, and is used as a check against the dissolver (TK-D5) solution analysis.

Zirconium-clad Mark IV fuels (0.947% U-235 enriched) are handled differently than "spike," Mark 1-A fuel elements (0.947 - 1.25% U-235 enriched). Descriptions of the fuel elements processed in the Purex Plant are given in Chapter 5.0. Most Mark 1-A fuel elements are transported in tall canisters and casks, although some spike fuel may be loaded in short canisters with hexagonal tops.

9413275.0759

4.1.1 Fuel Element Shipping

This section describes the shipping and handling of the casks containing fuel between the reactor storage basins and Purex, and within the Purex canyon.

4.1.1.1 Shipping and Handling Containers at Basins

Modified short canisters and casks, described in detail in Chapter 3.0, Section 3.2, are used at the KE and KW storage basins. The casks are handled and loaded in a similar manner at both the K and N Area basins. A cask is removed from the cask car with a bridge crane. The lid is unlatched, and the cask is lowered into a water-filled loading pit. An underwater mechanism has been devised to remove the cask lid as the cask is lowered. Under approximately 20 feet of water, the cask is moved out from under the lid and is rested on the bottom of the pit. The cask is loaded with canisters in the prescribed manner, then the lid is replaced as the cask is raised. After the lid is latched, the cask is placed on a cask car for shipment to Purex.

Zirconium-clad fuels from N Reactor are of tube-in-tube configuration, and are received in two types of two-barrel canisters. Short, 28-inch-tall canisters normally contain fourteen 0.947% enriched fuel elements in a single vertical layer, while taller canisters (71 inches) contain up to four layers of fuel elements. Usually only 0.947 - 1.25% enriched spike fuel elements are transported in the tall canisters. Short canisters containing spike fuel elements are identified with octagonal lids. Positive identification by the crane operator of the fuel element type in each canister is not possible due to the distance involved.

Nuclear criticality prevention during fuel transit is provided by the canisters and casks, whose design configurations physically limit the spacing of the accumulated fuel elements. Administrative controls are required after charging fuels to the dissolvers to prevent nuclear criticality.

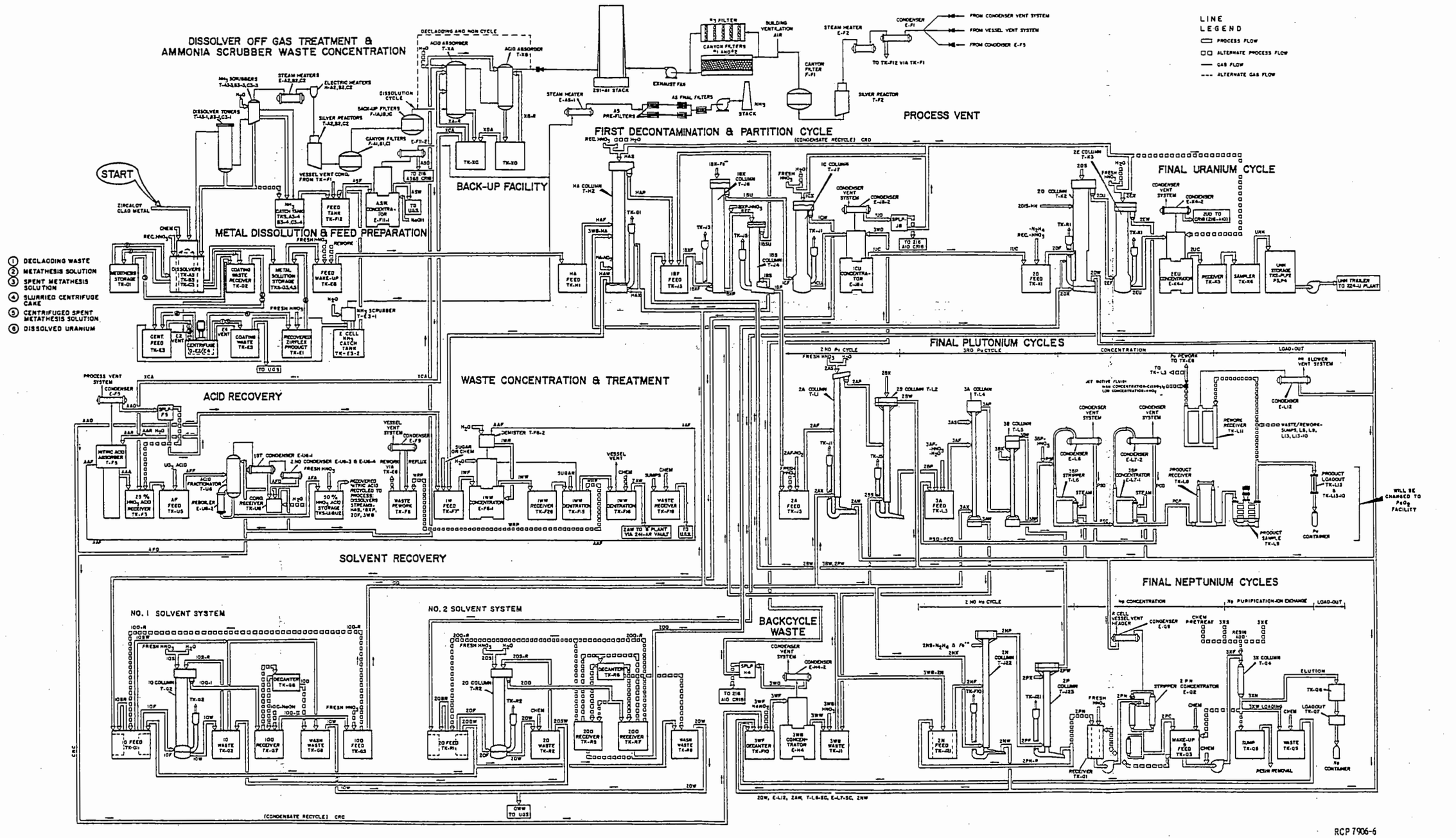

FIGURE 4-1. Purex Process Flow Diagram.

THIS PAGE INTENTIONALLY
LEFT BLANK

4.1.1.2 Rail Car Description

The canisters filled with fuel elements are transported in massive casks. The casks are enclosed in water-filled tanks or wells installed on special railroad cars. The water provides cooling and additional shielding. The tank covers are hinged and are opened with a gear box and chain and sprocket mechanisms operated with a hand wheel. This system of containers is designed to effectively shield the large amounts of radiation emitted by the irradiated metal during the time it is contained in the car. Typically, the metal remains in a car about 20 hours before it is charged to a dissolver.

A thermometer is provided to periodically monitor the cask tank water temperature so that, if necessary, evaporated water can be replaced before the elements overheat (liquid level measurement is not available in the tanks). Overheating of the fuel elements could result in cladding rupture and contamination of the water. Continued loss of the water coolant by evaporation could create a potential for a uranium fire. Since the fuels to be processed are previously stored in water-filled basins for a minimum of 180 days following discharge from the reactor, overheating of fuel in the cask tank is not expected.

4.1.1.3 Rail Car Handling

The Purex dispatcher regulates train entry into the railroad cut and tunnel by means of electric locks on the gate and the tunnel outside door. When a load of fuel reaches the Purex Plant, the dispatcher is contacted by the train crew for permission to enter the railroad cut, which is outside the northeast end of the 202-A Building. A member of Patrol is required to open the gate, while an operating supervisor, an operator, and a radiation monitor are required to receive the shipment. After the train enters the tunnel, the tunnel door control is activated by the dispatcher. The operator confirms that the cask cars are positioned for unloading, and the crane operator verifies that the canyon overhead ventilation door is closed. The cask cars are pushed into the tunnel by the train crew. The engine is disconnected, and a car puller is hooked to the cars (as many as three) nearest the tunnel door (north end). This enables the crane operator, who does not have a view of the door-end of the tunnel, to position the cars in the tunnel after the door is closed. With the car puller hooked to the north car, he cannot accidentally push a car through the door.

The cask car tank covers are opened with hand wheels on the tank by an operator before the tunnel door is closed. A visual inspection of the dissolver by the crane operator precedes the charging operation. Following the charge, empty canisters are returned to the casks. The overhead

door is closed and the dispatcher is notified. When the tunnel door is opened, the tank covers are closed and the cars are disconnected from the car puller.

The cars must meet contamination release limits before they can be turned over to the train crew. This means that portions of the cars which the train crew may contact, such as couplers, levers, handrails, and footrails, are cleaned to "nonsmearable" condition. The cask car decks, tanks, and running gear (axles, shafts, etc.) have less restrictive release limits.

4.1.2 Fuel Handling and Dissolver Charging Procedures

Charging fuels of 0.947% U-235 enrichment or 0.947 - 1.25% spike fuels to one of three identically designed dissolvers is the first step in the coating removal process described in Section 4.2. Zircaloy-clad fuels are charged into a solution of ammonium fluoride-ammonium nitrate (AFAN) for coating removal.

4.1.2.1 Fuel Identification and Radiation Monitoring

A visual inspection is made to identify the fuel elements before unloading to control the amount of fissile material in dissolver charges. Some fuel assemblies (0.947 - 1.25% enriched spike fuel) are fabricated with different U-235 enrichments in the outer and inner tube. For criticality control, only complete assemblies are charged, unless special specifications are involved.

A radiation detection chamber, which activates a red light in the crane cab when radiation levels exceed the limit, is installed in the railroad tunnel to monitor the canisters as they are removed from the casks. This radiation signal is transmitted and recorded in the dispatcher's office and the central control room. The alarm level is set to detect the radiation equivalent to that of fuel cooled for 180 days. Insufficiently aged fuels are prevented from being charged by this "green slug" monitoring system, as dissolution of these fuels would liberate large quantities of radioiodine which would vent to the atmosphere, thus exceeding release limits. If the alarm sounds in the central control room, the crane cab, or the dispatcher's office, the canister containing inadequately aged fuel is returned to the cask for shipment to storage in the reactor basin.

Shift operating supervision, the crane operator, and dispatcher must coordinate their activities to ensure that proper fuel is charged to the dissolvers and the charge limits are observed. The shift supervisor determines from a written bucket loading summary which of the available canisters to unload and charge in order to stay within the charging limit. The information contained in the bucket or metal loading summary is listed at the beginning of Section 4.1.

The fuel elements in a canister are included as a batch unit when preparing the charge list because of the impracticality of handling individual fuel elements. The charge list is authorized by shift supervision and provided to the crane operator. It includes the following information:

- Charge number
- Car number
- Cask position
- Canister location
- Key numbers
- Tons uranium
- Total tons uranium in charge.

The dispatcher maintains communication with supervision and the crane operator, and keeps a log sheet on each dissolver as canisters are charged.

4.1.2.2 Dissolver Preparation for Charging

The following preliminary checks are required to verify that process steps have been completed in the previous fuel dissolution cycle:

- The previous dissolver rinse cycle is completed
- The dissolver heel volume measurement is completed and recorded
- The steam and electric off-gas heaters are operating
- The off-gas selector switch is in position so that the backup facility is bypassed
- Tower cooling water is on
- Air spargers are off
- Drown tank is filled with 2,000 gallons of water
- The acid addition line is manually valved out
- Ammonium fluoride-ammonium nitrate solution (AFAN) makeup is completed.

A de-entrainment pad flush is performed to remove activity entrained during the previous dissolution by boiling 1,440 gallons of water in the dissolver with the tower condensate draining to the dissolver. After the 15-minute boilup is completed, the de-entrainment pad spray is activated with a flow of 10 gallons per minute for 10 minutes. The dissolver volume is adjusted to 1,440 gallons (830 gallons for spike fuel) by adding water or by boiling, the tower condensate being routed to the ammonia scrubber catch tank. The liquid in the dissolver is then cooled. The 11.2M ammonium fluoride - 1.0M ammonium nitrate decladding solution (1,440 gallons, but only 830 gallons for spike fuel decladding) is added to the dissolver in several steps as follows:

- The dissolver air spargers are started.
- Six hundred gallons of AFAN are added to AMU Tank 212, then are drained to the dissolver.
- Step 2 is repeated for 0.947 metal.
- The remaining 240 gallons (230 gallons for spike fuel) are added in the same manner.
- The dissolver is cooled as much as possible with maximum water flow to the cooling coil while charging, and the spargers are turned off.

When dissolver preparation is complete, the fuel elements are charged to the dissolvers with the overhead canyon crane.

4.1.2.3 Dissolver Charging

The dissolver charging procedure is divided into areas of responsibility for supervisor, process operator, dispatcher, and crane operator. The supervisor is responsible for fuel identification. The fuel elements to be charged are checked against the metal loading summary to assure that the material is the proper enrichment and does not exceed the total charge limit of uranium.

The dispatcher coordinates activities between the crane operator, supervisor, and process operator. The dissolver operator and crane operator are first contacted to see that the correct dissolver has been prepared and the lid removed. With the proper dissolver lid removed and supervision's approval, the dispatcher may open the overhead ventilation cover door to the tunnel.

The crane operator receives a list of cars, casks, and canisters to be charged from the supervisor and removes the proper cell cover block and dissolver lid. Since the mechanical strength of some of the short canisters is insufficient, three short canisters containing 0.947% fuel

elements are sometimes placed in baskets and shipped in tall NPR casks. When this is done, a basket holder and slug apron are placed on the dissolver after which each canister is dumped individually in one of three positions in the dissolver to obtain a relatively even filling pattern. Empty canisters and baskets are returned to the casks. If any metal is above the solution level, the dissolver operator is notified to add water until the metal is covered to prevent the possibility of a zirconium metal fire. The slug apron is then removed. The dissolver lid is replaced, and the cell cover block is replaced.

The dissolver process operator notifies the dispatcher that the dissolver has been prepared and is ready for the charge. After the charge, water is added to the dissolver lid seal, if needed, and the cell and dissolver vacuums are adjusted. If decladding is not scheduled to start immediately, the dissolver is cooled and held at 25°C.

9413275.0764

4.1.2.4 Charge Sizes and Criticality Prevention

For Zircaloy-clad fuels of 0.95% or lower U-235 enrichment, the charge size is limited by the amount of Zircaloy to be dissolved, but is specified by uranium weight, usually 11.25 tons. For spike Zircaloy-clad fuels (0.947 1.25% enrichment), the limit is 6.0 tons of uranium, including the dissolver heel, for criticality prevention. Criticality prevention for the lower enriched fuels is based on the fixed dimension of the dissolver annulus (12 inches), and on administrative controls limiting the height of the metal charged to equal or lower than that of the bottom of the fuel distribution cone. The higher enriched spike fuels require additional administrative controls limiting the charge. The current dissolver design requires that spike fuel be distributed uniformly around the annulus. A 33% overbatch (8 tons) of spike fuel is subcritical in the annulus under the least favorable conditions (i.e., optimum water-to-uranium ratio, no U-235 burnup).

4.2 COATING REMOVAL AND METATHESIS

The Zirflex process was developed specifically for chemical decladding of Zircaloy-clad (zirconium alloyed with small amounts of tin and iron) fuel elements, and employs a boiling solution of AFAN for cladding removal in preparing the radioactive fuel elements for separation of uranium, plutonium, and fission products. In the earlier Purex process, removal of jackets from aluminum-clad fuels was carried out by dissolution with a sodium hydroxide-sodium nitrate solution.

The Zirflex dissolution is a three-step process including dissolution of the Zircaloy cladding, centrifugation of the decladding solution, and metathesis of the uranium fluoride.

A process flow diagram of the coating removal process and equipment is given in Figure 4-2. The figure shows the major pieces of equipment, including off-gas treatment systems, process routes, and some instrumentation

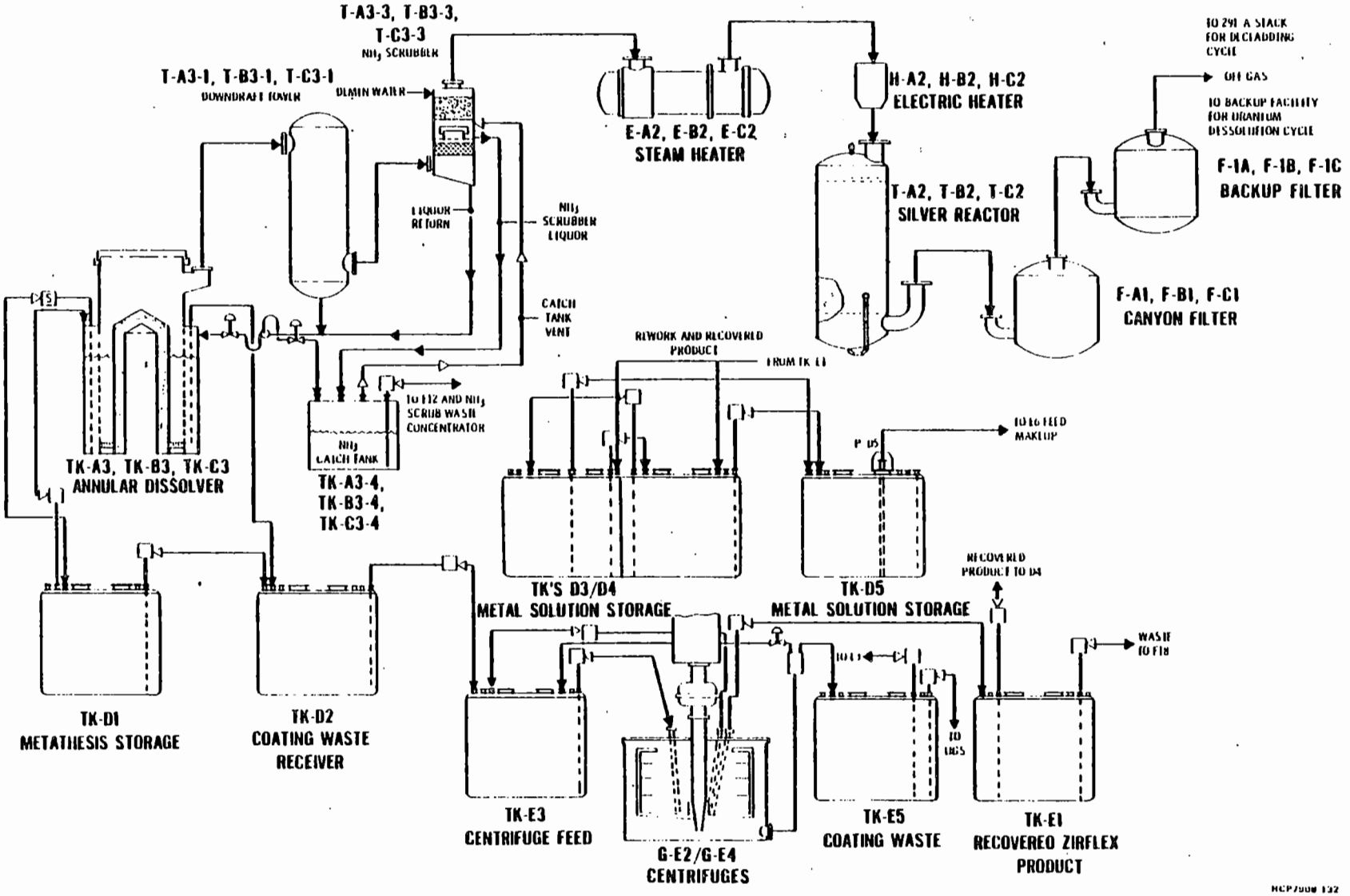

FIGURE 4-2. Coating Removal and Uranium Dissolution Process Flow Diagram.

and control equipment. The dissolving equipment consists of three independent annular dissolvers (TK-A3, TK-B3, TK-C3) and three parallel off-gas systems including downdraft condenser (dissolver tower) (T-A3-1, T-B3-1, T-C3-1), ammonia scrubber (T-A3-3, T-B3-3, T-C3-3), steam (E-A2, E-B2, E-C2) and electric heaters (H-A2, H-B2, H-C2), silver reactor (T-A2, T-B2, T-C2) and two off-gas filters (F-A1, F-B1, F-C1, and F-1A, F-1B, F-1C). The heaters, filters and downstream backup facility are described in Section 4.11 and Sections 3.4 and 3.13.

Coating waste is discharged from the dissolvers to a common 5,000-gallon tank (TK-D2), from where the solution can be jetted to a 5,000-gallon centrifuge feed tank (TK-E3), two parallel centrifuges (G-E2 and G-E4), a single 5,000-gallon coating waste catch tank (TK-E5), and the recovered Zirflex product tank (TK-E1). The centrifuge overflows to TK-E5 during operation. Storage of metathesis solution is in a 5,000-gallon D Cell tank (TK-D1) with routes available to TK-D2 and the dissolvers.

A detailed description of the equipment involved is given in Chapter 3.0, Sections 3.3, 3.4, and 3.5, and the process technology is described in Chapter 5.0. Off-gas handling systems for the coating removal process are discussed briefly in this section, and portions of the off-gas treatment are described in Subsection 4.2.5 and Section 4.11.

9413275-0766

4.2.1 Cladding Dissolution

Dissolution of the fuel element cladding is started after charging is completed by slowly bringing the dissolver solution to boiling with steam coils while controlling off-gas evolution rates. Air sparging is used for agitation until the dissolver temperature reaches 90°C, then steam is turned into the spargers for the remainder of the reaction.

The reaction of the AFAN with Zircaloy produces ammonia and some hydrogen, which is also formed by radiolysis of water. The nitrate in the AFAN helps suppress the formation of hydrogen, however. The dissolution reaction rate is dependent upon the ammonia removal rate from the solution, so the dissolver is steam sparged, since a low rate of ammonia removal will result in an increased solution pH, and will stop the reaction at a pH of 9 to 10. The dissolver air bleed is operated during boiling and cooling periods to dilute the dissolver and cell atmosphere to prevent accumulation of a potentially explosive mixture containing 4 vol% hydrogen. The dissolver off-gas is sampled and analyzed by means of an ammonia-hydrogen analyzer.

The Zirflex decladding solution reacts with about 1% of the uranium metal to form a relatively insoluble compound, uranium tetraflouride (UF_4). An excess fluoride ion concentration may be present in the dissolver if the liquid level is allowed to drop during coating removal, or if all the ammonia was not removed during the reaction and the dissolver is cooled.

The high fluoride concentration not only increases UF_4 formation, but also precipitates ammonium hexafluozirconate solids. To reduce the potential for fluoride problems, the solution is diluted with water to a maximum dissolver volume at the end of the digestion period, which lasts about 6 hours, and then is cooled to the maximum practical jetting temperature (60°C).

After the coating waste solution is jetted to the waste receiver tank (TK-D2), the dissolver is rinsed with 500 gallons of water before addition of metathesis solution. This water dilutes the 20-gallon jet heel, minimizing the free fluoride concentration, and is then jetted to TK-D2.

The coating removal chemistry and the controlling variables are discussed in more detail in Chapter 5.0; Section 5.2. The compositions of the Zirflex decladding streams are shown in Table 4-1.

9413275.0767

4.2.2 Metathesis Reaction

Following the jetting of the coating waste and the water rinse, nearly all of the excess fluoride is in the form of UF_4 solids in the dissolver heel. The solids are metathesized to hydrous uranium dioxide ($UO_2 \cdot 2H_2O$) by the addition of 7M potassium hydroxide (KOH) to the dissolver. The metathesis process replaces the fluoride with oxygen and water to produce soluble potassium fluoride (KF) in solution. Metathesis reaction chemistry and the controlling variables are described in more detail in Chapter 5.0, Section 5.2.4. Off-gas handling during metathesis is discussed later in this section. The compositions of the metathesis streams are shown in Table 4-2.

Metathesis solution (1,500 gallons) is transferred from the metathesis storage tank (TK-D1) to a dissolver when needed. The solution, containing excess KOH and KF, is recycled back to the metathesis storage tank (TK-D1), leaving hydrated uranium oxide solids in the dissolver after the 4-hour digestion at boiling temperature. A portion of the recycled metathesis solution is later used to further metathesize UF_4 solids in the centrifuge feed tank following coating waste centrifugation. Approximately 650 gallons of fresh metathesis solution are then added to the metathesis storage tank in preparation for treating the next dissolver coating waste heel.

4.2.3 Dissolver Metathesis Rinse

The used metathesis solution containing KOH and KF is jetted back to the metathesis storage tank without sparging the dissolver to leave the majority of the $UO_2 \cdot 2H_2O$-solids behind in the dissolver. To prepare the uranium fuel elements for nitric acid dissolution (Section 4.3), the dissolver must be rinsed and the residual fluoride ion complexed before acid addition to prevent corrosion of the dissolver. The KOH

TABLE 4-1. Zirflex Decladding Streams.

Stream	Composition	Function	Volume or Flow
Dilution Water	H_2O	Dilute Zirflex solution to desired concentration	1,440 gal
Zirflex Solution	NH_4F - 11.2M NH_4NO_3 - 1.0M	Dissolve Zircaloy cladding	1,440 gal
Charge	U - 22,500 lb Zircaloy-2 - 1,580 lb Pu[b] - 20,500 grams Np[b] - 340 grams	N Reactor fuel elements for processing	-
Dissolver Air Bleed	Air	Dilute hydrogen in off-gas during decladding	400 cfm
Steam Sparge	H_2O	Remove NH_3 to maintain desired pH	3,600 lb/hr for 7 hr
Water Makeup	H_2O	Maintain constant liquid level in dissolver during decladding	2,000 gal
Dilution Water	H_2O	Dilute decladding waste prior to cooling and jetting to reduce solids precipitation	950 gal
Decladding Waste	$(NH_4)_2ZrF_6$ - 0.50M NH_4F - 0.52M NH_4NO_3 - 0.11M U - 0.003M Pu - 0.004M U as entrained UF_4 - 180 lb	Remove dissolved zirconium fluoride ion and solids from dissolver	4,100 gal
Water Rinse	H_2O U as entrained UF_4 - 20 lb	Remove additional fluoride ion and solids from dissolver	500 gal
Dissolver Off-Gas	H_2 - 0.01% NH_3 - 3.1% H_2O - 78.2% Air - 18.7%	Gaseous effluent from dissolver during decladding	3,200 cfm @ 100°C
Condensate	NH_4OH - 1.4M	Condensate from downdraft condenser during decladding which is routed to catch tanks	5,000 gal
Downdraft Condenser Off-Gas	H_2 - 0.3% NH_3 - 5% H_2O - 4% Air - 91%	Off-gas from downdraft condenser routed to ammonia scrubber	520 cfm @ 30°C
Ammonia Scrub Water	H_2O	Remove ammonia from off-gas	25 gal/min for 8 hr (12,000 gal)
Ammonia Scrubber Off-Gas	H_2 - 0.3% NH_3 - 0.1% H_2O - 4% Air - 96%	Treated off-gas to main stack	500 cfm @ 30°C
Spent Ammonia Scrub Water	NH_4OH - 0.27M	Waste from ammonia scrubber	12,000 gal

[a] For processing of 0.947% U-235 enriched Mark IV uranium fuel from N Reactor.

[b] Assumes fuel exposure of 2435 MWD/T, 12% Pu-240 content, 1825 grams Pu/ton U and 30 grams of Np/ton U.

TABLE 4-2. Metathesis Streams[a].

Stream	Composition	Function	Volume or Flow
KOH Makeup	KOH - 7.0M	Metathesis solution makeup	650 gal
Metathesis Solution	K^+ - 7.0M OH^- - 5.7M F^- - 1.3M	Converts UF_4 remaining in dissolver to $UO_2 \cdot 2H_2O$	1,500 gal
Water Add	H_2O	Maintain liquid level during metathesis digest	260 gal
Recycled Metathesis Solution	K^+ - 7.0M OH^- - 5.0M F^- - 2.0M	Partially used metathesis solution returned to TK-01 for use in next metathesis in dissolver or E Cell	1,500 gal
Heel Dilution Water/ Solution	K^+ - 1.2M OH^- - 0.8M F^- - 0.3M	Remove additional metathesis solution to TK-01	100 gal
Air Bleed	Air	Dilute off-gas	150 cfm
Air Sparge	Air	Suspend solids during digest	100 cfm for 4 hr
Metathesis Rinse Water/ Solution	KOH - 0.003M KF - 0.008M U - 5×10^{-5}M Pu - 4×10^{-7}M U as $UO_2 \cdot 2H_2O$ - 20 lb	Remove spent metathesis solution	1,500 gal
Heel Dilution Water/ Solution	KOH - 5×10^{-4}M KF - 1×10^{-3}M U - 8×10^{-5}M Pu - 7×10^{-8}M	Dilute and remove additional rinse solution	100 gal
Ammonia Scrub Water	H_2O	Remove ammonia from off-gas	10 gal/min for 2 hr 5 gal/min for 4 hr (2400 gal)
Metathesis Spent Scrub Water and Condensate from Downdraft Condenser	NH_4OH - Trace	Feed to ammonia waste concentrator	2,700 gal
Ammonia Scrubber Off-Gas	NH_3 - Trace	Disposal via main stack	400 cfm

[a]For processing of 0.947% U-235 enriched Mark IV uranium fuel from N Reactor.

solution jet heel is diluted with 1,500 gallons of drown tank (TK-A3-A, TK-B3-A, TK-C3-A) water, boiled and sparged for 10 minutes, then processed with a portion of a batch of coating waste in the waste handling centrifuge. Five hundred seventy-five gallons of 1.6M aluminum nitrate solution are added to the dissolver rinse heel prior to acid addition for uranium dissolution. The aluminum complexes any remaining fluoride ion.

4.2.4 Coating Waste Handling and Uranium Recovery

The coating removal process flow diagram (Figure 4-2) illustrates the routing of head-end waste streams. The composition of the head-end waste disposal streams and of the centrifuged uranium metathesis and dissolution streams are given in Table 4-3 and Table 4-4, respectively.

4.2.4.1 Coating Waste Clarification

Because of the significant uranium content of the coating waste (in the form of entrained UF_4 solids--essentially all of the $UO_2 \cdot 2H_2O$ solids remain in the dissolver), the solution is processed through the E Cell clarification equipment for uranium recovery. The process consists of the following four basic steps:

- Centrifugation of coating waste to separate UF_4 solids from waste supernate
- Cleanout of the centrifuge and metathesis of UF_4 solids
- Centrifugation to recover $UO_2 \cdot 2H_2O$ solids
- Cleanout and transfer of uranium solids for later dissolution.

Coating waste solution is transferred without agitation from the dissolver to the coating waste receiver to be sampled for uranium and plutonium accountability, and is then transferred to the E Cell centrifuge feed tank, TK-E3. Approximately 3,000 gallons of the 4,600 gallons per batch of coating waste are processed on the first centrifugation by jetting the solution through the spinning centrifuge to the supernate waste receiver, TK-E5. Prior to the transfer, 720 gallons of 19M NaOH are added to the receiver tank for a "reverse strike" reaction (waste is added to caustic) to drive off ammonia and increase the pH of the waste. Waste handling and the reverse strike reaction are discussed in Subsection 4.2.4.2.

TABLE 4-3. Head-End Waste Disposal Streams.[a]

Stream	Composition	Function	Volume or Flow
Sodium Hydroxide	NaOH - 19.0M	React with decladding waste and rinse from centrifuge which are added to the NaOH to drive off ammonia	730 gal
Scrub Water	H_2O	Remove ammonia from gases evolved from TK-E5 when wastes are added to NaOH solution	25 gal/min for 12 hr = 18,000 gal
Decladding Waste and Rinse	$(NH_4)_2ZrF_6$ - 0.43M NH_4F - 0.44M NH_4NO_3 - 0.09M U - 0.003M Pu $2x10^{-5}$M U as UF_4 - 100 lb	Feed to centrifuge	3,350 gal
Decladding Waste and Rinse	Same as above except UF_4 is removed	Waste from centrifuge for disposal via TK-E5	3,350 gal
TK-E5 Off-Gas	NH_3 - 19% H_2O - 10% Air - 71%	Remove ammonia generated in TK-E5 during reaction with NaOH	300 cfm at 45°C
Ammonia Scrubber Off-Gas	NH_3 - 0.1% H_2O - 4 % Air - 96 %	Route off-gas to ammonia stack	230 cfm at 35°C
Spent Ammonia Scrub Water	NH_4OH - 0.39M RuRh-106 - 65 uCi/gal	Route waste to ammonia waste concentrator	18,000 gal
Decladding Waste and Rinse	$ZrO_2 \cdot 2H_2O$ - 0.35M NaF - 2.5M $NaNO_3$ - 0.08M U - 0.002M Pu - $1x10^{-5}$M pH - 10.0 RuRh-106 - 1.3 μCi/gal Solids - 50%	Route waste to underground storage tank.	4,100 gal
Water Rinse	H_2O	Flush TK-E5 and line to underground storage tank	515 gal
Sodium Hydroxide	NaOH - 19M	React with decladding waste and rinse mixed with metathesis rinse	330 gal
Decladding Waste and Rinse Mixed with Metathesis Rinse	$(NH_4)_2ZrF_6$ - 0.19M NH_4F - 0.19M NH_4NO_3 - 0.04M KF - 0.004M U - 5×10^{-4}M Pu - $1x10^{-6}$M U as UF_4 - 100 lb U as $UO_2 \cdot 2H_2O$ - 20 lb	Feed to centrifuge	3,350 gal
Decladding Waste and Rinse Mixed with Metathesis Rinse	Same as above except uranium is removed	Waste from centrifuge for disposal via TK-E5	3,350 gal
Reacted Decladding Wastes and Dissolver Rinses	$ZrO_2 \cdot 2H_2O$ - 0.17M NaF - 1.2M $NaNO_3$ - 0.02M KF - 0.004M NaOH - 0.5M U - 5×10^{-4}M Pu - 3×10^{-9}M RuRh-106 - 6×10^{-5} μCi/gal Solids - 20%	Route waste to underground storage tank	3,700 gal
Water Rinse	H_2O	Rinse of centrifuge feed tank TK-E3 and centrifuge routed to TK-E5 for disposal and flush of line to underground storage tank	530 gal

[a]For processing of 0.947% U-235 enriched Mark IV uranium fuel from N-Reactor.

TABLE 4-4. Centrifuged Uranium Metathesis and Dissolution Streams.[a]

Stream	Composition	Function	Volume or Flow
Centrifuge Cake Removal Slurry Water	H_2O	Remove centrifuge cake to TK-E3 for metathesis.	240 gal
Slurried Centrifuge Cake	U as UF_4 - 200 lb U as $UO_2 \cdot 2H_2O$ - 20 lb	Route uranium solids to TK-E3.	250 gal
Spent Metathesis Solution to TK-E3	KOH - 4.2M KF - 1.7M	Metathesize UF_4 in cake slurry.	780 gal
Spent Metathesis Solution From TK-E3	KOH - 2.7M KF - 1.6M U - 5×10^{-5}M Pu - 4×10^{-7}M U as $UO_2 \cdot 2H_2O$ - 220 lb	Feed to centrifuge for recovery of $UO_2 \cdot 2H_2O$.	1070 gal
Centrifuged Spent Metathesis Solution	Same as above except $UO_2 \cdot 2H_2O$ is removed	Route waste to TK-E5 and then to underground storage tank.	1070 gal
Water Rinse	H_2O	Rinse TK-E3, centrifuge TK-E5 and line to underground storage tank.	530 gal
Centrifuge Cake Removal Slurry Solution	$Al(NO_3)_3$ - 0.6M	Slurry $UO_2 \cdot 2H_2$) centrifuge cake to TK-E1 and complex fluoride.	240 gal
Slurried Centrifuge Cake	$Al(NO_3)_3$ - 0.6M U as $UO_2 \cdot 2H_2O$ - 220 lb	Transfer cake slurry to TK-E1.	250 gal
Nitric Acid	HNO_3 - 12.2M	Dissolve uranium oxide in TK-E1.	50 gal
Dissolved Uranium	$UO_2(NO_3)_2$ - 0.37M $Al(NO_3)_2$ - 0.5 M F^- - 0.15M HNO_3 - 0.5M Pu - 0.002M	Feed addition to TK-D4.	300 gal

[a]For processing of 0.947% U-235 enriched Mark IV uranium fuel from N Reactor.

One batch of dissolver metathesis rinse (1,500 gallons) is combined in the centrifuge feed tank with the remainder of the coating waste to make up the feed for the second centrifugation. The second batch is centrifuged when the waste receiver tank is emptied, and caustic (330 gallons) is again added to the receiver for reaction with the waste prior to the transfer. The caustic requirement for this batch is reduced because of the smaller amount of coating waste, which is diluted by the dissolver rinse water.

The combined solids from the two centrifuge batches are slurried from the centrifuge feed tank. Uranium tetrafluoride solids are metathesized to hydrated oxides by the addition of 600 gallons of recycled metathesis solution (KOH and some KF) from the metathesis storage tank, TK-D1. The reaction is carried out at boiling with agitation for 4 to 8 hours, converting the residual UF_4 to KF and $UO_2 \cdot 2H_2O$. Fresh KOH is added to the metathesis storage tank prior to the next dissolver metathesis.

The metathesized slurry is clarified in one batch with an E Cell centrifuge to separate uranium solids from the supernate. The spent metathesis supernate solution is sampled in the waste receiver and sent to an underground storage (UGS) tank. A 515-gallon water rinse of the feed tank, centrifuge, and waste tank is also transferred to UGS. The uranium solids are slurried to Tank E1 for dissolution.

4.2.4.2 Waste Treatment and Disposal

Coating waste and coating waste dissolver rinse solutions are reacted with caustic in the waste receiver tank, TK-E5, with the reverse strike method. To minimize the ammonia evolution rate during the reaction and to produce slurriable solids, 19M NaOH is added to the waste receiver tank before the waste is jetted through the centrifuge. This procedure allows the maximum practical process rate. The volume of NaOH required in the reverse strike reaction is reduced from 0.22 gallon of NaOH per gallon of waste for the first centrifugation batch to 0.10 gallon of NaOH per gallon of waste in the second batch, because of dilution from the dissolver rinse.

The reaction of coating waste with caustic generates ammonia, which is handled by an independent E Cell off-gas system. The system consists of an E Cell ammonia scrubber, similar to the dissolver ammonia scrubbers, and an ammonia analyzer. Off-gas handling is described in later subsections of 4.2 and 4.11.

The coating waste-caustic reaction generates up to 50 vol% solids (primarily hydrated zirconium-oxide), and requires agitation for solid suspension in order to transfer the slurry to UGS. The transfer is followed by a 530-gallon water flush.

4.2.4.3 Uranium Recovery

The recovery of uranium from $UO_2 \cdot 2H_2O$ solids is accomplished by nitric acid dissolution of the solids in the recovered Zirflex product tank (TK-E1) and blending of the acid solution with the metal solution from the dissolvers in Tank D4.

Following the centrifugation of metathesized solids, the centrifuge is cleaned out with 240 gallons of 0.6M aluminum nitrate solution sprayed in small high-pressure additions to the slowly spinning bowl. The slurry is transferred to TK-E1, where the solids are dissolved with a 50-gallon addition of 12.2M HNO_3.

The solution is sampled and additional aluminum nitrate nonahydrate (ANN) is added, if needed, to bring the aluminum-to-fluorine mole ratio to 3:1 before transfer to the metal solution feed tanks in D Cell. Complexing of the residual fluoride ions with aluminum is very important at this point to avoid fluoride complexing of plutonium in the first solvent extraction column (HA column), which would result in high plutonium losses to the aqueous waste stream (HAW).

Some zirconium oxide solids may be present in the dissolvers after coating removal, and must be slurried out with the coating waste, centrifuged, and accumulated in the recovered Zirflex product tank. If the quantity of these solids becomes measurable, a special dissolution with Zirflex solution could be necessary. This operation has not been required. The insoluble zirconium solids can have an adverse effect on the process in the first solvent extraction cycle. This and other off-standard process conditions are covered in detail in Section 4.2.6.

4.2.4.4 Clarification by Centrifugation

E Cell contains two solid bowl-type centrifuges, one with a 48-inch bowl diameter (G-E4) and one with a 40-inch bowl diameter (G-E2), used for Zirflex waste clarification. The larger centrifuge is used most of the time for waste processing, as no increase in overall processing rate is realized by utilizing the two in parallel with only one set of feed and receiver tanks. The smaller centrifuge is reserved as a spare. The feed and receiver tanks and transfer routes for either centrifuge are shown in the process flow diagram, Figure 4-2, and the individual equipment pieces are described in Chapter 3.0.

The centrifuge removes solids from aqueous solutions. The solids cake buildup in the bowl is monitored by a Beckman gamma monitor. Beckman readings are nearly proportional to the solids volume in the bowl and increase during centrifugation. If the monitor readings level off during centrifugation, it is an indication that solids may be flowing over the top to the supernate waste receiver (TK-E5).

Holdup volumes while the centrifuges are spinning are 90 gallons for the 48-inch bowl and 60 gallons for the 40-inch bowl. The centrifuges are equipped with skimmers, which are moved hydraulically to contact the spinning liquid at the end of a centrifugation cycle and quickly empty the residual liquid. Care is taken to avoid contacting the solids or bowl wall with the skimmers to minimize solids transfer and prevent damage of the skimmers.

A special technique is used to slurry the solids cake from the bowl at the end of a batch. A high-pressure pump sprays the cleanout solution at a high flow rate (but limited to give no more than a 20-gallon holdup volume) into the bowl as it is rotated slowly at 10 rpm. The slurry is jetted from the bottom of the bowl as the spraying operation is repeated, until all of the cleanout solution is used (usually approximately 240 gallons). The empty-out jet remains on throughout the cleanout operation.

4.2.5 Off-Gas Treatment

As discussed previously, potentially hazardous gases (hydrogen and ammonia) are evolved in the head-end processes. The methods and equipment for treating these and other innocuous gases generated are described in this section.

A more in-depth discussion of head-end technology is given in Chapter 5.0. Off-gas equipment is described more fully in Chapter 3.0.

4.2.5.1 Generation of Off-Gases by Zirflex Reaction

As mentioned in Subsection 4.2.1, the reaction of AFAN on the Zircaloy in the coating removal reaction produces ammonia and some hydrogen. Radiolysis of water also results in some evolution of hydrogen. The principal reason for including nitrate in the Zirflex solution is to suppress hydrogen formation.

Hydrogen must be controlled to a concentration below the minimum explosive limit of 4% by volume. The dissolver air bleed is operated during dissolver boiling and cooling periods to dilute the off-gas hydrogen concentration to below the conservative control limit of 2% by volume.

The efficiency of the decladding reaction is dependent on the ammonia being removed from the dissolver solution as fast as it is formed. The dissolver is steam sparged to aid in the removal of ammonia from the solution.

Table 4-1 lists the coating removal process off-gas streams and compositions before and after treatment.

4.2.5.2 Off-Gases from Waste Treatment

The greatest potential hazard in E Cell operations is ignition of the ammonia generated during the treatment of Zirflex waste with caustic. Precautions taken to prevent this occurrence include the reverse strike caustic reaction described earlier, and the injection of steam into the vapor space of the tanks. The water vapor maintains the atmosphere in the tank and lines to the scrubber system below the explosive ammonia concentration range of between 14.6 and 27.4 vol% ammonia.

Maintaining the vapor space temperatures above 45°C assures a non-explosive atmosphere by the dilution with water vapor. Downstream of the E Cell scrubber, the ammonia concentration is much lower (less than 0.25% by volume) than the explosive range, since most of the ammonia is removed by absorption and condensation with water in the off-gas tower and scrubber. Table 4-3 includes the process off-gas streams and compositions. The E Cell off-gas system is described in more detail in Subsection 4.2.5.5.

4.2.5.3 Gas Sampling and Analysis

Detection and measurement of hydrogen in a process stream requires a fairly sophisticated instrument system. A gas sample is taken from the dissolver off-gas downstream of the ammonia scrubber for analysis of the ammonia and hydrogen concentrations. The gas sample is passed through an analyzer cell for H_2 and NH_3 determinations, then through a silica gel cell for ammonia removal, and finally through a hydrogen analyzer cell. The instruments generate an output signal by burning the gas on a catalytic filament, and reading the temperature rise with a thermocouple. A bucking voltage from the hydrogen meter is fed to the ammonia meter to cancel the hydrogen contribution in the ammonia analyzer cell.

A more detailed description of the analyzer is given in Subsection 3.10.6.11 of Chapter 3.0.

4.2.5.4 Dissolver Off-Gas System - Coating Removal

The three downdraft dissolver towers, which are actually water-cooled condensers, are primarily designed for nitric acid recovery during uranium dissolution. However, each tower also functions as a first-stage off-gas scrubber, removing some ammonia and fission products with condensate during the coating removal process. The condensate stream is routed to the ammonia scrubber catch tank to be combined with ammonia scrubber waste.

An ammonia scrubber is installed downstream of each dissolver tower to remove ammonia from the off-gas stream. The scrubbing liquid is water during coating removal when ammonia is generated, but no scrubbing liquid is used during uranium dissolution when little or no ammonia is generated.

During the metathesis digestion in the dissolver, the scrub water flow rate is reduced below that used for coating removal. Scrub water rates during the overall coating removal process for the dissolver scrubbers and the E Cell ammonia scrubber are listed in Tables 4-1, 4-2, and 4-3.

Ammonia scrub waste (ASW) is routed to an individual catch tank (TK-A3-4, TK-B3-4, TK-C3-4) for each scrubber, then to the ASW concentrator feed tank (TK-F12). The scrubbers are designed to reduce the maximum ammonia content of the off-gas streams to 0.06 wt%, with the water flow rate specified in Table 4-1. Air addition to the coating removal off-gas stream is available if needed to increase the total gas flow for improved scrubber efficiency. Dissolver ammonia scrubber off-gas is routed to the main stack (291-A1) via each of the heaters, the three silver reactors used for removal of iodine from the off-gas, and filters.

0413275 0777

4.2.5.5 E Cell Off-Gas System

The E Cell off-gas system consists of a single ammonia scrubber (T-E3-1) and scrub waste catch tank (TK-E3-2). The catch tank liquid is routed directly to the ASW concentrator feed tank (TK-F12). The water flow rate is specified in Table 4-3, and a description of this scrubber is given in Chapter 3.0, Section 3.4. Off-gas from this scrubber is routed to the ammonia stack.

4.2.5.6 Ammonia Scrub Waste Concentration System

The ASW concentration system evaporates ammonia scrub waste from the three dissolver ammonia scrubbers and the E Cell scrubber. Average stream compositions for this system based on a processing rate of 10 tons of 0.947% U-235 enriched uranium per day are listed in Table 4-5. The concentrator feed tank (TK-F12), concentrator (E-F11-1), and condenser (E-F11-2) system are shown in the flow diagram, Figure 4-1. An equipment description is provided in Chapter 3.0. The concentrator and condenser can be operated continuously at boil-off rates up to 65 gpm, but processing rates vary throughout the dissolver and E Cell cycles.

The specific gravity of the ammonia scrub waste concentrator bottoms is monitored and allowed to increase to a predetermined level before shutdown, cooling, and jetting to the F Cell waste receiver (TK-F18). A radioactivity (Zr-Nb-95, Ru-106) concentration limit for the condensate is also a criterion for dumping the concentrator.

The condenser is operated to liquify the vapor and subcool the condensate. A portion of the condensate is routed through spray nozzles back to the condenser to scrub residual ammonia from the vapor stream. Up to 15 gpm of the condensate can be recirculated this way. Because of its affinity for cool water, nearly all of the ammonia is absorbed in the subcooled condensate. The ammonia containing condensate is pumped to the 216-A-36B Crib. A sampler for obtaining liquid for radionuclide analysis is available on the condensate stream.

TABLE 4-5. Ammonia Scrubber Water and Ventilation System Steam Condensate Concentration and Disposal Streams.

Stream	Composition	Function	Volume or Flow
Decladding Condensate and Spent Ammonia Scrub Water From Dissolver Cells	NH_4OH - 0.58M RuRh-106 - 4 x 10^3 uCi/gal	Feed to concentrator.	17,700 gal
Metathesis Spent Ammonia Scrub Water	NH_4OH - Trace	Feed to concentrator.	2,700 gal
E-Cell Spent Ammonia Scrub Water	NH_4OH - 0.41M RuRh-106 - 65 uCi/gal	Feed to concentrator.	18,700 gal
Purex Vessel and Condenser Vent Jet Steam Condensate	H_2O HNO_3 - Trace	Feed to concentrator.	21,600 gal/day
NaOH Add	NaOH - 19M	Prevent formation of NH_4NO_3 from reaction of NH_4OH with trace quantities of HNO_3 in jet condensates.	1.1 gal
ASD Condensate	NH_4OH - 0.31M RuRh-106[b] - 10 uCi/gal	Route condensate with most of ammonia to 216-A-36-B underground disposal trench or crib.	61,200 gal
Condenser Off-Gas	NH_3 - 1% H_2O - 4% Air - 95%	Route off-gas to ammonia stack.	130 cfm at 35°C
ASW	RuRh-106 - 61 Ci/day	Route concentrated waste to underground storage tank.	1,800 gal/batch as required

[a] For processing of 0.947% U-235 enriched Mark IV uranium fuel from N Reactor.

[b] RuRh-106 value based on processing 180-day cooled fuel. Value is 0.5 uCi/gal for 5-year cooled fuel.

Off-gases from the ASW condenser (filters and separate stack) and silver reactor off-gas (filters and main stack) are covered in Section 4.11.

4.2.6 Process Control and Off-Standard Conditions

A major concern during the head-end process is excess radioactivity in the stack, specifically radioiodine (I-131 and I-129) resulting from functional failure of a silver reactor. Inadvertent processing of a green fuel element can also result in a major I-131 release since these elements contain relatively large amounts of the short-lived isotope. A silver reactor failure may result from melting or leaching of the silver nitrate coating on the Berl saddles if the temperature of the gas feed stream is too high or too low, respectively. The units are regenerated with fresh $AgNO_3$ periodically, but the residue of $AgNO_3$-AgI is not dissolved and flushed. To isolate I-129 and any residual I-131, defective units are replaced and the loaded reactors are buried.

The coating removal reaction is controlled by maintaining an optimum zirconium to fluoride mole ratio (4:1), maintaining an optimum hexafluorozirconate concentration to preclude precipitation, and removing ammonia generated in the reaction by steam stripping the coating removal solution.

Basic controls during the coating removal process are:

- Maintaining hydrogen in the off-gas at < 2 vol% (4% is the lower explosion limit)
- Maintaining steam sparge flow and makeup water addition
- Maintaining boiling temperatures
- Maintaining constant liquid volume in the dissolver.

Key controls for the potassium hydroxide metathesis of uranium and plutonium fluorides are:

- Assurance of excess potassium hydroxide
- Sufficient digestion time at boiling temperature
- Adequate time for solids settling prior to solution transfer.

Although past experience indicates it is unlikely, insoluble zirconium solids could enter the HAF solvent extraction feed stream and cause problems such as emulsification and entrainment in the columns, or plugging

and sticking of valves and other equipment. The solids would be undissolved zirconium oxide from the fuel element surface, which is slurried with the coating waste and follows the recovered $UO_2 \cdot 2H_2O$ solids. If solids build up in the recovered Zirflex-product tank (TK-E1), solids would be transferred to the metal solution storage tanks where a special dissolution in Zirflex solution would be necessary to eliminate the solids. Solids not dissolved in this reaction would have to be slurried to an F Cell waste tank or to the coating waste disposal tank, depending upon routing or jumper availability.

Some zirconium-compound solids, which can be transferred to the HA extraction column, have been observed in the dissolver metal solution. These solids are apparently present because of inadequate removal of zirconium from the dissolver prior to nitric acid dissolution of uranium. If solids of this type accumulate in the metal solution feed storage tanks, removal by dissolution in Zirflex solution would be necessary.

An important consideration in the coating removal operation is the proper sequential scheduling of the coating removal reaction in the three dissolvers. The decladding reaction requires approximately 8 hours for completion after the dissolver is heated. Immediate cooling and solution transfer to E Cell for waste processing is required, since after the decladding reaction is completed, even cold AFAN will continue to react with uranium and contribute to potential uranium losses. Therefore, the optimum head-end schedule involves careful monitoring of E Cell progress and starting a new dissolver coating removal cycle no sooner than 8 hours prior to completion of an E Cell cycle.

During normal operation, a dissolver charge is made on top of a previous heel comprised primarily of fragments of zirconium tubes from which the majority of the uranium metal has been leached. Heel size is determined from the height of water required to cover the heel as observed from the canyon crane. The presence of large quantities of undissolved Zircaloy scrap requires a special small-volume Zirflex decladding operation to remove the scrap from a dissolver before a fresh batch of fuel elements is charged. During the special operation, the dissolution and steam flow rates must be controlled to avoid an excessive reaction rate and precipitation of fluorozirconium compounds with excessive free fluoride. Excessively rapid reactions can occur in the dissolver if a large amount of Zircaloy scrap is present during a coating removal. Off-standard conditions for the dissolver charging and decladding operations are summarized in Table 4-6.

4.2.7 Process Safety and Criticality Prevention -- Coating Removal

Criticality prevention in the coating removal process follows the same principles as in other parts of the plant, employing the following controls:

- Geometry - The fixed annulus dimension of the dissolvers is geometrically favorable for criticality prevention for material with less than 0.97% U-235 enrichment.

TABLE 4-6. Dissolver Charging and Decladding - Off-Standard Conditions.

Off-Standard Condition	How Detected	Likely Cause	Detection of Cause	Remedy
A) Charging incomplete fuel assemblies	Visual inspection by crane operator	Partial assembly loaded at reactor basin	Visual inspection by crane operator	Halt charging and notify supervision. Return fuel to reactor for reloading.
B) High radiation level in the railroad tunnel while charging	(1) Radiation detection chamber in the railroad tunnel (2) Alarm in central control (3) Alarm in dispatcher's office (4) Red light flashing in the crane cab	Receipt of "green" slugs (cooled less than 90 days)	Investigation of fuel history	Return fuel to reactor for additional cooling
C) Dissolver off-gas hydrogen concentration greater than 2%	Readings on the ammonia-hydrogen analyzer	(1) Too rapid of reaction during decladding (2) Improper positioning of air bleed valve	(1) Temperature and pressure readings during heatup (2) Valve loading pressure on air bleed DOV	(1) a) Open air in-bleed valve b) Slow reaction by decreasing steam flow through coil (2) Increase air bleed rate
D) Dissolver pressurized	Loss of vacuum on dissolver	(1) Too rapid of reaction during decladding (2) Improper positioning of air bleed valve	(1) Temperature, pressure, and hydrogen/ammonia readings during heatup (2) Valve loading pressure on air bleed DOV	(1) Slow reaction by cutting steam to coil (2) Decrease air bleed rate
E) Dissolver off-gas ammonia concentration greater than 1%	Readings on the ammonia-hydrogen analyzer	(1) Low water flow rate to ammonia scrubber (2) Low cooling water flow to downdraft condenser	(1) Reading on the scrubber water supply rotameter (2) Cooling water a) Temperature readings b) Flowmeter reading	(1) Increase water flow rate to scrubber (2) Check for raw water losses (a) Decrease steam flow to sparger & coil (b) Increase cooling water flow to condenser

TABLE 4-6. Dissolver Charging and Decladding - Off-Standard Conditions. (Continued)

Off-Standard Condition	How Detected	Likely Cause	Detection of Cause	Remedy
F) Excess Zircaloy heel in dissolver	Visual inspection by crane operator	(1) Insufficient AFAN, low AFAN concentration (2) Dilution of solution with water (3) Insufficient NH_3 stripping a) Low sparge rate b) Water addition insufficient (4) Shorter than required boiling time (5) Solution level below fuel level during decladding	(1) AFAN-Check concentration which may be indicated by low dissolver weight factor (2) Dilution-Dissolver specific gravity and/or weight factor readings (3) NH_3-a) Air sparge rotameter reading b) Water supply rotameter reading (4) Temperature recorder during boiling cycle (5) Low weight factor reading during heel check	(1) AFAN-Check volume addition of AFAN (2) Dilution-Increase steam flow to coil. Check downdraft condenser condensate routing (3) NH_3-a) Increase sparge rate to proper setting b) Increase water addition rate (4) Perform extra declad (5) Perform extra declad
G) Dissolver declad waste line plugged with solids	Inability to successfully transfer declad waste solution from dissolver	Overconcentration with hexafluorozirconate precipitates a) High fluoride concentration b) Cooling of dissolver during reaction	No decrease in dissolver WF or increase in TK-D2 WF when transfer is attempted a) Fluoride analysis of declad solution b) Temperature instrumentation on dissolvers	Maintain constant volume in dissolver while decladding a) Dilute solution as reaction progresses b) Maintain proper reaction temperature c) Backflush jet to remove plug
H) Excessive product loss while decladding	Analysis of TK-D2 solution for uranium	(1) Oxidation of UF_4 to UF_6 a) Excessive air sparging b) Holding decladding solution in dissolver without dilution or cooling (2) Insufficient rinsing of dissolver after last dissolution	(1) Oxidation - a) Air sparge rotameter reading b) Monitor weight factor and temperature charts (2) Monitor weight factor chart after jetting metal solution	(1) Oxidation - a) Check gang valves for air leakage b) Prompt dilution and cooling of declad waste (2) Rinse dissolver well (3) Do not sparge during declad waste transfer

- Materials - A concrete moderator and cadmium absorber are part of the dissolver design.

- Administrative - Material with an average U-235 enrichment of 0.97 to 1.15% prior to irradiation is limited administratively by controlling charge size. The height of the stacked fuel rods charged is limited in the annulus; limits are set such that an inadvertent 33% overbatch will not exceed the criticality limit. Processing of material containing above 1.15% U-235 in Purex would require separate criticality prevention standards.

Before transfer of coating waste solution from the dissolvers for centrifugation, the solids are allowed to settle to minimize the transfer of plutonium tetrafluoride (PuF_4). The centrifuges are limited to 500 grams of plutonium.

Potential process safety hazards and respective preventative measures for the coating removal process fall into three areas:

- Uranium and Zirconium Fires - Fuel is charged to the dissolvers into solution, and metal heels are covered with liquid. Water is available from the drown tank if needed.

- Hydrogen Explosion - Hydrogen concentrations in tank vapor spaces are controlled by air dilution. The hydrogen evolution rate is reduced by adding nitrate ion to the solution.

- Ammonia Explosion - The off-gas streams from the dissolvers are scrubbed to keep the ammonia content below the explosive composition limit of 14.6%. Steam is added to the vapor space in E Cell tanks and the vapor space temperatures are maintained above 45°C to give a mixture of water vapor, ammonia, and air stoichiometrically unfavorable for explosion.

4.3 URANIUM DISSOLUTION AND FEED PREPARATION

The Zirflex coating removal process is the first step in preparing the radioactive fuel elements for separation of uranium, plutonium, and fission products. Dissolution of the bare uranium metal in nitric acid is the next step and is described in this section. A detailed description of the equipment for this process is given in Chapter 3.0, Sections 3.3 and 3.4, and the process chemistry and technology are covered in Chapter 5.0. Off-gas handling systems for uranium dissolution and feed preparation are discussed briefly in this section, and portions of the overall process systems are described in Section 4.11. The compositions of the uranium dissolution, feed preparation and dissolver off-gas treatment streams are listed in Table 4-7.

TABLE 4-7. Uranium Dissolution, Feed Preparation, and Dissolver Off-Gas Treatment Streams.[a]

Stream	Composition	Function	Volume or Flow
Air Bleed	Air	Dilute and increase volume/velocity of off-gas.	150 cfm
Aluminum Nitrate	$Al(NO_3)_3$ - 1.6M	Complex residual fluoride in first cut.	575 gal
Nitric Acid	HNO_3 - 10.4M	Dissolve uranium metal in first cut.	2500 gal
Air Sparge	Air	Circulate solution; dilute and increase volume/velocity of off-gas.	60 cfm for 6 hours on each cut
Downdraft Condenser Off-Gas	NO_x - 23%	Route off-gas to treatment facilities (silver reactor, filters, backup facility) for 12 hours reaction time.	400 scfm
First Cut	$UO_2(NO_3)_2$ - 2.05M $Al(NO_3)_3$ - 0.29M F^- - 0.08M HNO_3 - 0.41M Pu - 3.8 g/gal	Route product dissolver solution to TK-D3/D4 storage.	3200 gal
Aluminum Nitrate	$Al(NO_3)_2$ - 1.6M	Complex residual fluoride in second cut.	140 gal
Nitric Acid	HNO_3 - 10.4M	Dissolve uranium metal in second cut.	1980 gal
Second Cut	$UO_2(NO_3)_2$ - 2.13M $Al(NO_3)_3$ - 0.10M F^- - 0.03M HNO_3 - 0.52M Pu - 3.9 g/gal	Route product dissolver solution to TK-D3/D4 storage.	2200 gal
First Rinse	H_2O	Dilute jet heel and transfer additional product from dissolver to TK-D3/D4.	100 gal
Second Rinse	H_2O	Same as first rinse.	200 gal
Dissolved Uranium From Centrifuge Cake	$UO_2(NO_3)_2$ - 0.37M $Al(NO_3)_3$ - 0.5M F^- - 0.15M HNO_3 - 0.5M Pu - 0.6 g/gal	Feed addition to TK-D4.	300 gal
Uranyl Nitrate Solution	$UO_2(NO_3)_2$ - 1.77M $Al(NO_3)_3$ - 0.20M F^- - 0.05M HNO_3 - 0.4M Pu - 3.3 g/gal	Feed addition to TK-E6.	6400 gal
XA Absorber Water[b]	H_2O	Absorb NO_x in XA tower of backup facility.	8 gal/min
XA Reflux	HNO_3 - 2.0M	Cool tower to increase efficiency and absorb NO_x.	288 gal/min
XCA	HNO_3 - 2.0M	Route backup facility acid to TK-F3 for transfer to fractionator.	5.4 gal/min
XB Absorber Water[b]	H_2O	Absorb NO_x in XB tower of backup facility.	2.5 gal/min
XB Reflux	HNO_3 - 1.7M	Cool tower and absorb NO_x.	80 gal/min
XBA	HNO_3 - 1.7M	Route T-XB product from TK-XD to TK-XC for use in T-XA reflux and transfer to TK-F3.	2.1 gal/min
Backup Facility Off-Gas	NO_x - 3% for 12-hour reaction time in dissolvers.	Route off-gas to main stack.	600 scfm

[a] For processing of 0.947% U-235 enriched Mark IV fuel from N Reactor.

[b] Recycled AFD condensate from the acid fractionator may be used for these streams.

4.3.1 Head-End Process Flow Diagram

A process flow diagram of the uranium dissolution process and equipment is given in Figure 4-2. The figure shows the major pieces of equipment (excluding the off-gas backup facility), process routes, and some instrumentation and control equipment. The uranium dissolution system consists of three independent annular dissolvers with parallel off-gas systems also used for coating removal, a feed makeup tank, and three storage tanks. The off-gas systems include the downdraft condensers (dissolver towers), steam and electric heaters, silver reactors, and two off-gas filters per system. The filters are described in Section 4.11, and the off-gas backup facility, shown in Figure 4-1, is described in this section and in Chapter 3.0, Sections 3.4 and 3.13.

The dissolvers discharge to metal solution lag storage TK-D3/D4, which is a two-compartment bathtub-shaped vessel with a capacity of 7,700 gallons in each side. Uranium recovered by dissolution of slurried centrifuge cake in TK-E1 is also added to TK-D4. The tanks are equipped with jets for transferring between compartments and to TK-D5, where solution samples are taken for product accountability. Tank D5 contains a pump which recircuates solution through the sample pot and transfers the solution to TK-E6 for feed preparation. The volume of solution transferred is determined from TK-D5 measurements. The two-stage sampler, shown schematically in Figure 4-3, involves pumping solution to a first-stage sample pot and second-stage air-lift circulation of the solution to the sample gallery. The first-stage sampling is operated from the central control room. Rework materials can also be transferred to TK-D5. The solution is then pumped to TK-E6 for final feed makeup. Tank E6 has provisions for adding demineralized water, nitric acid from three sources, and rework material from four sources.

4.3.2 Complexing of Fluoride Ions

After completion of the metathesis portion of the coating removal process described in Section 4.2, some UF_4 may be left in the dissolver, since the metathesis rinse dilutes the fluoride in the heel, but does not remove it completely. Since even small concentrations of fluoride will increase corrosion rates in the dissolver during acid dissolution and in the concentrators during subsequent processing, aluminum ion is added as aluminum nitrate nonahydrate solution [1.6M $Al(NO_3)_3 \cdot 9H_2O$, or ANN] to complex the residual fluoride prior to acid addition to the dissolver. The chemistry of the fluoride corrosion and complexing is discussed in Chapter 5.0, Section 5.2.

The ANN added provides an overall aluminum-to-fluorine mole ratio of greater than three, based on fluoride added in Zirflex solution that is not converted by metathesis to soluble KF. For 0.947% enriched fuel, the first dissolution cut requires 575 gallons of 1.6M ANN from AMU TK-205. Only 140 gallons of ANN are needed prior to the second (final) cut, because some fluoride is removed from the dissolver with solution from the first cut.

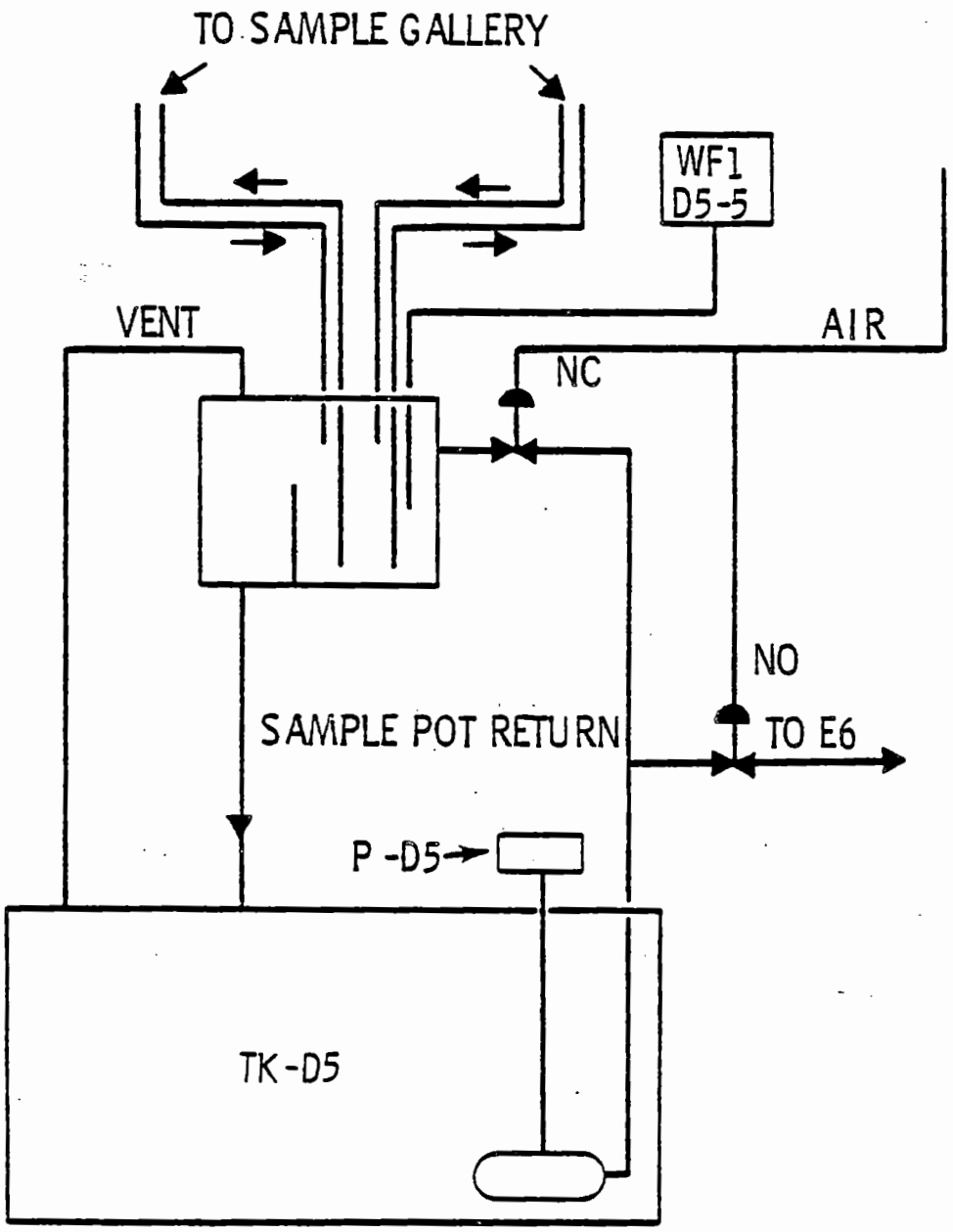

FIGURE 4-3. Tank D5 Sampling System.

For criticality prevention, processing of the higher enriched spike fuel (0.947 - 1.25% U-235, NPR Mark 1-A) requires a dissolver charge approximately half that of the 0.947% NPR fuel. Uranium dissolution of the spike fuel is completed in a single step. Because of the smaller batch, only 250 gallons of ANN are added to complex the residual fluoride ions in the dissolver.

4.3.3 Uranium Dissolution Process Variables

Uranium dissolution is started with addition of nitric acid to a dissolver annulus, via a magnetic flowmeter, at a rate of 50 gpm. Initial acid volumes vary from 1,000 gallons of 50% HNO_3 (10.4M) for the first cut and 600 gallons for the second cut, to 1,700 gallons for spike fuel dissolution. Acid is added with full cooling water flow to the dissolver coil. Heating is begun with steam to the coil until the solution temperature reaches 60°C. As hydrous uranium dioxide solids ($UO_2 \cdot 2H_2O$) and uranium fines may be present at the beginning of dissolution, the initial reaction may be hard to control. The solids and fines may react very fast at the start of the first cut, so the heating of the acid is slow to avoid pressurizing the dissolver.

After holding the solution temperature at 60°C for 30 minutes, the steam is shut off to monitor the rate of the initial reaction. An excessive reaction rate (inability to maintain at least 4 inches of water vacuum in the dissolver) is controlled by lowering the solution temperature with the cooling coil, or, as a last resort, by dumping drown tank water directly into the dissolver. When the reaction is under control and the temperature rise levels off, the coil steam is restarted and set at a specified flow rate (based on past operating experience), and adjusted to maintain the dissolver vacuum when the boiling temperature is reached. After about 2 hours of digestion, or if the solution specific gravity reaches 1.66, the first cut acid addition is resumed. An additional acid volume of approximately 1,500 gallons (500 gallons for spike fuel dissolution) of recovered 50% acid is added at a rate of 10 gpm. This controlled addition maintains the acid concentration above 0.4M (for the first cut), and an effective dissolution rate.

As metal dissolution progresses, the specific gravity of the solution increases. The first cut is terminated at a specific gravity of 1.66, as measured in the dissolver at boiling temperature, to avoid an acid-deficient solution with plutonium polymer formation. The first cut is also terminated if the specific gravity fails to rise 0.02 unit in 1 hour. These limitations on specific gravity also apply for termination of dissolution of spike fuel to ensure a minimum uranium heel in the dissolver. The dissolution reaction is stopped by cooling the solution to 60°C with the cooling coil. The solution is jet-transferred to the metal solution feed storage tanks (TK-D3/D4) to complete the cut.

For the lower enriched fuel, the second cut requires somewhat less acid (1,400 gallons in addition to the initial 600 gallons) because about 60% of the uranium charged is dissolved in the first cut. However, since there is less dilution of the acid by ANN, the second cut is terminated at a higher specific gravity (1.72) than the first cut with slightly higher final UNH and nitric acid concentrations in the solution. Concentrations of uranium (as UNH), ANN, F^-, and nitric acid at the termination point for each cut for dissolution of lower enriched fuel are compared in Table 4-8.

TABLE 4-8. Dissolver Solution Compositions for Dissolution of Fuel Enriched to 0.947% U-235

Solution	End of First Cut, M	End of Second Cut, M
$UO_2(NO_3)_2 \cdot 6H_2O$ (UNH)	2.05	2.13
$Al(NO_3)_3 \cdot 9H_2O$ (ANN)	0.29	0.10
F^-	0.083	0.03
HNO_3	0.41	0.52

The dissolver solution composition for spike fuel solution is nearly the same as for the second cut solution shown in Table 4-8. The ANN concentration in the spike solution is somewhat higher at 0.16M, as compared to 0.10M for the lower enriched second cut solution.

4.3.4 Dissolver Rinse

During coating removal, which follows a uranium dissolution, any uranium metal in solution which clings to the dissolver walls will be converted to soluble UO_2F_2 and will be lost with the coating removal waste unless it is rinsed beforehand from the dissolver with the two fresh demineralized water additions (100 and 200 gallons, successively) from the drown tank. The rinse water, which is jetted to a minimum heel of 20 gallons, follows the UNH to the metal solution storage tanks for the feed preparation steps in D Cell. The rinsed heel volume is measured as it is covered with coating removal solution or water as a safety precaution to prevent uranium metal fires.

4.3.5 Metal Storage and Feed Preparation

Preparation of feed solution for solvent extraction processing consists of transferring batches of dissolver solution from metal solution storage tanks (TK-D3/D4) to an accountability tank (TK-D5). The material is sampled for Purex input accountability in TK-D5, as shown schematically in Figure 4-3, and is then pumped to the feed makeup tank (TK-E6) in E Cell. Recovered uranium from E Cell metathesis is blended with feed metal solution in TK-D4.

If necessary, final feed adjustments are made in TK-E6, with the adjustments dependent upon the TK-D5 accountability sample analyses. The feed makeup tank has provisions for adding demineralized water, nitric acid from any of three sources, and rework materials from any of four sources.

When rework materials are added to the feed solution in TK-E6, chemical and volumetric adjustments are made to meet the following specifications:

- The plutonium-to-uranium ratio must be maintained below established limits which vary with the U-235 enrichment of the solution. (U-235 is also a fissile material, and a higher enrichment reduces the amount of allowable plutonium in the solution.)
- Nitric acid concentration is maintained at greater than 0.05 lb/gal.
- Uranium concentration is maintained above 1 lb/gal.
- Solution volume in TK-E6 is kept above 2,000 gallons.
- A minimum aluminum-to-fluoride mole ratio of three is maintained.

The typical spike fuel solvent extraction feed composition in the feed makeup tank (TK-E6) varies only slightly from that shown for 0.947% fuel in Table 4-7.

After the adjustments have been made, the solution is transferred to TK-H1, which is the feed tank for the HA solvent extraction column.

4.3.6 Off-Gas Treatment

Dissolver off-gases generated during uranium dissolution are rich in nitrogen oxides, which are partially removed from the off-gases and are recovered as nitric acid. The system used to accomplish the recovery, the backup facility, is described later in this section. The volatile

fission products released during uranium dissolution are Kr-85, Xe-133, I-129, and I-131. The first two, which are inert gases, are quantitatively discharged to the outside atmosphere via the 291-A stack. Part of the iodine isotopes are believed to reflux to the dissolver from the dissolver tower (downdraft condenser) during the initial stage of acid dissolution, and then discharge to the tower off-gas during the remainder of the dissolution. Iodine is then removed from the dissolver off-gas in the silver reactor by reaction with solid silver nitrate coating on the reactor packing material.

Chapter 5.0 contains information on head-end off-gas systems technology and chemistry for uranium dissolution. The backup facility and silver reactor operation are included in this section and in Chapter 9.0. Table 4-7 lists the uranium dissolution process off-gas streams and their approximate composition during a dissolution cycle.

4.3.6.1 Dissolver Off-Gas System - Uranium Dissolution

A flow diagram of the off-gas system involved in the uranium dissolution process is shown in Figure 4-1. Off-gas treatment equipment is described in Chapter 3.0, Section 3.4. The downdraft dissolver towers, which are actually water-cooled condensers, are primarily designed for nitric acid recovery during uranium dissolution. The tower also functions as a fission product scrubber, and may reflux some iodine. Condensate from the tower contains radionuclides, and is routed back to the dissolver during dissolution. The tower gaseous effluent is routed to the off-gas heaters and silver reactor via the ammonia scrubber. The ammonia scrubber water flow is stopped during dissolution, and the scrubbers do not function since no ammonia is evolved.

Silver reactors are provided in each dissolver off-gas system to remove radioiodine (I-131 and I-129), which is a potentially serious environmental health hazard. In the reactor, iodine in the heated off-gas combines with the silver nitrate coating on the packing to form silver iodide. Off-gases from the downdraft tower and ammonia scrubber are heated by passage through a heat exchanger operated with 185 psig steam. The gases then pass through an electric heater, bringing the gas temperature up to 380°F. Although significant quantities of iodine are not liberated during decladding or metathesis, off-gases are still routed through the silver reactors during these operations, since there is no bypass route around them.

Plant experience indicates that after extended use, the dissolver silver reactors lose their efficiency. Overall iodine decontamination factors, based on I-131 release and measured from the dissolver through the backup facility, range from 100 to 1,000 (Ref. 1). The loss in efficiency normally occurs when enough iodine has been charged to react with half of the silver on the packing. The dissolver reactors are regenerated with fresh $AgNO_3$ periodically, but are not flushed (i.e.,

dissolution of the coating and disposal to UGS), to ensure isolation of I-129 (1.6×10^7-year half-life) from the environment. I-131 remains on the reactor bed and rapidly decays (8-day half-life) to Table 1 guide values listed in Department of Energy Manual Chapter 0524 Annex (Ref. 2). Once a reactor no longer functions, it is replaced and is sent to solid waste burial.

Based on plant studies of the vessel vent system (Ref. 3), competing reactions such as reduction of silver nitrate to metallic silver and formation of silver chloride also occur, and profoundly affect silver reactor efficiency. The chloride is introduced as an impurity in process chemicals and formerly as CCl_4 in laboratory wastes routed to F Cell for disposal. Most of the iodine not removed from the dissolver off-gas by the silver reactor is absorbed in the backup facility acid absorbers and is returned to the process in the recycled acid (Ref. 4). Iodine removal from off-gas streams is discussed further in Subsection 9.2.1 of Chapter 9.0.

9413275.0791

4.3.6.2 Backup Facility

A backup facility to the dissolver off-gas systems was added to the original Purex Plant to recover as nitric acid a portion of those oxides of nitrogen not absorbed in the downdraft condensers. The backup facility equipment consists of two acid absorber towers (T-XA, T-XB) in series and associated catch tanks and pumps. Two water coolers are included with the T-XA tower. Nitrogen oxides in the off-gases are absorbed into the tower scrub water forming nitric acid, which is routed to the acid recovery system and is eventually returned to the process. In the absorbers, the water scrub streams contact countercurrently with the off-gases. The acid product, approximately 2.0M HNO_3, is transferred batch-wise to the acid recovery system.

The instrumentation and operational control of the facility have not been fully optimized. Although the absorber towers were designed for 95% recovery of acid, average recovery efficiency is about 60% (Ref. 1). The facility also removes radioiodine, contributing a DF of ten during a dissolver cut.

The chemistry and technology of the backup facility are described in more depth in Chapter 9.0.

4.3.7 Process Control and Off-Standard Conditions

The most critical scheduling requirement during uranium dissolution involves transferring the acid solution from the dissolver immediately following the first cut of 0.947% fuel. Even when cooled, the first-cut acid will continue to dissolve uranium and may result in an acid deficient solution and consequent formation of plutonium polymer. The first cut must be scheduled several hours prior to an opening of sufficient storage space in Tanks D3 and D4. Scheduling of transfers from

TK-D5 to Tanks E6 and H1 may be controlled by limited solvent extraction process rates. However, the transfers are normally not restricted as solvent extraction rates usually exceed dissolution rates. Removal of acid from the dissolvers at the end of second-cut 0.947% fuel dissolution or spike fuel dissolution is not critical since essentially all of the metal is dissolved.

Off-standard process conditions likely to occur during uranium dissolution and the recommended remedies are summarized in Table 4-9 and are discussed in this section. Administrative controls to preclude charging short-cooled fuel elements and the fuel identification and transfer procedures are discussed in Section 4.1.

In the unlikely event that a green charge is made, radioiodine monitors in the dissolver off-gas system will alarm during dissolution. Backup facility and main ventilation stack sample monitors also alarm, permitting prompt action to control the situation. Corrective action may include immediately quenching the uranium dissolution by rapid cooling and dilution. The dissolver solution may also be butted with a 10^{-2} M mercuric nitrate solution, which reacts with the iodine to form the insoluble and nonvolatile mercuric iodide.

Excessive dissolver corrosion resulting from high-fluoride concentrations may be detected from corrosion products in feed samples. Insufficient ANN addition may be the cause. The aluminum-to-fluoride ion mole ratio in the metal solution is maintained greater than or equal to three.

Improper feed preparation in TK-E6, faulty instrumentation, a steam leak in the dissolver, or other problems, may result in acid-deficient feed. A possible consequence is plutonium polymer formation resulting in increased product losses to the waste in the HA column. A high terminal specific gravity in the dissolver at the end of a dissolution can cause a low-acid feed condition. If the indicated specific gravity is lower than the actual value, the problem may be corrected by recalibrating dissolver specific gravity instrumentation. Depletion of nitric acid in the dissolver solution may be caused by a problem with the concentration of acid used, the dissolver tower operation, or a steam leak to the dissolver solution from a sparger ring. Feed adjustments can be made in TK-E6 when TK-D5 sample analyses are available.

A less critical and more common process control problem in the uranium dissolution process is pressurization of the dissolver caused by an excessive reaction rate. The reaction can be slowed by decreasing the steam flow through the dissolver coil, or turning on cooling water if necessary. As a last resort, water is available in the emergency drown tank for dilution of the dissolver contents.

TABLE 4-9. Uranium Dissolution - Off-Standard Conditions.

Off-Standard Condition	How Detected	Likely Cause	Detection of Cause	Remedy
A) Dissolver pressurization during initial heatup	Vacuum gauge on dissolver	Too rapid reaction	Increase in dissolver vessel pressure	(1) Shut off steam to dissolver coils (2) Turn on water to cooling coil (3) Add drown tank water
B) Dissolver pressurization during cut	Vacuum gauge on dissolver	Too rapid reaction	Increase in dissolver vessel pressure	(1) Decrease steam flow to dissolver (2) Turn cooling water on to coil (3) Add drown tank water
C) Excessive dissolver corrosion	Corrosion products in solvent extraction feed samples (TK-D5)	(1) Insufficient aluminum nitrate (ANN) added during cut (2) Excessive F^- remaining in dissolver	TK-D5 sample analysis	(1) Adjust ANN to proper Al/F mole ratio (2) Review metathesis chemistry (3) Review decladding operations
D) Acid deficient product solution	Product loss to the HAW due to the formation of plutonium polymer	(1) Too high a terminal specific gravity during dissolution (2) Nitric acid depletion of dissolver solution a) Low concentration nitric acid used during cut b) Faulty dissolver tower operation c) Steam leak to dissolver solution from a sparger ring d) Faulty specific gravity instrumentation in dissolver	(1) Specific gravity instrumentation out of calibration (2) Nitric Acid a) Analysis of HNO_3 used for cut b) Dissolver tower flowmeter and instrumentation c) Sparger gang valves leaking d) Comparison with specific gravity reading in storage tank	(1) Calibrate dissolver specific gravity instrumentation (2) Nitric Acid a) Butt HNO_3 into specifications b) Bring dissolver tower back to equilibrium c) Repair sparger DOVs d) Recalibrate specific gravity instrumentation
E) High iodine content in the dissolver off-gas	(1) I monitor on dissolver (2) High I alarms, 291-A and 293-A (hours later)	(1) Processing of "green" slugs (2) Silver reactor breakthrough	(1) High I monitor reading on dissolver (2) High I alarms, 291-A and 293-A (hours later)	(1) Immediately quench dissolution by rapid cooling (2) Butt dissolver with mercuric nitrate (10^{-2}M) (3) Dilution of dissolver solution

4.3.8 Process Safety and Criticality Prevention

Potential hazards associated with dissolver operations, and the measures applied for control of these conditions are:

- Uranium Fires - Fuel elements are charged into dissolver solution and the metal heels are covered with liquid. As a last resort, drown tank water can be dumped into the burning metal.

- Hydrogen Explosion - Air dilution is available to dilute the gases below the lower explosive limit for hydrogen. This is the principal safety hazard in the tanks containing the metal solution.

- Nuclear Excursion - Administrative and geometric controls are imposed. Material of 0.97 to 1.15% U-235 enrichment is limited by charge and plutonium masses. The height of any fuel charged is limited. The fixed annulus dimension in the dissolver is geometrically favorable for criticality safety for enrichments less than 0.97%, and a concrete moderator and cadmium neutron absorber in the dissolver limit the neutron flux.

4.4 SOLVENT EXTRACTION

Solvent extraction is the key operation of the Purex process. It serves to separate product materials (uranium, plutonium, and neptunium) from associated fission products and from each other, and produces purified nitric acid solutions of these products. Under controlled chemical conditions in the solvent extraction system, the products are selectively extracted from the aqueous feed into the process organic solvent, or are stripped back into aqueous streams. A series of extraction-stripping sequences accomplishes the needed separation of uranium, plutonium, and neptunium from fission products, and purification of products.

The organic solvent used in the solvent extraction process is a 30 vol% solution of tributyl phosphate (TBP) in a normal paraffin hydrocarbon (NPH) diluent (n-decane to n-tetradecane).

The solvent extraction process may be considered to consist of the following three major process systems:

- First decontamination and partition cycle

- Final uranium cycle

- Final plutonium cycles.

In this section, these major solvent extraction systems will be covered from a functional, operational, and flowsheet viewpoint. Special procedures, process control and handling of off-standard conditions, and alternative flowsheets will also be discussed. A detailed description of the solvent extraction equipment is given in Chapter 3.0, Section 3.6.

The second neptunium cycle solvent extraction columns and process are described in Section 4.6. Solvent extraction technology is presented in Chapter 6.0. Concentration of product streams is covered in later sections of this chapter, while uranium and plutonium concentration technologies are described in Chapter 7.0.

4.4.1 First Decontamination and Partition Cycle

The purpose of the first decontamination cycle is to separate the bulk of the fission products from uranium, plutonium, and neptunium. This separation is accomplished in the HA column by extracting the plutonium, uranium, and neptunium from the aqueous stream into the organic stream, leaving the bulk of the fission products in the aqueous phase.

In the partition cycle, plutonium is separated (partitioned) from uranium and neptunium. The partition process equipment includes three solvent extraction columns (1BX, 1BS, and 1C) and the uranium-neptunium intercycle concentrator (E-J8-1). The latter vessel is used to concentrate the uranium-neptunium feed stream for the final uranium cycle.

Figure 4-4 is a process flow diagram of the first decontamination and partition cycle, showing the major equipment pieces, some instrumentation, and the normal process routes.

4.4.1.1 HA Column

The Purex solvent extraction process starts in the HA column, which has a dual function. In the lower section of the column, uranium, plutonium, and neptunium are extracted from the aqueous feed stream into an organic stream. In the top (scrub section) of the column, the product-bearing organic is scrubbed with a clean aqueous stream to remove, or strip, some of the small amounts of fission products extracted by the organic stream. The scrubbing also removes very small droplets of aqueous solution entrained in the organic stream.

As shown in Figure 4-4, there are five process streams entering the HA column. The stream identifications, fluctuations, compositions, and flow rates are listed in Table 4-10. The organic stream (30 vol% TBP and 70 vol% NPH diluent mixture), which is termed HAX (HA column extractant), from solvent treatment system 1, enters the column via a standpipe equipped with four distributor nozzles located inside the bottom disengaging section. The organic is the continuous phase, so the column is essentially filled with organic. The aqueous dispersed phase in the form of droplets passes through the organic.

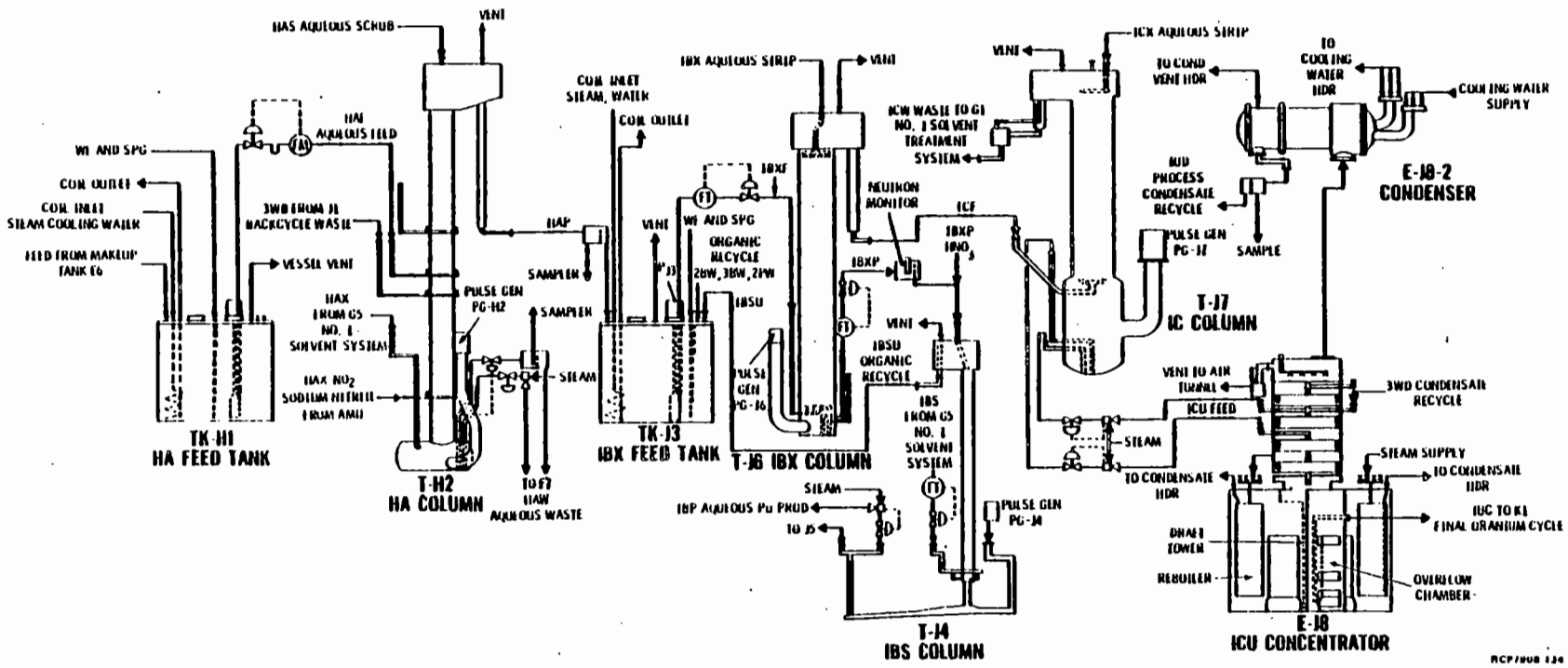

FIGURE 4-4. First Decontamination and Partition Cycle Process Flow Diagram.

TABLE 4-10. First Decontamination and Partition Cycle Streams.

Stream	Composition	Function	Flow[a], gal/min.
HAF	U - 1.7M HNO_3 - 0.4M $Al(NO_3)_3$ - 0.2M F^- - 0.05M Pu - 3 g/gal Np - 0.05 g/gal	HA column feed solution.	4.2
HAX	TBP - 30% NPH - 70% HNO_3 - 0.01M	HA column extractant (organic).	23.2
HAW	HNO_3 - 2.96M Al - 0.08M F^- - 0.02M U - 1.4×10^{-4}M Pu - 1.8×10^{-4}M	HA column aqueous waste.	10.6
3WB	HNO_3 - 7.7M U - 0.08M Pu - 0.03 g/gal Np - Variable	Aqueous backcycle--additional salting strength for extraction section.	3.5
HA-NO_2	$NaNO_2$ - 0.77M	Neptunium valence adjustment to +6 to ensure extractability.	0.013
HAS	HNO_3 - 2.0M	HA column acidic scrub solution to remove fission products from organic.	3.6
HAP	U - 0.3M HNO_3 - 0.19M Pu - 0.5 g/gal Np - Variable	HA column product stream containing extracted plutonium, uranium, and neptunium.	24.0
1BXF	U - 0.22M HNO_3 - 0.17M Pu - 0.4 g/gal	1BX column feed stream containing extracted plutonium, uranium, and neptunium, and 1BSU, 2PW, 2BW and 3BW recycle streams.	33.0
1BX	HNO_3 - 0.3M Fe^{+2} - 0.028M NH_2SO_3 - 0.1M	1BX column plutonium partition stream--iron (+2) reduces plutonium valence from +4 to +3, plutonium is stripped into 1BX, sulfamic acid kills NO_2.	3.8
1BU	U - 0.22M HNO_3 - 0.065M Pu - 2.8×10^{-5} g/gal Np - Variable	1BX column uranium and neptunium product stream, organic.	33.0
1BXP	U - 0.08M HNO_3 - 1.5M Pu - 3.6 g/gal	1BX column plutonium product stream.	4.0
1BXP-HNO_3	HNO_3 - 10.4M	Recovered acid to increase 1BP acidity.	1.2

TABLE 4-10. First Decontamination and Partition Cycle Streams. (Continued)

Stream	Composition		Function	Flow[a], gal/min.
1BS	TBP NPH HNO_3	- 30% - 70% - 0.01M	Scrub uranium out of 1BXP, organic.	4.6
1BP	HNO_3 Pu U	- 3.4M - 2.5 g/gal - $1x10^{-4}$M	1BS column plutonium product stream to 2AF Tank.	5.1
1BSU	HNO_3 U Pu	- 0.3M - 0.07M - 0.3 g/gal	Uranium scrub stream, recycled to 1BXF Tank, organic.	4.6
1CX	HNO_3	- 0.01M	Strip uranium and neptunium from 1BU organic stream, very low acid.	27.0
1CU	U HNO_3 Pu	- 0.27M - 0.09M - $3x10^{-5}$ g/gal	1C column uranium product stream.	27.0
1CW	U HNO_3	- Trace - Trace	1C column waste to solvent treatment system 1.	32.0
1UC	U HNO_3 Pu	- 2.1M - 0.9M - $2.6x10^{-4}$ g/gal	Concentrated uranium product solution from 1CU concentrator.	3.5
1UD	HNO_3	- Trace	Process condensate from 1CU concentrator recycled for use in HAS, 1CX, and 2EX streams.	46.0

[a]Based on processing rate of 10 tons of uranium per day.

The feed solution, designated HAF, enters the column at the midpoint (at the top of the extraction section, or bottom of the scrub section) via an internal distributor ring. The aqueous feed drops down through the nozzle and louver plates, and is dispersed in the rising organic stream, forming an emulsion by the action of the HA column pulse generator. The pulsing action also aids the countercurrent or opposite flow of the aqueous stream with respect to the organic stream.

The backcycle waste stream (3WB), which consists of concentrated, recycled waste streams containing plutonium, uranium, and neptunium, enters the HA column from various parts of the process slightly below the HAF feed point through a circular, external distributor equipped with nozzles which extend into the column. The nitric acid concentration of the 3WB stream is very high (7.7M) relative to the nitric acid concentration in the HAF (0.39M). The 3WB acidity may be increased by adding a nitric acid stream to the backcycle waste tank to provide extra salting strength in the extraction section aqueous phase, which increases the efficiency of product materials extraction by the HAX. This additional salting strength maintains near-optimum product extraction conditions and decreases the amount of product reflux in the scrub section of the column. Decontamination of a fission product like ruthenium is enhanced by high-acid scrubbing, but the decontamination of zirconium-niobium is decreased. This and other factors affecting fission product decontamination are discussed in Chapter 6.0, Section 6.1.

A chemical additive necessary for efficient extraction of neptunium in the HA column is a sodium nitrite stream ($HA-NO_2$), which enters the lower end of the extraction section via a circular external distributor ring equipped with nozzles extending into the column. The function of the $HA-NO_2$ is to ensure that the neptunium in the column exists in an extractable +6 valence state. As the sodium nitrite solution enters the bottom of the extraction section, it is immediately contacted by the rising organic stream, and the nitrite ion is extracted by the HAX. The presence of the nitrite in the HAX produces an oxidizing medium for the descending 3WB and HAF as they are contacted with the HAX. The nitrite ensures that any neptunium exisiting in the inextractable +5 valence state will be oxidized to a valence of +6, allowing it to be extracted by the organic.

The organic containing the extracted plutonium, uranium, and neptunium rises in the column and enters the scrub section, where it is contacted by the nitric acid scrub stream (HAS). This stream enters the HA column through an internal distributor ring located just above the top of the HA scrub section. As the HAS aqueous flows by gravity down through the scrub section, it contacts the rising organic and scrubs the fission products extracted along with the plutonium, uranium, and neptunium.

The larger diameter section of the column (bottom disengaging section) provides room for the aqueous-organic emulsion to break up and

coalesce into separate aqueous and organic layers. The aqueous HAW (HA column waste) collected in the bottom disengaging section is one of the two streams leaving the HA column. It contains greater than 99.9% of the fission products which entered the column in the HAF. The HAW flows continuously by gravity out of the bottom of the column, and is routed to the waste concentration - acid recovery section of the Purex Plant.

The organic product (plutonium, uranium, and neptunium) stream (HAP) overflows continuously from the top of the disengaging section of the HA column, and is routed to the 1BX feed tank (TK-J3), where the partition cycle is started.

4.4.1.2 1BX Column

The organic feed, originating from HAP and recycled organic waste from the second and third plutonium and second neptunium cycles plus the 1BSU recycle stream, is pumped from TK-J3 and enters the 1BX column via an internal distributor ring located in the bottom disengaging section. The aqueous continuous 1BX column is essentially full of the aqueous phase with the organic phase (1BXF) rising up through the aqueous phase. This column has one prime function: to strip the plutonium away from the organic stream while leaving the uranium and neptunium in the organic. A plutonium valence adjustment is necessary to accomplish this separation.

The aqueous in the column, termed 1BX (1BX column extractant), is a dilute nitric acid solution containing a reductant (ferrous sulfamate) and a holding reductant (sulfamic acid). Stream information is given in Table 4-10. The 1BX enters the top of the column through an internal distributor ring located just above the plate section. The ferrous ion (Fe^{+2}) reduces the valence of the plutonium in the 1BXF from the extractable +4 state to the nearly inextractable valence state of +3. (The distribution ratio for Pu^{+3} is a factor of 10 - 100 lower than that for Pu^{+4}, depending on the uranium and nitric acid concentrations). As the organic stream rises through the 1BX, the reduced plutonium (+3) is partitioned, or stripped, from the organic into the 1BXP aqueous stream. The sulfamic acid in the 1BX reacts with the nitrite ion left from the HA-NO_2 added to the HA column and carried along in the 1BXF. Without the sulfamic acid destruction of the nitrite, the nitrite would react with, or "kill," the ferrous ion before the plutonium valence adjustment took place, and no plutonium partition would be made.

The ferrous ion also reduces a portion of the neptunium in the 1BX column from its extractable valence state of +6 to the nearly inextractable +5 state, and then finally to a valence of +4, which is also extractable. This means that some of the neptunium is reduced and stripped by the 1BX, and is then further reduced and re-extracted by the organic stream. The uranium valence of +6 is not affected by the ferrous ion, but a small amount (4 to 5%) of uranium is stripped by the 1BX along with the plutonium.

When the plutonium-bearing 1BX aqueous stream has descended to the bottom disengaging section and coalesced to form an aqueous layer called the 1BXP (1BX column plutonium), it flows by gravity to the top of the 1BS column. The organic 1BU stream containing uranium and neptunium flows by gravity from the top disengaging section to the bottom of the 1C column.

4.4.1.3 1BS Column

The function of the 1BS column is to scrub out of the aqueous stream the small amount of uranium which was stripped into the 1BXP along with the plutonium in the 1BX column. Prior to its entry into the 1BS column, the 1BXP aqueous feed stream is butted with recovered nitric acid so that the plutonium-bearing 1BP stream leaving the column has sufficient acid concentration to allow efficient extraction of plutonium in the second plutonium cycle. The high acid content also enhances uranium extraction in the 1BS column. The uranium in the recovered acid is scrubbed out and recovered along with the uranium in the 1BXP. The alternate of adjusting the 1BP acid content in TK-J5 requires the use of fresh acid as the amount of uranium that can be separated from plutonium in the final plutonium cycles is limited.

The acidified 1BXP enters the aqueous continuous 1BS column via the internal distributor ring located just above the plate section. Organic from solvent treatment system 1 is routed to the 1BS column via an internal distributor ring located in the lower disengaging section just below the plate section. This organic is the 1BS (1BS column scrub) stream. The 1BS organic disperses up through the 1BS column and extracts or scrubs the uranium from the descending 1BXP aqueous stream. When the 1BS droplets reach the top disengaging section, they coalesce to form an organic layer called the 1BSU (1BS column uranium) stream. The 1BSU overflows from the top of the 1BS column, and is recycled to the 1BX organic feed tank (TK-J3) with about 6 to 10% of the plutonium. When the 1BXP reaches the bottom disengaging section, it is called 1BP, and is routed to the 2A column feed tank (TK-J5), where it is chemically adjusted for use as feed solution to the second plutonium cycle.

4.4.1.4 1C Column

In the 1C column, the uranium and neptunium product materials from the 1BU organic stream are transferred to an aqueous stream. The small amount of plutonium remaining in the 1BU follows the uranium and neptunium through the 1C column, as it operates only as a stripping column, and no partitioning takes place.

The 1BU organic stream, containing the uranium and neptunium, overflows from the top of the 1BX column to the bottom of the 1C column as the 1CF (1C column feed). It enters the aqueous continuous 1C column via an internal distributor ring located just below the plate section. The aqueous stream, 1CX (1C column extractant), is a very dilute solution

of nitric acid (0.01M) prepared continuously from demineralized water and 50 wt% HNO_3 in a mixing pot in the P & O gallery. The dilute nitric solution is piped from the mixing pot to the top of the 1C column, where the nitric solution enters the column via an internal distributor ring located above the plate section. The proper 1CX temperature is maintained by heating the water with steam, injected into the water line before it enters the mixing pot.

The condensate from the 1CU concentrator (1UD stream) is normally recycled back to the 1C column and substituted for most of the 1CX water stream after steady-state operation is attained.

As the 1CF organic moves up the column, it is dispersed in the aqueous phase (1CX), and the uranium and neptunium are stripped from the organic into the aqueous phase. No valence adjustments are involved in this column. Basically, the transfer is accomplished by contacting the organic 1CF with an aqueous solution containing very little nitric acid salting agent. The low acid content of the 1CX, its 50 to 60°C temperature, and the relatively high aqueous-to-organic flow ratio allow optimum column performance.

The aqueous collected in the bottom disengaging section is called the 1CU (1C column uranium). The 1CU contains practically all of the uranium and neptunium which entered the 1C column in the 1CF. This stream is next processed in the 1CU concentrator and final uranium cycle.

The organic droplets, stripped of uranium and neptunium, coalesce in the top disengaging section to form an organic layer called the 1CW (1C column waste). The 1CW overflows from the top of the 1C column, and is routed by gravity flow to the solvent treatment system 1 feed tank.

4.4.1.5 1CU Concentrator

The 1CU stream, bearing the uranium and neptunium, and the backcycle waste concentrator condensate (3WD) are transferred by steam jet to the 1CU concentrator (E-J8-1), entering via the concentrator tower. By routing the stream to the tower, the vapors passing up through the tower from the concentrator reboilers can contact and "steam strip" entrained organic from the descending 1CU stream. Steam stripping is necessary to keep potentially explosive organic decomposition products from accumulating in the concentrator. The exhaust vapors pass through a water-cooled condenser, which liquifies the vapors. Some of the condensate (1UD) is recycled to the HA, 1C, and 2E columns, while the excess is routed to concentrator E-K4-1 in the final uranium cycle. When the volume of uranium and neptunium solution in the 1CU concentrator has been reduced by approximately a factor of seven, the concentrated product (1UC) overflows from the concentrator to the final uranium cycle feed tank (TK-K1).

Concentrator and pulse column operations are described further in a later part of this section, and the concentrator and column designs are described in Chapter 3.0, Sections 3.7 and 3.6, respectively.

4.4.2 Final Uranium Cycle

In the final uranium cycle (sometimes called the second uranium cycle), the uranium product stream is decontaminated (purified) by solvent extraction and is concentrated. Neptunium and residual plutonium and fission products are separated from uranium and routed to the back-cycle waste system.

Figure 4-5 is a process flow diagram of the final uranium cycle showing process streams and equipment. Table 4-11 summarizes information pertaining to the process streams, including identification, function, composition, and flow rate.

4.4.2.1 2DF Feed Makeup

Before the 1UC can be used as a feed solution for the 2D column, the concentration of salting agent (HNO_3) must be increased to allow the selective extraction of uranium away from neptunium, plutonium, and fission products (FP's). Accordingly, a 10.4M HNO_3 solution, 2DF-HNO_3 (2D column feed nitric acid stream), is fed continuously to the feed makeup tank (TK-K1) to increase the acid concentration of the feed solution from 0.9M to 1.5M.

A solution of hydrazine (2DF-N_2H_4) is added to react with any nitrite ion present in the feed tank. This reaction protects the hydroxylamine nitrate used to separate plutonium from uranium. With the addition of the two butt streams, the 1UC is converted into 2DF (2D column feed).

4.4.2.2 2D Column

The 2D column is a dual-purpose (extraction-scrub), organic continuous column similar in function to the HA column. The 2DF stream is pumped from the feed tank into the 2D column via an internal distributor ring located just above the extraction section.

The 2DX (2D column extractant) is pumped to the 2D column from the solvent treatment system 2 storage tank (TK-R7). The organic in system 2 is kept separate from the system 1 organic to keep the 2D organic relatively free of fission products and plutonium, thereby producing a purer uranium product from the final uranium cycle.

9413275.0804

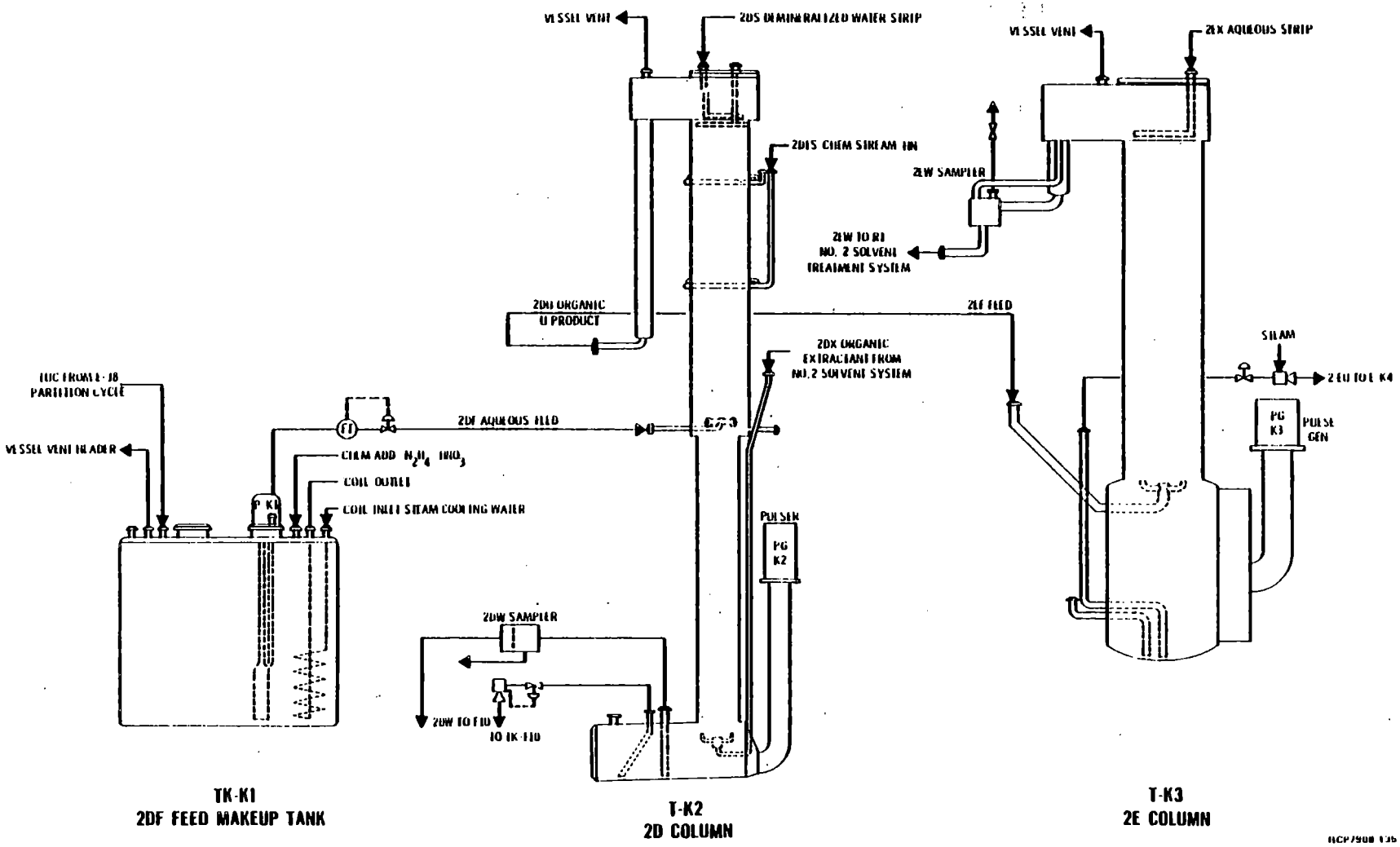

FIGURE 4-5. Final Uranium Cycle Process Flow Diagram.

TABLE 4-11. Final Uranium Cycle Process Streams.

Stream	Composition	Function	Flow[a], gal/min.
2DF-HNO_3	HNO_3 - 10.4M	2D column feed nitric butt stream, to increase salting strength.	0.24
2DF-N_2H_4	N_2H_4 - 11.3M	Reduce nitrite (NO_2^-) with hydrazine.	0.002
2DF	HNO_3 - 1.5M U - 1.97M Np - Variable Pu - 2.4×10^{-4} g/gal	2D column uranium-neptunium aqueous feed, from 2DF tank.	3.8
2DX	TBP - 30% NPH - 70% HNO_3 - 0.01M	2D column organic stream, extracts uranium, leaves neptunium, plutonium, and FP's.	20.0
2DIS	HN - 0.04M	Reductant stream (HN) to reduce plutonium to valence +3.	0.74
2DS	H_2O	2D column scrub water to strip nitric acid and FP's from organic.	2.13
2DW	U - 0.07M HNO_3 - 1.0M Pu - 1.5×10^{-4} g/gal Np - Variable	2D column aqueous waste back-cycled to HA column via back-cycle waste concentrator system.	5.9
2DU (2EF)	U - 0.34M HNO_3 - 0.003M	2D column organic uranium product feed to 2E column.	20.7
2EX	HNO_3 - 0.01M	2E column aqueous strip (very dilute nitric acid). Strips uranium.	17.3
2EW	TBP - 30% NPH - 70% HNO_3 - Trace U - 3×10^{-6}M	2E column organic waste to solvent treatment system 2.	20.0
2EU	U - 0.38M HNO_3 - 0.011M	2E column aqueous uranium product to 2EU concentrator.	18.4

[a]Based on processing rate of 10 tons of uranium per day.

The extraction of neptunium, plutonium and FP's with the uranium is restricted by saturating the organic with uranium. This is accomplished by adjusting the 2DX and 2DF flow rates so not quite enough 2DX organic is present to extract all of the uranium in the 2DF. This desired uranium loss is controlled between 5 and 7% to give efficient column operation. With the high uranium saturation, the organic extracts a limited amount of neptunium, plutonium, and FP's. As the organic, loaded with uranium, ascends through the 2D scrub section, it is contacted with two aqueous scrub streams. The 2DIS (2D column intermediate scrub) contains a reducing agent, normally HN (hydroxylamine nitrate [$NH_2OH \cdot HNO_3$]), which converts any extracted Pu^{+4} to Pu^{+3}. The second stream (2DS), which is demineralized water, scrubs the nitric acid (extracted along with the uranium in the extraction section) out of the organic to assure a low acid concentration in the final product. The low acid content is necessary to minimize corrosion of the concentrator and allow production of a high purity product. Some uranium and FP's are also scrubbed out of the organic by the 2DS.

In the bottom disengaging section, the 2DW (2D column waste stream) is formed. The 2DW contains 5 to 7% of the uranium, and essentially all of the neptunium, plutonium, and FP's which entered the 2D column via the 2DF. The 2DW is routed to the backcycle waste tank (TK-F10) for concentration and recycle to the HA column and the second neptunium cycle.

The organic 2DU (2D column uranium stream), loaded with extracted uranium, accumulates in the top disengaging section of the column and flows by gravity to the bottom of the 2E column.

4.4.2.3 <u>2E Column</u>

The 2E column is a single-purpose, aqueous-continuous stripping column, identical to the 1C column, used to strip the uranium from the 2DU organic stream. The 2DU organic enters the 2E column as the 2EF stream via an internal distributor ring located in the bottom disengaging section just below the plate section.

The aqueous phase in the column is supplied by the 2EX (2E column strip stream), which is an extremely dilute (0.01M) nitric acid solution prepared by adding fresh 12.2M HNO_3 into a mixing pot where it is diluted with water obtained from recycled 1UD. The 2EX enters the column via an internal distributor ring located just above the top of the plate section. The 2EX has no salting strength and readily strips all but a minute portion (0.0009%) of the uranium from the 2DU. The organic, barren of uranium, disengages and coalesces to form the 2EW (2E column waste) in the top section of the 2E column, then flows by gravity to the organic receiving tank (TK-R1) in solvent treatment system 2.

The aqueous stream, containing the stripped uranium, forms an aqueous layer in the bottom disengaging section. This uranium solution, called 2EU (2E column uranium stream), is routed to the 2EU concentrator (E-K4-1), which is discussed in Section 4.5.

4.4.3 Final Plutonium Cycles

The final plutonium cycles of the solvent extraction process consist of the second and third plutonium solvent extraction cycles. Plutonium product concentration, also considered to be part of the cycles, is covered in Section 4.5.

In the second plutonium solvent extraction cycle (2A and 2B solvent extraction columns), plutonium is partially purified from uranium, fission products, and metallic impurities and concentrated by a factor of about ten. The plutonium product solution is then routed to the third plutonium cycle (3A and 3B columns) for final purification and concentration.

The flow diagram for the solvent extraction portions of the final plutonium cycles is shown in Figure 4-6. Information pertaining to the liquid streams is summarized in Table 4-12.

4.4.3.1 2AF Feed Makeup

Product from the 1BS column (1BP) is prepared in the feed makeup tank (TK-J5) as the 2AF feed stream to the 2A column. A sodium nitrite stream (2AF-NO_2) is continuously added to oxidize the plutonium from the nearly inextractable +3 valence to the extractable +4 valence. The nitrite ion first chemically oxidizes, or kills, the reducing agents, ferrous ion and sulfamic acid, previously added to maintain the plutonium in the +3 valence state. The 2AF acidity is maintained at 3.3M by addition of fresh nitric acid when recovered nitric (1BXP-HNO_3) is not being added to the 1BS column feed.

4.4.3.2 2A Column

The 2AF, pumped from the 2AF feed makeup tank, enters the organic continuous 2A column about two-thirds of the way up via an external distributor ring equipped with nozzles extending through the column wall, just above the extraction section. The 2AX (2A column extractant) from solvent treatment system 1 also enters the column via an external distributor ring equipped with nozzles extending through the column wall, just below the extraction section.

As the aqueous phase descends through the extraction section, the Pu^{+4} and 50% or more of the nitrite ion entering in the 2AF are extracted into the organic. The organic containing the extracted plutonium moves up the column past the feed point into the scrub section, where it contacts the dilute nitric (0.75M) aqueous scrub solution, 2AS (2A column scrub stream). The 2AS strips or scrubs most of the extracted FP's out of the organic phase. The scrubbed organic rises and accumulates in the top disengaging section, and becomes the 2AP (2A column plutonium product stream), which overflows from the top of the 2A column to the bottom of the 2B column.

9413275.0808

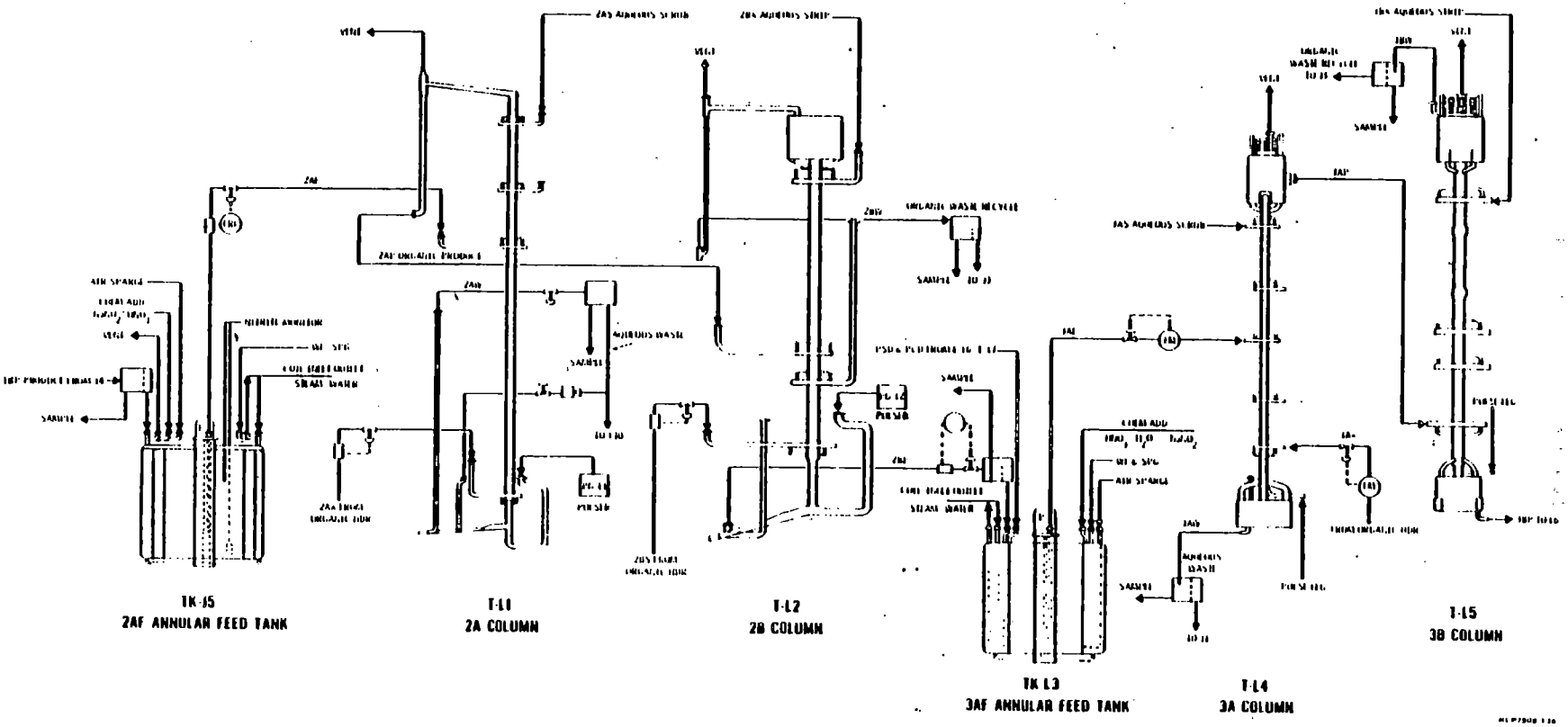

FIGURE 4-6. Final Plutonium Solvent Extraction Cycles Process Flow Diagram.

TABLE 4-12. Final Plutonium Cycle Process Streams.

Stream	Composition	Function	Flow[a], gal/min.
2AF-NO_2	$NaNO_2$ - 0.77M	Nitrite stream to oxidize Pu(+3) to Pu(+4).	0.31
2AF	HNO_3 - 3.3M NO_2 - 0.002M Pu - 2.4 g/gal	2A column feed stream, Pu(+4).	5.40
2AX	TBP - 30% NPH - 70% HNO_3 - 0.01M	2A column extractant, organic.	1.03
2AS	HNO_3 - 0.75M	2A column scrub. Dilute nitric acid removes FP's from plutonium-bearing organic.	0.93
2AW	HNO_3 - 2.9M Pu - 0.015 g/gal	2A column aqueous waste to backcycle system.	6.30
2AP	HNO_3 - 0.17M Pu - 12.3 g/gal	2A column plutonium product stream, to 2B column.	1.03
2BX	HNO_3 - 0.3M HN - 0.1M N_2H_4 - 0.05M	2B column stripping solution reduces Pu(+4) to Pu(+3) and kills nitrite.	0.40
2BS	TBP - 30% NPH - 70% HNO_3 - 0.01M	2B column uranium scrub stream, organic.	0.34
2BW	HNO_3 - 0.07M Pu - 0.004 g/gal	2B column organic waste recycled to 1BX feed tank.	1.38
2BP	HNO_3 - 0.51M Pu - 31.7 g/gal	2B column plutonium product to 3A column feed makeup.	0.40
3AF-NO_2	$NaNO_2$ - 0.77M	Nitrite stream to oxidize Pu(+3) to Pu(+4). Used only if necessary.	0.06
3AF-HNO_3	HNO_3 - 12.2M	Increases 3AF acidity.	0.18
3AF-DIL	HNO_3 - 1.2M	Dilute nitric acid stream to increase 3AF volume and flow rate. Used only during recycle of concentrated $Pu(NO_3)_4$ solutions.	
3AF	HNO_3 - 3.29M Pu - 18.3 g/gal	3A column feed stream, Pu(+4).	0.69
3AS	HNO_3 - 1.2M	3A column scrub, dilute nitric acid removes FP's from plutonium-loaded organic.	0.13
3AX	TBP - 30% NPH - 70% HNO_3 - 0.01M	3A column extractant (organic).	0.17
3AW	HNO_3 - 2.95M Pu - 0.04 g/gal	3A column aqueous waste routed to backcycle system.	0.82
3AP	HNO_3 - 0.19M Pu - 73.3 g/gal	3A column plutonium product, to 3B column.	0.17
3BX	HNO_3 - 0.15M	3B column strip solution, dilute nitric acid to remove Pu(+4).	0.11
3BW	HNO_3 - 0.03M Pu - 0.1 g/gal	3B column organic waste recycled to 1BX feed tank.	0.17
3BP	HNO_3 - 0.4M Pu - 112.3 g/gal (29.8 g/l)	3B column plutonium product.	0.11

[a]Based on processing 10 tons of uranium per day.

The descending aqueous droplets coalesce in the bottom disengaging section of the 2A column to form the 2AW (2A column waste stream). The 2AW, which contains about 0.7% of the entering plutonium plus the scrubbed and nonextracted fission products, is uTtimately returned to the HA column via the backcycle waste concentrator.

4.4.3.3 2B Column

The aqueous-continuous 2B column functions like a combined 1BX - 1BS column. Plutonium is partitioned from the uranium and FP's present in the 2AP by the aqueous 2BX stream. The 2BX stream contains hydroxylamine nitrate ($NH_2OH \cdot HNO_3$, or abbreviated as HN) as a reductant, and hydrazine (N_2H_4) as a holding reductant similar to the ferrous sulfamate and sulfamic acid in the 1BX column.

The organic 2AP bearing the plutonium product enters the 2B column via an external distribution ring equipped with nozzles extending through the column wall one-third of the way up the column. As the organic and aqueous streams are intimately contacted in the 2B column, the plutonium is reduced by the 2BX from the +4 to the nearly inextractable +3 state, and is stripped from the organic to the aqueous phase. The nitrite present in the organic also reacts with the 2BX reductant. An excessive quantity of nitrite could thus consume all the reductant and force the plutonium out the 2BW waste stream for recycle back to the 1BX column.

The plutonium-bearing aqueous stream continues down the column and is contacted by an organic stream (2BS) from solvent treatment system 1 to scrub uranium from the aqueous. This 2BS stream enters the column via an external distributor ring just below the plate section. The organic streams rise and coalesce into an organic layer at the top of the column. This organic stream, containing uranium, FP's, and only 0.04% of the entering plutonium, is the 2BW (2B column waste stream). It overflows from the 2B column and is recycled by gravity flow to the 1BX column feed tank (TK-J3). The plutonium-bearing aqueous stream, 2BP (2B column product), overflows into the 3AF tank (TK-L3), the feed tank for the third plutonium cycle.

4.4.3.4 3A Column and 3AF Feed Makeup

The decontamination partition, accomplished by the third plutonium cycle, is similar to operations discussed previously. The 3A column resembles the HA column in purpose. It is a dual-purpose, organic-continuous column for extracting the plutonium into a organic stream, and then scrubbing the organic to accomplish additional FP and metallic impurity decontamination.

The 2BP from the 2B column is received in the 3AF tank. In order to convert the 2BP solution to 3A column feed, a valence adjustment of the plutonium from +3 to the extractable +4 state is necessary. To

accomplish this, the 3AF-NO_2, a solution of sodium nitrite, is available for continuous addition to the 3AF tank. However, this stream is not normally required as the nitrite content of the fresh nitric acid added to the 3AF to obtain the desired acidity is sufficient to oxidize the plutonium. The nitrite ion chemically oxidizes, or kills, the reducing agents, hydrazine (N_2H_4) and HN, contained in the 2BP to maintain the plutonium in the +3 valence state. Dilute nitric acid solution (1.2M 3AS solution) may also be added to the 3AF tank to obtain the desired acidity, flow rate and plutonium concentration for efficient 3A column operation when processing recycled material.

The 3AF, pumped from TK-L3, enters the 3A column about two-thirds of the way up via a pipe extending through the column wall just above the extraction section. The 3AX organic (3A column extractant stream) from solvent treatment system 1 is piped into the column near the lower end of the extraction section. As the aqueous feed descends through the extraction section, the Pu^{+4} and about 80% of the nitrite ion are extracted from the aqueous into the organic.

As the organic, loaded with the extracted plutonium, passes the feed point and moves up into the scrub section, it contacts the 3AS aqueous scrub, a dilute nitric acid solution. As the 3AS contacts the rising organic, it strips, or scrubs, most of the extracted FP's out of the organic phase. A fission product decontamination factor of about 50 is attained.

The scrubbed organic rises to the top annular disengaging section where it forms an organic layer, the 3AP plutonium product. The 3AP overflows from the top of the 3A column to the bottom of the 3B column.

The descending aqueous droplets coalesce in the bottom disengaging section of the 3A column to form the 3AW waste stream containing about 0.3% of the plutonium and 98% of the FP's that entered the column. The 3AW is routed to the backcycle waste tank (TK-J1) for reprocessing and eventual recycle to the HA column.

4.4.3.5 3B Column

The purpose of the 3B column, a single-purpose, aqueous-continuous stripping column, is to transfer the plutonium product from the organic to the aqueous phase, and at the same time, increase the plutonium concentration of the product stream. This transfer also provides a typical FP decontamination factor of 1.5 to 2.0, as the FP's tend to remain in the organic rather than being stripped with the plutonium.

The organic 3AP bearing the plutonium product enters the 3B column via an external distributor ring equipped with three equally spaced pipes connected to the column wall just below the plate section.

As the 3AP organic and dilute nitric acid (0.15M) 3BX streams are contacted in the 3B column, the plutonium is stripped from the organic to the aqueous phase. No plutonium valence adjustment is necessary in this case; the valence of the plutonium remains +4. Stripping is accomplished by the 3BX due to its lack of salting agent (low nitrate concentration).

The organic, which contains the bulk of any nitrite and about 0.1% of the plutonium extracted in the 3A column, coalesces into an organic layer at the top of the 3B column. This stream, termed the 3BW (3B column waste stream, overflows from the 3B column, and is routed by gravity to the 1BX feed tank to be recycled.

The descending 3BX aqueous stream, containing the stripped plutonium, forms the 3BP plutonium product stream in the bottom disengaging section, and is the feed solution for the plutonium stripper (T-L6).

4.4.4 Solvent Extraction Startup Procedures

Purex solvent extraction systems operate as continuous processes, but require some special transient operation during startup and shutdown to avoid excess product losses, and to minimize extraction of fission products. The conditions that must be satisfied for smooth startup and shutdown are outlined here, but for more detail, the Purex operating procedures, or job performance aids (JPA's), should be consulted.

Prior to startup, prestartup procedures ensure that the solvent extraction equipment and piping routes of the three major systems are ready to operate. The checkout varies depending on whether the previous shutdown was an equilibrium or an extended shutdown. The P and O gallery piping and valving are checked for prescribed positions. The appropriate process columns are filled (not required when starting up from an equilibrium shutdown) and instruments are checked for operability.

Though stated simply, the following steps are required for starting the first decontamination and partition, final uranium, or final plutonium cycles in the proper sequence, with some operations occurring simultaneously:

- Complete the prestartup procedures.
- Start the column pulsers.
- Start the cold aqueous streams to the top of the columns.
- Start the feed and organic streams.
- Start the 1CU concentrator and simmer on seal pot water until process solution reaches the concentrator.

- Adjust the feed streams to full flow rates.
- Establish column interfaces.
- Begin condensate recycle (1UD to 1CX).

The backcycle waste system, discussed in detail in Section 4.6, is started up with the first decontamination and partition cycle.

A Purex process startup sequence requires careful scheduling. Start-up of the solvent extraction system does not begin until the head-end metal storage tanks and Tank E6 are full. A typical startup sequence is as follows:

- Solvent treatment system 1 is started and operated in a recycle mode.
- The third plutonium cycle columns, 3A (T-L4) and 3B (T-L5), and the stripper (T-L6) and concentrator (E-L7) are started.
- The second plutonium cycle columns, 2A (T-L1) and 2B (T-L2) are started. Acid is added directly to TK-J5 (2AF) prior to partition cycle startup.
- The backcycle waste concentrator (E-H4) is started to boil down waste from the final plutonium cycle and to provide a 3WB acid stream for the HA column.
- Partition cycle columns, 1BX (T-J6), 1BS (T-J4), and 1C (T-J7), are started (only aqueous streams are required at this point). The 1CU concentrator is started and simmered on seal pot water, ready to receive 1CU. Condensate recycle of 1UD to 1C, HA and 2E columns is routed when necessary.
- The first decontamination cycle HA column (T-H2) is filled with organic and started; organic specific gravity and column acidity are important during the normal column startup operations.
- The final uranium cycle columns, 2D (T-K2) and 2E (T-K3), are started 12 to 24 hours after the partition cycle, and after the solvent treatment system 2, waste treatment, and acid recovery systems are operating in a recycle mode (spinning).

4.4.5 Solvent Extraction Shutdown

Shutting down the solvent extraction columns employs principles which are, in essence, a reversal of the startup considerations. The

uranium and plutonium-bearing streams are shut off first, followed by a stripping period, and subsequent shutting off of the cold streams and pulsers.

During the stripping period, the cold streams are permitted to flow for several minutes to remove the greater percentage of the products in the column contents. An adequate stripping time can usually be determined by dividing twice the column volume by the extractant flow rate. The products resulting from this stripping procedure may contain excessive FP contamination resulting from the decreased degree of uranium concentration in the extraction column scrub sections. This material can be isolated and returned for rework as indicated in Subsection 4.4.10.3.

4.4.6 Mechanical Pulsers

Mechanical pulsers are used to agitate the liquid within the Purex solvent extraction columns, except for the third plutonium cycle columns where air pulsing is used to increase extraction efficiency. A simplified diagram of a mechanical pulse column system is shown in Figure 3-26 of Chapter 3.0. The pulser consists of a piston reciprocated by a variable-speed electric motor acting through reduction gears and a conventional crank arrangement. The pulse is transmitted to the column via a pulse leg, a pipeline filled with essentially stagnant liquid which connects the piston to the bottom of the column.

Trapped air in the pulse leg is undesirable since the piston requires liquid in the pulse leg for lubrication, and the pulse efficiency is adversely affected by an air cushion. Therefore, the piston head contains a "weep hole" to allow air to escape. Some liquid escapes from the weep hole and by leaking past the piston. This pulse leakage is routed back to process vessels during normal operation. Air pressure is applied to the pulse leg during shutdown to prevent the columns from draining through the weep hole. Water is commonly added to the pulse leg during startups and shutdowns for purging of air from the system, establishment of interface, and as liquid to displace the organic phase from the column.

4.4.7 Air Pulsers

Pulsing of the 3A and 3B columns of the third plutonium cycle is produced by compressed air introduced to the pulse leg at a controlled pressure and frequency via separate solenoid-operated Hannifin valves located in a P and O gallery white room glovebox. Alternate pressurization and venting of the pulse leg displaces the liquid contained therein and thus forces liquid in the column up and down through the holes in the cartridge plates. The pulse amplitude is a function of both frequency and air pulse pressure. The pulse generation and delivery systems are shown in Figures 3-29 and 3-30.

A number of operating problems with the pulser systems encountered during the first year of operation led to an in-depth study by the process engineers. Observations and actions resulting from that study are presented below.

4.4.7.1 Observations

- Air sparging of the columns, as indicated by the column static pressure recorders, occurs if the pulse air pressure exceeds 16.8 psig.

- When the spool-poppet assembly in the Hannifin valve sticks in the open position, pulse air pressure is continuously applied to the column. At about 12 psig for the 3A column and 10.4 psig for the 3B column, the column contents will be blown to TK-L3 via the vent line.

- If the frequency controller fails in a way that keeps the Hannifin solenoid EV-A energized, pulse air is also kept on the column continuously.

- When the air pressure to the pilot of the Hannifin valve falls below 35 psig, the spool-poppet assembly will not move. The pulsing action stops even though the frequency controller operates electrically.

- The air supply to the pilots of the Hannifin valves comes from PRV-L, which also supplies air to operate all of the piston-operated valves (POV's) in the third plutonium cycle (vessel jet-out lines, 3BP rework line, ventilation header selector). For POV operation, at least 90 psig is required to compress the strong springs installed in the POV's, and an additional compressor has sometimes been required to supply extra air at the needed pressure.

4.4.7.2 Actions

- The 3A (PRC-L4-4) and 3B (PRC-L5-4) air pulse pressure controllers are operated in the manual position to prevent oscillation (caused by either a sticky control valve or a too-sensitive control setting) at maximum pressures of 10 psig and 8 psig, respectively.

- The PRV's (PRV-L4-4 and PRV-L5-4) to the accumulators are set at 30 psig.

- Installation of a separate PRV (PRV-L4/L5) set at 60 psig for the air supply to the pilots of the Hannifin valves was recommended but not completed. The valve is needed

to assure a constant pilot air supply at an acceptable pressure (90 psig air will accelerate deterioration of the valve seals).

- The oilers are in operation whenever the pulsers are operated.

- A prototype pulse detector-counter, shown in Figure 3-30, is installed on the T-L4 (3A column) pulser exhaust air line. An ultrasonic flowmeter that operates a counter is clamped around the line to indicate when an exhaust occurs. The pulse rate is then determined by reading the counter over a known time period. Stopping of the counter while operating the pulser indicates sticking of the spool-poppet of the Hannifin valve or failure of the flowmeter system. The pressure controller is then reduced to zero pressure until the cause of trouble is determined. This prototype is not entirely satisfactory and is therefore not duplicated on T-L5 (3B column). The counter, which is located on a rack just outside the white room door, is affected by other vibrations and has to be set periodically.

4.4.8 Pulse Column Interface Control

The HA column aqueous waste stream flow rate is controlled by a remote air-operated valve which receives a signal, via pneumatic and electrical instrumentation, from a float situated at the aqueous-organic liquid interface in the column bottom disengaging section. The float rides at the interface and follows its up-and-down movement. When the interface level rises, the float rises and signals the HAW control valve (DOV) to open slightly, allowing more aqueous to flow out of the column, and dropping the interface level back to the desired set point. When the interface level drops from the set point, the float drops correspondingly and signals the HAW DOV to close. This action decreases the HAW flow and allows the aqueous volume in the bottom disengaging section to build up, raising the interface back to the desired level.

The 1BX column top disengaging section interface position is between the 1BU organic and the aqueous solution (1BX) below it. It is controlled by a float, instrumentation, and a remote valve (DOV). When the interface rises, a signal causes the 1BXP DOV at the bottom of the column to open slightly, increasing the aqueous flow from the column. The 1BX control valve is set for a given flow and is generally not altered. When the interface drops below the desired position, the interface float signals the 1BXP DOV to close slightly, decreasing the 1BXP flow and raising the interface level in the 1BX column.

The 1BS column interface control is similar to that of the 1BX column. The 1BP flow is controlled by the position of the top interface. Automatic control of these columns is by a cascading system. The interface controller manipulates the set point of the bottom outlet flow controller (1BXP or 1BP), which makes the necessary flow change to restore the proper interface level.

The interface in the top disengaging section of the aqueous-continuous 1C column is controlled with a dip tube interface detector rather than a float. (A float used on a test basis is installed, but was disconnected from the control instruments when it was found to be more sensitive to emulsions than the dip tube control system.) The interface reading is an aqueous-organic specific gravity instead of the actual interface position. The reading is maintained between a specific gravity equivalent to 100% organic and 100% aqueous to provide a valid indication of interface position, which controls the 1CU flow.

The level control of the bottom disengaging section of the 2D column resembles that of the HA column, with the interface float position controlling the 2DW flow control valve. The 2E column has a top interface maintained by a dip tube interface detector like that of the 1C column. The position of the interface controls the 2EU flow control valve.

The 2A and 3A columns operate in a manner equivalent to the HA column, with the 2AW and 3AW streams controlled. The 2B and 3B columns have a top interface, and a float controls the 2BX and 3BX aqueous stream flows at the top of the columns, rather than the bottom aqueous product flows.

4.4.9 1CU Concentrator Operation

The E-J8 concentrator is a steam-heated, vertical-tube, thermal recirculation-type evaporator similar to E-K4, E-H4, and E-F6, which are described in other sections of the process description. The concentrator consists of two tube bundles set off from, but connected to, a central downcomer. Seated on top of the downcomer is a stripping tower containing seven bubble-cap trays below a 3-foot layer of Raschig rings for de-entrainment. A more complete description of the equipment is given in Chapter 3.0, Section 3.7.

During processing, the feed solution (1CU stream) from the T-J7 column (1C) enters the stripping tower above the bubble-cap trays. The solution passes down through the bubble caps, countercurrent to the rising vapors, which strip entrained organic from the aqueous feed and enters the central downcomer. There, the feed solution mixes with the concentrated solution and circulates through the two reboiler sections. In the reboiler section, the vertical tube bundles heat the solution sufficiently to vaporize a portion of it. The concentrated solution overflows via an overflow chamber to TK-K1 (2D column feed).

The condensate from the E-J8 concentrator (1UD stream) is normally recycled back to the HA, 1C, and 2E columns in place of fresh demineralized water in the HAS, 1CX, and 2EX streams after steady-state operation is attained. The condensate is collected in a small pot and pumped to the condensate recycle header via a special jumper. The normal streams are blocked off and a small amount of water is added to the pump pot in the canyon to make up the required volume.

Startup and operation of the E-J8 concentrator involves the following major steps:

- The specified vacuum is established on the condenser and concentrator.
- The concentrator is filled to 3400 gallons with seal pot water.
- Cooling water flow to the condenser is started by setting the condensate temperature controller to 50°C on automatic.
- The temperature of the concentrator contents is increased to the boiling point over a period of 30 minutes by manually controlling the steam flow to the reboiler tube bundles. The volume is maintained between 3200 and 3400 gallons by adding seal pot water.
- The flow of aqueous solution from the 1C solvent extraction column is started and slowly increased to flowsheet value. The seal pot water is then turned off.
- Steam flow to the tube bundles is adjusted as necessary to hold the liquid level below overflow until the specific gravity of the reboiler contents reaches the desired value.

For optimum performance during concentrator operation, the E-J8 specific gravity is maintained nearly constant (constant overflow rate to TK-K1), and the E-J8 vacuum is maintained nearly stable.

The E-J8 concentrator is shut down and cooled by the following procedure:

- Flow from the 1C solvent extraction column to the concentrator is stopped.
- Steam flow to the tube bundles is decreased to 10-15% of chart.
- Air pressure to the tube bundles is increased by very slowly opening the air PRV bypass valve until the high pressure steam cutoff is activated.

- The manual valves downstream of the steam PRV's and DOV's are closed.
- Air pressure to the tube bundles is maintained at 20 to 25 psig for 5 to 10 minutes and is then reduced to 10 to 15 psig by slowly closing the air PRV bypass valve.
- The steam flow controllers are set to zero on manual.
- After approximately 30 minutes, water flow to the condenser is turned off.
- The condensate DOV's are opened wide.
- Water to the tube bundles is turned on slowly to a total pressure of 20 to 25 psig until the concentrator contents cool to 50°C and is then turned off.
- The air PRV bypass valve is opened to maintain an air pressure of 20 to 25 psig on the tube bundles for 10 to 15 minutes and is then closed.

Concentrator instrumentation and off-standard conditions are discussed in Section 4.5.

4.4.10 Process Safety and Criticality Prevention

A radiation hazard with the solvent extraction systems would result from a "suckback" of radioactive liquid from the cell vessels into the P and O gallery. The suckback would occur if steam condenses in a process line to a vessel containing radioactive liquid, and the resulting vacuum sucks the liquid up into the line. Some of these process lines are purged automatically, and some are designed to always be supplied with either air, steam, or water to prevent vacuum formation in the lines.

Process solvent in large quantities presents a potential fire hazard which can be controlled by restricting the solvent system temperatures. A potential explosion hazard from formation of "red oil" is minimized by limiting (by steam stripping) the amount of entrained organic to the concentrators, and by operating the concentrators below the critical temperature of 135°C, above which red oil may be formed. Formation of red oil is discussed in more detail in Chapters 6.0 and 7.0.

More specific process hazards are listed below.

- Interface Control - Column interfaces in the HA, 1C, 2D, 2E, 2N, 2P, 2A, 3A, and 3B columns must be carefully controlled to avoid losing too much organic to the downstream concentrators where red oil can be formed.

- Pulsers - Mechanical pulsers may be damaged by the piston freezing up in the cylinder if the pulser is operated with air in the pulse leg, or is started before the air can bleed off from the water purge.

- Cold Stream Controls - Several aqueous strip or scrub streams are formed by blending a chemical stream with water and heating the mixture. The water flow must be on before starting the steam flow to one of these heaters to avoid overheating the column organic. Improper chemical makeup and flow rates can also present process hazards which are covered further in Section 4.4.11.

Nuclear criticality is prevented by applying the following three basic methods of control:

- Safe solution concentrations

- Safe batch sizes

- Safe geometry of vessels.

In the Purex solvent extraction processes, usually some combination of two of the methods are used to ensure criticality prevention.

4.4.10.1 HA Column Criticality Prevention

The feed stream to the HA column contains plutonium and uranium in the same ratios as originally in the irradiated fuel element, and the solutions cannot reach criticality because of the amount of neutron-absorbing U-238 present. The permissible plutonium-to-uranium ratio is somewhat higher for feed solutions than the corresponding ratio for reactor fuel to allow for the occasional addition of rework materials and the continuous addition of backcycle waste to the feed. The allowable ratio varies with the U-235 enrichment of the fuel, since it is also a fissile isotope, and with the isotopic content of the plutonium. The HAF pump tank, TK-H1, is normally limited to a maximum plutonium-to-uranium ratio of 2300 grams per ton based on a maximum U-235 content of 1.15 wt% of the uranium and a minimum Pu-240 content of 3.0 wt% of the total plutonium.

The preferential extraction of uranium assures that the concentration of plutonium in the organic does not exceed the safe concentration of 6 g/ℓ. Polymer formation in the top of the HA column is prevented by the HAS nitric acid concentration (2M), which is continuously monitored with a conductivity probe.

4.4.10.2 Partition Cycle Criticality Prevention

The 1BX partition column, the 1BS scrub column, and the 2AF tank rely primarily on safe solution concentration for criticality prevention. Geometries of the 1BS column itself and the 2AF tank are also favorable. However, the plutonium concentration in these vessels is also limited to 6 g/ℓ because the column upper disengaging section and the sump under the vessels are not geometrically favorable.

During periods of abnormal operation, it is possible to accumulate plutonium in the 1BX column. If the 1BX and 1BXP streams were shut off and the organic feed was introduced to the column, plutonium would strip into the aqueous phase until all the 1BX reducing agent was oxidized. Since the 1BX ferrous ion concentration is verified prior to use to be less than 0.03M, the resulting plutonium concentration would approach, but not reach, the minimum critical concentration. The presence of U-238 in the column provides an additional margin of safety.

4.4.10.3 Final Uranium Cycle Criticality Prevention

Under ordinary process conditions, there are no criticality prevention problems within the final uranium cycle. Upsets in the partitioning cycle, however, could result in plutonium accumulations in the K Cell equipment which would require uranium recycle to the first decontamination cycle for rework. Plutonium entering the backcycle waste system with the 2DW stream could put that system out of specifications as well.

The control mechanism against these potential problems is to shut down the 2D and 2E columns before the TK-K1 plutonium content exceeds the 2D column limit of 870 grams. The permissible amount of plutonium in TK-K1 (15,000 grams) is greater than that for the columns, and material collected in TK-K1 can be recycled for rework without processing through the 2D and 2E columns.

4.4.10.4 Second Plutonium Cycle Criticality Prevention

The 2AF tank (TK-J5) is of geometrically favorable design for criticality prevention, with a 2.75-inch solution annulus moderated by a concrete core. This design is favorable for plutonium concentration equivalent to final product specifications (1700 g/gal or 450 g/ℓ). The primary criticality prevention control, however, is to limit the plutonium content to the safe solution concentration of 23 g/gal (6 g/ℓ).

This limit is not required for the tank, but is dictated by the unfavorable geometry of the J Cell sump with the possibility of a tank failure leaking 2AF solution to the sump.

Tank J5 could be unsafe if caustic or some other precipitating chemical caused the formation and accumulation of plutonium precipitate in the tank. The presence of the precipitating agent, however, would cause other operating difficulties requiring a plant shutdown before a critical mass could accumulate in the tank.

The 2A and 2B columns are geometrically favorable for concentrations equal to final product specifications. The sumps beneath these vessels and the third plutonium cycle vessels are also favorable, and permit a limit for the combined contents of the sump and any one vessel alone of 50 kg of plutonium.

0013275.0622

4.4.10.5 Third Plutonium Cycle Criticality Prevention

Nuclear safety in the third plutonium cycle equipment is primarily based on favorable geometry. The vessels are of annular, cylinder and slab configurations which have geometrically favorable dimensions for plutonium concentrations equal to final product solutions.

The 3A column must be operated such that the 3AW plutonium does not exceed 6 g/ℓ, since this stream is ordinarily routed to TK-J1, which is not of geometrically favorable design.

4.4.11 Process Control

Although process control is more critical and complex in the HA column, the basic control principles apply to the other solvent extraction columns as well. Important information given by solvent extraction system instrumentation and sample analyses, and methods of correcting off-standard process conditions are discussed in this section.

4.4.11.1 Important Process Data

The HA column extraction section is equipped with differential pressure instrumentation which furnishes a continuous record of the static pressure, or relative weight, of the mixture of the aqueous and organic present. During steady-state operation, an increase in the static pressure indicates a relative buildup of extractable products in the extraction section caused by either a relatively low organic flow or a high aqueous flow. A decrease in the static pressure indicates a relative decrease of extractable products caused by either a relatively high organic flow or a low aqueous flow. Static pressure is thus routinely correlated with uranium saturation of the organic phase, and is used as a guide to flow rate adjustments.

Other HA column operability checks include:

- HA Column Flows - Determine if column flows as indicated by rotameters are in balance, and adjust as necessary. Low flows may indicate restrictions in lines or valves.

- HAW Nitric Acid Monitor and Analyses - Monitor the amount of salting agent in the column. Low HAW nitric acid (2.4M) indicates lack of salting strength and a need to increase the 3WB flow or HAS acidity.

- HAW Neptunium Analyses - High neptunium loss indicates the need to check HA-NO_2 for proper flow and concentration.

- Pulse Frequency - May be set improperly for optimum extraction performance. Too low frequency causes mixer-settler type of operation, resulting in poor mass transfer. Too high frequency will cause cyclic flooding, entrainment, and emulsion formation.

Useful information from instrumentation on other columns includes:

- Static Pressure - Indicates liquid level, but is affected by flow rates, pulser frequency, and solution density, in addition to solution height. Normally, this pressure is relatively stable.

- Differential Pressure - The solution density in the space between two dip tubes is indicated, assuming the upper dip tube is covered. A rise or fall may indicate approaching flooding conditions depending upon the location of the measurement in the column and which type of column is being monitored.

- Interface Location - Indicates the relative position of the interface between aqueous and organic layers in the disengaging sections. Automatic control of interfaces and the appropriate column stream flow rates are discussed in Section 4.4.7.

- Flow Rates - All are normally set with automatic controllers. Column bottom stream flows are sometimes controlled by the interface controllers.

- Specific Gravity - Usually measure the specific gravity of the solution in part of the disengaging section to provide information on column flooding, emulsion formation, or organic saturation.

- Pulser Frequency - The cycles per minute the pulser is running is indicated and controlled. With mechanical pulsers, high frequency can cause column flooding, and a low frequency will reduce column separation efficiency. With air pulsers (3A and 3B columns) operating at a constant pressure, increasing the pulse frequency reduces column flooding.

Radiation and ion monitors, described in detail in Section 3.10, are used in the solvent extraction process to supplement sample analyses. The following types of monitors are currently being used:

- HNO_3 Monitor - This type of instrument indicates the nitric acid content of the HAS, 2AS, and HAW streams.

- Gamma Monitor - These recorders indicate the gamma levels in the streams. Gamma level is a good indicator of fission product concentration, and helps determine the efficiency of a decontamination process. Gamma monitors are used in the HAP, 1BP, 2EU and 2BP streams.

- Neutron Monitor - This type of instrument indicates the relative neutron activity levels from plutonium at three locations in the 1BX column, in the 1BXP stream, and in tanks E6 and J1. A neutron monitor is also used to determine the cadmium concentration in the TK-151 solution, which is used as the motive force for the jet to transfer highly concentrated plutonium solutions from TK-L11 to TK-E6 for rework.

- Alpha Monitor - These recorders indicate the alpha activity levels in plutonium streams. Alpha monitors are used on the 1BSU, 1BP, 2BP, 2AW, 3AF and 3AW streams.

- NO_2 Monitor - This instrument indicates the nitrite composition of the 2AF, and allows immediate flow adjustment of the 2AF-NO_2 stream when necessary.

- Photometer - This instrument indicates the uranium concentration in the 2DW stream.

4.4.11.2 Correction of Off-Standard Conditions

The diagnosis and correction of problems indicated by process instrumentation readings and laboratory analysis of process samples is often complex, requiring expert understanding of the solvent extraction processes and considerable operating experience by the diagnostician. Consequently, a discussion of all possible off-standard conditions which may be encountered with the Purex solvent extraction processes is virtually impossible to document. In this section, however, the most common off-standard conditions, including their detection, causes, and possible solutions, are described. This information, as related to specific cycles of the solvent extraction processes, is also summarized in Tables 4-13 through 4-17.

9413275.0825

TABLE 4-13. First Decontamination Cycle - Off-Standard Conditions.

Off-Standard Condition	How Detected	Likely Cause	Detection of Cause	Remedy
A) High uranium or plutonium loss to HAW	(1) By routine analysis of combined concentrated aqueous waste (TK-F15) (2) Specifically by analysis of HAW sample (3) Specifically by increase in static pressure of column (indication of high uranium loss) (4) Decrease in HAP specific gravity	(1) Flow rates a) Low HAX (high aqueous/organic flow ratio) b) High HAF c) High HAW d) Low HAS - low salting strength e) Low 3WB-HA (2) Stream compositions a) Low TBP concentration in HAX b) High uranium concentration in HAP c) Low acid concentrations (HAS, HAF, 3WB) (3) Flooding of HA column (4) Pulse frequency off optimum conditions	(1) Flow rates a) Flow recorder on HAX; high HAP (organic) specific gravity b) Flow recorder of HAF (cross-checked by tank volume readings of TK-H1) c) Flow recorders on 3WB-HA, HAS, HAF d) Flow recorders on HAS-H_2O and HAS-HNO_3 e) Flow recorder on 3WB-HA (2) Stream compositions a) Instrument specific gravity (TK-G5) b) High specific gravity indicates high uranium concentration in column c) Analysis of samples, HNO_3 monitors, TK-J1 specific gravity (3) Flooding a) Increase in static pressure readings b) Interface level variations (4) Pulse: frequency check	(1) Flow rates: adjust flows to proper values (2) Stream compositions: a) Butt into specifications b) Adjust flow rates to compensate 1) If low TBP concentration exists, raise HAX rate 2) If high uranium concentration exists, lower HAF rate or increase HAX rate c) Increase HAS-HNO_3 flow, add fresh nitric to TK-J1 or increase 3WB-HA flow (3) Flooding a) Decrease pulse frequency b) Decrease flow rates (4) Pulse: adjust frequency

9413275.0826

TABLE 4-13. First Decontamination Cycle - Off-Standard Conditions. (Continued)

Off-Standard Condition	How Detected	Likely Cause	Detection of Cause	Remedy
B) High fission product content in the HAP	(1) Continuously by gamma radiation monitor on HAP stream (2) Specifically by analysis of HAP for gamma activity	(1) Flow rates a) Low HAS rate (low salting strength) b) Low HAF rate (high organic/aqueous flow ratio) c) High HAX rate d) Low 3WB-HA (2) Stream Compositions a) High HNO_3 concentration in HAS b) High gamma activity in HAF (due to short fuel "cooling" time) (3) Flooding of HA column (4) Pulse frequency off optimum conditions	(1) Flow rates a) Flow recorders on HAS-H_2O and HAS-HNO_3, HAW HNO_3 monitor b) Flow recorder on HAF c) Flow recorder on HAX d) Flow recorder on 3WB-HA, HAW HNO_3 monitor (2) Stream Compositions a) HAS continuous nitric acid monitor b) Analysis of HAF for gamma activity (3) Flooding a) Increase in static pressure readings b) Interface float variations (4) Pulse: frequency check	(1) Flow rates: adjust flows to proper values (2) Stream Compositions a) Adjust HAS-HNO_3 concentration b) If high gamma in HAF, increase HAS flow rate and/or increase uranium saturation of the organic (3) Flooding a) Decrease pulse frequency b) Decrease flow rates (4) Pulse: adjust frequency
C) High neptunium loss to HAW	(1) Specifically by analysis of HAW for neptunium	(1) Low HA-NO_2 flow (2) Low HAX flow	(1) Flow recorder on HA-NO_2 (2) Flow recorder on HAX	(1) Increase HA-NO_2 flow to proper value (2) Increase HAX flow to proper value

9413275.0827

TABLE 4-14. Partition Cycle - Off-Standard Conditions.

Off-Standard Condition	How Detected	Likely Cause	Detection of Cause	Remedy
A) High plutonium loss in 1BU stream (resulting in high plutonium loss to 2DW)	(1) Specifically by analysis of 1CU for plutonium (2) Routinely by analysis of concentrated backcycle aqueous waste (TK-J1) for plutonium (3) 1BXP, 1BX column neutron monitors (4) 1BP alpha monitor (5) 1K-J1 neutron monitor	(1) Flow rates a) Low 1BX b) High 1BXF (2) Stream compositions: low reducing agent concentration (1BX-Fe^{++}, $NH_2SO_3^-$) (3) Flooding of the 1BX column (4) Off-standard pulse frequency (5) High nitrite in the 1BXF	(1) Flow rates a) Flow recorder on 1BX (cross-checked by tank volume readings of TK-209 and 210) b) Flow recorder on 1BXF stream (2) Analysis of sample from TK-209 or TK-210 (3) Flooding a) Decrease in static pressure reading b) Interface and/or 1BX flow variation (4) Pulse frequency check (5) Nitrite: a) Analysis of 1K-J3 b) HA-NO_2 flowmeter	(1) Flow rates: adjust flows to proper values (2) Restore reducing agent concentration (3) Flooding: a) Decrease pulse frequency b) Decrease flow rates (4) Adjust pulse frequency (5) Nitrite: a) Butt TK-J3 with sulfamic acid or hydrazine b) Reduce HA-NO_2 flow
B) High uranium in 1BP stream	(1) Analysis of 1BP stream for uranium (2) Very high uranium in 1BP may be indicated by increase in static pressure of 1BS column	(1) Flow rates a) Low 1BS rate b) High 1BX rate (2) Stream compositions: low nitric acid concentration in 1BXP (3) Flooding of 1BS column (4) Off-standard pulse frequency	(1) Flow rates a) Flow recorder on 1BS b) Flow recorder on 1BX (cross-checked by tank volume readings of TK-209 and 210) (2) Analysis of 1BP (can't sample 1BXP) (3) Flooding a) Decrease in static pressure readings b) Interface readings and/or 1BP valve loading variations (4) Pulse frequency check	(1) Flow rates: adjust flows to proper values (2) If HNO_3 concentration of 1BXP is low, increase flow rate of 1BXP-HNO_3 (nitric butt to 1BXP (3) Flooding a) Decrease pulse frequency b) Decrease flow rates (4) Adjust pulse frequency

TABLE 4-14. Partition Cycle - Off-Standard Conditions. (Continued)

Off-Standard Condition	How Detected	Likely Cause	Detection of Cause	Remedy
C) High uranium loss in 1CW	(1) By routine analysis of 1OW (2) By routine analysis of wash collected in TK-G8 (3) Specifically by 1CW analysis	(1) Low 1CX flow (2) Excess HNO_3 in 1CX (3) Flooding of 1C column (4) Off-standard pulse conditions (5) Low 1CX temperature	(1) Flow recorders on 1C-HNO_3 and 1CX-H_2O (2) Analysis of 1CX stream (3) Flooding a) Decrease in static pressure reading b) Interface and/or 1CU value loading variations (4) Pulse frequency check (5) Temperature recorder on 1CX	(1) Flow rates: adjust flows to proper values (2) Adjust HNO_3 in 1CX stream to proper concentration (3) Flooding a) Decrease pulse frequency b) Decrease flow rates (4) Pulse: adjust frequency (5) Adjust temperature of 1CX to 50-60°C by adjusting the temperature controller on 1CX
D) High plutonium loss in 1CU	← Same as "A" in this table - All plutonium remaining in the 1BU will follow the uranium and neptunium through the 1C column →			
E) High plutonium recycle via 1BSU stream	(1) 1BSU alpha monitor (2) 1BXP and 1BX column neutron monitors	(1) Low 1BX flow (2) Low reductant concentration (3) Nitrite recycle	(1) 1BX flow recorder and and TK-209/210 dropout rate (2) TK-209/210 analysis (3) Nitrite analysis of TK-J3 sample	(1) Adjust 1BX flow rate to proper value (2) Butt to proper reductant concentration (3) Butt TK-J3 with sulfamic acid or hydrazine (4) Increase 1BX flow

9413275.0829

TABLE 4-15. Final Uranium Cycle - Off-Standard Conditions.

Off-Standard Condition	How Detected	Likely Cause	Detection of Cause	Remedy
A) High uranium in 2DW	(1) 2DW photometer reading increase (2) Specifically by analysis of 2DW sample	(1) Flow rates a) High 2DF (high aqueous/organic flow ratio) b) Low 2DX c) High 2DS d) Low 2DF-HNO_3 (low salting strength) (2) Stream compositions a) Low TBP concentration b) Low acid or high uranium concentration (2DF) (3) Flooding of 2D column (4) Off-standard pulse frequency	(1) Flow rates a) Flow recorder on 2DF, high specific gravity b) Flow recorder on 2DX c) Flow recorder on 2DS d) Flow recorder on 2DF-HNO_3 (2) Stream compositions a) Instrument specific gravity readings in TK-R7, 200 analysis b) Analyses of stream samples (3) Flooding a) Increase in static pressure readings b) Interface and/or 2DW flow variations (4) Pulse frequency count	(1) Flow rates: adjust flows to proper values (2) Stream compositions a) Butt into specifications or b) Adjust flow rates to compensate 1) If TBP concentration is low, raise 2DX rate 2) If high uranium concentration exists in 2DF, lower 2DF rate and raise 2DX rate (3) Flooding a) Decrease pulse frequency b) Decrease flow rate (4) Pulse: adjust frequency
B) High plutonium in 2DW	(1) Specifically by analysis of 1UC for plutonium (2) Analysis of TK-J1 for plutonium (3) J1 neutron monitor	← Same as partition cycle off-standard condition A →		
C) High plutonium in 2DU (resulting in high plutonium in 2EU)	Routinely by analysis of 2EU for plutonium	(1) Lack of reducing agent in 2DIS or holding reductant in 2DF (2) Low 2DS flow (3) Low 2DIS flow (4) High 2DX flow, low uranium loss (5) Same as partition cycle off-standard condition A	(1) Analysis of 2DIS for HN and 2DF for N_2H_4, flow recorders on 2DIS-HN, 2DF-N_2H_4 (2) Flow recorder on 2DS (3) Flow recorder on 2DIS (4) Flow recorder on 2DX, static pressure in column, 2DW photometer (5) Same as partition cycle off-standard condition A	(1) Increase reducing agent concentration (HN) in 2DIS, 2DIS-HN flow rate, or 2DF-N_2H_4 flow rate (2) Increase 2DS flow rate (3) Increase 2DIS flow rate (4) Decrease 2DX flow rate (5) Same as partition cycle off-standard condition A

9413275:0830

TABLE 4-15. Final Uranium Cycle - Off-Standard Conditions. (Continued)

Off-Standard Condition	How Detected	Likely Cause	Detection of Cause	Remedy
D) High fission product content in 2DU (resulting in a high fission product content in 2EU)	(1) Continuously by 2EU gamma monitor (2) Continuously by Beckman readings near 2EU concentrator (3) Specifically by analysis of 2EU for gamma activity	← Same as first decontamination cycle, off-standard condition B →		
		(2) 2DW loss to low	(2) 2DW photometer	(2) Decrease 2DX rate
E) High uranium in 2EW	(1) By routine analysis of 2EW (2) By routine analysis of wash collection in TK-R8 (3) Decrease in the static pressure of 2E column	(1) Low 2EX rate (2) Excess HNO_3 in 2EX (3) Flooding of 2E column (4) Pulse frequency off-standard condition (5) Low temperature 2EX	(1) Flow recorders on 2EX-HNO_3 and H_2O (2) Analysis of 2EX stream (3) Flooding a) Decrease in column static pressure readings b) Interface and/or 2EU flow variations (4) Pulse frequency count (5) Temperature recorder for 2EX	(1) Increase 2EX-H_2O and 2EX-HNO_3 flow rates (2) Adjust relative flow rates on 2EX to obtain correct acid concentration (3) Flood a) Decrease pulse frequency b) Decrease flow rates (4) Pulse: adjust frequency (5) Increase temperature of 2EX to 50°C

9413275.0831

TABLE 4-16. Second Plutonium Cycle - Off-Standard Conditions.

Off-Standard Condition	How Detected	Likely Cause	Detection of Cause	Remedy
A) High plutonium in 2AW	(1) 2AW alpha monitor readings (2) Analysis of 2AW for plutonium (3) TK-J1 neutron monitor (4) Analyses of concentrated aqueous wastes (TK-J1) for plutonium	(1) Flow rates a) Low 2AX (high aqueous/organic flow ratio) b) High 2AF and/or 2AS (2) Stream compositions a) Low TBP concentration b) Low acid concentration in 2AF and/or 2AS c) Failure to oxidize all of plutonium to tetravalent state (3) Flooding of 2A column (4) Off-standard pulse frequency	(1) Flow rates a) Flow recorder on 2AX b) Flow recorder on 2AF and/or 2AS (2) Stream compositions a) Instrument specific gravity (TK-G5) readings or analysis of 100 b) Analysis of 2AF for HNO_3 and/or 2AS-HNO_3 monitor c) Low 2AF-NO_2 monitor readings or analysis of 2AW or 2AF for plutonium (III) [plutonium (III) in 2AF is indicated by blue color] (3) Flooding a) Increase in static pressure readings b) Interface and/or 2AW valve loading variations (4) Pulse frequency count	(1) Flow rates: adjust to proper values (2) Stream compositions a) Butt 100 (2AX) with TBP into specifications or raise 2AX flow to compensate b) Butt 2AF and/or 2AS into specifications, lower 2AF rate or increase 2AX rate c) Adjust sodium nitrite addition rate to TK-J5 to proper value (3) Flooding a) Decrease pulse frequency b) Decrease flow rates (4) Pulse: adjust frequency
B) High fission product content in 2AP (resulting in high fission product content in 2BP)	(1) 2BP gamma monitor (2) By routine analysis of 2BP for gamma activity	(1) Flow rates a) Low 2AS b) High 2AX (resulting in higher fission product/plutonium ratio in product) (2) Stream compositions a) Low HNO_3 in 2AF b) High gamma activity in 2AF (due to lack of fuel "cooling" time or faulty partition cycle operation) (3) Flooding of 2A column (4) Off-standard pulse frequency	(1) Flow rates a) Flow recorder on 2AS b) Flow recorder on 2AX (2) Stream composition a) Analysis of 2AF for HNO_3 b) Analysis of 2AF for gamma activity (3) Flooding a) Increase in static pressure readings b) Interface and/or 2AW valve loading variation (4) Pulse frequency count	(1) Flow rates: adjust flows to proper values (2) Stream compositions a) Butt 2AF into specifications b) Correct operating conditions in preceding cycles (3) Flooding a) Decrease pulse frequency b) Decrease flow rates (4) Pulse: adjust frequency

9413275.0832

TABLE 4-16. Second Plutonium Cycle - Off-Standard Conditions. (Continued)

Off-Standard Condition	How Detected	Likely Cause	Detection of Cause	Remedy
C) High uranium content in the 2AP (resulting in high uranium content in 2BP)	By routine analysis of 2BP for uranium	←	Same as partition cycle, off-standard condition B	→
D) High uranium content in 2BP resulting from inefficent uranium decontamination in 2B column	By routine analysis of 2BP for uranium	Low 2BS flow	2BS flow recorder	Increase 2BS flow
E) High plutonium loss to 2BW	(1) 2BP alpha monitor and/or 3AF alpha monitor (2) By routine analysis of 2BW for plutonium (3) Material balance around cycle	(1) Flow rates: high 2BS or low 2BX (2BP) rate (low aqueous/organic flow rate) (2) Excess HNO_3 in 2BX (3) Flooding of 2B column (4) Off-standard pulse frequency (5) No reductant in 2BX	(1) Flow recorder on 2BX and/or 2BP streams (2) Analysis of 2BX stream (3) Flooding a) Static pressure decrease b) Interface and/or 2BX flow variations (4) Pulse frequency count (5) 2BX makeup analysis	(1) Decrease 2BS or increase 2BX flow rate (2) Butt 2BX into specifications (3) Flooding a) Decrease pulse frequency b) Decrease flow rates (4) Pulse: adjust frequency (5) Add reductant to 2BX

9413275.0833

TABLE 4-17. Third Plutonium Cycle - Off-Standard Conditions.

Off-Standard Condition	How Detected	Likely Cause	Detection of Cause	Remedy
A) High plutonium in 3AW	(1) 3AW alpha monitor (2) Anlaysis of the 3AW for plutonium	(1) Flow rates a) Low 3AX (high aqueous/organic flow ratio) b) High 3AF and/or 3AS (2) Stream compositions a) Low TBP concentration b) Low acid concentration in 3AF c) Failure to oxidize all plutonium to tetravalent state (3) Flooding of 3A column (4) Off-standard pulse conditions	(1) Flow rates a) Flow recorder on 3AX b) Flow recorder on 3AF and/or 3AS (2) Stream compositions a) Instrument specific gravity readings or analysis, TK-G5 b) Analysis of 3AF for HNO_3 c) Analysis of 3AW for plutonium (III) (3) Flooding a) Static pressure increase b) Interface and/or 3AW valve loading variations (4) Pulse a) Termination of static pressure reading fluctuation b) Air pulser exhaust valve inspection c) Frequency count d) Pressure reading	(1) Flow rates: adjust to proper values (2) Stream compositions a) Butt 100 (3AX) with TBP, or increase 3AX rate to compensate b) Butt 3AF to specifications with HNO_3, lower 3AF rate or increase 3AX rate c) Add $NaNO_2$ to TK-L3 (3) Flooding a) Increase pulse frequency or decrease pulser air pressure b) Decrease flow rates (4) Pulse a,b) For no apparent pulse, shut down for maintenance c) Adjust frequency d) Adjust air pressure to pulser
B) High fission product content in 3AP (resulting in high fission product content in 3BP)	Analysis of 3BP for gamma activity	(1) Flow rates a) Low 3AS b) High 3AX (resulting in a higher fission product/plutonium ratio in product) (2) Stream composition a) Low HNO_3 in 3AF b) High gamma activity in 3AF (due to lack of fuel "cooling" time, faulty co-decontamination and/or partition and/or second plutonium cycle operation) (3) Flooding of 3A column (4) Off-standard pulse conditions	(1) Flow rates a) Flow recorder on 3AS b) Flow recorder on 3AX (2) Stream compositions a) Analysis of 3AF for HNO_3 b) Analysis of the 3AF for gamma activity (3) Flooding a) Increase in static pressure b) Interface and/or 3AW valve loading variations (4) Pulse - same as "A"	(1) Flow rates: adjust to proper ratios (2) Stream compositions a) Butt 3AF into specifications b) Correct operating conditions in preceding cycles (3) Flooding - same as "A" (4) Pulse - same as "A"

9413275.0834

TABLE 4-17. Third Plutonium Cycle - Off-Standard Conditions. (Continued)

Off-Standard Condition	How Detected	Likely Cause	Detection of Cause	Remedy
C) High uranium content in the 3AP (resulting from high uranium content in 2BP)	Analysis of 3BP for uranium	←	Same as partition cycle off-standard condition B Same as second plutonium cycle off-standard condition D	→
D) High plutonium loss to 3BW	(1) Analysis of 3BW for plutonium (2) Material balance around cycle	(1) Flow rates: low 3BX (3BP) rate (low aqueous/organic flow rate) (2) Excess HNO_3 in 3BX (3) Flooding of 3BP column (4) Off-standard pulse conditions	(1) Flow recorder on 3BX and/or 3BP streams (2) Analysis of 3BX stream (3) Flooding a) Static pressure decrease b) Interface and/or 3BX variations (4) Pulse - same as "A"	(1) Increase 3BX flow rate (2) Butt 3BX into specifications (3) Flooding - same as "A" (4) Pulse - same as "A"

4.4.11.2.1 Uranium Saturation

The correct relative flow rates of the aqueous and organic phases fed to a column are necessary for efficient solvent extraction operation. In the HA column extraction section, there must be enough HAX flow relative to the amounts of HAF and 3WB to extract the product materials (plutonium, uranium, and neptunium), but the flow must be limited such that intolerable amounts of fission products are not also extracted. When the HAF and 3WB are contacted with the HAX, the uranium is extracted first, next the plutonium and neptunium, and finally the fission products. If the relative flow of HAX is too small, there will not be enough HAX available for the complete extraction of the product materials, particularly plutonium and neptunium, since these are extracted after uranium. This condition is termed "high uranium saturation."

If the relative flow of HAX is too large, the product materials and a relatively large portion of the undesirable fission products will be extracted. This is termed "low uranium saturation." For most efficient operation, the best compromise between product waste losses and fission product decontamination must be maintained. As discussed in Section 6.1, the means of attaining this best compromise are somewhat complicated. However, this is not as critical during processing of N Reactor fuels as during processing of aluminum-clad fuels, because fluoride complexing of Zr-Nb-95 results in improved HA column fission product decontamination and allows satisfactory operation with a lower uranium saturation of the HAP stream.

Solvent extraction process engineering and technology are discussed in Chapter 6.0. Flowsheet calculations are based on design calculations for the column and on Purex operating experience. Example calculations are included in Chapter 6.0. Recognition of flooding, instability, high uranium losses, and special problems are also discussed further in Chapter 6.0.

4.4.11.2.2 Flooding

Whenever the holdup of the discontinuous phase in a solvent extraction column plate section increases to a value which interferes with free countercurrent phase flow, the conditions for flooding exist. If the approach to flooding is gradual, the dispersed phase buildup will be localized, and, depending on flow conditions, may tend to disperse and reform as a cyclic local flood. Complete flooding, caused by aggravation and growth of a local flood, is characterized by either the aqueous or the organic phase leaving the column at the same end as it entered. Development of flooding within a column lowers its separations efficiency. As a consequence, increased losses of uranium, plutonium, or organic (TBP-NPH), or an increase in FP content of the respective products is apt to result, depending on the type of column involved.

In those columns which operate with the aqueous phase continuous, the static pressure will decrease as the organic holdup within the column increases. An increased holdup of organic phase will also tend to raise the interface position, and may be indicated on the interface level instrument. Since the interface instrument controls the scrub addition rate to the 2B and 3B columns, an increase in organic holdup may also become apparent through a reduction in flow of the 2BX and 3BX streams. In the 1BX, 1BS, 1C and 2E columns, the respective aqueous effluent stream flow rates would decrease.

For the columns in which the organic phase is continuous, the reverse of the above instrument behavior is generally true. An increase in the aqueous holdup in these columns will be reflected by an increase in static pressure, falling interface level, and decreased flow of effluent streams in the HA, 2D, 2A, and 3A columns.

A flooded column is returned to normal operation by reducing influent stream flow and/or column pulser adjustments. To recover from a flood by pulser adjustments, the pulse energy input, which is the product of the frequency and amplitude, must be reduced. With a Purex constant-amplitude mechanical pulser, the frequency is therefore reduced. However, at a constant-pulse air pressure, the amplitude frequency product varies inversely with frequency for an air pulser system, and the frequency must therefore be increased to recover from a flood. Alternately, recovery from a flood may be accomplished by reducing the pulse air pressure while maintaining the frequency constant.

4.4.11.2.3 Emulsion

Excessive emulsification in the plate section of a pulse column at otherwise favorable operating conditions may result from the presence of excessive concentrations of TBP hydrolysis products, dibutyl phosphate (DBP) and monobutyl phosphate (MBP), or some types of siliceous or other foreign solid materials (crud). Emulsification is often accompanied by foaming and improper phase separation in the column disengaging sections, particularly at the interface end.

Severe emulsification in the column plate or packed section results in partial coalescence of the dispersed phase, and may impair decontamination and cause increased fluctuating uranium and plutonium losses. The instrument indications and consequences of a severely emulsified condition in a column are similar to those of local flooding. Distinguishing between a flooded and an emulsified condition may require observation and interpretation of equipment performance over a period of several hours, including the procurement of special samples. However, in plant operation, corrective action is taken immediately since severe emulsification in a column plate or packed section is usually remedied in the same manner as for a flooding condition -- by reducing flow rates and/or adjusting the pulse frequency.

A foaming or emulsified condition in a disengaging section may usually be detected by: an increase in the apparent specific gravity of the organic phase just above the interface; a decrease in the apparent specific gravity of the aqueous phase below the interface; or erratic behavior of the interface control system. An emulsion in a column disengagement section often has its counterpart in the plate section and thus often causes column operating instability and malperformance. Since emulsion formation in a disengagement section is generally a consequence of the presence of impurities such as siliceous material, DBP, and dirt accumulations, the condition may usually be remedied by jetting a volume of the interface zone to a waste tank. If the emulsified condition is not remedied by jetting out the impurities, a shutdown and flush of the system may be necessary in order to overcome the difficulty. A general consequence of disengagement section emulsification is excessive entrainment of the wrong phase, which may have undesirable effects on the process, as discussed below.

9413275.0037

4.4.11.2.4 Excessive Liquid-Phase Entrainment

During normal column operation, some entrainment of aqueous in the organic, and vice versa, is always occurring. Entrainment on the order of 0.01 to 0.1% by volume of the opposite phase may be considered normal. Phase emulsification in a disengagement section always leads to increased entrainment, and, depending on the type of column involved, may produce any of several undesirable results.

In extraction-type columns, entrainment of aqueous in the overflowing organic phase generally is detected by a decline in the decontamination performance for the extraction cycle involved, since the aqueous particles are usually associated with dirt and absorbed FP's. Organic entrainment in the aqueous phase, such as that which could occur in the bottom section of a stripping column, results in a solvent loss, which is of economic importance due to the high cost of TBP. Control of entrainment also prevents organic-phase entry into the concentrators, with a possible consequence of rapid nitration of TBP. Excessive entrainment can be remedied similarly to an emulsion problem.

4.4.11.2.5 Excessive Uranium or Plutonium Losses

Excessive uranium or plutonium losses are generally detected by analysis of routine samples (alpha, neutron, or photometer monitor indications), and/or, for uranium, by static pressure and specific gravity readings.

When uranium losses are only slightly higher than normal, or when excessive plutonium losses without high uranium losses are involved, the specific gravity and static pressure instruments will not give any positive indications of these conditions. It is therefore necessary to rely on routine sample analyses or alpha/neutron monitor indications

to reveal these losses. Once a loss is confirmed, a check of the controlled flows and operating conditions around the affected column will usually locate the off-standard condition.

If uranium losses are very high, the static pressure and specific gravity instrument readings will show marked changes. The high uranium loss will cause the static pressure to increase in the HA, 1BS, 1C, 2D, and 2E columns. The change in the specific gravity of the uranium-bearing product stream will depend on the cause of the high loss. For example, if the loss is caused by improper pulsing conditions (poor column efficiency), the uranium-bearing product stream specific gravity will decrease; if the loss is caused by insufficient extractant flow, the specific gravity of the extracted stream will increase.

Assuming the column pulsing conditions are correct, the most likely causes for high waste losses are improper flow ratios and/or off-standard flowsheet stream composition. These conditions may generally be detected by making a material balance around the off-standard column.

4.4.11.2.6 Inadequate Product Decontamination

Inadequate decontamination of the uranium and plutonium products may be detected during and after solvent extraction by the Beckman radiation recorders located near each uranium concentrator, the plutonium product receiver, and both plutonium sample tanks. An abnormally high reading after any of the solvent extraction cycles is an indication that an off-standard condition exists, and a check is made back through the column system instrumentation to interpret the high reading. Residual FP activity in the partition cycle plutonium, final uranium, and second cycle plutonium streams is monitored by gamma scintillation counters. A similar instrument monitors the FP content of the HAP stream and thus indicates the FP decontamination performance of the HA column.

Poor decontamination without coincident column flooding or emulsion formation may be caused by low aqueous-to-organic flow ratios in the scrub sections of the extraction columns.

4.4.11.3 Rework of Off-Standard Streams

Before reworking off-standard streams, a specific blend or method of rework must be chosen in each case on the basis of a number of factors. For instance, the effect of the rework stream on the control of the normal process must be considered. In the case of waste rework, the value of the recoverable uranium or plutonium must be assessed against the cost of reprocessing.

The normal rework routing of the five typical off-standard process streams is described below. In very unusual cases, off-standard first cycle uranium or second cycle plutonium streams may be reworked, but this procedure is not discussed.

- Final Uranium Product (2UC) - The final concentrated uranium product, which may require further decontamination from plutonium, FP's or nonradioactive contaminants, is sampled in TK-K6 and, if analyses indicate an off-standard condition, a transfer or series of transfers are scheduled. Routing may go directly to TK-E6 from TK-K6, or, more commonly, the stream is first routed to UNH storage TK-P1 and then to TK-E6 for reprocessing in the HA column. Routing is also possible from TK-K6 to TK-K1 for reprocessing of the solution in the final uranium cycle. Tank K6 or P1 solution is normally reprocessed via TK-E6 at the end of a processing campaign or during a spike fuel processing campaign if required to maintain a minimum uranium throughput rate of 7.5 tons per day. Rework of TK-K6 solution via TK-K1 is sometimes required for the first one or two batches of a campaign to produce specification material.

- Final Plutonium Product (PCP) - The final concentrated plutonium product, which may contain excessive uranium and/or FP concentrations, is sampled in TK-L9 and transferred either to the product loadout tank, the 3AF feed tank, TK-L3, or the rework receiver, TK-L11. From TK-L11, a special jet with a motive fluid (for criticality prevention) of cadmium nitrate and/or nitric acid solution transfers the rework solution in increments to TK-E6 where it is blended with uranium feed solution. Routing is also possible from TK-L11 to TK-L9 and then to TK-L3 for rework of solution through the third plutonium cycle. Plutonium product and rework handling are described further in Section 4.10.

- High-Level Waste (1WW) - Concentrated high-level waste, which may contain recoverable amounts of uranium and/or plutonium (more than 50 grams of plutonium), flows from the 1WW concentrator (E-F6), and is sampled in TK-F26 before sugar denitration. Composition of the stream and more details on waste handling are given in Section 4.8. The high-level salt waste must be reworked before sugar denitration to avoid process upsets. High losses should be detected in the HAW sample and correction should be made before a reworkable quantity of uranium or plutonium accumulates. High plutonium or uranium losses detectable in TK-F26 represent a considerable amount of off-standard waste in TK-F7 and the E-F6 concentrator.

Routing from TK-F26 or TK-F7 is to TK-F8, the waste rework handling tank, where the solution is boiled and refluxed from the E-F9 condenser for a period of time (up to 21 days) to hydrolyze any organic present. From there, the waste is transferred in 50- to 400-gallon increments to TK-E6 for blending with each feed batch.

- Sump Wastes (TK-F18) - Sump wastes are collected in TK-F18, as described in Section 4.8, and transferred to UGS or reworked for uranium and/or plutonium recovery, depending on sample analyses. Rework material is processed in TK-F8, as with 1WW described above, and transferred to TK-E6 feed makeup.

- Organic Waste (TK-F13) - Organic waste with potentially poor quality solvent is decanted from various aqueous feed and storage tanks (such as TK-F10), and collected for nitric acid wash in TK-F13. Excessive uranium or plutonium found in the aqueous strip solution may dictate rework via TK-F8. Handling of rework solution in TK-F8 is described above.

9403275.0840

4.5 FINAL URANIUM AND PLUTONIUM CONCENTRATION

The aqueous uranium and plutonium product streams from solvent extraction processing are concentrated by evaporation to meet final product concentration and purity specifications. The combined aqueous uranium and neptunium products from the first decontamination and partition cycle are also concentrated prior to the final uranium cycle solvent extraction process. A description of this intermediate product concentration procedure is presented in Section 4.4. This section describes the operations performed by the final uranium cycle and the third plutonium cycle concentration equipment. Downstream product handling (sampling) and loadout are covered in Section 4.9, and uranium and plutonium concentration technology are covered in Chapter 7.0. Neptunium concentration is described in Chapter 8.0. Additional details of concentrator equipment designs are presented in Chapter 3.0, Section 3.7.

4.5.1 Properties and Compositions of Uranium Product Solutions

Pertinent data concerning the uranium product streams before and after intermediate and final concentrations are summarized in Table 4-18. These compositions vary somewhat as a result of process variations and operating temperatures.

4.5.2 Special Chemical Problems

During concentration, uranium product solutions may undergo chemical reactions to form compounds which may adversely affect subsequent processing objectives. These reactions and their effects, discussed below, are described in more detail in Chapter 7.0.

TABLE 4-18. Physical Properties and Compositions of Uranium Streams.

Component	Uranium Streams			
	1CU	1UC	2EU	2UC
U, M	0.27	2.12	0.38	2.12
HNO_3, M	0.086	0.90	0.011	0.06
Pu, g/ℓ	8.7×10^{-6}	6.9×10^{-5}	---	---
Parts Pu/10^9 Parts U	140	140	---	<10
Np, g/ℓ	---	---	---	$<1 \times 10^{-5}$
Properties				
Flow[a], gal/min	27.4	3.5	18.4	3.3
Temperature, °C	55	110	50	50
Sp. Gr.	1.09	1.71	1.12	1.68

[a] Flow rates based on Purex processing rate of 10 tons uranium/day.

4.5.2.1 Tributyl Phosphate Hydrolysis

Tributyl phosphate, the active component of the solvent used in the Purex process, hydrolyzes slowly in boiling acid solutions to form dibutyl phosphate (DBP), monobutyl phosphate (MBP), and orthophosphoric acid. Hydrolysis rates as a function of temperature and acidity, and the reaction mechanisms are given in Chapter 7.0, Section 7.1. The hydrolysis products of TBP form strong complexes with uranium and plutonium, which exhibit undesirable distribution coefficients and emulsifying characteristics. For example, the DBP complex of uranium or plutonium has a high organic-to-aqueous phase distribution ratio (E_a^o); the transfer of uranium into the aqueous product phase in the 2E column (and other stripping columns) is thus reduced. A high product loss to the organic effluent results. A complex formed between uranium or plutonium and MBP is relatively insoluble in either phase, and forms emulsions or interfacial scum in the solvent extraction columns. Steam stripping, discussed in subsequent parts of this section, is employed in the uranium and plutonium concentrators to remove most of the dissolved and entrained TBP before it can be hydrolyzed to DBP.

4.5.2.2 Red Oil Formation

A complex mixture of organo-uranium compounds insoluble in either aqueous or solvent process streams can be formed under off-standard processing conditions. This mixture, commonly called "red oil," while not

completely characterized, is known to be explosively unstable and to contain uranium, TBP decomposition products, and possibly nitrated fragments of the hydrocarbon diluent. Red oil is produced by a chemical reaction between an aqueous solution of uranium and nitric acid with the Purex solvent, either by prolonged contact at ambient temperatures or by repeated concentration of solvent-saturated aqueous solutions.

More recent work (Ref. 6) indicates that diluent stability, specifically the resistance of the diluent to nitration, plays an important role in red oil formation. Red oil was not formed during concentration of thorium and uranyl nitrate solutions containing TBP-NPH under conditions reported to produce red oil with a previous diluent. The presence of DBP-bearing red oil promotes high uranium and plutonium organic-to-aqueous distribution ratios and losses in stripping column organic waste streams.

4.5.2.3 Rapid Decomposition of Nitrated Solvent

A rapid reaction may result when red oil reaches a temperature of 135°C or greater during concentration at atmospheric pressure if the weight ratio of TBP to uranyl nitrate exceeds 0.12. Similar reactions may occur during concentration of aqueous plutonium nitrate-nitric acid solutions containing solvent if the weight ratio of TBP to plutonyl nitrate exceeds 0.15. Nitric acid-TBP-water mixtures will also react violently if heated above 130°C for 68 wt% acid and 160°C for 22 wt% acid (Ref. 7).

These reactions may, under some conditions, be violent enough to rupture a concentrator. The conditions required for such a reaction are prevented in the Purex concentrators by design and operational safeguards. Steam pressure to the reboiler is set to limit the maximum temperature attainable, while instrumentation provides further safeguards by automatically shutting down a concentrator before potentially hazardous overconcentration can occur. Steam stripping of concentrator feed prior to concentration minimizes the TBP content of the concentrator bottoms. These safety precautions are discussed further in Section 4.5.3.

4.5.3 Uranium Concentration Process

As shown in Figure 4-7, the 2EU uranium product stream from the 2E column is concentrated in the 2EU concentrator (E-K4-1), which is a steam-heated, vertical-tube vessel surmounted by a water-cooled condenser (E-K4-2). This equipment is described in more detail in Sections 3.7 and 3.12 of Chapter 3.0. In normal operation, the 2EU solution is jetted continuously to the second bubble-cap tray from the top of the concentrator tower. As the 2EU stream flows down through the lower five trays in the tower, the 2EU stream is exposed to steam rising through the tower from the boiling liquid in the concentrator. This steam volatilizes, or strips, entrained or soluble organic material from the descending 2EU stream to keep organic material from entering the concentrator and possibly forming potentially explosive red oil.

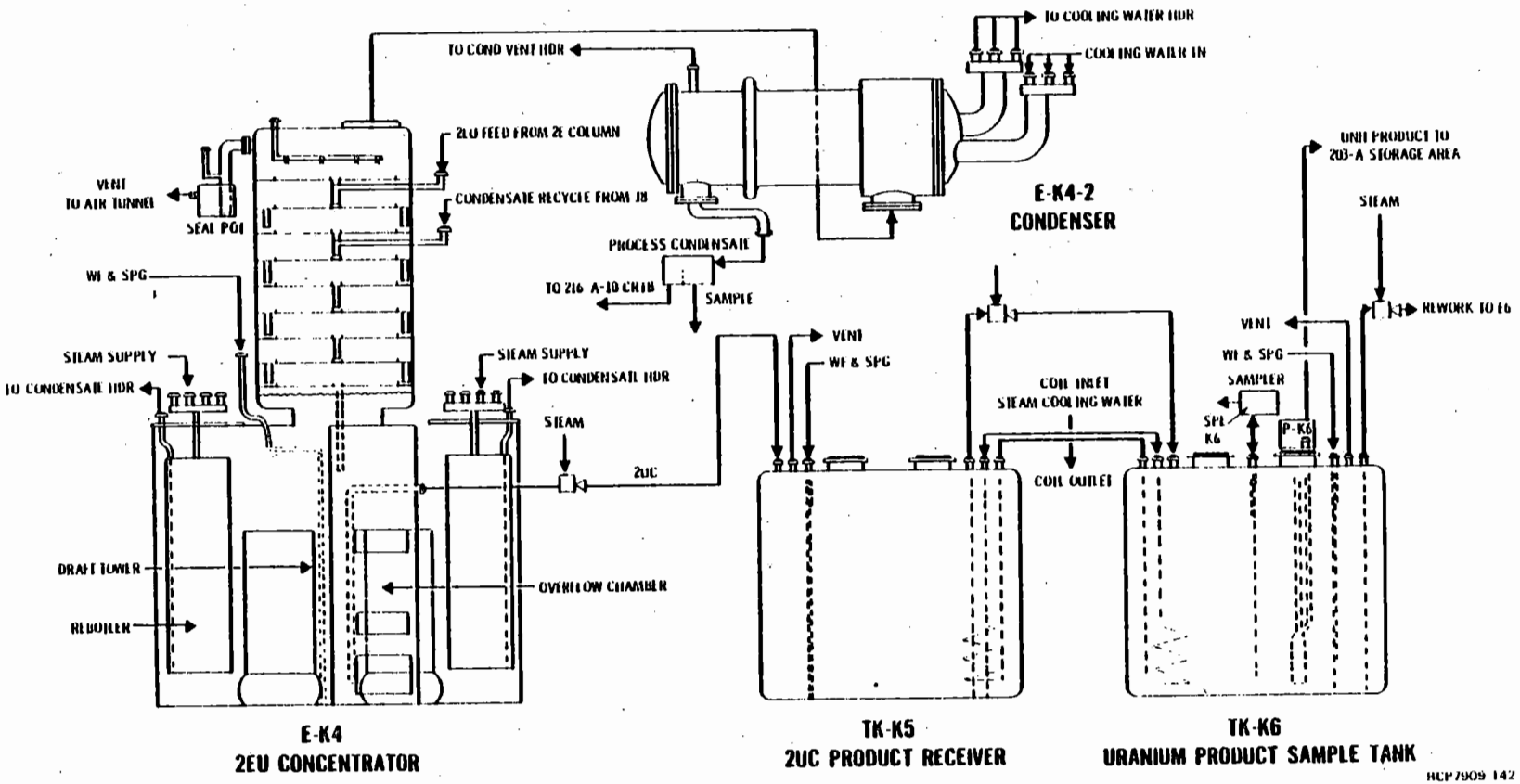

FIGURE 4-7. Uranium Concentration Process Flow Diagram.

The 2EU solution enters the central draft tube of the concentrator from the stripping tower and mixes with the concentrated solution as it is recirculated through the two vertical tube bundles in the reboilers. Upward flow of the solution through the tube bundles results from the boiling action in the steam-heated tubes, the solution being circulated from the top of the tubes and returning to the bottom of the tubes via the central downcomer (draft tube) section.

Entrained droplets of uranium solution are removed by impingement and gravity from the overhead vapors of the uranium concentrator to minimize the losses of uranium to the condensate. Liquid droplets entrained in the vapor jetting from the reboilers are partially removed by deflection by an impingement plate above the tubes. The vapor velocity is reduced to about 2 feet per second in the central chamber, permitting additional particles to drop out by gravity. Entrained droplets of concentrate are further removed by passing through the stripping section of the concentrator tower, where the flooded bubble-cap trays provide effective de-entrainment. The cumulative concentrate-to-overhead de-entrainment factor is on the order of 10^6.

Droplets of concentrator feed solution which are entrained at the feed plate are de-entrained from the vapors by the "dry" bubble-cap tray above the feed tray and the Raschig ring packing above the tray. The degree of de-entrainment is dependent on the superficial vapor velocity in the tower, which is relatively low with a tower of this large (9 feet) diameter.

The TBP stripping and de-entrainment functions of the tower are performed without specific controls, the liquid feed rate being determined by the controls of the 2E column, and the vapor feed rates being controlled by the reboiler controls.

The steam flow to the reboiler, and thus the rate of evaporation, is controlled by a flow recorder-controller with a set point that is continually readjusted by another recorder-controller which maintains a constant specific gravity for the reboiler contents (1.57 for the 2EU concentrator). This method of control permits the steam to establish whatever chest pressure (up to 29 psig) is required by the immediate operating conditions of processing rate, tube fouling, etc., and is insensitive to the relatively large changes of evaporation rate with small changes of steam chest pressure.

The 2EU is concentrated by a factor of about 7 to give a solution of 2.12M uranium. This concentrated uranium solution, called the 2UC, continuously overflows from a stilling chamber in the concentrator to the product receiver, or accumulator tank (TK-K5). From the product receiver tank, the 2UC solution is transferred in batches to the uranium product sample tank (TK-K6), where the product is agitated for 30 minutes and cooled to 50°C before sampling via a sample pot in the sample gallery. If the plutonium or FP content of the solution is above the product specifications (Ref. 8), the batch of uranium product solution must be segregated for blending, or

rework. After sampling and volume measurement, the uranium product (UNH) is pumped from TK-K6 to the 203-A area storage tanks. Final product handling and loadout are discussed in Section 4.9.

4.5.3.1 Concentrator Startup and Shutdown Sequences

The E-K4 uranium concentrator is started and shut down by a method which minimizes the hydrolysis of TBP. This is accomplished by introducing the solvent-laden aqueous solution from the 2E column only when steam is rising through the stripper at a rate sufficient to strip the TBP from the liquid before it reaches the concentrator reboilers.

The E-K4 uranium concentrator is placed in operation by the following procedure:

- The concentrator is filled to 3400 gallons with seal pot water.
- Cooling water flow to the condenser is started.
- The temperature of the concentrator contents is increased to the boiling point over a period of 30 minutes by manually controlling the steam flow to the reboiler tube bundles. The volume is maintained between 3200 and 3400 gallons by adding seal pot water.
- The flow of aqueous solution from the 2E solvent extraction column is started and slowly increased to flowsheet value. The seal pot water is then turned off.
- Steam flow to the tube bundles is adjusted as necessary to hold the liquid level below overflow until the specific gravity of the reboiler contents reaches the desired value.

The concentrator is shut down and cooled by the following procedure:

- Flow from the 2E solvent extraction column to the concentrator is stopped.
- Steam flow to the tube bundles is decreased to 10-15% of chart.
- Air pressure to the tube bundles is increased by very slowly opening the air PRV bypass valve until the high pressure steam cutoff is activated.
- The manual valves downstream of the steam PRV's and DOV's are closed.
- Air pressure to the tube bundles is maintained at 20 to 25 psig for 5 to 10 minutes and is then reduced to 10 to 15 psig by slowly closing the air PRV bypass valve.

- The steam flow controllers are set to zero on manual.
- After approximately 30 minutes, water flow to the condenser is turned off.
- The condensate DOV's are opened wide.
- Water to the tube bundles is turned on slowly to a total pressure of 20 to 25 psig until the concentrator contents cool to 50°C; water is then turned off.
- The air PRV bypass valve is opened to maintain an air pressure of 20 to 25 psig on the tube bundles for 10 to 15 minutes and is then closed.

4.5.3.2 Concentrator Instrumentation

Automatic controls are provided to prevent an overconcentration of UNH which may cause solidification of the UNH in the concentrator or a rapid reaction between nitric acid and solvent degradation products. This instrumentation includes alarms (both visual and audible) and automatic controllers which interrupt steam supply. Concentrator instrumentation is described in the following subsections.

4.5.3.2.1 Weight Factor Controls

- An indicator light flashes on and an alarm sounds if the weight factor goes above 227 inches of water in E-J8 or 240 inches in E-K4.
- An indicator light flashes on and an alarm sounds if the weight factor drops below 155 inches of water in E-J8 or 188 inches in E-K4.
- The steam supply is shut off to both reboilers in the affected concentrator if the weight factor falls to 76 inches of water in either E-J8 or E-K4.

4.5.3.2.2 Steam Pressure Alarms

- The steam supply is shut off to an individual tube bundle, and 10-psig air is turned on to the steam chest when the steam pressure of that tube drops to 10 psig. This sequence prevents concentrate from being sucked into the steam chest through any leaks in the reboiler tubes.
- The steam condensate valve for an individual tube bundle is closed if the steam pressure of that tube bundle drops to 15 psig.
- The steam supply is shut off to an individual tube bundle when the steam pressure to that tube bundle exceeds 29 psig.

4.5.3.2.3. Temperature Alarms

- An indicator light flashes on if the temperature of the concentrate exceeds 120.5°C.
- The steam supply to both tube bundles is shut off and an indicator light flashes on if the temperature of the concentrate exceeds 125°C.

4.5.3.3 Off-Standard Conditions

The detection and remedy of the most critical off-standard conditions associated with concentrator operation are described below, and are summarized in Table 4-19.

4.5.3.3.1 Fouling of Concentrator Tubes

Partial loss of evaporation capacity, as evidenced by an increased steam pressure required to maintain a given product concentration, may be an indication of reduced heat transfer coefficients due to scale formation in the reboiler tubes. If this condition becomes so severe that the desired evaporative capacity is not available at safe steam pressures, the concentrator is cleaned. In this operation, the concentrator is shut down, drained, and flushed thoroughly with water; scale-dissolving nitric acid solution is added via the spray ring in the top of the tower and recirculated by boiling. Solutions may be added at alternate locations, including T-J7 for flushing E-J8 and TK-K1 or T-K3 for flushing E-K4. After heat transfer rates have been re-established, the acid solution is transferred to the backcycle waste system.

4.5.3.3.2 Failure of Feed Supply

A failure of feed supply to the concentrator could cause an overconcentration of the UNH, and may be detected by a decrease in weight factor coupled with an increase in specific gravity. Such an overconcentration would normally be detected by observation of weight factor/specific gravity recorder charts before the safety devices shut off the steam in 15 to 30 minutes. In such a case, the steam should be shut off and the concentrator shut down until the feed supply can be restored.

4.5.3.3.3 Overconcentration of Uranyl Nitrate Hexahydrate (UNH)

If the UNH feed rate to a concentrator is reduced appreciably from a normal flow without a compensating reduction of steam flow, the uranium solution in the reboiler becomes more concentrated than normal, possibly to the point of solidification or even incipient calcination. Overconcentration may be detected by an increasing concentrate temperature as indicated by the temperature recorder, or by an increase in specific gravity as indicated by the specific gravity recorder. The condition may be corrected, if it has not proceeded too far, by increasing the rate of feed addition or by reducing the steam pressure and adding water, if the feed rate is very low. If overconcentration should result in scaling of the tubes or solidification of the solution, the unit must be flushed and cleaned out as described in Subsection 4.5.3.3.1.

TABLE 4-19. Uranium Concentration[a]- Off-Standard Conditions.

Off-Standard Condition	How Detected	Likely Cause	Detection of Cause	Remedy
A) Fouling of concentrator tubes	Partial loss in evaporator capacity	Reduced heat transfer coefficient due to scale formation in the concentrator tube bundles	Increased steam pressure required to maintain a given product composition	(1) Shut down concentrator for scale-dissolving nitric acid flush (2) Replace tube bundle
B) Failure of concentrator feed supply	Decrease in weight factor coupled with increase in specific gravity	(1) Failure of concentrator feed jets (from 1C or 2E column) (2) Process upset or shutdown	Flowmeter on 1CU or 2EU	Shut off steam until feed can be restored
C) Overconcentration of UNH	(1) Increasing reading on concentrator temperature recorder (2) Increase in concentrator specific gravity (3) Decrease in concentrator weight factor	Reduction in feed flow rate without a corresponding reduction in steam flow	Malfunction of the 1C (1CU) or 2E (2EU) column jets	(1) Increase feed rate to concentrator by increasing the flow rate of the 1CU or 2EU (2) Decrease the steam flow to the concentrator (3) Add water to the concentrator if the feed rate is very low (4) If tubes become scaled, clean as in "A"
D) Insufficient solvent removal in the steam stripping operation	(1) High phosphorous content in product (2) Visual inspection of samples from TK-K1 or TK-K5	(1) Excessive organic in concentrator a) Flooding of the C-type columns b) Excessive organic entrainment in the 1CU or 2EU stream (2) Reduced steam flow to the concentrator, resulting in abnormal reboiler operation a) Automatic shutdown due to overconcentration b) Mechanical failure of steam system (3) Use of alternate feed entry on the fourth tray provides too few stages for TBP removal	(1) Excess organic a) See solvent extraction off-standard conditions, Tables 4-14 and 4-15 b) Analysis of the 1CU or 2EU stream (2) Reboiler steam flow recorder	(1) See Tables 4-14 and 4-15 (2) Reduction in steam flow; shut off feed stream (3) Return feed entry point to second tray

[a]1CU (E-J8-1) or 2EU (E-K4-1) concentrators.

4.5.3.3.4 Insufficient Stripping

Inadequate solvent removal in the steam stripping operation (a) eliminates one of the safeguards against a rapid nitric acid-solvent reaction in the concentrators, (b) may require rework of non-specification product, and (c) may cause high product losses, poor decontamination, or foaming in subsequent processing steps. Insufficient stripping may occur when:

- Flooding of the C-type (single-purpose stripping) columns or excessive organic entrainment in the 1CU or 2EU stream introduces abnormal amounts of solvent to the concentrator.
- Loss of steam flow to the concentrator reboiler reduces steam flow to the stripping section.
- Excessive heat losses from the de-entrainment section cause reflux which returns TBP to the feed tray.
- The use of the alternate feed entry on the fourth tray down provides too few stripping stages for TBP removal.

Loss of steam flow to the stripping section occurs if the steam flow to the reboiler is lost by automatic shutdown due to overconcentration, or by mechanical failure of the steam line, valves, or instruments. Should the steam flow to the concentrator be interrupted, the feed stream should be shut off until the steam supply can be restored.

The reflux of condensate by heat losses from the de-entrainment section could return TBP to the feed plate when using the lower feed inlet point, when operating at very low concentration rates, or from a partial loss of insulation from the tower.

The lower feed inlet point provides less certainty of obtaining the desired removal of TBP, and is used only when the use of the upper feed inlet feed jet does not meet capacity requirements.

4.5.3.4 Process Safety and Criticality Prevention

Special procedures are provided and designed to minimize the radiation hazard of a suckback into the P and O gallery. This subject is covered in Section 4.4.10.

Close control of the 1C/2E column operation must be maintained to avoid loss of organic to the E-J8/E-K4 concentrator. Explosive mixtures of organic, nitric acid, and uranium could be formed if the concentrator high temperature limit were exceeded. A discussion of the adverse reactions that can take place in the concentrator, including red oil formation, is found in 4.5.2.2 and 4.5.2.3. These reactions are discussed in more detail in Chapters 7.0 and 10.0.

Under ordinary conditions, there are no criticality control problems associated with the uranium concentration process. Upsets in the partitioning cycle, however, could result in plutonium accumulations in the K Cell equipment, which would exceed limits and require recycle of the solution to the first decontamination cycle.

These potential problems can be controlled by shutting down the 2D and 2E columns before the TK-K1 plutonium content exceeds the column limit of 870 grams. Therefore, accumulation of plutonium in the 2EU concentrator or product tanks is not an important criticality prevention concern.

4.5.4 Properties and Compositions of Plutonium Product Solutions

Pertinent data concerning the plutonium product streams before and after concentration are tabulated in Table 4-20. Three streams are included, representing the 3B column product (3BP), the concentrated product from the stripper (PSC), and the nitrate product from the concentrator (PCP). The compositions may vary somewhat as a result of variations of flow rates, upstream concentrations, and operating temperatures. For reference and identification, the process flow diagram, Figure 4-8, may be consulted. The basis for the table values (Ref. 9) is a uranium processing rate of 10 tons per day, 12% Pu-240 (2435 MWd/t), Mark IV fuel.

TABLE 4-20. Physical Properties and Compositions of Plutonium Streams.

Component	3BP	PSC	PCP
Pu, M	0.12	0.63	1.46
Pu, g/ℓ	29.8	150.0	350.0
HNO_3, M	0.40	3.0	7.0
Properties			
Flow rate, gal/min[a]	0.11	0.022	0.0095
Temperature, °C	Ambient	120.0	122.0
Specific Gravity	1.055	1.26	1.64

[a]Based on processing of 10 tons of uranium per day from Mark IV fuel containing 1824 grams of plutonium (with 12% Pu-240) per ton.

9413275.0851

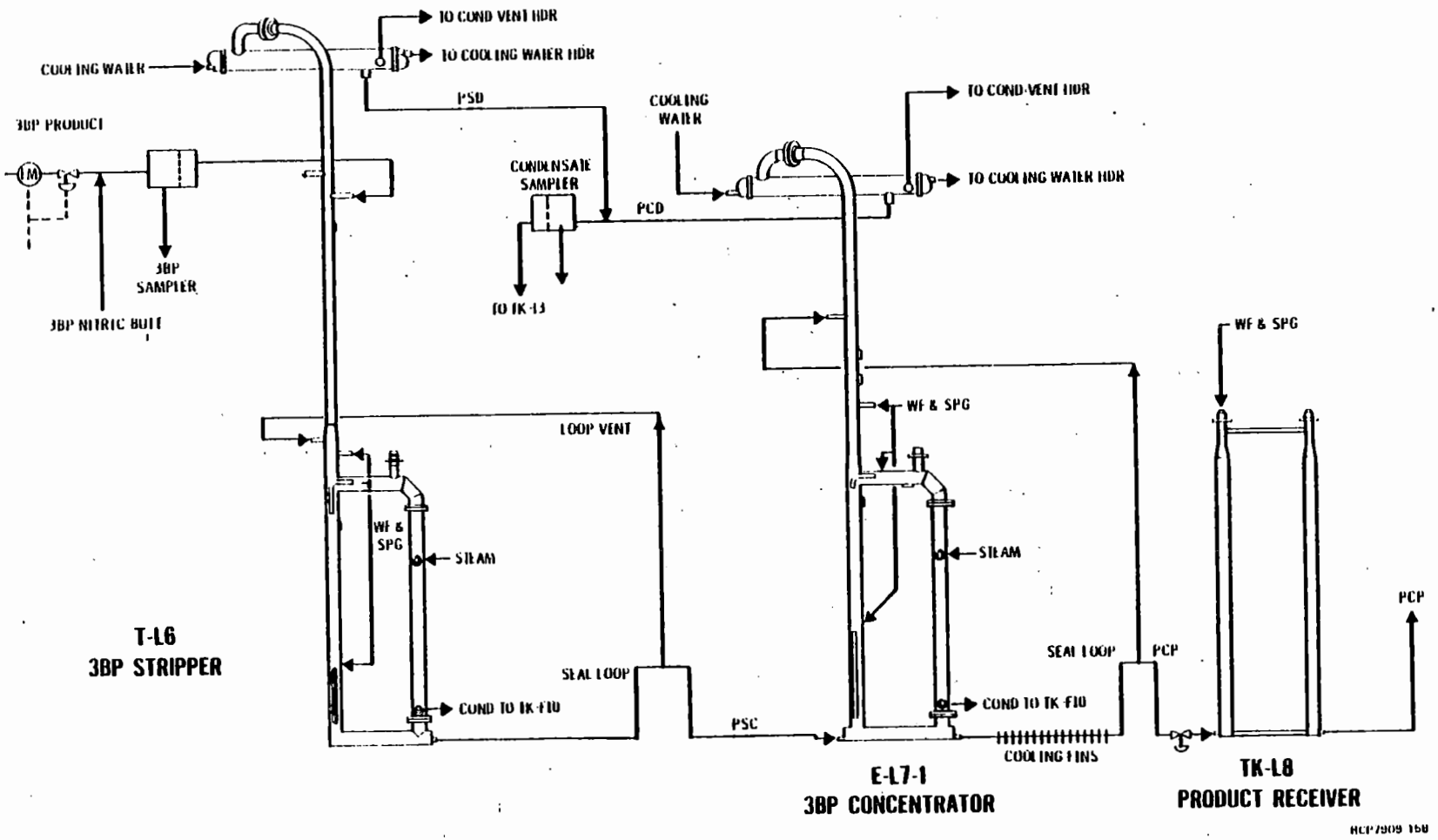

FIGURE 4-8. Plutonium Concentration Process Flow Diagram.

The plutonium content of the irradiated uranium varies with the integrated pile exposure level (MWd/t) of the fuel. Since the 3BP volume per ton of uranium processed is independent of the exposure level of the uranium, the plutonium concentration in the 3BP varies with the exposure level. This variation requires a varying degree of concentration of the 3BP in order to produce a constant plutonium product concentration.

The physical properties of dilute plutonium solutions depend almost entirely upon the nitric acid concentration. However, at higher plutonium concentrations, the effects are significant as illustrated by the following equation [accurate to ±5% (Ref. 10)] for specific gravity of plutonium nitrate solutions:

$$\text{Sp. Gr.} = 1 + (0.031)\ HNO_3\ \underline{M} + (0.00146)\ g\ Pu/\ell.$$

The effects of plutonium nitrate concentration upon the boiling point of nitric acid solutions and the nitric acid equilibrium are discussed in Section 7.2.

4.5.5 Chemistry of Plutonium Nitrate

Plutonium in the concentrators has a valence of four (Pu^{+4}) or six (PuO_2^{+2}). Plutonium (IV) may be associated with up to six nitrate ions in ionic complexes; plutonium (VI) may be complexed with up to two nitrate ions. The plutonium nitrates are very soluble in high concentrations of nitric acid; plutonium (IV) nitrate concentrations as high as 1200 g/ℓ (600 g Pu/ℓ) in 1.8$\underline{M}$ HNO_3 have been reported (Ref. 11). In plutonium nitrate solutions having a low concentration of nitric acid, the plutonium (IV) nitrate may partially hydrolyze to plutonium hydroxide, which may polymerize to form a complex molecule of high molecular weight.

This plutonium (IV) polymer is a positively charged colloid. Depolymerization may be accomplished by increasing the nitric acid concentration to 6 molar and heating at 90°C for 1 hour (Ref. 11). Once the polymer has formed, it can be precipitated at the elevated temperatures of the plutonium concentrators. However, the concentration of nitric acid in the plutonium concentration operation is sufficiently high to avoid hydrolysis or polymer formation. A further discussion of plutonium (IV) polymer is presented in Chapter 7.0.

Both dissolved and entrained TBP are present in the 3BP stream. The TBP is removed from the 3BP stream by steam stripping in the plutonium stripper, T-L6. This preventive measure minimizes the possibility of red oil formation or a rapid nitrate ion-TBP reaction in the plutonium stripper or concentrators.

4.5.6 Plutonium Concentration Process

As shown in Figure 4-8, plutonium is stripped from the organic phase by a countercurrent, low nitric acid stream in the 3B column. To prevent polymer formation during concentration, the 3BP product stream is continuously butted with concentrated nitric acid to give a ratio of 0.7 liter of 12.2M HNO_3 per liter of 3BP. This combined stream (PSF) is the feed to the plutonium stripper where the solution is concentrated by a factor of five. The stripper (T-L6) consists of a tower filled with Raschig rings above a thermosyphon reboiler. The PSF stream enters the upper section of the stripper and flows downward through the tower packing in contact with dilute nitric acid and water vapors formed in the reboiler section. Any traces of organic entrained in the 3BP stream are stripped by the vapor, and leave in the overheads (PSD).

The plutonium stripper is operated to maintain a steady specific gravity (1.26), and, assuming a constant 3BP flow, the specific gravity is controlled by the reboiler steam flow. Steam flow adjustments are made manually as the 3BP flow varies. Liquid level is maintained at the overflow level (equivalent to the height of the seal loop in the product exit line) by controlling the steam flow.

Entrained droplets of plutonium solution are removed from the overhead vapors during the stripping operation to minimize plutonium recycle in the condensate stream. The upper packed sections of the stripper remove these droplets from the rising vapors by impingement of the drops on the packing, with the separated liquid draining back to the reboiler section. The vapors are then condensed and recycled to the 3AF tank (TK-L3) so plutonium present in the process condensate is not lost from the plant.

The stripper product flows by gravity through a vented seal loop in the bottom of the vessel and enters the bottom of another thermosyphon concentrator (E-L7-1) for further concentration by a factor of two. The stripper and concentrator are nearly identical in design, except there is no Raschig ring packing in the concentrator tower. The second unit is provided because highly concentrated nitric acid would remain in the stripper reboiler if it alone were used to concentrate the plutonium. The high acid content decreases capacity, increases corrosion, and generally degrades the product.

The plutonium concentrator steady-state operation is similar to that of the stripper, with the specific gravity (1.64) controlled by manual adjustments of the steam flow. The specific gravity is watched very closely, as it is very sensitive to 3BP and PSC flow variations and can quickly overconcentrate. Steam flow adjustments are manual, but can be cut off automatically by low weight factor, high specific gravity, high vapor temperature, or low steam pressure alarms. The liquid level is maintained just below the overflow point, equivalent to the height of the seal loop in the product exit line, until the E-L7 solution has attained the desired specific gravity. The level is then allowed to build up to overflow to TK-L8.

The concentrator condensate is routed with the stripper condensate through a sample pot to the 3AF tank (TK-L3). The concentrator product (PCP) passes through an air-cooled, finned pipe and overflows into the receiver tank (TK-L8) until 32 liters of product are accumulated. From the receiver tank, the product is periodically vacuum-transferred to the PR room sample tank (TK-L9). Alternate empty-out routes which go to TK-L8 exist for both the stripper and concentrator. Final product handling and loadout are described in more detail in Section 4.9.

4.5.6.1 Plutonium Concentration Startup and Shutdown Sequences

Startup of the third plutonium cycle is not initiated until prestartup procedures have been completed, including a check of aqueous 3BX makeup, correct valving in the P and O gallery, and instrument operability, and filling the vessels with process solutions.

To start the T-L6 stripper and adjust to steady-state operation, cooling water is first turned on to the E-L6 condenser. The 3BP-HNO_3 DOV is opened and adjusted to give the specified flow rate to T-L6. The 3BX flow is diverted, by valving in the P and O gallery, from the 3B column (T-L5) to T-L6 to provide the aqueous flow for startup. The stripper is allowed to overflow to E-L7-1, and E-L7-1 to TK-L8 before introducing steam flow to either reboiler. When the concentrator liquid is overflowing to TK-L8, the steam is started to T-L6 and adjusted to the proper flow, based on operating experience, to achieve the liquid level buildup rate specified for TK-L8.

The concentrator is started by turning cooling water on to the E-L7 condenser, and then, when the T-L6 contents are boiling with the proper steam flow, steam is started to the concentrator reboiler. Steam flow and pressure are again adjusted based on experience to achieve the correct liquid level buildup in TK-L8.

Steady-state operation of the L6-L7-L8 system is established with synthetic 3BX feed before starting up the 3B column. During this time, when TK-L8 contains 32 liters of solution, the contents are transferred to TK-L9, and are then recycled to TK-L3 (3AF tank). Recycle to TK-L3 is minimized as much as possible by concentration of the E-L7-1 contents and allowing the liquid specific gravity to increase. When the 3B column is ready for startup, the 3BX is valved to the column, and the flow of aqueous product, 3BP, from the bottom interface of the column is started immediately by adjusting the loading pressure to the DOV. When the plutonium concentration builds up to 150 g/ℓ in TK-L9, the recycle from TK-L9 to TK-L3 is discontinued. As the specific gravity builds up to the flowsheet value, small adjustments in the stripper and concentrator steam flows may be necessary.

Shutdown of the L6-L7 operation is performed after the 3BP and 3BP-HNO_3 flows are turned off. The steam to T-L6 is turned off if the stripper is to remain filled during the shutdown. If T-L6 is to be emptied to TK-L8, the stripper contents are concentrated to a volume of

15 liters or a maximum specific gravity of 1.35 before the T-L6 steam is turned off. The steam to E-L7-1 is turned off when T-L6 stops overflowing. Air at about 10 psig is automatically supplied to the tube bundles when the steam is turned off. Cooling water flow to the condensers is then decreased to 10% of chart, and steam supply manual valves in the P and O gallery are closed.

4.5.6.2 Plutonium Concentrator Process Control

The major variables controlled by the T-L6 stripper operations include the following:

- Specific Gravity - When the 3BP flow is fairly constant, control of the specific gravity of the stripper bottoms is nearly self-sustaining. When necessary, however, the specific gravity is controlled by manually adjusting the steam flow to the stripper reboiler. A high specific gravity alarm (1.35) shuts off the steam.

- Steam Flow - When the 3BP flow varies, the steam flow is also varied with manual adjustments of the steam controller, which controls the DOV loading pressure. High steam pressure, low steam pressure, high vapor temperature, high specific gravity, or low weight factor alarms will shut off the steam.

- Steam Pressure - A high steam pressure alarm will shut off steam flow to the reboiler. A low steam pressure alarm closes the steam condensate valve. Steam pressure is controlled manually by the steam condensate flow control valve.

- Tower Differential Pressure (D/P) - The tower D/P is controlled by the reboiler steam flow and cooling water flow to the condenser.

- Liquid Level - The stripper liquid level must be maintained at overflow level by controlling steam flow. A low weight factor alarm shuts off the reboiler steam.

- Condensate Temperature - The condensate temperature is controlled at the specified value by adjusting the condenser cooling water flow.

- PSC Flow Rate - The product flow rate is controlled by 3BP, 3BP-HNO_3, and steam flows. The steam flow is adjusted to maintain the vessel solution level high enough to overflow to E-L7-1.

The plutonium concentrator (E-L7-1) requires these major controls:

- Specific Gravity - The bottoms specific gravity is controlled at 1.64 by manual adjustments of the reboiler steam flow. The specific gravity is very sensitive to 3BP and PSC flow variations,

and the solution is capable of being quickly overconcentrated without proper flow control.

- Steam Flow - The steam flow is adjusted manually to maintain the specified specific gravity value. Steam is cut off by low weight factor, high specific gravity, high vapor temperature, and high or low steam pressure alarms. Air at 10 psig is turned on to the tube bundle when the steam pressure drops to that level to prevent concentrate from being sucked into the steam chest through any leaks in the reboiler tubes.

- Steam Pressure - The steam pressure is controlled manually by a steam condensate flow control valve. High or low steam pressure alarms cut off steam flow.

- Vessel Pressure - The vessel pressure is controlled by the reboiler steam flow and/or cooling water flow to the E-L7-2 condenser.

- Liquid Level - The concentrator liquid level is maintained just below the overflow point until the solution has attained the desired specific gravity. The level is then allowed to build up to overflow. If desired, the liquid level can also be raised above the overflow point by closing, or partly closing, the PCP flow control valve. Normally, this valve remains open. A low weight factor alarm shuts off the steam flow.

- Condensate Temperature - The condensate temperature is controlled at the specified value by condenser cooling water flow adjustments.

- PCP Flow Rate - The concentrator product flow is controlled by the PSC rate, reboiler steam flow, and/or PCP valve control. The normal procedure is to allow the concentrator bottoms to overflow with the steam flow adjusted to give the required solution specific gravity.

Controls imposed on TK-L8 include:

- Temperature - The PCP is cooled before it reaches TK-L8 by heat transfer fins on the piping between E-L7 and TK-L8. No direct control is possible, other than slowing the PCP flow rate.

- Liquid Level - Tank L8 level is allowed to build up to 32 liters before transferring the product batch to TK-L9.

- Vent Vacuum - During normal product accumulation, TK-L8 is maintained under vacuum via connection to the condenser vent header, but must be switched to the vessel vent header during product transfer to TK-L9 so that sufficient differential pressure between L8 and L9 can be developed for the vacuum transfer.

4.5.6.3 Off-Standard Conditions

Conditions may exist during plutonium concentration operations which result in equipment malfunctions and product solution which does not meet specifications. These conditions and their remedies are described below, and are summarized in Table 4-21.

4.5.6.3.1 Plutonium Product Solutions

Plutonium product solutions failing to meet the specifications for uranium or FP content are detected by analysis of the solutions in the plutonium sampler tanks before the solutions are loaded out or transferred to the Purex Plutonium Oxide Production Facility. Upon detection, such solutions are drawn back into the vacuum tank (TK-L11) and jetted to the HAF makeup tank (TK-E6) with a 3 gal/min capacity jet. Rework of off-standard plutonium product is discussed in Sections 4.4 and 4.10.

4.5.6.3.2 Inadequate Stripping

The inadequate removal of solvent in the steam stripping operation in T-L6 may leave an accumulation of TBP hydrolysis products in the plutonium concentrate and increase the potential for a rapid, possibly explosive, nitrate ion-TBP reaction in the plutonium concentrator. Insufficient stripping is possible when abnormal amounts of solvent enter the stripper with the 3BP, either through emulsification or flooding in the 3B column; or a reduced steam flow to the stripper results in abnormal reboiler operation. Off-standard 3B column operation is detected and remedied as outlined in Section 4.4.11.

Steam flow to the reboiler can be lost by automatic shutdown due to overconcentration or by mechanical failure of the steam line or instruments. In such a case, the TBP-containing 3BP stream should be stopped by shutting down the solvent extraction solution flows.

4.5.6.3.3 Plugging of Stripper Packing

Plugging of the packed section of the stripper, as indicated by an increase in the column differential pressure, may occur if plutonium polymerizes due to low nitric acid concentration in the feed and if plutonium is held up in the packing. Control of the 3BP-HNO_3 flow at rate sheet values prevents polymer formation, and periodic washdowns remove deposited solids before the packing is plugged. Should the packing become partially plugged, the solids are removed by washing down the packing with chemical solutions added at the top of the stripper, or by boiling 57% nitric acid in the unit for about an hour.

9413275.0858

TABLE 4-21. Plutonium Concentration - Off-Standard Conditions.

Off-Standard Condition	How Detected	Likely Cause	Detection of Cause	Remedy
A) Overconcentration in the stripper or concentrator	(1) Increasing concentrator bottoms temperature (2) Increase in concentrate specific gravity coupled with (3) Increase in the concentrate weight factor at overflow volume (4) Sudden decrease in concentrate weight factor	(1) Low feed flow rates (PSF or PSC) (2) High steam flow rate	(1) Upset in solvent extraction system (2) Steam flow instrumentation	(1) Increase feed flow rate (2) Reduce steam flow rate to the concentrator (3) Dilute concentrator contents with nitric acid
B) Inadequate removal of solvent in the steam-stripping operation (I-L6)	Analysis of final plutonium product for phosphorous from TBP	(1) Abnormal amounts of solvent enter the stripper through the 3BP a) Emulsification b) Flooding of the 3B column (2) Reduced steam flow to the stripper, resulting in abnormal reboiler operation	← See off-standard condition "A" third plutonium cycle, Table 4-17 →	
			(2) Steam flow instrumentation	(2) Increase steam flow
C) High uranium or fission product contamination of plutonium product	Analysis of plutonium sampler tanks	(1) Malfunction of the partition cycle (2) Flooding or malfunction of the plutonium cycle columns (3) 1BS or 2BS flow may be low (U); 2AS or 3AS flow may be low (FPs)	← For extraction column malfunctions See partition cycle, plutonium cycle, off-standard conditions in Tables 4-14, -16, and -17 →	
			(3) Flowmeters	(2) Route off-specification product from TK-L9 to the HAF makeup tank (TK-E6) via the vacuum transfer tank (TK-L11)
D) Stripper packing plugged	High DP across packed section	(1) Solids deposited on packing due to low HNO_3 concentration (2) Flooding of packed section	(1) 3BP-HNO_3 flowmeter (2) Increase in stripper differential pressure readings	(1) Increase 3BP-HNO_3 rate (2) Wash down packing with nitric acid solution (3) Boil 57% nitric acid in the stripper for an hour or more

4.5.6.3.4 Overconcentration

Overconcentration in the stripper or concentrator may be detected by: an increasing concentrate temperature, as indicated by the temperature recorders in the unit; an increase in specific gravity, as indicated by the specific gravity recorders; or a decrease in the weight factor, as indicated by the weight factor recorder-controller. The condition may be corrected by reducing steam pressure, increasing feed flow, and/or diluting the concentrator contents with nitric acid. A high specific gravity alarm or a low weight factor alarm shuts off the steam to prevent further concentration.

4.5.6.4 Criticality Prevention

The maximum concentration of plutonium in the L Cell vessels is limited to 1700 g/gal (450 g/ℓ) by a criticality prevention specification (Ref. 12). A second specification limits the maximum plutonium mass in the SLA sump plus the contents of any single L Cell vessel to 50 kg.

The E-L7 concentrator must be controlled to avoid concentrating the PSC material in excess of the specification of 450 g/ℓ. The E-L7 specific gravity must be controlled at the ratesheet value (1.64) or overconcentration of the nitrate solution may result. Although a high specific gravity alarm will shut off the concentrator steam at a specified set point, this instrumentation is not relied upon alone. Whenever the overflow (PSC) from the T-L6 stripper is cut back or stopped, the E-L7 steam flow is immediately decreased. The PSC flow rate is determined, in part, by the 3BP, 3BP-HNO_3, and the T-L6 steam flow rates, so the effects of changes in those flows must be anticipated and compensated for in E-L7.

Polymer formation in the packed section of the stripper tower, as described in Subsection 4.5.6.3.3, must be prevented since polymer can be entrained to the condenser vent system and collect in geometrically unfavorable vessels. Control of the stripper solution acidity by regulation of the 3BP-HNO_3 flow rate prevents polymer formation.

4.5.6.5 Process Safety

The T-L6 stripper contents must be boiling before adding 3BP, which has contacted organic in the 3B column. This boiling is required to strip the organic from the entering solution with the rising vapors. Thus the organic is prevented from reaching the concentrating sections of T-L6 and E-L7 where potentially explosive red oil could be formed.

4.6 BACKCYCLE WASTE AND NEPTUNIUM RECOVERY

The aqueous waste streams from the second plutonium cycle, the final uranium cycle, and the neptunium recovery system are concentrated via the backcycle system, with part of the concentrated waste (3WB) being recycled to the HA column and the rest being fed to the neptunium recovery

system. After recovery, the neptunium is purified by ion exchange prior to nitrate product loadout. The Purex process flow diagram, Figure 4-1, shows how the neptunium and backcycle waste recovery systems fit in the overall process.

Final product handling and loadout are covered in Section 4.9, with neptunium technology covered in Chapter 8.0. A detailed description of backcycle and neptunium processing equipment is given in Chapter 3.0.

4.6.1 Neptunium Recovery Cycle

The operation of the neptunium recovery (second neptunium) cycle is a three-part transient process. The cycle serves to accumulate neptunium from the backcycle waste streams during Phase I operation. Neptunium is separated from FP's, uranium, and plutonium during Phase II operations, and a feed stream is provided for the neptunium ion exchange purification process during Phase III.

4.6.1.1 J Cell Equipment Package

The second neptunium cycle was added to the Purex Plant in 1962. The processing equipment is contained in the J Cell package, a compact assembly of two tanks, two solvent extraction pulse columns, assorted jumpers, and structural supports. The flow diagram, Figure 4-9, illustrates the primary process routes, vessels, and some instrumentation of the J Cell package.

4.6.1.2 Three-Phase Process Description

The neptunium accumulation and decontamination processes are accomplished in a manner similar to previously discussed solvent extraction operations. The three-phase process used for the second neptunium cycle is discussed in the following sections. A schematic flow diagram of each phase is shown in Figure 4-10.

4.6.1.2.1 Phase I

Descriptions of liquid streams for Phase I are given in Table 4-22. The 3WB stream, pumped from Tank J1, is routed in two directions. About 57% of the flow is returned to the HA column, while the other 43% is piped to the second neptunium cycle feed tank (TK-J21) and becomes part of the 2NF feed stream. From the feed tank, the aqueous 2NF is pumped to the 2N column, a dual-purpose extraction-scrub column, through an external distributor ring containing nozzles penetrating the column wall above the extraction section.

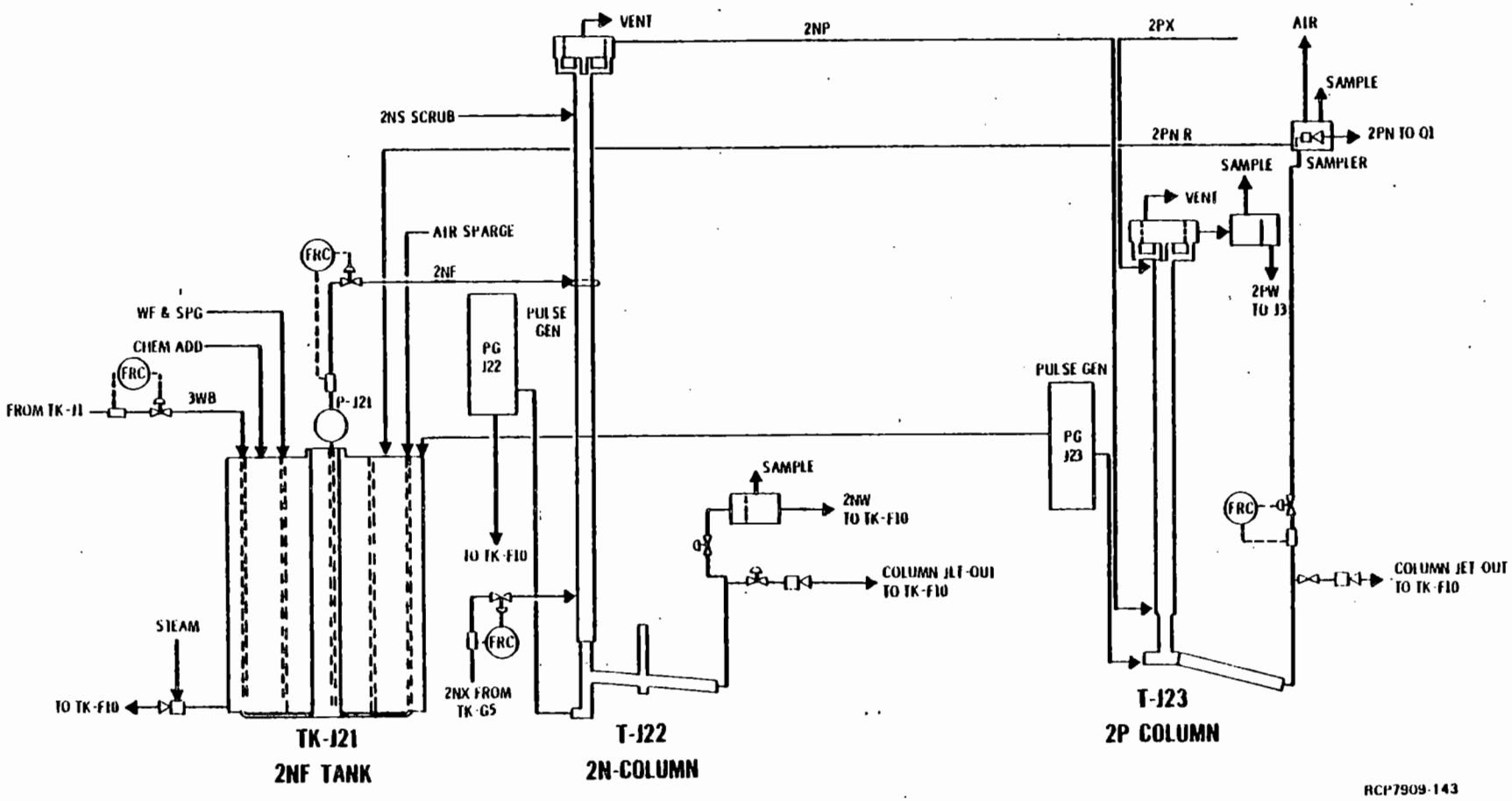

FIGURE 4-9. Second Neptunium Cycle Process Flow Diagram.

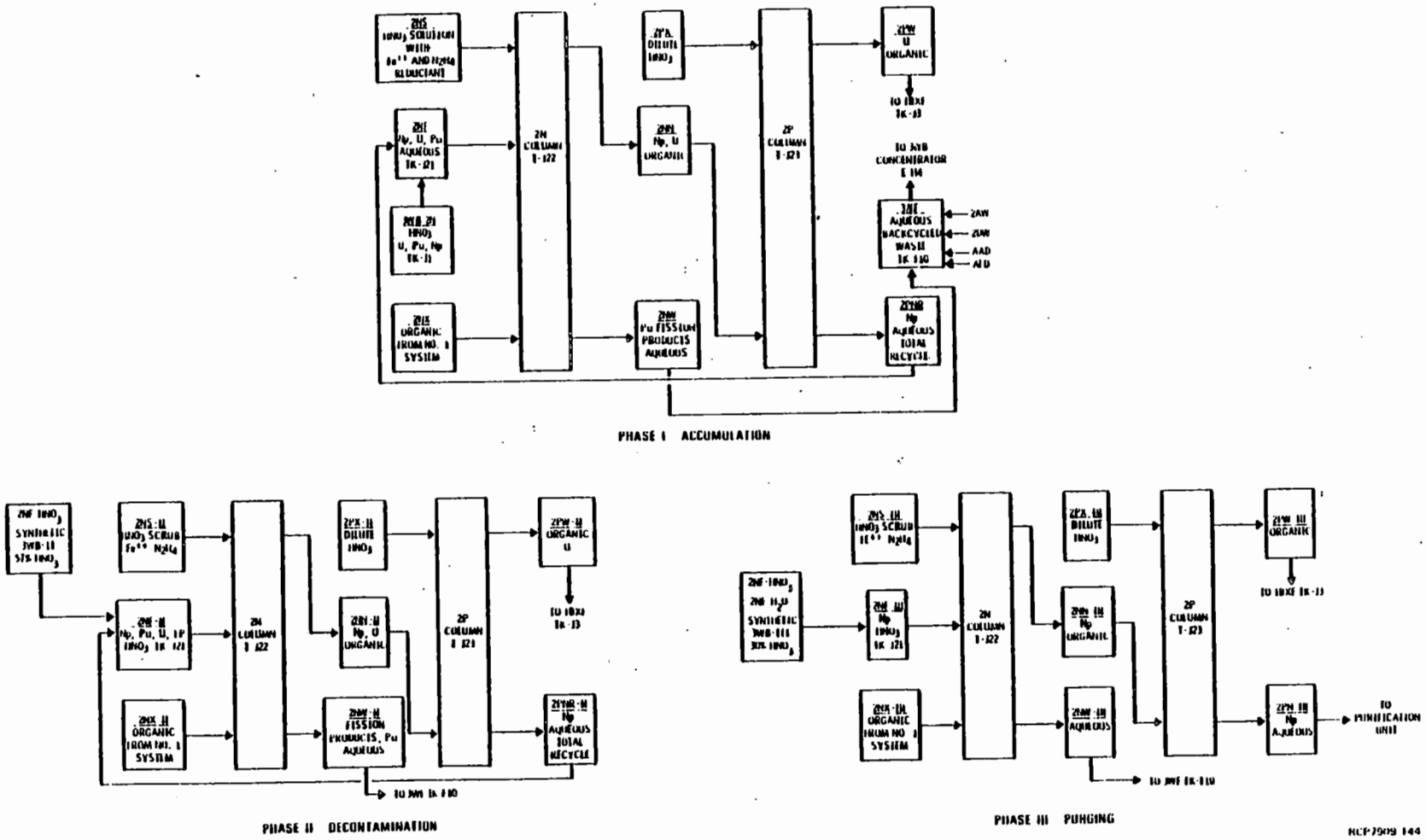

FIGURE 4-10. Second Neptunium Cycle -- Phase I, II, III Operation Flow Diagram.

TABLE 4-22. Second Neptunium Cycle Process Streams - Phase I.

Stream	Composition[a]	Function	Flow, gal/min
3WB	HNO_3 - 7.7M U - 0.07M Pu - 0.035 g/gal Np - Variable	Neptunium feed stream to TK-J21 from backcycle waste system	2.7
2NF (I)	HNO_3 - 5.9M U - 0.07M Pu - 0.028 g/gal Np - Increasing	2N column feed stream made up of 3WB and 2PNR	3.7
2NS	HNO_3 - 2M Fe^{++} - 0.025M N_2H_4 - 0.05M $NH_2SO_3^-$ - 0.05M	2N column scrub stream -- reducing agents for Pu(+3) and Np(+4) valence adjustments	0.67
2NX	TBP - 30% HNO_3 - 0.01M	2N column extractant stream from organic header 1	3.4
2NW	HNO_3 - 5.0M Pu - 0.021 g/gal Np - 0.0002 g/gal Fe^{++} - 0.004M SO_4^{--} - 0.008M	2N column waste stream routed to backcycle waste collection tank (TK-F10)	4.3
2NN (2PF)	TBP - 30% HNO_3 - 0.4M Pu - 0.002 g/gal U - 0.08M Np - Increasing	2N column neptunium stream -- 2P column feed stream	3.4
2PX	HNO_3 - 0.01M	2P column aqueous strip stream	1.0
2PNR	HNO_3 - 1.3M U - 0.08M Pu - 0.008 g/gal Np - Increasing	2P column neptunium product stream (recycled to TK-J21)	1.0
2PW	TBP - 30% U - 0.05M Np - 0.01 g/gal	2P column organic waste stream routed to 1BX column feed tank (TK-J3)	3.4

[a]The neptunium concentration increases in feed and product streams to a maximum of about 14 g/gal in the 2PNR due to recycle. The 3WB neptunium concentration also varies depending upon the amount of neptunium in the fuel, length of processing campaign, and other factors, but is commonly about 0.06 g/gal. Process streams also contain FP's (primarily Zr-Nb-95 and Ru-Rh-106) at concentrations up to 0.1 Ci/gal. These quantities are not listed in this or subsequent tables, as 1 Ci/gal of Ru-Rh-106 represents only 0.0003 g/gal, for example.

The 2NF is dispersed as tiny droplets into the continuous organic phase. The 2NX organic stream from solvent treatment system No. 1 enters the column via an external distributor ring located just below the extraction section. The aqueous droplets, depleted of neptunium and uranium in the extraction section, coalesce to form an aqueous layer, called the 2NW, in the bottom disengaging section ("beavertail"), which is designed for criticality prevention.

A reducing atmosphere is attained in the 2N column by the 2NS (2N column scrub stream), which contains ferrous sulfamate (source of Fe^{++}) and hydrazine (N_2H_4), both reducing agents. The hydrazine and sulfamate ion protect the reducing ability of the Fe^{++} ion by reacting with, or killing, oxidizing agents such as nitrite ion. The neptunium is reduced to the extractable valence of +4; plutonium is reduced to the nearly inextractable valence of +3; and the valence of uranium remains unchanged at +6. These valence adjustments allow most of the neptunium and uranium in the 2NF to be extracted into the organic stream and keeps most of the plutonium in the aqueous phase.

To enhance neptunium extraction into the solvent, 6M HNO_3 is present in the 2N column. However, the acid concentration must be controlled to limit acid carryover to the 2P column, where excess acidity inhibits stripping of the neptunium back into the aqueous phase.

The uranium saturation level of the organic must be maintained at less than 40% so there are enough free TBP molecules available to extract the neptunium.

The organic stream containing the extracted neptunium and uranium forms the 2NN in the annular top disengaging section. The 2NN overflows from the 2N column to the bottom of the 2P column, a single-purpose strip column operated with the aqueous phase continuous. The 2P column aqueous-continuous phase is a very dilute nitric acid solution furnished by the 2PX. The organic feed (2PX) is dispersed into tiny droplets with neptunium being stripped into the aqueous, leaving most of the uranium in the organic phase. The neptunium-depleted organic, termed 2PW (2P column waste), accumulates in the top annular disengaging section, and flows to the 1BX column feed tank (TK-J3), where the neptunium-depleted organic is blended into the 1BXF organic stream for reprocessing through the partition cycle. This recycle allows recovery of the uranium from the 2PW.

The aqueous stream containing the stripped neptunium, termed 2PNR (2P column neptunium recycle stream) descends to the bottom "beavertail" disengaging section, and is routed by gravity flow back to the 2N column feed tank (TK-J21). Before the 2PNR enters TK-J21, the 2PNR stream is mixed with the incoming 3WB stream in a horizontal 4-inch-diameter by 4-foot-long pipe section.

The 2NF stream is a combination of material from the backcycle waste system and recycled neptunium product solution (3WB and 2PNR) during Phase I operation. Plutonium exits the system via the 2NW, uranium via the 2PW, while neptunium accumulates and recycles through the system.

Decontamination accomplished by this mode of operation (Phase I) is not sufficient to allow the neptunium product solution to be routed to the neptunium ion exchange unit for further processing. Therefore, Phase I operation is continued until a specified amount (usually 1800 to 2000 grams) of neptunium is accumulated in the system; then a final decontamination process, Phase II, is initiated.

4.6.1.2.2 Phase II

Phase II operation is very similar to Phase I, except the 3WB flow (the source of new plutonium, uranium, neptunium, and FP's) to the 2N column feed tank (TK-J21) is discontinued and replaced by a lower volume 57% nitric acid stream. As Phase II progresses, the amount of plutonium, uranium, and FP's associated with the recycled product solution (2PNR) gradually decreases. The required duration of Phase II operation (generally 12 to 24 hours), is determined by the 2PNR uranium concentration, which should be less than 0.05 lb/gal prior to transfer to the neptunium ion exchange unit. During this period, the plutonium concentration also decreases to the desired value of less than 1 gram plutonium per 1000 grams neptunium. When this point is reached, Phase II neptunium decontamination is complete and Phase III operation begins.

Table 4-23 describes the liquid streams involved in the system during Phase II operation.

4.6.1.2.3 Phase III

Phase III operation involves the removal of neptunium from the J Cell package equipment and transfer to the neptunium ion exchange unit (Q Cell). A 30 wt% nitric acid stream is fed to TK-J21 and then to the 2N column (T-J22). Recycle of 2PN to TK-J21 is discontinued, and flow rates of all streams are greatly reduced. The 2PN is transferred by air jet to the Q Cell concentrator feed tank (TK-Q1). As Phase III progresses, the neptunium concentration in the system is gradually reduced by this strip transfer mechanism. When the neptunium concentration is diminished to less than 1.0 g/gal (target value is 0.1 g/gal), Phase III is discontinued and Phase I is started once again.

Table 4-24 describes the liquid streams involved in the process during Phase III operation.

4.6.1.3 J Cell Package Startup and Phase Transitions

Startup of solvent extraction columns is covered in detail in Section 4.4, and will not be included here, as the 2N and 2P columns are similar in operation to the 2A and 2B columns of the second plutonium cycle. Startup of the J Cell columns in relation to the rest of the Purex process is also discussed in that section.

The transition from one operating phase to another is primarily an adjustment of flow rates and restarting or discontinuing some streams.

TABLE 4-23. Second Neptunium Cycle Process Streams - Phase II.

Stream	Composition[a]	Function	Flow, gal/min
Syn 3WB-II	HNO_3 - 12.2M	Nitric acid solution to take place of 3WB during Phase II	0.92
2NF	Np - 1.9 g/ℓ U, Pu, & FPs - decreasing HNO_3 - 5.4M	2N column feed stream made up of 2PNR (Recycled neptunium product stream) and Syn 3WB	2.2
2NS	HNO_3 - 1.27M Fe^{++} - 0.017M N_2H_4 - 0.07M $NH_2SO_3^-$ - 0.034M	2N column scrub stream -- reducing agents for Pu(+3) and Np(+4) valence	0.87
2NX	TBP - 30% HNO_3 - 0.01M	2N column extractant stream from organic header 1	2.6
2NW	Pu - decreasing HNO_3 - 4.0M Np - 0.0002 g/ℓ Fe^{++} - 0.005M SO_4^{--} - 0.01M	2N column waste stream routed to backcycle waste collection tank (TK-F10)	3.1
2NN (2PF)	TBP - 30% Np - 1.7 g/ℓ U, Pu, FPs - decreasing HNO_3 - 0.3M	2N column neptunium stream; 2N column feed stream	2.6
2PX	HNO_3 - 0.01M	2P column aqueous strip stream	1.3
2PNR	Np - 3.3 g/ℓ U, Pu, FPs - decreasing HNO_3 - 0.6M	2P column neptunium product stream (recycled to TK-J21)	1.3
2PW	TBP - 30% U - decreasing Np - 0.001 g/ℓ	2P column organic waste stream routed to 1BX column feed tank (TK-J3)	2.6

[a]During Phase II, the columns are operated to give essentially 100% neptunium recycle resulting in essentially constant neptunium concentrations. However, the concentrations of uranium, plutonium, and FP's decrease due to desired losses via the 2PW and 2NW streams.

TABLE 4-24. Second Neptunium Cycle Process Streams - Phase III.

Stream	Composition[a]	Function	Flow, gal/min
Syn 3WB-III	HNO_3 - 5.6M	Nitric acid solution to take place of 3WB during Phase III	1.8
2NF (III)	Np - decreasing HNO_3 - 5.6M	2N column feed stream -- made up of Syn 3WB and 2NF-II heel in TK-J21	1.8
2NS	HNO_3 - 1.27M Fe^{++} - 0.017M N_2H_4 - 0.017M $NH_2SO_3^-$ - 0.034M	2N column scrub stream -- reducing agents for Pu(+3) and Np(+4) valence adjustments	0.33
2NX	TBP - 30% HNO_3 - 0.01M	2N column extractant stream from organic header 1	1.1
2NW	HNO_3 - 4.8M Fe^{++} - 0.003M Np - 0.0002 g/ℓ SO_4^{--} - 0.005M	2N column waste stream routed to backcycle waste collection tank (TK-F10)	2.1
2NN (2PF)	TBP - 30% Np - decreasing	2N column neptunium stream, 2P column feed stream	1.1
2PX	HNO_3 - 0.01M	2P column aqueous strip stream	0.50
2PN	HNO_3 - 0.7M Np - decreasing	2P column neptunium product stream to TK-Q1	0.50
2PW	TBP - 30% Np - 0.001 g/ℓ	2P column organic waste stream routed to 1BX column feed tank (TK-J3)	1.1

[a]The feed (2NF) is continuously diluted with synthetic 3WB resulting in a decreasing neptunium concentration.

4.6.1.3.1 Phase I to Phase II Transition

Transition to Phase II is normally not initiated until the neptunium content in the 2PN stream reaches about 14 g/gal, or a batch total of 2000 grams. The Phase I to Phase II transition is made gradually (approximately 90 minutes for total changes).

During routine operation, the 2N (J22) and 2P (J23) column interface recorder-controllers are placed on automatic to control the 2NW and 2PX flows, respectively. During phase transitions, these controllers must be placed in the manual mode to permit major flow rate changes. To maintain the 2N (J22) column interface on manual control, the 2NW valve loading pressure is adjusted to hold the interface reading constant. Maintaining the 2P (J23) column interface on manual control requires small increases in the 2PX flow if the interface decreases, or small decreases in the 2PX

flow if the interface increases above 50%. In addition, the following sequential steps are required:

- Decrease the 3WB-2N flow slowly over a 5-minute period, so that the HA column is not upset by a rapid change in the 3WB-HA flow.
- Turn on the nitric acid flow to 2NF (J21) tank to the flowsheet value.
- As the 2N column shows a lower uranium concentration (2N column scrub D/P begins to decrease), the Phase II 2NS scrub solution is added from AMU Tank 220/221 to the column.
- Commence transition to Phase II flow rates as follows: (a) Make rate changes in small increments taking approximately 90 minutes to reach the new values. Manually control the 2N and 2P column interfaces closely to prevent organic loss to 3WF (F10) tank, and aqueous to 1BXF (J3) tank. (b) Make flow changes in steps indicated on the flow rate sheet to maintain an equal organic-to-aqueous flow ratio throughout the transition. Increase the pulse frequencies of the 2N (J22) and 2P (J23) columns to maintain adequate mixing at the reduced volume throughput rates.

4.6.1.3.2 Phase II to Phase III Transition

Transition to Phase III is not initiated until the neptunium purification unit (Q Cell) is ready to receive the 2PN product stream and the 2PN analyses are satisfactory. The Q Cell concentrator must be operating in a satisfactory manner, and TK-Q1 and TK-Q3 must be available to receive the 2PN stream. Phase II to Phase III transition is also a gradual change (approximately 45 minutes for total flow changes). The following sequential steps are required:

- The flow rate adjustments to the 2NF-H_2O, 2NF-HNO_3, 2NF, 2NS, 2NX, 2PX, and 2PN are begun.
- Flow ratios are maintained as indicated on the flow rate sheet by stepwise flow changes.
- Time elapsed for total rate changes is approximately 45 minutes.
- Following the rate adjustments, run the system at these reduced rates for approximately 30 minutes before proceeding.
- Confirm that the plutonium content of the 2PN stream is less than 1×10^9 counts/min/gal ($\sim$0.01 g/gal).
- Purge the supply air to the 2PN jet to the cell atmosphere for approximately 60 seconds to remove any buildup of solids in the air line that may plug the 2PN jet to Q Cell.

- Open the air to the 2PN jet to Q Cell to its maximum pressure by increasing the air pressure with the controller. Time elapsed between turning on the 2PN jet and the arrival of the 2PN in TK-Q1 in Q Cell is approximately 45 minutes.

- Make necessary adjustments to the 2PN flow to Q Cell to avoid overloading the Q Cell concentrator. Adjust the 2PN flow rate to Q Cell by adjusting the 2PX flow controller, not by changing the 2PN jet air pressure.

4.6.1.3.3 Phase III to Phase I Transition

At the completion of Phase III, the J Cell package has been stripped of approximately 90% of the neptunium. At this time, the J Cell package can be shut down, or, if more neptunium is available in the backcycle, the flow rates of the package can be adjusted back to Phase I rates, and accumulation of neptunium can be resumed.

The general outline for resumption of Phase I is as follows:

- Divert the product stream (2PN) from Q Cell to the 2NF tank.

- Increase the concentration of the scrub stream (2NS) to Phase I specifications.

- Adjust flow rates of the feed (2NF), scrub (2NS), extractant (2NX), strip (2PX), and product recycle (2PNR) to Phase I rates.

- After reaching steady-state conditions, divert about 43% of the 3WB to the 2NF tank (TK-J21).

4.6.1.4 J Cell Process Safety

Few process hazards exist during J Cell operation. Operating personnel do not come in contact with equipment, except that in the control room, so there is little danger of physical injury.

A suckback from the canyon equipment to the P and O gallery is prevented by careful operation of valves or other equipment in the P and O gallery, and especially when removing air from the pulse leg prior to startup.

Close control of the 2N column interface should be maintained during the phase transition periods to avoid the loss of organic to the 3WF (F10) tank, since potentially explosive organic degradation products, including red oil, may be formed if the organic reaches the 3WB concentrator (E-H4-1).

4.6.1.5 J Cell Criticality Prevention

The second neptunium cycle equipment, known as the J Cell package, is of geometrically favorable design for criticality prevention. The 2NF tank has an annular solution space moderated by concrete to prevent criticality if plutonium solutions are added to the tank. The columns (J-22 and J-23) are the same size as the second plutonium cycle columns. However, these vessels are restricted to containment of solutions with a maximum plutonium concentration of 6 g/ℓ, as the vessels are located over the geometrically unfavorable J Cell sump and the SJ2 deep sump.

Plutonium leaving the J Cell package either returns to the backcycle waste system or is transferred to the neptunium purification unit in Q Cell. These routings also impose some plutonium concentration limits in the second neptunium cycle equipment which are more restrictive than would be required by the geometry of the equipment alone. The plutonium content of the 2PN stream must be less than 1×10^9 counts/min/gal (~0.01 g/gal) as verified by analysis during each shift to ensure criticality prevention in the Q Cell equipment.

4.6.1.6 J Cell Off-Standard Conditions

Identification, detection, causes, and remedies for the most common off-standard processing conditions encountered during neptunium solvent extraction are outlined in Table 4-25.

4.6.2 Neptunium Purification

The purification process in Q Cell is the fourth phase of the neptunium recovery and purification system. During Phase III, the neptunium is stripped from the J Cell package and jetted to the receiver (and feed tank to the 2PN stripper-concentrator) tank in Q Cell. This is the beginning of the batch anion exchange process for neptunium purification. The individual operations required are described in this section.

Neptunium concentration and ion exchange purification technology are documented in Chapter 8.0. Handling and loadout of the neptunium product are described in Section 4.9. The Q Cell process flow diagram, Figure 4-11, and Table 4-26, which describes the Q Cell streams, are presented for reference with the following sections on neptunium purification.

9413275.0871

TABLE 4-25. Second Neptunium Cycle - Off-Standard Conditions.

Off-Standard Condition	How Detected	Likely Cause	Detection of Cause	Remedy
A) High neptunium loss in the 2NW	Analysis of the 2NW for neptunium	(1) Flow rates a) High 2NF (High aqueous to organic flow ratio) b) High 2NS c) Low 2NX (2) Stream compositions a) Uranium concentration >40% saturation, [not enough TBP molecules available for extraction (Phase I)] b) Low HNO_3 concentration in 2NF c) Low 2NS-N_2H_4, Fe^{++} (reducing agent) (3) Flooding of the 2N column (4) Off-standard pulse frequency	(1) Flow rates - respective stream flowmeters/rotameters (2) Stream composition a) Analysis of 2NF or solvent for uranium b&c) Analysis of 2NW and 2NS (3) Flooding a) Increase in the column static pressure b) Variations in interface location and/or 2NW valve loading pressure (4) Pulse - frequency count	(1) Flow rates -- adjust to flowsheet value (2) Stream compositions a) High uranium - decrease feed (2NF) rate b) Butt TK-J21 to correct acid concentration c) Increase reducing agent concentration in scrub (3) Flooding a) Decrease pulse frequency b) Decrease flow rates (4) Pulse - adjust frequency
B) High neptunium loss in the 2PW	(1) 2PW neptunium analysis (2) Slower than expected buildup of neptunium in J Cell - 2PN neptunium analysis	(1) Low 2PX flow rate (2) High HNO_3 concentration in the 2P column (Phase I) (3) Flooding of the 2P column (4) Off-standard pulse frequency	(1) Flowmeter on 2PX (2) Analysis of the 2PN and 2PX for HNO_3 (3) Flooding a) Decrease in column static pressure b) Interface location variations (4) Pulse - frequency count	(1) Adjust 2PX flow rate to proper value (2) Butt TK-J21 or TK-224/225 into proper HNO_3 concentration (3) Flooding a) Decrease pulse frequency b) Decrease flow rates (4) Pulse - adjust frequency

9413275.0872

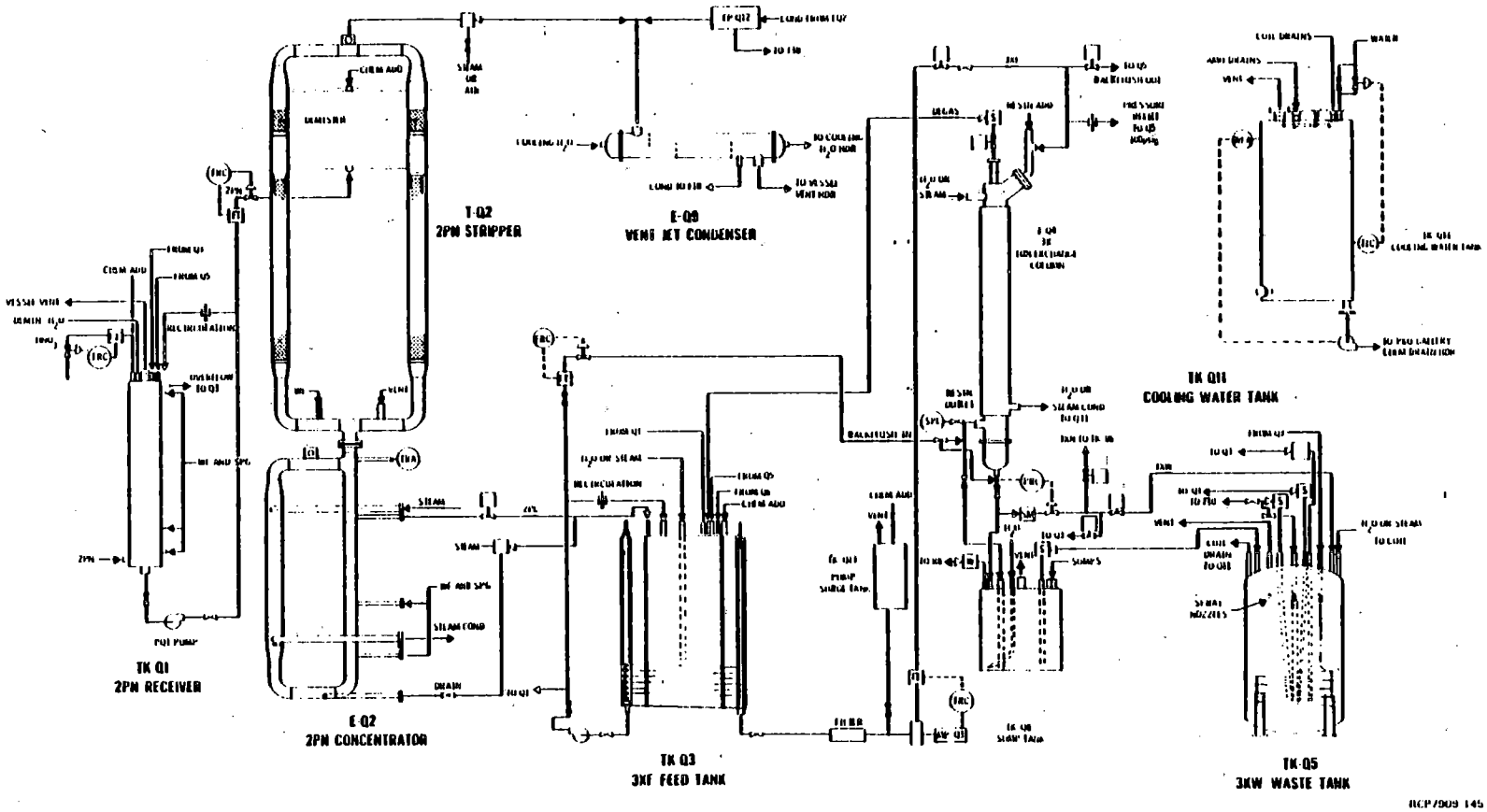

FIGURE 4-11. Neptunium Purification Process Flow Diagram.

TABLE 4-26. Neptunium Concentration and Purification - Q Cell Streams.

Stream	Composition	Function	Flow Rate and/ or Volume
2PN	Np - 2 g/ℓ HNO_3 - 0.7M Small amount U, Pu, FP's	Neptunium product solution accumulated in TK-Q1 (concentrator feed tank) from 2P column-Phase III. Routed to stripper-concentrator (E-Q2)	1.9 ℓ/min ~910 ℓ
2PN-HNO_3	HNO_3 - 57% (12.2M)	Nitric acid butt to adjust acidity of 2PN prior to concentration	(as required, used only if recycle concentrate is not available)
2PC	Np - ~9 g/ℓ HNO_3 - 3.1M U, Pu, FP's	Concentrated neptunium product solution accumulated in TK-Q3 (makeup and feed tank - 3XF)	Batch = 200 ℓ
3XPT	HNO_3 - 6.0M N_2H_4 - 0.1M	Resin pretreatment wash solution (routed to top of 3X column) to prepare resin for neptunium loading	0.46 ℓ/min Batch = 90 ℓ
3XW-PT	HNO_3 - ~2.9M N_2H_4 - <0.1M	Pretreatment waste routed from bottom of 3X column to 3XW combined waste tank (TK-Q5)	90 ℓ
3XF-HNO_3	HNO_3 - 12.2M	Nitric acid butt to adjust 2PC acidity	100 ℓ
3XF-N_2H_4	N_2H_4 - 11.3M	Hydrazine (reducing agent) addition to 2PC-3XF solution in TK-Q3 to adjust the neptunium valence to +4	2.8 ℓ
Recycle Concentrate	Np - ~4.8 g/ℓ HNO_3 - 7.25M	Neptunium solution from previous purification run to be reprocessed as part of 3XF	40 ℓ
3XF	Np - ~6 g/ℓ HNO_3 - 6.3M U, Pu, FP's N_2H_4 - 0.1M	Adjusted neptunium feed solution to 3X ion exchange column. Neptunium loaded on resin along with trace FP's and uranium	~0.120 ℓ/min Batch = 335 ℓ
3XW	Np, U, Pu, FP's, HNO_3 - 6.3M N_2H_4 - ~0.1M	Loading waste routed from bottom of 3X column to combined waste tank (TK-Q5)	~0.120 ℓ/min 335 ℓ
3XS-Pu	HNO_3 - 6.7M Fe^{++} - 0.1M N_2H_4 - 0.1M $NH_2SO_3^-$ - 0.2M	Wash solution - strong nitric acid and reducing agents to remove plutonium from resin. Not routinely used.	0.46 ℓ/min Batch = 225 ℓ
3XW-Pu	Pu HNO_3 - 6.7M Fe^{++} - 0.1M $NH_2SO_3^-$ - 0.2M N_2H_4 - ~0.1M	Waste plutonium wash solution from 3X column to TK-Q5. Not routinely used.	0.46 ℓ/min 225 ℓ
3XS-FP	HNO_3 - 7.0M N_2H_4 - 0.05M NaF - 0.01M	Wash solution (strong nitric acid-sodium fluoride) to remove FP's from resin	0.46 ℓ/min Batch = 450 ℓ
3XW-FP	FP's HNO_3 - 7.0M F^- - <0.01M	Waste FP wash solution from 3X column to TK-Q5	0.46 ℓ/min 450 ℓ

TABLE 4-26. Neptunium Concentration and Purification - Q Cell Streams. (Continued)

Stream	Composition	Function	Flow Rate and/ or Volume
3XS-F	HNO_3 - 8.0M N_2H_4 - 0.1M	Wash solution (strong nitric acid) to remove residual fluoride from resin prior to neptunium elution	0.46 ℓ/min Batch = 225 ℓ
3XW-F	F^- - <0.005M HNO_3 - 8.0M N_2H_4 - <0.1M	Waste fluoride wash solution from 3X column to TK-Q5	0.46 ℓ/min 225 ℓ
3XE	HNO_3 - 0.35M	3X column eluent (dilute nitric acid) to remove neptunium from resin	0.23 ℓ/min 140 ℓ
Forecut 3XF-FC	HNO_3 - ~5.0M Np - 1.2 g/ℓ	Displacement of residual strong nitric acid from fluoride wash with 3XE solution. Recycled from the 3X column to the 3XF feed tank (TK-Q3) to be concentrated, then combined with feed solution for the next run.	0.23 ℓ/min ~55 ℓ
3XN	Np - 40 g/ℓ HNO_3 - 0.35M	Neptunium product elution stream routed to the neptunium oxidizer tank (TK-Q6)	40 ℓ
Product strip-aftercut 3XF-AC	Np - 2.8 g/ℓ HNO_3 - 0.35M	Final neptunium strip of resin with 3XE solution. Final strip waste stream routed to TK-Q3 and combined with forecut wastes for concentration and recycle.	0.23 ℓ/min 45 ℓ
3XW-ANN	$Al(NO_3)_3$ - 1.6M Al/F Mole ratio ≥3	ANN addition to waste in TK-Q5 to complex fluoride prior to backcycle of waste to TK-F10	12 ℓ
3XW-$NaNO_2$[a]	$NaNO_2$ - 0.77M	Nitrite addition to react with N_2H_4 prior to recycle of 3XW to TK-F10	240 ℓ
3XW[a]	U, Pu, FP's, Np - ~0.15 g/ℓ HNO_3 - 5.4M	Combined Q Cell waste in TK-Q5 normally routed to the backcycle waste system but may be routed to underground storage if the neptunium content is low (<0.02 g/ℓ)	~1350 ℓ

[a] 3XW-$NaNO_2$ and 3XW volumes listed are for normal runs where 3XS-Pu stream is not used. The respective volumes are 306 ℓ and 1650 ℓ when it is used. Composition of 3XW also changes with 3XS-Pu use but is not shown.

4.6.2.1 Q Cell Equipment

Q Cell is a batch concentration and ion exchange facility in which the final purification of neptunium is carried out. The Q Cell ion exchange unit utilizes a design concept introduced to Purex in 1958. At that time, the all-welded construction and shielded maintenance operations were unique in the field of separations facility design (Ref. 13). Individual major pieces of equipment included in the unit are described below, but detailed equipment specifications are discussed in Chapter 3.0.

The 2PN or concentrator feed tank (TK-Q1) is a geometrically favorable 48-liter capacity tank with a 6-inch diameter. Recycled fore- and after-cut solutions or nitric acid is added from TK-Q1 to the stripper-concentrator (E-Q2) and heated to operating temperature before 2PN from the J Cell package is received in TK-Q1. This tank serves as a surge tank between the continuous solvent extraction cycle and the batch-operated stripper-concentrator. Feed mixing is achieved by recirculating 90% of the solution pumped from the tank.

The stripper-concentrator (E-Q2), a vessel of geometrically favorable design, is made in two sections, as shown in Figure 4-11. The bottom concentrating portion is constructed entirely of titanium with a 4-inch maximum I.D. The top stripping portion (T-Q2) is made of type 304L stainless steel with a 6-inch maximum I.D. The main section of the stripper is packed with 1-inch stainless steel Pall rings, and the upper portion above the feed inlet is packed with York mesh titanium mist eliminator pads. This stripper-concentrator strips any entrained or dissolved organic from the 2PN stream and reduces the volume by a factor of 4.5 so that the neptunium concentration is sufficiently high for ion exchange adsorption.

The 3XF feed tank (TK-Q3) is a 120-gallon capacity, 3-inch annular tank containing a cadmium liner and an 8-inch cylinder of concrete serving as a neutron poison and moderator, respectively. The tank has a heating and cooling coil and chemical addition distribution ring. Mixing is achieved by recirculating the solution by means of an in-line chemical pump located within the maintenance hood. Solution is withdrawn from two outlets on the bottom, 180° apart, and returned to two top inlets also 180° apart, but 90° from the two bottom outlets.

The 3X ion exchange column (T-Q4) is made from stainless steel pipe with an annular heating-cooling jacket surrounding the pipe. Plain Dutch Twill screens 24 by 110 mesh (woven wire screens with 24 openings per inch of length by 110 openings per inch of width) have been flanged into the top and the bottom of the column to provide a resin section about 9.5 feet long. A sonic probe used to determine the level of the resin inside the column during operating periods is inserted into the top of the column through a flange connection. Temperature control and pressure control systems are incorporated with the operation of this equipment. A pressure relief system, which includes a rupture disc rated to release at 100 psig, serves as a safety device against excessive pressure buildup in the column.

A degassing system composed of a steam jet connected to the top of the column allows the removal of any gas formed within the resin during operation. Through adequate backflushing and backflow systems, resin can be remotely added or removed from the column.

The 3XW waste tank (TK-Q5) is a 500-gallon tank with a dished bottom and top. It receives all the waste from the batch washing operations, as well as flush chemicals from any of the other Q Cell equipment. Mixing in this tank is achieved by means of an air sparger located in the bottom section of the tank.

The 3XN product receiver tank (TK-Q6) is a 25-gallon tank with a flat bottom containing a temperature control system and an air sparger. It receives the eluted neptunium product from T-Q4 and is also used to chemically adjust the neptunium valence to +5 prior to loadout for shipment.

The hot cell sump tank (TK-Q8) is a 46-gallon vessel buried in the floor of the hot cell. The design purpose of the tank was to allow the removal, by gravity flow, of the used resin from the 3X ion exchange column for subsequent disposal to underground storage tanks. This practice was discontinued in 1971, and resin is now loaded from the column into 1-gallon bottles for disposal as described in Subsection 4.6.2.5. Tank Q8 also accumulates all sump drainage for sampling prior to disposal. A unique water swirler similar to a dentist's fountain is designed into this tank for agitation to aid in the removal of resin and other solids.

The vent jet condenser (E-Q9) is made of stainless steel and is used to provide vacuum for both the concentrator and the vessel vent systems within the hot cell. Condensate from this condenser is returned to the Purex process via the 3WF tank (TK-F10).

The 9-gallon stainless steel pump surge tank (TK-Q13) is used for direct additions of small volumes of wash solution to the 3X ion exchange column (T-Q4) without having to go through the 3XF feed tank (TK-Q3).

Seven aqueous makeup tanks located above the control room plus one AMU tank located in the sample gallery (TK-Q31) with the required auxiliary equipment make Q Cell completely independent of the remainder of the Purex Plant. The tanks and their primary functions are listed below and are described in Subsection 3.8.2.1.

Tank Number	Function
Q21	3XPT and 3XE makeups
Q22	Scrub solution makeups
Q23	Resin add
Q24	$NaNO_2$ add
Q25	ANN add
Q26	FeSa add
Q27	N_2H_4 add
Q31	HNO_3 add to E-Q2

4.6.2.2 Feed Concentration

During Phase III, the neptunium is stripped from the J Cell package and jetted to Q Cell after the neptunium-bearing fore- and after-cut portions of the elution from the previous ion exchange purification batch are concentrated in E-Q2. The 2PN stream entering Q Cell is received in TK-Q1, from where it is pumped to the stripping section of the neptunium stripper-concentrator (E-Q2). The feed rate is dependent upon the transfer rate of 2PN from the J Cell package (about 0.5 gal/min). The feed is concentrated by a factor of about 4.5 and maintained at a specific gravity of 1.1 in the concentrator section. The bottoms solution containing the neptunium (called the 2PC stream) overflows by gravity into the ion exchange column feed tank (TK-Q3). After the 2PN flow to Q Cell is stopped, the neptunium stripper-concentrator contents are transferred by jet to TK-Q3. This solution comprises the feed material for the neptunium batch purification operation.

Since TK-Q1 receives neptunium product solution from an aqueous continuous pulse column, varying amounts of organic material which should not enter the concentrator are present in the solution. Therefore, feed solution in TK-Q1 is added to the top of the T-Q2 stripping section after the concentrator is boiling. The vapors rising through the stripping section will then remove any organic substances before they reach the lower part of the concentrator. To further eliminate the potential for explosion from organic in the concentrator bottoms, the tube bundle steam pressure has been limited to 29 psig, limiting the maximum possible concentrator temperature to 125°C, which is 10° below the minimum detonation temperature of 135°C.

After concentration, the final step in feed preparation consists of chemical adjustments to the 2PC. To optimize conditions for loading neptunium into anion exchange resin, the acid concentration is adjusted to 6.3M by addition of nitric acid, and the neptunium valence is adjusted to +4 by the addition of hydrazine to TK-Q3. The hydrazine addition is delayed until the resin bed pretreatment (described below) is completed, because the strong acid could reoxidize some of the neptunium and reduce the efficiency of the resin loading operation. The adjusted 2PC solution is known as 3XF.

4.6.2.3 Ion Exchange Process Cycle

This section describes the process steps required for ion exchange purification of the neptunium. Process streams are identified in Figure 4-11 and Table 4-26.

4.6.2.3.1 Resin Pretreatment

Since the ion exchange column (T-Q4) contains weak acid from elution of the previous neptunium batch, the resin (Amberlite IRA-97) must be treated by passing 6M HNO_3 containing 0.1M N_2H_4 (3XPT stream) through the column to prepare the resin for adsorption of the next neptunium batch. The solution is made up in TK-Q21 and pumped to T-Q4 via TK-Q13. This wash waste (3XW-PT) is collected in TK-Q5.

In pretreatment and subsequent ion exchange steps, certain safety precautions dictate allowable operating conditions. Since ion exchange resins may be explosive under certain conditions of acidity and temperature, restrictions are placed upon operating and standby conditions for the T-Q4 resin bed as discussed in Subsection 4.6.2.6.

4.6.2.3.2 Loading

Immediately before the neptunium is loaded on the resin, the resin bed is degassed to eliminate air pockets which can cause solution channeling and, hence, uneven and inadequate loading of the neptunium on the resin. This gas-removal step, which is repeated at 4-hour intervals during the loading and scrubbing cycles, is implemented with an air-driven jet which evacuates the top of the column and the column feed line.

Resin loading is accomplished by pumping the 3XF solution, downflow, through the T-Q4 resin bed. The effluent solution, stripped of the neptunium, is collected in TK-Q5.

4.6.2.3.3 Plutonium Scrub

Plutonium present in the 3XF is adsorbed onto the resin and, if not selectively removed, will be removed with the neptunium during elution. Neptunium product specifications permit only trace quantities of plutonium. When feed analytical results indicate a plutonium concentration greater than 0.5 gram of plutonium per 1000 grams of neptunium, the resin bed is washed with a plutonium removal scrub solution. The plutonium scrub (3XS-Pu) is made up of ferrous sulfamate and hydrazine in a 6.7M HNO_3 solution. The strong acid is necessary to prevent neptunium elution losses during the plutonium scrub.

The scrub is made up in TK-Q22 and pumped at a controlled flow rate from TK-Q13 downflow through the T-Q4 resin bed. The plutonium-bearing effluent, which contains some neptunium, is collected in TK-Q5 where it is combined with the pretreatment, loading, and subsequent scrub wastes. However, the 3XW is sampled and analyzed at the completion of each processing step for process control and material balance purposes.

4.6.2.3.4 Fission Product Scrub

Part of the fission products present in the 3XF are also adsorbed by the resin, but are largely removed from the T-Q4 resin bed in a FP scrub. The scrub solution, designated 3XS-FP, is a 7M HNO_3 solution containing fluoride, which is very effective for removal of FP's, particularly zirconium and niobium. The high acid and hydrazine in the scrub solution keep the neptunium on the resin as the FP's are scrubbed off.

The presence of fluoride in the scrub makes the solution corrosive to stainless steel. To lessen the corrosive effects, a solution of aluminum nitrate is added to the scrub waste receiving vessel (TK-Q5) before the scrub is pumped through the resin column. The TK-Q5 coil water is operated during this procedure to further reduce fluoride corrosion by lowering the waste tank temperature.

If processing is interrupted, the T-Q4 cooling water is started to reduce the corrosion rate on this column.

The fission product scrub solution is collected in TK-Q5. After obtaining a sample of this effluent (3XW-FP) for later process evaluation, the step to remove the residual fluoride from the resin is started as soon as practical.

4.6.2.3.5 Fluoride Scrub

The FP scrub leaves fluoride residue in the Q4 column. This fluoride residue must be removed prior to product elution, as fluoride is an impurity.

The fluoride scrub is an 8M HNO_3 solution containing hydrazine, which is made up in TK-Q22 and which follows the FP scrub from TK-Q13 through TK-Q4. The solution is collected in TK-Q5 with the previous wastes. The combined waste is sampled and analyzed for material balance determinations.

4.6.2.3.6 Waste Handling

The pretreatment, loading, plutonium scrub, FP scrub, and fluoride scrub wastes (3XW) containing neptunium lost during purification are returned to the backcycle waste system for recycling through the solvent extraction system. Sodium nitrite is added to react with hydrazine in the 3XW prior to jetting the solution from TK-Q5 to TK-F10 in batches of about 500 liters each.

4.6.2.3.7 Elution

Product neptunium is removed from the resin bed with a dilute (0.35M) nitric acid solution made up in TK-Q21 and pumped to the column from TK-Q13. Neptunium concentration is controlled by adjusting the product eluent volume to the quantity of neptunium on the resin, and no further product concentration step is required. Product elution consists of three distinct steps performed as a continuous operation.

The initial step is the forecut, during which the strong acid remaining from the fluoride scrub is displaced, as the neptunium will not come off the resin in the presence of strong acid. The forecut is started by pumping a specified volume of eluent made up in TK-Q21 from TK-Q13 through the resin bed to TK-Q3 at a flow rate of 230 mℓ/min. This flow rate is continued until neptunium appears in the T-Q4 effluent. The presence of neptunium is determined by an increase in the gamma monitor indication, and by the change in effluent color from colorless to green as viewed in the maintenance hood sight glass. A time lapse of about 4 hours may be expected from the beginning of the forecut until the neptunium begins to come off. The typical forecut volume is 55 liters.

When neptunium appears, the product elution step is started by routing the effluent to the product receiver tank (TK-Q6). If the diversion is made too soon, the product batch is dilute, and switching late results in neptunium losses to rework at the rate of about 5 g/min. The eluent is pumped down through the resin bed until the elution is complete, normally in about 3 hours (~40ℓ). When the gamma monitor reading begins to decrease, the sight glass is checked for color. Typically, the upper section of the sight glass shows a lighter color first. When this occurs, the eluent flow is increased for 2 or 3 minutes. When the effluent color is clear, the elution is complete and the effluent is again diverted to TK-Q3. The aftercut requires a volume of about 45 liters and 3 hours to complete. Again, the timing of the diversion is important to maintain neptunium recovery efficiency and product solution concentration.

The forecut and aftercut solutions in TK-Q3 are recycled to the concentrator feed tank (TK-Q1) and concentrated in E-Q2 for reprocessing with the next run. This operaton must be completed before 2PN is again routed to TK-Q1 from the J Cell package.

4.6.2.4 Shutdown and Startup of Ion Exchange Column

Occasional shutdowns during the neptunium purification process are necessary under a number of circumstances, such as finishing a particular procedural step, operator shift changes, or equipment malfunctions. The shutdown procedures vary, depending on the anticipated length of shutdown and the resin conditions. The general rule for shutdowns over 24 hours is to displace the concentrated acid with dilute acid in the column for safety, and to elute the resin if it is loaded with neptunium. However, if the column is to be started up within 72 hours, the neptunium may be left on the resin provided the acid in the column is exchanged with fresh acid every 8 hours.

An equilibrium shutdown (i.e., less than 24 hours) requires shutdown of the 3XF pump, reducing the pressure in the column, and turning on T-Q4 jacket cooling water if the resin is loaded.

Shutdown of the loaded or partially loaded column for 24 to 72 hours requires completing the equilibrium shutdown steps described above, then pumping concentrated acid solution (50 liters) through the column every

8 hours. The solution pumped through the column is either additional scrub solution of the type being used at shutdown or fluoride scrub solution if shutdown occurs during loading. Shutdown for periods of over 72 hours requires a neptunium strip with dilute acid, as with normal elution.

Startup of the ion exchange column involves these major steps:

- Establish the proper vent vacuum
- Adjust jacket cooling water
- De-gas the column with the air jet
- Start the 3XF pump and adjust flow
- Adjust column pressure.

4.6.2.5 Ion Exchange Resin Preparation and Changeout

Resin for use in neptunium purification is 20-25 mesh Amberlite IRA-97 (formerly called XE-270). The resin is received at Purex in the combined hydroxide form, and must be nitrated and washed to make it acceptable for Q Cell use. About 12 gallons of resin are put into the resin wash tank (AMU TK-51), and 1.0M HNO_3 is added. The mixture is air-sparged for 5 minutes, allowed to settle, and the solution is drained and decanted. This washing step is repeated from 10 to 15 times until the pH of the wash solution becomes two or less. The drained resin, which must not be allowed to dry out, is ready for use and is then removed from the tank and taken to Q Cell AMU.

The useful life of the IRA-97 resin in this service has not been determined as it was installed in January 1972 on a test basis and was removed upon plant shutdown in September 1972. Thirteen feed batches were processed during this period. However, after a period of use in Q Cell, which may be several years based on experience with the previous resin, the Q4 column ion exchange resin is expected to become sufficiently degraded to warrant replacing the resin bed. The resin degradation is due to radiation and nitric acid damage. Before disposal, a minimum of 450 liters of eluent is pumped through the column to remove the last traces of neptunium and FP's from the resin. T-Q4 effluent samples are taken at intervals during the elution for neptunium and FP analyses that are used to determine the degree of cleanup. Two samples of the resin are taken and sent to the 222-S Laboratory in the 200 West area for testing. When cleanup is completed, the resin is loaded into 1-gallon bottles through a tube attached to the sample spigot, and the bottles are bagged out of the hood for disposal. The column is then rinsed from TK-Q23 to assure that the resin has been completely removed from the column.

4.6.2.6 Q Cell Process Safety

It is important to maintain a low inventory of residual radioactive contaminants in Q Cell since Np-237, although an alpha emitter, has a decay daughter, Pa-233, which is a beta and gamma emitter. This daughter continues to build up as the neptunium decays to reach an equilibrium amount of about 700 microcuries per gram of neptunium within 150 days. Therefore, unless the equipment and hood areas of Q Cell are kept clean, deposits build up and increase the general radiation level within the area. However, good housekeeping practices combined with the shielding in the hot cell and on the face of the maintenance hood keep the radiation (primarily beta) levels within the normal acceptable ranges.

Under certain conditions of temperature, pressure, and acidity, a potential for resin explosion exists. To minimize or eliminate these conditions, the following process limiting control settings are observed:

- Maximum column and process stream temperatures - 60°C.
- Maximum column and process stream acid concentration - 8.0M.
- Maximum internal column pressure - 60 psig.
- Strong oxidizing agents such as dichromate, permanganate and peroxide shall not be added to any vessel or process stream in Q Cell or to any process stream that could be routed to Q Cell.
- Resin in column must be kept flooded.
- The resin bed, loaded with a total of 100 grams of neptunium and/or plutonium, shall not remain in stagnant acid for more than 24 hours if the acid concentration is greater than 3.0M.
- Ion exchange resin shall not be exposed to stagnant solution containing more than 100 grams neptunium/plutonium for longer than 36 hours.
- Ion exchange resin shall not be exposed to stagnant solutions containing >1.0M HNO_3 for more than 72 hours.
- Resin treatment in AMU shall use nitric acid at a concentration no greater than 1.0M and at a temperature no greater than 60°C.
- Ion-exchange resin that has been converted to nitrate form shall be stored fully submersed in water or dilute (<0.7M) nitric acid and in a covered container.

Ion exchange safety is covered in more detail in Chapter 8.0.

4.6.2.7 Q Cell Nuclear Criticality Prevention

Nuclear criticality prevention was considered in the original design of the equipment so that all the equipment, except the 3XW waste tank (Q5), the 3XN product receiver tank (Q6), and the hot cell surge tank (Q8), have a geometrically favorable shape or size. Administrative control of the batch additions to Q Cell limits the plutonium content in concentrator E-Q2 to no more than 450 grams. Also, it is required that after each six runs in Q Cell, a thorough (deep) flush of E-Q2 be performed.

For criticality control during changeout, the spent resin must be placed in noncombustible containers no larger than 6 inches in diameter and 12 inches high. The containers must be restricted by physical barriers to a center-to-center distance of at least 18 inches until the plutonium content has been determined to be less than 250 grams (Ref. 12).

4.6.3 Backcycle Waste System

The aqueous waste streams from the second plutonium cycle, the final uranium cycle, the neptunium recovery system, and excess acid recovery condensates are concentrated and recycled via the backcycle system. The 2DW, 2AW, 2NW aqueous waste, the L and Q Cell vent systems condensate, and excess AAD and AFD accumulate in TK-F10. These streams are continuously pumped to the E-H4 concentrator as 3WF. The stream is reduced in volume by a factor of about five in the concentrator, and then overflows to the 3WB tank (TK-J1). The aqueous waste from the third plutonium cycle (3AW) is also routed to TK-J1, from where about 60% of the solution is pumped to the HA column (T-H2) and about 40% is pumped to the 2NF tank (TK-J21) during neptunium recovery Phase I operation. The stream is routed exclusively to the HA column during Phase II and III operation.

The process flow diagram, Figure 4-12, identifies the process streams in the backcycle system. Tables 4-27 and 4-28 summarize the functions, typical compositions, and relative flow rates of the backcycle system during neptunium cycle Phase I or Phase II-III, based on processing 10 tons of uranium per day.

4.6.3.1 Backcycle Waste Equipment

As shown in Figure 4-12, the backcycle system equipment includes a feed tank (TK-F10), the 3WB concentrator (E-H4-1) and condenser (E-H4-2), and a receiving tank (TK-J1). The two tanks, which are nominally 5000-gallon-capacity tanks as described in Chapter 3.0, serve as mixing vessels for various process streams, as well as feed and receiving tanks.

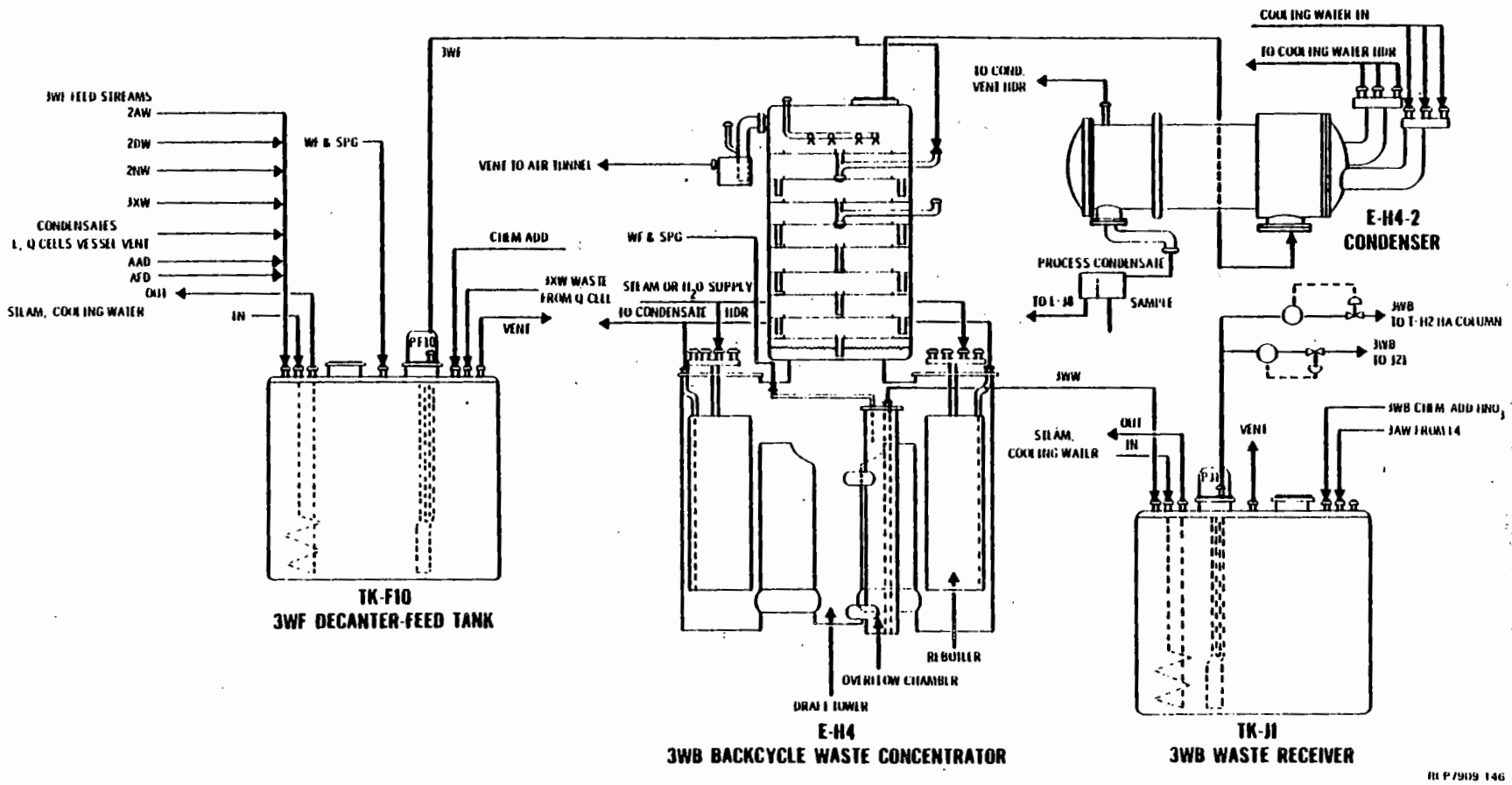

FIGURE 4-12. Backcycle Waste Process Flow Diagram.

TABLE 4-27. Backcycle Waste System Process Streams - Phase I.

Stream	Composition[a]	Function	Flow, gal/min
2NW	HNO_3 - 5.0M Pu - 0.006 g/ℓ Np - 0.0002 g/ℓ	Aqueous waste from 2N column	4.3
2DW	HNO_3 - 0.97M U - 0.073M Np - Variable	Aqueous waste from 2D column	5.9
2AW	HNO_3 - 2.9M Pu - 0.004 g/ℓ	Aqueous waste from 2A column	6.2
AAD	HNO_3 - 0.1M	Acid absorber process condensate (E-F5)	2.0
AFD	HNO_3 - 0.005M	Acid fractionator process condensate	6.6
3XW	HNO_3 - 5.1M Np - 0.14 g/ℓ	Aqueous wastes from Q Cell Np anion exchange process	0.03 (Avg) (Approximately 375 gal. in 3 batches over 10-day period)
3WF	HNO_3 - 1.8M U - 0.018M Pu - 0.002 g/ℓ	Backcycle feed	25.1
3WW	HNO_3 - 8.4M U - 0.082M Pu - 0.009 g/ℓ	Concentrated backcycle waste	5.3
3AW	HNO_3 - 3.0M Pu - 0.01 g/ℓ	Aqueous waste from 3A column	0.82
3WB	HNO_3 - 7.7M U - 0.071M Pu - 0.009 g/ℓ Np - Variable	Backcycle waste to TK-J21 and T-H2	6.1
3WB-2N	Same as 3WB	3WB to TK-J21	2.6
3WB-HA	Same as 3WB	3WB to T-H2 (HA column)	3.5

[a]Neptunium concentrations are highly variable, depending on feed and upstream process conditions.

TABLE 4-28. Backcycle Waste System Process Streams - Phases II, III.

Stream	Composition[a]	Function	Flow, gal/min
2DW, 2AW, AAD, AFD, 3AW	Same as Phase I	Same as Phase I	Same as Phase I
2NW-II	HNO_3 - 4.0M Np - 0.0002 g/ℓ	Aqueous waste 2N column Phase II	3.1
2NW-III	HNO_3 - 4.8M Np - 0.0002 g/ℓ	2N waste, Phase III	2.1
3WF	HNO_3 - 1.5M U - 0.018M Pu - 0.001 g/ℓ	Backcycle feed	23.8
3WW	HNO_3 - 8.4M U - 0.1M Pu - 0.007 g/ℓ	Concentrated backcycle waste	4.2
3WB	HNO_3 - 7.5M U - 0.1M Pu - 0.006 g/ℓ	Composite backcycle waste, to T-H2 (HA column)	5.0

[a]Neptunium concentrations are variable.

The 3WB concentrator is a steam-heated, vertical-tube, thermal-recirculation-type evaporator. The concentrator reboiler consists of two tube bundles offset but connected to a central downcomer. The reboiler has a flat bottom design for criticality prevention (refer to Section 3.7 of Chapter 3.0 for details of the design). The stripping tower, however, is nearly identical to the 2EU concentrator (E-K4-1) tower described in Section 3.7. The unit contains six bubble-cap trays and a wire mesh pad for de-entrainment, rather than the Raschig ring packing above the bubble-cap trays in E-K4-1.

The concentrator functions as other Purex concentrators. Feed solution is introduced into the stripping column to remove organic, then enters the concentrator reboiler where it mixes with the concentrated solution as it is recirculated through the two vertical tube bundles, and leaves the concentrator via the stilling chamber. Thermal recirculation of the solution through the vertical tube bundles results from the boiling action in the steam-heated tubes.

Liquid droplets entrained in the vapor jetting from the reboiler tubes are partially removed by being deflected by the impingement plate above the tubes, with the rest being removed by passing through the stripping section of the concentrator tower, where the flooded bubble-cap trays provide effective de-entrainment. Droplets of concentrator feed solution entrained at the feed plate are removed from the vapors by passage through the one-to-three bubble-cap trays above the feed plate and the wire mesh pad in the top of the concentrator tower.

4.6.3.2 Startup and Shutdown of Backcycle Concentration

Startup and operation of E-H4-1 involves the following major steps:

- Establish the proper vacuum on the condenser and concentrator.
- Fill E-H4-1 to a minimum volume of 2500 gallons with seal pot water.
- Air blow the tube bundle steam chests to remove water.
- Slowly heat the concentrator to boiling (30 minutes) with steam on both tube bundles while starting cooling water to the condenser (E-H4-2).
- Maintain the volume at 2500 (±100 gallons) by addition of seal pot water.
- Start the 3WF pump and introduce 3WF flow when concentrator is boiling; adjust steam flow as necessary to maintain the E-H4 liquid level.
- Seal pot water addition is discontinued, and the liquid level is held below overflow until the specific gravity builds up to the specified limit (1.25).
- The following variables are closely monitored and/or controlled during steady-state operation: (a) E-H4 bottoms specific gravity; (b) E-H4 vacuum; (c) overflow rate to TK-J1; (d) plutonium concentrations in TK-F10 and TK-J1 samples (2AW and 3AW monitors are also observed for indications of high plutonium losses).

For optimum performance during concentrator operation, the specific gravity should remain nearly constant (constant overflow rate), and the vacuum as stable as possible.

The shutdown and cooling operation for the E-H4 concentrator requires the proper valving sequence to maintain pressure on the tube bundle without causing a suckback of contaminated liquid from the canyon to the P and O gallery or damaging the equipment. For concentrator shutdown, the following first four steps are required; the last four steps are performed only if the concentrator is to be emptied:

- Air pressure to the tube bundles is increased very slowly by means of a bypass valve until the automatic high-pressure steam cutoff is activated.
- The steam supply DOV's are closed.

- The condensate DOV's are closed 5 to 10 minutes later.
- Air pressure on the tubes is reduced to 10 psig.
- The condensate DOV is cracked open while simultaneously turning on the cooling water, taking care that the bundle remains pressurized.
- The condensate valve is opened wide, and cooling water flow is increased as needed to cool the contents to 50°-60°C.
- Step 1 is repeated while closing the cooling water valves.
- Steps 3 and 4 are repeated.

4.6.3.3 Process Safety and Criticality Prevention -- Backcycle Waste System

To prevent the chance of a contamination suckback into the P and O gallery, all concentrator tube bundles are maintained pressurized with air, water, or steam.

Introduction of organic solvent from the 3WF stream to the E-H4 concentrator could create a potentially explosive mixture (red oil) of TBP, uranium, and nitric acid. To prevent such a condition, the following procedural safeguards exist:

- The 3WF streams are fed to the steam stripping section of the E-H4 concentrator to remove the bulk of the organic. In addition, the concentrator feed in TK-F10 is not agitated, and contains an extra (high) set of dip tubes for indication of organic in the 3WF. Periodically, organic accumulated in TK-F10 is decanted to TK-F13 or the solvent treatment system 1.
- The maximum steam pressure to the concentrator tube bundles is 29 psig (the value at which the steam pop-off valves are set). This prevents the bottoms temperature from achieving 130°C, which is below the potential minimum detonation temperature of 135°C for red oil.
- Should the bottoms temperature become greater than 125°C, the steam is automatically shut off.

Since the backcycle waste equipment is not geometrically favorable, plutonium mass limits are imposed for criticality prevention. The mass limit for the E-H4 concentrator is 6870 grams of plutonium, while those for TK-F10 and TK-J1 are 15,000 and 12,400 grams, respectively. This dictates that the plutonium concentration in the 3WF and 3WB tanks (TK-F10 and TK-J1) be carefully monitored, particularly during periods of high losses in the second and third plutonium cycles. Continued operation with a 3WF plutonium concentration of greater than 0.5 g/gal could result in exceeding the mass limit in E-H4.

4.7 SOLVENT TREATMENT

With continued use, the organic solvent used in Purex solvent extraction processes becomes contaminated and degrades chemically, thus decreasing its efficiency for chemical separations. Before reuse, the solvent is treated as described in this section. The overall Purex process flow diagram (Figure 4-1) shows the relationship between the solvent treatment system and the remainder of the process.

The organic solvent used in the Purex solvent extraction process is a 30 vol% solution of tributyl phosphate (TBP) in a normal paraffin hydrocarbon diluent (NPH). As purchased, the TBP contains maximum concentrations of 0.05N butanol (reducing normality), 0.02N mono plus dibutyl phosphate (acid normality) and 0.01 wt% suspended solids. The NPH contains mininum concentrations of 98 vol% normal paraffin hydrocarbons, and 99 vol% C_{10} to C_{14} components with maximum impurity concentrations of 0.2 wt% aromatics, 0.1 wt% olefins and 0.05 wt% alcohol (Ref. 14). After passage through the solvent extraction processes, the solvent also contains small quantities of FP's, uranium, plutonium, neptunium, and other impurities such as TBP degradation products, diluent nitration products, and solid or colloidal materials. These impurities can, if permitted to accumulate, result in increased product losses and/or decreased separation of the products from each other and decreased decontamination from FP's.

Solvent regeneration and reuse in Purex, because of the high cost of the chemicals (especially TBP at the June 1979 price of $8.59 per gallon), are an economic necessity. The Purex solvent is routinely regenerated for reuse by a series of washes in solvent treatment system 1 to remove soluble impurities and entrained materials. While this treatment removes most of the solvent impurities, solvent which has been used for initial decontamination of irradiated uranium is not sufficiently purified by this procedure to permit its reuse in the final uranium cycle, where the permissible concentrations of plutonium and FP's are extremely low. A separate decontamination cycle, solvent treatment system 2, is provided for solvent used in the final uranium cycle only, thus minimizing the contamination of the uranium product by impurities in the solvent.

Solvent treatment technology is covered in detail in Chapter 6.0. Descriptions of the related process equipment are given in Chapter 3.0.

4.7.1 Solvent Impurities

Impurities removed from Purex solvent include organic degradation products, entrained solids, fission products, and uranium, neptunium, or plutonium contaminants from column process problems. More detailed explanation of the origins and effects of these impurities are given in Chapter 6.0.

4.7.1.1 Tributyl Phosphate Degradation Products

The TBP in the Purex solvent slowly hydrolyzes under process conditions to form dibutyl phosphate (DBP), monobutyl phosphate (MBP), phosphoric acid, and butyl alcohol. Of these impurities, DBP and MBP are the most concentrated and have the most effects on the process. Both form stable complexes with uranium, plutonium, neptunium, and the FP's. Dibutyl phosphate complexes strongly favor the solvent, causing product losses to the organic waste streams and a high radioactivity level in the solvent. Monobutyl phosphate complexes favor the aqueous phase and can cause excessive entrainment and/or emulsification.

These hydrolysis products would, if permitted to accumulate, have adverse effects on the solvent extraction process, as described above. Fortunately, their rate of formation is so slow that detrimental effects are not noted in a single passage of solvent through a normal decontamination cycle, and the solvent regeneration procedures minimize the cumulative effects.

The rate of hydrolysis of TBP is apparently first order with respect to TBP concentration, and increases with increasing temperature and nitric acid concentration. Under the operating conditions of the Purex flowsheet, DBP is formed while passing through the solvent extraction columns, and complexes almost immediately with uranium or other metallic ions present. Since the complexes are more soluble in solvent than in aqueous solutions, at least 90% of the DBP formed is carried by the solvent to the solvent recovery facilities, where it is removed by the solvent washes. Monobutyl phosphate is formed in smaller quantities than DBP, since it is a product of the hydrolysis of DBP, and has a higher rate of hydrolysis than DBP. Monobutyl phosphate is largely removed from the system via the aqueous wastes, although some forms cruddy metallic precipitates, which are entrained in the solvent. These solid complexes are removed from the solvent by washes in the solvent treatment system. In addition, some of the crud accumulates at the solvent extraction interface from where it is periodically removed by special interface jets.

Phosphoric acid and butanol are formed in still smaller quantities, and are removed (principally in the aqueous wastes) as rapidly as they are formed. Butanol can adversely affect beta FP decontamination and/or cause plutonium losses by reducing plutonium (IV) to plutonium (III) (Ref. 11), but the concentrations required to cause observable effects are rarely encountered in Purex processing.

4.7.1.2 Diluent Impurities - Reaction Products

Purex solvent diluent (NPH) is much more resistant to thermal and radiation degradation than previously used diluents. However, NPH does react very slowly when heated with nitric acid of process concentrations, and the reaction rate is increased by the presence of nitrates. A wide

variety of compounds are formed from this reaction. The process effects produced by these compounds are primarily the retention of FP's or uranium in the solvent and increased foaming during subsequent uranium calcination steps at the UO_3 Plant. Olefins in the diluent react readily with radioiodine (I-131) to form relatively stable compounds. The iodine, thus reacted, is not easily removed by chemical washing and, hence, contributes appreciably to the radioactivity of the recirculating solvent when reactor fuels aged less than 90 days are processed. The I-131 content is not of concern at the current minimum fuel age of 200 days.

The process effects of the diluent reaction products are very similar to those of DBP described previously, and ordinary laboratory tests do not distinguish between the two types of impurities. While the specific identities of the compounds from diluent degradation causing the process effects are not known, it is believed that nitroso compounds or nitrolic acids are the offenders.

9413275.0891

4.7.1.3 Entrained Impurities

The organic effluent streams from the solvent extraction columns normally carry small quantities of entrained emulsified aqueous phase and solid materials of unknown composition. The solids probably originate with particles resulting from equipment wear, and possibly with precipitates involving solvent degradation products. Some of these materials are emulsifying agents and increase the entrainment of the aqueous phase. The most detrimental process effect of the entrained materials results primarily from the solids which absorb FP's (principally zirconium-niobium) and are entrained by the process streams, thereby limiting the decontamination effected by solvent extraction.

4.7.1.4 Fission Product Impurities

The organic waste streams are contaminated with FP's (principally iodine, ruthenium, zirconium, and niobium) as a result of both extraction and entrainment. Fission product retention by the solvent after continued reuse in the Purex flowsheet is quite low during processing of N Reactor fuel. Typical activity levels, in units of microcuries per gallon of washed solvent, of Zr-Nb-95 and Ru-106, respectively, are 70 and 190 in the No. 1 solvent treatment system and only 0.3 and 0.8 in the No. 2 solvent treatment system (Ref. 9).

Iodine has a chemical affinity for the Purex solvent, and in one study (Ref. 15), up to 85% of the iodine introduced in the solvent extraction feed was predicted to appear in the first-cycle solvent effluent. While the concentration of radioiodine may become quite high at equilibrium in the recirculating first-cycle solvent, it will interfere with the process only if its activity level in the process streams becomes so high that it interferes with the analyses for the process-limiting FP's, ruthenium and zirconium-niobium, or if its activity level causes excessive

irradiation of the solvent. Neither eventuality occurred in the Purex Plant even during processing of feeds aged 90 to 100 days. Solvent deterioration through iodine irradiation is highly improbable under any anticipated Purex operating conditions, which include feed aging times in excess of 200 days.

4.7.1.5 Uranium and Plutonium in Solvent

Small amounts of uranium and plutonium are normally present in the organic waste streams, and larger amounts may occasionally be present as a result of column operating problems. It is necessary to remove the uranium and plutonium from the solvent to minimize cross-contamination of the products.

The solvent feed for the first solvent treatment system (10F) normally contains less than 0.004% of either the uranium or the plutonium processed. The 2EW (feed to solvent system 2) normally contains less than 0.004% of the uranium and a negligible amount of plutonium.

4.7.2 Solvent Washing

Regeneration of all the organic used in the Purex solvent extraction process, except the second uranium cycle, is accomplished by solvent treatment system 1, located in G Cell. The treatment process consists of two washes:

- Alkaline-permanganate wash (solution of sodium carbonate and potassium permanganate)
- Nitric acid wash.

System 2, located in R Cell, is used to treat the solvent for the final uranium cycle, and consists of wash steps identical to those of system 1. The equipment used in the two systems is nearly identical, although there are variations in the flowsheets. Figure 4-13 schematically shows the equipment and streams comprising systems 1 and 2, and Table 4-29 describes the liquid streams involved in the solvent treatment systems.

4.7.2.1 Alkaline-Permanganate Wash

The sodium carbonate-potassium permanganate wash takes place in the semibatch washing tank (TK-G1 for system 1 or TK-R1 for system 2). The wash tank, illustrated in Section 3.8 of Chapter 3.0, contains a perforated circular inner liner with the annulus packed with Raschig rings. The aqueous wash material (10BR in system 1 and 20BR in system 2) is picked up from the bottom of TK-G1 or TK-R1 by a recirculation pump and discharged into the packed area along with the 1CW in system 1 or 2EW in system 2. The mixing of the two streams in the Raschig rings creates a loose organic-aqueous emulsion allowing the wash solution to contact and remove most of

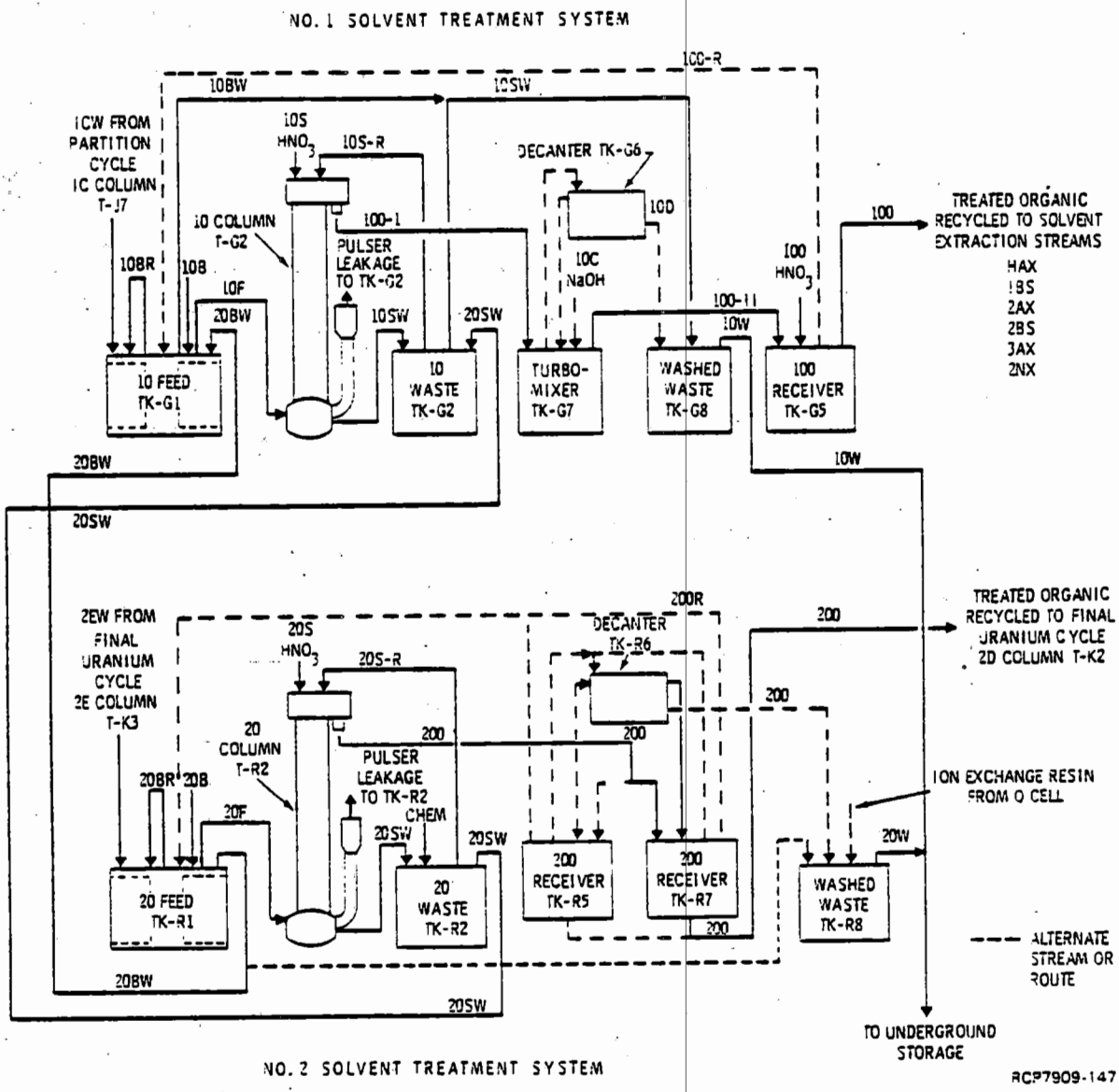

FIGURE 4-13. Solvent Treatment Systems 1 and 2 -- Process Flow Diagrams.

TABLE 4-29. Solvent System Streams.

Stream	Composition	Function	Flow, gal/min
1CW	TBP - 30% NPH - 70% U - trace FP's, other impurities	Organic waste stream from 1C column to the semibatch wash tank (TK-G1).	32.0
1OB (Batch Makeup)	Na_2CO_3 - 0.24M $KMnO_4$ - 0.024M	Alkaline-permanganate wash, added to TK-G1 to remove FP's and impurities from solvent.	0.5 (avg)
1OBR	Na_2CO_3 - $KMnO_4$ Composition variable between 1OB and 1OBW	Recycled alkaline-permanganate wash solution in TK-G1.	200.0
1OBW	Na_2CO_3 - 0.21M $NaNO_3$ - 0.06M $KMnO_4$ - ~0.01M MnO_2 - 0.01M U - 8×10^{-4}M FP's	Depleted alkaline-permanganate wash solution routed to TK-G8 for disposal.	0.51
1OF	Na_2CO_3 - trace TBP - 30% NPH - 70%	Washed-disengaged organic - 1O column feed.	32.0
1OSR	HNO_3 - 0.04M	Dilute nitric acid scrub to top of column to decontaminate 1OF organic stream. Alternated between fresh makeup and recycle from TK-G2.	3.63
1OW	Na_2CO_3 - 0.13M $NaNO_3$ - 0.04M MnO_2 - 0.004M	Aqueous waste from 1O column and TK-G1 to TK-G8 (Batch transfer to UGS).	0.93 (avg)
1OS - HNO_3	HNO_3 - 12.2M	Concentrated nitric acid added to the 1OS stream to maintain 1OSR acidity.	0.0006
1OSW	HNO_3 - 0.04M Impurities	Contaminated scrub solution in TK-G2 sent to wash waste collection tank (TK-G8).	0.36 (avg)
1OC	NaOH - 0.25M	Caustic wash solution added to turbomixer tank (TK-G7) removes FP's and impurities from solvent. Alternate, not normally used.	1.1
1OD	NaOH - 0.2M	Used caustic wash solution from decanter (TK-G6) routed to the wash waste collection tank (TK-G8). Alternate, not normally used.	0.71
1OO	TBP - 30% NPH - 70% Zr-Nb-95 - 70 μCi/gal Ru-106 - 190 μCi/gal HNO_3 - 0.01M	Washed-decanted solvent from TK-G7, transferred to solvent receiver tank 1 (TK-G5)	32.0
1OO - HNO_3	HNO_3 - 12.2M	Concentrated nitric acid added to the 1OO solvent to acidify it. Alternate, not normally used.	0.05

TABLE 4-29. Solvent System Streams. (Continued)

Stream	Composition	Function	Flow, gal/min
2EW	U - trace FP's, other impurities HNO_3 - 0.0001M	Organic waste stream from the 2E column (second uranium cycle) to semibatch wash tank (TK-R1).	20.0
Fresh Solvent	TBP - 50% NPH - 50% (May be varied as needed to adjust TBP concentration of solvent.)	Fresh solvent added to TK-R1 from solvent blend tank (TK-R1A) on a batch basis to replenish process inventory.	0.08 (avg)
20B (Batch Makeup)	Na_2CO_3 - 0.24M $KMnO_4$ - 0.024M	Alkaline-permanganate wash added to TK-R1 - remove FP's and impurities from solvent.	0.57 (avg)
20BR	Na_2CO_3 - $KMnO_4$ Composition variable between 20B and 20BW	Recycled alkaline-permanganate wash solution in TK-R1.	200.0
20BW	Na_2CO_3 - 0.23M $KMnO_4$ - 0.022M $NaNO_3$ - 0.02M MnO_2 - 0.002M	Semidepleted alkaline-permanganate wash solution routed to TK-G1 for further use, or to the wash waste collection tank (TK-R8) for disposal.	0.57 (avg)
20F	Na_2CO_3 - trace TBP - 30% NPH - 70%	Washed disengaged organic - 20 column feed stream.	20.0
20SR	HNO_3 - 0.04M	Dilute nitric acid scrub solution to top of 20 column to decontaminate 20F organic stream. Alternated between fresh makeup and recycle from TK-R2.	5.2
20S - HNO_3	HNO_3 - 12.2M	Concentrated nitric acid added to the 20S stream to maintain 20SR acidity.	0.005
20SW	HNO_3 - 0.04M	Partially contaminated scrub solution normally transferred to TK-G2 for further use.	0.36 (avg)
20S	HNO_3 - 0.064M	Fresh dilute nitric acid scrub solution batch makeup.	0.36 (avg)
20O	TBP - 30% NPH - 70% Zr-Nb-95 - 0.3 μCi/gal Ru-106 - 0.8 μCi/gal HNO_3 - 0.01M	Washed solvent transferred to TK-R7.	20.0

the contaminants from the 1CW or 2EW stream. The aqueous wash droplets move downward through the packing and gradually disengage from the organic solution, coalescing to form an aqueous wash layer at the bottom of the tank. The location of the interface between the organic and the wash solution is monitored by specific gravity dip tube instrumentation. The interface location must be controlled to assure that the basic aqueous solution is not pumped with the organic to the acid scrub column. Recycle of the aqueous wash solution continues for about 8 to 16 hours.

Periodically, the aqueous alkaline-permanganate wash solution in Tanks G1 or R1 must be changed out because of reduced pH and to remove accumulated FP's, plutonium, uranium, and dissolved organic impurities which reduce the effectiveness of the wash solution. The recirculation pump is shut off and the phases are allowed to separate. In G Cell, about three-fourths of the depleted scrub solution is then jetted to TK-G8 for disposal to an underground waste storage tank and replaced with fresh solution from TK-208 or used wash from TK-R1. In R Cell, about three-fourths of the aqueous wash in TK-R1 is then jetted to TK-G1 to be reused as a wash in solvent system 1, or can be jetted to TK-R8 for disposal to an underground storage tank, depending upon the purity of the wash solution. Fresh wash solution is then added from TK-208 to TK-R1.

4.7.2.2 Nitric Acid Wash

Nitric acid washing is accomplished in the 10 and 20 scrub columns (T-G2 and T-R2, respectively). The function of these single-purpose organic-continuous scrub columns is to remove entrained material from the solvent feed stream by contacting the organic with a dilute nitric acid scrub solution called the 10S or 20S stream.

After the 1CW is contacted with the alkaline wash solution in the packed section of TK-G1, it disengages and moves to the top center area of the tank. This partially decontaminated solvent becomes the feed stream (10F) for the 10 column, and is pumped to the bottom of that column. A dilute nitric acid scrub (10S) routed from the Purex sample gallery enters the top of the 10 column and settles downward, removing entrained carbonate and MnO_2 from the rising organic. The aqueous effluent from the column, called the 10SW (10 column scrub waste), flows to the 10 column waste collection tank (TK-G2). When a specified amount of 10SW solution is collected in TK-G2, the fresh 10S stream is shut off, the 10S-HNO_3 stream is adjusted to maintain the 10SR acidity, and a recirculation pump from TK-G2 is turned on to transfer the 10SW solution (now called 10SR) to the top of the 10 column, where it is utilized as scrub solution. This recirculation process continues for about 24 hours. At this time, the recirculation pump is shut off and the fresh 10S stream is started again to the column. The depleted 10W is transferred from TK-G2 as 10SW to the waste collection tank (TK-G8) for ultimate disposal to the Tank Farms. By recirculation of the 10SW, optimum use of the nitric acid is obtained, and solvent treatment essential material costs are reduced.

As shown in Figure 4-13, the R Cell nitric wash process is similar to that of G Cell, involving the 20 column for solvent scrubbing, collection of waste in TK-R2, and recycle of the 20SR stream as solvent scrub solution. R Cell scrub waste (20SW) is also routinely transferred to TK-G2 to be reused as a chemical makeup for 10SR to scrub system 1 solvent.

The dilute nitric acid scrub (10SR) in TK-G2 must also be changed periodically to remove accumulated FP's and to replace the nitric acid destroyed by reaction with the Na_2CO_3 entrained in the solvent. The spent solution is jetted to TK-G8 while maintaining normal operation in G Cell, and is replaced by increasing the 10S water and nitric acid flow rates, or by transfer of used dilute nitric acid scrub (20SW) from TK-R2.

Spent nitric acid in TK-R2 is replaced after jetting the used solution (20SW) to TK-G2 for reuse in solvent system 1, or to TK-R8 for disposal to underground storage in the Tank Farms. Tank R2 is refilled with water and nitric acid to make fresh 20S.

9413275.0897

4.7.2.3 Startup and Shutdown of Solvent Systems

The purpose of the startup procedures is to bring G or R Cell on-line by systematically starting the process stream flows, until steady-state conditions are reached.

The G Cell solvent system is started by establishing an internal recycle (spinning) of solvent by routing the solvent output from TK-G5 back to TK-G1. As the plant is started up, the organic streams to the various cycles are started as needed, and the recycling of solvent is discontinued.

R Cell is started in one of two ways. In an on-line startup, there is solvent output (2DX) to the 2D column and solvent input (2EW) from the 2E column. In a totally internal recycle (spinning) startup, the solvent output is used as solvent input via a special recycle route from TK-R7 to TK-R1.

Shutdown of G Cell equipment is done with solvent left in TK-G1 and the 10 column, or by transferring the solvent to TK-G5.

When R Cell solvent is no longer needed in K Cell, the solvent can be left in either TK-R1 and the 20 column, or routed to TK-R7 for storage.

4.7.3 Replacement of Solvent Losses

Losses of solvent from the Purex process by solubility, degradation, and entrainment in the aqueous phase are replaced by the addition of fresh TBP and diluent to the solvent inventory. Ordinarily, fresh TBP and diluent are mixed in the solvent blend tank (TK-R1A) to give a blend containing 50% TBP by volume.

A batch of fresh organic is made up in TK-R1A only when the in-plant inventory of solvent is low, as determined by the following:

- No spare solvent is available in TK-G7 or TK-R5.
- The combined volume in Tanks G5 and R7 is less than 5500 gallons while the plant is operating at steady-state.

After sample analysis, the fresh solvent is then added to R Cell after a carbonate-permanganate changeout. These additions are made to keep the operating levels in Tanks G5 and R7 between 2600 and 4000 gallons per tank, which is above the minimum levels required for agitation and pumping. The contents of TK-R1A are usually transferred to the system 2 semibatch wash tank (TK-R1) to give the solvent a wash treatment prior to introduction to the process. Fresh solvent additions to TK-R1 and from TK-R1 to TK-G1 are limited to 250 gallons at a time to avoid process upsets, and additions may continue until the next chemical changeout in either tank.

The TBP concentration of the solvent is slowly decreased by radiolytic and chemical degradation. The solvent is butted as required with NPH and TBP to adjust the concentration to 30 $\pm$1 vol% TBP and to maintain an operating inventory.

Under normal conditions, solvent entrained in the aqueous wastes will be transferred from R Cell to G Cell and to the underground waste storage tanks. Historically, solvent additions averaging about 200 gallons per day have been required to replace degradation and entrainment losses. Experience gained during the last few months of operation in 1972 indicates these losses can be reduced by 50% or more by maintaining close control over the TK-G8/R8 waste transfers and periodically recovering organic accumulated in these tanks.

4.7.4 Routine Flushing of Equipment

Both G and R Cells utilize potassium permanganate in the TK-G1 and TK-R1 contacting vessels. After a few weeks of plant operation, considerable manganese dioxide solids (MnO_2) accumulate in the packed section and bottom of the contacting vessels. These solids generally have appreciable amounts of beta and gamma emitters adsorbed on the particle surfaces. Other types of foreign material also accumulate in these vessels. During plant shutdown periods, the solids must be removed from the vessels since they interfere with efficient solvent treatment operation.

Solids are removed from the TK-G1 and TK-R1 feed tanks first as these tanks are used to supply the column flush solution. Chemicals used in the R Cell column flush are also used in the G Cell column flush, since the columns normally do not contain large amounts of solids. The procedure is arranged in a time sequence, which is important to assure efficient flushing and to avoid delays resulting from interferences with waste transfers.

Initially, a 2000-gallon oxalic acid-nitric acid flush is digested in each feed tank (TK-G1 and TK-R1). This waste solution is discarded via Tanks G8 and R8, respectively. Then a 4800-gallon oxalic acid-nitric acid flush is introduced to the 20 column (T-R2) and TK-R2 via TK-R1. After an 8-hour digestion, all of this flush is transferred to the G Cell equipment via the TK-R1 to TK-G1 jet and the TK-R2 to TK-G2 jet. After a complete water flush of both systems, 4800 gallons of sodium hydroxide-sodium tartrate flush are transferred into the R Cell equipment for an 8-hour digestion. This flush is later moved to the G Cell equipment (similar routing to the oxalic acid-nitric acid flush). A TK-G7 flush is also included. Waste transfers from the TK-G7 flushing are scheduled so as not to interfere with activity in Tanks G1 and G2.

4.7.5 Off-Standard Conditions

Malfunction of the solvent wash columns or the batch contactors results in a lower treated solvent quality, and is detected through appropriate laboratory tests of the solvent. Malfunction of the solvent extraction processes, due to poor quality solvent, is investigated by the same tests. The analyses most commonly employed to establish solvent quality are total gamma, percent TBP, disengaging time, and plutonium retention. Other analyses, such as rate of uranium transfer, DBP content, percent solids, percent aqueous phase, uranium or plutonium content, and spectrographic analysis, may be desirable under special circumstances.

High uranium losses to the solvent waste streams are frequently traced to complexing with DBP or other agents by determining the uranium distribution ratio. An abnormally high distribution ratio is a qualitative indication of the presence of a strong complexing agent. Uranium or plutonium losses to the aqueous waste streams may be caused by the gradual reduction of the TBP concentration through thermal or radiolytic degradation reactions and solubility in the aqueous waste.

Poor product decontamination from FP's in the solvent extraction processes is sometimes attributable to poor solvent quality. Extraction of FP's results from the presence of complexing agents such as DBP or diluent reaction products, which, in turn, are present because of malfunction of the solvent wash contactors. Entrainment of FP's in the solvent extraction columns may result from the improper operation of the columns, or from the presence of emulsifying agents in the system. Such agents can sometimes be detected by determining the aqueous-organic disengaging time, or by other physical tests. Spectrographic analysis may assist in identifying the emulsifier as a step in determining its source.

Cross-contamination of plutonium with uranium may result from incomplete uranium removal from the solvent during the washing operation. This condition may be detected by uranium analysis of the washed solvent.

Off-standard operation, such as flooding, emulsification, or defective scrub solution, in the solvent scrub columns generally results in impaired solvent quality, as described in the preceding paragraphs. On the other

hand, low solvent quality does not necessarily imply off-standard solvent scrub column operation. While uranium, plutonium, and TBP degradation products should be adequately removed by normal operation of the O columns, FP's and some diluent reaction products are incompletely removed by this procedure and tend to establish equilibrium concentrations in the recovered solvent. These equilibria are largely determined by plant operating conditions such as the irradiation and cooling history of the uranium, and the time, temperature, and concentration of nitric acid contact with solvent. Should such extraneous factors be causing the low solvent quality, corrective measures outside the scope of the normal solvent treatment procedure (i.e., special batch washing) may have to be applied.

Flooding in a solvent scrub column is indicated by an increase in the static pressure, a falling interface, and abnormal effluent flow rates. The flood can normally be dissipated by reducing the liquid volumetric velocity or the pulse frequency.

The symptoms of emulsification due to the presence of emulsion-forming materials in the scrub columns may range from a small entrainment (difficult to detect) in the solvent stream to complete flooding. In addition to a reduction in volumetric velocity and pulse frequency, emulsification may sometimes be decreased by: (a) increasing the 10B/20B Na_2CO_3 concentration, (b) increasing column temperature, and/or (c) by replacing the nitric acid recycle stream with fresh solution.

The sodium carbonate wash solution may become prematurely depleted and require replenishment because of excessive amounts of uranium or nitric acid in the waste solvent streams from the extraction system. Too low a carbonate concentration may lead to inadequate removal of FP's and DBP from the solvent. An abnormally high FP concentration in the incoming solvent will result in a corresponding buildup of radioactivity in the nitric acid recycle stream (10SR or 20SR), and thus produce recovered solvent with unusually high FP contamination. Under these conditions, the scrub solution is replaced more frequently if the product decontamination is excessively impaired.

Table 4-30 summarizes the detection and remedy of off-standard conditions in the solvent treatment systems.

4.7.6 Process Safety

Fire and explosion, which could damage equipment and the building, from ignition of G and R Cell solvent are potential hazards associated with the solvent treatment systems. The G and R Cell vessel temperatures must be controlled at 65°C or below and checked frequently. If any temperature indicator appears to be malfunctioning, or if any temperature indication is above 65°C, steam to the tank coils must be turned off and, if the malfunction occurs in Tanks G8 or R8, cooling water to the coils must be wide open while waste is transferred to the Tank Farms.

TABLE 4-30. Solvent Treatment - Off-Standard Conditions.

Off-Standard Condition	How Detected	Likely Cause	Detection of Cause	Remedy
A) Low quality of treated solvent	Analysis of solvent (1) Total gamma (2) Percent TBP (3) Disengaging time (4) Plutonium retention (5) Under special circumstances: uranium transfer, percent solids, percent aqueous phase, uranium or plutonium content, DBP content, spectrographic analysis	(1) Flooding of the solvent scrub columns (2) Malfunction of the batch contactors (3) Emulsification (4) Defective scrub solution	(1) Flooding a) Increase in column static pressure b) Falling or fluctuating interface c) Abnormal effluent flow rates (2) Analysis of TK-G1/R1 solution (pH) (3) Emulsification a) Flooding b) Entrainment (analysis) (4) Defective scrub - HNO_3 analysis of TK-G2/R2 solution	(1) Flooding: a) Reduce frequency of pulse b) Decrease flow (2) a) Increase contact time b) Increase Na_2CO_3 concentration (3) Emulsification: a) Replace 10B/20B makeup b) Increase column temperature c) Replace the nitric recycle stream with fresh solution (4) Increase scrub solution HNO_3 concentration
B) High uranium losses to the solvent waste streams	1CW/2EW waste loss and solvent wash waste sample analysis	Formation of uranium-DBP complexes	(1) Plutonium retention analysis of 10D/20D (2) pH analysis of TK-G1/R1 solution (3) Analysis of 1CW/2EW	Replace 10B/20B
C) High fission product contamination in treated solvent	Analysis of 10D/20D	(1) Low carbonate concentration in TK-G1/R1 (2) Extraction or entrainment of fission products in the solvent extraction system (3) Flooding of 10D/20D columns (4) Low HNO_3 in 10SR/20SR streams	(1) Low carbonate a) pH analysis of TK-G1/R1 sample b) Rotameter readings on the 10B/20B and/or 10R/20R streams (2) Gamma analysis of 1CW/2EW (3) ← See off-standard condition "A(1)" → (4) ← See off-standard condition "A(4)" →	(1) Low carbonate a) Replace 10B/20B b) Increase 10B/20B flow setting, replace or repair valve/pump as required (2) Adjust solvent extraction stream compositions and/or flow rates 1CX, 2EX, HAS, HAX, 2DX, 2DS
D) Cross-contamination of plutonium with uranium in the solvent extraction system	See solvent extraction off-standard conditions Section 4.4, Table 4-10,B and Table 4-12,C	Incomplete uranium removal from the solvent during washing	Uranium analysis of TK-G5/G7	See off-standard condition "A"
E) Plugging of TK-G1/R1 packing	(1) Solvent quality determination (2) Calibration of tank indicating solids displacement (3) Small amount of solvent removed greatly decreases tank WF, indicating solids' displacement	Solids in batch contact tank displace solution and interfere with flow of solvent and scrub	Same as "How Detected"	Shut down and perform an oxalic-nitric flush. Flush and dissolve solids until tank calibration returns to normal

Steam is not applied to a tank coil unless the liquid level is above the top of the coil to aid in temperature control. When vessel heating is required, steam is applied slowly to avoid an abrupt increase in temperature. For vessels requiring manual (P and O gallery) steam valving (Tanks R5, G5, and R7) for temperature control, the valves are never left open without monitoring the vessel temperatures.

Agitator impellers in organic-bearing vessels are routinely submerged greater than 6 inches below the air-liquid interface to avoid gross mist formation. Pumps or agitators in organic-bearing vessels are shut down as soon as overheating is suspected. Vapor-proof motors and switches are used, and the organic facilities are equipped with fire detection and prevention facilities.

9413275.0902

4.7.7 Alternate Solvent Treatment Methods

In addition to the solvent treatment methods described previously, other processes in the Purex Plant are available (though seldom used) which offer alternatives for making specific decontaminations. The following methods and other processes are described in detail in Chapter 6.0.

4.7.7.1 Turbomixer and Decanter for Solvent Purification

Equipment is available to do a third wash in solvent treatment system 1 if additional decontamination of FP's and other impurities from the solvent is necessary. In this process, the 10F solvent rises to the top of the 10 column, disengages from the aqueous phase, and overflows to TK-G7, which contains a volume of dilute caustic and a turbomixer. The turbomixer is a continuous solvent contactor adapted from a Savannah River Plant design to fit into TK-G7. The unit consists of a four-bladed paddle, 12 inches in diameter by 3 inches wide, rotating at approximately 200 rpm within a diffuser, which is attached to an 18-inch-diameter draft tube. The rotating paddle acts as the impeller of a double-suction pump, pulling organic in from above through a 5-inch orifice and dilute caustic in from below through a 10-inch-diameter orifice. The orifices minimize any change in the organic-to-aqueous mix ratio with a change in the volume of aqueous wash solution. The phases are intimately mixed (emulsified) and discharged through the diffuser which gives a radial flow pattern to prevent the tank contents from swirling (Ref. 16).

The emulsion is pumped to a decanter tank (TK-G6) located above the turbomixer tank (see Figure 4-13) where the aqueous and organic phases disengage. The organic flows from the top of the decanter back to the top of the turbomixer tank, and the aqueous wash waste exits at the bottom of the decanter and is routed to the wash waste collection tank (TK-G8).

The wash solution in TK-G7 is replenished by a continuous stream called the 10C. Contacted, decanted solvent is pumped from the top of TK-G7 to the decontaminated solvent receiver tank (TK-G5). Nitric acid

is added to TK-G5 to acidify the solvent before it is routed to the solvent extraction process. The organic wash waste solution collected in TK-G8 is routed to underground storage tanks as necessary.

A turbomixer tank is not included with the R Cell equipment. The organic from TK-R7 (or TK-R5) can be circulated through a decanter tank (TK-R6) to remove any entrained aqueous carryover from the 20 column. This flowsheet may be adopted if aqueous entrainment is excessive. The organic will flow from the top of the TK-R6 decanter back to TK-R7 (or TK-R5), while the aqueous phase exits from the bottom of the decanter to TK-R8.

4.7.7.2 Centrifuge Clarification

The washed Purex solvents carry small quantities of undesirable entrained materials, such as sodium carbonate solution and amorphous solids, which carry adsorbed FP's and help to stabilize aqueous-organic emulsions. These entrained materials were, at one time, continuously removed by centrifugation in specially designed liquid-liquid-solid centrifuges.

Operating and mechanical problems, and the potential safety hazard of organic mist formation, necessitated the removal of the centrifuges from the process. The process effects of the solids in the number 1 solvent system were found to be minimal and no further cleanup has been required. Two disc-type strainers designed for 2-psi pressure drops at operating flow rates and for removing particulates larger than 0.04 inch are installed in parallel on the outlets of both Tanks R5 and R7 in the number 2 solvent system. The strainers remove solids during inward, radial flow between circular discs separated by thin spacers. Periodically, an external handle is used to rotate the discs against stationary cleaner blades. The solids which fall to the bottom of the case are removed as required. Valves are used to maintain flow through one strainer of each set while the other is cleaned (Ref. 11).

4.8 ACID RECOVERY AND WASTE DISPOSAL

In the Purex Plant, treatment of high-level radioactive liquid wastes is part of the nitric acid recovery process. Highly radioactive waste solutions are treated before being sent to storage in underground tanks. In addition to acid recovery, the waste treatment process reduces the volume of material which must be processed through the waste management facilities and eventually stored.

In the 206-A Building acid fractionator and U Cell acid vault, dilute waste nitric acid streams are concentrated to a product suitable for reuse in the plant.

Liquid wastes containing radioactive concentrations within allowable release limits are routed to surface ponds or underground drainage sites, where the liquid disperses into the soil.

Technology for the acid recovery and waste treatment system is covered in Chapter 9.0, and a detailed description of equipment is in Chapter 3.0.

4.8.1 Acid Recovery

The Purex Plant is provided with facilities for the recovery of the salting agent (nitric acid) used in the solvent extraction operations. More than 80% of the nitric acid present in the aqueous waste streams from the solvent extraction batteries is reclaimed in reusable form. By recovering the nitric acid instead of neutralizing it and routing the waste to underground storage (UGS), appreciable caustic (NaOH), nitric acid, and waste storage savings are achieved. Sugar denitration, in contrast to neutralization, of high-level waste also produces a waste suitable for further processing in B Plant for strontium and cesium recovery. The 206-A Building acid fractionator and U Cell acid vault equipment convert recovered nitric acid streams to a product of uniform concentration which is suitable for process uses.

Recovered acid streams are received in the fractionator feed tank from three main sources. Acid driven off during metal dissolution is recovered in the off-gas treatment backup facility and returned to the fractionator system. This recovery process is described in Subsection 4.3.6.2. Acid driven off during process waste concentration and denitration in F Cell is also returned to the fractionator via the acid absorber. Acid is also recovered from calciner off-gases at the UO_3 Plant, and is returned to Purex in railroad tank cars and fed to the fractionator.

4.8.1.1 High-Level Waste Concentration

The aqueous acidic waste (HAW) from the HA column contains nearly all of the FP's from the fuel dissolution process. This waste is evaporated in the waste concentrator to reduce the volume of liquid which must subsequently be processed through the waste management facilities and stored.

The process flow diagram, Figure 4-14, includes information on the equipment, primary process routes, and some instrumentation for the system. The functions, typical compositions, and flow rates of the high-level waste concentration streams are summarized in Table 4-31.

9413275.0905

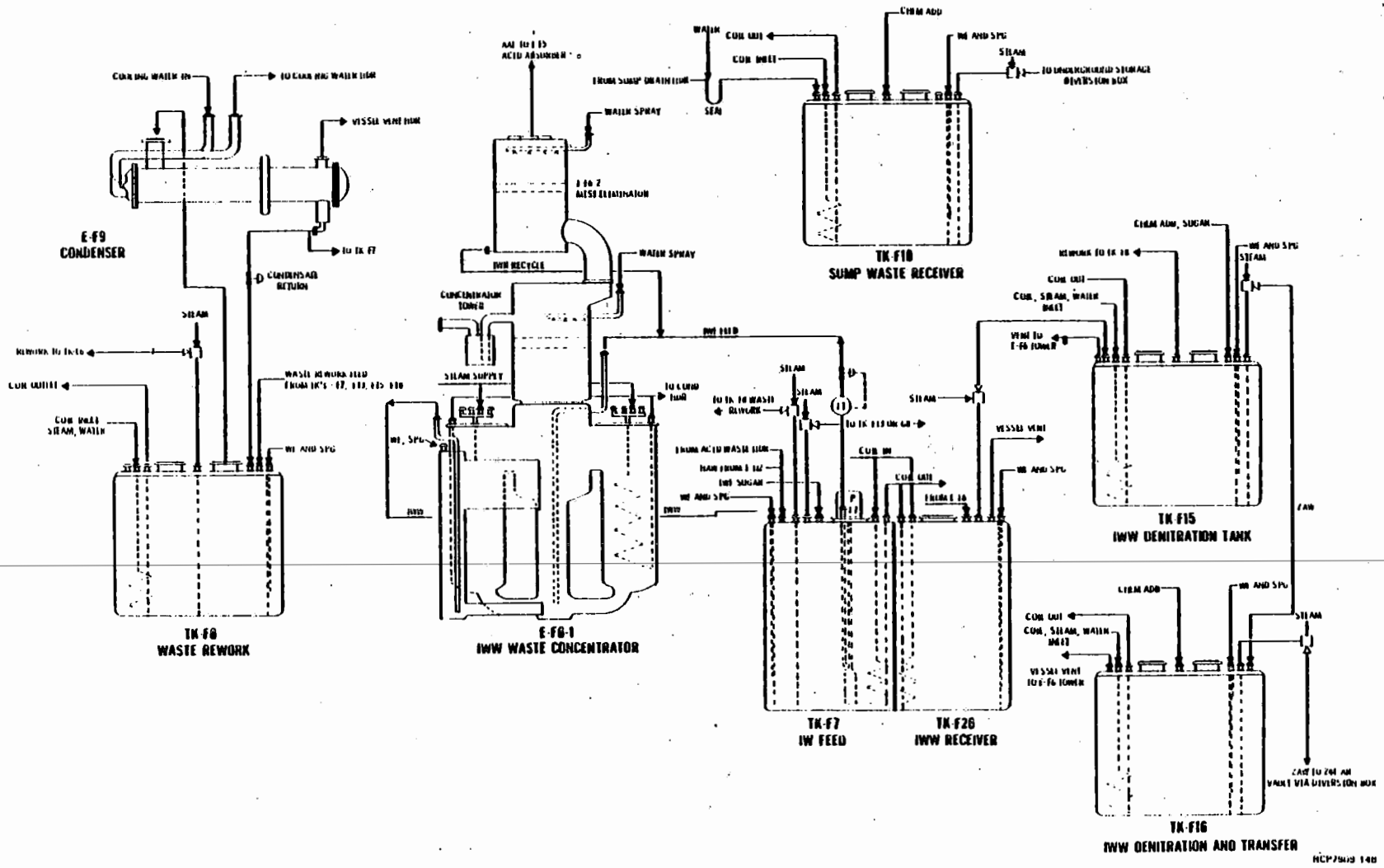

FIGURE 4-14. Waste Concentration and Handling Flow Diagram.

TABLE 4-31. High-Level Waste Concentration and Sugar Denitration Streams.

Stream	Composition	Function	Flow,[a] gal/min
HAW	U - 1.4×10^{-5}M HNO_3 - 3.0M Al - 0.09M F^- - 0.02M Pu - 1.8×10^{-4} g/gal	HA column waste stream	10.6
1WF-H_2O	HNO_3 - 0.1M AAD, Recycled E-F5 Condensate	Demineralized H_2O alternate added to dilute HAW in TK-F7 to allow more efficient concentrator operation and acid recovery.	17.1
1WF-Sugar	Sugar - 0.7M NaOH - 0.005M	Feed treatment in TK-F7 to suppress ruthenium volatilization from acid waste. NaOH added to prevent mold.	0.093
1WF	U - 5.3×10^{-6}M HNO_3 - 1.2M Al - 0.03M F^- - 0.008M Pu - 6.9×10^{-5} g/gal	Feed to E-F6-1 waste concentrator.	27.8
1WW	U - 1×10^{-4}M HNO_3 - 2.8M Al - 0.68M F^- - 0.15M Pu - 1.4×10^{-3} g/gal	Concentrated waste overflow from concentrator.	1.4
Denitration Sugar	Sugar - 0.7M NaOH - 0.005M	Denitrate 1WW.	0.3
ZAW	FP's - >3000 Ci/gal U - 1×10^{-4}M HNO_3 - 0.95M Al - 0.68M F^- - 0.15M Pu - 1.4×10^{-3} g/gal	Sugar-treated Zirflex acid waste to 244-AR vault.	1.4

[a]Based on Purex processing rate of 10 tons of uranium/day.

The HAW stream is routed to the high-level waste concentrator feed tank (TK-F7) and is then called the 1WF stream. The 1WF is pumped to the high-level waste concentrator (E-F6-1), entering the concentrator at the solution section, as in the ammonia scrubber waste concentrator, rather than at the tower section as in the other Purex Plant process concentrators. The waste concentrator is a steam-heated thermosyphon evaporator, very similar in design to the uranium product, ammonia scrubber waste, and backcycle waste concentrators. Designs of all of these vessels are presented in detail in Section 3.7 of Chapter 3.0.

To improve the nitric acid recovery from the high-level waste, 1WF dilution water (normally recycled condensate from the E-F5 condenser) is added to the concentrator feed tank (TK-F7). The concentrator is generally operated at full capacity, so the volume of dilution water added varies with the HAW flow rate. Sugar solution is also continuously added to TK-F7 to suppress ruthenium volatilization from the concentrator. The sugar reacts with nitric acid to form nitrite, which prevents ruthenium oxidation to volatile RuO_4.

The vapors (water and nitric acid) from the boiling waste in the concentrator pass upward through a mist eliminator located in the de-entrainment tower, and another mist eliminator (T-F6-2) in the tower off-gas line, before going on to the nitric acid recovery equipment. This off-gas stream is called the AAF. The condensate (1WR) formed in the upper mist eliminator is returned to the solution section of the concentrator.

The combination of the de-entrainment tower and the upper mist eliminator effectively decontaminates the off-gas stream from FP's. A small flow of scrub water is added to both the tower and de-entrainer during waste concentration to aid the de-entrainment/decontamination process. The scrub water returns to the concentrator with the condensate as additional dilution water.

Liquid holdup in the concentrator reboiler is about 2200 gallons, with an average residence time of about 26 hours at a 84-gal/hr concentrate removal rate. The concentrated high-level waste, called 1WW, overflows continuously to a waste receiver tank (TK-F26). In this tank, the 1WW is cooled and moved batchwise to the 1WW sample and denitration tank (TK-F15).

For efficient acid recovery, the concentrator specific gravity is held constant at the flowsheet value, and the vessel vacuum is controlled between 2 and 5 inches of water.

The TK-F7 liquid level (weight factor) must be maintained above 15% of chart to ensure that organic (if present) is not pumped to E-F6.

To avoid the formation of excess solids in the 1WW (and to avoid plugging lines during subsequent transfers), the concentrate specific gravity must not exceed the rate sheet value (normally equivalent to 1.24 at 25°C), and the E-F6 to TK-F26 overflow rate must be maintained at or near the rate sheet value (normally 1.4 gal/min) by adjusting the 1WF flow.

To ensure adequate FP decontamination of the concentrator overheads, the de-entrainer spray water flows and sugar flow to TK-F7 are maintained at specified rate sheet values. Also, "surging" the concentrator by too rapid a change in the boiloff rate must be avoided.

4.8.1.1.1 Waste Concentration Startup and Shutdown

Prestartup and startup procedures exist for F Cell to establish the necessary conditions for startup of the E-F6 waste concentrator. Prior to startup of the waste concentrator, checks are made to ensure that the condenser vent system is operating properly, and that there is no organic in TK-F7. Failure to have the condenser vent system operating when starting up the E-F6 concentrator would result in pressurization of E-F6. If any organic is left in TK-F7, it could be carried as feed to the E-F6 concentrator and be converted to potentially explosive compounds.

The T-F5 acid absorber condensate recycle pump is activated and the T-F5 absorber operation is established as the concentrator is started. The 1WF sugar addition is started simultaneously with the receipt of HAW in TK-F7. Once E-F6 is started, the waste concentrator-acid absorber system is brought up to normal operating rates.

The sequence of the concentrator startup is as follows:

- The concentrator is prepared for operation by checking the auxiliary systems; water is added to the de-entrainment pad spray and the seal pot.
- If necessary, the concentrator is filled with water via the seal pot.
- The steam is valved into the tube bundles.
- The liquid in the concentrator is simmered with demineralized water addition from TK-F7 to maintain concentrator liquid level until TK-F7 is receiving HAW.

The liquid level in TK-F7 is allowed to build up to working level as the 1WF flow is started, with a corresponding increase in concentrator steam flow. The E-F6 specific gravity is also allowed to increase before beginning concentrate overflow to TK-F26. When normal operating flows are attained, efficient operation of the concentrator requires a vacuum of

between 2 and 5 inches of water. Operating adjustments, if necessary, consist of reductions or increases of the T-F5/E-F6 vent vacuum, or reductions in the steam flow to the tube bundles.

The concentrator is shut down by slowly introducing air to the tube bundles, raising the bundle pressure until the automatic high-pressure steam cutoff is activated. The steam DOV's are closed and 5 to 10 minutes later the condensate DOV's are closed. The air pressure is then reduced to 10 psig. The concentrator is then cooled by opening the condensate DOV's and slowly turning on the cooling water to the tube bundle to avoid exceeding a bundle pressure of 39 psig, which would open the steam pop-off valve. When the concentrator is cool, the water is turned off and then blown out of the tube bundles with 30-psig air for 10 to 15 minutes. The air is returned to 10 psig, which is maintained throughout the shutdown. Water sprays to the de-entrainment pads are discontinued when E-F6 is cooled.

9413275.0900

4.8.1.1.2 Detection and Remedy of Off-Standard Conditions

A summary of waste concentration process control off-standard conditions is given in Table 4-32. Typical problems which may be encountered while operating E-F6-1 and appropriate remedial actions are provided.

4.8.1.1.3 High-Level Waste Concentration Process Safety and Criticality Prevention

Process safety in the waste concentrator operation is nearly the same as for other Purex concentrator systems. As in the rest of the plant, the potential exists for pressurizing vessels and developing leaks in concentrator tube bundles and process vessel coils. Any of these events could result in release of radioactive material to the environs. There is also the danger of explosive chemical reactions which can damage process equipment and result in release of radioactive materials outside the canyon. A major concern is improper valving, such as failing to air blow a jet following a solution transfer, which could cause a suckback from the vessel to the P and O gallery.

Various methods are used to monitor the process and prevent these occurrences. Instrumentation is installed to monitor and control vessel pressure. Tube bundles and coils are maintained pressurized to assure any leakage is into the process rather than from the process to the environs. The liquid level in TK-F7 is controlled to assure gross quantities of organic are not introduced to the concentrator, which is controlled at a safe temperature. Steam flow to the concentrator tube bundles is automatically shut off and air is turned on if the steam pressure or concentrator temperature exceeds a preset limit. Valving sequences are specified in operating procedures.

9413275.0910

TABLE 4-32. Waste Concentration - Off-Standard Conditions.

Off-Standard Condition	How Detected	Likely Cause	Detection of Cause	Remedy
A) Overconcentration of the waste in E-F6	(1) Increase in the concentrator boiling point (2) Increase in the concentrator specific gravity	Decreasing feed flow (IWF) without a compensating reduction of steam flow	Flowmeters on the IWF and the steam flow to the concentrator reboiler	Establish the correct ratio between the feed rate and concentrate removal by adjusting the steam flow and the IWF flow
B) Loss of concentrator feed supply	(1) Gradual decrease in the product removal rate (2) Decreasing feed flow rate (IWF)	Failure of pump between TK-F7 and E-F6	(1) Pump "off" indicator light (2) Flowmeter on the IWF	Restore feed pump to service
C) Excessive entrainment from E-F6	(1) High tower differential pressure reading (2) Analysis of recovered acid (TK-F3) for gamma activity	Excessively high boilup rate	(1) Tower differential pressure reading (2) Flowmeter on the IWF, steam and IWW	Decrease boilup rate by decreasing steam flow to concentrator reboiler
D) Excessive ruthenium volatilization from E-F6	Analysis of recovered nitric acid for ruthenium	(1) High nitric acid concentration in the E-F6 bottoms (2) Low sugar flow to TK-F7	(1) Analysis to determine HNO_3 concentration in IWW (2) Flowmeter on sugar addition line	(1) Dilute the feed with demineralized water (2) Increase sugar flow to TK-F7
E) High tower differential pressure (E-F6)	Tower differential pressure readings	Vapor velocity too high (most likely to occur during startup)	Tower differential pressure readings	Decrease the rate of steam flow to the concentrator reboiler
F) Excessive organic in feed to E-F6	Readings on TK-F7 organic detector	Entrainment of organic in the HAW stream from the solvent extraction system	Routine TK-F7 organic checks	(1) Jet organic to TK-F13 (2) Correct HA column operation
G) Excessive corrosion in absorber	Analysis of recovered acid	Decrease in ANN addition rate to T-F6, causing fluoride corrosion	(1) Flowmeter on ANN addition to T-F5 (2) Analysis of recovered acid for Al and F^-	Increase ANN addition rate to T-F5
H) Pressurization of E-F6	(1) Fluctuating overflow rate (2) Fluctuating weight factor readings	Foaming due to high sugar addition rate to TK-F7	Flowmeter on TK-F7 sugar addition line	Decrease sugar addition rate to TK-F7
I) No product overflow from E-F6	(1) Increase in concentrate specific gravity (2) Increasing E-F6 weight factor (3) No increase in F-26 weight factor	(1) Low IWF feed rate (2) Overconcentration due to high steam flow	(1) Flowmeter on IWF (2) Flowmeter on steam	(1) Increase IWF flow (2) Decrease steam flow
J) High temperature in concentrator	Temperature recorder on concentrator bottoms	High steam pressure in coils of concentrator reboiler	Steam pressure instrumentation	Decrease steam pressure/flow

When adjusting the concentrator vacuum, pressurization of the concentrator is avoided by making small (3% of chart) adjustments in the controller setpoint for the T-F5/E-F6 vent vacuum and by allowing adequate time between adjustments for the vent system readings to stabilize.

In the concentrator, introduction of organic solvent creates a potentially explosive complex mixture of TBP (and diluent) degradation compounds and nitric acid, which can explode at temperatures in excess of 150°C. The maximum permissible E-F6 concentrator temperature is higher than in the product and backcycle waste concentrators where high concentrations of uranium, plutonium, or neptunium are present. To prevent such conditions, the following safeguards exist:

- Tank F7 is checked for organic before startup, at shutdown, and whenever the HA column operation is upset.
- The maximum steam pressure to the concentrator tube bundles is 39 psig (the pressure at which the steam pop-off valves are set). This prevents the concentrator bottoms temperature from reaching 150°C.
- Should the steam temperature exceed 149°C, the steam is automatically shut off.

Nuclear criticality prevention in the waste concentration vessels is provided by administrative controls (HAW sample). The F7 and F26 tanks are limited to 11,000 grams of plutonium each, and concentrator E-F6 to 1200 grams in acidic solutions.

4.8.1.2 Sugar Denitration Process

Sugar denitration of 1WW is carried out to increase the acid recovery from the 1WW stream, thereby decreasing the quantity of sodium hydroxide required in subsequent processes to neutralize the acid waste. This reduction in sodium hydroxide usage also reduces the waste volume which must be stored in the underground waste tanks.

The flow diagram, Figure 4-14, contains information on the denitration equipment and process routes.

After about 2500 gallons of 1WW have accumulated in TK-F26, the liquid is sampled and analyzed for cesium, plutonium, and nitric acid. When the analyses confirm that the solution is within waste specifications, the 1WW is transferred to TK-F15, where an antifoam agent (400 mℓ Dow Corning Antifoam B/100 gallons 1WW) is added. The 1WW is then heated to between 95°C and 100°C. A 22 wt% sugar (0.7M sucrose) solution is added to the 1WW for 12 hours at a rate (based on 1WW volume and nitric acid concentration) of from 250 to 350 pounds of solution per hour. Addition is continued until sufficient sugar has been added to decrease the nitric acid concentration to less than one molar. A digestion period of 12 hours is required after addition is completed.

The sugar and nitric acid in the 1WW react chemically to form carbon and nitrogen oxides, which are exhausted through the waste concentrator tower to the acid absorber (T-F5). The reaction between nitric acid and sugar is easily controlled. The three main control variables are temperature and pressure of the 1WW in TK-F15, and rate of addition of the sugar solution. Since the possibility of tank pressurization (uncontrollable evolution of gases) exists if a large amount of sugar is added to a cold 1WW solution (below 90°C), the 1WW solution is heated before sugar is added. Consequently, if the reaction vessel temperature drops below 92°C, the sugar solution addition is automatically stopped and can be resumed only after the temperature of the solution is above 92°C. When no sugar is being added, two manual valves are closed in the sugar add-line between the sugar makeup tank, TK-204, and the reaction vessel, TK-F15.

Precipitating agents must not be added to vessels containing more than 500 grams of plutonium. Sugar is classified as a precipitating agent because oxalic acid is formed as an intermediate in the denitration reaction. Therefore, sugar denitration is not started until the TK-F15 plutonium content is determined from sample analyses to be less than 500 grams. Waste batches containing more plutonium than this are routed to Tank F8 or F13 for eventual rework as discussed in subsection 4.8.2.2.

The denitrated 1WW is cooled to 50°C before transfer to TK-F16. If further digestion is necessary, the liquid is heated to 90° - 96°C for the duration of digestion. The 1WW is then sampled and analyzed for acid content. From TK-F16, the waste is routed to the 244-AR vault, with subsequent transfer to B Plant for removal of cesium and strontium.

4.8.1.3 Acid Absorption

The acid and water vapors exiting the 1WW waste concentrator via the concentrator tower and de-entrainer are routed to the acid absorber (T-F5) where nitric acid is recovered as a 18 wt% product by an absorption (enriching) process involving countercurrent contact of the vapors with a reflux stream of water. The process flow diagram, Figure 4-15, contains information on the equipment, primary process routes, and some instrumentation. Table 4-33 summarizes the compositions, functions, and flow rates of liquid and vapor streams involved in the acid absorption process.

The T-F5 acid absorber is an atmospheric pressure, 15 bubble-cap tray tower. The acid-water vapors, termed AAF, enter the absorber above the eighth plate from the bottom of the tower. Absorber water, called AAR (normally recycled E-F5 condensate), is added through the top of the absorber and overflows downward from tray to tray, absorbing the nitric acid vapors from the upward-flowing gaseous stream passing out of the slots in the bubble-caps.

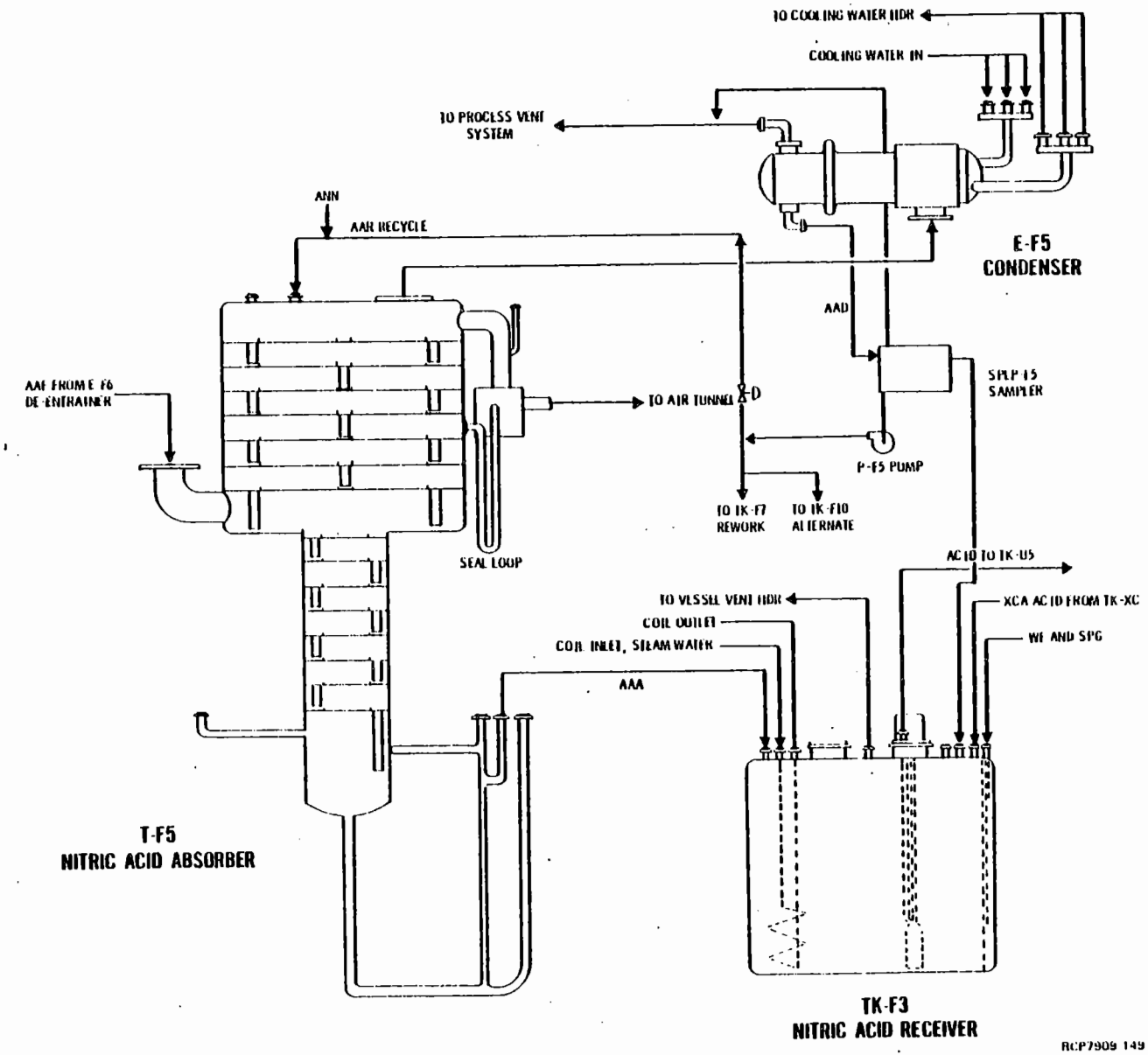

FIGURE 4-15. Nitric Acid Absorber Flow Diagram.

TABLE 4-33. Nitric Acid Absorption Streams.

Stream	Composition	Function	Flow, gal/min
AAF	Vapor HNO_3 - 1.1M	Acid absorber feed stream - vapor from waste concentrator (E-F6-1).	27.6
AAR	Recycled AAD; alternate demin. water	Acid absorber water to T-F5.	8.8
AAA	HNO_3 - 3.2M	18% HNO_3 solution product from T-F5 routed to TK-F3.	8.4
XCA	HNO_3 - 2.0M	HNO_3 recovered from dissolver off-gas by backup facility routed to TK-F3.	5.4
AAD	HNO_3 - 0.1M	Acid absorber condensate from E-F5 routed to AAR, TK-F7, and TK-F10.	29.8
ANN	ANN - 1.68M	ANN solution added to T-F5 to complex fluoride and thus reduce corrosion.	0.078

The off-gas from the absorber, depleted of nitric acid, passes through the condenser where the water vapor is condensed. The condensate is recycled as 1WF dilution water, as AAR, and to TK-F10, with capability to overflow to a crib.

Reflux to the absorber is normally supplied from the SPLP-F5 sample pot pump, which routes 30% of the gross E-F5 overhead condensate (42% of the net condensate) back to the absorber via a DOV and flowmeter. A demineralized water addition line is available to provide additional reflux if required. Since any chloride ion carried overhead during waste concentration accumulates in the 15 to 25% nitric acid (liquid) region of the tower, chloride purge lines have been provided on the tenth, eleventh, and twelfth trays from the bottom (the second, third, and fourth trays up from the vapor feed point) to drain the chloride-bearing acid from the trays. The chloride purge lines have seldom been used, since chloride ion accumulation has not been a problem.

A low volume aluminum nitrate nonahydrate (ANN) stream is also added with the reflux stream. The aluminum complexes fluoride to reduce corrosion in the absorber and during subsequent processing.

The absorber product acid, now 18 wt% nitric acid, flows by gravity to the bottom of the absorber. This stream is termed the AAA, and is routed to the absorber receiver tank (TK-F3). The nitric acid (XCA) recovered in the dissolver off-gas backup facility is also routed to TK-F3.

Identification, detection, causes, and remedies for correction of some off-standard conditions which may be encountered with acid absorber operation are given in Table 4-34. The engineering principles and technology of the absorber are discussed in Chapter 9.0, and the detailed equipment specifications in Chapter 3.0, Section 3.13.

TABLE 4-34. Acid Absorber - Off-Standard Conditions.

Off-Standard Condition	How Detected	Likely Cause	Detection of Cause	Remedy
A) Excessive acid in condensate	Analysis of condensate exiting condenser E-F5	Low reflux flow rate to absorber	Flowmeter on reflux line (AAR)	Increase AAR flow rate
B) Excessive differential pressure across absorber	(1) Absorber differential pressure instrumentation (2) Pressure indicator on absorber rebuiler	Vapor velocity too high (most likely to occur during startup)	Same as "How Detected"	(1) Reduce feed flow to absorber to reduce vapor velocity (2) Reduce E-F5 vent vacuum
C) Low acid concentration in product	Analysis of TK-F3 (AAA) for nitric acid concentration	(1) Low acid feed rate to the absorber (2) Excessive reflux to absorber (flooding or dilution	(1) Flowmeter on the acid absorber feed (AAF) (2) Flowmeter on reflux line (AAR)	(1) Increase feed rate to the absorber (2) Decrease AAR flow rate
D) Excessive radioactivity in absorber product (bottoms)	Analysis of TK-F3 (AAA)	← See waste concentrator off-standard condition D (Table 4-32) →		
E) Chloride accumulation on the absorber bubble-cap trays	Specific analysis of contents of the plates just above the vapor feed point	Chloride carryover during waste concentration	Same as "How Detected"	Purge affected plates
F) Insufficient reflux to T-F5, condensate reflux valve wide open	(1) High T-F5 bottoms specific gravity (2) Reflux valve loading pressure (3) Analysis of condensate exiting condenser E-F5	(1) Overconcentration (2) Plugged valve (3) Faulty T-F5 bottoms specific gravity and/or AAR flowmeter instrument readings	See "How Detected"	(1) Slowly add demineralized water to T-F5 until bottoms specific gravity drops (2) Unplug valve (3) Repair instrumentation
G) Insufficient complexing of fluoride	Analysis of TK-F3 for Al and F^-	Low ANN addition rate	Flowmeter on ANN	Increase ANN flow rate

4.8.1.3.1 Acid Absorber Operation and Process Control

The acid absorber is started as follows:

- The T-F5/E-F6 condenser vent system is operated on steam to give more than 40 inches of water vacuum.
- The T-F5/E-F6 vacuum jet is operated on steam to supply the desired vacuum.
- Water is added to T-F5 as necessary to increase the liquid level to 100 inches.
- The T-F5 condenser cooling water is turned on to maintain a water outlet temperature of 55°C or below.
- The E-F6 concentrator is started as described in 4.8.1.1.1.
- The T-F5 condensate recycle pump is started with the flow to T-F5 (AAR) set at 25% of the rate sheet value. The flow is increased to the rate sheet value as the T-F5 specific gravity increases.
- The condensate flows to TK-F7 and TK-F10 are adjusted.

The T-F5 bottoms specific gravity is controlled during operation to assure efficient nitric acid recovery by adjusting the AAR flow rate.

The T-F5 acid absorber is shut down by turning off the condensate recycle pump after the HAW flow is stopped. The TK-F7 inventory is reduced and E-F6 concentrator feed and steam flows are reduced.

4.8.1.3.2 Acid Absorber Process Safety and Criticality Prevention

There are no special personnel, process, or criticality hazards associated with operation of the acid absorber.

4.8.1.4 Acid Fractionation

The vacuum fractionator (T-U6) concentrates the nitric acid streams from the T-F5 acid absorber (about 18 wt% nitric acid) and the backup facility absorbers (about 12 wt% nitric acid), mixed with acid recovered in the UO_3 Plant (50 wt% nitric acid) to give a 50 wt% nitric acid for reuse in the Purex Plant. The three absorber streams are collected in TK-F3, and are then pumped to TK-U5 where they are blended with the UO_3 Plant acid to obtain a minimum concentration of about 20 wt%. This solution is fed to the T-U6 tower.

Figure 4-16 shows the fractionator process equipment and primary process flow routes. Process streams are identified in Table 4-35.

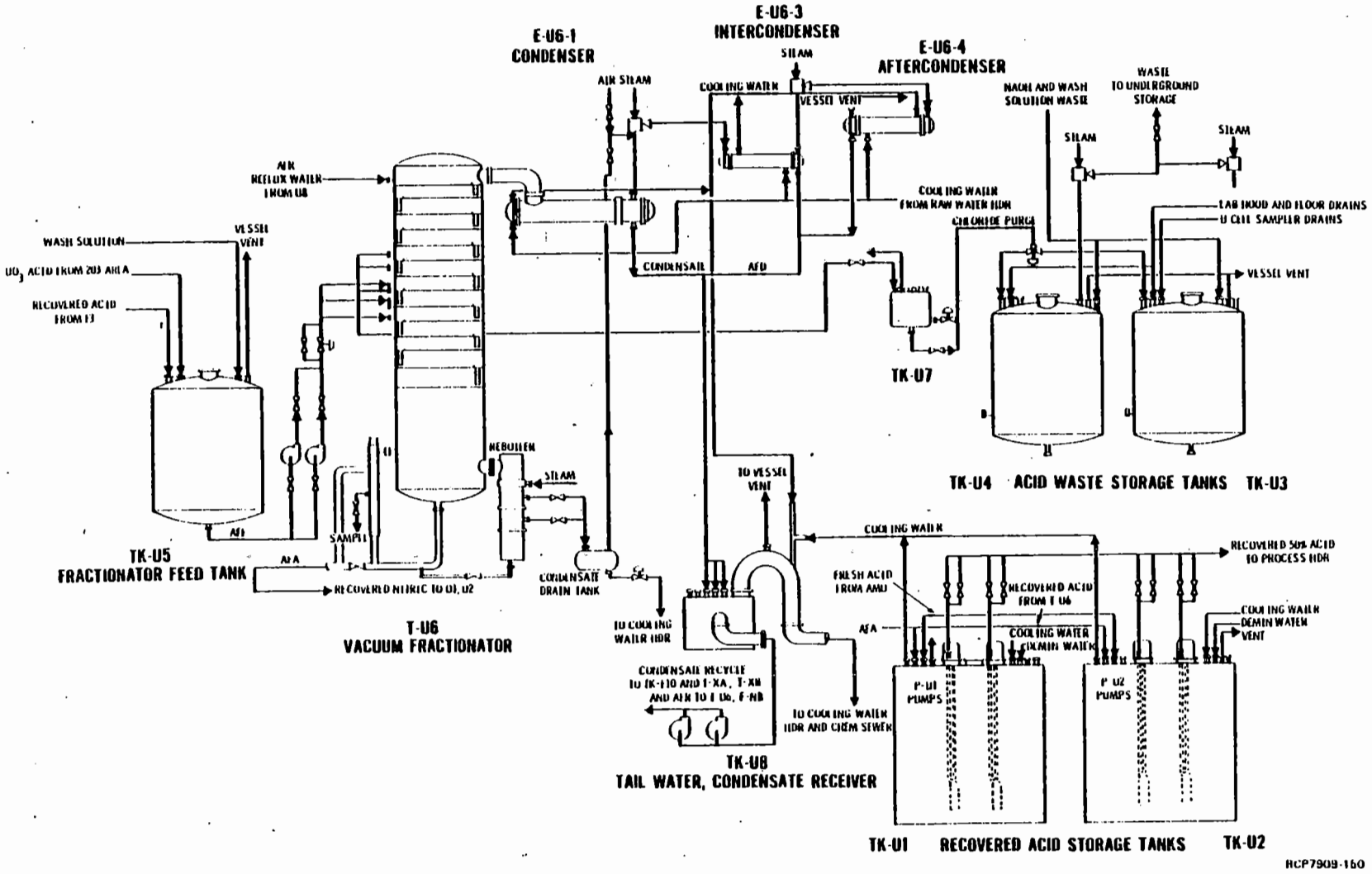

FIGURE 4-16. Vacuum Fractionator and U Cell System Flow Diagram.

TABLE 4-35. Vacuum Fractionator Streams.

Stream	Composition	Function	Flow,[a] gal/min
UO_3 Plant Acid	HNO_3 - 10.4M	UO_3 Plant recovered acid.	1.3 (avg)
AFF	HNO_3 - 3.4M	Acid fractionator feed pumped from TK-U5. Mixture of AAA, XCA, and UO_3 acid.	15.1
AFR	Demin. water (alternate) HNO_3 - 0.005M AFD recycle	Reflux added to fractionator (T-U6).	2.3
AFA	HNO_3 - 10.4M	50% HNO_3 solution from fractionator, routed to storage tanks (TKs-U1, U2).	4.9
AFD-XA, XB	HNO_3 - 0.005M	Fractionator condensate routed to backup facility as absorber water.	5.4
AFD-F10	HNO_3 - 0.005M	Excess AFD routed to backcycle waste.	5.2

[a]Based on Purex Plant processing rate of 10 tons of uranium/day.

The fractionator is a 14-tray bubble-cap tower, operated under vacuum to reduce corrosion rates for those portions of the fractionator handling concentrated acid. An absolute pressure of 100 millimeters of mercury is developed at the top of the tower by a two-stage steam jet system acting in series with a surface condenser (E-U6-1). The fractionator engineering principles and technology are discussed in Chapter 9.0, and the detailed equipment specifications in Chapter 3.0.

The dilute acid feed (AFF) is normally pumped to the fifth tray from the bottom in the upper section of the tower and flows down, along with some reflux water, from tray to tray and finally to the reboiler. Purge lines are provided for chloride removal from plates covering the 7 to 30% nitric acid composition range (sixth, seventh, eighth, and ninth plates from the bottom of the tower). The reboiler section operates with a constant boiling mixture of 50% nitric acid. Acid vapors from the reboiler pass upward through the bubble caps and are absorbed by the descending solution.

The resulting overhead vapor, consisting of 99.5 wt% steam, exits the top of the tower and is condensed in E-U6-1. When operating with a good balance of reboiler steam, fractionator feed, and reflux water, the off-gas exiting the tower is essentially free of acid. The condensed vapors (AFD) are returned to the column as reflux (AFR), and routed to the backup facility for use in the absorbers. Any excess condensate is routed to TK-F10. The bottom product (AFA), 50 wt% nitric acid, flows into a

stilling chamber from which the liquid overflows to one of two storage tanks (TK-U1 and U2) which supply the recovered acid header in the sample gallery. This header supplies the three dissolvers, a few tanks, and some continuous streams in solvent extraction.

4.8.1.4.1 Vacuum Fractionator Operation and Process Control

Startup of the acid fractionation process includes the following sequential steps:

- Cooling water flow is started to the three condensers (E-U6-1, E-U6-3, and E-U6-4).
- Steam is started to the first- and second-stage jets to establish operating vacuum on the fractionator.
- The fractionator product (AFA) overflow is valved to TK-U1 or TK-U2, and the AFR (reflux) flow is started. After 30 minutes, the AFR flow is adjusted to the planned feed rate.
- Steam is turned on to the T-U6 reboiler, and the AFF (acid feed) pump flow rate is set.
- Steam flow and feed rate are increased and adjusted to the desired rates.

The following guidelines govern steady-state operation of the vacuum fractionator:

- The tower vacuum is maintained at 100 millimeters of mercury (absolute pressure).
- The bottoms concentration is maintained at 50% nitric acid by adjusting the steam flow to the reboiler.
- The condenser (E-U6-1) cooling water outlet temperature is maintained at somewhat less than 40°C by adjusting the cooling water flow.
- The acid from the fractionator is routed between Tanks U1 and U2 as necessary.
- Tanks U1 and U2 liquid temperatures are maintained between 20° and 30°C by adjusting water flow to the coils.
- The feed to the fractionator (AFF) is maintained at a rate which keeps low liquid inventories in Tanks F3, XC, XD, and U5.
- The desired reflux rate (AFR) for the current feed rate (AFF) is determined and the AFR flowmeter is set.

A nomograph, presented in Reference 17, permits determining the required AFR and steam flow rates at various feed flow rates and acid concentrations. Methods for detecting and correcting typical off-standard operating conditions with the vacuum fractionator are listed in Table 4-36.

When the Purex Plant is shut down and the dilute acid supply from the T-F5 absorber and the XA and XB absorbers is discontinued, the acid inventory in Tanks F3 and U5 is processed and the vacuum fractionator equipment is shut down. In shutting down the fractionator, the feed to the tower is shut off first, then the steam to the reboiler and the AFR flow. The overhead jets are then turned off, bringing the tower to atmospheric pressure.

4.8.1.4.2 Vacuum Fractionator Process Safety and Criticality Prevention

No special personnel or process hazards are associated with the operation of U Cell equipment. Nuclear criticality danger is not present in the acid recovery equipment.

4.8.2 Waste Treatment and Disposal

There are three distinct groups of liquid process waste from the Purex Plant, and special waste handling and disposal procedures are employed for each of these waste groups. The high-level waste handling has been described earlier (coating waste in Section 4.2 and HAW in Section 4.8.1). Other liquid wastes include very low-activity aqueous wastes, such as condenser and vessel jacket cooling water, and various low-level process wastes, including some which may require rework for product recovery. Waste treatment technology is discussed in Chapter 9.0.

4.8.2.1 Treatment and Disposal of Low-Level Process Wastes

Liquids from the 291 Area (stack condensate, main filter drainage, cooler water, sump accumulations from the 293-A Building, etc.) are collected in TK-216-A2 and routinely jetted to TK-U3 for disposal to UGS. Miscellaneous laboratory wastes and 206-A sump wastes are also routed to either TK-U3 or TK-U4 for disposal. When a batch is accumulated in TK-U3 or TK-U4, the waste is diverted to the empty tank and the batch is sampled for uranium, plutonium, H^+ and/or pH analyses. The batch is made basic with caustic (NaOH) on the basis of the sample results, and transferred to UGS.

A sump waste receiver tank (TK-F18) is used for routine accumulation (with a few exceptions) of all head-end and central canyon sump waste. In addition, TK-F18 collects drainage from various sources such as the condenser vent, vessel vent, and sampler drain headers, and the ammonia scrubber waste (ASW) from concentrator E-F11-1. The current Instrument and Engineering Flow Diagrams (IEFDs) may be consulted for routing details.

9413275.0921

TABLE 4-36. Acid Fractionator - Off-Standard Conditions.

Off-Standard Condition	How Detected	Likely Cause	Detection of Cause	Remedy
A) Excessive differential pressure across T-U6.	Differential pressure instrument readings	Vapor velocity too high (Most likely to occur during startup)	Same as "How Detected"	(1) Reduce steam flow to reboiler (2) Reduce feed and reflux addition rate
B) Excessive pressure in tower (unable to maintain 100 mm Hg absolute pressure)	Column vacuum (pressure) instrumentation	(1) Loss of cooling water flow to the surface condenser (2) Failure of the jet ejector system (3) Above normal air bleed rate (4) Inadequate steam supply	(1) Flowmeter on cooling water stream (2) Sudden change in vacuum or inability to initially draw vacuum (3) Air bleed valve loading pressure (4) Inability to maintain steam flow to reboiler and vacuum simultaneously	(1) Restore cooling water flow to condenser (2) Shut down for maintenance (3) Adjust to proper setting (4) Increase total steam supply to the fractionator building
C) Excessive acid in distillate (overheads)	Analysis of the distillate for HNO_3	Low reflux flow rate (AFR)	Flowmeter on AFR stream	Increase AFR to proper flow rate
D) Low acid concentration in product (bottoms)	(1) Specific gravity reading of the stilling chamber (2) Analysis of TK-U1 or TK-U2 for HNO_3	(1) Control system failure (2) Feed rate too high (AFF) (3) Steam flow rate too low (4) High reflux to feed ratio	(1) Failure of involved instruments (2) AFF flowmeter (3) Reboiler steam flowmeter (4) AFR and AFF flowmeters	(1) Repair instruments (2) Decrease feed (AFF) rate (3) Increase steam flow to reboiler (4) Decrease reflux (AFR) rate
E) Excessive corrosion	Corrosion products in TK-U1/U2 samples	Fractionator operating at a higher pressure than normal	Column vacuum instrumentation	Increase vacuum to proper setting
F) Chloride accumulation	Analysis of material on the chloride purge plates	Chloride impurities introduced to process accumulate on trays	Same as "How Detected"	Purge affected plates

The contents of TK-F18 are sampled after each addition of sump solution or concentrated ammonia scrubber waste, which is handled as a separate waste batch. When a waste batch is accumulated, the contents are either made basic and sent to UGS, or jetted to the waste rework tank (TK-F8), depending on the amount of product in the liquid and the waste source. Disposal specifications for sump waste batches are based on Cs-137 analyses to determine the correct UGS destination. "Light water" used in the fire prevention system has been shown to be detrimental to the Purex process, and causes extremely excessive foaming during concentration. The light water collected in TK-F18 as a result of the fire prevention system being activated is made basic and sent to UGS.

4.8.2.2 Waste Handling - Rework

High- and low-level plutonium or uranium waste solutions which are generated in solvent extraction processing and which require rework for recovery of product materials must undergo extensive pretreatment before return to the process. The waste rework tank (TK-F8) and condenser (E-F9), shown in Figure 4-14, are used to hydrolyze organics which may be present in the waste by boiling the material in reflux for about 3 weeks. Dilute product-bearing waste may also be concentrated in this tank in preparation for product recovery. After processing, the liquid is introduced in small quantities to Purex solvent extraction feed tanks.

Potentially poor quality organic is decanted out of various feed and storage tanks, such as TK-F10 in the backcyle waste system, and routed to TK-F13 for recovery. The organic recovery is accomplished by first removing any product with a 3% nitric acid strip solution, which is intimately mixed with the organic, settled, sampled for product analyses and routed to either TK-F10 in the backcycle waste system or to TK-G8 for disposal depending on product content. The organic is then washed in TK-F13 with sodium carbonate-potassium permanganate solution. The washed organic is decanted to TK-G1 for reprocessing, and the aqueous waste is jetted to TK-G8, the wash waste tank.

4.8.2.2.1 Waste Rework Operating Procedure

The following is a general outline of the TK-F8 rework operation:

- All material is sampled and analyzed for uranium, plutonium, neptunium, and nitric acid, prior to rework through TK-F8.
- The E-F9 condenser is routed for total reflux, and the waste is transferred from TK-F18 or TK-F13 to TK-F8 without agitation to avoid transferring organic.
- The nitric acid concentration of the waste is adjusted to 2M, if necessary.

- Water to the TK-F8 coil is turned off, and steam is introduced to heat the waste to boiling.
- To hydrolyze organic degradation products, the E-F9 condenser is left in the reflux mode during boiling, and the waste is refluxed for a period of 3 weeks.
- If the waste is to be concentrated, the TK-F8 condensed overheads are routed from E-F9 to TK-F7.
- Liquid concentration is terminated at the desired specific gravity.
- The tank contents are cooled at the end of the concentration or reflux by slowly turning the steam off and adding cooling water to the coil. The agitator is turned on to assist cooling.

9413275.0923

4.8.2.2.2 Waste Rework Process Safety and Criticality Prevention

Tank F8 solution must be maintained at a temperature less than 130°C to prevent the formation of red oil. For criticality prevention, the specific gravity of the rework solution must be maintained at less than 1.30 at 110°C to prevent the formation of precipitates.

The temperature of the organic recovery tank (TK-F13) is maintained below 65°C while solvent is present to decrease the potential for an organic fire or explosion.

In Tanks F8 and F13, the maximum allowable plutonium mass in acid solution is 12,400 grams unless a caustic carbonate-permanganate wash for organic recovery is to be carried out. Since this wash may precipitate fissionable material, this step is undertaken only if the mass of plutonium in TK-F13 is known to be less than 500 grams.

4.8.2.3 Aqueous Effluents Disposal

Facilities and equipment involved with aqueous effluents are described in more detail in Chapters 2.0 and 3.0. Aqueous discharges from the Purex Plant include the following six categories: cooling water (CWL), chemical sewer (CSL), steam condensate (SCD), process condensate (PDD), ammonia scrubber waste condensate (ASD), and 203-A Area discharge (PTD). Brief descriptions of each system and of the modifications planned to eliminate the use of French drains follow. The information is summarized in Table 4-37 and Reference 18.

TABLE 4-37. Purex Plant Aqueous Effluents.

Discharge Stream	Flow Measurement	Sampling	Diversion	Radiation Monitoring	Emergency Sampling	Estimated Volume, 10^6 gal/year
Cooling Water (CWL to 216-A-25)	1) Weir 2) Dip Tube 3) Flow Integrator/ Totalizer	1) EMV Sampler 2) Tank Drain Sample	Retention Basin (Automatic)	Single Probe (non-redundant) (non-failsafe)	None	1100.0
Chemical Sewer (CSL to 216-B-3)	1) Parshall Flume 2) Flow Integrator/ Totalizer	Propor-tional	Retention Basin (Automatic)	Single Probe (Validated periodically by automatically actuated check source)	Automatic Verification Sample	230.0
Steam Condensate (SCD to 216-A-30)	1) Magnetic Flowmeter 2) Integrator/ Totalizer	1) EMV Sampler 2) Jug Pour Sample	Retention Basin (Automatic)	Single Probe (non-redundant) (non-failsafe)	Automatic Verification Sample	47.0
Process Condensate (POD to 216-A-10)	1) Magnetic Flowmeter 2) Integrator/ Totalizer	Propor-tional	None	Single Probe (Validated periodically by automatically actuated check source)	Automatic Verification Sample	2.5
Ammonia Scrubber Waste Condensate (ASD to 216-A-36B)	1) Magnetic Flowmeter 2) Integrator/ Totalizer	Propor-tional	None	Single Probe (Validated periodically by automatically actuated check source)	Automatic Verification Sample	5.0
203A Discharge (PTD to 216-B-3)	Collection Tank Volume Measurements	1) P-Tank Condensate Line Sample 2) Sump Sample 3) Waste Pump Tank (TK-P5) Sample	Capability for recycle to 202A tanks in E or K Cells depending on U conc. and purity, or to TK-F10 for disposal to under-ground storage	Not Required (Collection Tank Sample Analysis)	Not Required	0.06

4.8.2.3.1 Cooling Water

Cooling water discharged from concentrator condensers, low-risk vessel cooling coils, and dissolver off-gas condenser tube bundles is collected in header 8823. This header is located on the south side of the Purex Building, and drains to the 201 Pump Pit where stream sampling and monitoring for radionuclide content are performed. The pit also contains a weir with an integrator/totalizer for flow measurement. The cooling water flows from the 201 Pump Pit through a diversion box with capability for automatic emergency diversion to a covered, lined retention basin (216-A-42), which has a 1.5-million-gallon capacity. The stream then flows to a second diversion box where flow can be directed either to the Gable Mountain Pond, 216-A-25, or the B Pond, 216-B-3. Normal flow, at the time this manual was prepared, was to 216-A-25, but is limited to a maximum of 4100 gal/min by hydrology restrictions. Excess cooling water is routed to the B Pond.

The radionuclide content of this stream routinely meets Manual Chapter 0524 Table II guidelines (Ref. 2). However, if diversion of the stream is confirmed, a process shutdown is initiated immediately as the retention basin is filled in only 3 to 4 hours at normal process flow rates. The liquid in the retention basin is sampled, analyzed, and then pumped to the pond or back into the building for evaporation as dictated by the radionuclide concentration.

4.8.2.3.2 Chemical Sewer

The chemical sewer system collects AMU waste, noncontaminated floor drains and vessel coil waste, overflow from TK-U8, water demineralizer regeneration wastes, and vacuum fractionator and nonprocess steam condensate. These streams are collected in header 8819, located on the north side of the Purex Building, and drain to 216-B-3 via the 216-A-29 ditch. Stream sampling using a proportional sampler and continuous monitoring for gamma activity is performed via manhole #4. If the radiation exceeds release limits, an alarm is set off; the stream is automatically diverted to the 216-A-42 lined retention basin, and a sample is automatically taken for verification analysis by the laboratory (Ref. 19). As in the case of cooling water diversion, the process is shut down and the liquid is pumped to the pond or back into the building for evaporation as dictated by the radionuclide content.

The radionuclide content of this stream also routinely meets Table II guidelines (Ref. 2). However, the release of chemicals to the ground from the Purex Plant (primarily in the chemical sewer and process condensate wastes) and other 200 Area operations has resulted in groundwater nitrate concentrations that exceed drinking water standards beneath part of the reservation, as discussed in Section IV.1.6 of Reference 20. There is no evidence of significant migration or environmental impact of other industrial chemicals discharged via the chemical sewer.

4.8.2.3.3 Steam Condensate

Steam condensate from concentrator tube bundles, cooling water from high-risk vessel coils,* and the fuel element storage basin overflow and jetout streams are collected by headers 8824W and 8824R. These headers, located on the south side of the Purex Building, drain into a catch tank located centrally between 8824W and 8824R. Stream sampling and monitoring are performed in conjunction with pumpout of the catch tank via header 8824D to Crib 216-A-30 where auxiliary sampling capability exists. A magnetic flowmeter and a flow integrator/totalizer are used to measure liquid flow. If the radioactivity exceeds release guides, an alarm sounds and the steam condensate is automatically diverted to the 216-A-42 retention basin. There, the condensate is sampled, analyzed, and then pumped to the crib or back into the building for evaporation as dictated by the radionuclide concentration. Immediate shutdown is not required in this case as the basin capacity allows about 24 hours for problem identification and resolution. A normal process shutdown is required if a high radionuclide concentration is confirmed, however, as evaporation of significant quantities of diverted liquid at the maximum rate of about 75 gal/min interferes with routine plant operation.

Except for residual contamination in the 8824 headers from previous tube bundle or cooling coil leaks, the radionuclide content of the stream routinely meets Table II guidelines (Ref. 2). The most contaminated portion of the header is bypassed and data obtained during 1979 operability tests indicate Table II guidelines will be met.

4.8.2.3.4 Process Condensate

Process condensates from the E-K4 concentrator and overflow from the E-J8 and E-H4 sample pots are collected in headers 7717 and 7718. These headers are located on the south side of the Purex Building, and drain to the 216-A-10 Crib. Equipment including a magnetic flowmeter with a flow integrator/totalizer, proportional sampler, and gamma monitor with alarm and verification sampler is located in Building 216-A-525. The system is designed to facilitate tie-in with a proposed diversion system to 216-A-42 (Ref. 21).

As described in Reference 22, three condensate streams (AAD, 3WD, and 1UD) previously discharged directly to the 216-A-10 Crib are now recycled. As a result of these changes, the quantity of radionuclides released in the process condensate are, except for tritium, reduced by about a factor of 100. The 2UD stream, with a flow rate of 2 to 3 million gallons/year, contains up to 17,000 curies of tritium but less than 0.5 curie of combined fission product and transuranic radionuclides.

---

*Tanks A3, B3, C3, E1, E6, F8, F15, F16, H1 and J5.

Except for the tritium content, the radionuclide content of the 2UD stream meets Table II guidelines (Ref. 2). The radionuclide (except tritium) content of the 1UD stream, which is discharged for short periods of 8 to 16 hours during startups and shutdowns, also meets Table II values when averaged over a consecutive 12-month period. The total volume and radionuclide content of the 1UD stream are approximately 5 to 10% those of the 2UD.

4.8.2.3.5 Ammonia Scrubber Waste Condensate

Ammonia scrubber wastes from ammonia scrubbers in the dissolver cells and E Cell are routed to the E-F11 concentrator via TK-F12 (Ref. 23). The concentrated waste from E-F11-1 containing essentially all of the radionuclides is sent to an underground storage tank. The ammonia-bearing condensate (ASD) from the E-F11 condenser drains to the 216-A-36B Crib via line T034. Stream sampling, radiation monitoring, and flow measuring/totalizing are performed at the Caisson 295-AZ facility. If the radioactivity release guide is exceeded, an alarm sounds, a verification sample is taken automatically for laboratory analysis, and the concentrator is shut down for evaluation (Ref. 23).

The condensate is lower in radionuclide content by a factor of 10^3 for plutonium and up to 10^4 for specific fission products than the untreated ammonia scrubber wastes formerly routed to the 216-A-36B Crib. The ASD volume ranges from 4 to 6 million gallons annually, and contains less than 300 curies of tritium and less than 5 curies of combined fission products and transuranic nuclides. Radionuclide concentrations in this stream are expected to be below Table II guidelines (Ref. 2) when averaged over any consecutive 12-month period.

4.8.2.3.6 203-A Area Discharge

A new tank with gravity drain to TK-P5 is installed to collect sump wastes, P Tank heating coil condensate, overflow from TK-15 (UO_3 Plant recovered acid storage), cooling water, and steam condensate from TK-P6 via separate headers. The collection tank drain valve is closed when TK-P5 is filled. The TK-P5 solution is sampled, analyzed for uranium radionuclide content, and then pumped to the chemical sewer, back to Purex tanks in K or E Cell for rework or to TK-F18 for transfer to underground storage tanks, the routing based on an evaluation of the analytical data. The collection tank drain valve is reopened and the cycle is repeated.

4.8.2.3.7 French Drains

The system consists of six separate units which formerly collected drainage from Trap Pit 1, Trap Pit 3, cleaner and blower pit, A5 sample pit, UNH truck apron, and the 291-A fan control house. The drains will be capped and liquid-level detectors installed prior to plant startup. No liquid is expected to accumulate in the capped units. However, any collected liquid will be sampled, analyzed, and routed to the ground or back to the process as dictated by analytical results.

4.9 SOLID WASTE DISPOSAL

Solid wastes generated at the Purex Plant are divided into the three categories of nonradioactive wastes, low-level wastes and transuranic (TRU) wastes. Solid nonradioactive wastes contain no mixed fission products nor transuranic nuclides as determined by beta-gamma readings of less than 200 disintegrations per minute (dpm) per 100 cm^2, and alpha readings of less than 20 dpm per 100 cm^2, respectively. Solid low-level wastes contain greater than 200 dpm beta-gamma contamination per 100 cm^2 and less than 20,000 dpm alpha per 100 cm^2. Solid TRU wastes contain, or are suspected to contain, more than 10 nanocuries of transuranic nuclides per gram of waste (nominally 20,000 dpm per 100 cm^2). Collection and packaging of these wastes for disposal to various burial sites are described below.

4.9.1 Solid Nonradioactive Wastes

Solid nonradioactive wastes consisting of ordinary trash originating outside of contaminated areas are collected in trash cans, plastic bags, cardboard boxes, etc., which are emptied into a dumpster. The waste is compacted to approximately one-third volume and buried in the Hanford Site central sanitary landfill.

Noncontaminated asbestos waste is double-bagged, wetted and labeled before being placed in a separate dumpster designated "Asbestos Only."

4.9.2 Solid Radioactive Waste

Solid radioactive wastes generated in the Purex Plant consist primarily of failed or unusable equipment and other contaminated materials (i.e., tools, cleaning rags, plastic, and laboratory equipment). Solid radioactive wastes include low-level and TRU wastes as previously defined in Section 4.9 and large waste items from the canyon, which may be either low-level or TRU waste.

4.9.2.1 Solid Low-Level Waste

Solid low-level radioactive wastes of small bulk are collected and placed in cardboard cartons or drums for shallow-land burial in a designated area. Cardboard cartons are restricted to a maximum gross weight of 40 lb of dry waste. Drums used for burial of solid low-level radioactive wastes are black with a black dome and meet the requirements of the Department of Transportation (DOT) Container Specification 17-H, Title 49, CFR 178.118. In 1972, approximately 16,000 ft^3 of low-level waste from Purex was buried in the 200 East Area industrial burial ground.

4.9.2.2 Solid Transuranic Waste

Transuranic wastes of small bulk and relatively low levels of activity are placed in 55-gallon drums of distinctive colors to identify the type of waste contained. Low-level combustible TRU waste containing less than 1/2-gram of transuranic nuclide per drum is placed in black drums with

silver domes; combustible waste containing more than 1/2-gram of transuranic nuclide per drum is placed in black drums with yellow domes; noncombustible TRU wastes are placed in red drums with red domes. These drums, which also meet DOT Container Specification 17-H, are placed in 20-year retrievable storage in the 200 West Area. In 1972, approximately 6700 ft^3 of transuranic waste was transferred from Purex to retrievable storage.

4.9.2.3 Large Canyon Solid Waste Items

Items of failed process equipment that are too large, too bulky, and too radioactive to be removed from the plant in the immediate future are put on old railroad flatcars and moved into the Purex equipment Burial Tunnel 2 (218-E-15) for indefinite-term storage. The failed equipment pieces are thoroughly flushed to reduce the plutonium content to less than 15 grams as indicated by analyses of successive flush solution samples prior to removal from the canyon.

Large waste items from the canyon for immediate disposal are placed in wood, concrete, or metal boxes and buried in a 200 East Area burial ground. Smaller process equipment items or other highly radioactive solid canyon wastes are collected in a large carbon steel container that, when full, is placed in a concrete container with a lid and buried in a 200 Area burial ground. These burial boxes may be constructed for 20-year retrievable storage of TRU wastes.

4.9.3 Monitoring of Solid Waste

Solid waste effluents (excluding those that are intensely radioactive and handled remotely) are monitored by beta-gamma and alpha instruments to determine radiation levels. A neutron monitor is used to measure plutonium in dry waste containers to determine whether the waste is to be discarded or reprocessed for plutonium reclamation. The plutonium mass upper limit is 200 grams for an individual drum to be buried for 20-year retrievable storage.

4.9.4 Solid Waste Disposal Process Safety and Criticality Prevention

The safety precautions listed below are observed when handling radioactive and/or nonradioactive solid wastes:

- Only the waste type specified is placed into a particular container.
- Materials soaked with acid or oxidizing agent are thoroughly rinsed several times, wrung dry, and placed in a plastic bag, which is closed with tape prior to disposal.
- Incompatible materials (oxidizing and reducing agents) are not placed in the same containers.

- Each container is lined with plastic to protect against corrosive wastes.

- Uncontained liquids are not placed into the waste containers. Any liquid present is isolated from the waste container liner and sufficient absorbent is placed within the container to absorb spillage.

- Items with contamination which could easily become airborne are contained within a package before being placed in a waste container.

- Operators wear a full face mask while compacting radioactive waste.

- Waste cartons are limited to a 10 mrad/hr dose rate at contact.

- Waste drums are limited to a 200 mrem/hr dose rate at contact.

- Waste containers are stored away from heat sources.

- Portable fire extinquishers or installed sprinkling systems are available in waste carton storage and loading areas.

The following criticality prevention specifications apply to TRU waste containers (Ref. 12):

- Miscellaneous Scrap Wastes

  a) Wastes which contain only small quantities of plutonium (such as wiping rags used for decontamination, rubber gloves, and nonabsorbent materials) shall be handled, stored, and transported in a container limited as follows:

Container	Mass Limit	Array Limit L x W x H
30-gal drum	100 grams	∞ X ∞ X 3
	250 grams	∞ X ∞ X 1
50-gal drum	200 grams	∞ X ∞ X 2
	250 grams	∞ X ∞ X 1

  b) No waste containers containing greater than 200 grams of plutonium shall be transported to the burial ground.

- Miscellaneous Failed Equipment - Burial Boxes

  a) Any hydrogenous material (other than the hydrogenous material used in the construction of the equipment), shall be physically segregated from the equipment pieces and shall contain less than 15 grams of fissile material.

b) Only those materials known to contain less than 15 grams of plutonium shall be added to burial boxes that contain failed tube bundles which may contain plutonium.

c) The total plutonium content of a burial box shall be less than 250 grams.

- Burial Tunnel

  The total plutonium content of equipment placed on a rail car to enter the burial tunnel shall be restricted to the same limits imposed upon a burial box (250 grams).

9413275.0931

4.10 PRODUCT LOADOUT AND SHIPMENT

The Purex uranium, plutonium (see Subsection 4.10.2.1), and neptunium products are acidic nitrate solutions which are loaded into containers suitable for shipment to other facilities for further processing. The procedures and facilities for loading and shipping concentrated product solutions are discussed in this section. Uranium and plutonium concentration is covered in Section 4.5 and Chapter 7.0, and neptunium final purification and concentration in Section 4.6 and Chapter 8.0. Additional details of the loadout hoods, product tanks, and other equipment are presented in Chapters 2.0 and 3.0.

4.10.1 Uranium Product Handling

Uranium handling processes include storage and shipment of UNH product from Purex Plant, receipt and rework of UNH waste from the UO_3 Plant, and receipt of nitric acid (slightly contaminated with uranium), which is recovered at the UO_3 Plant.

4.10.1.1 Uranium Product Facilities

The 203-A facility, which is used to receive and store UNH and nitric acid, is located north of the 202-A Building. The flow diagram, Figure 4-17, illustrates the UNH storage area equipment and process routes. There is a great deal of built-in solution transfer flexibility in the UNH storage area. Valve manifolds provide for receiving product in any tank, for transferring to Purex from any tank, for transferring to the shipping trailer from any tank, for any tank-to-tank transfer, and for "recirculating" through any tank.

Four 100,000-gallon-capacity storage tanks, designated Tanks P1 through P4, together with the TK-P6 waste rework tank, permit segregation of UNH batches according to enrichment (U-235 content) and/or product purity. All of the tanks are enclosed by concrete dikes which control the spread of liquid spills.

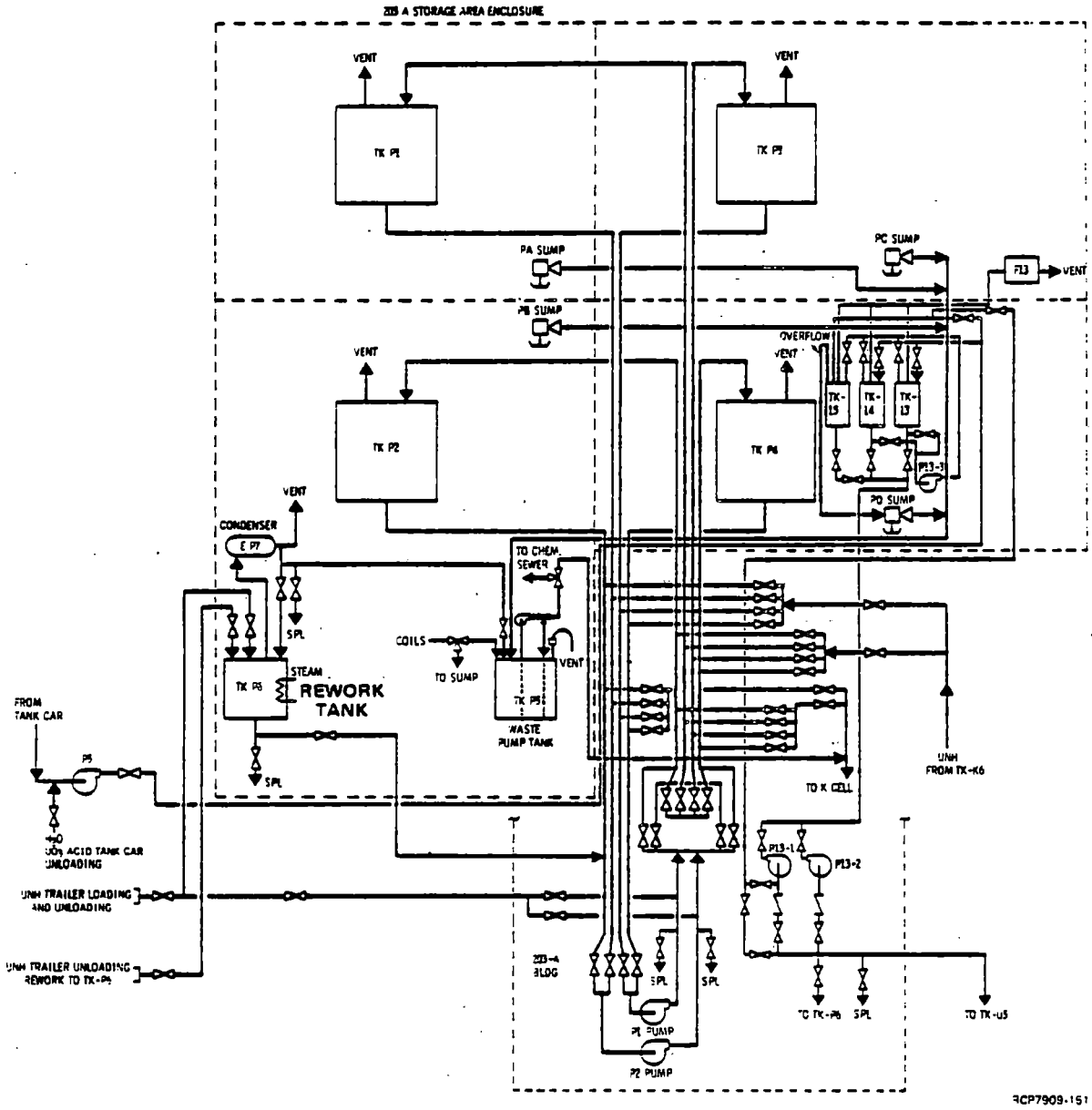

FIGURE 4-17. 203-A UNH Storage Area Process Piping and Flow Diagram.

Acid handling facilities for unloading nitric acid recovered from the UO_3 Plant consist of the railroad tanker unloading station, including a centrifugal pump, two 7300-gallon receiving tanks (TK-13 and 14) operated with open inlet and drain valves to maintain equal liquid levels in each vessel, a 13,800-gallon storage and supply tank (TK-15), and two pumps for supplying the 202-A UO_3 acid header 7530 to TK-U5. The three tanks are located in the TK-P4 enclosure.

In the TK-P2 enclosure is a 14,000-gallon stainless steel tank (TK-P6) for storing and concentrating UNH, and routing UNH solutions back to the process in K Cell for rework. Tank P6 is equipped with an off-gas treatment system consisting of a condenser, de-entrainer, filter, and steam ejector. Condensate from TK-P6 concentration and sump solutions from the basins are collected in a new collection tank and TK-P5, also located in the TK-P2 enclosure.

The trailers used for transfer of UNH between Purex and the UO_3 Plant are enclosed stainless steel tankers with self-contained unloading pumps. Nominal tanker capacity is 3000 gallons, but they are normally loaded to about 2800 gallons. The tanker is loaded only when coupled to a tractor as the trailer landing gear was not designed to support a tanker full of UNH. A drawing of a shipping tanker, including liquid transfer lines, is shown in Figure 4-18.

4.10.1.2 Uranyl Nitrate-Hexahydrate Product Storage and Shipping

The uranium product stream from Purex solvent extraction is accumulated in TK-K6 as a solution of UNH. In composition, this solution has a moderately high concentration of uranium, is slightly acidic, and slightly radioactive. Uranyl nitrate-hexahydrate solution in storage is maintained at a temperature between 45° and 65°C. Heating is necessary because the UNH content of the solution raises the freezing point significantly above that of water.

Uranyl nitrate-hexahydrate solution is pumped from any of the 203-A storage tanks to semitrailer tankers for shipment to the UO_3 Plant. The loading is accomplished by pumping from a selected storage tank, through one of the pumps (P1 or P2) in the 203-A Building, to the loading dock, and from there through a flexible connector to the trailer. The loadout system provides for automatically stopping the transfer when the required batch is metered. As a backup control, the transfer is automatically stopped if the liquid level becomes high enough to contact two electrodes near the top of the tanker. Standard operating procedures provide for the transfer to be stopped at a predetermined weight factor drop in the source storage tank.

9413275.0934

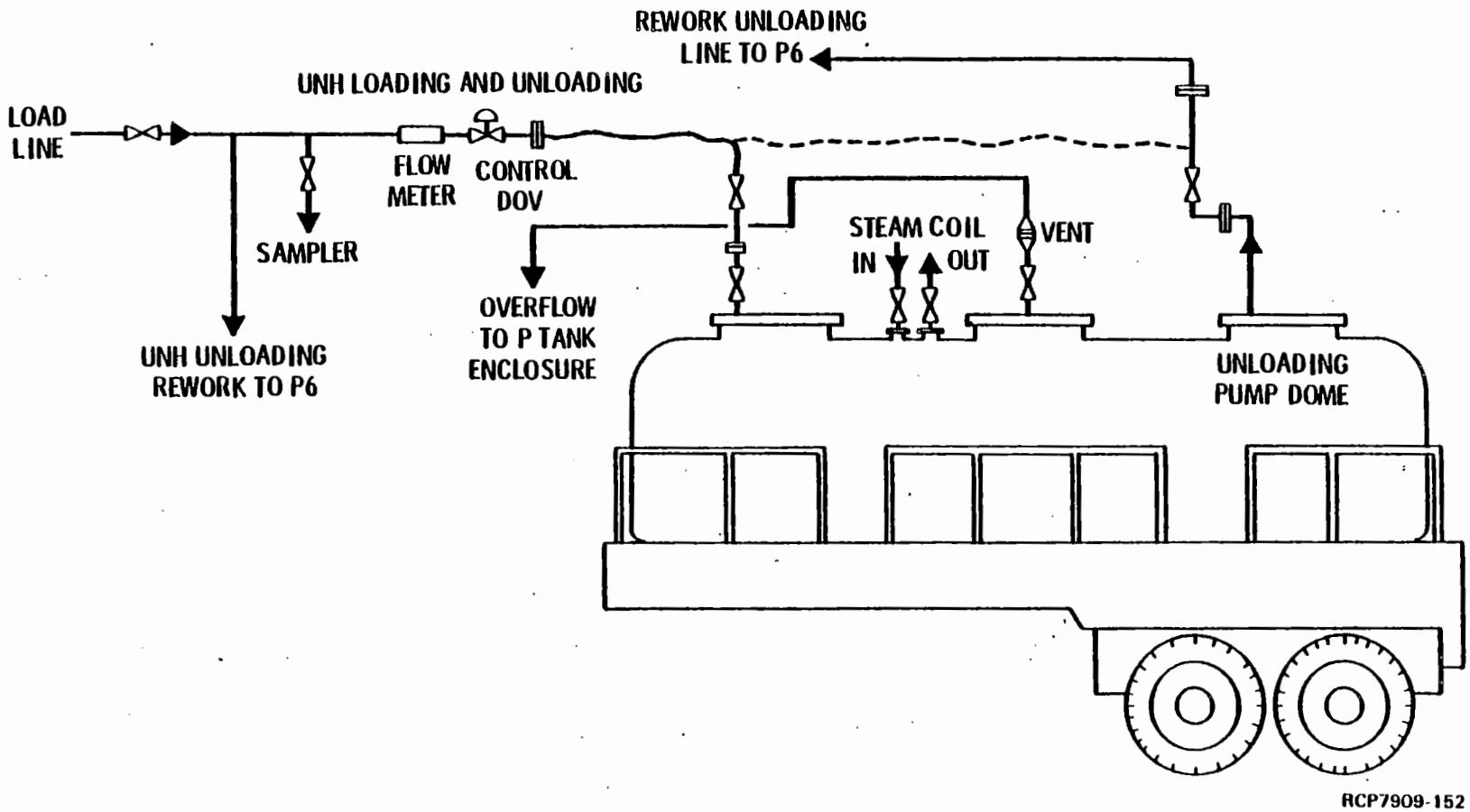

FIGURE 4-18. UNH Shipping Trailer Loading and Unloading Routes.

A general outline of storage tank and trailer conditions that must be maintained, and the operating steps involved in loading UNH tank trailers, are as follows:

- Uranyl nitrate-hexahydrate storage tank temperatures are maintained between 45° and 65°C, and loading is scheduled so that the loaded trailer does not stand long enough to cool before delivery to the UO_3 Plant.

- A minimum heel of 20 inches (6500 gallons) of solution is left in the storage tank when pumping out to prevent loading of organic.

- The trailer hookup for UNH loading is shown in Figure 4-18. Overflow alarm circuits are tested before starting liquid transfer to the trailer.

- The batch controller is set for 2800 gallons, and the pump valves are opened. The batch controller stops the pump when the transfer is complete.

- A DOV controller which regulates the flow rate is set once the pump is started. The DOV is closed when the transfer is complete.

- The trailer lines are disconnected and the vent valve is closed. The load-in well is flushed with water and drops or leaks are cleaned up.

4.10.1.3 Unloading Uranium Oxide Plant Nitric Acid and Waste

During calcination of UNH to uranium oxide at the UO_3 Plant, large quantities of gaseous nitrogen oxides are given off (about 4450 ft^3 of gas per ton of uranium processed). These oxides are recovered as 50 wt% nitric acid by absorption into a countercurrent water flow in a bubble-cap tower. This recovered acid, which contains about 0.1 lb of uranium per gallon, is received at the 203-A Building in railroad tank cars containing approximately 7500 gallons for reuse in the Purex process.

The general procedure for unloading a tank car of recovered acid is outlined below:

- The receiving tanks (13 and 14) must contain a minimum liquid level (8-12 inches) before unloading the car.

- A stop sign is attached to the rail car and chocks are placed under the wheels.

- A flex line is attached between the car nozzle and the tank manifold, and the valves listed in the appropriate operation procedure are opened.

- The P5 unloading pump is primed by backfilling the line with water until fumes exit the tank car vent valve.

- The P5 unloading pump is started and a manometer check of Tanks 13 and 14 is made.

- When the car is empty, a volume material balance is made and the flex line is disconnected.

- A sample of the acid is taken in Tanks 13 and 14 for uranium and specific gravity analyses before being recycled to the Purex process.

Uranyl nitrate-hexahydrate waste solutions collected at the UO_3 Plant are received at the 203-A Building in the trailer tankers. The UNH waste is reworked to meet process specifications, then is returned for calcination to UO_3. The unloading operation at the 203-A Building consists of connecting a flexible unloading line to the unloading pump in the trailer dome, connecting the pump motor to the power supply cable in the unloading dock, and pumping the solution to TK-P6. The routing is shown in Figure 4-17.

When the trailer pumping is completed, the trailer is water-flushed to TK-P6, disconnected from the unloading line and closed.

The waste receiving procedure is similar to the UNH loading procedure.

- Tank P6 must contain less than 10,000 gallons before pumping out the UNH truck.

- The TK-P6 coil steam is turned off, the coil is air blown, and coil cooling water is turned on to cool TK-P6 to 70°C.

- The TK-P6 off-gas system and condenser remain in operation during the transfer with the condenser (E-P7) condensate routed to TK-P6.

- Air to the TK-P6 air sparger is turned off and the weight factor/specific gravity readings are recorded.

- A flex line connection is made between the trailer unloading pump and the receiving line to TK-P6.

- The tank trailer contents are pumped to TK-P6.

- The final TK-P6 weight factor/specific gravity readings are recorded and a volume material balance is completed.

- Tank P6 temperature is adjusted to 45° to 65°C unless concentration is required; air to the tank air sparger is turned on.

4.10.1.4 Uranyl Nitrate-Hexahydrate Waste Rework

Tank P6 is used for the concentration of U Plant and 203-A Area uranium-bearing waste to the Purex process feed specification. This tank can also be used for the vaporization and hydrolysis of organic that may be present in the uranium waste.

Tank P6 is a 14,000-gallon, steam-coil heated, "bathtub-shaped" tank vented to the E-P7 condenser. The E-P7 condensate may be routed to the P5 waste tank via the collection tank when waste concentration is desired, or may be returned to TK-P6 as reflux.

Uranyl nitrate-hexahydrate waste which may contain process solvent is boiled under reflux for an extended period of time prior to processing. This operation eliminates any organic present by vaporization and hydrolysis, thus removing the potential for formation of "red oil." This mixture, a potentially explosive combination of TBP, nitric acid, and UNH, is reactive only at temperatures above 135°C. For this reason, there is a maximum temperature limit of 130°C for the TK-P6 operation.

The route for returning rework UNH to the process system is an underground 3-inch pipe from the 203-A pump pit to a gallery wall nozzle in K Cell. In-cell and hot pipe trench connections are available to route the material to first-cycle (TK-E6) or to second-cycle feed (TK-K1). Rework UNH may be transferred to the extraction process from TK-P6 or any of the product storage tanks. Transfers to process are frequently made to provide cold feed for plant shutdown or startup, and sometimes for plutonium dilution. The necessary valves are set up by inspection, making sure that all other systems are isolated, and that no other transfer is in progress.

General guidelines for the waste concentration operation are:

- Tank P6 contents must not exceed a temperature of 130°C and a specific gravity of 1.58 at 108°C to prevent precipitation.
- Full flow of cooling water is turned on to the condenser.
- Condensate is routed to TK-P5 via the collection tank.
- The tank contents are heated to boiling with steam on the TK-P6 coil.
- When a specific gravity of 1.54 at 108°C is reached, the concentrate is cooled and sampled for uranium, specific gravity, gamma scan, nitric acid and total metallic impurity (emission spectrographic) analyses.

Uranium waste is sometimes refluxed in TK-P6 for a period of 3 weeks to remove organic. The reflux operation differs from concentration in the following ways:

- The condensate is refluxed totally to TK-P6.
- Liquid level and specific gravity will normally remain constant.
- Tank P6 contents are sampled for uranium, nitric acid, and visual (organic detection) analyses after 1 week.

The tank contents are then cooled to 45°C before transfer to either Tank K1 or E6, and the air sparger is turned off.

4.10.1.5 Uranium Product Handling Safety

Compared to the upstream process systems in Purex, the 203-A facility processing is relatively simple. The UNH and recovered acid handled in this facility are sufficiently decontaminated to permit contact operation of the equipment. However, both streams are corrosive and are mildly radioactive liquids which must be confined in tanks and transfer lines.

In addition to the potential hazards of chemical burns, thermal burns from steam and hot liquids, and radioactive contamination, there are other items to consider during UNH trailer loading:

- Care should be taken to prevent falls when climbing and working on the trailer catwalk.
- In the event of a UNH spill on the loading pad, the liquid must be returned to storage via the pad sump pump.
- A tank may be loaded only when coupled to a tractor. The trailer landing gear is not designed to support a tanker of UNH.
- The normal minimum heel in a UNH storage tank is 20 inches. Heel solutions are recirculated and sampled to determine if organic is present prior to loading to the trailer to reduce the risk of transferring organics to the UO_3 Plant concentrators. A second sample from the loaded trailer is also inspected for organic.

In addition to previously mentioned safety aspects of UO_3 Plant acid unloading, two further safety measures must be taken when a railroad car is spotted for unloading:

- The car wheels must be chocked.
- The car must be flagged with a rail-mounted sign between the car and the railroad gate to the north.

The chocks and sign must remain in place as long as the unloading line is connected to the car, or as long as personnel are working on or around the car.

4.10.2 Plutonium Product Handling

Concentrated plutonium nitrate product from the third plutonium cycle product receiver is handled in the product removal (PR) room, which contains specially designed vessels for nuclear safety. In the PR room, product is sampled to assay the solution before loadout into plutonium containers, or to reroute plutonium-bearing liquids for rework through solvent extraction.

4.10.2.1 Product Removal Room Facilities

The flow diagram, Figure 4-19, illustrates the PR room equipment, but more detailed equipment descriptions are given in Chapter 3.0. A concentrated product solution of plutonium nitrate is received in the PR room from the third plutonium cycle concentrate receiver (TK-L8). There are two product receiving and sample tanks in the PR room gloveboxes. As originally installed, these were identical horizontal cylindrical vessels of about 14-gallon capacity. One (TK-L9) has been replaced with a 10.5-gallon tank constructed of three 5-inch-diameter vertical cylinders connected together at the top and bottom by crossover pipes, and equipped with an improved system for blending, sampling, and measuring solutions. The other (TK-L10) is no longer in routine use.

Tank L11, a 25-gallon-capacity, three-cylinder vessel, has a dual function. It is operated as a vacuum receiver for the motive steam jet used in tank-to-tank transfers, and also serves as a sump waste and rework receiver. The jet discharges into a water-cooled condenser (E-L12), where the jet steam is condensed and the condensate is routed to the backcycle decanter (TK-F10). A second jet is used for liquid transfers to TK-E6. The jet motive fluid can be either 3AS solution from TK-211 via the pump at TK-151, or $Cd(NO_3)_2$ solution from TK-151. Rework sampling is done by pumping solution out of TK-L11, recirculating it through a three-way valve, and returning it to the top of the tank. Tank L11 and L12 condenser are located inside the glove hood.

A vertical, glass, graduated product measuring tank (TK-L13-10), which holds up to 9 liters, is included in the product loadout hood. The loadout hood also contains a PR can holding bracket and a loadout head. The holding bracket swings outside the hood to provide easier movement of the PR can. The loadout head rests in a drip cup when it is not being used. When a PR can is in place, the head can be remotely lowered onto the mouth of the can with the hood door closed.

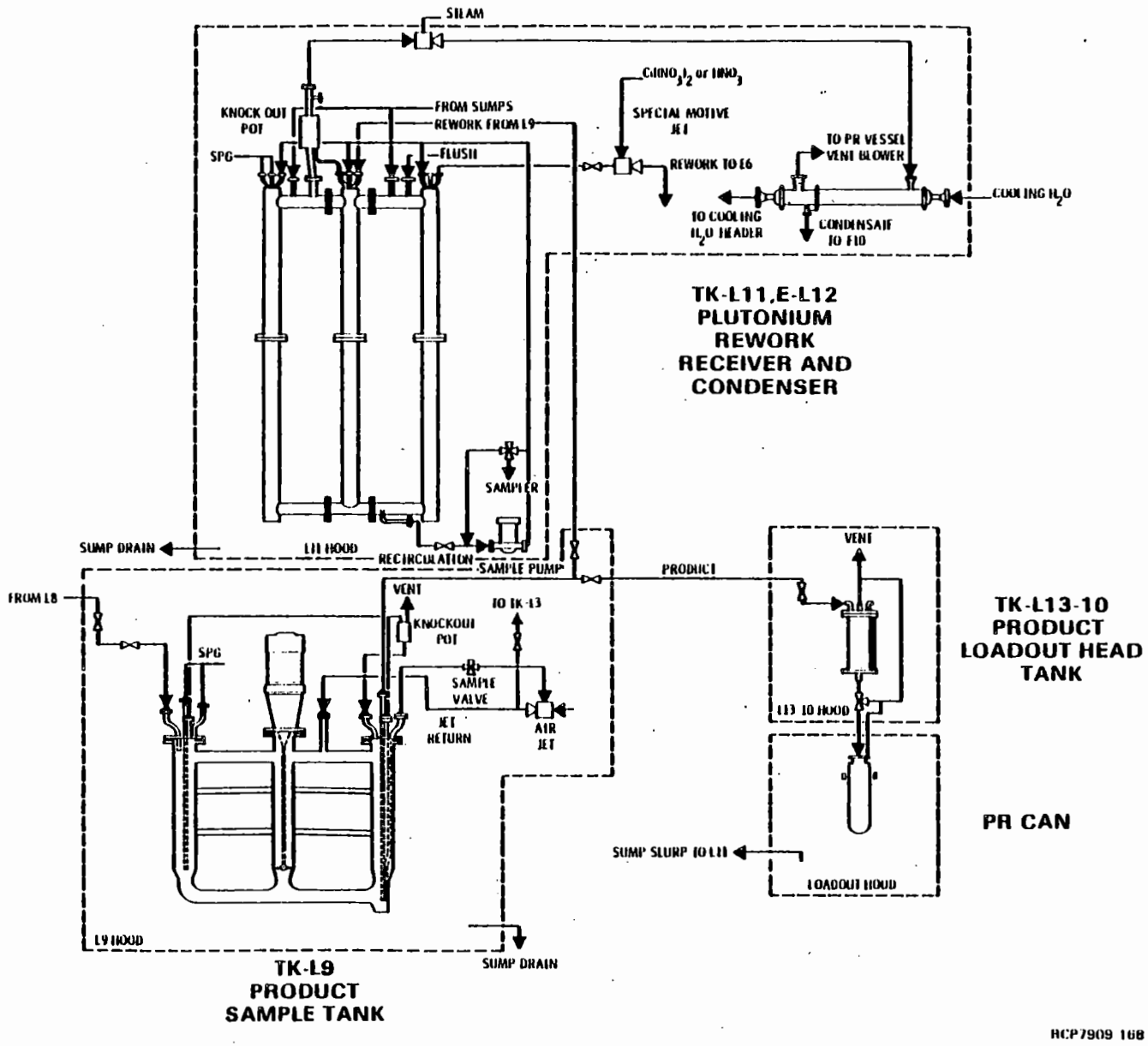

FIGURE 4-19. PR Room Process Flow Diagram.

At the time this manual was prepared, plans were being made to convert plutonium nitrate to oxide prior to shipment from the Purex Plant, thus eliminating further use of this loadout hood. However, neither the conversion process nor equipment design had been resolved.

4.10.2.2 Plutonium Transfers to PR Room

During operation of the third plutonium cycle, the product receiver tank, TK-L8, will periodically fill with overflow solution from the product concentrator, E-L7-1. This solution is transferred to TK-L9 for sampling prior to loadout when the volume reaches 31-32 liters. The transfer operation is outlined as follows:

- It is determined that TK-L9 heel plus TK-L8 contents will not exceed 38 liters to assure that the TK-L9 capacity of 40 liters is not exceeded.
- A check of PR room valve positions is made.
- It is determined that cooling water is flowing to the E-L12 condenser.
- Steam to the TK-L11 vacuum jet is started.
- The TK-L9 to TK-L11 valve is opened to generate vacuum in TK-L9.
- The TK-L8 inlet valve is closed to vent TK-L8 to the vessel vent system.
- The TK-L8 to TK-L9 transfer valves in the TK-L9 hood are opened.

The pressure differential between TK-L8 and TK-L9 will cause the solution to flow to TK-L9. A maximum liquid level (weight factor) indication is established for TK-L9, and must not be exceeded. Ending the solution transfer is accomplished by closing the valves which were opened in essentially the reverse order of the steps listed above.

As soon as practical, a material balance is made to determine that the solution volume received in TK-L9 and the TK-L8 dropout are equal. It is possible for material to be pulled into TK-L11. Material lost from the system should collect in canyon Sump SLL and Sump SLD located beneath TK-L11.

Tank L11 also serves as a receiver, sampling point, and batch transfer vessel for returning plutonium-bearing rework solutions to the process. These solutions may include production material which fails to meet specifications, flush materials generated in the solvent extraction area, or sump collections within the L Cell - PR area.

Solutions can be transferred to TK-L11 from the following locations:

- SN Sump (from N Cell hood)
- SNA Sump (from N Cell hood)
- SLL Sump (L Cell sump)
- SLK Sump (K6 and L1 sections of cell)
- SLD Sump (under TK-L11)
- Tank L8 (line from TK-L8 to TK-L11 is usually blanked)
- Tank L9 (usually plutonium product solution for rework)
- Tank L10 (usually flush or dilute product solution for rework)
- PR can (via the loadout hood slurp line)
- Loadout hood L13-10 Sump (small trench in bottom of hood emptied by a slurp line)

The principal steps in effecting these transfers are:

- Tank L11 is isolated from the vessel vent system.
- Steam to the TK-L11 vacuum jet is started.
- The TK-L11 vacuum controller is adjusted to procedure values.
- The transfer valve in the suction line from the appropriate transfer location is opened.

4.10.2.3 Product Sampling

Plutonium product sampling and analyses are the basis for determining the specific gravity and quality of plutonium solution produced. Values determined at this final plutonium measurement point at Purex are compared to plant input statements and also to reactor output calculations. The sample results are also important in the planning of plutonium oxide processing operations to fulfill customer requirements.

As soon as the 32-liter batch of product from TK-L8 is received in TK-L9 (as described in Subsection 4.10.2.2) and TK-L9 is back on the vessel vent system, the TK-L9 agitator lifts solution in the center cylinder of the tank, and causes solution to flow to the outside cylinders through the crossover pipes. This recirculation, which mixes the solution so a homogeneous sample can be taken, lowers the liquid level in the outer cylinders. A drop (at least 5%) in the indicated liquid level is the best evidence of proper circulation.

At the end of the prescribed agitation period, the sampler recirculation jet is started with the agitator running. The sampler jet can also transfer TK-L9 solution to the 3AF Tank (TK-L3) for product rework. The sample is delivered to the sample container, a one-ounce plastic bottle, by rotating the valve plug (ball) in 90° increments until the required sample volume of approximately 15 mℓ is obtained. The sampler valve delivers about 2 mℓ with each increment.

A general outline of the sampling procedure is as follows:

- The sample is scheduled to be taken immediately after the TK-L8 to TK-L9 transfer.
- A check is made to see that the sample line valve to TK-L9 is open and the rework line valve to TK-L3 is closed.
- The TK-L9 agitator is started and, after 10 minutes of agitation, circulation through the sampler line is started.
- The four-way sampler valve is rotated after circulating sample solution for 10 minutes to obtain a 14- to 16-mℓ sample in 2-mℓ increments.
- When sampling is complete, the air to the sample jet and the TK-L9 agitator is turned off.

4.10.2.4 Product Loadout

Although a seemingly simple job, loading plutonium nitrate into shipping vessels requires approximately 70 operating steps executed in the proper sequence to minimize the potential for nuclear or radiation hazards. The key requirements for general safety and criticality prevention are described in Subsection 4.10.2.6. The loadout procedures are also designed to maximize precision in measurement of product inventory.

The purified plutonium nitrate is measured out in 8-liter batches into weighed stainless steel bottles called PR cans. Figure 4-19 illustrates this process routine. The product batch is vacuum-transferred to the PR can loadout head tank (TK-L13-10). Each batch is then gravity-fed into a waiting PR can positioned in the loadout hood. The PR can is then sealed, decontaminated as required, weighed, placed in a protective jacket, and stored for subsequent shipment from Purex.

The PR cans are weighed both before and after being filled with solution. The weight difference divided by the solution specific gravity and multiplied by the plutonium concentration obtained from a sample of the loadout volume gives the quantity of plutonium transferred.

A general outline of the loadout procedure is as follows:

- Pre-loadout equipment operability, supply availability and radiation survey checks and inspections are made. The TK-L13 and TK-L11 valving is checked.
- A vacuum is drawn in TK-L11.
- The loadout head drip cup is emptied and rinsed.
- A empty PR can is brought into the PR room and removed from its jacket with the lifting yoke.
- The empty can is placed on the scales with the hoist and weighed. The tare weight is checked against the recorded value for the particular PR can. The can is not used if the tare weight is not within preset limits.
- Checks on scale accuracy are performed by weighing the can plus a 10 kg check weight.
- The PR can without the lid is placed in the loadout hood and all necessary equipment is checked for proper position.
- A vacuum is placed on TK-L13-10 and 8 liters of product solution are added to TK-L13-10 from TK-L9.
- The 8 liters of solution in TK-L13-10 are transferred by gravity to the PR can.
- The lid is replaced on the loaded can, which is then removed from the loadout hood and weighed.
- The loaded can is placed into its jacket; the jacket lid is secured, and the assembly is moved to the PR corridor for temporary storage.
- When the last PR can has been loaded, the TK-L11 vent-vacuum switch is turned to vent the tank.

4.10.2.5 Product Rework

Concentrated plutonium nitrate solution is periodically transferred to the HAF makeup tank (TK-E6) for rework. Tank L11 is the collection vessel for the various plutonium rework solutions, which include liquid from the PR room and L and N Cell sumps, out-of-specification product, and flushes from T-L6 and E-L7-1. More detail on the origin of these liquids is given in subsection 4.10.2.2.

The transfer operation is initiated after TK-L11 has been sampled and analyses have been received. The maximum volume of TK-L11 solution that may be transferred to TK-E6 without exceeding criticality prevention specifications is calculated, and it is determined whether cadmium nitrate solution must be used for the jet mixture fluid. A 5% nitric acid solution may be used for jetting if the plutonium concentration is less than 60 g Pu/gal. Solutions with high plutonium concentrations must be diluted to below 760 g Pu/gal prior to transfer to TK-E6. The special liquid transfer jet provides a flow dilution ratio of greater than 2.7:1. At the conclusion of each transfer, the route is flushed with jet solution for 2 minutes, followed by a 10-minute air purge.

The sampling method for liquids in TK-L11 is nearly identical to that for TK-L9 sampling. The difference is that an electric recirculation pump is used in TK-L11 instead of a jet and a longer recirculation time (1 hour) is required due to the larger size of TK-L11. Sampling involves recirculating the tank contents through a four-way valve which is rotated 90° to drop the valve port contents into a sample bottle.

A general outline of the transfer to TK-E6 is as follows:

- Tank E6 is sampled and analyzed for plutonium and uranium if the concentrations cannot be closely estimated from other sources.
- Before transfer, both agitators in TK-E6 must be operating; a TK-E6 volume greater than 2000 gallons with at least 1 lb of uranium per gallon is required, and no other transfers into or out of TK-E6 can take place.
- The motive fluid supply to the TK-L11 transfer jet is opened and the motive fluid pump is started.
- When transferring solution with less than 60 g Pu/gal, 3AS solution is routed to the motive fluid pump. Otherwise, the motive fluid is cadmium nitrate solution.
- When the jet motive fluid pressure is up to 75 psig, the TK-L11 to TK-E6 transfer valve is opened.
- The transfer is terminated by closing the transfer valve, turning off the pumps, and air blowing the transfer line for 10 minutes with an indicated 30-psig pressure air.

Another rework transfer sometimes made is the recycle of plutonium solution from the product sampling tank (L9) to the 3AF tank (L3). This transfer may be desired for a variety of reasons, including rework of contaminated product, concentration of dilute product, or for equipment testing.

The procedure involves valving the TK-L9 sampler recirculation line to TK-L3 and starting the TK-L9 air sampler jet. When the designated volume of TK-L9 solution has been jetted to TK-L3, the jet is stopped and the TK-L9 hood valves are turned to their original positions. If required, the transfer line may be flushed with 10% nitric acid afterward. Since recycling plutonium to the third plutonium cycle will normally increase the plutonium concentration in the process feed stream, the flow rates of other streams in the third plutonium cycle must also be increased.

In the case of the TK-L9 to TK-E6 transfer, the rework plutonium is transferred from a geometrically favorable to a geometrically unfavorable tank. A number of administrative and equipment controls are required to prevent criticality. These controls are covered in the following section.

4.10.2.6 Plutonium Handling Criticality Prevention

All equipment in the PR room is designed to be geometrically favorable for the plutonium concentrations normally encountered. Equipment design is discussed in detail in Chapter 3.0. Administrative criticality prevention controls are covered here.

4.10.2.6.1 Tanks L9 and L11

In the interest of criticality prevention, a number of restrictions are placed on the TK-L9 operaton. The limits include total mass, concentration, volume, and liquid level. This information must be known through sample analyses and volume measurements. The following restrictions apply to transfers into TK-L9 and from TK-L9 to TK-L11 (Ref. 12):

- The maximum allowable plutonium concentration in solutions in Tanks L9 and L11 is 1700 g/gal.
- The Tank L9 and L11 concentration limit also applies to the SLB, SLC, SLD, SLE, SLF and loadout hood sumps.
- To prevent polymer formation, a minimum nitric acid concentration of 1.0M is required whenever the plutonium concentration is more than 190 g/gal and the solution temperature is less than 80°C.
- The combined volume of TK-L11 and SLD Sump shall not exceed 23.25 gallons.
- The maximum depth of solution in PR room sumps measured from the lowest point shall be 2 inches.

- The as-built arrangement of PR room equipment and piping shall not be changed without prior review and approval by the Manager, Criticality Engineering and Analysis.

- The SLD, SLF, SLE, and SLB Sump drain lines to SLL Sump in the canyon shall be open.

When sampling TK-L9, extreme care is taken to assure that the sampler is properly valved, since the sampler system is used for transfers to TK-L3. The transfer of large amounts of plutonium product solution to TK-L3 without prior third plutonium cycle flowsheet adjustment could result in serious criticality prevention problems.

4.10.2.6.2 Product Rework, Tank L11 to Tank E6 Transfer

A number of criticality prevention specifications apply to TK-L11 operations. Solution plutonium concentrations must be known through sample analyses, and solution volumes and levels known to comply with the specifications. The limits listed in Subsection 4.9.2.6.1 concerning TK-L11 and sumps apply to TK-L11 sampling and transfer operations. Additional limits are as follows:

- The maximum sample size is 500 mℓ, unless the plutonium concentration is <23 g/gal, in which case, the maximum volume is 4 liters.

- The maximum quantity of plutonium allowed in any sample is 200 grams.

- For transferring TK-L11 solutions, >0.2M HNO_3 may be used as the jet motive fluid for plutonium concentrations of ≤60 g/gal. Cadmium nitrate solution with concentrations of ≥23M $Cd(NO_3)_2$ and >0.5M HNO_3 must be used for transfer of plutonium solutions with concentrations from 60 to 760 g/gal.

- In no case may solution containing more than 760 g Pu/gal be transferred from TK-L11 to TK-E6. Higher concentrations must first be diluted to below 760 g/gal in TK-L11 with dilute nitric acid, before transferring with cadmium nitrate solution.

- The jet pump will not operate if the AMU tank (TK-151) weight factor falls below 17, or if the cadmium nitrate concentration is less than 0.27M (65 g/ℓ). If only dilute nitric acid is being used as motive fluid, the cadmium nitrate low concentration cutoff must be bypassed.

The principal safety issue requiring attention when transferring plutonium nitrate from TK-L11 to TK-E6 is the potential for adding too much plutonium to the geometrically unfavorable E6 Tank. Also, the plutonium concentration in TK-E6 must be maintained below 23 g/gal (or the

equivalent reactivity in the presence of cadmium) to assure safety in the event of leaks in the transfer line which could route solution to other critically unfavorable locations. Several procedural and equipment design controls are imposed to assure criticality prevention in TK-E6:

- Tank E6 is limited to a maximum plutonium content of 15,000 grams.
- The maximum allowable ratio of plutonium to uranium in TK-H1 is 2300 grams of plutonium per ton of uranium. Tank E6 solution with a higher plutonium-uranium ratio must be diluted with "cold feed."
- Two agitators are installed in TK-E6 to preclude an unsafe accumulation of plutonium in one location within the tank. The agitators are interlocked with the TK-L11 transfer jet so that the jet pump cannot be started unless both agitators are operating.
- Tank E6 must contain at least 2000 gallons of solution with greater than one pound of uranium per gallon and at least 0.1M HNO_3 before a plutonium transfer from TK-L11 is made. The presence of uranium in TK-E6 prevents criticality, providing the uranium and plutonium are thoroughly mixed and the appropriate maximum ratio of plutonium to uranium is not exceeded.
- A dilution factor of >2.7:1 between jet motive fluid and plutonium solution achieved by the liquid jet transfer provides an added margin of safety by minimizing the possibility of a one-spot buildup of concentrated plutonium within TK-E6. It is most important that nitric acid (>0.2M) or nitric acid (>0.5M) and cadmium nitrate (>0.23M) be used to make the transfer instead of water. Plutonium solids (polymer) may be formed in the transfer line and deposited in TK-E6 if water is used.

4.10.2.6.3 Plutonium Product Loadout

In TK-L13-10, a plutonium concentration limit of 1700 g/gal is imposed. The plutonium loadout containers are subjected to the following additional controls:

- Only one loaded container (PR can) at a time may be outside its carrier while in the PR room.
- At no time may a bare, loaded PR can be outside the PR room.
- A loaded, bare can must not be brought closer than 15.75 inches to any other can in its container.

- Storage of cans in arrays in vertical alignment or two separate floors is permissible if the floor separating the arrays is constructed of concrete at least 12 inches thick or the neutron-shielding equivalent of other materials.

- When any material is loaded into a PR can, a tag or label must be immediately attached to the can's container to identify the material.

- Cans containing more than 250 grams of plutonium must have their lids and their container lids securely fastened at all times, except that one can at a time may be opened for loading, unloading sampling, or inspection. An opened, loaded can must not be left unattended. In practice, these rules are applied to all cans containing more than 10-gram quantities of plutonium.

4.10.2.6.4 Enclosure Restrictions

- Activities performed in the spaces outside the PR room vessel enclosures or through the port gloves are not restricted as to the number of persons present.

- Personnel entry to a vessel enclosure is restricted to one person if there is a possibility of more than 500 grams of plutonium present. The presence of a human body introduces a possibility for neutron reflection or moderation.

4.10.2.7 Plutonium Loadout Process Safety

The presence of plutonium solution in the PR room creates a potential radiological hazard. Operators must exercise special care to avoid contaminating the room with plutonium. The air in the PR room is automatically sampled, and a visual alarm will light in the event that contaminated air is detected. An assault mask must be immediately put on if the alarm actuates. The PR room is also equipped with an automatic criticality audioalarm.

Alpha energy surveys (with a poppy) of equipment, gloves, and work area are required before, during, and after each PR can loadout. Alpha monitoring requirements are such that the PR room work is essentially performed with a poppy probe in one hand. A potential for gamma radiation also exists in the PR room since rework and out-of-specification product liquids may contain traces of gamma-emitting fission products.

Gamma radiation levels may be high enough to require radiation monitoring and special work permit (SWP) timekeeping. All glove port work must be performed according to standard hood safety practices. Gloves must be inspected for defects and surveyed for external contamination

before and after use. Glove work around sharp objects must be performed carefully to avoid punctures or rips that could spread plutonium contamination. A 0.75-inch (water) vacuum in hoods is maintained to lessen the risk of spreading contamination in case a glove is breached.

Since cadmium is a toxic chemical, care must be taken to avoid inhalation of its fumes during makeup or from a leak of cadmium nitrate solution. Extra caution should also be exercised in the vicinity of the exposed cadmium nitrate piping since this system is under pressure.

Other process and industrial safety restrictions include:

- Tank L13-10 must never be filled without an empty PR can under the loadout head.
- The PR can must be closed before removing it from the hood.
- The lid hold-down spider must be tightened to the maximum obtainable by twisting with two hands before the can is handled on the hoist.
- The hoist used to lift PR cans presents a potential hazard from pinching and from dropping cans lifted on the hoist. The hoist should be checked for operability prior to use.
- Jacket lids and PR cans present pinch points unless handled properly.
- The safe transport of PR containers on a dolly requires careful and deliberate movements. Sudden turns or stops should be avoided. The PR elevator load limit is four PR containers.
- Steps on the access ladders to the TK-L11 hood, sampler, and the TK-L13-10 hood must be kept clear of foreign materials and climbed and descended with care.

4.10.3 Neptunium Product Handling

The neptunium nitrate product stream from the ion exchange neptunium purification process is transferred to TK-J2 for storage or is loaded into polyethylene bottles in the Q Cell loadout hood for shipment to the Savannah River Plant in Aiken, South Carolina.

4.10.3.1 Neptunium Loadout Facility

The flow diagram, Figure 4-20, illustrates the neptunium product loadout equipment and routing.

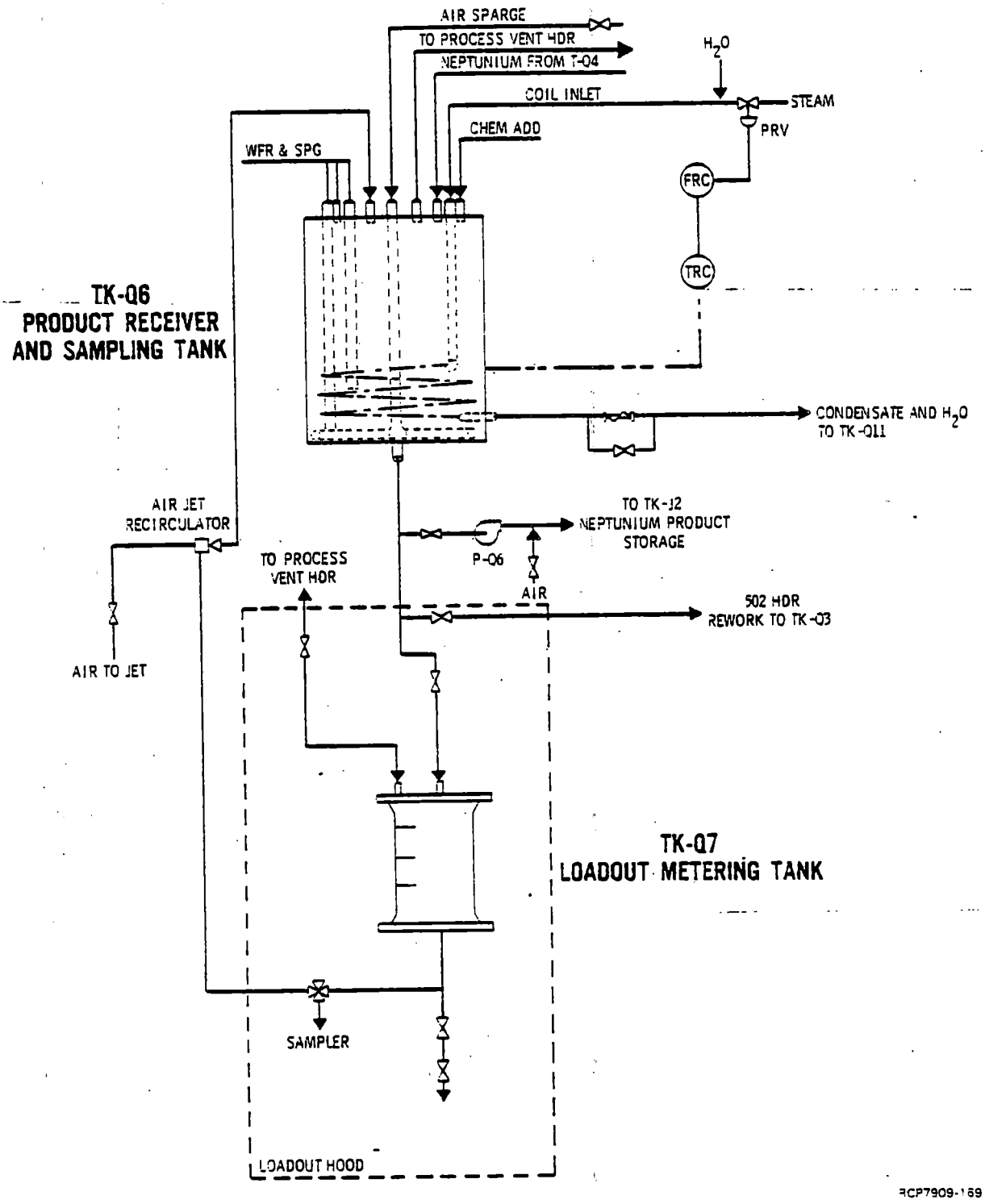

FIGURE 4-20. Neptunium Product Handling Process Flow Diagram.

Product sampling equipment and the Q6 receiver tank are located in the TK-Q6 hood. Tank Q6 solution is drained by gravity to TK-Q7 in the loadout hood. Solution is returned to TK-Q6 by an air jet mounted in the recirculation line. A rework route from TK-Q6 to TK-Q3 and a route to pump neptunium product solution from TK-Q6 to TK-J2 for storage are also available.

The 3XN product receiver tank (TK-Q6) is a flat-bottomed, 25-gallon tank with a temperature control system plus weight factor and specific gravity instrumentation. The neptunium product solution is sampled for neptunium, plutonium, uranium, gamma and nitric acid analyses, and is then pumped to TK-J2 for storage. Alternately, the neptunium valence is adjusted prior to product loadout via TK-Q7 for shipment. Heat supplied by steam to the heating coil and air added via a sparge ring on the bottom of the tank are used to adjust the neptunium valence as described below.

Tank Q7, the loadout metering tank, is a small calibrated glass cylinder used to measure the 3-liter batches of neptunium nitrate solution. The solution is loaded into a 1-gallon plastic bottle in the loadout hood.

4.10.3.2 Neptunium Valence Adjustment

The neptunium in TK-Q6, after being eluted from the resin column, exists in the +4 valence state. In this state, some gas is evolved and the product containers (1-gallon plastic bottles) could pressurize enough to rupture. Safety standards for off-plant shipment of neptunium nitrate, therefore, require that the neptunium must be oxidized to greater than 95% neptunium (V) and neptunium (VI). The neptunium (V) is the more stable.

The valence adjustment is carried out as follows:

- Air is turned on to the TK-Q6 sparger at 0.5 to 1.0 cfm.
- Tank Q6 solution is heated to 95°C with steam on the coil. The solution is maintained at 95°C for 5 minutes.
- Tank Q6 liquid is cooled to 25°C with water on the coil.
- The sparger is turned off and the solution is sampled and analyzed for neptunium valence, neptunium, plutonium, thorium, uranium, gamma, nitric acid, specific gravity, and metallic impurities.

Sampling TK-Q6 involves activating the air jet recirculator (see Figure 4-20) and maintaining a constant liquid level in TK-Q7 while recirculating the product solution for 30 minutes. A sample is obtained by rotating the sample valve the number of times necessary to obtain the amount of liquid needed.

Product loadout may proceed when the neptunium valence meets specifications.

4.10.3.3 Neptunium Product Loadout

Concentrated neptunium nitrate product solution (3XN stream) from the product sampling tank, TK-Q6, is gravity-transferred to the loadout metering tank, TK-Q7, in 3-liter batches. Tank Q7 is emptied into tared-gallon plastic jugs which are capped, removed from the hood, surveyed, reweighed, and placed in plastic sleeves. The jugs are normally loaded into shipping containers but may be stored for up to 48 hours in a rack in the hot cell access room. The TK-Q6 sample is used for product accountability in the overall plant material balance.

A general outline of the loadout procedure is as follows:

- Each bottle is visually inspected for defects and weighed before loading.
- One uncapped bottle is placed in the loadout hood, and the plastic loadout spout is inserted into the bottle.
- Three liters of solution are drained from TK-Q6 into the calibrated glass tank (TK-Q7).
- The contents of TK-Q7 are emptied into the bottle; the drain valve is closed, and the loadout spout is allowed to drain to the bottle for at least 2 minutes prior to removal.
- The bottle is capped, wiped clean, and surveyed for external contamination.
- The filled bottle is weighed to obtain a material balance for neptunium accountability, and then placed in a plastic sleeve which is sealed with masking tape.

4.10.3.4 Neptunium Product Handling Safety

Neptunium product solution is verified by sample analyses to be relatively free of FP's prior to product handling; thus, the radiation exposure danger is low. Product-containing bottles are cleaned and surveyed before removal from the loadout hood to eliminate the potential for spreading of contamination.

Process safety is of most concern during valence adjustment in TK-Q6 and during solution recirculation when sampling. Care must be taken to avoid overflow of TK-Q7. During valence adjustment, temperature control is important to prevent boiling of the neptunium solution.

9413275.0953

4.11 AQUEOUS MAKEUP

The processing of 10 tons of uranium fuel per day through the Purex Plant requires the handling of over 200,000 gallons of aqueous chemical solutions (including solute-free water streams) each day. Approximately one-half of this volume now consists of recycled process condensate which replaces demineralized water in several streams. The aqueous makeup (AMU) area of the plant serves to distribute over 20 "standard" chemical process streams and, occasionally, a few additional materials for decontamination flushes or special process operations.

Nitric acid in several concentrations is the major solute. Sodium hydroxide, sodium nitrite, sodium carbonate, and ferrous sulfamate are important solutes in a number of streams. The processes and methods for the makeup and distribution of these solutions are described in this section of the manual, but detailed procedures for each batch preparation are not included. The water demineralization and distribution processes are also discussed in this section.

4.11.1 Aqueous Chemical Data

The makeup requirements for aqueous process stock solutions, including concentrations, volumes, and makeup tanks, are given in Table 4-38. Stock solution makeups are added directly to the process or are used in the makeup of the process streams listed in Table 4-39. Streams which may be required on a nonroutine basis, such as solutions for equipment decontamination, and streams which have a service-type function, such as water demineralizer regeneration, are not included in these tables. Process streams consisting of stock solutions only or of stock solutions blended with demineralized water in the P and O gallery or with recycled process condensate in the canyon are also not listed in Table 4-39.

The bulk of the required chemicals are purchased and stored at the Purex Plant as aqueous solutions or dry chemicals. Process water for the plant is prepared by treating filtered water in the demineralizer. A considerable quantity of nitric acid is consumed, but nearly all of it is recovered for reuse within the plant (see Section 4.8.1), or returned from the UO_3 Plant (recovered from uranium product).

Table 4-40 lists the approximate daily consumption of the materials required for aqueous makeup and subsequent processing in Purex. Organic materials are also included in the table (Ref. 9, 24).

Miscellaneous chemical flush and regeneration streams which are run intermittently are listed in Table 4-41. The purpose, approximate frequency of use, and consumption of each material are listed. These materials are in addition to those covered in Table 4-40.

Table 4-38. Aqueous Makeup Stock Solution Specifications.

Solution	AMU Tank	Molar	Specification, wt%	Batch Makeup, lb	Net Gallons Makeup	Specific Gravity
$Fe(SA)_2$	101	2.01	8.35 Fe^{++} ± 0.04	3,600 - 50% $Fe(SA)_2$ 1,100 - Demin. H_2O 170 - 57% HNO_3	284	1.34
HN (Z Plant)	103	1.45 0.7	13.0 HN ± 1.0 3.0 HNO_3 ± 0.5	4,470 - HN(13%), HNO_3 (3%)	402	1.07
HN (Alternate, Purchased)	103	2.05	18.0 HN ± 1.0	4,550 - HN (18%)	402	1.09
$NaNO_3$	104	5.41	36.0 $NaNO_3$ ± 1.0	16,000 - Demin. H_2O 9,000 - $NaNO_3$	1,876	1.28
$NaNO_2$	106	0.77	5.14 $NaNO_2$ ± 0.25	3,690 - Demin. H_2O 200 - $NaNO_2$	336	1.034
Na_2CO_3 - $KMnO_4$	107	0.24 0.024	2.50 Na_2CO_3 ± 0.15 0.37 $KMnO_4$ ± 0.03	19,500 - Demin. H_2O 500 - Na_2CO_3 74 - $KMnO_4$	1,779	1.046
$Cd(NO_3)_2$	151	0.28 0.74	6.05 $Cd(NO_3)_2$ ± 0.20 4.35 HNO_3 ± 0.20	1,330 - Demin. H_2O 330 - $Cd(NO_3)_2$ (33%) 137 - 57% HNO_3	200	1.072
Sugar	204	0.70 0.005	22.0 Sugar ± 1.0 0.02 NaOH	3,900 - Demin. H_2O 1,100 - Sugar 1 - NaOH	440	1.09
ANN	205	1.60	50.0 ANN ± 1.0	6,500 - ANN (50%)	525	1.26
KOH	206	7.0	30.0 KOH ± 1.0	2,180 - Demin. H_2O 4,360 - KOH (45%)	515	1.29
AFAN	212	11.2 1.1	36.8 NH_4F 7.2 ± 0.2 NH_4NO_3	6,000 - AFAN as received	586	1.126
N_2H_4	217	11.3	35.0 N_2H_4 ± 1.8	475 - N_2H_4 (35%)	55	1.035

9413275.0956

Table 4-39. Aqueous Makeup Process Stream Specifications.

Solution	AMU Tank	Molar	Specification, wt%	Batch Makeup, lb	Net Gallons Makeup	Specific Gravity
1BX	209 210	0.30 0.03 0.10	1.86 HNO_3 ± 0.09 0.154 Fe^{++} ± 0.008 0.94 SA ± 0.05	18,595 - Demin. H_2O 643 - 57% HNO_3 365 - $Fe(SA)_2$ sol'n 81 - H(SA)	1,851	1.017
3AS	211 156	1.20	7.38 HNO_3 ± 0.36	2,904 - Demin. H_2O 432 - 57% HNO_3	391	1.025
3BX	150 155	0.15	0.94 HNO_3 ± 0.05	3,298 - Dist'ld. H_2O 55 - 57% HNO_3	400	1.005
2NS Phase I	220 221	2.0 0.025 0.06	11.6 HNO_3 ± 0.6 0.13 Fe^{++} ± 0.03 0.176 N_2H_4 ± 0.009	3,570 - Demin. H_2O 995 - 57% HNO_3 73 - $Fe(SA)_2$ sol'n 23.5 - N_2H_4	432	1.07
2NS Phase II and III	220 221	1.27 0.017 0.0165	7.58 HNO_3 ± 0.38 0.090 Fe^{++} ± 0.005 0.050 N_2H_4 ± 0.003	4,300 - Demin. H_2O 667 - 57% HNO_3 54.3 - $Fe(SA)_2$ sol'n 7.2 - N_2H_4	458	1.056
2PX	224	0.01	0.063 HNO_3 ± 0.003	3,810 - Demin. H_2O 4.21 - 57% HNO_3	266	1.001
2BX	213 214	0.30 0.10 0.05	1.81 HNO_3 ± 0.09 0.54 HN ± 0.02 0.15 N_2H_4 ± 0.01	4,259 - Demin. H_2O 150 - 57% HNO_3 239 - HN 20.4 - N_2H_4	436	1.04

Table 4-40. Essential Materials Consumption.[a]

Material	Pounds of Material (100%) Per Day
Ammonium Fluoride - Ammonium Nitrate (AFAN)	5,770
Potassium Hydroxide (KOH)	2,270
Sodium Nitrite ($NaNO_2$)	176
Nitric Acid - Fresh (HNO_3)	6,750
Ferrous Sulfamate [$Fe(NH_2SO_3)_2$]	275
Sulfamic Acid (SA)	354
Hydrazine (N_2H_4)	26
Hydroxylamine Nitrate (HN)	63
Sugar	1,125
Sodium Hydroxide (NaOH)	6,304
Sodium Carbonate (Na_2CO_3)	173
Potassium Permanganate ($KMnO_4$)	26
Aluminum Nitrate - Nonahydrate (ANN)	4,208
Tributyl Phosphate (TBP)	83
Normal Paraffin Hydrocarbon (NPH)	149
Demineralized Water	61,300 gallons

[a]Assuming a processing rate of 10 tons per day with a fuel load that is 20% "spike" and 80% 0.947% enriched NPR fuel elements.

Table 4-41. Miscellaneous Essential Material Requirements.

Material	Purpose	Use Interval,[a] Tons	Pounds of Chemicals (100%)	Average Pounds of Chemical (100%) Per Ton
Nitric Acid (HNO_3)	G and R Cell flush solutions	500	1880	3.8
Sodium Hydroxide (NaOH)	G and R Cell flush solutions	500	2200	4.4
Tartaric Acid ($C_4H_6O_6$)	G and R Cell flush solutions	500	950	1.9
Oxalic Acid [$(COOH)_2$]	G and R Cell flush solutions	500	4500	9.0
Amberlite IRA-97 Anion Resin	Resin changeout in Q Cell	>1000	63 (1.5 ft^3)	<0.06
Sulfuric Acid (H_2SO_4)	Regenerate cation demineralizer	150	627	4.2
Sodium Hydroxide (NaOH)	Regenerate anion demineralizer	150	200	1.3
Silver Nitrate ($AgNO_3$)	Regenerate silver reactors	400	250	0.6

[a]Use is required after processing the approximate listed number of short tons of uranium.

4.11.2 Makeup and Distribution Facilities

In the aqueous makeup area, chemical process streams and, occasionally, a few additional materials for decontamination flushes or special processing operations are prepared and distributed. Figures 4-21 and 4-22 illustrate the floor plans and elevation views, respectively, showing the locations of the AMU tanks. The associated piping, pumps, etc., are shown on the Purex Instrument and Engineering Flow Diagrams (IEFD's), and are not included in this manual. More information on chemical makeups and handling is given in Section 4.11.4.

The facilities available are located on three floors as described below. Q Cell AMU facilities are independent of the remainder of the Purex Plant, and are described later in this section. A detailed description of the AMU tanks is given in Section 3.8 of Chapter 3.0.

4.11.2.1 First-Level Aqueous Makeup Tanks

The first level of the main aqueous makeup area contains large tanks for mixing aqueous solutions of dissolved solid, and certain concentrated liquid essential materials. The materials are generally received in bags or drums, and are transported by forklift from the chemical warehouse to the appropriate makeup tank. First-level tanks and their uses are listed in Table 4-42.

4.11.2.2 Second- and Third-Level Aqueous Makeup Tanks

The completed chemical solutions in the first-level makeup tanks are transferred by pumps positioned on the basement level to "head" tanks located on the second and third levels of the aqueous makeup area. The elevation of the tanks on the upper levels provides sufficient liquid head, or pressure, for transferring the chemical solutions to various process points, including other aqueous makeup tanks.

Fifty percent sodium hydroxide solution, 57% fresh nitric acid, aluminum nitrate, potassium hydroxide, ammonium fluoride-ammonium nitrate, and demineralized water are pumped directly to the head tanks from the 211-A tank farm. The head tanks and their uses are listed in Tables 4-43 and 4-44.

4.11.2.3 Q Cell Aqueous Makeup Facilities

The AMU facilities for the Q Cell operation are intended to make Q Cell completely independent of the remainder of the Purex Plant. Seven primary tanks are included on the second level of Q Cell above the control room. In addition to this equipment, three portable chemical addition drums for ferrous sulfamate, hydrazine, and ANN are connected from the Purex sample gallery. Also, a chemical add tank (TK-Q31) to the stripper-concentrator (E-Q2) is located in the sample gallery.

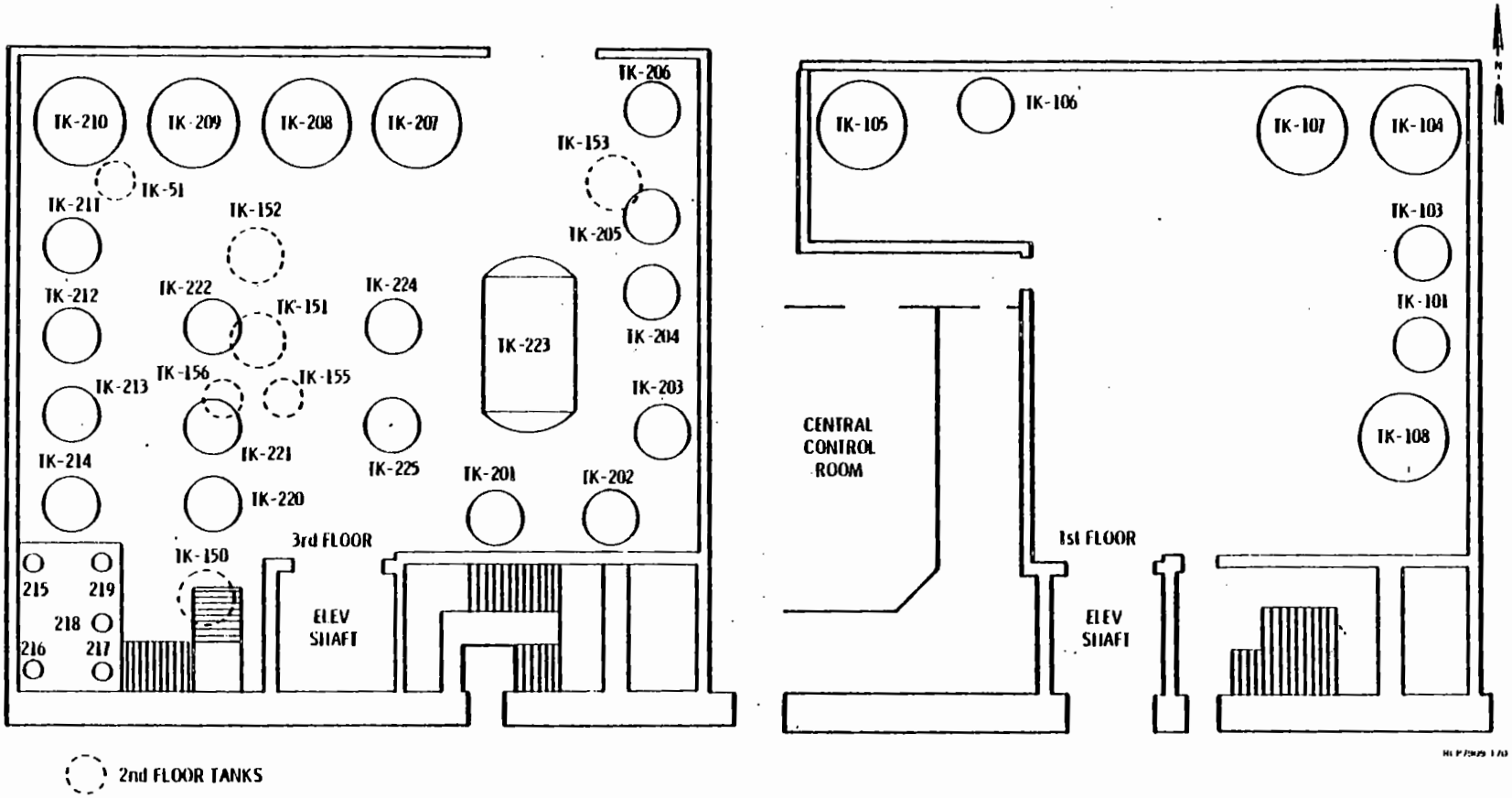

FIGURE 4-21. AMU Floor Plans.

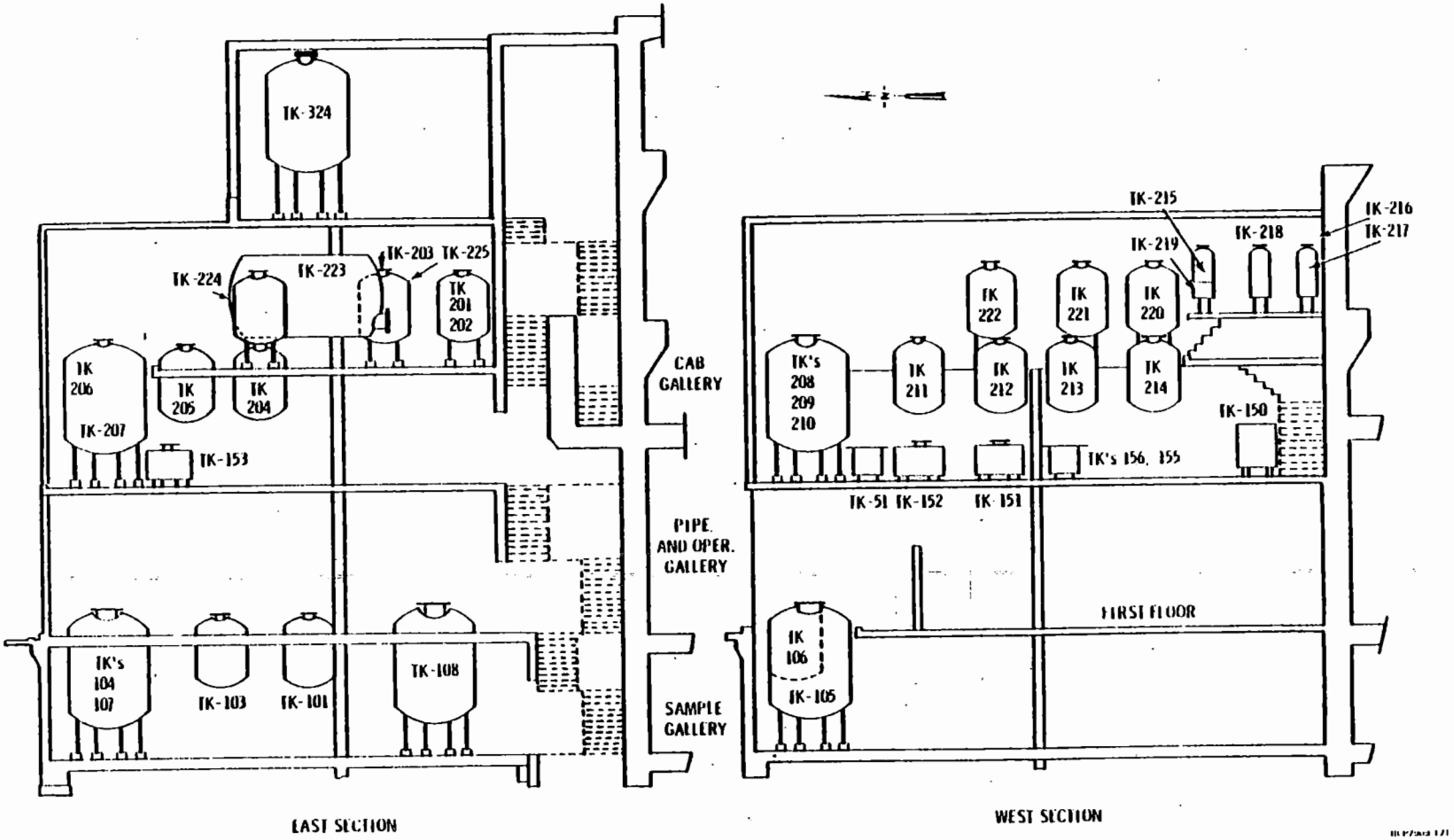

FIGURE 4-22. AMU Area Elevations.

Table 4-42. First Level Aqueous Makeup Tanks and Their Uses.

Tank	Service
101	Ferrous sulfamate makeup [$Fe(SA)_2$]
103	Hydroxylamine nitrate makeup (HN)
104	Sodium nitrate makeup ($NaNO_3$)
105	Utility. Used for mixing chemical solutions used in FP recovery, equipment decontamination, etc.
106	Sodium nitrite makeup ($NaNO_2$)
107	Sodium carbonate (Na_2CO_3) - Potassium permanganate ($KMnO_4$) mixture
108	Utility. Used for mixing chemical solutions used in FP recovery, neptunium recovery, equipment decontamination, etc.

Table 4-43. Second Level Aqueous Makeup Tanks and Their Uses.

Tank	Service	Remarks
150	3BX makeup nitric acid (HNO_3)	Makeup tank for 3BX solution. Routed to feed tank (TK-155). HNO_3 added from header. Distilled water added from storage tank located in the service blower room. (All other makeups use demineralized water.)
151	Cadmium nitrate $Cd(NO_3)_2$	Made up and routed to the PR room when required as the motive fluid for transferring rework plutonium solution from TK-L11 to TK-E6.
152	Sodium nitrite ($NaNO_2$)	Filled from TK-106; routed to the HA column (HA - NO_2), TK-J5 (2AF - $NaNO_2$), and TK-L3 (3AF - NO_2). The latter stream is not normally used.
153	Sodium hydroxide (NaOH)	Filled from Tank-20 (211-A); services all process locations using NaOH during Zirflex processing.
155	3BX feed	Head tank for routing 3BX solution to the 3B column. Filled from TK-150.
156	3AS feed	Head tank for routing 3AS solution to the 3A column. Filled from TK-211.
51	Resin wash tank	Used to convert ion exchange resin from hydroxide to nitrate form prior to addition to the neptunium purification unit.

TABLE 4-44. Third Level Aqueous Makeup Tanks and Their Uses.

Tank	Service	Remarks
201, 202, 203	Sodium hydroxide (NaOH)	Filled from TK-20 (211-A); supply NaOH to the three dissolvers during processing of aluminum-clad fuel elements for jacket removal. Tank 201 routed to TK-A3. Tank 202 routed to TK-B3. Tank 203 routed to TK-C3.
204	Sugar makeup and feed	Head tank for making up and routing sugar solution to TK-F7 to suppress ruthenium volatilization from the E-F6 waste concentrator and to TK-F15 for waste denitration.
205	Aluminum nitrate 4NN [$Al(NO_3)_3 \cdot (H_2O)$]	Filled from TK-42 (211-A); routed to the dissolvers, T-F5 and E Cell for complexing fluoride during Zirflex processing.
206	Potassium hydroxide feed (KOH)	Filled from TK-21 (211-A); routed to TK-01 for metathesis of UF_4 in the dissolvers during Zirflex processing.
207	Sodium nitrate ($NaNO_3$)	Filled from TK-104; supplies $NaNO_3$ to the three dissolvers for aluminum-clad fuel element jacket removal.
208	Sodium carbonate (Na_2CO_3) - potassium permanganate ($KMnO_4$) mixture	Filled from TK-107; organic wash solution routed to Tanks G1 and R1.
209, 210	1BX solution, nitric acid (HNO_3), ferrous sulfamate [$Fe(SA)_2$], sulfamic acid (SA)	Head tanks for making up and routing 1BX solution to the 1BX product partition column; HNO_3 added from TK-215. Ferrous sulfamate added from TK-216; SA added as a solid.
211	3AS solution, nitric acid (HNO_3)	Makeup tank for 3AS solution; routed to TK-156.
212	Ammonium fluoride - ammonium nitrate AFAN (NH_4F-NH_4NO_3)	Filled from TK-11 (211-A); routed to the dissolvers for fuel element jacket removal during Zirflex processing.
213, 214	2BX solution, nitric acid (HNO_3), hydroxylamine nitrate (HN), hydrazine (N_2H_4)	Head tanks for making up and routing 2BX solution to the 2B column. Nitric acid added from TK-215. Hydrazine added from drums. Hydroxylamine nitrate added from TK-219.
215	57% HNO_3	Nitric acid meter tank servicing TK-151, 209, 210, 211, 212, 213, 214.
216	Ferrous sulfamate	Ferrous sulfamate meter tank; filled from TK-101; services TK-209, 210.
217	Hydrazine (N_2H_4)	Added from drums; services TK-K1 (20F-N_2H_4 stream).
218, 219	Hydroxylamine nitrate	Filled from TK-103; routed to T-K2 (2DIS-HN). TK-219 is also used as a scale tank for HN addition to the 2BX makeup.
220, 221	2NS solution, HNO_3, $Fe(SA)_2$, N_2H_4	Head tanks for making up and routing 2NS solution to the 2N column; HNO_3 added from fresh HNO_3 header; $Fe(SA)_2$ added from TK-101; N_2H_4 added from drum via the 220/221A metering tank.
222	57% HNO_3	Filled from fresh HNO_3 header (Tank 12); services numerous process points requiring continuous fresh acid flow.
223	Demineralized H_2O	Filled from TK-30; services all process cells and AMU tanks.
224, 225	2PX solution, HNO_3	Head tanks for making up and routing 2PX solution to the 2P column; HNO_3 added from TK-222 fill line via the 224, 225A batch pot.
324	Utility	Filled from Tanks 105 and 108; services most sections of the Purex process as a utility chemical addition tank.

Basic details and construction of the major equipment pieces in the Q Cell AMU area are included in Chapter 3.0 and Reference 13. The Q Cell AMU tanks, their uses, functions, and volumes are listed in Table 4-45.

4.11.3 Process Water

Water for process use in the Purex Plant is obtained from the 200 East Area filtered water supply. As received, this water contains relatively large quantities of dissolved ionic impurities. To be suitable for process use, the water must meet specifications which limit the introduction of impurities into process streams. Table 4-46 compares filtered water impurity concentrations with the process water purity requirements. In addition to water purity shown by this table, the filtered water pH is 7.6 to 8.1, compared to the process water specification of 5 to 8.

The comparisons show that filtered water must be purified before it is suitable for process use in the Purex Plant. Water is purified in the demineralizers located in the 211-A chemical tank farm. High purity water required for final plutonium product purification (3BX stream) is produced by distillation of demineralized water.

4.11.3.1 Demineralization Process

Demineralization, or de-ionization, is a chemical exchange and adsorption process in which undesirable dissolved salts are removed from water. Adsorbents are selective with respect to either cations or anions; hence, a complete demineralization process includes contacting the water with both cation and anion-exchange materials. In both cases, removal of salts is effected by exchange of an ion in the adsorbent structure for another in the solution being treated. In the Purex Plant, an acidic adsorbent (Dowex Cation EX*) removes cations, and a basic adsorbent (Amberlite IRA-93**) removes anions.

Three cation and three anion columns are used to meet the demand for Purex process water. Sanitary water which has been filtered enters the top of the cation columns and is routed from the bottom of the cation columns to the top of the anion columns. After contacting the resin bed of the anion exchanger, the water flows out the bottom of the column to the demineralizer water header and to the demineralized water storage tank (TK-30).

---

*Dow Chemical Co., Midland, Michigan
**Rohm and Haas Co., Philadelphia, Pennsylvania

Table 4-45. Q Cell Aqueous Makeup Tanks and Their Uses.

Tank	Service	Remarks
Q21	Wash tank 1	21-gallon tank used for 3XPT and 3XE chemical makeups.
Q22	Wash tank 2	250-gallon tank used for chemical makeup of scrub solutions.
Q23	Resin add tank (Amberlite IRA-97)	12-gallon tank used to add new resin to TK-Q4.
Q24	Sodium nitrite addition	58-gallon tank used to add $NaNO_2$ to react with hydrazine in TK-Q5 waste.
Q25	ANN addition	13-gallon tank used to add ANN for complexing fluoride with aluminum ion in TK-Q5.
Q26	$Fe(SA)_2$	12-gallon dropout measurement tank for adding ferrous sulfamate to ion exchange feed in Tank Q3. Not normally used.
Q27	Hydrazine	5-gallon dropout measurement tank for adding hydrazine to ion exchange feed in TK-Q3. Used to adjust neptunium valence to IV.
Q31	HNO_3	15-gallon tank located in sample gallery for adding HNO_3 to ion exchange feed in TK-Q3.

Table 4-46. Comparison of Impurity Concentrations in Filtered Water to Process Water Specifications.

Constituent	Impurities in Filtered Water (ppm)	Specification for Process Water (ppm)
Total hardness as $CaCO_3$	55 to 80	0 to 2
Calcium	20 to 40	$\leq$0.4
Magnesium	4 to 5.5	$\leq$0.25
Chlorine (as NaCl)	1 to 5	$\leq$0.6
Sulfates (as Na_2SO_4)	14 to 30	$\leq$1.5
Total dissolved solids	85 to 110 (including silicates)	1 to 4.5 (excluding silicates)
Silica (as SiO_2)	3 to 7.5	7.5
CO_2	0 to 2	$\leq$100.0
Sodium	1.9	$\leq$0.01

With use, the resin beds gradually become less effective for deionizing water, and must be regenerated. Sulfuric acid is used to regenerate the cation units and sodium hydroxide is used to regenerate the anion units. Routine demineralizer operation consists of regenerating one cation unit and one anion unit after each has processed approximately 200,000 gallons of sanitary water. A special regeneration manifold permits the isolation of the columns to be regenerated while the other columns remain on-line and continue to produce demineralized water. The regeneration cycle consists of three steps:

- Each resin bed is backwashed with water from the bottom (upflow) to remove trapped solids and to reclassify the resin bed. The flow is out the top of the column to the sewer.

- The regeneration solutions (sulfuric acid or sodium hydroxide) are prepared batchwise for each resin bed using separate dilution tanks. The regenerant solutions are sucked up out of the makeup tanks and into the appropriate column by a water jet. Each solution is passed down through the resin bed, and is routed to the sewer. To avoid contaminating the conductivity probe on the anion unit being regenerated, the sample valve to the probe is turned off. The probe measures the conductivity of the column effluent during normal operation and is used as a guide to determine the need for column regeneration.

- After the regenerant solution has been added, the resin bed is given a slow water rinse to continue displacing the regenerating solution through the bed. The rinse water is fed into the column with the water jet and drained to the sewer. After the slow rinse, the water jet is turned off and the bed is given a fast water rinse to flush excess regenerating solution to the sewer.

Table 4-47 summarizes the demineralizer operating parameters and time cycles.

Table 4-47. Demineralizer Operating Parameters.

Operating Mode	Cation Flow Rate, gpm	Time Cycle	Anion Flow Rate, gpm	Time Cycle
Maximum desired flow rate of demin. water	150	--	110	--
Normal service flow	125	48 hr	85	72 hr
Back wash	100	15 min	25	15 min
Regeneration	75	40 min	25	30 min
Slow Rinse	25	10 min	20	10 min
Fast Rinse	100	50 min	75	50 min

4.11.3.2 Distilled Water

High purity water required for plutonium product purification is provided by a 100-gal/hr distillation system consisting of the tin-lined still (having three parts -- evaporator, condenser, and aftercooler), the distilled water storage tank, the distilled water pump, and associated piping. This equipment is located in the service blower room just east of the first floor AMU area.

Feed to the still is demineralized water. Raw water is used to first cool the distilled water in the aftercooler and then condense the distilled water vapor in the condenser. Steam in the evaporator coils converts the demineralized water into pure dry steam which goes through de-entrainment baffles to the condenser. The condensed distilled water flows by gravity through the aftercooler to the storage tank. The water may be pumped to one of five AMU tanks (150, 211, 212, 213, and 214), but it is used only in TK-150 for chemical makeup of the 3BX process stream.

The still is automatic in operation once initial adjustments to feed streams and controls are performed. As the liquid level lowers in the storage tank, the storage tank Vaporstat* controller closes the electric circuit to the still. The closed circuit opens the cooling water solenoid valve and also closes (activates) the still feed-water circuit. With the feed-water circuit closed, the liquid level in the still regulates the flow of feed water into the still. The cooling-water line pressure downstream of the solenoid regulates the operation of the steam DOV and the still drain DOV. As the line pressure increases (cooling water flowing to the condenser), the steam DOV opens and the still drain DOV closes.

When the storage tank fills, the tank Vaporstat opens the electric circuit and the still shuts down. The cooling water flow ceases which, in turn, stops the steam flow and opens the still drain. The open electric circuit also stops the feed water flow.

Every 4 hours of operation, the still electric circuit is opened by a timer and the still is shut down, independent of consumption. This occurs to prevent scaling conditions from being created by overconcentration of the feed water in the evaporator.

4.11.4 Chemical Handling

In this section, information on receipt, makeup, uses, and distribution of Purex chemicals is presented. More of this subject data, including consumption and makeup tank identification, is given in Tables 4-38 through 4-44. Chemical hazards are discussed in Chapter 10.0.

4.11.4.1 Nitric Acid Handling

In general, the choice of using either fresh or recovered nitric acid for the makeup of a particular process stream is based on purity limitations, as well as availability of recovered nitric acid. The use of recovered nitric acid is limited, because of its associated FP content (on the order of 10^{-5} gamma curie per gallon of 50% acid), to those streams in which such contamination can be tolerated. The use of nitric acid recovered from the UO_3 Plant is further limited by its uranium content. To provide flexibility of choice, and to guard against shortages, many streams are piped so that either fresh or recovered nitric acid may be used.

Detailed routing of fresh or recovered nitric acid streams in Purex is described by the process flow diagrams in various parts of this chapter. The makeups of principal acid-containing process streams are discussed later in this section.

---

*Honeywell Co., Fort Washington, Pennsylvania

Fresh nitric acid is received from offsite vendors in tank trucks or railroad cars. At the 211-A chemical tank farm, it is unloaded into the nitric acid storage tank (TK-12). From storage, it may be pumped via either of two headers to the 202-A Building equipment pieces. Header 7001 directly serves equipment in the AMU facility, including the nitric acid head tank (TK-222). From TK-222 in the AMU facility, header 7001 routes fresh nitric acid to continuous acid users in the canyon, such as the 2AS stream, and to certain gallery tanks. Header 7002 routes nitric acid through the AMU facility, where it serves three tanks (Tanks 105, 204, 221), and into the P and O gallery where it serves the dissolvers, TK-E6, recovered acid storage tanks, U1 and U2, and TK-R5.

Nitric acid recovered from the UO_3 Plant is received by tank car at the uranium storage tank farm, 203-A, where the acid is transferred to storage tanks (TK-13 and TK-14) (see Subsection 4.10.1.3). From the storage tanks, the acid is normally pumped to the acid fractionator feed tank (TK-U5), but may be pumped directly for metered additions to the dissolvers (TK-A3, -B3, and -C3) and to the HAF makeup tank, TK-E6.

Nitric acid recovered in the Purex Plant (see Section 4.8) is pumped from storage (TK-U1 and TK-U2) in the acid storage vault through the recovered nitric acid header in the sample gallery. This header is piped via metering and proportioning devices to various equipment pieces in the canyon.

4.11.4.2 Sodium Hydroxide Handling

Caustic (sodium hydroxide) is handled in large quantities in the Purex Plant for waste neutralization,* general processing, and for delivery to other Rockwell onsite facilities.

Fifty weight percent (19M) caustic solution is delivered to the 211-A Building complex in railroad tank cars and unloaded to Tank 20 at the dual-purpose tank car unloading station, which services both sodium hydroxide and potassium hydroxide unloading. Tank 20 has a maximum operating level of 25,000 gallons.

4.11.4.3 Aluminum Nitrate Nonahydrate Handling

Aluminum nitrate nonahydrate (ANN) is used in the uranium metal dissolver solution as a complexant for fluoride ions introduced in the coating removal solution to reduce corrosion rates during Zirflex processing, in the waste from the neptunium purification system, and in the T-F5 acid

*Since the waste is made alkaline instead of neutral, "alkalization" rather than "neutralization" is the correct term. However, the latter term has been used in the Purex Plant and other Hanford locations for many years to describe this operation. Hence, neutralization may be found elsewhere in this manual, operating procedures, and other documents.

absorber. Free fluoride can be very corrosive to process equipment. Aluminum nitrate nonahydrate is received as a 50 wt% (1.6M) liquid at Purex in truck trailer lots and is stored in TK-42 of the 211-A tank farm. From AMU TK-205, ANN is distributed for process uses.

4.11.4.4 Ammonium Fluoride-Ammonium Nitrate

Ammonium fluoride-ammonium nitrate (AFAN) is received at Purex in tank truck lots as an alkaline solution with a concentration of 36.8 wt% (11.2M) ammonium fluoride, 7.2 wt% (1.1M) ammonium nitrate. AFAN is stored in TK-211-A-11 and is distributed from AMU TK-212 for use in the coating removal process to dissolve the Zircaloy jackets.

4.11.4.5 Hydrazine

Hydrazine is received at Purex in steel drums as a 35 wt% (11.3M) aqueous, nonflammable solution which is pumped to Tanks 213/214, 220/221, and 217 to be added to the 2B column (2BX), the 2N column (2NS) and TK-K1 (2DF-N_2H_4), respectively. In these locations, hydrazine reacts with nitrite ion to prevent oxidation of plutonium (III). Hydrazine is also added to TK-Q3 via Q Cell AMU TK-Q27 to adjust the neptunium valence to (IV) prior to the ion exchange column.

4.11.4.6 Ferrous Sulfamate

Ferrous sulfamate is received at Purex as a green viscous liquid in 360-lb containers of 50 wt% (2.9M) solution. The containers are emptied into TK-101 and the solution is pumped to the 2NS makeup tanks (220 and 221) and TK-216, which serves the 1BX makeup tanks (209 and 210). The function of the ferrous ion is to reduce plutonium to the nearly inextractable (III) valence in the 1BX and 2N columns.

4.11.4.7 Potassium Hydroxide

Potassium hydroxide is used in the coating removal process to metathesize uranium tetrafluoride solids to hydrous uranium dioxide. Forty-five weight percent potassium hydroxide solution is received at Purex in railroad tank cars, is stored in TK-211-A-21 and is diluted in TK-206 for transfer to TK-D1.

4.11.4.8 Cadmium Nitrate

Cadmium nitrate solution is used as a jet motive fluid for criticality prevention in the plutonium product handling process during high plutonium rework transfers from TK-L11 to TK-E6. It is received at Purex as a 50 wt% solution in chemical drums, is stored in TK-211-A-10 and prepared in TK-151.

4.11.4.9 Hydroxylamine Nitrate

Hydroxylamine nitrate (HN) is a reducing agent used in the 2B column of the second plutonium cycle and the final uranium cycle 2D column. The solution is used as received in drums from Z Plant as 13 wt% HN (1.45M) - 3 wt% (0.7M) HNO_3 or as purchased as 18 wt% (2.05M) HN. The HN solution is accumulated in TK-103, pumped to Tanks 218 and 219, and used in the 2DIS-HN and 2BX streams.

4.11.4.10 Sodium Nitrite

Sodium nitrite is a powerful oxidizing agent used in the HA column to oxidize neptunium (V) to the extractable (VI) valence. Sodium nitrite is also used in the 2AF Tank to oxidize plutonium (III) to the extractable (IV) valence.

Sodium nitrite is received at Purex as white pellets in 100-lb bags. The solution is prepared in TK-106 and pumped to the feed tank (TK-152).

4.11.4.11 Sugar

Sugar (sucrose) solution is used for treatment of the 1WF stream to prevent ruthenium volatilization during waste concentration and for denitration of the 1WW stream. The solution is made up in TK-204. Sugar is received in 100-lb bags.

4.11.4.12 Sulfamic Acid

Sulfamic acid is received as a solid in 50-lb bags and is used as a holding reductant, which protects ferrous ion by reacting with nitrite ion in the 1BX makeups in Tanks 209 and 210.

4.11.4.13 Sulfuric Acid

Sulfuric acid is used as a water demineralizer regenerant. It is purchased as a commercial grade 93 wt% solution in tank truck lots and stored in TK-211-A-50.

4.11.4.14 Potassium Permanganate

Potassium permanganate is received at Purex in 100-lb metal drums. It has a dark purple crystalline form with a blue metallic sheen, and is used with sodium carbonate in the organic treatment systems to remove FP's, organic degradation products, and other contaminants. The makeup is prepared in TK-107 and transferred to the head tank (TK-208).

4.11.4.15 Silver Nitrate

Silver nitrate is received at Purex as a white crystalline salt in 1000-oz (62.5 lb) containers. The silver nitrate solution used in regenerating the silver reactors is made up in a chemical makeup dolly

(portable drum with agitator and pump) in the sample gallery and sprayed into the appropriate reactor nozzle through piping to a wall nozzle and flexible wand jumper.

4.11.4.16 Sodium Carbonate

Sodium carbonate is received at Purex as a white odorless crystalline powder in 100-lb bags. The sodium carbonate-potassium permanganate solution used in the solvent treatment systems is made up in TK-107, pumped to TK-208 and then routed to Tanks G1 and R1.

4.11.4.17 Sodium Fluoride

Sodium fluoride is received at Purex as a finely pulverized white powder and is placed in small packages in a vented glovebox. These packages are hand carried to Q Cell for use in the neptunium purification process FP scrub solution makeup in TK-Q22.

4.11.4.18 Oxalic Acid

Oxalic acid is received at Purex in a white crystalline form in fiber drums of approximately 300-lb capacity. Oxalic acid solutions used for flushes are generally made up in TK-105 or TK-108 for transfer to TK-324 and the required cell via one of the utility headers.

4.11.4.19 Normal Paraffin Hydrocarbon (NPH)

The organic diluent (NPH) used in fresh organic makeup is a very pure mixture of n-decane to n-tetradecane. Normal paraffin hydrocarbon is received at Purex in railroad tank car lots and stored in TK-211-A-40. NPH is pumped to TK-R1A in the sample gallery, blended with tributyl phosphate and added to TK-R1 in the No. 2 solvent system.

4.11.4.20 Tributyl Phosphate (TBP)

The Purex solvent is 30 vol% TBP mixed in NPH diluent. Tributyl phosphate is received at Purex in railroad tank car lots and is stored in TK-211-A-41. To replace solvent losses, tributyl phosphate is routed to the process with NPH via Tanks R1A and R1 as a 50 vol% mixture.

4.11.4.21 Aqueous Solvent Extraction Streams

Aqueous streams used in the solvent extraction processes which are either prepared in the AMU area or by blending in the P and O gallery, sample gallery or canyon are discussed in this section. Data for solution makeups are also summarized in Table 4-39.

4.11.4.21.1 HAS

The HAS is a 2M HNO_3 stream added to the top of the HA column (T-H2) to scrub fission products from the product-bearing organic phase. This stream is normally formed by mixing recovered nitric acid and process

condensate recycle in the sample gallery. As alternates, fresh nitric acid may replace the recovered nitric acid, and demineralized water may replace the process condensate recycle stream. The nitric acid content of this stream is important in holding uranium, plutonium, and neptunium products in the organic phase and in attaining the required fission product removal. A conductivity probe with the required additional instrumentation has therefore been installed to monitor the acid content of the mixed stream.

4.11.4.21.2 HA-NO_2 and 2AF-NO_2

Sodium nitrite solution is made up in TK-106 and pumped to the TK-152 head tank from where it is routed via separate flow control systems to the HA column (T-H2) as the HA-NO_2 stream to oxidize neptunium to the extractable (VI) valence and to the 2AF Tank (TK-J5) as the 2AF-NO_2 stream to oxidize plutonium (III) to extractable plutonium (IV).

4.11.4.21.3 1BX

The 1BX is prepared alternately in Tanks 209 and 210. One tank is used for makeup while the other is "on-line." The stream is routed to the top of the 1BX (T-J6) column and used to separate plutonium from uranium and neptunium.

The 1BX solution contains dilute nitric acid, ferrous sulfamate, and sulfamic acid. The dilute nitric acid holds the uranium and neptunium in the organic phase in the 1BX column. The ferrous ion reduces the plutonium to the nearly inextractable (III) valence, allowing the plutonium to be easily stripped into the aqueous phase. Sulfamic acid reacts with any nitrite ion in the feed stream, preventing it from oxidizing the iron or plutonium.

4.11.4.21.4 1BXP-HNO_3 or 2AF-HNO_3

The 1BXP-HNO_3 stream is recovered nitric acid added to provide the acid concentration required in the feed to the second plutonium cycle for efficient solvent extraction operation. Use of recovered nitric acid containing up to 0.1M uranium is permissible at this point as most of the uranium is subsequently removed in the 1BS uranium scrub column. As an alternate, fresh nitric acid is added to the 2AF tank as the 2AF-HNO_3 stream.

4.11.4.21.5 1CX

The 1CX stream is very dilute (0.01M) nitric acid added to the top of the 1C column (T-J5) to strip uranium and neptunium from the organic phase. The nitric acid content enhances column stability by preventing the formation of an emulsion. The 1CX stream is normally formed by mixing fresh nitric acid and process condensate recycle in the canyon. As an alternate, fresh nitric acid and demineralized water are mixed in a chamber

or pot located in the P and O gallery. The mixing chamber is heated and the effluent temperature is controlled to maintain the required 1C column operating temperature.

4.11.4.21.6 2AS

The 0.75M HNO_3 2AS stream is formed by blending metered fresh nitric acid from header 7001 and demineralized water in the P and O gallery. This stream is used to scrub fission products from the plutonium-bearing organic in the upper section of the 2A column. The nitric acid helps hold the plutonium in the organic phase.

4.11.4.21.7 2BX

The 2BX is prepared in Tanks 213 and 214. The solution is routed by gravity to the 2B (T-L2) column. The primary function of the 2BX is to strip plutonium from the organic phase in the column. The organic feed stream to the 2B column contains plutonium (IV) and small amounts of uranium. The 2BX contains hydroxylamine nitrate (HN), which reduces the plutonium (IV) to nearly inextractable plutonium (III), forcing it into the aqueous phase. Hydrazine (N_2H_4) is added to react with any nitrite present which would reoxidize the plutonium (III). Nitric acid is included in the 2BX to hold the uranium in the organic phase, thus improving the separation.

4.11.4.21.8 2DF-HNO_3

Purex recovered acid is added from the sample gallery header as the 2DF-HNO_3 stream to TK-K1 to provide the acid concentration required in the feed to the second uranium cycle for efficient solvent extraction operation. This stream also contains some nitrous acid. As an alternative, fresh nitric acid may be added from header 7001.

4.11.4.21.9 2DF-N_2H_4

Hydrazine is added to TK-217 from drums and routed as the 2DF-N_2H_4 stream to TK-K1, where it reacts with nitrite ion to prevent oxidation of plutonium (III) and the HN reductant in the 2D column.

4.11.4.21.10 2DS

The 2DS is a demineralized water stream added to the top of the 2D column to scrub fission products from the organic phase into the aqueous phase waste.

4.11.4.21.11 2DIS

The 2DIS stream, consisting of hydroxylamine nitrate solution from Tank 218 or 219 blended with demineralized water in the P and O gallery, is added to the 2D column just below the midpoint of the upper or scrub

section. The HN reduces plutonium to the nearly inextractable (III) valence, which is transferred to the aqueous phase. The demineralized water helps the 2DS to scrub fission products from the organic phase.

4.11.4.21.12 2EX

The 2EX is a 0.01M HNO_3 stream used in the 2E column (T-K3) to strip uranium from the organic phase. The nitric acid is added to enhance column stability by preventing the formation of emulsion. Like the 1CX stream, the 2EX is normally formed by mixing fresh nitric acid with process condensate recycle in the canyon. Also like the 1CX, the alternative is to mix fresh nitric acid with demineralized water in a heated, temperature-controlled mixing chamber located in the P and O gallery.

4.11.4.21.13 2NF-HNO_3

The 2NF-HNO_3 is a fresh nitric acid stream from the 7001 header added to the feed tank (TK-J21) for the second neptunium cycle to replace the 3WB stream during Phase II and Phase III operation. During Phase III operation, the nitric is blended to 30 wt% with demineralized water in the P and O gallery.

4.11.4.21.14 2NS

The 2NS, which is the scrub solution added to the 2N column (T-J22) in the neptunium recovery system, is prepared alternately in Tanks 220 and 221. One tank is used for makeup while the other is "on-line." The 2NS solution contains nitric acid, ferrous sulfamate and hydrazine. The nitric acid acts as the salting agent, holding the neptunium in the organic phase in the top of the column. Ferrous ion reduces the neptunium to the extractable (IV) valence and reduces plutonium to the nearly inextractable (III) valence to allow separation. Hydrazine reacts with nitrite ion to prevent the oxidation of plutonium, neptunium, and ferrous ion. The makeup concentrations are changed when the operating mode is changed to enhance plutonium separation and FP decontamination.

4.11.4.21.15 2PX

The 2PX is prepared alternately in Tanks 224 and 225. The 2PX is used to strip neptunium from the organic phase in the 2P column (J23). The 2PX contains a small amount of nitric acid (0.01M) to enhance column stability by preventing the formation of an emulsion.

4.11.4.21.16 3AF-HNO_3

The 3AF-HNO_3 is a fresh nitric acid stream from the 7001 header to the feed tank for the third plutonium cycle to provide the acid concentration required for efficient solvent extraction operation.

4.11.4.21.17 3AS

The 3AS is prepared with demineralized water and nitric acid in TK-211, transferred to TK-156, and fed by gravity to the 3A (T-L4) column. The primary function of the 3AS is to scrub FP's and other contaminants from the plutonium-bearing phase. Nitric acid is added to hold the plutonium in the organic phase at the top of the column. 3AS solution from TK-211 may also be used as the TK-L11 to TK-E6 jet motive fluid for rework transfers of solutions containing less than 60 g/gal of plutonium, or as flush solution in the PR room. The outlet from TK-211 can be valved to either the TK-151 pump or the PR room flush header.

4.11.4.21.18 3BX

The 3BX, which strips the plutonium out of the organic phase in the 3B column, is prepared in TK-150, pumped to TK-155, and fed by gravity to the 3B column (T-L5). A small amount of nitric acid is added to assure stable column operation and prevent plutonium polymer formation. The 3BX solution is made up from distilled water rather than demineralized water to reduce the metallic impurity content of the plutonium product.

4.11.4.21.19 10S/10SR/10S-HNO_3

The 10S is a dilute nitric acid solution made up in TK-G2 of the No. 1 solvent treatment system and recycled to the 10 column (T-G2) as the 10SR scrub stream. The 10SR scrubs fission products and other undesired impurities from the organic, neutralizes entrained sodium carbonate, and acidifies the organic for return to the process. The 10S-HNO_3, a low flow fresh acid stream from header 7001, is added continuously to replace the nitric acid consumed.

4.11.4.21.20 20S/20SR/20S-HNO_3

These streams are made up in the same manner and perform the same functions in the No. 2 solvent treatment system (R Cell) as the 10S/10SR/10S-HNO_3 streams in G Cell.

4.12 PROCESS VENTILATION SYSTEMS

The process ventilation systems exhaust gaseous wastes from the process vessels, remove condensible vapors, and filter out radioactive particulate matter entrained in the exhaust air. In addition, these systems maintain a slightly negative pressure in all process vessels, as compared to pressures in the cells and canyon, to minimize a spread of contamination in the event of leakage in a vessel vapor space.

Head-end off-gas handling is covered in Sections 4.2 and 4.3, and the 202-A Building air ventilation system is described in Chapter 2.0.

4.12.1 Process Vent System Flowsheet

The canyon process vent system is supplied by three header subsystems as follows:

- The 7700 vessel vent header, operated by the J-F1-1 jet, which vents most of the process vessels in the canyon cells;
- The 7701 condenser vent header, operated by the J-F1-2 jet, which vents the E-H4-2, E-J8-2, E-K4-2, E-L6, and E-L7-2 condensers;
- The header from the E-F5 condenser, operated by the J-F1-3 jet, which vents the T-F5 acid absorber. Also, the E-F6 high-level waste concentrator is vented to T-F5 and the 1WW sugar denitration vessel (TK-F15) is vented to E-F6.

A flow diagram of the canyon process vent system headers is shown in Figure 4-23. The off-gases from these three headers enter a common manifold to the E-F1 condenser, then pass through the vent steam heater (E-F2), the silver reactor (T-F2), and the off-gas filter (F-F1) to the building ventilation air tunnel. The air tunnel leads to the stack exhausters through the building main ventilation filters. The purposes of this vent system are to remove corrosive and radioactive vapors from the canyon vessels, remove radioactive iodine in the silver reactor, and return process condensate to TK-F-12. The vacuum in the condenser vent and E-F5 subsystems provide the necessary differential pressure to maintain vapor flow through each condenser and negative pressure on the concentrators. The vessel vent subsystem maintains a negative pressure on most of the other process vessels in the canyon.

During operation of the plant, three steam-operated jets provide the required differential pressure for the respective headers. When the plant is down with the concentrators shut off, the jets are run on air to reduce moisture accumulation. The vessel and condenser vents are not normally shut off.

4.12.2 Condenser and Vessel Vent Systems Operation

4.12.2.1 Startup

Startup of the vent system equipment is described with the following basic outline:

- Motive steam is turned on to the vent vacuum jet (J-F1-2) for the condenser vent header, and cooling water is turned on at a flow rate of 380 gal/min to the E-F1 condenser.
- The condenser vent header jet controller is adjusted to 45 to 50 inches of water vacuum.

9413275.0979

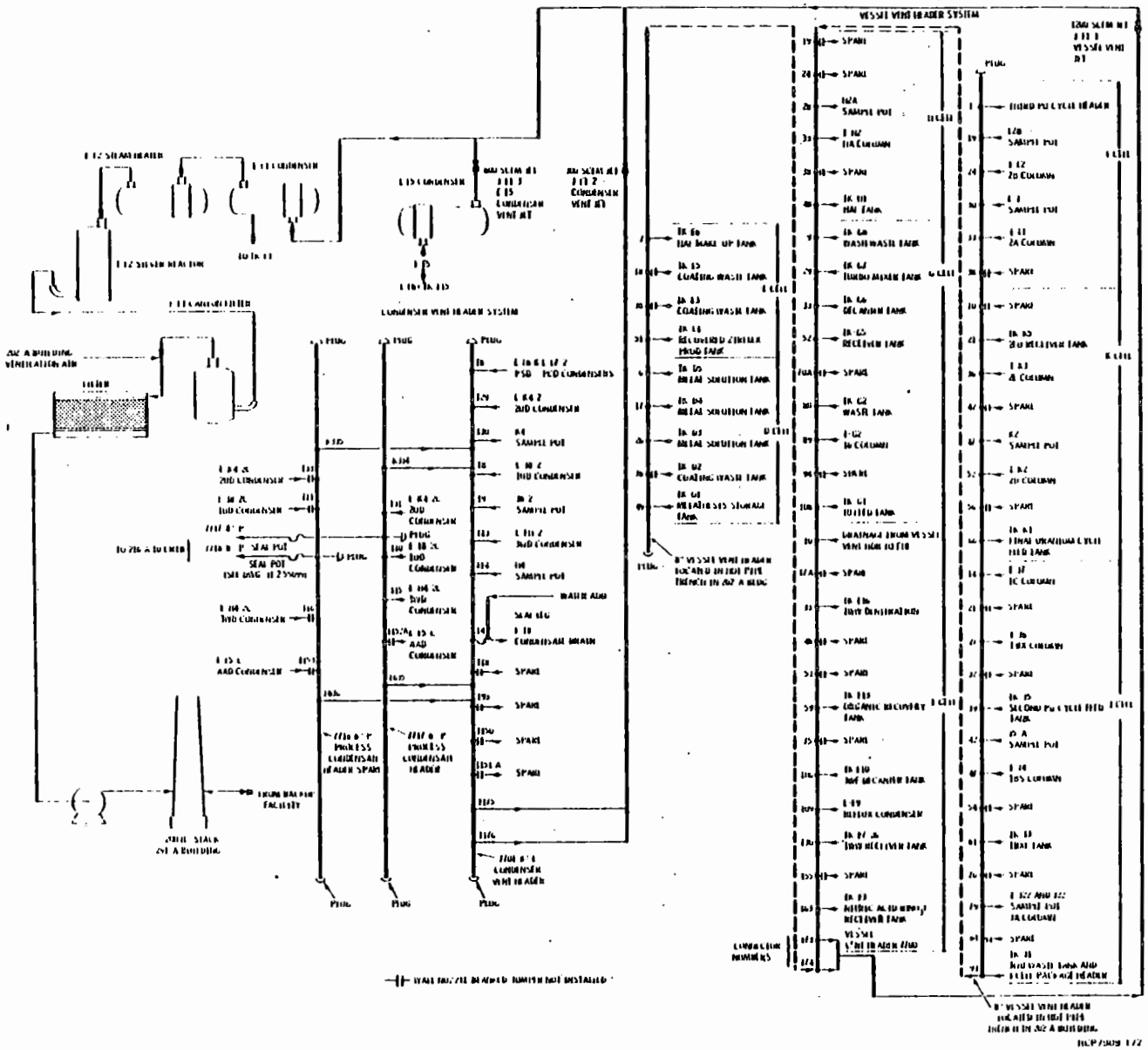

FIGURE 4-23. Process Vent System Flow Diagram.

- The E-F5 condenser vent vacuum jet (J-F1-3) is started with steam and adjusted to give a specified vacuum.

- The vessel vent header jet (J-F1-1) is also started with steam and adjusted to obtain the required vacuum.

- The vent exhaust heater steam flow is turned on full.

4.12.2.2 Process Control Trouble Shooting

The detection and correction of potential problems in each of the three header subsystems of the canyon process ventilation system are described in the following subsections.

4.12.2.2.1 7700 Vessel Vent Header

If the 7700 header vacuum is low or falling, the following items are checked and corrected as appropriate:

- Loading pressure on the steam or air supply DOV to the J-F1-1 jet; the loading pressure is increased as required.

- Crane records to determine if tank nozzles are open due to work in progress; installation of jumpers or nozzle blanks is expedited and adjustments are made to compensate for the increased flow.

4.12.2.2.2 7701 Condenser Vent Header

If all concentrators in operation are losing vacuum, the problem is most likely in the E-F1 condenser or beyond and is detected by high differential pressure (d/p) readings across the condenser or the F-F1 filter. The following items are checked and corrected as appropriate:

- The d/p's across the E-F1 condenser and F-F1 filters are checked.

- If the E-F1 condenser d/p is high, the E-F1 cooling water flow indicator and outlet temperature recorder are checked. The flow is increased if low or if the outlet temperature is above the specified value of 40°C.

- If the F-F1 d/p is high, indicating filter plugging which may be due to high moisture content of the incoming gas, the E-F2 steam heater flow indicator and the E-F2 outlet gas temperature recorder are checked. The steam flow is increased if low or if the temperature is less than 320°F.

- The steam pressure to the J-F1-2 jet is checked and increased if low.

- The condenser vent header jet controller vacuum readings and associated equipment are checked by maintenance personnel for possible failure or calibration drift.

If only one concentrator loses vacuum, the following items are checked and corrected as appropriate:

- The condenser cooling water flow and outlet temperature for the condenser are checked. The cooling water flow is increased as required.

- The condenser seal pot liquid level is checked and increased if low.

- The concentrator temperature is monitored for an unexplained increase resulting in an abnormally high off-gas rate. The temperature is decreased to regain control of vacuum.

- The concentrator and receiver tank liquid levels are checked and increased as necessary to cover diplegs.

Other conditions that must be met to prevent air in-leakage and keep vacuum on the 7701 condenser vent system are as follows:

- The seal legs on both the main (7717) and spare (7718) process condensate headers must be full.

- The seal leg on the condensate line to TK-F18 must be full.

- Spare nozzles on both the main (7717) and spare (7718) process condensate headers must have jumpers installed or be blanked.

- Spare nozzles on the condenser vent header must have jumpers installed or be blanked.

- Crane work (i.e., jumper removals) in progress might explain a vacuum loss.

4.12.2.2.3 <u>E-F5 Condenser Vent Header</u>

The potential problems and corrective actions for the E-F5 condenser vent header, which is operated by the J-F1-3 jet, include those listed in 4.12.2.2.2 for the 7701 condenser vent header plus the potential for rapid evolution of off-gas from TK-15 during sugar denitration. In the latter case, regaining vacuum control would require slowing the denitration reaction to normal rates.

4.12.2.3 Shutdown

When all concentrators are shut down, the three jet controllers are switched from steam to air. The desired vacuum is maintained by adjusting the three pressure recorder-controllers.

4.12.3 Iodine Removal by Silver Reactor

Radioiodine is removed from the process off-gas in the silver reactor (T-F2) by the combination of the iodine with silver nitrate coated on a heated bed of packing. Chemistry of the reaction is discussed further in Chapter 9.0. Off-gases from the process vent systems are routed through a steam heat exchanger (E-F2) operated at 320°F prior to entering the silver reactor. The position of the process vent system silver reactor is shown in the Purex process flow diagram, Figure 4-1.

Plant experience indicates variable performance by silver reactors, and after extended use, the dissolver silver reactors (described in Section 4.3) are known to lose efficiency (Ref. 1). The loss in efficiency normally occurs when enough iodine has been discharged to react with half of the silver on the packing. A similar correlation has not been developed for the vent system reactor. The vent system silver reactor, which has a more dilute feed stream than the head-end, may be less efficient than the dissolver reactors because of the lower operating temperature or because of the competition of effluent chloride for the available silver. Laboratory measurements (Ref. 3) made in 1968 show that a significant amount of silver chloride was formed in the vent system reactor and a negligible iodine decontamination factor was obtained during the study. The chloride is introduced as an impurity in process chemicals and formerly as CCl_4 in laboratory wastes routed to F Cell for disposal. The reactor will be regenerated with silver nitrate prior to startup, and studies are underway to determine methods for improving iodine decontamination (Ref. 25).

4.12.4 291-A Stack Operations

All gaseous wastes from contaminated areas within the Purex Plant are filtered to remove as much radioactive particulate matter as possible, and most are discharged to the atmosphere through the 291-A-1 stack, a 200-foot-tall column containing an internal free-standing stainless steel liner.

The stack is periodically flushed under a condition of reduced flue gas velocity to remove any particulate matter or other solids that may have accumulated on the walls of the stack liner. This is done to keep the solids, which might collect radionuclides, from being discharged to the atmosphere. Stack washdown spray rings are located at the 200-foot, 150-foot, 100-foot, and 40-foot levels. Water under controlled flow and pressure can be delivered to the spray rings by a 100-gpm pump located in the stack sample building (292-A). The stack drains to the 216-A-2 tank.

4.12.5 Q Cell Process Vent System

The Q Cell process vent system provides a source of vacuum for the process vessels to prevent contamination spread from the vessels to the hot cell, and to remove any vapors from tanks and the concentrator. Contamination of the cell is prevented by maintaining the vessel internal pressure lower than the pressure in the surrounding cell. Vacuum in the vent system is produced by operating an air jet in the off-gas line of the E-Q9 condenser. The jet discharges to the R Cell vessel vent header, which is discharged to the air tunnel. The E-Q9 condenser operates under vacuum, condensing and venting Q Cell equipment via the E-Q2 concentrator.

Although the vacuum jet is capable of producing more vacuum than required for normal operation, the vacuum is limited to a maximum value of 20 inches of water to maintain water seals in the system. The system is maintained at 18 inches of water vacuum during E-Q2 concentrator operation and is reduced to 8 inches for vent system control without concentrator operation.

To increase the vent system vacuum from 8 inches of water to 18 inches for concentrator operation, the following steps are taken:

- The vacuum controller set point is adjusted to 18 inches of water.
- Cooling water flow is adjusted to maintain an outlet cooling water temperature of less than 40°C during concentrator operation.
- If the vent system vacuum fluctuates, checks are made to see that all seal loops are filled with liquid and that AMU lines are closed.

After the concentrator is shut down, these steps are required to reduce the vacuum to 8 inches of water:

- The vent controller setting is gradually reduced to 8 inches of water.
- Water flow to the condenser is adjusted to 5 gal/min.
- Additional water flow is provided if the outlet cooling water temperature exceeds 40°C.

4.12.6 Ammonia Scrubber Vent System

A separate exhaust system for E Cell vessels and the ammonia waste concentrator (E-F11) is provided to eliminate the possibility of ammonia from these vessels depositing as ammonium nitrate on the building ventilation exhaust filter. The coating waste receiver tank, TK-D2, is also vented to TK-E3 for this reason. The equipment is shown in the overall Purex process flow diagram, Figure 4-1.

Ammonia is produced by the coating removal process in the dissolvers, the centrifugation and caustic treatment of waste in E Cell, and the evaporation of ammonia scrubber waste (ASW) in F Cell (E-F11). Ammonia not removed from the E-F11-2 condenser off-gas and E Cell ammonia scrubber off-gas is routed to a steam heater (E-AS-1) operated at 170°F, then through prefilters and HEPA filters. A separate 20-meter-high stack and blower sufficiently disperses the ammonia to the atmosphere to reduce the concentration to below the allowable threshold limit value (25 ppm) at ground level.

4.13 ANALYTICAL METHODS

Tables 4-48 to 4-50, presented at the end of this section, are brief outlines of the principal analytical methods available for use in determining the properties and components normally of greatest interest in Purex streams. The scope and limitations of each method are presented as an aid to operating personnel in properly interpreting laboratory results and in requesting determinations which will produce meaningful data. For each analytical method, the precision, accuracy, sample size, time required for analysis, and any impurities known to affect the method have been listed, together with a brief description of the method and the sample points on which the method is normally used.

As time passes, many of the methods described may be improved or replaced with new and better methods. Therefore, if the outlined methods do not meet a particular process control requirement, analytical laboratory personnel should be consulted.

4.13.1 Definition of Terms

In the outlines of the analytical methods in Tables 4-48 to 4-50, some special terms are used in certain specific senses. The following is an explanation of these special terms.

- Accuracy, or systematic error, is an expression of the agreement of the average analytical result with the absolute or "true" value, expressed in percentage (100% means no average systematic error).

- Precision is an indication of reproducibility of an analytical method. In Tables 4-48 through 4-50, the precision figures indicate 95% confidence limits, unless otherwise noted. In other words, in 95 out of 100 determinations run under the defined conditions, statistical studies have shown the reported value does not vary from the mean value by more than the stated precision.

  For radiochemical methods, precision may be limited by the radiation counting instrument, but improves with increase in the total number of counts recorded. The following counting precision may be expected from the Simpson Alpha-Proportional (ASP), Wide Beta, and Gamma Energy Analysis (GEA) counting systems described in Section 4.13.4 below:

Total No. of Counts Recorded	Precision (99% Limits), %
66,000	± 1
18,000	± 2
2,600	± 5
700	±10
170	±20

- Analysis time indicates the total elapsed time required for a single determination by the method indicated. Not included is the time required for transportation of the sample to the laboratory or waiting time in the laboratory. Also, for duplicate analyses of a sample, the time required is not double that for a single analysis, but is usually less than that required for the same determination on two different samples.

- Sample size is the volume of sample required by the analytical method for a single determination.

- Spike or standard spike refers to an added aliquot of a radioactive isotope which is chemically similar to the species being measured. The spike is added to the sample to correct for method losses, or, in the case of isotopic dilution, to change the isotopic ratios in a known fashion.

4.13.2 Physical Property Determinations

There are two physical determinations done at this time -- isotopic distribution of uranium and plutonium, and specific gravity. These methods are described in Table 4-48.

4.13.3 Chemical Determinations

Methods for uranium, ferrous iron, total iron, free acid, pH, hydroxide, nitrate, nitrite, tributyl phosphate, sulfamate, hydroxylamine, hydrazine, corrosion products (e.g., nickel), aluminum, fluoride, and others are outlined in Table 4-49.

4.13.4 Radiochemical Determinations

With the exception of uranium and thorium, radioactive components of Purex Plant streams are normally determined by radiochemical methods. However, one exception to this is the accountability measurement of plutonium in the feed and product streams, in which a physical method (mass spectrometry) is used on the feed sample and a chemical method (Redox titration) on the product sample. Radiochemical determinations may include total alpha and beta, alpha and gamma energy analyses, and specific assays for neptunium and plutonium. These methods are outlined in Table 4-50.

Radiochemical analyses are based on the use of radiation counting instruments for the measurement ("counting") of the radiation emitted by the components of interest. The types of radiation counting instruments used depend on the types of radiation which are counted, and include the Simpson Alpha-Proportional Counter (ASP) and the Alpha Energy Analysis (AEA) system for alpha; the Wide Beta Counter for beta; and the Gamma Energy Analysis (GEA) system for gamma.

A radiation counting instrument utilizes a detection device which, upon exposure to radiation from a sample, produces electrical pulses which are automatically counted. The number of counts per unit time is a function of the amount of radioactive material present.

For the ASP and Wide Beta, an electrical potential is applied to the ionization chamber detecting devices, which contain two electrodes surrounded by an atmosphere of nonconducting methane gas. Ionization of the gas, resulting from passage of radioactive particles from the sample through the gas, allows the flow of current in pulses between the electrodes. These pulses are amplified and counted.

The AEA detector is a solid state, silicon diffused-junction barrier, semiconductor diode held at a high potential reverse bias ($\sim$ 300 volts d.c.). The detector is kept in a chamber with a tight-fitting door. This detector is photosensitive when activated; hence, the chamber is light-tight and is also kept under vacuum to reduce energy degradation of the alpha radiation, and to keep the door tightly closed when the detector is activated.

In operation, alpha radiation strikes the detector and causes pulses of current to flow in the high-voltage circuit. These current pulses are then amplified and fed to a pulse height analyzer, which may be computer controlled. The accumulated alpha energy spectrum may also be displayed to an output device, such as an oscilloscope.

The GEA detector is a lithium-drifted (sensitized) germanium semiconductor diode reverse-biased at a very high potential (∿ 3000 volts d.c.). This detector must be kept at a very low temperature with liquid nitrogen to prevent the lithium from drifting out of the crystal which would ruin the detector. Maintaining a very low temperature also reduces the background noise level.

In operation of the GEA detector, gamma radiation strikes the detector face and causes current pulses to flow, as with the AEA detector. The treatment of these pulses is essentially the same as that for the AEA system, except that more channels are involved in the pulse height analyzer for the GEA detector.

The conversion of instrument counts per minute to curies of radioactivity is dependent on the arrangement of the instrument detector relative to the sample, as well as on other considerations. For example, the detector cannot "see" all points on the sample; the "geometry" of the instrument is the fraction of the total radiation field to which the detector is exposed. In addition, such effects as sample thickness, shielding by air or by instrument parts, side reactions dependent on the nature of the radiation, etc., must be considered. The geometry, or efficiency, of each instrument is measured with appropriate standards. For the Wide Beta, pure known sources of each radionuclide of interest are used. All count rates are corrected for the efficiency of the counting instrument prior to reporting.

The principal characteristics of the radiation counting instruments are tabulated below:

	Radiation		
	Alpha	Beta	Gamma
Counting Instrument	ASP	Wide Beta	GEA
Detecting Device	Ionization Chamber (methane gas)	Ionization Chamber (methane gas)	Lithium-drifted Semiconductor Ge(Li)
Units for Reporting	Disintegrations per min/ℓ	Disintegrations per min/ℓ	μCi/ℓ
Instrument Efficiency, %	50	3-60 (depends on radionuclide)	<0.1-4 (depends on radionuclide and sample position)

NOTE: At this time, the AEA system is not quantitative and is capable of giving only ratios of various alpha energies. A total alpha analysis is required for quantitative assay with all AEA's.

4.13.5 Explanation of Tables

Further explanations of terminology and abbreviations used in Tables 4-48 through 4-50 are included below.

4.13.5.1 Column Headings

The tables of methods are organized into 13 columns which are described as follows:

- Determination - This is the species which is measured.
- Symbol - This is the abbreviation for the determination.
- Application - This shows the routine uses of the method and, in some cases, the concentration limits.
- Sample Points - Listed in this column are samples which are routinely analyzed by the particular method. Those marked with an asterisk (*) indicate an alternate method to be used only when the primary method cannot give the desired results. Other sample points may be included under nonroutine conditions.
- Method and Description - These columns give a brief description of the procedure, the key reagents used, and the basic principle for completing the analysis. Any additional comments about the method may also be noted here.
- Interferences - This describes various species, compounds, or sample types that are known to interfere with the method. However, there may be other unknown interferences.
- Nominal Sample Size - Shown here are the ranges of sample volumes that are normally used for each method. Note that only the amount of undiluted sample is given.
- Maximum Sample Size - This represents the absolute maximum sample size that may be used in the method for a given run. With samples containing radionuclides, radiation exposure may further reduce this volume for certain methods.
- Precision - This gives the best possible precision (random error) at the 95% confidence level (C.L.) which the method is capable of under ideal conditions. "Cruddy" samples (samples containing solids) and other problems will, of course, make these figures larger.
- Accuracy - This column shows the method bias (systematic error) as determined from appropriate known standards. One hundred percent accuracy means the average analytical result is identical to the true value.

- Analysis Time - Shown here is the time required to run a single analysis. As stated previously in Section 4.13.1, this time does not include sample delivery time nor waiting time.

- Laboratory - If the work for a particular method is not done at the Purex Analytical Laboratory, this column shows the laboratory where the work is done.

4.13.5.2 Abbreviations

Certain abbreviations, which are defined below, are used in the tables.

EDTA	Ethylenediaminetetraacetic Acid
NA	Not Applicable
NE	Not Established
TTA	Thenoyltrifluoroacetone
TIOA	Tri-isooctylamine
mℓ	Milliliters
μℓ	Microliters
meq	Milliequivalents
mM	Millimoles

TABLE 4-48. Physical Measurements.

Determination	Symbol	Application	Sample Points	Method	Description	Interferences	Sample Size		Precision (95% C.L.), %	Accuracy, %	Analysis Time	Labs (if not Purex)
							Nominal	Maximum				
Specific Gravity	SpG	Determination of specific gravity of liquid samples.	All	Density Meter	The sample is introduced via a vacuum flow sampler into a U-shaped glass tube which is electromagnetically excited. Density is calculated, using a digital processor from the deviation in resonant frequency.	Solids, gassing	0.7 mℓ	0.7 mℓ	NE	NE	1/2 hr	--
Isotopic	IA (1)	Determination of isotopic distribution of uranium in UNH product	K6	Mass Spectrometry	An aliquot of sample is added to dilute nitric acid. A very small quantity of solution containing < 1 μg of metal is mounted on a special filament and the isotopic ratios of the uranium are determined by high resolution mass spectrometry.	Other metals with the same mass no.'s as uranium; relatively nonvolatile organics	25 μℓ	250 μℓ	~ .1	Bias Free	3 days	234-5
	(2)	Determination of isotopic distribution of plutonium in $Pu(NO_3)_4$ product	L9	Mass Spectrometry	Same as for uranium, except the diluted sample is decontaminated of uranium by ion exchange, to avoid interference of U-238 with Pu-238.	Relatively nonvolatile organics; ions with the same mass no.'s as plutonium (U-238, the worst potential interference, is removed in the method)	20 μℓ	250 μℓ	~ .1	Bias Free	3 days	234-5

TABLE 4-49. Chemical Measurements.

Determination	Symbol	Application	Sample Points	Method	Description	Interferences	Sample Size		Precision (95% C.I.), %	Accuracy, %	Analysis Time	Labs (if not Purex)
							Nominal	Maximum				
Carbonate	CO_3	Determination of carbonate in "cold" organic wash solution	Na_2CO_3 - $KMnO_4$ wash	Acid-base Titration	Total carbonate is determined by adding an excess of standard sulfuric acid, heating, and back-titrating the unreacted sulfuric acid with standardized base to a potentiometric end point.	Anions of weak volatile acids (e.g., nitrite)	100 μℓ	50 mℓ	±5	99	1 hr	--
Caustic Ratio	C/R	Empirical determination of "caustic demand" for various acidic waste samples	F18, G8, R8	Acid-base Titration	A sample of process waste material is titrated with standardized NaOH to the desired pH (8.00). From the volume required to titrate the sample, the amount of 50% NaOH needed to neutralize the process waste material is calculated.	Not really applicable, since this is an empirical method	25 - 100 μℓ	1 mℓ	(Empirical)	(Empirical)	1/2 hr	--
Fluoride	F^-	Determination of total fluoride ion in aqueous process samples	D2, D5, E1, E3, E5, F15, (F26), K6, L9, Sumps, U1/U2, F3, 18P, AFAN, 3XS-FP	Specific ion electrode	An aliquot of sample is added to a special mixture of buffer and complexant. By the method of standard additions, the sample fluoride concentration is calculated by ten-fold dilution of the spiked sample.	Excess free acid (>0.4 meq) base (>1.0 meq) or polyvalent metal ions (>0.4mM per sample).	25 μℓ - 1 mℓ	1 mℓ	±10	100	1 hr	--
Free Acid	H^+ (I)	Determination of acidity in aqueous samples essentially free of hydrolyzable cations (<0.1%)	U1/U2, F3, F5, 2NW, 3WD, 1UD, 2AW, 2AS, L6/L7, HAS, ICX, 2BX, 2EX, XCX, 2PX, 3AS, 3BX, 3XE, 3XPT, 3XS-FP, 3XS-FS	Acid-base Titration	An aliquot of sample is diluted into water and titrated with standard base. The end point is determined either potentiometrically using a pH electrode, or colorimetrically, using methyl purple indicator.	Hydrolyzable metal ions, such as Fe^{3+}, Al^{3+}, UO_2^{2+}, etc.; colored solutions; anions with equilibria involving H^+ (e.g., $Cr_2O_7^{2-}$)	10 μℓ - 50 mℓ	50 mℓ	±3	97	1/2 hr	--

TABLE 4-49. Chemical Measurements (Cont.).

Determination	Symbol	Application	Sample Points	Method	Description	Interferences	Sample Size		Precision (95% C.L.), %	Accuracy, %	Analysis Time	Labs (if not Purex)
							Nominal	Maximum				
Free Acid (cont'd)	(2)	Determination of free acid in aqueous samples containing hydrolyzable cations	F8, F15, F16, F26, Sumps, L9, L10 RW, L11, R8, 2PC, 3XF, 3XW, 3EW, Q6, 3WF, HAW, J1 (3WB), 2NS, $Cd(NO_3)_2$, 2PN, 2NF, 1BP, 2AF, 2BP, 3BP, 1BX, 3AF, 3XS-Pu	Acid-base Titration with complexant	The metal ions are complexed with excess potassium oxalate, and the solution is then titrated with standard base to a potentiometric end point.	Ions that have interspecies equilibria involving hydrogen ion interfere with the analysis (such as phosphate and dichromate)	20 μℓ - 3 mℓ	50 mℓ	±12	84	1 hr	--
	(3)	Determination of free acid in aqueous samples with high uranium content	D5, E1, E6, K6, P6, P-TK's, 2DW	Acid-base Titration with complexants	Same as (2) except potassium fluoride is used along with the oxalate, and the solution is titrated to a preset pH.	Anions such as listed in (2)	10 - 15 μℓ	1 mℓ	±10	91	1/2 hr	--
	(4)	Determination of total acid in organic samples essentially free of hydrolyzable cations (<0.1%)	G5, R7	Acid-base Titration	An aliquot of sample is added to ethanol and the solution is titrated with standard base to a potentiometric end point.	Hydrolyzed TBP; Hydrolyzable metal ions as listed in (1)	2 mℓ	2 mℓ	NE	NE	1/2 hr	--
	(5)	Determination of strippable acid in organic samples with high metal content	HAP, J3, (1BXF)	Stripping and titration with complexants	An aliquot of sample is emulsified with oxalate-fluoride complexing solution and the aqueous phase is titrated with standard base to a preset pH.	Hydrolyzed TBP; Anions or species having equilibria as described in (2)	500 μℓ	500 μℓ	NE	NE	1 hr	--

TABLE 4-49. Chemical Measurements (Cont.).

Determination	Symbol	Application	Sample Points	Method	Description	Interferences	Sample Size		Precision (95% C.L.), %	Accuracy, %	Analysis Time	Labs (if not Purex)
							Nominal	Maximum				
Hydrazine	N_2H_4	Determination of hydrazine in "cold" aqueous make-up samples	2BX, 2NS, N_2H_4, 3XPT, 3XS-Pu, 3XS-FP, 3XS-FS	Absorption Spectrophotometry	Hydrazine reacts with p-dimethylaminobenzaldehyde (p-DAB) to form a rearrangement compound which is an intense orange-red color in strong acid. The intensity of the color is then measured spectrophotometrically and the concentration of hydrazine is determined from a calibration curve.	Other amines which can form compounds with p-DAB	50 - 100 μg	1 mg	±8	93	1/2 hr	--
Hydroxide	OH^-	Determination of total hydroxide ion in "cold" aqueous make-up samples and those free of hydrolyzable anions (CO_3^{2-}, PO_4^{3-}, etc.)	KOH	Acid-base Titration (potentiometric)	The sample is titrated with standard acid to a potentiometric end point. The break is calculated as hydroxide.	Anions of weak acids such as CO_3^{2-}, PO_4^{3-}, etc.; aluminate (to some extent); CrO_4^{2-}	50 μg	5 mg	±1	99-100	1/2 hr	--
Hydroxylamine Nitrate	HN	Determination of total hydroxylamine in "cold" aqueous make-up samples	2BX, HN	Redox Titration	Ferric ammonium sulfate is added to the complexed hydroxylamine sample which reacts to reduce the ferric iron to ferrous iron. The resultant ferrous iron is titrated with standard permanganate solution. From the stoichiometric permanganate titration, the hydroxylamine concentration is calculated.	Ferrous iron initially in the sample; any other compound which will reduce Fe^{3+}	100 μg - 1 mg	10 mg	±5	99	1 hr	--

TABLE 4-49. Chemical Measurements (Cont.).

Determination	Symbol	Application	Sample Points	Method	Description	Interferences	Sample Size		Precision (95% C.L.), %	Accuracy, %	Analysis Time	Labs (if not Purex)
							Nominal	Maximum				
Iron (II)	Fe^{2+} (1)	Determination of ferrous ion in aqueous samples with low concentrations of other colored species	IBP	Absorption Spectrophotometry	An aliquot of sample is mixed with a special complexant (o-phenanthroline) in an acetate buffer. The ferrous ion reacts with the complexant at a pH of 3.5 - 3.7 to form a red-colored complex. The intensity of the color produced is then measured spectrophotometrically and the concentration of ferrous ion is determined from a calibration curve.	Be, Sn, Dy, Mo, Hg, Zn, (pH>4)	10 μg	500 μg	5	94	1/2 hr	--
	(2)	Determination of ferrous ion in "cold" aqueous makeup samples	IBX, 2HS, Fe(SA)2, 3XS-Pu	Redox Titration	The sample containing ferrous ion is titrated with standard permanganate solution to a colorimetric end point	N_2H_4, NH_2OH, other reductants oxidized by permanganate	250 μg - 10 mg	10 mg	7	91	1/2 hr	--
Iron (total)	Fe (1)	Determination of total iron in aqueous samples with low concentration of other colored species	*D5, *F15, *U1/U2, *F3	Reduction/ Absorption Spectrophotometry	All the iron in the sample is reduced to ferrous ion with hydroxylamine hydrochloride. The ferrous ion is then complexed with o-phenanthroline and determined as described above for iron (II) method #1.	Be, Sn, Dy, Mo, Hg, Zn, plutonium (IV) - color of ion interferes in high concentrations (e.g., t9)	25 - 100 μg	1/2 mg (500 μg)	±5	94	1/2 hr	--
	(2)	Determination or iron in plutonium product	L9	Solvent Extraction/ Absorption Spectrophotometry	Same as method #1, using hydroxylamine hydrochloride, o-phenanthroline, and acetate buffer. The iron (II) complex is then extracted away from the colored plutonium (III) ion into a nitrobenzene-n-butanol mixture and the absorbance of the organic phase measured on a spectrophotometer.	Ions as in (1) except plutonium (IV)	NE	1/2 mg (abs. spec)	±5 (abs. spec)	95 (abs. spec)	1/2 hr	--

*Alternate method

9413275.0995

TABLE 4-49. Chemical Measurements (Cont.).

Determination	Symbol	Application	Sample Points	Method	Description	Interferences	Sample Size		Precision (95% C.L.), %	Accuracy, %	Analysis Time	Labs (if not Purex)
							Nominal	Maximum				
METALS												
Aluminum	Al	Determination of aluminum in aqueous samples with low-to-high dissolved salt content	D5, E1, F3, U1/U2	Atomic Absorption Spectrophotometry	An aliquot of sample is diluted into a special matrix and analyzed for a specific metal ion on the atomic absorption spectrophotometer.	V, H_2SO_4	NE	1 mℓ	±11	97	1/2 hr	222-S
Cadmium	Cd	Determination of cadmium in aqueous samples	$Cd(NO_3)_2$ Samps	Same as above	Same as above.	Not available	NE	1 mℓ	±10	100	1/2 hr	222-S
Iron	Fe, (3)	Determination of total iron in process and product aqueous samples	D5, F3, F15, K6, U1/U2, P-TK's	Same as above.	Same as above.	High silica content	NE	1 mℓ	±7	102	1/2 hr	222-S
Chromium	Cr	Same as above	K6, P-TK's	Same as above	Same as above.	Fe, Ni	NE	1 mℓ	±10	105	1/2 hr	222-S
Nickel	Ni	Same as above	D2, D5, E1, E3, K6, P-TK's	Same as above	Same as above.	Not available	NE	1 mℓ	±5	95	1/2 hr	222-S
Sodium	Na	Same as above	K6, P-TK's	Same as above	Same as above.	None	NE	1 mℓ	±7	106	1/2 hr	222-S
Neptunium Valence	Np Val	Determination of neptunium valence state ratios in Q Cell samples	Q3, Q4, Q6	Absorption Spectrophotometry	The sample is diluted into nitric acid of the same concentration as that in the sample. The dilute sample is then scanned on an extended-range double-beam spectrophotometer. By comparing the spectrum obtained with the spectra of pure valence states (+4, +5 and +6) and also knowing the free acid concentration, the percentage of each valence state in the sample is calculated.	Species which absorb in the same region as neptunium ions; changes in acidity will change ratio of valence states; thus acidity must be known	100 μℓ	5 mℓ	±5	NE	1-2 hr	--

TABLE 4-49. Chemical Measurements (Cont.).

Determination	Symbol	Application	Sample Points	Method	Description	Interferences	Sample Size		Precision (95% C.L.), %	Accuracy, %	Analysis Time	Labs (if not Purex)
							Nominal	Maximum				
Ammonia	NH_3	Determination of NH_3 in most aqueous samples	F18	Distillation/ Acid-base Titration	The sample is made strongly basic with NaOH and heated. The ammonia thus formed is distilled and trapped in boric acid, which is titrated with standardized HCl using bromcresol green indicator. Intensely radioactive samples may require the distillation step to be done in a cubicle.	Other volatile bases	NE	1 ml	±10	90	1/2 hr	222-S
Nitrite (nitrous acid)	NO_2^- (1)	Determination of nitrite in aqueous samples with low iron content	3XW (Q5), 3AF, $NaNO_2$, 2AF	Absorption Spectrophotometry	An aliquot of sample is introduced into a solution of sulfanilic acid in acetic acid. The nitrous acid in the sample forms a diazonium salt which is then combined with 1-naphthylamine-7-sulfonic acid to form a pink azo dye. The intensity of this dye is then measured spectrophotometrically and the concentration of NO_2^- determined using a calibration curve.	Fe (III), but can be corrected for; plutonium at very high levels (Pu: NO_2^-, 120); Nd	10 - 50 µl	1 ml	±10	90	1 hr	--
	(2)	Determination of HNO_2 in organic samples	HAP, 1BXF, 2BW, 3BW	Aqueous Stripping Absorption Spectrophotometry	An aliquot of organic sample is contacted with dilute carbonate solution to strip the nitrous acid into the aqueous phase. The aqueous is acidified and buffered. Sulfanilic acid is added and the mixture is then analyzed as in Method #1.	Same as (1)	NE	NE	NE	NE	1-1/2 hr	--

9413275.0997

TABLE 4-49. Chemical Measurements (Cont.).

Determination	Symbol	Application	Sample Points	Method	Description	Interferences	Sample Size		Precision (95% C.L.), %	Accuracy, %	Analysis Time	Tabs (if not Purex)
							Nominal	Maximum				
Nitrate	NO_3	Determination of NO_3 in aqueous samples	$NaNO_3$	Raman Spectrometry	The sample is introduced into a capillary tube and scanned on a Raman spectrometer. The concentration of nitrate is determined by means of a calibration curve and perchlorate as an internal standard.	Carbonate	250 µg	2 mg	±5	100	1 hr	222-5
Potential of Hydrogen	pH	Determination of pH in any aqueous sample	All	Specific Ion Electrode	The pH of undiluted sample is measured by use of a pH meter and combination electrode.	Sodium at pH>12. Possibly other alkali metal ions	250 µg	None	±.2 pH unit	~99	1/4 hr	--
Plutonium	Pu (1)	Accountability measurement for plutonium in dissolver solution	D5	SX/IX/ Mass Spectrometry	Accurately known amounts of sample and spike solution (known standard solution of pure Pu-240 or Pu-242) are combined in 11 M HNO_3 and allowed to equilibrate. Valence adjustments and a TTA extraction are then performed as described in plutonium radiochemical method #1. After the organic is scrubbed 2-3 times with 0.75M HNO_3, the plutonium (IV) is stripped into 8M HNO_3, and a final cleanup from uranium is made with an anion exchange column, to assure thorough decontamination from U-238. An isotopic analysis is then made by high-resolution mass spectrometry. From knowing the isotopic distributions in the sample, spike, and sample plus spike, along with the spike concentration, the sample concentration is calculated.	Relatively nonvolatile organics: metals with same mass no.'s as plutonium (U-238 and Am-241 are removed in this method)	NE	0.05 mg	NE	NE	NE	234-5

9413275.0998

TABLE 4-49. Chemical Measurements (Cont.).

Determination	Symbol	Application	Sample Points	Method	Description	Interferences	Sample Size		Precision (95% C.L.), %	Accuracy, %	Analysis Time	Labs (if not Purex)
							Nominal	Maximum				
Plutonium (cont'd)	(2)	Accountability measurement in plutonium product	L9	Redox Titration	The plutonium in the sample is quantitatively oxidized to plutonium (VI) by heating with silver (II) oxide (AgO). It is then reduced to plutonium (III) with a known excess of ferrous ion, and the excess ferrous ion and plutonium (III) are titrated with standard dichromate ($Cr_2O_7^{2-}$) to an amperometric end point.	Americium (>0.1% by wt.) Cr, Mn (>100 ppm)	1 mℓ	1 mℓ	±.1	>99	10 hr	--
Sulfamate	SA	Determination of total sulfamate in "cold" aqueous makeup samples containing ferrous ion	IBX	Redox Titration	Total sulfamate concentration is determined by adding the sample to a warm sulfuric-nitric acid mixture. A pretitration with permanganate is done first to oxidize ferrous ion to ferric. Then standard sodium nitrite solution is added to the mixture. Sodium nitrite reacts with hydrogen ion from the acid solution to yield nitrous acid. At an elevated temperature, the nitrous acid reacts rapidly with sulfamic acid. The excess nitrous acid is titrated with standard permanganate and the amount of sulfamic acid is determined stoichiometrically.	N_2H_4, NH_2OH or any other reductant which reduces nitrous acid. Ferrous ion interferes, but is oxidized in the preliminary titration	3 mℓ	10 mℓ	±5	99	1/2 hr	--

TABLE 4-49. Chemical Measurements (Cont.).

Determination	Symbol	Application	Sample Points	Method	Description	Interferences	Sample Size		Precision (95% C.L.), %	Accuracy, %	Analysis Time	Labs (if not Purex)
							Nominal	Maximum				
Tributyl Phosphate	TBP	Determination of TBP in treated solvent extraction organic	G5, R7	Gas-Liquid Chromatography	A small aliquot of sample is introduced into a high temperature inlet port and vaporized. The vapor is then swept with a carrier gas into a packed column, where each component in the vapor is trapped for different time periods, depending on the temperature, nature of the compounds and gas flow rate. When each compound leaves the column, it is ionized in a hydrogen flame and detected electronically. The compounds appear as individual peaks on a recorder. The concentration of TBP in the sample is then calculated by comparing the areas under each peak with those of appropriate standards.	None	NE	0.5 - 1 μl	±10	100	2 hr	--
Trace Metallic Impurities	TMI	Determination of trace metals in product samples	K6, L9, Q6, P6	Emission Spectroscopy	The sample is placed in a suitable matrix and excited with a DC arc source. Characteristic emission lines from each trace element in the sample are identified. Through comparison with suitable standards, the intensity of each line is used to calculate the amount of impurity present in the sample.	Many element interferences; rare earths	NE	1 g	±100 - 50%	NE	7 hr	234-5

TABLE 4-49. Chemical Measurements (Cont.).

Determination	Symbol	Application	Sample Points	Method	Description	Interferences	Sample Size		Precision (95% C.L.), %	Accuracy, %	Analysis Time	Labs (if not Purex)
							Nominal	Maximum				
Thorium	Th	Determination of thorium in Q Cell and waste samples	3XF, 3XW, 3XN, F8	Solvent Extraction/ Absorption Spectrophotometry	Thorium is separated from interfering actinides by treating with 9M HCl and scrubbing with TIOA in xylene. The aqueous phase, containing thorium, is then mixed with arsenazo III, which forms a colored complex with the thorium. The intensity of this complex is then measured spectrophotometrically and the concentration of thorium is determined from a calibration curve.	Strong oxidizing or reducing agents (ceric, permanganate, etc.)	500 µℓ - 1 mℓ	1 mℓ	±10	90	1-1/2 hr	--
Uranium	U (1)	Determination of low-level uranium (<0.05M) in aqueous and organic samples with low quencher content	F8, F15, F16, F26, F18, G1/R1, G8, R8, U1/U2, U3/U4, *G5, 1CW, 2EW, R7, Sumps, PDO, SCD, ASD, CWL, CSL, PTD, PTS, 2NF*, 2PW*, 2PN*	Fusion/ Fluorimetry	The sample is fused in a pellet of NaF-LiF flux and the uranium is measured by fluorescence from UV excitation with a mercury lamp.	Quenchers (Fe, Ca, Cr, Co, Cu, Mg, Mn, Ni, Pb, Pt, Pu, Si, Th, Zn, HNO_3) NOTE: HNO_3 is distilled off in the fusion step	25 - 100 µℓ	1 mℓ	±70	96	2 hr	--

*Alternate Method

9413275.1001

TABLE 4-49. Chemical Measurements (Cont.).

Determination	Symbol	Application	Sample Points	Method	Description	Interferences	Sample Size		Precision (95% C.L.), %	Accuracy, %	Analysis Time	Labs (if not Purex)
							Nominal	Maximum				
Uranium (cont'd)	(2)	Determination of low-level uranium in aqueous samples with high quencher content	D2, E3, E5, L9, 1BP, 2BP, 3AF, 3BP, 2PL, 3XF, 3XW, 3EW, Q6	Solvent Extraction/ Fusion/ Fluorimetry	An aliquot of sample is added to a salting mixture and the plutonium is reduced to plutonium (III) with ferrous sulfamate. The uranium is extracted into a suitable organic solvent, and an aliquot of the organic is then fused and read as in (1).	Th (may extract with the uranium); Pt (off the dish); uranium complexants (SO_4^{2-}, PO_4^{3-}, etc.)	25 - 50 µℓ	1 mℓ	±5B	114	2-1/2 hr	--
	(3)	Determination of high-level uranium (>0.05M) in aqueous or organic samples and accountability measurement of uranium in feed and product	D5, E1, E6, 11AP, J1(3WB), 2NF, 2PW, 2PN, 1BSU (J2), 1BXF (J3), 1CU (J8), 2DW (K2), K6	Redox Titration	Uranium (VI) is reduced to uranium (IV) in concentrated phosphoric acid with iron (II). The excess iron (II) is then oxidized to iron (III) with nitric acid and a molybdenum catalyst. The uranium (IV) is then amperometrically titrated with standard dichromate beyond the end point and the excess chromium (VI) is back-titrated with iron (II).	H_2O (large amounts); various metal ions: M | M:U; Tc | >1/1000; Mn | >1/10; V | >1/10; Mo | (In presence of high nitrate content)	50 µℓ - 1 mℓ	1 mℓ	±0.2	Essentially 100	1/2 hr	--

9413275.1002

TABLE 4-50. Radiochemical Measurements.

Determination	Symbol	Application	Sample Points	Method	Description	Interferences	Sample Size		Precision (95% C.I.), %	Accuracy, %	Analysis Time	Labs (if not Purex)
							Nominal	Maximum				
Total Alpha (Aqueous)	AT	Determination of total alpha activity in aqueous samples with a relatively high ratio of alpha activity to total dissolved salt content	E6, G8, L9, L10 (RW), L11, R8, Sumps, 3WF, 3WB, 2NF, 2NW, 1BP, 2AW, 2BP, 3AF, 3BP, 3AW, L6/L7	Evaporation and Radioassay	An aliquot of sample or dilute sample is evaporated to dryness on a stainless steel disc and counted on a Simpson Alpha Proportional Counter (ASP). Dilutions are made with dilute nitric acid.	More than about 100 μg of solids on the disc will cause low results	20 - 500 μℓ	1 mℓ	±3	100.6	1/2 hr	--
Total Alpha (Organic)	AT	Determination of total alpha activity in organic samples	HAP, 1BSU, 1BXF (J3), 1CW (J7), 2BW, 3BW	Evaporation and Radioassay	Same as above, except dilutions are made with xylene or high-quality kerosene.	High beta activity (>1 rad) may cause high results	20 - 500 μℓ	1mℓ	±5	99	1/2 hr	--
Alpha Energy Analysis	AEA	Determination of individual alpha emitters (Np, Pu, Am) in samples containing more than one (1) alpha count percent of each emitter	2PC, 3XF, EW, 3XW (Q4), 3XW (Q5), Sumps, 3WB(J1), 2PW, 2NF	Evaporation and Radioassay	An aliquot of sample is mounted on a disc as described for AT determination. The disc is then counted with a semiconductor detector in a light-tight vacuum chamber. The detector is connected to a pulse height analyzer which produces an alpha energy spectrum. The percentage contribution of each alpha emitter with differing alpha energies is then calculated.	Solids on the disc broaden the spectral peaks and invalidate the analysis. Several isotopes have energies too close to be separated and are thus counted together. Two common pairs are: Pu-239/ Pu-240 and Pu-238/ Am-241	20 - 500 μℓ	1 mℓ	NE	NE	Depends on counting time, 1-8 hours	--

9413275.1005

TABLE 4-50. Radiochemical Measurements. (Continued)

Determination	Symbol	Application	Sample Points	Method	Description	Interferences	Sample Size		Precision (95% C.L.), %	Accuracy, %	Analysis Time	Labs (if not Purex)
							Nominal	Maximum				
Total Beta	TB (1)	Determination of total beta activity in high-level waste samples	U3, U4, other high-level samples	Evaporation and Radioassay	An aliquot of sample is evaporated to dryness on a 1-inch dish and the beta activity is measured by beta counting. "Total Beta" activity is empirical and is based on the beta energy distribution of Co-60.	Nonvolatile residue or dissolved salts can cause self-absorption on the mounts	25 µc	1 mc	NE	NE	1 hr	--
Total Alpha and Beta	AT, TB, (2)	Determination of total alpha and beta activity in intermediate level crib and effluent samples	PDD, SCD, ASD, CSL, CWL	Evaporation and Radioassay	An aliquot sample (5-10 mc) is mounted on a 2-inch dish and evaporated to dryness. The activity is measured with a combination alpha and beta detector. If more than 10 mc of sample is needed, multiple aliquots are added, evaporating each time.	Nonvolatile residue or dissolved salt can cause self-absorption on the mounts	10 mc	10 mc	±10	101	2 hr	--
Gamma Energy Analysis	GEA (1)	Determination of gamma emitter concentrations in both aqueous and organic solutions with relatively low alpha content	D2, D5, F15, F16, I26, U1/U2, U3/U4, P6 (see 3), F3, F5, G5, HAW, HAP, H4 (JUD), TCW, R7, F18	Direct Evaporation and Radioassay	An aliquot of sample or diluted sample is evaporated to dryness on a stainless steel dish and the dish is taped to an aluminum gamma plate. The sample is then counted on a lithium-drifted germanium "Ge(Li)" gamma detector connected to a pulse height analyzer. From the resulting gamma spectrum, the concentration of each emitter in the sample is calculated.	High concentrations of pure beta emitters (e.g., Sr-90) or very high beta-gamma ratios can mask gamma peaks on the low end (<0.3 MeV)	25 µc -1 mc	1 mc	±3	100	1/2 hr	--

TABLE 4-50. Radiochemical Measurements. (Continued)

Determination	Symbol	Application	Sample Points	Method	Description	Interferences	Sample Size Nominal	Sample Size Maximum	Precision (95% C.L.), %	Accuracy, %	Analysis Time	Labs (if not Purex)
Gamma Energy Analysis (Cont.)	(2)	Determination of gamma emitter concentrations in aqueous samples with high alpha content	L9, 2PC, 3XF, 3WF, 3EW, 3XW, Q6, 2NF, 2PW, 1BP, 1CU, 2DW, 2BP, 3AF, 3BP	Absorbed Liquid and Radioassay	An aliquot of sample is diluted to 1 mℓ with dilute nitric acid in a small polystyrene ("WIG-L-BUG") vial. A cotton dental roll is then added and the vial is capped and sealed. This mount is placed in an aluminum holder and counted as above in (1).	Same as above	25 - 100 μℓ	1 mℓ	NE	NE	1/2 hr	--
	(3)	Determination of emitters in UNH product	K6, P-TK's, (Possibly P6 too) UNH Trlr, 2EU	Liquid-Filled Can and Radioassay	An aliquot of sample is added to a plastic "tuna can" and the can is filled with dilute nitric acid. The can is then capped, sealed and counted directly on top of the Ge(Li) detector as described above in (1).		10 - 50 mℓ	100 mℓ	NE	NE	NE	--
	(4)	Determination of gamma emitters in ICC and ICS	ICC, ICS	Plastic Jar	An aliquot of ICS or the entire contents of ICC is added to a 300 mℓ plastic jar. The jar is capped and sealed with tape. Counting is done as described above for the "tuna can."		250 mℓ	250 mℓ	NE	NE	1-1/2 hr	--
Neptunium	Np (1)	Determination of neptunium in aqueous samples with more than 10 alpha % neptunium	3HB*, 2HF*	Solvent Extraction/ Radioassay (α)	Neptunium (V) is reduced to Neptunium (IV) with ferrous sulfamate in 1M HNO_3, which also reduces plutonium to the inextractable +3 state. The neptunium (IV) is then extracted into 0.5M TTA in xylene and the organic phase is scrubbed with fresh 0.9M HNO_3 and ferrous sulfamate. An aliquot of the organic phase is then mounted and counted on the ASP for AT, and, if necessary, AEA.	High concentrations of uranium, plutonium, or other alpha emitters or extractable salts (e.g. Fe^{3+}); complexants (e.g. F^- $C_2O_4^{2-}$); caustic samples	100 μℓ	1 mℓ	±40	82	1 hr	--

*Alternate method

TABLE 4-50. Radiochemical Measurements. (Continued)

Determination	Symbol	Application	Sample Points	Method	Description	Interferences	Sample Size		Precision (95% C.L.), %	Accuracy, %	Analysis Time	Labs (if not Purex)
							Nominal	Maximum				
Neptunium (Cont.)	(2)	Determination of neptunium in aqueous samples with high uranium content	K6, 2DW	Solvent Extraction/ Radioassay (α)	Same as (1), except that an acid adjustment is made prior to extraction, depending on the sample point, and the scrub solution is 0.75M HNO_3 to scrub out any traces of extracted uranium.	Very high plutonium content; complexants; caustic samples	1 mℓ	1 mℓ	±14	88	1 hr	--
	(3)	Determination of neptunium in aqueous samples with high beta-gamma levels	F8, F13, F16, F26, HAW, 2NW	Solvent Extraction/ Radioassay (α)	Neptunium (V) is reduced to neptunium (IV) in 3-5M HNO_3 with ferrous sulfamate. The neptunium (IV) is then extracted into 10% TIOA in xylene and the organic is scrubbed 2-3 times with fresh 5M HNO_3 and Fe^{2+} to scrub out plutonium (III). The TIOA is then diluted to ~3% with xylene, and the neptunium (IV) is stripped into 1M HCL. More Fe^{2+} is added to reduce any neptunium (V) formed by the low acidity, and the neptunium (IV) is again extracted into 0.5M TTA in xylene. The organic is then mounted and counted.	High uranium; complexants; caustic samples	100 μℓ - 2 mℓ	2 mℓ	±30	89	2 hr	--

TABLE 4-50. Radiochemical Measurements. (Continued)

Determination	Symbol	Application	Sample Points	Method	Description	Interferences	Sample Size		Precision (95% C.L.), %	Accuracy, %	Analysis Time	Labs (if not Purex)
							Nominal	Maximum				
Neptunium (Cont.)	(4)	Determination of neptunium in $Pu(NO_3)_4$ product	L9	Solvent Extraction/ Radioassay (α)	An aliquot of sample is added to 1M HCl and Fe^{2+}, which reduces the neptunium + plutonium to neptunium (IV) and plutonium (III), respectively. The neptunium is then extracted into 0.5M TTA in xylene and stripped into 8M HNO_3. The aqueous phase is adjusted to 5M HNO_3, more Fe^{2+} is added and the neptunium (IV) is extracted into 10% TIOA in xylene. The organic phase is then diluted to 3% TIOA and the neptunium (IV) is stripped into 1M HCl. More Fe^{2+} is added and the neptunium (IV) is again extracted into 0.5M TTA in xylene. The TTA organic phase is then mounted and counted as described above in (1).	High uranium concentration; complexants, caustic samples	500 μℓ	1 mℓ	NE	NE	4 hr	--
	(5)	Determination of neptunium in waste organic samples	2PW	Solvent Extraction/ Radioassay (α)	An aliquot of sample is contacted with dilute nitric acid, $NaNO_2$ and ferric nitrate. After stripping the neptunium as neptunium (V), excess nitrite is destroyed with hydroxylamine and the neptunium (V) reduced to neptunium (IV) with ferrous sulfamate. After an acid adjustment, the neptunium (IV) is extracted into 0.5M TTA in xylene and the organic is mounted and counted as described previously in (1).	High plutonium and uranium; N_2H_4, HN_3 or other substances which consume nitrite	500 μℓ	1 mℓ	NE	NE	2 hr	--

TABLE 4-50. Radiochemical Measurements. (Continued)

Determination	Symbol	Application	Sample Points	Method	Description	Interferences	Sample Size Nominal	Sample Size Maximum	Precision (95% C.L.), %	Accuracy, %	Analysis Time	Labs (if not Purex)
Neptunium (Cont.)	(6)	Input accountability measurement of neptunium	D5, F15*	Solvent Extraction/ Radioassay (α+γ)	An aliquot of sample is adjusted to 4-5M HNO_3 and a spike of Am-243 is added (the daughter, Np-239, is used as a correction for losses through the method). The neptunium is reduced to neptunium (IV) with ferrous sulfamate and extracted into 30% aliquat-336 in xylene. After scrubs with HNO_3 and Fe^{2+} to wash out excess plutonium and americium, the neptunium is stripped into 1M Na_2CO_3. The aqueous is then acidified and and the neptunium reduced to neptunium (IV) with Fe^{2+}. The neptunium is extracted into 0.5M TTA in xylene. The organic is then mounted, counted for AT, AEA, and GEA (the Np-239) to calculate the concentration of Np-237 in the sample.	Free complexants; caustic samples	500 μl	1 ml	±6	100	8 hr	--
	(7)	Product accountability measurement of neptunium	Q6	Radioassay (γ)	An aliquot of neptunium product is added to a "WIG-L-BUG" vial and counted on a Ge(Li) detector GEA system as described for vial mounts in GEA method #2. The 86 KeV gamma ray of the Np-237 is measured and compared to appropriate standards for accountability.	None	NE	1 ml	NE	NE	NE	--

*Alternate Method

TABLE 4-50. Radiochemical Measurements. (Continued)

Determination	Symbol	Application	Sample Points	Method	Description	Interferences	Sample Size		Precision (95% C.L.), %	Accuracy, %	Analysis Time	Labs (if not Purex)
							Nominal	Maximum				
Plutonium	Pu (1)	Determination of plutonium in aqueous samples with high beta-gamma levels and/or high dissolved salt content (except uranium)	D2, E1, E3, F8, F15, F16, F26, F18, U3/U4, HAW	Solvent Extraction/ Radioassay (α)	The sample is first heated with 3M HNO_3, hydroxylamine, and iron to reduce all the plutonium to plutonium (III) and destroy any polymeric forms of plutonium. An acid adjustment to ~ 0.9M HNO_3 is made. Sodium nitrite is added to oxidize the plutonium (III) to plutonium (IV) which is then separated from other alpha emitters and fission products by extracting into a solution of TTA in xylene. An aliquot of the organic is mounted on a dish and the plutonium is measured by alpha counting.	High concentrations of complexants, such as SO_4^{2-}, PO_4^{3-}, $C_2O_4^{2-}$, EDTA; high Fe^{3+}, uranium; caustic samples (> 1M)	25 μl - 1 ml	1 ml	± 16	92	1 hr	--
	(2)	Determination of plutonium in aqueous samples with high uranium content	1CU, 2EU, K6, P-TK's	Solvent Extraction/ Radioassay (α)	Same as method 1, except that the organic is scrubbed with 0.75M HNO_3 to remove uranium prior to mounting.	Complexants; caustic samples	100 μl - 1 ml	1 ml	±20	97	1 hr	--
	(3)	Determination of plutonium in neptunium product	Q6	Solvent Extraction/ Radioassay (α)	The sample is treated with sodium nitrite in dilute acid to oxidize the alpha emitters to neptunium (V) and plutonium (IV), respectively. The plutonium (IV) is then extracted with 0.5M TTA in xylene, and an aliquot of the organic is mounted and counted as described above in method 1.	Complexants; caustic samples; high uranium	500 μl	1 ml	NE	NE	3 hr	--

TABLE 4-50. Radiochemical Measurements. (Continued)

Determination	Symbol	Application	Sample Points	Method	Description	Interferences	Sample Size		Precision (95% C.L.), %	Accuracy, %	Analysis Time	Labs (if not Purex)
							Nominal	Maximum				
Plutonium (Cont.)	(4)	Determination of plutonium in caustic waste samples	D2*, E3*, E5	Solvent Extraction/ Radioassay (α)	The sample is first acidified and heated with hydroxylamine as in #1 to destroy plutonium polymer and reduce all the plutonium to plutonium (III). The plutonium (III) is then oxidized to plutonium (IV) with sodium nitrite and is extracted into aliquat-336/xylene. After an initial scrub with HNO_3, the plutonium is stripped into carbonate and the carbonate solution is re-acidified. The plutonium is then electrodeposited and measured by alpha counting. A spike of Pu-236 is used to correct for method losses and the recovery is determined by alpha energy analysis (AEA) of the mounts.	Complexants; high uranium	NE	2 mℓ	NE	NE	8 hr	--
Plutonium Retention	Ret (PRN)	Determination of the plutonium retention number on treated solvent extraction organic	G5, R7	Solvent Extraction/ Radioassay (α)	An aliquot of organic is contacted with standard plutonium solution (~ 0.3 g/ℓ Pu, 3M HNO_3). The organic is then stripped three successive times with fresh aliquots of 0.01M HNO_3. An aliquot of the organic is then mounted and counted.	Not really applicable, as this is an empirical method	5 mℓ	5 mℓ	Not applicable	NA	1.5 hr	--

*Alternate Method

4.14 REFERENCES

1. Schmidt, W. C., "Treatment of Gaseous Effluents," HW-49549-A, General Electric Company, Richland, Washington, April 10, 1957.

2. Department of Energy Manual Chapter 0524, "Standards for Radiation Protection," March 30, 1977.

3. du Plessis, L. A., and Sue L. Sutter, "Analysis of Samples from the Purex Vessel Vent Silver Reactor," BNWL-CC-2188, Pacific Northwest Laboratories, Richland, Washington, July 1969.

4. Raab, G. J. and R. E. Van der Cook, "Operating Experience Using Silver Reactors for Radioiodine Removal in the Hanford Purex Plant," ARH-SA-67, Atlantic Richfield Hanford Company, Richland, Washington, June 16, 1970.

5. Hess, D. D., "Engineering Study Purex 293-A Backup Facility," ARH-806, Atlantic Richfield Hanford Company, Richland, Washington, September 16, 1968.

6. Wilbourn, R. G., "Safety Aspects of Solvent Nitration in HTGR Fuel Reprocessing," GA-A14370, General Atomic Company, San Diego, California, June 1977.

7. Burger, L. L., "The Chemistry of Tributyl Phosphate - A Review," HW-40910, General Electric Company, Richland, Washington, October 27, 1955.

8. Matheison, W. E. and G. C. Oberg, "Process Specifications and Standards Plutonium - Uranium Processing in the Purex Plant," ARH-2012, Atlantic Richfield Hanford Company, Richland, Washington, April 1, 1971.

9. Jeppson, D. W., "Purex Flowsheet Reprocessing N Reactor Fuels," ARH-F-103, Atlantic Richfield Hanford Company, Richland, Washington, November 24, 1976.

10. Richards, R. B. and S. M. Stoller, Editors, Reactor Handbook, Volume II, Fuel Reprocessing, Second Edition, Interscience Publishers, Inc., New York, 1961.

11. "Purex Technical Manual," HW-31000, General Electric Company, Richland, Washington, March 25, 1955.

12. Matheison, W. E. and G. C. Oberg, "Criticality Prevention Specifications Uranium - Plutonium Separations at the Purex Plant," RHO-MA-118 Draft, Rockwell Hanford Operations, Richland, Washington, December 16, 1977.

13. Duckworth, J. P., "Purex Neptunium Recovery and Purification Information Manual," HW-77678, General Electric Company, Richland, Washington, April 1, 1963.

14. Palmer, M. E., "Essential Materials Manual," RHO-MA-132, Rockwell Hanford Operations, Richland, Washington, May 1978.

15. Flanary, J. R., et al., "Purex Process Laboratory Development Progress Report," ORNL-1548, Oak Ridge National Laboratory, Oak Ridge, Tennessee, June 20, 1953.

16. Shefcik, J. J, "Performance of a Turbomixer for Continuous Washing of Purex Organic," HW-51386, General Electric Company, Richland, Washington, July 3, 1957.

17. Pease, R. A., "Improvement of the Purex Vacuum Acid Fractionator Performance," ARH-1930, Atlantic Richfield Hanford Company, Richland, Washington, January 7, 1971.

18. Engelhardt, K. L. "Purex Process Engineering Study - Purex Aqueous Discharge," ARH-CD-962, Atlantic Richfield Hanford Company, Richland, Washington, May 6, 1977.

19. Heubach, E. C., II, "Conceptual Design Report Chemical Sewer Sampling, Monitoring, Flow Totalizing and Diverting System (Purex)," RHO-CD-320-CDR 1, Rockwell Hanford Operations, Richland, Washington, July 1979.

20. Liverman, James L., responsible official, "Final Environmental Statement, Waste Management Operations, Hanford Reservation, Richland, Washington," ERDA-1538, United States Energy Research and Development Administration, Richland, Washington, December 1975.

21. Danch, D. A., "Conceptual Design Report, Improved Purex Plant Process Condensate Sampling, Monitoring and Flow Totalizing System, Project B-203, Fiscal Year 1979 General Plant Project," RHO-CD-433, Rockwell Hanford Operations, Richland, Washington, August 31, 1978.

22. Beary, M. M., "Conceptual Design, Purex Condensate Recycle," ARH-3096, Atlantic Richfield Hanford Company, Richland, Washington, May 28, 1974.

23. Chambers, A. E., "Conceptual Design Report, Ammonia Scrubber Discharge (ASD) Sampling, Monitoring and Flow Totalizing System, Project B-188, Fiscal Year 1979 General Plant Project," RHO-CD-431, Rockwell Hanford Operations, Richland, Washington, December 1978.

24. Miller, F. A. and G. J. Raab, "Purex Plant Essential Material Requirements," ARH-CD-364, Atlantic Richfield Hanford Company, Richland, Washington, September 4, 1975.

25. Jeppson, D. W., "Program for Control of Iodine-129 During Zirconium Clad Fuel Reprocessing at Purex," ARH-CD-583, Atlantic Richfield Hanford Company, Richland, Washington, January 1976.

9413275.1012

THIS PAGE INTENTIONALLY
LEFT BLANK

CONTENTS

CHAPTER 5.0 - FUEL DISSOLUTION AND WASTE TREATMENT TECHNOLOGY

Page

5.1 FUEL COMPOSITION AND ELEMENT DESIGN 5-1

5.2 ZIRFLEX PROCESSING 5-7
5.2.1 Decladding. 5-7
5.2.2 Product Losses. 5-10
5.2.3 Corrosion 5-13
5.2.4 Metathesis. 5-13

5.3 TREATMENT AND DISPOSAL OF DECLADDING WASTE. 5-14

5.4 AMMONIA COLLECTION AND DISPOSAL 5-15
5.4.1 Properties of Ammonia-Air-Water Vapor Mixtures. 5-15
5.4.2 Ammonia Removal and Disposal. 5-15

5.5 DISSOLUTION OF UNCLAD FUEL. 5-18
5.5.1 Uranium Dissolution 5-18
5.5.2 Plutonium Dissolution 5-20
5.5.3 Fission Products. 5-20

5.6 REFERENCES. 5-20

FIGURES:
5-1 N Reactor Fuel Fabrication Process 5-3
5-2 Zirflex Decladding Parameters, 0.947% Enriched Fuel Elements 5-8
5-3 Zirflex Decladding Parameters, 1.25% - 0.947% Enriched "Spike" Fuel Elements 5-9
5-4 Solubility of Uranium in Zirflex Solutions 5-12
5-5 Flammability of Ammonia Gas Mixtures 5-16
5-6 Flammability of Air-Ammonia-Water Vapor Mixtures 5-17

TABLES:
5-1 N Reactor Fuel Element Descriptions. 5-2
5-2 N Reactor Fuel Components' Chemical Compositions 5-4
5-3 Fuel Identification Codes. 5-5
5-4 Fission Product Activity of Irradiated Fuels 5-6
5-5 Plutonium Loss to Decladding Solution. 5-11

THIS PAGE INTENTIONALLY
LEFT BLANK

CHAPTER 5.0 FUEL DISSOLUTION AND WASTE TREATMENT TECHNOLOGY

5.1 FUEL COMPOSITION AND ELEMENT DESIGN

N Reactor fuel elements are metallic uranium clad in Zircaloy-2, and are fabricated in two basic designs (Mark IV and Mark 1-A), differentiated primarily by diameter and U-235 content. They are of a "tube-in-tube" design, as shown in Table 5-1, and are of two different enrichments. The two fuel elements have different diameters and various lengths. The specifications of size and weight, along with the relative proportion of each type of fuel element processed, are given in Table 5-1. The fabrication process, shown in Figure 5-1, is outlined sequentially below:

- The metallic uranium core is coextruded with the Zircaloy-2 cladding.
- The extruded stock is cut to fuel element length (26 inches).
- The uranium is machined out of the ends of the fuel elements to prepare them for end closure.
- Uranium removal from the fuel element ends is completed by chemical milling with HNO_3 - H_2SO_4 solution.
- Zircaloy-2 end caps are placed in the fuel element along with 95% zirconium - 5% beryllium braze rings.
- The fuel element ends are brazed closed at a temperature above 1,000°C.
- The element is heat-treated in a molten salt bath at 720 to 750°C followed by a quench at 300°C.
- The ends are machined and welded for final closure.

The use of the zirconium-beryllium braze ring is unique to N Reactor fuel. Although safe for chemical decladding as in the Zirflex process, this unique construction appears to have contributed to cladding fires ignited by mechanical shock when N Reactor fuel was processed by shear-leach methods (Ref. 1).

The fuel component chemical compositions are shown in Table 5-2.

As each fuel element is fabricated, it is stamped with an identification code which tells the composition, length, and cladding thickness of the inner and outer components. This code is presented and explained in Table 5-3. As the fuel is loaded into canisters for storage after being irradiated, the identification code for each element is recorded on the bucket loading summary, which is used to plan and document each charge.

TABLE 5-1. N Reactor Fuel Element Descriptions

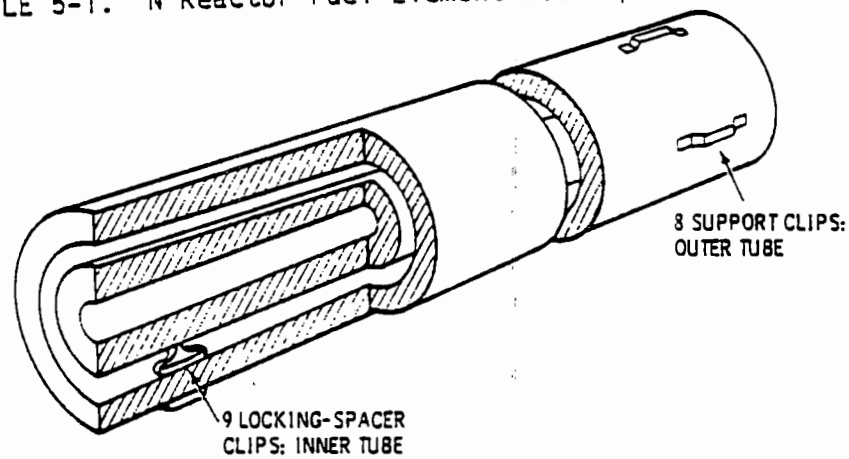

	MARK IV				MARK 1-A		
PREIRRADIATION ENRICHMENT OF URANIUM-235	0.947% ENRICHED				1.25-0.947% ENRICHED "SPIKE"		
TYPE	E	S	A	C	M	T	F
LENGTH (inches)	26.1	24.6	23.2	17.4	20.9	19.6	14.9
DIAMETER OF ELEMENT (in.)							
1. OUTER OF OUTER ELEMENT	2.42	2.42	2.42	2.42	2.40	2.40	2.40
2. INNER OF OUTER ELEMENT	1.70	1.70	1.70	1.70	1.77	1.77	1.77
3. OUTER OF INNER ELEMENT	1.28	1.28	1.28	1.28	1.25	1.25	1.25
4. INNER OF INNER ELEMENT	0.48	0.48	0.48	0.48	0.44	0.44	0.44
CLADDING WEIGHT (lbs)							
1. OUTER ELEMENT	1.21	1.15	1.10	0.88	1.94	1.83	1.45
2. INNER ELEMENT	2.41	2.29	2.18	1.74	1.18	1.12	0.89
WEIGHT OF URANIUM IN OUTER (lbs)							
1. (0.947% U-235)	35.2	33.1	31.2	23.1			
2. (1.25% U-235)					24.4	22.9	17.3
WEIGHT OF URANIUM IN INNER (lbs) 0.947% U-235	16.5	15.5	14.6	10.9	12.1	11.3	8.6
WEIGHTED AVERAGE OF URANIUM IN ELEMENT (lbs)			50.3			36.1	
RATIO OF ZIRCALOY-2 TO URANIUM (lbs/ton)	140	141.6	143.2	154.1	171.0	172.5	180.7
WEIGHTED AVERAGE (lbs/ton)			140.7			171.3	
% OF PROCESSING LOAD OF EACH TYPE	88	7	1	4	88	10	2
% OF TOTAL ELEMENTS	-		80			20	
DISPLACEMENT VOLUME gal/ton URANIUM	16	16	16	16	16	16	16

RCP7907-123

9413275.1016

DOE Richland, WA

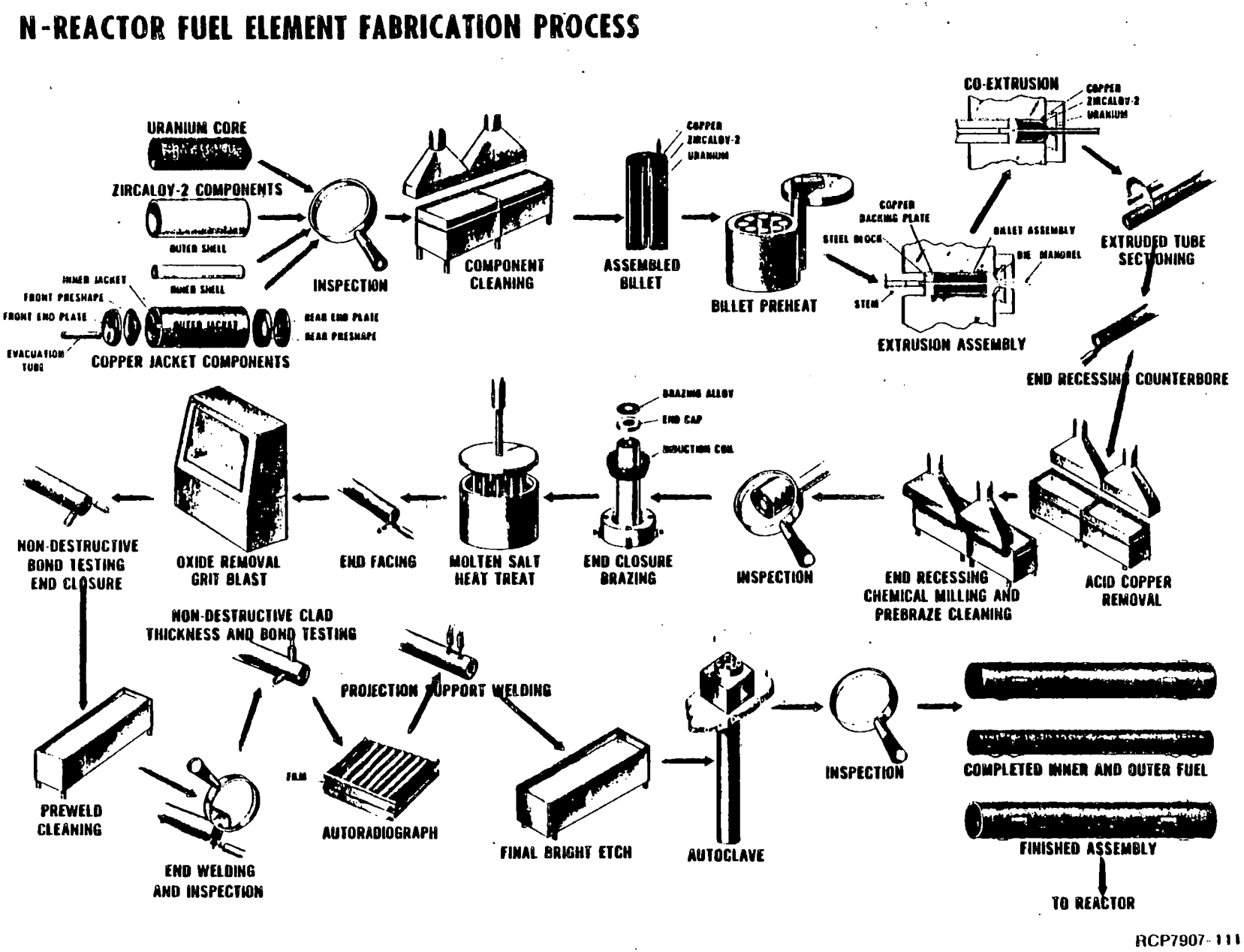

FIGURE 5-1. N-Reactor Fuel Element Fabrication Process.

TABLE 5-2. N Reactor Fuel Components' Chemical Compositions.

Element	Uranium Alloy 601*	Zircaloy-2*	Braze Filler*
Aluminum	700-900	75	145
Beryllium	10	--	4.75-5.25%
Tin	--	1.20-1.70%	1.14-1.70%
Iron	300-400	0.07-0.20%	0.06-0.21%
Chromium	65	0.05-0.15%	0.05-0.15%
Nickel	100	0.03-0.08%	0.28-0.08%
Carbon	365-735	275	500
Uranium	Balance	2.5	4
Zirconium	65	Balance	Balance
Boron	0.25	0.5	0.5
Cadmium	0.25	0.5	0.5
Cobalt	--	10	20
Copper	75	50	60
Hafnium	--	200	200
Hydrogen	2.0	25	50
Lead	--	100	130
Magnesium	25	20	60
Manganese	25	50	60
Molybdenum	--	50	50
Nitrogen	75	80	200
Silicon	124	100	250
Sodium	--	20	--
Titanium	--	50	20
Tungsten	--	50	100
Vanadium	--	50	50
Oxygen	--	--	2300

*Concentrations given in ppm maximum or ppm range unless shown as a weight percentage range.

The irradiated fuel received at Purex from N Reactor contains fission products, generated plutonium, residual uranium, and other transuranic elements. The content is a function of the original fuel composition, irradiation history, and cooling time. The majority of the short-lived fission products have decayed to insignificant concentrations by the time the fuel reaches Purex, as only fuel with a minimum age of 180 days (and as old as nine years) is processed. Table 5-4 shows concentrations of the more common fission products which are present in typical irradiated fuels. The complete calculated spectrum of fission products for different irradiation levels is available in document ISO-100 DEL EX (Ref. 2).

TABLE 5-3. Fuel Identification Codes

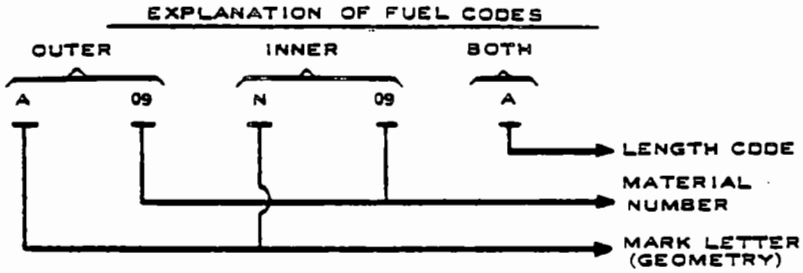

MARK LETTERS					
LETTER	GEOMETRY	REFERENCE DIMENSIONS (INCHES) O.D.	I.D.	CLAD OUTER	CLAD INNER
A	OUTER TUBE	2.404	1.767	0.025	0.025
B		2.425	1.701		0.020
C		2.299	1.437	0.030	0.025
D		2.345	1.360	0.035	
E		2.399	1.718		
F				0.028	
G		2.435	1.770	0.030	
H		2.434	1.776	0.025	0.020
J		2.433	1.762	0.020	0.015
N	INNER TUBE	1.246	0.440	0.040	0.025
P		1.349	0.475		
R		1.344	0.476	0.030	0.020
S		1.337	0.460	0.020	0.015
X		1.279	0.480	0.030	0.020
T	INNER ROD	1.337	—	0.030	—
V		0.379	—		—
W		0.565	—	0.032	—
Q		0.739	—	0.030	—

MATERIAL NUMBERS		
NO.	MATERIAL	
07	0.71	NATURAL URANIUM
09	0.95	ENRICHED URANIUM
12	1.25	
19	1.96	
21	2.10	
90	Al	
70-74	Li AND Al	

LENGTH CODES		REFERENCE LENGTH (INCHES) OUTER	INNER TUBE	INNER ROD
CODE	CALLED			
D	12"	11.600	11.540	—
F	15"	14.910	14.850	14.714
C	17"	17.400	17.340	—
P	19"	18.980	18.920	18.830
T	19.5"	19.580	19.520	—
B	20"	19.900	19.840	—
M	21"	20.880	20.820	20.730
A	23"	23.200	23.140	23.050
S	24.5"	24.560	24.500	—
E	26"	26.100	26.040	25.850

FUELS SECTION
(8-69)

RCP7907-124

TABLE 5-4. Fission Product Activity of Irradiated Fuels (Ci/Ton).

Pu-240 Content, %	12				9	
Fuel	Mark IV		Mark 1A		Mark IV	Mark 1A
U-235 Enrichment, %	0.947		1.25 - 0.947		0.947	1.25-0.947
Exposure, MWd/T, MW/T	2435,	11	2903,	11	1670**	2030**
Cooling Time	5 years	180 days	5 years	180 days	5 years	5 years
Pm-147	6.7×10^{3}	2.2×10^{4}	9.8×10^{3}	3.2×10^{4}	4.6×10^{3}	7.0×10^{3}
Cs-137*	7.3×10^{3}	8.0×10^{3}	9.1×10^{3}	1.0×10^{4}	5.0×10^{3}	6.2×10^{3}
Sr-90*	6.1×10^{3}	6.9×10^{5}	8.1×10^{3}	9.1×10^{5}	4.2×10^{3}	5.7×10^{3}
Ce-144*	2.3×10^{3}	1.3×10^{4}	3.0×10^{3}	1.5×10^{4}	1.6×10^{2}	2.3×10^{2}
Ru-106*	1.2×10^{2}	2.8×10^{2}	1.4×10^{2}	3.1×10^{3}	8.5×10^{2}	8.0×10^{2}
Kr-85	6.9×10^{2}	9.3×10^{3}	8.5×10^{2}	1.1×10^{3}	4.7×10^{2}	5.8×10^{2}
Cs-134	5.3×10^{2}	2.4×10^{3}	3.2×10^{2}	1.5×10^{3}	3.7×10^{2}	1.4×10^{2}
Sb-125	2.6×10^{2}	8.2×10^{2}	2.2×10^{2}	6.7×10^{2}	1.8×10^{2}	1.3×10^{2}
H-3	1.9×10^{1}	2.5×10^{1}	2.3×10^{1}	3.0×10^{1}	1.7×10^{1}	2.1×10^{1}
I-129	2.0×10^{-3}	2.0×10^{-3}	2.4×10^{-3}	2.4×10^{-3}	1.4×10^{-3}	1.6×10^{-3}
Zr-95	2.0×10^{-3}	7.7×10^{4}	3.0×10^{-3}	1.1×10^{5}	1.2×10^{-3}	2.6×10^{-3}
Nb-95	--	1.3×10^{5}	--	1.5×10^{5}	--	--
Y-91	--	5.2×10^{4}	--	7.5×10^{4}	--	--
Sr-89	--	3.0×10^{4}	--	4.7×10^{4}	--	--
Ru-103*	--	1.5×10^{4}	--	2.3×10^{4}	--	--
Ce-141	--	1.2×10^{3}	--	1.7×10^{3}	--	--
Te-127m	1.9×10^{-2}	1.0×10^{2}	2.9×10^{-2}	1.0×10^{2}	1.0×10^{-2}	2.04×10^{-2}
Te-129m*	--	9.0×10^{2}	--	6.9×10^{2}	--	--

*Daughters of these isotopes are also present at the same activity level. Example: Sr-90 has a daughter (Y-90) which is present in the fuel at the same curie content as Sr-90.

**Power levels between 10 and 11 MW/T.

--Less than 1×10^{-3}

5.2 ZIRFLEX PROCESSING

The Zirflex process is used for the selective dissolution of zirconium or Zircaloy cladding from reactor fuels. The process, based on the dissolution of zirconium by fluoride, is comprised of a decladding step and a metathesis step for fluoride removal from product uranium and plutonium solids.

5.2.1 Decladding

Zircaloy-2 cladding is dissolved from the fuel in a boiling aqueous solution of 5.5M ammonium fluoride and 0.5M ammonium nitrate (AFAN). The decladding reaction is:

$$Zr + 6NH_4F \rightarrow (NH_4)_2ZrF_6 + 4NH_3(g) + 2H_2(g) \qquad (5.1)$$

Hydrogen and ammonia are evolved in the course of the reaction. Both of these gases are potential burning and explosion hazards, with hydrogen giving the more violent reaction. In the presence of ammonium nitrate, however, hydrogen forms the less hazardous ammonia according to the equation:

$$4H_2 + NH_4NO_3 \rightarrow 2NH_3(g) + 3H_2O \qquad (5.2)$$

In practice, the hydrogen reaction goes to about 94% completion. Thus, the apparent overall reaction for dissolution of Zircaloy in Zirflex solution is:

$$Zr + 6NH_4F + 0.47NH_4NO_3 \rightarrow (NH_4)_2ZrF_6 + 4.94NH_3(g) + 0.12H_2(g) + 1.41H_2O \qquad (5.3)$$

Under optimum conditions, the dissolution rate is about 80 mils/hour, with a "free" fluoride concentration around 6M (free fluoride defined as fluoride not complexed by zirconium) (Ref. 3). The rate decreases proportionally as the free fluoride decreases. Marked decreases in the dissolution rate also occur if: a) the solubility limit of the zirconium in the solution is exceeded, b) the ammonia by-product from the dissolution is allowed to remain in solution, or c) an oxide film is present on the outer surface of the Zircaloy.

The solubility of ammonium hexafluozirconate [$(NH_4)_2 ZrF_6$] at room temperature (22°C), at 35°C, and at boiling (100 to 106°C) is shown in Figures 5-2 and 5-3 (Ref. 4) as a function of the free fluoride concentration. The solid diagonal lines in the middle of the figures represent the zirconium and free fluoride concentrations throughout the dissolution. These dissolution paths must avoid the vicinity of the boiling zirconium

9413275.1021

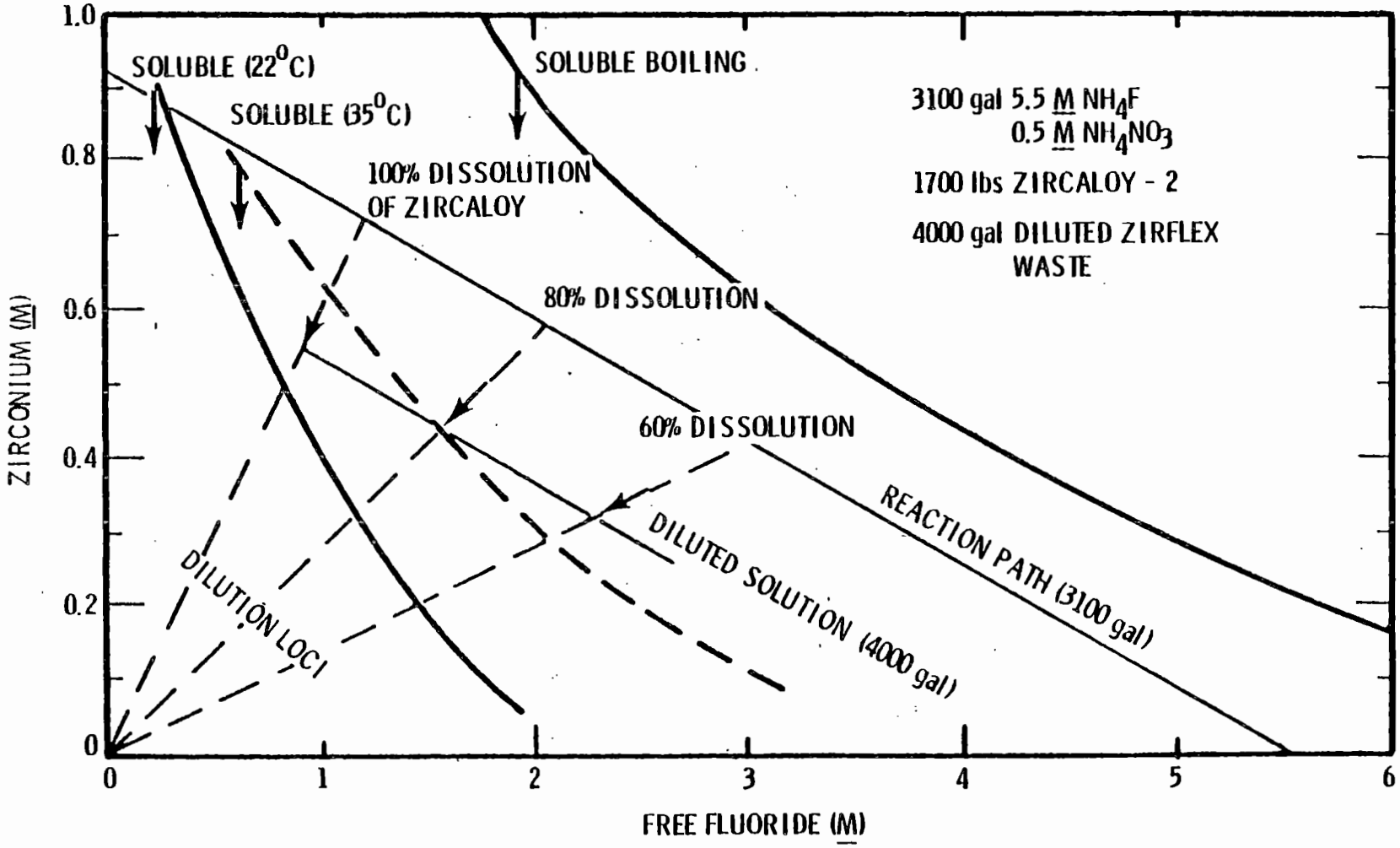

RCP7907-112

FIGURE 5-2. Zirflex Decladding Parameters, 0.947% Enriched Fuel Elements

9413275.1022

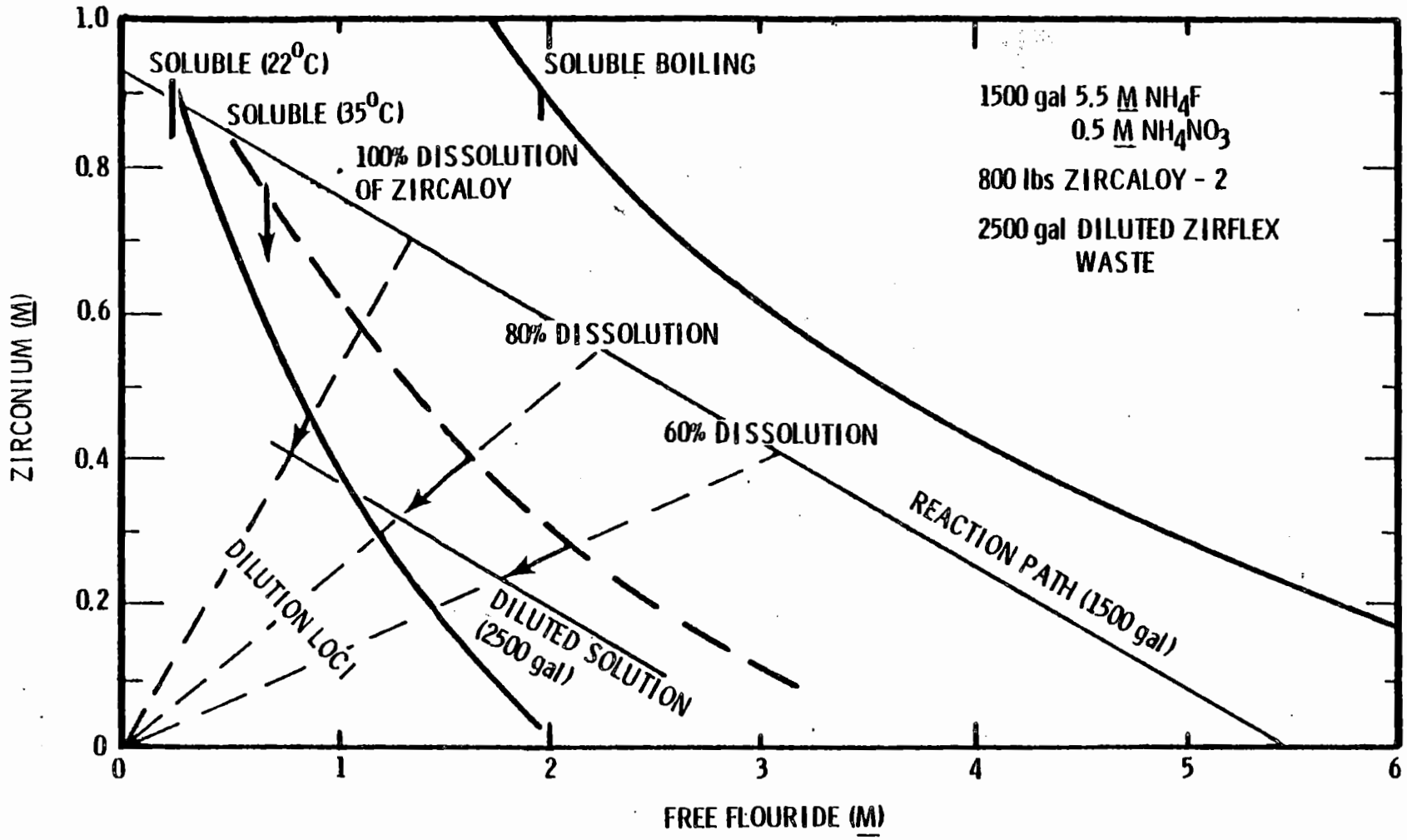

RCP7907-113

FIGURE 5-3. Zirflex Decladding Parameters, 1.25% - 0.947% Enriched "Spike" Fuel Elements

solubility curve, since an increase in the NH_4F concentration in this region causes precipitation of the zirconium. As a result, the surface of the fuel would become coated with insoluble reaction products, and the dissolution rate would be markedly reduced. Therefore, even though increasing the NH_4F concentration would initially decrease the dissolution time by increasing the dissolution rate, the maximum NH_4F concentration is fixed by the solubility of the zirconium in the boiling solution. Precipitation during the dissolution is avoided by starting with a NH_4F concentration of 5.5M (fluoride to zirconium mole ratio of 7.8:1). However, this concentration requires a water dilution to less than 0.5M zirconium at the end of the dissolution to prevent precipitation of the zirconium when the solution cools.

The zirconium solubility is also dependent on the ammonium ion concentration; the relative effect is shown by the expression:

$$Zr\ (\text{soluble}) = 1.8\ [\underline{M}\ NH_4^+]^{-3}\ [\underline{M}\ \text{free}\ F^-]^{-1}\ (\text{Ref. 5}) \qquad (5.4)$$

This particular equation is valid only at room temperature in the free fluoride concentration range of 0.3 to 1.3M but qualitatively shows the overall ammonia concentration effect. Thus, if ammonia is allowed to build up in the decladding solution, the zirconium solubility will decrease and precipitation could occur. Steam sparging during decladding helps remove the ammonia from solution and prevents such a buildup.

When Zircaloy is exposed to high temperature air or water, such as in a reactor, a black oxide film is formed, called "pretransition oxide." This oxide film is hard, tightly adherent, and highly resistant to the ammonium fluoride solution. In such cases, the dissolution rate is three to five times less than that with unoxidized Zircaloy, as the dissolution can start only at minute holes, cracks, and other imperfections in the oxide coating and proceed by enlargement of those holes (Ref. 6).

Laboratory studies demonstrated that dissolution rates for oxidized Zircaloy could be readily increased by other chemical means. Work by Gens (Ref. 7) reported the use of molten ammonium bifluoride for immediate dissolution of the oxide film. This process was not considered practical for Purex, however, since major changes in head-end equipment would be necessary. Increasing the initial NH_4F concentration of the dissolver solution to 7.5M was shown to readily remove the oxide coating (Ref. 8), but the fluozirconate precipitation problems discussed previously and the added cost of chemicals prevented the use of this method in the Purex plant.

5.2.2 Product Losses

Upon exposure to the ammonium fluoride decladding solution, up to 10% of the uranium metal in the fuel elements is converted to the relatively insoluble uranium tetrafluoride (UF_4). A small amount of the

UF_4 is further oxidized to the more soluble uranium hexafluoride (UF_6), but this amounts to only about 0.1% of the uranium charged. Losses of the uranium to the decladding solution are controlled primarily by the solubility of uranium in the solution. Figure 5-4 (Ref. 3) shows the solubility of uranium in Zirflex solution as a function of the free fluoride concentration. As can be seen, the solubility of uranium (IV) decreases with decreasing free fluoride concentration, while under the same circumstances the uranium (VI) solubility increases. It can also be noted that uranium (IV) solubility decreases with decreasing temperature. Therefore, minimum uranium losses may be obtained by: a) avoiding the presence of uranium (VI) in the solution, b) cooling the decladding solution to as low a temperature as possible before jetting, and c) obtaining the lowest possible free fluoride concentration (obtained by nearly complete complexing of the fluoride with zirconium).

In an actual Zirflex decladding step, the exposed uranium continuously dissolves and the solution eventually becomes saturated with uranium, mainly in the form UF_4 as stated earlier. Further dissolution then produces a precipitate of UF_4. Later cooling of the decladding solution will further reduce the uranium solubility and more UF_4 will precipitate. This precipitate is not entirely lost and can be easily recovered by centrifugation, as discussed later. Because air sparging would promote the oxidation of the UF_4 to the more soluble uranium (VI), the solution is steam sparged during decladding. The losses to uranium (VI) can also be reduced by thorough flushing between alternate decladding and core dissolution steps to prevent the carryover of uranium (VI) from one step to another.

In Zirflex decladding solution, plutonium reacts similarly to uranium, forming plutonium tetrafluoride (PuF_4). Experimental work designed to estimate the loss of plutonium from a fuel element to the decladding solution has been performed by exposing uranium-plutonium alloy to boiling Zirflex solution, with and without zirconium present. The results of that work are shown in Table 5-5 (Ref. 6).

TABLE 5-5. Plutonium Loss to Decladding Solution.

Pu/U Ratio in a U-Pu Alloy	Solution		Amount in Boiling Solution			Amount in Cooled Solution		
	M F^-	M Zr (IV)	U, g/ℓ	Pu, mg/ℓ	Pu/U Ratio	U g/ℓ	Pu, mg/ℓ	Pu/U Ratio
3×10^{-4}	6	-	15.0	4.3	2.9×10^{-4}	4.5	1.4	3.1×10^{-4}
11×10^{-4}	6	-	13.0	6.6	5.1×10^{-4}	2.5	1.7	6.8×10^{-4}
11×10^{-4}	6	0.7	2.5	0.68	2.7×10^{-4}	0.2	0.003	0.15×10^{-4}
11×10^{-4}	6	0.86	1.4	0.23	1.6×10^{-4}	0.3	0.015	0.5×10^{-4}

(Note: A Pu/U ratio of 11×10^{-4} corresponds to 1000 g Pu per ton U).

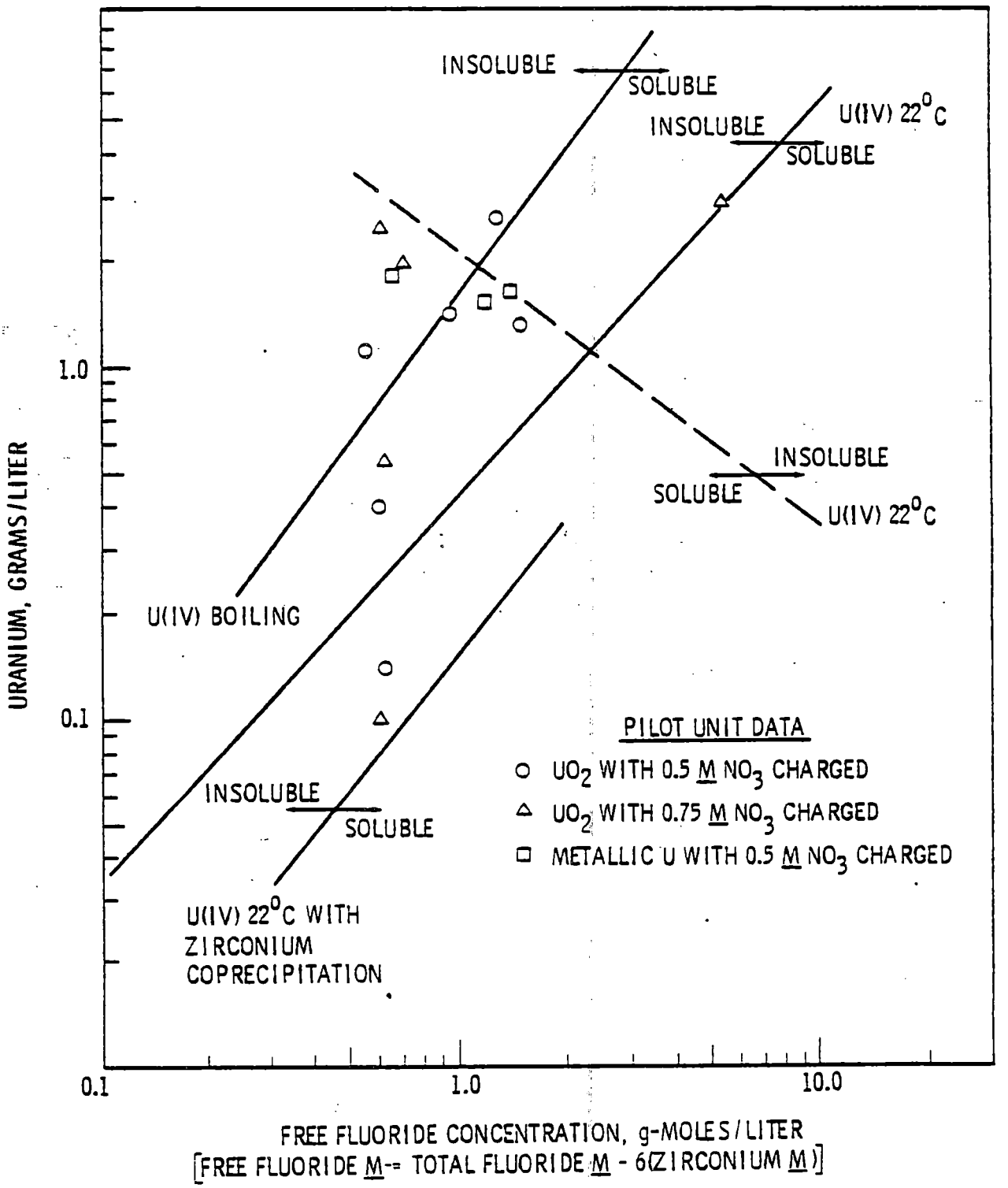

RCP7907-114

FIGURE 5-4. Solubility of Uranium in Zirflex Solutions

As can be seen in Table 5-5, for the alloy having a plutonium/uranium ratio of 11 x 10^{-4}, the plutonium/uranium ratio in the boiling solution was, in each case, less than the ratio in the metal. This would indicate that the percentage of plutonium lost to the decladding solution is less than the percentage of uranium lost. The difference in the plutonium/uranium ratios is even more pronounced in the solutions containing zirconium, especially on cooling. It is thought the reduction in the plutonium/uranium ratio occurs after cooling, due to carrying of the plutonium by the precipitating uranium fluoride salts.

A similar experiment was done using plutonium-aluminum alloy. Comparing the results of the two experiments indicates that, like uranium, the plutonium losses to the decladding solution are governed by solubility limits. If so, the relative loss of plutonium will decrease with increasing plutonium content in the fuel. Based on the results of this experiment, plutonium losses of less than 0.1% can be expected.

5.2.3 Corrosion

Zirflex decladding solution and the nitric acid fuel dissolution solution with residual fluoride from decladding are relatively corrosive to the 304-L stainless steel used in the dissolvers. Corrosion rate estimates for non-heat transfer surfaces obtained from laboratory data, corrosion coupons placed in the dissolvers during past Zirflex campaigns, and the analysis of process solutions are 5 to 10 mils/mo for the decladding and 2 to 7 mils/mo for the uranium dissolution operation. For heat transfer surfaces, the corrosion rates are 2 to 3 times higher.

Aluminum nitrate nonahydrate (ANN) is added to the dissolver prior to initiating acid dissolution to complex any soluble fluoride present or fluoride compounds unaffected by the previous metathesis. This is to prevent fluoride corrosion of the dissolvers during acid dissolution. Enough ANN is added to assure a minimum Al to F ratio of 3:1.

5.2.4 Metathesis

To permit solvent extraction recovery of the uranium and plutonium fluorides which are formed during decladding, and to limit the corrosion of the stainless steel dissolvers by residual fluoride during uranium dissolution, a metathesis step is performed. During this step, the UF_4 and PuF_4 are treated with potassium hydroxide and converted to the hydrated oxide solids, leaving potassium fluoride, which is quite soluble in aqueous solutions. The reactions are:

$$UF_4 + 4KOH \rightarrow UO_2 \cdot 2H_2O + 4KF \qquad (5.5)$$

$$PuF_4 + 4KOH \rightarrow PuO_2 \cdot 2H_2O + 4KF \qquad (5.6)$$

The initial metathesis solution concentration is around 7M KOH, with the equilibrium concentrations reaching approximately 5M KOH and 2M KF. The metathesis is not complete, probably due to incomplete contacting of the metathesis solution with the fluoride compounds adhering to the rough surfaces of the fuel elements. After metathesis, a boiling water flush sufficient to cover all of the fuel elements is used to remove any water soluble fluorides which adhere to the dissolver and the fuel elements.

Potassium hydroxide is preferred to sodium hydroxide for metathesis because potassium fluoride is much more soluble than sodium fluoride in aqueous solutions (923 g/ℓ vs. 42.2 g/ℓ in water at 20°C) (Ref. 9).

5.3 TREATMENT AND DISPOSAL OF DECLADDING WASTE

When the cooled decladding waste is jetted from the dissolver, some uranium tetrafluoride and plutonium tetrafluoride solids are unavoidably removed with the waste. The solids are recovered by centrifugation, metathesized, dissolved in HNO_3 (see Section 5.5), and returned to the process with the dissolved fuel elements in the metal solution feed tank. Because of the large density differences between the solids and the liquid (about a 6.5:1 solid to liquid density ratio), the solution centrifuges easily, and virtually 100% of the solids are recovered.

The loss of product through the centrifuge to underground storage is governed by the solubility of the uranium, mainly as uranium (VI), and the plutonium, as PuF_4, in the liquid leaving the centrifuge. Normally, however, because of the low solubilities involved, the uranium and plutonium losses are each less than 0.1% of the amounts in the irradiated fuel elements.

The liquid overflowing from the centrifuge, containing mainly ammonium hexafluozirconate, ammonium fluoride, and ammonium nitrate, is treated with sodium hydroxide in what is called a "reverse strike reaction." This step converts the NH_4F and NH_4NO_3 into NaF and $NaNO_3$, which are relatively noncorrosive in the basic (ph ≈ 10) waste solution. The reverse strike also removes from solution the ammonium ion, which could form potentially explosive ammonia gas in the waste storage tanks. The reactions involved in the neutralization are as follows:

$$(NH_4)_2ZrF_6 + 6NaOH \rightarrow ZrO_2(s) + 6NaF(s) + 2NH_3(g) + 2H_2O \qquad (5.7)$$

$$NH_4F + NaOH \rightarrow NaF(s) + NH_3(g) + H_2O \qquad (5.8)$$

$$NH_4NO_3 + NaOH \rightarrow NaNO_3 + NH_3(g) + H_2O \qquad (5.9)$$

Approaching the reaction from the high pH side (i.e., adding the waste to a large volume of concentrated NaOH), the ZrO_2 and NaF solids formed can be slurried, while the solids formed when approaching from the low pH side, (i.e., adding NaOH to the waste), are chunky and impossible to slurry.

5.4 AMMONIA COLLECTION AND DISPOSAL

Ammonia gas is formed during the feed preparation cycle while removing the Zircaloy-2 cladding from the fuel, processing of the decladding waste, and evaporation of ammonia-bearing waste.

5.4.1 Properties of Ammonia-Air-Water Vapor Mixtures

Ammonia can form flammable mixtures both with air (refer to Figure 5-5) and air-water vapor mixtures (refer to Figure 5-6) (Ref. 10). As can be seen in Figure 5-5, with ammonia-air mixtures the flammable concentration range is a function of temperature, increasing from 15.5 to 27.5 vol% at 0°C to 13 to 32 vol% at 250°C. Operations at Purex take advantage of the fact that the presence of water vapor greatly reduces the flammable region. As shown in Figure 5-6, with air-ammonia-water vapor mixtures, a flammable mixture is not possible if the gas temperature is above 45°C or the ammonia concentration remains below 15.5 vol%.

One of the characteristics of a flammable gas is the velocity at which the flame travels through the gas mixture. The importance of the flame velocity is realized when it is compared to the velocity of the off-gas in the region of most probable flammable gas formation, which is the piping between the down-draft condenser and the ammonia scrubber. The nominal gas velocity in this region of pipe is 12.8 ft/sec, which is 5.5 times the maximum flame velocity (for a mixture of 19% NH_3; 4% H_2 - 77% air) at this point. If ignition did occur, the flame front would be swept into the ammonia scrubber and would be quenched by temperature reduction and ammonia depletion. Sustained burning would require either a flame holder or a continuous ignition source, neither of which is present in these vessels.

5.4.2 Ammonia Removal and Disposal

Ammonia is recovered from the off-gas by absorption into water, following the reaction:

$$NH_3 + H_2O \rightarrow NH_4OH \qquad (5.10)$$

This reaction is dependent on temperature, with decreasing temperature increasing the absorption.

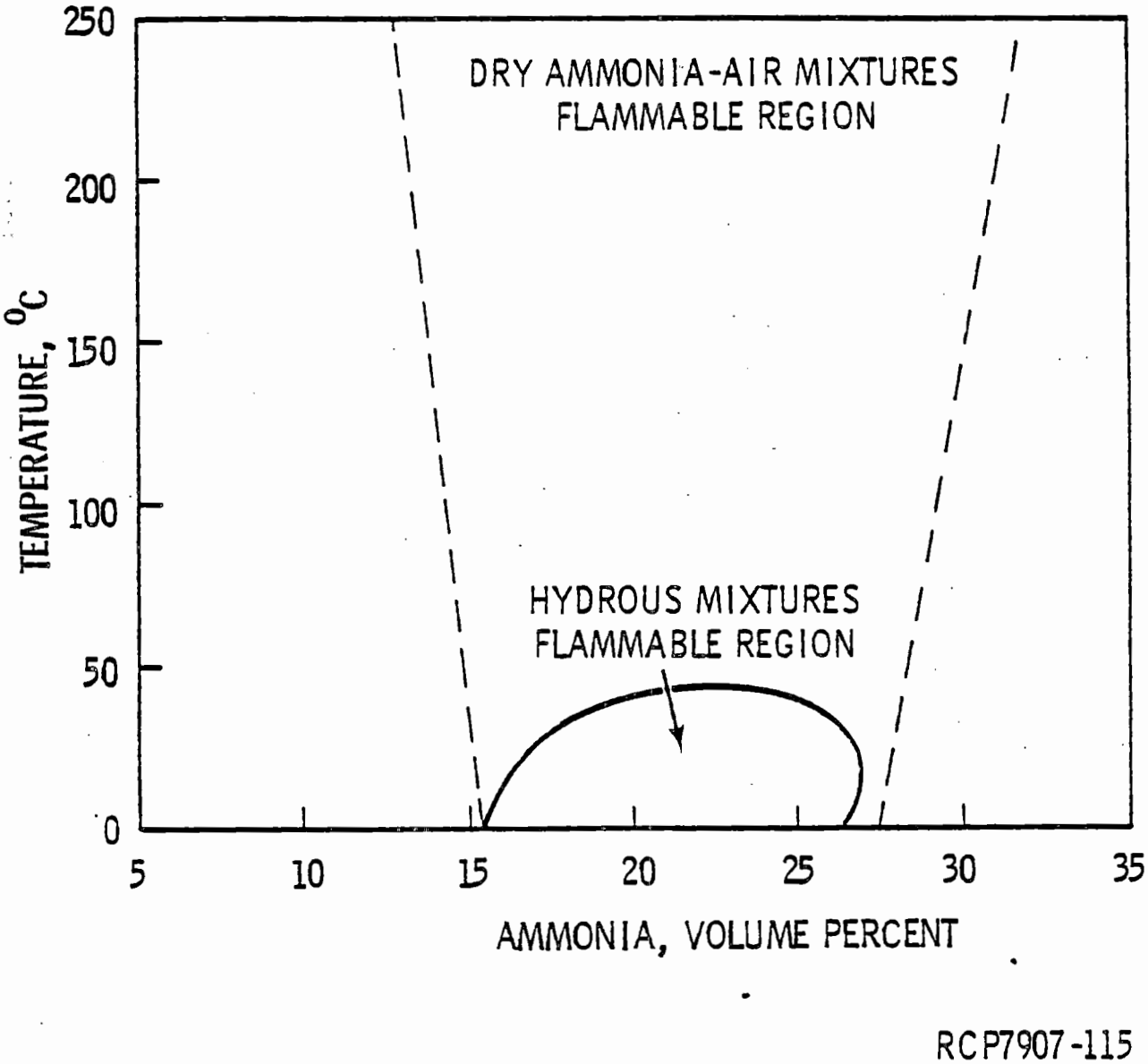

RCP7907-115

FIGURE 5-5. Flammability of Ammonia Gas Mixtures

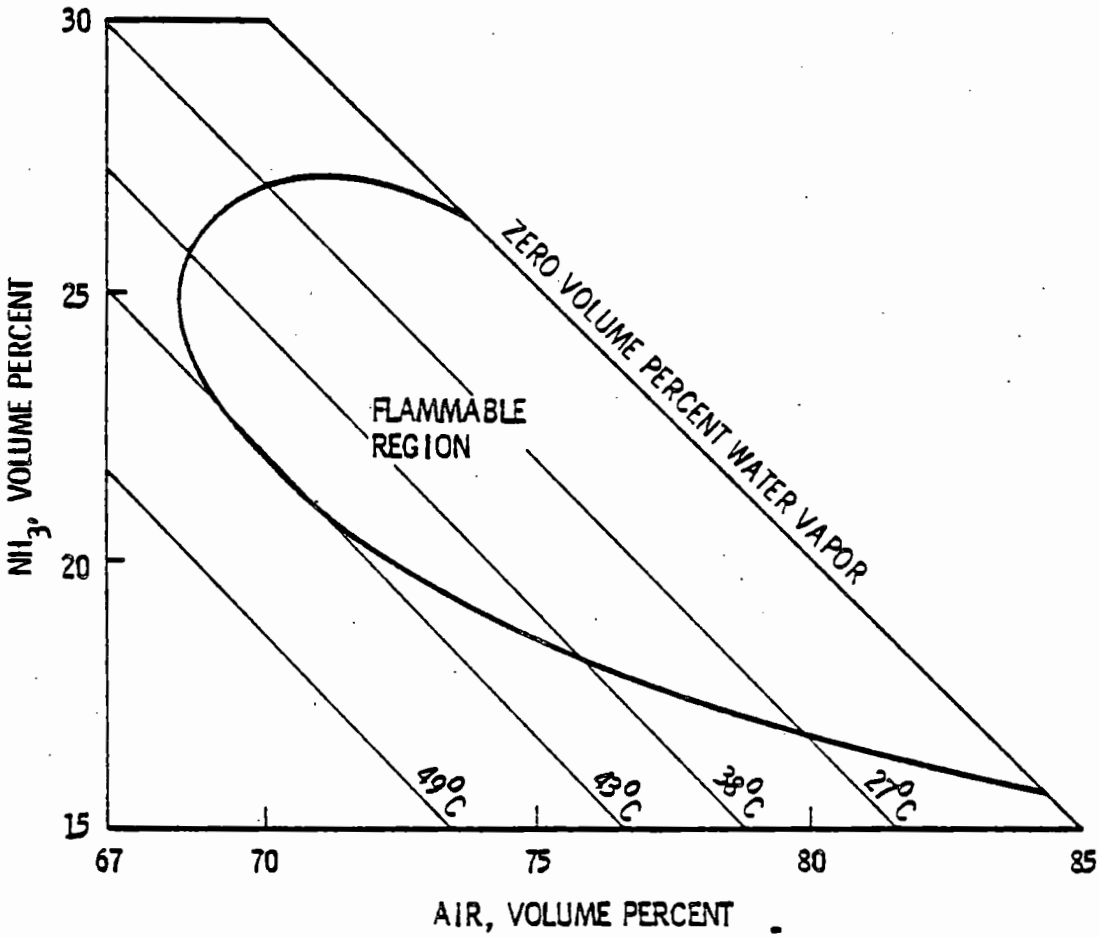

RCP7907-116

FIGURE 5-6. Flammability of Air-Ammonia-Water Vapor Mixtures

As the plant was originally operated, the off-gas temperature of the down-draft tower was maintained above 45°C so the water vapor content of the gas precluded a flammable mixture of ammonia and air. Because of sluggish instrument control, however, off-gas temperatures sometimes exceeded 65°C for short periods, reducing the efficiency of the ammonia scrubber and allowing ammonia gas to enter downstream equipment with the potential for forming explosive silver azide in the silver reactor. A study was made (Ref. 10) which recommended that the dissolver tower effluent gas be maintained at or below 30°C so that condensing water vapor in the condenser absorbs ammonia, precluding the formation of a flammable mixture and allowing only small quantities of ammonia to reach the silver reactor. The efficiency of the ammonia scrubber was calculated to increase by a factor of six when the inlet gas temperature changed from 45°C to 30°C. The instrumentation controls the off-gas temperature more effectively at 30°C than at 45°C, thereby reducing the temperature fluctuations experienced previously.

The vapors in the decladding waste tanks (D and E Cells) are maintained in the nonflammable composition range using a vapor space steam bleed, which saturates the vapor with water and also maintains the vapor temperature above 45°C.

The ammonia scrubber wastes are collected, treated with sodium hydroxide, and then concentrated before disposal to underground storage. The sodium hydroxide neutralizes any nitric acid which may enter the ammonia waste concentrator feed tank via the vessel vent header and thereby prevents the formation of potentially explosive ammonium nitrate.

5.5 DISSOLUTION OF UNCLAD FUEL

5.5.1 Uranium Dissolution

Uranium metal and uranium oxide are oxidized by nitric acid to uranyl nitrate, $UO_2(NO_3)_2$, following the equations shown below:

Metal

$$U + 4HNO_3 \rightarrow UO_2(NO_3)_2 + 2NO + 2H_2O \tag{5.11}$$

$$U + 4.5HNO_3 \rightarrow UO_2(NO_3)_2 + 1.55NO + .85NO_2 + .05N_2 + 2.25H_2O \tag{5.12}$$

Oxide

$$3UO_2 + 8HNO_3 \rightarrow 3UO_2(NO_3)_2 + 2NO + 4H_2O \quad (5.13)$$

$$UO_2 + 4HNO_3 \rightarrow UO_2(NO_3)_2 + 2NO_2 + 2H_2O \quad (5.14)$$

With uranium metal present, the uranium in solution is mainly in the hexavalent state, with some tetravalent uranium. As the dissolution proceeds, all the uranium is converted to the hexavalent state, with nitrogen dioxide or nitrous acid as the principal oxidizing agent. The relative amounts of NO and NO_2 evolved during dissolution are largely determined by the equilibrium:

$$3NO_2 + H_2O \rightleftharpoons NO + 2HNO_3 \quad (5.15)$$

The NO_2/NO ratio is higher during the final half of the dissolution than would be predicted on the basis of acid concentration alone due to the presence of radiolytically generated HNO_2 in solution. The heats of reaction of the dissolutions are sufficient to maintain the solution at the boiling point with little or no addition of heat.

Equation 5.11 represents the dissolution of uranium metal in nitric acid at concentrations less than 8M, while equation 5.12 applies at nitric concentrations greater than 8M. However, neither equation expresses all of the mechanisms involved since nitric acid is refluxed from the downdraft condenser and air is injected into the off-gas stream. Under these conditions, the nitric acid consumption is reduced from 4-4.5 to 2.5-3 moles acid/mole uranium. The bled-in air oxidizes the NO in the off-gas to NO_2 by the reaction:

$$2NO + O_2 \rightarrow 2NO_2 \quad (5.16)$$

The operating temperature of the condenser strongly favors the formation of NO_2 and the rate of oxidation is very rapid. The NO_2 is then absorbed into water in the condenser as expressed in the following equations:

$$2NO_2 + H_2O \rightleftharpoons HNO_3 + HNO_2 \quad (5.17)$$

$$3NO_2 + H_2O \rightleftharpoons 2HNO_3 + NO \quad (5.18)$$

The nitric acid formed refluxes to the dissolver. Depending on the NO/NO_2 ratio in the off-gas, the stoichiometric air requirement for the oxidation is from 7 to 12 scf/lb uranium dissolved when the acid-to-uranium mole ratio is about three.

The rate of uranium dissolution increases with an increase in the initial nitric acid concentration, temperature, and surface area of the fuel elements.

5.5.2 Plutonium Dissolution

In the presence of uranium, plutonium dissolves in nitric acid to form plutonium (IV) nitrate, although a small fraction of the plutonium may be present in the solution in the (III) and (VI) valence states, mainly through the disproportionation of the plutonium (IV). The dissolution of plutonium, like that of uranium, proceeds by several competing mechanisms. The following equation is a simplified statement of the reaction by which plutonium (IV) nitrate is formed:

$$Pu + 8HNO_3 \rightarrow Pu(NO_3)_4 + 4NO_2 + 4H_2O \qquad (5.19)$$

Normally, the dissolution is stopped while the solution is stoichiometrically slightly acidic in order to prevent the formation of insoluble plutonium (IV) polymer (see Section 7.2.4) which is redissolved only with difficulty and may be lost during solvent extraction.

Since plutonium is more concentrated near the surface of an irradiated fuel element, the amount of plutonium dissolved decreases in successive cuts. However, the presence of a heel of partially dissolved slugs in the dissolver at the time of charging tends to increase the uniformity of the plutonium concentration from one cut to the next.

5.5.3 Fission Products

The chemistry of neptunium, other transuranics, and nonvolatile fission products is not well defined, though all completely form acid soluble nitrates. The volatile fission products are Kr-85, Xe-133, I-29, and I-131. The first two are inert and are entirely discharged via the off-gas. The iodine radioisotopes are suspected of partially refluxing through the dissolver tower during the initial part of the acid dissolution, but later leave with the off-gas during the terminal part of the dissolution.

5.6 REFERENCES

1. Schulz, W. W. "Shear-Leach Processing N-Reactor Fuel, Cladding Fires," ARH-2351, Atlantic Richfield Hanford Company, Richland, Washington, February 15, 1972.

2. Buckingham, J. S., editor, "Waste Management Technical Manual, Part II, Feed Material, Chapter II, Nuclear Reactions, Transuranic Elements and Fission Products," ISO-100 DEL EX, Isochem Inc., Richland, Washington, August 31, 1967.

3. Cooley, C. R., and A. M. Platt, "The Zirflex Process - Interim Development Summary," HW-60597, General Electric Company, Richland, Washington, June 24, 1959.

4. Davis, Daniel, "Proposed Purex Flowsheet, Dissolution of 0.947 Percent Enriched and 1.25 - 0.947 Percent Enriched 'Spike' NPR Fuel Elements," ISO-705, Isochem Inc., Richland, Washington, March 28, 1967.

5. Smith, P. W., "The Zirflex Process - Terminal Development Report," HW-65979, General Electric Company, Richland, Washington, August 20, 1960.

6. Swanson, J. L., "The Selective Dissolution of Zirconium or Zircaloy Cladding by the Zirflex Process," Report A/ Conf. 15/2429, June 1958, a paper at the Second United Nations International Conference on the Peaceful Uses of Atomic Energy, Geneva, Switzerland, September 1958.

7. Gens, T. A., "Processing of Reactor Fuels in Liquid Ammonium Bifluoride," ORNL-CF-58-6-36, Oak Ridge National Laboratory, Oak Ridge, Tennessee, June 1958.

8. Phillips, Jr., J. F., "Dissolution of Oxide-Coated Zirconium and Zirconium Alloys," BNWL-600, Pacific Northwest Laboratory, Richland, Washington, April 1968.

9. Weast, R. C., editor, Handbook of Chemistry and Physics, Chemical Rubber Company, Cleveland, Ohio, 50th Edition, 1969 pp. B-143, B-158.

10. Pease, R. A., "Chemical Hazards Control of the Zirflex Decladding Off-Gas," ARH-1449, Atlantic Richfield Hanford Company, Richland, Washington, February 16, 1970.

THIS PAGE INTENTIONALLY
LEFT BLANK

CONTENTS

CHAPTER 6.0 - SOLVENT EXTRACTION TECHNOLOGY

6.1 PROCESS CHEMISTRY 6-1
6.1.1 Solvent Extraction Process Principles 6-1
6.1.2 Chemical Flowsheet 6-8
6.1.3 Properties of Process Materials 6-25
6.1.4 Solvent-Aqueous Phase Equilibria 6-72

6.2 PROCESS ENGINEERING 6-115
6.2.1 Basic Principles and Methods 6-115
6.2.2 Evaluation of Solvent Extraction Performance 6-124
6.2.3 Pulse Column Variables 6-144
6.2.4 Development of Purex Plant Pulse Column Designs 6-159
6.2.5 Decontamination 6-179
6.2.6 Use of Column Instrumentation for Detection of Off-Standard Conditions 6-188
6.2.7 Special Problems 6-190

6.3 REFERENCES 6-195

FIGURES:
6-1 Solubility of TBP and TBP-Diluent Mixtures in Water and Process Solutions 6-27
6-2 Vapor Pressures of TBP, Water, and Diluents 6-29
6-3 Effect of Temperature on Rate of Hydrolysis of TBP by Nitric Acid 6-31
6-4 Density Nomograph for Solvent-Phase Solutions 6-40
6-5 Aqueous Uranyl Nitrate Solutions, Conversion from Molarity to Weight Percent 6-48
6-6 Effect of Nitric Acid Concentration on Solubility of Uranyl Nitrate 6-49
6-7 Effect of Nitric Acid Concentration on Density of Uranyl Nitrate Solutions 6-50
6-8 Effect of Nitric Acid Concentration on Density of Uranyl Nitrate Solutions at the Boiling Point 6-52
6-9 Boiling Point Isotherms of the System $UO_2(NO_3)_2$-HNO_3-H_2O 6-54
6-10 Specific Heat and Refractive Index of Uranyl Nitrate Solutions 6-55
6-11 Interfacial Tension of TBP-AMSCO 125-90W Against Aqueous Solutions 6-68
6-12 Effect of Dilute Uranium Concentration on Distribution of Uranium 6-76
6-13 Effect of High Uranium Concentration on Distribution of Uranium 6-77

FIGURES (Cont.):

6-14 Uranium Equilibrium Diagram 6-78
6-15 Uranium Equilibrium Diagram, Low Uranium Concentrations 6-79
6-16 Effect of TBP Concentration on Distribution of Uranium 6-80
6-17 Effect of Temperature on Distribution of Uranium 6-82
6-18 Effects of Valence State and Nitric Acid Concentration on Distribution of Plutonium 6-86
6-19 Effect of Total Nitrate Concentration on Distribution of Pu(III) and Pu(IV) 6-88
6-20 Effect of Organic-Phase Uranium Saturation on Distribution of Plutonium and Fission Products 6-89
6-21 Effect of Nitric Acid Concentration on Distribution of Plutonium and Fission Products in Presence of Uranium 6-90
6-22 Effect of Nitric Acid Concentration on Distribution of Fission Products in Absence of Uranium 6-91
6-23 Effect of TBP Concentration on Distribution of Plutonium 6-92
6-24 Effect of TBP Concentration on Distribution of Fission Products 6-98
6-25 Effects of UNH and HNO_3 Concentrations on Distribution of HNO_3 6-106
6-26 Effect of Organic-Phase Uranium Saturation on Distribution of Nitric Acid 6-107
6-27 Effect of Temperature on Distribution of Nitric Acid 6-109
6-28 Effect of Nitric Acid Concentration on Distribution of Neptunium, UX_1 and UX_2 6-111
6-29 Example Uranium Mass Transfer Calculation, HA Column Uranium 6-132
6-30 Example Uranium Mass Transfer Calculation, 1C Column Uranium Operating Diagram 6-138
6-31 Minimum Theoretical Extractant Flow Requirements, A-Type Column 6-143
6-32 Minimum Theoretical Extractant Flow Requirements, C-Type Column 6-145
6-33 Types of Phase Dispersion 6-146
6-34 Stability and Phase Dispersion Pattern of Pulse Sieve-Plate Column 6-149
6-35 HA Column Flooding Characteristics 6-162
6-36 2D Column Flooding Characteristics 6-164
6-37 C-Type Column Flooding Characteristics 6-166
6-38 1BX Column Flooding Characteristics 6-168
6-39 1BS Column Flooding Characteristics 6-170
6-40 2A Column Flooding Characteristics 6-171
6-41 2B and 3B Column Flooding Characteristics 6-173
6-42 Pulse Amplitude Curves for 3A Column 6-174

9413275-1036

FIGURES (Cont.):

6-43 Pulse Amplitude Curves for 3B Column 6-175
6-44 2N Column Flooding Characteristics 6-176
6-45 2P Column Flooding Characteristics 6-178

TABLES:

6-1 Effect of Diluent on Solvent Radioactivity 6-22
6-2 Solvent Properties Before and After Chemical Wash Treatment 6-24
6-3 Physical Properties of Normal Butyl Phosphates 6-26
6-4 Radiolysis Product Yields for Irradiation of TBP 6-30
6-5 Rate of Formation of Dibutyl Phosphate by Hydrolysis of Tributyl Phosphate with UNH-HNO_3 Solutions 6-32
6-6 Effect of Temperature on Mutual Solubilities of TBP, Hydrocarbon Diluent, and Water 6-46
6-7 Plutonium Series Oxidation Potentials 6-58
6-8 Stability of Ferrous Ion in Aqueous Solutions 6-63
6-9 Solubility of Sulfamic Acid in Water 6-64
6-10 Organic-Aqueous Interfacial Tensions 6-69
6-11 Dispersion and Disengaging Times for Purex Process Systems 6-71
6-12 Heats of Extraction of Uranyl Nitrate and Nitric Acid 6-73
6-13 Heats of Stripping of Uranyl Nitrate 6-73
6-14 Comparative Salting Strengths of Aluminum Nitrate and Nitric Acid 6-81
6-15 Uranium Distribution in the Presence of Dibutyl Phosphate 6-83
6-16 Distribution of Uranium in the Presence of Monobutyl Phosphate 6-84
6-17 Effect of Phosphate on Uranium Distribution 6-84
6-18 Effect of DBP on Plutonium Distribution 6-93
6-19 Effect of Sulfate on Plutonium Distribution 6-94
6-20 Effect of Phosphate on Plutonium (IV) Distribution 6-94
6-21 Effect of Temperature on Plutonium (IV) Distribution 6-95
6-22 Distribution Ratios of Rare Earths 6-101
6-23 Effect of Complexing Agents on Distribution of Fission Products 6-104
6-24 Distribution Ratios of Miscellaneous Nitrates 6-113
6-25 Effect of Nitric Acid Concentration on the Distribution Ratios of Neptunium (IV) and Neptunium (VI) 6-114
6-26 Effect of Uranium Saturation of the Solvent on the Distribution Ratios of Neptunium (IV) and Neptunium (VI) 6-114

TABLES (Cont.):

6-27 Number of Theoretical Stages and Transfer Units Required for Purex Solvent Extraction Columns 6-141
6-28 Effect of Design Parameters on Pulse Column Performance 6-156
6-29 Effect of Redistributors on Uranium Loss in the A-Type Columns 6-158
6-30 Performance Comparisons of Various Cartridges for the C-Type Columns 6-165

9413275.0038

CHAPTER 6.0. SOLVENT EXTRACTION TECHNOLOGY

6.1 PROCESS CHEMISTRY

In this chapter, the chemical and engineering aspects of the Purex solvent extraction process are discussed. Included are presentations of variables affecting the process, relevant physical and chemical properties of process materials, and basic design and operating principles for the solvent extraction equipment.

6.1.1 Solvent Extraction Process Principles

6.1.1.1. Basic Principles

When an aqueous solution of metal ions (such as uranyl nitrate) is placed in a beaker and organic solvent containing a chemical complexing agent (such as tri-n-butyl phosphate) is added, some of the solute in the aqueous phase transfers to the organic solvent. The process is referred to as "solvent extraction." Similarly, if the solvent phase is removed from the above-mentioned system and placed in contact with fresh water, some of the solute transfers back to the aqueous phase.

The transfer of a solute, such as uranyl nitrate, from an aqueous solution into an organic solvent is colloquially referred to simply as "extraction," while its removal from the solvent phase into an aqueous one is termed "stripping" or "back extraction."

If either of the two-phase systems discussed above is agitated to cause intimate mixing of the two immiscible liquid phases, the solute concentration in each phase becomes constant. When constant (although not necessarily equal) concentrations have been attained, a dynamic equilibrium has been established, with the number of solute molecules leaving the aqueous phase equal to the number returning in a given time. The process of attaining equilibrium between the two phases is termed "equilibration of the phases." The distribution of a solute in such a two-phase system depends upon the relative solubility of the solute in each phase and may, for example, be altered by the simple expedient of changing its solubility in either the aqueous or the organic phase. The factors affecting relative solubility include the complexing strength of the solvent, the composition of the aqueous phase (e.g., the presence of other solutes having ions in common with the transferring solute), the chemical properties of the transferring solutes, and the temperature of the system.

The ratio of the concentrations of a given solute (e.g., uranyl nitrate) in each of two liquid phases in contact equilibrium is variously referred to as the "distribution ratio," "distribution coefficient," or "partition coefficient." The ratio is designated by the letter E, to which a subscript and a superscript are appended to indicate which phase is the reference phase. Thus, for uranyl nitrate, E_a^o indicates the ratio of the

concentration of the uranyl nitrate in the organic phase to the concentration in the aqueous phase. The term "distribution ratio" is used in the sense of this organic-to-aqueous distribution ratio (E_a^o) throughout this manual unless otherwise indicated.

The distribution ratio is the ratio of solute concentrations in each phase regardless of the relative volumes of the two liquid phases. However, the amount of solute extracted from the aqueous solution by the solvent is dependent upon the relative volume of solvent used as well as the distribution ratio of the solute.

6.1.1.2 Application to the Purex Process

The Purex solvent extraction process involves the separation of uranium, plutonium and neptunium from radioactive fission products and nonradioactive chemical contaminants, and from each other. These separations are accomplished by controlling the relative solubilities of the various solutes in the organic solvent. Uranium, tetravalent plutonium and neptunium are readily extracted by tri-n-butyl phosphate (TBP) from aqueous solutions rich in nitrate ion. Some fission products are also partially extracted by TBP, but to a much lesser extent than uranium, plutonium and neptunium. Thus, a high degree of separation may be obtained between fission products and the useful products.

Uranium and neptunium are separated from plutonium by taking advantage of the ease with which plutonium is reduced from its extractable tetravalent state to its relatively inextractable trivalent state. The uranium is subsequently separated from neptunium by saturating the solvent with the more highly extractable uranium, thus forcing the less extractable neptunium to remain in the aqueous phase.

At low aqueous phase concentrations of nitrate ion, uranium, plutonium and neptunium have relatively low solvent-to-aqueous phase distribution ratios, and they may be stripped from solvent with water or very dilute aqueous nitric acid in preparation for further processing.

6.1.1.2.1 Choice of Solvent

Tributyl phosphate is an excellent solvent for the separation of uranium, plutonium, neptunium, and fission products by solvent extraction because of the following desirable characteristics:

- It has a high extractability and selectivity for uranium, plutonium, and neptunium.
- It has a low mutual solubility with aqueous solutions.
- It has good chemical stability in the system involved, including stability towards moderate concentrations of nitric acid, which permits the economically advantageous use of nitric acid as a "salting" agent.

- It has adequate radiation stability.
- It has a low vapor pressure and high flash point.
- It is quite easily purified for reuse.
- It is available in the needed quantities at a sufficiently low cost.
- It is relatively noncorrosive.
- It has a low toxicity.

Pure TBP is generally not suitable for solvent extraction, however, because its density (0.97 g/mℓ) is close to that of water, and its viscocity (3.4 centipoises at 25°C) is high, which makes phase separation difficult. These properties can be altered in the desirable direction by mixing TBP with an inert hydrocarbon liquid of low density and viscosity.

6.1.1.2.2 Function and Choice of Diluent

As mentioned above, pure TBP is not suitable for use in solvent extraction because of density and viscosity constraints. Also, TBP is moderately surface active and would, if used in a pure state, form emulsions with aqueous solutions. These properties may be favorably altered by diluting the TBP with an organic compound or mixture which has suitable physical properties and is chemically inert in the system. The diluent must be completely miscible with TBP, and the complexes formed by TBP with uranyl nitrate and with plutonium nitrate must be soluble in the diluent. Except for solvent action, desirable characteristics for a diluent are generally similar to those indicated above for the solvent.

In the Purex process, the TBP is diluted with a refined hydrocarbon mixture in the kerosene boiling range having a density of just under 0.8 g/mℓ. The diluent used to reduce the density and viscosity of the solvent phase is a mixture of normal paraffin hydrocarbons (NPH) whose molecules contain between 10 and 14 carbon atoms. Hydrocarbon diluents, such as Shell E-2342 or others containing even small amounts of unsaturated hydrocarbons, have been found to be unsuitable because of their susceptibility to degradation under process conditions. Such degradation causes the solvent to extract some radioactive fission products into the solvent phase. When this occurs, the decontamination performance of the solvent extraction process deteriorates.

A 30 vol% concentration of TBP in the solvent phase was selected as a compromise between the conflicting requirements of solvent-phase properties approaching those of the pure diluent and low-solvent volume per unit weight of uranium processed.

6.1.1.2.3 Tributyl Phosphate Complexing with Uranium, Plutonium and Neptunium

The solvent action of TBP for uranium and plutonium is dependent upon the formation of coordination complexes. Equations representing the extraction of uranium and plutonium (IV) from aqueous solutions are as follows:

$$UO_2^{+2}(Aq.) + 2NO_3^- (Aq.) + 2TBP\ (Org.) \rightleftarrows UO_2(NO_3)_2 \cdot 2TBP\ (Org.) \qquad (6.1)$$

$$Pu^{+4}\ (Aq.) + 4NO_3^- (Aq.) + 2TBP\ (Org.) \rightleftarrows Pu(NO_3)_4 \cdot 2TBP\ (Org.) \qquad (6.2)$$

Neptunium (VI) and neptunium (IV) can be substituted for uranium and plutonium, respectively, in the above two equations. For the reversible reaction represented by Equation 6.1, an equilibrium constant, K, may be expressed by the following relationship, in which concentrations are given as molarities:

$$K = \frac{[UO_2(NO_3)_2 \cdot 2TBP(Org.)]}{[UO_2^{+2}(Aq.)]\ [NO_3^-\ (Aq.)]^2\ [TBP(Org.)]^2} \qquad (6.3)$$

In the above equation, TBP(Org.) represents the concentration of uncomplexed tributyl phosphate in the organic phase. Since two moles of TBP combine with each mole of uranyl nitrate extracted, the value of the term, TBP(Org.), may be calculated from the equation:

$$TBP(Org.) = TBP - 2UN(Org.) \qquad (6.4)$$

where the TBP represents the initial concentration of TBP in the organic phase, and UN(Org.) represents the uranyl nitrate concentration in the organic phase. From the definition of the organic/aqueous distribution ratio for uranyl nitrate, assuming that all the uranyl nitrate in the aqueous phase is completely ionized, the following relationship may be written:

$$E_a^o = \frac{UO_2(NO_3)_2 \cdot 2TBP(Org.)}{UO_2^{+2}(Aq.)} \qquad (6.5)$$

where E_a^o = distribution ratio, (g solute/ℓ organic phase)/(g solute/ℓ aqueous phase). Then, substitution of Equations 6.4 and 6.5 into Equation 6.3 results in the following expression (Ref. 1):

$$K = \frac{E_a^o}{[NO_3^-(Aq.)]^2\ [TBP - 2UN(Org.)]^2} \qquad (6.6)$$

By transposition, Equation 6.6 may be expressed as:

$$E_a^o = K[NO_3^-(Aq.)]^2\ [TBP - 2UN(Org.)]^2 \qquad (6.7)$$

Since uranyl nitrate does not form an ideal solution in water under process conditions, K is not constant for the equilibrium expressed, but varies with the concentrations of the various solution components. However, as discussed later, Equation 6.7 provides a generally accurate indication of the nature and order of magnitude of the effects of the concentrations of uranyl nitrate, nitric acid, and TBP on the distribution ratio of uranyl nitrate.

Equation 6.1 shows that the number of moles of uranium which can be dissolved in a given amount of solvent is equal to one-half the number of moles of TBP. The maximum uranium concentration attainable in the Purex solvent (30 vol% TBP) is 0.52M. This is slightly less than one-half of the TBP concentration in the solute-free solvent, due to the volume change which occurs when uranium transfers into the solvent. As uranium saturation of the solvent is approached, less solvent is available for complexing fission products, and their extraction is generally repressed, yielding improved decontamination.

An analysis analogous to the above for uranium may be applied to express the distribution ratio for plutonium (IV) based on Equation 6.2. However, the concentration of the plutonium itself may usually be neglected in the analysis, since the concentration of plutonium in Purex process streams is almost invariably low enough for its self-salting effect and its solvent-saturating effect to be insignificant. Thus, for plutonium (IV):

$$E_a^o = K[NO_3^-(Aq.)]^4\ [TBP(Org.)]^2 \qquad (6.8)$$

Equation 6.8 for plutonium (IV), like Equation 6.7 for uranium, is valid as a first approximation for indicating trends of the effects of nitrate ion and TBP concentrations on the distribution ratio. Equation 6.8 is subject to the further limitation that, when uranium is also present in the system, the amount of TBP complexed by the uranium, and thus rendered unavailable for complex formation with plutonium, must also be taken into account.

The nitrate of plutonium in its highest (hexavalent) oxidation state also forms a coordination complex with TBP. However, distribution ratios of plutonium (VI) are generally somewhat lower than those of plutonium (IV), as discussed in subsection 6.1.2.1.

Neptunium exists in the three relatively stable valence states -- neptunium (IV), neptunium (V) and neptunium (VI) -- of which two [neptunium (IV) and neptunium (VI)] are extractable into the organic solvent. As mentioned previously, neptunium (VI) and neptunium (IV) can

be substituted for uranium and plutonium, respectively, in Equations 6.1 and 6.2. Distribution ratios for neptunium (VI) and neptunium (IV) are therefore given by the following equations:

$$E_a^o = K[NO_3^-(Aq.)]^2\ [TBP\ (Org.)]^2, \text{ for neptunium (VI)} \qquad (6.9)$$

$$E_a^o = K[NO_3^-(Aq.)]^4\ [TBP\ (Org.)]^2, \text{ for neptunium (IV)} \qquad (6.10)$$

6.1.1.2.4 Salting

As previously discussed, the amount of uranium and plutonium extracted from an aqueous solution into the organic phase may be increased substantially by increasing the nitrate ion concentration in the aqueous phase. This phenomenon is referred to as "salting," although in the Purex process the nitrate ion is supplied by nitric acid and not by a salt. As compared with common metal nitrates such as sodium or aluminum nitrate, which would also be suitable, nitric acid has the important advantage that it is recoverable by distillation. The important savings realized by the recovery of nitric acid arise in two ways: (a) directly, from chemical cost savings; and (b) indirectly, from decreased volume of radioactive aqueous wastes requiring storage in underground tanks.

Uranyl nitrate furnishes nitrate ion, and is self-salting at high concentrations. As the uranyl nitrate is extracted into the organic phase, however, less nitrate ion is available in the aqueous phase, and supplemental nitric acid is required to complete the extraction process.

Nitric acid increases the distribution ratios of the fission products, Zr-Nb-95, and, to a lesser extent, Ce-144, as well as those of uranium, plutonium and neptunium. However, even the increased fission product distribution ratios are low, so that the required separation of fission products from uranium and plutonium is obtained.

The effects of nitric acid on the distribution ratios of uranium, plutonium, neptunium and fission products are shown quantitatively in subsection 6.1.4.

6.1.1.2.5 Factors Influencing Solvent Extraction Effectiveness

In a simple batch solvent extraction process, such as the beaker experiments described earlier in which the two liquid phases are agitated together until equilibrium is reached, the amount of solute extracted depends only on the distribution ratio and the relative volumes of the

two phases. The ratio of the amount of solute in the organic phase to the amount in the aqueous phase after equilibration may be expressed as:

$$E_a^o(O/A)$$

where

E_a^o = distribution ratio, (g solute/ℓ organic phase)/(g solute/ℓ aqueous phase);

O/A = organic-to-aqueous phase volume ratio.

This product of the distribution ratio and the phase volume ratio is termed the "extraction factor," usually designated by the letter P. Thus, a low extraction factor ($P<<1.0$) would represent conditions favorable for stripping the solute from the organic back into the aqueous phase, and a high extraction factor ($P>>1.0$) would represent conditions favorable for extracting the solute into the organic phase. The extraction factor is useful, in a slightly modified form, in the interpretation of solvent extraction processes more complex than those occurring in a simple batch contactor. The extraction factor is discussed in detail in Section 6.2.

The extraction of solute into an organic solvent may, in practice, be carried to a much greater degree of completion than is achieved in a single equilibrium contact. This may be achieved by a series of several countercurrent batch contacts or by a continuous countercurrent flow of one phase through another. The technical analysis of these more complex systems is also discussed in Section 6.2.

Equilibrium distribution ratios and, hence, extraction factors depend on the chemical conditions of the system, as discussed in Section 6.1.4. Chemical conditions of importance include the chemical species and concentration of the transferring solute, the concentration of the nitric acid salting agent, the concentration of TBP, and the presence of other complexing agents in either the organic or the aqueous phase. For example, dibutyl phosphate, a product of the hydrolysis of TBP, forms a stronger organic-phase complex than does TBP, and sulfate or fluoride ions form strong aqueous-phase complexes with uranium, plutonium and neptunium.

Temperature affects both the equilibrium distribution ratio and the rate of transfer of solute between the aqueous and organic phases. A temperature increase may either increase or decrease the distribution ratio, depending on the solute and liquid compositions. A temperature increase always increases the rate of solute transfer between phases, however, so that the overall effect of a moderate increase in temperature is generally favorable. Opposing the above favorable effect of increased temperature is the adverse effect caused by the increased rate of TBP hydrolysis to the strong, organic-favoring dibutyl phosphate complex.

9413275.1046

6.1.2 Chemical Flowsheet

The Purex solvent extraction process has been outlined in Chapter 1.0. The chemical flowsheet for processing zirconium-clad metallic uranium fuel is presented in Chapter 4.0. This section describes the individual process steps carried out in the solvent extraction columns, and discusses the main process considerations for each of the steps. Important process variables and the nature and relative magnitude of their effects on column performance are discussed qualitatively.

6.1.2.1 First Decontamination and Partition Cycle

6.1.2.1.1 HA Column

The purpose of the HA column is to separate uranium, plutonium, and neptunium from the bulk of the fission products. The aqueous feed solution (HAF) is introduced at a point approximately halfway up the column, and flows downward through the extraction section of the column. In the extraction section, the stream flow rates, salting strength, and the plutonium and neptunium valence states are controlled in such a way that the uranium, plutonium, and neptunium entering with the aqueous feed are extracted into the upward flowing solvent. Some fission products are also extracted, but are partially transferred back into the aqueous phase in the top (scrub) section of the column. The net result of the column operation is the quantitative transfer of uranium and plutonium and about 90% of the neptunium to the solvent phase, while over 99.9% of the fission products leave the bottom of the column with the aqueous waste stream.

6.1.2.1.1.1 Uranium Extraction

Uranium is rapidly extracted into the TBP solvent in the HA column, with approximately 90% transferring into the organic within the first 4 feet of cartridge below the feed point. The solvent (HAX) flow rate employed is greater than that required for quantitative extraction of the uranium entering the extraction section of the column, including a small amount that is stripped back into the aqueous phase in the scrub section, as well as that entering with the feed (HAF) and backcycle waste (3WB) streams. The excess solvent flow is required to compensate for minor flow variations, or "channeling" across the column cross section. The excess solvent flow allows for normal minor variations in stream flow rates and compositions, as well as providing for extraction of the plutonium and neptunium in the feed. While insufficient solvent flow causes a sharp increase in uranium reflux in the column and results in high waste losses, excess solvent flow results in the extraction of a greater fraction of the fission products and leads to poor decontamination performance, a condition discussed in subsection 6.1.4.3.

Uranium distribution ratios at feed point conditions and, hence, the minimum solvent flow requirements are relatively insensitive to variations in the aqueous nitric acid concentration in the range of 0.5M to 3.0M. A

reduction in the acidity from 3.0M to 0.5M causes only about a 10% increase in the minimum solvent flow requirement. At the dilute, or waste, end of the column, however, the distribution ratio is very sensitive to aqueous nitric acid concentration (because of the absence of the self-salting effect of the uranyl nitrate). The same decrease in acidity results in a 10-fold reduction in the distribution ratio. For this reason, the nitric acid concentration in the waste stream must be maintained within relatively narrow limits for optimum column process performance.

Uranium distribution ratios decrease with increasing temperature, with about a 10% reduction in feedpoint E_a^o resulting from a temperature increase from 20°C to 45°C. The rate of solute transfer (or mass transfer rate) is increased sufficiently, however, so that the overall effect of the temperature increase is beneficial.

The distribution ratio for uranium at the feed point of the column varies approximately in proportion to the TBP concentration (as would be expected) in the range of 25 to 35 vol% TBP in diluent.

Monobutyl phosphate (MBP), produced by hydrolysis of dibutyl phosphate (DBP), forms an aqueous-favoring compound with uranium, and leaves the column with the aqueous waste stream. Monobutyl phosphate hydrolyzes to phosphoric acid at a faster rate than its rate of formation, however, so monobutyl phosphate does not present a serious problem.

6.1.2.1.1.2 Plutonium Extraction

In the Purex process, plutonium is extracted into the TBP solvent in the tetravalent ionic state, as discussed previously. Although plutonium (III) is formed initially during the fuel element dissolution, it is rapidly oxidized to plutonium (IV) under the conditions present in the dissolvers. Some hexavalent plutonium may exist in equilibrium with plutonium (IV) in the solvent extraction feed storage tanks, but plutonium (VI) is reduced to the tetravalent state by nitrite ion in the HA column.

Plutonium is not as readily extracted into the TBP solvent as is uranium, since plutonium's distribution ratio is only about 20 to 25% of that for uranium. [The E_a^o for plutonium (VI) is only about one-eighth that of uranium and the E_a^o for plutonium (III) is very low.] Because of this lower extractability of plutonium, the HA column is "plutonium controlling" with respect to waste losses.

Distribution ratios for plutonium are affected greatly by the presence of certain chemicals that form strong complexes with plutonium. These complexants can be either organic- or aqueous-favoring; the aqueous-favoring complexants are the ones of concern in the HA column. Complexants of concern are monobutyl phosphate, fluoride ion, and sulfate ion. Monobutyl phosphate formed by hydrolysis of TBP forms an aqueous-favoring complex with plutonium (and with uranium) containing one atom of plutonium per molecule of MBP. As mentioned before, monobutyl phosphate does

not present a serious problem since it hydrolyzes to phosphoric acid at a faster rate than its rate of formation.

Fluoride ion, present in the HAF stream as a result of carryover from the Zirflex decladding step, forms a strong complex with plutonium and will cause high plutonium losses to the waste if the fluoride ion is not "tied up" by some other agent. Aluminum ion is satisfactory for this purpose, as it readily complexes with fluoride, is relatively inert and innocuous in the system and is relatively cheap. An aluminum-to-fluoride mole ratio of 3 to 1 is sufficient to prevent fluoride from complexing with plutonium. The aluminum is added to the acid in the dissolver prior to the fuel dissolution step and, thus, also prevents excessive fluoride corrosion of the dissolver.

Sulfate ion, which also forms an aqueous-favoring complex with plutonium and can be troublesome if not controlled, is formed in the back-cycle waste concentrator from oxidation of ferrous sulfamate and sulfamic acid, and enters the HA column via the 3WB stream. The sulfate concentration in the system is relatively constant, however, and its inhibiting effect on plutonium extraction can be countered by a slight increase in the HAX flow rate.

High waste losses can also result when fuel element dissolution is carried to the point that the uranyl nitrate solution is acid deficient. Under this condition, plutonium forms a solid compound (probably a mixture of hydrous oxide and nitrate) called plutonium polymer (see Section 7.2.4) which is not extracted by the TBP solvent.

Plutonium refluxes in the HA column scrub section in a manner similar to that described for uranium, with about a 10% increase in concentration at the feed point. The extent of the reflux depends on the nitric acid concentration profile in the scrub section, as well as the uranium saturation of the solvent and the extraction efficiency of the column.

The distribution ratio for plutonium is more sensitive to the chemistry of the system than is the ratio for uranium. The salting strength and the nitric acid concentration in the aqueous phase both have a more pronounced effect on plutonium extraction (see subsection 6.1.4.2). Variations in the TBP concentration also affect the plutonium distribution ratio more than that of uranium. With solvent containing about 30 vol% TBP, the organic-to-aqueous distribution ratio of plutonium (IV) varies with approximately the 1.3 power of the TBP concentration. The effect of temperature on plutonium extraction is the reverse of that for uranium. The plutonium distribution ratio is about 15% higher at 45°C than at 20°C.

6.1.2.1.1.3 Neptunium Extraction

Neptunium, like uranium and plutonium, forms stable nitrate compounds which readily bond with a complexing agent like TBP. Both neptunium (IV) and neptunium (VI) are extracted and stripped in the Purex

process, with neptunium (VI) having a higher distribution ratio at the acid concentration present in the HA column. Neptunium can also exist in the plus five valence state and, in fact, neptunium (V) is the most stable state, but is also the least extractable. Neptunium can be either reduced to neptunium (IV) or oxidized to neptunium (VI) by nitrite ion in a nitric acid solution, depending on the concentration of nitrite. The effect of nitrite concentration on neptunium valence in various nitric acid concentrations is shown below.

Nitrite Concentration, M	Nitric Acid Concentration, M	Neptunium Reaction
6×10^{-5} to 1×10^{-2}	1 to 6	$Np^{+5} \rightarrow Np^{+6}$
$>1 \times 10^{-2}$	1 to 6	$Np^{+6} \rightarrow Np^{+5}$
1×10^{-3} to 1×10^{-2}	>6	Both Np^{+4} and Np^{+6} are formed.

Ferrous sulfamate is also used to reduce neptunium to neptunium (IV) in the 1BX and 2N columns.

The neptunium in the feed to the HA column is extracted into the solvent phase and follows the uranium through the process. To ensure the existence of the extractable species, a small flow of sodium nitrite is continuously added near the bottom of the HA column extraction section.

6.1.2.1.1.4 Decontamination from Fission Products

After irradiation to 1000 megawatt days per ton (MWd/t) and cooling for 300 days, ruthenium contributes less than 1% of the beta radioactivity in a spent N Reactor Mark IV fuel element and less than 2% of the gamma radioactivity. Zirconium and niobium, after the above irradiation and cooling conditions, each contribute about 2% of the beta radioactivity in the fuel, but 25 and 55%, respectively, of the gamma radioactivity.

Fission products are extracted to a much lesser extent by TBP than are uranium and plutonium. As the organic extractant stream rises past the feed point of the HA column, most of the fission products remain in the aqueous phase. The small fraction of the fission products extracted along with the uranium and plutonium are partially scrubbed back into the aqueous phase in the scrub section of the column. The fission product decontamination performance of the HA column is closely dependent upon the process and operating conditions of the column and on the column cartridge design. With feed prepared by the Zirflex head-end process, approximately 1000-fold decontamination of uranium, plutonium and neptunium from gross fission product radioactivity is typically obtained at the feed point, with additional decontamination on the order of 10-fold provided by the scrub section. Feed point decontamination is primarily dependent upon the chemical conditions at the feed point (i.e., the presence of fluoride

ion, which complexes zirconium, the nitric acid concentration and the degree of saturation of the solvent). Feed point decontamination is essentially independent of the column operating conditions. Scrub section decontamination performance, on the other hand, is primarily dependent on the column operating conditions and column internals, since both affect contacting effectiveness in the scrub section.

The only fission products that are sufficiently extracted by TBP to be of concern are ruthenium, zirconium and niobium. Decontamination performance of the Purex solvent extraction columns is governed by decontamination from these three elements. Rare earth elements, cesium, and strontium, which contribute a major fraction of the radioactivity in the feed, have such low distribution ratios that very small quantities are extracted in comparison with ruthenium, zirconium and niobium.

Distribution ratios for zirconium and niobium are increased by increasing nitric acid concentration. Thus, increasing the feed point nitric acid concentration from 2M to 3M will result in an approximately 30% decrease in feed point decontamination from these fission products. Ruthenium, however, exhibits the opposite characteristic; its feed point decontamination is improved approximately 3-fold by the above increase in nitric acid concentration.

Distribution ratios for ruthenium, zirconium and niobium decrease as the saturation of the TBP with uranium is increased. In one series of pilot plant runs made at the Oak Ridge National Laboratory (Ref. 2), this effect was negligible upon going from 75 to 60% uranium saturation of the solvent, but was very marked upon further reduction of the fractional saturation to 50%. With the latter reduction in the fractional saturation, overall pilot plant HA column decontamination was reduced by factors ranging from approximately 2 for ruthenium, to approximately 50 for zirconium.

Radioactive I-131, which has an 8-day half-life, is present in appreciable concentrations only in feeds aged less than 120 days after discharge from the reactor. Iodine-129, which has an extremely long half-life (1.6×10^7 years), has a very low specific radioactivity and is of no concern from a product contamination standpoint. Iodine in the solvent extraction feed is nearly quantitatively and irreversibly extracted into the organic, probably as a result of chemical reaction with hydrocarbon components in the diluent (see subsection 9.2.1.2).

Degradation products of organic diluents containing unsaturated hydrocarbons (either aromatic or olefinic) can exhibit severe adverse effects on fission product (notably ruthenium) decontamination. The use of a fully saturated, straight-chain hydrocarbon diluent (NPH), however, has essentially eliminated this problem.

6.1.2.1.1.5 Nitric Acid Extraction

Tributyl phosphate extracts nitric acid to a lesser extent than it extracts uranium, plutonium and neptunium, but to a much greater extent than it extracts fission products. With 2M HNO_3 introduced as the scrub solution at the top of the HA column, the organic extractant (HAP) stream leaving the column contains about 0.19M HNO_3.

6.1.2.1.1.6 Extraction of Other Actinides

Uranium X_1 (Th-234) and UX_2 (Pa-234), products of the radioactive decay of U-238, are extracted almost completely (about 99%) in the HA column, even though their organic-to-aqueous distribution ratios are lower than those of plutonium. Although the distribution ratios of UX_1 and UX_2 in the dilute uranium portion of the column are sufficiently favorable for almost complete extraction, their low distribution ratios at high fractional saturation of TBP with uranium cause them to accumulate in the aqueous phase near the feed point to concentrations corresponding to several times their concentrations in the feed. The accumulation results from a reflux mechanism similar to but more pronounced than that for uranium and plutonium.

Americium and curium cannot, under Purex conditions, be oxidized above the trivalent state. In this state they are, like trivalent plutonium, practically inextractable so that they leave the HA column almost quantitatively with the aqueous waste (HAW) stream.

6.1.2.1.2 Partition Columns

In the partitioning columns [the 1B extraction (1BX) column and the 1B scrub (1BS) column], the uranium and neptunium are separated from plutonium by reducing the plutonium to the aqueous-favoring trivalent state by the addition of ferrous ion. The conditions of salting strength and flow ratios are controlled in such a way that a nearly quantitative separation is effected, the plutonium reverting to the aqueous phase and leaving the bottom of the 1B scrub column, while the uranium and neptunium as neptunium (IV) leave the top of the 1BX column in the solvent phase.

6.1.2.1.2.1 1B Extraction Column

The organic product (HAP) stream from the HA column, containing the uranium, plutonium and neptunium, is pumped from the 1BX feed tank (TK-J3) to the bottom of the 1BX column where the organic rises through a descending aqueous solution of ferrous sulfamate. With a distribution ratio of two or less in the 1BX column, the plutonium, as plutonium (IV), is partially stripped into the aqueous phase where it is reduced to the very sparingly extractable trivalent state ($E_a^o < 0.03$) by the ferrous ion. This process (partial stripping followed by chemical reduction) is continued as the solvent moves up through the column so that plutonium is nearly quantitatively removed from the uranium-bearing organic solvent.

The neptunium is reduced from the hexavalent state to the tetravalent state, which is also extractable. Most of the uranium and neptunium remain in the organic phase, but about 4% of the uranium accompanies the plutonium in the aqueous effluent stream from the 1BX column. Essentially all of this uranium plus about 9% of the plutonium is extracted into an organic phase in the 1BS column. The 1BS column organic effluent, containing the extracted uranium, is added to the 1BX feed tank for recycling through the 1B column system and recovery of the uranium as feed to the 1C column.

Addition of the organic waste streams from the second and third plutonium cycles and the neptunium recovery cycle (2BW, 3BW, and 2PW, respectively), to the 1B column feed (1BXF) results in the recovery of the plutonium lost from those systems. Such backcycling does not significantly affect the operation of the 1BX column, since the additional volume is only about 10% of that of the 1BXF.

Nearly complete removal of the plutonium from the uranium stream in the 1BX column is dependent on essentially complete reduction of the plutonium to its trivalent state. The reduction of plutonium (IV) to plutonium (III) by ferrous ion is rapid. It is essentially complete in 3 to 5 minutes at 25°C. The reduction rate is not markedly affected by variations in nitric acid and uranium concentrations.

Since both iron (II) and plutonium (III) are autocatalytically oxidized by nitrite [to iron (III) and plutonium (IV), respectively], a "holding reductant" must be used to decrease the oxidation rate. Sulfamate ion, which reacts more rapidly with nitrite than either iron (II) or plutonium (III), fulfills the function of a holding reductant.

The ferrous and sulfamate ions are introduced in the form of a ferrous sulfamate-sulfamic acid solution. The concentration of iron (II) reductant is limited to prevent the maximum plutonium concentration in the aqueous phase from exceeding 6 g/ℓ. Even at this low concentration, however, the iron reductant exceeds the stoichiometric requirement by approximately 85%.

The distribution of plutonium (III) in the 1BX column does not vary significantly with the nitric acid concentration. However, the fraction of uranium stripped into the aqueous phase increases with decreasing nitric acid concentration. Also, the salting strength of the aqueous effluent from the 1BX column must be sufficient to ensure quantitative extraction of the uranium in the 1BS column.

Under flowsheet conditions, one-half to two-thirds of the fission product radioactivity introduced to the 1BX-1BS partition system leaves with the uranium-bearing organic effluent 1BU stream. The remaining one-third to one-half leaves with the plutonium-bearing aqueous 1BP stream. The effects of process variables, such as nitric acid concentration and extent of uranium saturation of the TBP, on the fission product split between the organic and aqueous streams are qualitatively similar to the analogous effects in the HA column.

Uranium X_1 (Th-234) and UX_2 (Pa-234) generally follow the uranium and neptunium into the 1BU stream. The small fraction of UX_1 accompanying the plutonium under the flowsheet conditions of relatively low organic phase uranium saturation (<50%) is readily removed, along with residual, trace uranium, in the 2B column. (A substantial increase in uranium saturation of the TBP would be necessary before UX_1 contamination in the plutonium product would be a problem.) An increase in the salting strength (aqueous phase nitric acid concentration) would decrease the fraction of UX_1 and UX_2 accompanying the plutonium. Uranium X_1 and UX_2 are harmless in the uranium stream, into which they would, in any case, grow to an equilibrium concentration by the radioactive decay of the U-238. In the absence of its beta-decay parent (UX_1), UX_2 is harmless in the plutonium stream, since it quickly disappears because of its 1.1-minute half-life. Uranium X_1 is a potentially important contaminant in the plutonium (and neptunium) product streams, however, as is discussed in subsection 6.1.4.5.

6.1.2.1.2.2 1B Scrub Column

In the 1B scrub (1BS) column, the uranium accompanying the plutonium in the aqueous effluent from the 1BX column is essentially quantitatively extracted, along with about 10% of the plutonium, into the organic scrub (1BS) stream. The rest of the plutonium remains in the aqueous phase.

With respect to uranium extraction, the 1BS column functions similarly to the extraction section of the HA column. However, since the fission product split in the 1BS column is not normally important, a high degree of uranium saturation of the TBP (for good fission product decontamination of the extract) is not sought. A several-fold excess organic phase flow over the minimum theoretically required by the uranium distribution ratio is normally employed to ensure the effective liquid-liquid contacting required for attainment of the desired high degree of uranium-plutonium separation.

The organic-to-aqueous phase distribution ratio of plutonium (III) at the top of the 1BS column is estimated at 0.02. The small fraction of plutonium leaving the 1BS column with the uranium-bearing organic effluent stream is recycled to the 1BX column where it is transferred to the aqueous phase.

6.1.2.1.3 1C Column

In the 1C column, the uranium, neptunium, and traces of plutonium leaving the 1BX column via the organic 1BU stream are stripped, or back-extracted, into an aqueous, slightly acidic solution. Water would be a satisfactory aqueous stripping solution from a mass transfer standpoint; effective stripping of the solute from the solvent certainly depends on the absence of high concentrations of salting agent (nitric acid). The 1CX solution, however, contains a slight amount of nitric acid (0.01M)

to prevent emulsification in the presence of small concentrations of surface-active impurities such as DBP. The presence of the nitric acid in the 1CX does not significantly impair the stripping performance.

6.1.2.1.3.1 Uranium Stripping

The 1CX flow must be maintained slightly above the minimum theoretically required to achieve effective stripping of uranium in the 1C column and avoid high uranium losses to the organic waste (1CW) stream. The stripping of uranium is an endothermic reaction and, at 1C column conditions, the distribution ratio for uranium decreases by about 1% with each degree celsius temperature rise, thus permitting a proportionate reduction in the stripping solution (1CX) flow rate. In practice, slightly more aqueous strip flow than the minimum theoretically needed is used to obtain quantitative removal of uranium from the organic. The flowsheet 1CX-to-1CF volumetric flow ratio is 0.8 at a temperature of 55°C.

Nitric acid introduced with the organic feed stream is stripped into the aqueous phase in the lower portion of the 1C column, so that the aqueous phase nitric acid concentration in most of the column is essentially that of the aqueous 1CX stream. As the nitric acid concentration in the feed increases, the uranium distribution ratio at the feed point becomes less favorable to stripping. However, farther up the column where the nitric acid concentration is lower, the distribution ratio is more favorable to stripping. Under such conditions, the uranium concentration in the organic phase above the feed point may actually increase, by internal reflux, to a greater value than the concentration at the feed point. Although such a reflux condition would be expected to increase the uranium loss to the 1CW by a slight amount, nearly quantitative stripping can be obtained, provided the length of the contacting zone (or cartridge) in the column is sufficient, and efficient mixing of the two phases is obtained.

Uranium losses are not significantly affected by minor variations in 1CX acidity up to about 0.03M, but would probably increase to the order of 0.5% if the 1CX nitric acid concentration were increased to 0.1M. The organic-to-aqueous phase distribution ratio of uranium at the feed point increases with approximately the 1.33 power of the TBP concentration.

Dibutyl phosphate, formed by hydrolysis of TBP, forms a strong complex with uranyl nitrate, which favors the organic phase, and thus leaves the 1C column with the 1CW stream. The uranium-DBP compound contains one atom of uranium per molecule of DBP.

6.1.2.1.3.2 Plutonium and Neptunium Stripping

Plutonium and neptunium are stripped from the organic solvent more easily than is uranium, so that process conditions required in the 1C column are limited by uranium, rather than plutonium or neptunium.

The distribution of plutonium (IV) in the 1C column is made less favorable to stripping by a temperature increase. The organic-to-aqueous phase distribution ratio of plutonium (IV) increases by about 2% with every 3°C temperature rise. Even at 55°C, however, plutonium is stripped more readily than uranium.

Differences in the plutonium (IV) and plutonium (VI) distribution ratios are relatively small under 1C column process conditions, as discussed in subsection 6.1.4.2.

Traces of DBP increase the plutonium and neptunium losses by formation of organic-favoring compounds analogous to that formed with uranium. The relative magnitudes of the uranium, neptunium, and plutonium loss increases due to DBP reactions probably vary with process conditions, but have not been accurately established.

6.1.2.1.3.3 Decontamination from Fission Products

Product decontamination from fission products is not a primary function of the 1C column. Decontamination does occur, however, to a small but significant extent, usually between 2- and 10-fold.

The decontamination obtained across the 1C column is due to reaction of some fission products with solvent degradation products, such as DBP, and probably with compounds formed upon exposure of the diluent to radiation and nitric acid. Because of the small amounts of fission products involved, small concentrations of solvent degradation products can have a significant effect on decontamination. Iodine, which is extracted in the HA column largely by unsaturated hydrocarbon compounds which are impurities in the diluent, remains largely in the organic phase through the 1C column. Iodine decontamination factors across the 1C column are typically about 25.

6.1.2.1.3.4. Uranium X_1 and Uranium X_2

Uranium X_1 and UX_2 are quantitatively stripped into the aqueous phase, along with the uranium, plutonium, and neptunium.

6.1.2.2 Final Uranium Decontamination Cycle

In the final uranium cycle, which utilizes the 2D and 2E columns, uranium is decontaminated further from plutonium and fission products and separated from neptunium under conditions analogous to, but slightly different from, those in the HA and 1C columns.

The 2D column is operated under conditions of low acidity and high saturation of the organic solvent, conditions which enhance decontamination of the uranium from Zr-Nb-95 and removal of neptunium. The bulk of the uranium is extracted into the solvent, while the bulk of the neptunium

is forced, by the high solvent saturation with uranium, to remain in the aqueous phase. Typically, about 95% of the uranium and about 10% of the neptunium are extracted into the TBP solvent. Residual plutonium remaining with the uranium from the 1BX column (typically, less than 0.1% of the plutonium entering the solvent extraction system) is reduced to the trivalent state in the 2D column and exits via the aqueous waste (2DW) stream, with about 90% of the neptunium and 5% of the uranium.

Reduction of the residual plutonium in the 2D column is enhanced by the addition of hydrazine to the 2DF solution. Hydrazine reacts with any nitrite or other oxidizing material that might be present. Following the addition of hydrazine, hydroxylamine nitrate (the plutonium reductant) is added to the scrub section of the column. This method of addition of the "holding reductant" and plutonium reductant solutions has been demonstrated to provide more consistent and effective removal of plutonium than any other method of addition. The hydroxylamine nitrate and hydrazine are used in place of ferrous sulfamate and sulfamic acid to reduce the amount of nonvolatile, nonradioactive chemicals in the high-level waste. The aqueous waste leaving the 2D column is mixed with similar waste streams from the neptunium recovery cycle and the second plutonium cycle. The aqueous waste is concentrated to 8.4M HNO_3, mixed with the aqueous waste from the third plutonium cycle, and recycled to the HA and 2N columns as the 3WB stream containing 7.7M HNO_3.

The uranium is stripped from the organic solvent in the 2E column using 0.01M HNO_3, the processing operation nearly duplicating that of the 1C column. The only difference of significance in the two systems is the lower acidity at the bottom (feed point) of the 2E column, which results from the use of a water scrub stream in the 2D column and the ensuing reduced acidity of the organic 2DU stream.

6.1.2.3 Plutonium Oxidation

The plutonium leaving the 1BS column in the aqueous 1BP stream is in the nearly inextractable trivalent state. Further decontamination of the plutonium by extracting it away from the residual fission products requires reoxidation of the plutonium to its most extractable tetravalent state. The oxidizing agent used is nitrous acid, produced by the addition of nitric acid to the 1BXP or 1BP and sodium nitrite to the 1BP. The oxidation is rapid at room temperature, being carried to 99% completion in 2 to 3 minutes. The residual ferrous and sulfamate ions in the 1BP solution are converted to ferric and sulfate ions, respectively, during the oxidation step.

Common oxidizing agents other than nitrous acid, such as ozone, hydrogen peroxide, potassium permanganate, and sodium dichromate, have the disadvantage of oxidizing a significant fraction of the plutonium to plutonium (VI). The higher valence state is undesirable because, under the conditions of the 2A column extraction section, the organic-to-aqueous phase distribution ratio of plutonium (VI) is only about one-sixth of that of plutonium (IV). Thus, several percent of the plutonium (VI) entering

the 2A column would be lost to the 2AW stream. Oxidation with sodium nitrite or nitrogen dioxide leaves nearly all of the plutonium in the tetravalent state. A discussion of the oxidation-reduction properties of plutonium is given in subsection 6.1.3.7.

6.1.2.4 Second and Third Plutonium Decontamination Cycles

Plutonium is further decontaminated from uranium and fission products in the second plutonium cycle, and from fission products in the third plutonium cycle. The final product typically contains less than 500 parts uranium per million parts of plutonium and is virtually free of fission product contamination.

6.1.2.4.1 2A Column

The 2A column, like the HA and 2D columns, is a dual-purpose column, with an extraction section below the feed point and a scrub section above it. The function of the column is to decontaminate the plutonium from fission products and UX_1. The 2A column process is analogous to that involved in the HA column, with tetravalent plutonium, rather than uranium, being essentially quantitatively extracted into the TBP solvent, while the fission products and UX_1 largely remain in the aqueous phase. The aqueous waste (2AW) stream is mixed with the aqueous wastes from the final uranium and neptunium recovery cycles, concentrated, and recycled to the HA and 2N columns as the 3WB stream.

The organic-to-aqueous distribution ratio of plutonium (IV) in the absence of aqueous-favoring complexants and with 3.0M HNO_3 in the aqueous phase is approximately 17. The distribution ratio of plutonium (VI) is about 4, and that of plutonium (III) is only about 0.03. The sulfate ion present in the 2AF, however, suppresses the distribution ratios to about 25% of the above values for plutonium (IV) and plutonium (VI). At flowsheet conditions, about 0.7% of the plutonium remains in the aqueous phase and leaves with the 2AW stream.

Since the 2A column contains relatively little uranium competing with the plutonium for the TBP in the organic phase, a solvent (2AX) flow equal to about one-sixth of the aqueous flow rate suffices. The flow rate of solvent required is governed by the liquid-liquid contacting effectiveness of the column, the process (chemical) conditions in the column, and the acceptable amount of plutonium leaving in the 2AW stream.

The relatively low acidity of the scrub stream (0.75M HNO_3) results in a reflux of plutonium from the scrub section to the feed point by a mechanism similar to that in the HA column, as discussed in subsection 6.1.2.1. The increase in plutonium concentration at the feed point due to this reflux is estimated to be as much as 2-fold. It would be several times greater for plutonium (VI).

The plutonium (IV) distribution ratio is quite sensitive to variations between 2M and 4M in the aqueous-phase nitric acid concentration. Upon decreasing the nitric acid concentration from 4M to 2M (in the absence of complexing agents), the plutonium (IV) organic-to-aqueous phase distribution ratio decreases from about 25 to about 10.

The overall fission product decontamination factor across the 2A column is typically about 500. The fission products of principal concern are ruthenium, zirconium, and niobium. Most of the ruthenium decontamination is believed to occur at the feed point, while the low-acidity scrub section is relied on for zirconium and niobium decontamination.

As in the HA column, an increase in feed point acidity improves decontamination from ruthenium, but impairs decontamination from zirconium and niobium. Under normal flowsheet conditions, these effects are very pronounced; upon increasing the nitric acid concentration in the aqueous phase from 2M to 4M, the organic-to-aqueous phase distribution ratio of ruthenium decreases from approximately 0.03 to 0.006, while that of zirconium increases from 0.04 to 0.2, and that of niobium increases from 0.01 to 0.03.

Plutonium is decontaminated from UX_1 by a factor of about 1.5 in the 2A column.

6.1.2.4.2 2B Column

The 2B column functions to strip the plutonium from the organic phase into the aqueous phase, and to scrub any residual uranium from the plutonium. The organic phase (2AP) from the 2A column enters the 2B column approximately half-way up the column. The plutonium is converted to the aqueous-favoring trivalent state by the addition of both hydrazine and hydroxylamine to the 2BX stream, which enters the top of the column. The removal of residual uranium from the plutonium stream is accomplished in the lower half of the column by scrubbing the aqueous phase with fresh organic solvent. The stripped organic "waste" stream (2BW) leaving the 2B column is returned to the 1BXF pump tank (TK-J3), which feeds the 1BX column, for recovery of the trace quantities of uranium and, occasionally, plutonium.

6.1.2.4.3 3A Column

The aqueous product from the 2B column (2BP stream) is combined with the condensates from the plutonium stripper and concentrator, butted with 12M HNO_3, and fed to the 3A column. The plutonium in the 2BP stream is in the trivalent state and requires oxidation to the tetravalent state before it can be extracted in the 3A column. Normally, the reoxidation proceeds spontaneously upon the addition of the concentrated nitric acid; however, provision is made for the addition of sodium nitrite to the 3AF tank, in the event sodium nitrite is required to complete the oxidation of plutonium.

Extraction is carried out at an organic-to-aqueous volumetric flow ratio (O/A) of 0.2 and a feed-point acidity of about 3M. A 1.2M HNO_3 scrub stream is used. The 3AW stream is blended with the concentrated backcycle waste solution and recycled to the HA column. A fission product decontamination factor of about 50 is obtained in the 3A column.

6.1.2.4.4 3B Column

The plutonium is stripped from the organic phase into the aqueous phase in the 3B column at an O/A of 1.5. The 3BW (stripped organic) is returned to the 1BX column feed tank.

6.1.2.5 Neptunium Recovery

As mentioned previously, neptunium is extracted in the HA column and follows the uranium to the 2D column, where neptunium is separated and leaves the column with the aqueous 2DW stream. The 2DW is concentrated to about 8M HNO_3 in the backcycle waste concentrator, along with other second plutonium cycle waste streams. The neptunium is recovered from the concentrated backcycle waste (3WB) solution and decontaminated in a three-phase operation.

A detailed description of the neptunium recovery process is given in Section 4.6 of Chapter 4.0.

6.1.2.6 Solvent Treatment

As discussed previously, the solvent used in the Purex process is a 30 vol% solution of tri-n-butyl phosphate (TBP) in a normal paraffin hydrocarbon (NPH) diluent. The diluent contains those paraffins having between 10 and 14 carbon atoms. As purchased, the solvent constituents contain chemical impurities such as miscellaneous butyl phosphates and traces of hydrocarbons which are not normal paraffins. After passage through the process, the solvent also contains small quantities of fission products, uranium, plutonium, and other impurities such as hydrolysis and radiolysis products and solids or colloidal materials. These impurities can, if permitted to accumulate as the solvent is recycled through the process, result in increased product losses and/or decreased decontamination of the product. Thus, treatment of the solvent for regeneration is a necessity.

6.1.2.6.1 Fission Product Activity

The organic waste streams are contaminated with fission products (principally, iodine, ruthenium, zirconium and niobium) as a result of both extraction and, to a lesser extent, entrainment. Experience with various diluents indicates that the chemical nature of the diluent has a very pronounced effect on the retention of fission products and the ease with which they are removed. Table 6-1 presents typical fission

product activities in unwashed and washed solvent effluent from the first decontamination and partition cycle, with two of the three diluents that have been used in the Purex Plant while processing materials of similar irradiation and cooling histories (600 MWd/t, 120- to 150-day cooling periods). (Ref. 3).

TABLE 6-1. Effect of Diluent on Solvent Radioactivity.

Diluent	Radioactivity, μCi/gal			
	Ruthenium		Zirconium-Niobium	
	unwashed	washed	unwashed	washed
Soltrol - 170	1000-3000	500-2000	1000-2000	100-500
NPH	300-1000	50-200	100-300	3-30

9413279-1060

The washed solvent from the final uranium cycle (for 600 MWd/t, 120- to 150-day-cooled feed) contained, typically, 20 to 100 microcuries of gamma activity per gallon of solvent with Shell E-2342 or Soltrol diluents, and less than 10 microcuries per gallon with NPH diluent.

6.1.2.6.2 Uranium and Plutonium

Only trace amounts of uranium and plutonium are normally present in the organic waste streams, but larger amounts may occasionally be present as a result of improper column operation or inefficient stripping due to trace organic impurities in the stripping solution. All of the uranium and plutonium must be removed from the solvent to minimize cross-contamination of the products.

6.1.2.6.3 Entrained Impurities

The organic effluents from the solvent extraction columns normally contain small quantities of entrained, emulsified aqueous and solid materials of indefinite composition. One sample of a solids-stabilized emulsion from a pilot plant test of an organic wash column (employing a sodium carbonate wash solution) contained aqueous, organic and solid phases in a volumetric ratio of 4:16:1, respectively (Ref. 4). The solids were in the form of a very fine, dark-brown, amorphous powder composed mainly of calcium, iron, chromium, and silicon.

6.1.2.6.4 Methods of Solvent Treatment

The solvent treatment in the Purex Plant is accomplished by chemical washing of the solvent to remove dissolved impurities. Two parallel solvent systems are used--one for the final uranium decontamination cycle, and one for the rest of the solvent extraction process.

The objectionable soluble impurities, such as DBP, plutonium, uranium, and fission products, are removed from the recirculating Purex solvent by contact with a warm mixture of sodium carbonate and potassium permanganate. This washing is effected continuously in TK-G1 for first-cycle solvent, or in TK-R1 for the second-cycle solvent. The alkaline permanganate is recirculated through the contactors until being withdrawn periodically from the first-cycle system and sent to underground waste storage. The wash solutions withdrawn from the second-cycle system are normally sent to the first-cycle system, but may be sent to underground waste storage. Fresh material is added for makeup as required.

The alkaline permanganate-treated solvent is washed with dilute nitric acid in the 10 or 20 column. It is then ready for reuse. A detailed description of the solvent treatment process is given in Section 4.7 of Chapter 4.0.

6.1.2.6.5 Solvent Treatment Chemistry

The mixture of sodium carbonate and potassium permanganate performs a number of useful reactions in Purex solvent washing. Fission products are removed by extraction into the aqueous phase, or by adsorption on the manganese dioxide (MnO_2) formed in situ. Plutonium and uranium are removed by the formation of aqueous soluble carbonate compounds. Diluent degradation products are removed by adsorption on the manganese dioxide. Tributyl phosphate degradation products (DBP, MBP, and phosphoric acid) are removed by neutralization with sodium carbonate and the formation of aqueous-soluble carbonate complexes.

The dilute nitric acid wash, which follows the carbonate wash, effectively removes entrained carbonate and MnO_2, clarifying the solvent and slightly acidifying it for reuse.

6.1.2.6.6 Process Effectiveness

A comparison of the properties of solvent prior to and after the treatment described above is shown in Table 6-2 (Ref. 5). Also included in the table are properties of freshly prepared solvent. The solvent treatment reduced the fission product content of the used solvent dramatically and also reduced the plutonium retention number (a measure of the presence of deleterious diluent and TBP degradation products) by a factor of 40.

In other studies (Ref. 6) carried out by contacting used Purex solvent with 0.01M $KMnO_4$ in 3 wt% Na_2CO_3 at 50°C, the zirconium-niobium and ruthenium gamma activities were reduced by as much as 80 and 11-fold, respectively.

TABLE 6-2. Solvent Properties Before and After Chemical Wash Treatment.

Test/Property	Before Treatment	After Treatment	Laboratory-Prepared Solvent
TBP, vol%	29.6	29.2	30.0
Radioactivity, μCi/ℓ			
Zr-95	90	3.4	
Nb-95	98	2.1	
Ru-106	170	9	
Disengaging Time, sec.	37	61	67
Uranium E_a^o	14.6	14.2	17.4
PRN[a]	2070	50	23

[a]The plutonium retention number (PRN) is considered to be a sensitive measure of the presence of deleterious diluent and/or TBP degradation products in used Purex solvent. Thus, the 40-fold reduction in the PRN attests to the effectiveness of the solvent treatment.

Changing any of the following variables over the ranges given reduced the zirconium-niobium decontamination by factors of 2 to 3.5, and the ruthenium decontamination by a factor of 1.5:

- Reducing the $KMnO_4$ concentration from 0.1M to 0.001M
- Reducing the temperature from 50 to 25°C
- Reducing the contact time from 20 to 5 minutes
- Reducing the aqueous-to-organic ratio from 0.1 to 0.05.

After three throughputs of solvent through the contactor, the potassium permanganate was completely reduced, and the effectiveness of the wash approximated that of a sodium carbonate wash. Other observations about the behavior of potassium permanganate in the Purex solvent treatment system are listed below:

- The $KMnO_4$ distribution ratio (E_a^o) was 0.034.
- The $KMnO_4$ treatment did not increase uranium or plutonium retention in the solvent.

- MnO_2 collected at the interface; MnO_2 could be readily dissolved in dilute nitric acid by adding reducing agents such as ferrous or nitrite ions.

- Unreacted $KMnO_4$ in the organic phase was quickly reduced to MnO_2 by a dilute nitric acid wash. It could also be washed out readily by water or a 3% Na_2CO_3 solution.

6.1.3 Properties of Process Materials

The physical and chemical properties of all of the materials used in the Purex process (with the exception of the most common chemicals, such as nitric acid and caustic) are presented in this section.

6.1.3.1 Tributyl Phosphate

Tri-n-butyl phosphate, $(C_4H_9O)_3PO$, is a viscous, colorless liquid produced by the reaction of n-butyl alcohol with either phosphorus oxychloride ($POCL_3$) or phosphorus pentoxide (P_2O_5), with subsequent caustic treatment and distillation. Tributyl phosphate is used as the extractant in the Purex solvent extraction process because of the specificity of the strong complexes it forms with uranium and plutonium. In order to produce an organic phase with the optimum physical and chemical properties, TBP is diluted with a chemically inert, petroleum hydrocarbon fraction with a boiling range close to that of kerosene.

6.1.3.1.1 Specifications

To be used as an extractant in Purex solvent extraction, TBP must meet the following specifications (Ref. 7):

- Butanol content - Reducing normality less than 0.05
- Acidity - Less than 0.02N mono and dibutyl phosphates
- Water content - No turbidity when 1 volume is mixed with 19 volumes of 60° Baume gasoline at 20°C.
- Suspended solids - Less than 0.01 wt%
- Density at 25°C - 0.970 to 0.980 g/mℓ

6.1.3.1.2 Physical Properties

The physical properties of TBP, along with those of DBP and MBP, presented in Table 6-3 are those of fundamental interest in the Purex process (Ref. 8-10). The solubilities of TBP and TBP-diluent mixtures in water and various process solutions are given in Figure 6-1 and are discussed under subsection 6.1.3.4 (Ref. 11).

TABLE 6-3. Physical Properties of Normal Butyl Phosphates.

Property	TBP	DBP	MBP
Formula	$(n\text{-}C_4H_9O)_3PO$	$(n\text{-}C_4H_9O)_2(OH)PO$	$(n\text{-}O_4H_9O)(OH)_2PO$
Molecular weight	266.32	210.2	154.1
Color	Colorless	Pale yellow	Colorless
Odor	Mildly sweet	-	-
Density, g/mℓ, at 25°C	0.9730	1.065	1.220
Refractive index, n_D^{20}	1.4245	1.4260	1.419
Melting point, °C	< -80	-	-
Specific heat, cal/(g)(°C), at 25°C	0.41	-	-
Latent heat of vaporization, cal/gram-mole	14,680	-	11,400
Boiling point, °C, at 760 mm Hg pressure	289	190[a]	105[a]
Boiling point, °C, at 25 mm Hg pressure	177	-	-
Boiling point, °C, at 1 mm Hg pressure	121	-	-
Vapor pressure, mm Hg, at 100°C	ca. 1.0	-	-
Flash point, °F (Tag closed cup)	295 (146°C.)	-	-
Viscosity, millipoises, at 30°C, 25°C, 20°C	29.5, 33.2, 37.4	520 (25°C)	4300 (25°C)
Viscosity, Saybolt seconds, at 85°F	38.6	-	-
Solubility in water, g/ℓ at 25°C	0.39	18	-
Solubility in water, vol%	0.6	-	-
Solubility of water in butyl phosphate, g/ℓ, at 25°C	64	79	-
Solubility of water in butyl phosphate, vol%	7	-	-
Surface tension, dynes/cm, at 25°C	25	-	-
Dielectric constant at 30°C	7.97	-	-

[a]Decomposition temperature.

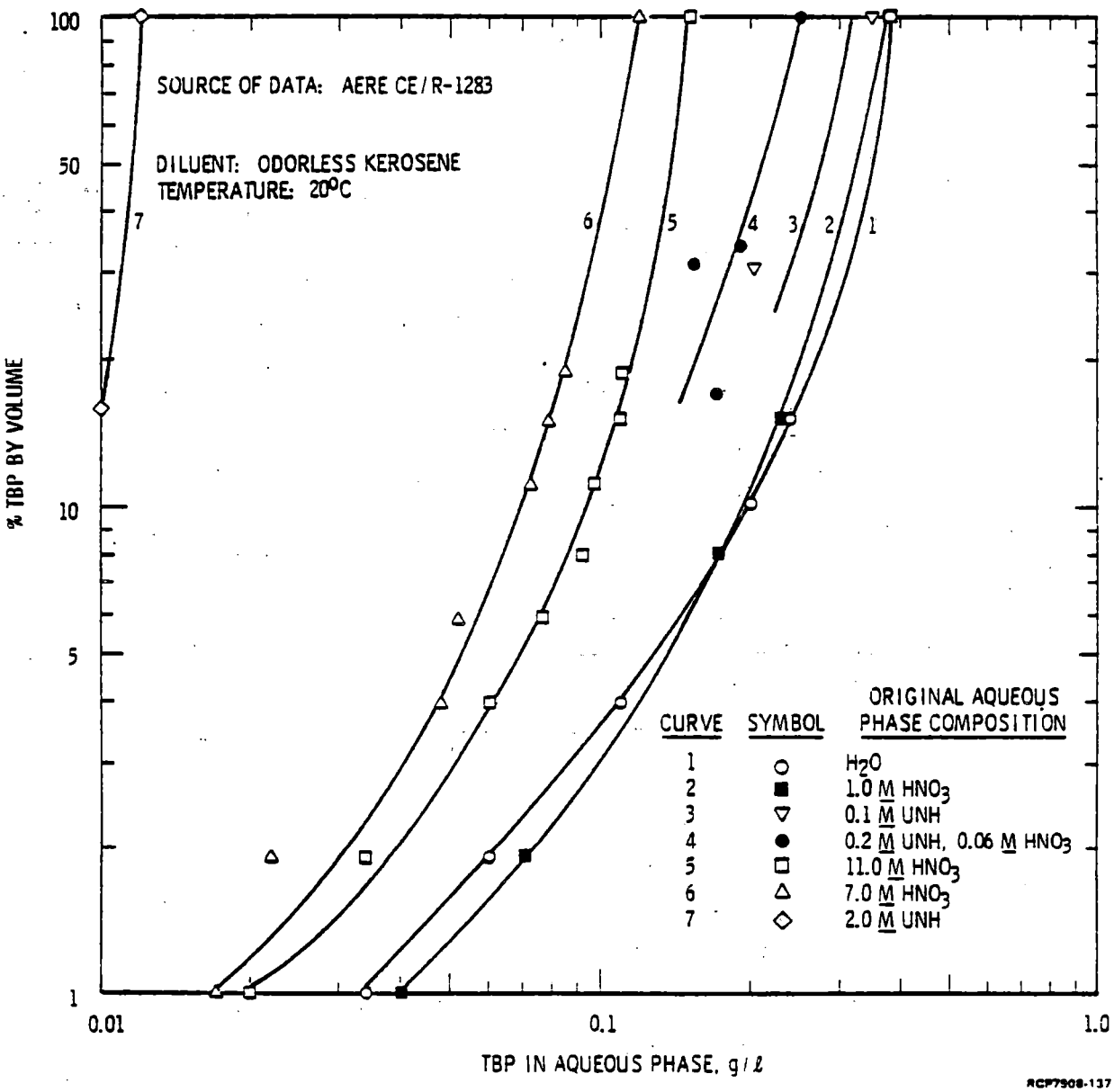

FIGURE 6-1. Solubility of TBP and TBP-Diluent Mixtures in Water and Process Solutions.

The vapor pressure of TBP as a function of temperature is presented (along with vapor pressure data for water and Deobase diluent boiling range cuts) in Figure 6-2. TBP has a relatively low volatility, with a vapor pressure of only about 0.0006 mm of mercury at 25°C. The vapor pressure increases logarithmically with temperature from 15 mm of mercury at 173°C to 760 mm mercury at 289°C (Ref. 8).

During laboratory studies of the evaporative concentration of TBP-saturated aqueous solutions, it was found that for solutions containing electrolytes such as uranyl nitrate, the TBP content dropped in accordance with what would have been predicted from classical physical chemical principles, and no accumulation of TBP or its decomposition products occurred. When a slight excess of TBP was added prior to the evaporation, the excess was distilled out rapidly. From the data obtained, the ratio of the vapor pressure of TBP to that of water was estimated to be 1.3×10^{-3} at 100°C. This ratio, multiplied by the ratio of the respective molecular weights (266/18), gives 1.9×10^{-2} as the weight ratio of TBP to water resulting from steam distillation (Ref. 12).

6.1.3.1.3 Radiation Stability

When subjected to radiation, tributyl phosphate undergoes slow radiation-induced hydrolysis (radiolysis) to form dibutyl and monobutyl phosphates, phosphoric acid, hydrogen, and, at high radiation doses, a polymeric solid of unknown composition. The radiolysis effect does not appear to be significant, however, until the dosage exceeds 2 watt-hours per liter (in the absence of nitric acid). The data presented in Table 6-4 are typical of those obtained in the irradiation of TBP (Ref. 13).

Demonstrated decontamination performance and product recoveries in the Purex Plant (overall decontamination factors of the order of 10^6 or 10^7 and uranium "losses" below the laboratory detection limits) attest to the radiation stability of TBP. Laboratory studies of the irradiation of TBP-diluent mixtures are discussed in subsection 6.1.3.3.

6.1.3.1.4 Chemical Properties

The chemical properties of TBP are similar to the properties of esters derived from inorganic acids. The formation by TBP of coordination complexes with uranium and plutonium nitrates, with nitric acid, and, to a lesser extent, with fission product and other nitrates are of basic process importance. Those complexes determine the solvent extraction behavior of the solutes in the process in accordance with the principles discussed in 6.1.1 and the data presented in 6.1.4.

Tributyl phosphate has no active hydrogen atom and only moderate surface-active properties. The butyl acid phosphates formed by the hydrolysis of TBP are compounds capable of forming strong, undesirable complexes with uranium, plutonium and fission products, and acting as emulsifying and foaming agents during extraction, stripping, and calcination. The process effects of TBP hydrolysis are discussed below, while quantitative data on the effects of the acid phosphates on distribution ratios are presented in 6.1.4.

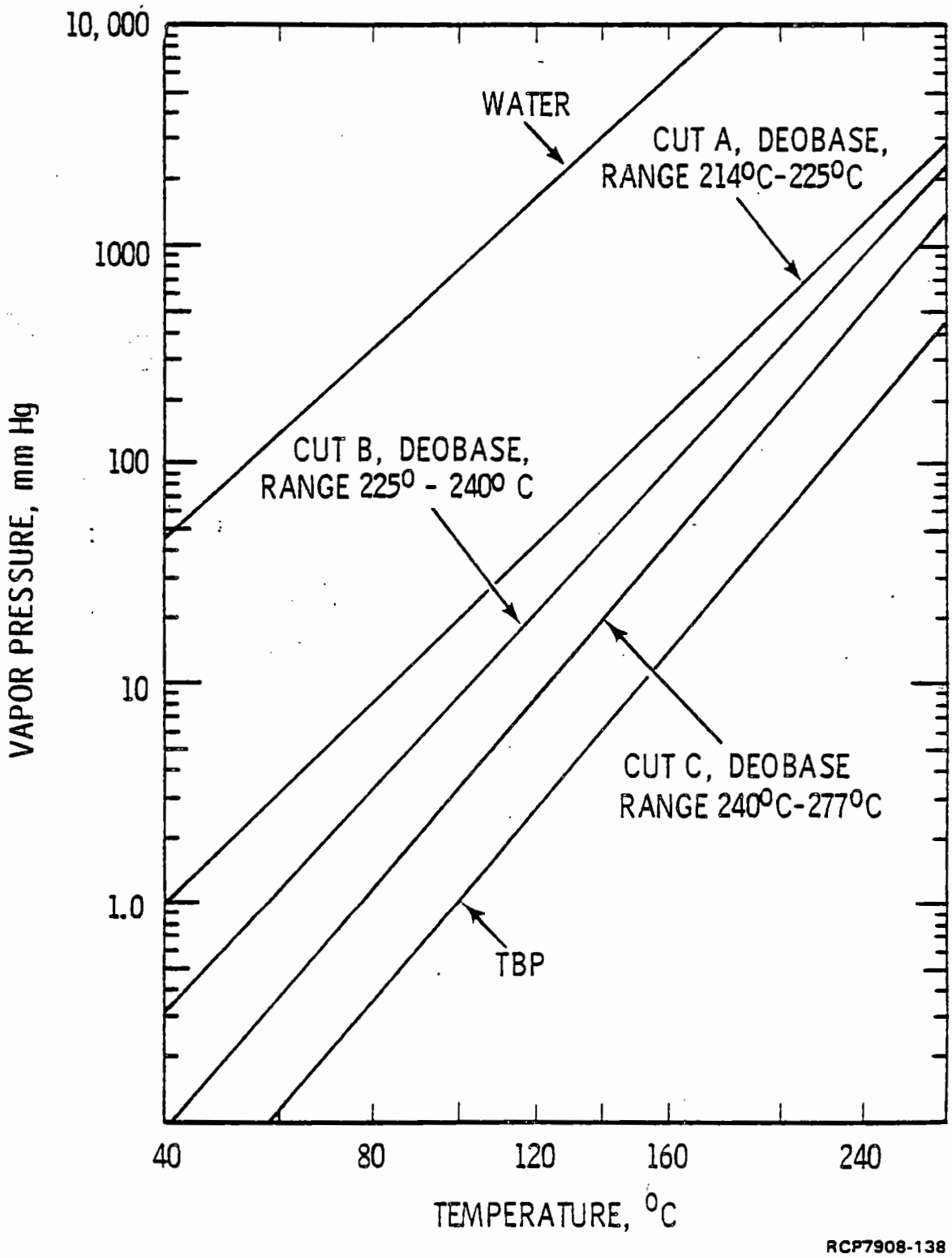

FIGURE 6-2. Vapor Pressures of TBP, Water, and Diluents.

TABLE 6-4. Radiolysis Product Yields for Irradiation[a] of TBP.

Constituents	Weight, grams	Molecular Weight	Moles	G^b	$-G_m^c$
TBP (initial)	103.8	266		-	-
TBP (recovered)	63.4	266		-	-
TBP (destroyed)	40.4	266	0.152	-	2.15
Gas	2.64	18	0.147	2.07	-
DBP	20.4	210	0.097	1.37	-
MBP	0.33	154	0.0021	0.03	-
H_3PO_4	0.03	98	0.0003	0.01	-
Polymer	17.1	266	0.064	-	-

[a]1900 watt-hours per liter

[b]Number of molecules produced per 100 electron-volts absorbed

[c]Number of molecules destroyed per 100 electron-volts absorbed

6.1.3.1.4.1 Hydrolysis

The hydrolysis, or de-alkylation, of TBP is of major importance to the Purex process since the hydrolysis products are known to affect the fission product decontamination and uranium and plutonium losses adversely, as well as being partially responsible for the formation of emulsions in the columns.

Tributyl phosphate hydrolyzes in either acid or alkaline media. Since the Purex process employs nitric acid as the salting agent, only the acid hydrolysis is of concern. The hydrolysis proceeds through the formation of DBP, MBP, and finally to orthophosphoric acid (H_3PO_4) and butyl alcohol by the cleavage of the oxygen-carbon bonds.

Values for the rates of hydrolysis of TBP in single- (aqueous) or two-phase systems vary widely, depending on the method used to determine these rates (Ref. 10, 14). Studies have shown that factors such as the nitrite ion concentration in the nitric acid, chemical composition of the diluent (Ref. 14, 15), method of pretreating the TBP (Ref. 16), presence of air (Ref. 17), the acidity of the aqueous phase (Ref. 18, 19), and radiation (Ref. 11, 20) influence the rate of hydrolysis of TBP. In view of these factors, it is evident that only relative values can be assigned to hydrolysis rates under Purex process conditions. However, the rates plotted in Figure 6-3 and presented in Table 6-5 are believed to be applicable to Hanford Purex Plant conditions within a factor of about two.

9413275.1069

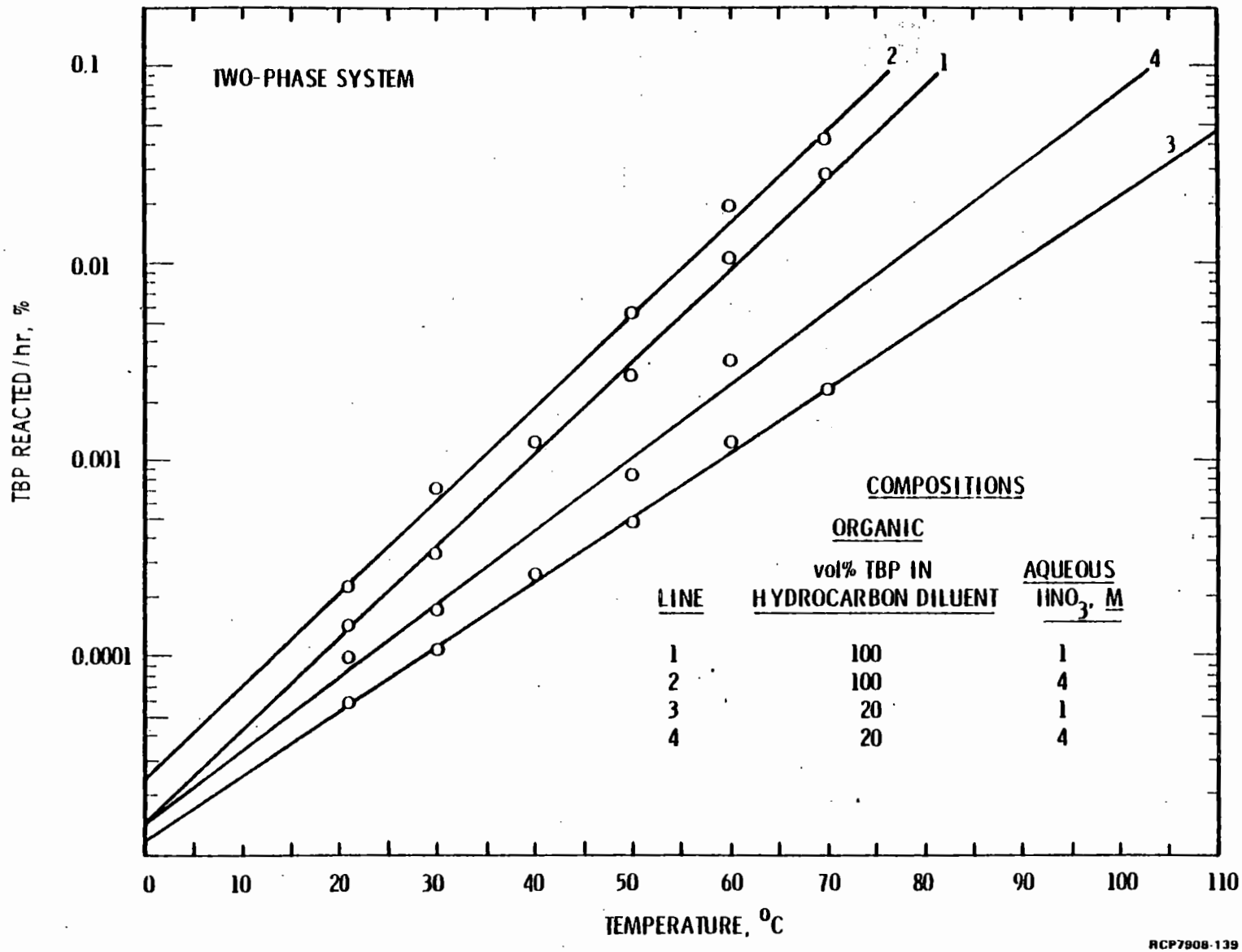

FIGURE 6-3. Effect of Temperature on Rate of Hydrolysis of TBP by Nitric Acid.

TABLE 6-5. Rate of Formation of Dibutyl Phosphate by Hydrolysis of Tributyl Phosphate with UNH-HNO_3 Solutions.[a]

Composition of Phases Before Equilibration			Rate of Formation of DBP at 50°C, % per day[c]
Aqueous Phase		Organic Phase Vol% TBP in Diluent[b]	
UNH, M	HNO_3, M		
2.0	6.0	12.5	0.105
2.0	2.0	12.5	0.037
2.0	0.2	12.5	0.011
0.11	6.0	12.5	0.105
0.11	2.0	12.5	0.022
0.11	0.2	12.5	0.009
0.25	0.05	20	0.0013[d]

[a]Equal volumes of TBP-hydrocarbon diluent and UNH-HNO_3 solutions.

[b]Shell deodorized spray base

[c]Values considered high by a factor of approximately two due to presence of light (Ref. 19).

[d]25°C.

In Figure 6-3, the rate of hydrolysis of TBP in a two-phase system is shown to increase with temperature. The rate is expressed as the percent of TBP reacted per hour and is given for 100% TBP and 20 vol% TBP in kerosene at aqueous-phase nitric acid concentrations of 1 and 4M over the temperature range from 0 to 100°C (Ref. 15). The rate of hydrolysis of TBP is apparently first order with respect to TBP concentration. In a two-phase system, the rate of hydrolysis of TBP is so much faster in the organic phase than in the aqueous phase that the rate of hydrolysis of TBP in a two-phase system is essentially independent of the hydrolysis of the small concentration of TBP dissolved in the aqueous phase. The reaction rate may be regarded to be zero order with respect to organic-phase nitric acid concentration (determined by the concentration in the adjacent aqueous phase) and requires no induction period (Ref. 14, 15). As shown in Figure 6-3 for a given temperature, the rate of hydrolysis increases with increasing nitric acid concentration in the aqueous phase, and with increasing TBP concentration in the organic phase.

Similar results were obtained by measuring the rate of increase of DBP (the rate of hydrolysis of TBP minus the rate of hydrolysis of DBP) in two-phase systems of equal volumes of TBP-hydrocarbon diluent and uranyl nitrate-nitric acid solutions. In addition to showing the effects

of nitric acid concentrations, Table 6-5 also shows that uranyl nitrate concentration has little or no effect on hydrolysis of TBP (Ref. 18, 19).

The rates of hydrolysis of DBP and MBP are not accurately known, but it has been shown empirically that TBP hydrolyzes faster than DBP, and DBP faster than MBP (Ref. 10, 14, 18, 21).

In the degradation of pure TBP to orthophosphoric acid in a single-phase aqueous system of uranyl nitrate and nitric acid, it appears that the hydrolysis of MBP to orthophosphoric acid is the rate controlling step at temperatures below 100°C (Ref. 18). However, since the decomposition temperature of MBP is 105 to 110°C, DBP hydrolysis, and not that of MBP, must be considered as the rate controlling step at temperatures much above 100°C. Hydrolysis rates for TBP in a single-phase aqueous system are reported to be either zero or first order with respect to the nitric acid concentration.

Approximate single-phase reaction rate constants for the acid hydrolysis of TBP, DBP, and MBP in aqueous 0.11M uranyl nitrate-nitric acid solutions at reflux temperatures (circa 100°C) are listed below (Ref. 18).

HNO_3, M	Fraction Decomposed per Hour		
	TBP	DBP	MBP
6.0	0.61	0.20	0.14
2.0	0.113	0.043	0.03
0.2	--	0.014	--

Note: Only the amounts of acid phosphate soluble in aqueous phase were determined.

Under the operating conditions of the Purex flowsheet, DBP is formed in small quantities (parts per million parts of solvent) while passing through the solvent extraction columns and complexes almost immediately with uranium or other metallic ions present. Since the complexes are more soluble in solvent than in aqueous solutions, at least 90% of the DBP formed is carried by the solvent to the solvent recovery systems (Ref. 22). Monobutyl phosphate is formed in smaller quantities than DBP since it is a product of the hydrolysis of DBP, and has a higher rate of hydrolysis than DBP. Monobutyl phosphate is largely removed from the system via the aqueous wastes, although some MBP forms "cruddy" metallic precipitates which are entrained in the solvent. Phosphoric acid and butanol are formed in still smaller quantities and are removed (principally in the aqueous wastes) as rapidly as they are formed.

The presence of DBP, MBP, and butanol may affect the Purex process in many ways (Ref. 4, 23, 24). Dibutyl phosphate forms stable complexes with uranium and plutonium nearly stoichiometrically, and with fission products. These complexes strongly favor the solvent. Dibutyl phosphate may, therefore, cause high uranium and plutonium losses in organic waste streams, and a high radioactivity level in the solvent. Although the fission product complexes strongly favor the solvent, enough are stripped into the aqueous phase in the C-type columns to decrease the decontamination obtained in the solvent extraction cycle. The principal process effects of MBP are those resulting from the formation of aqueous-favoring metal-organic complexes. These complexes can thus cause high product losses and can also form surface-active agents which promote emulsification. Butanol can adversely affect beta decontamination and/or cause plutonium losses by reducing plutonium (IV) to plutonium (III). The butanol concentration required to cause observable effects, however, is rarely encountered in Purex processing.

9413275.1072

6.1.3.1.4.2 Rapid Reactions with Uranyl Nitrate and Nitric Acid

Tri-n-butyl phosphate reacts exothermically, with varying degrees of vigor, with hot, highly concentrated solutions of uranyl nitrate and nitric acid. The vigor of the reaction depends on the heating rate and composition. At conditions most conducive, the reaction assumes explosive violence. However, no reaction takes place at atmospheric pressure until enough water and nitric acid have been distilled to permit the temperature of the solution to rise above 135°C.

The vigor of the reaction increases with the initial ratio of TBP to uranyl nitrate. Highly concentrated uranyl nitrate solutions yield a self-sustained reaction with TBP even in the absence of nitric acid, but when nitric acid is present, the reaction is more vigorous. The system TBP-HNO_3-water reacts with considerable violence if heated rapidly to temperatures above 150°C. Reaction at a moderate rate has been reported to occur under some conditions at 140°C (Ref. 25). The rapid reactions are accompanied by evolution of nitrogen oxides, but the exact nature of the reactions has not been determined. In fact, one of duplicate formulations at times fails to result in an explosive mixture.

Rates of pressure rise, determined in experiments with closed containers, varied from 250 to 1,020 psi per second. The pressure increases developed by the reactions varied from 150 to 1,200 psi. The higher pressure increases were obtained in conjunction with the higher pressure increase rates (Ref. 26).

Purex process conditions do not approach those under which the above-discussed rapid reactions can take place. Chapter 4.0 describes safeguards employed in the uranium, plutonium, and acid concentration steps to prevent such conditions from arising accidentally.

6.1.3.1.4.3 Other Reactions

There is some evidence that the yellow color of reused solvent is not entirely due to the nitration of diluent (discussed under 6.1.3.3.4), but that butyraldehyde, formed by the oxidation of butanol, undergoes an aldol condensation in the presence of sodium carbonate during solvent treatment, forming products which are yellow. Materials with similar infrared spectra have been prepared synthetically from butyraldehyde (Ref. 27).

6.1.3.2 Properties of Dibutyl Phosphate and Monobutyl Phosphate

The physical properties of DBP $[(C_4H_9O)_2(OH)PO]$, and MBP $[(C_4H_9O)(OH)_2PO]$ are listed in Table 6-3 along with the properties of TBP. This table shows the increase of density and viscosity of the butyl phosphates in going from TBP to MBP. The decomposition temperatures of DBP and MBP are 190° to 200°C and 105° to 110°C, respectively.

The solubility of DBP in water decreases with increasing temperature, going from 24 g/ℓ at 10°C, to 5 g/ℓ at 95°C. In nitric acid solutions of from 1M to 4M, the solubility of DBP varies from about 6 to 14 g/ℓ over a temperature range of 0° to 100°C (Ref. 10).

Monobutyl phosphate is more soluble in water than is DBP and, in two-phase systems, favors the aqueous rather than organic phase (15% TBP-85% hydrocarbon diluent) (Ref. 10). This is the reverse of DBP behavior when the DBP concentration is greater than 0.05%. Dibutyl phosphate also favors the aqueous phase at concentrations less than 0.05%, with its distribution to the aqueous phase increasing as the DBP concentration decreases (Ref. 28).

The chemical properties of DBP and MBP differ from TBP and from each other, due to the difference in acidic character. The dibutyl acid ester has one titratable hydrogen with a pH value of 1.8, and MBP has two hydrogens with pH values of 1.9 and 6.6, respectively (Ref. 10). It has been postulated that the acid hydrogens are responsible for the decrease in organic solubility and increase in aqueous solubility, due to hydrogen bonding (Ref. 10).

Both DBP and MBP form compounds with uranium (VI), namely, $UO_2[(C_4H_9)_2PO_4]_2$ and $UO_2C_4H_9PO_4$.

The following solubilities have been determined for the compounds (Ref. 10):

Compound	Solubility, g U/ℓ		
	In Water	In 1M HNO_3	In 15% TBP 85% kerosene by vol.
$UO_2C_4H_9PO_4$	0.07	3.3	0.08
$UO_2[(C_4H_9)_2PO_4]_2$	0.0026	0.016	12.1

Monobutyl phosphate and DBP also form compounds with plutonium (IV) and plutonium (VI). The solubilities of the plutonium (IV)-MBP compound in 0.6M and 15M HNO_3 are 0.31 and 43 mg Pu/ℓ, respectively. The solubility of the plutonium (III)-MBP compound is reported to be at least 1,600 times greater than that of the plutonium (IV)-MBP compound, $Pu(C_4H_9PO_4)_2$, in the presence of 3M HNO_3 (Ref. 29). Pilot plant data indicated that compounds are not formed between plutonium (III) and DBP in the Purex process (Ref. 14). However, later work (Ref. 30) indicated that the compound does form and that its organic-phase solubility is as follows:

20 vol% TBP in Solvent	Solubility, mg/ℓ
Soltrol	<0.01
Decalin	0.17
Xylene	97
Toluene	140

It has been reported (Ref. 31) that iron and chromium compounds are formed with DBP. These compounds are practically insoluble in nitric acid or organic solutions, and, indeed, these compounds were observed during initial plant operation. There is some evidence that the ferrous iron compound of DBP may exist as a colloid in Purex solvent and may cause the formation of stable emulsions (Ref. 29).

When contacted with sodium hydroxide or carbonate solutions, DBP and MBP (and their plutonium and uranium compounds) form aqueous-soluble sodium salts (Ref. 16).

6.1.3.3 Diluent

The diluent for TBP in the Purex process is a highly refined hydrocarbon mixture having a boiling temperature range similar to kerosene (190° to 270°C). Some commercially available solvents which have been used at Hanford or other plants for the diluent were obtained under trade names such as Soltrol-170 (Phillips Chemical Company), Shell Deodorized Spray Base, Shell E-2342, AMSCO (American Mineral Spirits Company), Ultrasene (Atlantic Richfield Company), Bayol-D (Standard Oil of New Jersey), and Deobase (Sonneborn Company, New York City, New York). However, the most satisfactory one found for use in the Hanford Purex Plant is a normal paraffin hydrocarbon fraction (NPH) supplied by South Hampton Co., Silsbee, Texas.

6.1.3.3.1 Specifications

The specifications for the purchase of the NPH diluent are as follows (Ref. 7):

• N-paraffin hydrocarbon	Minimum 98 vol%
• C_{10} to C_{14} component	Minimum 99 vol%
• Aromatics as 1, 2, 3, 4-tetrahydronapthalene	Maximum 0.2 wt%
• Iodine number (olefins as wt% 1-tetradecene)	Maximum 0.1 wt%*
• Alcohol	Maximum 0.05 wt%
• Density at 25°	Maximum 0.76 g/mℓ
• Viscosity at 25°C	Maximum 1.8 centipoises
• Flash point	70°C ± 1°C
• Interfacial tension between hydrocarbon and 0.1M NaOH	Minimum 12 dynes per centimeter
• Solids	None visible
• Color	Colorless

*Cannot be determined at this level by routine laboratory analysis.

6.1.3.3.2 Physical Properties

The boiling points of n-decane and n-tetradecane are 174°C and 252°C, respectively. The solubility of diluent in water is very slight. For example, the solubility of normal paraffin hydrocarbon is less than 0.005 g/ℓ between 25° and 50°C. The vapor pressure of the diluent at various temperatures is similar to that of kerosene and can be obtained approximately from the following equation:

$$\log_{10} p = 7.08 - \frac{2100}{T} \qquad (6.11)$$

where

p = vapor pressure, mm of Hg; and

T = temperature, degrees Kelvin

Results from the equation increase in accuracy with increasing temperature.

6.1.3.3.3 Radiation Stability

Normal paraffin hydrocarbon diluents have been successfully used at full Hanford radiation levels and, although slight radiation-induced decomposition of some diluent components probably occurs, the deleterious effects on the performance of the solvent extraction system are much less with NPH than those experienced with the naphthenic-based diluents which were formerly used.

6.1.3.3.4 Chemical Properties

Inertness in the presence of other process materials and radiation stability were major considerations in choosing the diluent (Ref. 32). The diluent selected is composed almost exclusively of saturated straight chain hydrocarbons. Traces of other types of compounds, such as olefins and aromatics, may also be present and react to some extent with Purex chemicals.

The amber color associated with used or reprocessed solvent in the Purex process was primarily due to nitration of the diluent, but can also be caused by the oxidation of butanol, which is present in trace amounts in TBP. (Only a very slight coloration is observed when NPH diluent is used.) Investigations with 30% TBP in AMSCO 135-15 diluent (11% aromatics) indicate that neither nitric nor nitrous acid alone at room temperature causes coloration, but the combination of nitric and nitrous acids, which produces N_2O_4 gas, is responsible for nitration of the diluent and consequent color formation.

The diluent reacts very slowly when heated with nitric acid of process concentrations. While this reaction is not detectable at temperatures below 35°C, a variety of reaction products are formed at higher temperatures. These impurities include carboxylic acids, nitro compounds, and other miscellaneous nitrogen-containing compounds such as nitrites, nitroso compounds, and nitrolic acids.

Investigations of the stability of diluents to nitric and nitrous acids have shown that paraffinic-type diluents such as NPH, which contains only normal paraffins, are more resistant to nitration reactions than naphthenic diluents (e.g., Shell E-2342 which contains 80% naphthenes) (Ref. 33).

The separation of nitration products from Uranium Recovery Plant* spent solvent (20 vol% TBP in Shell E-2342 diluent) and from diluent alone has shown that compounds of the general classification of alkyl nitrites, alkyl nitrates, aliphatic nitric and nitroso compounds, and carboxylic acids, are formed (Ref. 33).

The reactions of nitrogen oxides with naphthenes or paraffins occur in the vapor phase and very slowly in the liquid phase at room temperature (Ref. 34).

The primary process effect produced by the diluent impurities is the retention of fission products or uranium in the solvent. Olefins react readily with radioiodine to form relatively stable compounds which are not readily removed by chemical washing. However, with the low olefin content of the NPH diluent (0.1 wt%, maximum) together with the longer cooling time (>180 days) for the irradiated fuels, the radioactivity of the process solvent is very low.

6.1.3.4 Organic Phase Solutions

6.1.3.4.1 Tributyl Phosphate - Diluent Systems

6.1.3.4.1.1 Density

The density of a solution of TBP in diluent at 25°C may be calculated from the following equation (Ref. 35):

$$d_{Mixture} = 0.972\ N_{TBP} + N_{Diluent}\ d_{Diluent} \qquad (6.12)$$

where

d = density, g/mℓ, at 25°C

N_{TBP} = volume fraction of TBP; and

$N_{Diluent}$ = volume fraction of diluent.

For temperatures between 20° and 70°C (Ref. 2, 36), the density of 30 vol% TBP in diluent decreases approximately 0.0008 g/mℓ per degree Celsius increase. The approximate densities for TBP-diluent mixtures (15 to 45 vol% TBP) at temperatures from 10° to 70°C can be obtained from the plot on the right side of Figure 6-4 (Ref. 35).

*Former solvent extraction facility in the 271-U Building for recovery of uranium left in waste from the bismuth phosphate separations process.

9413275.1078

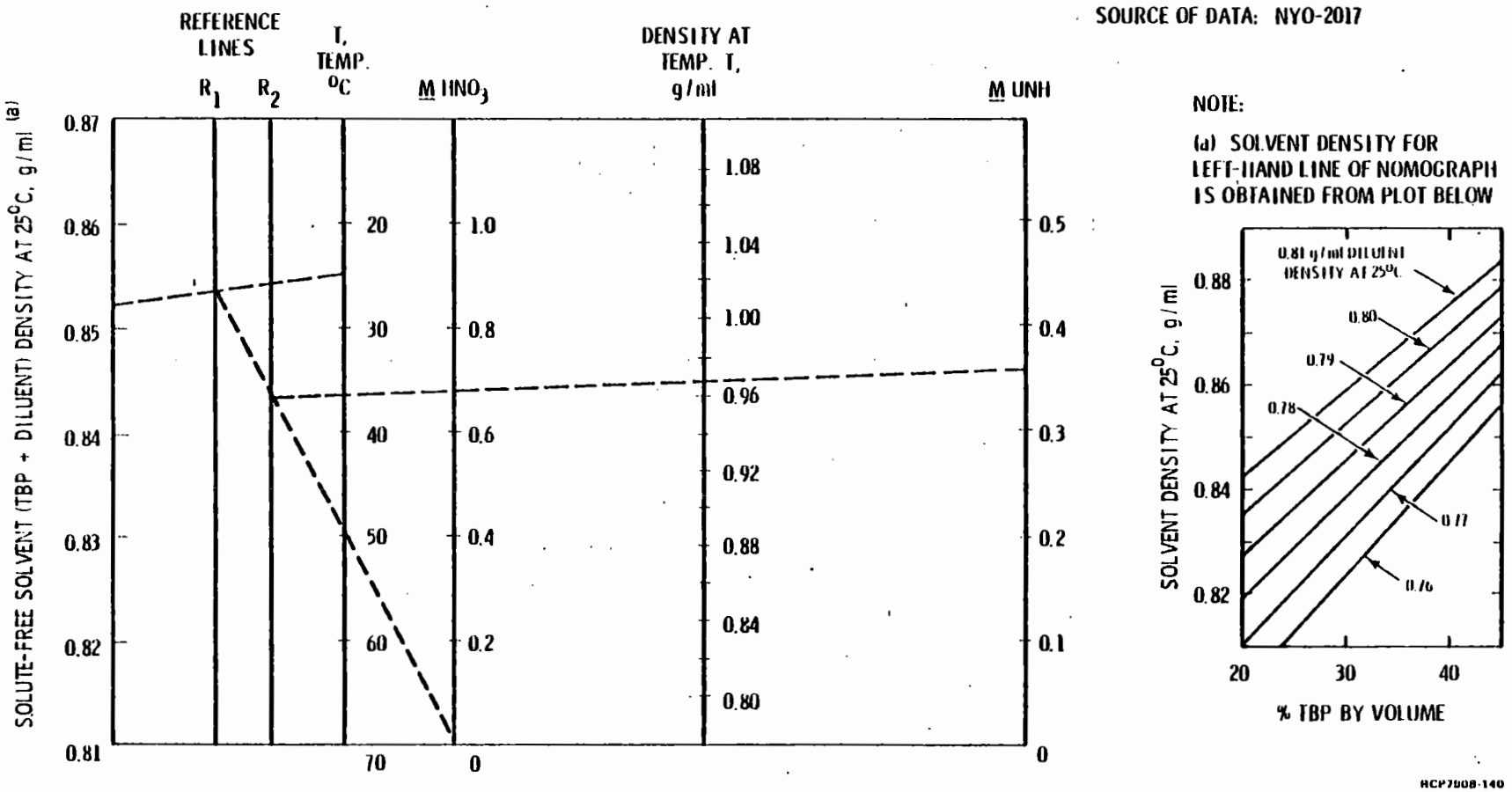

FIGURE 6-4. Density Nomograph for Solvent-Phase Solutions.

6.1.3.4.1.2 Refractive Index

The refractive index (R.I.) of water-free TBP-diluent mixtures at 25°C can be calculated from the following equation:

$$R.I._{Mixture} = R.I._{Diluent}(1-N) + 1.4226\ (N) \qquad (6.13)$$

where

R.I. = the index of refraction (n_D^{25}) measured at 25°C; and

N = the volume fraction of TBP in the mixture.

The presence of water in the solvent lowers the R.I. (Ref. 12), the amount of decrease being directly proportional to the water content. (The solubility of water in solvent is discussed later in this subsection.)

6.1.3.4.1.3 Viscosity

The viscosity, η (in millipoises), of water-saturated TBP-diluent mixtures at temperature, T, may be calculated from the equation (Ref. 35):

$$\log \eta_{mix} = N_{TBP}\ (1.345 + 0.36\ N_{TBP}) + N_{Dil} \log \eta_{Dil} \qquad (6.14)$$

where

N_{TBP} = volume fraction of TBP in the mixture; and

N_{Dil} = volume fraction of diluent in the mixture.

The constants in the equation take into account the fact that the solution is non-ideal, the varying water content as a function of TBP concentration, and the nonproportionality of the volume fraction with the mole fraction. Viscosities of the mixtures decrease logarithmically as the temperature is increased.

6.1.3.4.1.4 Flash Point

The flash point of the solvent increases linearly as the concentration of TBP is increased. The flash point temperature increase, ΔT, in degrees Kelvin, may be estimated from the following equation (Ref. 35):

$$\Delta T = \frac{-T_o^2}{2300} \log M \qquad (6.15)$$

where

T_o = flash point of pure diluent in degrees Kelvin at atmospheric pressure; and

M = mole fraction of diluent. (Calculation of M on the basis of an assumed diluent average molecular weight of 160 leads to approximately correct results with most commercial diluents of interest.)

For concentrations of TBP up to about 30 vol%, the calculated flash points for TBP-diluent mixtures are in good agreement with the observed values. The Tag closed cup flash point of NPH at atmospheric pressure is 70°C. The calculated value for 30 vol% TBP in NPH is 77°C.

6.1.3.4.1.5 Vapor Pressure

The vapor pressure of a TBP-diluent mixture depends both on the diluent used and the TBP concentration. The vapor pressures of TBP and of diluent were previously discussed in subsections 6.1.3.1.2 and 6.1.3.3.2, respectively. The approximate vapor pressure of a TBP-diluent mixture at any desired temperature may be calculated by multiplying the vapor pressure of the pure diluent at the temperature in question by the mole fraction of diluent in the TBP-diluent mixture. An assumed average molecular weight of 160 is a good approximation for the purposes of this calculation for most commercial diluents of interest.

6.1.3.4.1.6 Dielectric Constant

The dielectric constant of TBP-hydrocarbon diluent mixtures varies from 2 to 8 as the TBP concentration increases from 0 to 100 vol% TBP. For 30 vol% TBP in NPH diluent, the dielectric constant is less than 5 as compared with approximately 80 for all Purex process aqueous solutions.

6.1.3.4.1.7 Radiation Stability

The effects of radiation on Purex process solvent were evaluated with respect to the solvent's use in processing short-cooled spent fuel (Ref. 37, 38). It was found that irradiation of a TBP-AMSCO solvent hydrolyzed some of the TBP to dibutyl and monobutyl acid phosphates, which reduced both extraction and stripping effectiveness. The above batch test results were further verified in continuous countercurrent operations with solvent, irradiated (both with and without uranyl nitrate and nitric acid) by a Co-60 source (Ref. 39). The hydrolysis effect was not significant until the radiation dosage exceeded 0.2 to 2.0 watt-hours per liter. Such an irradiation is up to 5-fold greater than the 0.2 to 0.4 watt-hours per liter exposure received by solvent in the Purex HA column while processing N Reactor fuel cooled 90 days with an assumed 12-minute solvent holdup in the extraction section.

The lifetime of the TBP in dodecane, solvent in the Purex process, is limited by radiolytic and hydrolytic decomposition of the extracting and diluting agent. The decomposition is evidenced by an increasing retention of fission products, especially zirconium, by the extractant. The chemical composition of the radiolytic-formed complexing agent was identified by molecular distillation concentration and gas chromatography as long carbon chain phosphoric acids, and to a lesser extent, polycarbonyl compounds (Ref. 40). Samples of used first-cycle Purex solvent (Ultrasene plus 30 vol% TBP) have shown high infrared absorption values for nitroalkane and carbonyl compounds.

Overall beta and gamma decontamination factors on the order of 10^6 obtained with Hanford fuel elements in Oak Ridge National Laboratory pilot plant runs, together with overall uranium losses on the order of 0.01 to 0.15%, further confirm the radiation stability of TBP (Ref. 2).

6.1.3.4.2 Tributyl Phosphate-Diluent- $UO_2(NO_3)_2$-HNO_3 Systems

6.1.3.4.2.1 Saturation

The formula of the uranium-TBP complex [$UO_2(NO_3)_2 \cdot 2$ TBP], the molecular weight of TBP (266), and the specific gravity of TBP (0.973 at 25°C) are known; therefore, it may be calculated that one liter of 30 vol% TBP in diluent (where TBP concentration = 1.095M) will complex 124 grams of uranium (0.52M). At this point, the solvent phase is considered to be 100% saturated. The apparent discrepancy between the values for half the TBP concentration (0.547M) and the actual saturation value (0.52M) is due to the volume change which occurs when the uranium transfers into the solvent.

6.1.3.4.2.2 Density

The densities of solutions of uranyl nitrate and/or nitric acid in TBP-diluent mixtures are dependent on the exact density of the diluent, as well as on the concentrations of the components and on the temperature. The solution densities at 25°C may be calculated from the following equation (Ref. 41):

$$d_{25} = d_s + (0.394 - 0.086\, d_s)\,[\underline{M}\ UO_2(NO_3)_2] + (0.063 - 0.046\, d_s)\,(\underline{M}\ HNO_3) \qquad (6.16)$$

where

d_{25} = density of solution at 25°C, in g/mℓ;

d_s = density of TBP-diluent mixture at 25°C, in g/mℓ (see Equation 6.12 for calculation method); and

$\underline{M}$ = concentration in mol/ℓ

An equation for use in calculating the density, d_T, of TBP-diluent-$UO_2(NO_3)_2$-HNO_3 solutions at temperatures between 10° and 70°C is (Ref. 36):

$$d_T = d_c + (3.20 - 0.005T - 0.008\ TBP)\ 10^{-2}\underline{M}\ HNO_3 + (3.16 - 0.005T + 0.0045\ TBP)\ 10^{-1}\underline{M}\ U + 2.1 \times 10^{-3}\ TBP - 7.4 \times 10^{-4}T \qquad (6.17)$$

where

d_c = density of the diluent at temperature, T, in g/mℓ;
T = temperature, in °C; and
TBP = concentration of TBP, in vol%.

Equation 6.17 can be simplified to give the following equation:

$$d_T = d_s + (0.318)[\underline{M}\ UO_2(NO_3)_2] + (0.028)(\underline{M}\ HNO_3) - 8 \times 10^{-4}\ (T-25) \qquad (6.18)$$

Approximate densities of TBP-diluent-$UO_2(NO_3)_2$-HNO_3 solutions at temperatures from 10° to 70°C may also be obtained from the nomograph presented in Figure 6-4.

The nomograph may be used for organic-phase solutions containing 0 to 0.6M uranium and 0 to 1.2M HNO_3, with densities at 25°C of solute-free TBP-diluent mixtures in the 0.81 to 0.87 g/mℓ range. Densities of those organic-phase (solvent plus solutes) solutions range from 0.79 to 1.0 g/mℓ.

The density of the solute-free solvent (TBP in diluent) at 25°C can be obtained from the plot on the right hand side of Figure 6-4. The plot covers TBP concentrations from 20 to 45 vol% and diluent densities at 25°C of 0.76 to 0.81 g/mℓ.

The use of the nomograph is demonstrated by following the broken lines on Figure 6-4. To find the density of an organic-phase solution, a line is drawn between the pure solvent density at 25°C (in this example, 0.852 g/mℓ) and the temperature of the solution (25°C). The intersection of this line with line R_1 gives a point from which another line is drawn to the solution nitric acid concentration (0.02M). The intersection of this second line with line R_2 gives a second point from which a third line is drawn to the solution uranyl nitrate concentration (0.36M). The intersection of the third line with the density line gives the density of the solution at 25°C (0.97 g/mℓ). The densities obtained from Figure 6-4, are accurate to within approximately ±1%.

In the temperature range from 20° to 80°C, the densities of all Purex solvent-phase solutions decrease about 0.0008 g/mℓ with each increase of one degree Celsius.

6.1.3.4.2.3 Viscosity

The viscosities of TBP-diluent mixtures containing uranyl nitrate and nitric acid increase linearly as the concentration of the uranium increases. The effect of nitric acid on the viscosity of the organic phase is negligible (Ref. 35).

6.1.3.4.2.4 Solubility

The solubility of TBP from TBP-hydrocarbon diluent mixtures in aqueous solutions at 20°C is plotted in Figure 6-1, which shows that as the volume percent of TBP in kerosene diluent is decreased, the solubility of TBP in the aqueous phase decreases. The effect of the presence of ionizable substances in the aqueous phase is shown by the curves for 0.1, 0.2, and 2.0M uranyl nitrate solutions, where the TBP solubility decreases as the uranyl nitrate concentration is increased. The unusual effect of nitric acid on the solubility of TBP is shown for any specific TBP-diluent mixture (e.g., 30 vol% TBP in diluent) by the curves for 0, 1, 7, and 11M HNO_3 (Ref. 12, 15, 42, 43). For aqueous solutions containing from 0 to 1M HNO_3, there is little or no effect on the TBP solubility (0.31 and 0.28 g/ℓ for 0 and 1M HNO_3, respectively). As the acid concentration increases from 1M to 7M HNO_3, the TBP solubility decreases until a minimum of 0.09 g/ℓ is reached at 7M HNO_3, and from this point the solubility again increases rapidly to a maximum of 1.1 g/ℓ at 15.9M HNO_3 (Ref. 11, 31).

The influence of temperature on the solubility of TBP is shown in Table 6-6. The solubility of TBP in water, from a mixture of 30 vol% TBP in diluent, decreases from 0.41 g/ℓ at 10°C to a minimum of 0.11 g/ℓ at 35°C, and then increases to 0.20 g/ℓ at 84°C. Similarly, the solubility of water in 30 vol% TBP in diluent mixture decreases from 8.9 g/ℓ at 10°C, to 4.3 g/ℓ at 50°C, and then increases to 6.4 g/ℓ at 84°C. The presence of ionizable solutes in the aqueous solutions reduces the solubility of TBP, and also decreases the effect of temperature.

6.1.3.4.2.5 Specific Heat

The specific heats of TBP, hydrocarbon diluent, and mixtures of TBP-diluent and uranyl nitrate at 25°C, range between 0.41 and 0.48 calorie/g-°C (Ref. 44).

TABLE 6-6. Effect of Temperature on Mutual Solubilities of TBP, Hydrocarbon Diluent, and Water.

Temperature, °C	Solubility, g/ℓ				
	Water in 30 vol% TBP-70% Shell E-2342[a]	TBP in Water	TBP in 0.12M HNO_3 0.2M UNH	TBP in 0.04M HNO_3 0.2M UNH	Shell E-2342[a] in Water
10	8.9	0.41	--	--	--
25	7.9	0.26	0.04	0.11	0.004
35	6.9	0.11	--	--	--
50	4.3	0.12	0.05	0.10	0.004
70	5.8	0.18	--	--	--
84	6.4	0.20	--	--	--

[a]Solubilities for other commercial diluents such as NPH should be very close to those determined for Shell E-2342.

6.1.3.4.2.6 Dielectric Constant

The dielectric constant of solvent-phase solutions of uranyl nitrate and nitric acid varies little with the solute concentrations; under the various conditions of the Purex chemical flowsheet, the dielectric constant ranges from 3 to 5, as compared with approximately 80 for Purex aqueous streams.

6.1.3.5 Aqueous Uranyl Nitrate Solutions

The physical properties of the aqueous uranium solutions given in this section are those of major importance to the operation and control of the process equipment.

Nitric acid is the only constituent (other than the uranium itself) present in aqueous uranium streams which has an appreciable effect on the physical properties of the solutions. The plutonium contained in some uranium solutions is present in such low concentrations that it does not significantly affect the solution properties. Likewise, the minor components, namely, neptunium, fission products, sodium, and iron salts, have no significant effect.

Uranium in the aqueous solutions of the Purex process is always present as uranyl nitrate. This compound crystallizes as a bright yellow hexahydrate (UNH) solid, and imparts an intense yellow color to its solutions, even in very low concentrations. The intensity of the color varies with concentration, and can be used as an empirical means of estimating concentrations.

In order to aid in converting uranium concentrations in aqueous streams from weight percent uranyl nitrate to molarity, a conversion graph has been included as Figure 6-5 (Ref. 45). In view of the very small contribution which nitric acid makes toward the density of solutions of moderate uranyl nitrate concentrations (see Equation 6.20 in 6.1.3.5.2), the conversion curves of Figure 6-5 may be used for solutions containing up to 2M HNO_3, with an error of only a few percent. If the density of any system is known, the conversion of concentration units for any of the components may be obtained from the general equation:

$$\text{Weight \%} = \text{Molarity} \times \frac{\text{Formula weight}}{10 \times \text{Density}} \qquad (6.19)$$

where the density of the solution (in g/mℓ) and molarity of the component are determined at the same temperature.

6.1.3.5.1 Solubility

A saturated solution of uranyl nitrate at 25°C represents about 72 wt% or 2.6M of UNH $[UO^2(NO^3)^2 \cdot 6H^2O]$ (Ref. 46). The presence of nitric acid markedly reduces the solubility of uranyl nitrate in water, as shown by the temperature-solubility phase diagrams for the $UO_2(NO_3)_2$-HNO_3-H_2O systems given in Figure 6-6 (Ref. 42, 45, 47-53). A solution of 60 wt% nitric acid (13M) saturated with respect to uranyl nitrate contains 23.5 wt%, or 0.72M uranyl nitrate at 25°C. The saturation temperatures plotted on Figure 6-6 are, for practical purposes, considered as the freezing and melting points of the systems represented. The inflections in the 0.0M HNO_3 curve are considered eutectic points for the solid phases as indicated.

6.1.3.5.2 Density

The densities of aqueous solutions of the system $UO_2(NO_3)_2$-HNO_3-H_2O at 25°C are plotted in Figure 6-7, where uranyl nitrate is represented in moles per liter from 0M to 2.6M (saturation of $UO_2(NO_3)_2$ at 25°C), and nitric acid is included at concentrations of 0, 1, 2, and 3M (Ref. 54). Densities of specific solutions at 25°C can also be calculated for given compositions by means of the following equation:

$$d_{25} = 0.99704 + (0.3166)(\underline{M}\ U) + (0.0327)\ (\underline{M}\ HNO_3) - (0.00113)(\underline{M}\ U)(\underline{M}\ HNO_3) \qquad (6.20)$$

where

d_{25} = density at 25°C, g/mℓ

$\underline{M}$ = molarity of solution component

Equation 6.20, which is used at the Savannah River Plant, is slightly different, and probably more accurate, than a comparable equation given in the original Purex Technical Manual (HW-31000). The latter equation was adapted from one derived for the system: $UO_2(NO_3)_2$ - $Al(NO_3)_3$ - HNO_3 (or NaOH) - H_2O - hexone.

9413275.1086

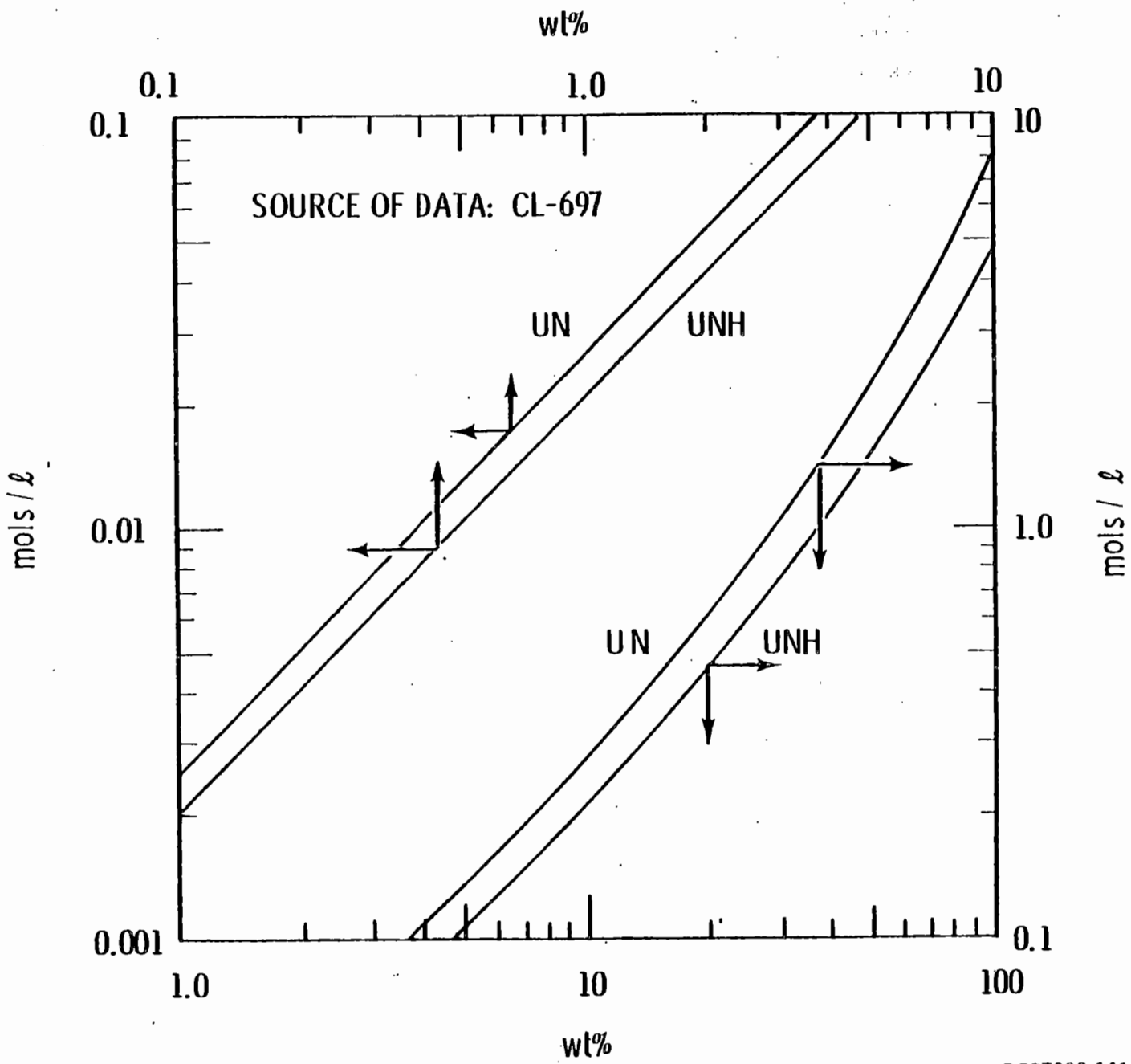

RCP7908-141

FIGURE 6-5. Aqueous Uranyl Nitrate Solutions, Conversion From Mola to Weight Percent.

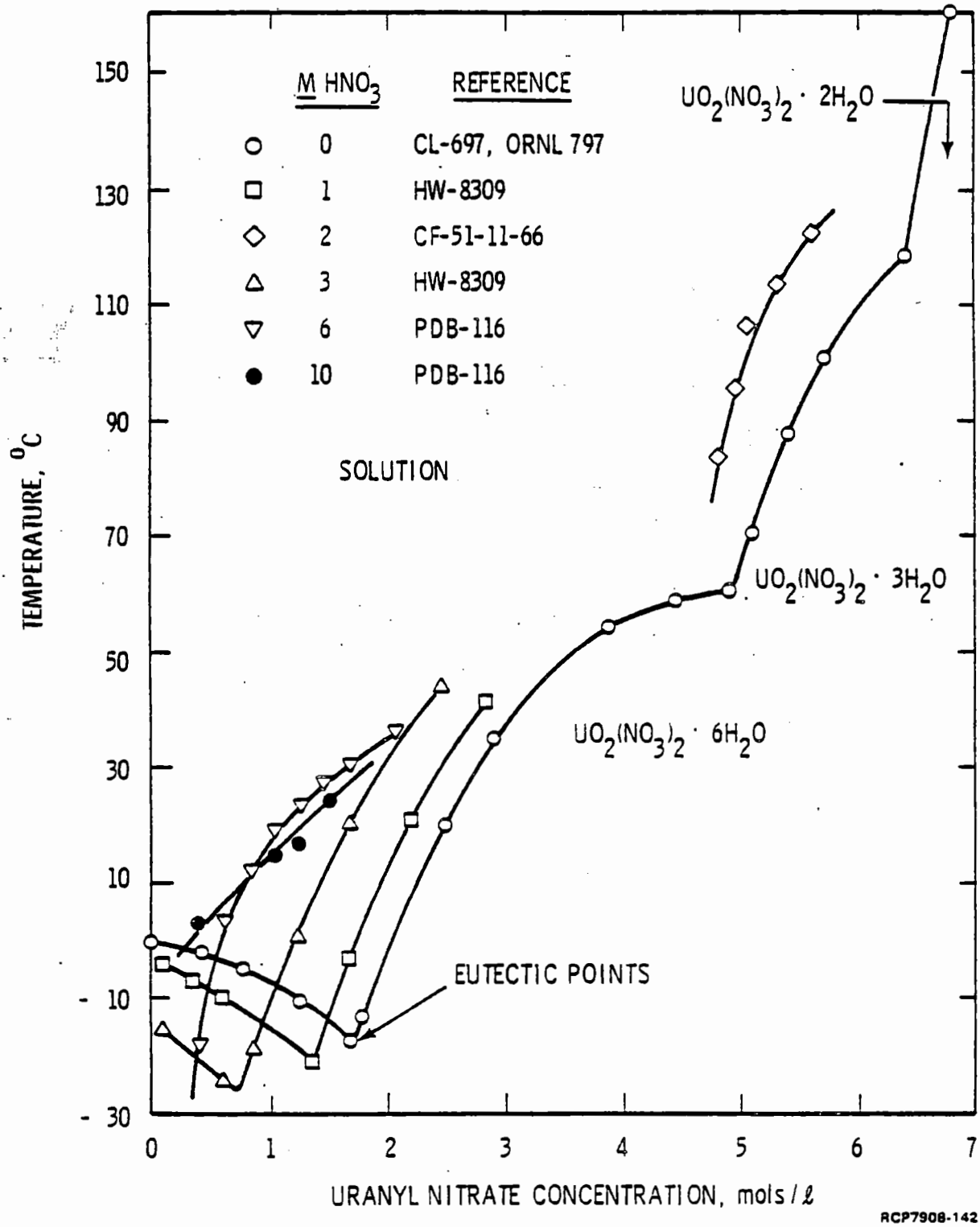

FIGURE 6-6. Effect of Nitric Acid Concentration on Solubility of Uranyl Nitrate.

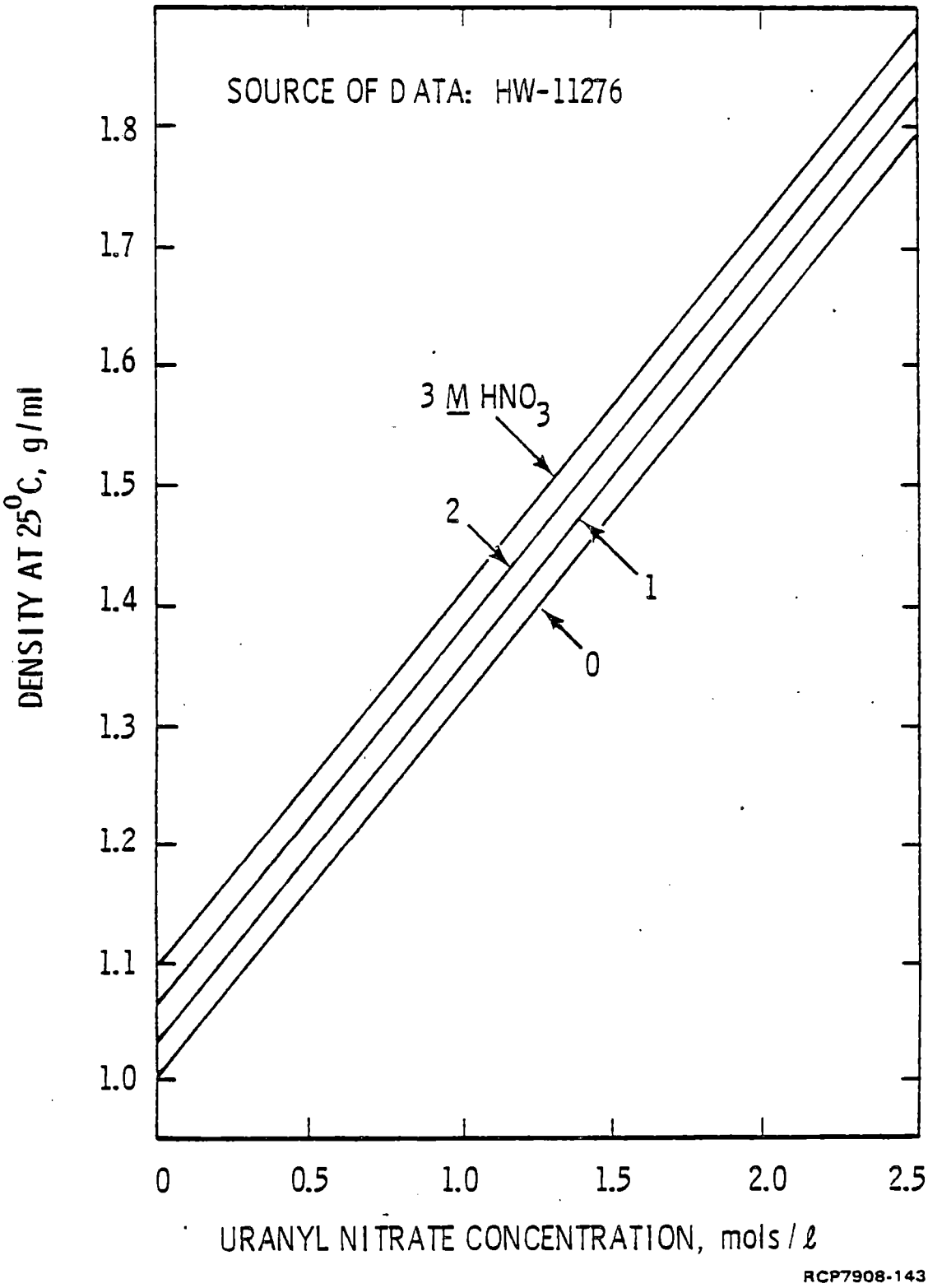

FIGURE 6-7. Effect of Nitric Acid Concentration on Density of Uranyl Nitrate Solutions.

The effects of aqueous-soluble process materials, such as sodium nitrite, sodium nitrate, and ferrous sulfamate [Fe $(NH_2SO_3)_2$], on the density of aqueous uranyl nitrate solutions are very small at the concentrations in which they are present in the Purex process streams. Therefore, they have been neglected in calculating the solution density (Ref. 54).

The density of an aqueous uranyl nitrate-nitric acid solution at 25°C can be converted to the density of other temperatures between 0° and 40°C by means of the following equation (Ref. 53):

$$d_T = 1.0125\ d_{25} + 0.000145T - 0.0005T\ d_{25} - 0.0036 \qquad (6.21)$$

where

T = temperature, °C

The densities of uranyl nitrate solutions at their boiling points are plotted in Figure 6-8, with nitric acid concentrations from 0M to 10M and temperature from 100° to 120°C as parameters (Ref. 45, 55).

6.1.3.5.3 Viscosity

The viscosities of aqueous uranium solutions in the Purex process at 25°C can be calculated by means of the following equation (Ref. 54):

$$\log_{10}\eta = 0.9527 + 0.2426\underline{M}_U + 0.0100\underline{M}_U^2 + [0.0089 - 0.023\underline{M}_U]\underline{M}_H \qquad (6.22)$$

where

η = viscosity in millipoises

$\underline{M}_U$ = molarity of uranyl nitrate

$\underline{M}_H$ = molarity of nitric acid

Thus, the viscosity of 1.65M $UO_2(NO_3)_2$, 0.39M HNO_3 (HA column feed) at 25°C is 23 millipoises. Other process materials have little effect on the viscosity of the Purex aqueous uranium streams because of the low concentrations in which they are present. However, if a high degree of precision is required, coefficients for use in Equation 6.22 for calculating viscosities of solutions containing various other solutes (aluminum nitrate, sodium nitrate, ferrous sulfamate, etc.) are given in Reference 54.

6.1.3.5.4 Hydrogen Ion Concentration (pH)

The pH values at 25°C of aqueous uranium solutions containing from 0.1 to 2.6M $UO_2(NO_3)_2$ and from -0.2 to 016M HNO_3 decrease at a constant nitric acid concentration with an increase in uranium concentration.

9413275.1090

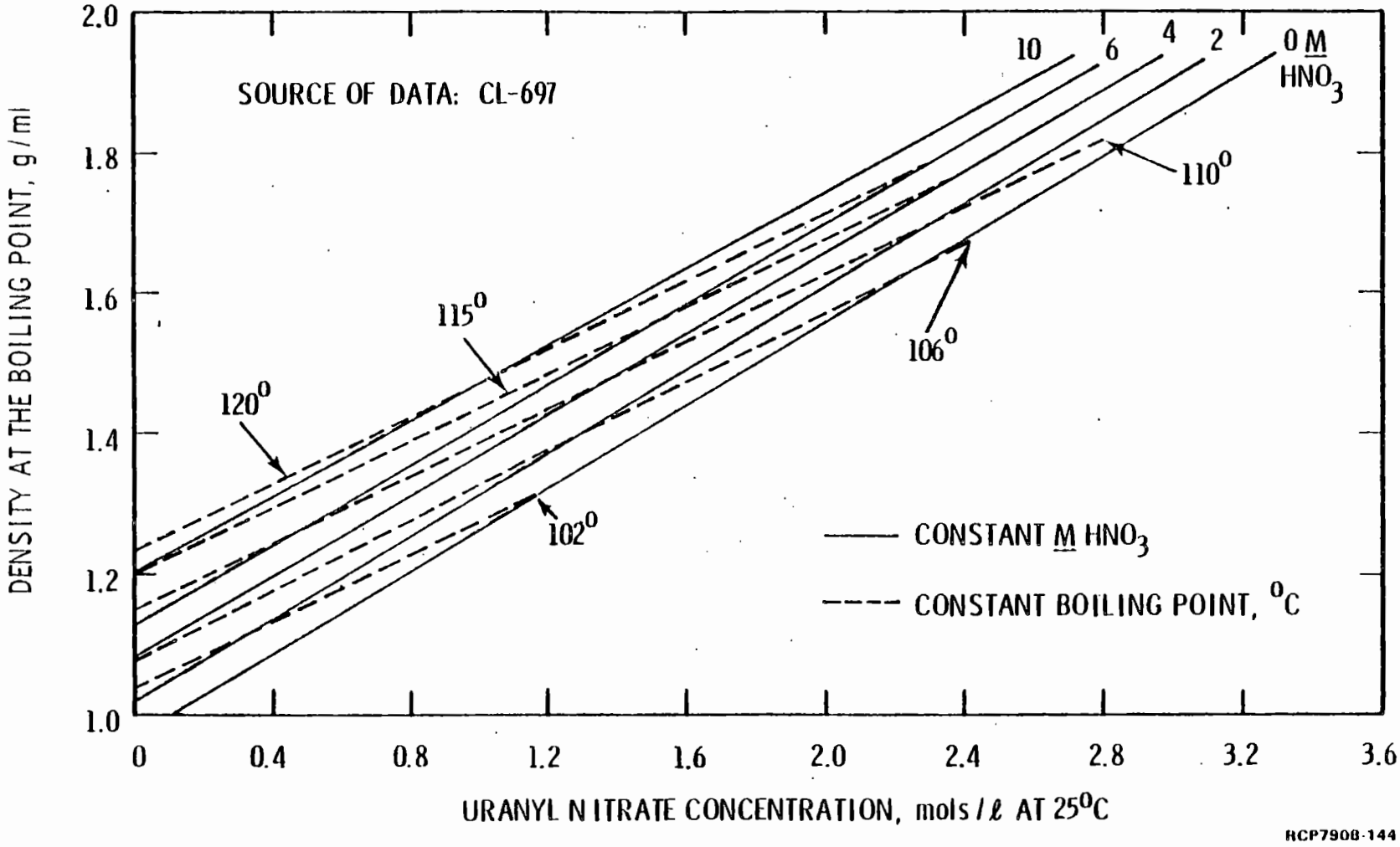

FIGURE 6-8. Effect of Nitric Acid Concentration on Density of Uranyl Nitrate Solutions at the Boiling Point.

6.1.3.5.5 Boiling Point

Boiling points for the system $UO_2(NO_3)_2$-HNO_3-H_2O are plotted on a phase diagram in Figure 6-9 as isotherms ranging from 101° and 188°C (Ref. 56). The three components of the system are represented in weight percent. The uranium concentrations may be converted to molarity by using Figure 6-5. Figure 6-9 also includes four distillation lines which show the change in composition of the solutions as a function of concentration. As the temperature is increased, water is rapidly removed until the temperature reaches approximately 120°C, at which point water and nitric acid form the maximum-boiling azeotrope, and 68 wt% nitric acid is distilled from the solution. At approximately 188°C [the decomposition temperature of uranyl nitrate (Ref. 49)], all of the free nitric acid has been removed from the solution, leaving 92 wt% uranyl nitrate and 8 wt% water of hydration. This composition corresponds to the compound $UO_2(NO_3)_2 \cdot 2H_2O$. It will be noted that further distillation above 188°C renders the solution acid deficient, indicating that the uranyl nitrate is decomposing (Ref. 45, 56). In the presence of TBP, however, the incipient denitration temperature of uranyl nitrate may be reduced to approximately 140°C (Ref. 57).

Boiling points of uranyl nitrate solutions, from 100° to 120°C, are also given in Figure 6-8, where the densities of the solutions are plotted at their boiling points.

The boiling point of 100% UNH is 118.6 ± 0.4°C at 760 mm mercury absolute pressure. The boiling point of UNH increases directly with pressure in the ratio of 1°C for each 16 mm mercury over the pressure range of 680 to 830 mm of mercury (Ref. 57).

6.1.3.5.6 Specific Heat

The specific heats of uranyl nitrate solutions from 0.07M to 2.6M are shown in Figure 6-10. The figure stops at 2.6M (56 wt%) $UO_2(NO_3)_2$, since this is the saturation temperature at 25°C, and beyond this concentration $UO_2(NO_3)_2 \cdot 6H_2O$ begins to crystallize out of solution. The specific heat of solid $UO_2(NO_3)_2 \cdot 6H_2O$ at 25°C is 0.23 cal/g-°C.

6.1.3.5.7 Refractive Index

The refractive indices at 25°C of uranyl nitrate solutions from 0.0M to 2.6M are included in Figure 6-10 (Ref. 45).

6.1.3.6 Aqueous Plutonium Nitrate Solutions

The physical properties of aqueous plutonium solutions are of interest in the Purex process only at the final plutonium product concentration step, since the plutonium concentration in other process solutions is too low to exert an appreciable influence on the physical properties of the

9413275.1092

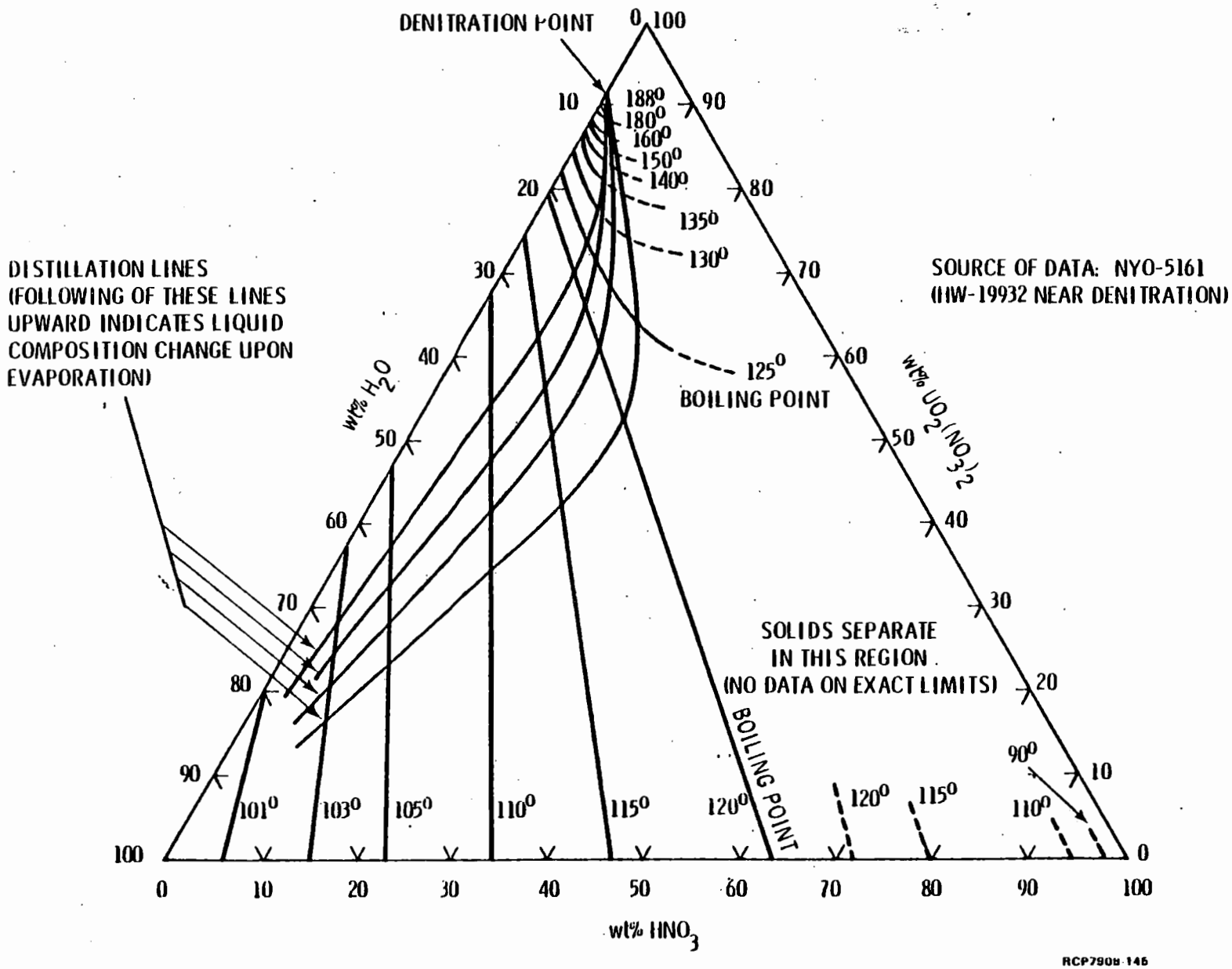

FIGURE 6-9. Boiling Point Isotherms of the System $UO_2(NO_3)_2$-HNO_3-H_2O.

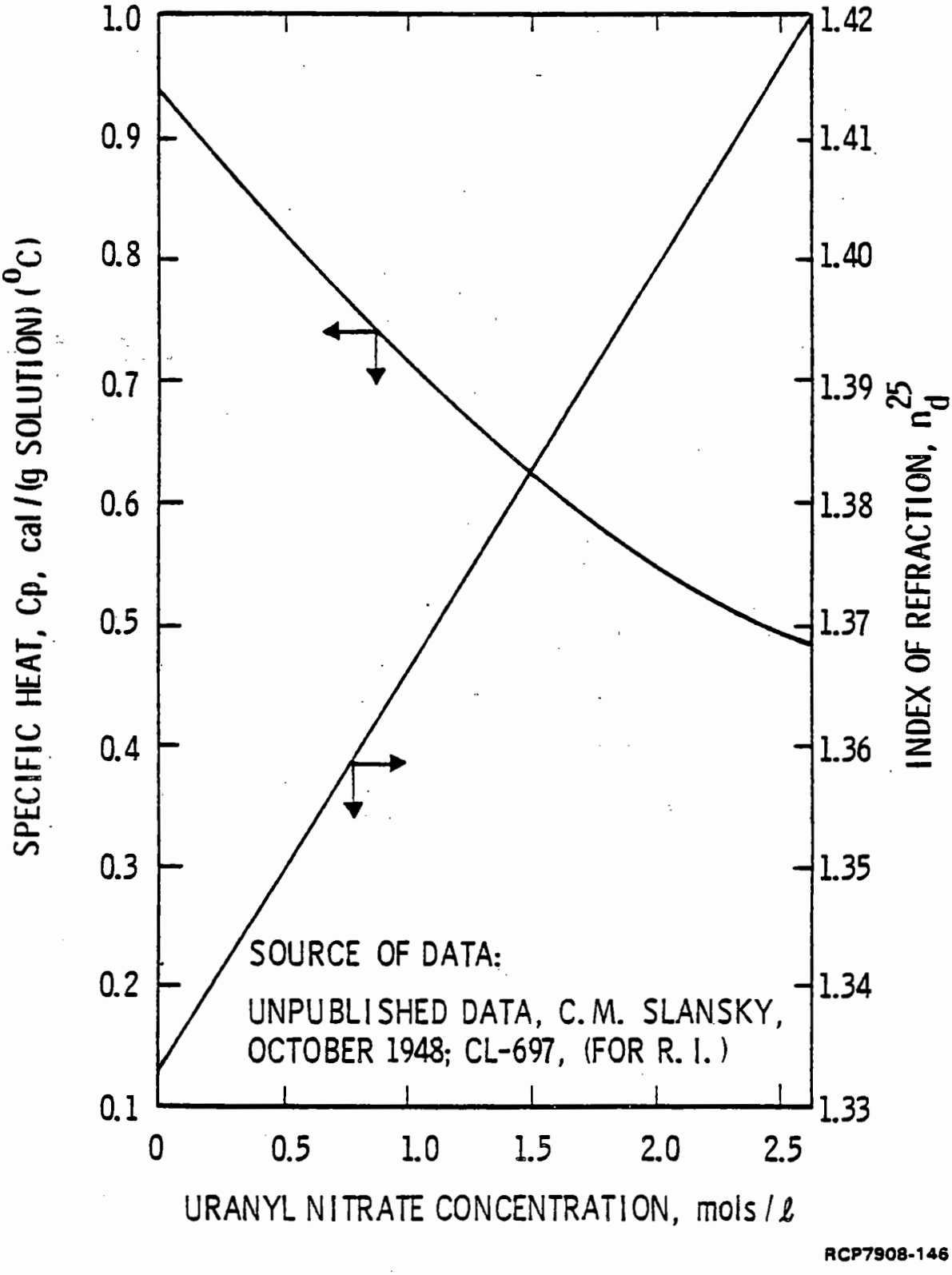

FIGURE 6-10. Specific Heat and Refractive Index of Uranyl Nitrate Solutions.

solutions. The effect of process amounts of plutonium in the 2BP stream upon such properties as density, freezing point, and viscosity is slight. On the other hand, the chemical behavior of plutonium in solution is of fundamental importance throughout the entire process. Both types of data are included in this subsection.

6.1.3.6.1 Solubility

The nitrates of plutonium are very soluble in water. However, solutions of plutonium nitrate, $Pu(NO_3)_4$, require the presence of from one to five moles of nitric acid per liter to prevent hydrolysis and subsequent polymerization or precipitation of the hydroxide. The plutonium (IV) polymer is discussed in the following subsection and in Chapter 7.0. Plutonium (VI) does not form the polymer in low acid solutions.

The solubility of plutonium (IV) nitrate is in the range of 2.1 to 2.5 mol/ℓ at 25°C in the presence of 1.8M HNO_3 (Ref. 58, 59). The solubility of plutonium (VI) nitrate is 2.1 mol/ℓ at 25°C (Ref. 58, 60).

6.1.3.6.2 Specific Gravity

The specific gravities of aqueous plutonium (IV) nitrate-nitric acid solutions at 25°C can be calculated by means of the following equation (Ref. 61):

$$\text{Sp.G.} = 1 + (0.031)(\underline{M}\ HNO_3) + (0.00146)(g\ Pu/\ell) \qquad (6.23)$$

where

Sp.G. = specific gravity of the solution at 25°C

$\underline{M}\ HNO_3$ = molarity of nitric acid; and

g Pu/ℓ = concentration of plutonium, in g/ℓ.

6.1.3.6.3 Ionic Species

Although the Purex process makes use of only the plutonium (III) and plutonium (IV) oxidation states in the plutonium separation steps, all of the plutonium valence states possible in aqueous solutions are encountered: plutonium (III) - blue-violet in color; plutonium (IV) - green [the polymeric form of plutonium (IV), stable at pH values above 1.0 to 1.3, is brown]; plutonium (V) - colorless; and plutonium (VI) - pink-orange. The ionic species present in a non-complexing medium are Pu^{+3}, Pu^{+4}, PuO_2^{+}, and PuO_2^{+2}, all highly hydrated (Ref. 62). The Pu^{+4} and PuO_2^{+2} are complexed by nitrate ion. In 2M HNO_3, the equilibrium constant for the reaction, $Pu^{+4} + NO_3^- \rightleftharpoons Pu(NO_3)^{+3}$, is approximately 2.9 (Ref. 63). Nitrate ion, therefore, is an effective salting agent for plutonium (IV), since it is probable that plutonium (IV) is extracted as the nitrate complex or the neutral molecule. The equilibrium constant for the reaction, $PuO_2^{+2} + NO_3^- \rightleftharpoons PuO_2NO_3^+$, is about 0.19 at 8M nitrate ion concentration (Ref. 64).

Plutonium (IV) is highly susceptible to complexing with sulfate ion, which was once used in the plant, the equilibrium constant for the reaction $Pu^{+4} + HSO_4^- \rightleftarrows PuSO_4^{+2} + H^+$ being approximately 500 at 2.3M H_2SO_4 concentration (Ref. 63).

6.1.3.6.4 Oxidation - Reduction

The formal oxidation potentials at which the concentrations of oxidized and reduced species are equal are given in Table 6-7 (Ref. 60, 62). The equations are written with the number of electrons involved on the right. The sign convention is used whereby the oxidized form of any couple will oxidize the reduced form of any couple of algebraically greater oxidation potential. Conversely, the reduced form of any couple will reduce the oxidized form of any couple of lower oxidation potential.

Comparing the above plutonium couples with the ferrous-ferric oxidation potential,

$$Fe^{+2} \rightarrow Fe^{+3} + e^-, \; E° = -0.771, \qquad (6.24)$$

where

E° is the oxidation potential in volts,

it is seen that ferrous ion (added in the Purex process in the form of ferrous sulfamate) is capable of reducing the oxidized form of any of the plutonium couples listed; i.e., of converting plutonium in any other valence state to plutonium (III). The reduction of plutonium (IV) to plutonium (III) by ferrous ion is nearly quantitative in 3 to 5 minutes at 25°C and nearly independent of acidity and uranium concentration.

The sulfamic acid formed from the ionization of ferrous sulfamate functions as a holding reductant; i.e., it prevents the oxidation of Fe^{+2} to Fe^{+3} by nitric acid or air.

The oxidation potential for the hydroxylamine-nitrous oxide couple,

$$2NH_2OH + 4OH^- \rightarrow N_2O + 5H_2O + 4e^-, \; E° = +1.05, \qquad (6.25)$$

shows that hydroxylamine could be used as a plutonium reductant in place of ferrous ion. However, the reaction rate for the reduction of plutonium (IV) by hydroxylamine rapidly decreases as the concentration of nitric acid is increased. The reduction is essentially complete in 1 minute in the presence of 0.66M HNO_3, but requires 10 minutes for 80% completion with 1.0M HNO_3 (Ref. 65).

Comparison of the potential of the nitric oxide-nitrous acid couple,

$$H_2O + NO \rightarrow HNO_2 + H^+ + e^-, \; E° = -0.99, \qquad (6.26)$$

with those of the reactions in Table 6-7 shows that nitrous acid (or a metal nitrite in acidic solution) will oxidize plutonium (III) and

9413275.1096

TABLE 6-7. Plutonium Series Oxidation Potentials.

Reaction Number	Couple (Pu Valences)	Reaction	Oxidation Potential,[a] Volts
1	V-VI	$PuO_2^{+} \rightarrow PuO_2^{+2} + e^-$	-0.91
2	III-IV	$Pu^{+3} \rightarrow Pu^{+4} + e^-$	-0.92
3	III-VI	$Pu^{+3} + 2H_2O \rightarrow PuO_2^{+2} + 4H^+ + 3\ e^-$	-1.04
4	IV-VI	$Pu^{+4} + 2H_2O \rightarrow PuO_2^{+2} + 4H^+ + 2\ e^-$	-1.10
5	III-V	$Pu^{+3} + 2H_2O \rightarrow PuO_2^{+} + 4H^+ + 2\ e^-$	-1.10
6	IV-V	$Pu^{+4} + 2H_2O \rightarrow PuO_2^{+} + 4H^+ + e^-$	-1.29

[a]Referred to the $H_2 \rightarrow 2H^+$ couple as zero at 25° to 30°C in 1M HNO_3.

plutonium (V) to plutonium (IV) and plutonium (VI), respectively, and also reduce plutonium (V) and plutonium (VI) to plutonium (IV) and plutonium (III). Thus, the net effect of the nitrous acid is to oxidize plutonium (III) and reduce plutonium (VI) to plutonium (IV). Gaseous nitrogen dioxide, N_2O_4, in the presence of water forms nitrous and nitric acids, and is therefore a possible alternate oxidant for the oxidation of plutonium (III) to plutonium (IV).

The rate of oxidation of plutonium (III) to plutonium (IV) by nitrous acid is highly dependent upon the conditions of the system. It has been shown that over 99% of the plutonium (III) in the 1BP stream is oxidized within a few minutes at 25°C (Ref. 66) when nitric acid and sodium nitrite are added to the 2AF stream, giving a nitric acid concentration of 3.3M. However, other investigations have found that under similar conditions with respect to plutonium (III) and iron (III), but dilute (0.5M) nitric acid, 30 minutes are required to obtain 99% oxidation (Ref. 67).

Plutonium (III) is also oxidized to plutonium (IV) by nitrate ion. The reaction is auto-catalytic; i.e., the nitrite catalyst is produced in the reaction, as follows:

$$Pu^{+3} + NO_3^- + 3H^+ + e^- \xrightarrow{HNO_2} Pu^{+4} + HNO_2 + H_2O \qquad (6.27)$$

In the presence of 16M HNO_3, the reaction goes to completion in a few seconds. The rate of oxidation for Purex conditions is not known, but it is believed to be much lower than the rate of oxidation by nitrite ion.

6.1.3.6.5 Disproportionation

The most important disproportionation mechanism of plutonium is the following:

$$2Pu^{+4} + 2H_2O \rightleftarrows Pu^{+3} + PuO_2 + 4H^+ \qquad (6.28)$$

This slow disproportionation is followed by the more rapid reaction:

$$PuO_2^+ + Pu^{+4} \rightleftarrows PuO_2^{+2} + Pu^{+3} \qquad (6.29)$$

which is the mechanism for the oxidation of plutonium (IV) to plutonium (VI) at macroconcentrations of plutonium, the role of the oxidizing agent being to convert the plutonium (III) formed to plutonium (IV).

In the reduction of plutonium (IV) to plutonium (III), the above disproportionation mechanism is reversed:

$$PuO_2^+ + Pu^{+3} + 4H^+ \rightleftarrows 2Pu^{+4} + 2H_2O \qquad (6.30)$$

The role of the reducing agent is to reduce PuO_2^{+2} to PuO_2^+ and Pu^{+4} to Pu^{+3}.

Due to the small differences in magnitude of the oxidation potentials of plutonium, given in Table 6-7, and to the rapid equilibrium of the electron transfer in Equation 6.29, it is possible for all plutonium species to coexist in aqueous solutions; e.g., a solution of pure plutonium (IV) salt in 0.5M HCl contains, at equilibrium at 25°C, 27.2, 58.4, 0.8 and 13.6% of plutonium (III), (IV), (V), and (VI), respectively (Ref. 62).

Under Purex process conditions, any plutonium (VI) formed by disproportionation is reduced to plutonium (IV) by nitrous acid. This reduction is measurably slow at room temperature, especially at high acid concentration. The presence of low concentrations of ferric ion [0.01M Fe (III)] however, catalyzes the reaction so that the reduction is complete in a few minutes (Ref. 68). After concentration, however, the plutonium product solution is believed to contain about 10% plutonium (VI), based on data for Z Plant product solutions with a similar nitric acid concentration. Valence data for Purex plutonium product solutions have not been obtained.

9413275.1098

6.1.3.6.6 Radiation Stability

Alpha particle bombardment from plutonium decay causes both oxidation and reduction of plutonium (Ref. 69). Plutonium (VI) and part of the plutonium (IV) are reduced, while plutonium (III) and part of the plutonium (IV) are oxidized. The amount of each oxidation state present in a system after equilibrium depends on the oxidation state of the major plutonium species present in the original solution. In determining the effect of alpha radiation on plutonium (IV) and plutonium (VI) solutions, measurements were reported in terms of daily decrease in the average valence state of plutonium. It is known that acid concentration and temperature affect the rate of reduction. The decrease in the average valence state of plutonium under the influence of its own alpha radiation ranged from 0.3 to 2% per day in acidic (0.1M to 1.5M) solutions (Ref. 62).

The effect of beta and gamma radiation on the stability of plutonium solutions is believed to be small. No apparent reduction of plutonium (VI) was noted on the exposure of a solution for 1 hour to beta and gamma radiation from dissolved fuel elements containing on the order of 2% of the beta activity of Purex dissolver solution (Ref. 64).

6.1.3.6.7 Gas Evolution

Plutonium nitrate solutions form a number of radiolytic products due to the alpha particle emission of the plutonium. The products include those expected from the radiolysis of water, i.e., .H, .OH, $.HO_2$, hydrogen peroxide, and hydrogen, as well as nitrous acid and nitrogen oxides which result from the radiolysis of nitrate.

Of the radiolysis products, $.H_2$, .H, H_2O_2 and some of the nitrogen oxides usually function as reducing agents while .OH and $.HO_2$ are usually oxidizing agents.

A second mode of gas generation takes place during the reduction of plutonium (VI). This reaction releases oxygen in accordance with the following equation:

$$12PuO_2^{++} + 12H^+ \rightarrow 12Pu^{+4} + 9\ O_2 \uparrow + 6H_2O + 12e^- \qquad (6.31)$$

6.1.3.6.8 Plutonium Polymer Formation

Tetravalent plutonium nitrate, $Pu(NO_3)_4$, is relatively unstable in dilute acid solutions, changing to the polymeric hydroxide (or hydrous oxide) with the release of nitric acid. The acidity at which plutonium polymer is formed is dependent upon the temperature and plutonium concentration, as well as the presence of other metal nitrates. The polymer is formed in a matter of minutes when the acidity falls below about 0.01M (Ref. 70). Between a pH of 2.5 and 3.0, the polymer agglomerates and precipitates (Ref. 71). The polymer can also be formed at an acidity of 0.1M at elevated temperatures, and at even higher acidities at high plutonium concentrations and elevated temperatures.

Polymeric plutonium (IV) may be formed in dissolver solution or process streams which are allowed to become acid deficient. An ionic plutonium (IV) solution, however, is stable for approximately 24 hours in a solution containing 1.92M $UO_2(NO_3)_2$, 0.20M acid deficient, contrasting with the observed very rapid polymerization in acid-deficient aluminum nitrate solution (Ref. 72).

Plutonium polymer is an electrically positive colloid which is electrostatically adsorbed on substances such as paper, sand and glass, which assume negative surface charges when immersed in water (Ref. 63). The polymer is not extracted by TBP at flowsheet conditions, causing excessive plutonium waste losses if present. The rate of conversion of the colloid into the nitrate complex depends upon the acid concentration and temperature. The conversion is slow at room temperature in 1M HNO_3, but proceeds very rapidly in concentrated acid at high temperatures, requiring 1 to 2 hours for completion in boiling 6M HNO_3 (Ref. 63, 70). The conversion of polymer to the nitrate complex is much slower, however, if the polymeric solution is heated previous to the acidification. The heating, as stated previously, appears to cause agglomeration of the colloid into a stringy amorphous solid.

All of the plutonium-containing aqueous process streams are at least 0.1M HNO_3 so that the formation of the inextractable plutonium (IV) polymer will not occur under normal operating conditions. In the organic process solutions, plutonium is complexed with TBP so that it is not available for polymer formation in the organic phase.

Plutonium polymer is discussed further in Section 7.2.4 of Chapter 7.0.

6.1.3.7 Reducing Agents

Ferrous ion, introduced in the form of ferrous sulfamate, is employed as the agent for the reduction of plutonium to its trivalent state in the

1B and 2N columns. Sulfamate ion, $NH_2SO_3^-$, introduced as ferrous sulfamate, or as sulfamic acid, is a holding reductant to prevent the premature nitrite-catalyzed oxidation of iron (II) to iron (III) by nitrate ion, and hence reoxidation of plutonium (III) to plutonium (IV). Hydrazine in the 2DF stream reduces any residual nitrite, and hydroxylamine nitrate added to the 2DIS stream ensures complete reduction of any plutonium entering the 2D column. Hydroxylamine nitrate with hydrazine as a holding reductant is also added to the 2B column to reduce plutonium to the trivalent state. Thus, plutonium is prevented from extracting into the organic scrub stream (2BS), which is used to remove residual uranium, thereby improving product quality.

Neptunium entering the 2D column is reduced to the less extractable tetravalent state by the hydroxylamine. By maintaining high uranium saturation of the solvent phase, the neptunium is made to leave the column with the aqueous 2DW stream. Hydrazine is also used in the 2N column as a holding reductant, in conjunction with the ferrous sulfamate, to ensure that the neptunium and plutonium are reduced to, and remain in, their lower valence states.

6.1.3.7.1 Ferrous Sulfamate

The anhydrous salt of ferrous sulfamate $[Fe(SO_3NH_2)_2]$ is highly deliquescent, and is believed to absorb five molecules of water of hydration. Ferrous sulfamate has the following physical properties:

- Appearance - 2.5M solution is blue-green in color (Ref. 73)
- Melting point - 135°C (Ref. 74)
- Solubility - The saturation concentration in water is approximately 3.6 to 3.8M at 25°C.

High pH contributes to the stability of sulfamate ion towards hydrolysis, while low pH is necessary for the stability of ferrous ion towards air oxidation and consequent precipitation. The stability of ferrous sulfamate toward ferric precipitation is satisfactory upon maintaining the pH of solution at 2 or slightly less, with a 2 to 3% excess of sulfamic acid (Ref. 73). The overall stability of a ferrous sulfamate solution maintained at a pH of 2 in a vessel containing an inert-gas blanket is limited by the rate of hydrolysis of sulfamate ion. This rate is approximately 0.1% per day at 25°C, and increases to over 4% per hour at 80°C. The total amount of sulfate ion in the solution due to hydrolysis will be the sum of that produced during the preparation of the ferrous sulfamate (approximately 1% of the initial sulfamic acid) plus that produced by aging of the solution.

The reaction between sulfamate ion and nitrous acid, described later in this subsection, is the reaction which prevents the oxidation of iron (II) to iron (III) through an autocatalytic mechanism involving nitrate ion (Ref. 75). In 5.0M HNO_3, where oxidation of iron (II) to iron (III) is normally rapid, sulfamate ion maintains the half-life of iron (II) in the range of 30 to 50 hours at a solution temperature of 25°C concentration, and temperature is shown in Table 6-8. From the table it can be seen that for a given sulfamate ion concentration, the half-life of ferrous ion decreases markedly with an increase in solution temperature, and with an increase in nitric acid concentration. The ion half-life with increased sulfamate is also shown.

TABLE 6-8. Stability of Ferrous Ion in Aqueous Solutions.

Solution Composition, mol/ℓ			Temperature, °C	Fe(II) Half-Life, hr
HNO_3	HSO_3NH_2	$FeSO_4 \cdot (NH_4)_2SO_4$		
4	0.2	0.1	25	130
4	0.2	0.1	48	7.1
4	0.2	0.1	70	0.5
6	0.2	0.1	25	23
6	0.2	0.1	50	1.1
8	0.2	0.1	25	4.3
8	0.2	0.1	50	0.3
8	0.3	0.1	25	8.2
8	0.4	0.1	25	11.0
10	0.1	0.1	25	<0.1
10	0.15	0.1	25	0.7

6.1.3.7.2 Sulfamic Acid

All ordinary salts of sulfamic acid (HSO_3NH_2) are extremely soluble in water being, in most instances, more soluble than the corresponding sulfate or nitrate. Water solubility of sulfamic acid increases with temperature, as shown in Table 6-9.

TABLE 6-9. Solubility of Sulfamic Acid In Water (Ref. 75).

Temperature, °C	Solubility, g HSO_3NH_2/ 100 g H_2O	Wt% HSO_3NH_2
0	14.68	12.8
10	18.56	15.7
20	21.32	17.6
30	26.09	20.7
40	29.49	22.8
50	32.82	24.7
60	37.10	27.1
70	41.91	29.5
80	47.08	32.0

Some other physical properties of sulfamic acid are as follows:

- Appearance: White crystalline solid, nonvolatile nonhygroscopic, odorless
- Melting point: 205°C (decomposes at 290°C) (Ref. 74)
- Heat of solution: -5800 cal/mole
- Density: 2.0 g/mℓ

6.1.3.7.2.1 Chemical Properties

Sulfamic acid is classed as a strong acid. Comparatively, the pH's of 0.5M aqueous solutions of phosphoric, sulfamic, and nitric acids are 1.9, 0.63, and 0.30, respectively (Ref. 74). In the following table, the pH of sulfamic acid is shown to increase with a decrease in concentration.

Concentration of Sulfamic Acid, M	pH
1.0	0.41
0.75	0.50
0.50	0.63
0.25	0.87
0.10	1.18
0.05	1.41
0.01	2.02

Sulfamic acid hydrolyzes according to the following reaction (Ref. 75).

$$HSO_3NH_2 + HOH \rightleftharpoons NH_4^+ + SO_4^= + H^+ \quad (6.32)$$

The hydrolysis rate at 25°C is about 0.1% per day for either a 1M HSO_3NH_2 solution in water or a 1M HSO_3NH_2 - 1M HNO_3 solution. A similar rate is found for a 1M HSO_3NH_2 - 1M $Al(NO_3)_3$ - 0.3M HNO_3 solution. The hydrolysis is a first-order reaction with rate constants at 80°C of 4.56 and 8.25% decomposed per hour for 1 and 10% solutions, respectively (Ref. 76, 77).

Sulfamate ion reacts rapidly and completely with nitrite ion to give nitrogen gas and sulfate ion according to the following reaction (Ref. 75).

$$HNO_2 + NH_2SO_3^- \rightleftharpoons N_2 + H^+ + SO_4^= + H_2O \quad (6.33)$$

Warm concentrated nitric acid reacts with sulfamic acid to produce N_2O gas and sulfuric acid (Ref. 77). Dichromate, permanganate, and ferric chloride solutions do not react with sulfamic acid (Ref. 75, 76, 78).

6.1.3.7.3 Hydrazine

Hydrazine (NH_2NH_2), which is a clear liquid, is purchased as a 35 wt% solution in water. Hydrazine is a powerful reducing agent. Some oxidizing agents oxidize aqueous solutions of hydrazine to ammonia with the formation of small amounts of hydrazoic acid, and other oxidizing agents give comparatively large yields of the acid, but little ammonia. In either case, ammonia formed would be immediately converted to ammonium nitrate. Pure hydrazine and its aqueous solutions are relatively stable, but decompose rapidly in the presence of alkali and air to form nitrogen and water.

Hydrazine in aqueous solutions decomposes at temperatures near the boiling point. It reacts vigorously with nitrous acid and other nitrites in accordance with the following reaction:

$$N_2H_4 + HNO_2 \rightarrow N_2O + NH_3 + H_2O \quad (6.34)$$

6.1.3.7.4 Hydroxylamine Nitrate

Hydroxylamine (NH_2OH) is a strong reductant. Its chemical stability is as follows:

- Pure aqueous solutions are stable even while boiling.
- Dilute nitric acid (0.1M) solutions of hydroxylamine nitrate ($NH_2OH \cdot HNO_3$) are stable at room temperature, but less stable at increasing acidity, especially at elevated temperatures.

- Decomposition in warm nitric acid, once initiated, proceeds autocatalytically, decomposing entirely to gases as follows:

$$4NH_2OH + 2HNO_3 \rightarrow 3N_2O + 7H_2O \qquad (6.35)$$

- Hydroxylamine nitrate is extremely hygroscopic.

- Hydroxylamine nitrate solutions, when heated under a flame, produce rapid dehydration followed by decomposition, but do not explode.

- Basic solutions of hydroxylamine are less stable than acid solutions, decomposing according to the equation:

$$4NH_2OH \cdot HNO_3 + 4OH^- \rightarrow N_2O + 2NH_3 + 4NO_3^- + 7H_2O \qquad (6.36)$$

- Nitrous acid decomposes hydroxylamine according to the equation:

$$NH_2OH + HNO_2 \rightarrow 2H_2O + N_2O \qquad (6.37)$$

- Hydroxylamine nitrate reduces plutonium according to the equations below, giving a mixture of N_2 and N_2O.

$$4\ Pu^{+4} + 2NH_3OH^+ \rightarrow 4Pu^{+3} + N_2O + H_2O + 6H^+ \qquad (6.38)$$

$$2Pu^{+4} + 2NH_3OH^+ \rightarrow 2Pu^{+3} + N_2 + 2H_2O + 4H^+ \qquad (6.39)$$

6.1.3.8 Surface and Interfacial Properties

The process of liquid-liquid countercurrent extraction involves intimate contact between two essentially immiscible liquids, during which time the solute is transferred from one phase to the other across the interface between the two phases. This desired contact is obtained in the Purex process by dispersing in one phase (which remains continuous) fine droplets of the other phase (which then becomes the discontinuous phase). Because of the specific gravity differential between the phases, the dispersed droplets rise or fall through the oppositely flowing continuous phase. Interfacial tension in such a system, analogous to surface tension in distillation and absorption processes, influences the size of the droplets of the dispersed phase. Smaller droplets are more easily formed by liquids of lower interfacial tension, the droplet diameter (when other factors are equal) being directly proportional to the interfacial tension. Small droplet diameters, in turn, mean higher total interfacial area, resulting in desirably high solute mass-transfer rates across the interface.

Too fine a dispersion is not desirable, however, as an excessively stable emulsion may result in increased difficulties of phase separation outweighing any advantages resulting from the increased interfacial area (Ref. 79). The dispersion and disengaging characteristics of liquid-liquid systems, a function of interfacial tension, have an important bearing on the performance of a pulse column, as discussed in Section 6.2.3. However, the exact relationship between interfacial tension measurements made in the laboratory and the capacity and/or efficiency of a pulse column of given design has not been defined completely.

6.1.3.8.1 Surface Tension (Ref. 80)

The attraction between molecules of a liquid manifests itself near the surface where the molecules are subject to an unbalanced force. The molecules at the surface are pulled inward by the subsurface molecules, and the liquid thus tends to adjust itself to give minimum surface area. The force is usually expressed in dynes/cm and is readily determined. The surface tension of a liquid is inversely proportional to the temperature and is decreased by certain surface-active agents. Some typical surface tension data are given in the following table (Ref. 81). From these data, the surface tension can be estimated to be about 26 dynes/cm for 30 vol% TBP in NPH.

Liquid	Temperature, °C	Surface Tension, Dynes/cm
H_2O	25	71.8
0.7M HNO_3	20	72.0
2.8M HNO_3	20	70.9
8.5M HNO_3	20	68.3
TBP	25	25.8
AMSCO 123-15	25	31.9
12.5 vol% TBP in Shell Deodorized Spray Base	25	26.6

6.1.3.8.2 Interfacial Tension

The same forces are involved in interfacial tension that are found in surface tension. However, when two partially miscible liquids are placed in contact, each dissolves to some extent in the other, and may cause marked changes in surface tension. The interfacial tension may be defined as the work required to increase the area of the interface by one square centimeter.

Figure 6-11 presents plots of interfacial tension between organic and various aqueous solutions against TBP concentration in a hydrocarbon diluent (Ref. 82). Tributyl phosphate has moderate surface-active properties, as may be seen from the rapid drop in interfacial tension as TBP is added to diluent.

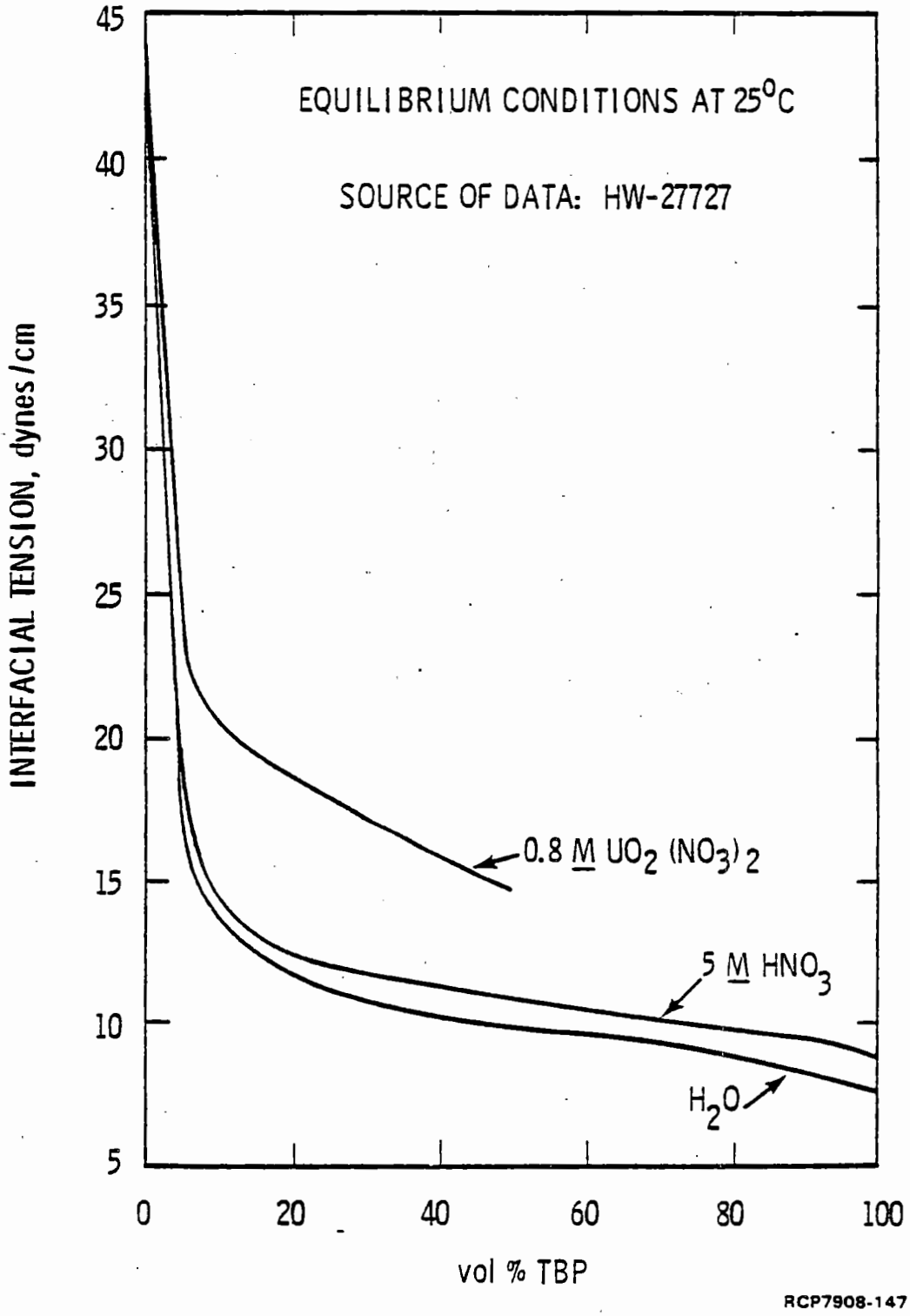

FIGURE 6-11. Interfacial Tension of TBP-AMSCO 125-90W Against Aqueous Solutions.

Table 6-10 lists the interfacial tension for a number of Purex-type systems at 24°C at equilibrium (Ref. 82, 83). The data indicate that the interfacial tension between 30 vol% TBP in NPH and 0.1M HNO_3 is between 10 and 11 dynes/cm.

TABLE 6-10. Organic-Aqueous Interfacial Tensions.

Initial Phase Compositions		Interfacial Tension, dynes/cm
Organic	Aqueous	
Drum TBP	H_2O	8.46
30% TBP in Ultrasene	H_2O	11.01
30% TBP in AMSCO 125-90W	H_2O	10.6
7% TBP in Ultrasene	H_2O	16.29
Drum Ultrasene	H_2O	44.85
AMSCO 125-90W	H_2O	44.0
30% TBP in Ultrasene	0.148M HNO_3	10.78
30% TBP in Ultrasene	1.67M HNO_3	10.85
30% TBP in AMSCO 125-90W	5.0M HNO_3	12.1
30% TBP in Ultrasene, 8.65 g U/ℓ	1.90M HNO_3, 0.55 g U/ℓ	11.29
30% TBP in Ultrasene, 76.5 g U/ℓ	2.03M HNO_3, 16.5 g U/ℓ	15.08
30% TBP in Ultrasene plus 0.05% DBP	H_2O	10.83
30% TBP in Ultrasene	0.1M NaOH	11.0

6.1.3.8.3 Contact Angles

The surface wetting characteristics of column internals are important both to the design and operation of the extraction columns. Measurements of the angle formed at the liquid-solid-liquid or liquid-solid-air boundaries when the liquid and solid surfaces are brought into contact in the presence of air or another (immiscible) liquid provide indications of these characteristics.

When the liquid completely wets the solid surface, i.e., a drop spreads to form a film of uniform thickness, the contact angle between the liquid and solid is said to be 0 degree. When no wetting occurs, i.e., a drop of liquid forms a perfect sphere with only a single point of contact, the contact angle is 180 degrees. Intermediate angles reflect intermediate degrees of wetting. In general, the greater the contact angle between a solid material surface and the dispersed phase liquid, the better the material is for making perforated plates in a pulse column cartridge.

While exact contact-angle measurements for Purex systems are not available, comparative aqueous-phase and organic-phase contact angles for clean stainless steel and three types of plastic surfaces are generally as follows (Ref. 84, 85, 86):

Surface	Contact Angle	
	Aqueous	Organic
Stainless Steel[a]	Lowest (i.e., most wetted)	High
Polyethylene[b]	2nd lowest	Lowest of 3 plastics
Fluorothene[b]	2nd highest	Between polyethylene and Teflon
Teflon[b]	Highest (i.e., least wetted)	Highest of 3 plastics

[a]Preferentially wetted by aqueous phase.

[b]Preferentially wetted by organic phase.

6.1.3.8.4 Dispersion and Disengaging Times

Effective extraction performance of a pulse column is dependent on the formation of a fine dispersion of one liquid phase into the other to provide a large interphase contact area. An additional requirement is that the dispersion formed in the column should be capable of disengaging (separating) fairly readily. Empirical tests of dispersion and disengaging times by a vibrational method may usually be qualitatively correlated with pulse column behavior. The method involves agitation of the two-phase mixture by reciprocating sieve plates. The use of stainless steel sieve plates results in dispersion of the organic phase in the aqueous phase, while the aqueous phase becomes dispersed if Fluorothene plates are used.

Typical dispersion and disengaging times for Purex process systems are presented in Table 6-11.

Dispersion times vary with TBP concentration, usually going through a maximum near 10 vol% TBP, and decreasing with increasing TBP concentration above 10% (Ref. 81).

Dispersion times for organic-in-aqueous phase dispersions are inversely dependent upon the rate of mass transfer of uranium or of nitric acid from the aqueous to the organic phase. This effect varies with the TBP concentration, being more pronounced in the 10 to 15% range than at

TABLE 6-11. Dispersion and Disengaging Times for Purex Process Systems.[a,b]

Applicable Section of Purex Column[c]	Dispersion Time, Sec.[d]		Disengaging Time, Sec.[e]	
	Stainless Steel[f]	Kel-F[g]	Stainless Steel[f]	Kel-F[g]
HA - Middle of extraction section (Final aq. phase U conc. ≅12 g/ℓ)	35	18	50	105
HA - Feed Point	15	2	50	108
HA - Top of scrub section	8	1	20	82
HC - Bottom	3	3	40	135
HC - Middle (Final org. phase U conc. ≅15 g/ℓ)	3	7	30	131
HC - Top	3	2	20	330
2A - Top of scrub section	40	4	35	60
Bottom of extraction section	40	4	35	60
2B - Top	9	-	30	-
Bottom	9	-	30	-
HAX vs H_2O (distilled)	3	-	78	-

[a]Average values obtained by contacting 12.5 mℓ of each phase in a 0.54-inch I.D. graduate with a pulse-type agitator. The agitator contains 5 stainless steel or Kel-F sieve plates mounted 0.25-inch apart on a 0.125-inch-diameter stainless steel shaft. The plates contain 0.030-inch holes on equilateral triangular spacing with 0.062 inch between centers. The agitator is moved up and down over a distance of 2.875 inches at a rate of 100 cycles/min.

[b]Valves are for synthetic solutions made up to Purex Flowsheet HW#3 compositions, Shell E-2342 diluent. Mass transfer was permitted to take place during dispersion test. Disengaging times are for essentially equilibrated liquids.

[c]Compositions of both phases approximating those encountered in the indicated section of the column.

[d]Time required to achieve constant dispersion. "Judgment factor" in determining when dispersion has ceased to change results in possible ±20% variation between investigators.

[e]Time required for the dispersion, after 2-min, agitation to settle to a 1-mm mixed phase thickness at the interface.

[f]Stainless steel sieve plates, giving organic-in-aqueous phase dispersion.

[g]Kel-F sieve plates, gives aqueous-in-organic phase dispersion.

higher or lower TBP concentrations. Dispersion time generally decreases with an increase in temperature. The effect of temperature is usually more pronounced in uranium-bearing streams.

The disengaging time varies little with the concentration of TBP in the 5 to 30 vol% range. A rise in temperature generally lowers the disengaging time slightly. Dibutyl phosphate, MBP, and other surface-active agents may greatly increase disengaging times.

6.1.3.9 Heats of Extraction and Stripping

The extraction of uranyl nitrate from an aqueous to an organic phase results in the liberation of heat ($-\Delta H$), while the stripping of uranyl nitrate from an organic to an aqueous phase results in the absorption of heat ($+\Delta H$). The opposite is true of nitric acid. Some values for the heats of extraction of uranyl nitrate and nitric acid, and heats of stripping of uranyl nitrate under various conditions, are shown in Tables 6-12 and 6-13 (Ref. 87, 88, 89).

The interphase transfer of plutonium (IV), gross beta-active fission products, ruthenium, zirconium, and niobium is accompanied, under Purex conditions, by heat effects in the same direction as for nitric acid. However, uranium and nitric acid are the only solutes present in Purex streams in sufficiently high concentrations to cause measurable temperature changes in the pulse columns. Even these effects are slight, the overall temperature rise in the HA column and the temperature reduction in the 1C column being approximately 1°C.

6.1.4 Solvent-Aqueous Phase Equilibria

The chemical bases of the Purex process are the extractability of uranyl nitrate, neptunium nitrate, and plutonium nitrate, and the relative inextractability of fission products from an aqueous phase containing nitric acid by an organic phase containing TBP. Data given in this section relative to the concentrations of solutes present in the two phases at equilibrium are presented largely in the form of distribution ratios, E_a^o, as defined by the relationship:

$$E_a^o = \frac{\text{Weight of solute per unit volume in organic phase}}{\text{Weight of solute per unit volume in aqueous phase}} \qquad (6.40)$$

For consistency, the distribution ratios (or distribution coefficients) presented in this section are invariably organic-aqueous concentration ratios, E_a^o, as defined previously. Distribution ratios presented in this chapter, when not otherwise designated, apply at 25°C.

Equilibrium diagrams for specific columns are discussed in Section 6.2.

TABLE 6-12. Heats of Extraction of Uranyl Nitrate and Nitric Acid.

Conditions

Direction of mass transfer: aqueous to organic phase.

Organic phase before equilibration: 30 vol% TBP in hydrocarbon diluent.

0.416M $UO_2(NO_3)_2$ in aqueous phase before contacting.

HNO_3 Concentration in Aqueous Phase Before Contacting, M	ΔH^a, Kcal/mol of Transferring Solute	
	$UO_2(NO_3)_2$	HNO_3
2.0	-2.4	+1.8
3.0	-4.2	+1.2
4.0	-6.6	+0.7

[a]Negative ΔH represents liberation of heat to surroundings; positive ΔH, absorption of heat. Tabulated ΔH's are average for 25° to 75°C.

TABLE 6-13. Heats of Stripping of Uranyl Nitrate.

Conditions

Direction of mass transfer: organic to aqueous phase.

Aqueous phase before contacting: water.

Organic phase: 30 vol% TBP in hydrocarbon diluent.

Organic-Phase Solute Concentrations Before Contacting, M		ΔH,[a] Heat Absorbed in Stripping, Kcal/mol Uranyl Nitrate
$UO_2(NO_3)_2$	HNO_3	
0.314	0.08	+6.1
0.210	0.05	+5.2
0.021	0.005	+6.0

[a]Average values for 0° to 60°C.

6.1.4.1 Uranium Equilibrium Distribution

Quantitative data are presented in this subsection which show the effects of process variables on the equilibrium distribution of uranium. The basic principles of the extraction of uranium in the Purex process, and a discussion of the complexing of uranium by TBP were discussed in Section 6.1.1. Although the equilibrium constant, based on the equation for the formation of the TBP-uranium complex, provides a qualitative picture of the effect of process variables on the extraction, uncertainties about activity coefficients and the presence of other complexes limit its general applicability. The overall reaction, and the associated equilibrium constant, K_U, are represented by the respective equations:

$$UO_2^{++}(Aq.) + 2NO_3^-(Aq.) + 2TBP\ (Org.) \rightleftarrows UO_2(NO_3)_2 \cdot 2TBP(Org.) \quad (6.41)$$

and:

$$K_U = \frac{[UO_2(NO_3)_2 \cdot 2TBP]\ (Org.)}{[UO_2^{++}]\ (Aq.)\ [NO_3^-]^2\ (Aq.)\ [TBP]^2\ (Org.)} \quad (6.42)$$

where the brackets indicate activities. If activities are identical with concentrations (i.e., in dilute solutions), the above equilibrium expression may be given as:

$$K_U' = \frac{E_U^o a}{(NO_3^-)^2(Aq.)\ (TBP_o - 2U_o)^2(org.)} \quad (6.43)$$

where

$E_U^o a$ = uranium distribution coefficient = $\frac{UO_2(NO_3)_2 \cdot 2TBP}{(UO_2^{++})}$

TBP_o = total concentration of TBP in solvent, mol/ℓ;

U_o = the molar concentration of uranium in the organic phase;

$(TBP_o - 2U_o)$ = an approximate expression for the free, uncomplexed TBP;

(NO_3^-) = the molar concentration of nitrate in the aqueous phase at equilibrium.

Although the "constant" (K_U) varies appreciably with changes in extraction conditions, it affords a qualitative interpretation of the data which follow.

6.1.4.1.1 Effect of Uranium Concentration

An increase in the concentration of uranyl nitrate may either increase or decrease the uranium distribution ratio, as shown in Figures 6-12 and 6-13 (Ref. 88, 90, 91). At low uranium and nitric acid concentrations, an increase in uranyl nitrate concentration results in a corresponding increase in the uranium distribution ratio. In concentrated nitric acid or uranyl nitrate solutions, the distribution ratio (E_a^o) decreases with increasing uranyl nitrate concentration.

The concentration of uranium in the organic phase is plotted as a function of the aqueous-phase uranium concentration in the equilibrium diagrams in Figures 6-14 (for high concentrations) and 6-15 (for low concentrations) (Ref. 90).

At high uranium concentrations, the organic-phase uranium concentration approaches a saturation limit which corresponds to approximately two molecules of TBP per molecule of uranyl nitrate, as indicated by Equation 6.41. The concentration of TBP in the solvent (30 vol% TBP in hydrocarbon diluent) is 1.095M. Because of the volume increase as uranium is added to the solvent, the theoretical saturation value for uranium is 0.52M rather than 0.547M (Ref. 92-95).

6.1.4.1.2 Effect of Nitric Acid Concentration

In the Purex process, nitric acid is the source of nitrate ions for salting uranium and plutonium into the organic phase. An increase in aqueous-phase nitric acid concentration (up to about 5M) increases the uranium distribution ratio, particularly for dilute uranium solutions, (Figure 6-12), as would be expected on the basis of the equilibrium expression given in Equation 6.43. At acidities above approximately 5M HNO_3, however, an increase in acid concentration is accompanied by a decrease in the uranium distribution ratio because of reduction in the concentration of free TBP due to its complex formation with nitric acid (Ref. 94, 95, 96).

The effect of nitric acid concentration on uranium distribution is also shown in the equilibrium diagrams in Figure 6-15 for low uranium concentrations and Figure 6-14 for high uranium concentration.

6.1.4.1.3 Effect of TBP Concentration

The effect of TBP concentration in the solvent is indicated by Figure 6-16 (Ref. 91, 92, 93), in which uranium distribution ratios for several representative aqueous compositions are plotted against the TBP concentration. For moderately dilute uranium solutions (0.1M) containing no nitric acid, the uranium distribution ratio varies as the square of the TBP concentration. For very dilute uranium solutions (0.005M) containing no nitric acid, the value of E_a^o varies as the 2.5 power of the TBP concentration (not shown on graph). The uranium distribution ratio for

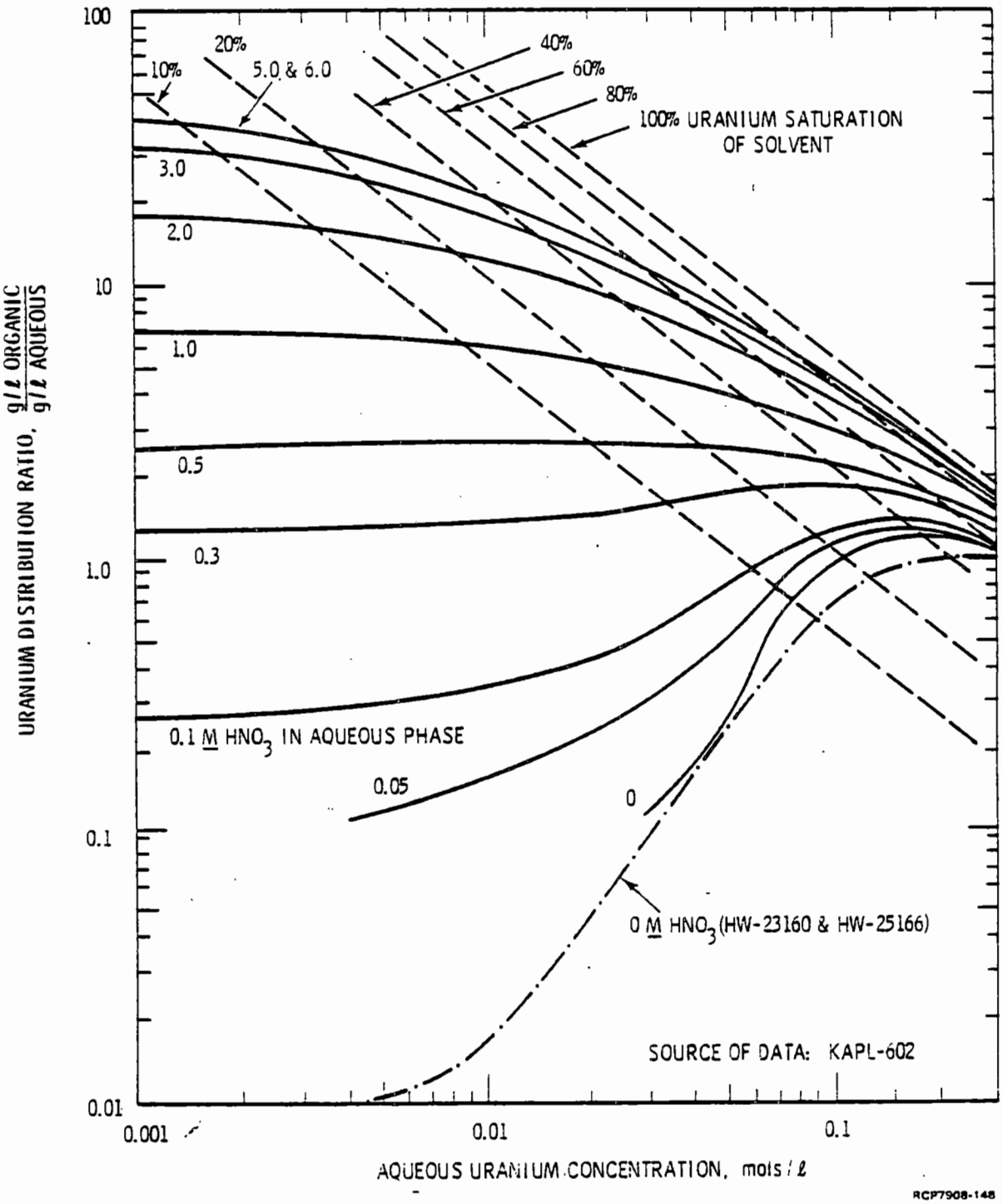

FIGURE 6-12. Effect of Dilute Uranium Concentration on Distribution of Uranium.

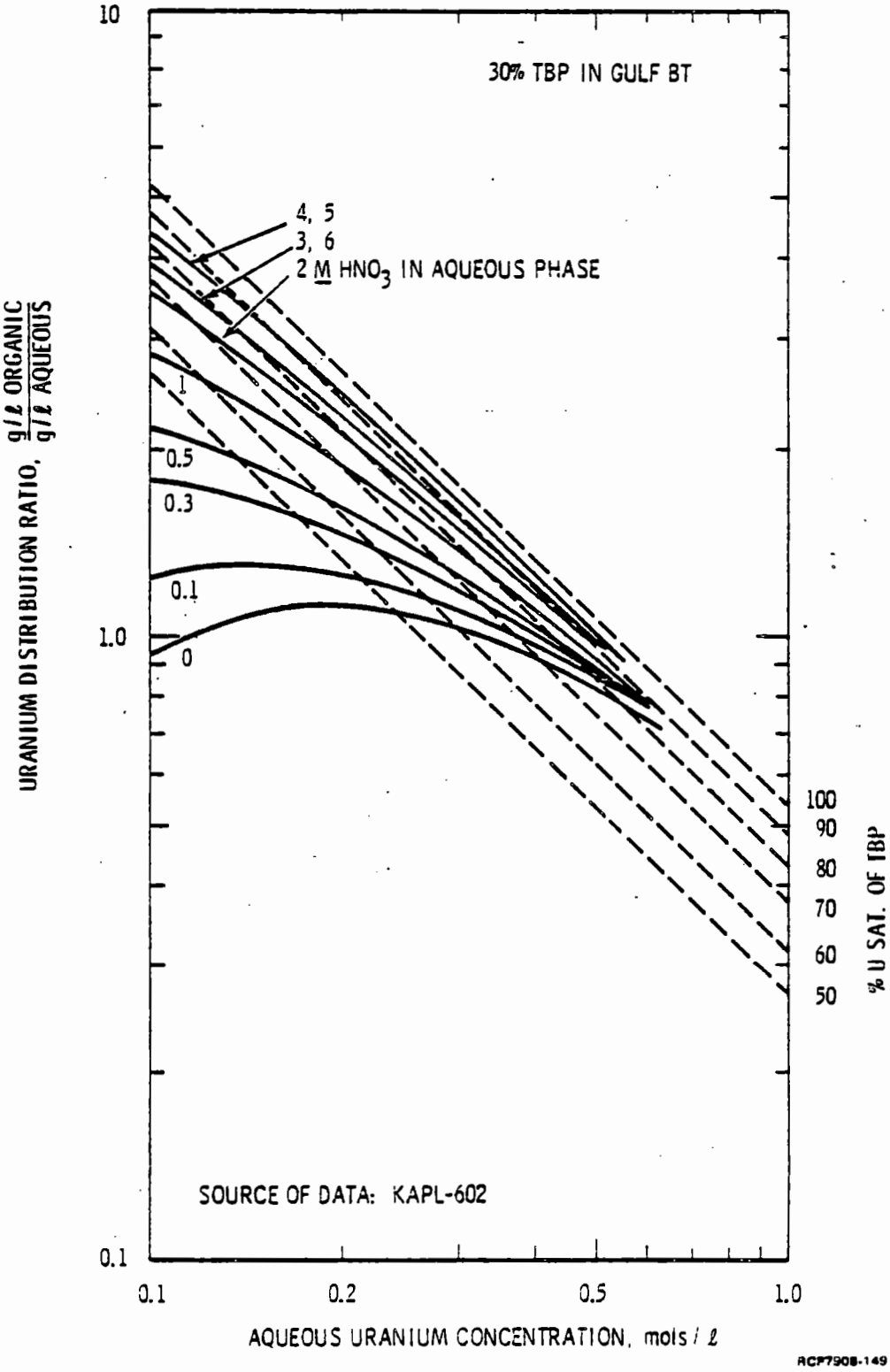

FIGURE 6-13. Effect of High Uranium Concentration on Distribution of Uranium.

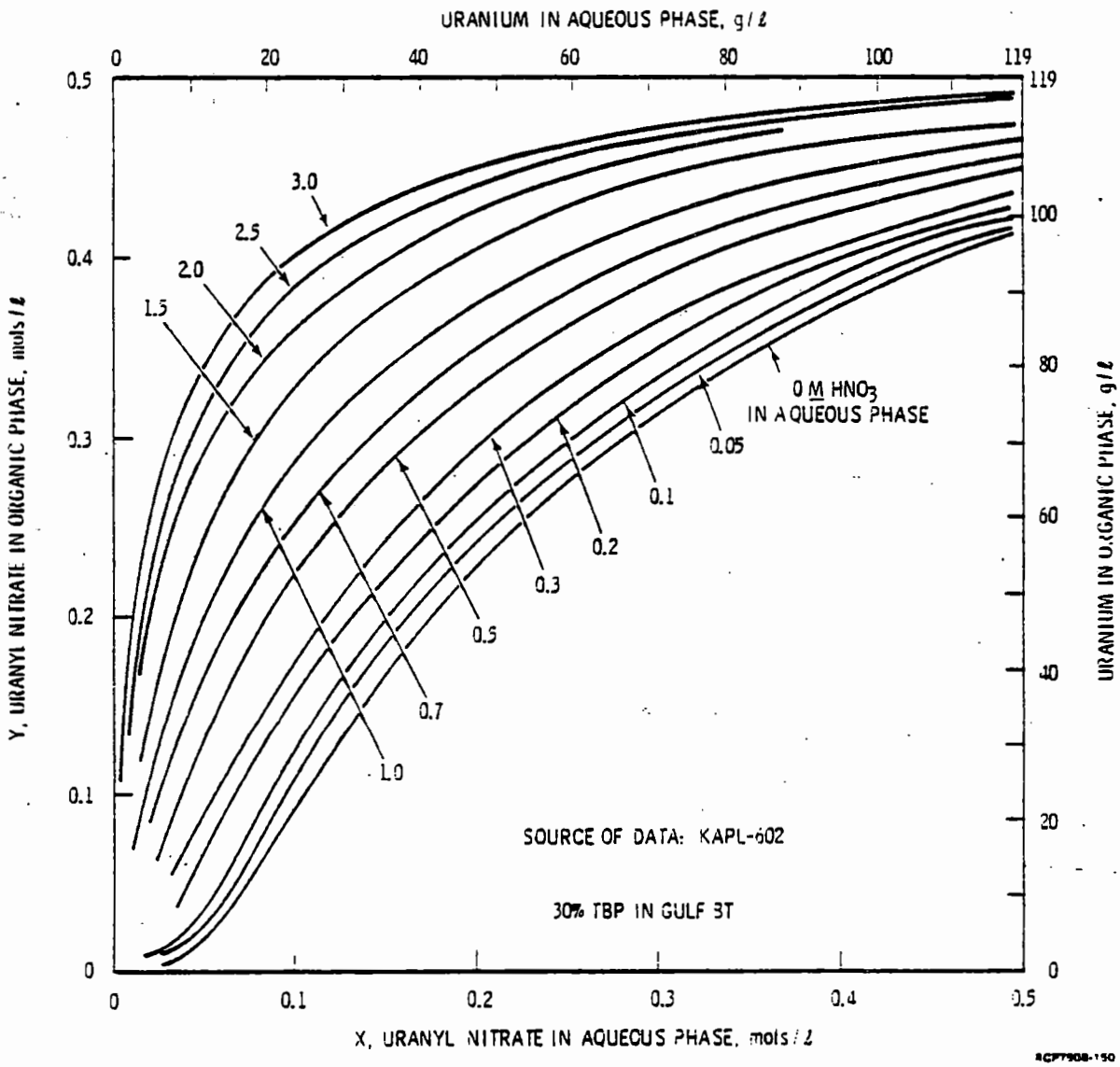

FIGURE 6-14. Uranium Equilibrium Diagram.

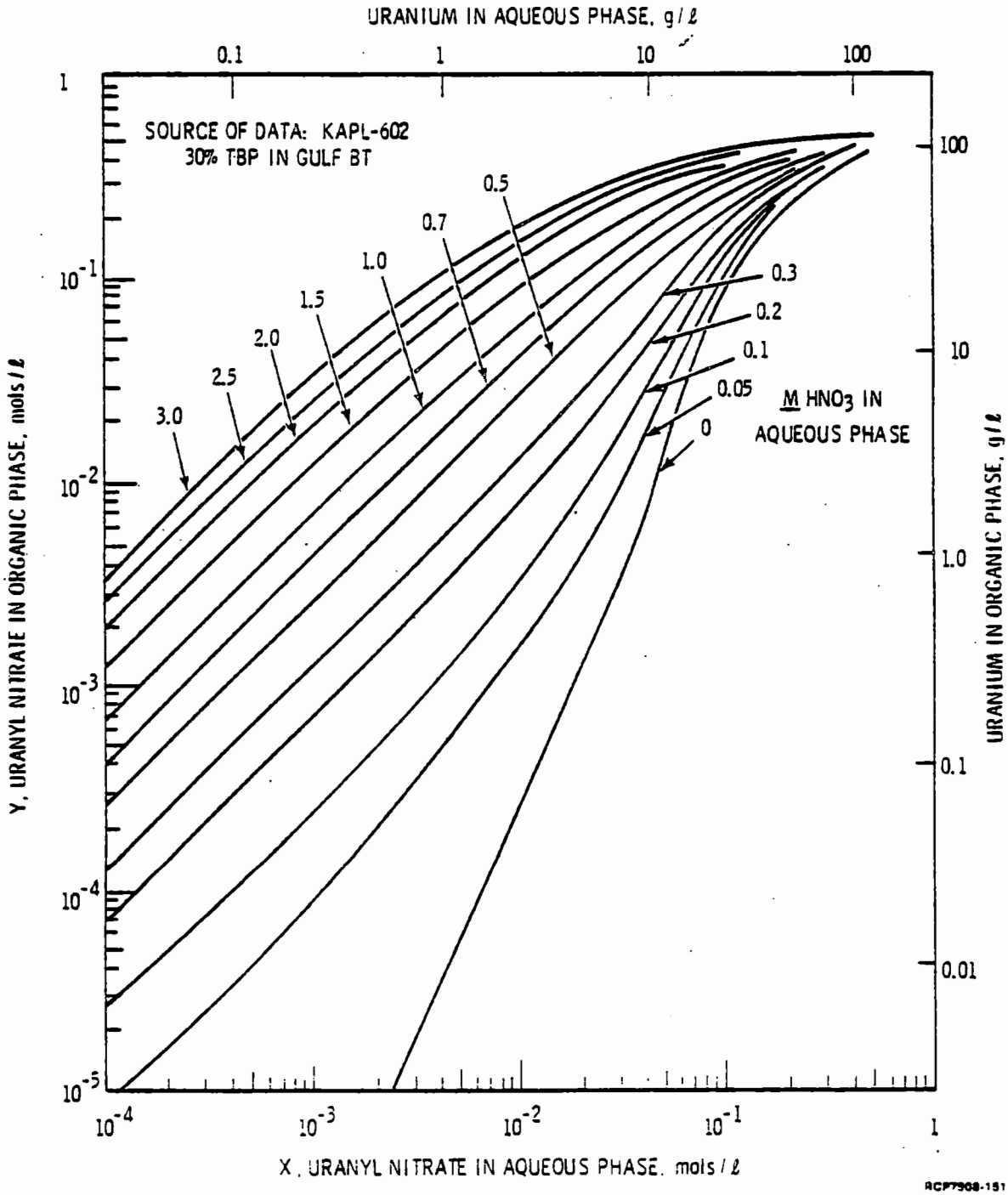

FIGURE 6-15. Uranium Equilibrium Diagram, Low Uranium Concentrations.

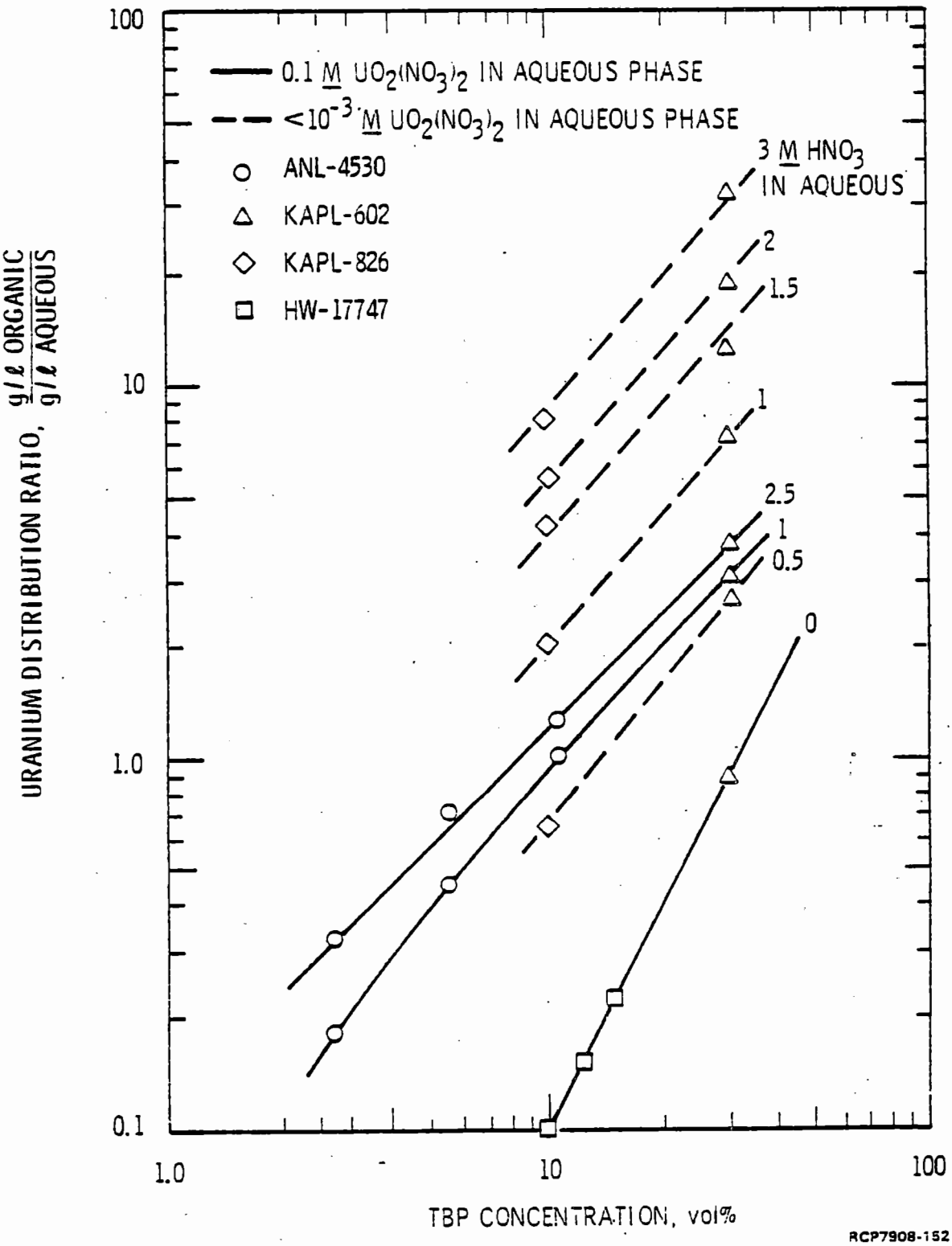

FIGURE 6-16. Effect of TBP Concentration on Distribution of Uranium.

dilute uranium solutions containing more than 0.5M HNO_3 varies approximately as the 1.1 power of the TBP concentration. It is of interest to note that this ratio is maintained over a fairly wide range (0.5M to 3.0M) of nitric acid concentrations (Ref. 96, 97, 98).

As the uranium concentration approaches saturation of the TBP, uranium E_a^o values increase in direct proportion to the TBP concentration.

6.1.4.1.4 Effect of Diluent

The uranium distribution coefficient is essentially independent of the type of hydrocarbon diluent used (Ref. 99).

6.1.4.1.5 Effect of Temperature

The uranium distribution coefficient is decreased by an increase in temperature as shown by Figure 6-17, in which the coefficient is plotted against temperature for a few organic (Ref. 100, 101) and aqueous (Ref. 88, 102) compositions. The effect of temperature is greatest at low uranium concentrations, and is quite small at high uranium concentrations, becoming negligible as saturation is approached.

6.1.4.1.6 Effect of Metal Nitrates

The salting strengths of sodium nitrate, calcium nitrate, and aluminum nitrate are approximately the same if compared on an equivalent nitrate ion basis. They have approximately the same salting strength as nitric acid at low nitrate concentrations, but they are more effective at the higher nitrate concentrations (above about 0.5M NO_3^-). Their effectiveness as salting agents in 30% TBP is also dependent upon the uranium concentration, as shown in Table 6-14 for aluminum nitrate (Ref. 90, 91).

TABLE 6-14. Comparative Salting Strengths of Aluminum Nitrate and Nitric Acid.

U Saturation of Solvent, %	Aqueous-Phase NO_3^- Normality	Uranium Distribution Ratio, (g U/ℓ Organic)/(g U/ℓ Aqueous)	
		HNO_3 as Salting Agent	$Al(NO_3)_3$ as Salting Agent
8	0	0.5	0.5
	0.5	2.5	2.5
	1.0	6.0	18.0
	1.5	10.0	ca. 100
38	1.5	6.0	10.0
76	0	0.8	0.8
	0.5	1.2	1.3
	1.0	1.6	2.3
	1.5	2.0	4.0

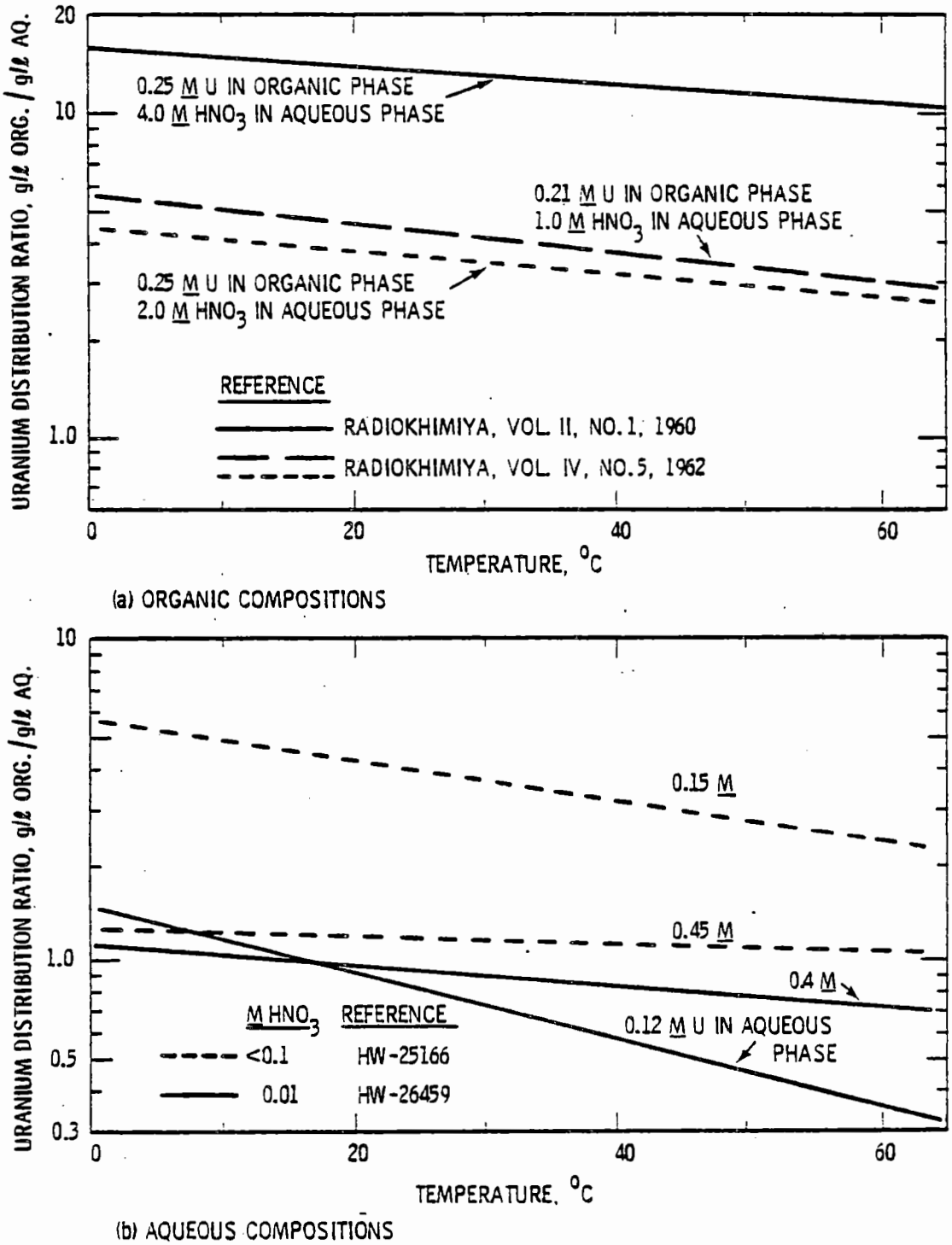

FIGURE 6-17. Effect of Temperature on Distribution of Uranium.

6.1.4.1.7 Effect of Butyl Acid Phosphates

Small amounts of MBP and DBP are present in the solvent as a result of TBP hydrolysis. The uranium in the DBP-uranium complex is held very tightly. The molar equilibrium constant, K_U (see subsection 6.1.4.1), for the reaction is 2.7×10^4, as determined with 10 to 25 g DPB/ℓ of organic in AMSCO 125-90W equilibrated with aqueous solutions which, before contacting, contained 3M HNO_3 and 0.01M $UO_2(NO_3)_2$. The complexing reaction and the definition of the equilibrium constant are given by the respective equations:

$$UO_2^{++} + 2H(C_4H_9)_2PO_4 \rightarrow UO_2[(C_4H_9)_2PO_4]_2 + 2H^+ \qquad (6.44)$$

$$K_U = \frac{UO_2[(C_4H_9)_2PO_4]_2[H^+]^2}{[UO_2^{++}][H(C_4H_9)_2PO_4]^2} = 2.7 \times 10^4 \qquad (6.45)$$

Equation 6.45 indicates that, in the presence of a stoichiometric excess of uranium, DBP should react quantitatively with the uranium to form the "unstrippable" uranium complex.

The compound $UO_2[(C_4H_9)_2PO_4]_2$, formed by the reaction of DBP and uranium, distributes to the organic phase. The effect of DBP upon the uranium distribution ratio is shown in Table 6-15 (Ref. 28). It can be seen that the uranium concentration in the organic phase increases with DBP concentration, especially at the lower aqueous-phase uranium and nitric acid concentrations.

TABLE 6-15. Uranium Distribution in the Presence of Dibutyl Phosphate.

Aqueous-Phase Concentrations, g/ℓ		U Distribution Ratio at Indicated Org. Phase DBP Concentration, (g U/ℓ org.)[a]/(g U/ℓ Aq.)				
U	HNO_3	DBP Absent	0.02 g DBP/ℓ	0.1 g DBP/ℓ	1 g DBP/ℓ	10 g DBP/ℓ
0.006	0	0.004		1		100
0.6	0.03	0.005	0.02	0.1	8	400
3	0.15	0.02	0.02	0.05	50	700
12	0.6	0.20	0.20	0.20	0.24	5
60	3	0.60	0.60	0.60		1.0

[a]20 vol% TBP

The compound, $UO_2(C_4H_9)PO_4$, formed by the reaction of MBP and uranyl nitrate, favors the aqueous phase. Calculations from solubility data (Ref. 10) indicate that distribution ratios should be of the magnitude shown in Table 6-16 for dilute solutions of the compound. As shown in the table, an increase in aqueous-phase acid concentration greatly reduces the distribution ratio.

TABLE 6-16. Distribution of Uranium in the Presence of Monobutyl Phosphate.

HNO_3 in Aq. Phase, M	Calculated Distribution Ratio, (g U/ℓ Org.)[a]/(g U/ℓ Aq.)
0	1
1	0.03

[a]15 vol% TBP

6.1.4.1.8 Effect of Aqueous-Phase Complexing Agents

Ions such as sulfate, phosphate, and oxalate, which react with the uranyl ion to form stable complexes in the aqueous phase, significantly decrease the extraction of uranyl nitrate by TBP.

Table 6-17 illustrates the effect of phosphate in lowering the uranium distribution ratio (Ref. 103). An increase in phosphate concentration above 0.3M, however, has little effect on E_a^o. Uranium Recovery Plant data indicated that one-third and one-molar phosphate in the feed lowered the uranium distribution ratio by approximately the same amount.

TABLE 6-17. Effect of Phosphate on Uranium Distribution.

Conditions

30 vol% TBP in hydrocarbon diluent.

33% uranium saturation of solvent.

2.6M HNO_3 in aqueous phase.

H_3PO_4 in Aqueous Phase M	Uranium Distribution Ratio (g/ℓ Org.)/(g/ℓ Aq.)
0.0	15.0
0.025	12.5
0.061	8.5
0.125	6.2

6.1.4.1.9 Equilibrium Diagrams

Equilibrium diagrams for the distribution of uranium between aqueous nitric acid solutions and a 30 vol% TBP organic phase for the entire range of uranium and nitric acid concentrations encountered in the Purex process are presented in Figures 6-14 and 6-15. The equilibrium curves, together with typical operating lines for several specific Purex extraction columns, are given in Section 6.2.

6.1.4.2 Plutonium Equilibrium Distribution

The separation of plutonium from fission products and from uranium is based on the relative extractability of plutonium (IV) and inextractability of plutonium (III) by TBP. Equations for the formation of the most probable plutonium-TBP complexes are as follows:

$$Pu(NO_3)_3 + 3TBP = Pu(NO_3)_3 \cdot 3TBP \quad (6.46)$$

$$Pu(NO_3)_4 + 2TBP = Pu(NO_3)_4 \cdot 2TBP \quad (6.47)$$

$$PuO_2(NO_3)_2 + 2TBP = PuO_2(NO_3)_2 \cdot 2TBP \quad (6.48)$$

The equation given for plutonium (III) is not well established because the complex is weak, and the distribution ratio is too low for accurate measurement. In general, one complex predominates for each valence state, although small amounts of other forms may be present at extreme conditions. Equilibrium constants based on the preceding equations have been determined, and provide a correlation of the data. These constants have not been used to predict distribution ratios under different conditions, however, because small errors in values assigned to activity coefficients are magnified through elevation to high powers, and may lead to large errors in the calculated distributions. Expressions for the equilibria between TBP and plutonium should include the effect of the nitrate complexing of plutonium in the aqueous phase, which is particularly important in the case of plutonium (IV), but is also appreciable for plutonium (III) and plutonium (VI) (Ref. 104-107).

6.1.4.2.1 Effect of Oxidation State

The high distribution ratio of plutonium (IV) in nitric acid-salted systems forms the basis for the separation of plutonium from fission products, which, in general, are not appreciably extracted by TBP. As shown in Figure 6-18 (Ref. 91, 105), the distribution ratio of plutonium (IV), between aqueous nitric acid solutions and 30% TBP, ranges from approximately 0.03 at 0.1M HNO_3 to 3 at 1M HNO_3, and to 30 at 5M. The distribution ratio of plutonium (VI) is also high in salted systems, although, as shown in Figure 6-18, is generally lower than that of plutonium (IV) under similar process conditions, the plutonium (VI) E_a^o being about 0.04 at 0.1M HNO_3, 1 at 1M, and 5 at 5M. In the absence of uranium, plutonium (III) distribution ratios are about a factor of 100 lower than those for plutonium (IV) and plutonium (VI).

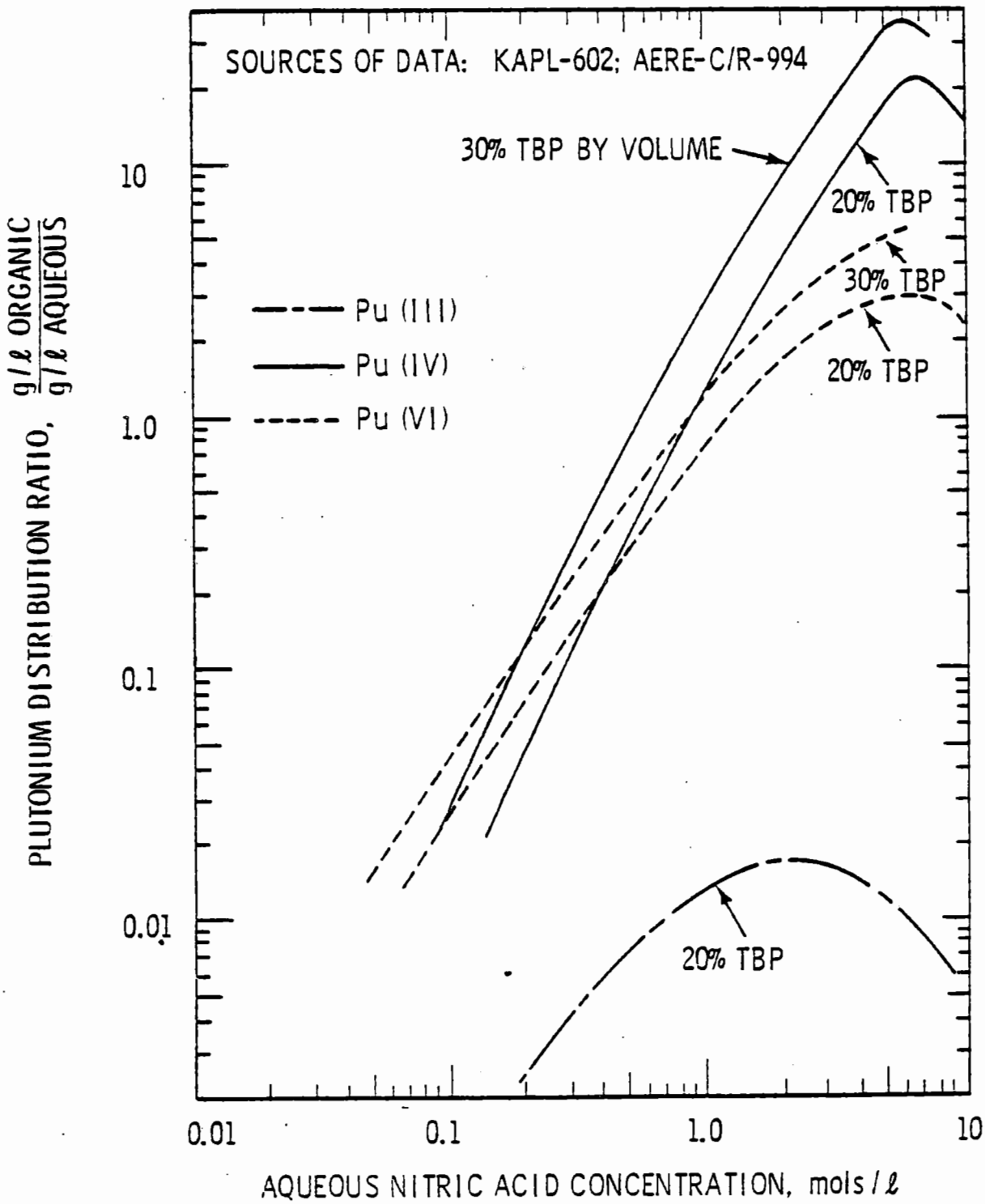

FIGURE 6-18. Effects of Valence State and Nitric Acid Concentration on Distribution on Plutonium.

Plutonium (III) and plutonium (IV) distribution ratios, in the presence of uranium, are compared in Figure 6-19 (Ref. 91). Under the conditions in the 1BX column, plutonium (III) distribution ratios are on the order of one-tenth those of plutonium (IV). The low distribution coefficient of plutonium (III) allows plutonium to be stripped from the uranium-containing organic phase in the 1BX column, and is the basis for the separation of plutonium from uranium (Ref. 91, 105, 108). Under 1BX column flowsheet conditions, the plutonium (III) distribution ratio, E_a^o, is approximately 0.02 or lower.

6.1.4.2.2 Effect of Uranium Concentration

Uranium forms a stronger complex with TBP than does plutonium. Therefore, as its aqueous-phase concentration increases, uranium tends to replace the plutonium in the organic phase. This tendency manifests itself in a reduction of the plutonium distribution ratio as the uranium concentration increases. As shown on Figure 6-20 (Ref. 107), the plutonium (IV) distribution ratio, E_a^o, between 3M aqueous nitric acid and 30% TBP decreases from about 10, in the absence of uranium, to 1 at 75% uranium saturation of the solvent, and to 0.5 at 90% saturation.

6.1.4.2.3 Effect of Nitric Acid Concentration

The addition of nitric acid (up to approximately 6M) results in a large increase in the plutonium distribution ratio as shown in Figures 6-21 and 6-22 (Ref. 107, 109). However, at nitric acid concentrations above 6M, plutonium in the organic phase is partially displaced by nitric acid so that a slight decrease in plutonium distribution ratio results (Ref. 91, 103, 105, 107, 110). Thus, as shown in Figure 6-18, the plutonium (IV) distribution ratio between uranium-free aqueous nitric acid solutions and 30% TBP increases from 0.03 at 0.1M HNO_3 to 33 at 6M, but decreases to 30 as the nitric acid concentration is increased to 8M.

6.1.4.2.4 Effect of TBP Concentration

The effect of TBP concentration in the solvent on the plutonium distribution ratio is illustrated by Figure 6-23 (Ref. 105), in which the distribution ratios for plutonium (IV) and plutonium (VI) are plotted as a function of the TBP concentration. At the conditions of Figure 6-23, the plutonium distribution ratio increases with the 1.2 to 1.4 power of the TBP concentration in the 20 to 40 vol% TBP range, and with higher powers at dilute TBP concentrations. In the 2 to 5% TBP range, the plutonium E_a^o varies with the 1.5 to 1.8 power of the TBP concentration. The relationship in the dilute TBP region approaches a simple second-power correlation, which would be expected at a unity activity coefficient with the two-to-one TBP-to-plutonium nitrate molecular ratio in the plutonium (IV)- and plutonium (VI)-TBP complexes. Since the plutonium (III)-TBP complex contains three TBP molecules per plutonium atom, E_a^o for plutonium (III) should increase with the third power of the TBP concentration, but no confirming data are available (Ref. 105, 106, 107, 111, 112).

9413275.1126

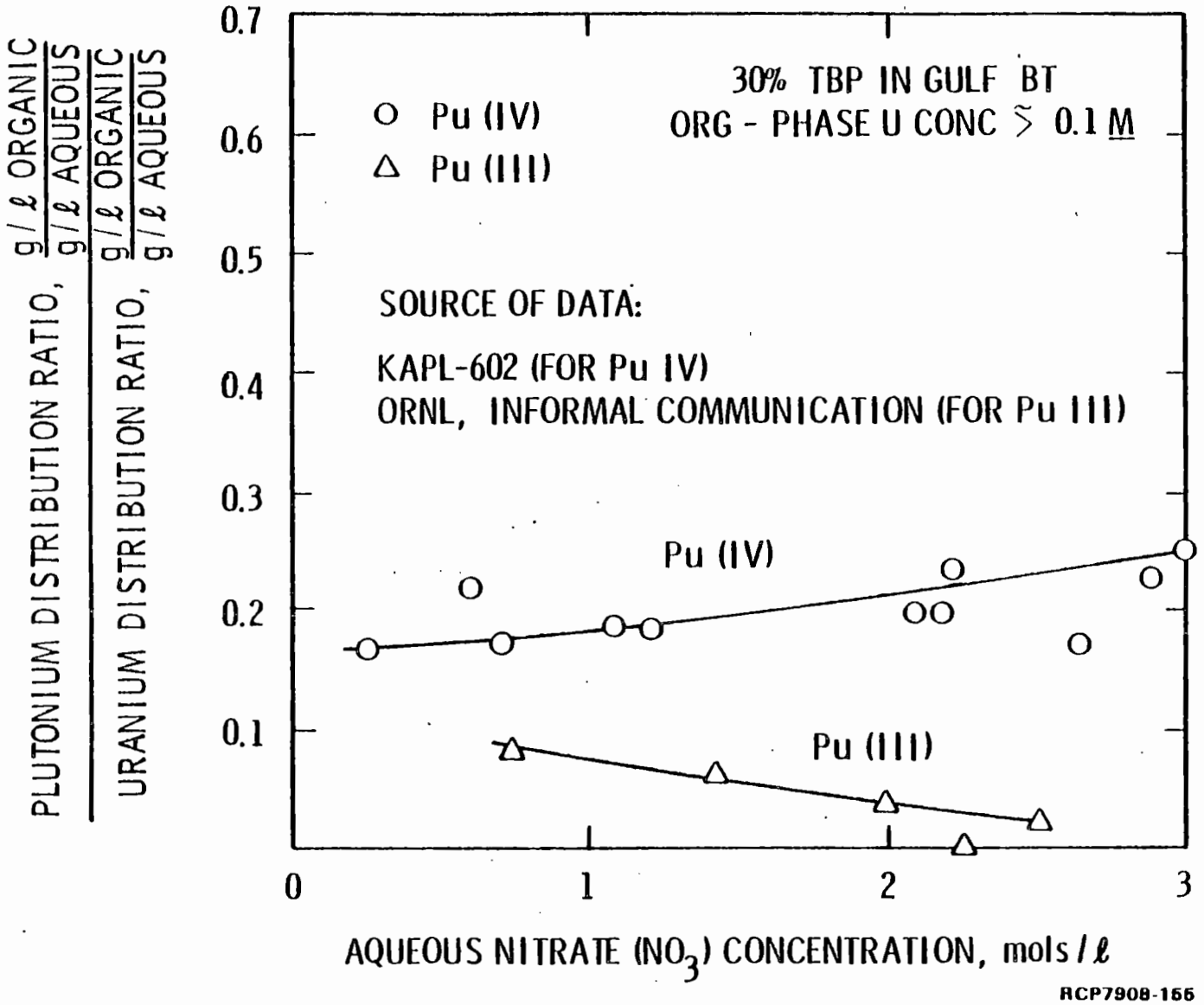

RCP7908-166

FIGURE 6-19. Effect of Total Nitrate Concentration on Distribution of Pu(III) and Pu(IV).

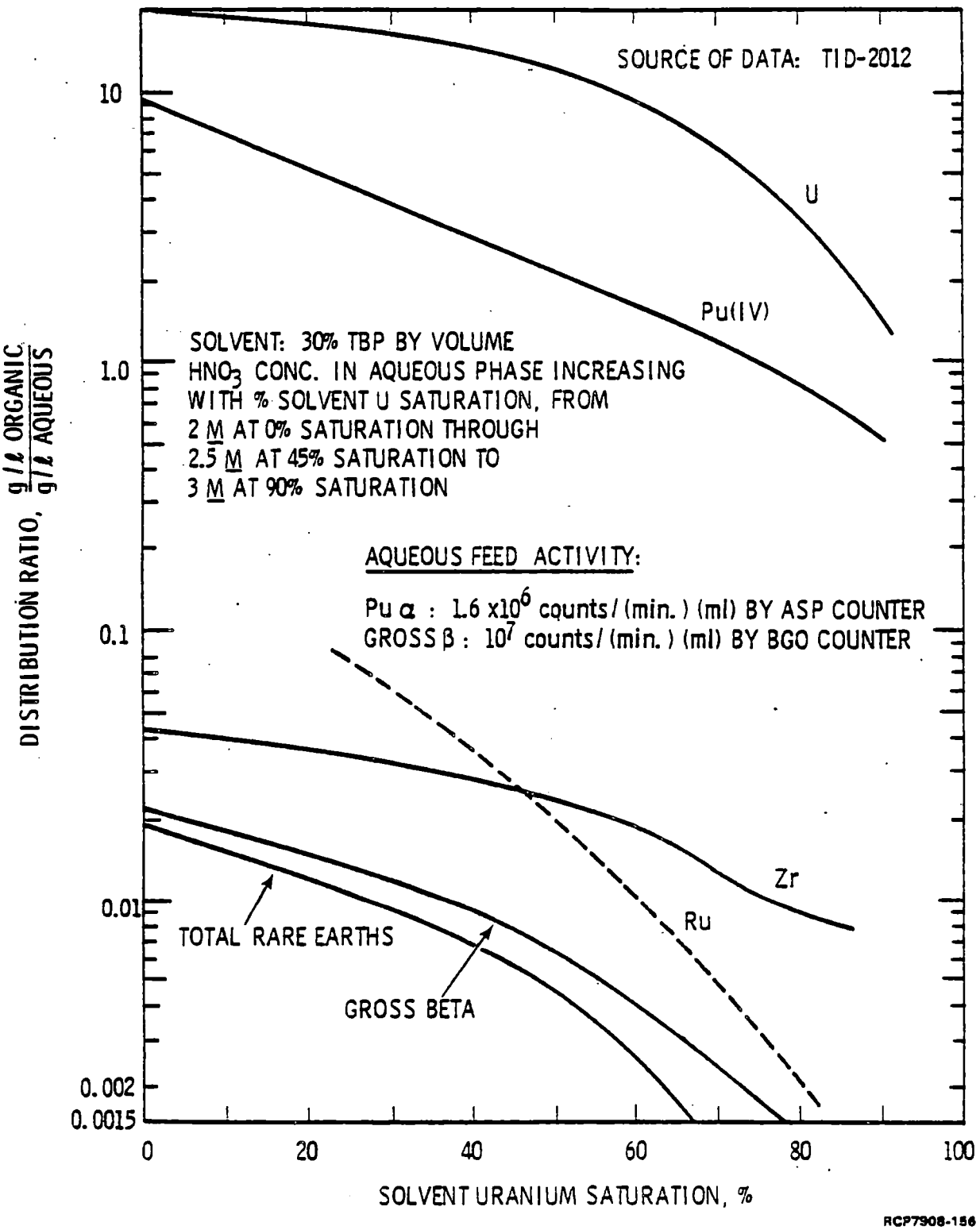

FIGURE 6-20. Effect of Organic-Phase Uranium Saturation on Distribution of Plutonium and Fission Products.

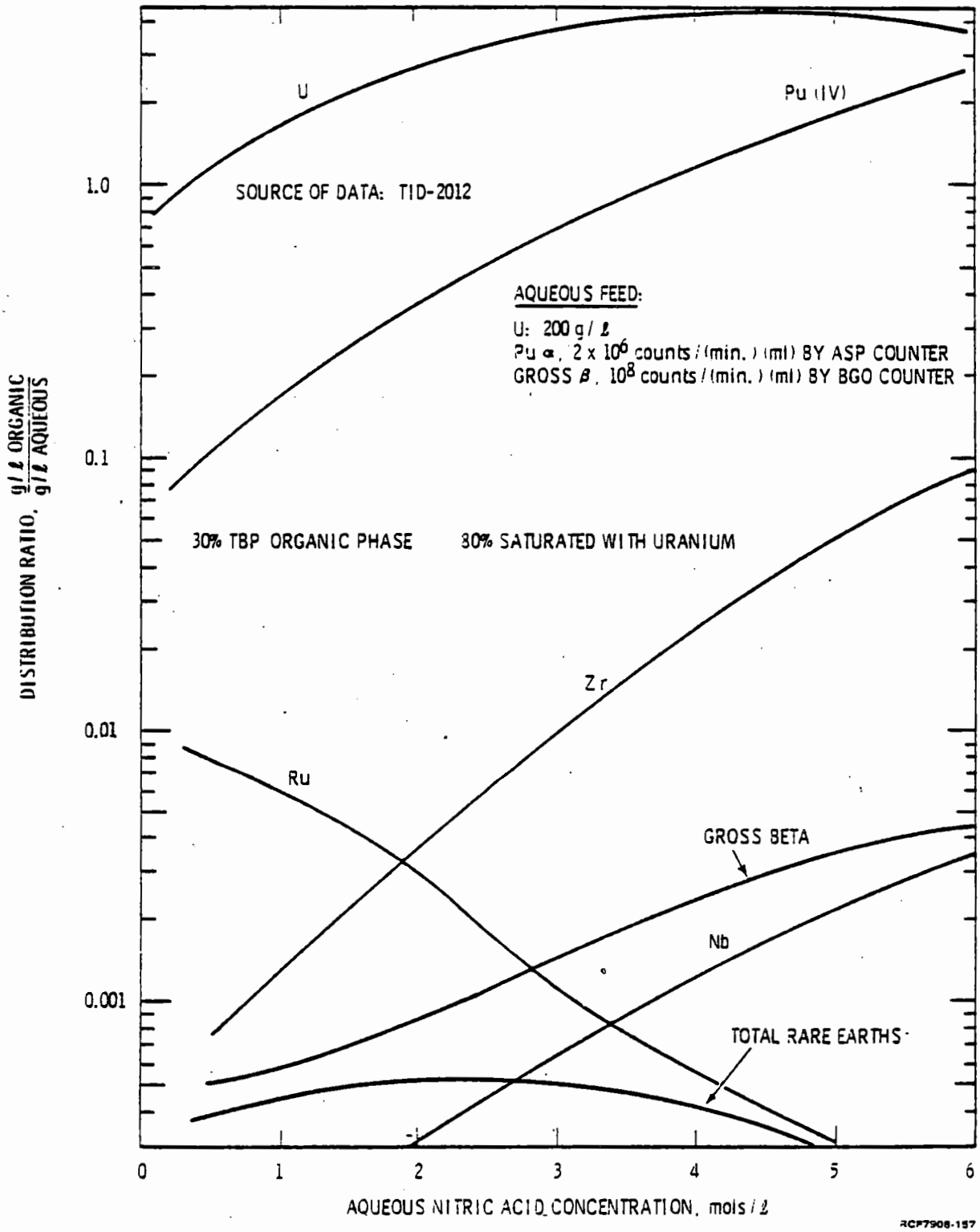

FIGURE 6-21. Effect of Nitric Acid Concentration of Distribution of Plutonium and Fission Products in Presence of Uranium.

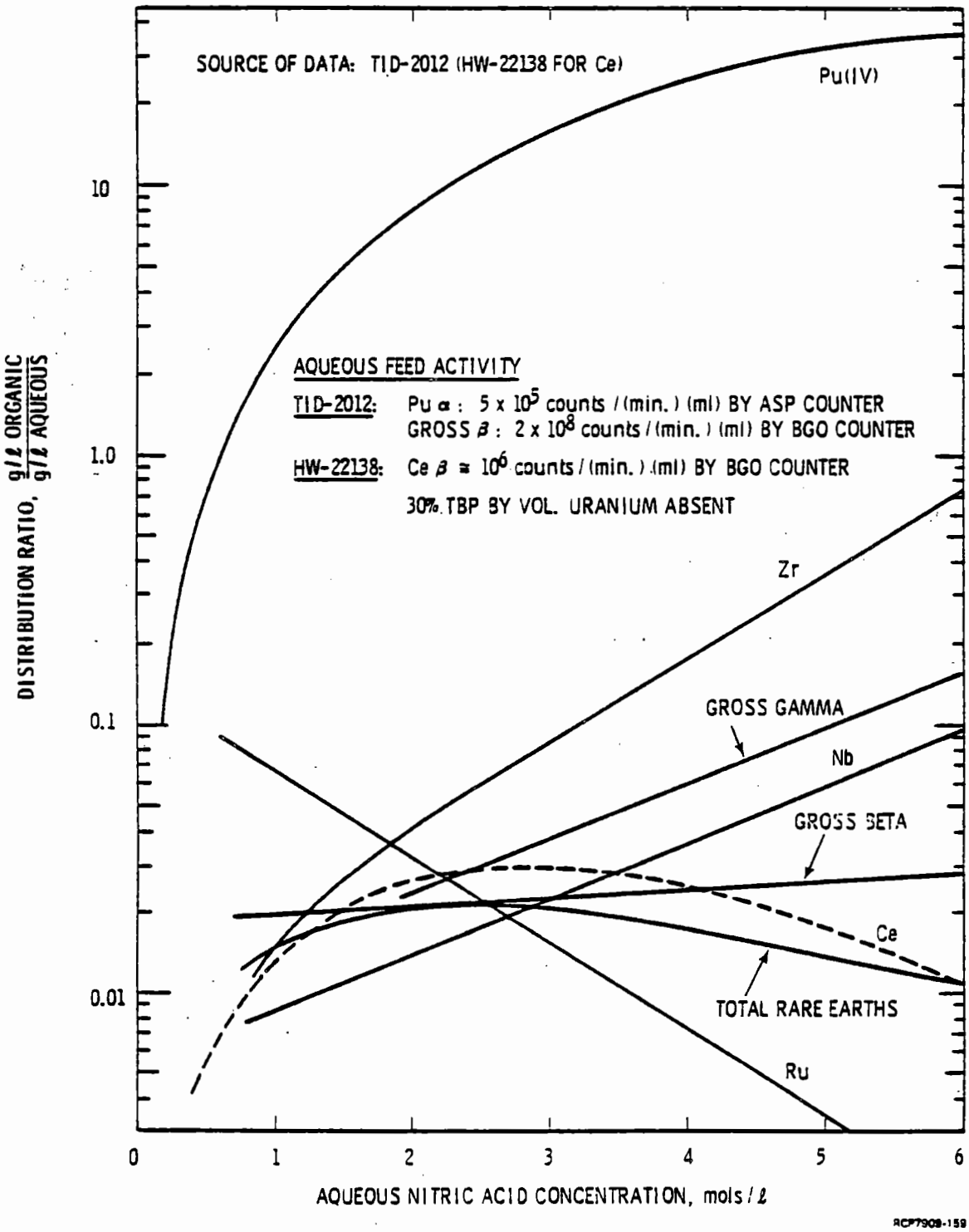

FIGURE 6-22. Effect of Nitric Acid Concentration on Distribution of Fission Products in Absence of Uranium.

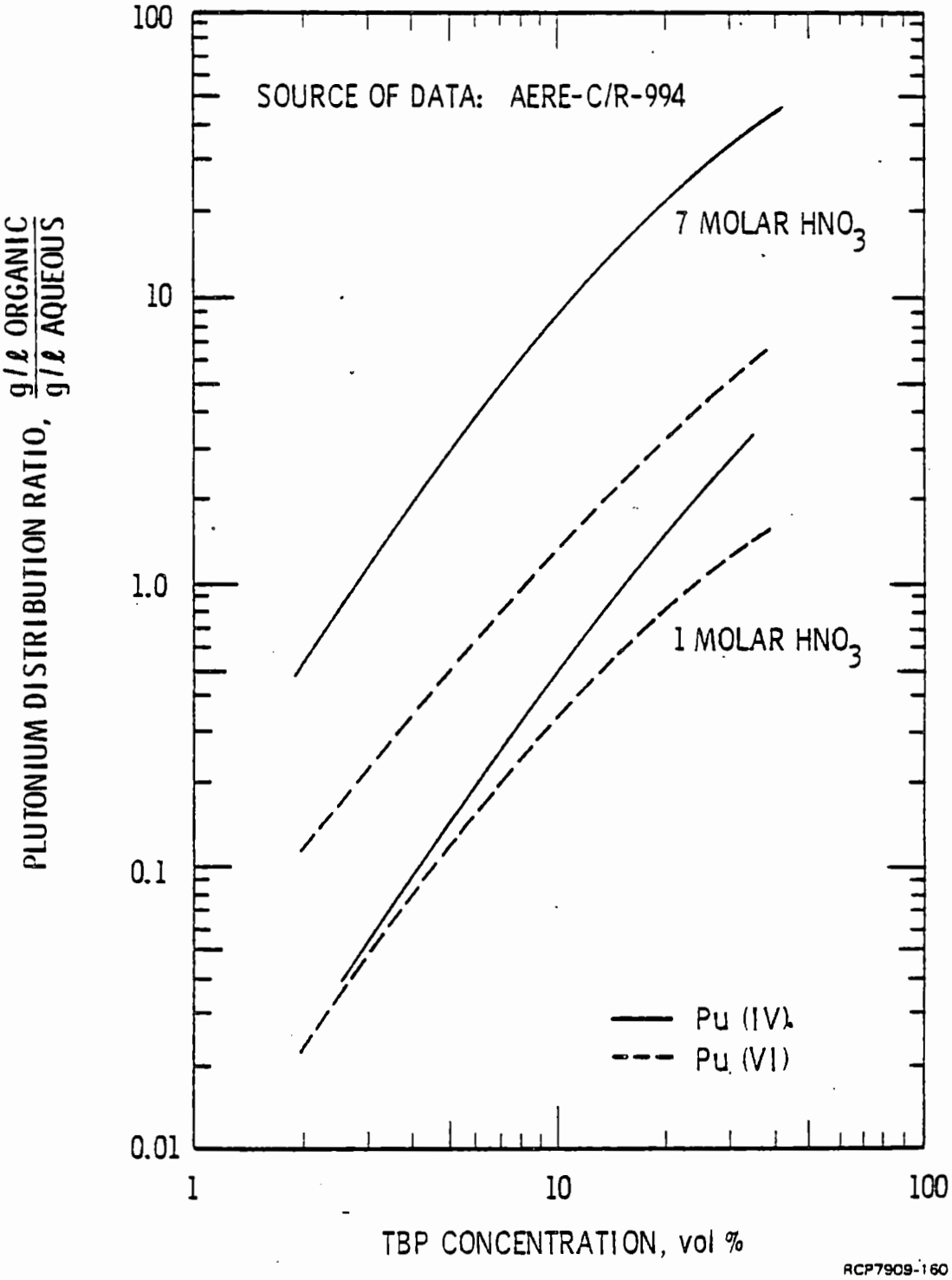

FIGURE 6-23. Effect of TBP Concentration on Distribution of Plutonium.

6.1.4.2.5 Effect of Butyl Acid Phosphates

Dibutyl phosphate forms a strong complex with plutonium (IV), and consequently, any DBP present in the solvent will result in the loss of plutonium to the organic waste streams. Rather than being a pure compound with one or two DBP molecules, the complex may contain both TBP and DBP. The degree to which a small amount of DBP affects the plutonium distribution ratio is shown in Table 6-18.

TABLE 6-18. Effect of DBP on Plutonium Distribution.

Feed: 30% TBP, 70% AMSCO, tracer Pu(IV)

Extractant: water

DBP Concentration, vol%	Plutonium Concentration, counts/(min)(mℓ)		Plutonium Distribution Ratio (g/ℓ Org.)/(g/ℓ Aq.)
	Organic	Aqueous	
0	850	120	7
10^{-4}	565	50	11
10^{-3}	5.0×10^4	744	68
10^{-2}	2.2×10^5	1440	150

Strong complexes are not formed by plutonium (III) with either DBP or MBP, and its distribution coefficient is not appreciably affected by the presence of either of these hydrolysis products. Plutonium can be stripped from solvent which contains DBP by reduction to its lower (III) valence state (Ref. 14, 113, 114).

6.1.4.2.6 Effect of Aqueous Phase Complexing Agents

The plutonium (IV) ion forms stable complexes with several anions such as phosphate (PO_4^{-3}), sulfate (SO_4^{-2}), fluoride (F^-), and fluosilicate (SiF_6^{-2}). Since the complexes are not extracted by TBP, but remain in the aqueous phase, the addition of any of the above ions lowers the apparent plutonium distribution ratio. The molecular formulas of the complexes formed are, in general, not well established, and several species are undoubtedly present in some cases, notably with phosphate. The extent to which the distribution ratio is reduced by the presence of a complexing agent is indicated by Table 6-19 for sulfate ion (Ref. 91). The decrease in distribution ratio is most marked at low acidities, probably because of more complete ionization of the complexing agents under these conditions.

TABLE 6-19. Effect of Sulfate on Plutonium Distribution.

SO_4^{-2} in Aqueous Phase, M	Pu Valence State	Pu Distribution Ratio (g Pu/ℓ Org.)[a]/(g Pu/ℓ Aq.), at Indicated Aqueous-Phase HNO_3 Concentration		
		1M HNO_3	3M HNO_3	6M HNO_3
0	IV	3	16	30
0.001	IV	2	15	--
0.01	IV	0.8	13	28
0.1	IV	0.09	4	20
0.0	VI	1.2	2.5[b]	
0.1	VI	0.95	2.2[b]	

[a]30 vol% TBP, uranium absent

[b]2M HNO_3

Phosphate ion reduces the plutonium distribution ratio to a greater extent than does sulfate ion. Phosphate is effective even in the presence of a large amount of uranium, as shown in Table 6-20 (Ref. 103).

TABLE 6-20. Effect of Phosphate on Plutonium (IV) Distribution.

% U Saturation of Solvent[a]	HNO_3 in Aqueous Phase, M	PO_4^{-3} in Aqueous Phase, M	Distribution Ratio (g Pu/ℓ Org.)/(g Pu/ℓ Aq.)
33	2.6	0	5
		0.025	2.3
		0.061	0.8
		0.125	0.23
63	3.0	0	2
		0.025	1.1
		0.061	0.36
		0.125	0.14

[a]30 vol% TBP

6.1.4.2.7 Effect of Temperature

The plutonium (IV) distribution ratio increases approximately 30% with an increase in temperature from 25° to 70°C. When uranium is also present, the relative increase is more pronounced because of the decrease in the uranium distribution ratio, which results in a larger concentration of uncomplexed TBP at higher temperatures (see Table 6-21).

TABLE 6-21. Effect of Temperature on Plutonium (IV) Distribution.

% Saturation of Solvent[a] with U	HNO_3 in Aqueous Phase, M	Pu(IV) Distribution Ratio, (g Pu/ℓ Org.)/(g Pu/ℓ Aq.)		
		25°C	50°C	75°C
0	0.2	0.07		0.1[b]
	1	3.0		4.3[b]
	4	24		27[b]
80	0.5	0.10	0.20	0.41
	2	0.46	0.63	1.13
	5	1.6	2.4	3.1

[a]30 vol% TBP
[b]70°C

The plutonium (VI) distribution ratio, like that of uranium, decreases with increasing temperature, being less than half as great at 70°C as at 25°C in the absence of uranium, but showing a smaller decrease in the presence of uranium. The organic-to-aqueous distribution ratio of plutonium (VI) in the 25° to 70°C temperature range is approximately one-eighth of that of uranium at the same temperature (Ref. 89, 115).

6.1.4.3 Fission Products

While uranium and plutonium are readily extracted by TBP with nitric acid as a salting agent, fission products are extracted only very sparingly by the solvent under the same conditions. The fission products of major interest in the Purex process are those which are the most difficult to separate from the uranium and plutonium and thus, determine the overall decontamination factors obtained in the process. These are ruthenium, zirconium, and niobium. Iodine is also extracted, but once transferred, tends to remain in the solvent rather than follow one of the product streams. Other fission products have lower distribution coefficients and usually do not contribute appreciably to the residual radioactivity after one solvent extraction cycle.

Since the ratio of beta to gamma radioactivity varies among radionuclides, gross fission product distribution ratios determined on the basis of beta and gamma counts are usually not the same.

Gross fission product distribution ratios depend to a large extent on the relative concentrations of the various elements. The gross beta and gamma distribution ratios, presented in the figures discussed below, are approximate values for typical HAF (initial feed) radioactivity spectra. With the least extractable fission products removed in the HA column, the gross organic-to-aqueous distribution ratio of the remaining fission products which enter subsequent columns is usually considerably higher.

6.1.4.3.1 Gross Beta Radioactivity

Distribution ratio data for gross beta emitters are given in Figures 6-20, 6-21, and 6-22 (Ref. 107, 109). The distribution ratio decreases with increasing uranium concentration in the solvent as shown in Figure 6-20. Figure 6-21, however, shows that with 80% uranium saturation of the solvent, the distribution ratio for gross beta increases about 2-fold as the nitric acid concentration increases from 1M to 3M. Figure 6-22 shows that in the absence of uranium the gross beta distribution ratio increases from 0.02 to 0.03 with an increase in nitric acid concentration from 1M to 6M. The beta activity in the HA column feed is largely attributable to the presence of a mixture of rare earth fission products. At most conditions, gross beta distribution ratios are intermediate in magnitude between corresponding values for total rare earths and ruthenium, and zirconium-niobium. The rare earths exhibit lower distribution ratios, in general, than ruthenium and zirconium-niobium and, hence, are more completely eliminated in the aqueous waste stream from the first extraction column than are the latter elements. In succeeding extraction columns, the beta activity is normally almost exclusively attributable to ruthenium and zirconium (Ref. 89, 92, 107, 111, 116, 117).

6.1.4.3.2 Gross Gamma Radioactivity

Since approximately 70% of the initial measured gross gamma activity is attributable to the zirconium-niobium pair, gross gamma distribution ratios are, as shown in Figure 6-22, intermediate between those of zirconium and niobium. Gross gamma distribution ratios are usually higher than those for gross beta (1.1 to 5 times as high at the conditions of Figure 6-22) (Ref. 68, 92, 116).

6.1.4.3.3 Ruthenium

Ruthenium is known to exist in Purex process solutions in several chemical species, although the nature of the species present and the conversion mechanisms of ruthenium from one form to another are incompletely understood. Ruthenium in solution may exist in all valence states

from +1 to +8, but the +4 state is probably the most common. The +3, +4, and +8 valence states are the ones most important to the Purex process. It is probable that ruthenium-nitric acid compounds exist in two groups--those containing a nitroso group (NO) and those without a nitroso group. In the nitroso-free group, $Ru(OH)_4$ has been isolated, but $Ru(NO_3)_4$ has not. The introduction of a nitroso group results in compounds of the type $Ru(NO)(NO_3)_x(OH)_{3-x}$. Aqueous ruthenium nitrate chemistry is complicated by the varying ratios of nitroso, nitrate, and hydroxide in the complex, which affect the equilibrium distribution relationships. Several forms normally coexist in the same solution. A disruption of the equilibrium between the species present (e.g., by the preferential solvent extraction of one species) results in the gradual conversion of other forms into the species removed from solution so as to re-establish the equilibrium.

As shown in Figures 6-21 and 6-22, the ruthenium distribution ratio is unique in that it decreases with an increase in nitric acid concentration, presumably due to a change in the predominant chemical forms which are dependent upon acidity. The data presented are for the predominantly relatively inextractable forms of ruthenium present at the column feed point. The effect of concentration of TBP in the solvent on the ruthenium distribution ratio is shown in Figure 6-24 (Ref. 118, 119).

Treatment of partially decontaminated uranium solution (1CU) with sodium nitrite or nitrogen dioxide gas results in a higher ruthenium D.F. in the subsequent uranium decontamination cycle (five times greater in one pilot plant comparison) (Ref. 2). However, treatment of freshly dissolved uranium with sodium nitrite does not increase the ruthenium D.F. in the following solvent extraction cycle. Apparently, in the latter case, the amount of relatively inextractable nitroso-ruthenium is already at equilibrium because of the treatment with nitric acid in the dissolving step (Ref. 2, 68, 89, 106, 116, 118, 120, 121, 122).

6.1.4.3.4 Zirconium and Niobium

Data for the distribution of Zr-95 are shown in Figure 6-20, and data for the distribution of Zr-95 and its daughter, Nb-95, are given in Figures 6-21, 6-22, and 6-24. The distribution ratios increase with increasing nitric acid and TBP concentrations, but decrease with an increase in the uranium saturation of the solvent. The zirconium distribution ratio varies approximately as the square of the TBP concentration. The increase with nitric acid concentration is different from the behavior of most elements in that the distribution ratio does not pass through a maximum for zirconium, but continues to rise as the acid concentration is increased to 12M and above. The increase of distribution ratio with acid concentration from 2 to 10M HNO_3 is attributed to the change in total nitrate ion concentration rather than acidity, since zirconium extraction is nearly independent of hydrogen ion concentration in this range. Thus, under process conditions, zirconium is, overall, the most extractable of the important fission products, although one or more of the ruthenium species, initially present in low concentrations, have considerably higher distribution ratios.

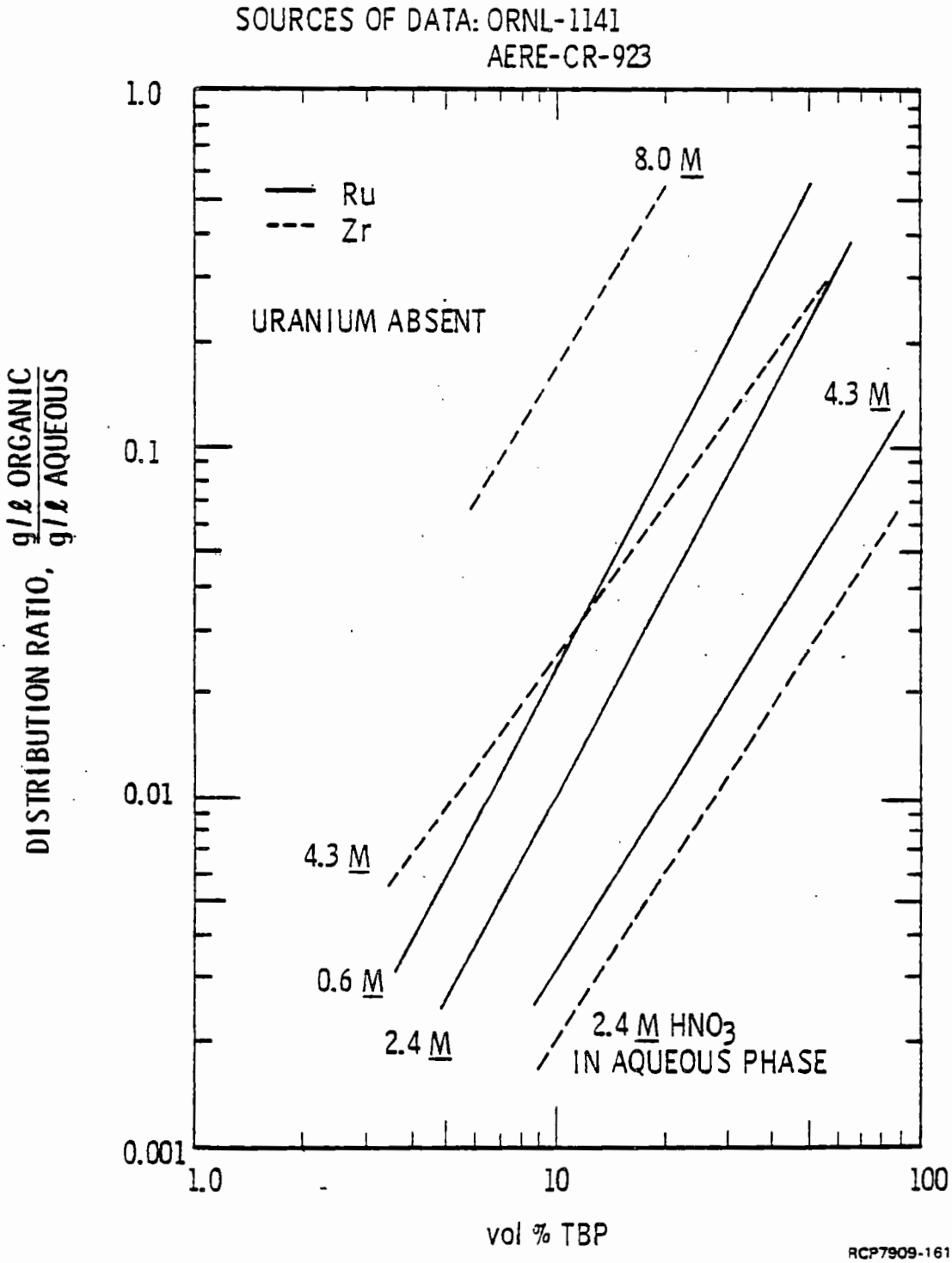

FIGURE 6-24. Effect of TBP Concentration on Distribution of Fission Products.

The data given in Figures 6-21 and 6-22 indicate that niobium decontamination should be considerably better than zirconium decontamination, but pilot plant results show both elements to be major contaminants of the product streams (Ref. 2). The 1B column showed a higher decontamination factor for niobium than for zirconium. In the 1C column, however, the reverse was true, and the niobium data must therefore be considered questionable. The two elements are similar in their chemical behavior, but zirconium has been studied in more detail.

Zirconium may exist in several forms in aqueous nitrate solutions; hydrolysis, polymerization, and complexing occur under some conditions. In Purex solutions, polymerization is probably not important because of the low zirconium concentration and the acidity of the process streams. Hydrolysis occurs in 2M HNO_3 to the extent of only a few percent, but at lower acidities, the amount of hydrolysis is much greater. In 3M HNO_3, zirconium is present principally in the form of negatively charged complex ions in which more than four NO_3^- groups are associated with each (tetravalent) zirconium atom. The extraction of a species with a nitrate-to-zirconium ratio of approximately four is indicated by the dependence of the distribution ratio on the fourth power of the nitrate concentration, and by chemical analysis of a third phase which forms during the extraction of macro amounts of zirconium. The zirconium-TBP complex contains two, or possibly three, TBP molecules per zirconium atom (Ref. 89, 90, 119, 123, 124).

6.1.4.3.5 Iodine

Free iodine may be extracted by a Purex-type solvent through complexing with the TBP or by reaction with the diluent (Ref. 108). In either case, the iodine extracted by the solvent remains predominantly with the solvent during the stripping operation and is subsequently only partially removed during solvent washing. Extraction by the diluent is largely the result of reaction of the iodine with olefinic compounds which are present in small concentrations in virgin diluent. Iodine in the form of iodide is dissolved by TBP, but is readily washed from the solvent by water. In the form of iodate, iodine is not extracted by TBP-diluent mixtures. Although the levels of iodine activity may approach those of other fission products in the uranium product if relatively fresh fuel elements are processed, the I-131 half-life is short (8.1 days), and its activity is negligible in irradiated metal which has been "cooled" for 180 days or more (Ref. 2, 125, 126).

6.1.4.3.6 Other Fission Products

Although of less importance to the process than those already discussed, distribution ratios for several other fission products (principally rare earths) have also been measured.

Along with ruthenium, zirconium, and niobium, cerium is another fission product element which may, at least partially, limit decontamination under normal process conditions. Under Purex conditions, cerium is in its trivalent state. Cerium distribution ratios, as shown in Figure 6-22, pass through a maximum at about 3M HNO_3. At the feed point of the HA column, the distribution ratio is about 0.002 (Ref. 116).

Distribution ratios for the mixture of rare earths present in irradiated uranium are shown in Figures 6-20, 6-21, and 6-22. The values are sufficiently low so that the radioactivity attributable to these fission products is usually neglible in comparison with that due to ruthenium and zirconium-niobium after one solvent extraction cycle. In the range of 1M to 6M HNO_3, the rare earth distribution ratio is not appreciably influenced by the acid concentration. It is decreased by a factor of approximately 40 by the presence of uranium equivalent to 80% saturation of the TBP (Ref. 89, 107, 127).

Distribution ratios of individual rare earths have been measured in isolated experiments. Gadolinium has an organic-to-aqueous distribution ratio of about 0.003 in the presence of 1M HNO_3 and 0.8M UNH, with 30% TBP (Ref. 128). Europium, in an aqueous solution containing 1M thorium nitrate and 2M HNO_3, with 22.5 vol% TBP, has a distribution ratio of about 0.003. Under the same conditions, the distribution ratio of yttrium is about 0.001 (Ref. 43). Table 6-22 lists distribution ratios for several rare earths (including cerium) in a 50 vol% TBP solvent system (Ref. 129, 130). For an aqueous-organic system with diluent absent, the distribution of yttrium increased from 0.1 with 1M HNO_3 to 100 with 16M HNO_3; under the same conditions the distribution ratio of scandium increased from 0.3 to 600. Each of the above rare earths has a distribution ratio that exhibits a second- or third-power dependence on the TBP concentration (Ref. 131).

6.1.4.3.7 Factors Affecting Fission Product Distribution Coefficients

6.1.4.3.7.1 Effect of Uranium Concentration

The presence of uranium suppresses the distribution of fission products into the organic phase, as shown in Figure 6-20. This is attributed to the fact that uranium is strongly complexed by TBP, and consequently, reduces the free TBP concentration available for fission product complexing. As plotted, the extent of the decrease appears comparable, within the limits of experimental accuracy, for different fission products, but is greater for ruthenium. The greater reduction for ruthenium may be due to the increase in nitric acid concentration in the equilibrated aqueous phase as the uranium concentration was increased under the conditions of Figure 6-20. It is inferred from the data in Figures 6-20, 6-21, and 6-22 that the change in E_a^o for ruthenium as a function of uranium saturation is comparable with the change for zirconium, if nitric acid concentration is held constant (Ref. 89, 92, 107).

TABLE 6-22. Distribution Ratios of Rare Earths.

HNO_3 Concentration, M		Distribution Ratio (g/ℓ Org.)/(g/ℓ Aq.)						
Aqueous	Organic	Cerium	Thulium	Europium	Samarium	Holmium	Ytterbium	Yttrium
0.025	0.015	0.0093	0.0033	0.012	0.011	--	--	--
0.10	0.025	0.013	0.0053	0.017	0.017	0.00074	0.00051	0.0017
1.0	0.25	0.045	0.030	0.092	0.087	0.041	0.013	0.018
3.0	0.73	0.039	0.081	0.13	0.13	0.11	0.048	0.071
5.0	1.2	0.023	0.12	0.10	0.095	0.12	0.086	0.085
7.0	1.7	0.013	0.19	0.089	0.074	0.15	0.18	0.15

In the scrub sections of the uranium extraction columns, the solvent is approximately 70% saturated with uranium. The following data obtained from a series of miniature mixer-settler tests show the influence of uranium saturation of the solvent on decontamination for an HA column with the uranium saturation of the solvent varied as shown (Ref. 132).

Fission Product	Arithmetic Decontamination Factors, DF	
	65% U Saturation	45% U Saturation
Gross beta	6500	1340
Gross gamma	2000	290
Ruthenium	338	79
Zirconium	4770	227
Niobium	5240	341

6.1.4.3.7.2 Effect of Nitric Acid Concentration

The effect of nitric acid concentration on the distribution of fission products is illustrated in Figures 6-21 and 6-22. In general, an increase in nitric acid concentration increases the distribution ratio, although in the case of ruthenium, the effect is reversed. The overall effect of nitric acid is determined by the influence of nitrate and hydrogen ion concentrations on the competing complexing reaction of the fission products with TBP and with components of the aqueous solution (Ref. 107).

6.1.4.3.7.3 Effect of Tributyl Phosphate Concentration

Figure 6-24 illustrates the effect of the TBP concentration in the solvent on the distribution ratios of zirconium and ruthenium. At the range of conditions of Figure 6-24, the distribution ratio, E_a^o, increases with the 1.4 to 2 power of the TBP concentration. The TBP concentration dependence of the distribution ratio for cerium is approximately the same (Ref. 118, 122).

6.1.4.3.7.4 Effect of Diluent

The hydrocarbon diluent, in its original state, has no appreciable effect on fission product decontamination. Diluent containing olefinic or aromatic components is susceptible to nitration, however, and some nitration products increase fission product (notably ruthenium) E_a^o values, and thus exert an adverse effect on decontamination (Ref. 133). For that reason, the Purex process requires the use of a diluent free of significant concentrations of aromatics and olefins.

6.1.4.3.7.5 Effect of Dibutyl Phosphate

When solvent contains DBP, a large increase in the zirconium distribution ratio is noted. Niobium extraction is also affected in a similar fashion, but to a much smaller extent. Ruthenium and cerium are reportedly unaffected by the presence of DBP (Ref. 133). The solvent treatment process effectively removes DBP and its complexes (see subsection 6.1.2.6).

6.1.4.3.7.6 Effect of Complexing Agents

Aqueous-soluble complexing agents have the effect of decreasing the extractability of zirconium by causing its retention in the aqueous phase. The extraction of ruthenium, however, is not suppressed by the complexing agents (e.g., oxalate and phosphate ions) which are effective with elements such as zirconium. The effects of oxalate and fluosilicate ions on the distribution of zirconium, cerium, and ruthenium are shown in Table 6-23 (Ref. 92). The zirconium distribution ratio, E_a^o, is decreased by a factor of approximately 40 by 0.01M oxalate ion, and by a factor of approximately 20 by 0.01M fluosilicate ion, at the conditions of Table 6-23. Other reports indicate that the zirconium E_a^o, at the above conditions, was decreased by factors of 6 and 100 by 0.1M sulfate and 0.1M phosphate ions, respectively. (These complexing agents, which tend to increase fission product decontamination factors, generally also have the undesirable effect of complexing plutonium and uranium.) (Ref. 9, 92).

6.1.4.3.7.7 Effect of Temperature

Fission product distribution ratios at comparable degrees of solvent saturation and aqueous salting strength are probably not greatly affected by temperature (Ref. 89). However, for a given aqueous-phase composition, an increase in temperature results in a decreased equilibrium concentration of uranium in the organic phase, and, as discussed previously in this section, the organic-to-aqueous distribution ratios of the principal fission products are increased by this change in uranium concentration. Elevated temperatures also cause a more rapid formation of DBP from the hydrolysis of TBP, and thus cause increased extraction of zirconium through complexing with DBP (Ref. 109). Improved decontamination factors, reported by Knolls Atomic Power Laboratory to have been achieved by increasing the temperature from 50° to 70°C, may be due to changes in the physical properties of the solution, resulting in improved scrubbing efficiency (Ref. 115, 134).

6.1.4.4 Nitric Acid

As discussed in Chapter 9.0, the recovery and reuse of nitric acid salting agent is one of the fundamental practices of the Purex process. Acid is present in each of the columns, and its concentration greatly influences the distribution ratios of uranium, plutonium, and fission products, as has been discussed in preceding subsections of this chapter. Unlike other salting agents, such as aluminum nitrate, nitric acid is extracted by the solvent and, therefore, its concentration in each liquid phase varies widely throughout a column.

TABLE 6-23. Effect of Complexing Agents on Distribution of Fission Products.

HNO_3 Conc. in Aqueous Phase: 2.8 to 2.9M Solvent: 10 vol% TBP in CCl_4

Complexing Agent	Uranium Concentration in Solvent, % Saturation	10^4 x (Distribution Ratio), $\frac{g/\ell\ Org.}{g/\ell\ Aq.}$				
		Gross Beta	Gross Gamma	Zr	Ce	Ru
None	25	30	60	103	4.0	11
	42	18	41	67	1.9	7.2
	69	6.2	18.2	25	0.40	2.2
	84	3.7	11.2	13	0.16	1.3
0.01M $K_2C_2O_4$	23	3.6	8.6		3.5	10
	43	3.2	4.6	1.10	2.90	10
	69	1.1	2.0	0.48	0.43	2.6
	75	0.61		0.38	0.063	1.5
0.01M Na_2SiF_6	24	5.4	7.7	4.2	4.5	10
	45	4.1	5.3	3.0	3.5	7.7
	73	1.5	2.8	1.6	0.5	2.3
	85	1.1	3.7		0.2	2.7

Extraction data and the solubility of nitric acid in TBP indicate that under normal Purex conditions, nitric acid is extracted by TBP as an equal molecular ratio complex, as shown by Equation 6.49, although a complex with a two-to-one HNO_3/TBP ratio probably exists at high nitric acid concentrations (Ref. 101).

$$H^+ + NO_3^- + TBP \rightleftarrows HNO_3 \cdot TBP \qquad (6.49)$$

The effects of changes in process variables may be qualitatively rationalized on the basis of the preceding equilibrium. Neglecting activity coefficients, the distribution ratio is given by the expression:

$$E_a^o = K[NO_3^-][TBP] \qquad (6.50)$$

where

K = equilibrium constant;

$[NO_3^-]$ = molarity of nitrate ion in the aqueous phase; and

[TBP] = molarity of uncomplexed TBP in the organic phase (Ref. 41, 99, 107, 119, 135, 136).

6.1.4.4.1 Effects of Uranium Concentration

The effects of uranium concentration on the nitric acid distribution ratio are illustrated in Figures 6-25 and 6-26 (Ref. 89). At low acid and uranium concentrations, an increase in the uranium concentration increases the nitric acid distribution ratio, E_a^o, because of the increase in the nitrate ion concentration. As shown in Figure 6-26, with 0.1M HNO_3 in the aqueous phase, the nitric acid E_a^o increases from 0.06 to 0.09 while increasing the organic-phase uranium saturation from 0 to 10%. At higher acid or uranium concentrations, the addition of uranyl nitrate decreases the nitric acid distribution ratio. The effect of the increase in nitrate ion concentration is counteracted by the reduction in free TBP concentration (Ref. 91, 137).

6.1.4.4.2 Effect of Nitric Acid Concentration

The nitric acid distribution ratio may be either increased or decreased by the addition of nitric acid, as shown in Figure 6-25. At low total nitrate ion concentrations, the addition of nitric acid results in an increase in nitrate ion concentration in the organic phase that is larger in percentage than the decrease in free TBP concentration; but at high initial nitrate ion concentration, the decrease in free TBP more than compensates for the increase in nitrate ion concentration, and thus, the distribution ratio decreases with the addition of acid. In a nitric acid-TBP system above 4M HNO_3 in the aqueous phase, the nitric acid concentration in the organic phase is greater than the theoretical saturation of the solvent based on a complex of the form, $HNO_3 \cdot TBP$ (Ref. 91, 96, 98, 105, 138, 139).

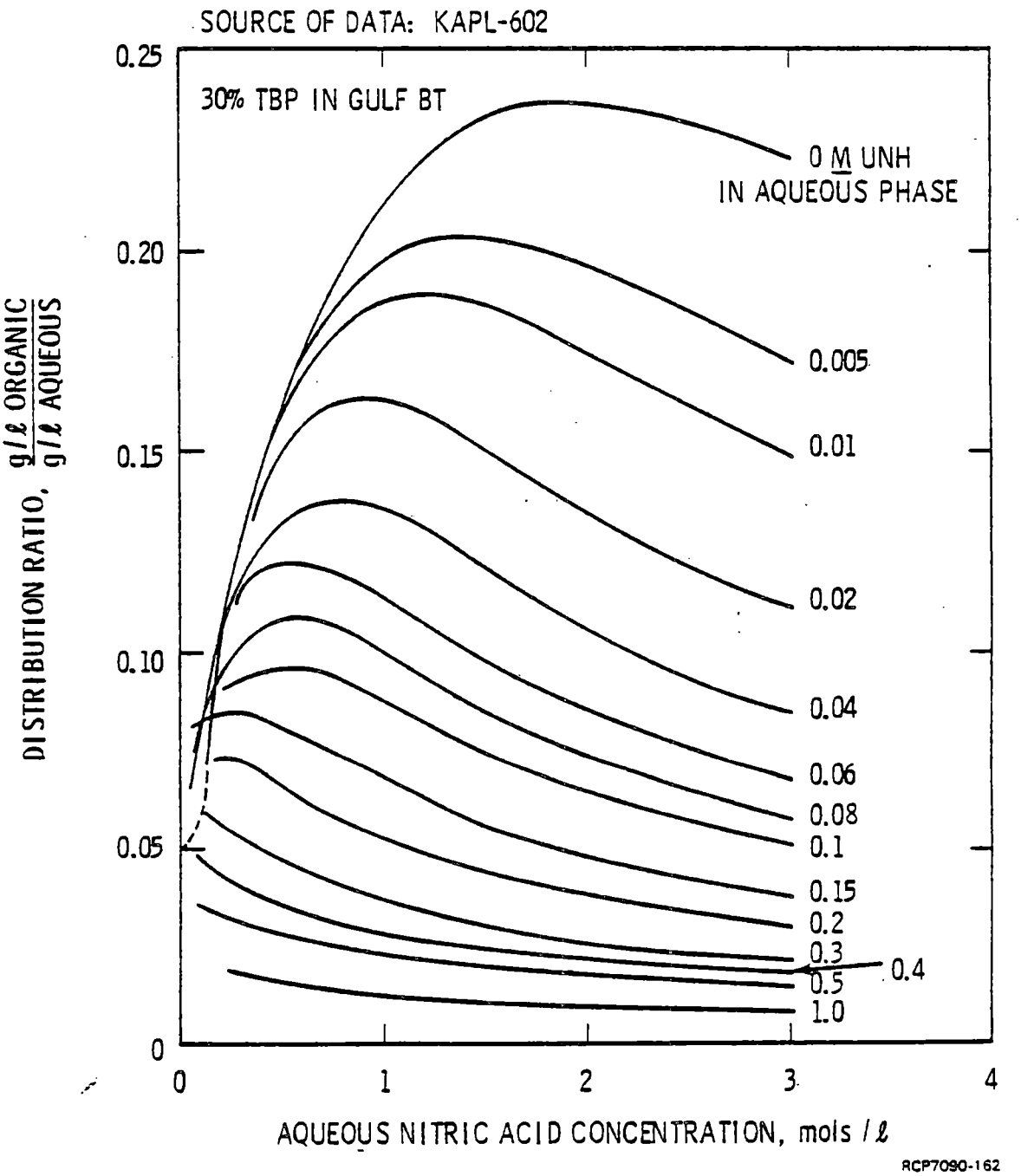

FIGURE 6-25. Effects of UNH and HNO_3 Concentrations on Distribution of HNO_3.

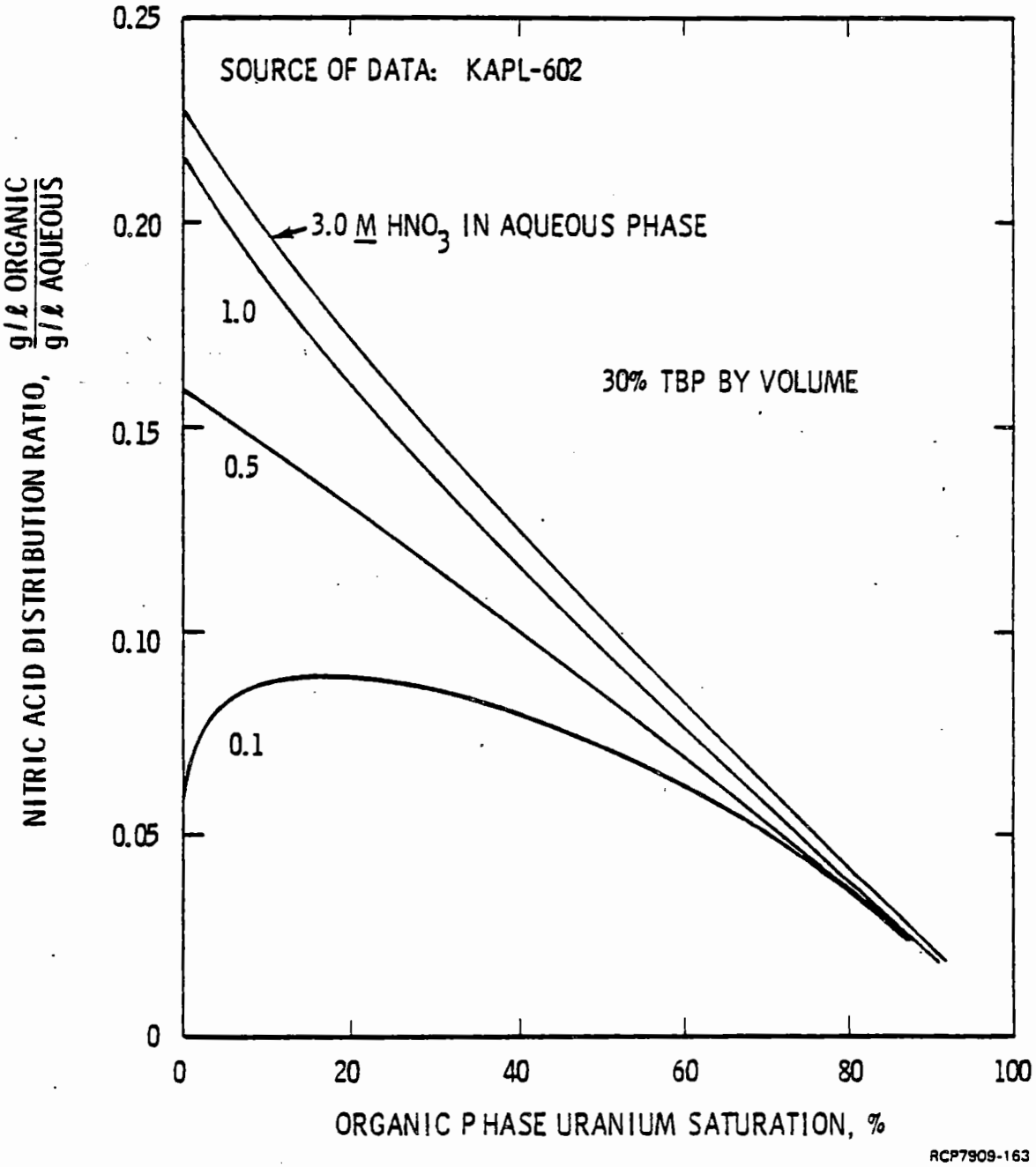

FIGURE 6-26. Effect of Organic-Phase Uranium Saturation on Distribution of Nitric Acid.

A small amount of nitric acid, derived from hydrolysis of UNH, is extracted by TBP even from stoichiometrically neutral aqueous uranyl nitrate solutions. Accordingly, the distribution ratio concept cannot be applied in the conventional sense to nitric acid in uranium-bearing systems in which the aqueous-phase stoichiometric nitric acid concentration is very low (substantially below 0.1M). Organic-phase nitric acid concentrations in equilibrium with stoichiometrically neutral aqueous UNH are usually not much lower than those in equilibrium with 0.1M HNO_3 at the same UNH concentration; these organic-phase concentrations range from 0.002M to 0.004M (Ref. 91, 96, 138, 139).

6.1.4.4.3 Effect of TBP Concentration

The equilibrium expression for the formation of the HNO_3-TBP complex indicates that the distribution ratio should be directly proportional to the concentration of uncomplexed TBP. In uranium-free systems, this prediction is reasonably borne out for aqueous-phase nitric acid concentrations of 3 to 6M. At lower acidities, however, the E_a^o increases with a higher power of the TBP concentration (approximately the 1.5 power at aqueous nitric acid molarities below 1.0). In the presence of uranium, it is inferred (from data obtained with a single solvent concentration) that the dependence of the E_a^o on the free TBP concentration is greater than first power, but less than second power (Ref. 41, 98, 118, 139).

6.1.4.4.4 Effect of Temperature

The nitric acid distribution ratio is relatively insensitive to temperature, as shown in Figure 6-27 (Ref. 89, 115). In the absence of uranium, the distribution ratio, in general, decreases slightly (25 to 30%), with an increase in temperature from 25° to 70°C. In uranium systems the nitric acid distribution ratio may increase with temperature, depending upon the relative concentrations of acid and uranium, due to the reduction in concentration of uranium in the solvent at elevated temperatures for a given aqueous composition.

6.1.4.5 Uranium X_1 and Uranium X_2

Uranium X_1 (Th-234) and UX_2 (Pa-234) are products of radioactive decay of U-238. They are of importance to the Purex process because they form relatively strong complexes with TBP, and may contribute appreciable radioactivity to the product streams, particularly the neptunium product stream. Both are short-lived; the half lives are 24.5 days for UX_1 and 1.1 minutes for UX_2. Corrections for their presence may be necessary in order to determine the decontamination from fission products achieved in the process, unless gamma energy analysis or "gamma scan" methods are used to identify specific fission products.

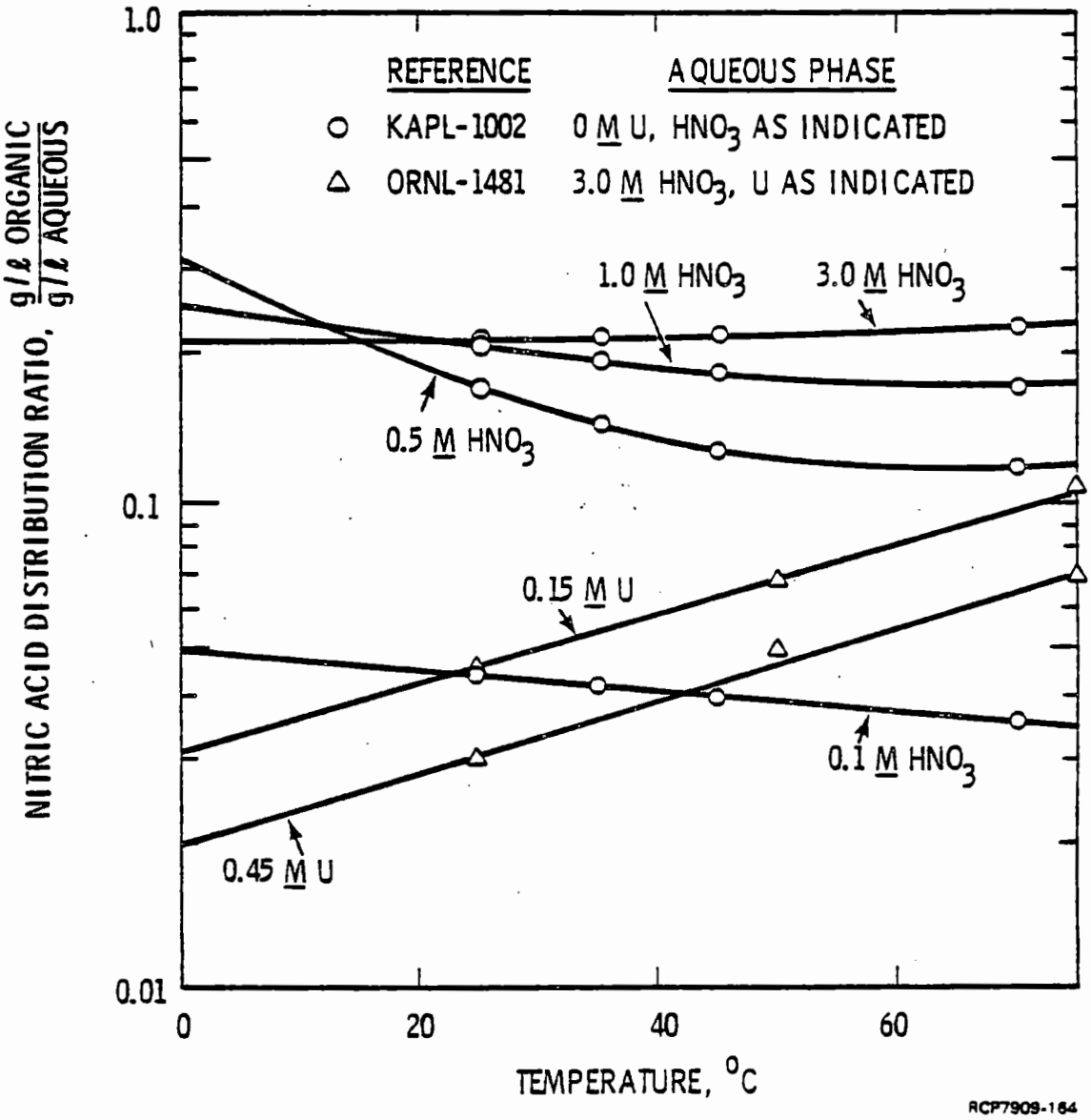

FIGURE 6-27. Effect of Temperature on Distribution of Nitric Acid.

At the low concentrations in which UX_1 is present, thorium probably forms a complex with TBP of the form, $Th(NO_3)_4 \cdot 4TBP$. Thorium also forms complexes with a lower TBP/thorium ratio at higher thorium concentrations. Typical UX_1 and UX_2 distribution ratios are given in Figure 6-28 at various acidities in uranium-free systems. UX_1 and UX_2 E_a^o values are of the order of 100 to 1,000 times higher than those of fission products and about the same as those for neptunium (IV). The plutonium (IV)-UX_1 separation factor (the ratio of the E_a^o for plutonium to that for UX_1) ranges approximately from 5 to 10. The UX_1 distribution ratio increases approximately as the square of the TBP concentration. As with uranium, complexing agents such as sulfate and phosphate greatly depress the distribution ratio. An increase in temperature of 30°C decreases the distribution ratio by about 20%.

Experiments carried out in miniature mixer-settlers operated at approximately Purex HW 3 Flowsheet (Ref. 140) conditions, without the HA-HC column codecontamination cycle, gave the following decontamination factors for UX_1 (Ref. 141):

Purex Column	Product Stream	UX_1 Decontamination Factor	
		Experimental	Calculated
1A	1AP	1.008	1.08
1B	1BP	50.0	25.0
2A	2AP	1.32	1.72
Overall Process	2BP	67.0	50.0

It was found that increasing the 1BX acidity from 0.1 to 0.5M HNO_3, increased the 1B column DF from 50 to 250. Increasing the 2AS flow rate to 125% of flowsheet specification increased the 2A column DF to 7.7.

The distribution ratio of UX_2 is of the same order of magnitude as that of UX_1, as shown in Figure 6-28, but any radioactivity due to UX_2 will disappear rapidly (after the elimination of UX_1) because of its very short (1.1 minute) half-life (Ref. 91, 118, 136, 138, 141, 142, 143).

6.1.4.6 Americium and Curium

Americium and curium are transplutonium elements which, for extraction considerations, resemble the rare earths discussed previously. The two elements exhibit similar distribution ratios.

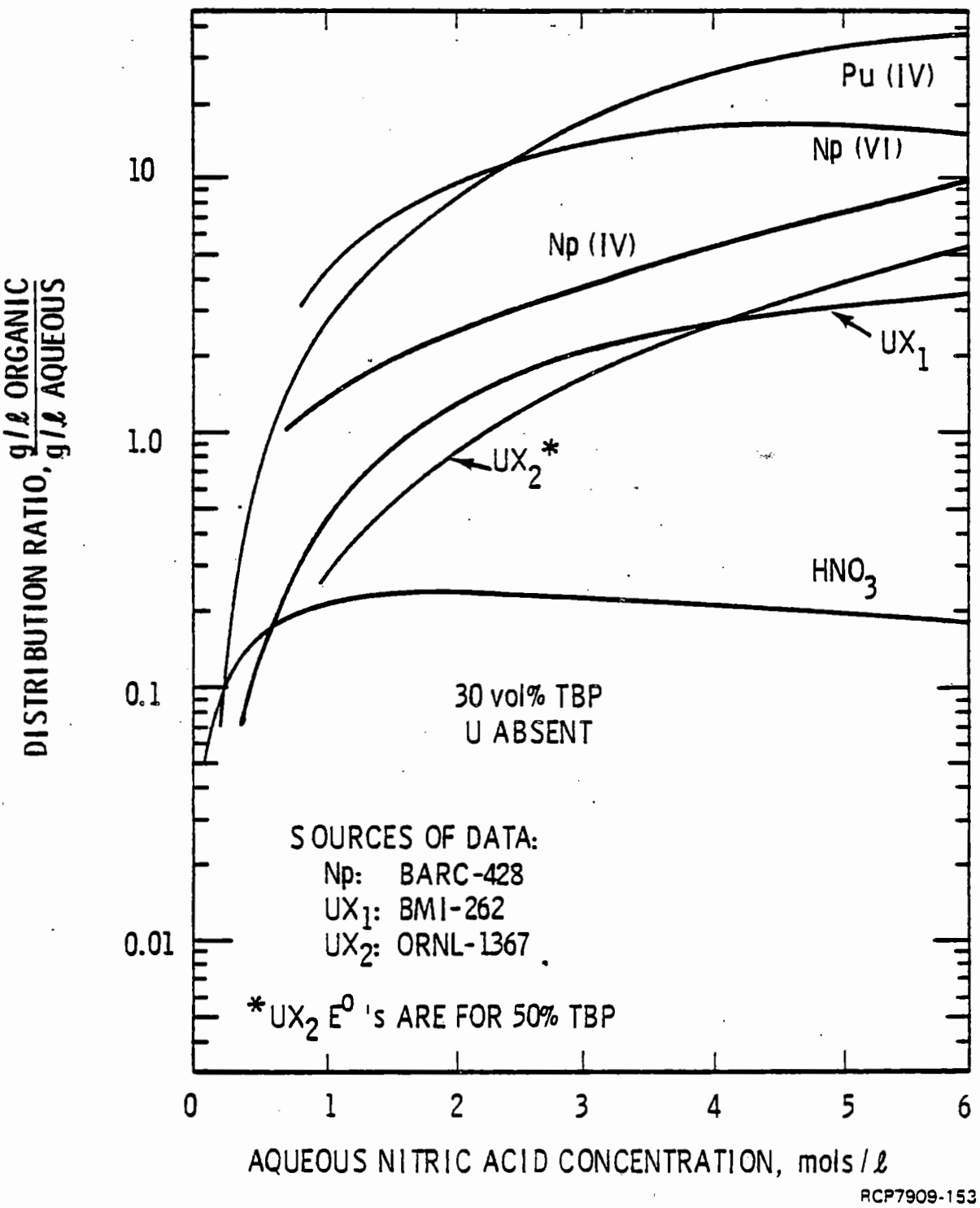

FIGURE 6-28. Effect of Nitric Acid Concentration on Distribution of Neptunium, UX_1 and UX_2.

The americium distribution ratios between nitric acid solutions and organic phases containing TBP are given in the following table:

HNO_3 in Aqueous Phase, M	Americium Distribution Ratio, (g/ℓ Org.)/(g/ℓ Aq.)	
	100% TBP	50% TBP in Dibutyl Ether
0.3	0.06	0.02
1.0	0.2	0.04
3.0	0.3	0.04
6.0	0.2	0.03
10.0	0.3	0.04

The dependence of distribution ratio on TBP concentration is approximately second power at low acidities (approximately 1M HNO_3), and third power at acidities above 4M HNO_3. Americium is more effectively salted into the organic phase by metal nitrates than by nitric acid; with calcium nitrate as the salting agent, and in the absence of free acid, the distribution ratios between 30% TBP and solutions of aqueous nitrate ion concentrations of 2M and 6M are 0.2 and 10, respectively (Ref. 92, 144, 145).

6.1.4.7 Other Metallic Ions

Nonradioactive metallic ions are of potential process significance as contaminants of the product streams. The distribution ratios are very low however, as indicated by the representative data in Table 6-24 (Ref. 72, 95, 145, 146, 147).

6.1.4.8 Neptunium

The distribution ratios (E_a^o's) for neptunium (IV) and neptunium (VI) between Purex process solvent and aqueous solutions containing various concentrations of nitric acid are shown in Figure 6-28 and Table 6-25 (Ref. 148). The E_a^o values for neptunium (IV) increase from 1.5 to 10.0 as the aqueous phase nitric acid concentration increases from 1.0 to 6.0M. By contrast the E_a^o value for neptunium (VI) increases from 4 to 13 as the nitric acid concentration increases from 1.0 to 3.0M, and then remains relatively constant as the nitric acid concentration is increased further to 6M.

The distribution ratios for both neptunium (IV) and neptunium (VI) are strongly influenced by the concentration of uranium in the solvent phase as shown in Table 6-26. At an initial nitric acid concentration of 3.0M, the E_a^o for neptunium (IV) decreases from 1 to 0.08 as the uranium saturation of the aqueous phase increases from 32 to 86%. Similarly, the E_a^o for neptunium (VI) decreases from 7 to 0.4 with the above increase in saturation. This characteristic of neptunium facilitates its separation from uranium in the 2D column.

9413275.1151

TABLE 6-24. Distribution Ratios of Miscellaneous Nitrates.

Ion	Aqueous-Phase Composition	Vol% TBP	Distribution Ratio (g/ℓ Org.)/(g/ℓ Aq.)	Reference
Al^{+3}	4.7M HNO_3, 7.2 g Al/ℓ	15	0.0003	70
Ca^{+2}	4.7M HNO_3, 7.5 g Ca/ℓ	15	0.0003	70
Ca^{+2}	1M $Ca(NO_3)_2$	30	0.008	140
Co^{+2}	2.14M $Co(NO_3)_2$	60	0.002	142
Cr^{+3}	3M HNO_3, 1.0M $Cr(NO_3)_3$	100	0.0001	93
Cr^{+3}	3M HNO_3, 1.9M $Cr(NO_3)_3$	100	0.0001	93
Cu^{+2}	3M HNO_3, 0.8M $Cu(NO_3)_2$	100	0.0004	93
Fe^{+2}	4.7M HNO_3, 0.7 g Fe/ℓ	15	0.005	70
Fe^{+2}, Fe^{+3}	2M HNO_3, 2.8 g Fe/ℓ	12.5	0.0003	141
Mg^{+2}	4.7M HNO_3, 2M $Mg(NO_3)_2$	15	0.0003	70
Na^{+}	3M HNO_3, ca. 0.2M UNH, 4 g Na/ℓ	30	0.0003	141
Na^{+}	2M HNO_3, 0.18M $NaNO_3$	12.5	0.003	141
Ni^{+2}	3M HNO_3, 0.9M $Ni(NO_3)_2$	100	0.00006	93
Ni^{+2}	3M HNO_3, 1.7M $Ni(NO_3)_2$	100	0.00006	93
Zn^{+2}	2M $Zn(NO_3)_2$	12.5	0.0001	141

TABLE 6-25. Effect of Nitric Acid Concentration on the Distribution Ratios of Neptunium (IV) and Neptunium (VI).

HNO_3 in Aqueous Phase, M	Neptunium Distribution Ratio	
	$\frac{g\ Np^{+4}/\ell\ Org.^*}{g\ Np^{+4}/\ell\ Aq.}$	$\frac{g\ Np^{+6}/\ell\ Org.^*}{g\ Np^{+6}/\ell\ Aq.}$
1.0	1.5	4.4
2.0	2.3	9.7
3.0	3.5	13.5
4.0	5.1	16.6
5.0	7.3	16.7
6.0	10.0	15.4

*30 vol% TBP in hydrocarbon diluent.

TABLE 6-26. Effect of Uranium Saturation of the Solvent on the Distribution Ratios of Neptunium (IV) and Neptunium (VI).

% Saturation of Solvent by Uranium	Neptunium Distribution Ratio	
	$\frac{g\ Np^{+4}/\ell\ Org.^*}{g\ Np^{+4}/\ell\ Aq.^\dagger}$	$\frac{g\ Np^{+6}/\ell\ Org.^*}{g\ Np^{+6}/\ell\ Aq.^\dagger}$
32	1.1	7.1
57	0.4	3.7
76	0.2	1.3
79	0.1	1.1
82	0.1	0.7
86	0.08	0.4

*30 vol% TBP in hydrocarbon diluent.

†Initial aqueous phase nitric acid concentration is 3.0M.

6.2 PROCESS ENGINEERING

This section discusses the chemical engineering technology of the pulse columns in which the solvent extraction process employed in the Purex Plant is carried out. The chemistry of the Purex solvent extraction process is discussed in Section 6.1. The pulse columns and associated pulse generators are described in Chapter 3.0, Section 3.6.

6.2.1 Basic Principles and Methods

6.2.1.1 Definitions of Special Terms

The terms defined in this subsection are those used frequently in discussing solvent extraction column operation or in evaluating column performance. Some of the terms were defined in Section 6.1 and are included here for convenience. Convenient colloquial terms which have come into use for the Purex process are also included.

- Solvent Extraction. The solvent extraction process was defined in Section 6.1 as the transfer of a dissolved solute from an aqueous phase to an immiscible organic phase. In more general terms, solvent extraction is defined as a process in which the separation of mixtures of different substances is accomplished by treatment with a selective liquid solvent. Although solvent extraction processes include leaching and washing, the Purex process is concerned only with liquid-liquid extraction, in which one or more solutes in a liquid phase are preferentially extracted into a second, immiscible liquid phase. The effectiveness of the extraction is dependent on the chemical composition and physical properties of the two phases, as well as on the type of extraction equipment used.

- Extraction, Stripping and Scrubbing. The term "extraction" is used in discussing the Purex process to describe the mass transfer of solute, notably uranium or plutonium, from the aqueous to the organic phase as, for instance, in the lower section of the HA column.

  The term "stripping" is used to describe mass transfer of uranium or plutonium from the organic to the aqueous phase. Thus, in the C-type column, uranium or plutonium is said to be stripped from the organic feed to the aqueous effluent stream.

  The term "scrubbing" is used to describe the removal of fission products from a uranium- or plutonium-bearing organic stream by contacting it with an aqueous stream. For example, scrubbing is carried out in the upper section of the HA column. The

removal of small residual amounts of uranium from the plutonium-bearing aqueous streams in the 1BS and 2BS columns by contacting with an organic stream is also referred to as scrubbing.

- Simple and Dual-Purpose Columns. A simple column is a column designed to perform only one solvent extraction function (extraction, scrubbing, or stripping). The Purex 1C and 1BS columns are typical examples of simple columns in which the operations of uranium stripping and plutonium stream scrubbing, respectively, are carried out.

  Other columns, such as the Purex HA column, are designed to carry out two separate solvent extraction functions and are, therefore, referred to as "dual-purpose" columns. In the HA column, uranium, plutonium, neptunium, and some fission products are extracted into the organic phase in the bottom section of the column and the fission products are scrubbed from the organic phase in the upper section. The dual-scrub column is a further refinement of the dual-purpose extraction column. In this column, a second scrub stream is introduced at an intermediate point in the scrub section. In the 2D column, for example, the primary or terminal scrub stream is water, which strips the nitric acid and residual fission products from the organic stream. The second or intermediate scrub stream contains water and hydroxylamine nitrate to reduce plutonium and neptunium to the III and IV valence states, respectively.

- Flooding. Flooding (or complete flooding) in a pulse column takes place when the flow rates of either or both of the liquid phases are so high that they cannot pass countercurrently through the column. The result is that one of the phases leaves the column at the same end at which it enters. The flooding capacity is the throughput rate at which an infinitesimal increase in flow rates results in flooding.

  "Local flooding" in the column consists of an unusually large accumulation of dispersed phase at some location in the two-phase zone. It may appear as an accumulation of closely-packed dispersed-phase globules, or as a single large globule filling the space between two or more plates. If the local flooding tends to dissipate and reform on a fairly frequent schedule, it is termed "cyclic local flooding." In either case, if the local flood tends to maintain a given size and does not disrupt the flow rate of the dispersed phase, the column may be operated indefinitely and give satisfactory performance.

- Reflux (External and Internal). The term "reflux," as used in discussing diffusional processes in general, refers to the recycling of a portion of the product back to the feed point. In

solvent extraction, as in other diffusional processes, "external reflux" may be returned to the column to enrich the extract concentration. For example, the concentration of plutonium in the Purex 2AP stream could be increased by adding a portion of the 2BP stream to the 2AS stream.

In some of the columns, a portion of one or more of the solutes may be extracted in one part of the column and stripped in the other. This phenomenon is referred to as "internal reflux." For example, in the HA column extraction section, nitric acid is extracted into the organic phase at the bottom of the section and partially stripped back into the aqueous phase at the top. Also, in the HA column, a portion of the uranium and plutonium in the organic phase is refluxed internally, being stripped from the organic phase in the scrub section and carried down the column by the HAS to the extraction section where it is again extracted into the organic phase.

- Amplitude and Frequency. The pulse amplitude is the magnitude of the up-and-down displacement of the liquid in a pulse column, as measured between the extreme positions of the pulse (i.e., twice the distance between the mean position and an extreme).

  The "pulse frequency" is the time rate of pulsing, expressed in cycles per minute.

  The "amplitude-frequency product" is frequently used as a simple means of correlating the pulsing conditions with column performance. It is equal to the pulse amplitude times the frequency, and is conveniently expressed in inches per minute.

- Volume Velocity. The term "superficial volume velocity" may be defined as the sum of the net volume flow rates of the two phases in the column divided by the total cross-sectional area of the enclosing column, neglecting the cross-section of the column occupied by packing or plates. It is expressed in this manual as gal/hr-ft^2. The volume velocity which produces comparable performance in columns with identical internal components, but different diameters, is essentially constant. Volume velocity is used, therefore, to correlate column performance (flooding and efficiency) with throughput rate.

- Pulsed Volume Velocity

  The "pulsed volume velocity" is simply the pulse amplitude-frequency product expressed in superficial volume-velocity units. It is directly proportional to both the pulse amplitude and frequency. In units of gallons pulsed/(hr) (ft^2 of column cross-sectional area), it may be calculated by multiplying the pulse frequency (in cycles/hr) by the pulse

displacement in gallons (employing the sum of the "up" and "down" displacements), and then dividing by the column cross-sectional area in square feet. Alternatively, if the amplitude, a, and the frequency, f, are expressed in the usual units of inches and cycles/min, respectively, the pulsed volume velocity in gal/hr-ft^2 is equal to 74.81 af.

- Equilibrium and Operating Lines. An "equilibrium line" is a graphical representation of the equilibrium solute distribution between the aqueous and organic phases for the chemical conditions existing in the countercurrent solvent extraction contactors. The development of the phase equilibrium data for the Purex process is discussed in Section 6.1.

  An "operating line" is a locus of points depicting the actual solute concentrations of the aqueous and organic phases at various heights within the column. The operating line equation is developed from a solute material balance made around either end of a plate or packed section. Typical operating and equilibrium lines for the Purex columns and discussion of their use in evaluating column performance are presented in 6.2.2.

- Height Equivalent to a Theoretical Stage (HETS). The mass transfer effectiveness of solvent extraction columns may be evaluated in terms of the height of a contacting section required to perform the same extraction duty as can be achieved in a simple contactor (or theoretical stage) in which two influent streams not at equilibrium are mixed and produce effluent streams which are at equilibrium. The equations and methods for calculating the HETS in a solvent extraction column are shown in subsection 6.2.2.2.

- Height of a Transfer Unit. Height of a transfer unit (HTU), like HETS, is a measure of the mass transfer effectiveness of a solvent extraction column. In a continuous, countercurrent, solvent extraction column, however, equilibrium between the phases is not closely approached. Thus the HETS, which is a comparison of the solute transfer process that takes place in a segment of the column with that in a simple contactor in which the phases are allowed to reach equilibrium, provides only an approximate measure of extraction efficiency. The transfer unit, as discussed in 6.2.2.2, is defined on a differential countercurrent basis, and consists of a step on the operating line such that the change in concentration of the solute is equal to the average difference between the concentration values on the equilibrium curve and the operating line over the region of the step. The relation between the HTU and the HETS is also discussed in 6.2.2.2.

- Pinching Flow Ratio. The "pinching" flow ratio is defined as the lowest ratio of extractant flow to feed flow that is theoretically sufficient for transfer of all of the solute in the feed into the extractant when the number of theoretical stages or transfer units is infinite. A "pinch" occurs when the actual solute concentrations in the two phases at some point in the column are equal to the equilibrium concentrations. This condition is shown graphically on an operating diagram by the equilibrium and operating lines intersecting or touching. The practical significance of the pinch in connection with operation of the Purex Plant columns is discussed in 6.2.2.5.

6.2.1.2 Methods of Solvent Extraction

Many different methods are available for accomplishing a liquid-liquid extraction and obtaining the desired performance. A few of these methods are discussed briefly in this subsection.

- Simple Contact. The simplest method, and the one most commonly used on a laboratory scale, is the simple contact, in which the solvent and the feed containing the solute to be extracted are brought together, mixed, and the two phases allowed to settle. The operation may be either batch, using a single container, or continuous, utilizing separate mixing and settling chambers. For any given ratio of solvent to feed, the maximum amount of solute which may be extracted is fixed solely by equilibrium considerations.

- Simple Multistage (Cocurrent) Contact. In a simple contact, the extract and raffinate solute concentrations are fixed by the equilibrium distribution coefficient (see 6.1.1.2.3). If a raffinate with a lower concentration of solute is desired, the raffinate from the first simple contact may be mixed with fresh solvent.

  If a sufficient number of contacts are made, and a sufficiently large volume of solvent is used, the concentration of the extracted component in the final raffinate may be reduced to almost any desired low value.

- Countercurrent Multicontact Extraction. In countercurrent multicontact extraction, feed and solvent enter the system at opposite terminals of a series of contacts and flow countercurrently through the system. Fresh extractant first contacts low-solute-concentration raffinate, and then contacts more concentrated raffinate as its own solute concentration increases.

- Continuous Countercurrent Differential Contact. In continuous countercurrent differential contact operations, a very large number of infinitesimally small contacts are achieved by subdividing (dispersing) one (dispersed) phase and passing it

countercurrently through the other (continuous) phase. Either of the phases may be continuous or dispersed. For example, if the lighter phase is to be continuous, the dispersed heavy phase is introduced at the top and allowed to fall by gravity through the continuous phase. When the heavier phase is continuous, the dispersed light phase is introduced through a distribution nozzle at the bottom and bubbles up through the heavy phase. Continuous, countercurrent, differential contacting is generally achieved, in practice, in tall, vertical, solvent extraction columns.

6.2.1.3 Solvent Extraction Equipment

Many different types of equipment are available and could conceivably be used to accomplish the required plutonium and uranium separation and purification in the Purex Plant. The principal limitations, advantages, and disadvantages of the important equipment types are mentioned in the following discussion.

6.2.1.3.1 Batch Equipment

Batch equipment has been used in the Purex process development only in laboratory equilibrium determinations. A high efficiency of solute transfer may be achieved in each contact in batch equipment, but the large number of contacts required present design and operating problems which render the use of batch equipment impractical in a large plant.

6.2.1.3.2 Continuous Mixer-Settlers

Continuous mixer-settler equipment can be designed to conduct simple contact, cocurrent, or countercurrent multiple-contact operations. Of these three methods, only countercurrent multiple contact has been used in pilot plant studies and as production plant equipment, since the other two methods involve a comparatively inefficient use of solvent.

Mixer-settler equipment can be operated at high stage efficiencies (better than 80% of a theoretical equilibrium stage). The number of stages required to provide the separation desired can thus be forecast with a high degree of certainty.

6.2.1.3.2.1 Pump-Mix Mixer-Settlers

Pump-type mixer-settlers, originally developed at the Knolls Atomic Power Laboratory, are employed as solvent extraction contactors in the Savannah River Purex separations plant (SRP). In such a mixer-settler, the mixing chambers are separated from the settling chambers by partitions. A centrifugal pump-agitator in each mixing chamber picks up both incoming phases in a hollow, vertical shaft, and discharges them radially, intimately mixed, into an adjacent settling zone, thus producing the necessary hydraulic head to produce stage-to-stage flow and

maintaining the liquid-liquid interface in the desired position in each stage. The two-phase flow in the settling zone is cocurrent and the flow between stages is countercurrent.

The impeller in a pump-mix mixer-settler operates at a speed of 300 to 500 rpm. There are no submerged seals or bearings, so the motor-impeller assembly has a long life expectancy and can be replaced remotely.

Relatively large cross-sectional area and liquid holdup is required for the settling chamber of a pump-mix mixer-settler to assure complete disengagement of the phases. Because of this large holdup requirement, the solvent in a pump-mix mixer-settler is subject to considerably more (a factor 2 to 4) radiation damage than in a solvent extraction column. Horizontal-type mixer-settlers usually require less vertical head space, but greater floor space than solvent extraction columns with the same processing capability (Ref. 68, 149).

6.2.1.3.2.2 Centrifugal Mixer-Settlers

The centrifugal mixer-settler is a low-holdup device developed at the SRP to replace the large pump-mix mixer-settlers in the first solvent extraction cycle. The unit consists of a small (ca. 10-inch-diameter) mixing chamber containing a straight, turbine-type impeller, surmounted by a liquid-liquid centrifuge with a bowl diameter of about 14 inches. The overall height of the unit, including drive motor, is about 6 feet. Each unit has a stage efficiency about the same as that of a pump-mix mixer-settler. Thus, an assembly of six centrifugal mixer-settlers and their piping can be installed in the same floor space as one or, at the most, two pump-mix mixer-settler stages.

A major advantage of the centrifugal mixer-settlers over the large pump-mix gravity settling units, and the primary incentive for their development, is the low solvent residence time (of the order of a minute or less per stage vs several minutes for the gravity units). A major disadvantage of both the centrifugal mixer-settlers and the pump-mix gravity settlers is the mechanical complexity and cost of the units.

6.2.1.3.3 Continuous Countercurrent Differential Contactors

The major difference between countercurrent differential contactors and the continuous mixer-settlers described above is that with the contactors, the two liquid phases flow countercurrent to one another at all times, and no attempt is made to achieve equilibrium between the phases at any point in the contactor. Like the continuous mixer-settlers, differential contactors can be divided into two general classifications: those that utilize natural gravitational forces to achieve countercurrent flow and phase disengagement, and those that utilize other generated forces. A third type, the pulse columns used at the Hanford Purex Plant, is a combination of these two types.

6.2.1.3.3.1 Centrifugal Contactors

A centrifugal extractor is a horizontal, countercurrent, liquid-liquid contacting device consisting of a series of concentric stages in which both mixing and settling are accelerated by a variable-speed centrifugal force field. The rotor can be operated at speeds up to 1800 rpm, and the unit has an organic phase holdup time of 30 seconds or less (about the same as a centrifugal mixer-settler), compared to an organic phase holdup time in a pulse column of 1 to 2 minutes per theoretical stage. Centrifugal contactors have the disadvantage of relatively low throughput per unit. A number of units would thus be required to obtain the throughput capacity of a single solvent extraction column. These units have been used successfully, however, in processes requiring low, high-velocity throughputs, such as the pharmaceutical industry.

6.2.1.3.3.2 Solvent Extraction Columns

Large-diameter vertical columns are used to accomplish solvent extraction by the countercurrent differential method discussed in 6.2.1.2. Solvent extraction columns can be operated with either phase continuous by controlling the position of the interface in the column. Settling zones (usually of enlarged cross-sectional area), in which phase disengagement takes place, are provided at each end of the column.

The chief advantages of solvent extraction columns over other types of extraction equipment are their lack of mechanical complexity and effectiveness of solvent utilization.

In the simplest type of column, the spray column, the dispersed phase is introduced through a suitable nozzle and rises or descends through the continuous phase in the column to the liquid-liquid interface. More effective extraction can be obtained by filling the column with a porous medium than with an open spray column. In a packed column, the dispersed phase is broken up and forced to follow a tortuous path through a packing material such as Raschig rings or Berl saddles. The type of packing used for a given application depends largely upon the chemical nature of the system and the processing requirements, while the depth (packed height) is dependent upon the degree of separation required. Since the interfacial area between the two phases in a packed column, even with small packing, is relatively low, packed columns are useful only in processes in which the distribution ratio (driving force) is high and the resistance to transfer between the phases is low. These conditions existed with the Redox process, which used methyl isobutyl ketone (hexone) as a solvent. With the Purex process, however, both the solute distribution ratios and the mass transfer coefficients are significantly lower, and inordinately tall (>100 ft) packed columns would be required.

In the pulse columns used in the Hanford Purex Plant (see Section 3.6 for detailed designs), substantially more effective contacting is obtained by applying an up-and-down motion to the liquid contents. As stated above, this type of solvent extraction contactor utilizes a unique combination of external forces and gravity to achieve liquid-liquid extraction and separation of the phases.

A pulsed, perforated-plate column, originally described by W. J. D. Van Dijck (Ref. 150), offers a more than 2-fold reduction in column height, as compared with a conventional, unpulsed, packed column. In such a pulse column, the up-and-down pulsing motion is superimposed on the net countercurrent liquid flow through a cartridge consisting of a series of stationary, spaced, horizontal, perforated plates. As an alternative to the perforated plates, a pulse column may employ bulk packing such as Raschig rings. The upward and downward pulsing movement of the column contents through the plate perforations or packing interstices causes vigorous agitation of the countercurrently flowing liquid streams, resulting in their emulsification and intimate mixing. The performance characteristics of pulse columns as functions of design and operating conditions are discussed in more detail in 6.2.3.

In the case of perforated-plate columns, the pulsing also performs another important function in that it provides the means for countercurrent flow of the aqueous and organic phases. The specific gravity difference between the two phases is usually not sufficient to cause a significant countercurrent flow through the small holes in the perforated plates. Consequently, the net flow of the discontinuous phase through the column is caused almost entirely by the actions of the pulse generator.

As stated previously, the most important advantage of pulse columns over packed columns is that, for the same extraction duty, pulse columns can be made much shorter than packed columns (Ref. 151). Additional advantages of pulse columns over packed columns are a less pronounced dependence of extraction effectiveness [height of transfer unit (HTU) values] on throughput rate and, in the case of sieve-plate columns, the greater ease of a temporary shutdown and startup because of the minimal flow through the plates in the absence of pulsing.

The primary disadvantages of a pulse column, compared with a packed, unpulsed column, are the initial cost of a pulse generator, if a mechanical device is used, and its potential maintenance requirements. If air pulsing is used, the mechanical devices can be installed outside of the highly-contaminated process cell, but cannot be eliminated, since large quantities of pressurized air and complex valving mechanisms are required.

The original designs for the Purex Plant pulse columns and column cartridges are based on extensive development studies performed at

Hanford in intermediate- to full-size equipment. Pilot plant studies using radioactive feed solutions were performed in small pulse columns at the Oak Ridge National Laboratory.

6.2.2 Evaluation of Solvent Extraction Performance

The use of the operating diagram in evaluating the performance of the Purex Plant pulse columns is discussed in this subsection. The concepts of the height equivalent to a theoretical stage (HETS) and the height of a transfer unit (HTU) and their relationship are discussed, and equations for calculating the HETS and HTU are presented.

Typical HETS and HTU calculation methods used for evaluation of HA and 1C column operation are given in 6.2.2.2. Typical operating diagrams for uranium and plutonium transfer in the HA and 1C columns are presented, with specific examples based on the current flowsheet for processing Zircaloy-clad N Reactor fuels (Ref. 152). The effect of fluoride ion on the equilibrium lines is not considered; however, the principles involved are readily translatable to any other desired flowsheet condition.

The concept of the minimum, or pinching, extractant-to-raffinate flow ratio is developed from operating diagram considerations. Graphs for the determination of the pinching flow ratios for the Purex A (extraction-scrub) and C (stripping)-type columns, showing the effect of feed and extractant compositions, are presented.

6.2.2.1 The Operating Diagram

An operating diagram for a liquid-liquid solvent extraction system is a graphical presentation, usually on a log-log scale, of the equilibrium and operating lines for a given set of process conditions. The lines are usually plotted in terms of grams (or gram-moles) of diffusing component per liter of solution.

The operating diagrams discussed in this chapter are X-Y plots (similar to the McCabe-Thiele diagram used in distillation calculations) with X- and Y-axis values depicting aqueous-phase and organic-phase concentrations, respectively. Each of the diagrams includes an X-Y equilibrium line for the diffusing components and an operating line connecting influent and effluent stream compositions. The operating diagrams are used for calculating the number of equivalent theoretical stages, or the number of transfer units required for the desired extraction. From the operating diagrams, a quantitative or qualitative analysis may be made of the effects which changing operating variables have on the extraction effectiveness of the separation.

6.2.2.1.1 Equilibrium Line Development

As stated in the previous subsection, the equilibrium line represents the solute concentration in the organic phase which is in equilibrium with

a given aqueous-phase solute concentration. The data used to construct the equilibrium line are obtained from laboratory studies, as discussed in Section 6.1.4.

6.2.2.1.2 Operating Line Equations

The operating line, as stated previously, depicts the actual solute concentrations in the aqueous and organic phases at various heights in the column, and is developed from a solute material balance around either end of the column section. A rigorous calculation would require consideration of the change in volume which occurs because of the transfer of uranyl nitrate and nitric acid, and would yield a curved operating line. By neglecting the change in volume, the calculation is greatly simplified and a straight line is obtained with only a slight loss in accuracy.

For the HA column extraction section, the uranium or plutonium operating line may be derived by a material balance around the bottom end of the column, as indicated by the schematic diagram and equations which follow.

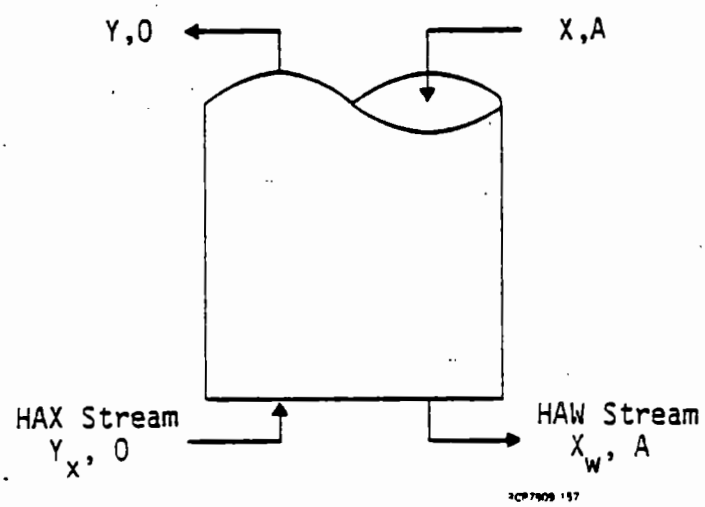

where

X = Aqueous-phase solute concentration, g/ℓ

Y = Organic-phase solute concentration, g/ℓ

A = Aqueous-phase flow rate, liters per unit time

O = Organic-phase flow rate, liters per unit time

x designates the influent or feed point

w designates the effluent or raffinate point

At steady-state operating conditions, the weight of diffusing solute entering the above section of column over a given time period via the aqueous and organic streams must equal the weight of the solute leaving via the effluent streams. The weight of solute carried by each of the four flowing streams in unit time is the product of the flow rate times the solute concentration: Y_xO, X_wA, YO, and XA, respectively. Thus, a material balance equation for uranium may be written by equating the influent flow of uranium to the effluent flow of uranium, as follows:

$$XA + Y_xO = X_wA + YO \tag{6.51}$$

Solving the preceding equation for Y gives the following equation, which represents a straight line in terms of Y and X if A/O, Y_x, and X_w are constants:

$$Y = (A/O)\ X + Y_x - (A/O)\ X_w \tag{6.52}$$

The use of the above operating line is illustrated in 6.2.2.2.

Operating lines for the other Purex columns are developed in an analogous manner. For example, the equation for the HA column scrub section operating line is:

$$Y = (A/O)_s\ X + Y_p - (A/O)_s\ X_s \tag{6.53}$$

and the equation for the 1C column operating line is:

$$Y = (A/O)\ X + Y_w - (A/O)\ X_x \tag{6.54}$$

where the subscripts denote the following streams:

p = uranium or plutonium product streams;

s = scrub stream;

w = waste stream; and

x = extractant stream.

6.2.2.2 Evaluation Methods

The extraction effectiveness of a solvent extraction column is frequently expressed in terms of the percent waste loss obtained. This method is fully satisfactory for comparing the effect of changing a single variable on extraction performance of an existing column, and is used in day-to-day and trend analysis evaluations of the performance of the pulse columns in the Purex Plant. This method, however, does not provide an absolute quantitative measure of the extraction effectiveness of a solvent extraction column and obviously cannot be used in designing a column or cartridge from laboratory and pilot plant data. A more

precise, quantitative method of evaluating the performance of solvent extraction columns involves consideration of the basic theory of mass transfer and the equations that have been developed to express the phenomenon. A discussion of the theory of mass transfer is beyond the scope of this manual; however, the methods and theoretical equations developed for evaluating mass transfer (or solvent extraction) effectiveness are presented in this subsection.

6.2.2.2.1 Height Equivalent to a Theoretical Stage

The height equivalent to a theoretical stage (HETS), as defined previously, is that height of a contacting section of column required to perform the same extraction that can be achieved in a simple contactor in which two influent streams, not at equilibrium, are mixed and allowed to reach equilibrium. For solvent extraction columns performing the extractive duty equivalent to several theoretical stages, the HETS may be obtained by dividing the total height of the contacting section by the number of theoretical stages (N_s) required to accomplish the same extraction being carried out by the column.

The number of stages in a column can be determined, when the equilibrium and operating lines are both straight, by the following equation, which is similar to one presented by Colburn (Ref. 153):

$$N_s = \frac{\ln[M(1-P) + P]}{\ln(1/P)} \qquad (6.55)$$

where

P = the extraction factor, the ratio of the slopes of the operating and equilibrium lines (P = A/mO for extraction and mO/A for stripping);

$$M = \frac{X_1 - Y_2/m}{X_2 - Y_2/m} \text{ for extraction and } \frac{Y_1 - X_2 m}{Y_2 - X_2 m} \text{ for stripping;}$$

A/O = slope of the operating line, (volume of aqueous phase per unit time) / (volume of organic phase per unit time);

m = slope of the equilibrium line, (concentration in the organic phase) / (concentration in the aqueous phase);

X = the solute concentration in the aqueous phase; and

Y = the solute concentration in the organic phase.

Subscripts 1 and 2 refer to concentrated-end and dilute-end concentrations, respectively.

For the phase equilibrium relationships involved in the Purex process, the equilibrium lines are curved; therefore, the slope is not constant, and the value of P varies. A reasonably close approximation of the number of stages may be obtained from the above equation, however, by using an appropriate mean value for the slope of the equilibrium line. A more rigorous method of determining the number of equivalent theoretical stages in a Purex Plant pulse column involves graphically "stepping off" the stages on the equilibrium diagram. This method is illustrated in subsection 6.2.2.3.

6.2.2.2.2 Height of a Transfer Unit

The concept of the transfer unit, as discussed in 6.2.1.1, more closely represents the actual conditions in a continuous, countercurrent, differential contactor (such as a pulse column) than does the equivalent theoretical stage. In addition, the HTU is less sensitive than HETS to variations in the numerical value of the extraction factor, P.

The number of transfer units in the cartridge sections of the Purex Plant columns may be expressed by the following integrals (Ref. 153):

$$N_t = \int_{X_2}^{X_1} dX/X-X^* \text{ (for extraction)} \qquad (6.56)$$

$$N_t = \int_{Y_2}^{Y_1} dY/Y-Y^* \text{ (for stripping)} \qquad (6.57)$$

where

N_t = the number of transfer units, overall raffinate-film basis, for transfer from the raffinate to the extract phase;

X = the concentration of the diffusing component in the aqueous phase;

X^* = the concentration of the diffusing component in the aqueous phase in equilibrium with an organic phase containing the diffusing component of concentration Y;

Y = the concentration of the diffusing component in the organic phase;

Y^* = the concentration of the diffusing component in the organic phase in equilibrium with an aqueous phase containing diffusing component of concentration X.

Thus, the number of transfer units is an integrated ratio of the change in diffusing component concentration to the concentration driving force which causes transfer between phases.

When the equilibrium and operating lines are both straight, as they frequently are at the dilute end of the column, N_t may be calculated from the following equation (Ref. 153):

$$N_t = \frac{\ln [M(1-P) + P]}{1-P} \qquad (6.58)$$

where M and P are defined in 6.2.2.2.1 for the discussion of N_s calculations.

When the equilibrium and operating lines are not straight, approximate N_t values can be determined by using a mean value for P. For unfamiliar systems, this mean value may be determined by dividing the operating diagram into a number of equally-spaced X or Y segments, determining the P value for each segment and using the average of the P values for the mean value of P. For familiar systems, the mean value of P may be determined by inspection (after a few rigorous calculations for N_t have been made for similar systems). Modifications of Colburn's basic equation to accomodate a curved equilibrium line can be found in the Chemical Engineers' Handbook (Ref. 154).

The overall HTU (based on the raffinate-phase film), which is calculated by dividing the packed or cartride height by the number of transfer units, includes contributions of both the individual raffinate-film and extract-film HTU values. These expressions are related by the following equation:

$$HTU_{oR} = (HTU_R) + (P)(HTU_E) \qquad (6.59)$$

where R and E refer to the raffinate-phase and extract-phase films, respectively, and P is the appropriate extraction factor. It is seen from this equation that, if the individual-film HTU's are largely independent of P, the overall value will likewise be independent whenever P is negligible (i.e., less than 0.1). As P increases from 0.1 to 1, the term $(P)(HTU_E)$ becomes increasingly significant, and more variation of the overall HTU values with P might be expected. The mean P values for the Purex extraction and stripping columns operating under flowsheet conditions are less than 0.1, with the exceptions of the 1C, 2E, and 2A columns, which have P values between 0.1 and 0.2, and the 1BX column, which has a P value of about 0.3.

6.2.2.2.3 Relation Between HTU and HETS

By combining the integrated expressions for N_t and N_s, it is found that the HETS and HTU are theoretically related by the following equation, which is rigorously correct only for straight operating and equilibrium lines:

$$\frac{HETS}{HTU} = \frac{\ln(1/P)}{1-P} \qquad (6.60)$$

where P is the extraction factor. For operating lines which are both straight and parallel, the value of P is one, and although the above equation reduces to an indeterminate form, it can be demonstrated that HETS equals the HTU. As the relative slopes of the operating and equilibrium lines are changed so that these lines diverge more and more, the numerical value of P becomes progressively smaller than unity, and the HETS becomes progressively larger than the HTU. For curved operating and/or equilibrium lines, the equation applies as an approximation, provided appropriate mean values for the slopes of these lines are chosen.

6.2.2.2.4 Other Evaluation Methods

The evaluation of the performance of solvent extraction columns or the prediction of performance of a column with a known number of transfer units under varying flowsheet conditions has been facilitated by a computer program (SEPHIS) developed at ORNL (Ref. 155) The program was developed to provide answers to many of the questions regarding the application of the Purex process to liquid metal fast breeder reactor (LMFBR) fuels. The program has been revised for application to the Hanford Purex process (Ref. 156, 157), providing for transient stage-wise calculations for the simultaneous mass transfer of uranium, plutonium (III), plutonium (IV), and nitric acid between aqueous and TBP-hydrocarbon phases.

6.2.2.3 Example HETS and HTU Calculations

6.2.2.3.1 HETS Calculations for the HA Column

The HETS is determined by dividing the column packed height or cartridge height by the number of equivalent theoretical stages in the column. The number of stages can be determined from a knowledge of the phase equilibria and operating conditions in the column. The graphical stage step-off computation of the number of stages (N_S) and the HETS for uranium transfer in the HA column is presented below.

The following data will be assumed to have been taken during a typical steady-state operating period in the Purex Plant HA column having a 13.5-foot-high extraction section:

Stream	Volume, ℓ	U Concentration, g/ℓ	HNO_3 Concentration, M
HAF	2,000	393	0.4
HAS	1,717	0	2.0
3WB	1,637	19	7.7
HAX	10,943	0.0002	0
HAP	11,320	71.4	0.02
HAW	5,000	0.003	2.96

The operating diagram for this hypothetical run is plotted in Figure 6-29. The operating lines were derived from the equations presented in 6.2.2.1 as follows:

- Upper Extraction Section (above 3WB distributor):

$$\text{Average slope, } (A/O)_x = 1/2 \left[\frac{HAF + HAS}{HAP} + \frac{HAW - 3WB}{HAX}\right]$$

$$= 1/2 \left[\frac{3717}{11320} + \frac{3363}{10943}\right] = 0.318$$

$$Y = (A/O)_x X + Y_x - (A/O)_x X_w \qquad (6.61)$$

$$Y = .318X + .0002 - (.318)(.003)$$

$$Y = .318X - .0008$$

- Lower Extraction Section

$$\text{Average slope, } (A/O)_x = 1/2 \left[\frac{HAF + HAS + 3WB}{HAP} + \frac{HAW}{HAX}\right]$$

$$= 1/2\ [0.473 + 0.457] = .465$$

$$Y = (A/O)_x X + Y_x - (A/O)_x X_w$$

$$Y = 0.465X - .0012$$

- Scrub Section

$$Y = (A/O)_s X + Y_p - (A/O)_s X_s \qquad (6.62)$$

$$Y = \frac{1717X}{11320} + 71.4 - 0 = 0.1517X + 71.4$$

The equilibrium lines, chosen from the family of curves in Figure 6-14 (corrected for temperature), are dependent upon the salting strength of the nitric acid in the aquous phase throughout the column. A rigorous determination of the acid gradient in the column involves stepping off the nitric acid and uranium stages together, starting from each end of the column. This is a time-consuming calculation, involving successive trial-and-error assumptions until the stages stepped off from either end coincide, since the uranium and nitric acid equilibria are interdependent. The

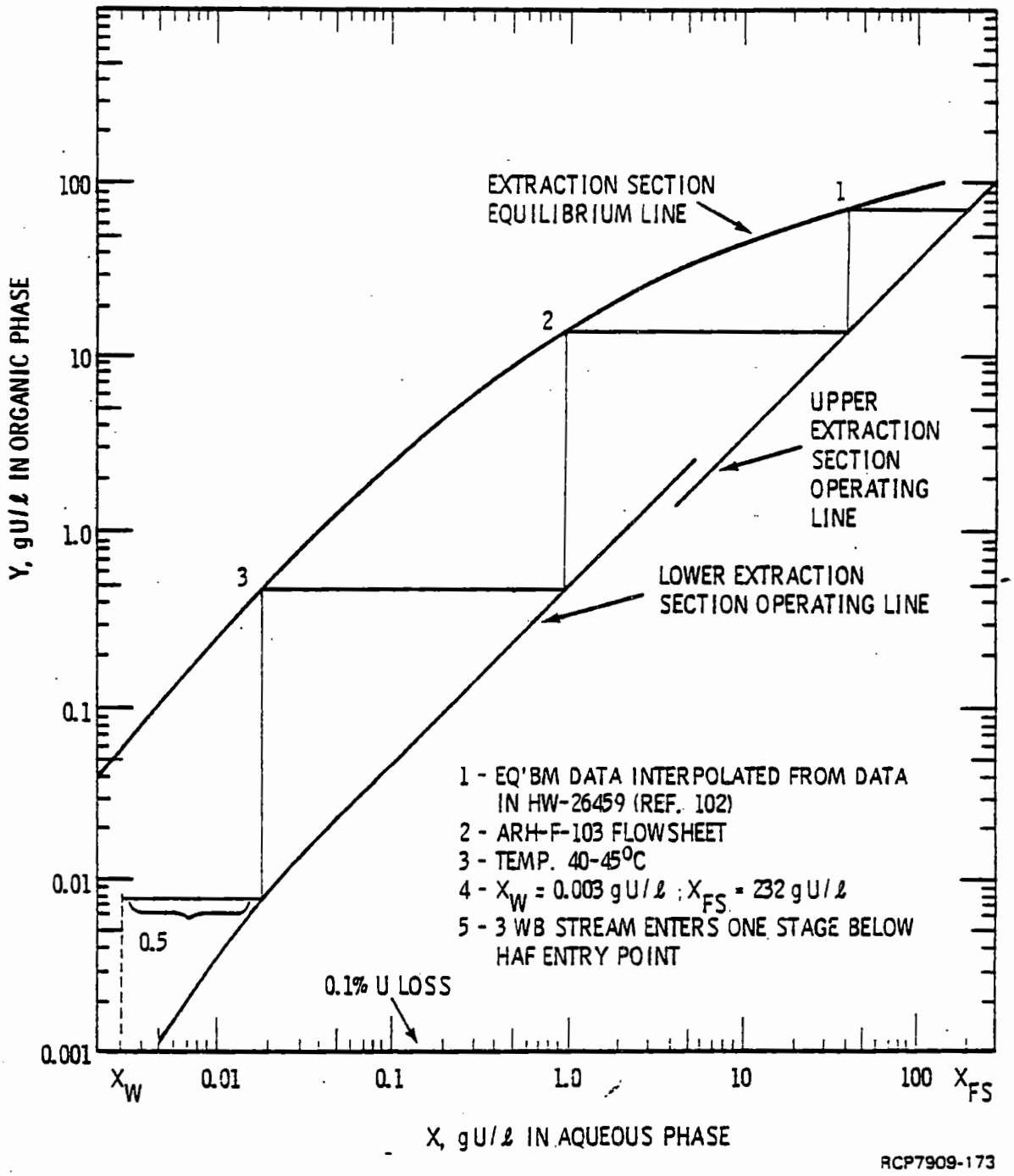

FIGURE 6-29. Example Uranium Mass Transfer Calculation, HA Column Uranium.

equilibrium lines can then be drawn by connecting the equilibrium points for each stage. It usually is not necessary to use such an elaborate method to draw the equilibrium line for an A-type column, however, since about 90% of the equilibrium concentration of nitric acid in the organic phase is reached in the first stage at the bottom of the column, and the shape of the equilibrium line for other operating conditions is similar to the one shown in Figure 6-29. Thus, by knowing the end conditions in the column, a satisfactory equilibrium line can be estimated for the entire column.

Before the number of stages in the extraction section can be calculated, the composition of the aqueous and organic phases at the top of the extraction section must be determined. Since the HA column is a dual-purpose column, the organic phase leaving the extraction section is an influent to the scrub section, and the aqueous effluent from the scrub section mixed with the HAF is an influent to the extraction section. The construction of a uranium operating diagram for the scrub section would show that the organic and aqueous phases at the bottom of the scrub section are essentially at equilibrium. Thus, the concentrations of the aqueous and organic phases at the bottom of the scrub section are found at the point of intersection of the scrub section operating and equilibrium lines. The uranium equilibrium line for the scrub section is essentially the same as for the upper portion of the extraction section. After the aqueous composition at the feed point is determined (by material balance), the stage step-off procedure can be performed. The aqueous and organic phase uranium concentrations at the bottom of the scrub section were determined, for this example, to be approximately 45 and 78 g/ℓ, respectively.

In this example, 3.5 stages were stepped off; therefore, the HETS is 13.5/3.5 or 3.8 feet. In the usual case where the number of stages is not an exact integer, the magnitude of the fractional stage remaining is calculated by using Equation 6.55, or by interpolating with a linear scale on the logarithmic operating diagram, as illustrated in stage 3.5 of Figure 6-29.

6.2.2.3.2 Example HTU Calculation for the HA Column

The operating diagram presented in Figure 6-29 will also be used for the following example HTU calculation.

The number of transfer units (overall aqueous-film basis) in the HA column extraction section can be determined by integrating the expression:

$$N_t = \int_{X_2}^{X_1} dX/X-X^* \qquad (6.63)$$

explained in 6.2.2.2.2. The equilibrium line for the HA column is of irregular curvature with a considerable deviation at high uranium concentrations from the simple relationship, $Y = mX^*$, which was used to derive Colburn's equation for N_t, shown below, from the former expression:

$$N_t = \frac{\ln[M(1-P) + P]}{1-P} \tag{6.64}$$

A close approximation to the number of transfer units may be obtained by using Colburn's equation for the dilute portion of the column, and by graphically integrating Equation 6.63 for the concentrated portion of the column. Though "counting the squares" is the most accurate method of graphical integration, several approximate methods of integration, such as Simpson's Rule, are available and require much less time to calculate than counting the squares. Simpson's Rule will be illustrated in the following example:

- <u>Dilute-Region Transfer Units by Colburn's Equation</u>: Equation 6.70 is used for the dilute-region transfer-unit calculations. In this equation,

$$M + \frac{X_1}{X_2} = \frac{10}{0.0030} = 3333$$

$$P = \frac{A/O}{m} = \frac{0.457}{12} = 0.038$$

$$N_t \Big|_{0.003}^{10} = \frac{\ln[M(1-P)+P]}{1-P} = \frac{\ln[(3333)(0.962) + .038]}{0.962}$$

$$N_t = 8.9$$

- <u>Concentrated-Region Transfer Units by Graphical Integration</u>: In graphically integrating Equation 6.63, values of X and X* are obtained by drawing constant Y lines on the operating diagram (Figure 6-29), and reading the corresponding values of X and X* at the intersections of the constant Y lines with the operating and equilibrium lines, respectively. Values of X are selected to facilitate the use of Simpson's Rule so that the increments between successive values within each group of these values

are equal (e.g., 5, 10 and 15). Furthermore, each group of three values should be selected so that the calculated incremental areas are all approximately equal. These data, calculated for values of X suitable for use with Simpson's Rule, are tabulated below:

X	X*	y = 1/(X-X*)	h= X_2-X_1	Area = $(h/3)(y_o + 4y_1 + y_2)$
10	0.14	0.1014		
15	0.24	0.0678	5	0.713
20	0.36	0.0509		
30	0.62	0.0340	10	0.713
40	1.0	0.0256		
60	2.0	0.0172	20	0.721
80	4.1	0.0132		
156	20	0.0073	76	1.22
232	60	0.0058		
			Σ Area =	3.36

$$N_t \Big]_{10}^{232} = \int_{10}^{232} \frac{dX}{X-X^*} = \qquad \Sigma \text{ Area} = 3.36$$

- Total Number of Transfer Units: The total number of transfer units in the HA column extraction section is determined by addition of the results obtained in the two examples shown above:

$$N_{t\ (total)} = N_t \Big]_{0.003}^{232} = N_t \Big]_{.003}^{10} + N_t \Big]_{10}^{232} = 8.9 + 3.4 = 12.3$$

- Height of a Transfer Unit: The HTU is determined by dividing the 13.5-foot cartridge height by the number of transfer units:

$$HTU = \frac{13.5}{12.4} = 1.1 \text{ ft.}$$

- Calculation of Number of Transfer Units Using an Average Value for P in Colburn's Equation: If average values for the slope, m, of the upper and lower portions of the equilibrium line are assumed to be 12 and 10.5, respectively, then:

$$P = A/mO$$

$$P_1 = 0.318/12 = 0.0265 \text{ for the upper extraction section}$$

$$\text{and } P_2 = 0.465/10.5 = 0.0443 \text{ for the lower extraction section}$$

$$M_1 = \frac{216}{10} = 21.6$$

$$M_2 = \frac{10}{.003} = 3{,}333$$

$$N_t = \frac{\ln[M(1-P)+P]}{1-P}$$

Upper section transfer units:

$$N_t = \frac{\ln[21.6(1-0.0265)+0.0265]}{1-0.0265} = 3.13$$

Lower section transfer units:

$$N_t = \frac{\ln[3.333(1-.0443)+0.0443]}{1-0.0443} = 8.43$$

Total number of transfer units:

$$N_t = 8.43 + 3.13 = 11.6$$

$$HTU = \frac{13.5 \text{ ft.}}{11.6} = 1.16 \text{ ft.}$$

The percent error in N_t, using the simplification, is:

$$\left(\frac{12.3 - 11.6}{11.6}\right) 100\% = 6.0\%$$

Since the accuracy of the calculated values is probably no better than two significant figures, the simplified method, using an average value for P, yielded the same result as that obtained using the more rigorous method.

6.2.2.3.3 Example HETS Calculation for 1C Column

The graphical step-off method for calculating the HETS for the Purex Plant 1C column is presented below. The process conditions shown in the table were taken from the current flowsheet for processing N Reactor fuels (Ref. 152) modified to the extent that the 1CX to 1CF flow ratio (A/O) was increased from 0.813 to 0.955.

The following data are assumed to have been taken during steady-state conditions of a typical Purex Plant production campaign:

Stream	Volume, ℓ	U Concentration, g/ℓ	HNO_3 Concentration, M
1BU-1CF	33,000	51.4	0.065
1CX	31,500	0	0.01
1CU	32,300	53.5	0.086
1CW	32,000	0.001	0

The operating diagram for this hypothetical operating period is presented in Figure 6-30. The operating line was derived in 6.2.2.1.2, resulting in Equation 6.54, shown below:

$$Y = (A/O)X + Y_w - (A/O)X_x \qquad (6.54)$$

The average slope of the operating line is:

$$\left(\frac{A}{O}\right)_{Ave} = \frac{1}{2}\left(\frac{1CX}{1CW} + \frac{1CU}{1CF}\right)$$

$$= (1/2)(31{,}500/32{,}000 + 32{,}300/33{,}000)$$

$$= 0.98$$

Thus, $Y = 0.98X + 0.001\text{-}0$

The equilibrium line, which is dependent on the nitric acid concentration and temperature, was determined by stepping off the nitric acid and uranium stages together, starting from the concentrated end of the column. An investigation of nitric acid transfer shows that approximately 90% of the acid entering in the feed to the C-type columns is transferred to the aqueous phase in the first theoretical stage, with most of the remaining acid in the organic phase transferring in the second stage. Thus, it isn't necessary, in most cases, to draw the nitric acid operating diagram to determine the position of the uranium equilibrium line. The equilibrium line determined as explained above was then adjusted to account for the higher temperature (55°C vs 45°C).

In this example, slightly over 5 stages were stepped off; therefore, the HETS for the 18-foot-long cartridge is 18/5 = 3.6 feet. The large number of stages is caused by the relatively close approach of the 1C column

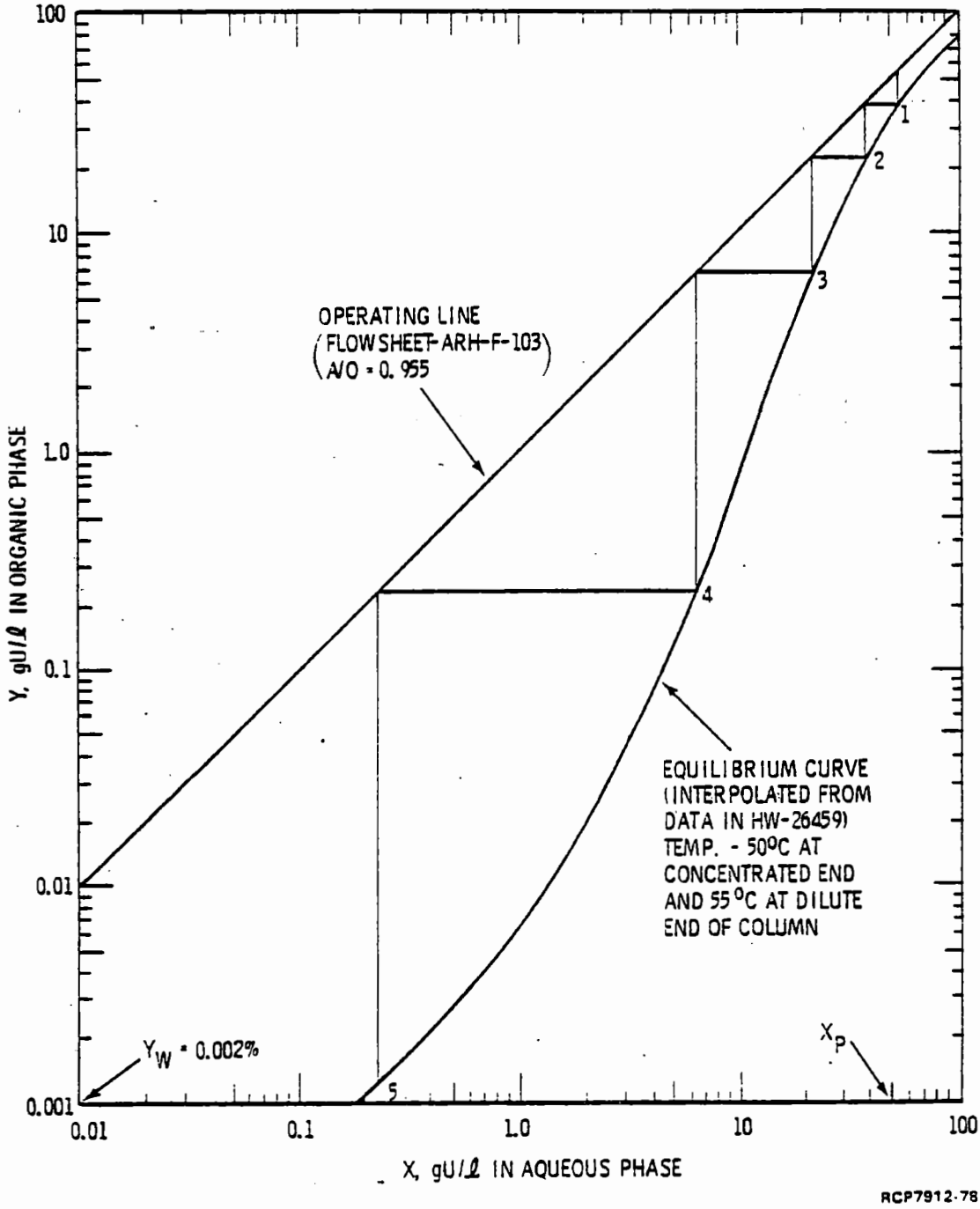

FIGURE 6-30. Example Uranium Mass Transfer Calculation, 1C Column Uranium Operating Diagram.

flowsheet to pinch conditions. The equilibrium and operating lines are close together and the concentration gradient (or "driving force") is small. Thus, relatively little transfer is taking place in the concentrated region of the column.

6.2.2.3.4 Example HTU Calculation for the 1C Column

The number of transfer units for uranium transfer (overall organic-film basis) in the 1C column may be determined by using a suitable method of integrating the basic equation

$$N_t = \int_{Y_2}^{Y_1} \frac{dY}{Y-Y^*} \qquad (6.57)$$

discussed under 6.2.2.2. The operating diagram (Figure 6-30) developed in the preceding example will be used for this calculation. Since the equilibrium line has considerable curvature, it would be difficult to determine an appropriate value for the extraction factor, P, to be used in Colburn's equation. Therefore, the calculation is broken into two parts, as was the HA column calculation, with the number of transfer units in the dilute region calculated by classical integration and the number of transfer units in the concentrated region calculated by graphical integration using Simpson's Rule.

- Dilute Region Transfer Units: In the dilute region of the column (from Y_w = 0.001 g U/ℓ to Y = 4 g U/ℓ), the value of Y* is negligible compared to the value of Y, thus:

$$N_t \Big]_{0.001}^{4.0} = \int_{0.001}^{4.0} dY/Y-Y^* \quad \int_{0.001}^{4.0} dY/Y$$

$$= \ln \frac{4.0}{0.001} = 8.3$$

- Concentrated Region Transfer Units: In evaluating the integral:

$$N_t \Big]_{4}^{51.4} = \int_{4}^{51.4} dY/Y-Y^*$$

values of Y and Y* are found from Figure 6-30 at the intersection of appropriate constant X lines with the operating and

equilibrium lines, respectively. These data, obtained at suitable intervals of Y to be used in Simpson's Rule, as discussed in the example for the HA column, are tabulated as follows:

Y	Y*	y = 1/Y-Y*	h= Y_2-Y_1	Area = $(h/3)(y_o + 4y_1 + y_2)$
4	0.065	0.25		
7	0.25	0.15	3	0.95
10	0.75	0.11		
15	2.5	0.08	5	0.82
20	5.0	0.07		
25	9.0	0.06	5	0.63
30	13	0.06		
40.7	23	0.06	11.2	1.1
51.4	39	0.08		

Σ Area = 3.5

Total N_t = 8.3 + 3.5 = 11.8

HTU = 18/11.8 = 1.5 ft.

6.2.2.4 Stage and Transfer Unit Requirements

The number of equivalent theoretical stages or transfer units required to perform a given extraction duty can be calculated using the process flowsheet as a basis. The heights of the stages or transfer units, which are dependent upon the phase contacting efficiency and mass transfer kinetics, as well as the chemical equilibria, are determined from pilot plant test data obtained under the same flowsheet conditions. With the values for N_s and HETS, or N_t and HTU thus determined, the packed or cartridge height required for each column is readily calculated by the equation:

$$\text{Total Height} = (N_s)(\text{HETS}) = (N_t)(\text{HTU})$$

The number of theoretical stages and transfer units required to attain 0.1% waste losses for uranium and plutonium extraction in the various Purex Plant columns is presented in Table 6-27. Except as noted, the data presented are for process conditions defined in the study flowsheet, HW #3 (Ref. 140), upon which the original plant column and cartridge designs were based. The use of the current flowsheet (Ref. 152) as a basis for the calculations would change the N_s and N_t values somewhat, as shown by the comparisons for the HA and 1C columns.

TABLE 6-27. Number of Theoretical Stages and Transfer Units Required for Purex Solvent-Extraction Columns.[a]

Column	Number of Theoretical Stages		Number of Transfer Units	
	U	Pu	U	Pu
HA Ext.	2.0 2.4[b]		7.0 7.7[b]	7.2
1C	4.1 4.3[b]		8.1 7.9[b]	
1BX		ca. 6[c]		ca. 10[c]
1BS	2.7[d]		10.0[c]	
2A Ext.		3.8 9.3[e]		7.1 10.8[e]
2B		2.1		7.0
2D Ext	2.0		7.0	
2E	3.5		7.7	

[a]Based on 0.1% waste loss and process conditions of HW#3 flowsheet (Ref. 140) except as noted.

[b]Based on conditions of ARH-F-103 flowsheet (Ref. 152) and 0.1% loss.

[c]Based on an assumed value of 0.02 for m.

[d]0.1% uranium in plutonium or 5.7×10^{-5}% uranium loss, based on HAF.

[e]Based on conditions of ARH-F-103 flowsheet and 0.7% plutonium loss.

6.2.2.5 Pinching Extractant-to-Feed Flow Ratios

The theoretical minimum, or pinching, extractant-to-feed flow ratio, as defined in 6.2.1.1, is the lowest ratio of extractant flow to feed flow that is theoretically sufficient for all of the solute to transfer into the extract. Two types of pinch can occur in a solvent extraction column--a dilute-end pinch and a concentrated-end pinch. The dilute-end pinch occurs when the extractant contains a small amount of the product solute, or when an inextractable species of the product material is present in the feed. When a dilute-end pinch occurs, the waste loss is insensitive to an increase in the organic-to-aqueous flow ratio. The concentrated-end pinch occurs because of insufficient extractant flow and can always be relieved by increasing the extractant-to-feed flow ratio. The minimum extractant-to-feed flow ratios actually needed to avoid high losses in the Purex Plant extraction and stripping columns are typically 10 to 50% higher than the theoretical minimum ratios due to flow channeling and backmixing in different portions of the column cross section.

The selection of an appropriate flow ratio generally involves compromise. Unacceptably high losses result from an excessively low extractant-to-feed flow ratio. In the A-type columns, an excessively high organic extractant rate impairs decontamination performance, as discussed in 6.2.5, in addition to increasing the throughput rate and load on both the column in question and the associated C-type column. In a C-type column, a high aqueous extractant rate increases the evaporation load on the associated concentrator. The discussion and figures in 6.2.2.5.1 and 6.2.2.5.2 are presented to assist in the selection of advantageous flow ratios to be employed in the operation of the Purex Plant A-type and C-type columns for a variety of potential operating conditions.

6.2.2.5.1 Minimum Flow Ratio in the A-Type Columns

Figure 6-31 may be used to calculate the theoretical minimum, or pinching, flow ratio for the A-type columns (HA and 2D) when operated under a wide variety of flowsheet conditions. This graph shows the relationship between the uranium concentration in the feed and the ratio of the scrub volumetric flow to uranium mass flow. The curves were calculated for a column with a single scrub stream, but they should be applicable, as well, to dual-scrub columns, provided that the sum of the top and intermediate scrub-stream flow rates is used as the HAS flow rate.

The following example illustrates the use of Figure 6-31, assuming the operating conditions shown below:

HAF composition: 1.35M U, 2.0M HNO_3

HAS-to-uranium ratio: 0.249 gal/lb (Purex HW#3 flowsheet)

Starting with X_F (HAF) uranium concentration, a line is drawn horizontally to intersect the 0.249 HAS/uranium line; this gives X_{FS}, the aqueous-phase uranium concentration at the feed point (0.98M), assuming six scrub stages.* From this intersection, a line is extended vertically to intersect the pinching O/A vs X_{FS} line. The value of the pinching O/A (1.86) may be read by drawing a line horizontally from this intersection to the ordinate axis. This value is for HW#3 flowsheet conditions, which call for an HA column operating temperature of 25°C. The above pinching O/A should be increased about 10% for the current flowsheet conditions.

The actual extractant-to-raffinate flow ratio in the column should be about 10 to 20% greater than the pinching flow ratio to prevent losses due to insufficient transfer units or to phase channeling.

---

*The amount of uranium refluxed back to the feed point by the scrub stream is a function of the scrubbing efficiency (or N_S) as well as the scrub flow rate. Fewer stages would reflux less uranium, and the value for X_{FS} would be less.

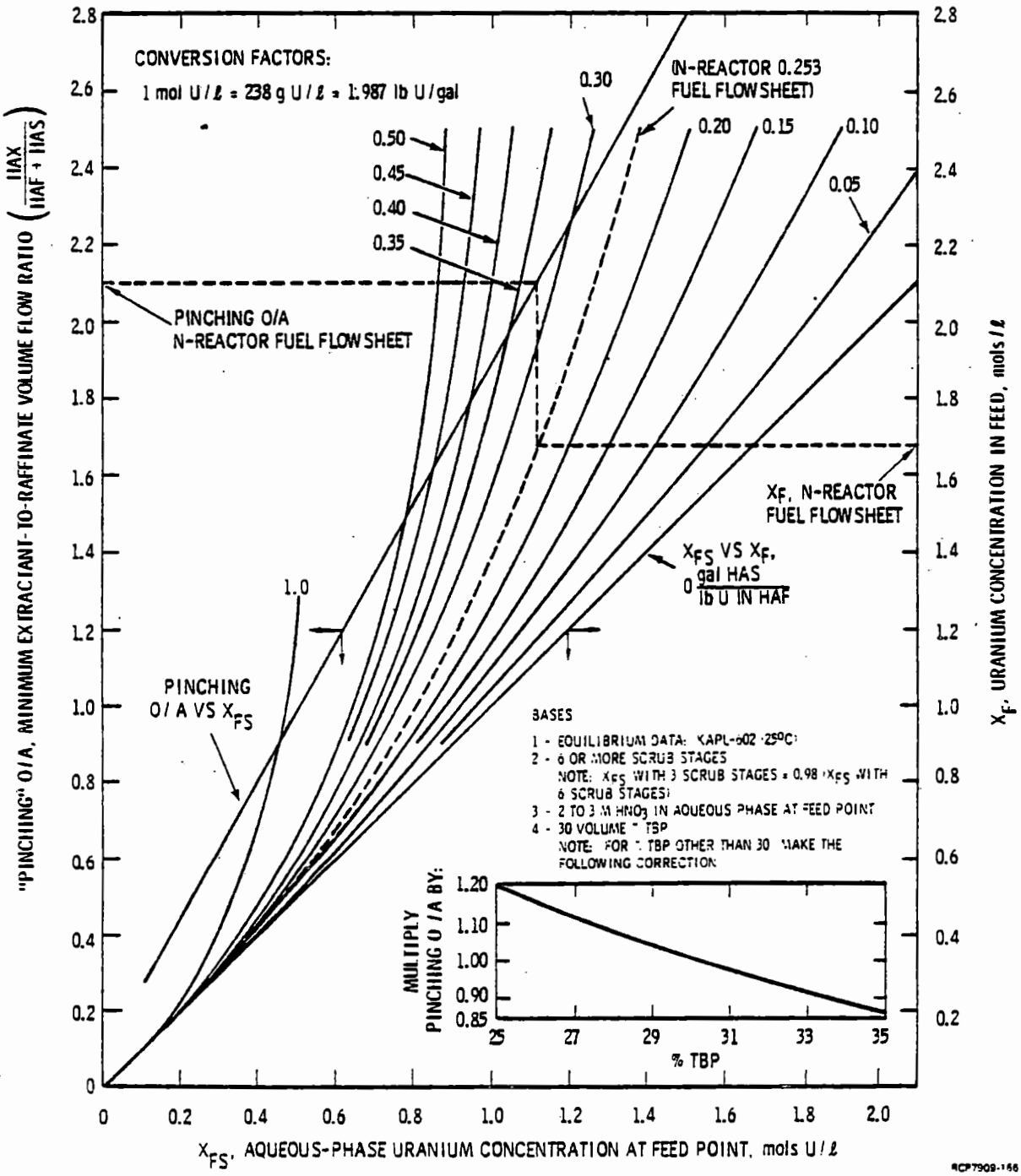

FIGURE 6-31. Minimum Theoretical Extractant Flow Requirements, A-Type Column.

6.2.2.5.2 Minimum Flow Ratio in the C-Type Columns

The effect of feed and extractant stream compositions on the pinching extractant-to-raffinate flow ratio in the C-type columns (1C and 2E) is shown in Figure 6-32. An auxiliary graph is added as a variable ordinate axis to correct for the effect of increased temperature. Correction factors for use with TBP concentrations differing slightly from 30% are also included.

The use of Figure 6-32 to determine operating conditions for the C-type columns is illustrated by the following example for which the conditions (typical of the present N Reactor fuel flowsheet) shown below are assumed.

1CF composition:	0.216M UNH, 0.065M HNO_3
1CX composition:	0.01M HNO_3
1C column temperature:	55°C.

Starting with the Y_F (1CF) uranium concentration, a line is drawn vertically to intersect the 0.01M HNO_3 1CX parameter. From this intersection, a line is extended horizontally to intersect that ordinate which applies for the 55°C column temperature. The pinching 1CX:1CF flow ratio (0.82) may be read by interpolating between the pinching A/O parameters.

The actual extractant flow rate used in the column is normally about 10 to 15% above the pinching value obtained in the above example to minimize the adverse effect of phase channeling.

6.2.3 Pulse Column Variables

In this section, pulse column design and operating variables are identified, and their effects on column operating performance are discussed.

6.2.3.1 Performance Characteristics of Pulse Columns

6.2.3.1.1 Phase Dispersion Characteristics

Pulse column operation is characterized by three distinct types of phase-dispersion behavior, as illustrated in Figure 6-33 and described in the following paragraphs. The type of phase dispersion is dependent on the throughput rate and the pulsing conditions. (In most instances in the Purex Plant, the pulse amplitude is fixed by design, and the dispersion characteristics are determined by throughput and pulse frequency.) The changes in phase-dispersion behavior accompanying changes in frequency or throughput rate involve gradual blending of one type of operation into another, rather than abrupt transitions.

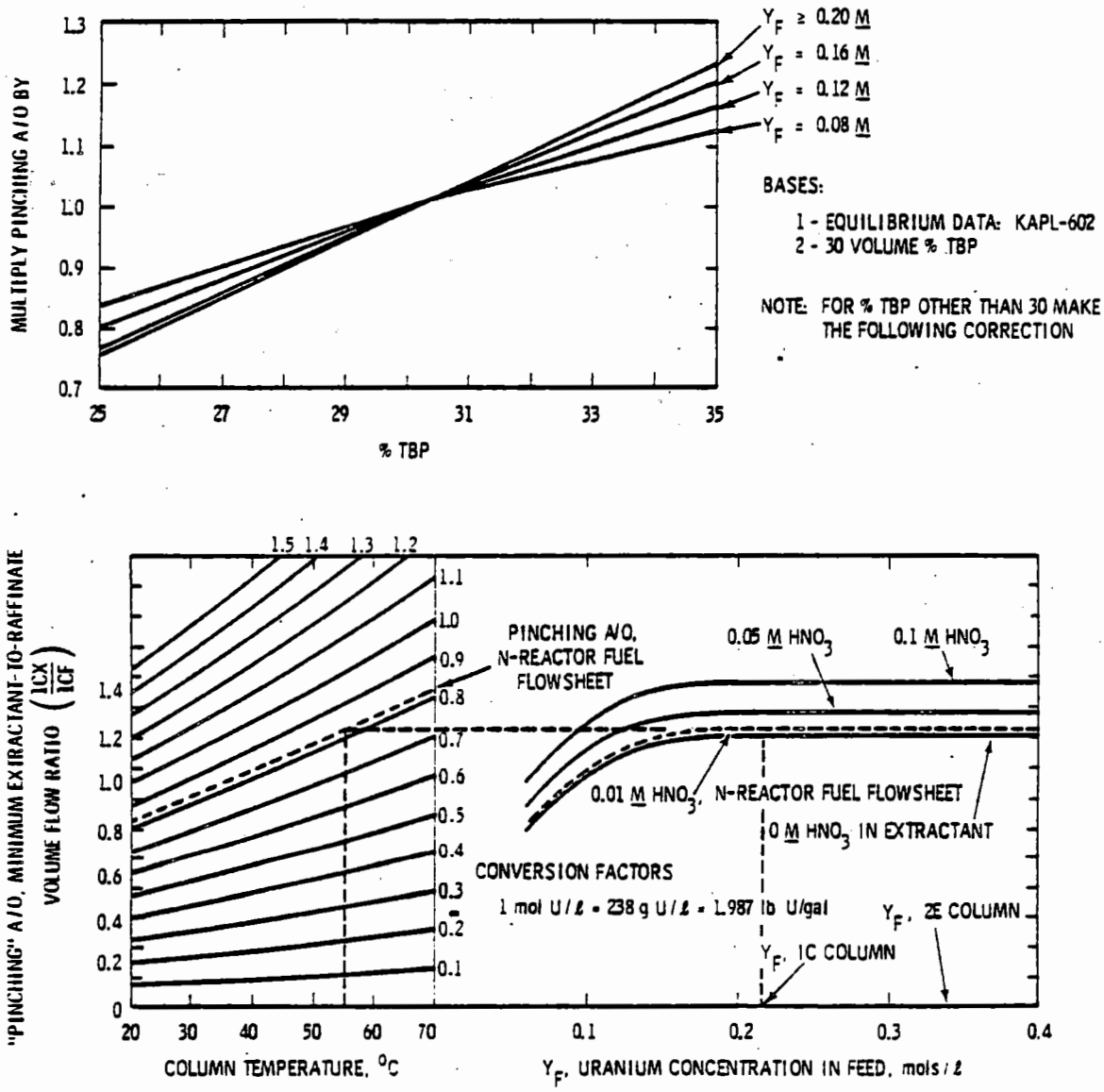

FIGURE 6-32. Minimum Theoretical Extractant Flow Requirements, C-Type Column.

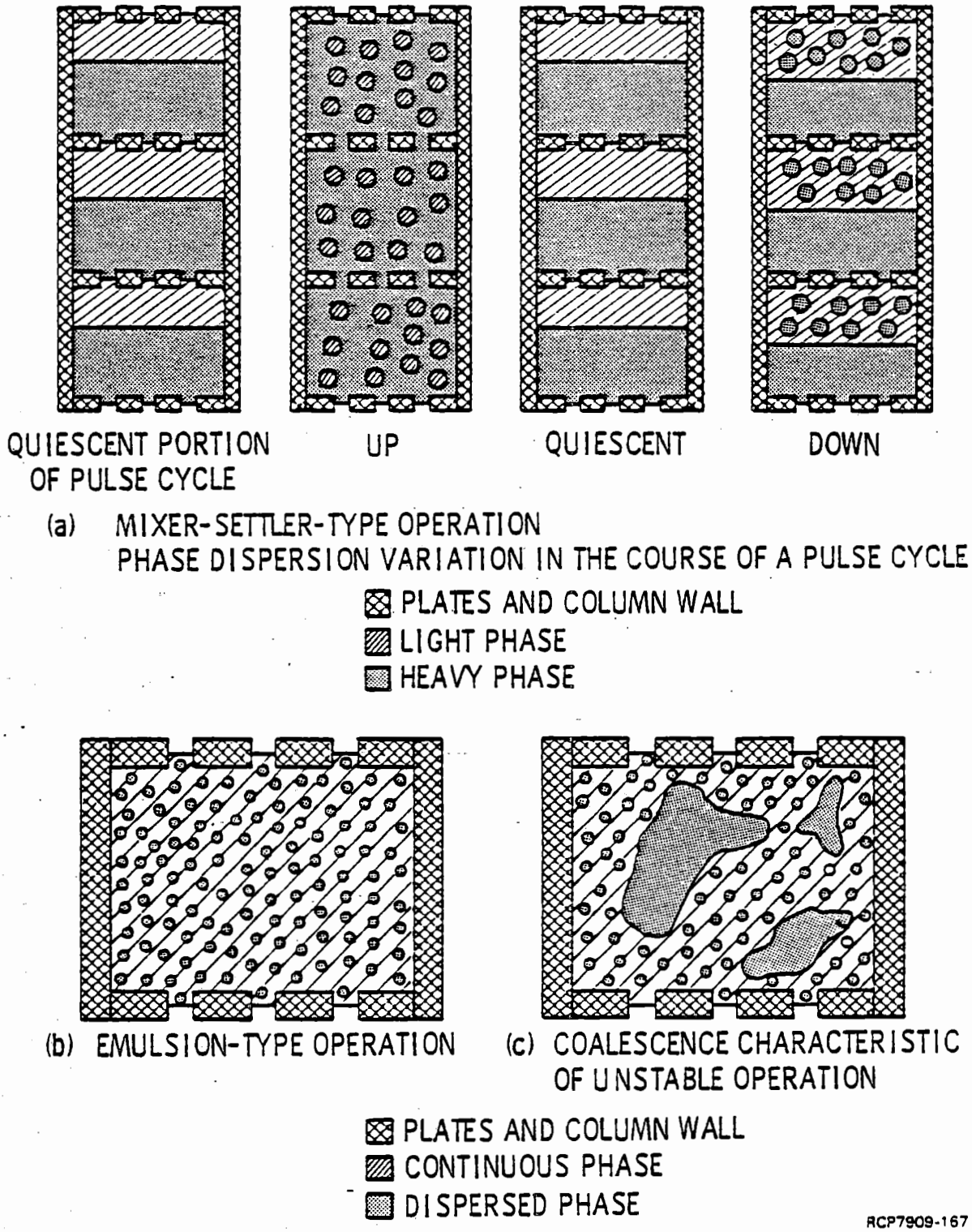

FIGURE 6-33. Types of Phase Dispersion

Mixer-settler-type operation (Figure 6-33a) occurs at low throughput rates and frequencies and is characterized by the separation of the light and heavy phases into discrete, clear layers in the interplate space during the quiescent portions of the pulse cycle. During the upward portion of the pulse movement, the light phase initially resting under the sieve plate is forced up through the perforations, and rises in fairly large globules through the layer of heavy phase above the plate. Similarly, the heavy phase descends during the downward movement of the pulse. With mixer-settler-type operation, the pulse column is highly stable but relatively inefficient compared with operation of the same column under emulsion-type operation.

Emulsion-type operation (Figure 6-33b) occurs at higher throughput rates and/or frequencies than mixer-settler operation, and is characterized by small drop size (typically, 1/16-inch, or less, in diameter), fairly uniform dispersion of the discontinuous phase, and little change in phase dispersion in the course of the pulse cycle. The high interfacial contact area per unit volume renders this the most efficient type of operation.

Unstable operation (Figure 6-33c) occurs at still higher throughput rates and/or frequencies than the other two types of dispersion behavior. Unstable operation is characterized by either one of two different types of phase dispersion. The more common type of instability in the Purex Plant pulse columns occurs in the nozzle plate cartridges with the organic phase continuous or in columns with the aqueous phase continuous, in which some of the sieve or nozzle plates have become preferentially wetted by the organic phase. This type of instability is characterized by mixtures of fine and coarse drops of the dispersed phase, the coalescence of the dispersed phase into large, irregular-shaped globs, and periodic reversals of the continuous phase in short sections of the column (cyclic local flooding). As the throughput and/or frequency is increased still further, the cyclic local flooding progresses to the point of complete flooding, and one or both of the entering streams is prevented from passing through the column and leaves through the exit line intended for the other phase.

The mass transfer efficiency of the column at the point of incipient instability may be as high or even slightly higher than in emulsion-type operation. As the instability increases to a cyclic local flooding condition, however, the efficiency generally becomes poorer than in emulsion-type operation, but remains higher than in mixer-settler type operation until complete flooding is reached.

Another type of instability that has been observed in glass demonstration columns operating with the aqueous phase continuous, and is presumed to occur in the large columns as well, consists of a very fine dispersion of organic and aqueous droplets. At the point of instability, it is virtually impossible to identify which phase is continuous. This

type of emulsion is resistant to disengaging, and generally propagates to the closest end of the column to its point of formation, and exits at that end. This type of instability characteristically occurs in a region of the column where very little mass transfer is taking place (e.g., the top of C-type columns and about one-fourth of the distance down from the top of the 1BX column). The mass transfer effectiveness in the region with this type of instability is very poor. However, since very little mass transfer is taking place, the calculated HTU values may not be affected appreciably.

6.2.3.1.2 Conditions of Stable Operation

The operation of a pulsed column containing a sieve-plate cartridge is markedly different from that of a pulsed, packed column. With a packed column, the maximum throughput is obtained without pulsing. With a sieve-plate column, on the other hand, no significant countercurrent flow can be obtained without pulsing of the liquid contents of a properly designed column. The capacity of a sieve plate column at low frequencies is equal to the pulsed volume velocity (defined in 6.2.1.1) and so increases in proportion to the amplitude - frequency product (or, at constant amplitude, in proportion to the frequency). At low frequency - amplitude products, the pulsed volume velocity, V, is given by:

$$V = 74.81\ af \quad \text{(Ref. 61)} \qquad (6.65)$$

where

V is given in gal/hr-ft^2 (both phases)

a is the pulse amplitude in inches (from one extreme position to the other), and

f is the pulse frequency, in cycles/min.

Equation 6.65 defines the straight portion of the curve shown in Figure 6-34. As seen from the figure, flooding may occur due to insufficient pulse frequency. As the frequency increases (with constant amplitude), a maximum pulsed volume velocity is obtained. As the frequency increases further, the flooding capacity becomes progressively lower than the pulsed volume velocity. After passing through a maximum value, the flooding capacity decreases with further increases in the pulse frequency.

6.2.3.1.3 Factors Affecting Pulse Column Performance

The factors affecting the performance of a pulse column may be divided into two broad groups--those which may be varied in the course of operation of a column of a fixed design (operating variables) and those which are fixed by design of the column, cartridge, or the associated pulse generator (design parameters).

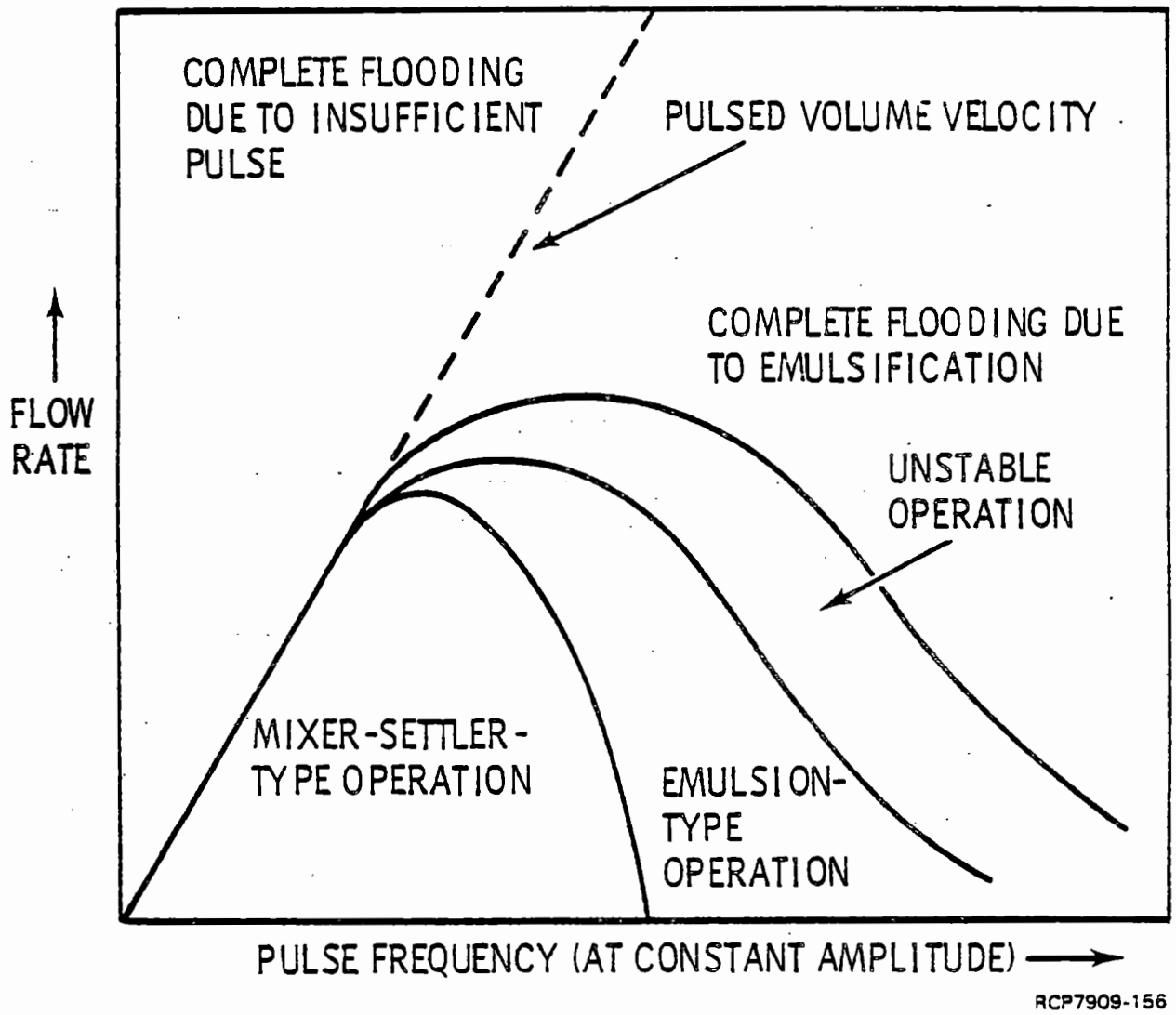

FIGURE 6-34. Stability and Phase Dispersion Pattern of Pulse Sieve-Plate Column.

The important operating variables are pulse frequency, throughput rate, flow ratio of the liquids, solute concentrations, physical properties of the liquids (notably specific gravity, viscosity, interfacial tension, diffusivity) including properties dependent on the choice of the diluent for the TBP, and temperature. The effects of these operating variables on extraction effectiveness and capacity of pulse columns are discussed briefly in 6.2.3.2, below. The effects of the variables on decontamination performance are discussed in 6.2.5.

The more important design parameters are pulse amplitude, choice of continuous phase, nature of the column internals (sieve plates, sieve and louver plates, nozzle plates, Raschig rings), wetting characteristics of the column internals, geometry of the packing or sieve plate (hole size and spacing, plate spacing, nozzle depth, free area), height of the cartridge or packed section, column diameter, and pulse wave shape. The general effects of these design parameters on the extraction effectiveness and throughput capacity of pulse columns are discussed briefly in 6.2.3.3. The considerations that led to the designs adopted for the Purex Plant columns are described in 6.2.4.

9413275.1188

6.2.3.2 Effect of Operating Variables on Extraction and Capacity

The direction and order of magnitude of the effects of the more important operating variables on the extraction effectiveness and capacity of pulse columns are described in this subsection. The reader is referred to 6.2.5 for specific data on the effects of these variables on the decontamination performance of the Purex Plant pulse columns.

6.2.3.2.1 Pulse Frequency

The effect of pulse frequency on the throughput capacity of a pulse column is described in 6.2.3.1.2 and illustrated in Figure 6-34.

Within the region of stable operation, HTU values generally decrease sharply (often over 3-fold) with increasing pulse frequency as the phase dispersion is transformed from mixer-settler type to an increasingly intimate emulsion type. On the threshold of unstable operation, there is sometimes an increase in HTU values with increasing pulse frequency as a result of incipient coalescence of the dispersed phase.

Experience indicates that frequencies giving near-optimum performance generally lie somewhere in the range of 75 to 95% of the flooding frequency. Optimum frequencies for the Purex Plant columns, which employ fixed amplitudes for different columns in the range of 0.53 to 1.86 inches, are generally between 35 and 110 cycles/min., depending on the column and operating conditions.

6.2.3.2.2 Throughput Rate

The relationship between throughput rate and the upper and lower flooding frequency of a pulse column is described in 6.2.3.1.2 and illustraded in Figure 6-34.

Extraction efficiency, as measured by HTU values, is relatively insensitive to variations in throughput rate, provided that the pulse energy is sufficient to produce good emulsion-type phase dispersion. Plots of HTU values versus throughput rate (expressed in terms of superficial volume velocity) at constant pulsing conditions vary in shape as a function of cartridge geometry, type of column (extraction, scrub or stripping) and the pulse frequency. Generally, however, the plots are convex downward and relatively shallow, with HTU values varying by 10 to 15% over a 2- to 3-fold range of throughput rates, and increasing HTU values at both high and low rates.

The increase in constant-pulse HTU values at low throughput rates can usually be overcome by increasing the pulse frequency, taking advantage of the higher flooding frequencies attained at low throughput rates. No such expedient is available, however, for reducing the HTU values at high throughput rates. Therefore, a diameter decrease gained by use of a cartridge designed to provide a high superficial flow rate may result in increased column height, impaired solvent extraction capability, or both, as discussed in 6.2.3.3.

6.2.3.2.3 Flow Ratio

HTU values generally increase with increasing continuous-to-dispersed phase flow ratio.

The flooding volume velocity (sum of phases) of a pulse column probably increases with increasing continuous-to-dispersed phase flow ratio (Ref. 158). The effect, however, is not significant for the Purex columns in the flow ratio ranges of interest.

6.2.3.2.4 Solute Concentration

Height-of-transfer-unit values generally increase with decreasing solute concentration. For example, a 3-fold reduction of the concentration of uranium in the feed to a column may result in decreasing its concentration in the raffinate by only 50%. Height-of-transfer-unit values are higher at the dilute end of a column than at the concentrated end.

6.2.3.2.5 Physical Properties of Liquids

Physical properties known to be important in pulse-column performance are: (a) the density difference between the liquid phases; (b) the density of each phase; (c) the viscosity of the continuous phase; (d) the interfacial tension between the phases; and (e) the diffusivities of the diffusing components.

While these effects are complex and not sufficiently well understood to permit prediction of column performance from physical data, some empirical evidence supports the following generalizations (each applying when all other factors are equal) as potentially useful first approximations.

- Effect on Capacity. The flooding capacity increases at approximately the 0.7 power of the density difference between the phases. The density difference in the Purex Plant column liquids ranges from about 0.1 to 0.3 g/mℓ.

  The flooding capacity is inversely proportional to the approximate 0.3 power of the change in continuous-phase viscosity; i.e., a low continuous-phase viscosity favors a high flooding capacity. The Purex Plant continuous-phase viscosities range from 1 to 3 centipoises. The viscosity of the dispersed phase does not appear to exert an important effect on the flooding capacity.

  The flooding capacity is proportional to about the 0.4 power of the interfacial tension; the interfacial tensions between the organic and aqueous phases of the Purex process systems are fairly low--generally between 10 and 15 dynes/cm.

- Effect on HTU. Individual-film HTU values are generally believed to vary approximately with the 0.6 power of the dimensionless Schmidt number, $\frac{\mu}{\rho D}$, for the phase in question where, with consistent units:

  μ = viscosity,

  ρ = density,

  D = diffusivity of the diffusing component.

Hence, individual aqueous-film or organic-film HTU values should decrease with decreasing viscosity and increasing diffusivity or density values.

Transfer unit heights and flooding capacities may vary somewhat with the physical properties imparted by the diluent to the solvent phase, as discussed above. Column performance may also be affected by the nature and concentrations of any chemically active impurities in the diluent.

6.2.3.2.6 Temperature

An increase in temperature usually increases the flooding capacity and decreases the HTU, presumably because increased temperature reduces the liquid viscosities and increases the diffusivity of the solute. Experience has shown the flooding capacity to increase about 1% for each degree Celsius rise in temperature. The viscosity of liquids generally decreases about 2% for each degree Celsius rise in temperature, while the diffusivity is, ideally, directly proportional to the absolute

temperature. Thus, for a 20°C rise in temperature, the individual-film HTU's, and consequently, overall HTU's, in the absence of complicating channeling and back-mixing effects, should decrease by almost 30%, although a 10% overall HTU decrease has been more typical of pilot plant experience. While increased temperature generally lowers HTU values, its effect on the distribution ratio of the solutes of interest may be favorable or unfavorable, as discussed in Section 6.1.

The net effect of a temperature increase on column performance is the resultant effect of the mutually reinforcing or opposing tendencies. In the Purex A-type columns, the temperature effect on uranium distribution ratio works to oppose the effect on HTU, while in the C-type columns, these two effects reinforce each other. The potential benefits of elevated temperature operation must also be weighed against possible adverse effects of accelerated solvent and diluent degradation.

Purex Plant experience has shown moderate increases in temperature to be beneficial in every instance. The only process streams that are not maintained above ambient temperature (~25°C) are some of the low-volume scrubbing and stripping streams (to the second and third plutonium cycles and the neptunium recovery cycle).

6.2.3.3 Effect of Design Parameters on Extraction and Capacity

The nature, direction and order of magnitude of the effects of the parameters which are fixed by design on the extraction effectiveness and throughput capacity of pulse columns are described briefly in this subsection.

6.2.3.3.1 Pulse Amplitude

The effect of pulse amplitude on column performance appears, from limited studies, to be of a lower magnitude than that of pulse frequency. Correlation of column performance with pulsing conditions has generally involved use of the amplitude-frequency product as a parameter which defines the pulsed volume velocity or minimum conditions of pulsing for countercurrent flow through a sieve-plate cartridge to occur. A review of the data, however, indicates the effect of changes in pulse amplitude on column performance to be substantially different from changes in pulse frequency. While a rigorous analysis is not possible with the limited data available, some qualitative relationships have been established and are included in the following general observations:

- A pulse amplitude equal to approximately one-half of the distance between adjacent sieve plates appears to provide optimum performance. Thus with 2-inch-spaced stainless steel sieve plates, a 1-inch amplitude yields lower (typically 10%) HTU values and higher (10-25%) capacities than a 1/2-inch amplitude, and slightly (5%) lower HTU values and about the same capacity as a 1.5-inch amplitude.

- A pulse amplitude equal to or greater than the plate spacing results in substantially higher HTU values--probably due to increased back-mixing.

- Flooding, good emulsion-type operation and low HTU values occur at lower amplitude-frequency products with a 1/2-inch amplitude than with a 1-inch amplitude.

6.2.3.3.2 Plate or Packing Wetting Characteristics and Choice of Continuous Phase

The trend of increasing HTU values with increasing continuous-to-dispersed phase flow ratio is attributed to the decrease in the interfacial contact area as the relative flow of the dispersed phase decreases. Thus, other factors being equal, slightly improved extraction efficiency may result if the phase with the larger flow rate is dispersed in the phase with the smaller flow rate. In this case, the advantage, which sometimes does not occur at all, depends upon the perforated plates being wetted by the continuous phase. With plates perferentially wetted by the dispersed, rather than the continuous phase, HTU values are generally higher. (The wetting characteristics of various materials used for perforated plates are presented in 6.1.3.8.3.) Visual observation of the dispersion in small-scale glass columns confirms the above effects. When the sieve plate (or packing) is preferentially wetted by the dispersed phase, it coalesces on the plates and travels through the column in large streams or globs, rather than dispersing as small drops of fairly uniform size and much larger interfacial area.

A second criterion for the choice of continuous phase, which generally has been found to override the phase ratio considerations discussed above, is that the interface should be located at the waste end of the column. When operating in this manner, interface "crud" (an accumulation of siliceous, degraded organic and other materials) leaves the solvent extraction column with the raffinate stream, rather than following the product through the remainder of the process. Since the interface crud contains substantial amounts of adsorbed fission products, the decontamination performance would be severely reduced if the interface crud followed the product stream.

The above phenomenon was experienced in the Purex Plant immediately after the initial "hot" startup. The A-type columns (except for the 2A column) were operated with the aqueous phase continuous and the C-type columns (except for the 2B column) were operated with the organic phase continuous. Satisfactory decontamination performance was achieved only after the A- and C-type columns were replaced with ones designed for operation with the organic and aqueous phases continuous, respectively.

6.2.3.3.2 Height of Plate or Packed Section

The HTU values generally increase with increasing column height. This is primarily due to a general trend toward higher HTU values with

decreasing diffusing component concentrations, as discussed previously in 6.2.3.2.4. The above relationship is the most pronounced in the decontamination sections of the A-type columns. Only minor improvement in the overall decontamination factor is gained by increasing the scrub section height above about 18 feet. The Purex Plant HS column, which provided additional scrubbing to the HAP stream in an 18-foot-high cartridge section, provided a DF ranging upward to about 10, and was typically about 2.

Hard-to-avoid chemical impurities (such as those giving rise to "inextractable" uranium or plutonium) sometimes limit the improvement in extraction effectiveness that would otherwise be obtainable by increasing the column height (and hence the number of transfer units in the column).

6.2.3.3.3 Column Diameter

As the column diameter increases, the countercurrently flowing liquid phases display an increasing tendency to channel in some portion of the column cross section rather than distribute evenly across it. This channeling tendency causes increasing overall transfer unit heights and, thus, increasing uranium and plutonium losses as the column diameter becomes larger. The severity of these effects varies with the physical properties of the liquid phases and with the column design. Since the adverse effect of channeling on column performance is greatest when the density difference between the phases is greatest and the extractant flow in excess of the theoretical minimum requirement is small, the impairment of column performance with diameter scale-up is particularly serious in the Purex A-type columns.

The "scale-up" factor (ratio of full-scale to intermediate, pilot plant-scale HTU values) upon going from 3-inch-diameter to Purex Plant-scale (7-inch to 34-inch-diameter) columns is variable. For the C-type columns, the HTU increases less than 50% upon increasing the diameter from 3.0 to 27 inches. For A-type columns, however, the effect of increasing the extraction section diameter from 3.0 to 24 inches is, in the absence of louver-plate redistributors, very large. Waste losses, under optimum operating conditions, from a 13-foot-high plate section increased from less than 0.001 to 6%.

The effect of increasing the column diameter from 3 inches to Purex Plant size (7 to 34 inches) on the flooding capacity and shape of the flooding throughput versus pulse frequency curve is not appreciable. The transition from stable, emulsion-type operation to unstable operation occurs at similar conditions of throughput and pulse frequency, but the smaller column sometimes floods more readily than the larger columns.

6.2.3.3.4 Sieve Plate and Cartridge Geometry

The selection of column internals, including packing or cartridge and plate design, for a given pulse column application is generally a trial-and-error procedure involving a compromise between high capacity

and low HTU values. The cartridges that were selected initially for use in the Purex Plant columns were, with three exceptions, all replaced by cartridges which were custom designed for the specific service, and which gave substantially superior performance as compared with the original designs.

New plate and cartridge designs should always be tested and compared with existing cartridge designs in a test column before installation in the Purex Plant. A knowledge of the general effects of the various plate and cartridge design parameters on pulse column performance is very helpful in expediting the selection process. The general effects of the plate and cartridge design parameters on column performance are summarized in Table 6-28.

TABLE 6-28. Effect of Design Parameters on Pulse Column Performance.

Design Parameter	Magnitude and Nature of Effect
Hole Diameter	Second order effect on capacity and HTU in the range of 0.08 to 0.188 inch. First order effect for diameters smaller or larger than the above limits.
Plate free (or perforated) area	First order effect, with both capacity and HTU values increasing by up to 15% with an increase in free area from 10 to 23%, and by as much as 50% with a further increase in free area to 33%.
Plate Spacing	Second order effect on both capacity and efficiency in the range of 1 to 4 inches.
Plate-to-wall clearance	Negligible effect, provided the clearance does not constitute greater than about 15% of the total cross-sectional area of the column. Substantial increase in HTU for increasing clearance above this amount, particularly, if the column internals are wetted by the dispersed phase.

Markedly superior performance (in both capacity and efficiency) can be obtained by custom designing a cartridge for a specific extraction duty and flowsheet. Glass-column studies of the dispersion behavior of various systems have shown that flooding nearly always starts at the same location with any given cartridge and flowsheet conditions. "Opening up" the cartridge to relieve the instability may, thus, result in a higher capacity with negligible decrease in the efficiency. This can be accomplished by increasing either the free area or the plate spacing, or both, in the unstable region.

Another technique for relieving one type of instability without sacrificing efficiency is to include a few plastic plates appropriately spaced in the unstable region. This technique is particularly effective in columns in which the aqueous phase is continuous and the instability is characterized by the formation of an emulsion of very fine, stable droplets of organic. The plastic plates provide coalescing surfaces for the fine organic droplets, and a distance equivalent to several plates is required for the fine, tight emulsion to reform. By inserting plastic plates at appropriate locations, the instability can be dissipated and higher pulse frequencies (with the resulting lower HTU values) or higher throughput rates can be attained.

6.2.3.3.5 Nozzle Plates

Nozzle plates are sieve plates fabricated from stainless steel or other similar corrosion-resistant metal with each hole indented or "dimpled," causing the hole to act as a small jet nozzle. Nozzle plates were initially developed to provide a superior alternative to plastic sieve plates for organic-continuous operation. To be effective in this use, the nozzles must protrude at least 0.03 inch from the plate surface. Later pilot plant studies, verified by Purex Plant experience, have shown that nozzle plates also provide superior performance to sieve plates for aqueous-continuous phase operation. The nozzles are oriented in the opposite direction of flow of the continuous phase (downward for organic-continuous operation and upward for aqueous-continuous operation.

The reason for the improved performance of the nozzle plates is hypothesized to be that the thin layer of the continuous phase that is trapped by the protrusions provides a coalescing surface for the continuous phase. Favorable nozzle plate designs may typically exhibit 50% higher throughput capacity and up to 30% lower HTU values than well-designed plastic sieve plates.

6.2.3.3.6 Louver Plates

Severe channeling of the discontinuous phase, leading to high HTU values and high losses in large-diameter columns, can be remedied by the use of louvered redistributor plates. The improvements in extraction efficiency obtained by the use of louver plates is shown in Table 6-29. Such a redistributor consists of a solid horizontal plate provided with louvers designed to impart a swirling or eddying motion to the column contents as they are pulsed. The louver slats are oriented upward, and additional eddying effects are imparted by vertical baffles placed in the path of the liquid discharged from the louvers. Louver plates are located at selected intervals along the length of the column. A suitable length (6 inches) of the column just above and just below the redistributor plate is generally left free of sieve plates to relieve flooding tendencies and to provide sufficient unimpeded space for the swirl to cause mixing of the column contents and, thus, break up channeling.

TABLE 6-29. Effect of Redistributors on Uranium Loss in the A-Type Columns.

Data from dual-purpose column studies; aqueous phase continuous. Cartridge geometry: stainless steel sieve plates, 1/8-inch holes, 23% free area, 2-inch plate spacing, 13.5-foot-long extraction section.

Amplitude x Frequency Inch/Minute[a]	% Uranium Loss		
	3-Inch Column	23.5-Inch Column	
		Without Louver Plates	With Louver Plates[b]
26 to 28	0.0009	12.6	----
37	---	10.7	0.05
53 to 55	0.0004	6.4	0.001
64	---	6.4	0.001

[a]Pulse ampltude = 0.9 inch

[b]13% free-area louver plates with 6 inches of free space on either side inserted 14, 40, 80, and 120 inches below top extraction section sieve plate.

Louver plates with 13 to 17% free areas, such as used in the Purex Plant, have been found to have no significant effect on the throughput capacities of columns employing a 23% free-area sieve or nozzle plate cartridge.

6.2.3.3.7 Pulse Wave Shape

The pulse displacement-vs-time curve for the mechanical pulsers employed for the larger (7 inches or greater in diameter) columns in the Purex Plant is approximately sinusoidal in shape. The air pulsers for the 3A and 3B columns produce a pulse wave shape varying from a modified notched or flat-topped sawtooth shape at low frequencies to a sharp sawtooth shape at higher frequencies.

Pulse wave shapes substantially deviating from the sine wave often give minimum HTU values comparable to those obtained with sine waves. Other wave shapes, such as a sawtooth shape, may substantially reduce throughput capacity as well as flooding frequencies from those obtained with a sine wave pulse. Plant experience with the 3A and 3B columns, however, has shown no problem in this respect.

6.2.4 Development of Purex Plant Pulse Column Designs

The column and cartridge designs used for the Purex Plant solvent extraction battery evolved to their present status as a result of extensive development studies, followed by plant operation and identification of problems. Additional pilot plant studies were then performed to test new design concepts and develop improved designs to overcome specific problems. "Custom-tailored" cartridges, designed for specific columns and functions, thus evolved to provide good extraction and scrubbing efficiencies over a wide range of conditions. The initial development studies--both "cold," using nonirradiated natural uranium, and "hot," using dissolved, irradiated fuel elements, were performed in experimental columns ranging in size from 2 inches (ORNL Hot Pilot Plant studies) to full scale. The development studies upon which the initial design specifications were based are reported in References 2 and 159. The later studies (after startup of the Purex Plant) were all performed in 3- or 4-inch-diameter glass columns. A summary of these later studies is given in this section.

The salient design details (column size and cartridge configuration) of the existing pulse columns are presented in Chapter 3.0, Section 3.6.

6.2.4.1 Functional Requirements

The Purex Plant pulse columns were designed to permit the recovery of greater than 99% of the uranium and plutonium products at processing rates in excess of 30 short tons of uranium per day. During the processing of N-Reactor fuels under the conditions of the current flowsheet (ARH-F-103), however, the plant is limited (by the feed preparation and the waste treatment operations) to a maximum instantaneous capacity of about 11 short tons per day.

The Purex process and solvent extraction system have a demonstrated capability of near quantitative separation of the uranium and plutonium products. The uranium product contains, typically, less than one part of plutonium per billion parts of uranium and less than one part of neptunium per million parts of uranium. The plutonium product contains, typically, less than 200 parts (each) of uranium and neptunium per million parts of plutonium. The neptunium product from the solvent extraction system contains, typically, one gram of uranium and 0.0003 gram of plutonium per gram of neptunium, and requires further purification by ion exchange.

The uranium, plutonium, and neptunium product streams from the solvent extraction system require near quantitative removal of the radioactive fission products. Overall decontamination factors on the order of 10^6 to 10^8 are routinely achieved. The gross radioactivity of the uranium product is typically less than that of aged natural uranium, and the fission product radioactivity of the plutonium product is typically less than 3 μCi/g Pu.

6.2.4.2 Development of the A-Type Column Design

The "standard cartridge"* and aqueous phase - continuous operation, which was used with success in the extraction column of the uranium recovery operation at U Plant, was specified for the original A-type columns in the Purex Plant (Ref. 160). With the standard cartridge, however, the flooding volume velocity in the scrub section of the column was substantially lower than that in the extraction section. A larger diameter was specified for the scrub section to compensate for the lower flooding velocity. Column diameters of 24 inches for the extraction section and 32 inches for the scrub section were specified to provide efficient performance in both sections over a wide range of throughput rates.

Poor fission product decontamination performance was experienced with the A-type columns immediately after processing of irradiated fuel commenced. The poor performance was attributed to a combination of backmixing in the scrub section and "bleeding" of interface crud into the product stream. This problem was corrected by changing to organic phase - continuous operation, with the interface located at the raffinate end of the column. This change required the replacement of the A-type columns with ones equipped with interface controllers in the lower disengaging sections, and with cartridges capable of operation with the organic phase continuous. Nozzle plate cartridges were selected for the extraction sections, based on development studies which showed them to provide superior performance under nearly all conditions, but particularly with the organic phase continuous (Ref. 161). Numerous cartridge designs were investigated for use in the scrub sections, with the most promising appearing to be the mixed-plate, or "zebra," designs. A cartridge comprised of alternate groups of four stainless steel and two linear polyethylene plastic† plates on a 1-inch spacing was recommended for the HA scrub section (Ref. 161). This cartridge gave good performance, but the plastic plates deteriorated rapidly, breaking up into small pieces that jammed flow meters and plugged valves. The recommended replacement for the HA scrub cartridge was comprised of 6% free area nozzle plates on a 3-inch plate spacing (Ref. 162). Louver plates, described in Sections 3.6.1 and 6.2.3.3, are spaced at about 4-foot intervals in all

*Stainless steel sieve plates with 1/8-inch-diameter perforations, 23% free area and 2-inch plate spacing; louver plates appropriately spaced to prevent channeling of the phases.

†The material specified for the plastic plates used in Purex Plant pulse columns is poly-trifluoromonochloroethylene. Two brands of this material, which have been used with equal success, are Kel-F, manufactured by the M. W. Kellogg Company and Fluorothene, manufactured by E. I. duPont de Nemours and Company. Linear polyethylene was specified for some of the early replacement cartridges because of its superior resistance to radiation damage, but was found to be extremely susceptible to "environmental embrittlement" and cracking (believed to be caused by exposure to oxygen and/or polar solvents) and thus unsatisfactory for use in the Purex Plant pulse columns.

of the A-type column cartridges, except the 2D scrub cartridge, to inhibit channeling of the liquid phases.

The dual-diameter HA column with nozzle-plate cartridges in the two sections performed satisfactorily for a number of years, until its replacement in 1967 as part of the 4.0 Capacity Project (a program to increase the processing capacity of the plant). The column was replaced with a 26-inch unidiameter column, after successful demonstration in the "cold" pilot plant of "graded-plate" cartridges,* to obtain comparable flooding capacities in the extraction and scrub sections. The performance of the unidiameter column has been very good, with acceptable extraction and scrubbing efficiencies obtained over a five-fold range of throughputs. The flooding characteristics of the unidiameter HA column are presented in Figure 6-35. As the figure shows, instability occurs at slightly lower pulse frequencies in the scrub section than in the extraction section, but well within the range of efficient operation. The maximum operating capacity of the column has not been demonstrated in the plant, as it is greater than the capacity of some of the ancillary equipment and other portions of the processing system.

The cartridge that was recommended for the 2D column scrub section at the time of the change to organic phase - continuous operation was similar in design to the mixed-plate cartridge initially recommended for the organic-continuous HA column. The cartridge was comprised of alternate pairs of stainless steel and poly-trifluoromonochloroethylene plastic plates on 1-inch spacings (the original zebra cartridge) (Ref. 161). The decontamination performance of this cartridge was initially excellent, but commenced deteriorating after about 4 years and was removed. The plastic plates were suspected of being broken and deteriorated† in a manner similar to that experienced with the polyethylene plates in the HA column. The cartridge was replaced with a nozzle-plate cartridge similar to the one in the HA column, based on the favorable performance of the HA column, as well as pilot plant studies indicating good scrubbing efficiency. The 2D column, however, was subject to sudden unexpected flooding, which generally required a complete stripping, or depletion, of the uranium from the organic phase before stability could be restored (Ref. 163). The problem was particularly severe during startup of the plant after extended shutdowns. Plant tests of a 10% free area and a "graded,"** 6% free area nozzle plate cartridge produced similar performance. Therefore, after a total of about 8 months, a second zebra cartridge, identical to the first one, was installed.

---

*Cartridges with varying plate spacings and/or free area.

†The cartridge was coated with a yellowish "slimy" substance, but no deterioration was apparent from a visual inspection.

**Plate spacing increased from 2 inches at the bottom to 3 1/2 inches at the top.

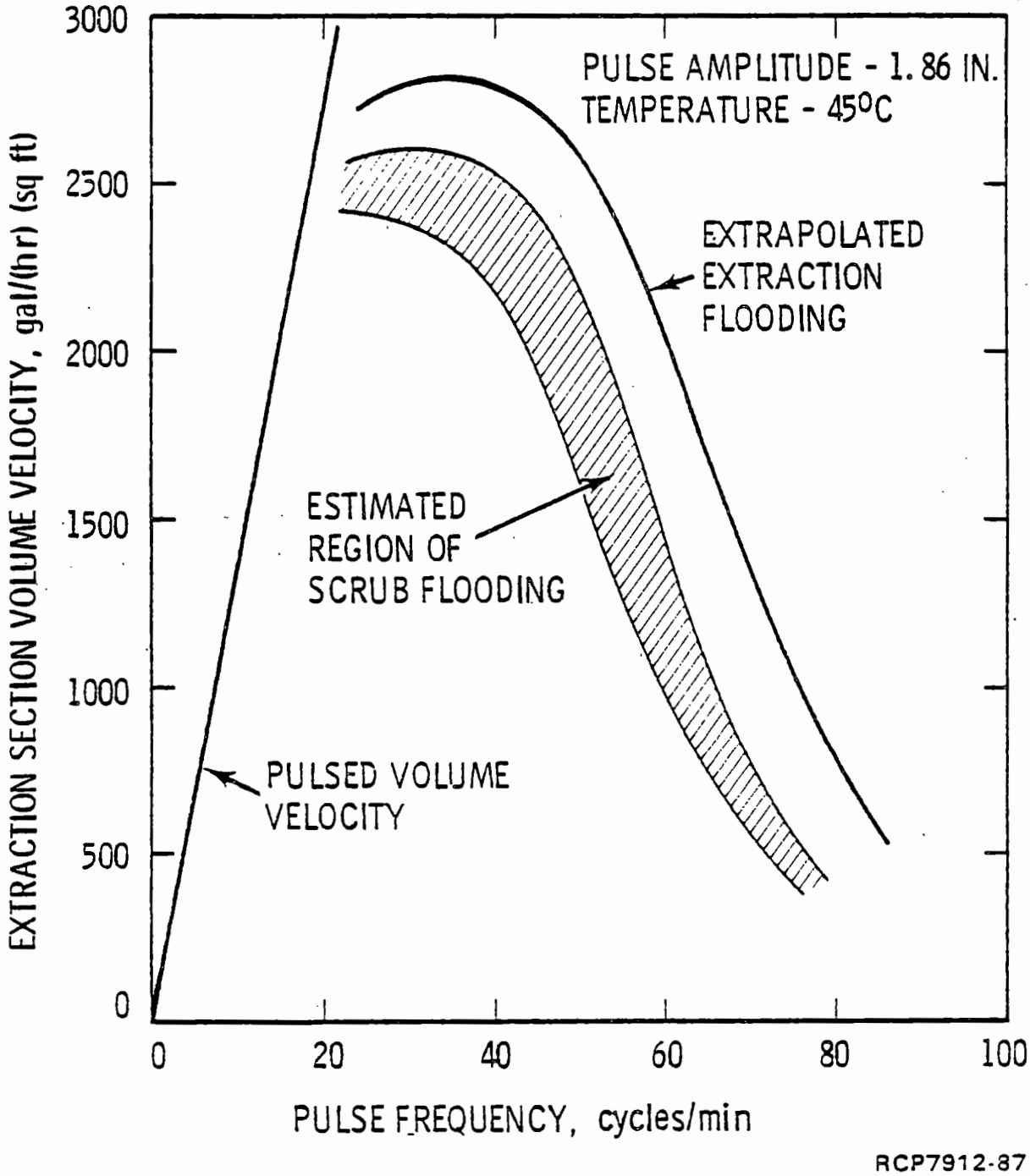

FIGURE 6-35. HA Column Flooding Characteristics.

The zebra cartridge performed very well for over 10 years until the plant was shut down in 1972. The flooding characteristics of the 2D column are presented in Figure 6-36. The flooding curves for the scrub and extraction sections are nearly coincident, indicating a very close match between the two sections. Throughput rates equivalent to nearly 35 tons of uranium per day have been demonstrated for short periods in the 2D column, but, like the HA column, the maximum capacity of the plant column has not been determined. Also, like the HA column, good performance at low throughput rates has also been demonstrated in the 2D column.

6.2.4.3 Development of the C-Type Column Design

The original design specifications for the C-type columns, in keeping with the generally accepted (at that time) concept that superior extraction performance is obtained if the phase with the greater flow is dispersed, called for organic phase - continuous operation (Ref. 160). Poly-trifluoromonochloroethylene sieve plates were specified initially, but were replaced with stainless steel nozzle plates before processing of irradiated fuel commenced. Problems of organic carryover into the product streams were experienced from the start, however, and column operation was changed to aqueous phase continuous. The nozzle plates performed satisfactorily at the prevailing throughput rates, even though the nozzles were pointed downward. All replacement cartridges have had the nozzles pointed upward for improved performance with aqueous phase - continuous operation. The graded cartridges, presently specified (Figures 3-12, -14) utilizing Fluorothene sieve plates mixed with stainless steel nozzle plates, evolved over several years of pilot plant scouting studies followed by in-plant testing. These cartridges performed satisfactorily from 1964 until the plant was shut down in 1972. A comparison of the performance characteristics of the various types of cartridges that have been tested in the pilot plant is presented in Table 6-30. From the table, there would appear to be relatively minor differences between the nozzle-plate cartridge (columns 4 and 5 of the table) and the graded, mixed-plate cartridge (column 7). The major advantage of the graded, mixed-plate cartridge, however, which is not readily apparent from the pilot plant data, is one of superior operational stability during extended operating periods and under adverse conditions such as the presence of emulsion-inducing impurities in the stripping solution.

The flooding characteristics of the cartridges specified for the 1C and 2E columns are presented in Figure 6-37. The throughput capacity of the C-type columns is about four-fold higher than the rates at which the columns are normally operated. The steep slope of the flooding curve, however, permits operation of the columns at the frequencies required for efficient performance.

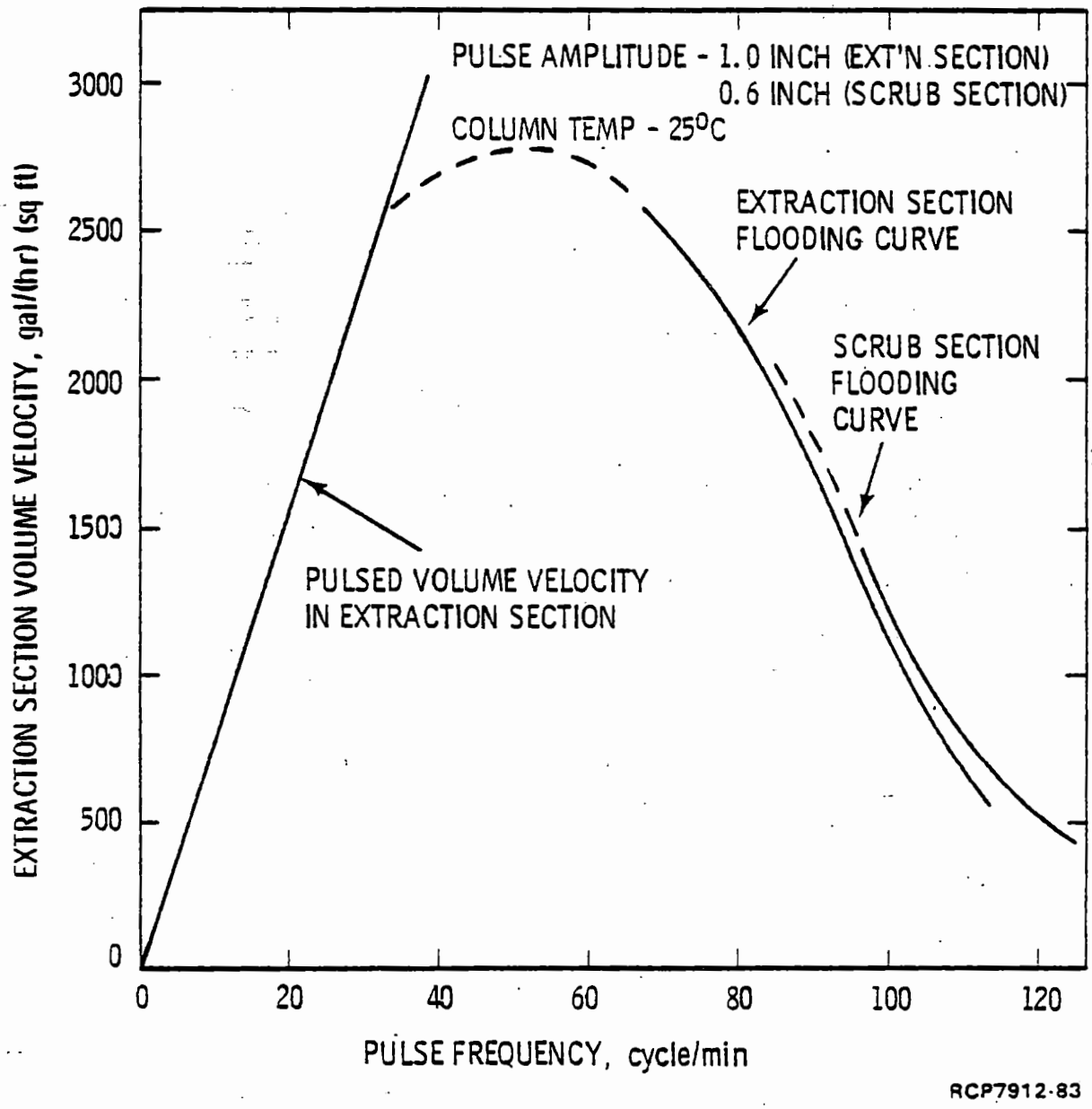

FIGURE 6-36. 2D Column Flooding Characteristics.

TABLE 6-30. Performance Comparisons of Various Cartridges for the C-Type Columns.

Cartridge Designation	Standard	Plastic	NP-D[a]	NP-D	NP-U[b]	Graded N/P[c]
Cartridge Description						
Plate Mtl	SST	Fluorothene[d]	SST	SST	SST	SST/Fluro.
Hole Diam, in	1/8	3/16	1/8	3/16	3/16	3/16
Free Area, %	23	23	10	23	23	23/23
Plate Spacing, in	2	4	4	2/4[d]	2/4[d]	varied[e]
Continuous phase	aqueous	organic	organic	aqueous	aqueous	aqueous
Max. Stable Capacity, Tons U/day	17	21	30	33	39	45
Max. Stable Frequency, cycles/min.,						
10 tons U/day		120	~85	>120	>120	~120
20 tons U/day		45	70	90	80	90
Operating Efficiency HTU, at 20 tons U/day, ft	2.1	0.95	~1.2	~1.2	~1.2	~1.2

[a]Nozzle plate cartridge, nozzles pointing down.

[b]Nozzle plate cartridge, nozzles pointing up.

[c]Mixture of nozzle and plastic plates with graded, or varying, plate spacing. Cartridges of this design are currently installed in the plant 1C and 2E columns.

[d]Plates spaced 2 inches apart in upper one-third of cartridge and 4 inches apart in lower two-thirds.

[e]Plate spacing varies from 1/2 to 3 inches; see Table 3-4 for details.

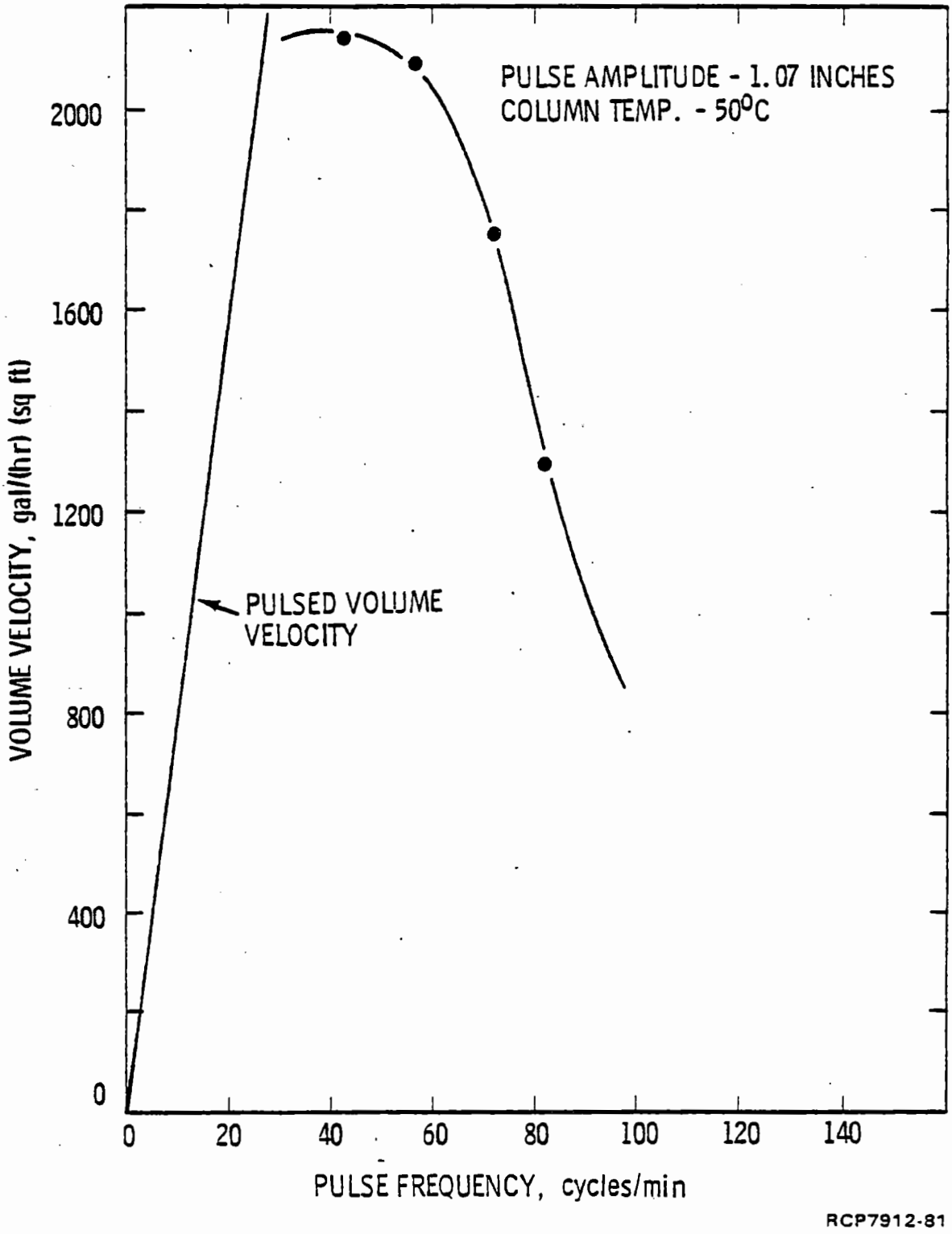

FIGURE 6-37. C-Type Column Flooding Characteristics.

6.2.4.4 Development of the 1B Extraction Column Design

The standard cartridge was originally specified for the 1BX column, based on "hot" pilot plant studies at ORNL, which indicated an approximate 0.1% plutonium loss should be attainable. The original column diameter (27 inches) was based on flooding studies in pilot plant columns ranging in diameter from 3 to 24 inches and the desire for a processing capacity of at least 15 tons of uranium per day.

The column performed satisfactorily, as predicted, at the processing rates for which it was designed. As the plant production rate was increased to greater than two-fold above the design capacity, the need for a higher capacity column became critical and an "opened-up" cartridge was developed. This open cartridge was comprised of 33% free area sieve plates with 3/16-inch-diameter perforations, on a 4-inch plate spacing, and with 28%-free area louver plates spaced at 4-foot intervals. The spare 1BX column containing a cartridge of the design described above was installed. This new 1BX column had excess capacity, but was relatively inefficient, with plutonium losses typically in the 1 to 2% range. This column was replaced in 1967, after several years use, by a larger (32-inch-diameter) column containing a cartridge of the original, standard design, and the plutonium losses decreased to 0.1% or less. The flooding characteristics of the 1BX column are shown in Figure 6-38. The individual flooding points presented in the figure were obtained during cold pilot plant studies of several cartridge configurations designed for increased capacity (Ref. 164). While the capacity of the 1BX column with the standard cartridge (shown in the figure) was substantially less than that of a mixed, nozzle-plastic plate cartridge that was tested, it has proven to be more than two-fold higher than the maximum expected rate.

6.2.4.5 Development of the 1B Scrub Column Design

The column and cartridge originally specified for the 1B scrub duty was an 8-inch-diameter column containing a 13.3-foot-long standard cartridge modified by the addition of 20% free area louver plates at 2-foot intervals. A diameter of 8 inches was specified, based on the flooding characteristics of the pilot plant column and the plant design throughput rate. The column height of 13.3 feet was based on the required uranium scrubbing duty (10 transfer units) and the average height of a transfer unit obtained in the pilot plant studies (1.3 feet). This column gave reasonably good performance and was used in the plant for a number of years.

The relatively low throughput capacity of the column, however, required flowsheet adjustments at processing rates much in excess of 20 tons of uranium per day. This restriction was eliminated in 1967 when the originally installed column was replaced with the spare column containing a remotely removable cartridge comprised of 21% free area, 3/16-inch hole-diameter nozzle plates on 2-inch spacings. This new cartridge provided approximately twice the capacity of the standard cartridge.

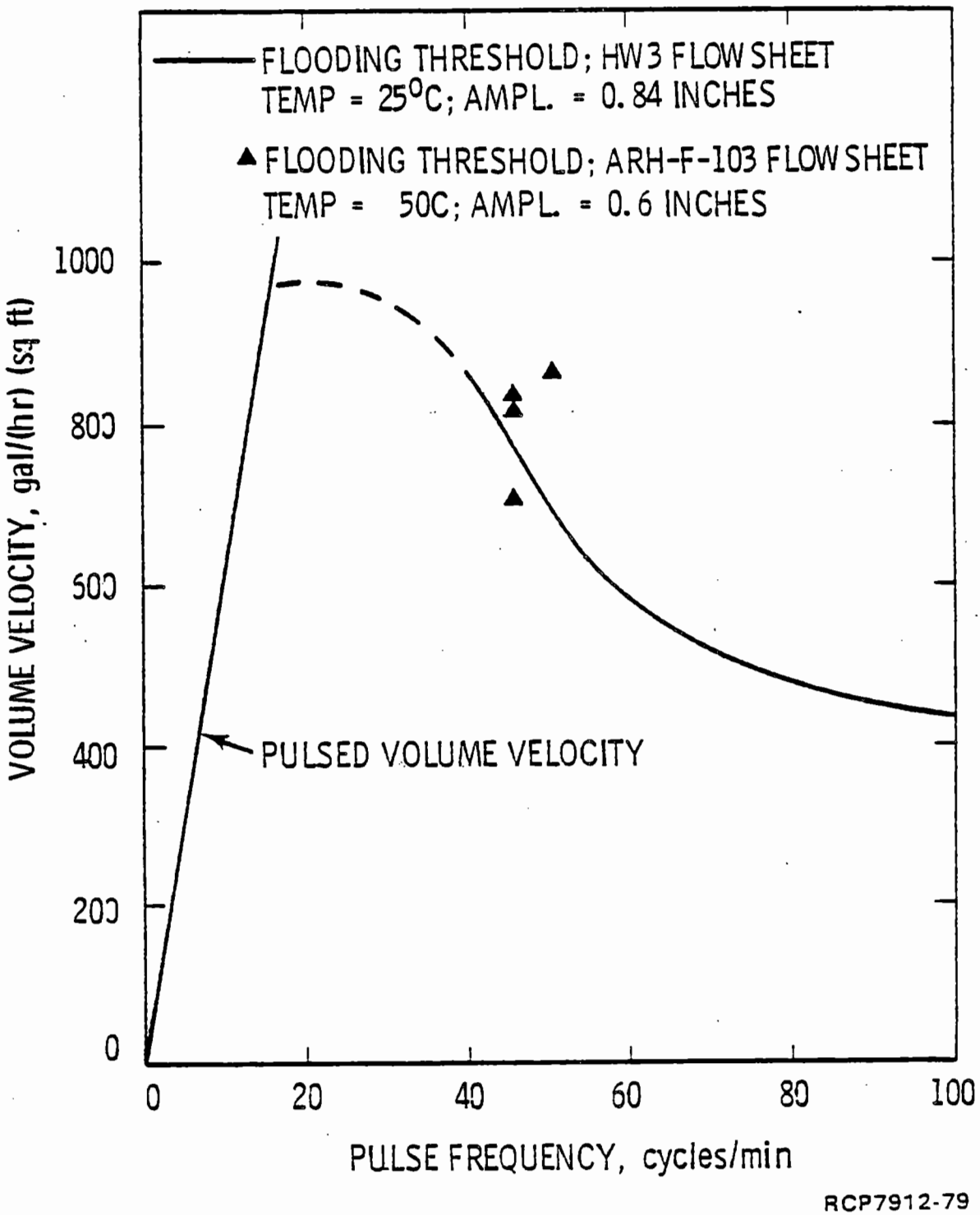

FIGURE 6-38. 1BX Column Flooding Characteristics.

The flooding characteristics of the 1BS column with the specified nozzle plate cartridge are shown in Figure 6-39. The superior capacity of the nozzle plate cartridge is apparent in the figure. In addition, a ten-fold improvement in uranium stripping efficiency was obtained with the nozzle plate cartridge.

6.2.4.6 Development of the 2A Column Design

The diameter of the 2A column is limited to 7 inches by criticality prevention considerations. Consequently, the only cartridges that warranted consideration were those which provided satisfactory performance at superficial volume velocities (in a 7-inch-diameter column) corresponding to plant processing rates in excess of 20 tons of uranium per day. Several different cartridge designs and materials of construction were tested, including the standard cartridge, Fluorothene sieve plates, nozzle plates, Fluorothene Raschig rings, and stainless steel Raschig rings. The stainless steel and the Fluorothene sieve plates exhibited unacceptably low flooding capacities. The nozzle plates were not developed until after the pulse column design specifications were established and so were not considered initially. Fluorothene Raschig rings were specified for the plant 2A column in preference to stainless steel rings because of their slightly higher capacity and superior extraction performance, and the advantage of organic phase - continuous operation.

Visual observation of the dispersion characteristics in "cold" tests and scrubbing studies (using nitric acid as the transferring solute) indicated that the fission product scrubbing effectiveness of Fluorothene Raschig rings should be adequate. The decontamination performance of the plant 2A column was marginal, however, and it was eventually replaced with one containing a nozzle plate cartridge. The specified nozzle plate cartridge was comprised of 23%-free area plates, with 3/16-inch-diameter, 0.035-inch-deep nozzles, and with a 2-inch plate spacing in the extraction section and a 3-inch spacing in the scrub section.

In the pilot plant studies, the nozzle plate cartridge exhibited a flooding capacity at least as high as the Fluorothene Raschig rings, and the dispersion characteristics appeared to be superior. The observations were verified by the performance in the plant; decontamination performance improved by approximately twenty-fold. The flooding characteristics of the 2A column with the specified nozzle-plate cartridge are shown in Figure 6-40. A comparison of the curves in the figure indicates the flooding characteristics of the two sections of column are very well matched, as increasing temperature results in higher flooding frequencies. This was verified in the pilot plant studies, in which it was difficult to determine whether the extraction or the scrub section flooded first.

6.2.4.7 Development of the 2B Column Design

The 2B column studies were directed towards the development of a satisfactory cartridge for aqueous phase - continuous operation, as both the flow ratio (A/O < 1.0) and the desired interface position (raffinate

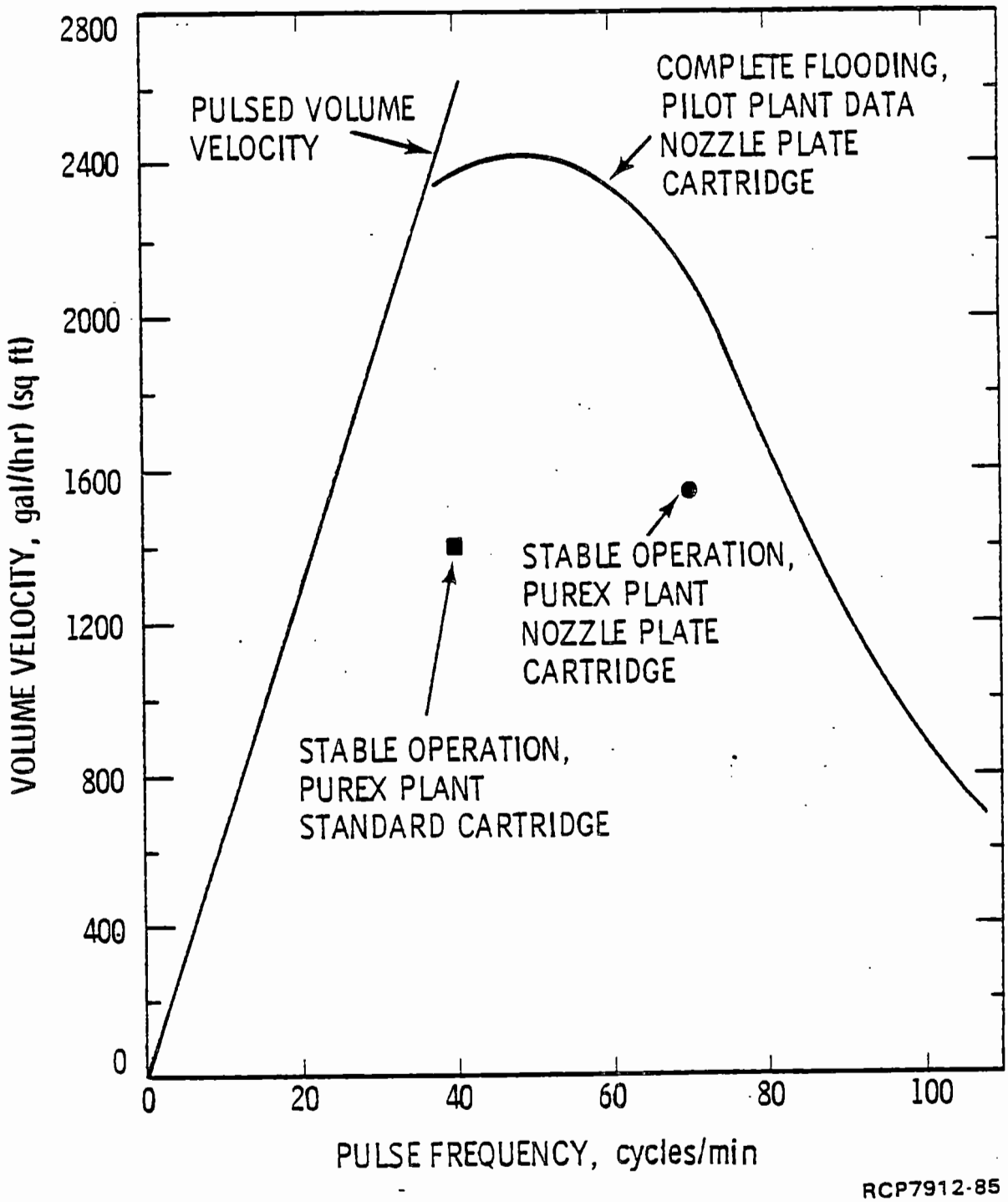

FIGURE 6-39. IBS Column Flooding Characteristics.

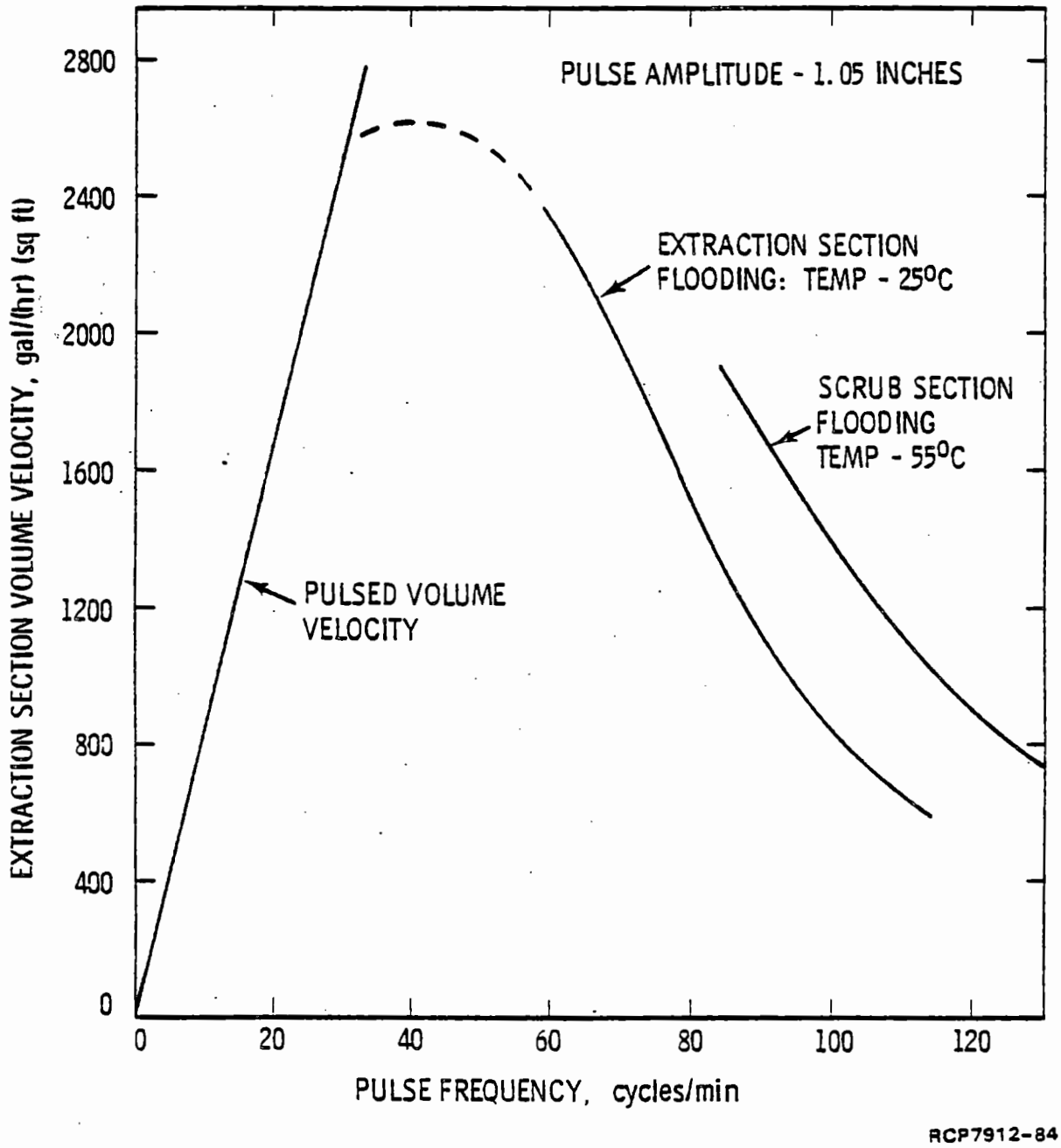

FIGURE 6-40. 2A Column Flooding Characteristics.

end of the column) favored this operation. Two stainless steel sieve-plate cartridge designs were tested--the standard cartridge design and a cartridge comprised of 2-inch-spaced sieve plates with 0.06-inch-diameter holes and 21% free area. Both cartridge designs gave good performance; the standard cartridge was slightly less efficient, but had a higher flooding capacity. The standard cartridge was specified, partly because of its higher capacity and partly because of the concern about plugging of the small holes in the other cartridge, and it provided satisfactory performance during the entire plant operating period. The 2B column has been replaced several times; the most recent replacement was to provide a feed distributor about 7 feet up from the bottom of the column for entry of the 2AP/2BF stream. The distributor at the bottom of the column is used to feed a clean organic (2BS) stream to the column to achieve additional uranium decontamination. The flooding characteristics of the 2B column without the additional scrub stream are shown in Figure 6-41. The addition of the organic scrub stream caused no apparent adverse effects on the flooding capacity.

6.2.4.8 Development of the 3A and 3B Column Designs

The 3A and 3B column designs were based on the 2N and 2P column designs but with annular instead of slab bottom disengaging sections. The original intent was to make the new columns 3 inches in inside diameter, which is adequate for processing 30 kg of plutonium per day. However, the diameters were increased to 3.5 inches to provide the capacity required for the potential processing of U-233 in the columns. The cartridge designs are similar to those used in the 2N and 2B columns but the 3B column cartridge has louver plates near actual or space solution entry points. The air pulsers for these columns are of the design (see Section 3.6.4) used for the CA column in the Plutonium Reclamation Facility, 236-Z Building.

Pilot plant work in support of the 3A and 3B columns was limited to verifying the pulse amplitude, air pressure, and frequency relationships developed in Reference 165 and shown in Figures 6-42 and 6-43. Flooding curves for the 3A and 3B columns are similar to those for the 2N and 2B columns, respectively. These curves are shown in Figures 6-44 and 6-41, respectively.

6.2.4.9 Development of the 2N and 2P Column Designs

The development studies leading to the design specifications for the 2N and 2P columns,* described in Reference 162, were relatively brief. The flowsheet for these columns was similar to that for the second plutonium cycle (2A and 2B columns) and previous pilot plant studies in support of HA and 1C column cartridge improvement provided important background information on general performance characteristics of various cartridge designs.

*The neptunium recovery columns were designated the 3A and 3B columns initially, and are referred to as such in the development studies. The designations were changed to 2N and 2P when the third plutonium cycle was installed in the plant.

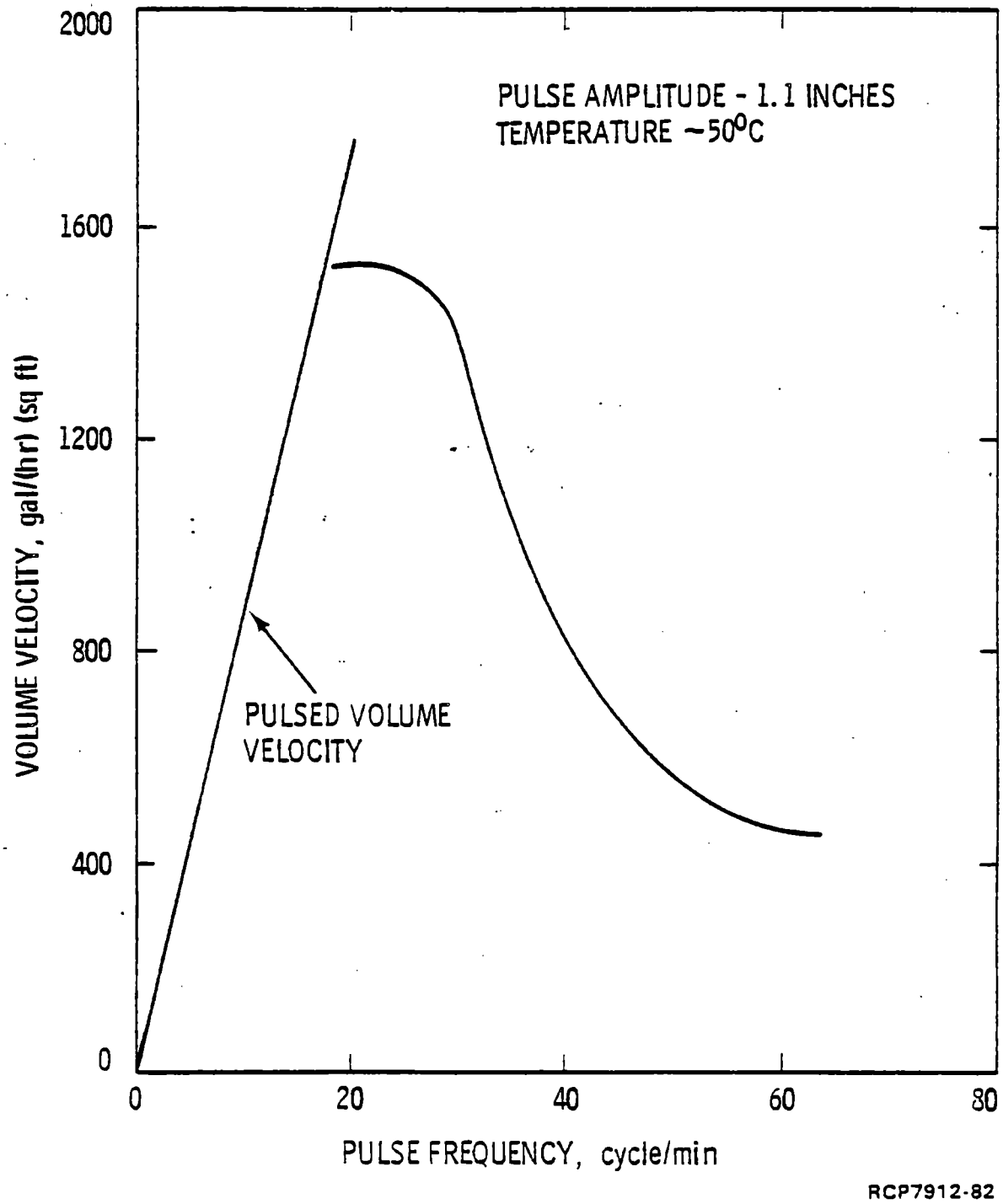

FIGURE 6-41. 2B and 3B Column Flooding Characteristics.

9413275.1212

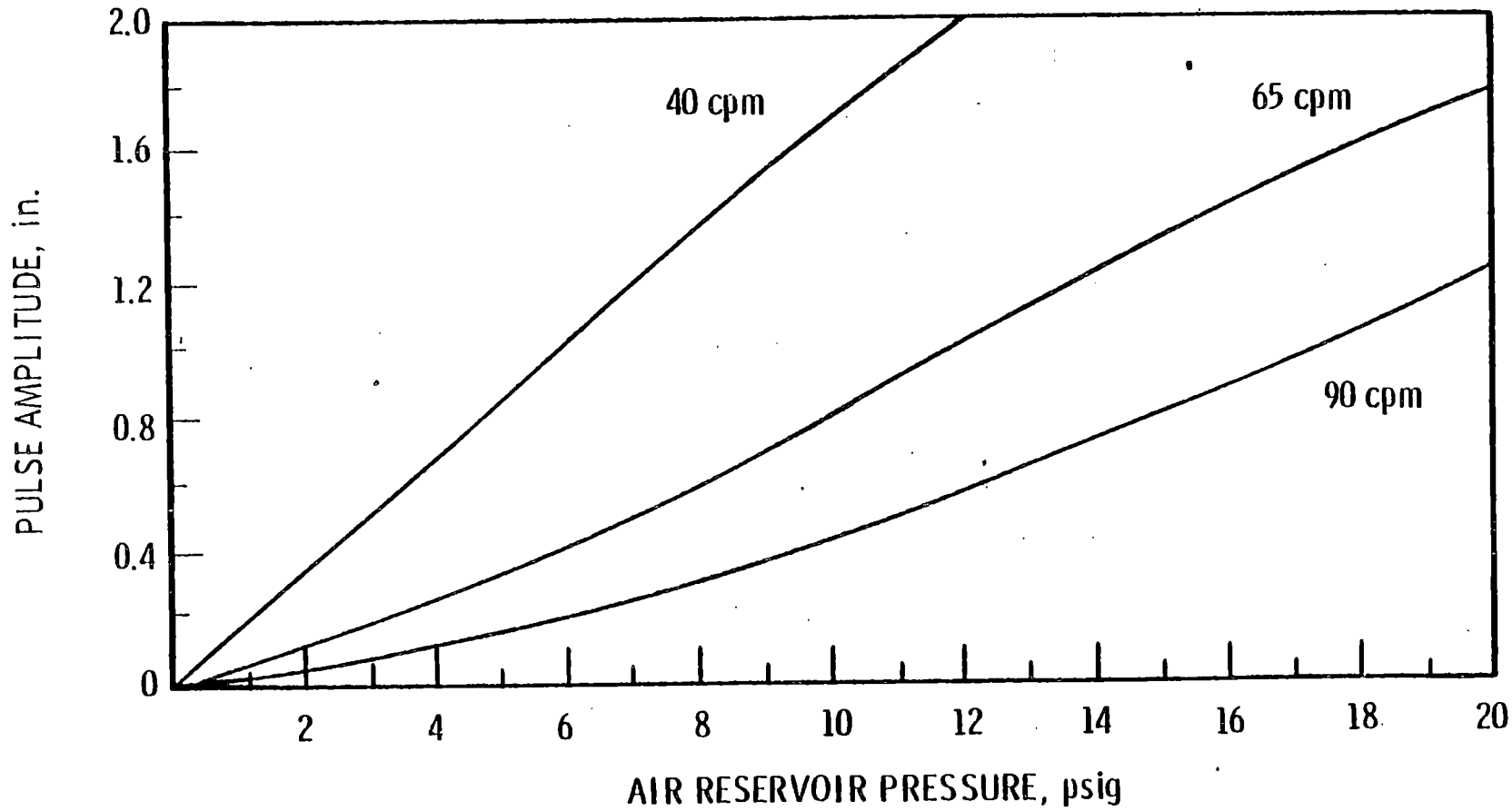

RCP7912-77

FIGURE 6-42. Pulse Amplitude Curves for 3A Column.

9413275.1213

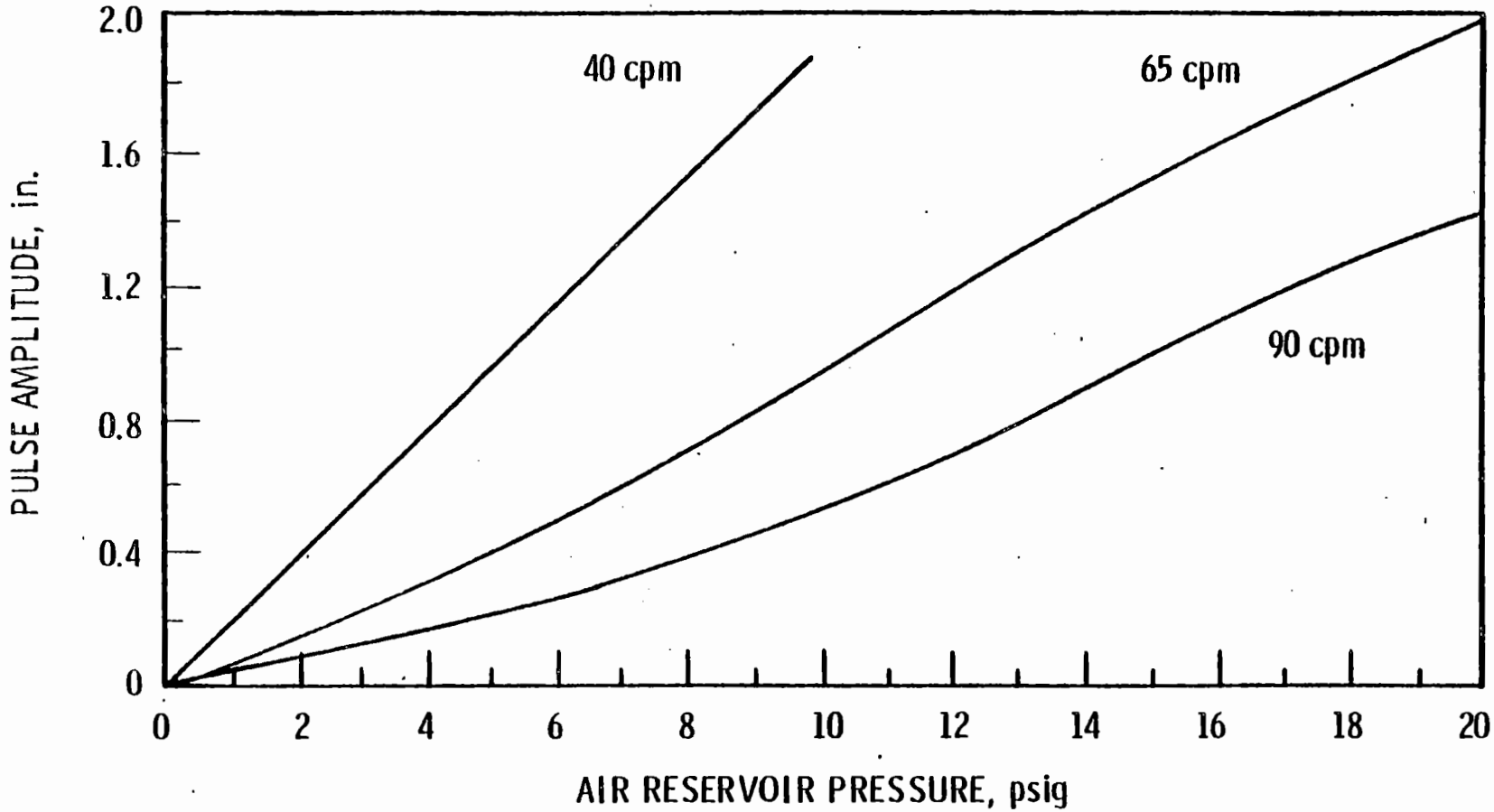

RCP7912-76

FIGURE 6-43. Pulse Amplitude Curves for 3B Column.

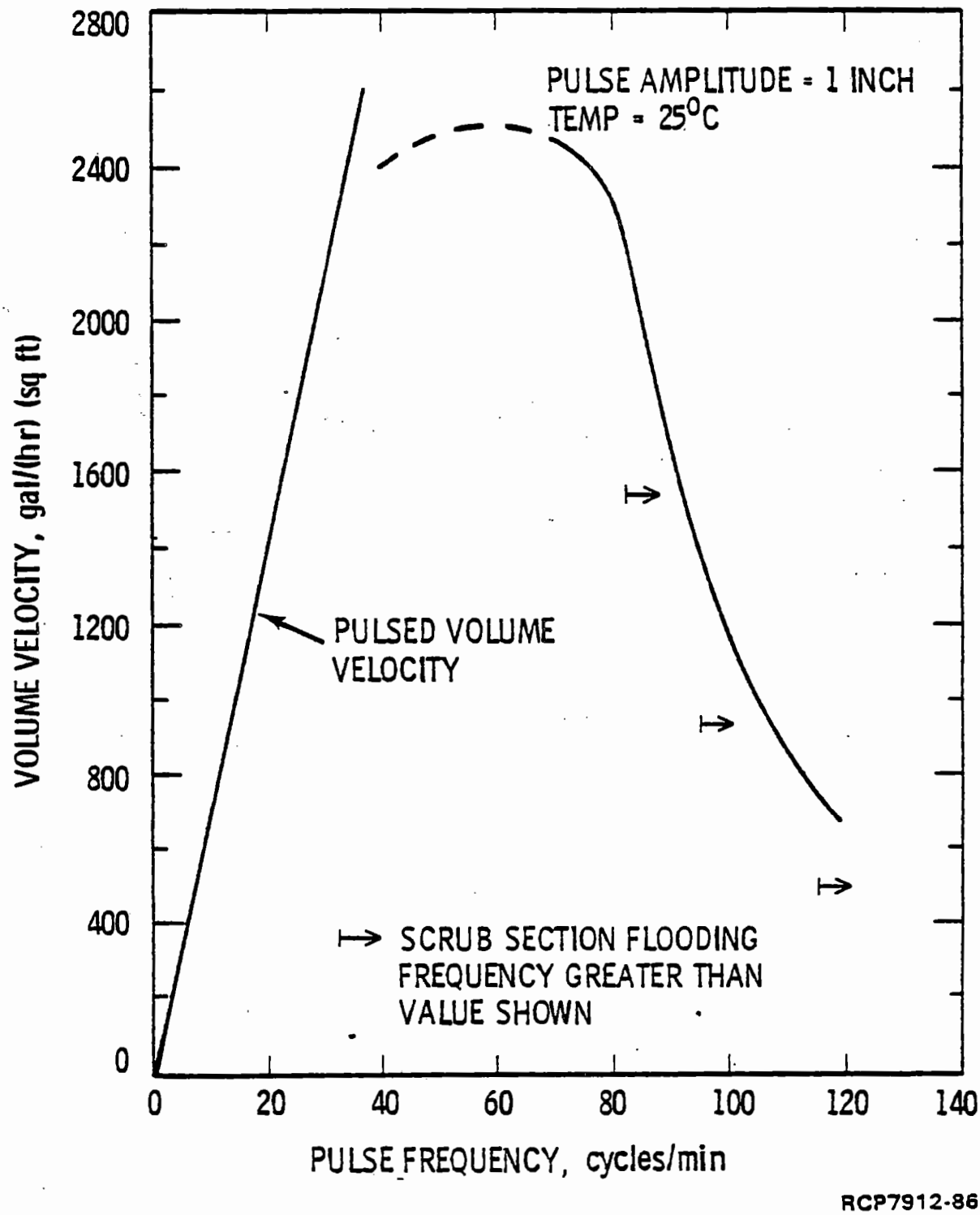

FIGURE 6-44. 2N Column Flooding Characteristics.

6.2.4.9.1 2N Column and Cartridge Design

The throughput rate for the 2N column is approximately equal to that for the 2A column. In addition, the 2A column was used successfully for the processing of neptunium on a campaign basis prior to the installation of the neptunium recovery "package." For these reasons, the only cartridge that was tested for the 2N column was a nozzle plate cartridge similar* to the one in the plant 2A column (Ref. 162). The design specifications for the 2N column were also very similar to those for the 2A column, the primary difference being the use of annular instead of slab-type disengaging sections.

The good extraction and scrubbing performance of the pilot plant column using uranium and sodium as stand-ins for neptunium and fission products, respectively, was verified during plant operation. The column has performed very well during approximately 9 years of plant service to plant shutdown in 1972. The flooding characteristics of the 2N column are shown in Figure 6-44.

6.2.4.9.2 2P Column and Cartridge Design

The specifications for the 2P column and cartridge were based on extensive development studies, with 14 different designs tested (Ref. 162). The cartridge that was initially specified for the Purex Plant 2P column was a graded, mixed nozzle-plate cartridge comprised of both 10 and 23%-free area nozzle plates. The 10%-free area plates had 1/8-inch-diameter nozzles and the 23%-free area plates had 3/16-inch-diameter nozzles. Polyethylene-coated stainless steel sieve plates were inserted at 1-foot intervals in the top 14 feet of cartridge. The original cartridge was replaced after about 3 years by one of similar design, but with Fluorothene sieve plates in place of the polyethylene-coated sieve plates.

The specified cartridge is a complex one, but the development studies indicated the design provided the needed performance over the wide range of processing conditions encountered during the three phases of the neptunium recovery and decontamination operation. The 2P column has performed well in the Purex Plant; stability has been good, even during the transition between phases, and uranium decontamination performance has been about as predicted by the development studies. The flooding characteristics of the 2P column are shown in Figure 6-45.

6.2.4.10 Development of the O-Type Column Design

The O-type columns were originally designed to be used as organic wash columns in which spent solvent from the solvent extraction cycles is scrubbed with an aqueous sodium carbonate solution. Washing of the organic solvent was initially considered a time-dependent operation, as

*The only difference is the inclusion of two louver plates, each, in the extraction section and scrub section of the column to ensure good dispersion with the high density difference between the phases.

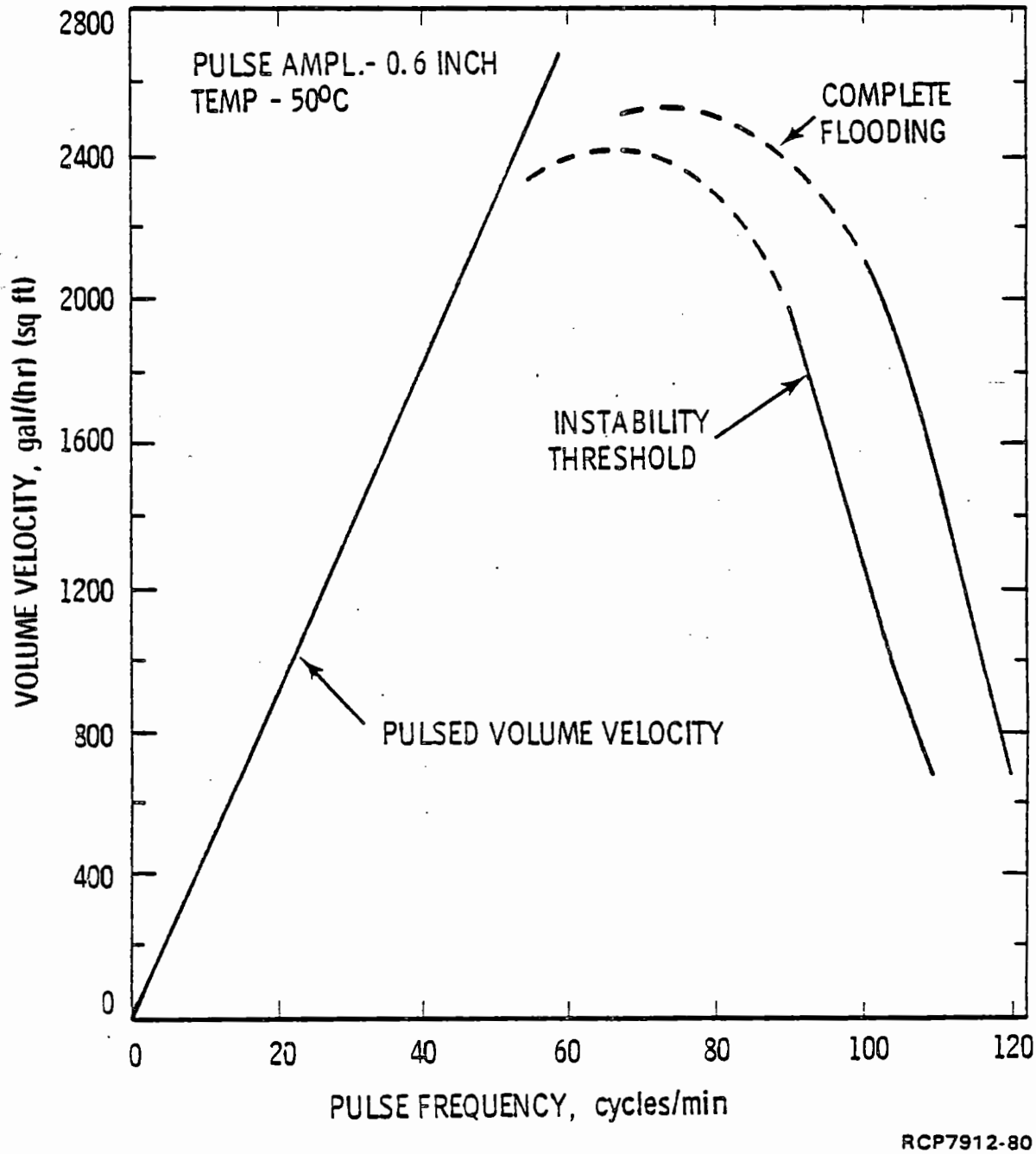

FIGURE 6-45. 2P Column Flooding Characteristics.

discussed in Section 6.1, and so it was thought necessary that the O-type columns be operated with the organic phase continuous. Thus, the cartridge had to be compatible with organic phase - continuous operation. Fluorothene sieve plates were specified initially, since nozzle plates had not yet been tested for this service, and were installed in both the 10 and the 20 columns. The cartridge in the 10 column was subsequently replaced for a few years by a stainless steel nozzle plate cartridge because of concern for the radiation stability of the Fluorothene plastic plates. Both original 10 and 20 columns are in service. The replacement 10 column with the nozzle plate cartridge is stored as a "hot" spare.

Shortly after startup of the Purex Plant, the solvent treatment procedure was changed to include a carbonate-permanganate wash in the solvent feed/wash tanks, followed by an acid wash in the 10 and 20 columns. This procedure has been effective and the demand on the pulse columns is very low.

6.2.5 Decontamination

The solvent extraction principles discussed in 6.2.3.2 are also applicable to the problem of separation of contaminants (principally fission products) from uranium and plutonium in the Purex Plant. The relative inextractability of the fission products into the organic phase (organic-to-aqueous distribution ratios of less than 0.02 for most species) is the fundamental property which allows their almost quantitative separation. This section discusses the application of solvent extraction theory to the evaluation of product decontamination performance, presents pilot and Purex Plant decontamination performance data, and discusses the effects of process variables on this performance.

6.2.5.1 Mass Transfer of Fission Products

Normal mass transfer concepts are useful in explaining the function of solvent extraction columns in the removal of contaminants such as fission products from uranium and plutonium product streams. Under some conditions, for which distribution ratios are known and reproducible, the number of transfer units or equivalent stages required to attain a desired decontamination factor (DF) for a contaminant may be estimated. Under other conditions, for which distribution ratios are not known with certainty, practical application of mass transfer theory is limited. In either case, an understanding of mass transfer in relation to decontamination is necessary for the proper evaluation of contaminant distribution ratios that are experimentally determined in the laboratory.

6.2.5.1.1 Fission Product Operating Diagrams

The basic principles for the construction of operating diagrams are explained in 6.2.2.1. As indicated, equilibrium data are essential in the diagrams. The fission product equilibrium data for Purex flowsheet

conditions are incomplete and probably approximate, at best. Data which have been published are generally limited by the following factors:

- Laboratory batch-contact stages are not always 100% efficient. Lower efficiency may be caused by factors such as insufficient agitation or entrainment between phases.

- The effects of some variables, such as fission product concentrations and acidity, on E_a^o values have not been evaluated in depth.

- Increases in E_a^o values with increase in the number of stages have been noted for some fission products. This may be caused by the initial removal of a particular species of fission product with a low E_a^o.

For these reasons, the use of operating diagrams for estimating the number of transfer units (or theoretical stages) is generally considered impractical.

6.2.5.2 Evaluation Methods

The chemical conditions (acidity, uranium concentration, and temperature) in the scrub sections of the A-type columns, where most of the decontamination is accomplished, are relatively constant. Average distribution ratios can therefore be approximated for most of the fission products of concern. For example, for a point in the scrub section of the HA column where the nitric acid concentration in the aqueous phase is 2.0M and the organic phase is approximately 60% saturated with uranium, the distributuion coefficient for zirconium is 0.01. Since the acid and uranium concentrations are essentially constant throughout the scrub section, the distribution coefficient for zirconium is also expected to be constant and the equilibrium line should be straight. For such cases, the Colburn equations discussed in 6.2.2.2 and 6.2.2.3 are useful in explaining the relationships between values of E_a^o for the fission products and decontamination performance in solvent extraction columns.

6.2.5.2.1 Decontamination Factor Versus the Number of Transfer Units

The following discussion applies only to the scrub sections of A-type columns, as these are the only column sections devoted exclusively to decontamination. The overall decontamination factor, DF_O, for a particular fission product is equal to the product of the feed plate decontamination factor, DF_F, and the scrub section decontamination factor, DF_S. The feed plate DF represents the decontamination that occurs at the point of entry of the feed stream because only a small fraction of the fission products in the aqueous feed (HAF) transfers into the organic

extractant (HAX). In terms of volumetric flow rates and solute (fission product) concentrations:

$$DF_F = \frac{X_f\ A_f}{Y_1\ O_1} \tag{6.66}$$

$$\text{and } DF_S = \frac{Y_1\ O_1}{Y_2\ O_2} \tag{6.67}$$

$$DF_o = \left[\frac{X_f\ A_f}{Y_1\ O_1}\right]\left[\frac{Y_1\ O_1}{Y_2\ O_2}\right] = \frac{X_f\ A_f}{Y_2\ O_2} \tag{6.68}$$

where

A_f = volume of aqueous feed per unit of time;

O = volume of organic phase per unit of time;

X_f = solute (fission product) concentration in the aqueous feed;

Y = solute concentration in the organic phase;

and the subscripts 1 and 2 refer to influent and effluent conditions, respectively.

Again, for this same case, the Colburn equation relates the number of transfer units, N_t, in the scrub section to the scrub section distribution ratio (E_a^o) and DF_S:

$$N_t = \frac{2.3 \log [M(1-P) + P]}{1-P} \tag{6.69}$$

where

$P = \frac{m\ O}{A_s}$;

$\frac{O}{A_s}$ = reciprocal of the slope of the operating line (organic flow rate/aqueous flow rate);

m = slope of the equilibrium line = $(E_a^o)_S$ for a straight line;

$M = \frac{Y_1 - X_x m}{Y_2 - X_x m}$;

Y_1 = solute concentration in the organic influent stream;

Y_2 = solute concentration in the organic effluent stream;

X_x = solute concentration in the aqueous influent (scrub) stream.

Under conditions of a single scrub, $X_x = 0$ and $M = Y_1/Y_2$. Also O_1 and O_2 are essentially equal, so that:

$$DF_s = \frac{Y_1\ O_1}{Y_2\ O_2} = \frac{Y_1}{Y_2} = M \qquad (6.70)$$

Thus for the above conditions, DF_s may be substituted for M in the Colburn equation.

The overall decontamination factor, DF_0, may be related to the scrub-section decontamination factor, DF_S, by the application of feed-plate and scrub-section material balances and the assumption that the aqueous and organic solute concentrations at the feed point are essentially at equilibrium, a generally valid assumption. Thus:

$$DF_0 = \frac{M}{(E_a^o)_F\ O}\ (A_f = A_s) - M + 1 \qquad (6.71)$$

where $(E_a^o)_F$ equals the feed-plate distribution ratio.

When $(E_a^o)_F$ and $(E_a^o)_S$ are approximately equal, which may often be the case, the above equations can be used to express N_t in terms of either distribution ratio and DF_0.

Equations analogous to those presented in 6.2.2 can also be developed in terms of the number of theoretical stages, N_s.

The use of the above equations may be illustrated by a sample calculation of the number of transfer units required to attain a DF_0 equal to 800 for a fission product with $(E_a^o)_S$ and $(E_a^o)_F$ equal to 0.01. Relative flows are given as $A_f:A_s:0 = 1.0:0.67:3.33$. Substituting in Equation 6.71,

$$800 = \frac{M}{(0.01)(3.33)}\ (1.0 + 0.67) - M + 1$$

$$P = \frac{E_a^o\ 0}{A_s} = \frac{(0.01)(3.33)}{0.67} = 0.05$$

Substituting M and P into Equation 6.69:

$$N_t = \frac{2.3 \log [(1-0.05)\ 16.2 + 0.05]}{1-0.05}$$

$$N_t = 2.88$$

6.2.5.3 The "Irreversible" Extraction of Some Fission Products

Laboratory studies and Purex Plant experience indicate that small fractions of some of the fission products, once extracted into the organic phase, cannot be scrubbed back into the aqueous phase. Such irreversible behavior has been explained in terms of two mechanisms, both of which undoubtedly occur to some extent in the Purex process.

One of the possible mechanisms is the formation of an organic-favoring complex compound with some other solute of the fission product in question. Zirconium may be thus complexed by DBP, formed by the hydrolysis of TBP. Other complexes may be formed with unknown impurities, such as nitration products of the diluent. Because of the extremely low concentration in which the individual fission products are present (in the range of 10^{-5} to 10^{-4}M in the HAF stream), a very low concentration of complexing agent could be effective in forming these compounds.

Another possible mechanism involves the presence of certain fission products in more than one chemical form, some with low and some with high distribution ratios. Irreversible behavior by zirconium, niobium, and iodine, in addition to that of ruthenium, has been observed.

6.2.5.4 Pilot Plant Decontamination Performance

The use of the Purex process for the decontamination of uranium and plutonium from fission products and from each other was demonstrated in laboratory and "hot" pilot plant studies at a number of Atomic Energy Commission (predecessor of the Department of Energy) sites prior to the startup and successful operation of the Purex production plants at Hanford and Savannah River. Hot pilot plant studies were performed in mixer-settlers at the Knolls Atomic Power Laboratory (KAPL), and provided the bases for the design of the mixer-settler contactors at the Savannah River Plant. Hot pilot plant studies were also performed at the Oak Ridge National Laboratory (ORNL), using pulse columns, and provided some of the basic data used in establishing the height of the scrub sections for the Hanford Purex Plant columns.

Pilot plant decontamination performance is discussed briefly in this subsection as it relates to expected performance based on theoretical calculations and to actual experience in the Purex Plant.

6.2.5.4.1 Pilot Plant Studies at ORNL

The use of pulse columns for the decontamination of uranium and plutonium from radioactive fission products was initially demonstrated at ORNL (Ref. 2). Decontamination factors for zirconium and niobium in the ORNL 1A column (analogous to the Purex Plant HA column) were in the range of 200 to 3000. Typical DF's in the Purex Plant HA column with an 18-foot-high scrub section, operating with the organic phase continuous and using normal paraffin hydrocarbon diluent, are in the range of

3000 to 10,000 for Zr-Nb. (The two fission products are not separated in the laboratory analyses.)

Calculations based on mass transfer theory indicate that typical DF's should have been about 5000 for zirconium and 50,000 for niobium, assuming six transfer units in the 18-foot-high scrub section. The relatively low DF's obtained in the ORNL pilot plant studies are attributed to the following factors:

- Eddy diffusion (or back-mixing) in the aqueous-continuous scrub section, causing a portion of the fission products to migrate to the top of the column counter to the downflowing scrub stream. This problem was eliminated in the Purex Plant by operating the A-type columns with the organic phase continuous.

- Insufficient height of the scrub section.

- Distribution coefficient (E_a^o) values relatively unfavorable for stripping (i.e., E_a^o values in the range of 0.01 to 0.4).

- The so-called "inextractable" (or, more correctly, "unstrippable" or "unscrubbable") behavior of certain fission products, due to complexing in the organic phase or formation of organic-favoring forms. This factor is believed to be related, primarily, to the type of diluent used. High radioactivity of the organic solvent and relatively poor ruthenium decontamination performance of the Purex Plant solvent extraction system were serious problems with both Shell E-2342 and Soltrol-170 diluents, particularly after extended use. (Both of these diluents contained substantial amounts of unsaturated compounds.) These problems were virtually eliminated with the use of normal paraffin hydrocarbon diluent.

6.2.5.4.2 Pilot Plant Studies at KAPL

Hot pilot plant studies of the Purex process were also performed at KAPL (Ref. 166). The KAPL studies differed from the ORNL studies, however, in that mixer-settlers were used instead of pulse columns and additional decontamination by head-end treatment was investigated, and the KAPL flowsheet included a co-decontamination cycle similar to the Hanford Purex HW#3 flowsheet. Gross gamma decontamination factors of about 22,000 for the first solvent extraction cycle compared favorably with the theoretical calculations and with later experience in the Purex Plant.

6.2.5.5 Effect of Design and Operating Variables on Decontamination Performance

The effects of design and operating variables on the decontamination performance of the pilot plant columns and mixer-settlers are discussed and compared with Purex Plant operating experience in this subsection.

6.2.5.5.1 Effect of Scrub Section Height

The effect of scrub section height (or number of stages) on decontamination performance appeared to be negligible in both the ORNL studies and the KAPL studies. In two separate studies at ORNL (Ref. 2), increasing the column scrub section height by 50% produced no significant change in DF. In the KAPL studies, increasing the number of scrub stages from five to eight resulted in no change in DF's which could be charged to the equipment change.

Prior to startup of the Purex Plant, the heights of the HA and 1A column scrub sections were increased from 13 to 18 feet when scouting studies in the Hanford Hot Semiworks indicated a potential problem of poor decontamination performance. Whether or not the longer scrub sections improved the decontamination performance is moot, as the columns that were initially installed had other deficiencies, and their decontamination performance was unacceptably low. The problem of inadequate decontamination in the A-type columns was corrected by replacing the HA and 2D columns with ones designed to operate with the organic phase continuous. Later, the co-decontamination cycle was effectively eliminated by bypassing the HC and 1A columns. The HC column was then converted and used as an additional scrub (HS) column in series with the HA column. Although use of the HS column was discontinued a few years before the plant shutdown (after the change to NPH diluent, and processing of N Reactor fuels had become routine), typical DF values obtained prior to the column's deactivation were of the order of 2 to 10. The lower values were generally obtained when the radioactivity in the HAP stream was highest, indicating the presence of an "unscrubbable" species of fission product.

6.2.5.5.2 Effect of Throughput Rate

The relationship between throughput rate and decontamination performance was found, in pilot plant studies, to be essentially the same as that between extraction efficiency and throughput rate, as would be expected. In studies with volume velocities comparable to production rates of 5 and 10 tons U/day in the Purex Plant, a consistent, approximately 50% reduction in DF accompanied the decrease in throughput at constant pulse amplitude and frequency. An increase in pulse amplitude of 30% at the lower throughput rate resulted in an increase in the DF to approximately the values obtained at the higher rates. Thus, DF values could be held constant over a relatively large change in throughput rate by appropriate adjustments in the pulsing conditions. This same characteristic has been observed consistently in the Purex Plant.

6.2.5.5.3 Effect of Organic Phase Uranium Saturation

The effect of varying uranium concentration in the organic solvent on the scrub section decontamination performance was studied in the ORNL pilot plant. A series of runs were made in which the uranium saturation

of the 1AP stream and, therefore, the 1A column scrub section, was varied from 75% (the ORNL flowsheet value) down to 50%. No significant change in DF's was observed when the saturation was reduced from 75 to 60%. A further decrease in saturation to 50%, however, decreased the DF's by factors ranging from 2 for ruthenium to nearly 50 for zirconium.

This general effect has not been studied quantitatively in the Purex Plant, but is routinely observed during operation of the HA column. Standard operating control of the HA column involves maintaining the organic phase uranium saturation at the maximum level, consistent with low plutonium losses to the raffinate stream. Any significant decrease in saturation (identified by a decrease in the extraction section differential pressure) is accompanied by an increase in the HAP gamma monitor reading. This was very pronounced before processing of N Reactor fuels commenced.

6.2.5.5.4 Effect of Acid Concentration

The equilibrium data for ruthenium, zirconium and niobium (shown in Figures 6-20, 6-21 and 6-22), the three fission products of primary concern in the Purex process, indicate the following general relationships should apply:

- Ruthenium DF's should increase with increasing acid concentration.
- Zirconium DF's should decrease with increasing acid concentration.
- Niobium DF's should not change to any great extent, but might show a slight decrease with increasing acid concentration.

Pilot plant mixer-settler studies were performed at KAPL to compare the "high-acid" flowsheet such as that used at ORNL (2M HNO_3 in the 1AF and 3M HNO_3 in the 1AS) with a "low-acid" flowsheet (0.5M HNO_3 in 1AF and 2M HNO_3 in 1AS). The reported results for the first cycle (1AF to 1BP and 1CU) verified the above relationships with respect to the plutonium (1BP) stream, with ruthenium DF's averaging a factor of about three higher with the high-acid flowsheet and average zirconium-niobium DF's averaging a factor of about two higher with the low-acid flowsheet. The DF's for the uranium product (1CU) stream were consistently slightly higher with the high-acid flowsheet, however. No measurements were made of the radioactivity of the 1AP stream, however, and the change in acidity of this 1AP stream is believed to have caused enough of a change in the distribution ratios in the 1BX column to overshadow the beneficial effects of lower acid concentration in the 1A column on zirconium and niobium DF's.

The current Purex Plant flowsheet for processing N Reactor fuels, utilizing a high-acid lower extraction section coupled with low-acidity feed and scrub streams (0.4M HNO_3 and 2M HNO_3 respectively) has demonstrated excellent decontamination performance for ruthenium and good

performance for zirconium and niobium. The second uranium cycle, operated at a very low acidity (1.5M HNO_3 in the 2DF and 0.0M HNO_3 in the 2DS), has proven very effective in removing the residual zirconium-niobium contamination.

6.2.5.5.5 Radioactivity of the Solvent

Recovered* organic solvent from the first solvent extraction cycle (1CW) was successfully reused as extractant for the first cycle and the second plutonium cycle. A study of residual radioactivity in the solvent and second uranium cycle decontamination showed adverse effects on the uranium product quality, however, and a second solvent treatment system was recommended for that cycle.

As discussed previously in 6.1.2.6.1, Purex Plant experience has shown the residual radioactivity concentration of the organic solvent to be primarily a function of the diluent. A pure, saturated, straight-chain hydrocarbon such as n-dodecane or NPH exhibits markedly superior stability towards radiation and chemical attack, as compared to diluents composed of mixtures of saturated and unsaturated, isomeric and aromatic hydrocarbons (such as AMSCO-123, Shell E-2342 and Soltrol-170). Furthermore, an organic solvent containing a normal paraffin hydrocarbon diluent shows much less tendency to retain radioactivity, and the radioactivity that is retained in the 1CW is washed out much more readily during the solvent treatment process.

The Purex Plant still utilizes two solvent treatment systems. It is quite probable, however, that satisfactory performance could be achieved with a slightly modified single treatment system. The main barrier to changing to a single system is the lack of an economic incentive.

6.2.5.5.6 Solvent Centrifugation

The ORNL pilot plant studies showed approximately 3-fold increases in DF's as a result of centrifuging the carbonate-washed organic to remove entrained solids.

The Purex Plant was provided with liquid-liquid centrifuges for each solvent treatment system and they were used for a number of years. Shortly after startup, however, the solvent treatment process was modified to incorporate an acid wash after the carbonate wash. The acid wash removed most of the entrained solids, and the centrifuges are no longer used.

---

*Treated by intimate contact, or "washing," with a 2.5% sodium carbonate solution.

6.2.5.5.7 Interface Location

The ORNL pilot plant studies were generally made with the aqueous phase continuous (top interface). The cartridges were composed of stainless steel sieve plates with 1/8-inch-diameter perforations, 23% free area and 2-inch plate spacings, which gave reasonably good performance with the aqueous phase continuous. In the few runs which were made with the organic phase continuous, however, the effect on decontamination performance varied from none measurable to severely adverse. This was not surprising, since the cartridges had been observed to give very poor phase dispersion when operated with the organic phase continuous.

Operation of the A-type columns with bottom interface (organic phase continuous) has, as was discussed previously, been demonstrated in the Purex Plant to provide superior decontamination performance, as compared to top interface operation.

6.2.6 Use of Column Instrumentation for Detection of Off-Standard Conditions

6.2.6.1 Column Static and Differential Pressure

Air bubbler-type pressure instruments, described in Section 3.10, are provided for each column for measuring the static (or differential) pressure of the column contents. The instruments actually record the differential pressure (DP) between two points in the column. Thus, the static pressure is a measurement of the DP between the bottom and the top of the column, or the total static "head" on the column, in inches of water. Static pressure instruments are provided for each column. The differential pressure instruments, which are provided, additionally, on some columns, measure the DP between the bottom (or top) and some intermediate location in the column. Thus, differential pressure instrumentation measures the DP's across the scrub and extraction sections of the A-type columns and across the lower and upper portions of the 1BX, 2B, 3B and 2P columns. The apparent specific gravity of the column liquid contents can readily be calculated from the indicated static pressure by dividing the indicated measurement, in inches of water, by the vertical distance between the two pressure tops. All column pressure measurements are dampened by "snubbers" in the transmitting lines to minimize the effect of pressure fluctuations caused by the action of the pulsers.

In general, any change in the column operation which increases the column holdup of the dispersed phase will cause the apparent specific gravity of the column to approach the specific gravity of the dispersed phase. Thus, increasing the volume velocity, the flow rate of the dispersed phase, or the pulse frequency in an aqueous-continuous column will cause the apparent specific gravity to decrease. In an organic

phase-continuous column, an increase in dispersed phase flow rate or pulse frequency will cause the apparent specific gravity to increase. Increases in pulse frequency will also increase the "error," or displacement, in the DP readings caused by pressure fluctuations produced by the pulsing, even with snubbers on the transmitting lines.

The approach of a complete flood in a column (in which the dispersed phase becomes the continuous phase in a portion of the column) is indicated by a sharp change in the apparent specific gravity towards that of the dispersed phase. Thus, a flood in an organic-phase-continuous column will be indicated by a sharp increase in the column static pressure. The indications from the differential pressure instruments will be similar to, but more pronounced than the static pressure indications. A flood in the HA column scrub section that causes a five chart-division increase in the static pressure, for instance, will likely cause an increase of up to 10 chart divisions in the scrub section DP measurement, and a smaller, more gradual decrease in the extraction section DP measurement. The sharp change in static pressure and scrub section DP reading is attributable to a rapid buildup of the discontinuous phase in the column as complete flooding is approached. The concurrent decrease in extraction DP reading is caused by the reduced dispersed-phase flow in the extraction section as a result of the scrub section flood.

A similar but much more gradual change in apparent specific gravity (or static and differential pressures) occurs when flooding is caused by emulsification. This type of flooding is sometimes characterized by the gradual accumulation of the dispersed phase as a tightly packed emulsion which may, in time, leave the column through the continuous phase outlet. This gradual change in static pressure with emulsification differs from that normally occurring with a change in frequency or flow rate in that it does not stabilize after a few minutes of operation.

Cyclic forms of instability, such as cyclic local flooding, often occur at operating conditions slightly less severe than those that cause complete flooding. This instability is characterized by cyclic buildup of the dispersed phase in the column until it develops enough "head" to channel its way through the continuous phase. It can sometimes be detected by cyclic variations in the static or differential pressures.

6.2.6.2 Interface Controls

The pulse column interface controls, described in Section 3.10, are intended primarily for control of liquid flows, rather than to provide information on column operation. An analysis of the longer-term interface fluctuations in conjunction with the column static and/or differential pressure recordings, however, can provide a more complete understanding of the nature of erratic column behavior. Minor cyclic local flooding, for instance, may be indicated as an erratic or fluctuating interface level, but not be severe enough to cause a noticeable change in the static pressure reading.

6.2.6.3 In-Line Monitors

In-line monitors, described in Section 3.10, are used for the continuous measurement of the radioactivity and certain other chemical properties of the process streams. The HAP gamma monitor measures the fission product (primarily Zr-Nb) content of the organic product stream from the HA column and, in conjunction with the extraction section differential pressure, is used to maintain the desired uranium saturation in the organic solvent. The plutonium neutron and alpha monitors on the partition system and the second and third plutonium cycle effluent streams are important criticality prevention tools. The neutron monitors on the 1BX column and the 1BXP stream and the alpha monitor on the 1BSU and 1BP streams are used to detect perturbations in the plutonium-uranium partitioning system and prevent internal refluxing of plutonium or partition failure. The alpha monitors on the 2AW and 3AW streams provide continuous measurements of the plutonium concentrations in these streams and, thus, are used to maintain control of the plutonium inventory in the backcycle system. Neutron monitors are also used to determine the plutonium content of the feed preparation tank (TK-E6) and the 3WB receiver tank (TK-J1) in the backcycle waste system, and to monitor the cadmium concentration in AMU Tank 151, as described in subsection 3.10.6.8.2. A nitrite monitor on the 2AF stream and conductivity monitors on the HAS, HAW and 2AS streams are used for continuous measurement and control of the nitrite and acid concentrations of these respective streams. Alpha monitors on the 2BP and/or 3AF streams are used in conjunction with those on the 1BP and 2AW streams to determine the path of plutonium through the second plutonium cycle. The uranium photometer on the 2DW stream is used indirectly to maintain control of the uranium saturation in the 2DU by controlling the 2DW uranium concentration. Continuous indications of fission product contents in the aqueous product streams of solvent extraction cycles are provided by the 1BP, 2BP, and 2EU gamma monitors.

6.2.6.4 Stream Flowmeters and Valve Loading Pressures

Occasionally, the flowmeters on, particularly, the radioactive process streams become partially plugged or the electrical properties of the transmission lines change, causing a change in the calibration, or the instrument system may fail completely. A knowledge of the air loading pressure on the diaphragm-operated valve controlling the flow of the stream of concern can be very useful in maintaining the approximate flow on an emergency basis.

6.2.7 Special Problems

This subsection discusses briefly the experimental information available on inestractable uranium and plutonium, crud formation, emulsifying impurities and emulsification, and pulse loss or distortion. In unusual circumstances, such conditions may give rise to anomalous column behavior, but generally, their effects are minor and do not cause any operational problems.

6.2.7.1 "Inextractable" Uranium and Plutonium

Both MBP and DBP, decomposition products of TBP, as well as some other elements and compounds form stable complexes with uranium and plutonium. The complex formed with MBP is strongly aqueous-favoring and only sparingly soluble in Purex aqueous and organic streams. Any MBP present in the organic extractant or formed by hydrolysis of DBP in the solvent extraction columns will carry out a corresponding amount of uranium and/or plutonium in the aqueous raffinate. The uranium-MBP complex is a fine, possibly colloidal, precipitate and may collect at the interface temporarily, but will eventually exit with the aqueous raffinate stream. The complex formed with DBP, on the other hand, is strongly organic-favoring and will leave the solvent extraction system in the organic raffinate streams. Other chemicals which form strong, aqueous-favoring complexes with uranium and/or plutonium, and thus cause high waste losses, include fluoride, oxalate, sulfate and phosphate ions. The uranium and plutonium complexed in this manner and leaving the columns in the raffinate streams is referred to as "inextractable" or "unstrippable," as the degree of extraction or stripping of these complexes is very small because of their unfavorable distribution ratios.

6.2.7.2 "Crud" Formation

Interface "crud" is the colloquial name given to the brownish-black solids which collect at the liquid-liquid interface in the solvent extraction columns. The exact composition of this material is not known. Analysis of representative samples of the crud, however, have shown it to contain iron, aluminum, and silicon in varying proportions, with lesser amounts of such elements as calcium, barium, manganese, magnesium, chromium, and nickel. Radioactive constituents consist largely of ruthenium, zirconium and niobium. Entrainment of this crud in the product streams (which could occur rather easily since its apparent density is between that of the aqueous and organic phases) would have the effect of reducing the decontamination factor obtained in the column. For this reason, the Purex Plant solvent extraction columns are designed with the interface position at the waste end of the column. Thus, the entire length of the column is available to scrub the interface crud out of the product stream, and any carryover will be with the raffinate stream.

6.2.7.3 Emulsions

Effective extraction performance of a pulse column is dependent on the formation of a relatively fine phase dispersion to provide a large interphase contact area. It is an additional requirement, however, that the dispersion formed in the column should be capable of disengaging fairly readily. Emulsions which do not disengage readily may be responsible for the following undesirable effects:

- Decreased capacity, reduced pulse frequency ranges for good performance, and reduced extraction efficiency;

- Increased organic solvent losses and fission product carryover in the organic product streams;

- Interface foam may interfere with interface controls, increase entrainment, and cause flooding if the foam is allowed to propagate into the plate section.

A discussion of the above effects and their possible causes follows.

6.2.7.3.1 Emulsification, Interface Foam, and Entrainment

Occasionally, because of the chemical flowsheet conditions, excessive pulsing, or the presence of emulsion-stabilizing impurities, the net rate of emulsion formation in the column, or a portion of the column, is greater than the rate of dissipation of the emulsion. If the accumulation of emulsion continues until an appreciable amount of the discontinuous phase is entrained in the continuous phase effluent, the column is said to be emulsified or flooding by emulsification.

Interface foam is produced when the dispersed phase fails to coalesce when it reaches the interface. The foam (or partially stabilized emulsion) may accumulate to a stable height, or it may propagate throughout the plate section, eventually producing flooding by emulsification. Two types of interfacial foam have been observed: a simple type in which droplets of one phase are dispersed in the other phase, and a more complex type in which thin, filmy "balloons" of one phase are both filled and surrounded by the other phase. The latter type of emulsion is believed to give the frothy appearance to the top layer of the normal, slight amount of interface foam in the aqueous-continuous columns. Excessive interface foam may be produced by emulsion stabilizing impurities which collect at the interface.

Entrainment refers to the carryover of one of the phases with the effluent stream of the other phase. The entrained liquid normally amounts to only a small fraction (typically, 0.01 to 0.1%) of the total flow of the phase, and usually consists of very fine droplets, some of which may be colloidal in size, which usually do not settle out in disengaging sections. An emulsifying agent in the column would be expected to increase the amount of entrainment. Entrainment is undesirable for the following reasons:

- Entrainment of the organic phase in the aqueous effluents represents a potentially economically important loss of solvent, and adds an additional stripping load to the uranium and back-cycle concentrators. Some of the solvent may be recovered in the condensate recycle system, but would likely contain decomposition products that would have an adverse effect on solvent extraction performance.

- Entrainment of the aqueous phase in the organic product streams may, in some instances, permit the carryover of fission products to subsequent extraction cycles.

6.2.7.3.2 Emulsifying Impurities

The presence of any emulsifying impurities in the pulse columns may intensify any or all of the undesirable effects discussed in this subsection. Potential emulsifying agents include the decomposition products of TBP (particularly DPB) introduced in the solvent, and colloidal alumina or siliceous material introduced in the feed or as an impurity in "cold" chemical solutions. Other colloidal or gelatinous compounds, containing such metallic elements as aluminum, iron, tin, gallium, barium, manganese, magnesium, chromium and fission products, have been identified either as potential emulsifying agents or as constituents of emulsion-stabilizing interface crud. These compounds may be formed in the column by combination of the metallic ions with the acidic decomposition products of TBP, or with unsaturated hydrocarbon impurities in the TBP diluent. This latter mechanism is not likely, however, with the use of n-dodecane or a similar highly refined normal paraffin hydrocarbon. The metallic ions introduced to the system may come from the uranium fuel elements, concentrator corrosion, or "cold" chemical impurities.

Primary reliance on elimination of emulsifying impurities in the Purex Plant rests on the solvent treatment system and on the purity specifications for the chemicals procured (Ref. 7).

6.2.7.3.3 Emulsion-Induced Instability

Excessive emulsification, which would result in unstable operation or flooding, may normally be prevented without impairment of HTU values by the proper selection of pulsing conditions and superficial volume velocities for the chemical system and column design involved. However, under unusual conditions not normally encountered in the Purex Plant, special problems in this respect may arise as a result of large differences in the ease of phase dispersion in the different portions of the column. In such cases, the most easily dispersed portion of the column system may be susceptible to emulsion-induced instability at the pulsing conditions required to produce reasonably good performance in less easily dispersed portions.

Emulsion-induced instability effects sometimes do not arise immediately upon establishment of operating conditions susceptible to their occurrence. At borderline conditions, the column may operate stably for hours until an accumulation of emulsifying impurities, abrupt changes in interface position, or flow rate fluctuations catalyze the development of instability. The instability usually takes the form of large globs (approximately 1 to 2 inches in diameter) of coalesced dispersed phase, which channel through the tightly "packed" emulsion in the unstable region. In extreme cases, cyclic local phase inversion, or even complete flooding, may result. In any case, extraction efficiency is likely to be reduced as a result of coalescence and channeling of the dispersed phase.

6.2.7.4 Pulse Transmission

The effectiveness of the pulse in creating the desired phase dispersion is dependent upon a reasonably undistorted transmission of the pulsing movement from the pulse generator to the liquid contents of the column. Distortion of the pressure wave produced by the pulser could occur in a number of ways. It may reduce the effective pulse amplitude in the column, impairing the column's extraction effectiveness, or it may increase the amplitude so the column will flood at throughputs and frequencies lower than those of the normal flooding thresholds.

Air trapped in the pulse transmission pipeline may cause serious pulse distortion. In limited pilot plant studies, pulse amplitude gains of up to 50% and amplitude losses of up to 80% have been caused by trapped air. Whether the amplitude is reduced or increased depends on the frequency and hydraulic characteristics of the system. To prevent the accumulation of air, the Purex Plant pulse transmission lines are designed without any intermediate high points at which air might be trapped. Any air that might find its way to the pulser piston located at the top of the transmission line normally escapes through the clearance around the piston rings and through a special 3/32-inch-diameter bleed hole through the piston.

Another possible cause of pulse distortion is cavitation in the pulse transmission line. Cavitation occurs when the pressure at some point in the pulse transmission line becomes less than the vapor pressure of the liquid with the subsequent formation of vapor bubbles in the line. Cavitation is accompanied by shock pressures, as the vapor bubbles collapse, which may be damaging to mechanical elements in the system. To avoid cavitation, the minimum pressure (algebraic sum of the hydrostatic, atmospheric, and acceleration pressure) in a pulse system must at all times exceed the vapor pressure of the pulsed liquid. This requirement determines the minimum pulse leg diameter and maximum pulse leg height, since the minimum pressure decreases with decreased diameter of increased height.

The minimum pressure at the pulse generator is reached when the pulse flow changes from positive to negative (pressure reaches a high negative value). The minimum value of the acceleration pressure is given by the following equation (Ref. 167):

$$P_{min} = \frac{-8\pi k \ell \rho w^2}{D^2 g} \qquad (6.72)$$

where, with consistent units,

P_{min} = minimum acceleration pressure

k = half-cycle pulse volume

ℓ = length of pulse leg

ρ = liquid density

w = pulse frequency

D = diameter of pulse leg

g = acceleration of gravity

6.3 REFERENCES

1. Pollock, H., "Investigations of the Chemical and Physical Properties of TBP," Bi-Weekly Report 2, Program 22, Study 8512, TNX Semiworks, Savannah River Laboratory, Aiken, South Carolina, July 19, 1953.

2. Chandler, J. M., and D. O. Darby, "Terminal Report for the ORNL Pilot Plant Investigation of the Purex Flowsheet," ORNL-1519, Oak Ridge National Laboratory, Oak Ridge, Tennessee, February 5, 1954.

3. Beary, M. M. "Solvent Improvement Resulting From the Use of NPH in the Hanford Purex Plant," ARH-SA-73, Atlantic Richfield Hanford Company, Richland, Washington, June 12, 1970.

4. Woodfield, F. W., "Progress Report, Chemical Development, August 1952," HW-25635, SECRET, General Electric Company, Richland, Washington, August 31, 1952.

5. Schulz, W. W., "Macroreticular Ion Exchange Resin Cleanup of Purex Process TBP Solvent," ARH-SA-58, Atlantic Richfield Hanford Company, Richland, Washington, August 1, 1970.

6. Richardson, G. L., "Purex Solvent Washing with Basic Potassium Permanganate," HW-50379, General Electric Company, Richland, Washington, May 29, 1957.

7. Palmer, M. E., "Essential Materials Manual," RHO-MA-132, Rockwell Hanford Operations, Richland, Washington, May 1978.

8. Wagner, R. M., and C. M. Slansky, "Evaporation of Process Streams in the Tributyl Phosphate Process for Uranium Recovery," HW-15172, General Electric Company, Richland, Washington, November 11, 1949.

9. Hill, O. F., and F. J. Leitz, "Progress Report for August, 1950, Chemical Research Section," HW-18880, SECRET, General Electric Company, Richland, Washington, September 19, 1950.

10. Wagner, R. M., "The Hydrolysis Products of TBP and Their Effects on the TBP Process for Uranium Recovery," HW-19959, General Electric Company, Richland, Washington, July 31, 1951.

11. Kennedy, J., and S. S. Grimley, "Radiometric Studies with Phosphorous-32 Labeled Tri-n-Butyl Phosphate: Part I, Solubility and Distribution Studies," AERE-CE/R-1283, United Kingdom Atomic Energy Authority, Harwell, United Kingdom, December 1, 1953.

12. Burger, L. L., and R. C. Forsman, "Solubility of TBP in Aqueous Solution," HW-20936, General Electric Company, Richland, Washington, April 2, 1951.

13. Wagner, R. M., and L. Towle, "Radiation Stability of Organic Liquids, Semiannual Report No. 2 for July 1 to December 20, 1957," AECU-4052, Division of Technical Information Extension, Oak Ridge, Tennessee.

14. Reilly, V. J., "The Hydrolysis of Tributyl Phosphate and Its Effect on the Purex Process," ORNL-1138, Oak Ridge National Laboratory, Oak Ridge, Tennessee, November 14, 1951.

15. Kennedy, J., and S. S. Grimley, "Radiometric Studies with Phosphorous-32 Labeled Tri-n-Butyl Phosphate: Part 2, Acid-Alkali Hydrolysis," AERE-CE/R-1284, United Kingdom Atomic Energy Authority, Harwell, United Kingdom, December 18, 1953.

16. Kennedy, J., and S. S. Grimley, "Tri-n-Butyl Phosphate Studies," AERE-CE/R-968, Parts I, II, and III, United Kingdom Atomic Energy Authority, Harwell, United Kindgom, October 6, 1952.

17. Gresky, A. T., et al., "Progress Report, September 30, 1952, Laboratory Development of the Thorex Process," ORNL-1431, Oak Ridge National Laboratory, Oak Ridge, Tennessee, April 6, 1953.

18. Brite, D. W., "The Determination of Dibutylphosphate," Revision, HW-30643, General Electric Company, Richland, Washington, October 15, 1954.

19. Reas, W. H., "Quarterly Progress Report, Chemistry Unit, July, August, and September 1954," HW-33496, SECRET, General Electric Company, Richland, Washington, December 13, 1954.

20. Eister, W. K., "Quarterly Progress Report for Period Ending May 31, 1950, Chemical Technology Division," ORNL-763, CONFIDENTIAL, Oak Ridge National Laboratory, Oak Ridge, Tennessee, July 26, 1950.

21. Kosolapoff, G. M., Organophosphorous Compounds, John Wiley and Sons, Inc., New York, New York, 1950.

22. Author Unknown, "Uranium Recovery Technical Manual," HW-19140, DEL, General Electric Company, Richland, Washington, pp. 1100-1117, November 10, 1951.

23. Woodfield, F. W., "Progress Report, Chemical Development, June 1951," HW-21685, CONFIDENTIAL, General Electric Company, Richland, Washington, July 18, 1951.

24. Author Unknown, "Report of the Chemistry and Chemical Engineering Section for May, June, July 1953," KAPL-959, SECRET, Knolls Atomic Power Laboratory, Schenectady, New York, September 25, 1953.

25. Nichols, G. M., and T. H. Siddall, "Laboratory Investigations of Exothermic Reactions of Organic-Aqueous Mixtures Encountered in the Purex Process," Bi-Weekly Report 4, Program 15, Study 8517, TNX Semiworks, Savannah River Laboratory, Aiken, South Carolina, June 23, 1953.

26. Colven, T. J., Jr., G. M. Nichols, and T. H. Siddall, "Interim Technical Report, TNX Evaporator Incident, January 12, 1953," DP-25, Savannah River Laboratory, Aiken, South Carolina, May 15, 1953.

27. Bushey, A. H., "Quarterly Report, Chemistry Unit, January, February, and March, 1954," HW-31630, CONFIDENTIAL, General Electric Company, Richland, Washington, May 1, 1954.

28. Burger, L. L., "Partition of Dibutyl Phosphate," HW-33682, General Electric Company, Richland, Washington, November 8, 1954.

29. Moore, R. L., "The Solubility of Plutonium (IV) Monobutyl Phosphate," HW-18188, General Electric Company, Richland, Washington, June 28, 1950.

30. Morgan, W. W., W. G. Mathers, and R. G. Hart, "Processing of Irradiated Reactor Fuels," Industrial and Engineering Chemistry, 51, 7, July 1959, p. 817.

31. Flagg, F. J., "Report of Visit to the Atomic Energy Research Establishment, Harwell, England," TID-5110, United States Department of Energy, Technical Information Service, Oak Ridge, Tennessee, March 1953.

32. Woodfield, F. W., "Progress Report, Chemical Development Unit, May, 1952," HW-24641, SECRET, General Electric Company, Richland, Washington, May 31, 1952.

33. Moore, R. H., "Chemical Stability of Purex and Uranium Recovery Process Solvent," HW-34501, General Electric Company, Richland, Washington, February 2, 1955.

34. Author Unknown, "Minutes of Symposium: Nitric Acid - Organic Material Reactions," ANL-5128, Argonne National Laboratory, Argonne, Illinois, June 11, 1953.

35. Burger, L. L., "Comparison of Diluents for Tributyl Phosphate," HW-19065, General Electric Company, Richland, Washington, October 6, 1950.

36. Petretic, G. C., A. R. Eberle, and R. Beaumont, "The Densities of Tributyl Phosphate-Kerosene-Uranium-Nitric Acid Solutions from 30-70°C," NYO-2017, New Brunswick Laboratory, New Brunswick, New Jersey, May 4, 1951.

37. Thompson, W. E., "Quarterly Progress Report for Period Ending October 1, 1952, Homogeneous Reactor Project," ORNL-1424, Oak Ridge National Laboratory, Oak Ridge, Tennessee, January 10, 1953.

38. Thompson, W. E., "Quarterly Progress Report for Period Ending January 1, 1953, Homogeneous Reactor Project," ORNL-1478, Oak Ridge National Laboratory, Oak Ridge, Tennessee, March 3, 1953.

39. Cathers, G. I., "Radiation Effects in Chemical Processing," CF-53-91-196, SECRET, Oak Ridge National Laboratory, Oak Ridge, Tennessee, September 24, 1953.

40. Becker, B., and F. Bumgartner, "Understanding of Complexing Radiolytic Products of the Purex System (20 Percent TBP-dodecane-HNO_3)," AED-CONF-75-404-016, Kernforschungszentrum, Karlsruhe, F. R., Germany, 1975.

41. KAPL Staff, "Progress Report for November and December 1950, January 1951, Separations Processes," KAPL-461, SECRET, Knolls Atomic Power Laboratory, Schenectady, New York, March 19, 1951.

42. Chandler, J. M., et al., "ORNL Purex Pilot Plant Data Manual," CF-52-2-189, SECRET, Oak Ridge National Laboratory, Oak Ridge, Tennessee, March 10, 1952.

43. Rodden, C. J. "Quarterly Progress Report for the Period Ending December 1951," NYO-2024, New Brunswick Laboratory, New Brunswick, New Jersey, May 1952.

44. Dreeben, A., "Determination of the Specific Heats of Some Purex Solvents and Diluents," KAPL-834, Knolls Atomic Power Laboratory, Schenectady, New York, October 18, 1952.

45. Mulliken, R. S., and J. A. Lane, Project Handbook, Chapter II, "Physical and Chemical Properties," CL-697, Clinton Laboratories, Oak Ridge, Tennessee, May 1945.

46. Seidell, A., Solubilities of Inorganic and Metal Organic Compounds, 3rd Edition, Vol. I, Van Nostrand Co., Inc., New York, New York, 1948, p. 519.

47. Reilly, V. J., "ORNL Quarterly Report on Denitration of Uranyl Nitrate for Period August 10 to November 10, 1951," CF-51-11-66, Oak Ridge National Laboratory, Oak Ridge, Tennessee, November 13, 1951.

48. Harmon, M. K., "Freezing Point Data for UNH-H_2O-HNO_3 Systems," HW-8309, General Electric Company, Richland, Washington, December 17, 1947.

49. Clagett, F., "Chemical and Physical Properties vs. Degree of Concentration of Uranyl Nitrate - Nitric Acid, etc.," HW-18406, SECRET, General Electric Company, Richland, Washington, July 24, 1950.

50. Maness, R. F., and F. Clagett, "Laboratory Conversion of UNH to UO_3," HW-19932, General Electric Company, Richland, Washington, January 10, 1951.

51. Eister, W. K., "Progress Report for Month of April 1950, Chemical Technology Division," ORNL-721, SECRET, Oak Ridge National Laboratory, Oak Ridge, Tennessee, June 27, 1950.

52. Marshall, W. L., and J. S. Gill, "The Uranyl Nitrate - Water System Above 60°C," ORNL-797, Oak Ridge National Laboratory, Oak Ridge, Tennessee, September 18, 1950.

53. Hart, R. G., "The Crystallization Temperatures of Uranyl Nitrate-Nitric Acid Solutions," PDB-116, Atomic Energy of Canada, Ltd., National Research Council of Canada, Chalk River, Ontario, March 10, 1954.

54. Burger, L. L., et al., "Properties of the System: $UO_2(NO_3)_2$-$Al(NO_3)_3$-HNO_3 (or NaOH-H_2O-Hexone), Part II: Density, Apparent Molar Volume, and Viscosity," HW-11276, General Electric Company, Richland, Washington, March 22, 1949.

55. Author unknown, "Redox Technical Handbook," HDC-826, CONFIDENTIAL, General Electric Company, Richland, Washington, December 1948.

56. Dodge, E., and A. E. Ruehle, "$UO_2(NO_3)_2$-HNO_3-H_2O Boiling Point Diagram," NYO-5161, Mallinckrodt Chemical Works, St. Louis, Missouri, January 1946.

57. Woodfield, F. W., "Progress Report, Chemical Development Subsection, January 1955," HW-34832, SECRET, General Electric Company, Richland, Washington, January 31, 1955.

58. Cunningham, B. S., "July Meeting with Dr. C. A. Thomas on Final Purification and Metallurgy of '49'," CK-1968, University of Chicago, Chicago, Illinois, August 7, 1944, pp. 31, 34.

59. Katzin, L. I., "Survey of the Chemistry of Plutonium," CK-2240, University of Chicago Metallurgical Laboratory, Chicago, Illinois, October 1, 1945, p. 25.

60. Asprey, L. B., et al., "Report for Month Ending June 1, 1944, Chemical Research: Basic Chemistry of Plutonium," CN-1702, University of Chicago, Chicago, Illinois, June 26, 1944, p. 28.

61. Stoller, S. M., and R. B. Richards, Editors, Reactor Handbook, Volume II, Fuel Reprocessing, Second Edition, Interscience Publishers, Incorporated, New York City, New York, 1961.

62. Connick, R. E., "Oxidation States, Potentials, Equilibria and Oxidation-Reduction Reactions of Plutonium," CC-3869, University of Chicago, Chicago, Illinois, May 5, 1948.

63. Hindman, J. P., "Ionic and Molecular Species in Solution, Section 4.1," CN-3819, University of Chicago, Chicago, Illinois, May 19, 1947.

64. Alter, H. W., and E. L. Zebroski, "A Survey of Developments in Plutonium Process Chemistry for 1948-1949," KAPL-314, Knolls Atomic Power Laboratory, Schenectady, New York, March 17, 1950.

65. Reilly, V. J., "Hydroxylamine and Nitrous Acid Behavior in the Second Plutonium Cycle," CF-53-3-132, Oak Ridge National Laboratory, Oak Ridge, Tennessee, March 17, 1953.

66. Wilson, A. S., and J. L. Swanson, "A Continuous Process for the Oxidation of the Purex 1BP Stream," HW-23301, General Electric Company, Richland, Washington, January 17, 1952.

67. Thomas, J. R., "The Chelate Process I," CN-3733, University of Chicago, Chicago, Illinois, March 3, 1947.

68. Zebroski, E. L., and W. O. Haas, "The Purex Process at Knolls Atomic Power Laboratory," Reactor Science and Technology, Volume 4, No. 1, TID-2012, SECRET, United States Department of Energy Technical Information Service, Oak Ridge, Tennessee, March 1954, pp. 37-64.

69. Gresky, A. T., and N. T. Rigstad, "Summary Report of the ORNL Pilot Plant Program for the Recovery of Plutonium from Chalk River and Hanford Fuel Rods," ORNL-880, SECRET, Oak Ridge National Laboratory, Oak Ridge, Tennessee, March 21, 1951.

70. Kraus, K. A., "Depolymerization of Polymeric Pu(IV) Solutions in Nitric Acid," CN-3399, University of Chicago, Chicago, Illinois, June 30, 1945.

71. Kraus, K. A. "Oxidation - Reduction Potentials of Plutonium Couples as a Function of pH," CN-2830, University of Chicago, Chicago, Illinois, January 1, 1947.

72. Mullins, L. J., and W. C. Hazen, "Quarterly Progress Report, July 1, 1950: Recovery of Plutonium from Slag and Crucibles," GEH-17923, General Electric Company, Richland, Washington, October 30, 1950.

73. Clagett, F., "The Preparation of Ferrous Sulfamate," HW-13697, General Electric Company, Richland, Washington, June 10, 1949.

74. Monk, R. G., "Sulphamic Acid and Its Salts," CEI-2, National Research Council of Canada, Chalk River, Ontario, October 1948.

75. Zebroski, E. L., and R. C. Feber, "Sulfamic Acid in the Redox Process," KAPL-89, Knolls Atomic Power Laboratory, Schenectady, New York, July 15, 1948.

76. Cupery, M. E., "Sulfamic Acid, A New Industrial Chemical," Industrial and Engineering Chemistry, 30, 627, 1938.

77. Marsden, J., "Monthly Report - Redox - March 1948," INDC-806, General Electric Company, Richland, Washington, April 7, 1948.

78. Flagg, J. F., et al., "Monthly Report - Redox - October," GEH-11551, General Electric Company, Richland, Washington, November 10, 1947, p. 16.

79. Tegge, B. R., "The Performance of Solvent Extraction Equipment," Pennsylvania State College Thesis, August 1942, p. 97.

80. Getman, F. H., and F. Daniels, Outlines of Physical Chemistry, 7th Edition, John Wiley and Sons, Inc., New York, New York, 1946, p. 163.

81. Moore, R. H., and J. E. Mendel, "The Vibrational Method for Measuring Dispersion and Disengaging Time and Its Application to the Study of Emulsion Problems," HW-27807, General Electric Company, Richland, Washington, April 21, 1953.

82. Bushey, A. H., "Quarterly Progress Report, Chemistry Unit, January, February, and March 1953," HW-27727, SECRET, General Electric Company, Richland, Washington, April 30, 1953.

83. Caverly, M. R., "Determination of Interfacial Tension of Various Purex Solutions," Bi-Weekly Report 3, Program 7, Study 8513, TNX Semiworks, Savannah River Laboratory, Aiken, South Carolina, July 29, 1953.

84. Fox, H. W., and W. A. Zisman, "The Spreading of Liquids on Low Energy Surfaces, I, Polytetrafluoroethylene," Journal of Colloid Science 5, 514, 1950.

85. Shulman, F., and W. A. Zisman, "Surface Chemical Properties of Solids Coated with a Monolayer of Perfluorodecanoic Acid," Journal of the American Chemical Society, 74, 2123, 1952.

86. Clagett, F., "Contact Angles on Fenske Extractor and Disengaging Time Studies of Recuplex Solutions," HW-23011, General Electric Company, Richland, Washington, November 21, 1951.

87. McKay, H. A. C., and G. R. Best, "The Extraction of Plutonium by Tributyl Phosphate," AERE-C/R-1116, Part II, SECRET, United Kingdom Atomic Energy Authority, Harwell, United Kingdom, 1953.

88. Hill, O. F., "Quarterly Report, April through June, 1952, Chemical Research Section," HW-25166, SECRET, General Electric Company, Richland, Washington, July 28, 1952.

89. Flanary, J. R., et al., "Progress Report, May through July 1952, Purex Process Laboratory Development," ORNL-1481, CONFIDENTIAL, Oak Ridge National Laboratory, Oak Ridge, Tennessee, April 20, 1953.

90. Hill, O. F., and F. J. Leitz, "Quarterly Report, October through December 1951, Chemical Research Section," HW-23160, SECRET, General Electric Company, Richland, Washington, January 15, 1952.

91. Codding, J. W., W. O. Haas, and F. K. Henmann, "Equilibrium Data for Purex Systems," KAPL-602, Knolls Atomic Power Laboratory, Schenectady, New York, November 26, 1951.

92. Burris, Leslie, and R. C. Vogel, "TBP Solvent Extraction Process for Recovery and Decontamination of Uranium-235 Fuel Discharged from Experimental Breeder Reactor," ANL-4530, Argonne National Laboratory, Argonne, Illinois, September 15, 1950.

93. Granquist, D. P., and E. T. Merrill, "Uranium Phase Equilibria in the TBP Process," HW-17747, General Electric Company, Richland, Washington, March 1, 1951.

94. KAPL Staff, "Program Report, February, March, April, 1951, Separations Processes," KAPL-523, SECRET, Knolls Atomic Power Laboratory, Schenectady, New York, (Undated).

95. KAPL Staff, "Report of the Chemistry and Chemical Engineering Section for November, December, 1952 and January, 1953," KAPL-858, SECRET, Knolls Atomic Power Laboratory, Schenectady, New York, March 24, 1953.

96. KAPL Staff, "Report of the Chemistry and Chemical Engineering Section for August, September, and October 1952," KAPL-826, SECRET, Knolls Atomic Power Laboratory, Schenectady, New York, October 1952.

97. Bartlett, T. W., "Some Factors Influencing the Use of Tributyl Phosphate for the Extraction of Uranium in Analysis," K-706, Carbide & Carbon Chemical Company, K-25 Plant, Oak Ridge, Tennessee, February 27, 1951.

98. Ferguson, D. E., and T. C. Runion, "Tributyl Phosphate Solvent Extraction of Uranium from Metal Waste - Laboratory Investigation," ORNL-260, CONFIDENTIAL, Oak Ridge National Laboratory, Oak Ridge, Tennessee, October 7, 1949.

99. Moore, R. L., "The Extraction of Uranium in the Tributyl Phosphate Metal Recovery Process," HW-15230, General Electric Company, Richland, Washington, September 1, 1949.

100. Shevchenko, V. B. and I. A. Federov, "The Effect of Temperature on the Extraction of Uranyl, Plutonium, Ruthenium, and Zirconium Nitrates with Tributylphosphate," Radiokhimiya, Volume II, No. 1, 1960, pp. 6-12.

101. Rozen, A. M., et. al., "Effect of Temperature on Extraction with Tributylphosphate," Radiokhimiya, Volume IV, No. 5, 1962, pp. 591-600.

102. Burger, L. L., and L. H. Clark, "The Valve-Actuated Pulse Column II, A Study of Temperature Effect and Design Variables," HW-26459, General Electric Company, Richland, Washington, February 16, 1953.

103. Tomlinson, R. E., and F. W. Woodfield, "Purex Chemical Flowsheet HW 2," HW-27277, SECRET, General Electric Company, Richland, Washington, February 25, 1953.

104. Seaborg, G. T., J. J. Katz, and W. M. Manning, "The Transuranium Elements," NNES Division IV, Plutonium Project Record, Volume 14B, McGraw Book Co., Inc., New York, New York, 1949, p. 478.

105. McKay, H. A. C., and P. R. Woodgate, "The Extraction of Plutonium by Tributyl Phosphate," AERE-C/R-994, Part I, CONFIDENTIAL, United Kingdom Atomic Energy Authority, Harwell, United Kingdom, November 24, 1952.

106. Runion, T. C., and C. V. Ellison, "TBP Process for Uranium Recovery from Metal Waste, Laboratory Summary," ORNL-557, Oak Ridge National Laboratory, Oak Ridge, Tennessee, January 18, 1950.

107. Flanary, J. R., "The Purex Process at Oak Ridge National Laboratory," Reactor Science and Technology, Volume 4, No. 1, TID-2012, SECRET, United States Atomic Energy Commission, Technical Information Service, Oak Ridge, Tennessee, March 1954, pp. 9-26.

108. Hill, O. F., "Quarterly Report, October through December, 1952, Chemical Research Section," HW-26937, CONFIDENTIAL, General Electric Company, Richland, Washington, January 26, 1953.

109. Hill, O. F., and F. J. Leitz, "Quarterly Report, July through September 1951, Chemical Research Section," HW-22138, SECRET, General Electric Company, Richland, Washington, October 1, 1951.

110. Turgon, J. C., and A. M. Aikin, "Tributyl Phosphate Process XIV, The Extraction of Plutonium IV by TBP," CEI-37, CONFIDENTIAL, National Research Council of Canada, Chalk River, Ontario, March 17, 1952.

111. Eister, W. K. "Progress Report for Month Ending December 31, 1949, Technical Division," ORNL-580, Oak Ridge National Laboratory, Oak Ridge, Tennessee, February 9, 1950.

112. Eister, W. K., "Progress Report for Month Ending March 1950, Chemical Technology Division," ORNL-708, Oak Ridge National Laboratory, Oak Ridge, Tennessee, June 19, 1950.

113. Eister, W. K., "Quarterly Progress Report for Period Ending May 20, 1951, Chemical Technology Division," ORNL-1061, SECRET, Oak Ridge National Laboratory, Oak Ridge, Tennessee, September 24, 1951.

114. Albaugh, F. W., "Progress Report for March, 1950, Chemical Research Section," HW-17542, SECRET, General Electric Company, Richland, Washington, April 17, 1950.

115. KAPL Staff, "Report of the Chemistry and Chemical Engineering Section for August, September, and October 1953," KAPL-1002, SECRET, Knolls Atomic Power Laboratory, Schenectady, New York, January 11, 1954.

116. Hill, O. F., et al., "Quarterly Report, January through March 1951, Chemical Research Section," HW-20863, SECRET, General Electric Company, Richland, Washington, April 16, 1951.

117. Lanham, W. B., and A. T. Gresky, "Purex Process Laboratory Development," ORNL-717, SECRET, Oak Ridge National Laboratory, Oak Ridge, Tennessee, June 15, 1950.

118. Eister, W. K., "Progress Report for Period Ending August 20, 1951, Chemical Technology Division," ORNL-1141, SECRET, Oak Ridge National Laboratory, Oak Ridge, Tennessee, March 26, 1952.

119. McKay, H. A. C., W. H. Hardwick, and F. C. Bedford, "The Extraction of Zirconium by Tributyl Phosphate," AERE-C/R-923, United Kingdom Atomic Energy Authority, Harwell, United Kingdom, 1952.

120. Powell, A. R., F. M. Lever, and N. R. W. Benwell, "Chemistry of of Ruthenium in Nitric Acid Solutions," AERE-X/R-1226, United Kingdom Atomic Energy Authority, Harwell, United Kingdom, October 1953.

121. Baxman, H., E. Turk, and L. Deutsch, "Minutes on Conference on the Chemistry of Ruthenium: December 13 and 14, 1948," ANL-4265, Argonne National Laboratory, Argonne, Illinois, December 16, 1948.

122. Bushey, A. H., "Quarterly Progress Report, Chemistry Unit, October, November, and December 1953," HW-30635, SECRET, General Electric Company, Richland, Washington, February 1, 1954.

123. Hardwick, W. H., F. Bedford, and G. M. Gillies, "The Effect of Uranium Concentration on the Extraction of Zirconium and Plutonium by Tributyl Phosphate," AERE-C/M-122, United Kingdom Atomic Energy Authority, Harwell, United Kingdom, (Undated).

124. McVey, W. H., "Zirconium Chemistry - The Nitrate and Thenoyl Trifluoracetone Complexes and the Hydrolytic Species," HW-21487, General Electric Company, Richland Washington, June 29, 1951.

125. ORNL Staff, "Quarterly Progress Report for Period Ending November 20, 1952, Chemical Technology Division," ORNL-1448, Oak Ridge National Laboratory, Oak Ridge, Tennessee, February 11, 1953.

126. Flanary, J. R., et al., "Progress Report, August 1952 through January 1953, Purex Process Laboratory Development," ORNL-1548, Oak Ridge National Laboratory, Oak Ridge, Tennessee, July 30, 1953.

127. Eister, W. K., "Quarterly Progress Report for Period Ending November 20, 1950, Chemical Technology Division," ORNL-936, Oak Ridge National Laboratory, Oak Ridge, Tennessee, January 31, 1951,

128. Rodden, C. J., "Progress Report for the Period Ending June 30, 1951," NYO-2021, New Brunswick Laboratory, New Brunswick, New Jersey, (Undated).

129. Dawson, J. K., R. Elliott, and H. A. C. McKay, "The Extraction of Neptunium by Tributyl Phosphate," AERE-C/R-1117, United Kingdom Atomic Energy Authority, Harwell, United Kingdom, February 15, 1953.

130. Blackmore, R. H., A. E. Bearse, and G. D. Calkins, "Final Report on Distribution of Rare-Earth Tracers Between Aqueous and Tributyl Phosphate - Diluent Phases," BMI-261, Battelle Memorial Institute, Columbus, Ohio, June 20, 1952.

131. Manning, W. M., "ANL Summary Report for October, November, and December 1950," ANL-4593, Section C-1, Chemistry Division, Argonne National Laboratory, Argonne, Illinois, February 1, 1951.

132. Adams, W. H., et al., "Effect of Solvent Saturation on Decontamination in the Purex HA Extraction-Scrub System," HW-33053, SECRET, General Electric Company, Richland, Washington, September 14, 1954.

133. Hill, O. F., et al., "Progress Report for October 1950, Chemical Research Section," HW-19503, General Electric Company, Richland, Washington, November 17, 1950.

134. KAPL Staff, "Report of the Chemistry and Chemical Engineering Section for November and December 1953, and January 1954," KAPL-1069, Knolls Atomic Power Laboratory, Schenectady, New York, January 1954.

135. Groot, C., and H. H. Hopkins, Jr., "The Recuplex Process," HW-23344, SECRET, General Electric Company, Richland, Washington, October 15, 1952.

136. Gresky, A. T., et al., "Progress Report on Laboratory Development of the Thorex Process," ORNL-1367, SECRET, Oak Ridge National Laboratory, Oak Ridge, Tennessee, January 2, 1953.

137. Aikin, A. M., and R. M. Dinzey, "Tributyl Phosphate Process III," CEI-22, National Research Council of Canada, Chalk River, Ontario, December 31, 1950.

138. Ewing, R. A., et al., "Final Report on Purification of Thorium Nitrate by Solvent Extraction with Tributyl Phosphate: Laboratory Investigations," BMI-262, Battelle Memorial Institute, Columbus, Ohio, July 31, 1952.

139. Swartout, J. A., "Quarterly Progress Report for Period Ending June 30, 1950, Chemistry Division," ORNL-795, Oak Ridge National Laboratory, Oak Ridge, Tennessee, October 3, 1950.

140. Smith, R. E., "Purex Chemical Flowsheet HW 3," HW-31373, SECRET, General Electric Company, Richland, Washington, April 6, 1954.

141. Adams, W. H., et al., "Path of UX in Purex Process," HW-33296, SECRET, General Electric Company, Richland, Washington, October 1954.

142. Whatley, M. E., et al., "Purification of Thorium by Solvent Extraction," ISC-415, Iowa State University of Science and Technology, Ames, Iowa, July 1953.

143. KAPL Staff, "Report of Chemical and Chemical Engineering Section for February, March and April, 1952," KAPL-747, SECRET, Knolls Atomic Power Laboratory, Schenectady, New York.

144. Osborne, D. W., editor, "ANL Summary Report for April, May, and June, 1950," ANL-4490, SECRET, Section C-1, Chemistry Division, Argonne National Laboratory, Argonne, Illinois, July 27, 1950.

145. Rainey, R. H., "Development of the Amex Process for Americium Recovery," ORNL-1697, Oak Ridge National Laboratory, Oak Ridge, Tennessee, May 21, 1954.

146. Hopkins, H. H., et al., "Preliminary Metal Ion Distribution Studies in Redox and Uranium Recovery Process Systems," HW-25911, General Electric Company, Richland, Washington, October 13, 1952.

147. Waind, G. M., et al., "The Effect of Diluents on the Solvent Extraction of Nitrates," AERE-C/R-773, United Kingdom Atomic Energy Authority, Harwell, United Kingdom, March 11, 1952.

148. Srinivasan, N., et al., "Process Chemistry of Neptunium, Part I," BARC-428, Bhabha Atomic Research Center, Bombay, India, 1969.

149. Coplan, B. V., J. K. Davidson, and E. L. Zebroski, "The 'Pump-mix' Mixer Settler -- A New Liquid-Liquid Extractor," Chemical Engineering Progress, 50, 1954, pp. 403-408.

150. Van Dijck, W. J. D., United States Patent 2,001,186, August 13, 1935.

151. Figg, W. S., and J. G. Bradley, "Scouting Studies in a 5.05-Inch-Diameter Redox Pulse Column," HW-19023, General Electric Company, Richland, Washington, January 15, 1951.

152. Jeppson, D. W., "Purex Flowsheet for Reprocessing N Reactor Fuels," ARH-F-103, Atlantic Richfield Hanford Company, Richland, Washington, November 24, 1976.

153. Colburn, A. P., "Simplified Calculation of Diffusional Processes," Industrial Engineering Chemistry, 33, 1941, pp. 459-467.

154. Perry, John H., editor, Chemical Engineers' Handbook, 3rd Edition, McGraw-Hill Book Company, Incorporated, New York, New York, 1950, pp. 742-746.

155. Gronier, W. S., "Calculation of the Transient Behavior of a Dilute Purex Solvent Extraction Process Having Application to the Reprocessing of LMFBR Fuels," ORNL-4746, Oak Ridge National Laboratory, Oak Ridge, Tennessee, April 1972.

156. Richardson, G. L., "The Effect of High Solvent Radiation Exposures on TBP Processing of Spent LMFBR Fuels," HEDL-TME 73-51, Hanford Engineering Development Laboratory, Richland, Washington, June 1973.

157. Richardson, G. L., and J. L. Swanson, "Plutonium Partitioning in the Purex Process with Hydrazine-Stabilized Hydroxylamine Nitrate," HEDL-TME 75-31, Hanford Engineering Development Laboratory, Richland, Washington, June 1975.

158. Swift, W. H., "Limiting Flow Capacity in Solvent Extraction Pulse Columns; Part I: The Effect of Pulse and Cartridge Variables," HW-33953, General Electric Company, Richland, Washington, November 30, 1954.

159. Nicholson, G. A., "Purex Pulse Column Studies with Hydrocarbon Diluent," HW-40550, General Electric Company, Richland, Washington, July 24, 1956.

160. Author Unknown, "Purex Technical Manual," HW-31000, Declassified, General Electric Company, Richland, Washington, March 25, 1955.

161. Hesson, G. M., G. A. Nicholson, and R. G. Geier, "Organic Continuous Pulse Column Cartridge for Purex A-Type Columns," HW-49181, General Electric Company, Richland, Washington, March 22, 1957.

162. Jansen, G., and G. L. Richardson, "Purex Pulse Column Studies - 1960," HW-68846, General Electric Company, Richland, Washington, February 22, 1961.

163. Richardson, G. L., "Purex 2D and 2E Column Studies - 1962," HW-73452, General Electric Company, Richland, Washington, April 23, 1962.

164. Richardson, G. L., "Pilot Plant Studies: Uranium (IV) Behavior in the Purex 1BX Column; 1BX Cartridge Development," BNWL-CC-2470, Pacific Northwest Laboratory, Richland, Washington, April 16, 1970.

165. Kaser, J. D., "Analysis of Air Pulser Performance for Pulsed Extraction Columns," BNWL-B-51, Pacific Northwest Laboratory, Richland, Washington, February, 1971.

166. KAPL Staff, Pilot Plant Progress Reports, Knolls Atomic Power Laboratory, General Electric Company, Schenectady, New York. Document numbers and report periods as follows:

a) KAPL-708, November 1951 - January 1952
b) KAPL-738, February - April 1952
c) KAPL-785, May - July 1952
d) KAPL-809, August - October 1952
e) KAPL-860, November 1952 - January 1953
f) KAPL-913, February - June 1953

167. Cooper, V. R., and C. Groot, "Design Calculations for a Pulse Column System, March 9, 1950," Solvent Extraction Equipment Evaluation Study, Part 1, BNWL-2186, Appendix A, Pacific Northwest Laboratory, Richland, Washington, January 1977.

CONTENTS

CHAPTER 7.0 - URANIUM AND PLUTONIUM SOLUTIONS' CONCENTRATION TECHNOLOGY

Page

7.1 CONCENTRATION OF URANIUM SOLUTIONS....7-1
- 7.1.1 Properties and Compositions of Solutions....7-1
- 7.1.2 Steam Stripping....7-5
- 7.1.3 De-entrainment....7-8

7.2 CONCENTRATION OF PLUTONIUM SOLUTIONS
- 7.2.1 Properties of Plutonium Nitrate Solutions....7-9
- 7.2.2 Composition of Plutonium Nitrate Solutions and Condensate....7-12
- 7.2.3 Steam Stripping....7-15
- 7.2.4 Plutonium (IV) Polymer....7-15
- 7.2.5 Criticality Prevention....7-19

7.3 REFERENCES....7-20

FIGURES:
- 7-1 Typical TBP Steam Stripping Operating Diagram, TBP-Water System, HW #3 Flowsheet Conditions....7-6
- 7-2 Boiling Temperatures for Plutonium Nitrate-Nitric Acid Solutions....7-10
- 7-3 Equilibrium Diagram for the Plutonium Nitrate-Nitric Acid-Water System....7-11
- 7-4 Plutonium Polymerization Curves For Dilute Solutions....7-17
- 7-5 Plutonium Polymerization Curves For Concentrated Solutions....7-18

TABLES:
- 7-1 Typical Uranium Concentrator Stream Data....7-2
- 7-2 Uranium Nitrate Product Specifications....7-3
- 7-3 Concentrator Entrainment as a Function of Throughput Rate....7-9
- 7-4 Plutonium Nitrate Quality Specifications....7-13
- 7-5 Metallic Impurities in Purex Plutonium Product....7-14
- 7-6 Geometrically Favorable Vessels in Second and Third Plutonium Cycles....7-19

THIS PAGE INTENTIONALLY
LEFT BLANK

CHAPTER 7.0 - URANIUM AND PLUTONIUM SOLUTIONS' CONCENTRATION TECHNOLOGY

The following four streams containing uranium and plutonium are concentrated by evaporation in preparation for subsequent processing:

- The uranium product leaving the solvent extraction battery
- The plutonium product leaving the solvent extraction battery
- The uranium stream leaving the 1C column
- The backcycle stream, which is an accumulation of extraction column waste streams, and contains uranium, plutonium, and neptunium.

Any solvent entrained or dissolved in the concentrator feeds is removed with the distillate to minimize adverse effects of products from TBP hydrolysis or other reactions which might occur. De-entrainment columns surmounting the concentrators reduce the entrainment losses of uranium and plutonium to negligible values. The operations performed in the concentration steps are described in this chapter.

7.1 CONCENTRATION OF URANIUM SOLUTIONS

Efficient operation of the Purex solvent extraction batteries requires that the uranium-bearing aqueous stream (1CU) be concentrated from 0.272M to 2.12M uranium before being introduced as feed to the subsequent solvent extraction cycle. The backcycle stream (3WF), an accumulation of solvent extraction aqueous waste streams, is concentrated from 0.02M to 0.08M uranium before being returned to the HA column or 2NF tank. The uranium product stream (2EU) is concentrated from 0.38M to 2.12M before shipment to the calcination operation.

7.1.1 Properties and Compositions of Solutions

7.1.1.1 Concentrator Feed and Product Compositions

The pertinent data concerning the 1CU, 2EU, and backcycle (3WF) solutions before and after concentration are listed in Table 7-1. The compositions noted may vary somewhat (perhaps up to 25%) as a result of changes in extraction column flow ratios and concentrator operating temperatures.

TABLE 7-1. Typical Uranium Concentrator Stream Data.

Basis:
Purex Flowsheet - Reprocessing N Reactor fuels (Ref. 1).
Processing Rate - 10 tons uranium per day.

Concentrator:	E-J8-1		E-K4-1		E-H4-1	
Stream: / Component or Property	1CU	1UC	2EU	2UC	3WF	3WW
UNH, M	0.272	2.12	0.381	2.12	0.018	0.082
HNO_3, M	0.086	0.90	0.011	0.06	1.82	8.4
Specific gravity at 25°C	1.09	1.71	1.12	1.68	1.10	1.25
Flow, gal/min	27.4	3.52	18.4	3.30	25.1	5.3

The specifications for the uranium product, i.e., the overflow from concentrator E-K4-1 (2UC stream), are indicated in Table 7-2.

7.1.1.2 Condensate Compositions

The condensates contain essentially all of the diluent and TBP entering the concentrators. In addition, they may contain up to 10^{-4}% of the uranium in the feed to the concentrators and trace amounts of fission products.

7.1.1.3 Tributyl Phosphate Hydrolysis

Tributyl phosphate hydrolyzes slowly in boiling acid solutions to form successively: dibutyl phosphate (DBP), monobutyl phosphate (MBP), and orthophosphoric acid, the first hydrolysis step being rate determining. The reaction in a single phase is zero or first-order with respect to HNO_3 concentration. The hydrolysis products of TBP form strong complexes with uranium and plutonium which exhibit undesirable distribution coefficients and emulsifying characteristics. For example, in the 1C, 2E, and 2B systems, the DBP complex of uranium or plutonium exhibits a high organic-to-aqueous-phase distribution ratio (E_a^o) which hinders the transfer of uranium or plutonium into the aqueous product phase, and may result in a high product loss to the solvent effluent. The complex formed between uranium or plutonium and MBP is relatively insoluble in either phase, and forms emulsions or interfacial scum in the solvent extraction columns. Further discussion of the effects of TBP hydrolysis products can be found in Chapter 6.0.

TABLE 7-2. Uranium Nitrate Product Specifications (Ref. 2).

Chemical or Property	Specification
Uranium	2.0 to 2.2M
Uranium-235	≤1.0 wt%*
Nitric Acid	≤0.2M
Other Actinides:	
Plutonium	10 parts per billion parts (ppbp) uranium
Thorium	750 parts per million parts (ppmp) uranium
Fission Products:	
Zirconium-Niobium-95	≤10 μCi/lb uranium
Ruthenium-103 and Ruthenium-Rhodium-106	≤20 μCi/lb uranium
All others, excluding Technetium-99	≤20 μCi/lb uranium
Organic	Nondetectable
Other Impurities:	
Iron	≤40 ppmp uranium
Chromium	≤16 ppmp uranium
Nickel	≤12 ppmp uranium
Sodium	≤20 ppmp uranium

*This specification is included as a critical mass control in the UO_3 Plant. When processing 72 or 94 metal, no U-235 analysis is required.

7.1.1.4 Red Oil Formation

A complex mixture of organo-uranium compounds insoluble in either aqueous or solvent process streams can be formed under off-standard processing conditions. This mixture, commonly called "red oil" at Hanford, sometimes called "third phase" at other sites, varies from yellow-orange to red in color and has a specific gravity which may range from 1.1 to 1.6. While not completely characterized, it is known to contain uranium, TBP decomposition products, and possibly nitrated fragments of the hydrocarbon diluent. Red oil is produced by a chemical reaction between an aqueous solution of uranium and nitric acid with a Purex-type solvent, either by prolonged contact at ambient temperatures or by repeated concentration of solvent-saturated aqueous solutions.

There is some disagreement with regard to red oil generation. For example, some investigators have been unable to make it with NPH diluent. Others have found that the hydrocarbon diluent employed is of importance in solvent nitration. In bench-scale experiments on solvent nitration (Ref. 3), the NPH used in the pilot plant High Temperature Gas-Cooled Reactor (HTGR) fuel reprocessing studies was found to be more resistant to nitration than diluents used in early plant applications of the Purex process. Red oil was not formed in these tests under conditions reported to produce red oil with diluents previously used. Savannah River Laboratory has made a third phase which is yellow when pure, but turns red when mixed with TBP and heated (Ref. 4).

The presence of DBP-bearing red oil in solvent extraction columns promotes unfavorably high uranium and plutonium distribution ratios in C-type columns, as discussed in Chapter 6.0. Red oil may be an intermediate product in the rapid reaction of solvent with nitric acid (discussed below).

9013275.1251

7.1.1.5 Rapid Reactions of Tributyl Phosphate With Nitrate Ion

A rapid reaction may result when mixtures of TBP and aqueous solutions of uranium and nitric acid have attained a minimum temperature of 135°C during concentration (Ref. 5-7). This reaction, discussed in Chapter 6.0, may, under some conditions, be sufficiently violent to rupture a concentrator. The conditions required for such a reaction are prevented from arising in the Purex uranium concentrators by the following design and operational safeguards. The reboilers are heated with a maximum of 29-psig-pressure steam, which limits the maximum temperature attainable in the concentrate to 135°C. Steam pressure, weight factor, and temperature instrumentation is incorporated to automatically shut off the steam to the concentrator tube bundles before potentially hazardous over-concentration can occur. Steam stripping of the concentrator feeds prior to concentration minimizes the TBP content of the concentrator bottoms.

7.1.1.6 Solids Formation

If the UNH feed rate to a concentrator is reduced appreciably from normal without a compensating reduction in steam flow, the uranium solution in the reboiler becomes more concentrated than normal and may solidify or dry to the point of incipient calcination. Over-concentration may be detected by an increasing concentrate boiling temperature or by an increase in the specific gravity of the concentrate. Safety devices including high steam pressure, high liquid temperature, and low weight factor interlocks are provided to prevent such a condition from becoming extreme.

7.1.1.7 Criticality Considerations

The uranium concentration vessels are not critically safe by design geometry. Therefore, the amount of plutonium in the feed to the concentrator must be controlled below a value which would amount to a critical mass if all the plutonium in the concentrator were to precipitate.

7.1.2 Steam Stripping

Prior to concentration of aqueous solutions of uranium, dissolved or entrained solvent is removed by steam stripping to minimize the formation of DBP or red oil. Solvent removal is accomplished by introducing the solution to the concentrator via a stripping tower in which the solution is countercurrently contacted by water vapor leaving the reboiler. The TBP and diluent are vaporized, carried with the water vapor to the condenser, and are either recycled to solvent extraction or leave the process with the condensate.

A McCabe-Thiele operating diagram for the steam stripping of TBP is presented in Figure 7-1. A similar diagram for the diluent is not included since the degree of diluent removal is not critical. Also, diluents are more volatile than TBP and are therefore more completely removed by steam stripping.

The equilibrium line in Figure 7-1 is plotted from vapor pressure (Ref. 8) and solubility (Ref. 9) data for TBP, and defines the equilibrium concentration of TBP in the vapor (Y) as a function of the TBP concentration in the liquid (X) when boiling at standard atmospheric pressure. The equilibrium data shown are for a TBP-water system. The effect of the concentrations of nitric acid and uranyl nitrate in the concentrator feed on the pressures is assumed to be negligible. In that portion of the equilibrium line representing a true solution of TBP in the liquid, it is assumed that Henry's law applies, as the partial pressure of the dissolved component is proportional to its concentration in the liquid phase. For the vapor phase, it is assumed that the perfect gas law and Dalton's law apply. Thus, the partial pressure of the TBP in the vapor is equal to the product of the TBP mole fraction in the vapor and the total pressure. Combining these principles, the relationship between vapor and liquid compositions can be stated mathematically as follows:

$$Y = KX$$

where

Y = mole fraction TBP in the vapor phase;

K = proportionality factor (in this case, 62.2);

X = mole fraction TBP in the liquid phase.

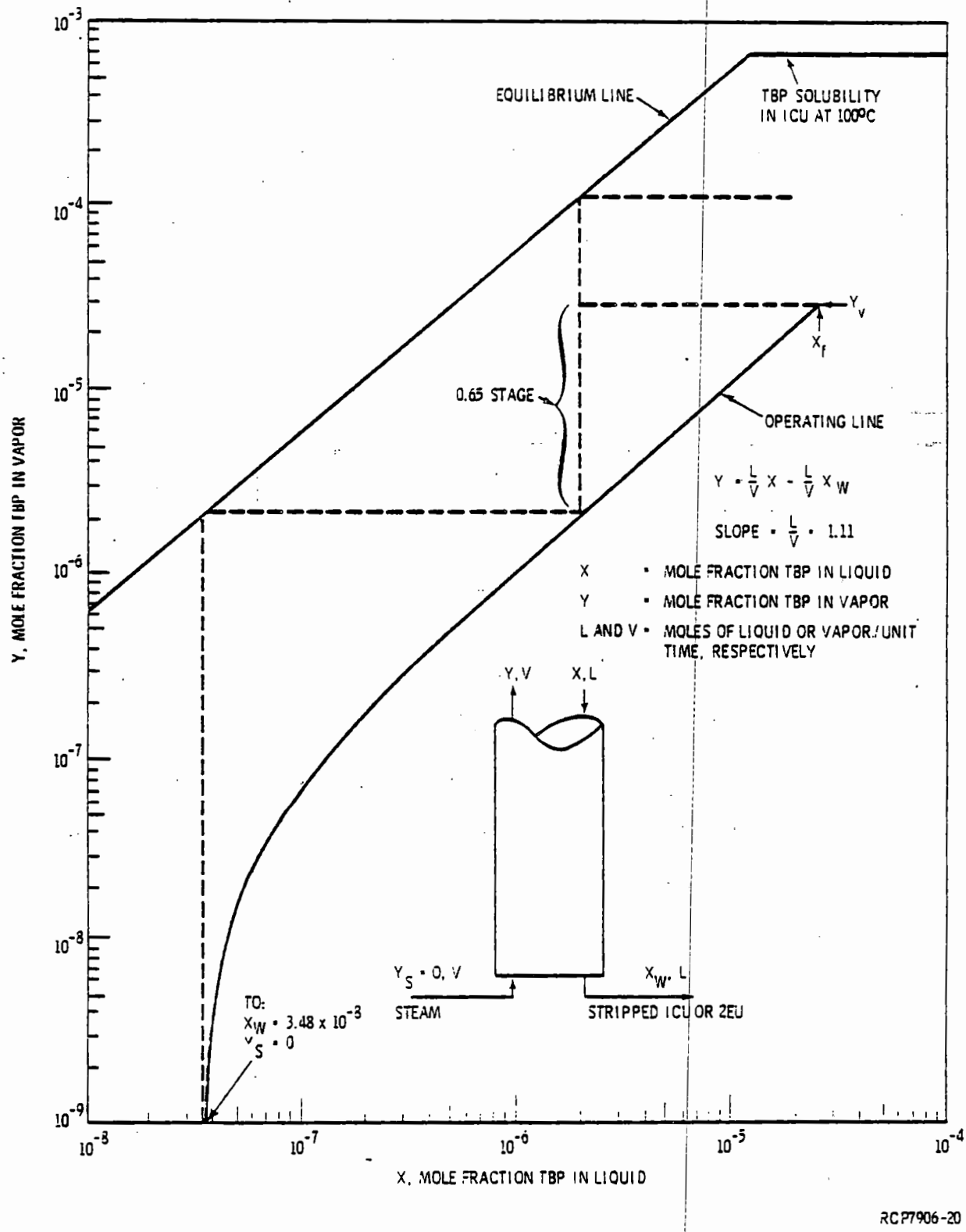

FIGURE 7-1. Typical TBP Steam Stripping Operating Diagram, TBP-Water System, HW#3 Flowsheet Conditions (Ref.10)

As the values of X are increased to exceed the solubility of TBP in the aqueous phase (concentrator feed), a second liquid phase (entrained solvent) is present and the values of Y become limited by the ratio of vapor pressures of pure TBP and water at the operating pressure and temperature. This value of Y is constant for any amount of entrained solvent in the concentrator feed.

The operating line shown in Figure 7-1 is drawn to represent the stripping of TBP to the desired concentration of five parts of TBP per million parts of UNH under the anticipated operating conditions. The equation for the operating line is developed from a TBP material balance around either end of the stripper. At steady-state operating conditions, the amount of TBP entering the stripper via the influent streams must equal the amount of TBP leaving via the effluent streams. Also, neither the liquid nor vapor flow rate changes appreciably from plate to plate. Equating the influent and effluent flows on the bottom plate, the following expression is obtained:

$$X(L) + Y_S(V) = Y(V) + X_W(L)$$

where

X = mole fraction TBP in liquid entering bottom plate;

X_W = mole fraction TBP in liquid effluent from stripping tower;

Y = mole fraction TBP in vapor leaving bottom plate;

Y_S = mole fraction TBP in vapor entering stripping tower;

L = flow rate of liquid, moles per unit time;

V = flow rate of vapor, moles per unit time.

Rearranging the above equation gives:

$$Y = L/_V\ (X - X_W) + Y_S$$

If L/V, Y_S, and X_W are assumed constant, this equation defines a straight line when plotted on rectangular coordinates, and expresses the operating conditions throughout the stripper. While L/V is not constant because a portion of the steam entering the stripper will be condensed in heating the entering feed, the L/V change is so slight that it can be neglected. By assuming Y_S is zero and inserting the maximum value of X_W desired in the stripped solution, an operating line can be constructed from the above equation. The operating line is shown in Figure 7-1, and shows that 1.65 theoretical plates would be required to strip a typical entering feed containing 0.35 g TBP/ℓ (Ref. 11), to a desired concentration of 0.0005 g TBP/ℓ. This latter concentration corresponds to five parts of TBP per million parts of UNH. Two theoretical stages would suffice to strip a feed containing up to 1.58 g TBP/ℓ (corresponding to 0.49 vol% entrainment of 30% TBP) to the maximum desired X_W value. In operation, the ratio of actual to theoretical plates in the steam stripping section will probably vary between two and five (i.e., 20 to 50% overall plate efficiency.

7.1.3 De-entrainment

7.1.3.1 Concentrators E-J8-1 and E-K4-1

Entrained droplets of uranium and plutonium solutions must be removed from the overhead vapors of the uranium concentrators to minimize the losses of fission products, plutonium, and uranium to the condensate. Since the condensate streams are sent to cribs or recycled, plutonium and uranium effluent losses are maintained below maximum permissible limits. The losses are considered acceptable if they are less than 10^{-4}% of the uranium and/or plutonium from the concentrators.

In the concentrators, liquid de-entrainment from vapor is accomplished by impingement and low vapor velocity. Liquid droplets entrained in the vapor jetting from the reboiler tubes are partially removed by deflection from the impingement plate above the tubes. The vapor velocity is then reduced to about 2 ft/sec in the central chamber when processing 10 tons of uranium per day, permitting additional particles to settle. Entrained droplets of concentrate are further removed by passing through the stripping section of the concentrator tower, where the flooded bubble-cap trays provide effective de-entrainment, resulting in a cumulative concentrate-to-overhead de-entrainment factor on the order of 10^6. Droplets of concentrator feed solution which are entrained at the feed plate are de-entrained from the vapors by passage through the one (or three) bubble-cap tray(s) and the Raschig ring packing above the feed tray, with the de-entrained liquid draining back by gravity. The degree of de-entrainment obtained is dependent on the superficial vapor velocity in the tower, and, to a lesser degree, upon the number of dry bubble-cap trays employed above the feed tray.

The entrainment obtained with a small-scale (6-inch-diameter) model of a concentrator de-entrainment tower of the design described above is summarized in Table 7-3 (Ref. 10).

The pilot plant data indicate that it is possible to operate the concentrators at rates as high as 21 tons of uranium per day [HW #3 flowsheet (Ref. 12) conditions] and still realize entrainment losses of less than 0.01% when using one de-entrainment tray above the feed tray. However, Purex has operated with rates greater than 30 tons/day without excessive entrainment losses.

7.1.3.2 Concentrator E-H4-1

De-entrainment devices for Concentrator E-H4-1 are similar to those described above except for the Raschig ring packed section and the number of trays. Instead of the packed section, Concentrator E-H4-1 contains a mist de-entrainment pad above the bubble-cap trays. The pad is 8 inches

thick by 74 inches in diameter. It was fabricated from 5-mil-diameter tantalum wire, and has a bulk density of 10 to 12 lb/ft^3. Concentrator E-H4-1 has six bubble-cap trays in its de-entrainment tower, while E-J8 and E-K4 have seven trays each.

TABLE 7-3. Concentrator Entrainment as a Function of Throughput Rate.

Equivalent Throughput Rate, Tons Uranium/Day[a]	Superficial Vapor Velocity, Ft/Sec	F Factor[b]	Percent of Feed Uranium Entrained[c]	
			Three Trays[d]	One Tray[d]
9 to 10	1.8 to 2.0	0.34 to 0.37	<0.0005	<0.0003
15	3.1	0.58	<0.0003	0.0003
20	4.1	0.76		≦0.003
22	4.6	0.86	0.0003	8
25	5.2	0.97		10
29	6.0	1.1	20	--

[a]Based on Purex Plant concentrator operating at Purex HW #3 Flowsheet conditions at experimental superficial vapor rate.

[b]Defined as:

$$\frac{(\text{Vapor rate, ft}^3/\text{sec})\ (\text{Vapor density, lb/ft}^3)^{0.5}}{(\text{Column cross-sectional area, ft}^2)\ (\text{Sp. gr. of liquid feed})^{0.5}}$$

[c]Percent uranium entrained = (concentration of uranium in vapor) (100)/concentration of uranium in feed.

[d]No liquid addition above feed point, surmounted by 3-foot layer of 1-inch stainless steel Raschig rings.

7.2 CONCENTRATION OF PLUTONIUM SOLUTIONS

7.2.1 Properties of Plutonium Nitrate Solutions

7.2.1.1 Properties of Boiling Solutions

Plutonium nitrate - nitric acid solutions containing up to 800 g Pu/ℓ have been prepared by evaporation. Batch-evaporation curves (without reflux) for a variety of feed solution compositions are shown in Figure 7-2. These curves illustrate the effect of plutonium nitrate concentration on the boiling point of plutonium nitrate-nitric acid solutions. An equilibrium diagram for the plutonium nitrate-nitric acid-water system is shown in Figure 7-3 (Ref.13).

9413275.1257

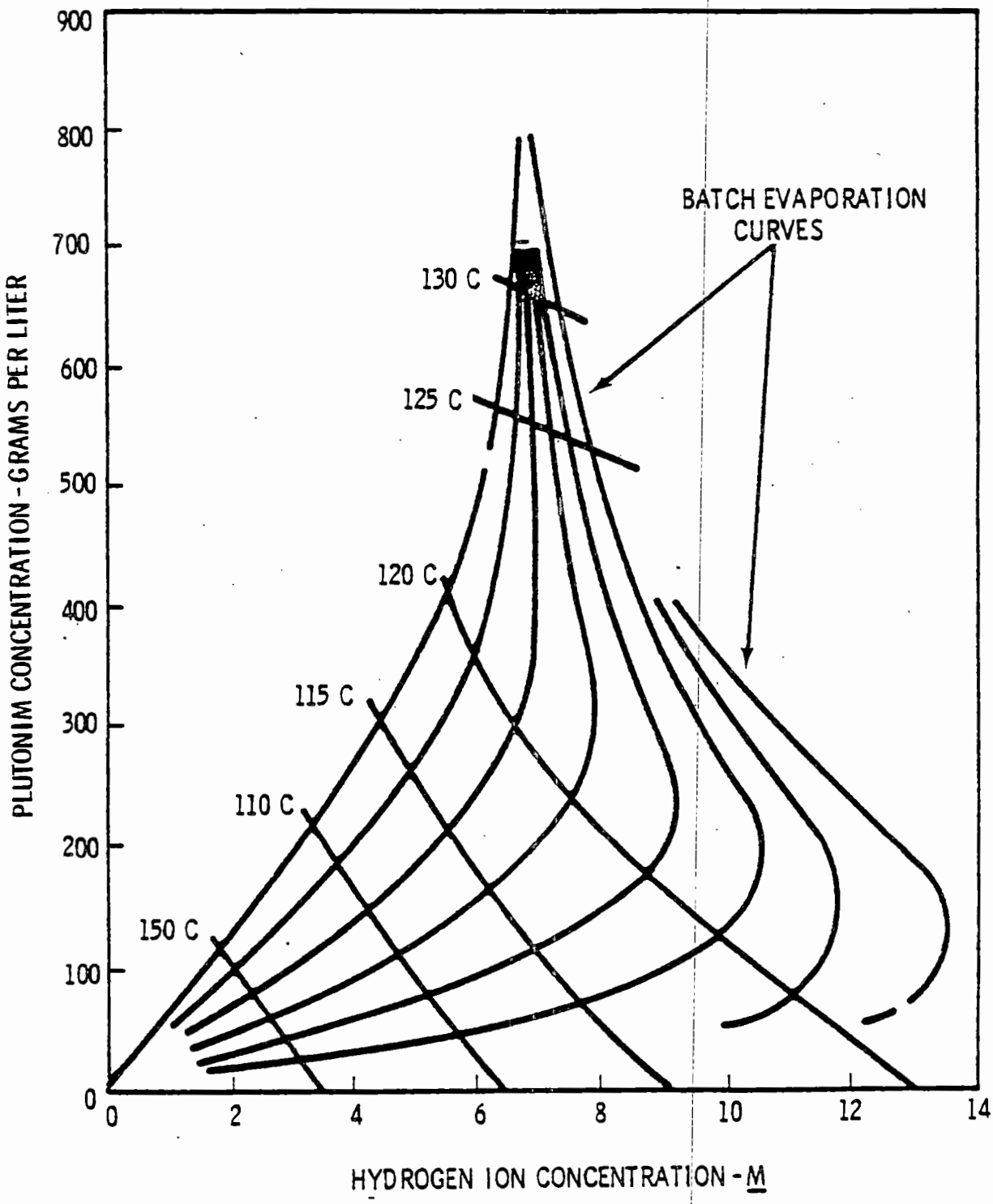

RCP7907-117

FIGURE 7-2. Boiling Temperatures for Plutonium Nitrate-Nitric Acid Solutions

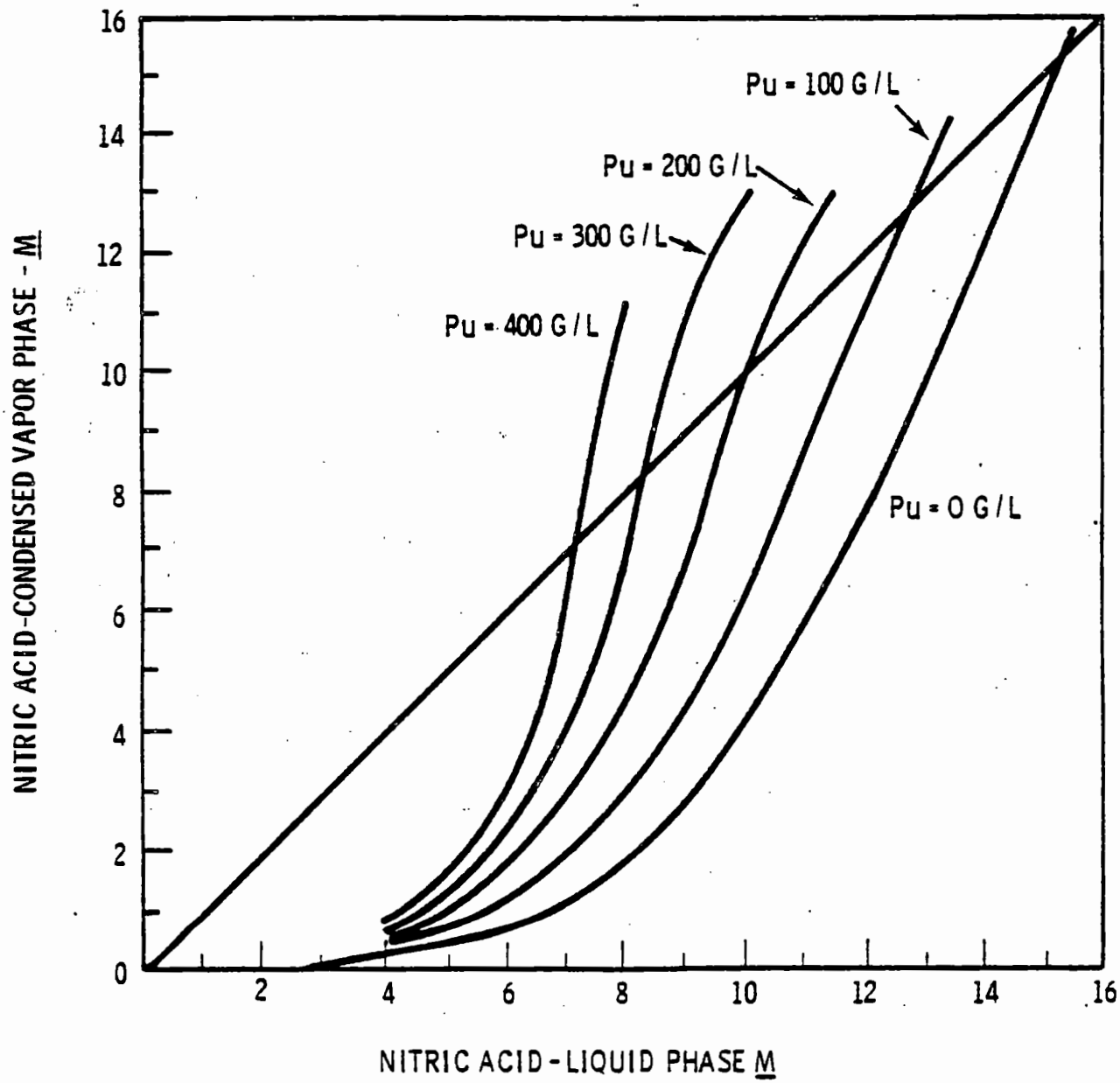

RCP7907-118

FIGURE 7-3. Equilibrium Diagram for the Plutonium Nitrate-Nitric Acid-Water System.

7.2.1.2 Valence Stability

Under the usual conditions of evaporation, only the tetra-and hexa-valent states of plutonium are stable. Plutonium (V) cannot exist at the high acidities involved and plutonium (III) is oxidized rapidly by hot or concentrated nitric acid. Plutonium (IV) is oxidized to plutonium (VI) at acidities below 4M, with the maximum rate occurring around 1M. No appreciable oxidation of plutonium (IV) occurs at nitric acid concentrations above 6M because of the formation of nitrate complexes. Slow reduction of plutonium (VI) occurs as the result of alpha radiation effects (Ref. 13). The observed rate of this reduction in 0.5M HCl at 25°C corresponds to a half-life of 296 days (Ref. 14). Other reduction mechanisms occur in concentrated nitric solutions as the amount of plutonium (VI) remaining after only 22 days of storage at room temperature is insignificant (Ref. 15).

7.2.2 Compositions of Plutonium Nitrate Solutions and Condensate

7.2.2.1 Feed to Stripper-Concentrator

Decontaminated plutonium solution (3BP) from the 3B column is butted with nitric acid, then stripped to remove residual TBP, and concentrated in a stripper-concentrator (vessels T-L6 and E-L7). The composition of the feed to the stripper-concentrator, based on the conditions stated in Reference 1, are indicated as follows:

Pu, g/ℓ	27.8
HNO_3, M	1.2
Specific gravity	1.085

7.2.2.2 Product Composition and Specifications

The quality specifications for the plutonium product for feed to the oxalate precipitation process are given in Table 7-4.

The plutonium solution leaving the stripper is concentrated to approximately 350 g Pu/ℓ and 7M HNO_3 in the concentrator bottoms. Based on data obtained between March and September 1972, the content of individual elements in the plutonium product is within the ranges indicated in Table 7-5.

7.2.2.3 Condensate Composition

The combined process condensate from the stripper and concentrator contains 0.7M HNO_3 and a trace of plutonium. Since this stream is recycled to the 3AF feed tank, no plutonium is lost via the condensate stream. Steam condensates from T-L6 and E-L7 are recycled to the back-cycle concentrator feed tank (TK-F10).

TABLE 7-4. Plutonium Nitrate Quality Specifications (Ref. 2).

Chemical or Property	Specification
Plutonium	100 to 450 g/ℓ (0.84 to 3.76 lb/gal)
Nitric Acid	2.0 to 12.0M (1.025 to 6.15 lb/gal)
Plutonium-240	Report value
Other Actinides:	
Uranium	≤2,000 ppmp plutonium
Neptunium	≤1,000 ppmp plutonium
Fission Products:	
Zirconium-Niobium-95	≤3.0×10^{-11} μCi ZrNb/At (one batch in a sliding block of 20 batches may be 4×10^{-11})
All others, CP instrument reading on can	Emergency can - ≤50 mr/hr; PR can - ≤8 mr/hr
Organic	Nondetectable
Other impurities:	ppmp plutonium
Silver	100
Aluminum	2,000 (1,500 ave.)
Boron	200
Beryllium	200
Bismuth	200
Chromium	2,000
Copper	100
Iron	5,000
Manganese	200
Molybdenum	100
Nickel	1,000
Phosphorus	400
Lead	100
Silicon	500
Tin	100
Titanium	500
Zirconium	500
Σ Lithium, Magnesium, Sodium, Calcium, Potassium	12,000

TABLE 7-5. Metallic Impurities in Purex Plutonium Product.

Element	Concentration Range, ppm
Aluminum	2 - 3,000
Arsenic	<8 - 490
Barium	<5 - 19
Beryllium	<0.1 - <0.8
Bismuth	<0.1 - 50
Boron	<0.2 - <0.8
Cadmium	<0.2 - <1
Calcium	<8 - 1,1000
Chromium	8 - 250
Cobalt	2 - 130
Copper	2 - 62
Gallium	<5 - 50
Iron	10 - 1,085
Lead	<1 - 570
Lithium	<2 - 22
Magnesium	<1 - 85
Manganese	<1 - 10
Molybdenum	<0.5 - 25
Nickel	<1 - 165
Niobium	<1 - 25
Phosphorus	20 - 900
Potassium	<20 - 100
Silicon	<1 - 100
Silver	<5 - 100
Tantalum	<50 - 100
Titanium	<20 - 1,100
Tungsten	<30
Uranium	0.3 - 4,200
Vanadium	<1 - 20
Zinc	<1 - 300
Zirconium	<10 - 900

7.2.3 Steam Stripping

In the plutonium stripper, the plutonium solution is stripped of both dissolved and entrained TBP while flowing countercurrently to the steam flow down through a packed section into a disengaging section. Concentrated nitric acid is added to the plutonium solution before entering the stripping section to prevent formation of plutonium polymer which could plug the packing. During the stripping process, the solution is concentrated from 27.8 to 150 g Pu/ℓ. The mechanism of steam stripping is given in Section 7.1.2. The steam for the stripping operation is vaporized liquid from the concentration of the stripped plutonium in the solution in the vertical tube reboiler. It is estimated that with an L/V flow ratio of two, the TBP in the liquid will be stripped to less than 0.01 g TBP/ℓ as the liquid passes through the stripping section which contains 8 feet of Raschig rings.

7.2.3.1 Red Oil Formation

As in the uranium concentrators (see Section 7.1.1.4), "red oil," a nitration product of TBP and its degradation products, could be formed in the plutonium concentrator in the event of a malfunction of the plutonium stripper. Red oil is produced when the temperature of a TBP-$Pu(NO_3)_4$-HNO_3 mixture reaches a level high enough to decompose the plutonium nitrate to produce NO_2 which nitrates the organic phase. The three conditions necessary for red oil formation during concentration of plutonium nitrate solutions have been shown to be: (a) temperature above 150°C, (b) a minimum TBP/Pu weight ratio of 0.15, and (c) conditions of incipient calcination with violent NO and NO_2 release (Ref. 16).

7.2.3.2 De-entrainment

Entrained droplets of plutonium solution must be removed from the overhead vapors during the stripping operation to minimize plutonium in the condensate streams. The upper packed section of the stripper de-entrains these droplets from the rising vapors by impingement of the drops on the packing, and the separated liquid drains back to the stripping section.

7.2.4 Plutonium (IV) Polymer

The tetravalent plutonium ion hydrolyzes more readily than any other plutonium species to form a highly insoluble plutonium (IV) hydroxide with an estimated solubility product of 7×10^{-56} (Ref. 17). Hydroxide precipitation requires a large excess of hydroxyl ion. Of greater concern in the Purex Plant is the partial hydrolysis of plutonium (IV) in dilute HNO_3 solutions to form a colloidal polymer with an extremely high, widely varying molecular weight of 4×10^3 to 1×10^7 (Ref. 18). Polymer formation during processing could result in high solvent extraction waste losses, emulsification in solvent

extraction columns, excessive foaming during concentration, plugged lines, and potential criticality hazards, since polymer can accumulate or migrate uncontrolled into Purex process vessels.

The polymer is identified by its bright green color and its absorption spectrum, which differs from that of monomeric plutonium (IV). The polymer, a positively charged colloid in acidic solutions, is not extracted by TBP (Ref. 17.) As shown in Figure 7-4 for dilute (Ref. 19) and Figure 7-5 for more concentrated aqueous plutonium nitrate solutions (Ref. 20), polymer formation is dependent on acidity, plutonium (IV) concentration and temperature. Thus polymerization can occur at higher acidities as the plutonium concentration and/or temperature increase(s). In Purex organic solutions, plutonium (IV) is complexed with TBP and is therefore not available for polymerization.

Polymer may be formed under conditions of transient instability as in the water dilution of acidic plutonium solutions with inadequate agitation. Polymer may also be formed in localized areas of low acidity, even if the final solution acidity is too high for polymerization to occur (Ref. 21). Dilute nitric acid is therefore generally used for dilution of plutonium nitrate solutions.

Dilution of dissolved fuel element solution with water is permitted as the acidic nature of the uranyl nitrate solution assures a low pH, even at acid deficient conditions. For example, an ionic plutonium (IV) solution is stable for approximately 24 hours in a 0.2M acid deficient solution containing 1.92M $UO_2(NO_3)_2$, in contrast with the very rapid polymerization seen in acid deficient aluminum nitrate solutions (Ref. 22). Other observers also report (Ref. 18) that nitrate ion has an effect on polymerization; polymer was observed to form rapidly in low acid solutions with NH_4NO_3 concentrations below 0.5M, slowly in 1 to 2M nitrate solutions, and not at all with nitrate concentrations of 4M or above.

Depolymerization is slow in HNO_3 solutions at room temperature, with the rate being approximately first order in polymer concentration, and is even slower for polymers formed at elevated temperatures as shown in the following table:

Half-Times for Depolymerization of Plutonium (IV) Polymer

Formation Temperature, °C	HNO_3 Concentration			
	2M	4M	6M	10M
25	20 days	400 min.	100 min	30 min.
80	1 year	---	15 days	---

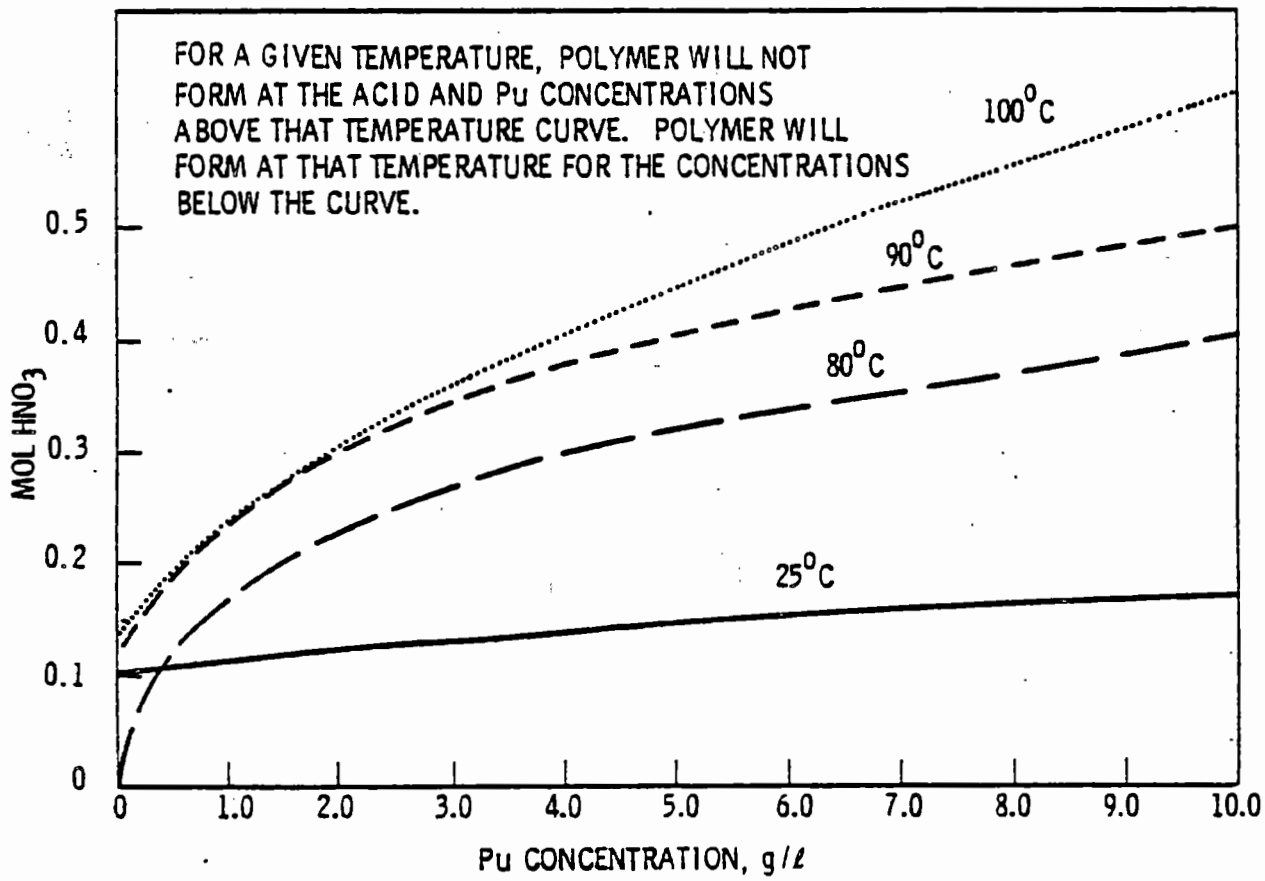

RCP7907-119

FIGURE 7-4. Plutonium Polymerization Curves for Dilute Solutions

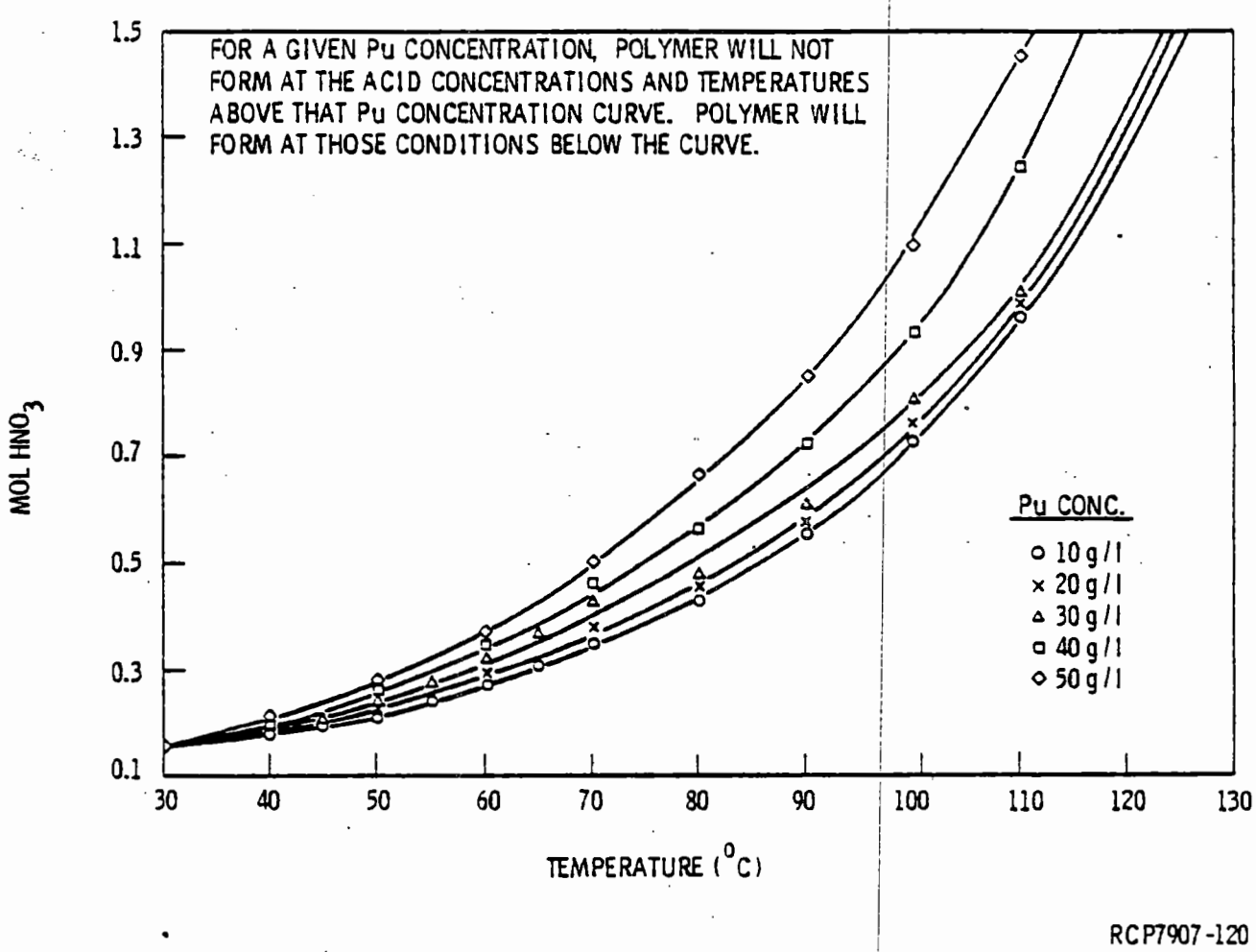

FIGURE 7-5. Plutonium Polymerization Curves for Concentrated Solutions

Polymers become more difficult to depolymerize with age. For example, in 5M HNO_3 at 25°C, polymer aged for several months at 25°C had a depolymerization half-time of 320 hours compared to only 20 hours for freshly formed polymer under identical conditions. The accelerating effect of elevated temperatures on the depolymerization rate of even the aged polymer is illustrated by a half-time of only 0.56 hour at 95°C. Depolymerization is also accelerated by fluoride with complete depolymerization attained in less than 5 minutes with 5M HNO_3 - 0.05M F^-, and a half-time of 2.4 minutes with 5M HNO_3 - 0.05M F^- complexed with 0.2M $Al(NO_3)_3$ (Ref. 23).

7.2.5 Criticality Prevention

All the vessels in the second and third plutonium cycles are geometrically favorable for plutonium nitrate solutions up to 450 g Pu/ℓ. "Geometrically favorable" means the system is subcritical under *any foreseen* neutron moderation and reflection condition, as opposed to "safe" which means subcritical under *any* moderation and reflection condition. The neutron interaction in the several parts of each equipment piece, as well as between the different equipment pieces, must be considered in evaluation of safety. Small-dimension slabs, cylinders, and annuli are all utilized for components of the plutonium cycle vessels as shown in Table 7-6.

TABLE 7-6. Geometrically Favorable Vessels in Second and Third Plutonium Cycles.

Vessel	Geometry	Vessel	Geometry
TK-J5 (2AF)	3-inch-wide annulus	T-L6 (Product Stripper)	4-inch-diameter cylinders (2)
T-L1 (2A)	7-inch-diameter cylinder	E-L7-1 (Concentrator)	4-inch-diameter cylinders (2)
T-L2 (2B)	7-inch-diameter cylinder	TK-L8 (Receiver)	4-inch-diameter cylinders (2)
TK-L3 (3AF)	2-inch-wide annulus	TK-L9 (Sampler Tank)	5-inch-diameter cylinders (3)
T-L4 (3A)	3 1/2-inch-diameter cylinder	TK-L11 (Rework Tank)	4-inch-diameter cylinders (3)
T-L5 (3B)	3 1/2-inch-diameter cylinder	TK-L13-10 (Loadout Tank)	5-inch-diameter cylinder

NOTE: Column disengaging sections are slabs or annuli.

7.3 REFERENCES

1. Jeppson, D. W., "Purex Flowsheet Reprocessing N Reactor Fuels," ARH-F-103, Atlantic Richfield Hanford Company, Richland, Washington, November 24, 1976.

2. Mathieson, W. E. and G. L. Ritter, "Processing Specifications U-Pu Processing in the Purex Plant," ARH-2012, Atlantic Richfield Hanford Company, Richland, Washington, April 1, 1971.

3. Wilbourn, R. G., "Safety Aspects of Solvent Nitration In HTGR Fuel Reprocessing," GA-A14372, General Atomic Company, San Diego, California, June 1977.

4. Carol Watts, Editor, "Solvent Extraction Equipment Evaluation Study, Part 2, Workshop Proceedings," BNWL-2186 Part 2, Pacific Northwest Laboratories, Richland, Washington, January 1977.

5. Colven, J. T. Jr., G. M. Nichols, and T. H. Siddall, "TNX Evaporator Incident," DP-25, E. I. DuPont de Nemours Co., Aiken, South Carolina, May 15, 1953.

6. Wagner, R. M., "Investigation of Explosive Characteristics of Purex Solvent Decomposition Products (Red Oil)," HW-27492, General Electric Company, Richland, Washington, March 17, 1953.

7. Sege, G., "Overconcentration in Initial Operation of Uranium Evaporator-321 Building," HW-28690, SECRET, General Electric Company, Richland, Washington, July 10, 1953.

8. Schefner, L. and M. B. Jacobs, The Handbook of Solvents, D. Van Nostrand Company, Inc., New York, 1953.

9. Woodfield, F. W., "Progress Report, Chemical Development, November 1953," HW-30108, SECRET, General Electric Company, Richland, Washington, November 30, 1953.

10. Woodfield, F. W., "Progress Report, Chemical Development, August 1954," HW-32964, SECRET, General Electric Company, Richland, Washington, p. 22, August 31, 1954.

11. Woodfield, F. W., "Progress Report, Chemical Development, July 1953," HW-28927, SECRET, General Electric Company, Richland, Washington, July 31, 1953.

12. Smith, R. E., "Purex Chemical Flowsheet HW#3," HW-31373, SECRET, General Electric Company, Richland, Washington, April 6, 1954.

13. Stoller, S. M. and R. B. Richards, Editors, Reactor Handbook, Volume II, Fuel Reprocessing, Second Edition, Interscience Publishers, Inc., New York City, New York, 1961.

14. Benedict, M. and T. H. Pigford, Nuclear Chemical Engineering, McGraw-Hill Book Company, New York, 1957.

15. Greintz, R. M. and D. H. Neal, "Plutonium (IV) Oxalate Precipitation and Calcination Process for Plutonium Nitrate to Oxide Conversion," RFP-2602, Rockwell International, Rocky Flats Plant, Golden, Colorado, July 26, 1978.

16. Felt, R. E., and O. R. H. Rasmussen, "Engineering Evaluation, Steam Pressure in the CCP Concentrator," ARH-2534, Atlantic Richfield Hanford Company, Richland, Washington, June 12, 1972.

17. Katz, J. J. and G. T. Seaborg, The Chemistry of the Actinide Elements, John Wiley and Sons, Inc., New York, 1957.

18. Ockendon, D. W. and G. A. Welch, "The Preparation and Properties of Some Plutonium Compounds. Part V. Colloidal Quadrivalent Plutonium," Journal Chemical Society, 1956, pp. 3358-63.

19. Brunsted, A., "Polymerization and Precipitation of Plutonium (IV) in Nitric Acid," HW-54203, General Electric Company, Richland, Washington, December 17, 1957.

20. Schuelein, V. L., "Parameters For Plutonium Polymer Formation in Nitric Acid," ARH-SA-233, Atlantic Richfield Hanford Company, Richland, Washington, May 1975.

21. Wick, O. J., Editor, Plutonium Handbook - A Guide to the Technology, Vol. 1, Ch. 13, Gordon and Breach, Science Publishers, New York, 1967.

22. Mullins, L. J. and W. C. Hazen, "Quarterly Progress Report, July 1, 1950: Recovery of Plutonium From Slag and Crucibles," GEH-17923, General Electric Company, Richland, Washington, October 30, 1950.

23. Costanzo, D. A. and R. E. Biggers, "A Study of the Polymerization, Depolymerization and Precipitation of Tetravalent Plutonium as Functions of Temperature and Acidity by Spectrophotometric Methods: Preliminary Report," ORNL-TM-585, Oak Ridge National Laboratory, Union Carbide Company, Oak Ridge, Tennessee, July 1, 1963.

THIS PAGE INTENTIONALLY
LEFT BLANK

CONTENTS

CHAPTER 8.0 - NEPTUNIUM CONCENTRATION AND ION EXCHANGE PURIFICATION TECHNOLOGY

8.1 INTRODUCTION.....8-1

8.2 NEPTUNIUM CONCENTRATION.....8-2
8.2.1 Stripper Section.....8-2
8.2.2 Concentrator Section.....8-2

8.3 ION EXCHANGE PURIFICATION.....8-4
8.3.1 Ion Exchange Material Criteria.....8-4
8.3.2 Chemistry.....8-5
8.3.3 Amberlite IRA-97 Ion Exchange Resin.....8-6
8.3.4 Ion Exchange Process Cycle Technology.....8-11

8.4 GENERAL SAFETY PRECAUTIONS.....8-21

8.5 REFERENCES.....8-21

APPENDIX.....8-22

FIGURES:
8-1 Partial Pressures of Nitric Acid and Water Over an Aqueous Solution of 3.1M (17%) Nitric Acid.....8-3
8-2 Growth of Protactinium-233 from Decay of Neptunium-237.....8-7
8-3 Differential Thermoanalysis of Nitrate-Form Amberlite IRA-97 Resin.....8-9
8-4 Neptunium and Thorium Distribution Ratios versus Nitric Acid Concentration, Using Amberlite IRA-97 Resin.....8-10
8-5 Kinetics of Neptunium (IV) Sorption on Amberlite IRA-97 Resin.....8-12
8-6 Effect of Feed HNO_3 Concentration on Column Loading Cycle.....8-14
8-7 Effect of Feed Flow Rate on Column Loading Cycle.....8-15
8-8 Effect of Temperature on Column Loading Cycle.....8-16
8-9 Thorium Scrub Behavior in Fission Product Wash Cycle.....8-17
8-10 Neptunium Scrub Behavior in Fission Product Wash Cycle.....8-18
8-11 Elution of Neptunium from Amberlite IRA-97 Resin.....8-20

TABLES:
8-1 E-Q2 Concentrator Stream Conditons.....8-2
8-2 Specifications of Amberlite IRA-97.....8-8
8-3 Neptunium Purifications with Amberlite IRA-97 Resin--Plant Performance.....8-19

THIS PAGE INTENTIONALLY
LEFT BLANK

CHAPTER 8.0 - NEPTUNIUM CONCENTRATION AND ION EXCHANGE PURIFICATION TECHNOLOGY

8.1 INTRODUCTION

Neptunium was first recovered in the Purex Plant in June of 1958. Since that time, Np-237 has become a regular third product for the Purex Plant. Continual efforts have been made to increase the neptunium recovery and to make the recovery operation more compatible with the remainder of the plant. Process development and research efforts resulted in the installation of equipment in 1962 for the continuous extraction and purification of neptunium in two packaged units called J Cell Package and Q Cell Package.

The J Cell Package is equipped for a complete solvent extraction cycle. The solvent extraction equipment is approximately the same size as the second plutonium cycle equipment. It is capable of extracting and decontaminating neptunium on a continuous basis without interrupting the normal processing of uranium and plutonium in the remainder of the plant. The use of this equipment is advantageous in that previous methods of operation required neptunium to be recovered during down periods.

The neptunium purification unit, known as Q Cell, is located in the basement of the Purex building in the west end of the alternator room adjacent to the PR room. As shown in Figure 2-7 (Chapter 2.0), Q Cell includes a control room, a shielded hot cell, a shielded maintenance hood, a maintenance room, a loadout room, and an aqueous makeup (AMU) level. The latter is a second floor installation above the control room.

Q Cell was constructed in the building so that the neptunium recovered and decontaminated in J Cell Package could be further purified before it is shipped off site. Initially, final purification of Np-237 was carried out in a developmental facility in the 222-S Building. It was in this facility, operated by Separations Chemistry Laboratory personnel, that the basic flowsheet for batch ion exchange purification was developed and demonstrated.

The Q Cell purification unit is designed for batch operation and has the flexibility to handle not only neptunium recovered in the Purex Plant, but also neptunium recovered from offsite sources. Unpurified neptunium batches from other sources can be routed to the Q Cell equipment via a neptunium loadin hood located near the K6 sampler in the sample gallery. More detailed equipment and process descriptions for Q Cell can be found in Chapters 3.0 and 4.0, respectively.

The remainder of this chapter deals with the technical aspects of the Q Cell neptunium concentration and ion exchange purification.

8.2 NEPTUNIUM CONCENTRATION

The E-Q2 stripper-concentrator is used to concentrate the 2PN stream from phase III of the second neptunium cycle to Np-237 concentrations suitable for ion exchange adsorption. A detailed description of E-Q2 is given in Section 3.7 (Chapter 3.0).

8.2.1 Stripper Section

The 2PN stream contains trace quantities of soluble and entrained organics carried over from the J Cell solvent extraction process. To prevent organics from entering the concentrator and possibly creating a red oil hazard, the feed is passed downward through a stripper located on top of the concentrator where rising steam from the concentrator strips out the organic. The steam is condensed and routed to the backcycle waste system.

8.2.2 Concentrator Section

The concentrator is a thermosyphon evaporator with steam heating. The steam pressure is limited to 29 psig (134°C at saturation) to prevent an explosion hazard stemming from organic materials in the concentrator. Table 8-1 gives conditions of the streams entering and leaving the concentrator.

TABLE 8-1. E-Q2 Concentrator Stream Conditions.

	2PN Feed	2PC Product Concentrate	2PD Distillate
Volume, liters	910	~200	710
Temperature, °C	25	101	50
Sp. Gr.	1.04	1.05(1.09@25°C)	~1.0
HNO_3	0.7M	3.1M	~0.025M
Neptunium	2 g/ℓ (0.008M)	~9 g/ℓ(0.038M)	0

Nitric acid concentrations in the E-Q2 concentrator are approximately two orders of magnitude greater than neptunium concentrations. Therefore, the process conditions are dependent on the acid molarity rather than neptunium concentration. Figure 8-1 shows partial pressures of water and nitric acid over a 3.1M HNO_3 solution, which corresponds to the final acidity of the concentrator product. At the product concentrater temperature of 101°C, the nitric acid partial pressure is 1.3 mm Hg, which corresponds to a 0.10M HNO_3 distillate concentration. Actually, the composite distillate acidity is approximately 0.025M since the evaporation process begins at 0.7M HNO_3 in the feed and ends with 3.1M HNO_3 in the concentrate.

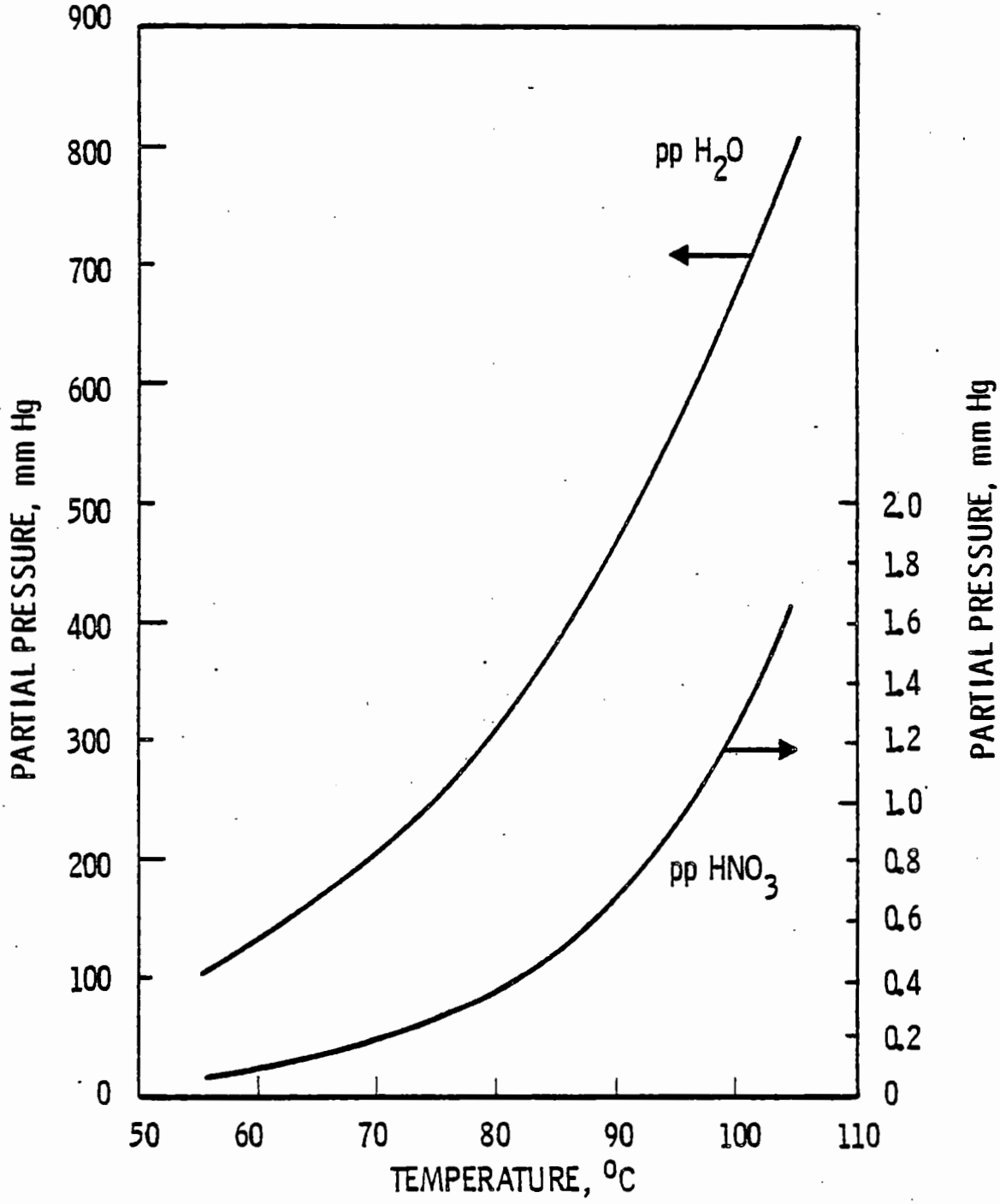

RCP7906-21

FIGURE 8-1. Partial Pressures of Nitric Acid and Water Over an Aqueous Solution of 3.1M (17%) Nitric Acid.

8.3 ION EXCHANGE PURIFICATION

Ion exchange, which is used for final purification of the neptunium product, is the reversible interchange of ions between a solid ion exchange material and a liquid phase, during which there is no permanent change in the structure of the solid. The terms "reversible" and "no permanent change" are key points in this definition and are the characteristics which allow ion exchange to be useful. Some applications of ion exchange include water conditioning, chemical separations, chemical synthesis, medical research, food processing, mixing, and agriculture.

8.3.1 Ion Exchange Material Criteria

Ion exchange materials must meet certain basic requirements, some of which are closely interrelated and cannot be modified without altering another. Some of the more important requirements are as follows (Ref. 1):

- An exchanger must have a high total capacity (high number of adsorption sites per unit mass of resin).
- The resin should exhibit good chemical equilibrium characteristics when handling the expected solutes within a given pH range.
- The kinetics of the adsorption reaction should be such that a high operating capacity may be obtained.
- An extremely low solubility is of major value since ion exchanger beds are reused. Also, the product quality can be affected adversely if materials can be leached from the resin.
- Good chemical stability favors resistance to attack by acids or bases, to oxidation or reduction, and to radiation.
- Good physical stability prolongs resin life when exposed to swelling, hydraulic pressures, osmotic pressure, and mechanical forces such as those encountered when pumping resin slurries or backwashing a column.

8.3.2 Chemistry

8.3.2.1 Neptunium Valence Adjustment

In nitric acid solutions, neptunium can exist in the (IV), (V), and (VI) oxidation states. Neptunium (IV) is most important in that it forms a nitrate complex which is relatively stable in 8M nitric acid containing hydrazine. In dilute nitric acid, neptunium (IV) is less stable, oxidizing relatively rapidly to the (V) state.

Hydrazine (N_2H_4) and ferrous ion (Fe^{++}) are effective in reducing neptunium from the (V) and (VI) states to the (IV) state (Ref. 2). In 8M nitric acid containing 0.05M hydrazine, the time required for reduction to neptunium (IV) at 25°C is 24 hours and at 65°C is less than 1 hour. To attain the desired neptunium (IV) state in the Q Cell ion exchange feed stream (3XF), the solution, containing 0.1M N_2H_4, 6.3M nitric acid, and about 6 gNp/ℓ, is heated to 60°C for 1 hour.

Ferrous ion is more effective as a reducing agent than hydrazine. For example, a combination of 0.03M N_2H_4 and 0.05M ferrous ion in 8M nitric acid solution at 25°C gives complete reduction to neptunium (IV) in less than 30 minutes. Ferrous sulfamate as the source of ferrous ion, with hydrazine as the protecting agent or holding reductant to react with, or "kill", oxidizing material, is used in the 2N solvent extraction column and was formerly used in the 3XF to give neptunium (IV). The latter use was discontinued to reduce the potential for iron and sulfur contamination of the Np product and to reduce gassing problems in the column.

Nitrite ion (NO_2^-) acts either as an oxidizing or reducing agent, depending on the NO_2^- and nitric acid concentrations (Ref. 3). Neptunium is converted from the (V) to the (VI) state in nitrite ion concentrations of 6×10^{-5} to 1×10^{-2}M and nitric acid concentrations of 1 to 6M. When the nitrite ion molarity is greater than 1×10^{-2} and the nitric acid concentration is 1 to 6M, neptunium is converted from the (VI) to the (V) state. Both neptunium (IV) and (VI) are formed with nitrite ion concentrations between 10^{-3} and 10^{-2}M and greater than 6M nitric acid.

8.3.2.2 Ion Exchange Adsorption

Since neptunium chemistry closely resembles the chemistry of plutonium, its anionic nitrate complex is assumed to be $Np(NO_3)_6^{2-}$ in solutions having high nitrate ion concentrations.

Amberlite IRA-97 (made by Rohm and Haas Company, and formerly called Amberlite XE-270), which is used in the 3X column for neptunium purification, is a weakly basic resin having tertiary amine functional groups. The ion exchange adsorption of neptunium is expressed by the following equations (Ref. 4):

$$2R_3NH^+NO_3^- + Np(NO_3)_6^{2-} \rightleftarrows (R_3NH)_2Np(NO_3)_6 + 2NO_3^-$$

$$2R_3NH^+NO_3^- + Np(NO_3)_4 \rightleftarrows (R_3NH_2)_2NP(NO_3)_6$$

Ion exchange adsorption of neptunium reaches a maximum between 7 and 9M nitric acid and is quite high over the range of 6 to 10M acid. Elution is accomplished with low nitrate concentrations which ionize the adsorbed neptunium complex.

8.3.2.3 Radiochemistry of Neptunium-237 (Ref. 3)

Neptunium-237 decays by alpha (α) emission (2.14×10^6 years half-life) to Pa-233. Protactinium-233 (27.0 days half-life) beta (β) decays to U-233 which is an alpha emitter. Neptunium-237 also has several gamma decay energies which contribute to the total radiation emitted by this isotope.

Protactinium-233 reaches an equilibrium concentration with Np-237 of 696 microcuries of Pa-233 per gram of Np-237. Figure 8-2 shows the growth rate of Pa-233 from the decay of Np-237.

8.3.3 Amberlite IRA-97 Ion Exchange Resin

Amberlite IRA-97 is a weak base macroreticular anion exchange resin composed of a styrenedivinylbenzene skeletal structure with tertiary amine exchange sites. The resin is converted to the nitrate form and added to the 3X column, producing a chemically stable and physically durable fixed bed for purification and concentration of neptunium.

Amberlite IRA-97 is well suited for neptunium purification since it exhibits excellent thorium decontamination properties. Thorium accumulation in J and Q Cell neptunium recovery systems has been a problem following past thoria (Ref. 5) processing campaigns. Since thorium chemistry closely resembles that of neptunium, most ion exchange resins will not separate the two. This was the case with Dowex 21K resin which was used prior to 1972. Laboratory tests with Amberlite IRA-97 resin show thorium decontamination factors at least an order of magnitude greater than Dowex 21K.

8.3.3.1 Specifications

Amberlite IRA-97 is extremely stable chemically and offers excellent physical durability. Specifications of the resin are given in Table 8-2 (Ref. 6).

9413275.1276

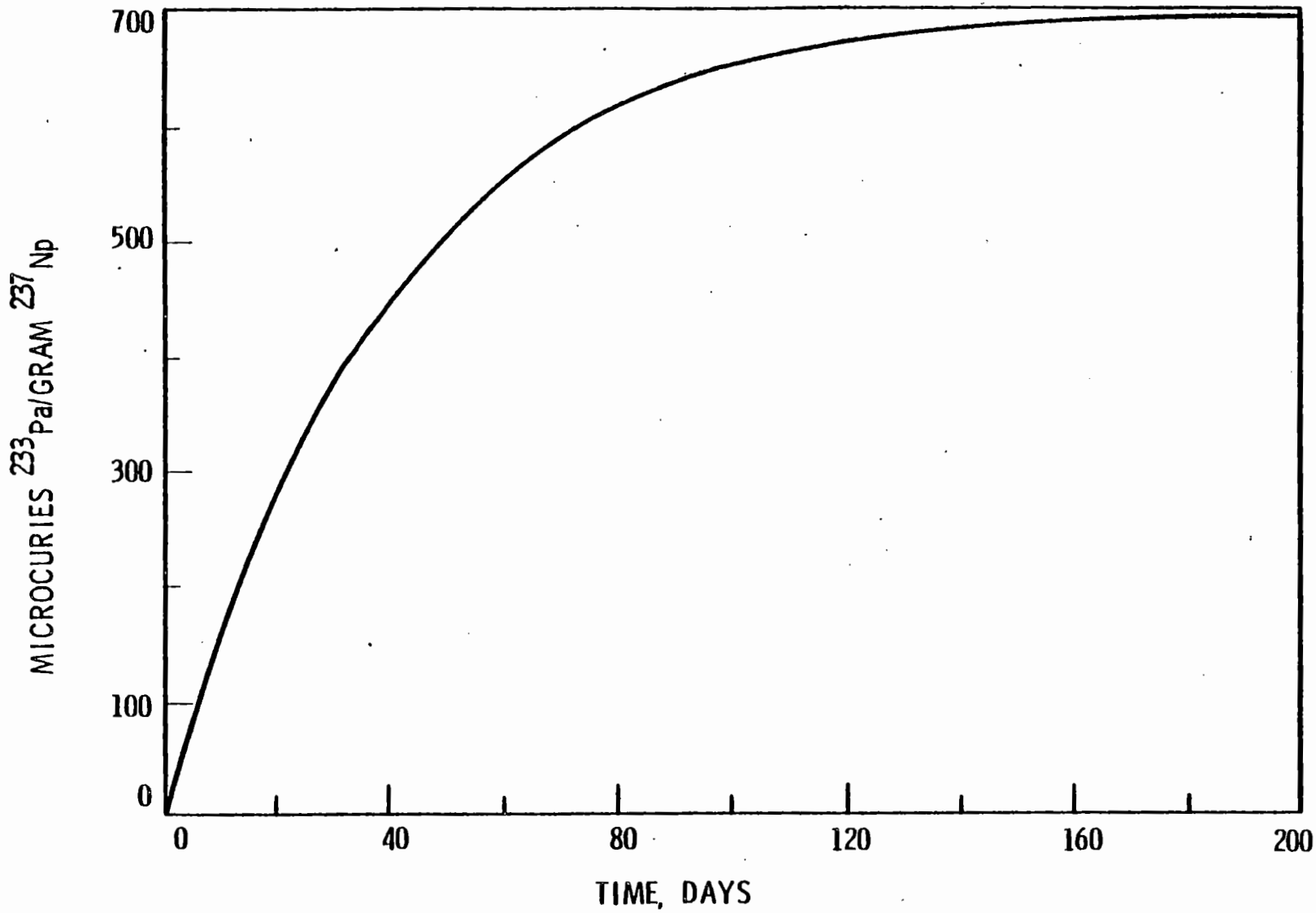

RCP7906-22

FIGURE 8-2. Growth of Protactinium-233 From Decay of Neptunium-237.

TABLE 8-2. Specifications of Amberlite IRA-97.

Resin type	Weak base
Ionic form	Hydroxide
Skeletal structure	Styrenedivinylbenzene
Functional group	Tertiary amine
Moisture content	46-54%
Swelling (OH^- to NO_3^- form)	40% total
Porosity in the dry state	48%
Total anion exchange capacity	1.4 meq/mℓ wet resin
Maximum operating temperature	100°C
Shape	Spherical beads
Screen grading	25 to 50 mesh (U.S. Standard screen)
Shipping weight	42 lb/ft^3

8.3.3.2 Thermal Stability

Amberlite IRA-97 resin in the nitrate form exhibits good thermal stability well above the 70°C maximum allowable operating temperature of the 3X column as pointed out by differential thermoanalysis results shown in Figure 8-3 (Ref. 7). The first exotherm occurs at about 180°C and a second smaller one at 420°C. Note, however, that the maximum recommended operating temperature for Amberlite IRA-97 resin is 100°C (Table 8-2).

8.3.3.3 Distribution Ratios

By definition, the ion exchange distribution ratio (K_d) of a species is the ratio of the concentration of that species in the resin to that in the solution in equilibrium with the resin. For neptunium, K_d is as follows:

$$K_d\ (Np) = \frac{\text{g Np/g oven-dried resin}}{\text{g Np/g solution}}$$

Neptunium distribution ratios are greater than thorium distribution ratios by at least an order of magnitude in 4 to 9M nitric acid solutions (Ref. 7) (see Figure 8-4). This selective adsorption of neptunium over thorium results in favorable thorium decontamination factors even in solutions containing high concentrations of thorium.

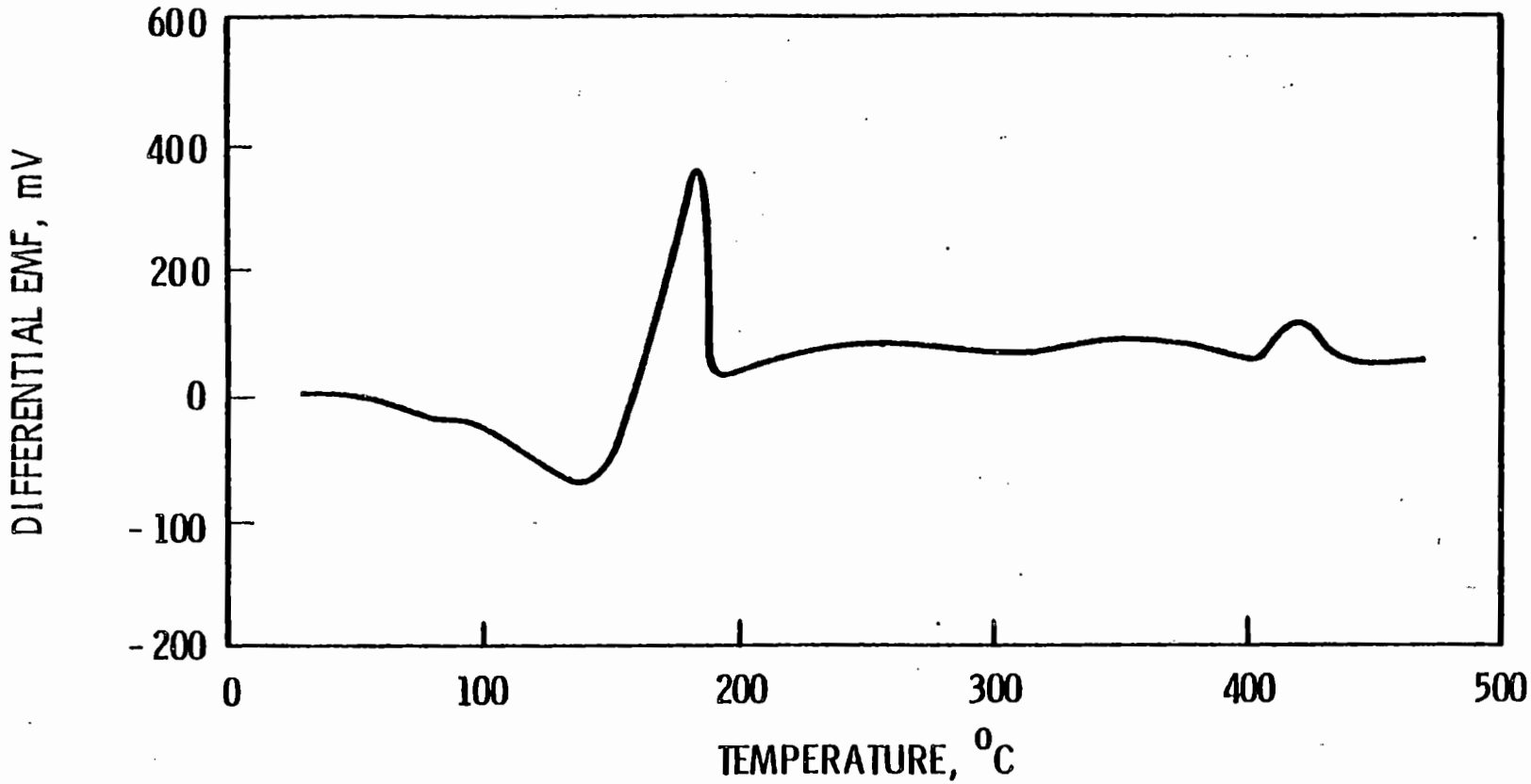

RCP7906-23

FIGURE 8-3. Differential Thermoanalysis of Nitrate-Form Amberlite IRA-97 Resin.

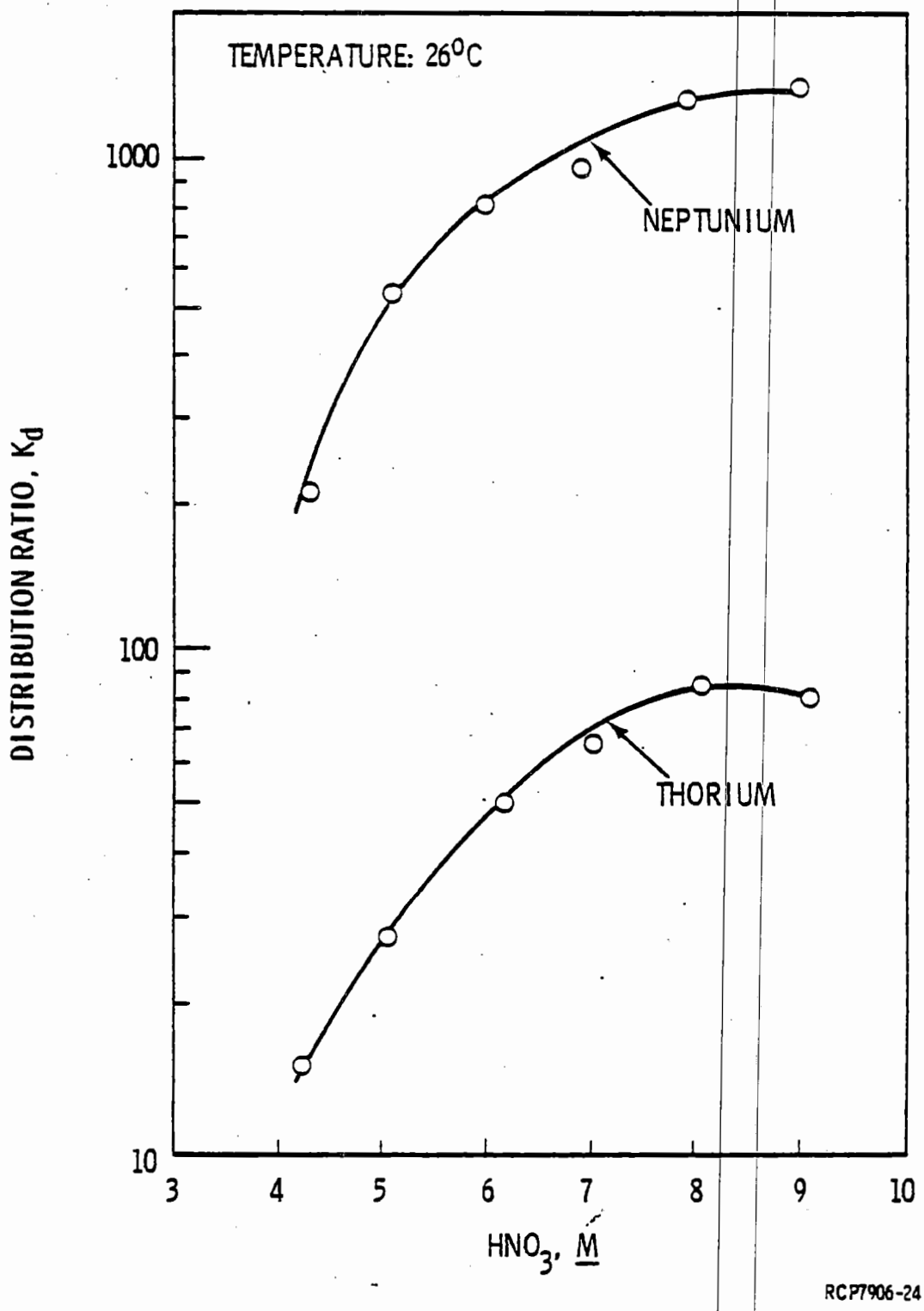

FIGURE 8-4. Neptunium and Thorium Distribution Ratios versus Nitric Acid Concentration Using Amberlite IRA-97 Resin.

8.3.3.4 Kinetics

The rate at which ion exchange equilibrium is approached is of considerable importance in equipment design and operation. If the rate of exchange is slow, more time is required for separation processes, and flow rates must be lowered. Since, for neptunium, the exchange process at the active site is very fast, the rate-determining step is the diffusion of ions to and from the active site.

Kinetics of neptunium sorption on Amberlite IRA-97 resin are illustrated in Figure 8-5 (Ref. 7). Equilibrium between 7.2M HNO_3 and the resin at 26°C is approached after 3 hours.

8.3.3.5 Radiation Stability

No specific information regarding the radiation stability of Amberlite IRA-97 is available. However, polymers and resins similar in chemical structure will show moderate radiolytic degradation after receiving 10^7 rads absorbed dose and considerable degradation after 10^8 rads absorbed dose (Ref. 8).

Assuming all the radiation energy from Np-237 in equilibrium with its daughter, Pa-233, is absorbed by Amberlite IRA-97, 2.7 years would be required for the loaded resin to obtain an absorbed dose of 10^7 rads. This estimate does not consider radiation effects from thorium. Past experience with ion exchange resins shows that degradation can result in pressurization and structural failure of ion exchange columns (Ref. 9).

8.3.4 Ion Exchange Process Cycle Technology

Purification of neptunium by ion exchange first involves pretreatment of Amberlite IRA-97 resin followed by loading the neptunium in the IV valence state on the resin. Undesired contaminants, such as uranium, plutonium, and fission products, are preferentially washed off the loaded resin in a series of controlled batch scrubs. After decontamination, the neptunium is removed from the resin by eluting with dilute nitric acid into the product tank (TK-Q6) for valence adjustment and loadout.

8.3.4.1 Resin Pretreatment

Prior to the loading step, the last solution passed through the T-Q4 column in the previous run is normally the low acid eluent (0.35M HNO_3). To condition the resin for adsorption of $Np(NO_3)_6^{2-}$, about two bed volumes of 6.0M HNO_3 - 0.1M N_2H_4 are passed through the column immediately before the load cycle.

9413275.1281

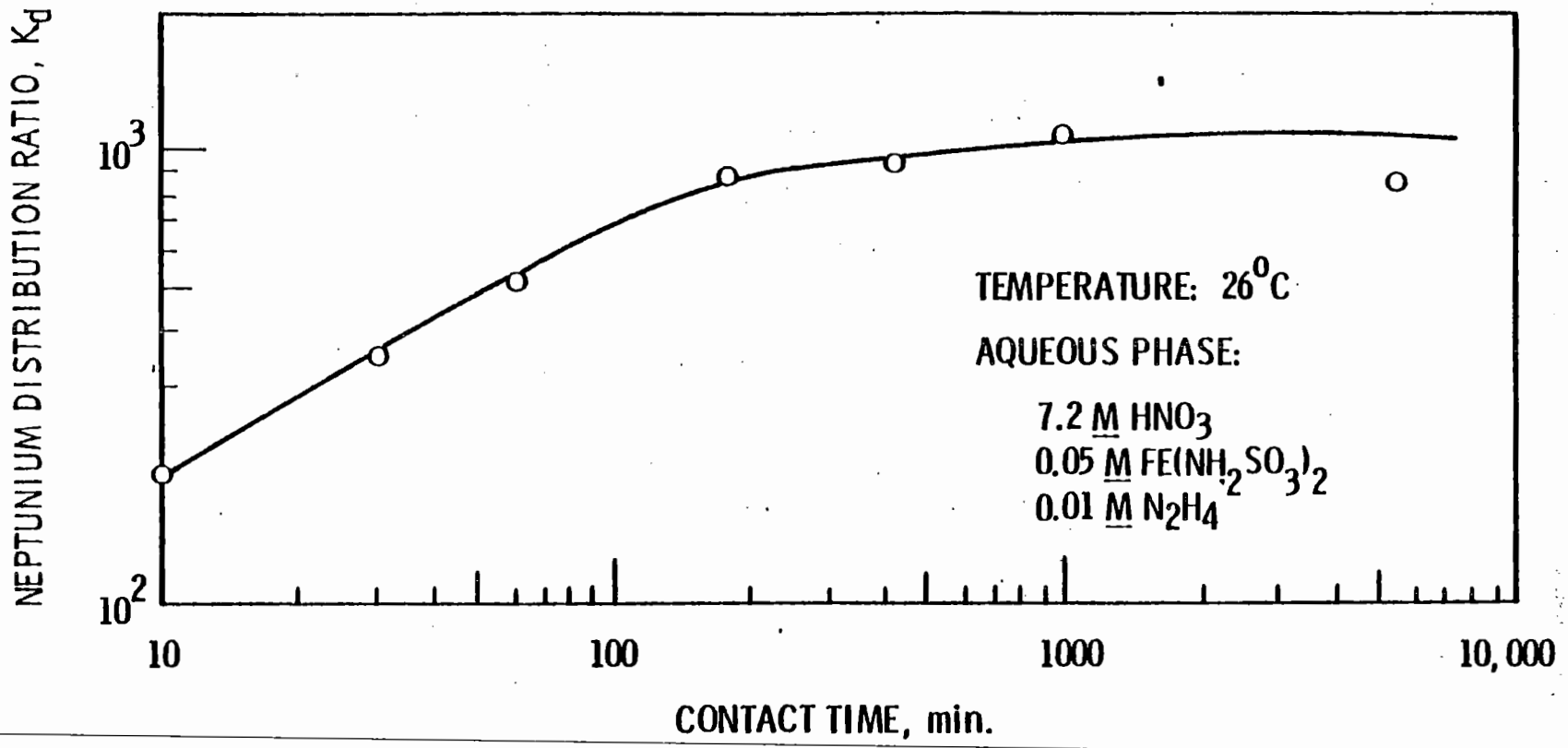

RCP7906-25

FIGURE 8-5. Kinetics of Neptunium (IV) Sorption on Amberlite IRA-97 Resin.

8.3.4.2 Loading

Neptunium feed is adjusted to the (IV) valence state in the makeup and feed tank (TK-Q3) by adding nitric acid and hydrazine. A 0.1M hydrazine concentration and a 6.3M nitric acid concentration will convert neptunium to the (IV) state when heated to 60°C for 1 hour.

The resin is loaded by passing approximately seven bed volumes (310 liters) of feed downflow through the 3X column. The nominal 6 g Np/ℓ in the feed can be loaded on the resin to concentrations as high as 30 to 40 g/ℓ, even from feedstocks containing up to 100 g Th/ℓ. The feed rate is typically 120 mℓ/min (43.2 g Np/hr).

Load cycle effects of nitric acid, flow rate, and temperature are shown in Figures 8-6, 8-7, and 8-8, respectively (Ref. 7). Unless otherwise noted, all data in these figures are for 6.3M nitric acid - 0.01M ferrous sulfamate - 0.01M hydrazine solutions containing 25.7 g Th/ℓ and 5.1 g Np/ℓ. For these conditions, sorption and breakthrough behavior of thorium is relatively insensitive to changes in feed acidity, flow rate, and column temperature. As could be expected for the primary species being exchanged, sorption and breakthrough behavior of neptunium is more sensitive than thorium to changes in all these parameters. For example, neptunium loads more efficiently in 7 and 8M nitric acid feeds than from 6.3M acid (Figure 8-6). Also, lower feed rates (Figure 8-7) and higher bed temperatures (Figure 8-8) act to increase neptunium loading.

8.3.4.3 Decontamination Scrubs

Following the load cycle, a plutonium scrub cycle consisting of 6.7M nitric acid, 0.1M ferrous sulfamate, and 0.1M hydrazine is used when the plutonium concentration is greater than 0.5 g Pu/1000 g Np. Ferrous sulfamate, hydrazine, and strong acid are used in this and other scrubs to maintain tetravalent neptunium to prevent undesired neptunium elution. Normally, plutonium concentrations are low enough following the J Cell solvent extraction process that the plutonium scrub is not needed.

A mixed nitric-hydrofluoric acid scrub is used to remove Zr-95, Nb-95, and other undesirable fission products from the loaded resin bed. Thorium and small amounts of neptunium are also removed during the fission product wash cycle. The effects of acidity, flow rate, and column temperature on thorium and neptunium scrubbing are plotted in Figures 8-9 and 8-10 (Ref. 7).

Each column volume of fluoride fission product scrub solution (after the first) removes about 3% of the neptunium loaded on Amberlite IRA-97 resin. This wash solution must be recycled to the stripper-concentrator to recover lost neptunium. To minimize such recycle, the fission product wash volume should be kept to the minimum required for adequate removal of fission products and thorium.

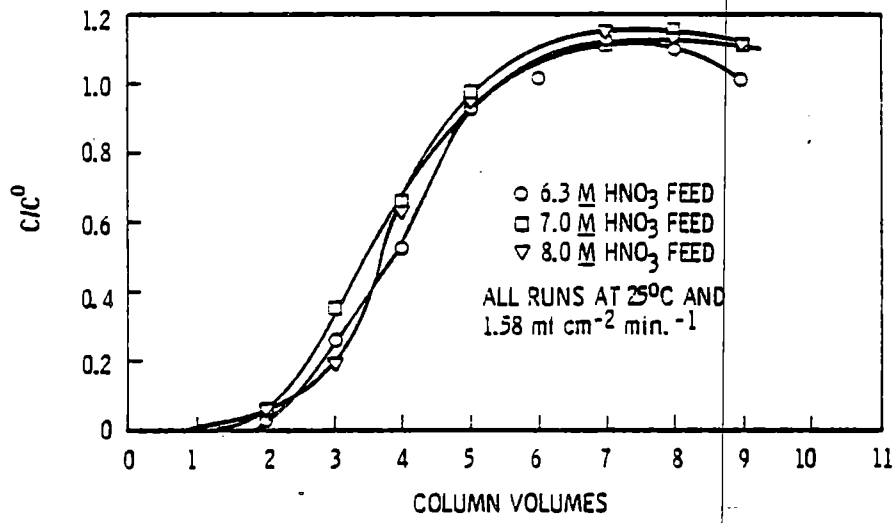

a) THORIUM

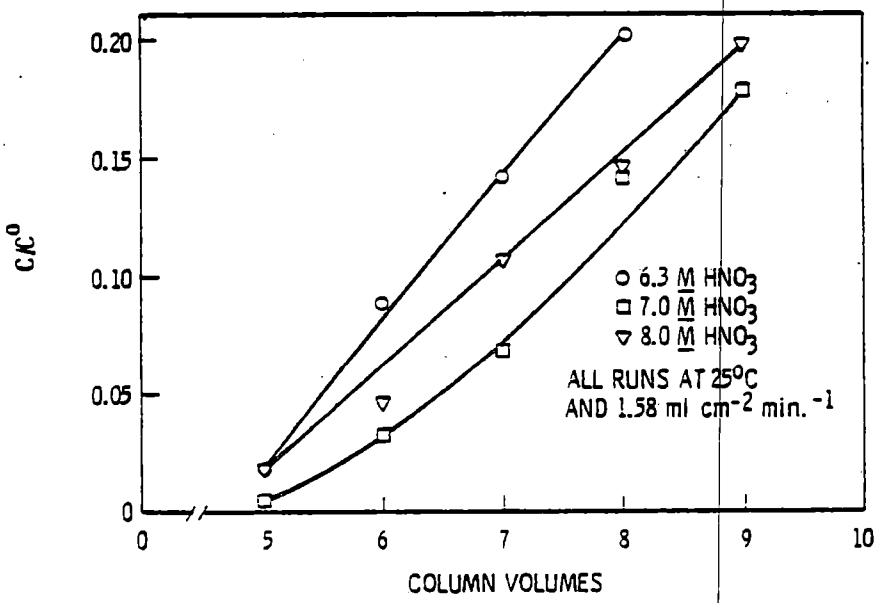

b) NEPTUNIUM

(C/C^0 = CONC. IN EFFLUENT / CONC. IN INFLUENT)

RCP7906-26

FIGURE 8-6. Effect of Feed HNO_3 Concentration on Column Loading Cycle.

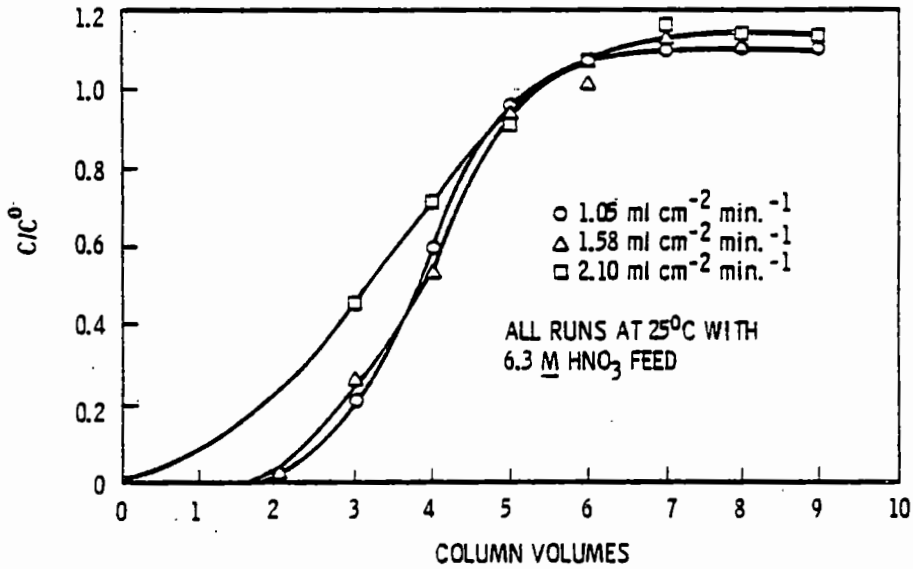

a) THORIUM

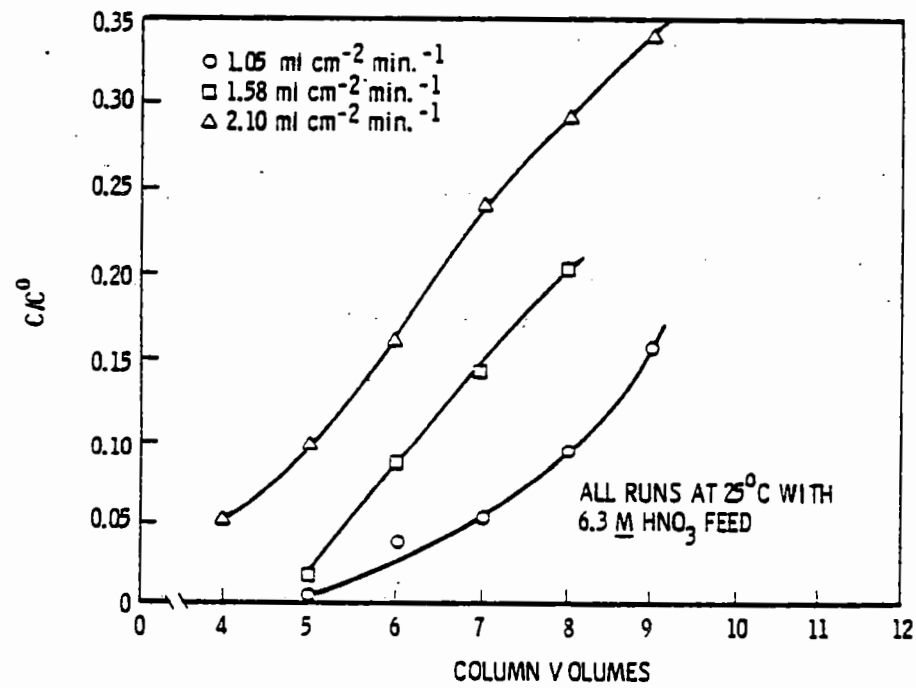

b) NEPTUNIUM

(C/C^0 = CONC. IN EFFLUENT/CONC. IN INFLUENT)

RCP7906-27

FIGURE 8-7. Effect of Feed Flow Rate on Column Loading Cycle.

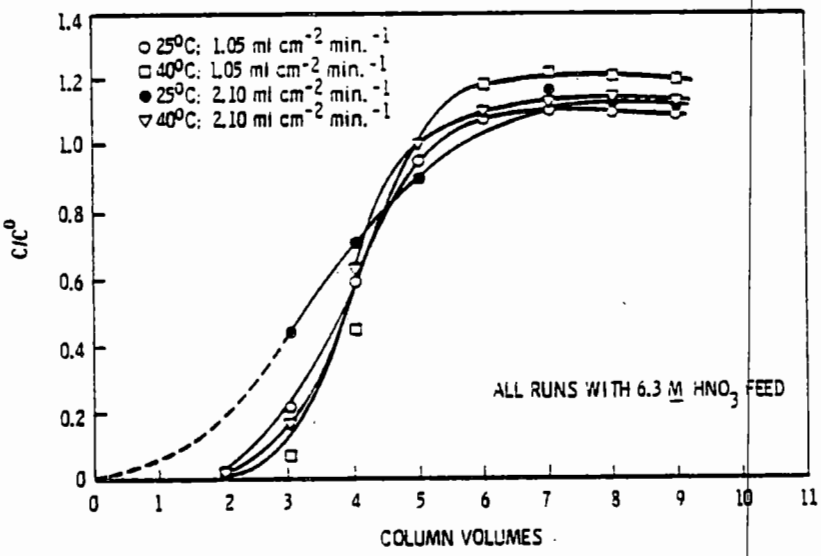

a) THORIUM

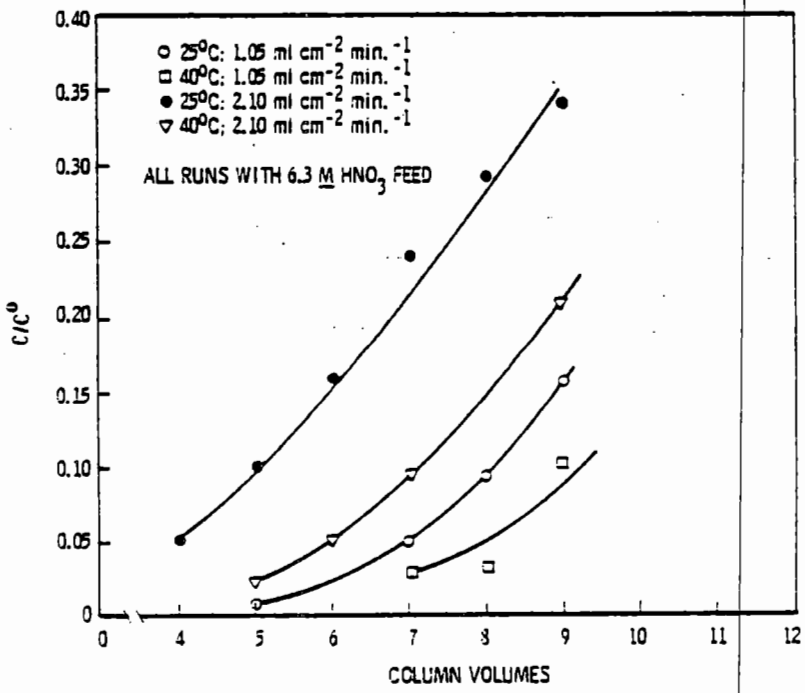

b) NEPTUNIUM

(C/C^0 = CONC. IN EFFLUENT / CONC. IN INFLUENT)

FIGURE 8-8. Effect of Temperature on Column Loading Cycle.

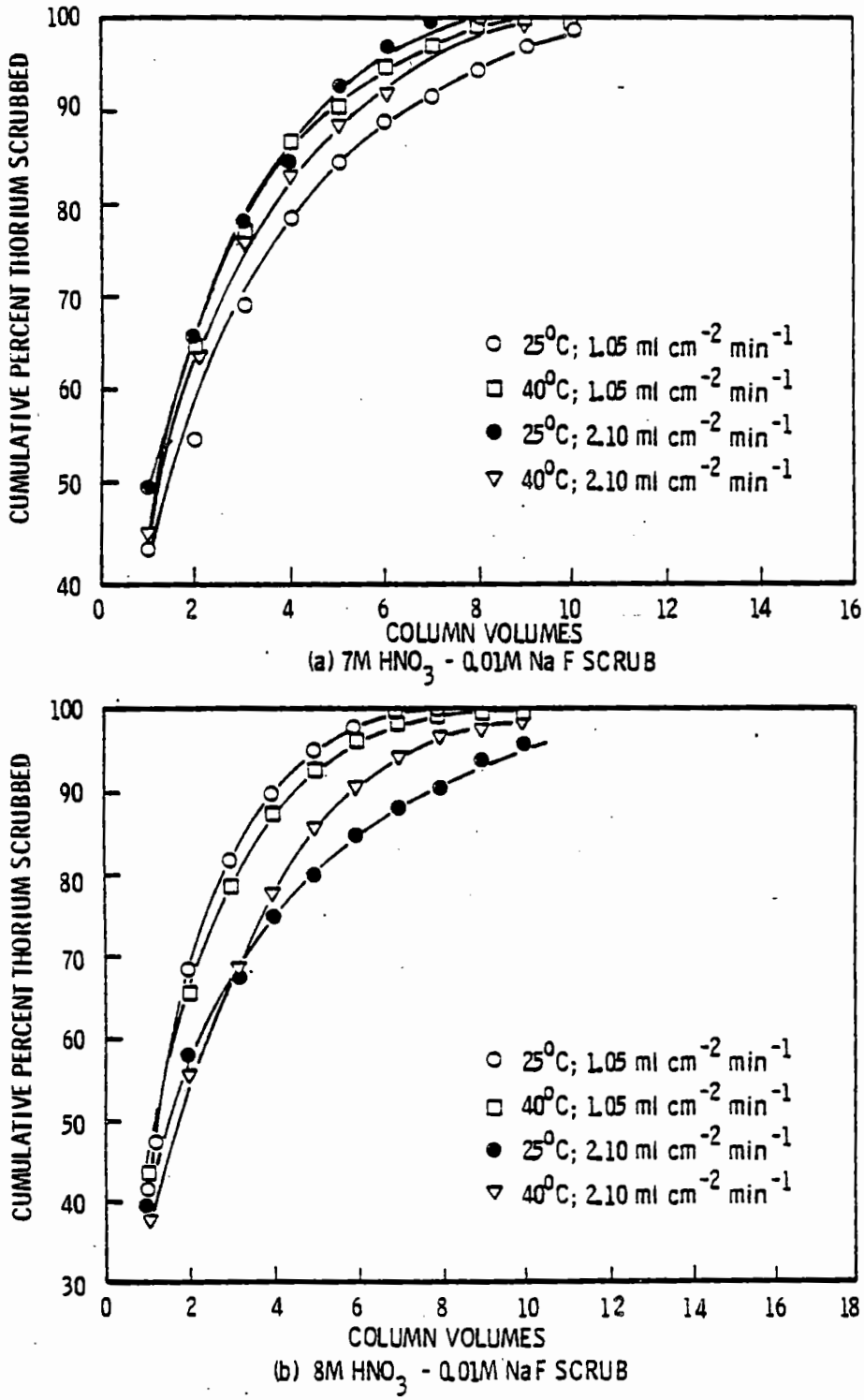

FIGURE 8-9. Thorium Scrub Behavior in Fission Product Wash Cycle.

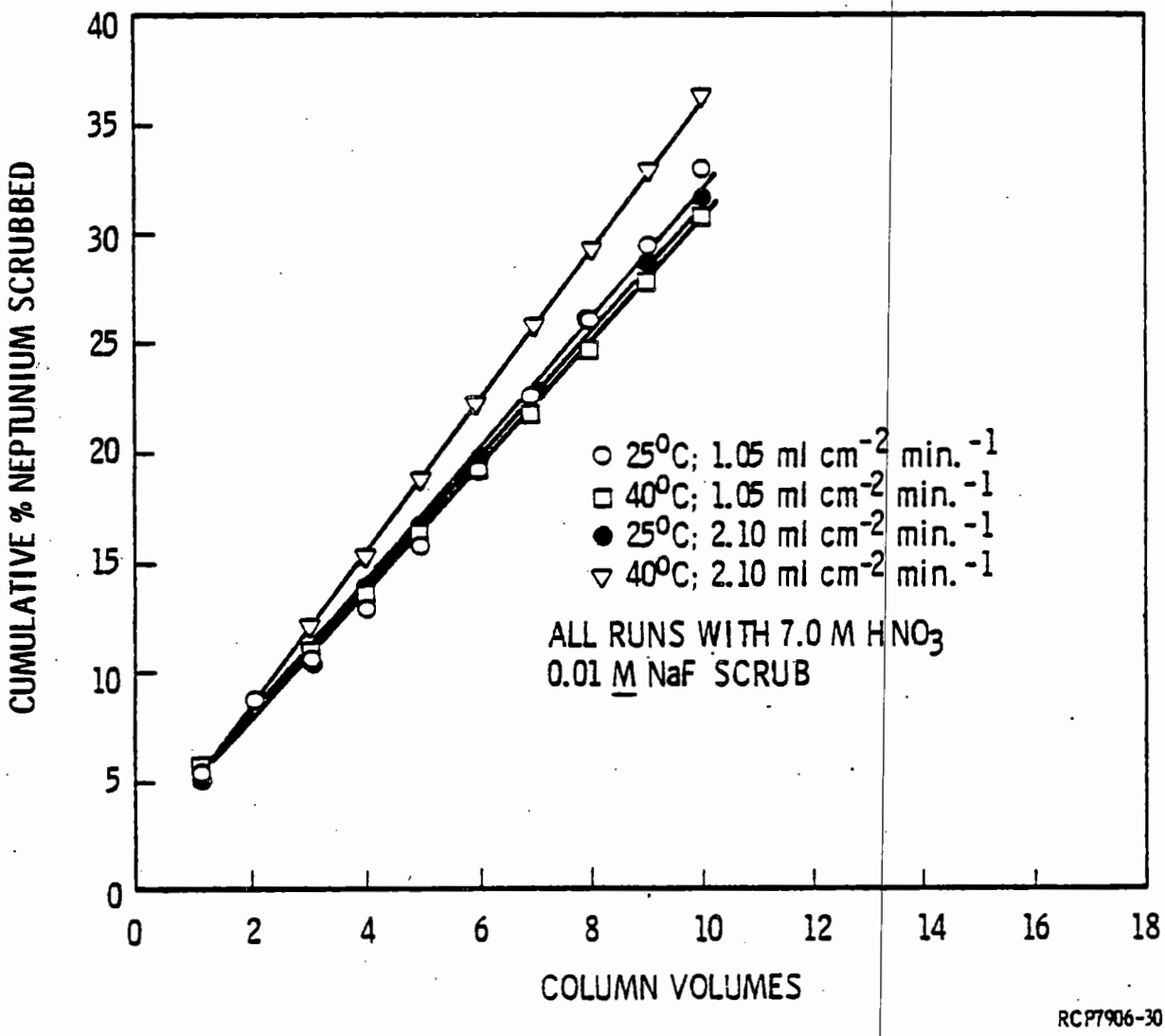

FIGURE 8-10. Neptunium Scrub Behavior in Fission Product Wash Cycle.

As seen in Figure 8-9, at least three column volumes of wash are required to remove 75% of the thorium remaining on the loaded resin.

Fluoride remaining in the column from the fission product wash is removed by a fluoride scrub consisting of 8.0M HNO_3 and 0.1M N_2H_4. As shown in Table 8-3, Amberlite IRA-97 generally gave excellent fission product decontamination factors at 25°C during the 13 plant runs conducted in 1972. Thorium decontamination was very high and far exceeded that attained with the formerly used Dowex 21K resin in most cases. However, the thorium content of the neptunium product exceeded the ≤3 wt % specification in five of the runs due to processing of feeds with extremely high thorium contents of 7 to 114 g Th/ℓ as compared to 3.5 to 12 g Np/ℓ. This problem should not recur as approximately 370 lb (169 kg) of thorium was flushed from the system and was transferred to an underground storage tank during the plant shutdown period.

TABLE 8-3. Neptunium Purification With Amberlite IRA-97 Resin -- Plant Performance.

Average Np Recovery, %	75
Range of Recoveries, %	40 to 102
Decontamination Factors*	
Thorium	40 to 16,000
Ru-106-Rh-106	16 to 530
Zr-95-Nb-95	2 to 420
Pa-233	<1 to 100,000
Uranium	140 to 192,000

*Decontamination Factor =

$$\frac{\text{Np Concentration in Product}}{\text{Np Concentration in Feed}} \times \frac{\text{Contaminant Concentration in Feed}}{\text{Contaminant Concentration in Product}}$$

8.3.4.4 Elution

Purified neptunium is recovered from the resin by elution with approximately three column volumes of dilute nitric acid (0.35M) in which the neptunium nitrate complex dissociates. The product elution is carried out in three distinct but continuous steps: forecut, product elution, and aftercut. During the forecut, strong acid remaining from the fluoride wash is displaced as the neptunium will not come off the resin in the presence of strong acid. When neptunium appears in the effluent, as observed in a sight glass, the product cut begins and continues until the effluent color changes from green to clear. At this point, the aftercut is taken to remove residual neptunium from the resin. Both fore- and aftercuts are reprocessed with the next run as they contain small amounts of neptunium. As Figure 8-11 illustrates, neptunium elutes from Amberlite IRA-97 in a very narrow volumetric band, even at 25°C. As a result, high product concentrations are obtained with minimal fore- and aftercut neptunium concentrations.

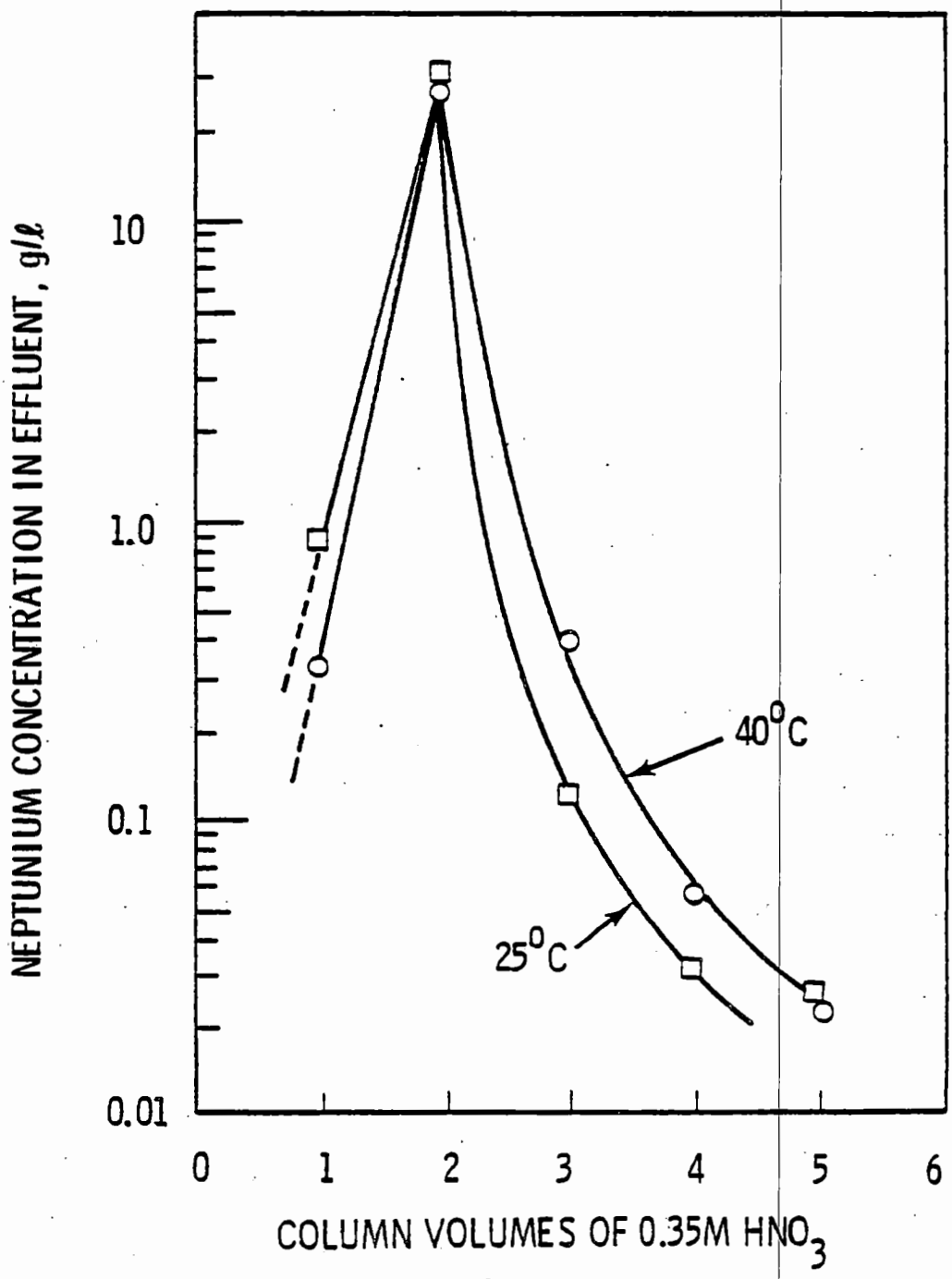

RCP7906-31

FIGURE 8-11. Elution of Neptunium From Amberlite IRA-97 Resin.

9413275.1289

8.4 GENERAL SAFETY PRECAUTIONS

The list of recommended safety precautions shown in the Appendix were compiled from operating experiences with nitrate-form ion exchange resin (Ref. 9).

8.5 REFERENCES

1. Kirk, R. E. and D. F. Othmer, Encyclopedia of Chemical Technology, 2nd Edition, Vol. II, pp. 871-872, 1963.

2. Burney, G. A., "Anion Exchange of Neptunium in Nitrate Solutions," DP-531, E. I. Dupont de Nemours Co., Aiken, South Carolina, 1960.

3. Duckworth, J. P., "Purex Neptunium Recovery and Purification Information Manual," Appendix A, HW-77678, General Electric Co., Richland, Washington, April 1963.

4. Schulz, W. W. and Glen E. Benedict, "Neptunium-237: Production and Recovery," TID-25955, Atlantic Richfield Hanford Co., Richland, Washington, p. 36, October 1972.

5. Rathvon, H. C. et al., "Recovery of U-233 from Irradiated Thoria," Thorium Fuel Cycle, Proceedings of Second International Thorium Fuel Cycle Symposium, Gatlinburg, Tennessee, May 3-6, 1966, USAEC Report CONF-660524, pp. 765-824, February 1968.

6. "Amberlite XE-270 for Uranium Recovery," Technical Bulletin, Rohm and Haas Company, Philadelphia, Pennsylvania, (date unavailable).

7. Schulz, W. W., "Application of Amberlite XE-270 Resin to Purification of Neptunium," ARH-SA-149, Atlantic Richfield Hanford Company, Richland, Washington, p. 25, May 1973.

8. Egorov, E. V. and P. D. Novelov, "Action of Ionizing Radiation on Ion Exchange Materials," Israel Program for Scientific Translations, Jerusalem, pp. 58-66, 1967.

9. Miles, F. W., "Ion-Exchange-Resin System Failures in Processing Actinides," Nuclear Safety, Vol. 9, No. 5, pp. 394-406, September - October 1968.

APPENDIX

PRECAUTIONARY MEASURES RECOMMENDED IN THE USE OF RESINS[1]

A. Measures Associated with the Chemistry of Resins[2]

1. Avoid drying of resin either in use or in storage.
2. Check for dark brown areas in the resin that may indicate nitration and possible thermal instability of the resin.
3. Observe predetermined safe temperature limit.
4. Observe predetermined safe nitric acid concentrations.
5. Add sulfamic acid or hydrazine to nitric acid solution to react with nitrite ion impurity.
6. Observe predetermined safe contact time limit between resin and specified concentrations of nitric acid.
7. Limit ionic loading to the predetermined safe value.
8. Avoid addition of extraneous ions and materials to resin.[3]

B. Measures Generally Applicable to Safe Chemical Processing[4]

1. Provide pressure relief valve on column to avoid rupture.
2. Limit dimensions of column to safe size.
3. Provide adequate blending of all nitric acid solutions.
4. Monitor concentrations of all streams.
5. Monitor temperatures in column.

---

[1] Each section is listed in approximate order of descending importance.

[2] The safe limits may be unknown and cannot therefore be stated without definitive tests.

[3] That is, by using water and chemicals free of contaminants.

[4] As with the measures in Group A, values or limits would need to be determined for the specific conditions being used.

6. Provide high-temperature alarm so that column is flushed internally with water when alarm sounds.[5]

7. Observe predetermined precautionary measures when equipment stands idle.

8. Vent column when not in use.

9. Limit amount of radioactive materials processed to predetermined safe values.

10. Improvise cautiously and with adequate safety protection when processing with off-standard conditions.

11. Follow tested procedures.

12. Have adequate cleanup during and following maintenance.

13. Provide an external column flush.[5]

14. Install mechanism, such as an agitator, to minimize risk of forming stagnant air pockets in column.

15. Regenerate resin with a continuous flow of nitric acid to dissipate some heat of reaction away from the column.

16. Limit bed volume of resin to predetermined safe size.

17. Provide good heat transfer from column by internal cooling coils or external cooling jacket.

---

[5]Subject to limitations necessary to make the system critically safe.

THIS PAGE INTENTIONALLY
LEFT BLANK

CONTENTS

CHAPTER 9.0 ACID RECOVERY AND GASEOUS FISSION PRODUCT WASTE HANDLING TECHNOLOGY

9.1 ACID RECOVERY TECHNOLOGY 9-1
- 9.1.1 Acid Removal from High-Level Waste 9-1
- 9.1.2 Nitric Acid Absorption 9-20
- 9.1.3 Absorption of Nitrogen Oxides in the Backup Facility 9-21
- 9.1.4 Vacuum Fractionation of Nitric Acid 9-27

9.2 GASEOUS FISSION PRODUCT WASTE HANDLING TECHNOLOGY 9-32
- 9.2.1 Iodine 9-32
- 9.2.2 Tritium 9-38
- 9.2.3 Krypton-85 9-38
- 9.2.4 Carbon-14 Production and Control 9-39

9.3 REFERENCES 9-39

FIGURES:
- 9-1 Nitric Acid - Water Boiling Points -- Liquid Vapor Compositions 9-3
- 9-2 Effects of Sugar and Sodium Nitrite Reductants on Volatilization of Ruthenium from 1WF. 9-5
- 9-3 Effect of Nitric Acid Concentration on RuO_4 Vapor Pressure 9-6
- 9-4 Effect of Sodium Nitrate Concentration on RuO_4 Vapor Pressure 9-7
- 9-5 Oxidation of Sucrose 9-9
- 9-6 Destruction of Nitric Acid by Sucrose Addition to 1WW 9-11
- 9-7 Effect of 1WW Composition on Denitration Rate 9-12
- 9-8 Effect of Iron on Destruction of Nitric Acid by Sucrose 9-14
- 9-9 Optimum Sugar Addition for Denitration of Zirconium Acid Waste 9-16
- 9-10 Denitration Rate of Acid Waste by Sucrose 9-17
- 9-11 Destruction Rate of Sucrose by Acidic Waste 9-18
- 9-12 Comparison of Visual Opacity to Theoretical Opacity for NO_2 Gas Plumes 9-25
- 9-13 Comparison of Statistically-Based Experimental and Theoretical NO_2 Opacity Relationships 9-26
- 9-14 Schematic of the Acid Fractionator. 9-28
- 9-15 Acid Fractionator Operating Diagram 9-30

CONTENTS (continued)

TABLES:

9-1 Compositions of Waste from Processing Zircaloy-clad and Aluminum-clad Fuel Elements 9-13
9-2 Denitration of Synthetic Acid Waste by Various Sugar Forms 9-19
9-3 Composition of Purex Dissolver Off-Gas. 9-23
9-4 Effect of Temperature on Iodine Retention in Silver Nitrate Bed 9-34
9-5 Chloride Specifications and Content of Zirflex Process Chemicals 9-37

CHAPTER 9.0 ACID RECOVERY AND GASEOUS FISSION PRODUCT WASTE HANDLING TECHNOLOGY

Radioactive liquid, solid, and gaseous wastes are generated at the Purex Plant during the reprocessing of spent nuclear fuels. These wastes are treated at Purex to control radioactive and toxic releases to the environment at acceptable levels, and to recover nitric acid for reuse in the plant. United States Department of Energy (DOE) environmental release limits, Environmental Protection Agency (EPA) environmental release limits, and Washington State environmental release limits must be complied with for all Purex releases to the environment. Wastes containing radioactivity in quantities greater than acceptable limits are treated to recover uranium, plutonium, strontium, and cesium. The waste is then neutralized, concentrated, and stored in underground double-shell tanks while awaiting DOE decisions on an acceptable process and product form for final storage.

This chapter contains technology for distillation and sugar denitration of aqueous waste, absorption of nitrogen oxides from gaseous waste, and vacuum fractionation of nitric acid to obtain a concentrated reusable nitric acid. In addition, some proven techniques and methods being developed for removing radionuclides from Purex off-gas streams are presented.

9.1 ACID RECOVERY TECHNOLOGY

Nitric acid is used at the Purex Plant to dissolve uranium and provide "salting" strength in solvent extraction operations. The main reason for selecting nitric acid is that it can be recovered and used again without generating large volumes of contaminated aqueous waste. Nitric acid is recovered at the Purex Plant by evaporation and denitration of high-level waste and absorption of nitric acid and nitrogen oxides from off-gas streams, and is concentrated by vacuum distillation to 50% acid for reuse in the process. The recovery of nitric acid provides a substantial economic benefit by reducing the quantity of acid purchased, and by reduction in the volume of high-activity wastes which are converted to an interim storage form.

9.1.1 Acid Removal from High-Level Waste

The aqueous raffinate from the HA column (HAW stream) is about 3M HNO_3 and contains greater than 99% of the fission products charged to the dissolvers. This stream contains most of the nitric acid used for salting strength in the solvent extraction system. Most of the acid is removed from the high-level waste by distillation to allow reuse of the nitric acid in the Purex Plant. Distillation of the nitric acid is controlled to prevent excessive contamination from entering the recovered acid, which would adversely affect the uranium, plutonium, or neptunium decontamination in the solvent extraction process. Sugar is added to the feed tank to suppress ruthenium volatilization during distillation. Two de-entrainment

pads in the top of the concentrator provide additional decontamination of the recovered nitric acid. Aluminum nitrate is added to the T-F5 absorber for corrosion protection to complex any fluoride that vaporizes or is entrained from the E-F6 concentrator.

9.1.1.1 Distillation

Distillation of nitric acid from the high-level waste in the E-F6 concentrator is a continuous process. Feed solution (1WF) is continuously fed to the concentrator, while vapor (AAF) is continuously removed, and liquid (1WW) overflows from the concentrator at a constant rate to produce an acceptable high-level waste concentration. The concentrator solution is maintained at boiling temperature by applying steam to each of the two tube bundles. As shown in Figure 9-1 (Ref. 1), the concentration of nitric acid vaporized is dependent upon the concentration of nitric acid in the concentrator reboilers.

The vapor exiting the concentrator (AAF) is at equilibrium with the 110°C liquid (1WW) overflowing to Tank F26. The 1WW stream contains 2.8M HNO_3, 0.68M $Al(NO_3)_3$, and 0.23M $NaNO_3$. The nitrate ions associated with the aluminum and sodium provide a salting effect to increase the partial pressure of the nitric acid above that of a comparable nitric acid-water solution. The nitric acid partial pressure for equilibrium with the concentrator solution at 110°C is about 15 mm of mercury. In general, for a given nitric acid concentration in the bottoms, the higher the bottoms aluminum nitrate concentration, the higher the acidity of the overheads (Ref. 2). At flowsheet conditions, the nitric acid and vaporized water are condensed to a concentration of 1.1M HNO_3.

The HAW stream is diluted with condensate from the T-F5 acid absorber to strip nitric acid from the concentrator solution. The condensate addition rate is limited by the maximum boiling capacity of E-F6.

9.1.1.2 Ruthenium Suppression During Distillation

Distillation of nitric acid from high-level radioactive waste must be carried out in a manner that prevents excessive contamination of the acid with fission products. The fission products can affect the quality of the uranium product, and will cause higher radiation fields in the contact maintenance areas of the 206-A Building, which contains the vacuum fractionator and acid storage vaults (U Cell).

Under oxidizing conditions, such as exist in a nitric acid waste concentrator, some ruthenium oxidizes and forms a volatile species, ruthenium tetroxide. As a result, the recovered acidic and nonacidic condensates are excessively contaminated with radioactive ruthenium.

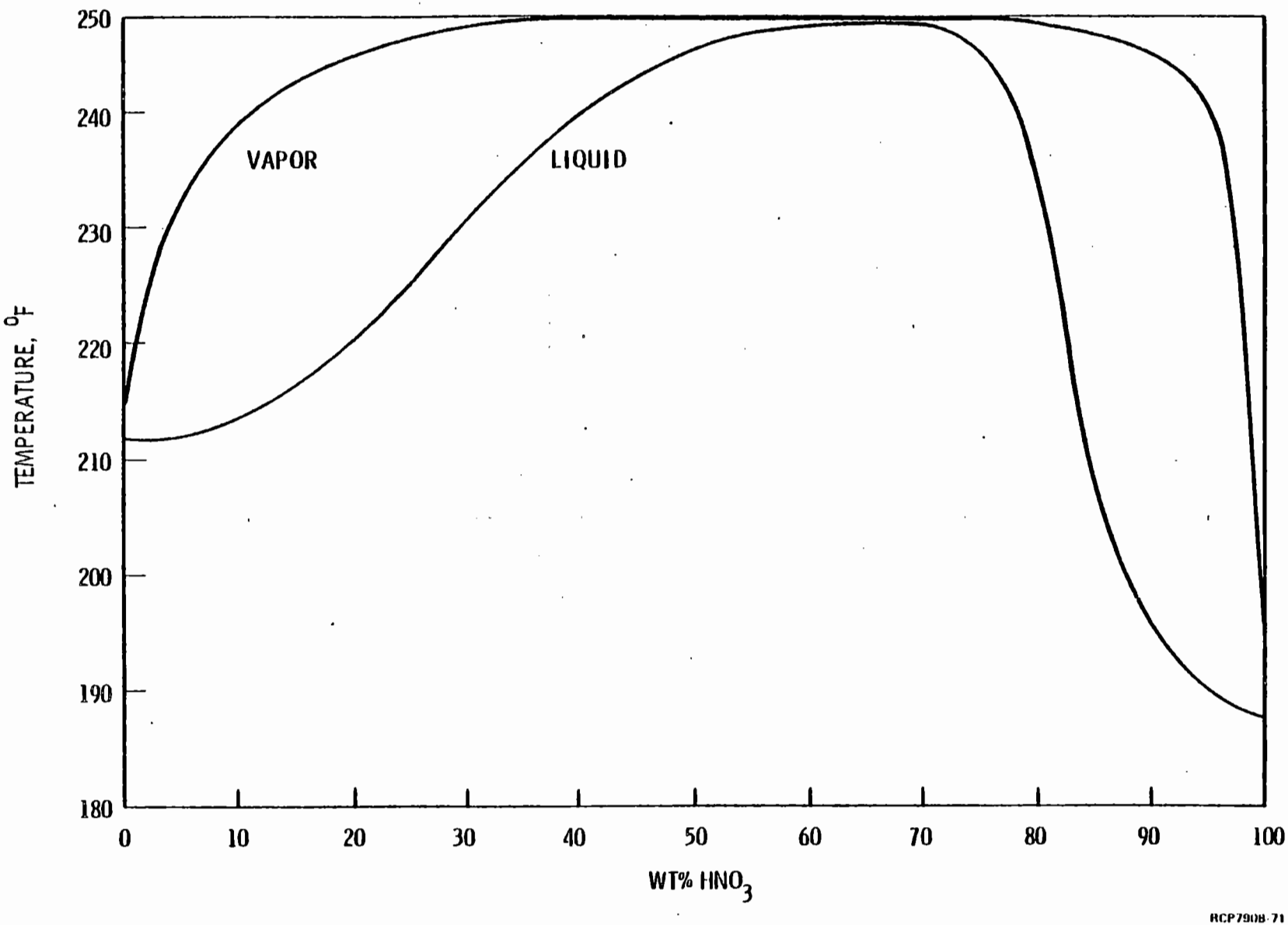

FIGURE 9-1. Nitric Acid - Water Boiling Points -- Liquid and Vapor Compositions.

It has been demonstrated that sodium nitrite will reduce ruthenium to a nonvolatile state, but the cost of the chemical is high and the sodium increases the salt content of the waste which must be stored.

Ruthenium is maintained in a nonvolatile reduced state by adding sugar (sucrose) to the boiling waste in the concentrator feed tank (TK-F7). After entering the concentrator, sugar reacts with the nitric acid and forms a significant amount of nitrite ion, which in turn holds ruthenium in a reduced nonvolatile form. The reaction of sugar and nitric acid does not increase the salt content of the waste, but rather produces minor amounts of nonradioactive gases.

Since 1963, sugar solution (initially 0.001M) has been used in the 1WF stream to suppress ruthenium volatilization in the concentrator. Figure 9-2 (Ref. 3) shows a comparison of ruthenium DF's in the plant-recovered acid in the presence of no reductant, 0.013M $NaNO_2$, and 0.001M sugar in the 1WF. Sugar provided four times the ruthenium DF compared to that for sodium nitrite, which had previously been used as a reductant.

Ruthenium tetroxide vapor pressure is dependent upon the nitric acid concentration of the concentrator bottoms, as shown in Figure 9-3 (Ref. 4). The data in Figure 9-3 were obtained at room temperature when no sugar or metal ions were present. The data indicate that increasing nitric acid concentration decreases the vapor pressure of ruthenium tetroxide. However, the vapor pressure of ruthenium tetroxide increases as sodium nitrate concentration is increased, as shown in Figure 9-4, which shows vapor pressures at room temperature. The presence of other metal ions in solution is believed to enhance the volatility of ruthenium tetroxide also. The vapor pressure of ruthenium tetroxide in nitric acid increases sharply with temperature.

As plotted in Figure 9-2, the calculated zirconium-niobium DF across the concentrator remained essentially constant, thus indicating that the fuel fission product content was also essentially the same during this period. Currently, a concentration of 0.0024M sugar is maintained in the 1WF.

Another advantage to be gained from the sugar addition is a reduced rate of corrosion in the stainless steel acid concentrator vessel. Corrosion of stainless steel by nitric acid is significantly accelerated by the presence of corrosion product chromium in the +6 valence state. It is thought that sugar-generated nitrite shifts the chromium toward the relatively innocuous Cr^{+3} in the $Cr^{+3} \rightleftharpoons Cr^{+6}$ equilibrium (Ref. 3).

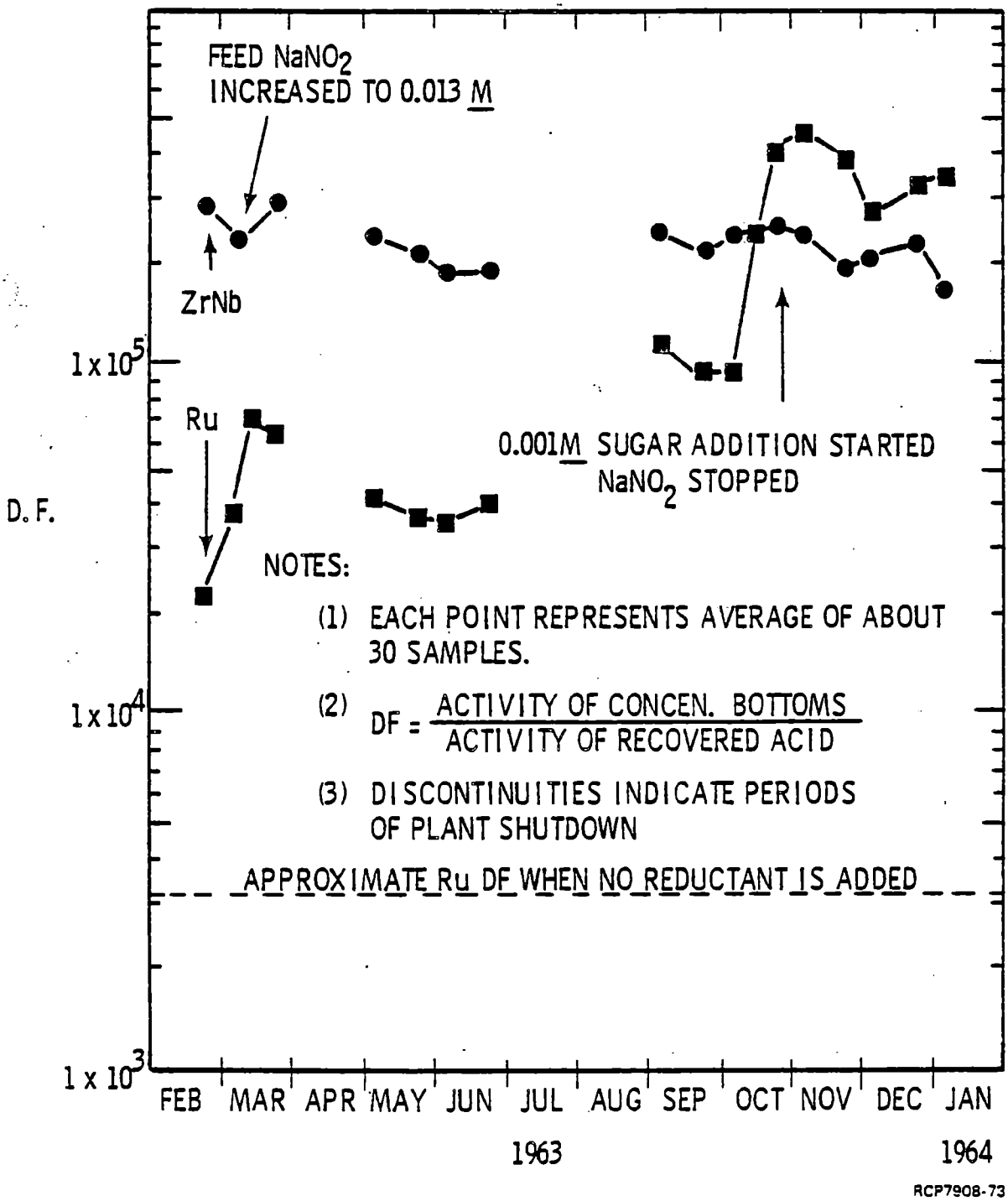

FIGURE 9-2. Effects of Sugar and Sodium Nitrite Reductants on Volatilization of Ruthenium From 1WF.

9413275.1300

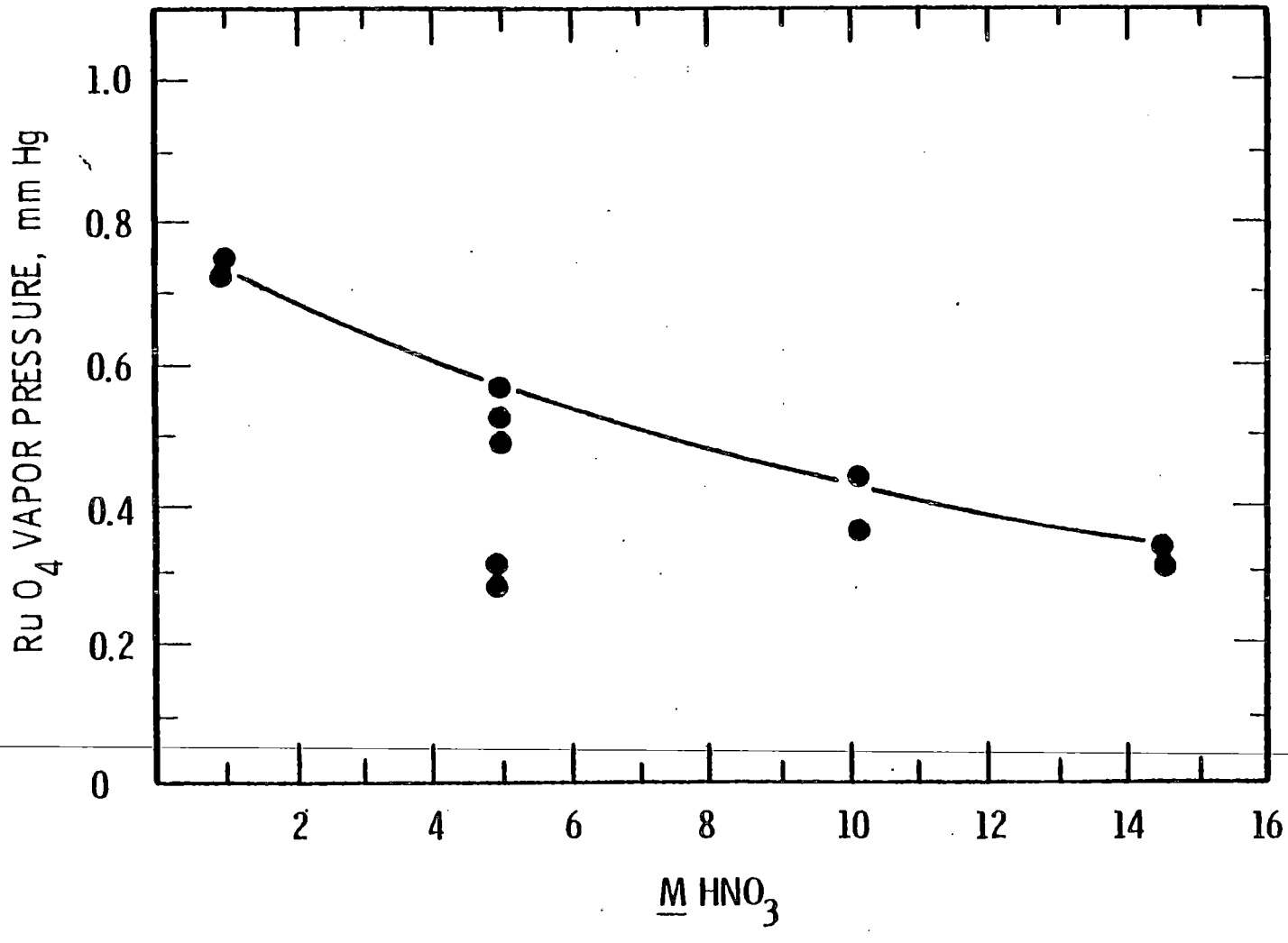

RCP7908-74

FIGURE 9-3. Effect of Nitric Acid Concentration on RuO_4 Vapor Pressure.

9413275.1301

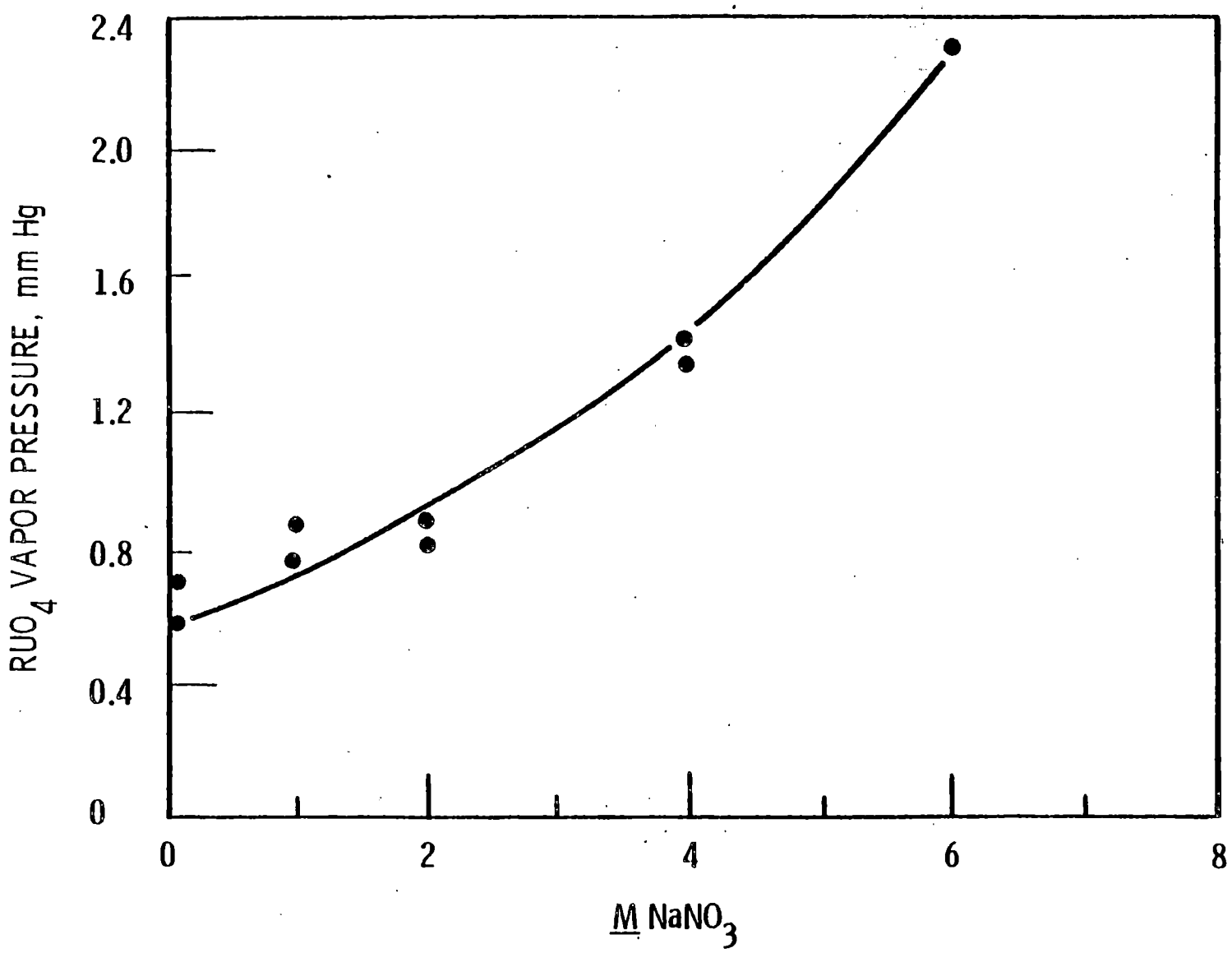

RCP7908-75

FIGURE 9-4. Effect of Sodium Nitrate Concentration on RuO_4 Vapor Pressure.

9.1.1.3 Fluoride Volatility During Distillation

Residual fluoride from the dissolver coating removal step is carried in the solvent extraction feed to the high-level radioactive waste. Aluminum nitrate is added to the feed to reduce the corrosion of stainless steel by complexing the fluoride. The complexed fluoride is not extracted in the HA column, but is discharged to the high-level radioactive waste via the HAW stream. Some fluoride in the waste stream volatilizes during acid distillation in the E-F6 concentrator, and is collected in the acid recovered in the T-F5 absorber. It is assumed that this noncomplexed fluoride volatilizes as hydrogen fluoride (vapor pressure of about 0.02 mm of mercury) from the boiling concentrator solution. Aluminum nitrate is constantly added to the absorber to maintain an aluminum-to-fluoride ratio of three or greater. The aluminum complexes the fluoride, thus preventing excessive corrosion of the stainless steel vacuum fractionator.

9.1.1.4 Sugar Denitration

Sugar denitration is employed in the Purex process to reduce the nitric acid concentration of the high-level waste (1WW) prior to further fractionization of the waste at B Plant and disposal in underground storage tanks. Initially, the high-level radioactive waste was neutralized with caustic prior to storage in underground tanks. In 1962, a continuous formaldehyde denitration process was tried in the plant and difficulties were experienced (Ref. 5). The process proved ineffective due to foaming and plugging of lines when actual plant waste was used instead of synthetic solutions. Plant denitration efficiencies were 50% less than those experienced in the laboratory.

The sugar denitration process was developed to reduce aluminum-clad fuel waste acidity from 10M to a minimum residual acidity of 0.5M free acid (Ref. 6). The process has since proved effective in the plant for denitration of Zirflex waste where the acid concentration is reduced from 2.8M to about 0.95M. The time required for denitration of Zirflex waste is 24 hours for a 2,500-gallon batch of waste. Twelve-hour addition and 12-hour digestion times are required. The sugar denitration reaction is dependent upon nitric acid concentration, metal ion concentration, time, and temperature. However, under any given conditions, the reaction can be controlled by the rate at which sugar is added or by the temperature of the reaction vessel contents.

9.1.1.4.1 Denitration Mechanism

The products of denitration of acidic waste with polyhydroxy compounds such as sucrose ($C_{12}H_{22}O_{11}$) are all gaseous, consisting of oxides of carbon and nitrogen. Sugar (sucrose), upon hydrolysis with acids, yields glucose and fructose in equal amounts. The hydrolysis and oxidation of the glucose portion of the sugar follows a step-wise reaction sequence similar to that shown in Figure 9-5.

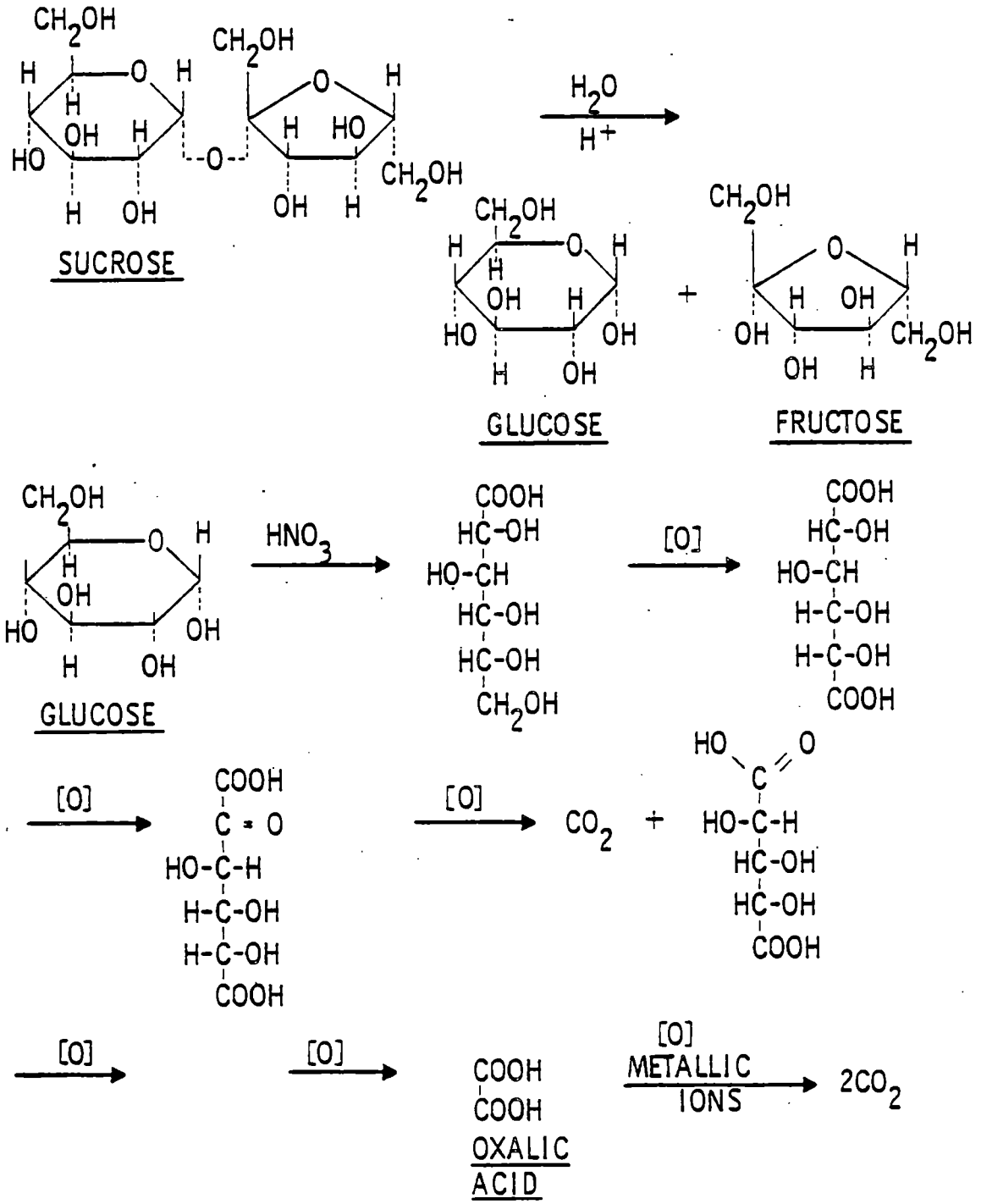

FIGURE 9-5. Oxidation of Sucrose.

The oxidation of fructose follows a reaction sequence similar to that of glucose, and the two hydrolysis reactions and at least three oxidation reactions are required before any evolution of gaseous carbon dioxide will occur. A relatively long induction period of from 6 to 10 minutes has been noted before the oxidation becomes noticeable. The stoichiometric equations for the reactions are thought to be:

$$12HNO_3 + C_{12}H_{22}O_{11} \rightarrow 12CO + 6(NO + NO_2) + 17H_2O \quad (9.1)$$

$$CO + NO_2 \rightarrow CO_2 + NO \quad (9.2)$$

$$12HNO_3 + 24NO \rightarrow 18(NO_2 + NO) + 6H_2O \quad (9.3)$$

$$12HNO_3 + 12CO \rightarrow 6N_2O_3 + 12CO_2 + 6H_2O \quad (9.4)$$

$$24\ HNO_3 + 12CO \rightarrow 24NO_2 + 12CO_2 + 12H_2O \quad (9.5)$$

$$C_{12}H_{22}O_{11} + 48HNO_3 \rightarrow 48NO_2 + 12CO_2 + 35H_2O \quad (9.6)$$

According to the above reactions, the observed efficiency could range to 12 to 48 moles of nitric acid destroyed per mole of sucrose consumed.

9.1.1.4.2 Denitration as a Function of Acid Concentration

Results of studies summarized in Figure 9-6 show that the destruction of nitric acid with sucrose is linear with acid concentration, i.e., 1 mole of sucrose destroys approximately 14 moles of acid at all of the acid concentrations tested (Ref. 7).

9.1.1.4.3 Denitration as a Function of the Metallic Salt Concentration

The stoichiometry of the sucrose denitration reaction (moles of nitric acid destroyed per mole of sucrose fed) and the speed of the reaction with added metal salts were studied. Figure 9-7 (Ref. 8) shows that the destruction of acid is much faster in the waste material than in pure nitric acid. Compositions of the synthetic 1WW, simulating wastes from processing aluminum-clad and Zircaloy-clad fuel elements, used in the tests are shown in Table 9-1.

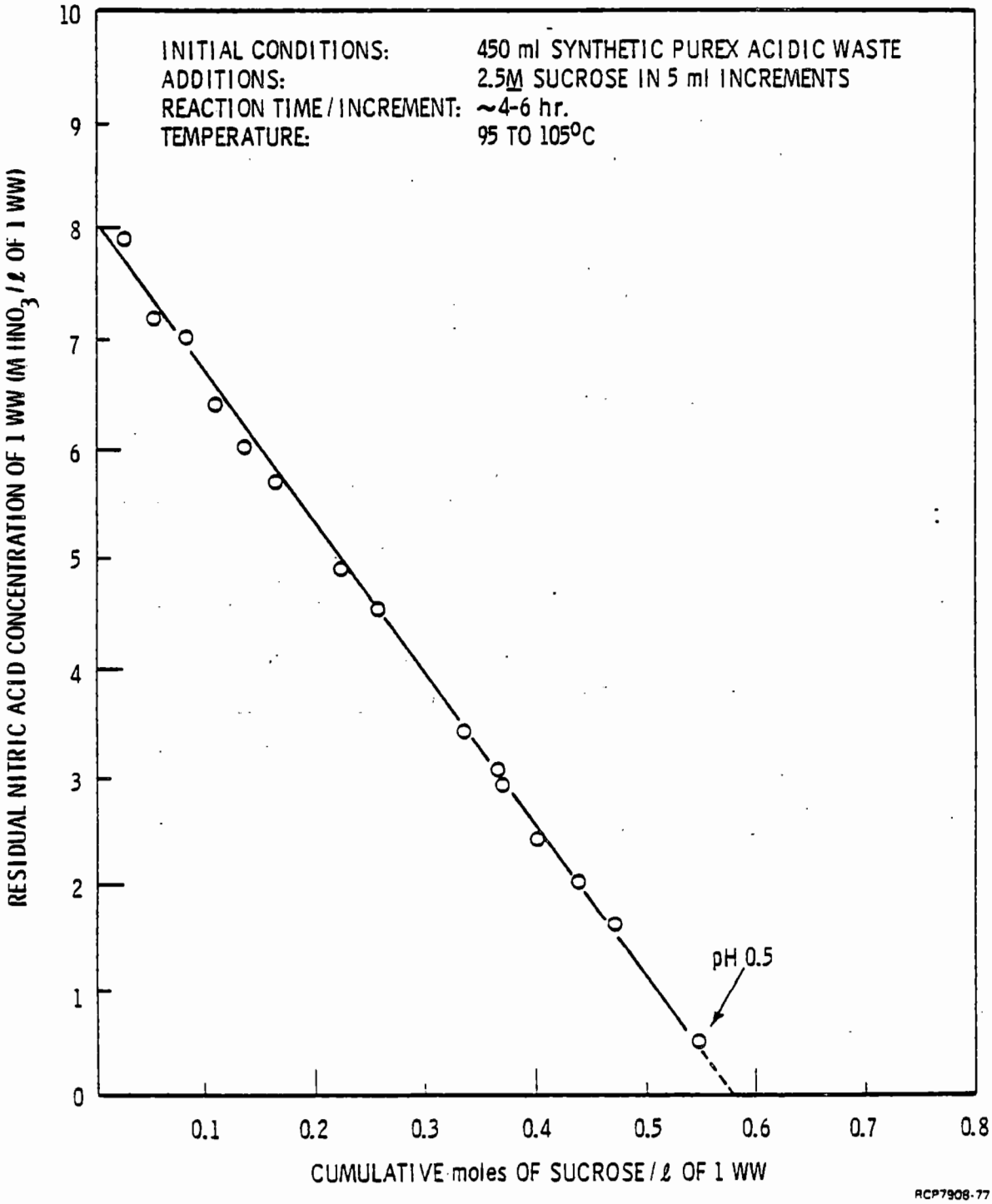

FIGURE 9-6. Destruction of Nitric Acid By Sucrose Addition to 1WW.

9413275.1306

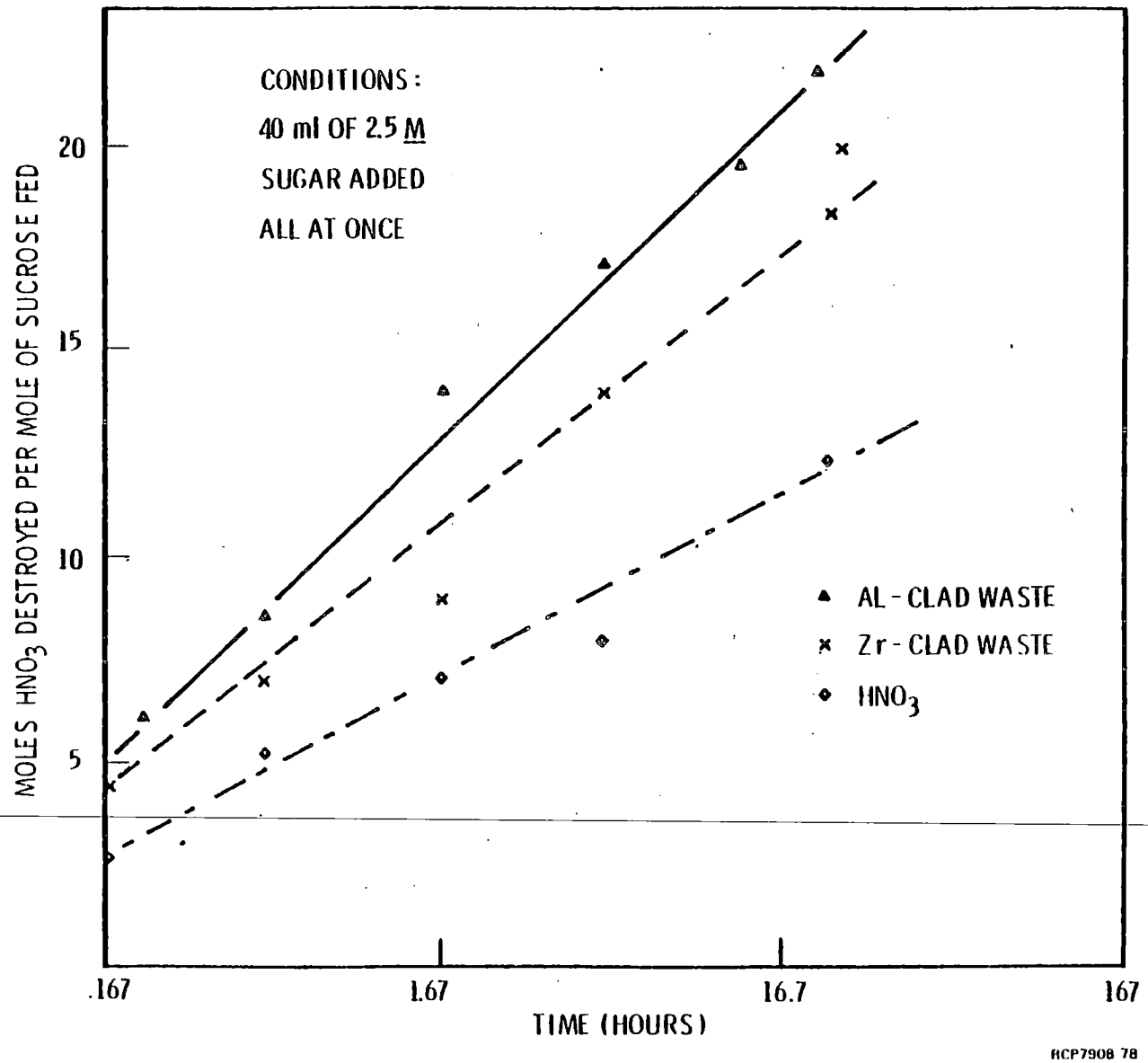

FIGURE 9-7. Effect of TWW Composition on Denitration Rate.

TABLE 9-1. Compositions of Waste from Processing Zircaloy-clad and Aluminum-clad Fuel Elements

Component	Zircaloy Waste, M	Aluminum Waste, M
Al^{3+}	0.68	0.1
Fe^{3+}	0.20	0.8
Ni^{2+}	----	0.2
Cr^{3+}	----	0.1
Na^{+}	----	6.0
F^{-}	0.15	---
HNO_3	7.0	5.6

As shown in Figure 9-8 (Ref. 7), differences between denitration reaction rates can be attributed to differences in ferric ion concentrations. For a reaction time of 24 hours, the moles of nitric acid destroyed per mole of sucrose changes from 11.5 to 20.5 when the ferric ion concentration is increased from 0 to 1M.

A matrix of experiments was run to determine the optimum amount of sugar needed to denitrate a zirconium acid waste (1WW) of the following composition (Ref. 8):

Component	Concentration, M
Al^{3+}	0.68
Fe^{3+}	0.20
F^{-}	0.15
SO_4^{2-}	0.3
Na^{+}	0.4-0.6
Rare Earths	0.01
HNO_3	2-4

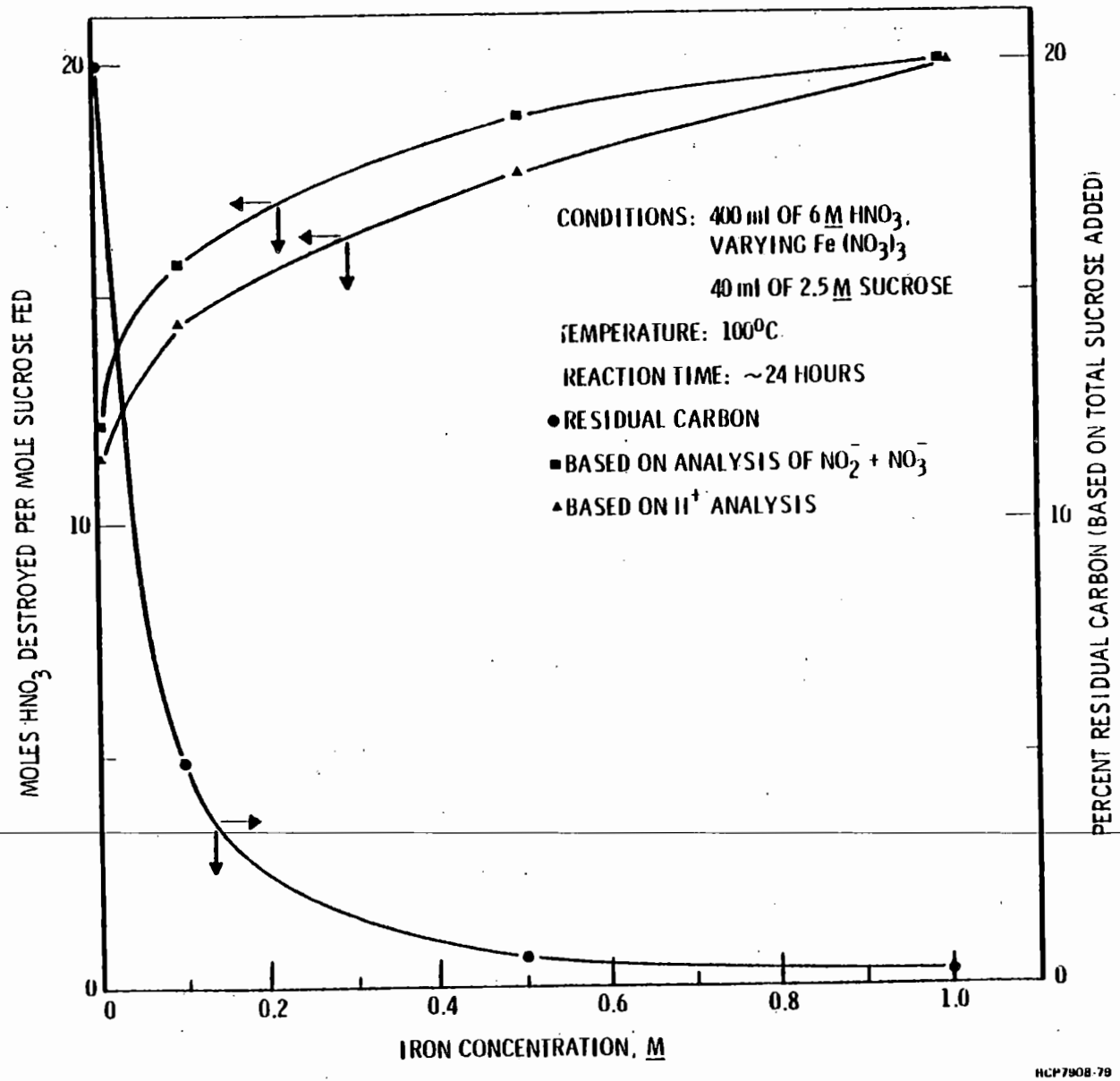

FIGURE 9-8. Effect of Iron on Destruction of Nitric Acid by Sucrose.

As shown in Figure 9-9, the amount of sugar added for denitration of waste containing 2.5 to 3.5M acid should be based on a stoichiometric ratio of acid to sugar in the range of 23.5:1 and 26.5:1. These ratios permit the reduction of acid and carbon content in the waste to acceptable levels (1M H^+ and 2% residual carbon, based on total sucrose added) in a reasonable time (15-21 hours).

9.1.1.4.4 Denitration as a Function of Temperature and Time (Ref. 7)

The initial reaction temperature required for rapid acid destruction by sucrose is approximately 85°C, although it has been noted that once the reaction has started and then stopped, the restart temperature is much lower (approximately 50°C).

The ratio of moles of nitric acid destroyed per mole of sucrose fed improves approximately 10% by increasing the reaction temperature from 85° to 100°C. The acid destruction is not improved with the use of a reaction tower above the reaction vessel, as required for a formaldehyde denitration process. The initial induction period is only 6 to 9 minutes after the initial addition of sugar (i.e., before visible evidence of oxides of nitrogen), and air sparging reduces this period by a factor of 2 to 4.

A number of laboratory batch denitration studies were performed to determine acid destruction as a function of time. Typical results for the denitration of synthetic acidic waste (0.8M iron) with time are shown in Figure 9-10. The results show that 49% of the original nitrate and 37% of the hydrogen ion were destroyed during the first 10 minutes, but only 4% of the total carbon content had been evolved as an oxide. The difference noted between the hydrogen ion and nitrate destroyed during the initial reaction is due to the intermediate formation of organic acids.

To define more fully the rate of sucrose (or residual carbon) destruction, several other batch denitration studies were performed. As shown in Figure 9-11, 60% of the sucrose was destroyed after 60 minutes, 75% after 120 minutes, and 99% after approximately 20 hours.

9.1.1.4.5 Other Potential Sources of Sugar

Batch denitration tests (Ref. 7) were performed to evaluate other potential useful sources of sugar. A "standard liquor" and a "thick juice" were obtained from the Utah-Idaho Sugar Company, Moses Lake, Washington. In addition, a supply of Hawaiian "black strap" molasses was obtained from the Pacific Molasses Company, Portland, Oregon. As shown in Table 9-2, all sugar sources tested compared favorably for denitration with refined sucrose. After 24 hours of reaction, the percent residual carbon and the moles of hydrogen ion destroyed per mole of molasses fed appear high when compared to the other sugars tested. This is probably due to the presence of other reactive carbonaceous materials in molasses which are not reported as sugar.

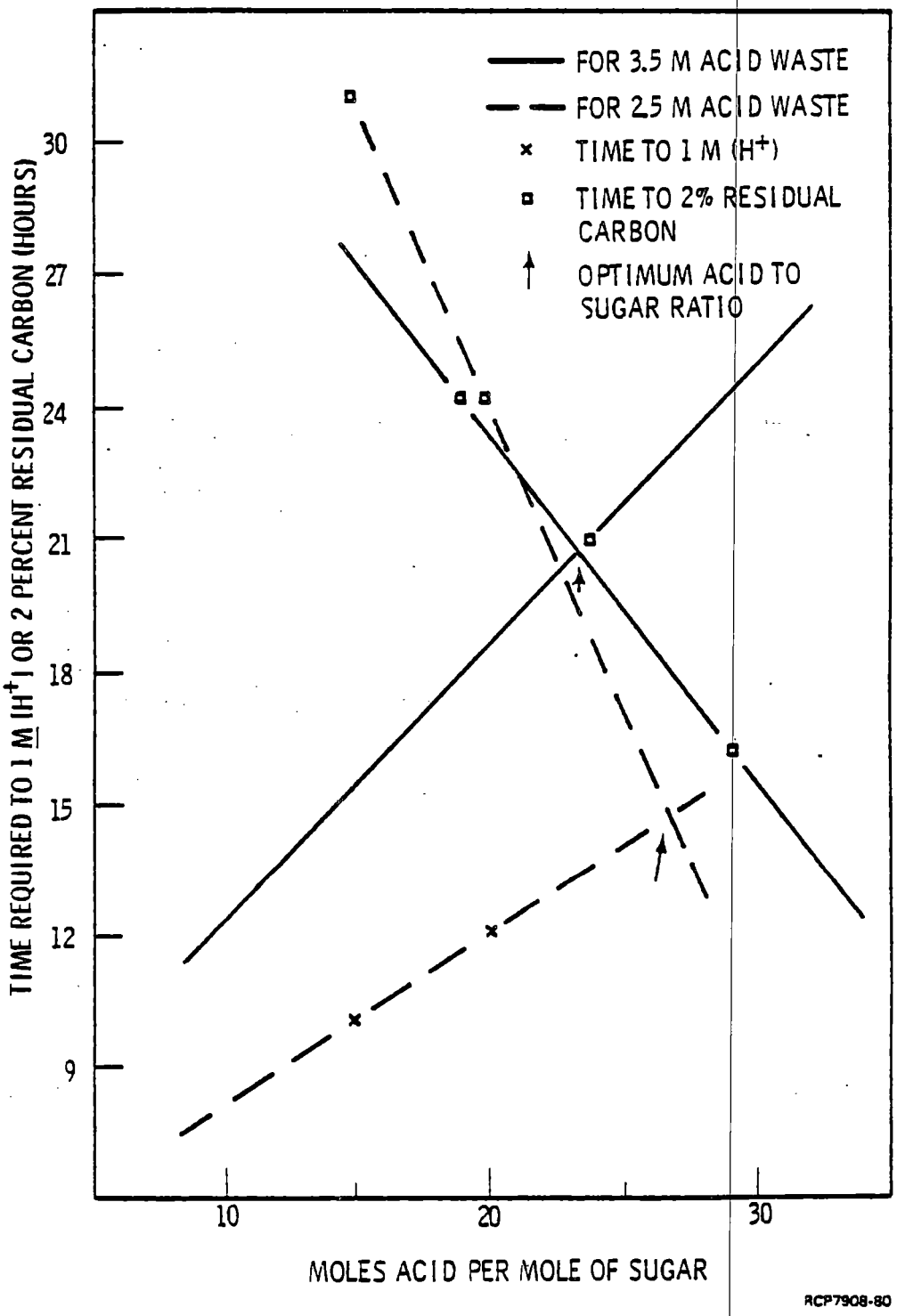

FIGURE 9-9. Optimum Sugar Addition for Denitration of Zirconium Acid Waste

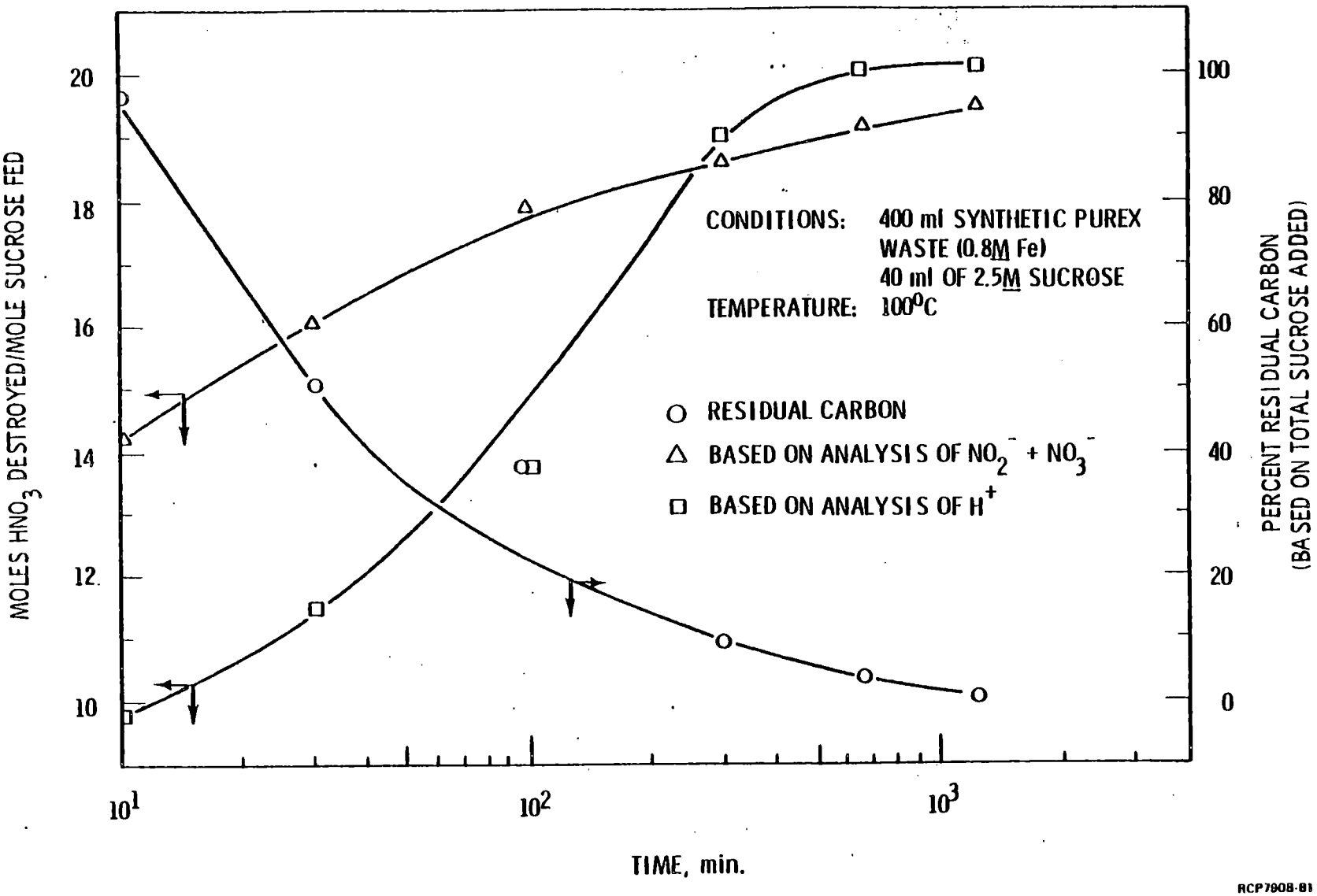

FIGURE 9-10. Denitration Rate of Acid Waste by Sucrose.

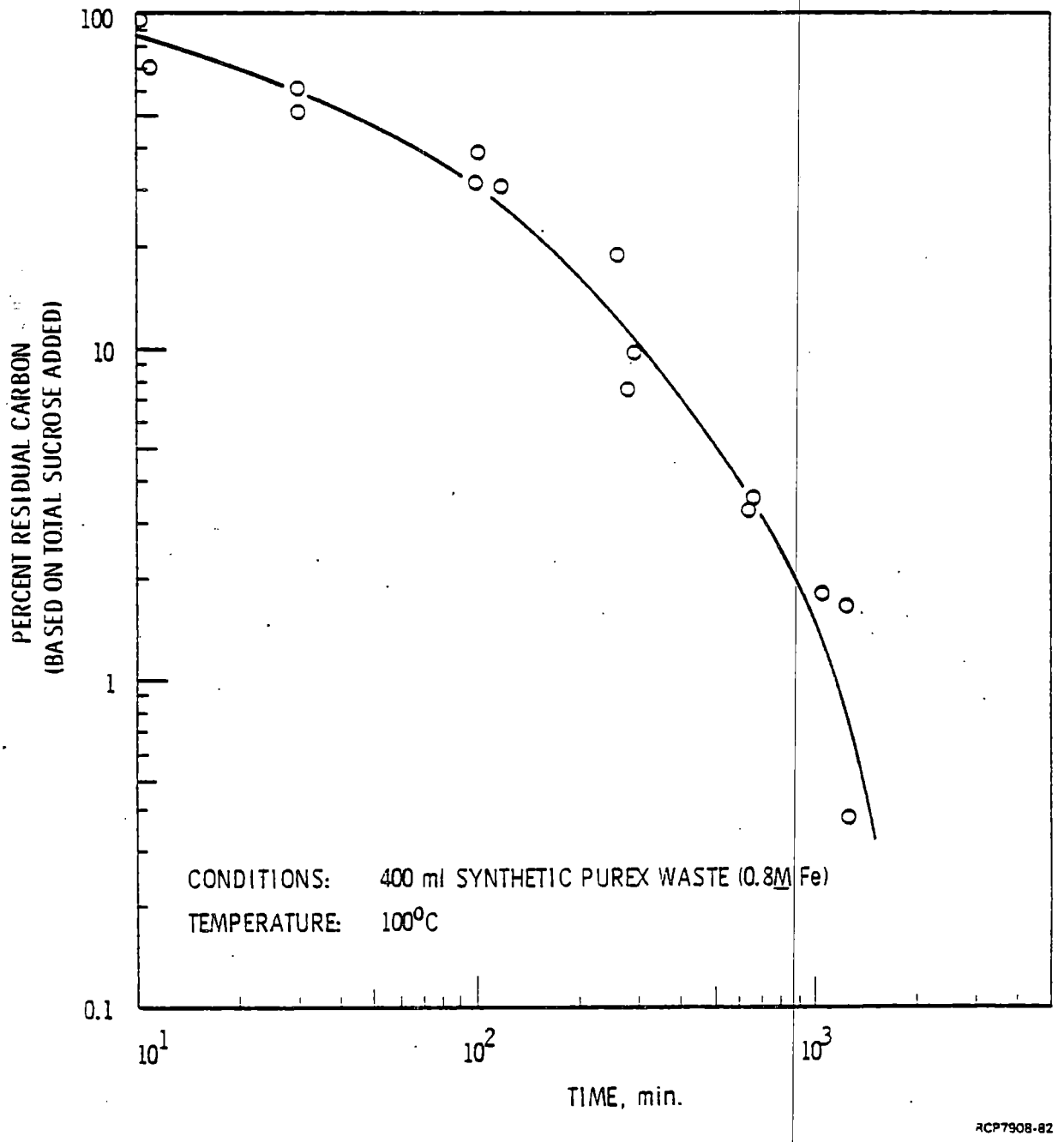

FIGURE 9-11. Destruction Rate of Sucrose by Acidic Waste.

TABLE 9-2. Denitration of Synthetic Acid Waste by Various Sugar Forms.

Sugar Form	Reaction Time, hr	Volume, mℓ	H^+ M	Residual Carbon, %[a]	Acid Destruction[b]
Standard Liquor*	0.0	400	6.4	-	-
Conditions:	1.0	425	2.9	55.3	10.8
[400 mℓ 1WW (0.8M Fe)	7.75	360	0.8	11.6	18.5
50 mℓ standard liquor]	15.75	360	0.41[c]	2.8	19.6
Conditions:	0.0	400	6.4	-	-
[400 mℓ 1WW (0.8M Fe)	1.4	450	3.7	40.6	14.6
25 mℓ standard liquor]	7.2	425	3.0	5.6	20.9
	22.7	415	2.9	1.3	22.1
Thick Juice**					
Conditions:	-	400	6.4	-	-
[400 mℓ 1WW (0.8M Fe)	2.0	460	3.7	41.7	15.7
25 mℓ thick juice]	7.7	425	3.1	5.9	22.7
	23.7	400	3.2	1.2	23.4
Black Strap Molasses***					
Conditions:	0.0	400	6.4	-	-
[400 mℓ 1WW (0.8M Fe)	1.0	440	4.2	51.9	24.2
15 mℓ black strap]	24.0	425	4.1	3.7	27.9
Sucrose****					
Conditions:	0.0	400	6.4	-	-
[400 mℓ 1WW (0.9M Fe)	1.75	450	4.5	31.6	15.3
25 mℓ of 1.4M sucrose]	4.75	435	4.2	7.5	21.0
	18.0	415	4.2	1.8	23.3

*Standard Liquor

Dry substance, %	68.0
Sugar, %	63.6
pH	7.9
SpG	1.32
Sucrose concentration, M	~2.46
Strontium, ppm	18
Calcium, g/ℓ	0.6

**Thick Juice

Dry substance, %	61.1
Sugar, %	47.8
pH	7.8
SpG	1.30
Sucrose concentration, M	2.19
Strontium, ppm	22
Calcium, g/ℓ	1.0

***Black Strap Molasses

Assume 48% sugars	
SpG	1.4
Sugar concentration, M (supplier's anal.)	1.96
Strontium, ppm	100
Calcium, g/ℓ	1.8
Obtained from:	Pacific Molasses Co.
Approximate cost:	$39.25/ton

****Sucrose

Sucrose concentration, M	1.4
Strontium, ppm	1.0
Calcium, ppm	8.0

[a]Based on percent of total carbon fed as sugar

[b]Moles of H^+ per mole of sugar fed

[c]Precipitate formed was very fine and hard to dissolve

None of these sugar sources was considered a suitable replacement for sucrose, however, since liquid storage tanks would have to be installed. Also, the relatively high strontium and calcium content of these sources would add to the volume of fission product strontium which must be separated from the high-level waste, as well as requiring more capsules for storage of the recovered strontium.

Three other sugars were tested to determine their effectiveness as denitrating agents. The sugars tested were Cerelose Brand Dextrose, 2001 (Powder), Enzose Brand Hydrol, E-081 (Powder), and Polyol, 1L-1416 (liquid). These sugars were used to denitrate nonradioactive solutions simulating typical 1WW from aluminum-clad fuel. The results of the tests showed that approximately 11 moles of nitric acid were destroyed per mole of Cerelose, Enzose, or Polyol, as compared to 24 for sucrose. On a carbon content basis, denitration by the other sugars is quantitatively about the same as that for sucrose.

9.1.1.4.6 Mold Growth in the Sugar

Mold growth in the sugar makeup tank was found to cause plugging of the sugar solution headers and rotameters. A laboratory program found several compounds that keep mold from forming in sugar solutions. The compounds are:

Compound	Concentration, M
Sodium Hydroxide	0.01
Nitric Acid	0.005
Phenol	0.01
Formaldehyde	0.01

Since the sugar solution header is black iron, nitric acid cannot be used. Phenol and formaldehyde are not stocked for other uses at Purex, so sodium hydroxide is used to inhibit mold growth in the sugar solutions. The current 0.005M NaOH concentration was found to be adequate during later plant tests.

9.1.2 Nitric Acid Absorption

Nitric acid distilled from the high-level radioactive waste concentrator is absorbed in an atmospheric pressure absorber (T-F5) and collected as 19% nitric acid. The T-F5 tower has the capability of operating as an atmospheric pressure fractionator with a reboiler stripping section and a rectifying section to produce 60% acid. However, only the top absorber section of the tower is currently used.

Sugar denitration off-gases from TK-F15 are routed to the E-F6 tower and enter the T-F5 absorber as part of the gaseous feed stream (1WD-AAF). This denitration off-gas contains oxides of nitrogen (NO_x), which are partially recovered as nitric acid in the T-F5 absorber and E-F5 condenser system. It is estimated that 25% of the NO_x liberated during sugar denitration is converted to nitric acid (Ref. 8). The total amount of NO_x liberated from sugar denitration, however, is small compared to the nitric acid evaporated from E-F6.

9.1.3 Absorption of Nitrogen Oxides in the Backup Facility

Dissolver off-gases are treated in the 293-A backup facility absorption towers (T-XA and T-XB) to recover nitrogen oxides (NO and NO_2) as nitric acid. The nitrogen oxides (designated collectively as NO_x) are recovered to reduce their release to the atmosphere in order to comply with emission and gas plume opacity standards, and to produce nitric acid for use in the Purex Plant.

The XA tower in the backup facility was designed to recover 90% of the entering NO_x and provide a gas residence time of approximately 30 seconds at 1000 scfm. The XB tower was originally an iodine scrub tower, but is now used to recover NO_x (gas residence time in T-XB is about 16 seconds for a flow of 1000 scfm). Actual plant performance of the XA and XB towers combined is around 50% of the design value for XA.

9.1.3.1 Chemical Reactions for NO_x Absorption

Absorption of nitrogen oxides in water to produce nitric acid is a commercial chemical process, and methods are available for producing concentrated acid (Ref. 9). The important chemical reactions involved in the absorption are thought to be:

$$2NO\ (g) + O_2\ (g) \rightarrow 2NO_2\ (g) \qquad (9.7)$$

$$2NO_2\ (g) \rightleftarrows N_2O_4\ (g) \qquad (9.8)$$

$$N_2O_4\ (g) + H_2O\ (l) \rightleftarrows HNO_3\ (l) + HNO_2\ (l) \qquad (9.9)$$

$$2HNO_2\ (l) \rightleftarrows H_2O\ (l) + NO\ (g) + NO_2\ (g) \qquad (9.10)$$

$$NO + NO_2 + H_2O \rightleftarrows 2HNO_2 \qquad (9.11)$$
$$(N_2O_3)$$

From the reactions, a large amount of heat is produced which must be removed in the tower to get maximum absorption. The rate of the reaction given in Equation 9.7 increases with decreasing temperature and the equilibria of 9.8 and 9.9 are more favorable at lower temperatures.

Since the overall absorption reaction is:

$$1.5N_2O_4\ (g) + H_2O\ (l) \rightleftarrows 2HNO_3\ (l) + NO(g) \qquad (9.12)$$

some NO is always regenerated and has to be reoxidized to NO_2. The oxidation reaction is normally the rate-limiting step in the absorption process. As the concentration of NO decreases, the reaction becomes extremely slow and long residence times, high pressures, low temperatures, and excess oxygen (or oxidizing agents) are required for complete oxidation. Provided there is adequate oxygen, the bulk of the NO (80 to 90%) is oxidized to NO_2 by the time it reaches the absorption column.

Pilot plant tests on a model of the XA and XB columns indicated that nitrous acid in the recycle stream, rather than the oxidation of the NO, was limiting the efficiency of the absorption process. The tests also showed that low gas flow rates, low temperature, and increased flows of fresh water to the top of the columns increased absorption efficiency. The effect of low gas flow rates (500 vs 1000 scfm) is to provide a longer residence time for the gas in the column, allowing more material to be absorbed either through mass transfer or kinetic reactions. Lowering the column temperature (100°F to 60°F) shifts the equilibrium reactions to favor formation of the absorbed compounds (N_2O_4, N_2O_3) and also increases the solubility of their reaction products. Addition of fresh water dilutes the nitrous acid which builds up in the recycle stream and inhibits NO_x absorption.

Nitrous acid can be removed by heating the recycle streams to 160°F and stripping the HNO_2 with air, adding hydrogen peroxide to oxidize HNO_2 to HNO_3, or by reducing the HNO_2 to N_2 and CO_2 with urea. All three methods have been tested in the pilot plant and have proven to be effective. The recycle streams to the columns could be eliminated, but they are needed to absorb the heat of reaction produced during the absorption process. If the column temperature is lowered to 60° to 70°F and the nitrous acid in the recycle stream is removed or destroyed, the concentration of NO_x leaving the columns should be consistently between 0.5 and 2 vol% of the exit gases.

Data from the past performance of the backup facility (Ref. 10) indicate that the gases leaving contained up to 11.5 vol% NO_x (see Table 9-3). Under projected future operations with metal dissolution occurring in only one dissolver at a time, oxygen deficiency will occur during the peak dissolution rate and would cause excessive NO_x emissions. To prevent the emissions, air will be added to the dissolver off-gas far enough upstream of T-XA to give the necessary residence time for the oxidation of NO and absorption to take place.

9413275.1312

TABLE 9-3. Composition of Purex Dissolver Off-Gas.

Test Date	March 23-24, 1958							April 9, 1958					April 22, 1958				
Sample Point	T-XA Absorber Inlet	T-XB Scrubber Inlet		T-XB Scrubber Discharge				T-XA Absorber Inlet	T-XB Scrubber Inlet	T-XB Scrubber Discharge			T-XA Absorber Inlet	T-XB Scrubber Inlet	T-XB Scrubber Discharge		
Hours since Dissolver Began Boiling	2.8	0.6	2.9	1.6	2.6	3.6	4.6	3.4	3.1	1.0	2.8	5.7	4.1	3.9	1.7	3.7	5.8
Gas Flow CFM	1305	1195	1180	1152	1146	1150	1208	1284	1250	1234	1244	696	615	692	501	624	509
Vol. %																	
H_2O	5.7	6.3	3.8	6.0.	5.7	5.1	4.2	5.5	3.7	4.8	4.6	3.1	3.7	2.5	3.9	2.5	3.4
NO	3.7	1.9	1.9	1.6	0.9	0.6	0.6	3.7	1.1	1.9	2.2	0.6	3.1	1.2	6.5	0.6	0.7
NO_2	12.2	4.1	3.6	3.9	1.7	1.1	1.1	6.2	2.7	1.9	2.5	2.0	6.0	1.5	5.0	1.1	1.2
N_2O	<0.1	<0.1	<0.1	<0.1	<0.1	<0.1	<0.1	<0.1	<0.1	<0.1	<0.1	<0.1	<0.1	<0.1	<0.1	<0.1	<0.1
Ar	0.7	0.8	0.8	0.8	0.8	0.8	0.8	0.6	0.8	0.8	0.8	0.6	0.7	0.8	0.7	0.8	0.7
O_2	10.5	11.6	9.5	10.6	9.6	12.2	12.8	9.5	9.9	9.8	9.4	13.6	14.0	12.9	11.6	12.3	12.8
N_2	66.3	74.3	79.2	76.4	80.5	80.5	79.7	71.8	78.4	77.7	77.4	77.1	72.0	80.4	71.6	82.1	80.4
H_2	0.5	0.6	0.5	0.5	0.5	0.7	0.5	2.7	3.4	2.9	2.9	2.8	0.4	0.6	0.5	0.6	0.7
Conditions:																	
B Dissolver	1st Cut							1st Cut					2nd Cut				
C Dissolver	2nd Cut							1st Cut					Off				
T-XA Absorber	Reflux Off																
T-XB Scrubber	NaOH							2.5 gpm H_2O					2.5 gpm H_2O				

9.1.3.2 NO_x Emissions and Opacity Measurements

When this section was written, negotiations between the Department of Energy, Richland Operations Office (DOE-RL) and the Washington State Department of Ecology were in progress to determine the standard for visual opacity of a NO_2 plume rising from the Purex 291-A1 stack. The opacity of the plume is caused by light absorption in the NO_2, which produces a brown color. Ultimately, additional recovery of NO_2 by the methods described in Section 9.1.3.1 will be required for compliance with a 20% (current standard) or 40% (standard proposed by DOE-RL) opacity standard. Purex NO_x emissions are expected to meet ambient air concentration standards.

A study was conducted to determine the relationship between visual plume opacity and NO_2 concentration (Ref. 11). Opacity measurements were taken by trained, certified smoke opacity readers and compared to theoretical opacity values. Readings were taken from plumes at the 333 Building (UNC), the Purex 291-A1 stack, and the Idaho National Engineering Laboratory (INEL) at Idaho Falls. The results of the study are shown in Figure 9-12, where 100 minus percent opacity is plotted as a function of NO_2 concentration times path length (plume depth). As can be seen from Figure 9-12, the visual opacity values were highly imprecise and did not agree with theoretical values. Since visual opacity measurements are the legally accepted measurement for determining opacity compliance, the data were statistically analyzed to correlate NO_2 concentrations with the corresponding visual opacities. Results of the statistical analyses are shown in Figure 9-13. The definitions of the statistically based plots are as follows:

- Regression line - The curve that best fits the experimental data
- Upper confidence limit - Based on the regression line, there is a 95% probability that the observed opacity will be less than predicted by these values.
- Tolerance limits - With a 95% probability, 99% of the averaged or individual readings will be less than predicted by the respective curve.

Based on the tolerance limit for the averaged readings, a NO_2 discharge of 125 ppm from the Purex stack would produce a plume of 20% opacity, while a discharge of 225 ppm would produce a plume of 40% opacity. Since there is an air dilution factor of approximately 100 for the gases leaving the backup facility and entering the stack, the concentration of NO_2 in the gases leaving the backup facility can be 100 times higher than the limit for the stack gases.

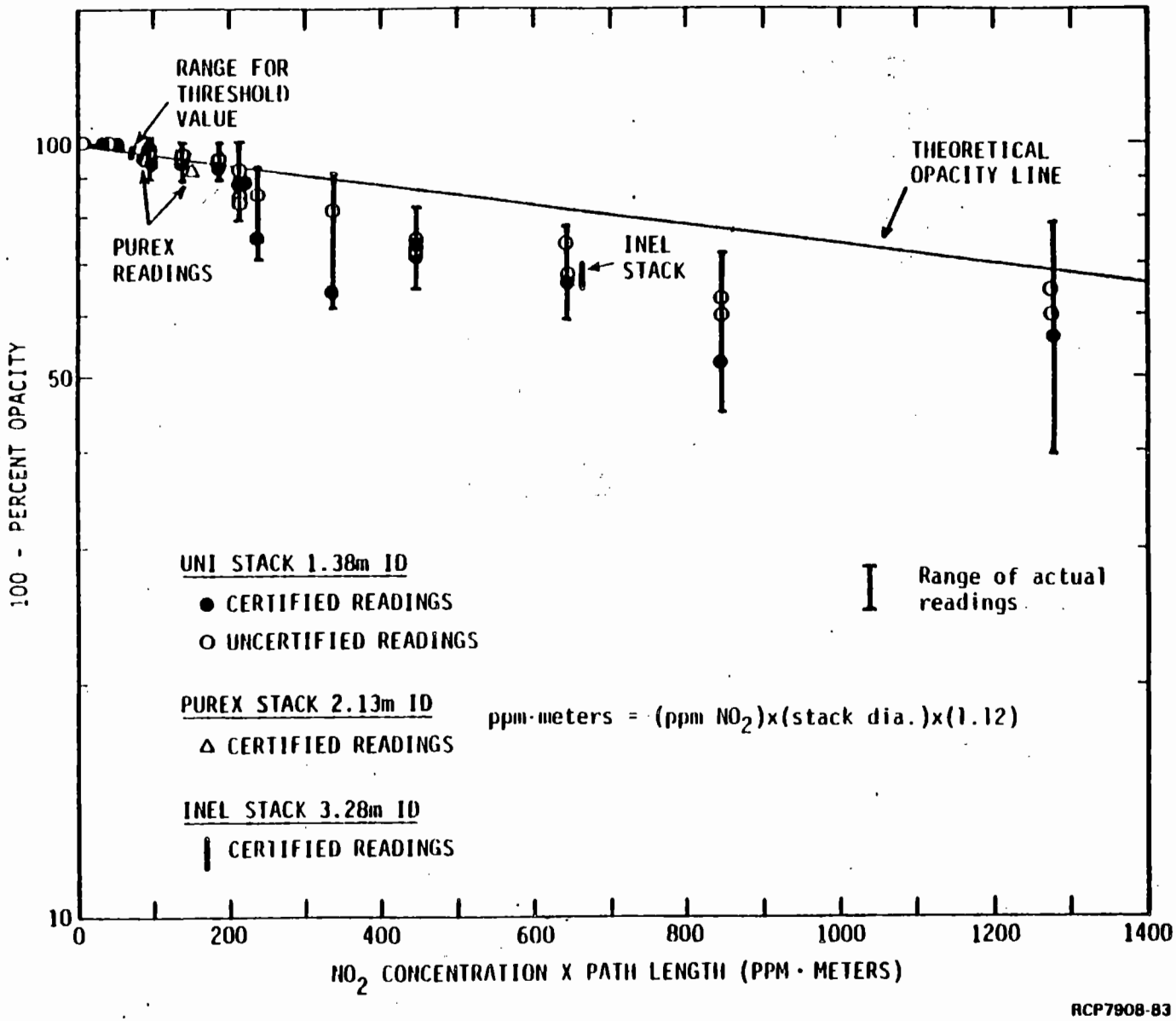

FIGURE 9-12. Comparison of Visual Opacity to Theoretical Opacity for NO_2 Gas Plumes.

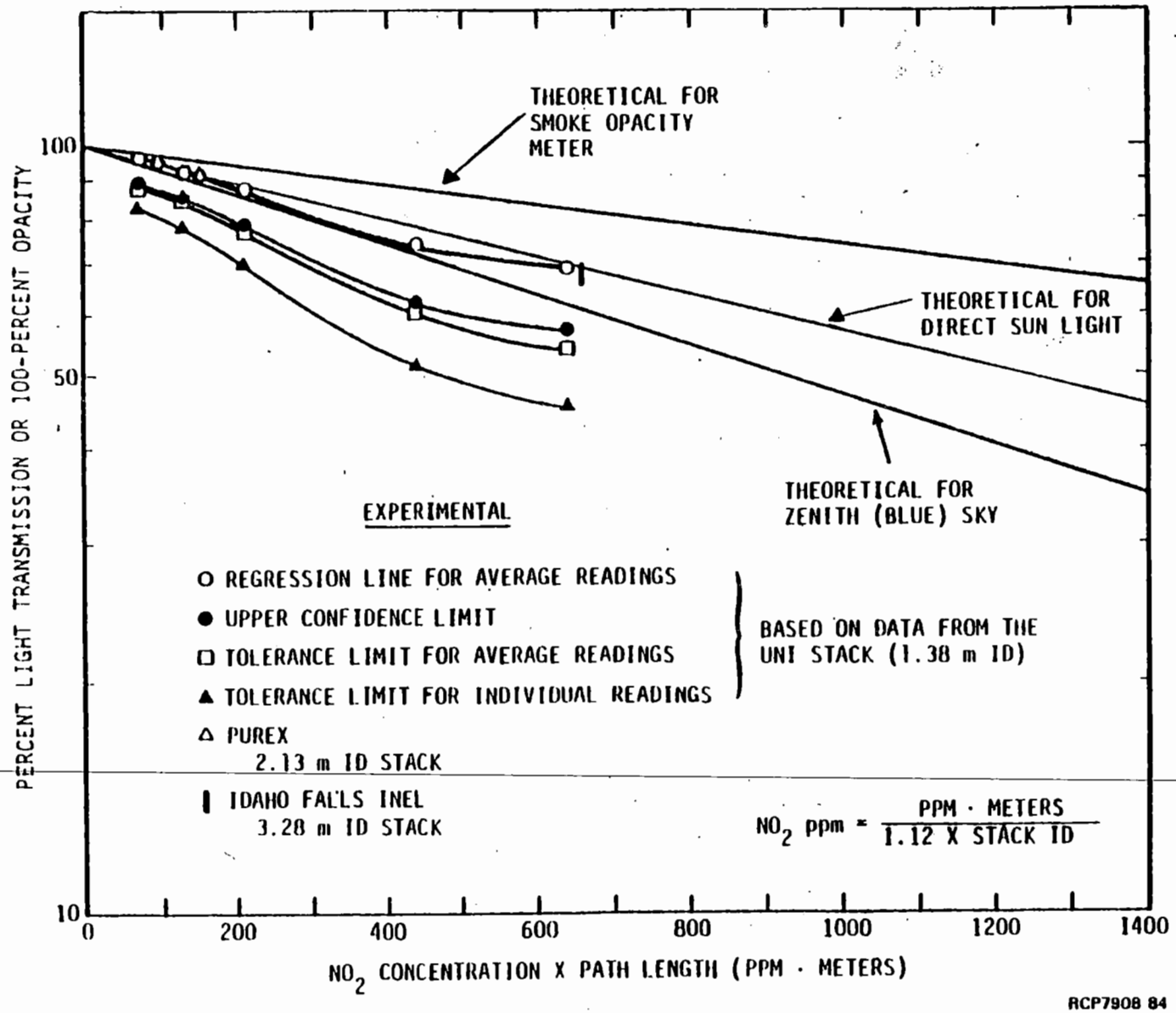

FIGURE 9-13. Comparison of Statistically-Based Experimental and Theoretical NO_2 Opacity Relationships.

9.1.4 Vacuum Fractionation of Nitric Acid

During uranium metal fuel reprocessing, nitric acid is recovered from:

- Overhead acid vapors produced in the 1WW waste concentrator and condensed in the acid absorber (T-F5) as 3.2M acid;
- Nitrogen oxides produced in the dissolvers during metal dissolution and absorbed in the backup facility gas absorbers as 2.0M acid;
- Nitrogen oxides produced in the UO_3 Plant calciners during conversion of UNH solution to UO_3 powder and absorbed in the condenser-absorber off-gas system as 10.4M acid.

The three recovered acid streams are combined in the vacuum fractionator feed tank to produce a feed stream which is approximately 3.4M acid. The acid is then concentrated to 10.4M in the fractionator tower (T-U6) before being recycled to the uranium dissolution and solvent extraction processes.

9.1.4.1 Fractionator Design Methods

The vacuum fractionator, which is described in Section 3.14, is a distillation column performing a binary separation of nitric acid and water. A schematic of the 14-tray column, which was designed by the Lummus Company of New York, is shown in Figure 9-14. The fractionator is designed to produce 13M (60 wt.%) HNO_3 from a 5.2M (28 wt.%) acid feed with a 99.9% recovery efficiency, although during plant operations, the tower is used to produce 10.4M acid from a 3.4M acid feed. The top of the tower is operated at a pressure of 100 mm of mercury absolute to lower the reboiler operating temperature and reduce corrosion rates of the process vessels.

Generally, one of the graphical methods (McCabe-Thiele or Ponchon - Savarit) is suitable for the calculation of the number of theoretical plates required in a binary separations system. However, the high purity of distillate required makes graphical methods impractical since a part of the fractionation occurs in a region where the system composition is more than 99% water. Therefore, plate-to-plate calculations are used to determine the number of theoretical plates in the column. The fractionator design calculations are shown in a notebook entitled, "Process Calculations, Design and Layout for Nitric Acid Vacuum Fractionator" prepared by the Lummus Company.

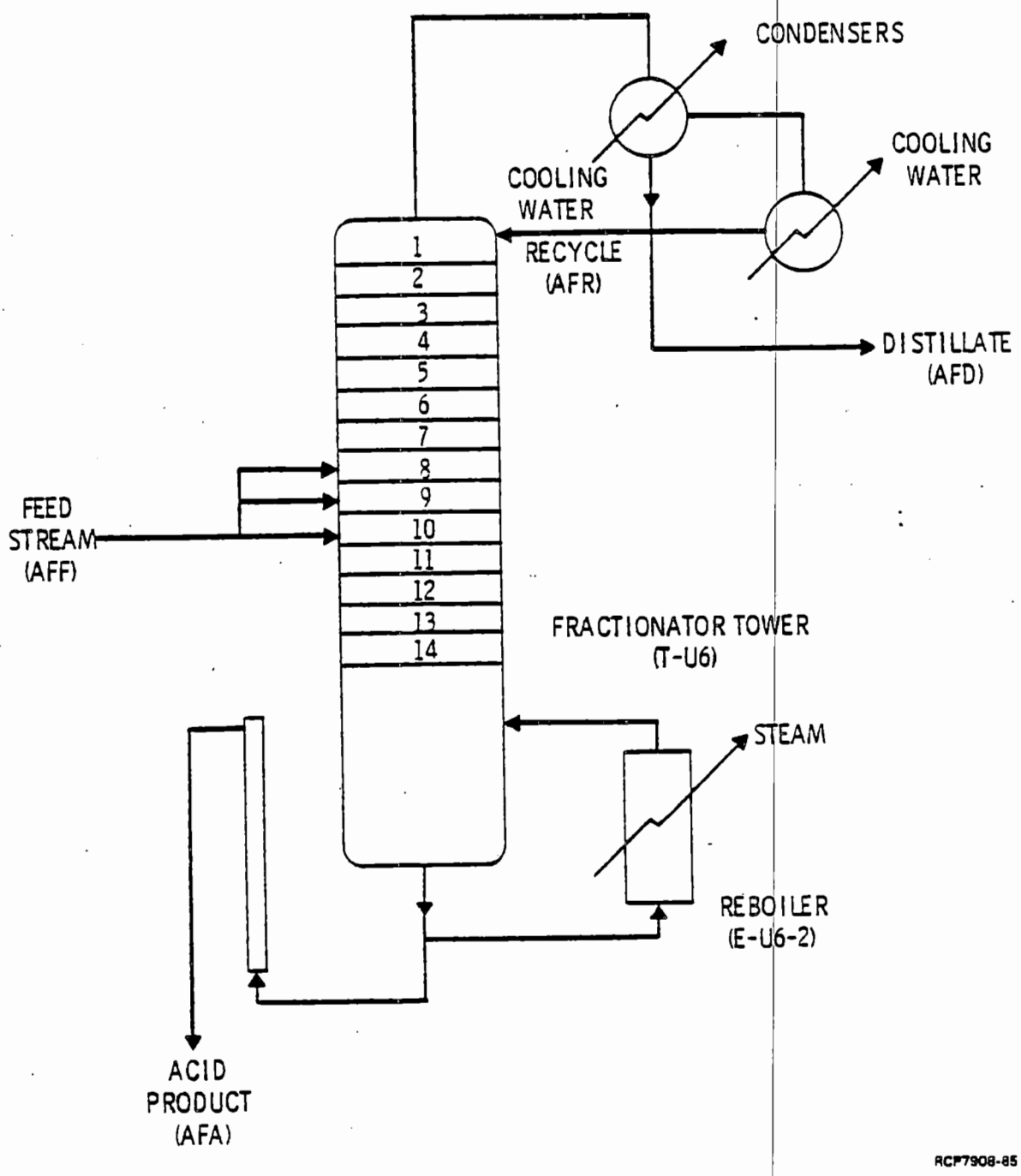

FIGURE 9-14. Schematic of the Acid Fractionator.

9.1.4.1.1 Equilibrium Diagram

In designing the fractionator, the lack of vapor-liquid equilibrium data for low acid concentrations was overcome using activity coefficients predicted by extrapolation of known equilibrium data by the Van Laar correlation in the form of:

$$(\log_{10} \gamma_N)^{1/2} = A \left(\frac{x_N}{x_w}\right) + B \qquad (9.13)$$

where:

γ_N = the activity coefficient of nitric acid in water

x_N = the mole fraction of nitric acid in the liquid

x_w = the mole fraction of water in the liquid

A,B = empirical constants derived from high acid composition equilibrium data. A plot of equilibrium data determined A = 0.8176 and B = 0.753.

The equilibrium line for low acid concentration (in the x_N range of 0.001 to 0.1) of the acid-water system is determined using the equation:

$$Y_N = \frac{\gamma_N P x_N}{\pi} \qquad (9.14)$$

where:

Y_N = the mole fraction of nitric acid in the vapor

P = the vapor pressure of pure nitric acid at the column operating temperature

π = the column operating pressure.

The resulting equilibrium line (assuming P = 287 mm Hg and π = 130 mm Hg) is shown on Figure 9-15.

9.1.4.1.2 Operating Lines

Plate-to-plate calculations were completed by combining equations for material and enthalpy balances taken around each end of the fractionator. The results (5.6 theoretical plates at a reflux ratio of 0.23) were then plotted on a McCabe-Thiele diagram to determine the stripping and rectifying sections' operating lines shown in Figure 9-15.

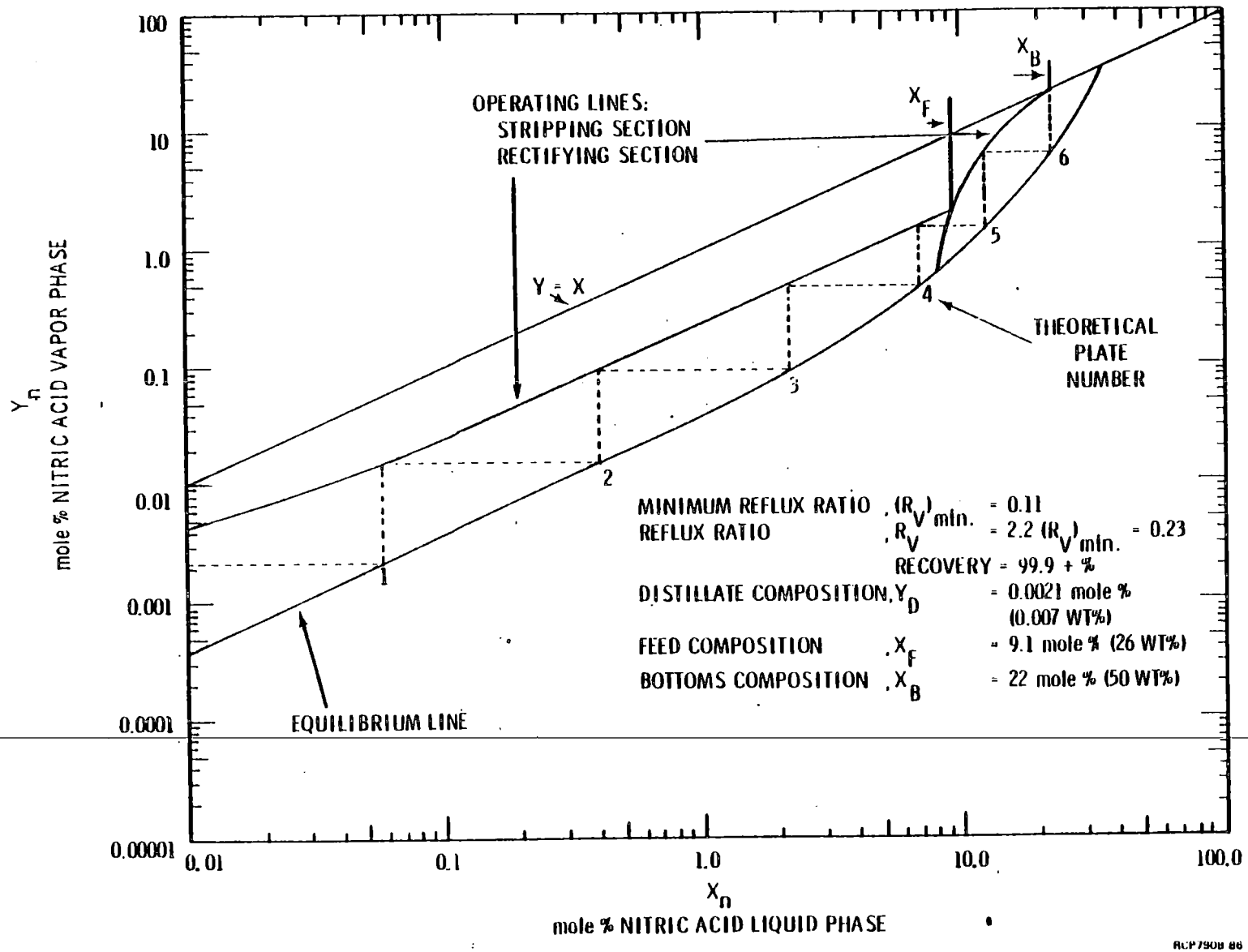

FIGURE 9-15. Acid Fractionator Operating Diagram.

9.1.4.1.3 Tray Efficiency

The vapor phase Murphree efficiency for an individual tray is determined by:

$$E_v = \frac{Y_n \; Y_{n+1}}{Y^*_n \; Y_{n+1}} \qquad (9.15)$$

where:

E_v = the Murphree tray efficiency for the vapor phase

Y_{n+1} = the mole fraction of nitric acid in the vapor entering tray n

Y^*_n = the mole fraction of nitric acid in the vapor leaving tray n, assuming the tray is an equilibrium stage

Y_n = the mole fraction of nitric acid in the vapor actually leaving tray n.

Plate efficiencies of 0.4 were assumed for the fractionator design. Thus, 14 trays (5.6/0.4 = 14) were built into the tower. In actual operation, however, Murphree vapor phase tray efficiencies were determined to be 0.50 in the rectifying section and 0.70 in the stripping section of the vacuum fractionator. The efficiencies were determined by sampling a rectifying section plate while operating the column under known conditions (Ref. 12). Actual trays can be stepped off on a McCabe-Thiele diagram using the reported tray efficiencies.

9.1.4.1.4 Recycle Ratio

The fractionator uses a recycle of fractionator distillate. The nitric acid concentration in the fractionator distillate is controlled by adjusting the reflux ratio, R_v,

where:

R_v = Reflux (AFR) flow rate/distillate (AFD) flow rate. (9.16)

The minimum reflux ratio, $(R_v)_{min}$, was determined to be 0.11 from a Ponchon - Savarit diagram. The operating lines shown in Figure 9-15 were determined using a reflux ratio (based on a desired distillate acid concentration) of 2.2 times the minimum (R_v = 0.23). Since the recycle stream contains nitric acid, some decrease in the separations capability of the fractionator is expected. Normally, the recycle acid concentration is small and has a negligible effect on column operations. However, the effectiveness of column separations can be grossly changed if the reflux

ratio is allowed to approach the minimum reflux ratio. As the reflux ratio approaches the minimum, the distillate acid concentration increases, resulting in excessive acid in Purex recycle streams.

9.1.4.1.5 Feed Point

As shown in Figure 9-14, the fractionator is constructed so that one of three different trays (8, 9 or 10) can be selected as the feed plate. During the production of 10.4M acid from 3.4M acid feed, the feed point is located on tray 10. Studies indicate that when operating in this mode, the separation is severely limited below the feed tray due to the difference in composition of the feed stream and liquid on the feed tray (Ref. 12). The column operation could be improved by lowering the feed point to tray 12; however, installation of a new feed line to tray 12 would be required.

9.1.4.2 Chloride Ion Accumulation

Any chloride ion present in the plant nitric acid is expected to accumulate in 15 to 25% nitric acid at the tower operating pressures. A corrosive concentration of chloride in nitric acid is from 200 to 500 ppm. A chloride purge system is installed on the fractionator to remove any accumulated chloride ions from trays 6, 7, 8, and 9. The chloride purge system has not been used during previous operating periods because no significant quantities of chloride have been detected by sample analyses. However, a periodic evaluation of chloride accumulation in the fractionator nitric acid during plant operation is desirable since chloride poisoning of the silver reactors in the dissolver off-gas has been determined to be a problem (see Section 9.2.1.3).

9.2 GASEOUS FISSION PRODUCT WASTE HANDLING TECHNOLOGY

Some radioactive fission products produced in the fuel during irradiation in the reactors are sufficiently volatile to escape from the Purex Plant during fuel reprocessing. Some of these fission products can be controlled by simply cooling the fuel prior to processing, while others require additional equipment to prevent their releases. Volatile fission products of concern include I-131, I-129, Kr-85, C-14, and tritium. Release guideline concentrations for these radionuclides are found in DOE Manual, Chapter 0524 (Ref. 13).

9.2.1. Iodine

Iodine is released in the dissolver off-gas when irradiated uranium is dissolved in nitric acid. Iodine is also released from the process vessels to the ventilation system of the plant as the uranium is processed through solvent extraction. Containment of I-131 was accomplished by the use of silver reactors when processing "green" fuel (cooled for 90 to

120 days) at Purex. During early years of operation, the fuel which was processed cooled to between 90 and 180 days. In later years of plant operation, the reactors were left in the system, but were not retained in a fully active condition since the fuel was routinely cooled for more than 180 days (I-131 has a half life of 8.07 days).

9.2.1.1 Chemistry and Performance of the Silver Reactor

In the developmental stages of the silver reactor, tests were made on the unit using an aliquot of radioiodine-bearing gas. Radioiodine entering and leaving the silver reactor was measured by analysis of a caustic solution used for absorption of iodine from a portion of the influent and effluent gases. Data from these tests indicated that the retention of radioiodine in the silver bed would be 99.9 to 99.99% (Ref. 14). In actual operation, however, the units operate at a retention efficiency of 99 to 99.99% for I-131 when reprocessing relatively green fuel elements.

The types of silver-bearing material which have been used very successfully are: (a) pellets of pure silver approximately 1/16-inch in diameter; (b) a silicon carbide matrix which contained approximately 3% silver; and (c) unglazed, porous ceramic column packing soaked in a concentrated silver nitrate solution. Of the three types of packing, the silver nitrate-coated ceramics were the most economical, and for this reason are considered the best packing. The unglazed ceramic Berl saddle was selected as the best packing for maximum contact area, minimum pressure drop, and adequate porosity. The porosity of the ceramic controls the absorption of the silver nitrate solution and, as a general criterion, the more silver that is absorbed, the longer the unit remains efficient. For this reason, a ceramic that is unglazed and, consequently, quite porous is desirable.

The largest known contributors to low efficiencies of the reactor are low gas temperature and free chlorine, which will replace the iodine already reacted with silver. The influence of temperature on iodine retention was further evaluated in the laboratory by passing a 10% nitrogen dioxide - 90% air mixture containing iodine over a silver nitrate bed at different temperatures. As seen from the results of these tests given in Table 9-4, the iodine retention in the bed decreases markedly with a relatively small decrease in temperature. Further investigation in the laboratory also revealed that the amount of iodine passing the silver bed increases approximately as the square of the off-gas nitrogen dioxide concentration (Ref. 15).

TABLE 9-4. Effect of Temperature on Iodine Retention in Silver Nitrate Bed

90% Air - 10% NO_2 Residence Time in Silver Nitrate Bed - 1.4 minutes.		
Test No.	Temperature, °F	Amount of I_2 Passing Through Bed, $\mu g/ft^3$
1	420	0.014
2	368	0.78
3	320	60.0
4	284	580.0

In the preliminary stages, it was believed that the collection of iodine on the silver reactor could be represented by the equations:

$$6AgNO_3 + 3\ I_2 + 3H_2O \rightarrow 5AgI + AgIO_3 + 6HNO_3 \qquad (9.17)$$

which is the reaction occurring in the presence of water, or

$$6AgNO_3 + 3\ I_2 \rightarrow 5AgI + AgIO_3 + 6NO_2 + 3/2\ O_2 \qquad (9.18)$$

Later experiments in the laboratory (Ref. 16) have indicated that the following reactions also occur, depending upon such factors as nitrogen dioxide concentration, temperature and pressure:

$$2AgNO_3 + I_2 \rightarrow 2AgI + 2NO_2 + O_2 \qquad (9.19)$$

$$2AgNO_3 + I_2 + 2\ O_2 \rightarrow 2AgIO_3 + 2NO_2 \qquad (9.20)$$

Thus, it can be seen that an overall chemical equation for the system is very difficult to write because of changing variables as the uranium-nitric acid reaction progresses. Other laboratory studies show that the isotopic exchange reaction given below occurs. This reaction could partially account for the lowering of actual performance below expected performance:

$$2AgI^* + I_2 \rightarrow 2AgI + I_2^* \qquad (9.21)$$

where I* represents radioactive I-131, and I is stable iodine.

Several experiments were run in the laboratory (Ref. 17) by introducing radioiodine over a heated bed of silver iodide and measuring the amount of radioiodine passing the bed. The indicated efficiency of this reaction was 99.9%. These data indicate that a bed of silver iodide as a final cleanup layer would be beneficial in increasing the overall iodine retention efficiency of a silver reactor.

Silver nitrate melts at 413°F, which limits the maximum temperature of silver reactor operation. There is also some evidence of lower melting eutectics of silver nitrate-silver iodide. Melting of this eutectic at operating temperatures could cause the somewhat shorter useful life of the reactors than a stoichiometric calculation would indicate.

9.2.1.2 Studies of the Purex Ventilation Silver Reactor

Studies were conducted to evaluate the performance of the Purex ventilation silver reactor (T-F2) during periods of aluminum-clad fuel reprocessing. From these studies (Ref. 18) a number of observations were made:

- The spent silver reactor contained silver chloride, but no detectable iodide. Silver iodide would have been detectable if its mass had been more than one-fifth that of the silver chloride.
- The off-gas, both upstream and downstream of the reactor, contained carbon tetrachloride (CCl_4).
- Estimates of carbon tetrachloride concentration in the off-gas ranged from 10^{-10} to 4×10^{-9} g/ℓ for different samples.
- A small peak in the gas chromatograms of upstream and downstream samples was tentatively ascribed to methyl iodide (CH_3I).
- If the methyl iodide peak identification was correct, the estimates of its concentration in the off-gas ranged from 10^{-12} to 10^{-10} g/ℓ.
- The presence of methyl iodide (if correctly identified) and carbon tetrachloride downstream shows that the present silver reactor does not efficiently trap organic halides.
- The off-gas contained at least 2×10^{-6} g/ℓ of normal paraffin hydrocarbon, slightly degraded to olefins.

As a result of this study, the addition of carbon tetrachloride to Tank F10 from the laboratory waste stream was discontinued. No method has yet been devised to suppress the evolution of methyl iodide, which is probably formed by a reaction between iodine and organic from the solvent extraction process.

9.2.1.3 Evaluation of the Dissolver Off-gas Silver Reactor Performance

Samples of the B and C Cell silver reactors' Berl saddles were obtained and analyzed for silver, I-129, I-127, and other halogens. Analysis of the sample from the top of the lower bed of the C Cell silver reactor indicated that the coating on the Berl saddles consisted of 55.4 wt.% silver, 16.8 wt.% chlorine, 4.5 wt.% bromine, and 0.75 wt.% iodine. This implies that about 90% of the surface silver reacted with chlorine, about 10% with bromine, and less than 0.1% with iodine. The high chloride content was confirmed by analysis of the Berl saddle samples from the top of the B Cell reactor bed. Trace amounts of bromine and 3% free silver were also reported. Analysis of solids removed from the entrance piping to one of the Redox Plant silver reactors also confirms that chloride combines with the major portion of the silver.

Chloride entering the reactor combines with the silver and prevents the removal of iodine from the off-gas. Chloride will also displace iodine from silver iodide. The presence of the chloride in the reactors at least partially accounts for the low DF across the silver reactor during plant operation in 1968 through 1972 as determined by I-131 and I-129 measurements.

The source of chloride loading of the Purex dissolver silver reactors is not known for certain. Some possible sources include: (a) the Purex laboratory waste added to the backcycle system prior to 1970, (b) the caustic used in dissolving aluminum cladding, and (c) continuous release of trace quantities of chloride from dissolver solution during plant operation in the period from 1969 to 1972. The addition of chloride-bearing waste from the laboratory to the process was shown to be responsible for the chloride poisoning of the process ventilation silver reactor, but this practice was discontinued in 1969. Prior to this time, some chloride from this source may have been transferred to the dissolver system via recovered acid, resulting in the poisoning of the dissolver silver reactors. Dissolver caustic may have contributed to chloride poisoning in the past, but since very little aluminum-clad fuel remains to be processed, only a very small amount of caustic will be used in the dissolver, and essentially no chloride will be added via this source during future operations. Chloride traces from dissolver solution are still a concern, but can be controlled by the frequency of regeneration of the silver reactor.

The chemicals used in the Zirflex process have been analyzed for chloride content. The results of these analyses and current chloride specifications for the chemicals which may contribute chloride to the process are listed in Table 9-5.

TABLE 9-5. Chloride Specifications and Content of Zirflex Process Chemicals

Chemical	Chemical Analysis, Wt%	Chloride Specification, Wt%	Maximum Contribution to Process, g Cl^-/MTU*
Aluminum Nitrate Nonahydrate (1.9M)	<0.0024	<0.005	<7
Fresh Nitric Acid (12.2M)	<0.00067	<0.05	<12
Purex Recov. Acid (10.4M)	<0.00091	-----	<15

* MTU = Metric ton of uranium

The chloride content of the chemicals is considerably lower than their respective specifications, except for the aluminum nitrate chloride content, which was about half the concentration of the specification. These analyses of available chemicals indicate that less than 34 grams of chloride per metric ton of uranium (MTU) are present in the dissolver solution.

For 12% Pu-240 fuel, the total iodine content after one year of cooling is about 19 grams, or 0.15 gramatom I/MTU. The dissolver off-gas could contain up to 6 atoms of chlorine per atom of iodine. A full silver reactor charge is 250 pounds of silver nitrate (670 gram-moles of silver). Assuming that all of the chlorine volatilized to the off-gas and that 50% of the silver reacted with halogens prior to unacceptable breakthrough of iodine, about 350 MTU could be processed prior to regeneration of the silver reactor.

In past operating periods, the I-131 loading capacity of the silver reactors varied from about 150 to 1,800 MTU processing equivalent while providing an iodine DF of about 100. The iodine content of the 12% Pu-240 fuel to be processed is about twice that of the fuel processed in the past. If chlorine is the predominant halogen present, however, doubling the iodine content will have little effect on the loading capacity of the reactors. Maintaining atmospheric I-129 emissions to past release rates will require less uranium throughput between reactor regenerations.

9.2.2 Tritium

Tritium associated with the fuel elements (calculated to be 17.5 Ci/ton U for Zircaloy-clad fuel) is produced by ternary fission and neutron irradiation of light-element impurities such as lithium, boron, and deuterium in the fuel elements. During fuel decladding and dissolution, the tritium is released to gaseous and aqueous streams in the form of elemental tritium and tritiated ammonia and water. Before process condensate recycle was instituted in the Purex Plant, analysis of the effluents indicated that about 2.5% of the tritium was released to the main ventilation stack, largely as elemental tritium; about 90%, in water, was sent to cribs and surface ponds, and the balance remained in the high-level waste prior to waste fractionization (Ref. 19). With process condensate recycle, the flow path of tritium will change, but the degree and direction of the changes have not been verified. No plans for recovery of tritium are currently under consideration.

Removal of tritiated water from aqueous solutions is a difficult process and has been limited to small laboratory-scale operations. At the present time, the most economically and technically favorable process is one based on water-hydrogen sulfide exchange coupled with a distillation process (Ref. 19).

A proposed fuel reprocessing scheme which allows for recovery of tritium uses a voloxidation process in which UO_2 fuel elements are oxidized to U_3O_8 by heating at 490°C. Tritium is evolved from the fuel as water vapor (HTO). The tritiated water is then absorbed on molecular sieves, concentrated and stored (Ref. 19,20). Due to the pyrophoric nature of uranium metal, however, extensive research would be necessary before the voloxidation process could be applied to Purex head-end operations.

9.2.3 Krypton-85

Essentially all of the Kr-85 charged to the dissolvers escapes to the atmosphere via the dissolver off-gas system. This amounts to about 300,000 Ci per gigawatt-year, or about 800 Ci per short ton of uranium processed (assuming an exposure of about 2,400 MWd/t).

Several absorption processes are being evaluated for collection of krypton from off-gases by various DOE contractors. Some of the absorbents that look promising in pilot plant studies are freon, liquid nitrogen, and liquid carbon dioxide. Adsorbent material such as charcoal, zeolite molecular sieves, silica gel, and methycrylate plastics provide efficient adsorption of krypton, and can be regenerated in place for reuse.

Absorbents are predominantly stored under pressure in standard gas cylinders. Storage of krypton on zeolites inside of gas cylinders is also being considered.

9.2.4 Carbon-14 Production and Control

Most of the C-14 present in N Reactor fuel is produced by (n, p) reaction with N-14. Nitrogen-14, present in unirradiated fuel in both the uranium metal and the zirconium cladding, has a cross section of 12.6 millibarns (±30%) for neutron capture-proton release (Ref. 20). The actual quantity of C-14 produced in the fuel at a given exposure has not been measured, but the calculated C-14 production, based upon the nitrogen specifications for the N Reactor fuel, is:

N-14 Source	Maximum C-14 (ppm)	Maximum Grams C-14/MTU
Uranium	75	75
Zirconium	40	3

The actual average nitrogen contents of the metals used by United Nuclear Corporation (UNC) to fabricate fuel elements are:

N-14 Source	Maximum C-14 (ppm)	Maximum Grams C-14/MTU
Uranium	15	15
Zirconium	40	3

From these average values of nitrogen content, the average value of C-14 content of irradiated fuel is calculated to be 2.12×10^5 Ci/MWd(t) for uranium, and 0.34×10^5 Ci/MWd(t) for zirconium, for a total of 2.46×10^5 Ci/MWd(t).

This number multiplied by three gives an estimate of C-14 production based on the reactor's electrical rather than thermal output. Therefore, the average C-14 content of irradiated fuel is 7.38×10^5 Ci/MWd(e).

The actual behavior of C-14 (5,730-year half-life) in the Purex Plant has not been determined and no process for its removal from off-gases is now in use. No actual measurements of quantities or forms of C-14 in dissolver off-gases have been made.

9.3 REFERENCES

1. Washburn, Edward W., Editor, International Critical Tables of Numerical Data, Physics, Chemistry, and Technology, Volume III, Published for the National Research Council of the United States of America by McGraw-Hill Book Company, Inc., New York, New York, 1928, p. 309.

2. Clark, W. E., et. al., "Development of Processes for Solidification of High Level Radioactive Waste: Summary For Pot Calcination and Rising Level Potglass Processes," ORNL-TM-1584, Oak Ridge National Laboratory, Oak Ridge, Tennessee, August 1966.

3. Lambert, R. W., and H. C. Rathvon, "The Use of Sugar for Suppressing Ruthenium Volatilization in Nitric Acid Concentrations," HW-79812, General Electric Company, Richland, Washington, February 1964.

4. Barton, G. B., "Vapor Pressure of Ruthenium Tetroxide Over Some Aqueous Solutions," HW-74688, General Electric Company, Richland, Washington, September 1962.

5. Forsman, R. C., and G. C. Oberg, "Formaldehyde Treatment of Purex Radioactive Wastes," HW-79622, General Electric Company, Richland, Washington, October 1963.

6. Bray, L. A., and E. C. Martin, "Use of Sugar to Neutralize Nitric Acid Waste Liquors, Invention Report," HW-75565, General Electric Company, Richland, Washington, November 1962.

7. Bray, L. A., "Denitration of Purex Wastes with Sugar," HW-76973 Rev, General Electric Company, Richland, Washington, April 1963.

8. Jensen, R. T., "Denitration in the Zirconium Reprocessing Flowsheet," RHO-CD-715, Rockwell Hanford Company, Richland, Washington, January 1979.

9. Carberry, James J., Chemical and Catalytic Reaction Engineering, McGraw-Hill Book Company, Inc., New York, New York, 1967.

10. Facer, J. F., "Composition of Purex Dissolver Off-Gas," HW-56399, General Electric Company, Richland, Washington, June 1958.

11. Evoniuk, C. J., "Opacity of Nitrogen Dioxide Stack Plumes," RHO-CD-728, Rockwell Hanford Operations, Richland, Washington, June 1979.

12. Pease, R. A., "Improvements of the Purex Vacuum Fractionator Performance," ARH-1930, Atlantic Richfield Hanford Company, Richland, Washington, January 1971.

13. Department of Energy Manual, Chapter 0524, "Standards for Radiation Protection," March 1977.

14. Schmidt, W. C., "Treatment of Gaseous Effluents," HW-49549-A, General Electric Company, Richland, Washington, April 1957.

15. Burger, L. L., "Thermodynamics of Iodine Removal with the Silver Reactor," HW--38311, General Electric Company, Richland, Washington, July 1955.

16. Barton, G. B., and E. D. McClanahan, Jr., "Chemistry of the Silver Reactor," HW-42408, General Electric Company, Richland, Washington, March 1956.

17. McClanahan, Jr., E. D., "Removal of Iodine-131 from Dissolver Off-Gas Streams by Isotopic Exchange," HW-47676, General Electric Company, Richland, Washington, November 1956.

18. du Plessis, L. A., and Sue L. Sutter, "Analysis of Samples from the Purex Vessel Vent Silver Reactor," BNWL-CC-2188, Pacific Northwest Laboratories, Richland, Washington, July 1969.

19. Rhinehammer, T. B., and P. H. Lamberger, "Tritium Control Technology," WASH-1269, Monsanto Research Corporation, Miamisburg, Ohio, December 1973, pp. 16-19, 207-210, 412-416.

20. Stone, J. A., and D. R. Johnson, "Measurement of Radioactive Gaseous Effluents from Voloxidation and Dissolution of Spent Nuclear Fuel," Proceedings of the 15th DOE Nuclear Air Cleaning Conference Held in Boston, Massachussetts 7-10, August 1978, CONF-780819, Volume 1, pp. 570-583.

THIS PAGE INTENTIONALLY
LEFT BLANK

CONTENTS

CHAPTER 10.0 SAFETY

	Page
10.1 HEALTH PROTECTION FROM RADIATION	10-1
10.1.1 General Radiation Safety Procedures	10-1
10.1.2 Nature of Radiations	10-2
10.1.3 Methods of Monitoring	10-5
10.1.4 Treatment of Radiation Injuries	10-14
10.1.5 Bioassay	10-14
10.1.6 Personnel Decontamination	10-14
10.1.7 Removal of Equipment from Radiologically Posted Areas	10-15
10.2 RADIATION INTENSITIES AND SHIELDING	10-15
10.2.1 Initial Radiation Intensities	10-16
10.2.2 Attenuation of Gamma Rays	10-17
10.2.3 Attenuation of Alpha Particles	10-24
10.2.4 Attenuation of Beta Particles	10-24
10.2.5 Calculation of Gamma Radiation Intensity at a Receptor	10-25
10.2.6 Purex Plant Shielding	10-31
10.3 DECONTAMINATION OF SURFACES	10-33
10.3.1 General	10-33
10.3.2 Stainless Steel	10-36
10.3.3 Iron and Carbon Steel	10-40
10.3.4 Concrete	10-41
10.3.5 Glass	10-41
10.3.6 Lucite and Plexiglass	10-41
10.3.7 Wood	10-42
10.3.8 Protective Coatings	10-42
10.3.9 Skin	10-43
10.3.10 Clothing	10-44
10.4 HAZARDS OTHER THAN RADIATION	10-44
10.4.1 Flammability and Explosiveness	10-44
10.4.2 Physiological Effects of Process Chemicals	10-51
10.5 CRITICALITY PREVENTION	10-64
10.5.1 Introduction	10-64
10.5.2 Critical Mass for Slow-Neutron Fission	10-65
10.5.3 Criticality Prevention Methods	10-73
10.5.4 Criticality Prevention in the Purex Plant	10-73
10.5.5 Consequences of a Criticality	10-78
10.6 REFERENCES	10-78

CONTENTS (CONTINUED)

FIGURES:

10-1 Mass Attenuation Coefficients for Lead..... 10-20
10-2 Absorption of Gamma Radiation..... 10-22
10-3 Sphere Critical Mass, Plutonium-H_2O-Full Water Reflection..... 10-66
10-4 Critical Sphere Diameter, Plutonium-H_2O..... 10-67
10-5 Critical Infinite Cylinder, Plutonium - H_2O - Full Water Reflection..... 10-68
10-6 Critical Infinite Cylinder, Plutonium - H_2O - Unreflected..... 10-69
10-7 Critical Slab Concentration, Plutonium (3 wt% Pu-240) - Water..... 10-71

TABLES:

10-1 Gamma Dose Rate and Mean Energy Level as Functions of Source, Cooling Time, and Concrete Shield Thickness..... 10-30
10-2 Purex Decontamination Solution..... 10-39
10-3 Activation Condition of Concentrator Safety Devices..... 10-50

CHAPTER 10.0 SAFETY

10.1 HEALTH PROTECTION FROM RADIATION

A comprehensive coverage of this subject is beyond the scope of this section. For detailed background coverage, refer to References 1 through 4. The principles followed in the protection of personnel from radiation by shielding are discussed in 10.2. The following information deals with radiation hazards and with personnel protection methods other than shielding.

10.1.1 General Radiation Safety Procedures

A posted radiological area is an area, defined by physical barriers, that is posted with prescribed caution signs for purposes of personnel radiation protection. Entry into posted radiological areas is controlled by radiation work procedures. The area posting classifications are defined in Reference 3.

10.1.1.1 Radiological Survey Frequency

Routine radiation and contamination surveys are performed in work areas at a frequency determined by the Radiation Monitoring Section. Additional surveys plus audits performed by Radiological Engineering may be required to determine the effectiveness of contamination control procedures. The requirement for surveys is established on the basis of experience with those tasks that might result in significant exposure of personnel to radiation or airborne contamination and have a potential for spread of radioactive contamination.

10.1.1.2 Radioactive Contamination Limits

An evaluation of levels of radioactive contamination is required in order to determine:

- The adequacy of the level of decontamination performed on a facility
- The extent of required excavation or other demolition of activated structures
- The disposition of equipment, materials, and scrap.

Facilities and equipment are evaluated for smearable and total (fixed plus removable) contamination by means of smear survey and direct instrument surveys. Activated structures are evaluated for radioactive concentrations by sampling or surveying with detection instruments.

Where practicable, items are decontaminated to levels lower than the acceptable limits.

During most activities, all scrap generated is evaluated for radioactive contamination prior to release to normal waste channels or packaging for disposal by land burial.

10.1.1.3 Radiation Limits

The limits used in defining a radiation zone, for releasing material, equipment, or property from a radiation zone, for nonoccupational and occupational exposure, for airborne contamination control, and liquid waste control are delineated in Reference 3.

10.1.1.4 Radiation Survey Reports

Radiation survey reports indicate the contamination and radiation levels at specific locations throughout the plant.

10.1.1.5 Signs and Warning Devices

Signs are posted to provide clear identification of the potential radiological hazards present. Areas with surface contamination or high radiation exposure are enclosed with ropes to discourage routine personnel entry.

The presence of airborne contamination is indicated by a continuous bell and flashing red light.

10.1.1.6 Facility Ventilation

The facility ventilation systems are designed to assist in controlling airborne contamination by directing the flow of air from areas of least contamination potential toward areas of higher contamination within the building. Airflow is controlled by maintaining a successively lower static pressure in each area of higher contamination. All facility exhaust from areas containing radioactive material is directed through prefilters and high efficiency filters for removal of particulates.

10.1.2 Nature of Radiations (Ref. 5)

Nuclear radiations are invisible and undetectable by the unaided senses. There are two general types of nuclear radiation: (a) bits of matter which comprise some of the building blocks of atoms (neutrons, alpha and beta particles), and (b) electromagnetic waves of the same general type as light and heat, but of extremely short wave length--gamma and x rays. The radiations emitted in the chemical separations processes are alpha, beta, and gamma. Neutrons, which for practical considerations are emitted only during fuel element irradiation, are not discussed in this chapter.

10.1.2.1 Alpha Particles (Ref. 6)

Alpha particles are ejected spontaneously by the nuclei of uranium and plutonium atoms, but not by fission product elements. Alpha particles are identical with the nuclei of helium atoms and thus have a mass of four with a positive charge of two. Because of the large mass and charge, the penetrating power of these particles is very low. The alpha emitters encountered in the Purex process have a maximum energy of about 6 MeV. Particles with an energy of 5 MeV have a range of 3.48 cm in air and 0.0037 cm in tissue (Ref. 7). A very small thickness of almost any material such as a thin sheet of paper, a film of water, or the outer layer of skin will completely stop alpha particles. Ionization from alpha particles external to the body is not a problem in the Purex Plant. However, because alpha particles produce an extremely dense path of ionization before being stopped (one alpha particle may produce from 100,000 to 150,000 ion pairs), it is vitally important to prevent alpha emitters from entering the body.

10.1.2.2 Beta Particles

Beta particles are high-energy electrons emitted during the decay of radioactive nuclei. These particles carry a negative charge of one unit and have velocities ranging up to 0.99 times that of light. The corresponding energies range from near zero up to several million electron volts. Some material may emit beta rays with energies up to 11 or 12 MeV, but energies above 2 to 3 MeV are rare. 2-MeV beta particles have a range of 700 cm in air and are completely stopped by 0.9 cm of water or tissue or 0.08 cm of lead. The higher-energy beta particles can penetrate to the germinal layer of the skin and cause moderate to severe burns; thus, beta radiation is hazardous when the observer is directly exposed or when the emitter is taken into the body. The electrons are, under some conditions, absorbed with the formation of X-ray photons in a process known as Brehmsstrahlung ("slowing-down radiation"). Under exceptional circumstances involving high-energy beta particles, this secondary radiation may also be a hazard (Ref. 8).

10.1.2.3 Gamma Rays

Gamma rays are a form of electromagnetic radiation similar to X-rays and have a wave length roughly one-millionth that of visible light. These rays penetrate matter to a much greater extent than alpha and beta particles. A beam of gamma rays loses intensity exponentially along its path and is not considered to have a definite limit or range. However, one frequently uses the term tenth-value-layer which is the thickness of the medium required to reduce the intensity tenfold. For gamma radiation of 2-MeV energy, the intensity of radiation is reduced tenfold by 1.8 inches of lead, 2.7 inches of steel, or 19 inches of water. The same tenfold reduction for this energy level gamma ray would require 1,300 feet of air (Ref. 9).

Gamma rays lose energy while traversing through matter. This energy appears in the form of liberated electrons; hence, the term "ionizing radiation." Even though the ionization power of gamma rays is roughly one-thousandth that of alpha particles (Ref. 10), gamma rays penetrate very far and are therefore a major problem.

10.1.2.4 Definition of Terms

A roentgen (R) is a quantity of x or gamma radiation that produces 1 electrostatic unit of electricity of either sign per 0.001293 gram of air. (Note: 0.001293 gram is the mass of 1 cm^3 of dry atmospheric air at 0°C, and 760-mm Hg pressure.) The energy absorbed when 1 roentgen is produced in air is about 87.7 ergs/gram. [This value replaces the 83 ergs/gram figure used until the late 1950's and is based on more recent data (Ref. 11).]

A rad (roentgen absorbed dose) corresponds to an absorbed dose of 100 ergs/gram of matter (Ref. 8).

A rem (roentgen equivalent man or mammal) is that dose of any ionizing radiation which produces a relevant biological effect equal to that produced by 1 roentgen of high-voltage (about 0.4 MeV) x radiation, other exposure conditions being equal. The use of the rem is a convenient shorthand method for adding exposure from mixed radiations. Due recognition must be given to the relative biological effectiveness of the various radiations. For the chronic exposures, the mixed radiations may be added in terms of rems according to the following scale of relation (Ref. 12):

X-rays or gamma rays	1 R = 1 rad = 1 rem
Beta particles	1 rad = 1 rem
Alpha particles	1 rad = 20 rems

A curie is defined as that quantity of a radioactive element which undergoes 3.7×10^{10} disintegrations per second. This definition refers to disintegrations occurring and not to the number of particles emitted per second. For example, 1 curie of a radioelement, disintegrating at a rate of 3.7×10^{10} atoms per second, may emit directly and indirectly (i.e., through daughter elements) several times 3.7×10^{10} alpha, beta, and/or photon particles per second. Conventional instruments for measuring radioactivity count the number of particles rather than the number of atoms disintegrating per unit of time. Due to counting efficiencies being much less than 100%, instruments do not count all of the particles being emitted and appropriate corrections must be made to the number of particles counted to estimate the total number of particles being emitted.

10.1.2.5 General Body Exposure

The critical tissues for high energy beta radiation (up to three million electron volts) are the superficial tissues of the skin.

Alpha particles ordinarily do not penetrate more than 1 to 2 inches of air and are completely absorbed by as little as 1/30 millimeter of tissue or one protective layer of clothing. Alpha particles are therefore not normally considered in determining external radiation exposure limits but are of concern in evaluation of internal radiation dose.

10.1.2.6 Personnel Contamination Limits

The maximum permissible contamination levels on skin or clothing or protective equipment removed from a radiation zone ("release limits") are 6,000 disintegrations/minute/100 cm^2 for combined beta-gamma contamination and 220 disintegrations/minute/100 cm^2 for alpha contamination. These limits coincide with the approximate detection thresholds for standard radiation detection counting instruments (Ref. 3).

10.1.3 Methods of Monitoring

Various elaborate provisions in building and equipment design and in equipment operation have been made to protect personnel from the hazards of radiation. In addition to these safeguards, a thorough and constant program of radiation monitoring is maintained to prevent accidental over-exposure or contamination of personnel and contamination of work areas.

The chief items requiring monitoring are broken down into five main categories: (a) operating areas and equipment, (b) personnel, (c) processing-area air, (d) stack gas, and (e) environs. The following discussions cover in brief the general features involved in the control of radiation hazards in each of the above categories. Detailed description of the monitoring procedures and equipment used is beyond the scope of this chapter.

10.1.3.1 Monitoring of Operating Areas and Equipment

The equipment and facilities provided are adequate for handling the radioactive process solutions under normal operating conditions. However, in the event of operational accidents or the need to enter any of the equipment cells or areas for inspection or maintenance, the areas and equipment are surveyed to determine the degree of contamination and radiation. In addition, surveys are made of all the operating areas to detect contamination for subsequent removal. The techniques of decontamination are discussed in Section 10.3.

10.1.3.1.1 Area Radiation Measurement

Fixed monitor stations which measure and record instantaneous beta and gamma radiation levels in the Purex Plant 202-A Building are located as follows:

Location of Detector	Number of Detectors
Central Control Room	4
Power Unit Control Room	2
Head-End Control Room	4
293-A Control Room	2
Aqueous Makeup Facility	2
Operating Gallery	8
Sample Gallery	9
Storage Gallery	2
Canyon Lobby	2
Crane Cab	2
Crane Cab Airlock	2
Crane Cab Gallery	3
Crane Maintenance Platforms	2
PR Room	1
Hot Shop	1
M Cell	1
Q Cell	3
R Cell	3
Vacuum Fractionator	1
Recovered Acid Storage Vault	2
Railroad Tunnel	1

The recorders for all crane cab stations are located in the cab. All other recorders are located in the dispatcher's office.

A complete monitoring installation consists of an ion chamber, a Beckman Model-V vibrating reed amplifier and switching mechanism, and a recorder. The ionization chamber is a 5-inch-diameter Bakelite shell with approximately half of the wall of the chamber cut away and covered with 0.005-inch-thick cellulose nitrate or cellulose acetate sheet for detection and measurement of gamma and beta radiation.

The Beckman Model-V Amplifier can be connected to between 1 and 12 ionization chambers, depending on the switching mechanism used. Radiation fields which can be reliably detected are limited by the volume of the ionization chamber and by the sensitivity of the Beckman Amplifier. The Model-V Beckman Amplifier has a typical useful range for measurement of from 0.3 mr/hr to 900 mr/hr (the exact range depends on the specific ionization chamber used). Sensitivity can be changed for special operating conditions by adding or removing plug-in resistors. The instruments are calibrated and source checked routinely.

10.1.3.1.2 Portable Survey Instruments

The value of any radiation survey is dependent on the judgment of the person in selecting an instrument, making the survey, and interpreting the results of the survey. In order to prevent errors, survey instruments must be used in substantially the same way as used during calibration.

To get reliable and reproducible results with any instrument, the following precautions are taken:

- Sufficient warmup time is allowed (usually on the order of a few seconds).
- The instrument is adjusted to zero if the instrument has an adjustment knob. It is possible to make this zero adjustment in the radiation field.
- The distance from source is accurately measured.
- Caution is exercised to avoid contamination of the survey instruments.
- Since most instruments are sensitive to mechanical disturbances, flames, electrical discharges, or air drafts, care is taken to avoid these conditions.
- It is quite possible to miss radioactive contamination or beams of radiation by surveying too rapidly. Therefore, considerable skill and experience are required to detect the presence of radiation or be assured that radiation is absent.

10.1.3.2 Radiation Protection Standards and Controls

The "Radiological Controls" manual forms the basis for radiation protection policies for personnel and contains the recommendations for control of radioactive materials and radiation hazards (Ref. 3). This manual contains standards for establishing radiation zones, radiation work procedures, controlling personnel radiation exposure, airborne contamination control, disposal of radioactive materials, preparation of radiation records, and documentation of radiation occurrences. All exposure indicated by the exposure measurement program is considered to have been received by the individual unless an investigation proves otherwise.

10.1.3.2.1 Personnel Monitoring Devices

A multipurpose dosimeter is worn by employees who enter radiation zones. Each dosimeter contains four lithium fluoride thermoluminescent

chips which have specific functions. The dosimeter is worn above the waist and below the head on the front of the body with the face of the badge away from the body. When the likelihood of the dosimeter being contaminated is high, the dosimeter is either worn on the inner pair of protective coveralls or placed in a plastic wrapping for protection.

A self-reading pencil dosimeter is issued by Radiation Monitoring on a daily basis in conjunction with the multipurpose dosimeter during certain operations. Each Radiation Monitoring office is equipped with a self-reading dosimeter charger.

Whenever operations are performed that pose a potential for significant extremity exposure, a dosimeter such as a finger ring dosimeter is utilized for extremity monitoring.

An integrating dosimeter is a small portable dosimeter that indicates the accumulated dose of an individual by emitting a beep at every mrem of exposure received.

Thermoluminescent specialty dosimeters are used to supplement regular dosimetry by providing a more detailed analysis of exposures to various parts of the body.

10.1.3.2.2 Qualified Radiation Workers

An individual does not enter a radiation area except in a visitor status (escorted by a qualified radiation worker) or perform work with radioactive materials unless currently qualified as a radiation worker. Appropriate training is given by Human Resources Development in conjunction with Radiation Monitoring. A record of personnel qualified as a radiation worker, which includes the ability to perform self-monitoring, is kept by Human Resources Development. Periodic retraining to assure that qualified personnel remain proficient is also conducted and documented.

10.1.3.2.3 Protective Clothing

Personnel working in a radiation zone wear protective clothing and equipment as prescribed in the Radiation Work Procedure (Ref. 4) issued by Radiation Monitoring with approval of the appropriate operating and service groups. Protective clothing and equipment of the following kinds are prescribed:

- Head protection: cloth caps, cloth hoods, rubber hats.
- Hand protection: canvas, leather, surgeon's rubber gauntlets, or rubberized canvas gloves worn individually or in specified combinations.
- Foot protection: shoe covers, canvas boots, or rubber galoshes worn individually or in specified combinations.

- Body protection: laboratory coats, coveralls, and/or plastic suits.

- Respiratory protection: full face respirator, self-contained breathing apparatus, or air line respirator.

- Dosimeters: multipurpose TLD badge (pencils and finger rings when specified).

Prior to removal, a complete survey of all protective clothing and equipment is made with alpha detecting (poppy) and beta-gamma detecting (Geiger-Müller/GM) instruments. The protective clothing is removed at the boundary of the radiation zone prior to the special "step-off pads" in such a manner that the individual steps from a potentially contaminated area to a clean area without spreading contamination. Depending upon the contamination level, the used clothing is either placed in a laundry hamper for washing or wrapped and labeled with the contamination level for guidance of laundry personnel.

10.1.3.2.4 Monitoring of Personnel Leaving a Radiation Zone

The individual is resurveyed after removing the protective clothing. As a further check, hand and shoe counts are taken on both alpha and beta-gamma fixed counting instruments or on both a poppy and GM instrument after each exit from a radiation zone, before eating or smoking, and before leaving the facility for the day. Qualified radiation workers may survey themselves only. All other workers or visitors must be surveyed by a Radiation Monitor.

10.1.3.3 Evaluation of Airborne Radioactivity

Airborne radioactivity is evaluated to assure that no individual is exposed to airborne radioactive or toxic material in excess of regulatory limits.

10.1.3.3.1 Air Monitoring

Air monitoring for airborne radioactive material is performed by means of continuous air monitors in areas specified by Radiological Engineering.

10.1.3.3.2 Air Sampling

Air sampling for airborne radioactive or toxic material is performed by the following methods:

- A fixed system of piping is continuously evacuated by a central exhauster so that vacuum is obtainable at any of the several outlets to which standard filter holders are attached. Similar systems may be provided for use with individual vacuum pumps in the event that using a central vacuum system is impracticable.

- Portable air samplers are used for "spot" samples. Each sampler requires a 110 volt a.c. power supply and contains an air pump.

- Constant air monitors (CAM's) continuously sample and monitor a given air stream. The CAM's emit both audible and visual alarms at a preset adjustment and are located throughout the various facilities.

- Lapel air samplers are worn by employees at the direction of Radiological Engineering. The samplers are worn close to an individual's face to monitor the actual air being breathed.

- Toxic gas detectors are used as indicated by the potential for such exposure.

10.1.3.3.3 Limits for Airborne Radioactivity Levels

Every reasonable effort is made by the use of engineering safeguards to maintain airborne contamination at the lowest practicable levels. If airborne contamination levels approach or exceed the applicable limits, the appropriate respiratory protective devices are utilized to control exposure. Continuous air monitors are set to alarm when such conditions exist in the work area.

The applicable limits, maximum permissible concentration (MPC), for airborne contamination levels in the radiologically posted areas are described in Reference 3. In the event any employee is exposed to airborne radioactive materials in excess of the MPC, he is not permitted to return to work in a contaminated facility until the deposition of radioactive material in his body is determined to be within acceptable limits.

Self-contained breathing apparatus or supplied air respirators are worn when airborne particulate activity exceeds 20 times the MPC. The filter mask which does not have an air supply is not worn in this situation.

Personnel do not enter or remain in areas where the airborne particulate activity level exceeds 1,000 times the MPC. This restriction applies even to personnel wearing self-contained breathing apparatus or air line respirators. If personnel entry is required to these areas, containment, and filtered ventilation are used to reduce airborne radioactivity levels to below 1,000 times the MPC. Exceptions to this requirement are permitted in emergency situations as defined in Reference 13.

At the discretion of Radiation Monitoring or Radiological Engineering, certain specific operations may require the use of respiratory protective devices strictly on the basis of the potential for exposure to airborne contaminants. Such operations are identified as work progresses.

10.1.3.4 Stack Gas Monitoring

The off-gas streams from the primary building (291-A-1), PR room (296-A-1), west sample gallery hood (296-A-2), east sample gallery hood (296-A-3) and laboratory stacks (296-A-5A and 296-A-5B) are continuously monitored for radioactivity (plus NO_x in the primary building exhaust) as described in the following sections. Additional stack gas samples are obtained as described in 10.1.3.4.4.

10.1.3.4.1 Primary Building Stack

A flow totalizer (FT), record sampler (RS), and monitor sampler (MS) are installed on the primary building stack. The FT and RS subsystems are installed with sensing probe penetrations at the 768-foot level (grade level is 708 feet) of the 291-A-1 stack. Sufficient sampling nozzles are positioned across the stack at the center of concentric equal (stack flow) areas to obtain representative gas samples. A digital readout of the stack flow rate and a low stack flow audio-visual alarm are provided in Panel B-14 in the central control room.

Gas flows from the RS probes via the manifold header and insulated, heat-traced transport line to a particulate filter. A charcoal cartridge-type filter for collecting iodine is located downstream of the particulate filter in one RS leg. A second RS leg contains absorbers for collecting C-14 and H-3 for analysis. The quantities of alpha, iodine, C-14, and H-3 released are determined for record by periodic analyses of the filters and absorbers plus measured stack flow rates. A third RS leg balances flow rates for optimum performance using flow control valves in each leg. An audio-visual alarm in the dispatcher's office is activated when the RS stream flow rate is low. Isokinetic flow conditions are maintained in the RS stream by a flow synchronizing controller. Flow indicators, control equipment, vacuum pump, and other RS equipment are located in the 292-A Building (Sample House).

The MS sensing probes are at the 782-foot elevation level of the 291-A-1 stack. The average nozzle velocity is isokinetic at the normal flow rate of 120,000 cfm. At other stack flow rates, the system maintains an optimum monitor equipment flow rate through the monitoring instruments even though the flow is not isokinetic.

The MS transport line, which is heat traced and insulated to prevent condensate formation, descends in an "S" fashion to the 292-A Sample House. One monitor leg is composed of the following:

- An alpha particulate (Pu-239) monitor, fixed filter, monitored continuously with an analog recorder in the central control room and an audio-visual alarm in the dispatcher's office. The alarm level is 1×10^{-12} μCi/mℓ.

- A beta particulate (Sr-90) monitor, fixed filter, monitored continuously with an analog recorder in the central control room and an audio-visual alarm set at 2×10^{-10} μCi/mℓ in the dispatcher's office.

- A radioiodine monitor (I-129 and I-131) with an analog recorder in the central control room and an audio-visual alarm in the dispatcher's office. The alarm level is set at 1×10^{-10} μCi/mℓ.

- A beta gas monitor for Kr-85 with an analog recorder in the central control room.

A second sample leg is composed of the following:

- A beta/gamma monitor moving filter, located in the 292-A Building with an analog recorder in the central control room and an audio-visual alarm in the dispatcher's office.

- A I-131 and I-129 caustic scrubber system located in the 292-A Building with an analog recorder in the central control room and an audio-visual alarm in the dispatcher's office.

The NO_x content of the stack effluent is determined by measuring the opacity of the stack or drawing a continuous sample through a NO_x analyzer.

10.1.3.4.2 PR Room Stack

An RS and an MS system are installed on the PR room stack (296-A-1) to determine the Pu-239 concentration in the effluent. The RS system utilizes isokinetic sampler nozzles (probes) in the stack at the same level as the stack velocity measurement section. A total-sample flow rate sensor and total-sample nozzle velocity transmitter control total sample velocity. A velocity synchronizing controller relates total-sample average nozzle velocity with stack average velocity to maintain isokinetic sample flow conditions. The RS gas passes through a particulate filter for removal of alpha particles. The quantity of Pu-239 released is determined from periodic analyses of the filter plus measured stack flow rates.

The MS system utilizes separate but similar isokinetic sampling nozzles in the stack located two duct diameters downstream from the RS section. The MS system maintains a constant sample volume with varying stack flow rates. The nozzles provide an isokinetic sample at a normal stack flow of 5,000 cfm. Alarms provided include: (a) low total sampler flow velocity, (b) monitoring equipment failure, and (c) high alpha radiation. The continuous stack monitoring instrument is an alpha particulate (Pu-239) fixed filter device located in an enclosed area near the base of the stack. The minimum detection level for Pu-239 is 2×10^{-12} μCi/mℓ and the alarm is activated at 2×10^{-11} μCi/mℓ. The alpha measurement is recorded in the central control room and the alarms are located in the dispatcher's office.

10.1.3.4.3 East (296-A-3) and West (296-A-2) Sample Gallery Hood Exhausts

The 296-A-2 and 296-A-3 stacks are equipped with RS and MS systems similar to those described for the 296-A-1 stack. The 296-A-2 MS includes continuous measurement capability for both alpha and beta radiation while the 296-A-3 MS continuously measures beta radiation only. The RS systems include particulate filters which are periodically analyzed, flow measurement and control capability, and audio-visual low flow alarms located in the dispatcher's office. The MS systems include recorders in the central control room plus high radiation, low flow and failure alarms in the dispatcher's office.

10.1.3.4.4 Laboratory Exhausts

The 296-A-5A and 296-A-5B stacks are also equipped with RS and MS systems similar to those described for the 296-A-1 stack with continuous measurement capability for alpha radiation. The RS systems include particulate filters which are periodically analyzed, flow measurement and control capability, and audio-visual low flow alarms located in the dispatcher's office. The MS systems include recorders in the central control room plus high radiation, low flow and failure alarms in the dispatcher's office.

10.1.3.4.5 Stack Sample Analyses

The following stacks are sampled:

Stack Designation	Sample Location
291-A-1	Primary Building Exhaust (50-foot level)
291-A-1	Primary Building Exhaust (200-foot level)
296-A-1	PR Room Exhaust
296-A-2	West Sample Gallery Hood Exhaust
296-A-3	East Sample Gallery Hood Exhaust
296-A-5	Laboratory Exhaust
296-A-6	East Sample Gallery and U Cell Exhaust
296-A-7	West Sample Gallery and R Cell Exhaust
296-A-8	White Room Exhaust
296-A-10	No. 2 Burial Tunnel Exhaust
296-A-14	Backup Facility Exhaust

The samplers are isokinetic units through which gas is drawn by: (a) connection to the building vacuum system, (b) by a jet, or (c) in the case of stack 296-A-14 by a Motoaire vacuum pump. The gas stream passes

through a 2- or 4-inch-diameter HV-70 filter or a 47-millimeter-diameter Metrocel filter.

The filters are changed weekly, except for the 291-A-1 filters, which are changed three times each week. After removal, the filters are sent to the 222-S Building laboratory for counting to determine alpha and beta radioactivity shortly after arrival (~6 hours) and again after 48 hours. This procedure allows for the decay of the naturally occurring radon. The filters are retained in the laboratory for compositing over a 13-week period. After this period the filters are burned and the ash is counted to determine gamma radioactivity and the plutonium, americium, and strontium content.

10.1.4 Treatment of Radiation Injuries

Any injury, no matter how small, received while working in a radiologically posted area must be reported immediately to the Radiation Monitor, who will evaluate the potential for internal deposition and recommend corrective action, if any is required.

Employees working with radioactive materials report any skin breaks to their supervisor. The nurse on duty provides a dressing or protection for the skin break. A person having skin breaks performs work with radioactive materials only with the specific approval of his supervisor. The supervisor ensures that the degree of protection afforded the skin break is adequate in view of the employee's work assignment and the contamination status of the work location.

10.1.5 Bioassay

Bioassay, principally by means of urinalysis, is utilized as a means of assessing internal deposition of radioactivity in personnel. A baseline specimen is obtained from each worker prior to his assignment to work in radiologically posted areas. During the facility operation, specimens are collected at frequencies determined by Radiological Engineering.

Special bioassay specimens, including urine and fecal specimens, are obtained at the discretion of Radiation Monitoring or Radiological Engineering whenever there is reason to believe that personnel may have been subjected to internal deposition of radioactive material.

Whenever the analysis of a routine or special bioassay specimen indicates radioactivity is present in excess of the minimum detection limit, resampling is performed. Until such time that a reevaluation is completed, the employee is not permitted entry to radiation areas.

10.1.6 Personnel Decontamination

In the event of employee skin contamination, Radiation Monitoring is immediately notified. Radiation Monitoring is charged with the responsibility for removing all skin contamination and for final release surveys

of employees after decontamination has been accomplished. Radiation Monitoring makes followup surveys to determine potential contamination spread. Radiological Engineering evaluates the internal or external personnel exposures resulting from the event. Each instance of skin contamination is recorded on a "Personnel Contamination" record card.

If high levels of contamination are detected on protective clothing sufficient to result in a measurable dose to the individual's skin, the clothing is promptly removed to minimize the exposure and saved for evaluation. The source of contamination is identified and preserved for further study. A complete body survey is then performed to determine contamination levels. If high dose rates are observed, the level is reduced promptly. Dose rates and locations involved are recorded. If loose high-level contamination is encountered, respiratory protection is worn and extreme care is taken to avoid spread of contamination.

Skin contamination known or suspected to have originated from radioactive material in a caustic, corrosive, or organic carrier is immediately diluted or flushed with sanitary water. Extreme care is taken to prevent contamination spread to any skin or body opening.

10.1.7 Removal of Equipment From Radiologically Posted Areas

All equipment or materials moving into unposted areas from any radiologically posted area is surveyed for radiation and radioactive contamination levels. No item contaminated in excess of established limits is moved into an unposted area. The radiation and contamination levels are assessed by Radiation Monitoring immediately prior to the transfer of the item. Required decontamination is performed by Operations personnel.

An item with inaccessible surfaces that has never been subjected to decontamination efforts is released only if it is reasonable for Radiation Monitoring to assume that the inaccessible surfaces could not be contaminated unless the accessible surfaces are contaminated. Release of radioactive material for either unrestricted or regulated use is done in accordance with References 2 and 4.

10.2 RADIATION INTENSITIES AND SHIELDING

High levels of alpha, beta, and gamma radioactivity are associated with the irradiated uranium fuels processed in the Purex Plant. Harmful effects of the radiation upon personnel and the extent to which protection from these effects is necessary are indicated in Section 10.1. The present section explains methods of reducing the intensity of radiations by the interposition of a massive shield between the radiating source and the receptor (Ref. 14). Of the three types of radiation, the very penetrating gamma rays (or photons) are the most important from a shielding standpoint. Several feet of concrete are required to reduce the intensity of electromagnetic radiation from gamma rays to a low level. Alpha particles, which

are helium nuclei, and beta particles, which are electrons, are both far less penetrating than gamma rays. These particles are normally absorbed by the vessel walls and are of concern only in special situations.

10.2.1 Initial Radiation Intensities

The effect of radiation on matter is a function of the radiant energy which is absorbed in the matter. The estimation of the radiation intensity from a radioactive source and at a receptor offers a practical method for predicting and controlling the effects of exposure to radiation on the receptor.

The radiation intensity at a receptor is a function of the initial radiation intensity (at the source) and of the attenuation (i.e., intensity reduction) attained between the source and the receptor. Attenuation is discussed later in this chapter. This section defines radiation units and presents methods for estimating the initial radiation intensity.

10.2.1.1 Radiation Units and Interconversion

With other conditions assumed to be constant, the absolute rate at which radiant energy from a source is dissipated (or absorbed) in matter is a function of the power of the source, the energy of individual radiations, and the properties of matter.

For any ionizing radiation (including gamma, beta, and alpha), units of radiation have been defined in terms of energy absorption. The rad is defined as 100 ergs of energy absorbed per gram of any matter whereas the roentgen corresponds to the absorption of about 87.7 ergs of energy from x or gamma radiation per gram of air. This means that the dose in rads per unit time, at a receptor exposed to a given source, is dependent on the properties of the receptor. In actual practice, the effect of biological receptor properties is generally negligible, since, under identical irradiation conditions, the rates of energy absorption per gram in substances of common interest (e.g., water, human tissue, air) are roughly equal.

10.2.1.2 Initial Gamma Radiation Intensity

The initial gamma intensity from a source is commonly expressed in terms of roentgens per unit time at a distance of 1 centimeter from the source. It is a measure of the rate of gamma energy dissipation per cubic centimeter of air at that point and is directly proportional, approximately, to the gamma power of the source. For example, if the total gamma energy is considered to be concentrated at a point,

$$\dot{x} = \frac{5500\ CEF}{d^2} \qquad (1)$$

where

$\dot{x}$ = initial gamma exposure rate, R/hr

C = gamma curies

E = energy level, MeV

d = distance from the source, centimeters

F = fraction of photon emissions for each disintegration.

The actual values of C and E are normally obtained from instrument readings and/or a knowledge of the irradiation history of the source. For example, if the irradiation history of the fuel from the reactor is known, the radioactivity in gamma curies per ton of irradiated uranium, for any fission product emitting photons of a particular energy level, may be estimated. From a knowledge of the Purex Plant flowsheet (or operating conditions), the gamma curies per ton of uranium can then be converted to other bases, e.g., gamma curies in the volume of solution in a particular vessel.

For maximum accuracy, Equation 1 and other radiation intensity expressions presented in this chapter are used to estimate an individual exposure rate for each energy level present in the source. Individual exposure rates are then summed to give the total exposure rate. However, a solution of sufficient accuracy for most practical purposes may be obtained by the use of conservative simplifying assumptions concerning the energy spectrum of the source and frequency of photon emissions. A value of "effective mean" energy level for the source is selected. F is assumed to be 1, and an estimate is made based on total curies of all energy levels present in the source.

10.2.2 Attenuation of Gamma Rays

Attenuation (i.e., intensity reduction) of photons is accomplished by distance and by passage through matter. The various attenuation mechanisms are considered in this section. These mechanisms are employed in the Purex Plant to reduce intensities to values consistent with personnel safety.

10.2.2.1 Attenuation by Distance

Apart from the attenuating effects of any matter through which the radiation passes, the intensity of gamma rays at any point decreases with increasing distance from the source. For a mathematical point source, the intensity is inversely proportional to the square of the distance. For an infinite line source, the intensity decreases with the first power of the distance. In the theoretical case in which the radiation originates from an infinitely large area, no attenuation with distance occurs. For real-object sources of finite extension, the manner in which the radiation intensity decreases with increasing distance is generally intermediate

between these idealized special cases. The exact relationship depends on the shape of the source and on its size compared to the distance to the receptor. Evaluation of the exact intensity-distance relation for real-object sources is mathematically complicated. However, results sufficiently accurate for most practical purposes may be obtained by treating a real-object source as the most nearly equivalent mathematically simple source type--point, line, or large bulk. The use of these approximate methods of calculation is discussed in Section 10.2.4.

10.2.2.2 Attenuation by Passage Through Matter

Unlike alpha and beta particles, gamma rays are not completely stopped by a certain thickness of matter, but are attenuated by a factor which is an exponential function of the thickness of matter traversed. This attenuation is the result of three possible mechanisms: photoelectric absorption, Compton scattering, and pair production. These attenuation mechanisms are described and their relative importance under various conditions is discussed below.

10.2.2.2.1 Photoelectric Absorption

Photoelectric absorption occurs when the entire energy of the photon is used to eject an electron from one of the inner orbits of an atom. Absorption by this mechanism predominates at low gamma energies and rapidly increases with the atomic number of the absorber. In light elements, such as aluminum, the photoelectric effect accounts for most of the absorption up to about 0.1 MeV. In heavy elements, such as lead, photoelectric absorption is effective up to about 1 MeV.

10.2.2.2.2 Compton Scattering

Compton scattering is an interaction of a photon and an electron in one of the outer orbits of an atom. Part of the photon's energy is given to the electron ejected from an atom, while the remainder of the energy appears as a scattered photon of longer wavelength. This process accounts for most of the attenuation in the intermediate energy range of 1 to 5 MeV in lead. Compton scattering varies with the number of electrons per cubic centimeter of absorber and hence is proportional to the density of the absorber. Therefore, in the energy range where this process predominates, the effectiveness of a shield is roughly proportional to its density, and is otherwise nearly independent of the composition of the shield. Compton scattering decreases with increasing gamma energy.

10.2.2.2.3 Pair Production

Pair production occurs when a photon enters the field of a nucleus and is converted into a positive electron (positron) and a negative electron (beta), plus a certain amount of translational energy of these particles. When the positron collides with another electron, the mass of the two particles is converted into two 0.5 MeV photons. This phenomenon occurs

to a significant extent only at very high gamma energies and increases rapidly with the energy of the photons and the atomic number of the absorber. Pair production does not take place to any significant extent in Purex Plant shielding, since the highest gamma energy encountered is only approximately 2.5 MeV.

10.2.2.3 Absorption in Lead

Figure 10-1 shows the contribution of each of the absorption mechanisms to the total absorption of gamma radiation in lead. Indvidual and total absorption coefficients are plotted as functions of photon energy. Below approximately 1 MeV, photoelectric absorption is the predominating mechanism; from about 1 to 5 MeV, Compton scattering accounts for most of the absorption; and above this range absorption by pair production becomes particularly significant.

10.2.2.4 Self-Absorption by a Source

In a thick source, such as the HAF tank, a considerable fraction of the intensity is absorbed in the source itself and appears as heat energy. It is evident that radiation from incremental volumes near the surface is not attenuated, but radiation from incremental volumes some distance from the surface is attenuated to an extent dependent on the distance the ray traverses in reaching the surface. Thus, the fractional contribution of the total radiation leaving the surface decreases exponentially as incremental volumes further from the surface are considered. It may be shown by integration that the total radiation from an infinitely thick source is equal to the radiation from a source one mean-free path in thickness, measured in the direction of the beam, without self-absorption. The mean-free path is defined as the thickness of absorber (source, in this case) required to reduce gamma radiation intensity by a factor of e (2.718).

Estimates of radiation intensity are generally corrected for self-absorption if the source thickness is greater than one mean-free path. Under these conditions, estimates are based on the radiation in a source of thickness equal to one mean-free path. If the radiation from such a source may be considered to be concentrated at a point, the initial gamma radiation intensity may be estimated by use of the following equation:

$$\dot{X} = \frac{5500CEA}{\mu} \qquad (2)$$

where

$\dot{X}$ = initial gamma intensity, R/hr at 1 centimeter distance in air

C = gamma Ci/cm^3

E = energy level of the source, MeV

A = projected area of the source, cm^2, as "seen" by the receptor

μ = total absorption coefficient in reciprocal centimeters.

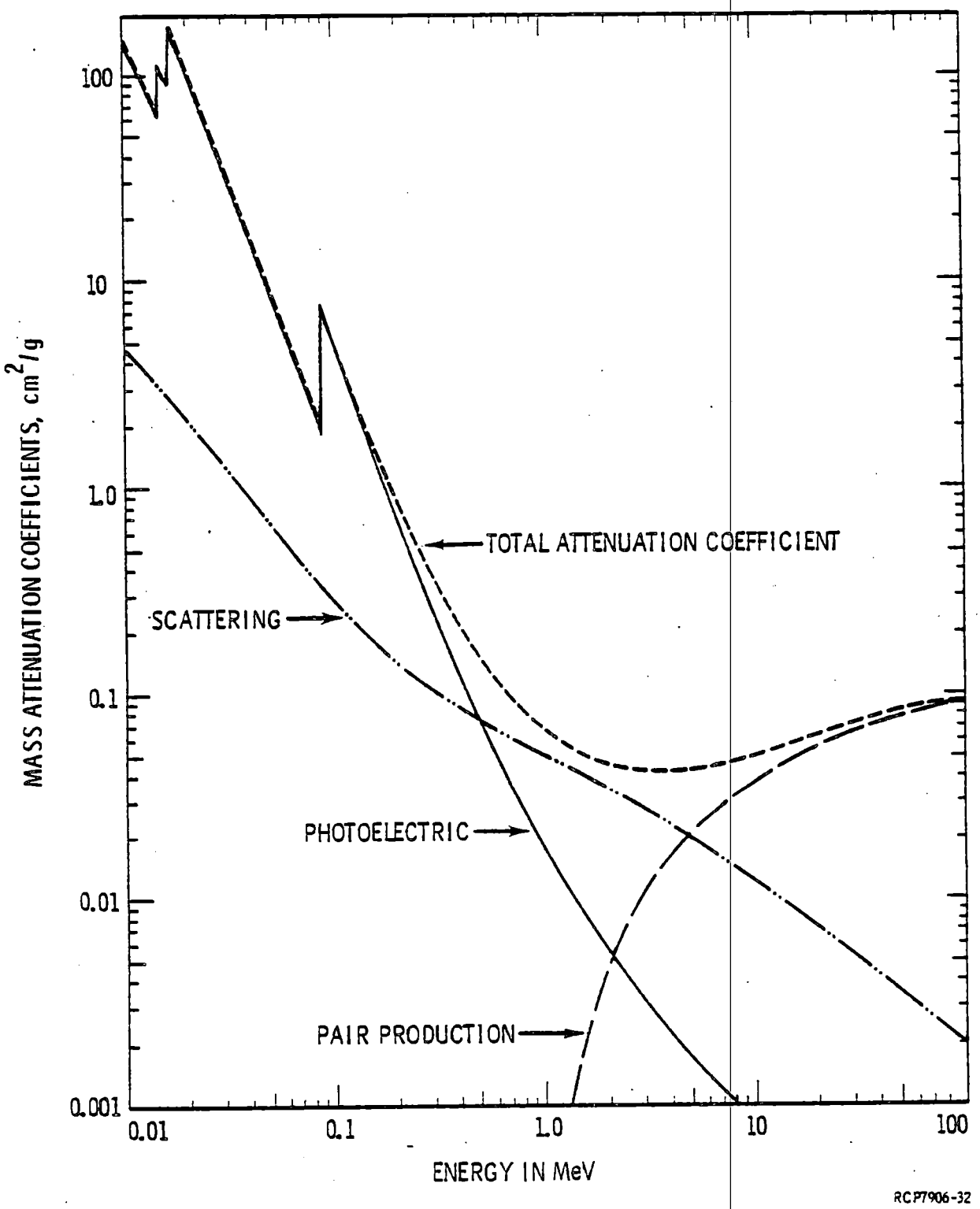

FIGURE 10-1. Mass Attenuation Coefficients for Lead.

For use in the equation above, Figure 10-2 presents a plot of total absorption coefficient (μ), in reciprocal centimeters, and the mean-free path ($1/\mu$), in centimeters, as functions of gamma-ray energy level for each of several common absorbing materials. Also in Figure 10-2, the dashed line labeled "Compton μ/ρ" can be used to estimate the absorption coefficients (or the mean-free paths) for materials of low atomic number at energies greater than 0.1 MeV. For example, HAF has a density of 1.5. At 1.5 MeV, the value of μ/ρ (0.044 cm^{-1} from Figure 10-2) multiplied by the density gives the absorption coefficient as 0.066 cm^{-1}.

Like Equation 1, Equation 2 is derived for use with monoenergetic sources, but may be used directly for a source with a range of energy levels if a value of "effective mean" energy level is available.

10.2.2.5 Attenuation Equation

The attenuation of gamma radiation upon passage through matter may be computed from the following equation, based on the combined effects of the absorption mechanisms involved and on the fact that the intensity falls off exponentially with the thickness of the absorber.

$$X = BX_0e^{-\mu x} \qquad (3)$$

where

X = radiation intensity after traversing x centimeters of absorber, R/hr

B = "buildup factor", an empirical correction factor for secondary photons produced by Compton scattering (see text and tables below)

X_0 = initial radiation intensity in R/hr at 1 centimeter

e = 2.718

μ = absorption coefficient in reciprocal centimeters (Figure 10-2)

x = distance through absorber (shield) in direction of beam, centimeters.

The buildup factor, B, allows for the photons which are not destroyed (but merely reduced in energy and diverted) by Compton scattering. The magnitude of B varies with the shield (absorber) material, with photon

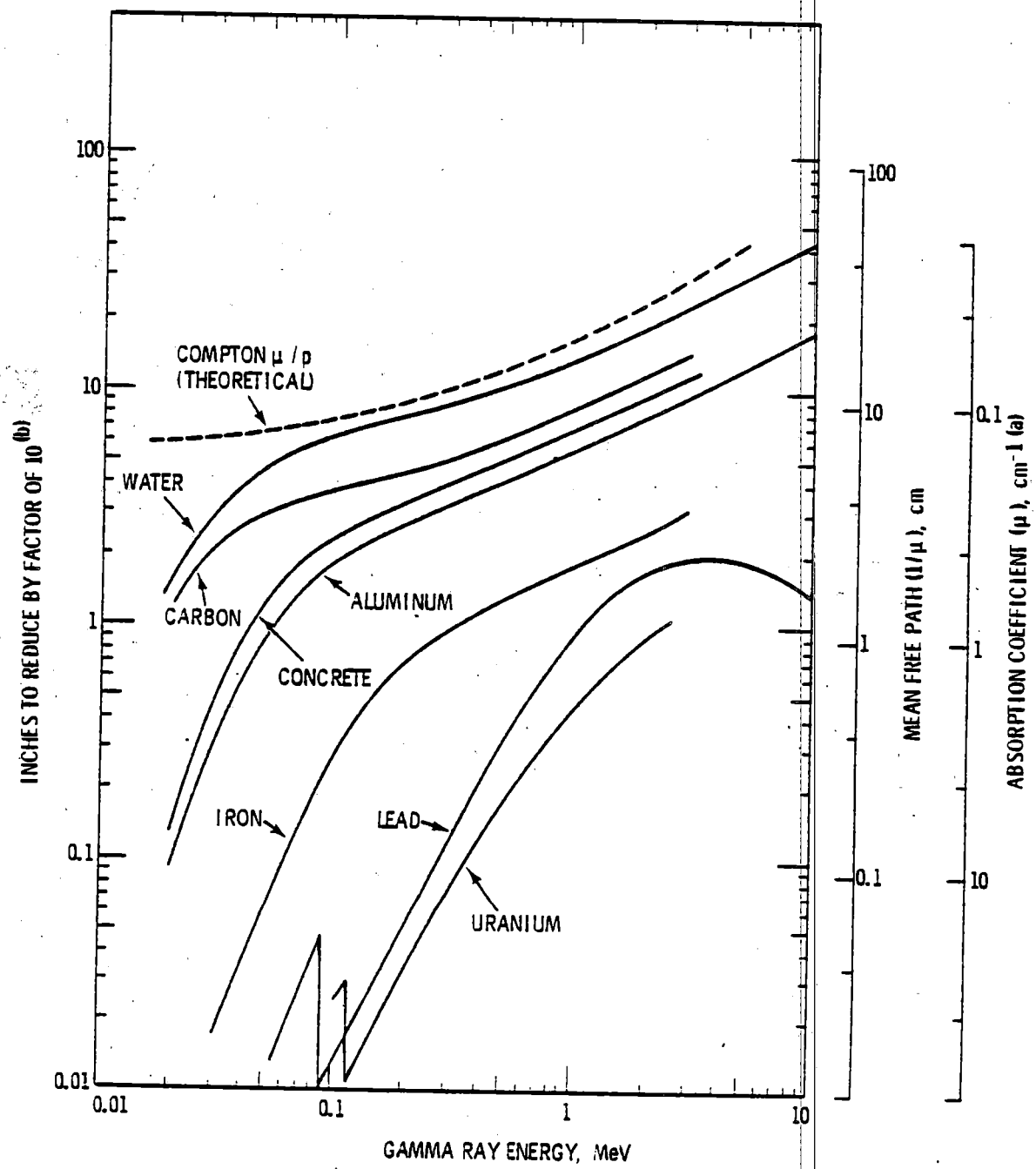

NOTE: (a) REFER TO THE TEXT AND FIGURE 10-1 FOR FURTHER EXPLANATION OF THE ABSORPTION COEFFICIENT. THE USE OF THE ABSORPTION COEFFICIENT IN SHIELDING CALCULATIONS IS EXPLAINED UNDER 10.2.3.3 IN THE TEXT.

(b) THIS IGNORES THE SECONDARY PHOTONS PRODUCED BY COMPTON SCATTERING. (SEE 10.2.3.3.2 IN TEXT)

RCP7906-33

FIGURE 10-2. Absorption of Gamma Radiation.

energy and with shield thickness, although the relationship is difficult to define. Values of B, estimated on this basis for use in the design of the Purex Plant, are tabulated below.

Buildup Factor, B
Used in Purex Plant Design

Absorber	Thin Shields (<1 Mean-Free Path)	Thick Shields
Air	6	6
Water	----	33
Concrete	1	3
Steel	1	1
Lead	1	1.5

Investigations completed after the Purex Plant design led to B factors for concrete, lead, and water which are generally considered as more nearly correct than those listed above. The later values are listed below.

Buildup Factor, B
Corrected by More Recent Investigations

Absorber	Thin Shield (<1 Mean-Free Path)	Intermediate Shield (2-8 Mean-Free Paths)	Thick Shield (<8 Mean-Free Paths)
Concrete	1	5	15
Lead	1	2	3
Water	----	22	39

10.2.2.6 Attenuation by Solid Objects

As discussed in Section 10.2.2, when a primary gamma ray impinges on matter, such as a thick slab, the mechanism of Compton scattering produces photons of reduced energies. These photons are scattered in all directions with some escaping from the slab on the same side as the source. The net effect is a "reflection" of a portion of the primary beam, known as back-scatter.

In the design of shielding, gamma-ray attenuation resulting from scattering by the shield must be considered. If there is any possibility for radiation to be scattered around a shield or through an opening in the shield, the design must assure adequate attenuation by scattering. In practice, this is accomplished by means of labyrinths which are discussed under Section 10.2.6.2.

10.2.3 Attenuation of Alpha Particles

Because of the large mass (compared to electrons and photons) and double charge of alpha particles, the ion production per unit length of path (i.e., rate of energy absorption by matter through which the particle passes) is high. This means that the total energy of the particle is absorbed in passing through a relatively short distance in matter. For example, the range of the 4.18 MeV alpha particle from U-238 is approximately 1 inch in air, 0.001 inch in the dead layer of skin, 0.0006 inch in aluminum, and 0.00035 inch in lead. Because of this short range, the intensity of alpha radiation may be neglected insofar as shielding calculations or the effect of material is concerned.

10.2.4 Attenuation of Beta Particles

Compared to gamma photons, beta particles are much less penetrating because of their greater mass and associated greater energy absorption in matter. For example, the 2.3 MeV beta particle from either Pa-234 (UX_2) or Rh-106 has a range of approximately 25 feet in air and 0.15 inch in aluminum. Normally, beta particles do not penetrate container walls. Because of the relatively short range of beta particles in materials of interest, as compared to the inherent mass and geometry of the Purex Plant, beta attenuation mechanisms are of primary interest only as related to the problem of a receptor at a short distance from a bare beta source.

For beta radiation, the effect of intensity attenuation by distance is similar to that for gamma. Likewise for beta radiation, the effect of air as an absorbing material (shield) between the source and the receptor provides only negligible attenuation compared to pure distance attenuation. Unlike gamma radiation, however, the range of beta particles in air is definitely limited by absorption and varies significantly with energy level. Thus, for a point source, the attenuation of beta rays by distance may be approximated by the method explained for gamma rays, provided the distance from source to receptor is small compared to the range in air. The initial intensity (as estimated by the method outlined under 10.2.1.2) is divided by the square of the distance (in centimeters) to the receptor.

For a beta source of thickness greater than one mean-free path, the initial intensity must be corrected for self-absorption. For beta rays, the mean-free path, μ centimeters, of a particle of energy level E (MeV) in a material of density ρ (g/cm^3) may be approximated by the expression

$$\mu = \frac{0.055E^{1.33}}{\rho} \qquad (4)$$

10.2.5 Calculation of Gamma Radiation Intensity at a Receptor

The gamma radiation intensity at a receptor is a function of the initial radiation intensity and of the attenuation attained between the source and the receptor due to the combined effects of distance and of interposed matter (shielding). Initial radiation intensities and attenuation have been discussed in previous sections of this chapter. In this section, methods are presented for estimating intensities at receptors under conditions likely to be of interest in the Purex Plant.

10.2.5.1 Effective Mean Energy Levels

In estimating the total radiation intensity from a source of more than one energy level, maximum accuracy results if individual values of intensity, calculated for each energy level present, are summed. For approximate estimates, however, a single calculation for each type of radiation is more convenient, based on an estimated value of the "effective mean" energy level for that type of radiation.

For the Purex Plant, the energy spectrum of the uranium fuel elements is roughly constant. Therefore, in most cases it is practical to approximate radiation intensities on the basis of conservatively estimated values of effective mean energy level.

Because of the variation of absorption coefficients with energy level and material (see Figure 10-2), calculated values of mean effective energy level are affected by self-absorption of the source and by shielding. For approximate solutions of Purex Plant problems, the effect of self-absorption is negligible but effects due to shielding should be considered. For example, in estimating the gamma intensity from a given source, the effective mean energy level may vary by a factor of three, depending on the amount of shielding involved. For a source with the energy spectrum of N Reactor Mark IV uranium fuel elements irradiated for 220 days to 2435 MWd/t and "cooled" for 180 days, the approximate variation of mean effective energy level, for gamma radiation, with concrete shield thickness is shown by the following table.

Variation of Mean Effective Energy Level
With Shield Thickness

Concrete Shield Thickness, Ft	0	2	6.5
Effective Mean Energy Level, MeV	0.3	1.1	2.1

For a conservative approximation of Purex Plant gamma intensities, mean effective energy level values of 0.7 MeV, in the absence of shielding or with a thin shield (6 inches of concrete or less) and 1.6 MeV, in the presence of thick shielding (more than 6 inches of concrete), may be assumed. For the principal beta case of interest, viz., a receptor immersed in a radiation source (10.2.5.2 below), a value of 1.5 MeV may be used as the effective mean value of the beta energy maxima.

10.2.5.2 Point Source

A real-object radiation source may be considered as approximately equivalent to a mathematical point source if the distance between the source and the receptor is greater than any dimension of the source area facing the receptor. Under these conditions, the radiation attenuation due to the combined effects of distance and passage through matter is approximately governed by the following equation:

$$\dot{X} = \frac{\dot{X}_o}{d^2} (Be^{-\mu x}) \qquad (5)$$

where

d = distance from source to receptor, centimeters

B = "Buildup factor", an empirical correction factor for secondary photons produced by Compton scattering

e = 2.718

$\dot{X}$ = radiation intensity at the receptor, R/hr

$\dot{X}_o$ = initial radiation intensity, R/hr

x = distance through absorber (shield) in direction of beam, centimeters

μ = absorption coefficient in reciprocal centimeters (see Figure 10-2).

The use of Equation 5 is illustrated by the calculations below, in which the intensity of gamma radiation at a point 25 feet from the HAF tank and shielded by 6 feet of concrete is estimated. For this case (thick source) $\dot{X}_o$ is calculated by means of Equation 2:

$$\dot{X}_o = \frac{5500CEA}{\mu}$$

where

$C = 0.17$ gamma Ci/cm^3

$E = 2.1$ MeV (10.2.5.1)

$A = 74{,}300\ cm^2$ (10 foot diameter by 8 foot liquid depth)

$\mu = 0.066\ cm^{-1}$, for HAF (10.2.2.4)

$$\dot{X}_o = \frac{(5500)\ (0.17)\ (2.1)\ (74{,}300)}{(0.066)} = 2.2 \times 10^9\ R/hr$$

For use in Equation 5,

$d = 760$ centimeters

$B = 15$

$\mu = 0.105\ cm^{-1}$ for concrete

$x = 183$ centimeters of concrete. (The beam of radiation is assumed to be perpendicular to the two parallel shield faces.)

Hence the intensity of radiation at the receptor is estimated to be

$$\dot{X} = \frac{(2.2)\ (10)^9 (15)\ (2.718)^{-(0.105)\ (183)}}{(760)^2}$$

$$= 2.6 \times 10^{-4}\ R/hr$$

$$= 0.3\ mr/hr$$

As is frequently the case when estimating by the simplified method outlined above, this intensity value may be on the conservative (high) side.

10.2.5.3 Line Source

A real-object source, such as a column or a pipeline, may be considered a line source if it is longer than the distance to the receptor and its diameter subtends an angle smaller than about 54 degrees at the receptor. Under these conditions, the approximate attenuation due to distance alone may be calculated from the following equation:

$$\dot{X} = \frac{\dot{X}_o}{aL}\left(\frac{9\pi}{180}\right) \qquad (6)$$

where

$\dot{X}$ = intensity at the receptor, R/hr

$\dot{X}_o$ = initial radiation intensity, R/hr

a = perpendicular distance from the source (or its extension) to the receptor, centimeters

L = length of the source, centimeters

θ = angle subtended by the longest dimension of the source (L) at the receptor, degrees

When the effect of shielding upon the radiation intensity from a line source is also to be evaluated, it is generally convenient to divide, for calculation purposes, the line source into two to four component parts each of which meets the criteria for point sources. The radiation intensity at the receptor due to each of these component parts is then calculated by the use of the point source equation (Equation 5) and the intensity at the receptor due to the several components of the source are added together to obtain the total intensity at the receptor.

10.2.5.4 Large Bulk Sources

The radiation intensity at a receptor located at or very near the surface of a real-object radiation source, or at any receptor located at a distance smaller than the smallest dimension of the source facing the receptor, may be calculated from the following equations:

(a) For a thick source, i.e., for a source which is more than one mean-free path thick (e.g., a tank):

$$I = \frac{2\pi\ I_o^*}{\mu} \qquad (7)$$

(b) For a thin source, i.e., for a source which is less than one mean-free path thick (e.g., a large spill):

$$I = \frac{(I_o^* V)}{A} \; 2.3 \log \frac{R^2}{a^2} + 1 \qquad (8)$$

where

I = radiation intensity at the receptor, R/hr

I_o^* = initial radiation intensity from cm^3 of source, R/hr

μ = absorption coefficient of source, reciprocal centimeters

V = volume of source, cm^3

A = area of source, cm^2

R = radius of circular source, centimeters. For a noncircular source, the average of the largest and smallest radii or 80% of the largest radius, whichever is larger, may be used.

a = perpendicular distance from source to receptor, centimeters.

Equations 7 and 8 may be used in radiation attenuation calculations when no shielding is involved for any real-object source which does not meet the point-source or line-source criteria suggested under 10.2.5.2 and 10.2.5.3. However, Equation 7 quite often yields unduly conservative results. A thick real-object source which is too large to meet the point-source or line-source criteria is subdivided into two parts, each of which meets the line-source criteria, or into two to four parts, each of which meets the point-source criteria. More realistic results are then obtained by carrying out distance-attenuation calculations for each part separately and adding the intensities at the receptor due to the several parts. When both shielding and attenuation by distance are involved, subdivision of the source into components meeting the point-source criteria is almost always the simplest reasonably accurate calculation method.

10.2.5.5 ISOSHLD - II Program

The ISOSHLD (pronounced Isoshield) - II computer program (Ref. 15, 16) provides a convenient semirigorous method to perform gamma ray shielding calculations for isotope sources in a wide variety of source and shield configurations. This computer program replaces hand calculations, which were very time consuming and approximate. Isotopic decay, material attenuation, buildup factor, and other required basic data for the computer calculations are available as subroutines. Thus, for most problems the user need only supply the geometry and material composition of the source and shields.

The ISOSHLD program plus a program specially prepared to extract information from the ISOSHLD output to make further calculations were used to determine the mean gamma energy levels and dose rates at a total distance of 12 feet from the center of two different sources. Calculations were made for source cooling times of 0, 180 days, and 5 years with intervening concrete shield thicknesses of 0, 2, and 6.5 feet. The cases considered include a bare fuel assembly (24.1 kg uranium), and fuel assembly dissolved in a 10-foot-diameter by 10-foot-high cylindrical tank made of 3/8-inch-thick steel. Neglecting self-shielding effects, the dose rate from N fuel elements dissolved in the same tank is approximated within 10% by multiplying the dose rate from the single assembly by N. The results of these calculations with N = 1 and 200 (to approximate HAF conditions) are summarized in Table 10-1.

TABLE 10-1. Gamma Dose Rate[a] and Mean Energy Level[a] as Functions of Source, Cooling Time, and Concrete Shield Thickness.

Source	Cooling Time	Concrete Shield Thickness [Units are (Rems/hr)/MeV]					
		0 ft		2 ft		6.5 ft	
		Rems/hr	MeV	Rems/hr	MeV	Rems/hr	MeV
Bare fuel Assembly[b]	0	1.1(8)[c]	0.35	3.0(5)	2.5	7.6	3.0
	180 days	5.5(5)	0.30	7.3(1)	1.3	7.2(-5)	2.1
	5 years	1.4(4)	0.27	1.3	1.5	1.5(-6)	2.2
1 Fuel Assembly Dissolved in Tank[d]	0	7.4(7)	0.35	1.5(5)	2.3	1.8	3.0
	180 days	4.5(5)	0.30	6.6(1)	1.1	2.5(-5)	2.1
	5 years	1.6(4)	0.27	1.1	1.1	5.1(-7)	2.2
200 Fuel Assemblies Dissolved in Tank[d]	0	1.5(10)	0.35	3.0(7)	2.3	1.5(3)	3.0
	180 days	9.0(7)	0.30	1.3(4)	1.1	5.0(-3)	2.1
	5 years	3.2(6)	0.27	2.2(2)	1.1	1.0(-4)	2.2

[a]At a total distance of 12 feet from center of source

[b]24.1 kg of uranium

[c]1.1(8) = 1.1×10^8, e.g.

[d]10-foot-diameter x 10-foot-high cylindrical tank of 3/8-inch steel

10.2.6 Purex Plant Shielding

After discharge from the reactor and subsequent "cooling," irradiated fuel is transported by railroad to the Purex Plant (202-A) for processing. During all phases of these operations, shielding adequate for personnel safety is required. Purex Plant shielding is designed to reduce radiation intensities ot a mazimum of 1.0 mr/hr in radiologically controlled areas.

Massive lead-shielded casks (see Section 3.1), each of which carries 168 N-Reactor fuel elements (approximately 4.3 tons of uranium), are used to transport irradiated fuel by railroad. The radiation from the fuel is attenuated to a gamma intensity of less than 10 mr/hr outside the cask. Upon arrival at the 202-A Building, the irradiated fuel elements are charged directly to a dissolver.

Radiation escaping to the out-of-doors during the unloading of the fuel elements from the railroad cars in the Building 202-A railroad tunnel is attenuated by earth and by concrete shielding. The railroad approach to the building is a curved section of track, about 600 feet long, located 10 feet below grade in a cut, the outer edge of which is topped with a 12-foot-high (above grade) earth embankment. A 95-foot-long railroad tunnel extension, with 2-foot-thick concrete walls and a 1-foot-thick concrete roof, shields that section of the approach adjacent to the building. Two concrete walls on opposite sides of the track and parallel to the building at approximate distances of 175 feet and 700 feet shield the open end of the railroad tunnel extension. The near wall (on the inside of the curved track) is 1 foot 6 inches thick; the far (outer) wall is 1 foot thick.

The principal shielding elements in the 202-A Building are concrete walls and roof. For economy of design and construction, the thickness of any continuous wall is constant. The thickness is that required to give protection from the radiation source of maximum intensity shielded by the wall. Thus, the shielding for many parts of the building is more than adequate.

The upper walls of the canyon are 4 feet thick and are designed to protect personnel in the operating gallery in the event that a fuel element is suspended near the wall. The lower canyon wall, on the south, which is 2 feet 6 inches thick, provides sufficient protection for the normally unoccupied pipe trench. An outer wall on the south side, 5 feet 6 inches thick, protects personnel from the radiation from the pipes and from that radiation not sufficiently attenuated by the thin inner wall. The canyon roof is 1 foot thick.

Concrete cover blocks for the process cells, the "hot" pipe trench, the decontamination cell, and the pool cell are designed to limit the radiation level on the canyon deck to 100 mr/hr. Thus, in the absence of any radioactive materials above the deck level, access to the canyon is permitted if the cell cover blocks are in place. Process cell cover blocks

are 3 feet thick; decontamination cell and pool cell blocks are 2 feet thick; and pipe trench cover blocks are 2 feet 6 inches thick. Cell cover blocks for the acid storage vault are 1 foot thick.

The concrete sidewalls of the railroad tunnel, within the canyon area, are 4 feet thick and limit the radiation level on the tunnel floor to 12 mr/hr, when cell covers are in place.

To eliminate direct radiation to the crane cab, the cabway is shielded by a concrete curtain wall 2 feet 2 inches thick and a concrete cab gallery floor slab 2 feet thick. The crane operator in the cab is protected from scattered radiation by 4 inches of steel on the top and upper sides, 3 inches on the lower sides, and 1 1/2 inches on the bottom. The auxiliary crane, which operates at a higher level in the canyon, has no shielding wall. This crane is either remotely operable from the regular crane or independently operable from the nonshielded cab. The auxiliary crane is used independently only when radiation levels permit.

A concrete pipe chase runs the length of the sample gallery behind the sample enclosure. This chase has a front wall 1 foot thick and removable concrete covers 1 foot thick which attenuate the radiation from the sample drain headers, recovered acid header, recovered solvent header, and laboratory drain header. The chase for interconnecting lines between the Solvent Treatment Building (276A) and the canyon has walls 2 feet thick.

In addition to the principal shielding elements of the 202-A Building, special shielding is provided as required for the contact operation of certain equipment. For example, various thicknesses of lead, concrete, and steel are used for shielding the sampling equipment. These materials are also used for shielding in the product removal room; the product removal cans are shielded with 1/2 inch of lead.

The Waste Storage Facilities (241 Tank Farms) and the piping from the 202-A Building are shielded by a minimum of 7 feet of earth. Portions which have no earth cover (e.g., diversion boxes and pump pits) are shielded by concrete covers. Diversion box covers are made up of three blocks, each of which is 1 foot 8 inches thick. The pump pit cover is a concrete block 2 feet 6 inches thick.

Special design techniques, based on attenuation by scattering, are employed to prevent the escape of high intensity radiation through necessary openings, or interruptions, in otherwise continuous shielding. These openings, or apertures, are frequently required for operating or construction convenience. In the Purex Plant, apertures include the clearances around cell cover blocks, the openings resulting from passage of process piping through shielding, and access openings into radiation zones.

It is apparent that if a straight length of pipe were run through a shielding wall, radiation could escape through the space required by the pipe. On the other hand, if the path of the pipe were curved, the radiation would be attenuated by the effective straightline thickness of

the shield and scattering through the pipe. In the Purex Plant, piping through concrete shields is run with an offset bend of at least five diameters in the shields.

Likewise, if the joint between a cell and the cover block were a straight line, radiation could escape through the resulting crack. In the Purex Plant, radiation through such joints is attenuated by maintaining close clearances and fabricating steps in the joint such that no straight-line crack passes more than one-third of the distance through the shield.

For the case of openings such as doorways, labyrinths are frequently constructed in the shielding material to attenuate radiation. A labyrinth provides a path through the shield which includes sufficient right angle turns to scatter any radiation entering the opening to a harmless level. In addition, the labyrinth is constructed with walls of a thickness sufficient to cause any straightline radiation to pass through the normal shield thickness.

10.3 DECONTAMINATION OF SURFACES

Surface decontamination techniques are employed in the Purex Plant for the removal of radioactivity from various operating equipment pieces and operating areas prior to removal of the equipment for maintenance purposes. A summary of information concerning decontamination solutions and methods is contained herein.

10.3.1 General

The intensity of radioactivity within the Purex Plant covers a wide range, and the types of work which may require decontamination of equipment diverge widely. The usual practice is to flush the equipment piece in place prior to removal from the canyon for maintenance work or for replacement.

Because of the almost universal use of stainless steel in the construction of the Purex Plant process equipment, the problem of decontamination of process equipment is largely a problem of removing radioactivity from stainless steel. Decontamination of this particular material has received considerable study, and a reasonable degree of success has been realized. The structural and supporting elements of the plant are fabricated almost entirely from concrete and mild steel. These materials without a protective coating are extremely difficult, if not impossible, to decontaminate. In the processing areas, all non-stainless steel elements have been covered with protective coatings which have good resistance to process solutions and prevent wetting the bare material with contaminants. These coatings permit the use of chemical reagents for decontamination which might otherwise react with the unprotected surfaces.

Decontamination of the surfaces of Purex Plant equipment and structural elements necessarily involves empirical procedures based on knowledge obtained in plant practice and laboratory studies at Hanford and other sites. The usefulness and feasibility of decontamination has been demonstrated clearly. The principal difficulties encountered are in decontamination of concrete and mild-steel surfaces where failure of the protective coating permits contamination to contact unprotected surfaces.

10.3.1.1 Terminology

The decontamination procedure has given rise to the use of certain special terms and concepts.

The term decontamination is used to designate the removal of radioactive chemical elements from solid surfaces.

Contaminants are the radioactive elements present on the solid surface.

Mechanism of contamination is the means whereby the radioactive elements are transferred to and fixed to the solid surface.

Decontamination methods are the means utilized to remove radioactive elements. The methods are generally classified as (a) physical--total or partial removal of the contaminated surface; (b) chemical--reaction with the radioactive elements or the larger mass of the associated nonradioactive materials to attain soluble or extractable forms; and (c) physicochemical--suspension by surface-active agents.

10.3.1.2 Principles of Decontamination

The mechanism governing surface contamination and decontamination is not completely understood. However, laboratory tests and in-plant decontamination of process equipment indicates some of the principles of contamination-decontamination phenomena to be as follows (Ref. 17):

- The art of decontamination requires the control of radioactivity at all times. Good planning and the subsequent pursuit of a well-thought out decontamination procedure are mandatory.
- Surfaces contacted by "spills" should be flushed or swabbed before the activity has had a chance to dry. This principle also applies to the interior of process vessels.
- Removal of a thin film or layer of the contaminated surface is necessary for achievement of maximum decontamination in the shortest time.
- Complexing, chelating, and metathesizing agents are of little value after the activity has dried.

- Successive use of several reagents over short periods of time (1 to 4 hours) appears to produce better decontamination than the use of a single reagent over an extended period of time (24 to 48 hours).

- Good agitation is necessary for the successful use of any reagent in solution.

- The efficiency of a given reagent usually increases as the temperature increases; however, the maximum practical temperature may be limited by corrosion considerations.

- Surfaces may be protected from radioactive contaminants by reduction of the surface free energy (used here as analogous to ease of wetting). Coating exposed surfaces with relatively non-wetting membranes such as paint or non-polar plastics is always desirable where practical.

- Application of strippable coatings or other inert membranes, where practical, presents the simplest and perhaps the easiest method of decontamination.

10.3.1.3 Factors Influencing Decontamination

The following are some of the factors affecting decontamination procedures in the Purex Plant:

- The constituents of the Purex process solutions do not normally form insoluble compounds. Hence, any deposits formed by exceeding the saturation point should be removable with water flushes.

- The Purex Plant incorporates design features to confine process materials within the interior of processing equipment.

- The employment of continuous-flow equipment in the Purex process necessitates some mechanical complexity, with the associated need for equipment replacement and adjustment.

- Facilities (Decontamination Cell, Hot Shop, and Regulated Shop) have been provided for servicing repairable contaminated equipment.

10.3.1.4 Protective Coatings

Structural elements in the plant have been either protected with a chemically resistant coating or constructed of 18-8 Cr-Ni stainless steel. Thus, all exposed concrete within the cells has been protected with Amercoat No. 33 or 74 with the exception of the floor areas in the Pool, Decontamination and L Cells (from the 2B column, T-L2, on) which are protected with stainless steel sheathing. Structural-steel elements and

certain equipment fabricated from carbon steel have been protected with Amercoat No. 33 or 74. This type of construction facilitates removal of gross radioactivity by simple water flushing.

10.3.1.5 Construction Materials

Process equipment normally wetted by process solutions is fabricated almost entirely from stainless steel. Some important but relatively small elements utilize Stellite, Kel-F, and Teflon. All of these materials are exceptionally resistant to chemical attack and are decontaminated readily.

10.3.1.6 Design Features Facilitating Decontamination

All equipment normally in contact with process solutions is designed to be fully drainable and flushable. The process equipment also incorporates seals on all pump and agitator shafts, that, with the vacuum vent header system, effectively confine radioactive material to the interiors of process equipment.

10.3.1.7 Makeup and Routing of Decontaminating Solutions

The Aqueous Makeup facilities include a utility makeup tank (TK-105) designed primarily for the makeup of decontaminating solutions. The utility makeup tank discharges to a wash solution header, which is piped to all tanks feeding canyon process equipment. Decontaminating solutions are made up in the utility makeup tank, routed through the wash solution header to the appropriate aqueous makeup tanks, and then routed to the process equipment in need of decontamination via normal process piping. In some cases it is necessary or advantageous to employ an indirect routing, i.e., to route the decontamination solution through one or more other pieces of process equipment before it reaches the piece to which it is destined. Any of the aqueous makeup tanks may be employed for decontaminating agent makeup if the need arises.

10.3.2 Stainless Steel

The Purex Plant process equipment components (tanks, lines, pumps, etc.) are fabricated almost entirely from the 300 series of chrome-nickel stainless steels. The decontamination of stainless steel is consequently of prime interest. Since the problem of decontamination is solved by an empirical approach, discrimination between 300 series types is not justifiable.

Stainless steel contamination is categorized as: (a) alpha contaminants on internal surfaces, (b) alpha contaminants on external surfaces, (c) beta and/or gamma contaminants on interior surfaces, and (d) beta and/or gamma contaminants on exterior surfaces. In general, the least corrosive effective decontaminant is used, so that attack upon the equipment is maintained at a minimum.

Internal surfaces are first in the sequence of decontamination because of the greater freedom and control associated with this operation and because these surfaces contain large amounts of easily removable contamination. To produce results of the greatest value, decontamination flushes are routed from areas of low radioactivity into areas of high radioactivity. Decontaminants that are combined with process wastes for disposal must be compatible with the process solutions so that normal plant production is not interrupted (Ref. 18).

10.3.2.1 Internal Alpha Contamination

Alpha (notably uranium and plutonium) contamination inside process vessels assumes relative importance only where the fission-product beta and gamma activities have reached comparatively low levels, i.e., downstream (with respect to uranium and plutonium) from the HA column.

Nitric acid is the preferred decontamination reagent since the principal alpha contaminants (plutonium and uranium) are soluble in this medium. As-received 57 wt% nitric acid is the most effective, readily available concentration, although lesser concentrations have been used successfully. Some judgment must be exercised as it is possible to roughen highly polished surfaces with concentrated acid (20% or above). Normally, a temperature of 25 to 30°C is adequate.

10.3.2.2 External Alpha Contamination

The problem of decontaminating external surfaces is complicated by the possibility of extending the contamination to otherwise clean areas. Therefore, caution must be exercised, since the need for decontaminating surfaces adjacent to those originally contaminated may be increased by unrestricted and uncontrolled flushing.

The following precautions are observed in decontaminating external surfaces:

- The redistribution of existing contamination is limited to the smallest possible area.
- Normally the surface is not flooded with water or other decontaminating agents.
- The surrounding surfaces that might be wetted during the decontamination treatment are protected.
- Contaminated materials such as tools, rags, swabs, or gloves are not placed in uncontaminated areas. Disposable containers such as bags or boxes are used for storing all cleaning supplies.

The choice of decontamination reagents is based on factors such as the original surface finish, necessity for preserving the finish, and limitations of drainage facilities for solvents or highly radioactive chemical agents. The materials listed below have been found to be useful for room-temperature application, but the relative effectiveness has not been established.

- Fifty-seven wt% nitric acid
- Five wt% nitric acid
- Permanganate-bisulfite. The sequence of operations consists of scrubbing the surface with saturated potassium permanganate solution, removing the permanganate by wiping, scrubbing the surface with 10% sodium bisulfate solution, and flushing the surface with water.
- Organic solvents
- Abrasives
- Inhibited hydrochloric acid.

10.3.2.3 Internal Beta and Gamma Contamination

Beta and gamma contamination, due primarily to fission products, is of greatest concern in the earliest process steps, i.e., before substantial decontamination of process solutions is accomplished by the process. Since most of the surfaces contaminated with beta and/or gamma contaminants are also likely to be contaminated with alpha contaminants, it is general practice to use nitric acid for the first flush, particularly if a significant amount of plutonium holdup is suspected. Although beta and/or gamma contaminants are not completely removed by nitric acid, it is useful in removing the major portion of nonradioactive materials constituting the film in which the radioactivity is bound.

Oxidizing, reducing, and complexing agents have been used successfully for decontamination. A summary of the solutions found most effective is shown in Table 10-2. Solutions containing a mixture of tartaric acid and sodium hydroxide or a mixture of oxalic acid and nitric acid are effective for removing zirconium-niobium contamination. A solution containing potassium permanganate and sodium hydroxide removes ruthenium from surfaces. The basic permanganate solution has been used in conjunction with a nitric acid-fluoride-ferrous sulfamate mixture which removes any precipitated manganese dioxide plus additional radioactivity, particularly zirconium and niobium. Either sodium or potassium fluoride mixed with aluminum nitrate is used to remove accumulations of silicates.

TABLE 10-2. Purex Decontamination Solutions.

Name	Composition	Wt%	Specific Gravity	Application Temperature, °C	Product Removed
Caustic	Sodium Hydroxide	25	1.27	80	Basic Aluminum Oxide
Caustic-Tartrate	Tartaric Acid	2	1.06	80	Zirconium-Niobium
	Sodium Hydroxide	5			
Oxalic-Nitric	Oxalic Acid	5	1.03	60	Zirconium-Niobium and Manganese Dioxide
	Nitric Acid	3			
Alkaline Permanganate	Potassium Permanganate	4	1.05	Ambient	Ruthenium
	Sodium Hydroxide	1			
Acid	Nitric Acid	15	1.08	Ambient	Plutonium and Uranium
KF	Potassium Fluoride	*	*	90	Silicates
	Aluminum Nitrate Nonahydrate				
NaF	Sodium Fluoride	*	*	90	Silicates
	Aluminum Nitrate Nonahydrate				

*Composition variable depending upon anticipated usage.

For successful internal decontamination, frequent changes of decontamination solutions are more beneficial than extended contact time. The most rapid dissolution of radioactive contaminants in the decontaminating solution occurs in from 15 minutes to 2 hours, depending upon the solution used (Ref. 19, 20). Considerations governing the frequency of change include the cost of solution disposal. Adequate agitation is also a prime requisite of successful internal decontamination, and elevated temperatures usually add to the effectiveness of flushing solutions.

In addition to liquid decontaminants, live steam assists the decontamination process in some cases. The mechanism of decontamination with steam may involve either the penetration of minute recesses inaccessible to liquids or by the exertion of an abrasive action.

10.3.2.4 External Beta and Gamma Contamination

The plant areas in which external beta and gamma contamination is of potential concern coincide with those in which internal beta-gamma contamination levels are high. Decontamination efficiency is hampered by the fact that the flush solutions are not confined by equipment and efforts to restrict the contamination spread by decontaminating agents are generally not very effective. The decontaminating agents shown in Table 10-2 can be used for the removal of external contamination. The decontaminating solutions may be applied from the closest point of vantage by means of a pump or jet or spray nozzle. To assist in carrying the contamination from the decontaminated area to the sump, the entire area undergoing decontamination is liberally flushed with water.

10.3.3 Iron and Carbon Steel

Iron and carbon steel are employed for machine and structural elements (e.g., electric motors, jumper braces) not normally wetted by process solutions. As installed, these elements are protected by a chemical-resistant coating. Experience with decontamination of unprotected iron or steel has been generally disappointing. Complete removal of the contaminated piece is usually the most practical solution.

Nitric acid, although effective in decontaminating stainless steels, is not effective in the decontamination of unprotected iron and steel. The degree of re-adsorption of the highly diluted, radioactive elements by the freshly formed, unoxidized metallic surface appears to create a practical obstacle that limits the decontamination. In addition to being ineffective, the use of acidic solutions increases the difficulty of successfully removing the contamination with subsequent decontaminating agents because of the surface-etching effect of the acid.

10.3.4 Concrete

Concrete, in the absence of a protective surface coating, retains contaminants to a high degree. Chemical or physico-chemical reagents are not effective in removing either chemically fixed or physically adsorbed radioactivity. The Purex Plant is designed and constructed on the basis that concrete surfaces are always protected by a chemical-resistant coating. In the event of contamination which penetrates through to the concrete base material, only two courses appear practical: (a) physical removal of the contaminated surface, or (b) shielding of the contaminated concrete surface.

10.3.5 Glass

Glass finds its greatest application in the construction of laboratory equipment. Accordingly, the type of contamination may vary widely. A 5 wt% solution of ammonium hydrogen fluoride (NH_4HF_2) has been effective in decontaminating glass at Oak Ridge National Laboratory. Etching does not result if the time of contact is kept to only a few minutes (Ref. 21).

Nitric acid in concentration of 20 to 60 wt% is also used effectively for decontaminating laboratory glassware. The more concentrated solutions are used for soaking the equipment while the less concentrated are usually used for swabbing. Laboratory cleaning solution (95 wt% sulfuric acid saturated with sodium dichromate) is also effective for decontaminating glassware.

10.3.6 Lucite and Plexiglass (Ref. 21)

Lucite and Plexiglass (polymerized methyl methacrylate), transparent thermoplastics, are construction materials employed in the Product Removal Room that also find numerous applications as components in laboratory equipment. The transparency of Lucite is an essential requirement in its product removal room applications; therefore, precautions must be taken to use decontaminating agents that do not cause "fogging." In laboratory applications, loss of transparency is of less concern. Cleaning solutions (95 wt% sulfuric acid saturated with sodium dichromate) routinely used in laboratories as a decontaminating agent for Lucite cause "fogginess," which increases with the number of applications.

The primary contaminant in the product removal room is plutonium in an aqueous nitric acid system. A suitable procedure for removal of plutonium contamination is as follows:

- The adjacent uncontaminated areas are protected with absorbent paper.
- Five to ten weight percent nitric acid is applied by swabbing. (Nitric acid in concentrations in excess of 20 wt% attacks Lucite.) The swabbed area is permitted to remain wet for 3 to 5 minutes.

- The nitric acid is removed by sponging the surface with water.
- The surface is dried with a soft, clean, nonabrasive cloth or paper.

Personnel carrying out the decontamination must be adequately protected from alpha contamination. To avoid recontamination of the surface, separate containers must be provided for clean and used cleaning materials.

The transparency of a polished Lucite surface may be impaired and permanent fixation of plutonium may be caused if the surface is wetted by a reagent in which Lucite is soluble. Since Lucite is soluble in many common organic solvents, no organic solvent is normally used for its cleaning or decontaminating.

10.3.7 Wood

Wood is utilized primarily for structural or equipment items, such as office fittings and furniture, not normally subject to contamination. Occasional temporary requirements may result in the introduction of wood into process or laboratory areas. Decontamination of wood is extremely difficult because of its porous, absorbent structure (Ref. 20). Protection from fixation of radioactivity is dependent upon the applied protective coating. In the event that contamination penetrates the protective coating, either partial or complete removal of the wood is the most practical and economical procedure.

10.3.8 Protective Coatings

Protective coatings employed in the Purex Plant for application to steel and concrete surfaces are either vinyl or epoxy based. These coatings provide a protective film that is smooth, chemically resistant to process and decontaminating solutions, and not readily wetted by them.

Since the protective films are the only barrier to essentially permanent contamination of the base materials, it is important to use a decontaminant which will inflict the minimum damage to the coating. Highly reactive materials such as nitric acid, chromic acid, or caustic soda are used as sparingly as possible and only in dilute solutions. The following agents, listed in order of preference, are recommended:

- Water
- Detergent solutions
- Complexing agents, oxalates, citrates, tartrates
- Alkaline permanganate-oxalic acid. This procedure requires direct manual application of 1 1/2 wt% $KMnO_4$-1/2 wt% NaOH solution for a 5- to 10-minute period followed by an application of 1 to 2 wt% NaOH solution and a water flush. Manual application of 5 wt% oxalic acid followed by a second water flush completes the procedure.

10.3.9 Skin (Ref. 2)

The techniques used in skin decontamination are important because of the danger of the entrance of contaminants into the body, either orally or through skin breaks.

Most skin contamination can be removed successfully with soap and water. Areas of the body that have toughened skin surfaces, such as the palms of the hands, may be decontaminated with abrasive type soaps such as "Lano-Kleen" or "Lava" soap. When further reduction in contamination levels is not being achieved using soap and water, other reagents are used. The following basic sequential steps will, under normal circumstances, successfully remove radioactivity from skin surfaces:

- Soap and Water. Regular bar soap and tap water are usually sufficient. As mentioned, a lightly abrasive soap such as Lava may be used on toughened skin surfaces. If, after several soap and water washings, no reduction in the contamination levels is noted, then use:

- Clorox (household type, only). Use Clorox directly as it comes from the container. Apply to the contaminated skin surface with a light rubbing action using cotton sponges. Refrain from reapplying contamination or spreading the contamination to unaffected areas by using a fresh sponge for each swipe. Rinse the skin surface with water after each Clorox application. Continue using Clorox until no reduction in radioactivity is noted. If contamination remains, then use:

- EDTA (10 wt% solution). Apply EDTA to the contaminated skin surface using cotton sponges. Rinse the skin surface thoroughly with water after each application. Do NOT apply EDTA more than two times. If contamination still remains then use:

- Potassium Permanganate and Sodium Bisulfite (4 wt% solutions). Using a cotton-tipped applicator, apply potassium permanganate ($KMnO_4$) solution directly to the contaminated skin surface. Allow time for the solution to dry on the skin; then, using additional applicators, remove the stain with a solution of sodium bisulfite ($NaHSO_3$). If the three previous steps have been attempted, make only two efforts to remove the contamination with the potassium permanganate/sodium bisulfite technique. Rinse the skin surface thoroughly with water after each application.

10.3.10 Clothing

In those areas within the Purex Plant where there is a hazard of personnel contamination with radioactive materials, all persons entering are required to wear coveralls, shoe covers and/or overshoes, caps, and gloves, as a protection against contamination of skin and street clothing. This outer protective clothing is called special work permit (SWP) clothing. In addition to these items, towels are furnished where required. The SWP clothing is monitored for contamination both before and after laundering. Articles of clothing registering less than 10,000 disintegrations per minute and/or 6 mrad per hour are sent to the laundry in regular SWP laundry bags. All items contaminated to levels higher than 10,000 disintegrations per minute and/or 6 mrad per hour but less than 40,000 disintegrations per minute and/or 50 mrad per hour are wrapped in a labeled plastic bag and placed beside the proper laundry hamper. Protective clothing contaminated in excess of 40,000 disintegrations per minute and/or 50 mrad per hour is discarded in a contaminated waste container, for eventual disposal by burial.

In the laundry, non-SWP clothing is handled separately from the SWP clothing. All towels and non-SWP clothing are washed in equipment used only for such clothing. Ozonite (a detergent) is used as a washing agent for this clothing.

A special procedure is used for washing normal SWP clothing (<6 mrad per hour). After a water rinse, the material is washed with Turco 4182A. If a radiation survey after washing indicates any residual contamination, the procedure is repeated until all contamination is removed. More highly contaminated clothing (6 to 50 mrad per hour), wrapped separately, is collected until a sufficient quantity has been accumulated to warrant separate washing. SWP rubber goods are decontaminated and then washed.

10.4 HAZARDS OTHER THAN RADIATION

The nature and extent of fire, explosion, and physiological hazards from Purex process chemicals are addressed in this section. Design features incorporated into the plant to eliminate or minimize these hazards and any special operational precautions required are reviewed.

10.4.1 Flammability and Explosiveness

Potential fire and explosion hazards in the Purex Plant arise primarily from the use of a moderately flammable organic solvent. Other potentially hazardous materials, besides the solvent, are hydrogen and ammonia gases, evolved in certain process steps, and oxidizing/reducing chemicals used in the process. Suppression of fire and explosion hazards has been a prime consideration in the design of the Purex process and of the Purex Plant. A discussion of these hazards follows with particular emphasis on (a) their extent, (b) engineering features designed to eliminate or minimize them, and (c) any special operational precautions required.

10.4.1.1 Definition of Terms

Definitions of special terms relative to flammability and explosiveness are:

- Flash Point is the lowest temperature at which a liquid gives off enough flammable vapor at or near its surface to ignite in an intimate mixture with air when contacted by a spark or flame. Flash point determinations are made in either closed cup or open cup apparatus. The results obtained by open cup determinations are affected by room atmosphere conditions and are usually several degrees lower than closed cup flash points.

- Autoignition temperature is the temperature at which a material (solid, liquid, or gas) will self-ignite and sustain combustion in the absence of a spark or flame.

- Fire point is the lowest temperature at which a mixture of air and vapor continues to burn in an open container after being ignited.

- Lower explosive limit (LEL) is the lowest percentage, by volume, of flammable vapor in air in which flame propagation can occur.

- Upper explosive limit (HEL) is the highest percentage, by volume, of flammable vapor in air in which flame propagation can occur.

10.4.1.2 Solvent

The solvent in the Purex Plant is a solution of tributyl phosphate (TBP) in a hydrocarbon diluent having a boiling range similar to kerosene. While both components are combustible, the relatively low volatilities and high flash points preclude the possibility of fire or explosion under normal prescribed conditions of solvent use in the Purex Plant. Potential hazards may arise from abnormal or nonstandard conditions.

10.4.1.2.1 Flammability Properties

The closed cup flash point of normal paraffin hydrocarbon diluent currently used in the Purex Plant and TBP are 158°F (Ref. 22) and 295°F (Ref. 23), respectively. The addition of TBP to diluent lowers the diluent vapor pressure in proportion to the amount of TBP added, and consequently raises the flash point. Flammability and explosive properties of normal paraffin hydrocarbon diluent other than the flash point are not reported. The values shown below are for kerosene and may be regarded as approximately correct for Purex Plant diluent. For example, the autoignition temperature for dodecane, which is a major component of the diluent, is 399°F (Ref. 22).

Lower explosive limit	0.7 vol%
Upper explosive limit	5.0 vol%
Autoignition temperature	444°F

10.4.1.2.2 Extent of Solvent Handling Hazard

The bulk of the solvent within the 202-A and 276-A Buildings is normally handled by the following solvent feed tanks:

Name of Vessel	Vessel Number
100 Feed	TK-G5
200 Feed	TK-R7

These tanks have a total working volume of 23,000 gallons, and the normal in-process inventory approximates 25,000 to 30,000 gallons. Tanks G7 and R5 are used, as necessary, to store the column solvent inventory during down periods.

Diluent and TBP storage facilities are provided in the 211-A Chemical Tank Farm. The following tanks are located in this area:

Name of Vessel	Tank Number	Nominal Volume, Gallons
Diluent Storage Tank	TK-40	65,000
TBP Storage Tank	TK-41	30,000

The fire and explosion hazard is small in both of the previously mentioned areas. Flammable vapor-air mixtures are not produced at normal operating temperatures. The 211-A Chemical Tank Farm is an outdoor installation, and the tanks within the area are vented to the atmosphere.

10.4.1.2.3 Precautionary Measures

To prevent a solvent fire in the Purex Plant, the solvent concentration in air is maintained too lean to support combustion, i.e., less than the lower explosive limit. Since the solvent at prevailing temperatures is below its flash point (a class III solvent), the use of an inert gas blanket is not required for flammability control. However, the fire protection systems described in Section 2.11 are located in process areas for fire detection and control.

Fire prevention by maintaining vapor concentrations too lean to support combustion places primary reliance on the control of the temperature of the solvent and/or diluent. The flash point of normal paraffin hydrocarbon containing 30 vol% TBP in air is near 200°F. The highest temperature attained by the solvent in contact with air in the Purex process is about 130°F. Thus, 70°F is available as a safety margin and/or to compensate for operational and instrument variations. The accumulation of potentially

dangerous pockets of vapor in process areas is prevented by adequate ventilation. Additional provisions to avoid solvent fires are made by using nonsparking tools and rotating equipment in solvent handling areas, where all electrical equipment is installed in conformance with the National Electrical Code (Ref. 24) requirements for handling class III solvents. It should be noted, however, that the design of electrical connectors and electrical equipment in accordance with these requirements is not "explosion proof" and is not suitable for use with a flammable liquid at or above its flash point. Sparking devices, such as switches, relays, and fuses, are installed in zones where solvent vapors are essentially absent.

10.4.1.3 Hydrogen

10.4.1.3.1 Explosive Limits of Hydrogen

The physical properties of hydrogen pertinent to flammability and explosiveness are (Ref. 22):

Lower Explosive Limit:	4.1 vol%
Upper Explosive Limit:	74.2 vol%
Autoignition Temperature:	1085°F

10.4.1.3.2 Evolution of Hydrogen During Decladding

During the removal of Zircaloy-2 cladding, the 7-hour average hydrogen content of the gas leaving the dissolution vessels is 0.01 vol%. After removal of ammonia and water vapor, the concentration of hydrogen increases to 0.3 vol% prior to discharge to the stack. Thus, the hydrogen concentration is at least a factor of 10 below the lower explosive limit, and therefore constitutes no hazard.

10.4.1.4 Ammonia

10.4.1.4.1 Explosive Limits of Ammonia

The physical properties of ammonia pertinent to flammability and explosiveness in dry air are (Ref. 25):

Lower Explosive Limit:	15.0 vol%
Upper Explosive Limit:	28.0 vol%
Autoignition Temperature:	651°C (1204°F)

Ammonia also reacts with silver nitrate (present in the off-gas iodine removal facilities) to form explosive silver azide.

10.4.1.4.2 Ammonia Evolution

Ammonia is formed in the dissolvers during the Zircaloy decladding process in preference to hydrogen if nitrate is present and during the metathesis process as described in Section 4.0. Ammonia is also evolved in large quantities when the decladding waste solution is reacted with caustic solution in E Cell using the reverse strike procedure in which waste is slowly added to the caustic.

10.4.1.4.3 Ammonia Removal

To minimize downstream hazards, the dissolver and E Cell off-gas ammonia scrubbers are operated at a low temperature with a saturated water-air mixture for effective and safe removal of ammonia. A separate off-gas system, including condenser, steam heater, pre-filters, final filters, blower and stack, is provided for the exhaust from E Cell decladding waste tanks and the concentrator which is used to reduce the volume of spent ammonia scrubber solutions. Separation of ammonia vapors in this manner prevents the reaction with nitric acid contained in the vessel and condenser vent systems to form ammonium nitrate particles which would deposit on the filters.

10.4.1.5 Tributyl Phosphate-Nitric Acid, Tributyl Phosphate-Uranyl Nitrate and Tributyl Phosphate-Plutonium Nitrate Reactions

10.4.1.5.1 Nature and Conditions of the Reaction

Tributyl phosphate is capable of reacting exothermically with heated solutions of nitric acid and/or uranyl nitrate. The reaction may proceed with various degrees of vigor, depending on the temperature and composition of the reacting mixture. Under extreme conditions it may assume disruptive violence (Ref. 26). The temperature required for initiation of a rapid TBP-HNO_3, TBP-$UO_2(NO_3)_2$, or TBP-$Pu(NO_3)_4$, reaction is a function of the composition of the reacting mixture. However, tests at atmospheric pressure have indicated that the temperature must be in excess of 135°C for a rapid TBP-$UO_2(NO_3)_2$ reaction to take place, above 150°C for a TBP-$Pu(NO_3)_4$ reaction.

10.4.1.5.2 Location and Extent of Hazard

The potential hazard of a rapid TBP-HNO_3, a TBP-$UO_2(NO_3)_2$ or TBP-$Pu(NO_3)_4$ reaction is present only in the uranium, plutonium, and waste concentrators. The continuous concentrators normally operate at temperatures which are safely below the temperature required to initiate a rapid reaction. Also, TBP is normally present only in negligibly low concentrations in these concentrators. The potential hazard arises from accidental introduction of TBP into the concentrators coinciding with

accidental overconcentration of the aqueous liquid to a composition with a boiling point exceeding the temperature required for initiation of the reaction.

10.4.1.5.3 Plant Precautions

The Purex Plant is designed to prevent a rapid TBP-HNO_3, TBP-$UO_2(NO_3)_2$, or TBP-$Pu(NO_3)_4$ reaction by minimizing the concentration of TBP in the process concentrators and by limiting the maximum temperature permitted in these vessels to a value below the temperature required to initiate the rapid reaction. The presence of TBP in the concentrators is minimized by passing the aqueous feeds through pulse-column liquid-liquid disengaging sections. In addition, the feeds to the uranium and plutonium concentrators are steam stripped prior to entering the heat exchange zones. Safety devices are also provided to prevent an accidental overconcentration of process solution with an accompanying temperature high enough to initiate a rapid TBP-HNO_3 or TBP-$UO_2(NO_3)_2$ reaction. The set points on these devices are given in Table 10-3.

9413275.1386

10.4.1.6 Rapid Nitration of Diluent

Because of the known reactivity of nitric acid with olefins to form potentially hazardous dinitro-olefins (and to a lesser extent with aromatic hydrocarbons), the hydrocarbon diluent used in the Purex process is essentially free of olefins and aromatics. To preclude the possibility of such nitrating reactions in the Purex Plant, diluent specifications conservatively permit a maximum olefin-plus-aromatic concentration of only 0.3 wt% Although the maximum safe olefin concentration in the solvent has not been demonstrated experimentally, diluent meeting the above specification is known to be safe.

10.4.1.7 Ammonium Nitrate

Concern has been expressed regarding the safety of up to 7,000 pounds of the organic contaminated ammonium nitrate contained in the upper 2 feet of the Purex primary exhaust system No. 1 fiberglass filter. (A slightly smaller amount is contained in the bottom 2 feet of the No. 2 filter.) Ammonium nitrate is an explosive and a dangerous fire hazard under confinement but is difficult to detonate by impact or friction (Ref. 27).

Ammonium nitrate decomposes at an appreciable rate at elevated temperatures. The resultant vapors do not sustain combustion below about 300°C (the salt melts at 169.6°C) and requires a spontaneous ignition temperature of 450°C (Ref. 28). A temperature of 450°C and a pressure of 60 to 80 atmospheres are required for detonation of pure salt. At the same temperature, the detonation pressure for commercial grade ammonium nitrate is 20 atmospheres (Ref. 29). Materials such as dichromates and sodium chloride act as catalysts to increase the decomposition rate of the salt (Ref. 29).

9413275.1387

TABLE 10-3. Activation Condition of Concentrator Safety Devices.

Concentrator	E-J8	E-K4	E-H4	E-F6	E-F11	T-L6-1	T-L7-1	TK-F8
Solution high temperature alarm, °C	120.5	120.5	120.5	120.5	129	119.5		120.5
Solution high temperature alarm shuts off steam, °C	125	125	125	125	138	123	123	125
High pressure in steam chest shuts off steam, psig	29	29	29	29	39	29	29	29
Low liquid level shuts off steam supply, inches of water	17	17	17	17	17	17	17	17

Tests reported in Reference 30 showed that the mixture expected in the plant filter at up to 7.5 times the average loading density could not sustain a detonation and would not be capable of thermal runaway reaction even if subjected to high temperatures for extended periods.

10.4.1.8 Oxidants and Reductants

Fires and/or explosions could result from the improper storage or handling of various chemical oxidants and reductants used in the Purex process. See Reference 31 for a discussion of the hazards involved with these chemicals.

10.4.2 Physiological Effects of Process Chemicals

The following brief review of the physiological effects of the process chemicals is presented to assist in recognizing and minimizing the health hazards involved in the operation of the Purex Plant. Detailed handling procedures and first aid advice for specific chemical exposure instances are beyond the scope of this section.

The threshold limit values (TLV) (Ref. 25) listed in this section are established by the American Conference of Governmental Industrial Hygienists and are equivalent to the former maximum allowable concentration (MAC) values. The TLV's generally refer to time-weighted concentrations for an 8-hour work day and 40-hour work week that produces no adverse effects in nearly all workers. The TLV is usually expressed in parts of gas or vapor per million parts of air (ppm) or in milligrams per cubic meter (mg/m^3) for fumes, mists, and some dusts.

10.4.2.1 Ammonium Fluoride-Ammonium Nitrate (AFAN)

Ammonium fluoride-ammonium nitrate is received as an alkaline solution of 36 wt% ammonium fluoride and 7 wt% ammonium nitrate.

10.4.2.1.1 Physiological Effects

Soluble fluorides are very irritating to the skin, eyes, and mucous membranes. Acute effects resulting from exposure to fluorine compounds are due to hydrogen fluoride. The solution is poisonous and ingestion results in acute intoxication.

10.4.2.1.2 Tolerance Concentrations

The TLV for ammonium fluoride is 3 ppm.

10.4.2.1.3 Extent of Hazard

AFAN is used only in the Zircaloy decladding operation.

10.4.2.1.4 Precautions

AFAN is received as an alkaline solution to avoid the potential effects of hydrogen fluoride. Equipment for handling AFAN is designed in accordance with normal chemical plant practice. Proper protective clothing is worn by operating personnel and the safety showers provided are kept operable and accessible.

10.4.2.2 Cadmium Nitrate

Cadmium nitrate is a toxic chemical and powerful oxidizing agent.

10.4.2.2.1 Physiological Effects

Ingestion of cadmium salts causes effects which resemble those of food poisoning. The symptoms, which become apparent 15 to 30 minutes after exposure, include diarrhea, nausea, vomiting, and abdominal pain. The illness is serious but seldom fatal.

Inhalation of fumes from cadmium compounds results in the following symptoms which may be delayed up to 3 or 4 hours after exposure: throat dryness, metallic taste, nausea, dizziness, coughing, and shortness of breath. The fumes are odorless and nonirritating even at dangerous levels.

10.4.2.2.2 Tolerance Concentration

The TLV for cadmium and its compounds is 0.2 mg/m^3.

10.4.2.2.3 Extent of Hazard

Cadmium nitrate solution is used as the jet motive fluid for the transfer of highly concentrated plutonium nitrate rework solutions. The chemical is received in drums as a 45 to 50 wt% solution.

10.4.2.2.4 Precautions

Cadmium nitrate is stored in a separate tank in the 211-A area and transferred from there by pump directly to the head tank for use. Respiratory protection and protective clothing are worn during transfer from the drums to the storage tank.

10.4.2.3 Hydrazine

Hydrazine is a powerful reducing agent. Hydrazine used in the Purex Plant is obtained as a 35 wt% aqueous solution which is nonflammable (Ref. 31) and no more dangerous to handle than any strong acid or alkali.

10.4.2.3.1 Physiological Effects

Hydrazine by ingestion, inhalation, or skin absorption may cause damage to the liver and destruction of red blood cells. Hydrazine is a suspected carcinogen of lung, nervous system, liver, kidney, and subcutaneous tissue.

Hydrazine vapors attack the membranes of the nose, throat, and eyes. Inhalation may cause dizziness and nausea; however, the odor of hydrazine is so irritating that it is unlikely that anyone would breathe quantities sufficient to cause permanent damage (Ref. 31).

10.4.2.3.2 Tolerance Concentration

The threshold limit value for exposure to hydrazine is 1 ppm in air.

10.4.2.3.3 Extent of Hazard

Hydrazine is used in the aqueous makeup area (AMU) in the 2BS, 2NS, 2DF-N_2H_4, 3XF-N_2H_4, and various Q Cell ion exchange pretreatment and scrub solution makeups.

10.4.2.3.4 Precautions

Proper protective clothing is used when handling hydrazine and access to operable safety showers is available.

10.4.2.4 Hydrogen Peroxide (H_2O_2)

Hydrogen peroxide is a toxic chemical and strong oxidant. Solutions of less than 50 wt% H_2O_2 will not start a fire immediately when spilled on combustible material but the higher concentration resulting from drying may lead to spontaneous combustion.

10.4.2.4.1 Physiological Effects

Solutions, vapors, and mists of hydrogen peroxide are irritating to the eyes, respiratory tract, and skin. Contact of the eyes with vapor or mist from higher concentrations may cause severe damage which may not be noticeable immediately upon exposure. Inhalation of highly concentrated H_2O_2 vapors can cause extreme irritation and inflammation in the nose and throat. Skin contact can produce local reddening up to burns with destruction of tissue, depending upon concentration and length of contact.

10.4.2.4.2 Tolerance Concentration

The TLV for H_2O_2 is 1 ppm.

10.4.2.4.3 Extent of Hazard

Hydrogen peroxide is used in the Purex Plant only to adjust the plutonium valence to plutonium(IV) in plutonium nitrate feed solution to the oxalate precipitation process.

10.4.2.4.4 Precautions

Hydrogen peroxide is stored in tightly covered containers placed in cool areas. It is received and used as a 13 to 15 wt% aqueous solution. Appropriate protective clothing is worn when handling H_2O_2 and safety showers are available to wash H_2O_2 from the skin.

10.4.2.5 Hydroxylamine Nitrate

Hydroxylamine nitrate is a moderately toxic material combining to a degree the effects of hydroxylamine and nitric acid.

10.4.2.5.1 Physiological Effects

Locally hydroxylamine is irritating and systematic exposure can cause methemoglobinemia.

10.4.2.5.2 Tolerance Concentration

Although no limits are given for the exposure to hydroxylamine nitrate, contact should be avoided to the greatest extent possible.

10.4.2.5.3 Extent of Hazard

Hydroxylamine nitrate is received from 234-5 Z Building in a dilute nitric acid solution and is used in the AMU area in the 2DIS-HN and 2BX solution makeups.

10.4.2.5.4 Precautions

Proper protective clothing is used when handling hydroxylamine nitrate and access to an operable safety shower is available.

10.4.2.6 Nitric Acid

Nitric acid is a highly corrosive mineral acid and powerful oxidizing agent. The proper types of protective gloves, clothing, and goggles must be worn when handling this material.

10.4.2.6.1 Physiological Effects

Indication of the magnitude of the nitric acid contact hazard is given by tests which have shown that 70 wt% HNO_3 produces definite skin

burns in 5 to 15 seconds. Burns of first, second, or third degree may result from nitric acid contact. Skin which has contacted nitric acid must be washed with water immediately before very severe, possibly permanent, damage results.

In cases of ingestion, severe internal burns may be experienced. The patient should be given abundant amounts of a lukewarm fluid such as salt solution, soapy water, or milk, followed by egg whites and milk. Vomiting should be induced as soon as possible. Emetics and carbonates should be avoided.

10.4.2.6.2 Tolerance Concentrations

While a prolonged contact with dilute (less than 5 wt%) nitric acid results in stinging and mild irritation of the skin, contact with concentrated (greater than 50 wt%) nitric acid causes severe burns in a matter of seconds. Precautions should be taken to prevent such contacts.

The ingestion of nitric acid should be avoided. While no permissible limits are given in the literature, the ingestion of 10 mℓ of concentrated acid is considered fatal. The TLV for nitric acid vapor is 2 parts per million (Ref. 25).

10.4.2.6.3 Extent of Hazard

Although the process consumption of nitric acid is large, the greatest contact hazards occur in equipment decontamination and during sampling of solutions containing nitric acid. Appreciable concentrations of nitric acid as a mist are not normally encountered in the Purex Plant.

10.4.2.6.4 Precautions

As previously indicated, the proper types of protective gloves, clothing, and goggles are worn when handling nitric acid. Standard chemical plant design practice was followed in installation of the nitric acid handling facilities. Deluge-type safety showers and hose bibs are provided at strategic locations in operating areas to provide for rapid washing in cases of surface exposures, and are kept operative and accessible.

10.4.2.7 Oxides of Nitrogen

Oxides of nitrogen are formed when nitric acid contacts organic or reducing materials such as uranium, sawdust, iron filings, etc. These oxides consist of a mixture of NO, NO_2, and N_2O_4.

10.4.2.7.1 Physiological Effects

Nitric oxide itself is neither an irritant nor a health hazard but is oxidized in the air to the dangerous dioxides. The nitrogen dioxide

and tetroxide dimer exist together in equilibrium concentrations which are temperature dependent. These nitrogen oxides are only slightly irritating to the mucous membranes of the upper respiratory tract. Therefore, low but dangerous amounts of nitrogen oxides may be inhaled before discomfort is observed. Higher nitrogen oxide concentrations (60 to 150 ppm) cause immediate irritation of the nose and throat, with coughing and burning in the throat and chest. The symptoms often clear up on breathing fresh air. However, perhaps 6 to 24 hours after prolonged exposure to 100 to 150 ppm nitrogen oxides or short exposures to >200 ppm, a sensation of tightness and burning in the chest, shortness of breath, sleeplessness and restlessness occur. Air hunger increases rapidly with the development of cyanosis, followed by death.

10.4.2.7.2 Tolerance Concentration

The effects of nitrogen oxides over a wide range of concentration are as follows:

Concentration, as NO_2, ppm	Physiological Response
200 to 700	Rapidly fatal after very short exposures.
100 to 150	Dangerous for exposures of 30 to 60 minutes.
5	Threshold limit value

10.4.2.7.3 Extent of Hazard

The greatest hazard of exposure to nitrogen oxides comes from the fact that serious effects are not felt until several hours afterward. Nitric acid contact with organic materials or metals, due to spills or improper decontamination procedures, represents the chief source of such fumes, and care should be exercised in all cases where nitrogen oxide fumes are observed.

10.4.2.7.4 Precautions

Nitrogen oxide fumes are best handled by controlling the processes so that the threshold limit value for nitrogen oxides is never exceeded. If it is necessary for an individual to enter an area where nitrogen oxide fumes are present, a suitable air mask and protective clothing is provided.

The presence of oxides of nitrogen may be detected by odor and, to a certain extent, by color. A characteristic odor is distinct at concentrations of less than 5 ppm in air. Based on laboratory data with some

supporting field observations, the visible threshold for the reddish-brown tint of nitrogen dioxide (NO_2) is related to the depth of the field by

$$C_o = \frac{2400}{d}$$

where

d = stack diameter, inches

C_o = NO_2 concentration, ppm (Ref. 32)

It should be noted, however, that other oxides of nitrogen (NO and N_2O_4) are practically colorless and that the relative proportions of the different molecular forms are temperature dependent. Thus, an atmosphere colored by oxides of nitrogen is probably dangerous, but the absence of color does not necessarily indicate safety.

10.4.2.8 Normal Paraffin Hydrocarbon (NPH)

The Purex diluent is paraffinic hydrocarbon having from 10 to 14 carbon atoms. Diluent vapors are heavier than air and tend to settle and accumulate at low points.

10.4.2.8.1 Physiological Effects

Inhalation of NPH vapor causes irritation of the mucous membranes of the eyes and nose. The vapor is a simple asphyxiant or a narcotic when present in high concentrations. The symptoms of asphyxiation are rapid respiration, diminished mental alertness, nausea, vomiting and loss of consciousness.

10.4.2.8.2 Tolerance Concentrations

No tolerance limits are specified in the literature for the constituents of the normal paraffin hydrocarbon diluent used in the Purex Plant. The TLV for Stoddard Solvent, a hydrocarbon distillate having a similar boiling range to Purex diluent, is about 500 ppm (Ref. 25).

10.4.2.8.3 Extent of Hazard

Normally, the diluent inventory consists of up to 21,000 gallons in the 202-A and 276-A Building process vessels and up to 60,000 gallons in storage at the 211-A tank farm. The possibility of diluent contacting the skin during sampling operations or because of leaks and spills is the greatest potential hazard to be encountered when handling diluent. A hazardous vapor concentration might occur if a process pipe rupture released large quantities of diluent in a 202-A Building operating area.

10.4.2.8.4 Precautions

Equipment for handling diluent is designed in accordance with normal safe chemical plant practice. In the 202-A and 276-A buildings, the ventilation system maintains diluent vapors below hazardous concentrations. The 211-A tank farm is in an open area which permits hazardous vapors to escape to the surrounding atmosphere where dilution to a negligibly low concentration occurs.

10.4.2.9 Oxalic Acid

Oxalic acid is a highly toxic chemical that may be absorbed through the skin in appreciable amounts. Oxalic acid, a reductant, is stored in a cool area in tightly covered containers.

10.4.2.9.1 Physiological Effects

Oxalic acid produces a strong local caustic action on the skin and mucous membranes. Concentrated oxalic acid solutions produce marked irritation and prolonged exposure produces gangrene of the skin. Ingestion of 1/2 to 1 ounce of oxalic acid is usually fatal. Exposure to vapors or mists from oxalic acid solutions or inhalation of the dust causes irritation of the nasal passages.

Systemic intoxication may occur after ingestion or inhalation of the acid with central nervous system involvement indicated by convulsions followed by paralysis. Chronic poisoning may cause permanent disability (Ref. 31).

10.4.2.9.2 Tolerance Concentration

The TLV for oxalic acid is 1 mg/m^3.

10.4.2.9.3 Extent of Hazard

Oxalic acid is received in the solid form and used in the process as 0.95M solution to precipitate plutonium oxalate from plutonium nitrate feed or at lower concentrations in the makeup of decontaminating flush solutions.

10.4.2.9.4 Precautions

Respiratory protection and protective clothing are worn when handling solid oxalic acid. Safety showers and hose bibs are available for rapid washing and removal of concentrated solutions from the skin.

10.4.2.10 Potassium Hydroxide (KOH)

Potassium hydroxide is a strong caustic chemical with properties similar to those of sodium hydroxide.

10.4.2.10.1 Physiological Effects

Inhalation of caustic mists or dusts causes severe irritation of the eyes, nose, and throat. Potassium hydroxide, as a solid or in solution, has a markedly corrosive action upon all body tissue. Exposed body areas should be washed immediately with water.

10.4.2.10.2 Tolerance Concentrations

TLV for potassium hydroxide is 2 mg/m^3. Contact with KOH as a solid or liquid should be avoided.

10.4.2.10.3 Extent of Hazard

Potassium hydroxide is received and stored as a 45 wt% solution for use in metathesizing uranium tetrafluoride solids produced during the decladding process to hydrous uranium oxide.

10.4.2.10.4 Precautions

Equipment for handling potassium hydroxide solutions is designed in accordance with normal chemical plant practice. Proper protective clothing is worn by operating personnel and the safety showers provided are kept operable and accessible.

10.4.2.11 Potassium Permanganate ($KMnO_4$)

Potassium permanganate is a powerful oxidizing agent that may react explosively when contacted with sulfuric acid, alcohol, ether, flammable gases and combustible materials.

10.4.2.11.1 Physiological Effects

Permanganate dust acts as a lung irritant with prolonged exposure resulting in pneumonia and bronchitis. Like other manganese compounds, it is a systemic poison causing permanent damage to the nervous system and is particularly hazardous as the TLV is below the irritating level.

10.4.2.11.2 Tolerance Concentrations

The TLV for potassium permanganate is 5 ppm.

10.4.2.11.3 Extent of Hazard

Potassium permanganate is received as a solid and used in the make-up of the solvent treatment wash and some flush solutions.

10.4.2.11.4 Precautions

Respiratory protection is worn when handling solid $KMnO_4$. The chemical is stored separately in tightly covered metal containers.

10.4.2.12 Silver Nitrate ($AgNO_3$)

Silver nitrate is a powerful oxidizing agent and a fire hazard. Silver nitrate crystals react vigorously with reducing solids.

10.4.2.12.1 Physiological Effects

Contact of silver nitrate solutions with the skin causes a characteristic, but nonharmful, darkening due to silver deposition and/or reaction with protein of the skin. Ingestion of the bitter tasting, highly caustic, silver nitrate results in a poisoning caused by absorption in the blood followed by deposition in various body tissues.

10.4.2.12.2 Tolerance Concentrations

A fatal ingested dose for an adult is 30 grains with death occurring within a few hours to several days.

10.4.2.12.3 Extent of Hazard

Silver nitrate is received in crystalline form and is used only infrequently as a dilute solution for regenerating the silver reactors.

10.4.2.12.4 Precautions

Standard precautions, including isolation and minimal protective clothing, are used during storage and handling of silver nitrate.

10.4.2.13 Sodium Fluoride (NaF)

Sodium fluoride is a highly toxic chemical that must be handled with extreme caution. Addition of NaF to acidic solutions liberates hydrofluoric acid.

10.4.2.13.1 Physiological Effects

Inhalation of NaF powder can destroy mucous membrane and tissue cells. Large doses can cause damage to the gastrointestinal and nervous systems as well as bone structure.

10.4.2.13.2 Tolerance Concentration

The lethal dose by oral ingestion is less than 60 milligrams. Doses of 25 to 50 mg cause severe vomiting, diarrhea and central nervous system disorders.

10.4.2.13.3 Extent of Hazard

Sodium fluoride is used in the makeup of the dilute scrub solution used to remove fission products from the ion exchange column in the neptunium purification cycle.

10.4.2.13.4 Precautions

Personnel handling NaF wear respiratory protection, safety goggles and protective clothing. The NaF required for the scrub solution makeup is either purchased in the desired size package or prepackaged in a small ventilated glovebox or hood located in the laboratory.

10.4.2.14 Sodium Hydroxide

Sodium hydroxide is a chemical widely used in industry. Proper protective equipment, such as gloves, clothing, and goggles, is worn when handling sodium hydroxide.

10.4.2.14.1 Physiological Effects

Sodium hydroxide as a solid or in solution has a markedly corrosive action upon all body tissue. The corrosive action causes burns and frequently deep ulceration, with ultimate scarring. Prolonged contact with dilute sodium hydroxide solutions also has a destructive effect upon tissues. No time should be lost in washing exposed body areas with water.

Inhalation of sodium hydroxide when dispersed as a dust or mist of concentrated solution can cause damage to the upper respiratory tract and to lung tissue, depending upon the severity of the exposure. Ingestion of sodium hydroxide either in the solid or solution form causes serious damage to the mucous membranes or other tissues with which contact is made.

10.4.2.14.2 Tolerance Concentrations

The recommended TLV for sodium hydroxide is 2 mg/m^3. Contact with sodium hydroxide as a liquid or a mist should be avoided. Ingestion of 2 grams is sufficient to cause death.

10.4.2.14.3 Extent of Hazard

The usage of sodium hydroxide when processing Zircaloy clad fuel is confined to neutralizing process wastes and regenerating the water demineralizer units. The hazard is thus localized to a great extent.

10.4.2.14.4 Precautions

Equipment for handling sodium hydroxide solutions is designed in accordance with normal chemical plant practice. Proper protective clothing is worn by operating personnel and the safety showers provided are kept operable and accessible.

10.4.2.15 Sulfuric Acid

Sulfuric acid is a corrosive mineral acid widely used in the chemical industry. In handling sulfuric acid, the proper types of gloves, clothing, and goggles are worn.

10.4.2.15.1 Physiological Effects

Sulfuric acid causes severe burns on contact with the skin. Concentrated sulfuric acid is a strong dehydrating agent, and this property causes a burning and destructive action. Sulfuric acid splashes on the skin should be rinsed immediately with abundant quantities of water.

Except on heating, no appreciable fumes are evolved from sulfuric acid. However, a spray or mist may be produced during chemical reaction. The fumes and mists are very irritating and attack the upper respiratory tract.

In case of ingestion of sulfuric acid, the patient should be given milk of magnesia, up to 8 fluid ounces, and quantities of water or milk, followed with egg whites and milk. Emetics and carbonates should be avoided. Without treatment, ingestion of only 3.8 grams of sulfuric acid may result in death of an adult.

10.4.2.15.2 Tolerance Concentration

Normally 0.125 to 0.5 ppm of sulfuric acid vapor in air may be mildly annoying, 1.5 to 2.5 ppm can be definitely unpleasant, and 10 to 20 ppm is unbearable. The threshold limit value for sulfuric acid fumes is 1 mg/m^3.

10.4.2.15.3 Extent of Hazard

The principal use for 93 wt% sulfuric acid in the Purex Plant is for the regeneration of water demineralizer units. The hazard is small because of the limited quantities involved and the low probability of contact with personnel.

10.4.2.15.4 Precautions

As previously indicated, protective clothing designed to prevent contact of the chemical with the skin is worn when handling sulfuric acid. Standard chemical plant design practice was followed in installation of the sulfuric acid handling facilities. Deluge-type safety showers and hose bibs are provided at strategic locations in operating areas to provide for rapid washing of surface exposures.

10.4.2.16 Tributyl Phosphate

Tributyl phosphate (TBP) is a colorless, odorless organic liquid. Due to its low volatility, TBP vapors are seldom present.

10.4.2.16.1 Physiological Effects

Tributyl phosphate is classed as a moderately toxic acute local irritant which is also moderately toxic if ingested or inhaled. Tributyl phosphate causes stimulation of the central nervous system, but the effect is not severe enough to cause permanent injury. The effect of chronic exposure is not given in the literature.

10.4.2.16.2 Tolerance Concentrations

The TLV for TBP is 5 mg/m^3.

10.4.2.16.3 Extent of Hazard

Tank cars of TBP are emptied into the 30,000 gallon TBP storage tank, TK-41, at the 211-A Chemical Tank Farm. The handling of TBP is accomplished with permanently installed pumps and piping.

10.4.2.16.4 Precautions

Equipment for handling TBP was designed in accordance with normal, safe chemical plant practice.

10.4.2.17 Uranium, Plutonium, Neptunium and Radioactive Fission Products

Uranium, plutonium, neptunium and radioactive fission products represent a serious health hazard. The principal physiological effect of these substances is due to radioactivity. Plutonium is also highly toxic and has the lowest permissible level of any of the radioactive elements. In the body, plutonium is concentrated in the blood-forming sections of the bone. The hazards involved in handling these chemicals are discussed in Section 10.1 and Reference 31.

10.4.2.18 Other Process Chemicals

Other process chemicals, aluminum nitrate, ferrous sulfamate, sodium carbonate, sodium nitrate, sulfamic acid, sugar, and tartaric acid are discussed in Reference 31 but are not hazardous enough to warrant a detailed discussion here. Reasonable care should be exercised, however, in handling these chemicals (except sugar), to avoid skin contact and to assure that ingestion does not occur. Chemical storage areas are arranged to assure separation of noncompatible chemicals and reduce fire or explosion hazards.

10.5 CRITICALITY PREVENTION

The principal plutonium isotope, Pu-239, and the uranium isotope, U-235, are both capable of self-sustained nuclear fission reactions. Both nuclides are handled in the Purex process. However, the U-235 content of the fuel is limited and U-235 is invariably associated with neutron absorbing U-238. A chain reaction of U-235 is therefore not possible under the conditions of the Purex process once the fuel is in solution. Consequently, this section deals only with Pu-239 criticality prevention.

10.5.1 Introduction

Plutonium-239 is capable of both slow- and fast-neutron chain reactions. Slow-neutron chain reactions result when the neutrons released by the fission of Pu-239 nuclei are moderated to lower levels by collisions with other kinds of atoms before capture by other Pu-239 nuclei, which in turn fission and continue the reaction. Fast-neutron chain reactions are basically the same, except that free neutrons undergo essentially no moderation with other atoms and thus lose no energy before capture. A certain quantity of plutonium must be present under a given set of conditions before a fission reaction can become self-sustaining. This quantity is called the *critical mass*. Since the fission capture cross-section is smaller for fast neutrons than for slow neutrons, a larger weight of Pu-239 is required to produce fast neutron criticality. Under certain conditions, as little as 0.5 kilogram of plutonium may undergo a slow-neutron chain reaction, while a fast-neutron reaction requires 5 kilograms. Typical fast-neutron reaction conditions--plutonium concentrations above 5,000 g/ℓ and H:Pu atomic ratios below 5--are entirely foreign to the Purex process. However, less extreme conditions result in significant contribution to slow-neutron reactions by neutrons of higher energy. The specific concern with critical mass in the Purex Plant is generally the prevention of slow-neutron reactions of plutonium, with the potential contribution of higher-energy neutrons being of concern only in exceptional cases, as noted later in the section. This section presents the technical and experimental background of the critical mass

problem as well as the design features and operational safeguards employed to preclude a critical accumulation of Pu-239 in the Purex Plant. It will become evident from the following discussion that special criticality safety measures are required only in connection with equipment containing plutonium after it has been separated from uranium.

10.5.2 Critical Mass for Slow-Neutron Fission

The amount of plutonium required to reach criticality is dependent on a number of factors which affect either moderation (slowing down) of fast neutrons or the possibility of neutron capture by the Pu-239 present. The principal factors include: (a) the relative abundance of the various plutonium isotopes, (b) the concentration of the plutonium, (c) the nature and concentration of other chemical elements present, (d) the geometry of the assembly, and (e) the nature of surrounding materials.

10.5.2.1 Minimum Critical Mass

The smallest conceivable volume for a self-sustained Pu-239 chain reaction would be with solid Pu-239, which would undergo a fast-neutron reaction. However, the smallest conceivable weight of plutonium which could sustain a reaction would occur with the plutonium moderated for a slow-neutron reaction. Such a minimum conceivable critical mass under conditions of the Purex Plant occurs when the plutonium is uniformly distributed in an approximately 12-inch-diameter sphere, moderated, and surrounded by water. The value of the "minimum critical mass" varies slightly with the total reactor exposure that the parent fuel elements have received, because of the increased concentration of Pu-240 formed with increased reactor exposure. Plutonium-240 has a poisoning effect which inhibits the criticality of Pu-239.

The minimum critical mass for pure Pu-239 in water (which has significance as a limiting case for plutonium produced at zero megawatt-day per ton reactor exposure) has been calculated as 510 grams, and occurs at a plutonium concentration of 32 g/ℓ in a 12.2-inch-diameter sphere. (This hypothetical value is derived from measured critical masses by applying appropriate corrections for foreign ions and solid walls of finite thickness necessarily present in experimental determinations.) The minimum critical mass values for water moderated plutonium produced in fuel elements with various total reactor exposure levels are shown in Figure 10-3 (Ref. 33).

10.5.2.2 Effect of Geometry

The effect of sphere or cylinder diameters on the critical concentration is shown in Figures 10-4 and 10-5 (Ref. 33). These curves illustrate the situation for completely water-reflected spheres and cylinders, i.e., for those cases where a large percentage of neutrons which initially escape from the vessel are reflected back to the plutonium mass. The critical diameter versus plutonium concentration for unreflected infinite cylinders is shown in Figure 10-6 (Ref. 33). The critical concentration (and mass) is higher for air-reflected (air-surrounded) spheres or

9413275.1403

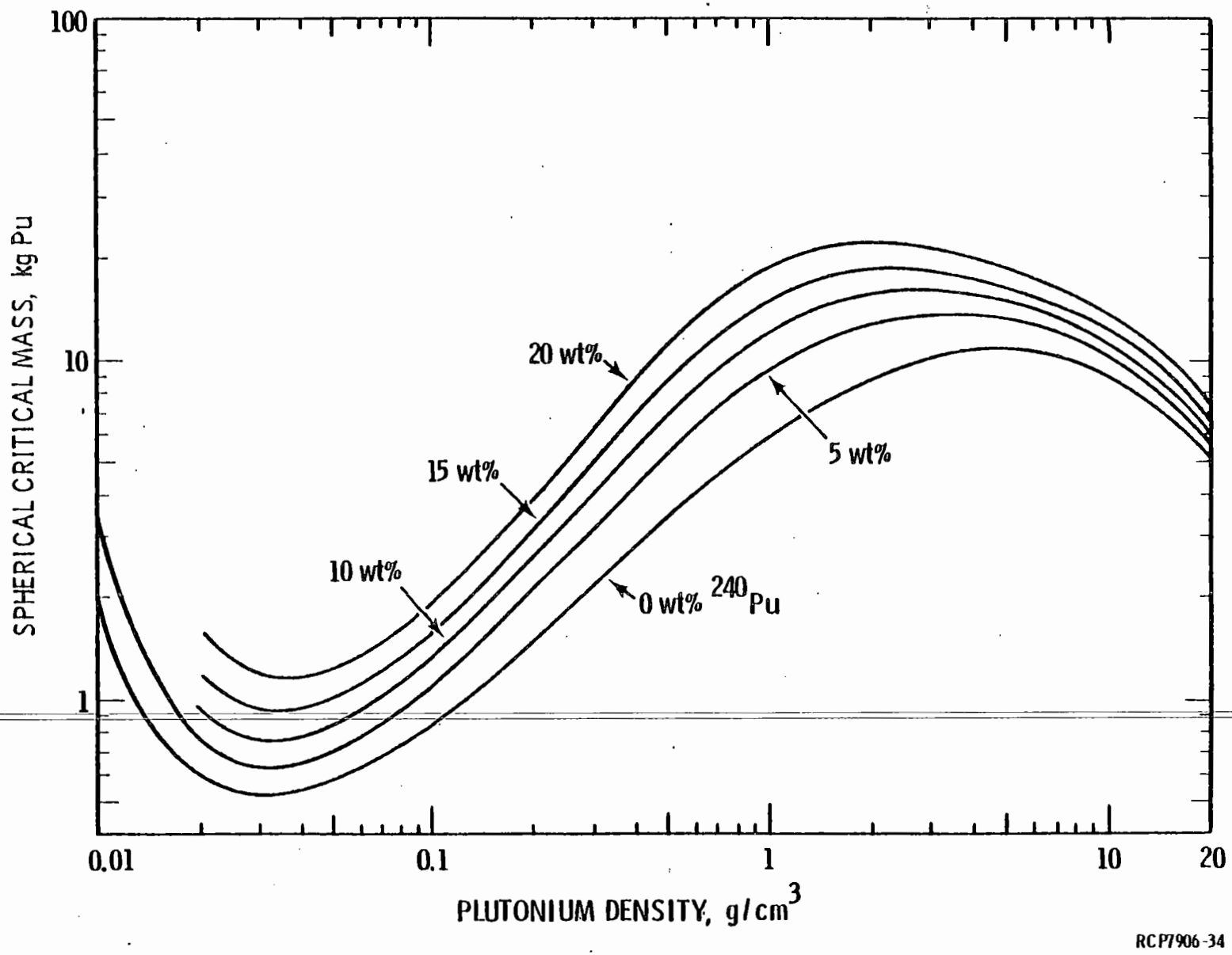

FIGURE 10-3. Sphere Critical Mass, Plutonium-Water, Full Water Reflection.

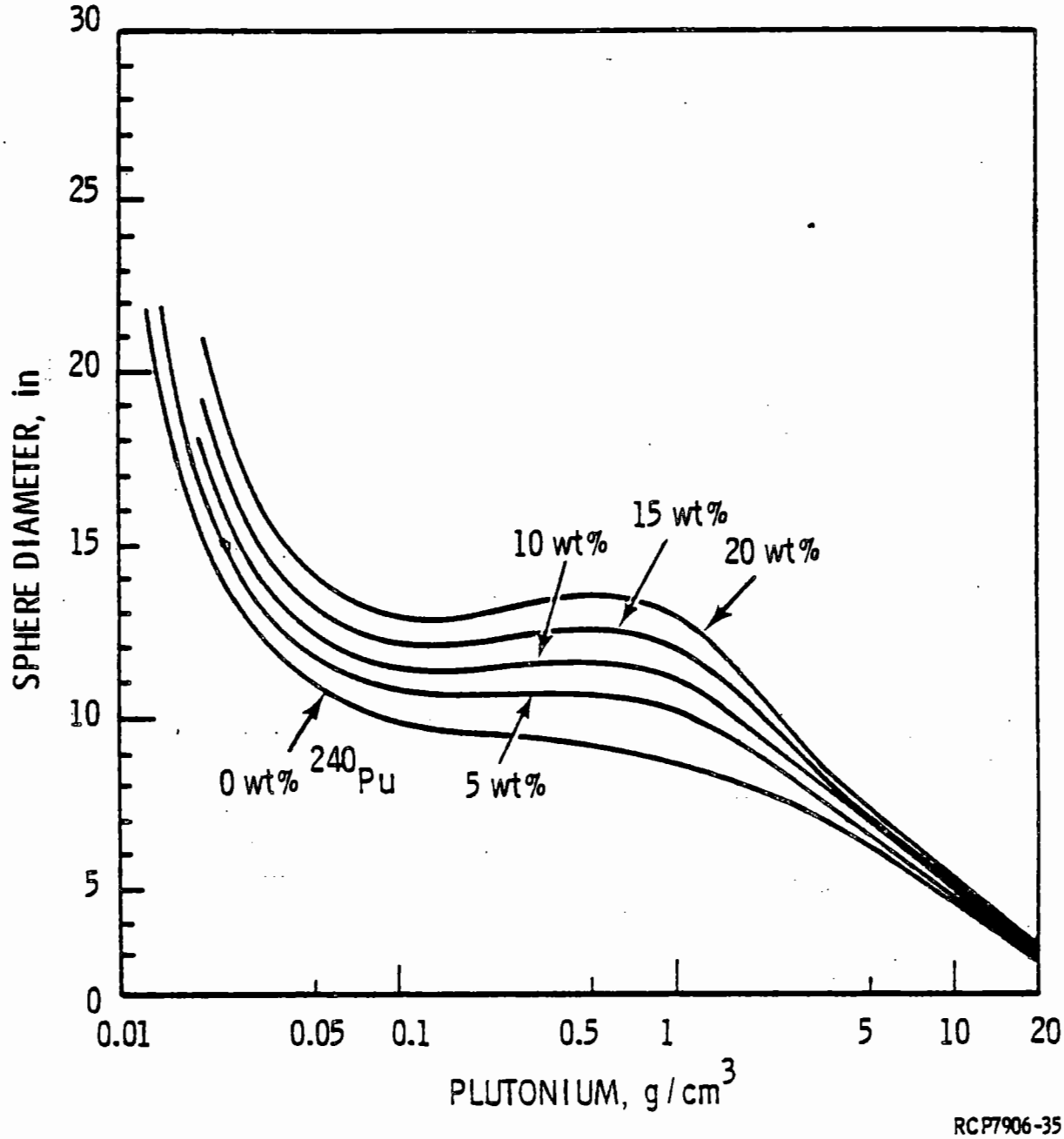

FIGURE 10-4. Critical Sphere Diameter, Plutonium-Water, Full Water Reflection.

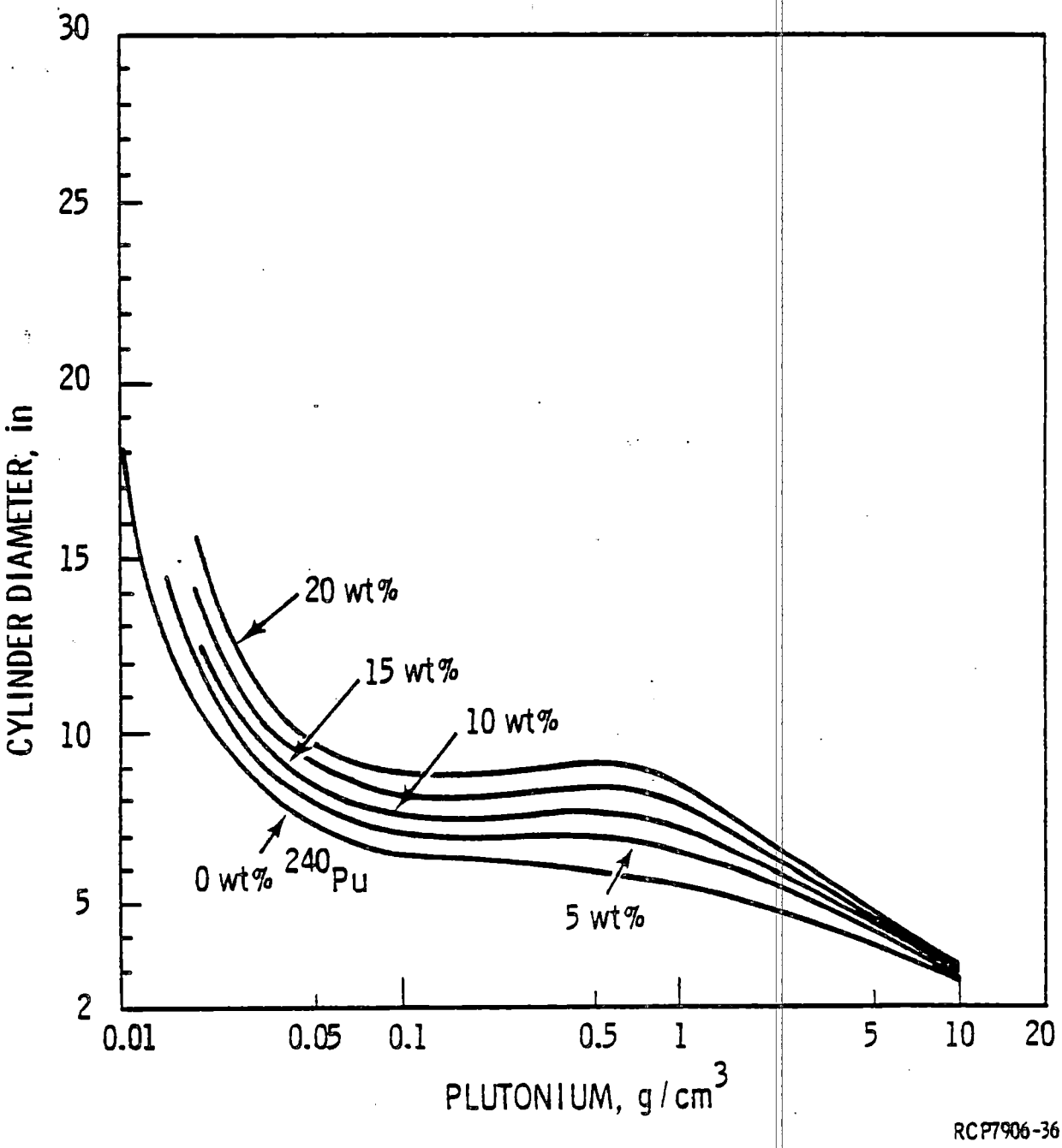

FIGURE 10-5. Critical Infinite Cylinder, Plutonium-Water, Full Water Reflection.

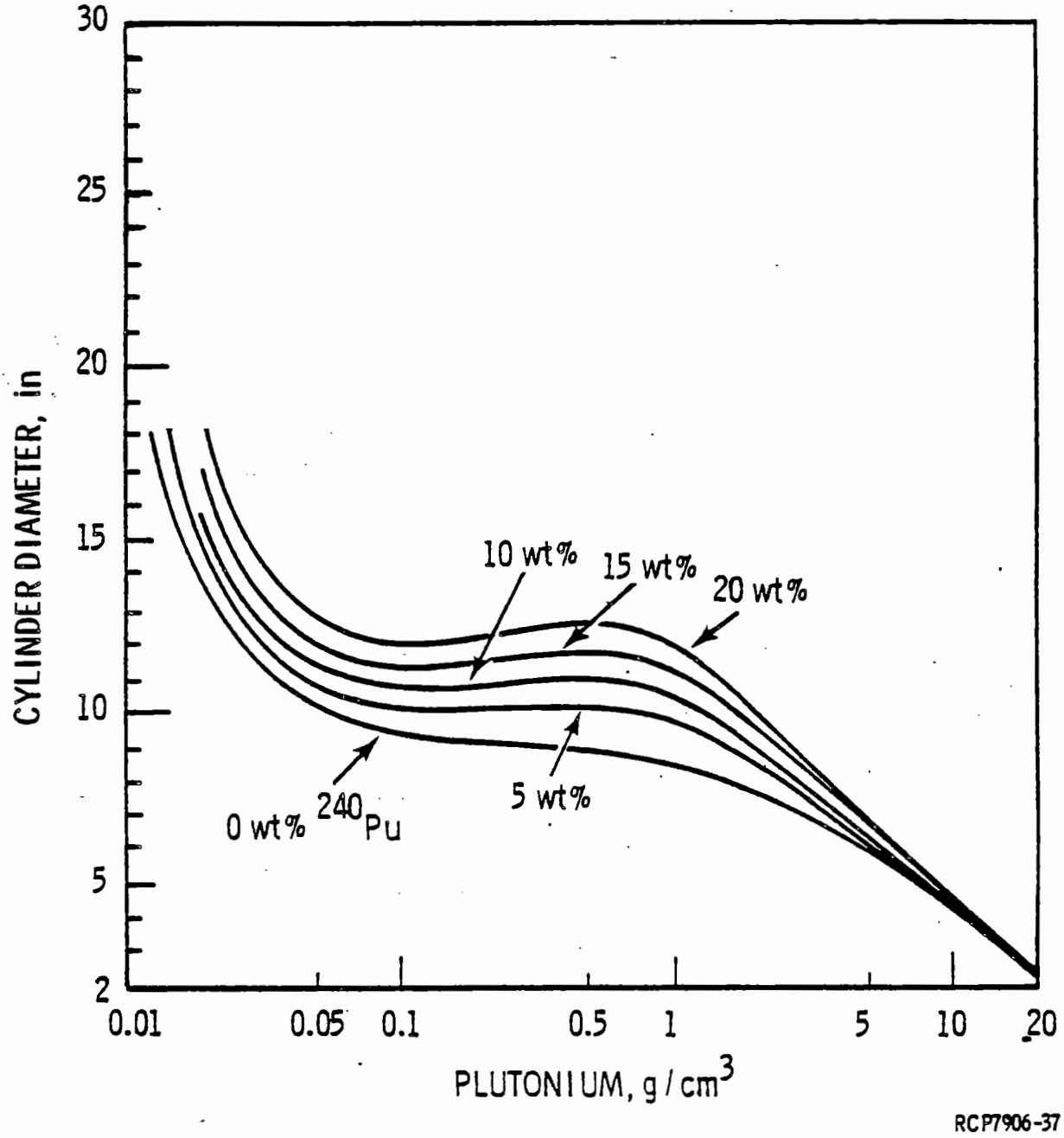

FIGURE 10-6. Critical Infinite Cylinder, Plutonium-Water, Unreflected.

cylinders, since few of the escaping neutrons are reflected back to the plutonium mass. It may be noted from Figures 10-3 and 10-4 that the critical mass of plutonium is highly dependent on the geometry of the containing vessel as well as the plutonium concentration. In fact, a plutonium concentration above a certain critical value is required to support a chain reaction in a cylinder of any given diameter, even when the cylinder is infinitely long. Figure 10-5 and 10-6 show the effect of diameter on the critical concentration of infinitely long, water-reflected and air-reflected cylinders for plutonium produced at various irradiation levels. These curves can be used to find the maximum diameter of an "always safe" infinitely long cylinder in which slow-neutron criticality is impossible. As the irradiation level of the plutonium increases, the maximum safe diameters increase because of the poisoning effect of the increased Pu-240 concentration.

2041327 5 1402

10.5.2.3 Effect of Other Elements

The introduction of chemical ions into a plutonium solution generally increases the critical mass. This increase is caused by the combined effects of substituting nonmoderating foreign ions for some of the water moderator which causes more neutrons to escape from the vessel and substituting foreign ions with neutron absorption cross-sections higher than that of water. Since the foreign ion absorbs more of the slow neutrons and moderates fewer fast neutrons, the critical mass must be increased to provide more neutrons to counterbalance the increased loss of neutrons due to absorption and leakage.

The uranium isotope U-238 also inhibits plutonium criticality, rendering a chain reaction impossible in a solution containing the uranium isotopes (notably U-238 and U-235) and plutonium in approximately the proportions as in the irradiated fuel elements.

10.5.2.4 Effect of Plutonium Concentration

The critical mass as a function of plutonium concentration passes through a minimum at an optimum plutonium concentration, as shown in Figure 10-3.

Figures 10-5 and 10-6 indicate the critical concentration of various long air-reflected and water-reflected cylinders. The critical concentration for these infinitely long cylinders falls rapidly from about 0.08 g/cm^3 towards an asymptotic value as the diameter increases above 8 to 10 inches.

The critical concentrations in slabs of varying thicknesses for a 3 wt% Pu-240 system are shown in Figure 10-7 (Ref. 33). The critical concentration for slabs falls rapidly toward an asymptotic value as the slab thickness (solution depth) increases up to 6 to 10 inches depending upon the amount of reflection and isotopic content.

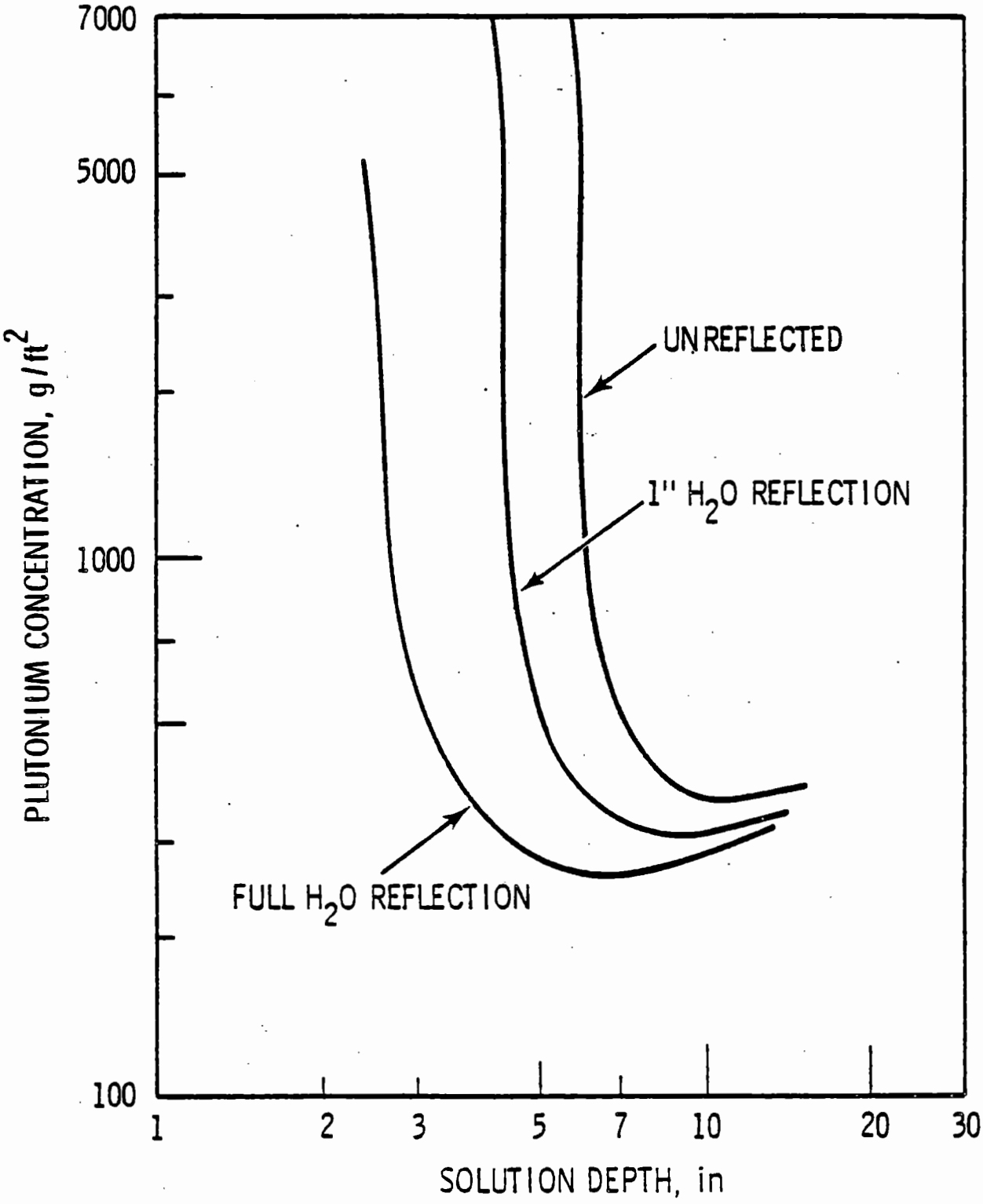

RCP7906-38

FIGURE 10-7. Critical Slab Concentration, Plutonium (3 Wt% Pu-240) - Water.

For plutonium concentrations below the critical values, the solution is safe from chain reaction in any vessel, regardless of its size and shape providing there is no neutron interaction with other plutonium containing vessels.

10.5.2.5 Effect of Surrounding Materials

The effects of surroundings on critical cylinder geometry were discussed briefly above. The following effects were noted when the critical shape containing 500 g Pu/ℓ solution (3 wt% Pu-240) was surrounded with air and with water:

Geometric Shape	Air-Reflected	Water-Reflected
Minimum critical infinitely long cylinder inside diameter, inches	9.8	6.7
Minimum critical infinite slab solution depth, inches	5.7	2.5

As indicated above, surrounding a vessel with water instead of air significantly affects the minimum critical dimensions. In those portions of the Purex Plant where safe geometry has been employed, it has generally been assumed that the vessels will be reflected by a minimum of 1 inch of water unless interaction with other vessels is calculated. In the latter case, the actual system is assumed. However, in the plant it is generally impossible to design an equipment piece which is completely surrounded by air. Therefore, the effects introduced by the surroundings must be considered and suitable allowances made in the geometry of the vessel. Among the effects which must be considered are the following:

- The thickness and type of container walls. For example, increasing the stainless steel wall thickness has an adverse effect on safe slab and cylinder dimensions.

- The presence of nearby objects which can moderate and/or reflect neutrons to the vessel. In this category would fall the various appendages (e.g., auxiliary instrument lines and support dunnage) to the vessel and confining cell walls.

- The presence of nearby (or connecting) vessels which contain neutron sources. When neutron sources are 2 feet or more away from a vessel, "interaction" effects are generally negligible.

- The presence of other types of reflectors, such as concrete or lead. Concrete is a better reflector than water for vessels, containers, or arrays which have one noncurved dimension which is fairly large (>1 foot). Since most of the Purex vessels are longer than this, concrete is usually included in safe design calculations. Lead must be greater than 6 inches thick to exceed the reflecting effect of water and this condition seldom occurs.

10.5.3 Criticality Prevention Methods (Ref. 34)

Accumulation of a critical mass of plutonium in any process solution is prevented by the use of any of the following basic approaches: (a) concentration control, (b) geometrically favorable shapes, (c) batch limits, (d) neutron absorbers or poison control, or (e) some combination of two or more of the above.

The method of concentration control involves processing solutions of compositions that cannot become critical under any possible process condition. Criticality is not possible because of the absorption of free neutrons by other elements in the solution. A solution cannot be considered safe without additional safeguards if any condition leading to separate precipitation of the plutonium is possible.

The method of geometrically favorable shapes involves handling plutonium in equipment of such size and shape that enough free neutrons escape for criticality to be impossible in any unexpected contingency. This is different from geometrically safe equipment which would be safe for any plutonium concentration, an extreme and unnecessary limiting condition. The geometrically favorable solvent extraction columns in the Purex Plant are sometimes incorrectly referred to as safe columns. The diameter of such columns is dependent upon the supports or reflectors around them. These columns, designed against a slow-neutron reaction, are known to be "critically favorable" only for plutonium concentrations up to 450 g/ℓ. However, in nitrate systems the columns are satisfactory for concentrations up to at least 1,000 g Pu/ℓ.

The method of batch limits involves handling the plutonium in isolated batches which contain less plutonium than the minimum amount which will become critical under the most unfavorable conditions expected.

The method of poison control involves the addition of strong neutron absorbers such as cadmium, i.e., cadmium nitrate, to absorb free neutrons.

10.5.4 Criticality Prevention in the Purex Plant

In the Purex Plant all four of the above mentioned methods of criticality prevention are employed. In the initial processing steps of the Purex Plant--from the dissolvers through the codecontamination cycle--criticality prevention is achieved by the principle of safe concentration

and plutonium mass limits. The plutonium and uranium in these process equipment pieces are present in the same ratio as in the irradiated fuel and criticality is not possible because of the large amount of U-238 present. By selective precipitation of plutonium in the head-end vessels, it would be conceivable to accumulate a critical mass. However, the chemical conditions required to permit selective precipitation are difficult to create, and the possibility of accumulation of a critical mass in these vessels is, accordingly, extremely remote. New limits permit safe operation even with selective plutonium precipitation.

In connection with the 1BX and 1BS columns and the 2AF tank, safety methods based on combinations of concentration control and batch limit principles are employed as discussed in Section 10.5.3.

In the second and third plutonium extraction cycles and the plutonium sampling and loadout facilities, vessels of geometrically favorable design, i.e., slabs and cylinders either alone or in favorable combinations, are used. Consideration was given during the design of various equipment pieces to the interaction and reflection effects for each specific equipment installation and suitable allowances were made in the dimensions of the vessels to provide a safe integrated unit. These geometrically favorable vessels are subcritical even if plutonium precipitates were to accumulate in them.

Batch limitations are employed in metering the plutonium product solution into product removal cans, even though batching is not required from a criticality prevention standpoint at the Purex Plant since both the sampler tank and the product removal cans are of geometrically favorable design. Batching is employed for accountability reasons, to provide critically safe batches suitable for handling in subsequent processing steps, and to avoid overflowing the product receiver vessel.

Poison control is used in the transfer of concentrated rework solution from L Cell back to the feed makeup tank (TK-E6).

In determining the criticality prevention methods to be employed, as well as in the design of the various geometrically favorable vessels, the following basic assumptions are made:

- The feed material to be processed in the plant is irradiated uranium having an average initial concentration of less than 1.15 wt% U-235. For irradiated uranium in which the plutonium content is less than about 2,300 grams per ton of uranium, the resulting solutions are safe because of the neutron absorption of U-238.

- The uranium fuel elements processed are irradiated in the reactors to a level to produce plutonium with at least 3% Pu-240. The design of the geometrically favorable vessels is based on this minimum Pu-240 content. At higher irradiation levels, the

Pu-240 content of the plutonium is increased. Since Pu-240 acts as a poison, the geometrically favorable vessels contain a greater factor of safety for processing fuel elements having a higher irradiation exposure.

10.5.4.1 Geometrically Favorable Equipment

Equipment of geometrically favorable design is employed from the 2AF tank through the rest of the plutonium processing operation. Included in this equipment group are: the 2AF tank, the 2A and 2B columns, the 3AF tank, the 3A and 3B columns, the plutonium stripper, concentrator and condenser, the plutonium receiver, the plutonium samplers, the vacuum tank, and the product removal cans. The plutonium denitration facility equipment, which is scheduled for installation prior to resuming plant operation, is also geometrically favorable.

In the design of geometrically favorable equipment, cylinders and slabs of small dimensions are interconnected. In the case of the 2A and 2B columns, for example, the plate section of the column is a 7-inch-I.D. cylinder while the phase disengaging sections at the top and bottom of the columns are slabs of 3-inch inside height or annular shapes of similar thickness. To aid in the design of these columns and other critically favorable vessels, the following guides have been used.

- Favorable columns are limited to a maximum internal diameter of 7 inches and safe slabs to a maximum inside thickness of 3 inches. These dimensions are sufficiently smaller than the actual critical diameters and thicknesses for air-reflected assemblies to allow for a reasonable extent of reflection and interaction effects with surrounding vessels, concrete, and structural members and thereby to permit reasonable flexibility in design.

- The maximum size right-angle tee employed in an air-reflected critically favorable assembly is limited to 5-inch pipe.

- A 7-inch-I.D. critically favorable cylinder should neck down to 5 inches or less for a distance of at least 2 feet before a sharp bend or miter joint.

- A critically favorable 3-inch-thick slab should neck down to a width of 12 inches before transition (i.e., conversion for attachment to a 5-inch pipe).

- In general, pipes should not connect to the large flat faces of critically favorable slabs but should center on the 3-inch-high sides. Such pipes should extend 2 feet from the slab before running perpendicular to the large flat faces of the slab. For the 3-inch slabs used in the 2A and 2B columns, calculations indicate that half-inch-diameter pipes may enter directly into the slab as long as these pipes are 2 feet apart.

- In general, pipes should not enter directly into the 7-inch-I.D. cylinders. However, for the 2A and 2B columns, calculations have indicated that the construction used for the "doughnut-type" distributor introduces no intolerable effects as long as the 2-inch International Pipe Standard (I.P.S.) "doughnut" is at least 6 inches from the outside shell of the cylinder. From the "doughnut" three equally spaced 1/2-inch pipes lead into the cylinder proper.

- Geometrically favorable assemblies should be placed at least 2 feet from other vessels containing plutonium.

- The method of supporting a safe assembly is important. The effects of supports and the surroundings must be considered.

- New and revised equipment design is reviewed by criticality safety specialists prior to construction and/or installation, depending upon complexity.

9413275.1413

10.5.4.2 <u>1B Extraction and 1B Scrub Columns and 2AF Tank</u>

The 1B extraction column, the 1B scrub column, and the 2AF tank rely primarily on concentration control for criticality prevention. During normal or near-normal operation, the plutonium concentration in these process vessels (0.2 to 1.0 g/ℓ) is far below the limiting concentration of 6 g Pu/ℓ.

In the 32-inch-diameter 1B extraction column, the following safeguards are available in addition to dilution:

- In most of the 1BX column, uranium is present in appreciable concentrations along with the plutonium.

- Three neutron monitors are located 5 feet apart vertically on the lower section of the 1BX column to provide an instantaneous indication of changes in the Pu-239 concentration.

- An alpha monitor on the 1BSU stream which recycles to the 1BX column feed tank provides an indication of excessive plutonium recycle.

- The addition of ferrous sulfamate is controlled so that the plutonium concentration in the column should not exceed 6 g/ℓ and cannot exceed 7.2 g/ℓ.

During periods of abnormal operation it would be possible to accumulate plutonium in the 1BX column. For example, if the 1BX and aqueous effluent streams were shut off and the organic feed was introduced to the column, plutonium would strip into the aqueous phase. Under such conditions, the plutonium would build up until the ferrous iron reducing agent

is oxidized. At flowsheet conditions, the existing aqueous phase plutonium concentration might then approximate 7.2 g/ℓ assuming sufficient reductant addition, slightly less than the 8 g/ℓ minimum critical concentration. The presence of uranium in both the continuous phase (aqueous) and the dispersed phase (organic) provides an additional margin of safety.

The 8-inch-diameter 1BS column is safe against a slow-neutron reaction by virtue of its geometry for any plutonium concentration up to 450 g/ℓ with minimal water reflection. However, the upper disengaging section is not geometrically favorable and plutonium concentration control is necessary. Similar control is required for the 1BX column disengaging section and the SJ Sump.

The occurrence of a nuclear chain reaction with the potential minimum critical mass of plutonium for the 1BS column (1,600 grams) would require the accidental co-occurrence of the following events, each extremely unlikely in itself:

- An undetected plutonium holdup of 1,600 grams
- A reflux into the upper disengaging chamber.

The annular 2AF tank is geometrically favorable in the presence of nitrate for a plutonium concentration of 450 g/ℓ. However, the plutonium concentration is kept low for sump safety considerations. Similarly, the plutonium concentration in the geometrically favorable second neptunium cycle equipment is limited because of the sump.

10.5.4.3 Sumps

In case of rupture of an equipment piece containing concentrated plutonium solution, the solution is collected in the cell sump. In the design of L Cell (containing the second and third plutonium extraction cycles) and the PR room sumps, critically favorable slab construction has been employed. The sumps have been so designed that the contents of any one vessel in the cell may be safely dumped into the sump under normal conditions. To determine the presence of slight leaks and a possible accumulation of solutions containing plutonium, the weight factor dip tubes for the L Cell sumps, SLK and SLL, are connected to alarm lights on the operating panel boards. The relatively flat SLL sump can normally safely receive the contents of any vessel above it if the sump plutonium content is initially low. Criticality safety analysis indicates that a total plutonium content of 50 kg is subcritical in the sump after any foreseeable accident.

10.5.4.4 Rework Effects

During periods of nonstandard operation of the Purex Plant, it is occasionally necessary to rework waste and product solution containing significant amounts of plutonium. To accomplish this, the solution is

routed to the feed makeup tank (TK-E6) where it is combined with dissolver solution for transfer to the HAF tank (TK-H1) or it is routed to the 3AF tank. Special operating precautions must be taken when batches are reworked via the HAF tank to prevent enriching the dissolver solution sufficiently to approach criticality prevention limits. For example, the vessels at the head end of the process are safe primarily because the plutonium content of irradiated uranium from N Reactor fuel is less than 2,300 grams per ton. Thus, the plutonium added to TK-E6 for rework must not result in the presence of more than 2,300 grams per ton of uranium.

10.5.5 Consequences of a Criticality

The possibility of a plutonium criticality incident in the Purex Plant is extremely remote. Criticality could occur only as the result of a number of simultaneous abnormal events, each extremely unlikely in itself. If a critical concentration is accidently reached in any process vessel, the outcome will depend largely upon the rate at which the supercritical conditions are attained. The possibilities range all the way from (a) simmering at a temperature slightly above that of the room, through (b) slow boiling, and (c) boiling at a pressure high enough to eject plutonium solution through the vent system to the atmosphere, to (d) a steam explosion with a temperature of less than 5000°C. Cases c and d are considered extremely unlikely. The most extreme conditions believed at all likely if the critical concentration is exceeded are: (a) development of about two atmospheres of absolute pressure for less than 1/10 of a second in the process vessel and (b) a high gamma radiation field in the immediate area even behind 1 1/2 feet of concrete shielding.

10.6 REFERENCES

1. U.S. Department of Energy, Manual Chapter 0524, "Standards for Radiation Protection," TN-20, March 30, 1977.

2. Killand, W. D., "Radiation Monitoring Manual of Standard Practices," ARH-MA-145, Atlantic Richfield Hanford Company, Richland, Washington, June 12, 1976.

3. Radiological Engineering, "Radiological Controls," RHO-MA-220, Rockwell Hanford Operations, Richland, Washington, November 1978.

4. Compiled by Radiation Monitoring Group, "Radiation Work Procedures," RHO-MA-172, Rockwell Hanford Operations, Richland, Washington, January 24, 1979.

5. U.S. Atomic Energy Commission, "Eighth Semiannual Report," Washington, D.C., 1950.

6. Soule, H. F., "Manual of Radiation Monitoring Practices," HW-28802, General Electric Company, Richland, Washington, July 23, 1953.

7. Morgan, K. Z., et al., "Health Physics Insurance Seminar," TID-388, Oak Ridge National Laboratory, Union Carbide Company, Oak Ridge, Tennessee, March 12, 1954.

8. Parker, H. M., et al., "Introductory Lecture Series on Health Instrumentation," Part I, Chapters III and X, Hanford Works, General Electric Company, Richland, Washington, 1947.

9. Burnett, T. H. J., et al., "Lecture Notes, Health Physics Training Lectures, 1948-1949," AECU-817, September 29, 1950.

10. Delario, A. J., "Roentgen, Radium, and Radioisotope Therapy," Lea and Febiger, Philadelphia, Pennsylvania, 1953.

11. Blizzard, E. P., Editor, Reactor Handbook, Volume III Part B, Shielding, Interscience Publishers, New York, 1962.

12. Author not stated, "Manual of Radiation Protection Standards," HW-25457, General Electric Company, Richland, Washington, July 10, 1951.

13. Wilson, R. H., "Rockwell Hanford Operations Emergency Plan," RHO-MA-111, Rockwell Hanford Operations, Richland, Washington, October 6, 1977.

14. Radiological Health Handbook, 1970, U.S. Department of Health, Education and Welfare.

15. Engel, R. L., J. Greenborg and M. M. Hendrickson, "ISOSHLD - A Computer Code for General Purpose Isotope Shielding Analysis," BNWL-236, Battelle Pacific Northwest Laboratory, Richland, Washington, June 1966.

16. Simmons, G. L., J. J. Regimbal, J. Greenborg, E. L. Kelley, Jr., and H. H. Van Tuyl, "ISOSHLD - II: Code Revision to Include Calculation of Dose Rate from Shielded Bremsstrahlung Sources," BNWL-236 SUP 1, Battelle Pacific Northwest Laboratory, Richland, Washington, March 1967.

17. Watson, C. D, "A General Decontamination Manual for the Idaho Chemical Processing Plant," IDO-26081, Idaho Operations Office, United States Atomic Energy Commission, Idaho Falls, Idaho, March 11, 1953.

18. Raille, M. N., "Final Report - Decontamination of 221-224-B Process Equipment," HW-27774, General Electric Company, Richland, Washington, April 20, 1953.

19. Steiner, C. F., and J. F. LaBonte, "Pilot Plant Progress Report, August, September, October, 1952," KAPL-809, Knolls Atomic Power Laboratory, Schenectady, New York.

20. Wood, H. P., "Decontamination of the ORNL Pilot Plant," ORNL-1242, Oak Ridge National Laboratory, Oak Ridge, Tennessee, May 5, 1952.

21. Author not stated, "Redox Technical Manual," HW-18700, General Electric Company, Richland, Washington, July 10, 1951.

22. Palmer, M. E., "Chemical Processing Department - Essential Material Manual," RHO-MA-132, Rockwell Hanford Operations, Richland, Washington, May 1978.

23. Author not stated, "Uranium Recovery Technical Manual," HW-19140, General Electric Company, Richland, Washington, November 10, 1951.

24. Author not stated, "National Electrical Code, Volume V," National Fire Protection Association, 1947.

25. Sax, N. I., Dangerous Properties of Industrial Materials, Fourth Edition, Van Nostrand Reinhold Company, New York, 1975.

26. Colven, T. J., Jr., G. M. Nichols, T. H. Siddall, "TNX Evaporation Incident," Interim Technical Report, DP-25, E. I. Du Pont Nemours and Company, Savannah River Plant, May 15, 1953.

27. Taylor, J. and Sillitto, The Use of Ammonium Nitrate as a Solid Fuel to Provide Gas for Propulsive Purposes, Third Symposium on Combustion, Flame and Explosion Phenomena, Williams and Wilkins, Baltimore, 1949.

28. Heid, A, and H. Koenen, "Ammonium Nitrate Explosions", Chem. Ztg. 76, 1952, pp. 471-475. (As abstracted in Chem. Abstracts 47, p. 4083, 1953).

29. Hainer, R. M., The Application of Kinetics to the Hazardous Behavior of Ammonium Nitrate, Fifth Symposium on Combustion, Reinhold, New York, 1955.

30. Cruice, W. J., "Purex Filter Safety Analysis Study," HRC Report 4152, Hazards Research Corporation, Denville, New Jersey, April 1979.

31. Eakin, D. E., "Hazardous Properties of Purex Plant Chemicals," ARH-1404, Atlantic Richfield Hanford Company, Richland, Washington, October 15, 1969.

32. Hardison, L. C., "Techniques for Controlling the Oxides of Nitrogen," Journal of Air Pollution Control, Vol. 20 No. 6, June 1970.

33. Carter, R. D., G. R. Kiel, and K. R. Ridgway, "Criticality Handbook, Volume 1," ARH-600, June 28, 1968.

34. Shaw, H. P., "Technical Criteria for the Prevention of Criticality," ARH-468, Revision 2, Atlantic Richfield Hanford Company, Richland, Washington, February 15, 1975.