QTY	PT NO	DESCRIPTION	MTL/REF
X	1	ASSEMBLY	
1	2	PLATE 1/4" THK	300 SERIES SST
AR	3	TUBING 3/4" X .035" WALL	↓
AR	4	TUBING 1/4" X .035" WALL	
2	5	PLATE 3/4" W X 1 1/2" L X 1/16" THK	
2	6	NOZZLE	↓

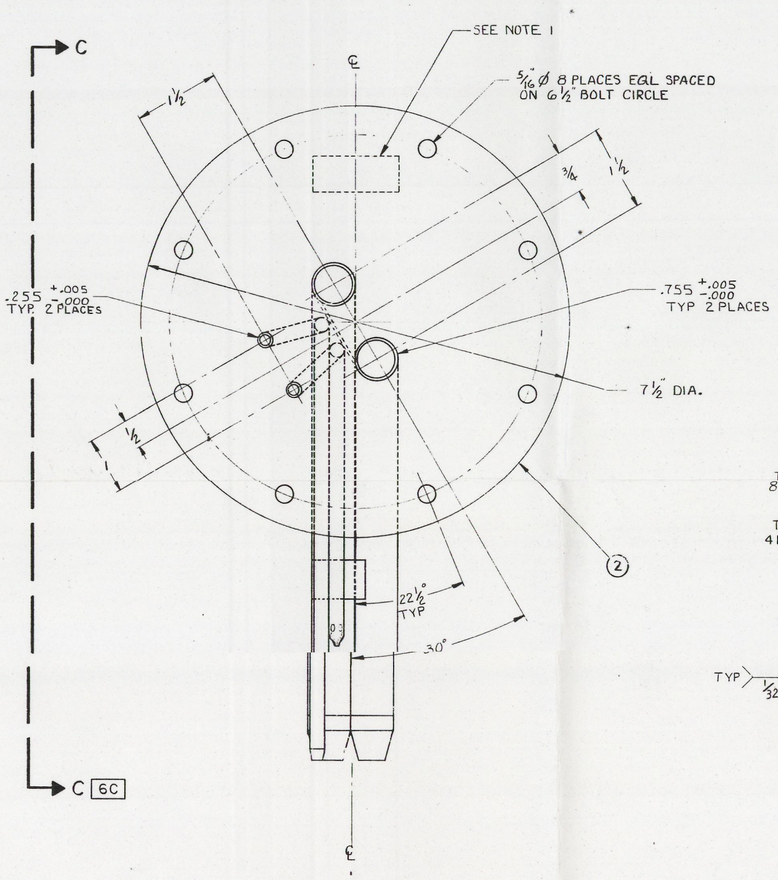

1 ASSEMBLY

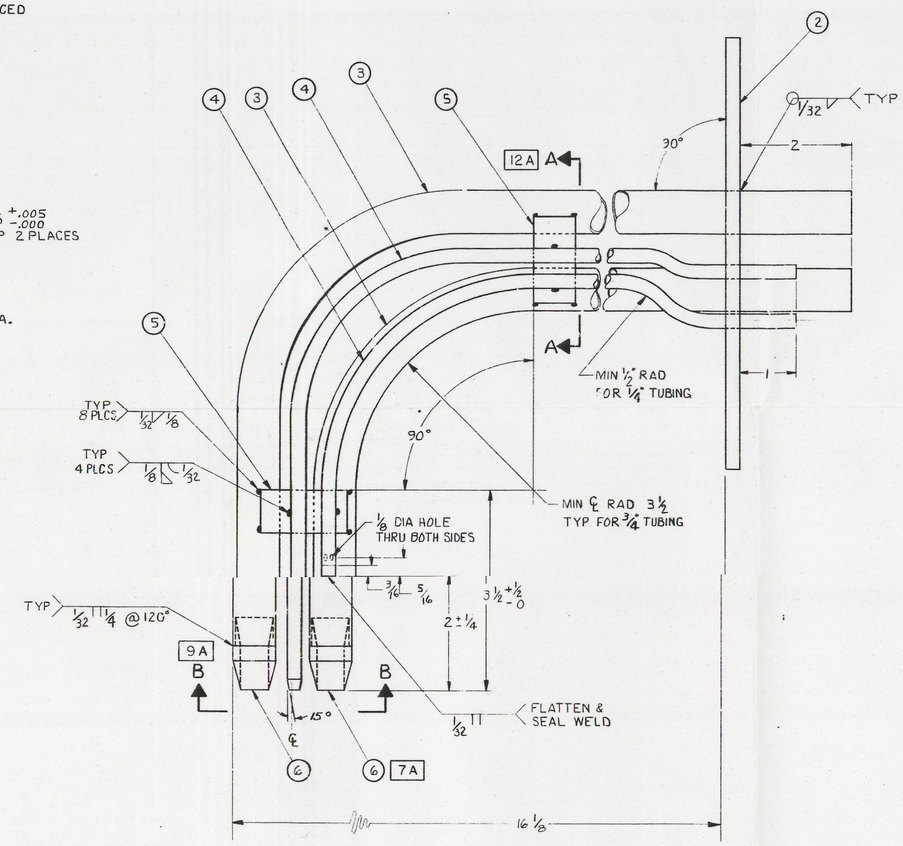

VIEW C-C 11D

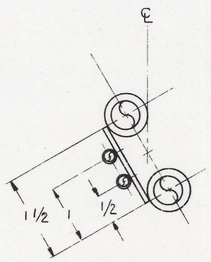

SECTION A-A 6F

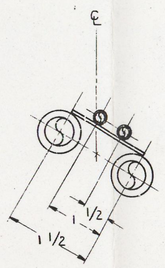

VIEW B-B 8D

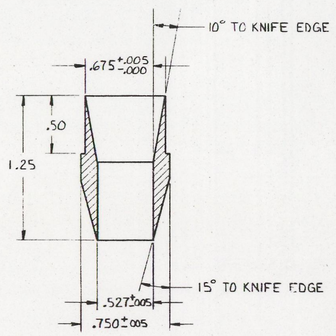

6 NOZZLE 7C
SCALE: 2/1

GENERAL NOTES:

1. IDENTIFY PART 1 PER HWS-10227 TYPE B WITH DRAWING NO., PART NO AND DWG. REV. NO IN LOCATION INDICATED, USING .25 INCH HIGH BLACK CHARACTERS.
2. REMOVE ALL BURRS AND BREAK SHARP EDGES.
3.

WELDING AND INSPECTION REQUIREMENTS			
FABRICATION	1. WELDING STANDARD	☐ ASME ____ ■ ANSI B 31.0 ■ AWS D1.1/D1.5/B3.0	☐ HWS-100.53 - OPTIONAL (IN HOUSE)
	2. PROCEDURE SPEC. & PERFORMANCE CERT.	■ ASME SECTION IX ■ AWS B 3.0	☐ ____
	3. FILLER MATERIAL	■ ASME SECT. II/AWS A5 ____	☐ ____
INSPECTION	4. VISUAL (VT)	■ WELDING STD. IN (1) ■ FITUP	■ SPP 2.5.0-B (IN HOUSE) ☐ ROOT PASS ■ FINAL
	5. PENETRANT (PT)	☐ WELDING STD. IN (1)	☐ ____
	6. MAGNETIC PART (MT)	☐ WELDING STD. IN (1)	☐ ____
	7. ULTRASONIC (UT)	☐ WELDING STD. IN (1)	☐ ____
	8. RADIOGRAPH (RT)	☐ WELDING STD. IN (1)	☐ ____
	9. LEAK TEST (LT)	☐ ____	☐ ____
☐ OTHER REQTS.			

UNLESS OTHERWISE SPECIFIED DIMENSIONS ARE IN INCHES

TOLERANCES ON:

DECIMALS	ANGLES	FRACTIONS
.XX ±.03	±1°	±1/32
.XXX ±.010		

DO NOT SCALE PRINT

0031019

CAUTION
NOT COMPLETE WITHOUT
CURRENT STATUS OF OUTSTANDING
ECNS FROM DATA BASE

MAR 24 1993

REVIEW NUMBER 257

THIS DRAWING HAS BEEN APPROVED BY A ROCKWELL DOCUMENT REVIEW BOARD.
REVISION NO. 0
CHAIRMAN J.W. Cameron DATE 8-3-82

QUALITY ASSURANCE LEVEL I

DRAWING APPROVALS	DATE
[illegible]	8/3/82
R.D. Reid	8/3/82
R.M. Froming	8/3/82
[illegible]	8/3/82
R. STANTON	
[illegible]	7/6/82
[illegible]	7/7/82
R.A. Bjorne	7/14/82

U. S. Department of Energy
Richland Operations Office
Rockwell Hanford Operations
Richland, Washington 99352

296-B-5
STACK MONITOR
PROBE ASSEMBLY

CLASSIFICATION	SCALE	SIZE	DRAWING NO.
NONE	1/1 & NOTED	221-BB	5901
BY NOT REQD	H-2-93288	SHEET 1	SHEETS 1

DWG NO.	DRAWING TITLE
H-2-93287	STACK MONITOR INSTALL.

REFERENCE DRAWINGS
NEXT USED ON H-2-93287

WORK PTS	QUALITY ASSURANCE	RESPONSIBLE ENGINEER	DRAFTING	CHKD BY DATE	REV BY DATE	DESCRIPTION	REV NO.
	REVISION APPROVALS			REVISIONS			LAST REV. 0

COMMENT PRT ISSUE NO. / 6-22-82 DATE | CHECK PRT. ISSUE NO. / 6-25-82 DATE

DRAWING STATUS D.E.-E421

START

0031019

GENERAL NOTES:

1. IDENTIFY PART 1 PER HWS-10227 TYPE B WITH DRAWING NO., PART NO AND DWG. REV. NO IN LOCATION INDICATED, USING .25 INCH HIGH BLACK CHARACTERS.

2. REMOVE ALL BURRS AND BREAK SHARP EDGES.

3.

WELDING AND INSPECTION REQUIREMENTS			
FABRICATION	1. WELDING STANDARD	☐ ASME ____ ■ ANSI B 31.0 ■ AWS D1.1/D1.3/B3.0 ☐ HWS-10053 - OPTIONAL (IN HOUSE)	
	2. PROCEDURE SPEC. & PERFORMANCE CERT.	■ ASME SECTION IX ■ AWS B 3.0	☐ ____
	3. FILLER MATERIAL	■ ASME SECT. II/AWS A5 ____	☐ ____
INSPECTION	4. VISUAL (VT)	■ WELDING STD. IN (1) ■ SPP 2.5.0-B (IN HOUSE) ■ FITUP ☐ ROOT PASS ■ FINAL	
	5. PENETRANT (PT)	☐ WELDING STD. IN (1)	☐ ____
	6. MAGNETIC PART. (MT)	☐ WELDING STD. IN (1)	☐ ____
	7. ULTRASONIC (UT)	☐ WELDING STD. IN (1)	☐ ____
	8. RADIOGRAPH (RT)	☐ WELDING STD. IN (1)	☐ ____
	9. LEAK TEST (LT)	☐ ____	
☐ OTHER REQTS.			

UNLESS OTHERWISE SPECIFIED DIMENSIONS ARE IN INCHES

TOLERANCES ON:

DECIMALS	ANGLES	FRACTIONS
.XX ±.03	±1°	±1/32
.XXX ±.010		

DO NOT SCALE PRINT

DO NOT
LETTER WITHOUT
OF OLD STANDING
DATA BASE

JAN 6 1993

REVIEW NUMBER 257	1	2	3	4

THIS DRAWING HAS BEEN APPROVED BY A ROCKWELL DOCUMENT REVIEW BOARD.
REVISION NO. 0
CHAIRMAN J. W. Cameron DATE 8-3-82

QUALITY ASSURANCE LEVEL I

DRAWING APPROVALS	DATE
E. E. Hall	7/2/82
R.D. Reid	7/2/82
R.M. Conway	7/2/82
R. Stanton	7/2/82
R. STANTON	
R. D. Reid	7/3/82
R. A. Tilley	7/7/82
R.A. Blume	7/14/82

U. S. Department of Energy
Richland Operations Office
Rockwell Hanford Operations
Richland, Washington 99352

296-B-5
STACK MONITOR
PROBE ASSEMBLY

SCALE	SIZE	CODE NO.	DRAWING NO.	SHEET	SHEET
1/1 & NOTED		221-BB	H-2-93288	1	1

CLASSIFICATION	BY
NONE	NOT REQD

REVISIONS					
			DESCRIPTION		
6-22-82	CHECK PRT. ISSUE NO. 1	6-25-82			

DRAWING STATUS D.I.-E421

LAST NOTE	0

4 3 2 1

7 8

9413096.0590