START

0036119

5 Sta. 4

NOV 30 1993

ENGINEERING DATA TRANSMITTAL

Page 1 of 1

1. EDT 603085

2. To: (Receiving Organization) DISTRIBUTION	3. From: (Originating Organization) TANK FARMS ENVIRONMENTAL ENGINEERING	4. Related EDT No.: N/A
5. Proj./Prog./Dept./Div.: WIO/TWRS	6. Cog. Engr.: T.W. SEIFERT	7. Purchase Order No.: N/A
8. Originator Remarks: LERF, RCRA INSPECTION SCHEDULE, 40 CFR 265.15, WAC 173-303-320		9. Equip./Component No.: N/A
		10. System/Bldg./Facility: LERF
11. Receiver Remarks:		12. Major Assm. Dwg. No.: N/A
		13. Permit/Permit Application No.: N/A
		14. Required Response Date: November 30, 1993

15. DATA TRANSMITTED

(A) Item No.	(B) Document/Drawing No.	(C) Sheet No.	(D) Rev. No.	(E) Title or Description of Data Transmitted	(F) Impact Level	(G) Reason for Transmittal	(H) Originator Disposition	(I) Receiver Disposition
1	WHC-SD-WM-IP-005		0	LERF INSPECTION SCHEDULE	3E	1	1	

16. KEY

Impact Level (F)	Reason for Transmittal (G)		Disposition (H) & (I)	
1, 2, 3, or 4 (see MRP 5.43)	1. Approval 2. Release 3. Information	4. Review 5. Post-Review 6. Dist. (Receipt Acknow. Required)	1. Approved 2. Approved w/comment 3. Disapproved w/comment	4. Reviewed no/comment 5. Reviewed w/comment 6. Receipt acknowledged

17. SIGNATURE/DISTRIBUTION (See Impact Level for required signatures)

(G) Reason	(H) Disp.	(J) Name	(K) Signature	(L) Date	(M) MSIN	(J) Name	(K) Signature	(L) Date	(M) MSIN	(G) Reason	(H) Disp.
1		Cog.Eng. T.W. Seifert	T.W. Seifert	11-30-93	R1-51	Operations D.R. Lance	D.R. Lance		S0-09	1	
1		Cog. Mgr. R.D. Gustavson	R.D. Gustavson	11-30-93	R1-51						
		QA									
		Safety									
		Env. G.M. Crummel		11-30-93	R1-51						
1	1	Waste Ops P.G. Johnson			R1-43						
1		Operations J.S. Taylor			S0-09						

18.	19.	20.	21. DOE APPROVAL (if required)
SEE BLOCK 17 Signature of EDT Originator Date	Authorized Representative for Receiving Organization Date	SEE BLOCK 17 Cognizant/Project Engineer's Manager Date	Ltr. No. [] Approved [] Approved w/comments [] Disapproved w/comments

MAY 1994 RECEIVED EPIC

9413276.1457

BD-7400-172-2 (07/91) GEF097

BD-7400-172-1 (07/91)

THIS PAGE INTENTIONALLY
LEFT BLANK

NOV 30 1993

Date Received: 11/30/93	INFORMATION RELEASE REQUEST	Reference: WHC-CM-3-4

Complete for all Types of Release

Purpose

[] Speech or Presentation
- [] Full Paper
- [] Summary
- [] Abstract
- [] Visual Aid

(Check only one suffix)

[] Speakers Bureau
[] Poster Session
[] Videotape

[] Reference
[] Technical Report
[] Thesis or Dissertation
[] Manual
[] Brochure/Flier
[] Software/Database
[] Controlled Document
[] Other

ID Number (include revision, volume, etc.): WHC-SD-WM-IP-005

List attachments.

Date Release Required: 11/30/93

Title: LERF INSPECTION SCHEDULE

Unclassified Category: UC-

Impact Level: 3E 8Q

New or novel (patentable) subject matter? [X] No [] Yes
If "Yes", has disclosure been submitted by WHC or other company?
[] No [] Yes Disclosure No(s).

Information received from others in confidence, such as proprietary data, trade secrets, and/or inventions?
[X] No [] Yes (Identify)

Copyrights? [X] No [] Yes
If "Yes", has written permission been granted?
[] No [] Yes (Attach Permission)

Trademarks?
[X] No [] Yes (Identify)

Complete for Speech or Presentation

Title of Conference or Meeting: N/A

Group or Society Sponsoring: N/A

Date(s) of Conference or Meeting: N/A

City/State: N/A

Will proceedings be published? [] Yes [] No
Will material be handed out? [] Yes [] No

Title of Journal: N/A

CHECKLIST FOR SIGNATORIES

Review Required per WHC-CM-3-4	Yes	No	Reviewer - Signature Indicates Approval: Name (printed)	Signature	Date
Classification/Unclassified Controlled Nuclear Information	[]	[X]			
Patent - General Counsel	[]	[X]			
Legal - General Counsel	[]	[X]			
Applied Technology/Export Controlled Information or International Program	[]	[X]			
WHC Program/Project	[X]	[]	R.D. Gustavson	R.D. Gustavson	11/30/93
Communications	[]	[X]			
RL Program/Project	[]	[X]			
Publication Services	[]	[X]			
Other Program/Project	[]	[X]			

Information conforms to all applicable requirements. The above information is certified to be correct.

	Yes	No
References Available to Intended Audience	[X]	[]
Transmit to DOE-HQ/Office of Scientific and Technical Information	[]	[X]

Author/Requestor (Printed/Signature): T.W. Seifert — Date: 11/30/93

Intended Audience: [X] Internal [] Sponsor [] External

Responsible Manager (Printed/Signature): R.D. Gustavson — Date: 11/30/93

INFORMATION RELEASE ADMINISTRATION APPROVAL STAMP

Stamp is required before release. Release is contingent upon resolution of mandatory comments.

Date Cancelled | Date Disapproved

9413276.1459

THIS PAGE INTENTIONALLY LEFT BLANK

THIS PAGE INTENTIONALLY
LEFT BLANK

SUPPORTING DOCUMENT

1. Total Pages 121

2. Title	3. Number	4. Rev No.
LERF INSPECTION SCHEDULE	WHC-SD-WM-IP-005	0

5. Key Words	6. Author
LERF, RCRA INSPECTION SCHEDULE, 40 CFR 265.15, WAC 173-303-320	Name: T.W. Seifert Signature Organization/Charge Code W7C420/N13G1

7. Abstract This document specifies the general facility and unit-specefic system, equipment, and structural inspections required to be performed at LERF with the RCRA and WAC requirements governing such inspections.*

8. PURPOSE AND USE OF DOCUMENT - This document was prepared for use within the U.S. Department of Energy and its contractors. It is to be used only to perform, direct, or integrate work under U.S. Department of Energy contracts. This document is not approved for public release until reviewed.

APPROVED FOR PUBLIC RELEASE 12-14-93

PATENT STATUS - This document copy, since it is transmitted in advance of patent clearance, is made available in confidence solely for use in performance of work under contracts with the U.S. Department of Energy. This document is not to be published nor its contents otherwise disseminated or used for purposes other than specified above before patent approval for such release or use has been secured, upon request, from the Patent Counsel, U.S. Department of Energy Field Office, Richland, WA.

DISCLAIMER - This report was prepared as an account of work sponsored by an agency of the United States Government. Neither the United States Government nor any agency thereof, nor any of their employees, nor any of their contractors, subcontractors or their employees, makes any warranty, express or implied, or assumes any legal liability or responsibility for the accuracy, completeness, or any third party's use or the results of such use of any information, apparatus, product, or process disclosed, or represents that its use would not infringe privately owned rights. Reference herein to any specific commercial product, process, or service by trade name, trademark, manufacturer, or otherwise, does not necessarily constitute or imply its endorsement, recommendation, or favoring by the United States Government or any agency thereof or its contractors or subcontractors. The views and opinions of authors expressed herein do not necessarily state or reflect those of the United States Government or any agency thereof.

9. Impact Level 3E

10. RELEASE STAMP

OFFICIAL RELEASE BY WHC (5)
DATE NOV 30 1993
Sta. 4

* The inspection schedules outline procedures used in maintaining compliance with the regulatory requirements and WHC company policy for inspection of the LERF to prevent equipment malfunction and deterioration, operating error, and discharge that may present a threat to human health, or lead to the release of dangerous waste constituents to the environment.

9413276.1459

THIS PAGE INTENTIONALLY
LEFT BLANK

LIQUID EFFLUENT RETENTION FACILITY

INSPECTION SCHEDULE

R. D. Gustavson
T. W. Seifert
Westinghouse Hanford Company

M. L. Felch
R. S. Slagle
Science Applications International Corporation

Date Published
December 1, 1993

9413276.1460

THIS PAGE INTENTIONALLY
LEFT BLANK

9413276.1461

This inspection schedule document for the Liquid Effluent Retention Facility was prepared to meet a restart schedule. To compile the system and equipment lists contained in this document required technical determinations based on documents, interviews, technical reviews, and walkdowns of the facility. The authors realize there may be omissions or errors associated with the information provided in this document. Please contact Tank Farms Environmental Engineering to resolve any concerns and/or provide revised information.

THIS PAGE INTENTIONALLY
LEFT BLANK

FOREWORD

For permitting purposes, the Liquid Effluent Retention Facility has been classified as a surface impoundment, subject to Federal regulations under 40 CFR 265, Subpart K and state regulations under WAC 173-303-650. The facility meets the principal criterion for legal and responsible operation of a surface impoundment; that is, it provides for the interim storage of liquid (in this case, three 6.5 million gallon catch basins that receive process condensate from the 242-A Evaporator) in such a manner that stored liquids neither leach to the ground nor evaporate to the air. The facility is controlled and operated from the 242-A Evaporator; accordingly, only minimal accommodations for personnel are found at the basin site. There is a portable structure for personnel use which contains fire and emergency response equipment, a preengineered metal building for clean and contaminated equipment storage, and a portable wood storage building that may be used for storing contaminated laundry. There is no sanitary water at LERF. Portable eyewash stations are stored at 272-AW for use at the LERF Facility. Portable radios are used for communication within the LERF and between LERF and the 242-A Evaporator. Operation of the facility has not begun and some aspects of operation have not been finalized. One such aspect is the requirement for a Radiological Control Area (RCA) and related radiological protective measures.

9413276.1462

This page intentionally left blank.

9413276.1463

CONTENTS

FOREWORD iii

ABBREVIATIONS AND ACRONYMS xi

1.0 INTRODUCTION 1-1

2.0 PURPOSE 2-1

3.0 SCOPE 3-1

4.0 RESPONSIBILITIES 4-1

5.0 LIQUID EFFLUENT RETENTION FACILITY (LERF) 5-1
- 5.1 FACILITY DESCRIPTION 5-1
- 5.2 THE 242-A EVAPORATOR WASTE FEED 5-4
- 5.3 242-A EVAPORATOR WASTE TRANSFER TO LERF 5-5
- 5.4 WASTE DESIGNATION 5-5

6.0 INSPECTION PROCESS 6-1
- 6.1 INSPECTION SCHEDULES, FORMAT, USE AND REVISIONS 6-1
- 6.2 VISUAL INSPECTIONS 6-5
- 6.3 INSTRUMENTATION MONITORING: MONITORING CONTROL SYSTEM 6-5
- 6.4 PREVENTIVE AND PREDICTIVE MAINTENANCE 6-6
  - 6.4.1 Component-Based Recall System 6-7
- 6.5 DOCUMENTATION REQUIREMENTS 6-8

7.0 INSPECTION REQUIREMENTS 7-1
- 7.1 SAFETY CLASSIFICATION SYSTEM REQUIREMENTS 7-1
- 7.2 OPERATIONAL SAFETY REQUIREMENTS 7-1
- 7.3 GENERAL FACILITY INSPECTION REQUIREMENTS 7-2
  - 7.3.1 Waste Pile Inspection 7-3
  - 7.3.2 Incinerator Inspection 7-3
  - 7.3.3 Landfill Inspection 7-3
  - 7.3.4 Land Treatment Facility Inspection 7-3
- 7.4 LERF UNIT-SPECIFIC INSPECTION REQUIREMENTS 7-3
  - 7.4.1 Storage Basins 7-4
  - 7.4.2 Leachate Detection, Collection, and Removal 7-5
  - 7.4.3 Ancillary Equipment Requirements 7-6
  - 7.4.4 Waste Sampling 7-6

9413276.1464

8.0 INSPECTIONS 8-1
8.1 GENERAL FACILITY INSPECTIONS 8-1
8.1.1 Security 8-2
8.1.2 Communication Equipment 8-5
8.1.3 Safety Systems/Emergency Equipment 8-7
8.1.4 Fire Protection System 8-11
8.1.5 Operational, Structural, and Housekeeping 8-12
8.1.6 Monitoring Equipment 8-12
8.2 UNIT-SPECIFIC INSPECTIONS 8-13
8.2.1 Basins: 242-AL-42, 43, and 44 8-13
8.2.2 Leachate Detection, Collection, and Removal 8-22
8.2.3 Piping System 8-23
8.3 SAMPLING PROGRAM 8-27
8.3.1 Sample Preservation and Shipment 8-28
8.3.2 Analytical Procedures 8-28
8.3.3 Chain of Custody 8-29
8.3.4 LERF Process Condensate Sampling 8-29
8.3.5 Retention Basin Groundwater Monitoring Wells 8-33
8.4 WASTE CONTAINERS 8-36

9.0 FACILITY AND OPERATIONAL ADMINISTRATIVE INSPECTIONS 9-1
9.1 FACILITY AND OPERATIONAL SAFETY INSPECTIONS 9-1
9.2 HAZARD COMMUNICATION AND HAZARDOUS MATERIALS SURVEILLANCE 9-2
9.3 SAFETY SURVEILLANCE 9-3

10.0 WHC PROGRAM REQUIREMENTS 10-1
10.1 WASTE ANALYSIS PLAN 10-1
10.2 PERSONNEL TRAINING 10-1
10.3 WASTE MINIMIZATION AND RECYCLING 10-2
10.3.1 Waste Minimization 10-2
10.3.2 Source Reduction and Recycling 10-3
10.4 SAFETY AND HEALTH REQUIREMENTS 10-3
10.5 HEALTH PHYSICS ORGANIZATION 10-4
10.5.1 HPT Equipment & Instrumentation 10-5
10.5.2 Procedures 10-6
10.6 CORRECTIVE ACTIONS 10-7
10.7 RECORDKEEPING AND REPORTING REQUIREMENTS 10-7
10.8 OPERATING RECORD INFORMATION REQUIREMENTS 10-8
10.9 QUALITY, ENVIRONMENTAL, AND SAFETY TRENDING SYSTEM 10-9
10.10 INDEPENDENT ACTIVITIES 10-9

9413276.1465

11.0 REFERENCES 11-1
11.1 REGULATIONS AND DIRECTIVES 11-1
11.2 DOCUMENTS 11-1
11.3 MANUALS 11-4

APPENDIX A INSPECTION SCHEDULES FOR LERF 11-1

9413276.1466

FIGURES

Figure 5-1. Location of Liquid Effluent Retention Facility 5-2
Figure 5-2. Liquid Effluent Retention Facility Operations Facility. 5-3
Figure 6-1. Sample Inspection Schedule 6-2
Figure 8-1. Liner System Schematic. 8-14
Figure 8-2. Liner Anchor Wall and Cover Tension System. 8-15
Figure 8-3. Soil Source Location. 8-18
Figure 8-4. Carbon Adsorber Vent System. 8-21
Figure 8-5. Leak Detection System Test Riser Fitting. 8-25
Figure 8-6. Leak Detection System Test Riser Assembly. 8-26
Figure 8-7. LERF Basin Sampling System. 8-30
Figure 8-8. Monitoring Well Locations for LERF. 8-35

9413276.1467

TABLES

Table 8-1. Locations and Text of Signs to be Posted at LERF 8-4

9413276.1468

This page intentionally left blank.

9413276.1469

ABBREVIATIONS AND ACRONYMS

ANOVA	Analysis of Variance
ALARA	As Low As Reasonably Achievable
ALR	Action Leakage Rate
CBRS	Component-Based Recall System
CFR	Code of Federal Regulations
DOE	U.S. Department of Energy
DOE-RL	U.S. Department of Energy, Richland Field Office
DST	Double-Shell Tank
EPA	U.S. Environmental Protection Agency
HAZMAT	Hazardous Materials
HDPE	High Density Polyethylene
HFD	Hanford Fire Department
HPT	Health Physics Technician
JCS	Job Control System
LERF	Liquid Effluent Retention Facility
M&TE	Measuring and Test Equipment
MEA&A	Maintenance Engineering Administration and Analysis
MICS	Maintenance Instrumentation Calibration System
MCS	Monitor and Control System
PAPR	Powered Air-Purifying Respirators
PC	Process Condensate
PNL	Pacific Northwest Laboratory
PUREX	Plutonium and Uranium Recovery and Extraction Facility
QA	Quality Assurance
RCA	Radiological Controlled Area
RCRA	Resource Conservation and Recovery Act
RTPR	Reinforced Epoxy Thermoset Resin Pressure Pipe
SAR	Safety Analysis Report
SCBA	Self Contained Breathing Apparatus
SME	Subject Matter Expert
SST	Single-Shell Tank
TLD	ThermoLuminescent Dosimeter
TSD	Treatment, Storage, and Disposal
TSR/OSR	Technical/Operational Safety Requirement
UHF/PLC	Ultra High Frequency/Programmable Logic Controller
VCA	Verification Control Authorities
VLDPE	Very Low Density Polyethylene
WAC	Washington Administrative Code
WHC	Westinghouse Hanford Company

9413276.1470

This page intentionally left blank.

9413276.1471

1.0 INTRODUCTION

The Hanford Site is owned and operated by the United States Government and is managed by the Department of Energy-Richland Field Office (DOE-RL). Westinghouse Hanford Company (WHC) is a major contractor to DOE-RL. The Hanford Site covers approximately 560 square miles of semi-arid land and is located northwest of the city of Richland, Washington. The city of Richland adjoins the southeastern-most portion of the Hanford Site boundary and is the nearest population center.

The Hanford Site produces mixed waste, i.e., waste containing both radioactive and dangerous materials. The radioactive portion of mixed waste is interpreted by the DOE to be regulated under the *Atomic Energy Act of 1954*. The nonradioactive dangerous portion of mixed waste is interpreted to be regulated under the *Resource Conservation and Recovery Act of 1976* (RCRA). For purposes of RCRA, DOE-RL is the owner/operator and Westinghouse Hanford is a co-operator of the dangerous waste management units on the Hanford Site.

9413276.1472

The Liquid Effluent Retention Facility, located in the 200 East Area at Hanford, provides interim storage for process condensate produced through operations at the 242-A Evaporator/Crystallizer. In the 242-A Evaporator, waste from various Hanford Site operations that is being stored in underground double-shell tanks is reduced in volume to increase storage capabilities. The waste feed is heated, evaporated, and the vapors condensed. Two product streams are generated: a double-shell slurry feed and process condensate. The double shell slurry feed is transferred to double-shell tanks. The process condensate is filtered to remove solids, passed through an ion exchange column to further reduce the cesium and strontium content and then passed through an in-line strainer. The process condensate, now a low-level, low-hazard liquid, is piped to the LERF for interim storage until a permanent treatment and disposal system can be designed and built.

The LERF consists of three retention basins (with capacity for a fourth basin), associated transfer piping, sampling ports, valves, instrumentation and controls, and basin support structures, which include a fixed structure (MO-727) and two buildings. The Evaporator process condensate is pumped from 242-A to the basins through double-encased, fiberglass-reinforced epoxy thermoset resin pipelines. The capability exists to transfer the contents of one basin into another basin.

The LERF occupies approximately 40 acres of land north of the 242-A Evaporator. During construction, the site was outside the 200 East Area protected fence; when the construction was completed, the fence was moved to enclose the facility. In addition, an operational security fence totally encloses LERF; this fence controls personnel access and excludes deer and other large animals from the facility.

Previously, the 242-A Evaporator process condensate was disposed of to the soil column without treatment. Discharges to the soil column were curtailed in April 1989 when

the DOE-RL learned that some effluents might contain listed dangerous waste as well as ammonia in concentrations high enough to make the waste a characteristic dangerous waste. The LERF relieves the shortage of adequate DST space, allowing other Hanford Site operations to continue.

The LERF provides RCRA-permittable interim retention capacity until a treatment and disposal system can be designed and constructed. The State of Washington, as an Agreement State through the Washington Administrative Code (WAC), is responsible for facility environmental approvals rather than the EPA.

Owners or operators of facilities that treat, store, and/or dispose of dangerous wastes and/or mixed wastes as defined in Washington Administrative Code (WAC) Chapter 173-303, *Dangerous Waste Regulations*, must inspect their facilities to prevent malfunctions and deteriorations, operator errors, and discharges that may cause or lead to the release of hazardous waste constituents to the environment and/or cause a threat to human health. Standards that are applicable to all treatment, storage, and disposal (TSD) facilities are

- RCRA Section 3010 notifications to EPA
- Part A permit applications to EPA
- Facility management plans
  - waste analysis
  - security
  - inspections
  - maintenance
  - training
  - ignitable, reactive, and incompatible wastes
- Location of waste management units
- Preparedness for and prevention of emergencies and releases
- Written contingency plan and emergency procedures
- Written operating records, manifest records, and biennial reports of facility activities
- Groundwater protection and monitoring (for land disposal facilities)
- Corrective action
- Closure plan and post-closure care and use

9413276.1473

- Financial information and guarantees regarding closure, post-closure, accidents, and bankruptcy.

Both the RCRA and WAC regulations require that a written inspection schedule be developed, implemented, and kept at the facility. The schedule must address both general facility inspection and unit-specific inspection requirements. The general inspection requirements apply to inspection of the portions of the TSD facility other than the actual TSD units (e.g., storage basins, piping, pumps, and transfer lines).

LERF RCRA inspection schedules are presented in this document. The development of a RCRA Inspection Schedule is the first step in complying with the requirements of 40 CFR 265.15 and WAC 173-303-320. An inspection log, documenting completion of inspections and implementation of remedial/corrective actions, is currently under development to ensure compliance with regulatory operating requirements. The inspection schedules themselves are displayed in tabular form in Appendix A. The sections of this document discuss the purpose, scope, and responsibilities of the inspection program, the facility design and components, and the general and unit-specific inspections that have been determined to be required to prevent hazards to the public and the environment. Also identified are administrative and programmatic inspections that, while not displayed in schedule form, are conducted at the LERF.

9413276.1474

This page intentionally left blank.

9413276.1475

2.0 PURPOSE

The intent of this document is to specify the general facility and unit-specific system, equipment, and structural inspections required to be performed at the LERF to satisfy the RCRA and WAC requirements governing such inspections. Inspection schedules, found in Appendix A, outline procedures used in maintaining compliance with regulatory requirements and WHC policy for inspection of the LERF facility to prevent equipment malfunction and deterioration, operating error, and discharge that may present a threat to human health or lead to the release of dangerous waste constituents to the environment. The inspections are designed to provide a proactive process to identify operational, equipment, personnel, and programmatic issues related to the LERF. Further, the inspection schedules provide a method to specify remedial actions required to correct issues of concern so that harm to personnel or the environment is avoided.

9413276.1476

This page intentionally left blank.

9413276.1477

3.0 SCOPE

Inspections of the LERF must be completed to determine malfunctions and deterioration, operator errors, and discharges that may cause or lead to releases of hazardous constituents to the environment or a threat to human health, as outlined in WAC 173-303-320 and 40 CFR 265.15. Additional inspection requirements are also outlined in DOE Orders and WHC policies, including the Safety Classification System and Operational Safety/Limiting Conditions for Operation. Some specific requirements include

- A comprehensive, written inspection plan or schedule.

- Documentation of inspections in inspection log or summary to be kept for at least five years from date of inspection. The documentation must include at a minimum:
  - the date and time of the inspection
  - the printed name and handwritten signature of the inspector
  - any observations made
  - date and nature of any repairs or remedial actions taken.

- A schedule to resolve any problems revealed by the inspections to prevent hazards to public health and the environment. Where a hazard is imminent or has already occurred, remedial action must be taken immediately.

- Daily inspections of areas subject to spills (loading and unloading areas, container storage areas, etc.) when those areas are in use, and inspections according to applicable regulations when the areas are not in use.

In general, the inspection schedules apply to the system used to treat or accumulate dangerous waste and include operating and structural devices and equipment that help prevent, detect, and/or are used in the response to hazards posed by dangerous wastes to employees, the public, and/or the environment. The inspection schedules contained in Appendix A are intended to address primary inspections that must be performed for both operational and shutdown conditions of the facility. These schedules are to be used as master schedules, allowing individual inspection schedules to be generated based on such criteria as responsible organization, inspection frequency or type, or equipment.

9413276.1478

This page intentionally left blank.

9413276.1479

4.0 RESPONSIBILITIES

Owners and operators of RCRA-regulated TSD facilities are required to develop, implement, and keep written inspection schedules in the facility operating records. The LERF Cognizant Engineer is responsible for oversight of daily operation, overall knowledge of LERF processes, and maintaining and updating the inspection schedules through notification of LERF facility and documentation revisions that will affect the inspection schedules, in conjunction with the organization responsible for performing the inspections. Additionally, WHC Subject Matter Experts (SME) have been assigned individual responsibility for specific systems and/or topic areas (piping, monitoring, safety, regulatory, process engineering, and QA).

A scheduled review and update of the referenced documents and the applicable regulatory requirements is performed by the Cognizant Engineer, Maintenance, Operations, Safety and Health, Emergency Preparedness, Hanford Fire and Security Patrol, management of responsible organizations, and those personnel responsible for environmental compliance support of the LERF. When the inspection program is revised, the most current revision of the regulations and WHC documentation will always be used by both management and personnel. Additionally, the most current revision of a WHC procedure will be used in the field in the performance of LERF inspection activities.

To ensure the appropriate level of oversight, review, and clarification, the responsibilities for designing and implementing the inspection program for the LERF are as follows:

- WHC managers shall ensure that activities and associated documentation under their authority are completed in accordance with the requirements of WHC-CM-7-5, *Environmental Compliance*.

- Quality Assurance shall establish provisions in accordance with WHC-CM-1-3, *Management Requirements and Procedures*, MRP-5.2 "Quality Assurance," DOE Order 5400.1, and DOE Order 5700.6.C, covering the appropriate elements of environmental inspection and management surveillance programs commensurate with its nature and complexity.

- 200 Area Tank Farms Environmental Compliance Officer shall be the point of contact for the environmental requirements and programs as identified by WHC for all equipment, facility, and management inspection programs performed under the direction of Tank Farms personnel.

- Regulatory Analysis shall identify, document, and communicate environmental regulatory changes appropriate to WHC Tank Farms organizations.

9413276.1480

- WHC organizations identified by Regulatory Analysis as potentially affected by proposed environmental regulations shall be responsible for providing comments on the regulations.

- WHC employees are responsible for notifying their immediate manager of any condition or practice that may affect compliance with environmental regulatory requirements. The manager shall give these notices immediate attention and notify Regulatory Field Support.

- Regulatory Support shall approve and issue waivers and compliance plans in accordance with the procedures established in WHC-CM-1-3, MRP 1.1 "U.S. Department of Energy Directives" and MRP 2.21 "Controlled Manual Waiver Process." The manager of Regulatory Field Support implements the waiver and compliance plan provisions of MRP 2.21 on behalf of Regulatory Support.

- WHC organizations responsible for facilities or activities governed by the provisions of WHC-CM-7-5 are responsible for maintaining controlled copies and for ensuring that lower-tier manuals or procedures under their control are updated to reflect new or revised requirements.

9413276.1481

5.0 LIQUID EFFLUENT RETENTION FACILITY (LERF)

5.1 FACILITY DESCRIPTION

The Liquid Effluent Retention Facility (LERF) is located in the 200 East Area, approximately 0.75 mile (1.2 kilometers) north of the 242-A Evaporator. The LERF consists of three 6.5-million gallon (24.6-million liter) surface impoundments (basins) located on a 39-acre (16-hectare) site. The basins are identical in design and constructed with two composite liners, a leachate collection system between the liners, and floating covers (Rieck 1990, pp. 2,4). The LERF site was designed to accommodate a fourth basin for future additions. Illustrations showing the location of LERF and its relationship to the 242-A Evaporator are shown in Figures 5-1 and 5-2. In addition, Hanford Site drawings that illustrate the locations of the basins and the configuration and specifications of the piping and samplers are found in the LERF Part B Application.

9413276.1482

The LERF receives process condensate from the 242-A Evaporator through approximately 4950 feet (1509 meters) of transfer pipe. The transfer pipe is enclosed in an outer containment pipe and runs at least 4 feet underground from its exit at the 242-A Evaporator until it enters the storage basins. Interconnecting pipes allow the transfer of liquid from one basin to another. There are nine sampling ports in each basin.

Transfer of process condensate is controlled from the 242-A Evaporator control room and only minimal personnel accommodations are located at the LERF. Structures and utilities include

- MO-727
- Metal storage building
- Electrical power substation
- Concrete step-off pad
- Portable wood storage building.

MO-727 is a fixed structure located between 242-AL-42 Basin and 242-AL-43 Basin. It contains a fire extinguisher, a spill response kit, and a vestibule with portal monitors.

Figure 5-1. Location of LERF.

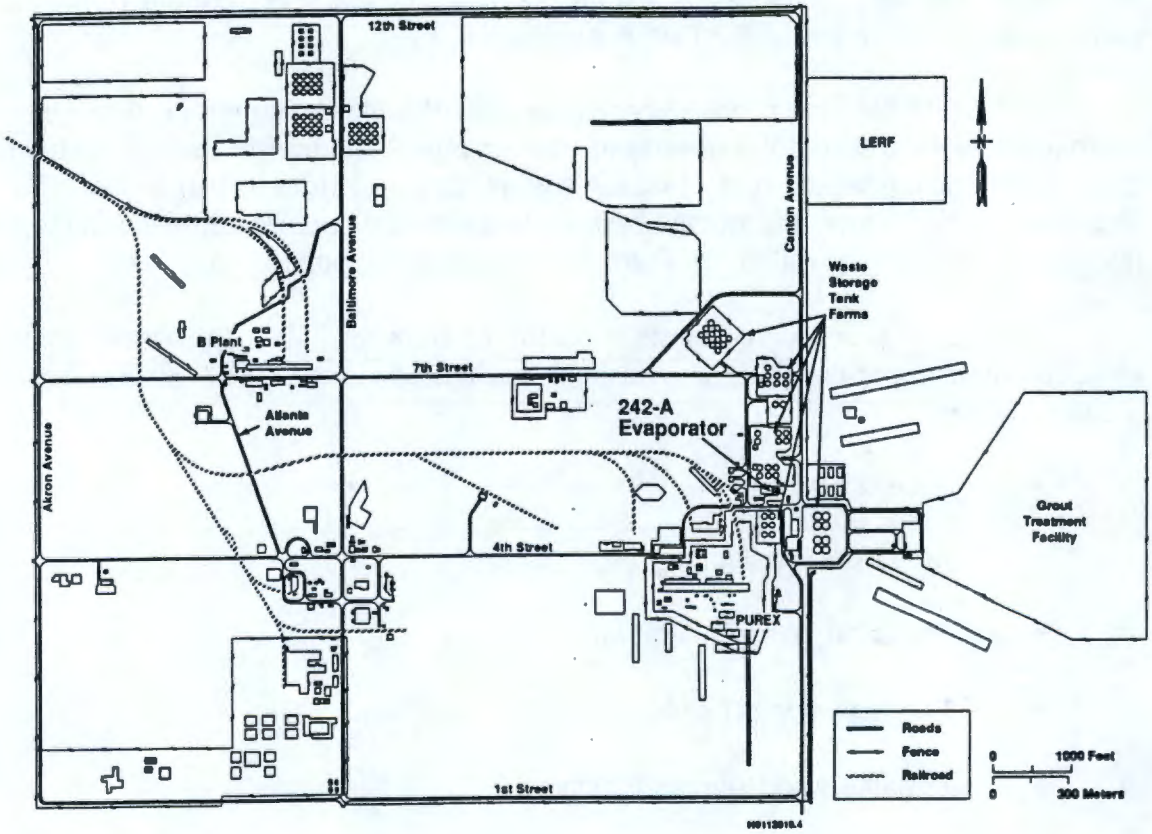

Figure 5-2. LERF Operations Facility.

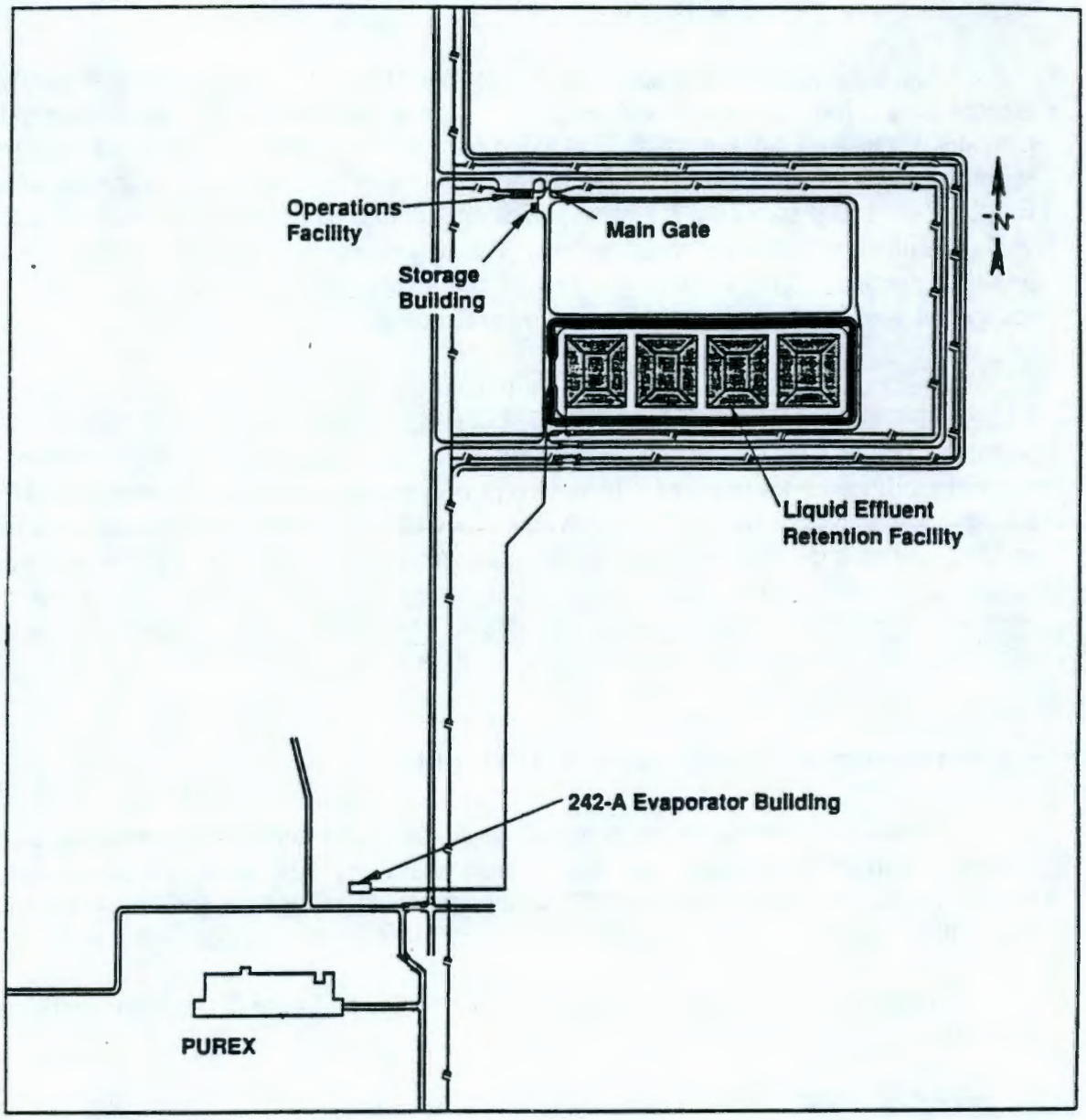

79009161.2

9413276.1484

The building is insulated and equipped with appropriate entryway, windows, lighting, electrical power, and a heating, ventilation, and air conditioning system. This building is not equipped with sanitary water or sewer services. Emergency eye wash stations are provided at 272-AW for transfer to LERF on an as-needed basis. Potable water is provided for minor emergencies and skin contaminations. Showers are located about one mile (1.6 kilometers) from LERF at the 272-AW Building.

A preengineered metal building, 30 feet by 40 feet (9.1 meters by 12 meters), is erected on a 2-foot (61-centimeter) concrete curb near the north access gate. The building provides segregated storage space designated for clean and contaminated basin equipment and supplies. Doors include an 8-foot by 10-foot (2.4-meter by 3-meter) roll-up door and a 3-foot by 7-foot (0.9-meter by 2.1-meter) personnel door. The interior is insulated and the walls are lined with interior metal panels. The concrete curb and floor are coated with a protective sealant. Two electric unit heaters and a roof-mounted exhaust fan with a dampened wall intake louver for ventilation are provided (Rieck 1990, p. 12).

Electrical power for the LERF is provided by a 150 KVA unit substation located immediately north of the pipe berm. Power is required for the permanent leachate pumps, portable transfer pumps, lighting, and instrumentation. Standby power for the basins and the support facilities is not required. In the event of a power outage during waste transfer, the standby power system for the 242-A Evaporator will provide the power for completion of the transfer and leak detection monitoring devices. An exterior concrete pad (step-off pad) exists at the exit from the basin area. The pad is equipped with bins for used special work clothing. A portable wooden structure is located onsite for storage purposes. This building would be used for contaminated clothing if an RCA were established.

5.2 THE 242-A EVAPORATOR WASTE FEED

The 242-A Evaporator treats mixed waste generated during the production of special nuclear materials and research and development activities. The waste is stored as alkaline liquids and solids in underground DSTs located within the 200 East and 200 West Areas. The process condensate is generated from treatment of waste taken from these DSTs.

Waste stored in the DST System and treated by the 242-A Evaporator includes the following:

- PUREX nonaging waste or low-level waste
- Plutonium Finishing Plant low-level processing waste supernate
- B Plant process and miscellaneous waste including cell drainage and vessel cleanout waste

9413276.1485

- S Plant laboratory and decontamination waste
- T Plant spent decontamination solutions
- 300 Area laboratory waste
- 300 Area fuels fabrication waste (no longer generated)
- 400 Area laboratory waste
- 100-N dilute phosphate decontamination waste and 100 Area spent fuel storage basin sulfate waste from ion exchange regeneration and sand filter backwashing (no longer generated)
- Single-shell tank (SST) salt well pumping waste.

A detailed description of the waste types stored in the tank farms can be found in the *Double-Shell Tank Farms Dangerous Waste Permit Application* (DOE-RL 1991a) and the *Draft Single Shell Tanks System Closure Corrective Action Work Plan* (DOE-RL 1989).

9413276.1486

5.3 242-A EVAPORATOR WASTE TRANSFER TO LERF

Process condensate from the 242-A Evaporator is transferred to the LERF using a pump (P-C-100) located in the 242-A Evaporator and approximately 4950 feet (1509 meters) of pipe, consisting of a carrier pipe and an outer containment pipeline. Flow through the pipe is controlled through a downstream valve and averages between 30 and 50 gallons per minute, with a maximum flow of approximately 75 gallons (284 liters) per minute.

The pipeline exits the 242-A Evaporator underground and remains below grade at a minimum depth of 4 feet (1.2 meters) for freeze protection until the pipeline emerges at LERF at the corner of the 242-AL-43 basin.

Waste stored at the LERF consists of a dilute mixed-waste stream containing primarily water, along with volatile substances and entrained nonvolatile substances removed from the waste feed. The volatile substances consist of organic compounds, ammonia, and radionuclides. The nonvolatile substances consist of organic compounds, inorganic salts, and radionuclides.

5.4 WASTE DESIGNATION

The process condensate has been designated a dangerous waste per WAC 173-303-070 because the following substances (referenced by waste code) are present:

- F003 nonhalogenated spent solvents dimethyl ketone and methyl isobutyl ketone

- F005 nonhalogenated spent solvent methyl ethyl ketone (2-butanone)

- WT02 ammonia in concentrations subject to regulation.

The waste was designated through evaluation of both process information and sampling data. Processes were reviewed and compared with the discarded chemical products list and the dangerous waste source list.

9413276.1487

6.0 INSPECTION PROCESS

6.1 INSPECTION SCHEDULES, FORMAT, USE AND REVISIONS

The inspection schedules are based on the regulatory requirements found in WAC 173-303-320 and 40 CFR 265.15. Additionally, the *LERF Safety Analysis Report (SAR)*, WHC-SD-W105-SAR-001 (Lavender 1993), and the *Safety Equipment List 242-A Evaporator*, WHC-SD-WM-SEL-028 (Wahlquist 1992), have been reviewed and included as determined to be appropriate to environmental protection, through review and discussions with WHC Subject Matter Experts. A sample inspection schedule is shown in Figure 6-1.

The focus of the LERF inspection schedules is LERF equipment, systems, and structures. The required frequency of inspection is based on the rate of possible deterioration of equipment and the probability of an environmental or human health incident if the deterioration, malfunction, or operator error goes undetected. The inspector is determined by the type of inspection to be performed, inspection and individual training/certification requirements, and the safety boundaries of the actual inspection. An inspection schedule and inspection summary are maintained by Tank Farms Operations at the 242-A Evaporator Control Room.

9413276.1488

The additional programs required to be in place under the RCRA standards are discussed in the *LERF Dangerous Waste B Permit Application*, DOE/RL-90-43, Rev. 0 (DOE-RL 1991b). The programs have been discussed in this document only as they apply to the inspection process or for clarification purposes.

The inspection schedules are designed to correspond with the current methods of inspection being employed by the responsible organizations. The inspection schedule will verify in many cases that inspections and/or rounds are being performed. The intent of the schedule is not to increase the amount of inspection activities but rather to serve as a baseline for scheduling the required LERF inspections. The schedules can serve as verification that required inspections are being performed and identify duplicate or inadequate inspection activities; thus, the schedules provide a positive method for correction and refinement of the RCRA inspection program, and the additional inspection programs currently being performed.

WHC has been proactive in developing predictive and preventive maintenance programs using a Component-Based Recall System (CBRS). WHC management and personnel are committed to safety and are demonstrating that commitment through the use of data sheets and round sheets to document inspections, monitor and control systems at the

Figure 6-1. Sample Inspection Schedule

Item Description	Equipment Number	Procedure	Inspection Frequency	Regulatory Driver	Item Type/ Class	CSRS Number	Parameters
Leak Detection Element	LDE-A1-01	TF-EFT-635-004	6 Months	40 CFR 265.193 WAC 173-303-640	Regulatory	—	Function test to activate
Leak Detection Element	LDE-A1-02	TF-EFT-635-004	6 Months	40 CFR 265.193 WAC 173-303-640	Regulatory	—	Function test to activate
Leak Detection Element	LDE-A1-03	TF-EFT-635-004	6 Months	40 CFR 265.193 WAC 173-303-640	Regulatory	—	Function test to activate
Leak Detection Element	LDE-A1-04	TF-EFT-635-004	6 Months	40 CFR 265.193 WAC 173-303-640	Regulatory	—	Function test to activate
Leak Detection Element	LDE-A1-05	TF-EFT-635-004	6 Months	40 CFR 265.193 WAC 173-303-450	Regulatory	—	Function test to activate
Leak Detection Element	LDE-A1-06	TF-EFT-635-004	6 Months	40 CFR 265.193 WAC 173-303-640	Regulatory	—	Function test to activate
Leak Detection Element	LDE-A1-07	TF-EFT-635-004	6 Months	40 CFR 265.193 WAC 173-303-640	Regulatory	—	Function test to activate
Leak Detection Element	LDE-A1-08	TF-EFT-635-004	6 Months	40 CFR 265.193 WAC 173-303-640	Regulatory	—	Function test to activate

Note: During inspections, calibration tags are checked to verify that they are current.

9413276.1489

242-A Evaporator control room to allow operations personnel to continuously evaluate the LERF systems, and a management surveillance program to ensure facility equipment, personnel, safety and training programs are meeting the intent of the governing regulations. This combined overview of operations has been integrated by WHC to ensure inspection, repair, test, and overall review of LERF Startup, Operation, and Shutdown meets or exceeds the federal and state regulatory requirements. Additionally, the WHC programs, staffed with technical subject matter experts, provide a method to review:

- Equipment repair records
- Equipment length of service
- Vendor replacement schedules
- Monitoring data
- Operating trends
- Repeated corrective actions
- Required operational and programmatic activities.

To ensure scheduling of WHC personnel responsible for inspection, test, and monitoring activities, the LERF Inspection Schedules have been designed to meet the regulatory requirements, and provide ease for both inspectors and managers to determine current and future inspection activities.

The controlling documents required to be used in the performance of the inspection are delineated. The inspection schedules have been designed for ease of identification of the organization responsible for performing the inspection, as well as the frequency the inspection is to be performed. The frequency has been derived through a review of 40 CFR 265 and WAC 173-303 regulatory requirements, WHC program documents, operating and maintenance procedures, and discussions with WHC personnel.

Systems inspected during a function test and calibrations are denoted on the schedules when possible by the sequential CBRS alpha-numeric indicator. When an individual component is being inspected, and the inspection is not performed through a complete system inspection, the schedules have identified the location of the equipment/component. When an individual component associated with a specific piece of equipment is being inspected, the equipment the component supports has been indicated when possible through the use of the CBRS indicator.

Program and documentation changes are inevitable and, in fact, were occurring as the Inspection Schedules were being completed. Those areas that are undergoing the largest

9413276.1490

number of changes are Security and Health Physics. New and/or revised procedures are being written by WHC Support Organizations to provide a comprehensive inspection program and to improve the current methods of documenting the inspection findings, and any remedial/corrective actions required.

The inspection schedules are to remain current with the work scheduled and will be updated, as required, when any of the following occur:

- Facility modification
- Regulatory requirement revision
- LERF Part B Permit Application revision
- WHC reorganization
- Procedural revision.

All changes governing LERF operation will be reviewed by the responsible organizations to ensure the continued safety of personnel, the public, the environment, and the facility.

The LERF has been designed to provide RCRA-permittable interim retention for 242-A Evaporator process condensate until a treatment and disposal system can be designed and constructed. The requirements outlined under WAC 173-303-320, and 40 CFR 265.15, and implemented by DOE-RL and WHC personnel through DOE Orders and WHC procedures, respectively, are intended to ensure that safe operations are maintained. Inspections, surveillances, functional tests, predictive and preventive maintenance (PM), and walk-throughs are performed to ensure that operation of the facility meets or exceeds regulatory, safety and operating requirements. Remote inspection, using a Monitoring Control System (MCS) primarily based on nonvisual methods, is also employed.

The LERF process equipment is inspected using three separate methods: visual, instrumentation monitoring, and preventive and predictive maintenance. All inspections are performed under the direction of facility procedures, specific to the type of inspection being performed.

Provisions to prevent contact with, or disturbance of, wastes and equipment within the active portion of the facility include the use of equipment guards, railings, lock and tag procedures, and structural integrity assessments of the basins and support buildings within the facility.

9413276.1491

6.2 VISUAL INSPECTIONS

Visual inspections of the process equipment, piping, and structures are performed by the operators. An inspection summary is maintained at the 242-A Evaporator Control Room that contains as a minimum the following information:

- Date and time of the inspection
- Printed name and signature of the inspector
- Notations of specific observations made
- Date and nature of any repairs or remedial actions taken.

Problems observed are recorded on the inspection summary and placed on a schedule for remedial action to prevent hazards to the health and safety of personnel and the public.

A catch basin is provided at the northeast corner of each basin where the inlet pipes, leachate risers, and transfer pipe risers emerge from the basin. The concrete pad is sloped so that any leaks or spills from the piping or pipe connections will drain into the basin. The catch basin provides an access point for inspecting and servicing specific basin equipment.

6.3 INSTRUMENTATION MONITORING: MONITORING CONTROL SYSTEM

Due to the configuration of the facility, remote monitoring inspections are performed using instruments in the 242-A Evaporator Control Room. Monitoring instruments are connected to audible alarms, and the MCS visual indicators track alarm status. The MCS provides trending of selected monitoring data and graphic and equipment summary displays. The MCS system provides the data for an operator to take corrective action as required. All system messages, alarm messages, operator input, and special messages are printed by MCS printers. An alarm history file records all system events and the time of occurrence on the MCS fixed disk system. The file is downloaded to data storage disks when the system hard drive is full and the disks are retained as a Quality Assurance record.

Specific system and function tests can be determined to be a pre-startup requirement. Individual function tests of a designated portion of a system can also be required. During tests, inspection occurs to ensure the equipment, components, relays, transmitters, and annunciators are performing in sequence and at the designed parameters. After the tests, an additional review is performed to determine any areas of leakage, spill, overfill, and malfunction. The LERF equipment is monitored continuously at the 242-A Evaporator Control Room during operation through the MCS.

6.4 PREVENTIVE AND PREDICTIVE MAINTENANCE

The strategy used in maintenance and repair is a combination of preventive maintenance, predictive maintenance, and a run-to-failure philosophy. The strategy is based on cost effectiveness and feasibility of application to each group of documented equipment, as determined by facility technical support organizations and plant management. The Standard Preventive Maintenance Program, which establishes procedures for performing repetitive checks/tests of equipment and/or systems including minor repairs or adjustments, is detailed in WHC-CM-8-2, *Central Support Services*.

Preventive maintenance procedures are those working-level procedures that describe the performance of preventive maintenance. Preventive maintenance is predictive, periodic, or planned maintenance. These are defined, according to WHC-CM-8-2, as

- Predictive--Continuous or periodic monitoring and diagnosing of equipment to forecast failure.

- Periodic--Routinely scheduled maintenance on equipment to prevent breakdown, including instrument calibration and lubrication.

9413276.1493

The 200 Area Support Services maintains an index of maintenance procedures. It is updated quarterly and is available by contacting the procedure coordinator.

LERF is maintained by maintenance personnel assigned to the 200 Area Maintenance Organization. The maintenance personnel receive unit-specific training to ensure knowledge of the LERF processes and equipment. Additionally, training is provided for the specific tasks they will be required to perform.

A preventive maintenance recall system is employed as a method to direct preventive maintenance activities at the LERF. Equipment requiring maintenance is checked at least annually and may be checked as often as every 30, 90, or 180 days depending on the maintenance history and the manufacturer's recommendations. If the Evaporator is in an operational mode, and LERF equipment cannot be examined, the actual inspection may be slightly earlier or later than the preferred frequency, based on the operating campaign schedule dates.

Instrumentation housed in the 242-A Evaporator used to monitor LERF is calibrated on a scheduled basis to ensure accurate and reliable operations. All process control instrumentation is calibrated at least annually. Designated instruments are calibrated semiannually or monthly, depending on previous calibration experience or as a best management practice. Instruments that are precalibrated and certified prior to receipt by maintenance personnel, and are recommended by the vendor not to be recalibrated, are inspected for wear and operability, but are not scheduled for calibration in accordance with the vendor information.

Two types of instrument calibrations are performed for LERF: 1) overall calibration, and 2) limited calibration. Both types of calibrations have been included on the LERF RCRA inspection schedule for environmental equipment. The frequency has been based on the projected rate of deterioration of the equipment or item, the probability of an environmental or personnel incident, and vendor recommendations.

6.4.1 Component-Based Recall System

The CBRS applies to tools, gauges, instruments, and other measuring and test equipment (M&TE) used in facilities operated by Defense Waste Management. The CBRS does not apply to chemical standards, radiological sources, and hand-held radiation survey instruments.

The CBRS consists of five subsections.

- Labeling requirement as prescribed in WHC-CM-8-2.
- The CBRS, as prescribed in WHC-CM-8-2.
- The Maintenance Instrumentation Calibration System (MICS), as prescribed in WHC-CM-8-2. This section does not apply to M&TE that are permanently installed plant instrumentation.
- Monthly recall of M&TE requiring periodic calibration/verification, as prescribed in WHC-CM-8-2.
- Standardization of data elements pertaining to M&TE, as prescribed in WHC-CM-8-2.

The CBRS is the system established to support the calibration and control of M&TE. This program uses a computerized database to document and forecast plant-installed instrument and equipment calibrations and verifications. The system produces hard-copy reports from read-only computer database files for the calibration status of all instrumentation on file.

Verification Control Authorities (VCA) assign M&TE to groups, determine applications and calibration types, specify calibration intervals and other calibration and verification requirements, and approve initial input and changes to calibration requirements in the CBRS databases. Calibration requirements, including range, accuracy, and type and frequency of calibration, are included in the procurement specifications for all new M&TE. Newly acquired M&TE requiring calibration are calibrated before initial use or installation.

The calibration status of each item of M&TE, thereafter, is provided by using the computer database file and/or checking labels. Instruments identified as out of calibration are repaired or replaced.

Maintenance Engineering Administration and Analysis (MEA&A) provides overall management and administration of CBRS and is responsible for producing and distributing CBRS reports as required. Plant production control managers and maintenance managers ensure that job cards and reports are completed and submitted in a timely manner. WHC management personnel are currently reviewing the procedures to determine the most effective line organization to be responsible for the CBRS. The computerized database is maintained with records applicable to the calibration and control of M&TE calibrated by plant personnel. The database is updated at least monthly.

The CBRS generates monthly reports that list:

- The calibrations scheduled to be performed during the upcoming month.
- Items that were scheduled, but for which MEA&A did not receive a completed CBRS calibration job card.
- Calibrations completed during the previous month. Items on this list for more than 3 months are included on a special report sent to level 3 and 4 managers.
- Instruments that were found to be out of tolerance during the calibration.

The calibration job card is the official record of the completed calibrations performed by WHC personnel. The manager of MEA&A maintains a computerized, up-to-date index of calibration procedures. The index is updated quarterly and is available from the procedure coordinator, MEA&A.

6.5 DOCUMENTATION REQUIREMENTS

As part of the inspection schedule, and the completed inspections, an inspection summary must be maintained as specified in WAC 173-303-320 and in 40 CFR 265.15. The summary must be kept at the facility for at least five years from the date of the inspection. At a minimum, the summary must note the following:

- Date and time of the inspection
- Printed name and signature of the inspector
- Notations of any observations made

9413276.1495

- Identification of any spills or discharges in accordance with WAC 173-303-145.

- Repairs or remedial actions taken.

Any problem revealed by the inspection must be remedied on a schedule that prevents hazards to human health and the environment. Where a hazard is imminent or has already occurred, remedial action must be taken immediately. Procedures used to perform inspections must clearly state at a minimum the following:

- Documentation to be completed

- Required signatures at completion

- Location of the documentation

- Record completion and retention requirements.

The inspection summary and procedural requirements are being developed for implementation as part of the LERF Inspection Program. Retention of inspection documentation has not been identified on the inspection schedules. Procedures specified to perform each line item on the inspection schedules do not clearly delineate the documentation retention requirements for the inspection. Retention periods specified by regulatory requirements have been included where appropriate. An environmental document retention center is under development at this time. The governing procedures that will be required for the retention center will include as a minimum: documentation retention periods, required transfer of documentation, locations of files retained by organizations, and organizational transmittal responsibilities.

Originals will be forwarded to site storage after copies have been made. The copies will be kept at 2750-E for a period of one month, and at the 200 Area Technical Data Center for an as-yet-undetermined period of time.

9413276.1496

This page intentionally left blank.

9413227.1497

7.0 INSPECTION REQUIREMENTS

7.1 SAFETY CLASSIFICATION SYSTEM REQUIREMENTS

The LERF was concluded to be a low-hazard nuclear facility by the *242-A Evaporator Interim Retention Basin Hazard Classification Analysis*, WHC-SD-WM-PSE-004 (Clapp 1989), and the *Preliminary Safety Evaluation, Project W-105, Evaporator* and *PUREX Interim Retention Basin*, WHC-SD-WM-PSE-006 (Johnson 1989). In accordance with the classification of LERF as a low-hazard nuclear facility, and the results of the analyses presented in *Final Safety Analysis Report, 242-A Evaporator Liquid Effluent Retention Facility*, WHC-SD-W105-SAR-001 (Lavender 1993), demonstrating that no mitigating features are required to maintain offsite or onsite radiological or toxicological consequences within guideline values, there are no Safety Class 1 or Safety Class 2 systems, structures, or components at LERF. Therefore, in accordance with the definitions contained in DOE Order 6430.1A there are no Safety Class Items associated with LERF. LERF has been designed to meet all applicable environmental regulatory requirements and standards.

9413276.1498

7.2 OPERATIONAL SAFETY REQUIREMENTS

Semi-annual sampling of LERF basins that contain process condensate is required by SR 3.1.1.1 in the *Final Safety Analysis Report, 242-A Evaporator Liquid Effluent Retention Facility*, WHC-SD-W105-SAR-001. A sampling program is outlined for basin sampling at a fixed semi-annual frequency. The number of samples per sampling event is dependant on analysis results.

Procedure TO-670-010, "Perform Sampling of Condensate and Leachate Systems at LERF," implements requirements for sampling basin process condensate and sampling basin leachate collection systems at the LERF. Each basin is equipped with eight sampling ports around the perimeter of the basin and a sampling valve in the leachate sump pump-out line.

The SR 3.1.1.1 requirement states "Collect and analyze samples from each basin." The required frequency is semi-annual, defined as once per 184 days with an allowance for a 25% extension to 230 days. Due to the potential for basin freezing during winter months, basin sampling will be scheduled to avoid sampling during winter months, under normal conditions. Additionally, as described in the *LERF Dangerous Waste Permit Application*, the following sampling is required:

- Active basins (currently accepting process condensate) - at half full (3.25 million gallons) and full (6.5 million gallons), or every six months, whichever comes first.

- Inactive basins containing process condensate - every six months.

Initial sampling of each basin consists of three samples (at different levels) from each sampling port, a total of 24 samples. The number of ports and levels for subsequent sampling depends on the homogeneity and stratification indicated by the results of the initial sampling. Leachate sampling is a non-routine operation, necessary when a basin leachate rate exceeds the Action Leakage Rate (ALR) per OSD-T-151-00029.

7.3 GENERAL FACILITY INSPECTION REQUIREMENTS

The general facility inspection requirements are addressed in WAC 173-303-320 and 40 CFR 265.15. These regulations specify that a written inspection schedule must be developed. This process will search out and identify potential problems. The inspection schedule must identify the types of problems considered in the inspections and indicate the frequency of inspection for specific items. This frequency must be based on the projected rate of deterioration of the equipment or item, and the probability of an environmental or human incident. WAC 173-303-320, 40 CFR 265.15, and 40 CFR 265.32 address the following items:

- Security equipment, such as fences, signs, lights, and locks.
- Communication equipment, such as radios, telephones, intercoms, closed-circuit TV systems, and public address systems.
- Emergency equipment, such as spill-control supplies, fire extinguishers, emergency lights, generators, and fire alarms.
- Safety equipment, such as eye wash stations, protective shields, first aid equipment, and respirators.
- Operating and structural equipment, such as dikes, sump pumps, etc., that are important in preventing, detecting, or responding to environmental or human health hazardous.
- Monitoring equipment, such as thermostats, fire detection equipment, liquid-level; leak detection devices; and pressure, temperature, and flow-measurement devices, and UHF/PLC equipment.
- General facility items, such as building floors, walls, roof, elevators, lights, ramps, and vehicles.

9413276.1499

7.3.1 Waste Pile Inspection

Operation of the LERF does not involve the placement of dangerous waste in piles. Therefore the inspection requirements of this section are not applicable to the LERF.

7.3.2 Incinerator Inspection

Operation of the LERF does not involve the incineration of dangerous waste. Therefore, the inspection requirements of this section are not applicable to the LERF.

7.3.3 Landfill Inspection

Operation of the LERF does not involve the placement of dangerous waste in landfills. Therefore, the inspection requirements of this section are not applicable to the LERF.

7.3.4 Land Treatment Facility Inspection

Operation of the LERF does not involve the land treatment of dangerous waste. Therefore, the inspection requirements of this section are not applicable to the LERF.

7.4 LERF UNIT-SPECIFIC INSPECTION REQUIREMENTS

Unit-specific inspection requirements refer to the individual units themselves (storage basins, pumps, transfer lines and piping). These requirements are addressed in WAC 173-303-650 and 40 CFR 265.226 (*Surface Impoundments*). While a surface impoundment is in operation, it must be inspected to detect evidence of any of the following:

- Freeboard level
- Deterioration, malfunctions, or improper operation of overtopping control systems
- Sudden drops in the level of the impoundment's contents
- Severe erosion or other signs of deterioration in dikes or other containment devices.

The amount of liquids removed from each leak detection sump must be recorded weekly, in accordance with 40 CFR 265.226. If the level in the sump stays below the pump

9413276.1500

operating level for two consecutive months, the amount of liquids in the sump must be recorded quarterly. If the level in the sump stays below the pump operating level for two consecutive quarters, the amount of liquids in the sump must be recorded semi-annually.

The inspection program followed by the operators of the LERF was developed to ensure that the LERF is properly maintained and operated, and any problems that might develop are identified and corrected in a timely fashion. Inspections are performed daily when any of the basins contain waste water and after significant precipitation events. When the basins are not in use, the LERF is inspected weekly by operators.

7.4.1 Storage Basins

7.4.1.1 Overtopping Control System

Each storage basin is designed and constructed to maintain 4.4 feet (1.3 meters) of freeboard with a storage volume of 6.5 million gallons (24.6 million liters). Freeboard of 4.4 feet corresponds to a fluid depth ranging from 18.8 feet (5.7 meters) at the shallowest depth to 22.2 feet (6.8 meters) at the deepest depth. Liquid levels are measured by instrumentation installed in the northernmost sample portion of each basin. The level indicator system consists of two electronic level transmitters, one for basin level and one for leachate level. The basin and leachate level signals are transmitted via UHF/PLC to the 242-A Evaporator Control Room. The leachate level is also displayed on a local level indicator. The level indicators are check as part of the daily inspection conducted at LERF.

Basin waste can be transferred between basins should basin volume adjustment or drainage be necessary. The relatively low rate of flow into the basins (maximum flow of approximately 75 gallons [284 liters] per minute) allows a margin of safety against overtopping.

The basins also are provided with floating VLDPE covers that are designed and constructed to prevent the introduction of precipitation into the basins and the buildup of sediments within the basins. The covers also prevent the evaporation of the fluid and reduce the emission of volatile organic constituents into the air.

7.4.1.2 Impoundment Contents

The LERF basins are inspected daily while in use. One of the inspection items is an assessment of whether effluent is escaping at the basin. Basin release or escape indicators, should a loss of impoundment contents be occurring, include unaccountable change in the level indicator readings, and primary liner leakage rates exceeding the Action Leakage Rate (ALR).

9413276.1501

Maintenance of at least 4 feet (1.2 meters) of freeboard is assessed through the use of level instrumentation. The level indicator system consists of two electronic level transmitters, one for basin level and one for leachate level. The basin and leachate level signals are transmitted via UHF/PLC to the 242-A Evaporator Control Room. The leachate level is also displayed on a local level indicator. This method also is used to determine whether fluid is being released from the basin. The level indicator system consists of calibrated height lines painted on the basin covers. These horizontal lines correspond to the point at which the floating cover bends as it lifts front he waste surface. The calibrated lines provide a visual indication of changes in basin waste levels. The level indicators are checked as part of the daily inspection conducted at the LERF.

7.4.1.3 Structural Integrity

The structural integrity of the basin dikes has been certified in writing by an independent, qualified, registered professional engineer (IQRPE). The engineer reviewed the supporting calculations that were performed to determine static and dynamic loads and stresses as well as material testing data, soil compaction testing data, and other quality control measures that were followed during construction of the basins.

Visual inspections of the exterior dike walls are conducted on a regular basis and after significant precipitation events. The purpose of these inspections is to make note of any impacts on the dikes from precipitation events, wind, burrowing mammals, or vegetation, and to implement corrective measures to ensure the structural integrity of the dikes.

7.4.2 Leachate Detection, Collection, and Removal

A leak in the primary liner would release process condensate to the underlying drainage gravel. Released fluid would drain to the leachate collection sump. The leachate collection sump pump is activated automatically when the liquid level in the leachate sump reaches the high level sensor. The pump control sensors maintain the liquid level in a 2 inch range. A totalizer on the leachate return line monitors the leachate flow rate and the total leachate flow.

The leachate pump status is indicated in the 242-A Evaporator Control Room. This signal is transmitted via UHF/PLC and is provided by a contact in the pump motor starter. This pump indicator status is shown as <u>on</u> or <u>off</u>. A pump failure would be detected on the control room monitors or by the LERF inspectors noting that the daily leachate pumping volume had dropped off or by higher that normal sump liquid levels.

The EPA acknowledges that there could be leakage associated with a properly constructed liner (EPA 1989, p. 121). The LERF operators determine the daily leakage rate based on totalizer readings and compare the ALR.

9413276.1502

7.4.3 Ancillary Equipment Requirements

WAC 173-303-640 and 40 CFR 265.193 discuss ancillary equipment. These regulations specify that ancillary equipment must be provided with full secondary containment (e.g., a trench, jacket, or double-walled piping) that meet the requirements of paragraphs (b) and (c) of 40 CFR 265.193. The condensate transfer pipeline from the 242-A Evaporator to the LERF is a double contained pipeline, and is inspected continuously through the MCS. All of the LERF transfer piping and fittings that are not directly over a catch basin or basin liner are of pipe-within-a-pipe construction.

7.4.4.1 Piping

The buried pipeline is "inspected" continuously by an electric leak detection system. Single point leak detection elements are installed along the main pipeline at 1,000-foot (305-meter) intervals. The piping system routinely undergoes ongoing integrity assessments in accordance with WAC 173-303-640(2).

Above-ground piping is visually inspected for signs of leakage and for general structural integrity. During visual inspections, particular attention is paid to valves and fittings for signs of cracking, deformation, and leakage. Additionally, catch basins at each retention basin have a leak detector.

9413276.1503

7.4.4 Waste Sampling

There is a procedural process for authorizing Westinghouse Hanford Company (WHC) environmental samples requiring laboratory analysis, that defines the interface activities between the Hanford Analytical Services Management (HASM) project and sample coordinators, and between HASM, field samplers, commercial laboratory contacts, and requesters of sample analyses. Sampling is performed in compliance with WHC-SD-W105-SAR-001, SR 3.1.1.1, as described in Section 7.2 of this document.

8.0 INSPECTIONS

Equipment at the LERF is visually inspected by several organizations during rounds but can only be function-tested by a single organization. Personnel tasked with daily activities at the LERF interface with external support organizations. The system is one of respect and shared responsibility in ensuring the health and safety of personnel, the public, the environment and the facility. As the role of Hanford changes, so must the roles of the internal and external organizations change, and move toward an assessment of what the regulations require, based on the present work conditions. Hanford Patrol and the Hanford Fire Department are in the process of reviewing and revising their support in terms of personnel and program breadth. A review of the support offered and required by these two organizations will be necessary to ensure compliance with regulatory requirements.

Provisions to prevent contact with wastes and equipment within the active portion of the facility, and provisions to prevent disturbance of wastes or equipment within the active portion of the facility include equipment guards, railings, and lock and tag procedures. Additionally, housekeeping inspections are completed to ensure that aisle space is adequate, controlled areas for waste are adequately maintained, chemicals are stored correctly, and outside grounds are free of debris, sink holes, and unsafe conditions.

Personnel attend pre-job briefings prior to the performance of the job activities, where conditions of the job are discussed. Management ensures that personnel assigned to perform the work have met the job-specific requirements, either through training, previous experience, or a supervisor in attendance.

8.1 GENERAL FACILITY INSPECTIONS

The owner/operator is responsible for the security of the facility, and ensuring the safety of personnel. Unless proof can be obtained that contact with the waste or disturbance of the waste is not dangerous or in violation, the following is required:

- A 24-hour surveillance system
- An artificial or natural barrier completely surrounding the active portion of the facility and a means to control entry at all times
- A sign "Danger--Unauthorized Personnel Keep Out" at each entrance to the active portion of the facility and at other necessary locations.

8.1.1 Security

The entire Hanford Site is currently a controlled access facility. The site maintains an around-the-clock surveillance for protection of government property. The Hanford Patrol furnishes a constant company of guards to provide site security. Manned barricades are maintained at checkpoints on vehicular access roads leading to the Hanford Site. Vehicle operators wishing to enter this portion of the Hanford Site must display a Department of Energy (DOE) issued security identification badge before being admitted. Personnel entering the site must submit to a vehicular search and a search of items in their possession, upon request by a security guard at the Wye and Yakima barricades. Hanford Patrol trains their own personnel and administers their own program. WHC-CM-4-17, *Patrol Operations Procedures*, and WHC-CM-4-18, *Patrol Policies*, in conjunction with DOE-RL orders, provide the basis for Hanford Patrol.

The primary barrier to prevent unauthorized access to the Tank Farm TSD units is the perimeter fencing surrounding the 200-East and 200-West Areas. Existing surveillance, access control and, as a result, the primary barrier preventing unauthorized access will cease to exist per the U.S. Department of Energy (RL) directive in mid-January 1993. Guards have been removed from the 200 Area gates and perimeter fencing surveillance has been eliminated. A WHC Regulatory Support memo dated June 9, 1993 stated that the new security configuration meets WAC 173-303-310 requirements by equivalency to industry standards. RL/EPA concurrence with this position is needed.

A written policy determination is needed from RL/EPA to ascertain if the current TSD fencing meets RCRA security barrier requirements in consideration of the recent security transition and potential future removal of the Wye and Yakima barricades. The WHC Regulatory Support position given in the June 9, 1993 memo to Tank Farms stated that the current security configuration meets access control requirements and that a formally documented agreement with Ecology will be covered in the RCRA Hanford Facility Permit.

8.1.1.1 Security Fencing

Two new fences were erected for the LERF. A new 200 East Area limited access perimeter fence was constructed at the perimeter of the LERF, which connects to the existing 200 East Area perimeter fence. An operational security fence was built parallel to and 100 feet (30 meters) inside the new limited access perimeter fence. At the north end of the north/south service road, the operational security fence was moved south to allow the basins to be located inside the new operational security fence. Both fences are constructed of 7-foot (2.1-meter) high chain link topped with 1 foot (30 centimeters) of 3 strands of barbed wire. Two 24-foot (7.3-meter) wide access gates are provided in the operational security fence, one located at the north end of the north/south service road, and the other located at the south end to serve as an emergency gate. A radiation zone and a dangerous waste buffer zone are located outside the main gate (Rieck 1990, p. 6). During operation, the two perimeter entrances to the facility will be kept locked. The entrance gates at the North and South sides

9413276.1505

of the facility will be locked using a security lock. Also, sensors are provided to alarm locally and also in the 242-A Evaporator Control Room via UHF/PLC signals when either gate is opened. Access to the entrance gate can be obtained at the shift supervisor's office.

8.1.1.2 Signs

Signs have been ordered to post at LERF. The signs (Table 8-1) will alert personnel to access restrictions, facility hazards, and safety requirements.

Inspection

The Schedules that addresses performance of Security Inspections for subsections 8.1.1 through 8.1.1.2 are found in Appendix A, Schedule A-1. Security checks are performed by Operations personnel. Fences and gates, surrounding the site, are inspected weekly by Operations personnel. Entries are made in the inspection summary, kept in the 242-A Evaporator Control Room. The summary is retained in compliance with recordkeeping regulatory requirements specified in WHC-CM-7-5, *Environmental Compliance*, and WHC-IP-0842, *Waste Tank Administration* (WHC 1993c).

The 242-A Facility forms part of the perimeter of the A-farms complex (A, AX, AY, & AZ tank farms) and is monitored by Hanford Patrol. Access to the LERF can be gained through the Control Room at the 242-A Evaporator. Fences surrounding LERF and the locks on the gates at the farm checkout stations are checked weekly by Operations for indications of damage or forcible entry.

Facility access warning signs are checked daily by operations to ensure that the appropriate signs are in place and that they are in good condition. Completed inspection items are initialed on the Operator Daily Round Sheets. Deficiencies are recorded on data sheets, which are kept at Building 272-AW for a period of five years at which time they are forwarded to Operational Support Group for long-term storage. The inspections are recorded on Inspection Data Sheets or Operator Round Sheets.

9413276.1506

Table 8-1. Locations and Text of Signs to be Posted at LERF.

Location	Text
On entrance gates and at 100 foot intervals along the operational security fence.	DANGER UNAUTHORIZED PERSONNEL KEEP OUT
On entrance gates.	REPORT TO 242-A EVAPORATOR CONTROL ROOM FOR ACCESS TO LERF
On entrance gates and at 100-foot intervals along the operational security fence.	RADIOLOGICAL CONTROL AREA (RAD SYMBOL)
Around perimeter of each basin.	AUTHORIZED PERSONNEL ONLY
South side of MO-727 on cage enclosing compressed argon/methane gas tanks.	FUEL GASES NO SMOKING NO OPEN FLAMES
On cage with compressed gases and at 100-foot intervals along operational security fence.	NO SMOKING
Inside doors of MO-727.	KEEP DOOR LOCKED

9413276.1507

8.1.2 Communication Equipment

The LERF is equipped with an internal communication system using radios, which allow communication between the 242-A Evaporator and the LERF. The Evaporator, which is the control base for the LERF, is equipped with telephone, paging, crash alarm, and a public address system consisting of speaker horns located throughout the facility. The public address system is coupled to the building telephone system to provide telephone-accessed public address and voice paging.

8.1.2.1 Radios, Plant Phone, and Intercom System

Portable radios are used for communication within the LERF, to the 242-A Evaporator Control Room, and other Tank Farm locations.

The public address system is coupled to 242-A Evaporator facility telephone systems to provide telephone-accessed voice paging. The 242-A Evaporator facility-wide alarms are annunciated via elements of the public address system. The Evaporator Control Room Shift Supervisors and Operators are the connection for LERF field personnel. Emergency conditions and the directions for required actions would be communicated via the radios.

The general plant telephone system maintains telephones with external lines within the 242-A Evaporator facility. The telephone in the control room is a crash alarm telephone which can be automatically disassociated from the regular system and connected to control stations for emergency communication use.

The emergency control room crash alarm system provides a medium for simultaneously relaying emergency messages and information to key personnel. When the crash alarm is activated, crash alarm telephones not in use sound a continuous ring instead of their normal intermittent ring. Crash alarm telephones in use have a call-waiting tone sounded to notify the person to hang up, thus allowing the call to ring through. Crash alarm telephones on hold do not ring, nor can crash alarm calls be made to call forward. The 242-A Evaporator Shift Supervisor, via radio communication, will ensure LERF personnel are notified of conditions requiring emergency response.

Inspection

The Schedules that address Communication Equipment Inspections are found in Appendix A, Schedule A-2. Results of the inspections, including discrepancies and corrective actions, are identified on Operator Round Sheets, and remedial/corrective actions are recorded in the inspection summary, which will be kept at the facility for five years. The requirements for testing these systems are contained in WHC-CM-4-44, *Emergency Management Administration Manual* and WHC-CM-4-1, *Emergency Plan*.

9413276.1508

Verification that the telephones and radios are in place, in their proper location, and are functioning properly, is performed on a monthly basis. Results of the inspection, including discrepancies and corrective actions, are documented. Telephones and radios are inventoried annually. The phone system and radios are used constantly. When a problem is noted with a telephone or radio, the shift manager is notified. Telephone Repair (376-1611) or Radio Maintenance (376-6189) are called for repair. Replacement radios are available in the Shift Office.

8.1.2.2 Emergency Siren

The emergency siren system includes emergency sirens (for evacuation or take cover), audible fire alarms (fire gong), and a crash alarm phone system. The evacuation siren, fire gong and crash phones may be applicable to dangerous waste emergency situations. The evacuation and take cover sirens use the same equipment. The evacuation siren is a steady siren for 3 to 6 minutes and the take cover is a wavering siren for 3 to 6 minutes.

The telephone in the 242-A Evaporator Control Room is a crash alarm telephone which can be automatically disassociated from the regular system and connected to control stations for emergency communication use. This system provides a medium for simultaneously relaying emergency messages and information to key personnel, who would then transmit that information via the radio to LERF personnel. When the crash alarm is activated, crash alarm telephones not in use sound a continuous ring instead of their normal intermittent ring. Crash alarm telephones in use will have a call-waiting tone sounded to notify the person to hang up, thus allowing the call to ring through. Crash alarm telephones on hold do not ring at all. Crash alarm calls cannot be made to call forward. The requirements for testing these systems are contained in WHC-CM-4-44, *Emergency Management Administration Manual* and WHC-CM-4-1, *Emergency Plan*.

9413276.1509

Inspection

The Schedules that addresses performance of Emergency Inspections are found in Appendix A, Schedule A-4. On the last Monday (Tuesday if Monday is a holiday) of the month, during the crash alarm test, the 200 Area Emergency Preparedness Group reminds the facility to do its monthly siren test. The control room operator audibly tests the building evacuation and take cover alarms and this test is recorded.

The crash alarm phone system is tested weekly by the 200 Area Emergency Preparedness Group in accordance with WHC-CM-4-44, *Emergency Management Administration Manual*, Procedure Number 02.01, REV 1, "200 Areas Crash Alarm and Siren Tests." The testing of the crash alarm systems is conducted on Monday (Tuesday, if Monday is a holiday) between 12:45 pm and 1:15 pm. During the test (and in a real emergency), and after transmitting the first message, a roll call of crash alarm telephones is conducted to determine who is on the circuit and who has received the message. An attempt is made to contact those stations who did not answer the roll call by dialing their actual

phone number. The status of the roll call is reported to the Emergency Control Center Director. The roll call is documented on a **200 Area Crash Alarm Roll Call List Sheet.** Any problems or comments are noted on the roll call sheet beside the appropriate station/phone number. When repairs to the crash alarm phones are necessary, the 200 Area Emergency Preparedness Group notifies GTE Northwest of the problem and ensures that repairs are completed. The roll call sheet is dated and signed and delivered to the 200 Area Emergency Preparedness office in Building 2750-E where it is retained for five years. The fire alarm (gong) is tested by the Hanford Fire Department annually as a supervised test and every 2 months as an unsupervised test.

8.1.3 Safety Systems/Emergency Equipment

9413276.1510

In addition to the waste analysis and training requirements, a contingency plan and subsequent emergency procedures must be completed. The objective is to minimize health and environmental hazards from releases of hazardous waste or constituents into the air, surface water, groundwater, or soils. Both a contingency plan to ensure that operation and maintenance of hazardous waste equipment meet expectations and a testing program to ensure that required safety and alarm systems are working must be maintained at the facility.

The contingency plan must include the names and addresses of emergency coordinators and arrangements with local police, fire, and hospital officials. Most importantly, a current evacuation plan for facility personnel and detailed step-by-step procedures to handle an imminent or actual emergency must be maintained. The contingency plan must be amended whenever processes change significantly or whenever the plan fails to work during an emergency.

The LERF emergency equipment is inspected visually through a systematic inspection and maintenance program by the Hanford Fire Department (HFD), Maintenance, and Operations. Equipment, components, and structures are examined during routine or scheduled supplementary maintenance inspections. Additionally, the Hanford Fire Department expands the inspection process by performing visual inspections and operational tests of emergency equipment, on a scheduled basis. The Building Emergency Plan (BEP) for the LERF is being revised, to provide complete evacuation plans and current emergency equipment lists and descriptions. With Ecology approval, the Hanford Site has taken a tiered approach to providing a contingency plan, emergency procedures, and response guidance. The tiered levels are:

- *DOE/RL Emergency Response Plan, Rev. 3* (DOE-RL 1992)
- *Hanford Facility Contingency Plan, Appendix 7A of DOE/RL-91-28. Rev OA* (DOE-RL 1993)
- Specific TSD Unit Building Emergency Plans

- WHC-IP-0839-TF, *Tank Farm Emergency Response Manual* (WHC 1993b).

Operators are required under 40 CFR 265.51 to have a contingency plan for the facility designed to minimize hazards to human health and the environment in the event of an actual explosion, fire, or unplanned release of hazardous waste. The contingency plan must be implemented whenever there is a fire, explosion or release of hazardous waste which could threaten human health or the environment. Additionally, under the Preparedness and Prevention requirements facilities must have, unless unnecessary due to the nature of the wastes handled, the following equipment:

- An internal alarm or communications system
- A device capable of summoning emergency assistance from local agencies
- Fire and spill control equipment including water at adequate volume and pressure
- Decontamination equipment.

In addition, the regulations specify other requirements such as maintaining equipment in proper operating condition, routine testing of equipment, and providing adequate aisle space to allow unrestricted movement of emergency equipment to any area of the facility. LERF will not be handling special chemicals as part of its operation. For chemicals brought into the facility by other personnel (i.e., maintenance, subcontractors, health physics), the user would know the type of chemical. Thus a chemical spill and proper response actions would be known and implemented. A chemical spill would normally be caused by a container leaking, spilling or suffering a handling error/accident.

If and when decontamination chemicals are brought into the LERF, control measures are in place to ensure any releases would be handled effectively. A major release requires response actions by the Hanford HAZMAT personnel.

8.1.3.1 Spill Response Kits

A spill response kit is located where chemicals are used and stored within the LERF. This kit is located at MO-727.

Inspections

The spill response kit items are inspected for previous use and for shelf life expiration weekly. The results of these inspections are recorded, and maintained until forwarded to the Operational Support Group for long-term storage.

9413276.1511

8.1.3.2 Eye/Face Wash Stations

Portable eye wash stations are available in Building 272-AW. They are available for work involving hazardous chemicals where no permanent eyewash stations are available. These stations are provided for immediate decontamination of facility personnel who have been inadvertently exposed to dangerous materials.

Eye/Face Washes are covered in WHC-CM-4-3, *Industrial Safety Manual; Volume 1 Standards and Volume 2 Guides*; G-11, "Eyewash Apparatus" provides the requirements and responsibilities for the use and maintenance of eyewash apparatus.

Inspections

It is the employee's responsibility to function test the closest safety eyewash prior to the start of any job in which an eyewash is or may be required. Each portable eyewash apparatus is functionally tested, drained, and refilled monthly. Results of the inspection, including discrepancies and corrective actions, are documented on the inspection summary.

9413276.1512

8.1.3.3 Personnel Protective Equipment

Personnel Protective Equipment (PPE) is available to ensure the safety of personnel donning the equipment.

8.1.3.3.1 Protective Clothing. Protective clothing available for routine use at the LERF includes cloth overalls, laboratory coats, caps, shoe covers, boots, and gloves. In addition, plastic-coated and rubber gloves, rubbers, british leggings, rubber boots, and plastic-coated cloth suits are available. Clothing will be available at 272-AW Operations Building or at 242-A Evaporator with clothes change areas provided at both locations. Clothing is decontaminated, cleaned, and sanitized by Interstate Nuclear Services in the Richland facility. Contaminated clothing is collected at controlled area exit points and transferred to Interstate Nuclear Services.

Inspections

All PPE, both fixed and portable, is inspected per Tank Farms Administrative requirements and Industrial Safety Requirements. Inspections are performed on a monthly basis. Equipment used during an emergency must be inspected, cleaned, and repaired prior to replacement or storage. This is the responsibility of the Shift Manager/BED, the affected facilities manager and operators, and support organization managers (i.e., Health Physics, Maintenance, etc.)

8.1.3.3.2 Respiratory Protective Equipment. Supplies of appropriate types of respiratory protective equipment are tested, maintained, and controlled by the Personnel Protective Equipment Administrator. These include Full Face Mask Mechanical Filter

Respirators to be used in routine maintenance and operation tasks. Requirements for use of these devices are determined by the Operations and Health Physics organizations and usage is implemented by RWPs. Powered Air-Purifying Respirators (PAPR) are also supplied. The PAPRs can be half- or full-face respirators or hoods, providing a positive pressure through an air-purifying cartridge and a battery-powered blower. Self-Contained Breathing Apparatus (SCBA) units consists of a full facepiece equipped with a pressure reducing valve connected to a cylinder of compressed air. A central mask-fitting and testing facility is operated by HEHF to perform mask fits.

Inspections

All respiratory protective equipment is decontaminated, cleaned, sanitized, and repaired in the central Protective Equipment Decontamination Facility in the 200 West Area. Personnel are trained to check PPE prior to use for equipment seals, clothing tears, zippers functioning, and adequate size and number for use.

9413276.513

8.1.3.4 Railings, Lock and Tag

Provisions to prevent contact with wastes and equipment within the active portion of the facility, and provisions to prevent disturbance of wastes or equipment within the active portion of the facility include the following:

- Railing provided around each LERF Basin with a emergency floatation devices attached on all four sides.
- Lock and Tag Procedures
- Areas for waste, chemicals, and samples locked and/or controlled.

Inspection

Personnel are trained to review the safety measures of equipment prior to use. Pre-job briefings provide the mechanism for reviewing specific equipment that has been locked and tagged, and the appropriate equipment that can be worked on by personnel, based on the lock and tag. Lock and tag logs are reviewed at shift turnover by operations and maintenance personnel.

8.1.3.5 Emergency Lights

There are no emergency lights at the LERF; consequently, no inspection is required.

8.1.3.6 Safety Equipment Inspections

The LERF safety equipment is inspected visually through a systematic inspection and maintenance program. Equipment, components, and structures are examined during routine or scheduled supplementary maintenance inspections. Additionally, the Hanford Fire Department expands the inspection process by performing visual inspections and operational tests of safety equipment on a scheduled basis. The schedules that address performance of safety equipment inspections are found in Appendix A-4.

8.1.4 Fire Protection System

The LERF is an exterior surface impoundment. The MO-727 fixed structure, storage building, and portable wooden storage building will be equipped with fire extinguishers. Sprinkler systems, or potable water for fire control purposes, are not present. However, a fire hydrant is located northwest of the proposed site of the fourth basin.

9413276.1514

Inspections

The inspection schedules that address performance of Fire Protection System inspection are found in Appendix A-3.1. The Fire Systems Maintenance Engineering Unit (under Operational Support Services) manages the fire protection systems. Job Cards released via the Job Control System (JCS) are used to perform preventive maintenance. Copies must be retained in the files at Building 609-G, or an alternate location, for a minimum of five years.

8.1.4.1 Fire Extinguishers

Fire extinguishers are provided at LERF as provided by the Fire Protection Program. There is one fire extinguisher in MO-727. Lists of fire extinguishers at the facility are regularly updated in compliance with WHC-IP-0263-TF, *Tank Farms Building Emergency Plan* (WHC 1993a). Company requirements are also identified in WHC-CM-4-41, *Fire Protection Program Manual*, which provides the requirements and responsibilities for installation and maintenance of portable fire extinguishers.

Inspections

Fire extinguishers are part of the fire protection system. The Fire Department performs a visual check of the equipment annually to assure reliability. The procedure used is the "Hanford Fire Department Procedure A-14." Tags on the extinguisher are initialed and a **Fire Department Form BC-6200-077** is filled out. This form is kept on file for at least five years in Building 609-G.

The fire extinguishers are visually inspected by Tank Farm Operations to verify that the equipment is in place, readily available, and appears to be in good working order. This inspection is performed monthly using procedure and recorded on **Form 54-6200-080, Inspection - Fire Extinguishers and Hose Lines (TO-040-480)**. Documentation that the inspection has been done is recorded on the Operator Round Sheets.

Fire Extinguishers are serviced as required by an outside contractor. General Supplies Inventory manages the Contract. After servicing, the contractor places an inspection tag on the item. The frequency, and contractual items to be performed could not be located, as well as the verification of appropriate performance by the contractor. **Hydrostatic Test Frequency** determines the frequency at which fire extinguishers are serviced.

9413276.515

8.1.5 Operational, Structural, and Housekeeping

Operational equipment is inspected visually and through MCS instrumentation monitoring. Inspections performed not using the MCS from the 242-A Evaporator Control Room are most often a visual facility walk-down. These inspections play an important role in assessing the overall condition of the facility. Visual inspections can vary from a structural inspection to a check of the floating cover to determine precipitation, as well as the dike to determine integrity of the basins. Schedules for housekeeping and structural inspections are shown in Appendix A-5.

Housekeeping of the LERF Facility is reviewed per shift to determine structural integrity, adequate aisle space, waste container segregation, equipment/system leaks and spills, and unusual structural and equipment condensation. Areas holding samples, waiting for pick-up are reviewed to ensure the area is controlled, and access denied as appropriate.

8.1.6 Monitoring Equipment

8.1.6.1 Area Radiation and Airborne Radioactivity Monitoring Instrumentation

Portable monitoring equipment may be utilized in support of the Radiation Protection Program developed for the LERF operational phase to detect, record and disseminate results of radiation/contamination surveys conducted within and around the facility. Monitoring may be performed prior to operations or maintenance activities involving surface contamination areas and if appropriate, respiratory protection must be used. Air sampling will be performed as required by the particular operations being conducted under the criteria put forth in WHC-CM-1-6, *Radiological Control Manual*.

8.2 UNIT-SPECIFIC INSPECTIONS

Inspections performed not using the MCS from the control room are most often a visual facility walk-down. These inspections play an important role in assessing the overall condition of the facility. Inspections can vary from a structural inspection to a check of the dikes, covers, piping, and surrounding areas for evidence of breaks, leaks, corrosion, etc. Walkdown inspections of the catch basins, portable pumps, and transfer piping are conducted once or twice per year. Structural and room inspections are not applicable to the LERF.

8.2.1 Basins: 242-AL-42, 43, and 44

The three 6.5-million gallon (24.6-million liter) basins of the LERF are designed with two liner systems, primary and secondary, composed of several layers of lining and protective materials. Between the two liner systems in each basin is a leachate detection, collection, and removal system that removes leachate from between the primary and secondary geomembranes. About 4,950 feet (1,509 meters) of pipeline connect the 242-A Evaporator with the LERF. This transfer pipeline is considered part of the storage unit.

In addition, each basin is equipped with a floating very low-density polyethylene (VLDPE) cover. The cover is anchored and tensioned at the concrete wall at the top of the dikes, using a patented mechanical tensioning system.

8.2.1.1 Liner System Description

The LERF employs a double-composite liner system, illustrated in Figures 8-1 and 8-2. Each basin is constructed with an upper or primary liner consisting of a 60-mil (1.5-millimeter) high-density polyethylene (HDPE) geomembrane laid over a geotextile/ bentonite carpet liner that provides a hydraulic conductivity of 10^{-7} centimeters per second or less. The lower or secondary liner in each basin is a composite of a 60-mil (1.5-millimeter) geomembrane over 36 inches (91 centimeters) of soil/bentonite admix with a hydraulic conductivity of not more than 10^{-7} centimeters per second. There is a geotextile layer separating the soil/bentonite layer and the subgrade. The soil/bentonite layer is 42 inches (107 centimeters) thick on the sloped sides of the basins. The synthetic liners extend completely up the dike wall to a concrete anchor wall at the top of the dike. A batten system bolts the layers in place.

Figure 8-1. Liner System Schematic.

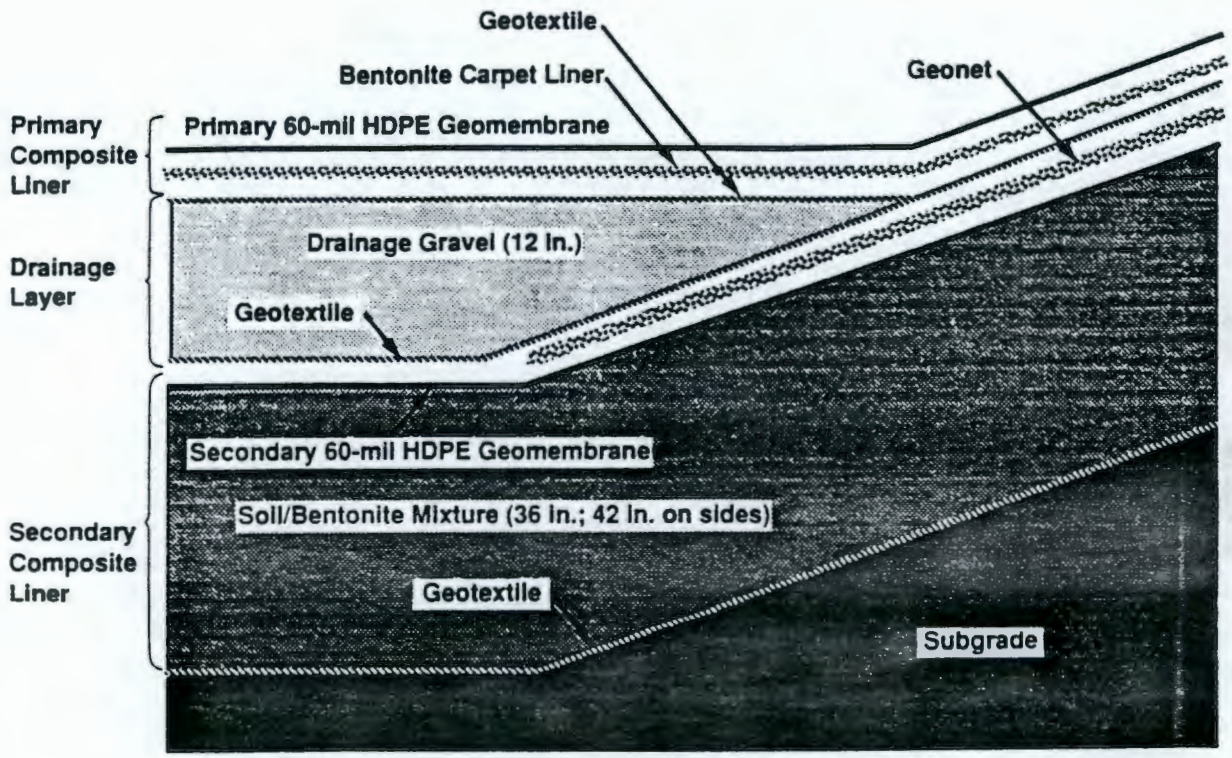

39103001.27

9413276.1517

Figure 8-2. Liner Anchor Wall and Cover Tension System.

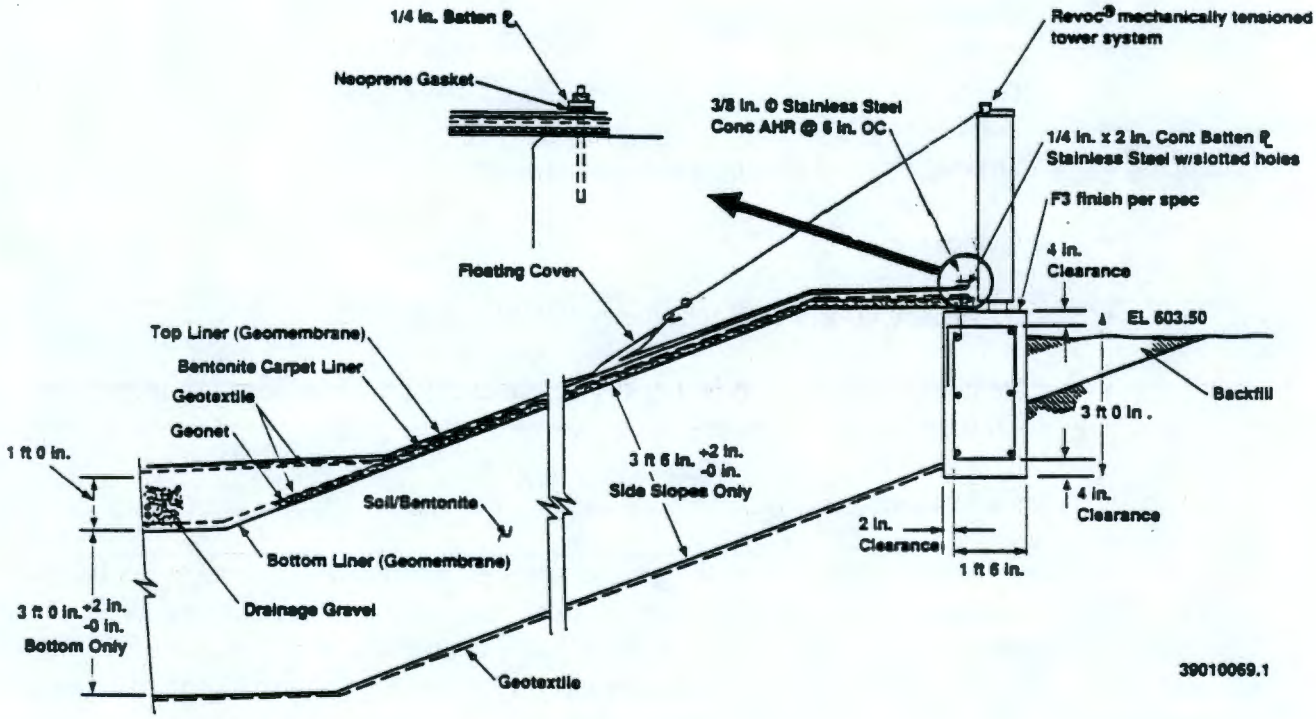

® = Patented and licensed by CW Neal Corp, Santee, CA

9413276.1518

Located between the primary and secondary liners there is the drainage layer. This consists of 12 inches of drainage gravel sandwiched between geotextile layers. Between the drainage layer and the secondary liner there is also a geonet layer that makes up the sides of the drainage area where the gravel does not extend. Within the drainage region there is a leachate detection, collection, and removal system which provides for collection and removal of liquids that may enter the area between the liners.

8.2.1.1.1 Liners. The LERF liner system uses both soil and synthetic liners. In the following sections, specific information on each of the liner system components is presented. The liner layers, listed from the top to the bottom of the liner system, are the following:

- Primary 60-mil (1.5-millimeter) HDPE geomembrane
- Geotextile/bentonite carpet liner
- Geotextile
- Drainage gravel (bottom) and geonet (sides)
- Geotextile
- Secondary 60-mil (1.5-millimeter) HDPE geomembrane
- Bentonite/soil mix [36 inches (91 centimeters) on the bottom, 42 inches (107 centimeters) on the sides]
- Geotextile.

The liner system covers all of the ground surface that underlies the retention basins. The primary liner extends up the side slopes to a concrete anchor wall at the top of the dike, encircling the entire basin (Figure 8-2). A catch basin is provided at the northwest corner of each LERF basin where pipes extend from the basin to allow for the installation of a portable manifold assembly for basin-to-basin liquid transfer.

The following discussion of the liners is segregated according to the type of liner (i.e., synthetic or soil) rather than the order of the liner design. This will minimize the confusion where certain liner material types are used in several different places within the liner system.

Synthetic Liners

Several layers of synthetic materials are employed in the LERF liner system, including geotextiles, a geonet, and two geomembranes (Figure 8-1). The primary geomembrane, made of 60-mil (1.5-millimeter) HDPE, forms the basin surface that holds

liquid effluent. The secondary geomembrane, also 60-mil (1.5-millimeters) HDPE, forms a barrier surface for leachate incase of penetration from the primary liner. The HDPE is chemically resistant to constituents in the process condensate and has a high strength compared to other lining materials. The HDPE resin specified for the LERF contains carbon black, antioxidants, and heat stabilizers to enhance its resistance to ultraviolet radiation.

Three geotextile layers are used in the LERF lining system. The layers are thin, nonwoven polypropylene fabric layers that are chemically resistant, highly permeable, and resistant to microbiological growth. One layer is located directly above the drainage gravel layer (Figure 8-1). This layer and the second geotextile, lying under the drainage gravel and wrapping around the gravel where it meets the basin walls, prevent fine soil particles from infiltrating and clogging the drainage layer. In addition, the second geotextile provides limited protection for the secondary geomembrane from the drainage rock. The third geotextile layer is located at the base of the soil/bentonite layer, overlying the subgrade. The third geotextile layer is to prevent the mixing of the soil/bentonite admix with the much more porous and granular foundation material, ensuring a uniform impermeable soil layer of 36 inches (91 centimeters) [42 inches (107 centimeters) on the basin sides] under the secondary geomembrane.

9413276.1520

The geotextile is manufactured from filaments composed of a long-chain polypropylene polymer containing stabilizers and inhibitors to enhance the filaments' resistance to ultraviolet radiation and heat exposure.

A geonet (or drainage net) made of HDPE, with approximately 0.5-inch (13-millimeter) openings, is located immediately above the secondary geomembrane on the basin sidewalls. The geonet functions as a preferential flow path for liquid in the leachate detection, collection, and removal system, carrying liquid down to the gravel drainage layer and subsequently to the leachate sump.

Soil Liners

Each basin is lined with a layer of soil/bentonite mixture, 36 inches (91 centimeters) thick on the basin bottom and 42 inches (107 centimeters) thick on-the-basin sides. The soil/bentonite admix rests on a geotextile layer that lies directly on the foundation material. The soil/bentonite layer, containing a nominal 12 percent bentonite, has an in-place permeability of no more than 10^{-7} centimeters per second and acts, in conjunction with the secondary geomembrane, as a barrier to leachate migration.

The soil component consists of well-graded silt or silty sand screened from native soil. The maximum particle size is 4.75 millimeters (No. 4 sieve) to exclude larger particles that could increase the overall permeability of the mixture or puncture the overlying

Figure 8-3. Soil Source Location.

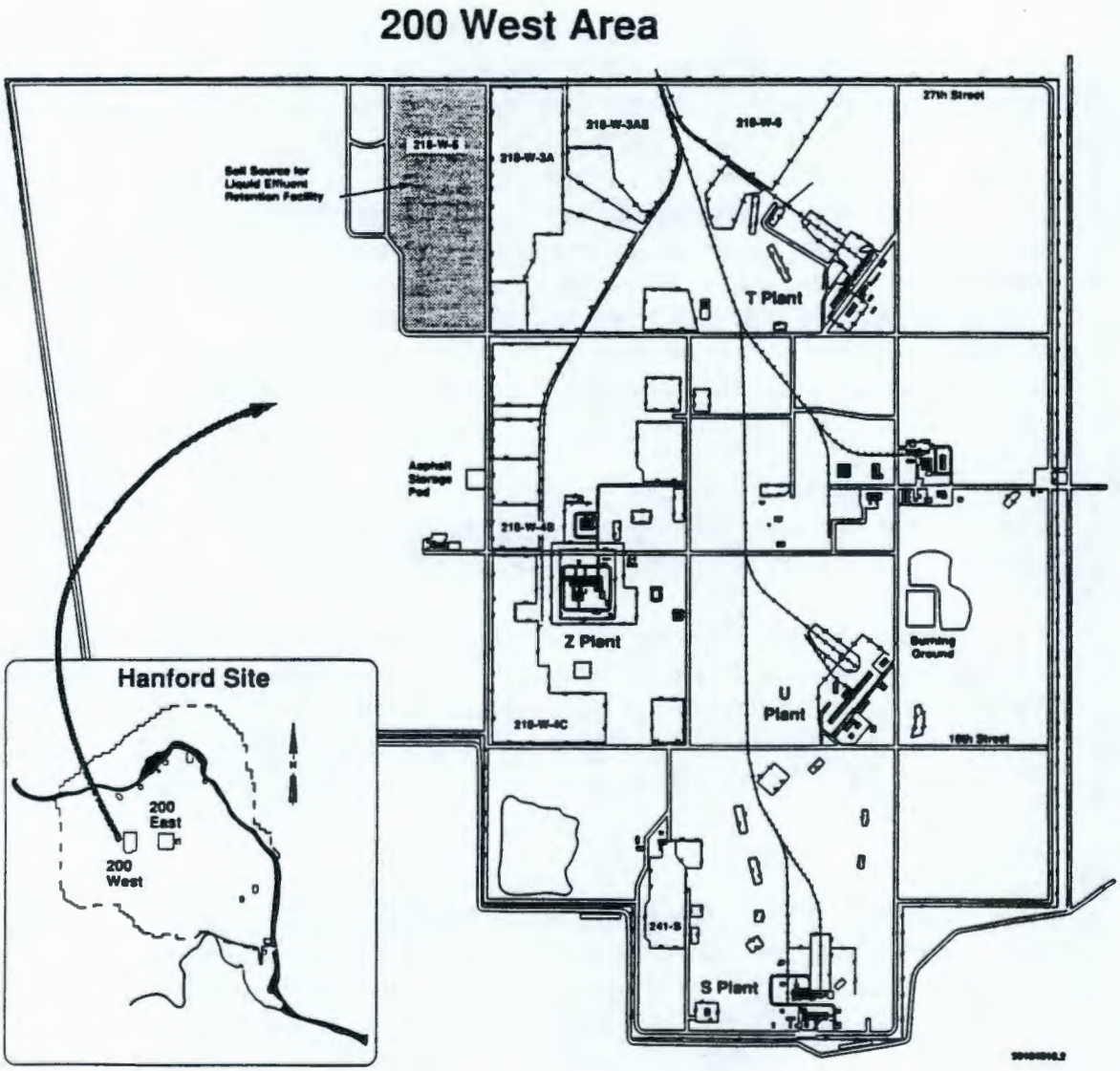

geomembrane. The source of this soil is the 218-W-5 Burial Ground located about 5 miles (8 kilometers) west of the LERF site (Figure 8-3) in the 200 West Area. The undeveloped area of the 218-W-5 Burial Ground is bounded between Trenches 39 and 47, extending to the existing roads. The soil removal effort was limited to no deeper than the grade of the scraped portion (south end) of the 218-W-5 Burial Ground. Grain size distribution tests were conducted to classify the soil and confirm its suitability for this application. Standard engineering properties of the soil were measured in the laboratory.

8.2.1.1.2 Cover. The entire lining system is covered by a VLDPE floating cover that is bolted to the concrete anchor wall. A patented tensioning system is employed to prevent wind from lifting the cover and to automatically accommodate changes in liquid level in the basins. The cover tension mechanism consists of a cable running from the flexible geosynthetic cover over a pulley on the tension tower (located on the concrete anchor wall) to a deadman anchor. These anchors (blocks) simply hang from the cables on the exterior side of the tension towers (Chen-Northern 1990a). The anchor wall also provides for solid attachment of the liner layers and the cover, using a 0.25-inch (6.4-millimeter) batten and neoprene gasket to bolt the layers to the concrete wall, effectively sealing the basin from the intrusion of light, precipitation, and airborne dust (Figure 8-2).

9413276.1522

The floating cover is made of ultraviolet inhibitors which is designed to prevent degradation during the service life of the LERF. The VLDPE material contains carbon black for ultraviolet protection, anti-oxidants to prevent heat degradation, and seaming enhancers to improve weldability.

Inspection

The cover is inspected daily by Operations, when the basins contain waste, for run-on, run-off, integrity, and erosion problems. After significant precipitation events, Operations personnel provide additional as-required inspections at the discretion of the shift supervisor.

8.2.1.1.3 Liner System Exposure Prevention. Both primary and secondary geomembranes and the floating cover are stabilized with carbon black to prevent degradation from ultraviolet radiation. Furthermore, none of the liner layers will experience long-term exposure to the elements. Thin polyethylene sheeting was used to maintain optimum moisture content and provided protection from the wind for the soil/bentonite layer until the secondary geomembrane was laid in place and its seams welded over the compacted soil/bentonite layer. The secondary geomembrane was covered by the geonet and geotextile as soon as quality control testing was complete. Once the geotextile layer was completed, drainage material immediately was placed over the geotextile. The final (upper) geotextile layer was placed over the drainage gravel and immediately covered by the bentonite carpet liner. This was covered immediately, in turn, by the primary HDPE liner.

8.2.1.2 Ventilation

The floating covers prevent evaporation of the process condensate and release of volatile organic compounds into the atmosphere. To allow for the natural expansion of gases between the liquid the cover, and between liners, each basin is equipped with a ventilation system. This system consists of a carbon adsorber vent and twenty-one "breather" vents.

The carbon adsorber vent allows the release of gases from the vapor space between the cover and the liquid surface. Each basin is equipped with this single vent which exits through a penetration in the anchor wall into a carbon adsorber located in the corresponding catch basin. The adsorber extracts nearly all of the organic compounds, ensuring that emissions to the air from the basins are not toxic. Figure 8-4 depicts the carbon adsorber vent system. This carbon adsorber vent system controls the only release to the atmosphere at the LERF facility.

The breather vents in each basin prevent the buildup of gas between the liners. These vents are located in the primary liner's geomembrane and allow for the reduction of any excess gas pressure within the drainage area. The gas released from the breather vents accumulates between the cover and the liquid surface and will be released by the carbon adsorber vent system.

The carbon adsorber is a prefabricated unit consisting of a steel canister lined with two coats of heat-cured, epoxy-modified phenolic material for corrosion resistance, filled with approximately 150 pounds (68 kilograms) of granular activated carbon. The carbon is supported by an 8-inch (20-centimeter) deep gravel bed. Inlet gases enter near the base of the canister, flowing first into the gravel bed and infiltrating up through the carbon layer where they are "scrubbed," to exit through a vent on the top of the canister. The unit is designed specifically for low flow, low organic loading applications.

Inspection

Information from the vendor ensures that the carbon adsorber will be adequate throughout LERF operation; no sampling or replacement will be needed.

8.2.1.3 Basin Leakage Monitoring System

Monitoring for leakage is provided by three systems: (a) a level measuring system is provided to monitor the liquid level in the basin; (b) a leachate collection system is provided to extract leachate from between the composite liners; and (c) groundwater monitoring wells are provided in the vicinity of the basins.

Figure 8-4. Carbon Adsorber Vent System.

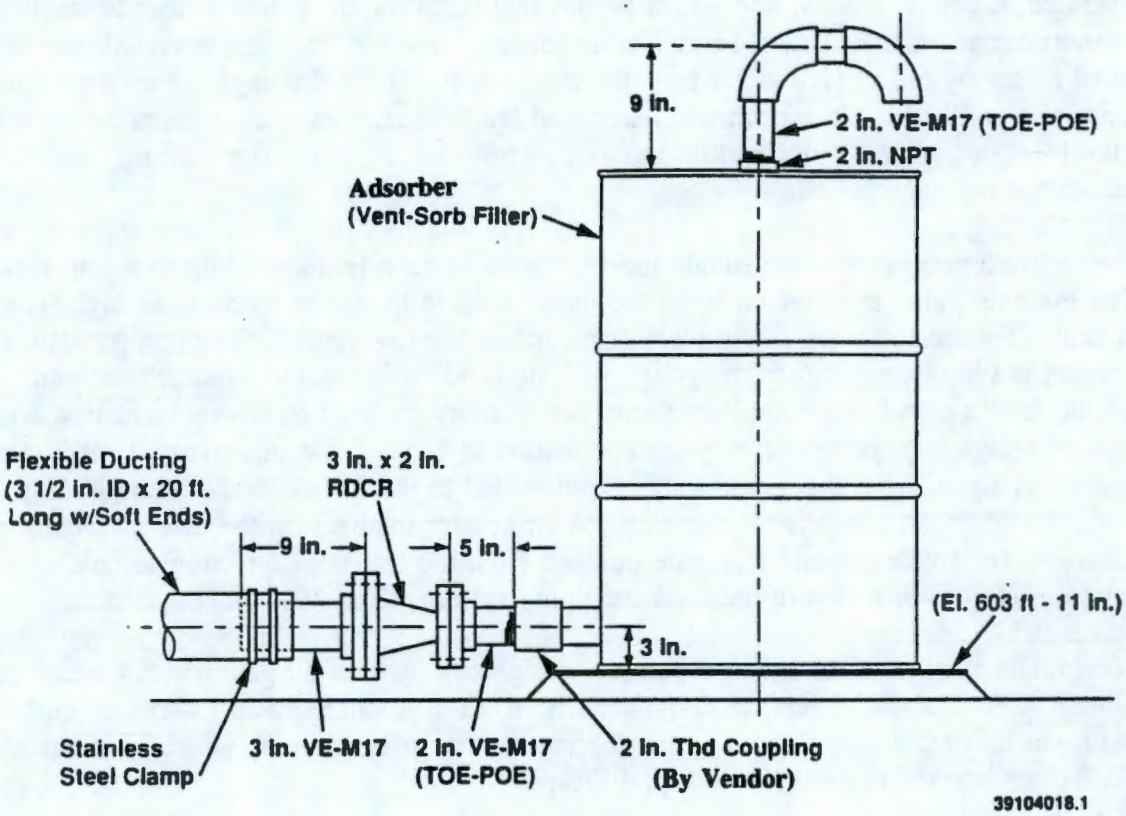

8.2.1.3.1 Basin Level Measuring System. The manual basin level measuring system provides direct indication of interim retention basin level, locally at the basin, for reading by LERF operations personnel.

8.2.2 Leachate Detection, Collection, and Removal

The leachate detection, collection, and removal system is designed, constructed, and operated to detect, collect, and return liquids that permeate the primary liner to the basin. System components include a 12-inch (o-centimeter) layer of drainage gravel sloped to a lined 6-foot by 6-foot (1.8-meter by 1.8-meter) sump, HDPE drainage net on the basin sidewalls, a 10-inch (25-centimeter) perforated leachate riser extending down between the two liners, a dedicated submersible leachate pump installed in the riser, piping, and associated instrumentation.

9413276.1525

Automated controls maintain the fluid level in each leachate sump in a 2-inch range. The leachate pump is activated when the liquid level in the sump reaches the high sensor and is shut off when the sump liquid level drops below the low sensor. The pump controls will prevent the leachate pump from cycling with no fluid, which could damage the pump. Liquid level control is accomplished with conductivity probes that trigger induction type control relays selected specifically for application to submersible pumps and condensate fluids. A signal from the motor starter, transmitted to the 242-A Evaporator Building, indicates when the pump is in operation. A flowmeter totalizer on the leachate return pipe measures fluid volumes and flow rate pumped from the leachate collection sumps. A sampling port is provided in the leachate piping system (KEH 1990, p. 6).

The stainless steel leachate pump is designed to deliver 50 gallons (114 liters) per minute at 84 feet (20 meters) total dynamic head. The leachate pump returns liquid to the basin via a fiberglass reinforced epoxy thermoset resin pressure pipe which connects and discharges into the basin through a HDPE pipe.

Operation of the leachate pump is transmitted to the 242-A Evaporator Building by a signal from the pump motor starter. The 242-A Evaporator operator can verify the pump operation from the control room displays. Monitoring of pump operation in tandem with daily leachate volume observations provides the Evaporator operator with sufficient information to determine pump and basin status. The operational manager would initiate the appropriate actions for replacing and repairing the pump should the pump fail to activate. Preventive maintenance of the leachate pumps takes place every 6 months.

<u>Inspections</u>

Leak detection is provided through daily inspection of the leachate flow totalizer readouts. The leakage rate in gal/acre/day is calculated by dividing the change in totalizer

reading by the basin wetted surface area. The calculated leakage rate is compared to the average leakage rate (ALR) per OSD-T-151-00029.

There is also leak detection provided for the transfer piping and in the catch basins were the piping connects to the retention basins. No leak detection equipment is needed below the secondary liner because the soil/bentonite layer is impermeable to liquids at the compaction state of the LERF design.

Preventive maintenance inspections of the instruments that indicate the presence of leachate between the liners, pump the leachate, and show the level of liquid in the basins and basin leakage, are conducted semi-annually or annually. Instruments are inspected according to the schedules found in Appendix A, Schedules A-6.1 and A-6.2, A-7.1 and A-7.2, and A-8.1 and A-8.2.

9413276.1526

8.2.3 Piping System

Process condensate from the 242-A Evaporator is transferred to the LERF using pump P-C-100, located in the 242-A Evaporator Building, and approximately 4,950 feet (1,509 meters) of transfer pipe, consisting of a carrier pipe within an outer containment pipeline. Flow through the pump [rated at 75 gallons (284 liters) per minute] is controlled through a downstream valve and averages between 30 and 50 gallons (114 and 190 liters) per minute.

The pipeline exits the 242-A Evaporator Building underground and remains below grade at a minimum 4-foot (1.2-meter) depth for freeze protection, until the pipeline emerges at the catch basins, at the corner of each basin. All piping above the catch basin or less than 4 feet (1.2 meters) below grade is wrapped with heater cable and insulated for protection from freezing. The heater cable is of the self-regulating, semi-conductive core type.

The process condensate transfer line is centrifugally cast, fiberglass reinforced epoxy thermoset resin pressure pipe (RTPR). The pipe is classified as RTPR Type II, Grade 1, Class C, with a pure resin corrosion barrier of minimum 30 mil (0.76 millimeter), and a constant smooth iron pipe size (IPS) outside diameter [ANSI B36.10 (ANSI 1989)]. The pipe material was selected for its chemical resistance characteristics and was tested for its compatibility with process condensate. The 3-inch (76-millimeter) carrier piping is centered and supported within 6-inch (152-millimeter) containment piping. Pipe supports are fabricated of the same material as the pipe, and meet the strength requirements of ANSI B31.3 for dead weight, thermal, and seismic loads. The supports attach to the inner pipe within the containment (outer) piping to prevent sagging or buckling failure under thermal expansion. Containment pipe and carrier pipe have a design pressure of 100 pounds per square inch (7.0 kilograms per square centimeter) gage, and can accommodate fluid temperatures from 40°F to 120°F (4°C to 49°C).

To prevent corrosion and erosion of the pipe, all carrier and containment piping has a minimum of 30-mil (0.76-millimeter) pure resin corrosion barrier and a constant smooth iron pipe size outer diameter. Manufacturing data demonstrate excellent corrosion resistance (ISO 1978). In addition, the pipe was tested for its compatibility with the process condensate, using a modified and approved EPA Method 9090 (EPA 1986a).

8.2.3.1 Secondary Containment System for Piping

The 6-inch (152-millimeter) containment piping wholly encases the 3-inch - (76-millimeter) carrier pipe in which the process-condensate flows from the 242-A Evaporator to the LERF. All of the piping-and fittings that are not directly over a catch basin or a basin liner are of this pipe-within-a-pipe construction. The carrier pipe is centered and supported within the containment pipe, providing continuous drainage toward the basins of any fluid in the 0.75-inch (19-millimeter) (minimum) annular space between the pipes. A catch basin is provided at the northwest corner of each basin where the inlet pipes, leachate risers, and transfer pipe risers emerge from the basin. The catch basin consists of a 16-foot by 43-foot (4.9-meter by 1.1-meter) concrete pad at the top of the dike. The perimeter of the catch basin is curbed, and the concrete is triple-coated with a chemical resistant epoxy sealant. The concrete pad is sloped so that any leaks or spills from the piping or pipe connections will drain into the basin. The catch basin provides an access point for inspecting, servicing, and operating various LERF systems within the basins as discussed in other sections of this chapter.

9413276.1527

8.2.3.2 Leak Detection System

Single point electronic leak detection elements are installed along the transfer line at 1,000-foot (305-meter) intervals. The leak detection elements are located in the bottom of specially designed test risers, which resemble a tee/elbow combination (Figures 8-5 and 8-6). Each sensor element employs a conductivity sensor, which is connected via standard mating connectors and 3 feet (0.9 meters) of sensor cable to a jumper cable leading back to the 242-A Evaporator control room. The sensor is corrosion-resistant to acids, bases, and water, and can be reused after exposure to moisture. In the event that moisture should come in contact with two or more wraps of the coiled wire in the sensor, the alarm circuit is completed and an electric signal initiates the alarm at the alarm/locator module. The system is designed to ensure the sensor can detect even minute moisture content.

Figure 8-5. Leak Detection System Test Riser Fitting.

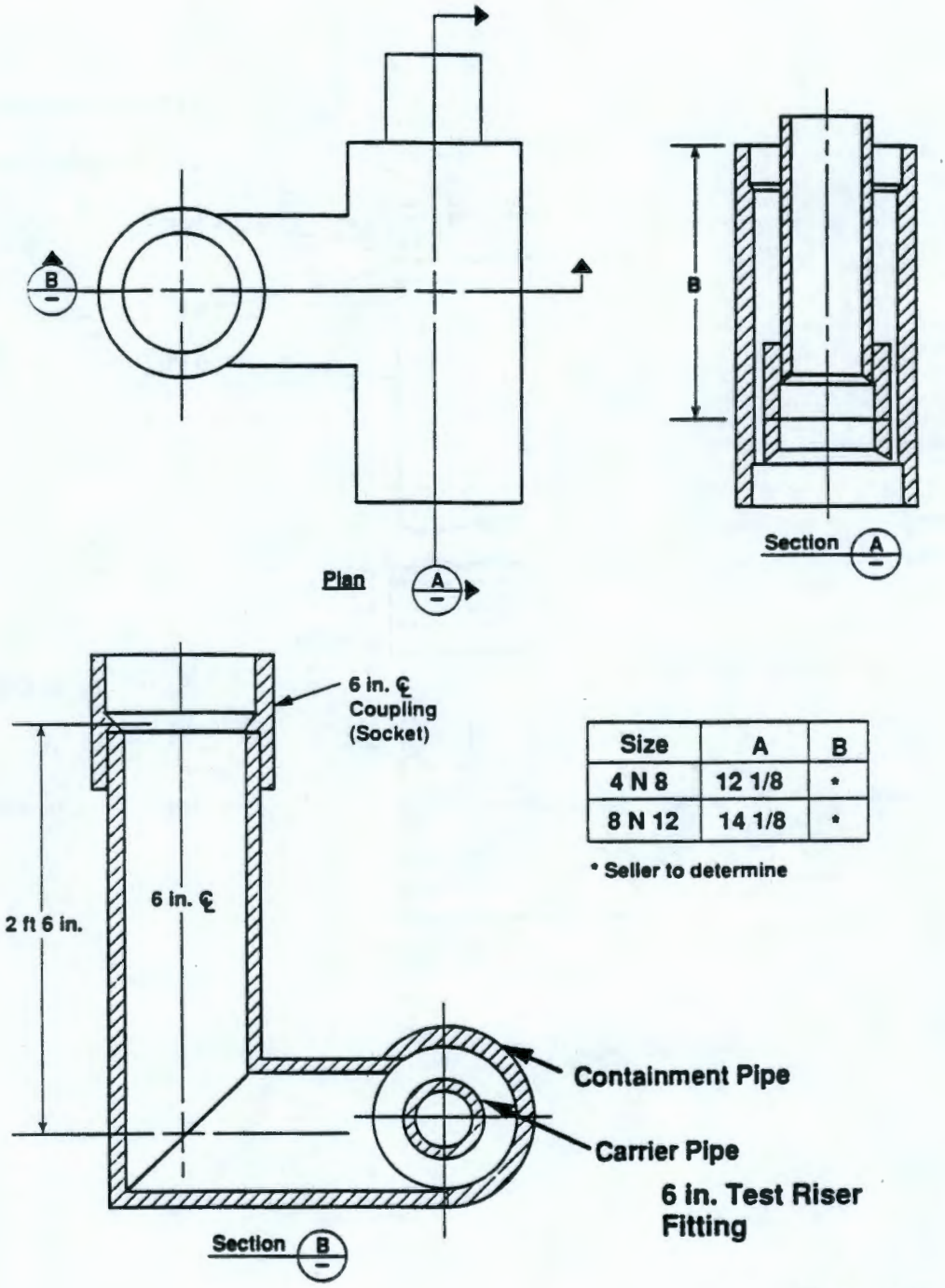

Size	A	B
4 N 8	12 1/8	*
8 N 12	14 1/8	*

* Seller to determine

9413276.1528

Figure 8-6. Leak Detection System Test Riser Assembly.

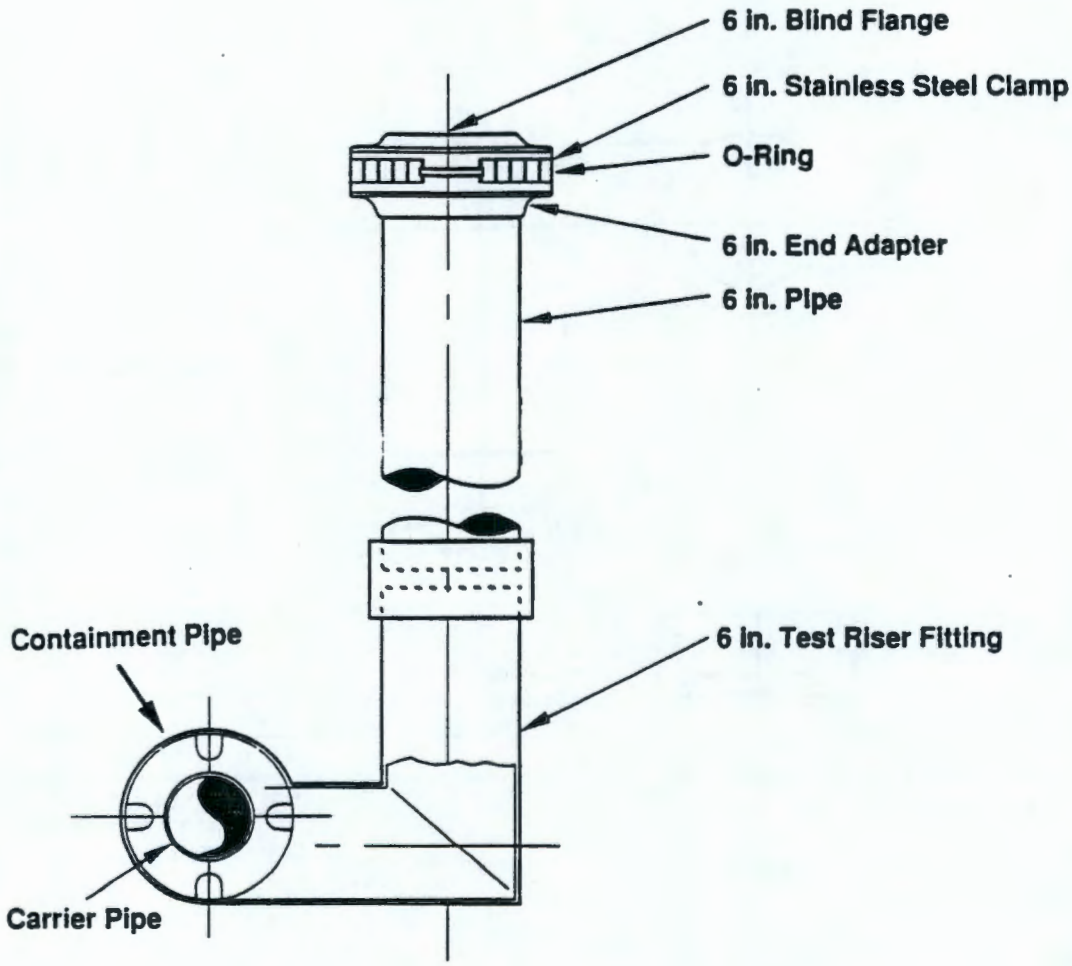

Not to Scale

39102025.3

9413276.1529

The alarm and locator module monitors all of the sensors on the transfer pipeline. A detection of a leak in the line triggers an audible (90 decibel) alarm and indicates on a digital display, in 242-A, the zone number where the leak was detected. The unit is equipped with a self-testing system. An external acknowledge button clears the alarm.

If a leak develops in the carrier pipe, fluid will exit the carrier pipe and travel down the exterior surface of the carrier pipe or the interior of the containment pipe. As moisture contacts a sensor unit, the alarm sounds in the 242-A Evaporator Building and the zone of the leak is indicated on the digital display. The condensate pump (P-C-100), located in the 242-A Evaporator Building, is interlocked to the leak detection system and shuts down automatically, diverting the flow of process condensate from the transfer line to a holding tank, TK-C-100, or feed tank, TK-102-AW, in the 242-A Evaporator.

9413276.1530

The LERF operation personnel would note the zone indicated by the alarm/locator module and mobilize to the affected zone. Swab risers are located every 100 feet (30 meters) along the transfer line to facilitate pinpointing and repairing any leak detected by the electronic components, and to facilitate the removal of process condensate. Starting at the nearest swab riser upstream from the affected leak detection element, maintenance and spill personnel would locate the damaged section of pipe. By lowering absorbent material on a rod into a swab riser and withdrawing it allows personnel to determine if moisture is present at that point. Proceeding upstream, personnel would continue to monitor each swab riser until no fluid was found present at a swab point. The damaged pipe between the last wet swab riser and the first dry swab riser would then be excavated and replaced, using proper decontamination and handling procedures.

There is also a leak detection conductivity probe installed in each of the three catch basins to detect any leakage from the piping into the basin. The probes are monitored at the 242-A control room were an alarm will signal if a leak is detected.

Inspections

Leak detection elements associated with the transfer pipeline receive a preventive maintenance inspection every 6 months. These inspections are detailed in Appendix A, Schedule A-9.

8.3 SAMPLING PROGRAM

The sampling process applies to all WHC site sampling that results in chain-of-custody (COC) forms being generated and tracked through the HASM including sampling performed in accordance with the following regulations. At LERF, two sampling programs are conducted: one to establish basin contents and the other to monitor groundwater. Schedules for these sampling programs are presented in Appendix A, Schedule A-10.

Sample authorization is performed in accordance with the *Hanford Federal Facility Agreement and Consent Order*, Section 3.0, "Unit Identification, Classification and Prioritization," and Section 11.0, "Work Schedule and Other Work Plans" (Ecology et al. 1990). Sampling is performed in compliance with the regulatory requirements governing each sampling activity found in the following regulations:

- *Comprehensive Environmental Response, Compensation and Liability Act, (CERCLA).*
- *Hanford Federal Facility and Consent Order (TPA).*
- *Resource Conservation and Recovery Act (RCRA).*
- *Dangerous Waste Regulation*, WAC 173-303-110, "Sampling and Test Methods," and WAC 173-305-071, "Excluded Categories of Waste," as required by the Tri-Party Agreement (TPA).

9413276.1531

8.3.1 Sample Preservation and Shipment

Prelabeled sample containers will be supplied by the approved lead laboratory for sampling and will include the appropriate preservatives. To ensure no free head space, the containers for samples analyzed for VOC will be filled so the meniscus of the fluid is above the rim of the containers before being capped.

Immediately after collection, the sample containers will be placed in sealed, insulated coolers packed with ice to cool the ambient temperature to approximately 4°C. The coolers will be transported to the approved lead laboratory for arrival within 24 hours. Field parameter record forms and approved sample analysis request forms will be attached to the sealed containers.

8.3.2 Analytical Procedures

The approved lead laboratories for the sampling programs will use standard laboratory procedures as recommended in SW-846 (EPA 1986b). Quality assurance and quality control procedures will meet the guidelines of SW-846, Chapter 1, "Quality Control". This includes requirements for spiked samples, blanks, duplicates, instrument calibration and adjustment, and data reporting.

8.3.3 Chain of Custody

Chain of custody procedures will be followed to ensure the integrity of samples and to trace the possession and handling of the individual samples from the time of collection through laboratory analysis and data reporting. The chain of custody form will be used for each sample transport shuttle and will trace the handling of the samples. Each person handling one or more of the listed samples on the form will sign and return a copy of the form to the implementing DOE/RL contractor contact identified on the top line of the form. Other quality control and quality assurance procedures used during the groundwater sampling process include field log books and sample packaging and shipping.

8.3.4 LERF Process Condensate Sampling

Ideally, to achieve a representative characterization of the effluent, multiple samples should be collected from randomly chosen locations and depths. However, fixed sampling locations had to be chosen for the LERF because random sampling is not feasible. The SW-846 methods (EPA 1986b) do not offer specific guidance on the initial sampling strategy for waste streams without historical in-basin data, as is the case with process condensate stored in the LERF. To determine the number of samples to adequately characterize basin contents, a statistical method of analysis known as hierarchical or nested analysis of variance (ANOVA) was employed. The analysis indicated a total of nine random locations throughout each basin and five depths at each location are necessary for initial characterization. Operational constraints and characteristics of the waste were considered to further refine the sampling program.

Procedure TO-670-010, provides operator instructions for sampling basin process condensate and sampling basin leachate collection systems at the LERF. Each basin is equipped with eight sampling ports (Figure 8-7) around the perimeter of the basin and a sampling valve in the leachate sump pump-out line.

9413276.1532

Figure 8-7. LERF Basin Sampling System.

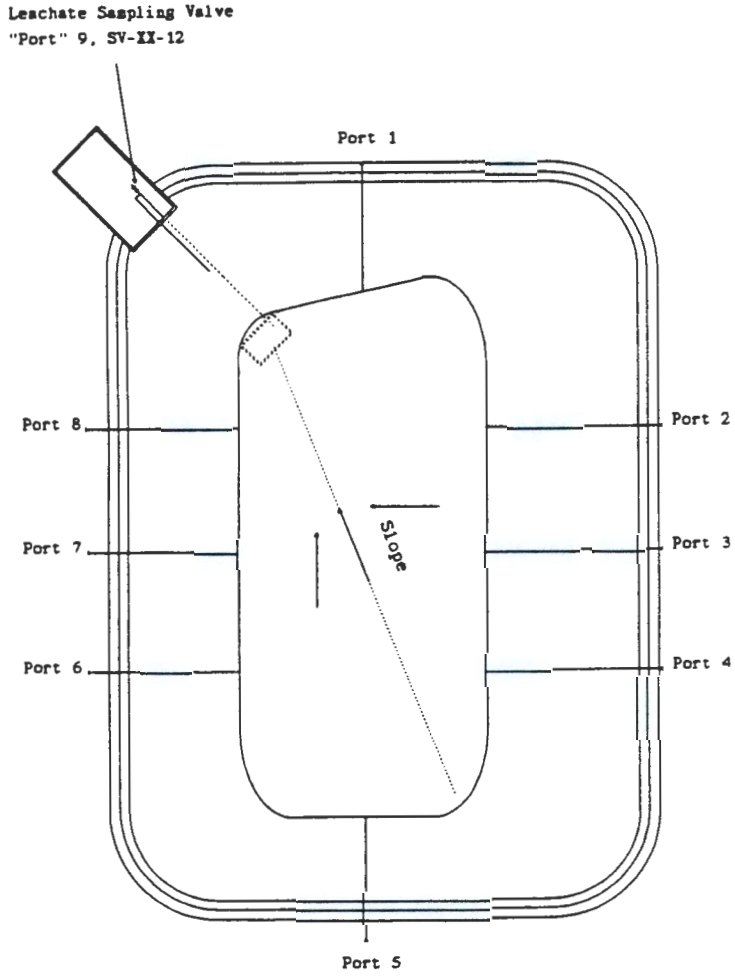

8.3.4.1 Sample Risers

The LERF is a covered waste management unit. It is impractical to lift the covers of the basins for sample collection. From a health and safety standpoint, the increased risks to field personnel from the removal of the covers are not justified. Therefore, the use of random sample locations is not feasible. Instead, sample risers with fixed locations are used. The sample risers are constructed of 6-inch (152-millimeter) pipe extending the entire depth of each basin. The pipe is similar to a gas collection pipe and is slotted from the maximum water level at the top to the bottom of each basin. The pipes are laid on the sides of each basin and are supported by two 3-inch (76-millimeter) HDPE pipes filled with concrete grout, one on each side. The slotted pipe allows for representative sample collection at different depths in each basin. Eight sample risers are provided in each basin, spaced along the sides. In addition, a ninth sampling location is provided through an access hatch in each basin cover at the center of the basins.

9413276.1534

8.3.4.2 Sample Depths

According to the hierarchical analysis of variance method, five random depths at each sample location are necessary to characterize the potential vertical variability of the LERF process condensate. However, existing knowledge of process condensate constituents and their propensity to partition into a density gradient, producing stratification of basin contents, can be used to reduce the number of samples required to characterize the vertical profile of the stored waste. Based on the solubility products of the constituents of process condensate, it was determined that stratification is unlikely. If stratification were to occur, only three layers would be present. The top of the fluid column would consist of organics that are less dense than water, the middle layer would consist of a mixture of the process condensate, and the bottom would consist of precipitation solids and/or denser organics. Thus, samples taken from three depths instead of five at each sample port are sufficient to provide in-basin characterization of the waste.

8.3.4.3 Sample Frequency

The sampling frequency is based on several considerations. Proper operation of the 242-A Evaporator is complex, and the feeds are processed on a batch basis, or by waste campaign. Therefore, the waste generation rate for any given period of time is not expected to be the same. From historic records between 1985 and 1988, the 242-A Evaporator generated annually between 8.8 million gallons (33.3 million liters) and 12.4 million gallons (46.9 million liters) of process condensate (WHC 1990). Although the generation rate is expected to be less than historic generation rates, the exact generation rate is varied depending on operating conditions of the 242-A Evaporator and mission objectives. Each basin has a capacity of 6.5 million gallons (24.6 millon liters), and each basin is expected to fill up in 6 to 18 months. For basins actively receiving process condensate, sampling

frequency based on both capacity and time is required. As discussed previously, if stratification does occur, it would develop over time, such as over a 6-month period. If the generation rate is greater than expected, it would be appropriate to obtain samples from each basin at half and full capacities. For basins already filled with process condensate, sampling frequency based on time only is required.

The sampling program is repeated on the following basis:

- Basins actively receiving process condensate--at one-half capacity [i.e., 3.25 million gallons (12.3 million liters)] and at full capacity [i.e., 6.5 million gallons (24.6 million liters)], or every 6 months, whichever comes first. The capacity is based on flow totalizer readings taken at a flow-proportional composite sampler located in the 242-A Evaporator.

- Basins that are full--every 6 months.

Initial sampling of each basin consists of three samples (at different levels) from each sampling port, a total of 24 samples. The number of ports and levels for subsequent sampling depends on the homogeneity and stratification indicated by the results of the initial sampling. Leachate sampling is a non-routine operation, necessary when a basin leachate rate exceeds the Action Leakage Rate (ALR) per OSD-T-151-00029.

9413276.1535

8.3.4.4 Sampling Method

A portable sampler equipped with a peristaltic pump is used to sample the waste. It has a maximum lift capacity of 26 feet (8 meters), which is adequate to withdraw samples from the bottom of each basin. Tubing is positioned to the appropriate heights for sample collection. The tubing is flushed with source liquid at the specified depth before the collection of each sample. Each sample is taken by filling a glass bottle with approximately 1.7 liters of process condensate and immediately transferring the sample to the appropriate bottles.

All sample containers are selected to ensure compatibility with the waste stream and are properly prepared (if required) in accordance with established methodologies to be used. Sample labels and sample tags are filled out at the time of sampling and are affixed securely to each container. The labels and tags identify the sample number, collector's signature, date and time of collection, location of sampling point, and preservatives added. Chain-of-custody procedures are implemented to track and document sample collection, shipment, and laboratory processing.

The basin liquid level indicators, LI-42-2, LI-43-2, and LI-44-2 have a zero-point at 1.2 feet below the highest point of the sloping basin bottom (Elevation 580). The sampling

levels calculated per the LERF Sampling Level Data Sheet will result in samples at equally spaced intervals from Elevation 580 to the liquid surface.

The sampling suction tubes consist of 5- and 10-ft sections of stainless steel tubing with Swagelok quick-connects. The quick-connects are equipped with a "tru arc" ring to prevent accidental disconnecting. combinations of the 5- and 10-ft lengths are assembled to reach the desired sampling level. Sampling pump tubing has an average pumping life of 1000 gallons (3780 liters), and will be inspected to ascertain if tubing appears worn, ruptured or deformed. Tubing will be inspected and replaced as required before beginning sampling. Samples are handled by Sampling & Mobile Labs, including transport to the off-site analytical lab.

8.3.5 Retention Basin Groundwater Monitoring Wells

Groundwater monitoring is conducted by a program meeting the requirements of WAC 173-303, Sections 400 and 645, and 40 CFR 265, Subpart F. The monitoring program is outlined in the *Interim Status Groundwater Monitoring Plan for the 200 East Area Liquid Effluent Retention Facility* (Schmid 1991) and in Chapter 5.0 of the *Liquid Effluent Retention Facility Dangerous Waste Permit Application* (DOE/RL-90-43, Rev. 0). The monitoring program provides for detection of significant breaches in the LERF interim retention basin liner systems by sampling and analyzing groundwater for dissolved metals, total metals, cyanide, volatile organic compounds, semivolatile organic compounds, total organic carbon, total organic halogens, and gross alpha and beta. Detection of these substances above background levels may indicate leaching from the LERF basins.

Groundwater monitoring and groundwater monitoring plans are prepared by WHC based on requirements for interim-status facilities, as defined by RCRA. These regulations are promulgated in 40 CFR 265, Subpart F, and WAC 173-303-400.

The downgradient (detection) wells are located along a north-south line approximately 100 ft west of the westernmost margin of the basins site. The wells are located at 400 ft intervals along the north-south line, with the center well aligned on the west-west axis of the basin site. The upgradient (background) well will be located 400 ft east of the basins. This location is close enough to the basins to provide information regarding upgradient water quality, but far enough away from the consequent plume spreading in the vadose zone.

Four monitoring wells have been drilled around the catch basin site. Three of the wells are east of the basins and provide representative information on water quality downgradient from the LERF. The fourth well, west of the basins, provides information on upgradient water quality. The locations of the wells are shown in Figure 8-8. Quarterly samples from each well, over a period of at least one year, are required to establish background groundwater parameters.

9413276.1536

Collection of groundwater samples from the LERF network will be consistent with procedures listed in Chapter 10 of EPA manual SW-846. These procedures include static water level measurements, immiscible liquids monitoring, well purging, field analysis, sample withdrawal, and laboratory analysis. All downgradient wells will be sampled at least semiannually during the active and postclosure period. The interval between sampling events will be 6 months and will commence within 90 days of final unit permitting, providing that an appropriate background water quality baseline has been established. Otherwise, the semiannual sampling schedule will begin within 90 days of establishing the background water quality conditions.

8.3.5.1 Immiscible Liquids Monitoring

The *RCRA Groundwater Monitoring Technical Enforcement Guidance Document* (EPA 1986c) recommends that sampling of nonaqueous phase liquid take place before the purging of wells. However, because the LERF will be used only for the management of aqueous waste that does not contain discrete, nonaqueous phases that are more or less dense than water, monitoring for the presence of nonaqueous phase liquids at LERF is not required.

9413276.1537

8.3.5.2 Field Analysis

During well purging and sample withdrawal, field determinations of temperature, pH, and specific conductivity will be measured and recorded. The stabilization of these parameters will be an indication that well water has been purged and formation water is being sampled. Other methods of determining the presence of formation water (e.g., measuring the concentration of specific ionic species during the well-purging process) may be proposed at some future time.

8.3.5.3 Sample Withdrawal

After the monitoring well has been purged, water samples will be withdrawn from the well using a dedicated pump. The sample withdrawal rate will be kept to approximately 0.26 gallon (1 liter) per minute. If a monitoring well has a low yield, the water in the well will

Figure 8-8. Monitoring Well Locations for LERF.

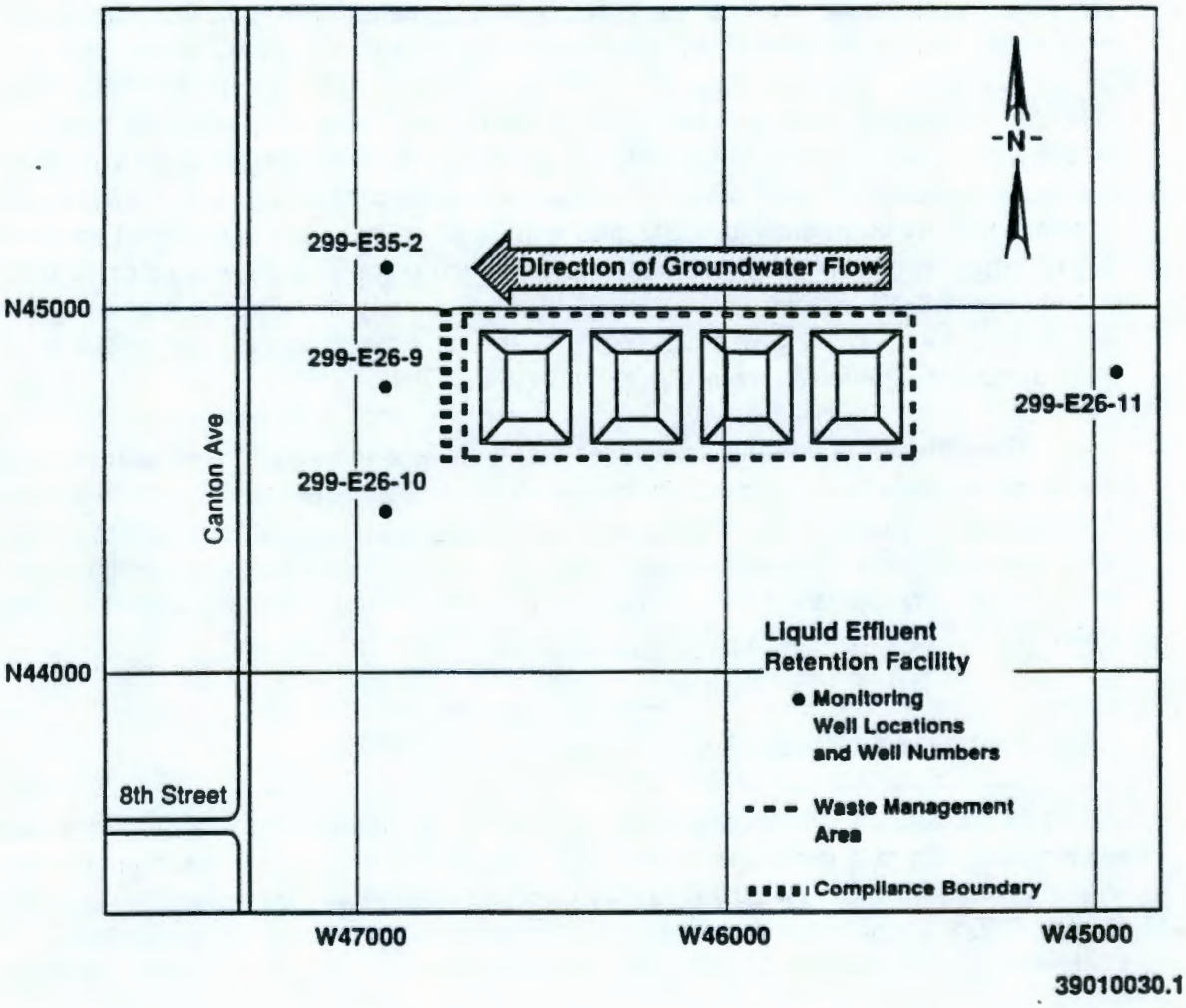

9413276.1538

be removed and the well will be allowed to recharge for a minimum of 24 hours. If the volume of water recharged to the well after approximately 24 hours is insufficient for complete suite of samples, the well will be considered dry for the sampling event.

Inspection

Groundwater samples from all monitoring wells are scheduled to be tested quarterly for contamination indicator parameters, interim primary drinking water constituents, secondary ground-water quality parameters, and site-specific parameters for the first year of sampling. Background levels of the ground-water contamination indicator parameters will be statistically established after this first year of sampling using methods in the Technical Enforcement Guidance Document (EPA 1986c). Once the site-specific background for the indicator parameters has been established at the Basins, subsequent sampling from the monitoring network will be statistically compared to the established background values to determine if there are significant differences. If a difference is found, the wells in question will immediately be resampled. Samples will be taken using the one upgradient and three downgradient wells. In addition, sampling for specific constituents will be performed in compliance with the Sampling Schedule published annually. The procedures for groundwater sample collection, water-level measurements, and field measurements are contained in *Procedures for Ground-Water Investigations* (PNL 1989).

9413276.1539

If verification sampling determines that there is a statistically significant increase in one or more groundwater parameters above background, written notice will be made to Ecology within 7 days of the finding and will indicate which parameters and/or constituents have shown statistically significant increases. If such increases in the concentrations of groundwater parameters are determined, the DOE/RL comply with regulations specified under WAC 173-303-645(9)(h)(iii).

8.4 WASTE CONTAINERS

Miscellaneous solid mixed waste, including such items as failed equipment, paper towels, soil, and rags generated during maintenance activities are placed in approved shipping containers and sealed for proper disposal, designated, and shipped to the Hanford Central Waste Complex or disposed of in accordance with all applicable regulations. The containers will not contain free liquids and will not remain on site for more than 90 days.

Inspections

Containers are inspected each operating day at LERF, as shown in Appendix A-5. Operators ensure that adequate aisle space, waste container segregation, and container storage location exist in compliance with regulatory requirements. Additionally, operators inspect during rounds for container corrosion, leakage, cracks, and overall appearance when sampling is being performed.

9.0 FACILITY AND OPERATIONAL ADMINISTRATIVE INSPECTIONS

Information on facility and operational administrative inspections is presented in the following sections. This information has been included to highlight these inspections to ensure compliance with RCRA program requirements for activities such as record keeping, hazard communication, waste characterization, source reduction, and safety and health. Programmatic inspections covering these activities would focus on ensuring adequate implementation of the regulatory requirements. Because these inspections differ from those already presented, which focus on systems, equipment, and their associated parameters, no formal schedules are presented. However, the importance of these inspections is recognized and the required schedules are clearly identified in the text.

9.1 FACILITY AND OPERATIONAL SAFETY INSPECTIONS

In general, facility support is to be provided to the Industrial Safety and Fire Protection Programs in conducting overview activities. Safety and fire protection inspections and hazardous materials surveillance are to be conducted according to an established schedule; unscheduled inspections of selected work areas are to be conducted as well. Annual level 3 management safety inspections are to be conducted for operations and facilities under their control. Inspection is to be formally documented with a copy sent to Industrial Safety and Fire Protection (ISFP).

Site Services Procedure 717, REV 1, "Facility and Operations Safety Inspections," found in WHC-CM-8-5, *Site Services Manual*, further defines these responsibilities and requirements.

- The Level 3 Manager, Site Services, is responsible for seeing that an annual safety inspection is conducted of all operations and facilities under his/her control. This responsibility for conducting the annual safety inspections is delegated to the group managers (Level 4) for the facilities under their respective control.

- Section managers (Level 5) are responsible for conducting quarterly safety inspections for all operations and facilities under their control.

- Annual and quarterly safety inspections shall include:

  - Investigating various operations to detect procedures, practices, and equipment that may be hazardous.

  - Ensuring that identified hazards are eliminated or controlled.

- Promptly correcting any practice or condition that violates established safety procedures.

- Periodically following up to ensure that hazard controls are maintained and that no new hazards have been introduced.

- Reviewing individual shop safety logs to ensure that weekly safety inspections are being documented, that necessary corrective actions are being taken and documented, and that the logs are easily accessible for personnel use.

- The results of inspections shall be formally documented on Form A-7500-068, Management Safety Inspections. Copies shall be sent to the Manager, Site Services, and to ISFP.

- Deficiencies should be corrected as soon as possible. Deficiencies that cannot be corrected immediately shall be documented and tracked to an assigned completion date until corrected. Corrective actions should be sufficient to ensure that the same or similar deficiencies will not occur.

- Weekly safety inspections shall be conducted by first-line supervisors. Safety logbooks shall be used in the support, maintenance, and fabrication shops to document results of workplace inspections, noting both positive and negative conditions observed, safety actions taken during formal and informal inspections, and items requiring follow-up action. The logbook should be kept in a location where entries can be made by group workers.

9413276.1541

9.2 HAZARD COMMUNICATION AND HAZARDOUS MATERIALS SURVEILLANCE

Hazard Communication and Hazardous Materials Surveillance are part of the 200 Area Support Services Internal Safety and Surveillance Program. The program's intent is to assist building and facility managers, maintenance managers and building administrators in ensuring that safety is practiced by Support Services personnel in accordance with WHC-CM-4-3, *Industrial Safety Manual*, and internal department requirements established in WHC-CM-8-7, *Operations Support Services*, and WHC-CM-8-2, *Central Support Services*. Surveillance is performed to identify existing and potential deficiencies, the correction of which significantly improve maintenance and operations activities.

Hazardous materials surveillance is conducted by a team that includes the following personnel:

- Group manager, 200 Area Support Services, or a delegated representative

- Cognizant surveillance engineer (CSE), Maintenance Engineering Services

- A surveillant (one or more) selected from a function (200 Area Support Services or another function) for some unique knowledge that would assist in the performance of the surveillance.

The specific description and location of all deficiencies and observations are recorded on a safety surveillance checklist, which is turned over to the CSE. A copy is submitted to the Maintenance Group manager. The Maintenance group manager submits a report of corrective action (ROCA) to the function manager with a copy to the CSE. After approval by the function manager, the ROCA is submitted to the CSE for internal recordkeeping. The surveillance is considered closed when the ROCA and all related approved extensions to a 30-day resolution period are completed and the Support Services manager concurs. (Closed means that the deficiency or observation is corrected and documented on the ROCA.)

The CSE maintains a folder in the Maintenance Engineering Services files. The folder contains the safety surveillance checklist, the surveillance report, the ROCA, applicable extensions, and meeting minutes related to the surveillance activity. The folder is kept for 12 months before it is reviewed by the CSE for disposal with approval of the Maintenance Engineering Services manager.

9413279.1542

9.3 SAFETY SURVEILLANCE

Safety surveillance is part of the 200 Area Support Services Internal Safety and Surveillance Program. Its intent is to assist building and facility managers, maintenance managers, and building administrators in ensuring that safety is practiced by Support Services personnel in accordance with Industrial Safety, Fire Protection, and Management Programs in WHC controlled manuals. Safety surveillances are performed to identify existing and potential deficiencies, the correction of which significantly improves maintenance and operations activities.

The safety surveillance is conducted per the requirements specified in WHC controlled manuals, and will be performed by a team that includes the following personnel:

- Function manager, 200 Area Support Services, or a delegated representative

- Group manager, 200 Area Support Services, or a delegated representative

- Cognizant surveillance engineer (CSE) - Maintenance Engineering Services

- A surveillant (one or more) selected from a function (200 Area Support Services or another function) for some unique knowledge that would assist in the performance of the surveillance.

The specific description and location of all deficiencies and observations are recorded on a safety surveillance checklist, which is turned over to the CS. A copy of the checklist is submitted to the Maintenance group manager. The Maintenance group manager submits a ROCA to the function manager with a copy to the CSE. After approval by the function manager, the ROCA is submitted to the CSE for internal recordkeeping. The surveillance is considered closed when the ROCA and all related approved extensions to a 30-day resolution period are completed and the functional manager concurs.

The CSE maintains a folder in Maintenance Engineering Services files that contains the safety surveillance checklist, the surveillance report, the ROCA, copies of completed work authorizations, applicable extensions, and meeting minutes related to the surveillance activity. The folder is kept for 12 months before it is reviewed by the CSE for disposal with approval of the Maintenance Engineering Services Manager.

9413276.1543

10.0 WHC PROGRAM REQUIREMENTS

Regulatory requirements define specific areas that require active programs to be in place for TSD facilities to operate. These program requirements have not been addressed in the schedules found in Appendix A. Each of the areas listed below is being managed, reviewed, and revised by personnel identified in program manuals and implementation procedures.

10.1 WASTE ANALYSIS PLAN

9413276.1544

Before an owner/operator can treat, store, or dispose of any hazardous waste, a detailed chemical and physical analysis of the waste material, including all information necessary to properly treat, store, or dispose of the waste is required. A written waste analysis plan (WAP) describing analytical parameters, sampling methods, test methods, testing frequency, and responses to any process changes that may affect the character of the waste must be developed and followed as described in 40 CFR 262.40, 40 CFR 264.13, WAC 173-303-300, and WAC 173-306. The waste analysis plan for LERF is found in the *Liquid Effluent Retention Facility Dangerous Waste Permit Application*, DOE/RL 90-43. The LERF does not store ignitable, reactive, or incompatible waste. The waste analysis plan includes requirements for sampling the process condensate to determine if stratification, reaction, or solids precipitation is occurring in the basins.

10.2 PERSONNEL TRAINING

Facility personnel must complete a training program in hazardous waste management procedures. All facility employees must receive training within six months of hire, and attend an annual refresher course. Training records, including written job titles, job descriptions, and individual employee training records, must be maintained. The regulatory requirements are described in WAC 173-303-330.

The Tank Farms training program is designed to prepare employees to operate and maintain the LERF in a safe, efficient, and environmentally sound manner. This training program also ensures that employees are prepared to respond promptly and efficiently should abnormal or emergency conditions occur. Emergency response training is consistent with the emergency responses outlined in the tank farm contingency plan.

The Tank Farms training plan is developed and implemented by Defense Waste Management (including the Tank Farms) in cooperation with Technical Training, Health Physics, the Industrial Safety and Fire Protection Program, Tank Farm Engineering and Laboratory Training, and other Westinghouse Hanford organizations.

The qualifications of LERF employees must be verified before they can work without supervision. Qualification requires personnel to successfully meet identified classroom and on-the-job training requirements.

Tank Farms management is responsible to ensure that employees are trained adequately in meeting plant-specific requirements, although the manager for each job classification must ensure that all fundamental requirements have been met.

10.3 WASTE MINIMIZATION AND RECYCLING

The term "waste minimization" was introduced in the *Hazardous and Solid Waste Amendments of 1984* (HSWA), which amended RCRA as a method of preventing pollution that focuses on reducing hazardous waste generation and output at the source to avoid subsequent handling, treatment, and disposal. Waste minimization was more formally defined by EPA in its 1986 report to Congress as:

"The reduction, to the extent feasible, of hazardous waste that is generated and subsequently treated, stored, or disposed of. It includes any source reduction or recycling activity that is undertaken by a generator that results in either (1) the reduction of total volume or quantity of hazardous waste, or (2) the reduction of toxicity of hazardous waste, or both, so long as such reduction is consistent with the goal of minimizing present and future threats to human health and the environment."

Source reduction and onsite or offsite recycling are included in this definition of waste minimization.

10.3.1 Waste Minimization

RCRA requires that all generators practice waste minimization to the extent that it is economically feasible. However, while Congress recognizes waste minimization in concept as the "ideal" waste management method, complete prevention of waste generation or total recycling of a waste stream is not always practical. Therefore, other methods of waste management are acceptable, although severely restricted, under RCRA.

RCRA also requires generators to document the results of their waste minimization efforts in biennial generator reports. In addition, those who hold RCRA permits for onsite TSD facilities must certify annually that they have a waste minimization program in place.

10.3.2 Source Reduction and Recycling

Source reduction is any activity that prevents, reduces, or eliminates the volume and/or toxicity of waste at its source. Recycling is any process that uses or reuses potential emissions or waste as an effective substitute for a commercial product or as an ingredient or feedback in an industrial process. The term recycling includes use, reuse, and reclamation practices consistent with the RCRA definitions of these terms (see 40 CFR § 261.1(c)).

10.4 SAFETY AND HEALTH REQUIREMENTS

WHC addresses safety and health requirements through WHC-CM-4-41 and the *General Safety and Health Standards*, WAC 296-24. 29 CFR 1910 also requires that workers involved in hazardous waste management and emergency response activities be trained. RCRA addresses safety and health protection in three key areas.

- Training programs for all employees involved in hazardous waste management
- Health risk assessment before corrective action at RCRA-regulated facilities
- Monitoring workers and the site perimeter as necessary to safeguard the health of workers and surrounding populations while implementing corrective action.

Safety measures are taken to prevent endangerment of the health of employees or the public near the LERF. Health and safety requirements are vital criteria for both the design and operation of the LERF. The facility is located approximately 25 miles from the nearest population center (Richland, Washington). The LERF is accessible to emergency vehicles at all times and emergency evacuation of personnel will not be obstructed.

LERF is designed and operated in accordance with applicable federal, state, and local regulations. No chemicals are stored at LERF; however, if chemicals are stored at LERF in the future, they will be stored in accordance with manufacturer's recommendations and applicable National Fire Protection Association and Occupational Safety and Health Administration requirements. Specific design safety features include shielding, contamination control, control of toxic/dangerous materials, and process safety. LERF is constructed to withstand design-basis accidents without undue risk to the health and safety of the general public or operating personnel. The unit's performance objectives for protection against known hazards include:

- Protection of employees from injury, exposure to harmful physical agents and dangerous waste or toxic materials, and exposure to radiation over allowable limits.
- Minimization of accident potential.

9413276.1546

- Limiting loss or damage to government property.

The overall goal is to limit dangerous and mixed waste exposure to ALARA levels. A combination of features is used in the design and operation of the LERF to ensure stringent confinement of radioactive and dangerous materials, to protect personnel against dangerous and mixed waste, to ensure process safety, and to adequately protect operating personnel and the general public. The principal preventive measure is containment; additional measures may include shielding, maximizing the distance from contamination sources, restricting the time of occupancy in contamination zones, and using protective clothing. Monitoring for leakage from primary containment is provided and monitoring instruments alarm at the 242-A Evaporator control room and locally, as appropriate.

Protective clothing and equipment are prescribed for personnel handling chemicals or dangerous waste. Protective clothing at the LERF consists of foot protection, eye and face protection, respiratory protection, protective apparel, and head protection. Before the start of any operation that may expose employees to the risk of injury or illness, the operation is reviewed to ensure that the nature of hazards that might be encountered are considered and that appropriate protective gear is selected. Whenever possible, exposures to hazards are controlled by accepted engineering and/or administrative controls. Material safety data sheets and procedures also outline protective apparel requirements.

10.5 HEALTH PHYSICS ORGANIZATION

Safety functions are part of the Environment, Safety, Health and Quality Assurance organization, which has the overall responsibility for the Radiation Protection Program. The *Organization Charts and Charters Manual*, WHC-CM-1-2, establishes the charter and describes responsibilities and authorities for the Safety Function. Two groups have been delegated principal responsibility for support and overview of the Radiation Protection and ALARA Programs: the Health Physics group and the Nuclear Safety group.

Health Physics has responsibility for

- Day-to-day operational support
- Conducting audits and monitoring of compliance with DOE Orders, Washington Administrative Codes, standards, and other pertinent requirements
- Maintaining a trained staff and equipment capable of response to incidents involving control and containment of radioactive materials
- Maintaining a health physics support service which provides the radiological measurements, surveys, and dosimetry program necessary to ensure radiological safety

- Administering a comprehensive program which ensures that ALARA practices and principles are applied to the control of radiological hazards

- Providing expert advice to assist all Westinghouse Hanford organizations in effectively meeting their radiation protection program responsibilities.

Within this organization, Waste Management Area Health Physics has responsibility for providing operation support to the LERF.

Nuclear Safety performs an independent oversight role. This organization has responsibility for conducting annual safety appraisals of each Westinghouse Hanford nuclear facility to ensure compliance with DOE Order 5480.5 and DOE-RL Order 5480.5. Examples of activities covered by this organization include readiness reviews, design reviews, audits and appraisals, facility inspections, and operational surveillance assessments.

9413276.1548

10.5.1 HPT Equipment & Instrumentation

10.5.1.1 Portable Surveillance Instruments.

Portable radiation monitoring and surveillance instruments are provided to all Hanford Site contractors from a central Hanford Site instrument pool operated for DOE by PNL. All instruments are readily available to the HPTs and other personnel in Health Physics. The frequency and method of calibrations of portable surveillance instruments are defined in WHC-CM-1-6, *Radiological Control Manual*, and PNL-MA-562, *Radiation Protection Instrument Manual*.

10.5.1.2 Personnel Survey Instruments

Semi-portable rate meters for monitoring shoes and clothing are available at the LERF. As needed, both scintillation and/or Geiger-Mueller detectors are available for use at the LERF. Personnel contamination monitors (PCM), which detect alpha and beta radiation, will be located near the access control stations.

10.5.1.3 Laboratory Counting Equipment

The 222-S Health Physics counting laboratory has an automated, twin silicon diode (alpha-beta) spectrometer for air sample counting, an alpha mini scaler, and a beta-gamma mini scaler.

10.5.1.4 Personnel Dosimeters

Two dosimetry programs are used at Westinghouse Hanford to monitor personnel dose. The major program uses a thermoluminescent dosimeter (TLD) badge device that

provides the legal record of an individual's radiation dose history. A supplementary dosimetry program uses self-reading gamma pencil dosimeters to provide a realtime tracking system for an individual to note and control his/her exposure totals on a short-term basis. The use of dosimeters is described in WHC-CM-1-6.

10.5.1.5 Instrument Storage, Calibration, and Maintenance

All portable surveillance instruments are maintained, repaired, and calibrated at the central Hanford Site instrument pool operated by PNL. Standard calibrations are performed in accordance with ANSI N323, *Radiation Protection Instrumentation Test and Calibration* (ANSI 1978).

10.5.1.6 Health Physics Survey

The methods, frequencies, and procedures for conducting radiation surveys are determined based on the characteristics of materials handled (i.e., form, element, isotope) and the radiological condition and type of operations conducted (i.e., dose rate, contamination level, or airborne potential). The *Health Physics Procedures Manual*, WHC-IP-0692, contains specific procedures followed by Operational Health Physics personnel.

10.5.2 Procedures

Westinghouse Hanford has developed a number of documents which describe requirements and procedures relative to radiological and environmental protection. A brief overview of relevant documents and summaries of various radiological protection procedures applicable to LERF activities are provided below.

- WHC-CM-7-5, *Environmental Compliance Manual*. This manual provides detailed standards for controlling the release of radioactive and nonradioactive materials to air, water, and land; environmental surveillance criteria; and effluent sampling and monitoring program requirements.

- WHC-CM-1-6, *Radiological Control Manual*. Radiation protection policies, standards, requirements, and guidelines in effect at Westinghouse Hanford facilities are detailed in this manual.

- WHC-CM-4-12, *Health Physics Practices Manual*. This manual provides methods, routine practices, controls, exposure guides, supporting data, and other information developed to assist radiation monitoring personnel in establishing and maintaining a uniform and sound radiation control program.

- WHC-CM-4-16, *Dosimetry Manual*. This manual describes policy and specific procedures followed by Health Physics and other personnel involved in implementing the Westinghouse Hanford Dosimetry Program.

- WHC-IP-0692, *Health Physics Procedure Manual*. Specific procedures followed by Operational Health Physics personnel, including those for instrument calibration and supplemental dosimetry, are provided in this manual.

10.6 CORRECTIVE ACTIONS

The requirements and responsibilities for the management of corrective actions to ensure that timely and effective resolution of adverse conditions are established in WHC-CM-1-3, *Management Requirements and Procedures*, Section MRP 5.1, "Corrective Action Management System." Elements described within this procedure ensure management attention to open items and provide steps for preventing recurrence of the adverse condition. Line organizations are responsible for identifying and completing corrective actions as described in WHC-CM-1-3, Section MRP 5.14, "Event, Critique, and Unusual Occurrence Reporting."

Notifications and reporting of specific events related to environmental releases and/or events involving effluents and/or hazardous materials are reported in accordance with internal procedures.

10.7 RECORDKEEPING AND REPORTING REQUIREMENTS

The minimum recordkeeping and reporting requirement for a TSD Facility is a written operating record containing all data pertaining to the hazardous waste management units. The operating record must be kept until closure of the facility, with the exception of inspection data, which must be kept for five years. Other records that must be kept on file at the facility include, but are not limited to:

- Copies of each manifest or shipping paper

- Personnel training records

- Groundwater monitoring data, where applicable

- Closure plan

- Contingency plan.

9413276.1550

- Inspection schedules/logs

In addition, recordkeeping requirements specific to particular hazardous waste management units (e.g., tank systems, container storage, landfills, etc.) must be met. The amount of time that specific records must be kept varies, and record retention periods are automatically extended during unresolved enforcement action. All records must be furnished on request, and at all reasonable times records must be available for inspection by EPA or Ecology representatives. As a generator, up-to-date records of the wastes, training programs, safety procedures, manifests, and other key activities are required.

A biennial report using EPA Form 8700-13A that covers hazardous waste activity for the previous calendar year must be submitted. The report must include the type and quantity of waste generated, who transported it, and where it went. An exception report must be submitted whenever a signed manifest is not returned from a destination within 45 days.

9413276.1551

10.8 OPERATING RECORD INFORMATION REQUIREMENTS

The owner or operator of a facility is required to keep a written operating record at the facility. Maintenance of the operating record is required until closure of the facility (WAC 173-303-380). At a minimum, records that must be maintained are:

- Description and quantity of each hazardous waste received, treated, stored, or disposed of at your facility and the date(s) and method(s)
- Common name, EPA hazardous waste identification number and physical state (liquid, solid, gas) of the waste(s)
- Estimated (or actual) weight, volume, or density of the waste material
- Description of the method(s) used to treat, store, or dispose of the waste(s) using EPA handling codes
- Physical location and quantity of each hazardous waste at each location within the facility with cross-references to any pertinent manifest document number(s)
- For disposal facilities, the location and quantity of each hazardous waste recorded on a map or diagram of the disposal area
- Records and results of any required waste analyses and trial tests
- Records and results of inspections

- Records of any monitoring, testing, or analytical data, and corrective action where required

- Records of closure cost estimates and post-closure cost estimates (the latter is applicable only to disposal facilities)

- Annual certification of program to reduce the volume and toxicity of hazardous waste

- Summary reports and details of any incident requiring implementation of the contingency plan

- Copies of the notices, and certifications and demonstrations if applicable, required by the land disposal restriction requirements of *40 CFR Part 268*.

9413276.1552

10.9 QUALITY, ENVIRONMENTAL, AND SAFETY TRENDING SYSTEM

The Quality, Environmental, and Safety Trending System (QUEST) is used as the central database to monitor and track the status of corrective actions. The system is administered by Quality Safety Data Management (QSDM). Each department and/or division representative shall enter data directly to the QUEST system per desk instructions provided in the QUEST user's manual.

10.10 INDEPENDENT ACTIVITIES

Environmental QA and Tank Waste Remediation System Quality Engineering (TWRSQE) performs independent verification of activities in accordance with WHC-CM-4-2. These organizations also participate in review and approval of Impact Level 1Q, 2Q, and 3Q documents.

This page intentionally left blank.

9413276.1553

11.0 REFERENCES

11.1 REGULATIONS AND DIRECTIVES

29 CFR 1910, 1992, "Occupational Safety and Health Standards," Title 29, *Code of Federal Regulations*, as amended.

40 CFR 265, 1992, "Interim Status Standards for Owners and Operators of Hazardous Waste Treatment, Storage, and Disposal Facilities," Title 40, *Code of Federal Regulations*, as amended.

Atomic Energy Act of 1954, 42 USC 201, et seq.

Comprehensive Environmental Response, Compensation, and Liability Act of 1980, as amended, 42 USC 9601 et seq.

Hazardous and Solid Waste Amendments of 1984, PL 98-616.

Resource Conservation and Recovery Act of 1976, 42 USC 6901, et seq.

DOE, 1984, *Safety of Nuclear Facilities*, DOE Order 5480.5, U.S. Department of Energy, Richland, Washington.

DOE, 1986, *Safety of Nuclear Facilities*, DOE Order 5480.5, U.S. Department of Energy, Washington, D.C.

DOE, 1989, *General Design Criteria*, DOE Order 6430.1A, U.S. Department of Energy, Washington, D.C.

DOE, 1990, *General Environmental Protection Program*, DOE Order 5400.1, U.S. Department of Energy, Washington, D.C.

DOE, 1991, *Quality Assurance*, DOE Order 5700.6C, U.S. Department of Energy, Washington, D.C.

WAC 173-303, 1993, *Dangerous Waste Regulations*, Washington Administrative Code, as amended.

WAC 296-24, 19 , *General Safety and Health Standards*, Washington Administrative Code, as amended.

9413276.1554

11.2 DOCUMENTS

ANSI, 1989, *Chemical Plant and Petroleum Refinery Piping*, (ANSI B36.10 and B31.3), American National Standards Institute, Washington, D.C.

ANSI, 1978, *Radiation Protection Instrumentation Test and Calibration*, (ANSI N323), American National Standards Institute, Washington, D.C.

Cejka, C.C., 1990, *Functional Design Criteria for the 242-A Evaporator and PUREX Plant Condensate Interim Retention Basin*, WHC-EP-0327, Westinghouse Hanford Company, Richland, Washington.

Clapp, D.A., 1989, *242A Evaporator Interim Retention Basin Hazard Classification Analysis*, WHC-SD-WM-PSE-004, Westinghouse Hanford Company, Richland, Washington.

Cooney, F.M., and S.P. Thomas, 1989, *Westinghouse Hanford Company Effluent Discharges and Solid Waste Management Report for Calendar Year 1988: 200/600 Areas*, WHC-EP-0141-1, Westinghouse Hanford Company, Richland, Washington.

DOE-RL, 1993, *Hanford Facility Dangerous Waste Permit Application*, Appendix 7A of DOE/RL-91-28, Rev. 1, U.S. Department of Energy, Richland Operations Office, Richland, Washington.

DOE-RL, 1992, *DOE/RL Emergency Response Plan*, Rev. 3, U.S. Department of Energy, Richland Operations Office, Richland, Washington.

DOE-RL, 1991a, *Double Shell Tank System Dangerous Waste Permit Application*, DOE/RL-90-39, Rev. 0, U.S. Department of Energy-Richland Operations Office, Richland, Washington.

DOE-RL, 1991b, *Liquid Effluent Retention Facility Dangerous Waste Permit Application*, DOE/RL-90-43, Rev. O, U.S. Department of Energy-Richland Operations Office, Richland, Washington.

DOE-RL, 1989, *Draft Single Shell Tanks System Closure Corrective Action Work Plan*, DOE/RL-89-16, U.S. Department of Energy-Richland Operations Office, Richland, Washington.

Ecology, EPA, and DOE, 1990, *Hanford Federal Facility Agreement and Consent Order*, Washington State Department of Ecology, U.S. Environmental Protection Agency, and U.S. Department of Energy, Olympia, Washington.

EPA, 1986a, *Permit Writer's Guidance Manual for Exposure Information Assessment*, U.S. Environmental Protection Agency, Washington, D.C.

9413276.1555

EPA,1986b, *Test Methods for the Evaluation of Solid Waste: Physical/Chemical Methods*, SW-846, 3rd ed., U.S. Environmental Protection Agency, Washington, D.C.

EPA, 1986c, *RCRA Groundwater Monitoring Technical Enforcement Guidance Document*, Office of Waste Programs Enforcement, Office of Solid Waste and Emergency Response, U.S. Government Printing Office, U.S. Environmental Protection Agency, Washington, D.C.

EPA, 1989, *Requirements for Hazardous Waste Landfill Design, Construction, and Closure*, EPA/625/4-89/022, Center for Environmental Research Information, Office of Research and Development, U.S. Environmental Protection Agency, Cincinnati, Ohio.

ISO, 1978, *Polypropylene Pipes and Fittings - Chemical Resistance with Respect to Fluids*, IS/DATA5-1978(E), International Organization for Standardization, Geneva, Switzerland.

Johnson, L.E., 1989, *Preliminary Safety Evaluation Project W-105, Evaporator and PUREX Interim Retention Basin*, WHC-SD-WM-PSE-006, Westinghouse Hanford Company, Richland, Washington.

KEH, 1990, *System Design Intent for 242-A and Plutonium Uranium Interim Retention Basin - 242-A Effluent Stream*, W10551/ER0156, Kaiser Engineers Hanford, Richland, Washington.

Lavender, J.C., 1993, *Final Safety Analysis Report, 242-A Evaporator Liquid Effluent Retention Basin*, WHC-SD-W105-SAR-001, Rev. 0C, Westinghouse Hanford Company, Richland, Washington.

Olascoaga, M.A., 1991, *Functional Design Criteria for the Liquid Effluent Retention Facility 242-A Evaporator Condensate Interim Retention Basin, Project W-105, Functional Design Criteria*, WHC-SD-W105-FDC-001, Rev. 1, Westinghouse Hanford Company, Richland, Washington.

PNL, 1989, *Procedures for Ground-Water Investigations*, PNL-6894, Pacific Northwest Laboratory, Richland, Washington.

Rieck, C.A., 1990, *Conceptual Design Report 242-A Evaporator and PUREX Interim Retention Basin*, Project W-105, WHC-SD-W105-CDR-001, Rev. O, Westinghouse Hanford Company, Richland, Washington.

Schmid, J.S., 1991, *Interim Status Groundwater Monitoring Plan for the 200 East Area Liquid Effluent Retention Facility*, WHC-SD-EN-AP-024, Rev. 0, Westinghouse Hanford Company, Richland, Washington.

9413276.1556

Smith, R.M., and R.B. Kasper, 1983, *Serviceability of Cribs Affected by PUREX Startup*, RHO-HS-EV-18, Rockwell Hanford Operations, Richland, Washington.

Wahlquist, R.A., 1992, *Safety Equipment List, 242-A Evaporator*, WHC-SD-WM-SEL-028, Westinghouse Hanford Company, Richland, Washington.

WHC, 1989, *Waste Stream Characterization Report*, Vol. 2, WHC-EP-0287, Westinghouse Hanford Company, Richland, Washington.

WHC, 1990a, *Liquid Effluent Study Final Project Report*, WHC-EP-0367, Westinghouse Hanford Company, Richland, Washington.

WHC, 1990b, *Tank Farms Building Emergency Plan*, WHC-IP-0263-TF, Westinghouse Hanford Company, Richland, Washington.

WHC, 1993a, *Building Emergency Plan for the Liquid Effluent Retention Facility*, WHC-IP-0263-LERF, Westinghouse Hanford Company, Richland, Washington.

WHC, 1993b, *Tank Farm Emergency Response Guides*, WHC-IP-0839-TF, Westinghouse Hanford Company, Richland, Washington.

WHC, 1993c, *Waste Tank Project Administration*, WHC-IP-0842, Westinghouse Hanford Company, Richland, Washington.

WHC, 1993d, *Health Physics Procedure*, WHC-IP-0718, Westinghouse Hanford Company, Richland, Washington.

11.3 MANUALS

PNL-MA-562, Radiation Protection Instruments

WHC-CM-1-2, Organization Charts and Charters

WHC-CM-1-3, *Management Requirements and Procedures*, Westinghouse Hanford Company, Richland, Washington.

MRP 1.1, "U.S. Department of Energy Directives."
MRP 2.21, "Controlled Manual Waiver Process."
MRP 5.2, "Quality Assurance."

WHC-CM-1-6, *Radiological Control Manual*, Westinghouse Hanford Company, Richland, Washington.

9413276.1557

WHC-CM-4-1, *Westinghouse Hanford Company Emergency Plan*, Westinghouse Hanford Company, Richland, Washington.

WHC-CM-4-3, *Industrial Safety Standards*, Westinghouse Hanford Company, Richland, Washington.
G-11, "Eyewash Apparatus"

WHC-CM-4-12, *Health Physics Practices Manual*, Westinghouse Hanford Company, Richland, Washington.

WHC-CM-4-16, *Dosimetry Manual*, Westinghouse Hanford Company, Richland, Washington.

WHC-CM-4-17, *Patrol Operations Procedures*, Westinghouse Hanford Company, Richland, Washington.

WHC-CM-4-18, *Patrol Policies*, Westinghouse Hanford Company, Richland, Washington.

WHC-CM-4-41, *Fire Protection Program*, Westinghouse Hanford Company, Richland, Washington.

WHC-CM-4-44, *Emergency Preparedness Administration*, Westinghouse Hanford Company, Richland, Washington.
Procedure No. 02.01, Rev. 0, 200 Areas Crash Alarm and Siren Tests

WHC-CM-7-5, *Environmental Compliance*, Westinghouse Hanford Company, Richland, Washington.

WHC-CM-8-2, *Central Support Services*, Westinghouse Hanford Company, Richland, Washington.

WHC-CM-8-5, *Site Services Manual*, Westinghouse Hanford Company, Richland, Washington.

WHC-CM-8-7, *Operations Support Services*, Westinghouse Hanford Company, Richland, Washington.

9413276.1558

This page intentionally left blank.

9413276.1559

9413276.1560

APPENDIX A

INSPECTION SCHEDULES FOR LERF

A-1 General Facility Inspections: Security (Operations)

A-2 General Facility Inspections: Communications

A-3 General Facility Inspections: Safety Equipment

A-4.1 General Facility Inspections: Fire Protection System (Operations)

A-4.2 General Facility Inspections: Fire Protection System (Hanford Fire Department)

A-5 General Facility Inspections: Housekeeping/Structural

A-6.1 242-AL-42 Basin/Operations

A-6.2 242-AL-42 Basin/Maintenance

A-7.1 242-AL-43 Basin/Operations

A-7.2 242-AL-43 Basin/Maintenance

A-8.1 242-AL-44 Basin/Operations

A-8.2 242-AL-44 Basin/Maintenance

A-9 Transfer Pipeline

A-10 Sampling of Condensate and Leachate Systems

9413276.1561

A-1 GENERAL FACILITY INSPECTIONS
SECURITY

Performed By: Operations

Item Description	Procedure	Inspection Frequency	Regulatory Driver	Location	Parameters
Gates and Building Doors	WHC-CM-4-3 WHC-IP-0842	Daily	WAC 173-303-310 WAC 173-303-320 40 CFR 265.14	Gate Personnel Entrances Perimeter Vehicle Entrances Metal/Wooden Structures Basin Entrances	• Secured (closed and locked) • Locks functional • Locks properly used • Correct number of keys issued • Employee list current for assignment of keys
Fences and Gates	WHC-IP-0730-P021	01 Week	WAC 173-303-310 40 CFR 265.14 40 CFR 265.17	Site Perimeter	• Structurally sound • No holes • No evidence of damage, tampering or forced entry
Posted Access Warning Signs	WHC-IP-730-P021	01 Week	WAC 173-303-310 WAC 173-303-320 40 CFR 265.14	Throughout Facility	• Required signs are posted • Signs are legible @ 25 ft • Controlled areas are chained and signs posted • Seen from all approaches

Note: During inspections, calibration tags are checked to verify that they are current.

A-2 GENERAL FACILITY INSPECTIONS
COMMUNICATIONS

Performed By: Operations

Item Description	Procedure	Inspection Frequency	Regulatory Driver	Location	Parameters
Radios	WHC-CM-4-44 WHC-CM-4-1 WHC-IP-0263 WHC-IP-0839-TF	01 Month	WAC 173-303-340 40 CFR 265.32	242-A Control Room MO-272	• Verify that the portable radios are active • Verify that radios are in proper location • Verify that radios are functioning properly • Verify that batteries are charged • Verify no evidence of damage or tampering
Emergency Siren	WHC-CM-4-44, Procedure #02.01 WHC-CM-4-1 WHC-IP-0263 WHC-IP-0839-TF	01 Month	WAC 173-303-340 40 CFR 265.32	242-A Evaporator	• Verify siren is audible • Verify siren completes cycle

Note: During inspections, calibration tags are checked to verify that they are current.

A-3 GENERAL FACILITY INSPECTIONS
SAFETY/EMERGENCY EQUIPMENT

Performed By: Operations/Maintenance

Item Description	Procedure	Inspection Frequency	Regulatory Driver	Location	Parameters
Lock and Tag	WHC-CM-4-3 WHC-IP-0482	Daily	WAC 173-303-340 29 CFR	Throughout Facility	• Lock in place • Equipment tagged • Correct tag for shift
Spill Control	TO-040-500 TO-040-501	Daily	WAC 173-303-340 40 CFR 265.32	Trailer MO-727	• Visually inspect retention basins and catch basins for evidence of spills or leaks
PPE Housekeeping	TO-040-501	Daily	WAC 173-303-340 29 CFR	Trailer MO-727 242-A Storage Area	• All used masks and dirty laundry are to be picked up and sent for sterilization
Safety Showers and Eyewash Stations-Portable Units	2M246064 WHC-CM-4-3 Operator Round Sheets	01 Month	WAC 173-303-340 29 CFR	When brought from 272-AW	• Function test • Check eyewash and shower drains for proper function
Emergency Spill Response Kit	TO-040-500 TO-040-501	Monthly	WAC 173-303-350 40 CFR 265.56	MO-727	• Easily accessible • Required equipment available (check contents against list in the kit) • Supplies are in good condition • Expiration / shelf-life of materials not exceeded • No evidence of damage or tampering

Note: During inspections, calibration tags are checked to verify that they are current.

A-4.1 GENERAL FACILITY INSPECTION
FIRE PROTECTION SYSTEM

Performed By: Operations/Maintenance

Item Description	Procedure	Inspection Frequency	Regulatory Driver	Location	CBRS Number	Parameters
Fire Extinguisher	WHC-IP-0263-TF WHC-CM-4-3 TO-040-480	01 Month	WAC 173-303-340 40 CFR 265.32 NFPA 101 LSC	MO-727	N/A	• Equipment in identified location • No evidence of tampering • No evidence of corrosion, or leaking • Equipment is tagged with current inspection date
Fire Hydrant, Valve & Ground Gate	FS-0026	12 Months	WAC 173-303-340 40 CFR 265.32 NFPA 101 LSC	NW of the proposal 242-AL-41 Basin	N/A	• Turned toward street • Unobstructed • No evidence of ground gate leaks • Labeled or tagged

Note: During inspections, calibration tags are checked to verify that they are current.

A-4.2 GENERAL FACILITY INSPECTION
FIRE PROTECTION SYSTEM

Performed By: Hanford Fire Department

Item Description	Procedure	Inspection Frequency	Regulatory Driver	Location	Parameters
Fire Extinguisher	WHC-IP-0263-TF WHC-CM-4-3	12 Months	WAC 173-303-340 40 CFR 265, Sub C NFPA 101 LSC	MO-727	• Aerate extinguisher • Equipment is tagged with current inspection date
Fire Hydrant, Valve & Ground Gate	FS-0026	12 Months	WAC 173-303-340 40 CFR 265.32 NFPA 101 LSC	NW of 242-AL-41 Basin	• Turned toward street • Unobstructed • Operational • Check for ground gate leaks • Verify the unit is labeled or tagged
Portable Fire Extinguisher	WHC-CM-4-41, 4.2	12 Months	NFPA 10; 4-4.1 WAC 173-303-340	MO-727	• Inspect for: Unimpaired physical condition Pressure gage in operable range If dry chemicals-not compacted
Portable Fire Extinguisher	WHC-CM-4-41, 4.2	05 Years	NFPA 10; 5-2 WAC 173-303-340	MO-727	• Hydrostatically test and perform maintenance on pressurized water and CO_2 extinguisher
Portable Fire Extinguisher	WHC-CM-4-41, 4.2	06 Years	NFPA 10; 4-4.1.3 WAC 173-303-340	MO-727	• Disassemble and perform maintenance on Halon, dry chemical, and stored pressure extinguisher
Portable Fire Extinguisher	WHC-CM-4-41, 4.2	12 Years	NFPA 10; 4-4.1.3 NFPA 10; 5-2 WAC 173-303-340	MO-727	• Remove non-rechargeable extinguisher from service • Hydrostatically test Halon dry chemical, and stored pressure extinguisher

Note: During inspection, calibration tags are checked to verify that they are current.

A-5 GENERAL FACILITY INSPECTIONS
HOUSEKEEPING/STRUCTURAL

Performed By: Operations

Item Description	Procedure	Inspection Frequency	Regulatory Driver	Location	Parameters
General Area Inspection	TF-OR-A-03	Daily	WAC-173-303-320 40 CFR 265.15 40 CFR 265, Sub Q	Throughout Facility	• Notify Solid Waste Engineering to remove any empty or unlabeled drums • Inspect for abnormal wet spots/spills in the area • Inspect the area for combustible material (rags, tumbleweeds, etc.) • Verify active portions of the facility have required signs
General Inspection of Basin Covers	TF-OR-A-03	Daily	WAC 173-303-650 40 CFR 265.223	Basins 42, 43, 44	• Check that basin covers are free of wind blown debris • Verify that basin covers are free from obvious tears as observed from basin perimeter
Waste Containers	TO-100-053 TO-100-052	Daily	WAC 173-303-200 40 CFR 265, Sub I	SAA	• Ensure waste container segregation and container storage location are compliant • Inspect for corrosion leakage
Aisle Space	WHC-CM-4-3	Daily	WAC 173-303-340 WAC 173-303-350 40 CFR 265.15	Throughout Facility	• Unobstructed • Sufficient clearance (at least 2 feet) • Well lit if within fixed structures
Grounds Inspection	TO-040-500 TO-040-501	01 Week	WAC-173-303-320 40 CFR 265.15 40 CFR 265, Sub Q	Throughout Facility	• Check for hazards such as sinkholes, trash, etc. • Check for wet spots and dead vegetation or animals, especially around piping and other auxiliary equipment
Structural Inspection (Outside)	TO-040-501	12 Months	WAC-173-303-320 40 CFR 265.15 40 CFR 265, Sub Q	Throughout Facility	• Disposal of unnecessary items • Check the outside of the building for any hazards • Report any unusual conditions

Note: During inspections, calibration tags are checked to verify that are current.

A-6.1 242-AL-42 BASIN

Performed by: Operations

Item Description	Equipment Number	Procedure	Inspection Frequency	Regulatory Driver	Item Type/ Class	CERS Number	Parameters
Leachate Level Transmitter	LT-42-1	TF-EFT-635-005	12 months	40 CFR 265.226 WAC 173-303-650	Regulatory	AL003 1	0.0 - 28.0 in H2O
Leachate Level Local Indication	LI-42-1	TF-EFT-635-005 TF-OR-A-03	12 months Daily	40 CFR 265.226 WAC 173-303-650	Regulatory	AL003 2	0.0 - 28.0 in H2O
Basin Level Transmitter	LT-42-2	TF-EFT-635-005	12 months	40 CFR 265.226 WAC 173-303-650	Regulatory	AL006 1	0.0 - 24.0 ft H2O
Basin Level Local Indication	LI-42-2	TF-EFT-635-005 TF-OR-A-03	12 months Daily	40 CFR 265.226 WAC 173-303-650	Regulatory	AL006 2	0.0 - 24.0 ft H2O
Leachate Flow Indication	FQI-42-1	TF-EFT-635-005 TF-OR-A-03	12 months Daily	40 CFR 265.226 WAC 173-303-650	Regulatory	AL009 2	4.9 - 5.1 Gal/min
Catch Basin Leak Detector Element	LDE-42-1	TF-EFT-635-004	6 months	40 CFR 265.226 WAC 173-303-650	Regulatory	AL012 1	Function test to activate loop test
Catch Basin Indication Control Relay	LDS-42-1	TF-EFT-635-004	6 months	40 CFR 265.226 WAC 173-303-650	Regulatory	AL012 2	Funciton test: AL012
Catch Basin Leak Detector Relay	LDY-42-1	TF-EFT-635-004	6 months	40 CFR 265.226 WAC 173-303-650	Regulatory	AL012 3	Function test: AL012
Catch Basin Amber Warning Strobe Light	LDI-42	TF-EFT-635-004	6 months	40 CFR 265.226 WAC 173-303-650	Regulatory	AL012 4	Function test: AL012
Leachate Flow Rate Indicator	FI-42-1	TF-OR-A-03	Daily	40 CFR 265.226 WAC 173-303-650	Regulatory	---	0-999
Leachate Level Element High	LEH-42-1	TF-EFT-635-005	12 months	40 CFR 265.226 WAC 173-303-650	Regulatory	---	Function test to activete
Leachate Level Element Low	LEL-42-1	TF-EFT-635-005	12 months	40 CFR 265.226 WAC 173-303-650	Regulatory	---	Function test to activate
Leachate Level Relay	LY-42-1	TF-EFT-635-005	12 months	40 CFR 265.226 WAC 173-303-650	Regulatory	---	Function test to activate

A-6.1 242-AL-42 BASIN

Performed by: Operations

Item Description	Equipment Number	Procedure	Inspection Frequency	Regulatory Driver	Item Type/ Class	CERS Number	Parameters
Leachate Pump	P-42	TF-EFT-635-005	12 months	40 CFR 265.226 WAC 173-303-650	Regulatory	---	Function test
		TF-OR-A-03	Daily				
Pipe Manifold Outlet Pressure Indicator	PI-42-1	TF-OR-A-03	Daily	40 CFR 265.226 WAC 173-303-650	Regulatory	---	0.0 - 60.0 psi

Note: During inspections, calibration tags are checked to verify that they are current.

A-6.2 242-AL-42 BASIN

Performed by: Maintenance

Item Description	Equipment Number	Procedure	Inspection Frequency	Regulatory Driver	Item Type/ Class	CERG Number	Parameters
Leachate Level Transmitter	LT-42-1	06-TF-074	12 Months	40 CFR 265.226 WAC 173-303-650	Regulatory	AL003 1	0.0 - 28.0 in H2O
Leachate Level Local Indication	LI-42-1	PSCP-4-194	12 Months	40 CFR 265.226 WAC 173-303-650	Regulatory	AL003 2	0.0 - 28.0 in H2O
Basin Level Transmitter	LT-42-2	06-TF-074	12 Months	40 CFR 265.226 WAC 173-303-650	Regulatory	AL006 1	0.0 - 24.0 ft H2O
Basin Level Local Indication	LI-42-2	PSCP-4-194	12 Months	40 CFR 265.226 WAC 173-303-650	Regulatory	AL006 2	0.0 - 20.0 ft H2O
Leachate Flow Indication	FQI-42-1	06-TF-072	12 Months	40 CFR 265.226 WAC 173-303-650	Regulatory	AL009 2	4.9 - 5.1 Gal/min
Catch Basin Indication Control Relay	LDS-42-1	06-TF-072	06 Months	40 CFR 265.226 WAC 173-303-650	Regulatory	AL012 2	Calibration
Catch Basin Leak Detector Relay	LDY-42-1	06-TF-072	06 Months	40 CFR 265.226 WAC 173-303-650	Regulatory	AL012 3	Calibration
Catch Basin Amber Warning Strobe Light	LDI-42	06-TF-072	06 Months	40 CFR 265.226 WAC 173-303-650	Regulatory	AL012 4	Calibration

Note: During inspections, calibration tags are checked to verify that they are current.

A-7.1 242-AL-43 BASIN

Performed by: Operations

Item Description	Equipment Number	Procedure	Inspection Frequency	Regulatory Driver	Item Type/ Class	CERS Number	Parameters
Leachate Level Transmitter	LT-43-1	TF-EFT-635-005	12 months	40 CFR 265.266 WAC 173-303-650	Regulatory	AL004 1	0.0 - 28.0 in H2O
Leachate Level Local Indication	LI-43-1	TF-EFT-635-005 TF-OR-A-03	12 months Daily	40 CFR 265.266 WAC 173-303-650	Regulatory	AL004 2	0.0 - 28.0 in H2O
Basin Level Transmitter	LT-43-2	TF-EFT-635-005	12 months	40 CFR 265.266 WAC 173-303-650	Regulatory	AL007 1	0.0 - 24.0 ft H2O
Basin Level Local Indication	LI-43-2	TF-EFT-635-005 TF-OR-A-03	12 months Daily	40 CFR 265.266 WAC 173-303-650	Regulatory	AL007 2	0.0 - 24.0 ft H2O
Leachate Flow Indication	FQI-43-1	TF-EFT-635-005 TF-OR-A-03	12 months Daily	40 CFR 265.266 WAC 173-303-650	Regulatory	AL010 2	4.9 - 5.1 Gal/min
Catch Basin Leak Detector Element	LDE-43-1	TF-EFT-635-004	6 months	40 CFR 265.266 WAC 173-303-650	Regulatory	AL013 1	Function test to activate loop test
Catch Basin Indication Control Relay	LDS-43-1	TF-EFT-635-004	6 months	40 CFR 265.266 WAC 173-303-650	Regulatory	AL013 2	Funciton test: AL012
Catch Basin Detector Relay	LDY-43-1	TF-EFT-635-004	6 months	40 CFR 265.266 WAC 173-303-650	Regulatory	AL013 3	Function test: AL012
Catch Basin Amber Warning Strobe Light	LDI-43	TF-EFT-635-004	6 months	40 CFR 265.266 WAC 173-303-650	Regulatory	AL013 4	Function test: AL012
Leachate Flow Rate Indicator	FI-43-1	TF-OR-A-03	Daily	40 CFR 265.266 WAC 173-303-650	Regulatory	---	0-999
Leachate Level Element High	LEH-43-1	TF-EFT-635-005	12 months	40 CFR 265.266 WAC 173-303-650	Regulatory	---	Function test to activate
Leachate Level Element Low	LEL-43-1	TF-EFT-635-005	12 months	40 CFR 265.266 WAC 173-303-650	Regulatory	---	Function test to activate
Leachate Level Relay	LY-43-1	TF-EFT-635-005	12 months	40 CFR 265.266 WAC 173-303-650	Regulatory	---	Function test to activate

A-7.1 242-AL-43 BASIN

Performed by: Operations

Item Description	Equipment Number	Procedure	Inspection Frequency	Regulatory Driver	Item Type/ Class	CBRS Number	Parameters
Leachate Pump	P-43	TF-EFT-635-005	12 months	40 CFR 265.266 WAC 173-303-650	Regulatory	---	Functional test
		TF-OR-A-03	Daily				
Pipe Manifold Outlet Pressure Indicator	PI-43-1	TF-OR-A-03	Daily	40 CFR 265.266 WAC 173-303-650	Regulatory	---	0.0 - 60.0 psi

Note: During inspections, calibration tags are checked to verify that they are current.

A-7.2 242-AL-43 BASIN

Performed by: Maintenance

Item Description	Equipment Number	Procedure	Inspection Frequency	Regulatory Driver	Item Type/ Class	CERS Number	Parameters
Leachate Level Transmitter	LT-43-1	06-TF-074	12 Months	40 CFR 265.266 WAC 173-303-650	Regulatory	AL004 1	0.0 - 28.0 in H2O
Leachate Level Local Indication	LI-43-1	PSCP-4-194	12 Months	40 CFR 265.266 WAC 173-303-650	Regulatory	AL004 2	0.0 - 28.0 in H2O
Basin Level Transmitter	LT-43-2	06-TF-074	12 Months	40 CFR 265.266 WAC 173-303-650	Regulatory	AL007 1	0.0 - 24.0 ft H2O
Basin Level Local Indication	LI-43-2	PSCP-4-194	12 Months	40 CFR 265.266 WAC 173-303-650	Regulatory	AL007 2	0.0 - 20.0 ft H2O
Leachate Flow Indication	FQI-43-1	06-TF-075	12 Months	40 CFR 265.266 WAC 173-303-650	Regulatory	AL010 2	4.9 - 5.1 Gal/min
Catch Basin Indication Control Relay	LDS-43-1	06-TF-072	06 Months	40 CFR 265.266 WAC 173-303-650	Regulatory	AL013 2	Calibration
Catch Basin Detector Relay	LDY-43-1	06-TF-072	06 Months	40 CFR 265.266 WAC 173-303-650	Regulatory	AL013 3	Calibration
Catch Basin Amber Warning Strobe Light	LDI-43	06-TF-072	06 Months	40 CFR 265.266 WAC 173-303-650	Regulatory	AL013 4	Calibration

Note: During inspections, calibration tags are checked to verify that they are current.

A-8.1 242-A L-44 BASIN

Performed by: Operations

Item Description	Equipment Number	Procedure	Inspection Frequency	Regulatory Driver	Item Type/ Class	CBRS Number	Parameters
Leachate Level Transmitter	LT-44-1	TF-EFT-635-005	12 Months	40 CFR 265.266 WAC 173-303-650	Regulatory	AL005 1	0.0 - 28.0 in H2O
Leachate Level Local Indication	LI-44-1	TF-EFT-635-005 TF-OR-A-03	12 Months Daily	40 CFR 265.266 WAC 173-303-650	Regulatory	AL005 2	0.0 - 28.0 in H2O
Basin Level Transmitter	LT-44-2	TF-EFT-635-005	12 Months	40 CFR 265.266 WAC 173-303-650	Regulatory	AL008 1	0.0 - 24.0 ft H2O
Basin Level Local Indication	LI-44-2	TF-EFT-635-005 TF-OR-A-03	12 Months Daily	40 CFR 265.266 WAC 173-303-650	Regulatory	AL008 2	0.0 - 24.0 ft H2O
Leachate Flow Indication	FQI-44-1	TF-EFT-635-005 TF-OR-A-03	12 Months Daily	40 CFR 265.266 WAC 173-303-650	Regulatory	AL011 2	4.9 - 5.1 Gal/min
Catch Basin Leak Detector Element	LDE-44-1	TF-EFT-635-004	06 Months	40 CFR 265.266 WAC 173-303-650	Regulatory	AL014 1	Function test to activate loop test
Catch Basin Indication Control Relay	LDS-44-1	TF-EFT-635-004	06 Months	40 CFR 265.266 WAC 173-303-650	Regulatory	AL014 2	Funciton test: AL012
Catch Basin Detector Relay	LDY-44-1	TF-EFT-635-004	06 Months	40 CFR 265.266 WAC 173-303-650	Regulatory	AL014 3	Function test: AL012
Catch Basin Amber Warning Strobe Light	LDI-44	TF-EFT-635-004	06 Months	40 CFR 265.266 WAC 173-303-650	Regulatory	AL014 4	Function test: AL012
Leachate Flow Rate Indicator	FI-44-1	TF-OR-A-03	Daily	40 CFR 265.266 WAC 173-303-650	Regulatory	—	0-999
Leachate Level Element High	LEH-44-1	TF-EFT-635-005	12 onths	40 CFR 265.266 WAC 173-303-650	Regulatory	—	Function test to activate
Leachate Level Element Low	LEL-44-1	TF-EFT-635-005	12 onths	40 CFR 265.266 WAC 173-303-650	Regulatory	—	Function test to activate
Leachate Level Relay	LY-44-1	TF-EFT-635-005	12 Months	40 CFR 265.266 WAC 173-303-650	Regulatory	—	Function test to activate

A-8.1 242-A L-44 BASIN

Performed by: Operations

Item Description	Equipment Number	Procedure	Inspection Frequency	Regulatory Driver	Item Type/ Class	CBRS Number	Parameters
Leachate Pump	P-44	TF-EFT-635-005	12 Months	40 CFR 265.266 WAC 173-303-650	Regulatory	---	Function test
		TF-OR-A-03	Daily				
Pipe Manifold Outlet Pressure Indicator	PI-44-1	TF-OR-A-03	Daily	40 CFR 265.266 WAC 173-303-650	Regulatory	---	0.0 - 60.0 psi

Note: During inspections, calibration tags are checked to verify that they are current.

A-8.2 242-AL-44 BASIN

Performed by: Maintenance

Item Description	Equipment Number	Procedure	Inspection Frequency	Regulatory Driver	Item Type/ Class	CBRS Number	Parameters
Leachate Level Transmitter	LT-44-1	06-TF-074	12 months	40 CFR 265.266 WAC 173-303-650	Regulatory	AL005 1	0.0 - 28.0 in H2O
Leachate Level Local Indication	LI-44-1	PSCP-4-194	12 Months	40 CFR 265.266 WAC 173-303-650	Regulatory	AL005 2	0.0 - 28.0 in H2O
Basin Level Transmitter	LT-44-2	06-TF-074	12 Months	40 CFR 265.266 WAC 173-303-650	Regulatory	AL008 1	0.0 - 24.0 ft H2O
Basin Level Local Indication	LI-44-2	PSCP-4-194	12 Months	40 CFR 265.266 WAC 173-303-650	Regulatory	AL008 2	0.0 - 20.0 ft H2O
Leachate Flow Indication	FQI-44-1	06-TF-075	12 Months	40 CFR 265.266 WAC 173-303-650	Regulatory	AL011 2	4.9 - 5.1 Gal/min
Catch Basin Indication Control Relay	LDS-44-1	06-TF-072	06 Months	40 CFR 265.266 WAC 173-303-650	Regulatory	AL014 2	Calibration
Catch Basin Detector Relay	LDY-44-1	06-TF-072	06 Months	40 CFR 265.266 WAC 173-303-650	Regulatory	AL014 3	Calibration
Catch Basin Amber Warning Strobe Light	LDI-44	06-TF-072	06 Months	40 CFR 265.266 WAC 173-303-650	Regulatory	AL014 4	Calibration

Note: During inspections, calibration tags are checked to verify that they are current.

A-9 TRANSFER PIPELINE

Performed by: Operations and Maintenance

Item Description	Equipment Number	Procedure	Inspection Frequency	Regulatory Driver	Item Type/ Class	CBRS Number	Parameters
Leak Detection Element	LDE-A1-01	TF-EFT-635-004	6 Months	40 CFR 265.193 WAC 173-303-640	Regulatory	—	Function test to activate
Leak Detection Element	LDE-A1-02	TF-EFT-635-004	6 Months	40 CFR 265.193 WAC 173-303-640	Regulatory	—	Function test to activate
Leak Detection Element	LDE-A1-03	TF-EFT-635-004	6 Months	40 CFR 265.193 WAC 173-303-640	Regulatory	—	Function test to activate
Leak Detection Element	LDE-A1-04	TF-EFT-635-004	6 Months	40 CFR 265.193 WAC 173-303-640	Regulatory	—	Function test to activate
Leak Detection Element	LDE-A1-05	TF-EFT-635-004	6 Months	40 CFR 265.193 WAC 173-303-450	Regulatory	—	Function test to activate
Leak Detection Element	LDE-A1-06	TF-EFT-635-004	6 Months	40 CFR 265.193 WAC 173-303-640	Regulatory	—	Function test to activate
Leak Detection Element	LDE-A1-07	TF-EFT-635-004	6 Months	40 CFR 265.193 WAC 173-303-640	Regulatory	—	Function test to activate
Leak Detection Element	LDE-A1-08	TF-EFT-635-004	6 Months	40 CFR 265.193 WAC 173-303-640	Regulatory	—	Function test to activate

Note: During inspections, calibration tags are checked to verify that they are current.

A-10 SAMPLING OF CONDENSATE AND LEACHATE SYSTEMS

Performed by: WMTE

Item Description	Procedure	Inspection Frequency	Regulatory Driver	Item Type/ Class	Location	Parameters
Active Retention Basins	SR 3.1.1.1 TO-670-010	6 Months OR when half-full (3.25 million gallons) or full (6.25 million gallons), whichever occurs first	40 CFR 265	Regulatory	Basins 42, 42, and/or 44 (Nine sampling ports in each basin)	• Analyzed for constituents identified in annual sampling plan
Inactive Basins Containing Process Condensate	SR 3.1.1.1 TO-670-010	6 Months	40 CFR 265	Regulatory	Basins 42, 43, and/or 44 (Nine sampling ports in each basin)	• Analyzed for constituents identified in annual sampling plan
Groundwater Monitoring	SW-846, Chap 10	6 Months	WAC 173-303-400 WAC-173-303-645 40 CFR 265 Subpart F	Regulatory	Four groundwater wells (Figure 10-1)	• Analyzed for constituents identified in annual sampling plan
Leachate Sampling	OSD-T-151 00029 TO-670-010	Non-routine: only when leachate rate exceeds the Action Leakage Rate	40 CFR 265	Regulatory	Basins 42, 43, and/or 44 (Nine sampling ports in each basin)	• Analyzed for constituents identified in annual sampling plan or by process memo

Note: During inspections, calibration tags are checked to verify that they are current.

This page intentionally left blank.

9413276.1579