U.S. Department of Energy
Hanford Site

March 24, 2020

20-TPD-0015

Ms. Alexandra K. Smith, Program Manager
Nuclear Waste Program
Washington State
Department of Ecology
3100 Port of Benton Blvd.
Richland, Washington 99354

Dear Ms. Smith:

THE U.S. DEPARTMENT OF ENERGY, OFFICE OF RIVER PROTECTION TRANSMITTAL OF RPP-PLAN-63150, "CATCH TANK 241-C-301 SAMPLING AND ANALYSIS PLAN," REV. 0

The purpose of this letter is to transmit the "*Catch Tank 241-C-301 Sampling and Analysis Plan*," RPP-PLAN-63150, Rev. 0, to the Washington State Department of Ecology.

Sampling in Catch Tank 241-C-301 supports milestone M-045-83, *Complete the Closure of WMA C*; detailed milestones for this specific work scope are the subject of current negotiations. RPP-RPT-45723, *Catch Tank 241-C-301 Retrieval Feasibility Study*, Rev. 0, identified sampling and analysis as a necessary step in support of future decisions regarding potential retrieval of waste from the catch tank (report currently available in the Tri-Party Agreement Administrative Record). Detailed requirements in the sampling and analysis plan are derived from RPP-45634, *Data Quality Objectives for Tank 241-C-301 Waste Transfer and Component Closure*, Rev. 1, dated April 17, 2019.

Sampling equipment design, fabrication, and testing are currently underway. Field work for sampling at Catch Tank 241-C-301 is scheduled in late 2020.

If you have any questions, please contact me, or your staff may contact James Lynch, Tank Farms Programs Division, Office of River Protection, on (509) 376-4170.

Sincerely,

Brian A. Harkins for

Robert G. Hastings, Assistant Manager
Tank Farms Project
Office of River Protection

TPD:JJL

Attachments:
1. RPP-PLAN-63150
2. RPP-45634

cc w/attachs:
M. Barnes, Ecology
S. L. Brasher, MSA
D. K. DeFord, WRPS
D. R. Einan, EPA
S. Leckband, HAB
J. J. Lyon, Ecology
T. G. Myer, WRPS
K. Niles, ODOE
D. L. Parker, WRPS
J. K. Perry, MSA
P. L. Rutland, WRPS
C. L. Tabor, WRPS
Administrative Record
Environmental Portal
WRPS Correspondence

cc w/o attachs:
J. Bell, NPT
A. Buck, Wanapum
L. Contreras, YN
P. Mills, CTUIR
M. Murphy, CTUIR

Attachment 1
20-TPD-0015

CATCH TANK 241-C-301 SAMPLING AND ANALYSIS PLAN
RPP-PLAN-63150, REV. 0

(55 Pages Including Cover Sheet)

DOCUMENT RELEASE AND CHANGE FORM

Prepared For the U.S. Department of Energy, Assistant Secretary for Environmental Management
By Washington River Protection Solutions, LLC., PO Box 850, Richland, WA 99352
Contractor For U.S. Department of Energy, Office of River Protection, under Contract DE-AC27-08RV14800

TRADEMARK DISCLAIMER: Reference herein to any specific commercial product, process, or service by trade name, trademark, manufacturer, or otherwise, does not necessarily constitute or imply its endorsement, recommendation, or favoring by the United States government or any agency thereof or its contractors or subcontractors. Printed in the United States of America.

Release Stamp

DATE: Jul 31, 2019

HANFORD RELEASE

1. **Doc No:** RPP-PLAN-63150 **Rev.** 00

2. **Title:**
CATCH TANK 241-C-301 SAMPLING AND ANALYSIS PLAN

3. **Project Number:** ☒N/A

4. **Design Verification Required:** ☐Yes ☒No

5. **USQ Number:** ☒ N/A RPP-27195

6. **PrHA Number** **Rev.** ☒ N/A

Clearance Review Restriction Type: public

7. **Approvals**

Title	Name	Signature	Date
Clearance Review	Raymer, Julia R	*Raymer, Julia R*	07/31/2019
Document Control Approval	Crockett, Shelby	*Crockett, Shelby*	07/31/2019
Originator	Nguyen, Duc M	*Nguyen, Duc M*	06/11/2019
Other Approver	Diedesch, Samuel J	*Diedesch, Samuel J*	06/11/2019
Other Approver	April, John G	*Nguyen, Duc M for April, John G per telecon*	06/12/2019
Other Approver	Withrow, Steve M	*Withrow, Steve M*	05/14/2019
Other Approver	McKinney, Jo M	*McKinney, Jo M*	06/12/2019
Other Approver	Cooke, Gary A	*Cooke, Gary A*	06/11/2019
Other Approver	Snyder, Susan	*Snyder, Susan*	06/11/2019
Other Approver	Pappas, Alexander D	*Pappas, Alexander D*	05/28/2019
Responsible Manager	Baune, Heather L	*Baune, Heather L*	06/13/2019

8. **Description of Change and Justification**

Initial release

9. **TBDs or Holds** ☒N/A

10. **Related Structures, Systems, and Components**

a. Related Building/Facilities ☐N/A	b. Related Systems ☒N/A	c. Related Equipment ID Nos. (EIN) ☒N/A
241-C-301		

11. **Impacted Documents – Engineering** ☒N/A

Document Number	Rev.	Title

12. **Impacted Documents (Outside SPF):**

N/A

13. **Related Documents** ☐N/A

Document Number	Rev.	Title
HNF-SD-WM-DQO-001	24	DATA QUALITY OBJECTIVES FOR TANK FARM WASTE COMPATIBILITY PROGRAM
RPP-23403	06	SINGLE-SHELL TANK COMPONENT CLOSURE DATA QUALITY OBJECTIVES
RPP-45634	01	DATA QUALITY OBJECTIVES FOR TANK 241-C-301 WASTE TRANSFER AND COMPONENT CLOSURE
RPP-RPT-60210	00	Data Quality Objectives to Support Best-Basis Inventory (BBI)

14. **Distribution**

Name	Organization
Anderson, Mason A	TNK WST INVENTORY & CHARACTZTN
April, John G	CLOSURE & INTERIM MEASURES
Baune, Heather L	TNK WST INVENTORY & CHARACTZTN
Cooke, Gary A	PROCESS CHEMISTRY
Craft, Tom	SAMPLING OPERATIONS
Diedesch, Samuel J	TNK WST INVENTORY & CHARACTZTN
Garberg, Vern	TFP FIELD CREW OPS
Holm, Melissa J	A/C FARM RETRIEVAL ENGRNG
Klages, Deanna L	RETRVL & CLOSURE/PROJ ENV CMPL
McKinney, Jo M	ANALYTICAL PROJECT MGMT
Nguyen, Duc M	TNK WST INVENTORY & CHARACTZTN
Pappas, Alexander D	CLOSURE & INTERIM MEASURES
Parker, Dan	CLOSURE & INTERIM MEASURES
Schramm, Geoff D	QA PROGRAMS & ASSESSMENTS
Simons, Greg B	SAMPLING OPERATIONS
Snyder, Susan	PROJECT MANAGEMENT

DOCUMENT RELEASE AND CHANGE FORM	**Doc No:** RPP-PLAN-63150 **Rev.** 00

14. **Distribution**

Name	**Organization**
Tribbett, Joe S	SAMPLING OPERATIONS
Uytioco, Elise M	PROD OPERATIONS PROCESS ENGRNG
Withrow, Steve M	TANK FARM SAMPLING

INFORMATION CLEARANCE REVIEW AND RELEASE APPROVAL

Part I: Background Information

Title: CATCH TANK 241-C-301 SAMPLING AND ANALYSIS PLAN

Information Category:
- ☐ Abstract ☐ Journal Article ☐ Summary
- ☐ Internet ☐ Visual Aid ☐ Software
- ☐ Full Paper ☑ Report ☐ Other

Publish to OSTI? ☐ Yes ☑ No

Trademark/Copyright "Right to Use" Information or Permission Documentation	Yes	NA
	☐	☑

Document Number: RPP-PLAN-63150 Revision 00 Date: June 2019

Author: Nguyen, Duc M

Part II: External/Public Presentation Information

Conference Name:

Sponsoring Organization(s): WRPS

Date of Conference: Conference Location:

Will Material be Handed Out? ☐ Yes ☑ No Will Information be Published? ☐ Yes ☑ No *(If Yes, attach copy of Conference format instructions/guidance.)*

Part III: WRPS Document Originator Checklist

Description	*Yes*	*N/A*	*Print/Sign/Date*
Information Product meets requirements in TFC-BSM-AD-C-01?	☐	☑	
Document Release Criteria in TFC-ENG-DESIGN-C-25 completed? (Attach checklist)	☐	☑	
If product contains pictures, safety review completed?	☐	☑	

Part IV: WRPS Internal Review

Function	*Organization*	*Date*	*Print Name/Signature/Date*
Subject Matter Expert	WRPS	07/11/2019	Nguyen, Duc M IDMS Data File att.
Responsible Manager	WRPS	06/17/2019	Baune, Heather L IDMS Data File att.
Other:			

Part V: IRM Clearance Services Review

Description	*Yes*	*No*	*Print Name/Signature*
Document Contains Classified Information?	☐	☒	If Answer is "Yes," ADC Approval Required Print Name/Signature/Date
Document Contains Information Restricted by DOE Operational Security Guidelines?	☐	☒	Reviewer Signature: Print Name/Signature/Date
Document is Subject to Release Restrictions? *If the answer is "Yes," please mark category at right and describe limitation or responsible organization below:*	☐	☒	Document contains: ☐ Applied Technology ☐ Protected CRADA ☐ Personal/Private ☐ Export Controlled ☐ Proprietary ☐ Procurement – Sensitive ☐ Patentable Info. ☐ OUO ☐ Predecisional Info. ☐ UCNI ☐ Restricted by Operational Security Guidelines ☐ Other (Specify)
Additional Comments from Information Clearance Specialist Review?	☐	☒	Information Clearance Specialist Approval APPROVED By Janis D. Aardal at 12:12 pm, Jul 18, 2019 Print Name/Signature/Date

When IRM Clearance Review is Complete – Return to WRPS Originator for Final Signature Routing (Part VI)

INFORMATION CLEARANCE REVIEW AND RELEASE APPROVAL

Part VI: Final Review and Approvals

Description	*Approved for Release*		*Print Name/Signature*	
	Yes	*N/A*		
WRPS External Affairs	☒	☐	IDMS Data File att.	McKenna, Mark
WRPS Office of Chief Counsel	☒	☐	IDMS Data File att.	Cherry, Steve
DOE – ORP Public Affairs/Communications /OCS	☒	☐	IDMS Data File att.	Beeman, Melinda C/Levardi, Yvonne M
Other: ORP SME	☒	☐	IDMS Data File att.	Lobos, Rodrigo A
Other: DOE OCC	☒	☐	IDMS Data File att.	Silberstein, Mark D

Comments Required for WRPS-Indicate Purpose of Document:

This document specifies requirements and provides direction for sampling and analysis of waste in catch tank 241-C-301.

APPROVED
By Janis D. Aardal at 12:12 pm, Jul 18, 2019

Approved for Public Release; Further Dissemination Unlimited

Information Release Station

Was/Is Information Product Approved for Release? ☒ Yes ☐ No

If Yes, what is the Level of Releaser? ☑ Public/Unrestricted ☐ Other (Specify) _____

Date Information Product Stamped/Marked for Release: 07/18/2019

Was/Is Information Product Transferred to OSTI? ☐ Yes ☒ No

Forward Copies of Completed Form to WRPS Originator

```
- <workflow name="(JDA) Normal - RPP-PLAN-63150 Rev0_CatchTankC301SAP"
    id="244160051">
  - <task name="Clearance Process" id="0" date-initiated="20190617T1250"
      performer="Janis D Aardal" performer-id="267960" username="h0090683">
      <comments>Due Wednesday, June 26, 2019 - COB Please approve the Rev.
        0, CATCH TANK 241-C-301 SAMPLING AND ANALYSIS PLAN, by Duc
        Nguyen for public release. Thank you, Janis Aardal Information
        Clearance</comments>
    </task>
    <task name="Add XML" id="1" date-done="20190617T1250" />
    <task name="Manager Approval" id="41" date-due="20190620T1250" date-
      done="20190617T1314" performer="Heather L Baune" performer-
      id="141017875" username="h2790307" disposition="Approve"
      authentication="true" />
    <task name="Document Reviewer1" id="54" date-due="20190620T1313" date-
      done="20190620T0726" performer="Mark McKenna" performer-id="182697281"
      username="h1903617" disposition="Public Release" authentication="true" />
    <task name="Document Reviewer2" id="53" date-due="20190620T1313" date-
      done="20190626T0827" performer="Stephen B Cherry" performer-id="1382719"
      username="h0374767" disposition="Public Release" authentication="true" />
    <task name="Doc Owner Clearance Review" id="13" date-due="20190627T0827"
      date-done="20190626T0852" performer="Duc M Nguyen" performer-
      id="1085768" username="h0051515" disposition="Send On"
      authentication="true" />
    <task name="Milestone 1" id="24" date-done="20190626T0852" />
  - <task name="ORP Document Reviewer1" id="57" date-due="20190628T0852"
      date-done="20190708T0950" performer="Melinda C Beeman" performer-
      id="198738044" username="h5116897" disposition="Public Release"
      authentication="true">
      <reviewer performer="Rod (Rodrigo) A Lobos" performer-id="232334741"
        username="h2488419" />
      <reviewer performer="Mark D Silberstein" performer-id="158207236"
        username="h5490246" />
      <reviewer performer="Yvonne M Levardi" performer-id="185346745"
        username="h7131303" />
      <comments>Reviewer's Comments Date: 07/02/2019 07:21 AM Step Name:
        RPP-PLAN-63150 Revision 00 Performer: Silberstein, Mark (h5490246)
        approve Reviewer's Comments Date: 07/08/2019 09:17 AM Step Name:
        RPP-PLAN-63150 Revision 00 Performer: Levardi, Yvonne (h7131303) no
        comments</comments>
    </task>
    <task name="Doc Owner Reviews ORP Comments" id="61" date-
      due="20190709T0950" date-done="20190711T0904" performer="Duc M
      Nguyen" performer-id="1085768" username="h0051515" disposition="Send On"
      authentication="true" />
    <task name="Milestone 2" id="62" date-done="20190711T0904" />
    <task name="Verify Doc Consistency" id="4" date-due="20190712T0903" date-
      done="20190718T0743" performer="Janis D Aardal" performer-id="267960"
      username="h0090683" disposition="Cleared" authentication="true" />
  </workflow>
```

RPP-PLAN-63150, Rev. 0

SIGNATURE PAGE

The signatories concur with this document as of the signature dates.

R. A. Lobos
Department of Energy – Office of River Protection

6-12-2019
Date

M. W. Barnes
State of Washington Department of Ecology

June 11, 2019
Date

RPP-PLAN-63150
Revision 0

CATCH TANK 241-C-301 SAMPLING AND ANALYSIS PLAN

Prepared by

D. M. Nguyen
Washington River Protection Solutions LLC

Date Published
July 2019

Prepared for the U.S. Department of Energy
Office of River Protection

Contract No. DE-AC27-08RV14800

Approved for Public Release;
Further Dissemination Unlimited

TABLE OF CONTENTS

1.0 SAMPLING AND ANALYSIS OBJECTIVES 1
2.0 FACILITY AND TANK WASTE DESCRIPTION 1
3.0 SAMPLING EVENT REQUIREMENTS 4
3.1 SAMPLING DESIGN REQUIREMENTS 4
3.2 SAMPLE COLLECTION 5
3.2.1 Liquid Sampling 5
3.2.2 Solids Sampling 8
4.0 LABORATORY ANALYSIS REQUIREMENTS 10
4.1 DIRECTION FOR SAMPLE HANDLING 10
4.1.1 Direction for Handling Liquid Samples 10
4.1.2 Direction for Handling Solids Samples 11
4.2 REQUIREMENTS FOR ANALYSIS 11
4.2.1 Requirements for Analysis of Liquid Samples 13
4.2.2 Requirements for Analysis of Solids Samples 20
4.3 INSUFFICIENT SAMPLE RECOVERY 25
5.0 QUALITY ASSURANCE AND QUALITY CONTROL 25
6.0 EXCEPTIONS AND CLARIFICATIONS 34
7.0 ORGANIZATION 35
8.0 DELIVERABLES 36
9.0 CHANGE CONTROL 37
10.0 REFERENCES 38
APPENDIX A - RADIONUCLIDE ESTIMATES FOR SAMPLE SHIPPING A-1
APPENDIX B – CHARACTERIZATION CHANGE NOTICE B-1

LIST OF FIGURES

Figure 2-1. Catch Tank C-301 2
Figure 2-2. Tank Riser Layout 3
Figure 2-3. Location of Catch Tank C-301 3
Figure 3-1. Photograph of a Bottle-on-String Sampler 5
Figure 3-2. Conceptual Model of a Modified Finger Trap Sampler 8

LIST OF TABLES

Table 2-1. Liquid Sample Results from 1985 4
Table 3-1. Summary of Sample Requirements 4
Table 3-2. Liquid Sampling Requirements 6
Table 3-3. Solids Sampling Requirements 9
Table 4-1. Required Analyses for Liquid Samples 14
Table 4-2. Primary Organic Analytes 18
Table 4-3. Secondary Organic Analytes "Hanford Library" 18
Table 4-4. Required Analyses for Solids Samples 21
Table 5-1. Quality Control Criteria for Primary Analytes – Solids Analyses 26
Table 5-2. Quality Control Criteria for Primary Analytes – Liquid Analyses 28
Table 5-3. Target Detection Limits for Primary VOA and SVOA Constituents 29
Table 5-4. Target Detection Limits for PCBs 30
Table 5-5. Target Detection Limits for Primary Inorganics 30
Table 5-6. Target Detection Limits for Secondary Inorganics 32
Table 5-7. Target and Required Detection Limits for Primary Radionuclides 32
Table 7-1. Project Key Personnel 35
Table 8-1. Final Data Report Distribution 37
Table A-1. Estimated Radionuclide Activity for Catch Tank C-301 Liquid Samples – Decay-Corrected to January 1, 2019 ..... A-2
Table A-2. Estimated Radionuclide Activity for Catch Tank C-301 Solids Samples – Decay-Corrected to January 1, 2019 ..... A-3

LIST OF TERMS

Abbreviations and Acronyms

AEA	Alpha Energy Analysis
BBI	Best-Basis Inventory
C-301	Catch Tank 241-C-301
CCN	Characterization Change Notice
CVAA	Cold Vapor Atomic Absorption
DQO	Data Quality Objective
FB	Field blank
GC/ECD	Gas Chromatography/Electron Capture Detector
GC/MS	Gas Chromatography/Mass Spectrometry
GEA	Gamma Energy Analysis
GMA	Gravimetric Moisture Analysis
IC	Ion Chromatography
ICP/AES	Inductively Coupled Plasma/Atomic Emission Spectrometry
ICP/MS	Inductively Coupled Plasma/Mass Spectrometry
LCS	Laboratory Control Sample
MSD	Matrix Spike Duplicate
N/A	Not Applicable
ORP	Office of River Protection
PCB	Polychlorinated Biphenyl
PFA	Perfluoroalkoxy
PLM	Polarized Light Microscopy
POC	Point of Contact
PTFE	Polytetrafluoroethylene
QA	Quality Assurance
QAPjP	Quality Assurance Project Plan
QC	Quality Control
RDL	Required Detection Limits
RPD	Relative Percent Difference
SB	Sampling Blank
SEM	Scanning Electron Microscopy
Sep	Separation
SST	Single-shell tank
SVOA	Semivolatile Organic Analysis
SVOC	Semivolatile Organic Compound

TB	Trip blank
TIC	Tentatively Identified Compound
TIOC	Total Inorganic Carbon
TGA	Thermogravimetric Analysis
TOC	Total Organic Carbon
TSAP	Tank Sampling and Analysis Plan
VOA	Volatile Organic Analysis
VOC	Volatile Organic Compound
WHL	Wastren Advantage Inc. Hanford Laboratory
WRPS	Washington River Protection Solutions, LLC
XRD	X-ray Diffraction

Units

g/mL	grams per milliliter
J/g	Joules per gram
J/mL	Joules per milliliter
M	moles per liter
mg/kg	milligram per kilogram
µCi	microcuries
µCi/g	microcuries per gram
µCi/L	microcuries per liter
µCi/mL	microcuries per milliliter
µg/g	micrograms per gram
µg/mL	micrograms per milliliter
mL	milliliter
%	percent
Wt%	weight percent

1.0 SAMPLING AND ANALYSIS OBJECTIVES

This tank sampling and analysis plan (TSAP) identifies sample collection, laboratory analysis, quality assurance/quality control (QA/QC), and reporting objectives for the characterization of liquid and solids in catch tank 241-C-301 (C-301).

Sampling and analysis requirements in this TSAP are based on RPP-45634, *Data Quality Objectives for Tank 241-C-301 Waste Transfer and Component Closure.* Other Data Quality Objective (DQO) documents cited in RPP-45634 are RPP-23403, *Single-Shell Tank Component Closure Data Quality Objectives*, HNF-SD-WM-DQO-001, *Data Quality Objectives for Tank Farms Waste Compatibility Program*, and RPP-RPT-60210, *Data Quality Objectives to Support Best-Basis Inventory*. Data to be collected per this TSAP will meet the requirements of these DQOs, except where noted in RPP-45634. RPP-45634 also specifies data requirements to support waste retrieval and transfer decisions for C-301.

General QA/QC requirements for tank waste sampling are specified in RPP-PLAN-62100, *Quality Assurance Project Plan for Tank Waste Sampling and Analysis* (hereafter is referred to as the QAPjP). General requirements in the QAPjP are applicable to this sampling event unless an exception is taken in section 6.0 of this TSAP. Project-specific QA/QC requirements as identified in the DQOs are also included in this TSAP.

Tank Farm Sampling will collect liquid grab samples from one riser and solids grab samples from two risers. The samples will be shipped to the 222-S Laboratory for analysis and testing. WAI Hanford Laboratory (WHL) will receive the samples, perform the analyses on the samples, and provide sample material to Process Chemistry for testing.

2.0 FACILITY AND TANK WASTE DESCRIPTION

Catch tank C-301 was built in 1944. A detailed description of the catch tank can be found in RPP-RPT-45723, *Catch Tank 241-C-301 Retrieval Feasibility Study*. C-301 is a vertical tank with an inside diameter of 20 feet and a height of 15 feet 6 inches, excluding the dome top. The tank walls are constructed of reinforced concrete with an interior application of gunite. The walls are 6 inches thick at the base and taper to 5 inches thick at the top. The bottom slab of the tank is 5-3/4 inches thick. The catch tank is buried approximately 10 feet below ground. Access to the tank interior is through two groups of risers located near the tank wall and on opposite sides of the catch tank. Each group consists of four risers, two 12-inch diameter risers and two 4-inch diameter risers (see Figures 2-1 and 2-2).

Catch tank C-301 is located northwest of single-shell tank (SST) 241-C-112 in the 241-C tank farm (see Figure 2-3). The catch tank is now inactive but was used in the past to collect drainage from diversion boxes 241-C-151, 241-C-152, 241-C-153, and 241-C-252. The catch tank accumulated waste via leaking process connections or jumper drainage from the interconnected diversion boxes during operation. Additionally, the catch tank received water from rainfall or

snowmelt and accumulated windblown dust that entered the diversion boxes and washed into the catch tank via drain lines.

The catch tank was stabilized in May 1985, with a waste level of 53.5 inches and a reported solids level measurement of 46 inches. The solids level measurement was higher than some previous waste (liquid) surface level measurements and its validity was questioned (RPP-RPT-45723). Recent inspection in May 2018 shows a total waste level of 66.3 inches (WRPS-1803745, "FY18 Visual Inspection of Tank 241-C-301"), indicating continued water intrusion despite the tank stabilization. Solids level was also re-measured in 2018; measurements of 6.8 and 9.1 inches were obtained at Riser 3 and 6, respectively (WRPS-1803745). It appears that the solids level reported in 1985 was in error.

Figure 2-1. Catch Tank C-301

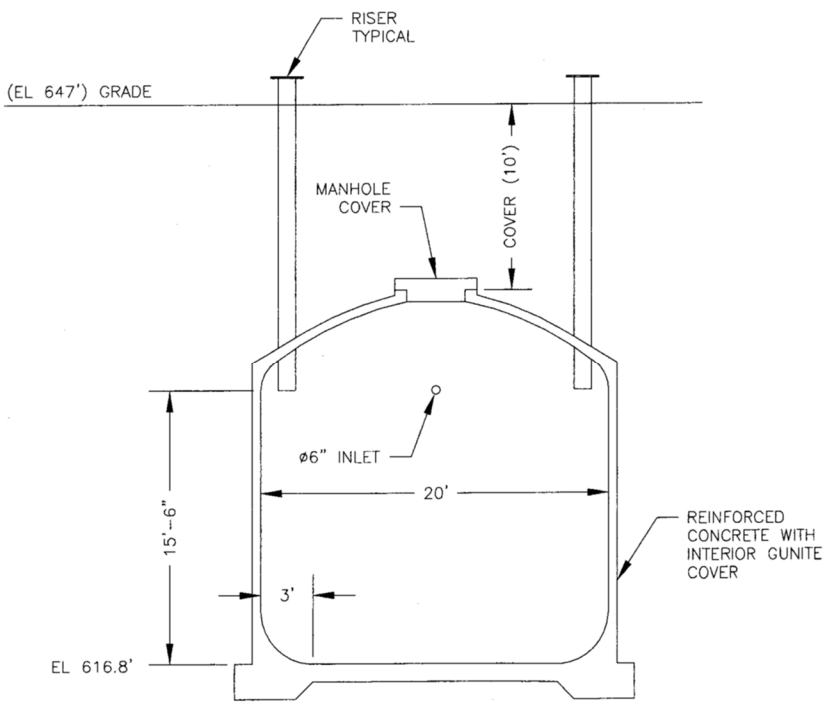

Figure 2-2. Tank Riser Layout

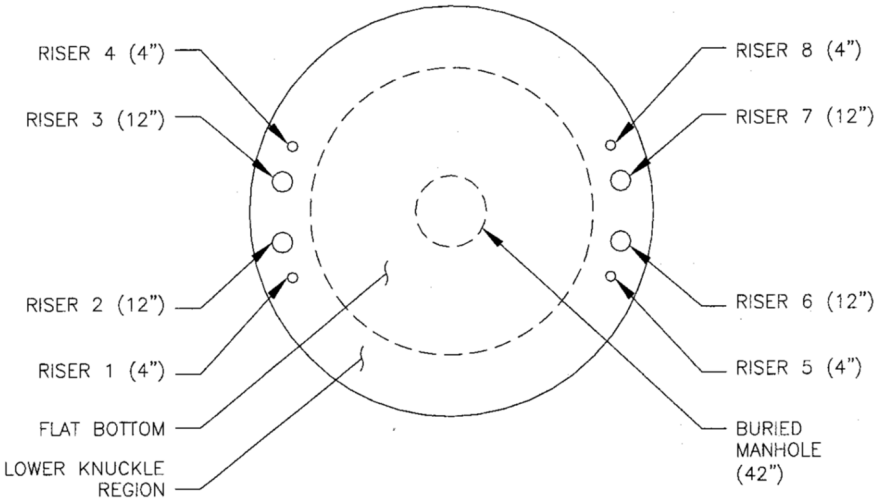

Based on an average solids depth of 8 inches, the solids volume is estimated to be approximately 1,600 gallons. By difference, the catch tank also contains approximately 11,600 gallons of liquid. Liquid in the catch tank was sampled on January 24, 1985 and sample results are summarized in Table 2-1 (RPP-RPT-45723). Although the data are limited in quantity and do not directly represent the current waste due to water intrusion and radioactive decay, they provide an indication of the contamination level in the liquid. There are no sample data on the solids.

Figure 2-3. Location of Catch Tank C-301

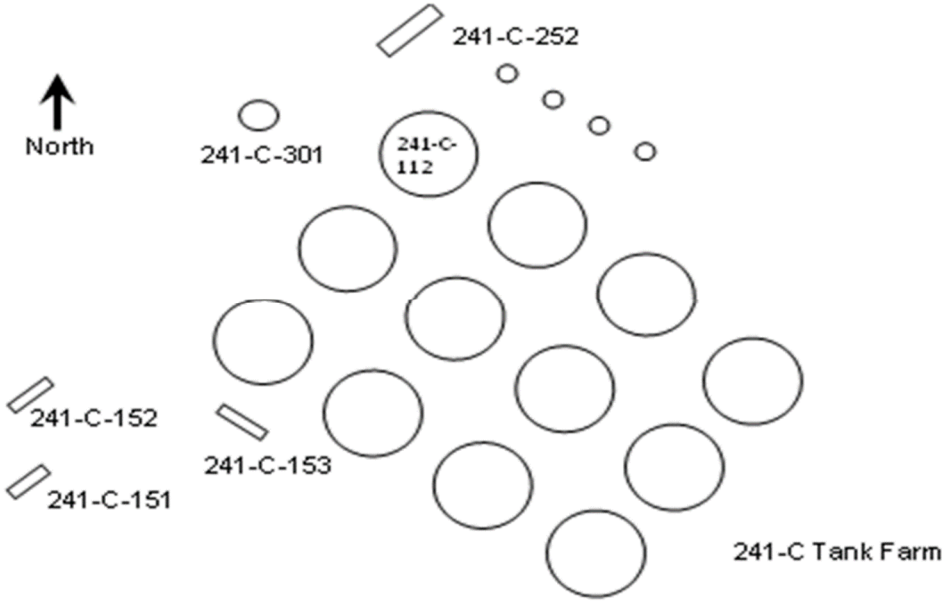

Table 2-1. Liquid Sample Results from 1985

Analysis	Reported Results in Original Unit	Reported Results Converted to Current Standard Unit
NO_2	2.53E-02 M	1.56E+03 ug/mL
NO_3	2.44E-02 M	1.12E+03 ug/mL
Total Alpha	3.23E-01 µCi/L	3.23E-04 µCi/mL
Cs-137	1.02E+04 µCi/L	1.02E+01 µCi/mL
Total Beta	1.73E+04 µCi/L	1.73E+01 µCi/mL
pH	7.52	7.52

Temperature of the tank waste is not monitored. Densities of the liquid and solids are not known.

3.0 SAMPLING EVENT REQUIREMENTS

Sampling will be conducted to meet the sampling design requirements summarized in Section 3.1. Activities that will be conducted to meet the design requirements are described in Section 3.2.

3.1 SAMPLING DESIGN REQUIREMENTS

Sample collection requirements for C-301 are summarized in Table 7-1 of RPP-45634 and are shown below (Table 3-1).

Table 3-1. Summary of Sample Requirements

DQO/Data Needs	Minimum Number of Samples, Liquid	Minimum Number of Samples, Solids
Tank closure	2 samples (plus 1 field duplicate) from one riser	1 sample from one riser and 1 sample (plus 1 field duplicate) from a second riser
Waste compatibility	• 2 samples (plus 1 field duplicate) at different depths • Separable organic check, either by sampling or by in situ measurement (e.g., oil-water meter).	1 sample plus 1 field duplicate
Inventory update	2 samples plus 1 field duplicate	Same as tank closure.
Waste retrieval/transfer	2 samples	2 samples

3.2 SAMPLE COLLECTION

To meet the sampling design requirements above, liquid grab samples will be collected from one riser and solids grab samples from two risers. Direction for sampling is provided separately for liquid and solids.

3.2.1 Liquid Sampling

Liquid samples will be taken using the weighted bottle (bottle-on-string) method. A photograph of a bottle-on-string sampler is shown in Figure 3-1. Sampling is initiated by placing a clean bottle in the metal cage. The cage is lowered through a tank riser into the liquid. The bottle is allowed to fill with liquid and then removed from the tank. The bottle is capped, removed from the cage, and placed in a shipping container for transportation to a laboratory for analysis. Another clean bottle is placed in the cage for collecting the next sample until sampling is completed. Sampling shall be conducted as required in Table 3-2.

Figure 3-1. Photograph of a Bottle-on-String Sampler

Table 3-2. Liquid Sampling Requirements (2 sheets)

Before Sampling

- Cleaning of sample bottles (or purchasing of pre-cleaned bottles) and sampling equipment shall be conducted as required in Section 3.3.5 of the QAPjP. Enter lot number for the sample bottles in the logbook (see exception in Section 6.1 for more information).
- Sample bottles shall be labeled/etched for identification as required in Section 3.4.6 of the QAPjP.
- Prepare sampling blank and trip blank as required below.
- A verbal notification by Tank Farm Sampling is to be made to the 222-S Laboratory at 373-2435 at least 24 hours in advance of an expected shipment.

During Sampling

- Collect samples in the order shown below.
- Place the sample assembly such that the mouth of the sample bottle is at the specified location.
- Notify the Characterization Engineer for further instructions if samples cannot be obtained at the locations specified.
- Except where noted, hold the sample bottle at each elevation for approximately 30 seconds or longer to allow the bottle to fill.
- Document sampling activities in a logbook as described in section 2.6.1.1 of the QAPjP. Logbook shall be completed within two business days of sampling (see exception in Section 6.1 for more information).
- Complete chain-of-custody form(s) as described in Section 3.4.5 of the QAPjP.
- Use custody seal or tape as required in Section 3.4.7 of the QAPjP.
- Complete a Sampling Data Sheet as described in Section 2.6.1.2 of the QAPjP. Attach completed Sampling Data Sheet to the logbook.

Sample Identification Number	Riser No.	Sample Type	Sample Bottles/Caps	Sample Location	Additional Requirements
C301-19-01SB	Any available riser	Sampling Blank	250-mL, narrow-mouth, amber glass bottle with polytetrafluoroethylene (PTFE) or perfluoroalkoxy (PFA) lined cap	In the tank head space and at least 24 inches (two feet) above liquid surface level as indicated by the surface level measurement.	• Note: Measure liquid surface level prior to obtaining the sampling blanks. A measurement device with a resolution of ¼ of an inch shall be used with the zip cord. • The sample blank is to be taken by uncapping the bottle and lowering to the specified headspace depth. • The sample blank is to be shipped to the laboratory in the same manner as the waste samples.
C301-19-01TB	N/A	Trip Blank	250-mL, narrow-mouth, amber glass bottle with PTFE or PFA lined cap	N/A	Sample bottle shall be taken to the field and then shipped to the laboratory the same manner as the waste samples. The TB shall not be opened in the field.

Table 3-2. Liquid Sampling Requirements (2 sheets)

Sample Identification Number	Riser No.	Sample Type	Sample Bottles/Caps	Sample Location	• Additional Requirements
C301-19-01	Any available riser	Floating organic check	250-mL, clear, wide-mouth glass bottle with PTFE or PFA lined cap	This sample shall be taken with the aid of an in-tank camera. The sample bottle should be lowered just enough to allow waste to enter the bottle, then raised prior to the bottle completely filling.	• Take sample with the aid of a camera. • Sample is to be taken without a stopper. • A partial (approximately 10% to 90% full) sample is desired. • An oil-water meter may be used instead of taking this sample.
C301-19-02 C301-19-02DUP	Any available riser	Subsurface grab	250-mL, narrow-mouth, amber glass bottle with PTFE or PFA lined cap	Approximately 24 inches below the liquid surface level.	• Sample is to be taken with a stopper. • Minimize sample headspace
C301-19-03	Any available riser	Subsurface grab	250-mL, narrow-mouth, amber glass bottle with PTFE or PFA lined cap	Approximately 15 inches above the solid surface level.	• Note: Before collecting this sample, take a solids level measurement using a zip cord with a measurement device with a resolution of ¼ inch. • Sample is to be taken with a stopper. • Minimize sample headspace
After Sampling • Samples should be shipped to the laboratory as soon as possible. If necessary, samples may be stored until shipment but must meet storage requirements as described Section 3.4.4 of the QAPjP.					

3.2.2 Solids Sampling

Solids grab samples will be taken using the modified finger trap sampler currently under development. The main modifications are (1) the body of the sampler is six inches long (approximately four inches longer than the original sampler) and (2) a tool is added to drive the sampler into the solids. One example of such a tool is a slide hammer as shown in Figure 3-2. The slide hammer is attached to a cable (not shown) that is used to control the hammer. A sample is collected by placing the sampler vertically on the solids and then pulling up and dropping the slide hammer repeatedly to drive the sampler into the solids until a full-depth sample is collected. The sampler is then retrieved into a glovebag above the tank, the sampler body removed from the sampler and placed into a jar which is placed in a shipping container for transportation to a laboratory for analysis. Sampling shall be conducted as required in Table 3-3.

Figure 3-2. Conceptual Model of a Modified Finger Trap Sampler

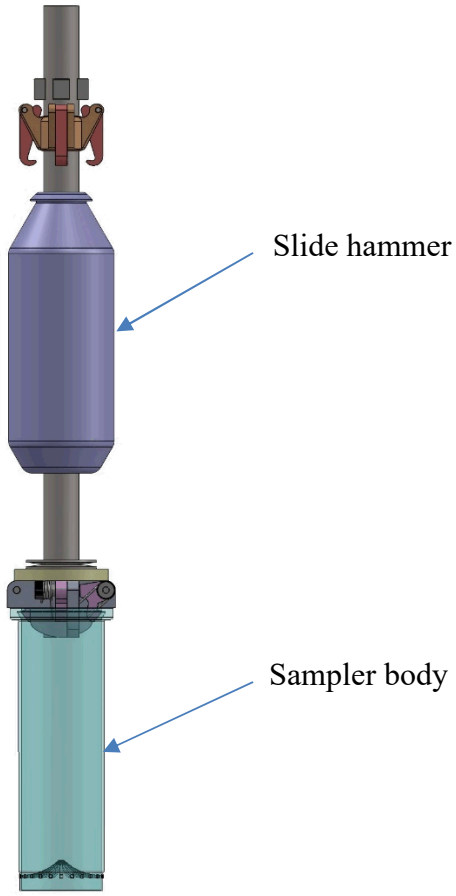

Table 3-3. Solids Sampling Requirements

Before Sampling

- Cleaning of sample bottles (or purchasing of pre-cleaned bottles) and sampling equipment shall be conducted as required in Section 3.3.5 of the QAPjP. Enter lot number for the sample bottles in the logbook (see exception in Section 6.1 for more information).
- Sample bottles shall be labeled/etched for identification as required in Section 3.4.6 of the QAPjP.
- Prepare equipment blank.
- A verbal notification by Tank Farm Sampling is to be made to the 222-S Laboratory at 373-2435 at least 24 hours in advance of an expected shipment.

During Sampling

- Collect samples in the order shown below.
- Notify the Characterization Engineer for further instructions if samples cannot be obtained at the locations specified.
- Document sampling activities in a logbook as described in section 2.6.1.1 of the QAPjP. Logbook shall be completed within two business days of sampling (see exception in Section 6.1 for more information).
- Complete chain-of-custody form(s) as described in Section 3.4.5 of the QAPjP.
- Use custody seal or tape as required in Section 3.4.7 of the QAPjP.
- Complete a Sampling Data Sheet as described in Section 2.6.1.2 of the QAPjP. Attach a copy of the data sheet to the logbook.

Sample Identification Number	Riser No.	Sample Type	Sample Bottles/Caps	Sample Location	Additional Requirements
C301-19-10EB	N/A	Equipment Blank	250-mL, narrow-mouth, amber glass bottle with PTFE or PFA lined cap	N/A	• The EB shall be shipped to the laboratory in a similar manner as the waste samples. • One EB is needed for all equipment to be used to collect samples.
C301-19-10	02 or 03	Solids grab sample	500-mL, clear, wide-mouth glass bottle with PTFE or PFA lined cap (take measures to prevent breakage of glass bottle due to the metal sampler)	Sample to be taken directly under the access riser	• Attempt to take solids from top to bottom of the solids layer. • If possible, take these two samples on the opposite sides of the riser. • If recovery for a sample is low, an additional sample shall be taken. The sample will be labeled with an alpha-suffix (e.g., C301-19-10A or C301-19-10DUPA).
C301-19-10DUP					
C301-19-11	06 or 07	Solids grab sample	500-mL, clear, wide-mouth glass bottle with PTFE or PFA lined cap (take measures to prevent breakage of glass bottle due to the metal sampler)	Sample to be taken directly under the access riser	• Attempt to take solids from top to bottom of the solids layer. • If recovery is low, an additional sample shall be taken. The sample will be labeled with an alpha-suffix (e.g., C301-19-11A).

After Sampling

- Samples should be shipped to the laboratory as soon as possible. If necessary, samples may be stored until shipment but must meet storage requirements as described Section 3.4.4 of the QAPjP.

4.0 LABORATORY ANALYSIS REQUIREMENTS

After the samples are received at the laboratory, the samples shall be prepared and analyzed according to the direction and requirements specified in this section. Sample preparation and analysis shall be conducted such that holding time requirements as described in Section 3.4.3 of the QAPjP are met. Directions for sample handling and requirements for sample analysis are specified in Sections 4.1 and 4.2, respectively. Direction for addressing insufficient sample recovery is provided in Section 4.3. Applicable QA/QC requirements for the analyses are specified in Section 5.0.

4.1 DIRECTION FOR SAMPLE HANDLING

Direction for handling liquid samples in weighted bottles is provided in Section 4.1.1 and for solids samples in finger trap samplers in Section 4.1.2.

4.1.1 Direction for Handling Liquid Samples

The following steps shall be performed on each sample:

- Verify the identification number on the sample bottle matches the sample seal on the sample container when each sample is loaded into the hot cell.
- Record visual observations such as color and clarity of the liquid and the presence of any solid particles (i.e., suspended solids) in the liquid. If settled solids are identified, estimate the percent volume of settled solids relative to the total sample volume. Photograph the sample per laboratory hotcell protocol.
- Closely inspect the sample for the presence of any organic (separable) layers. Estimate and record the volume of the separable organic layer, and if present, retain the immiscible material in a separate jar. Notify the Characterization Engineer within two working days if a separable organic layer is observed.
- If solids are present and appear to be precipitates caused by cooling of the sample, hold the sample at the hotcell temperature and contact the Characterization Engineer for further direction.
- Remove liquid aliquots and perform the analyses as directed in Section 4.2.1.
- Archive the remainder of each sample, store and disposition per RPP-10226, *Direction for Disposition of Tank Waste Samples in Archive*.
- Sample preparation material and subsamples may be disposed 30 days after issuance of the final report.

4.1.2 Direction for Handling Solids Samples

The laboratory shall observe and record physical characteristics such as color and consistency of the solids in each sample jar. Close-up photographs of the sample materials shall be taken. The photographs should show, as clearly as possible, color and consistency of the samples.

Sample material from each finger trap shall be transferred into a tared glass jar before weighing the glass jar and recording the net weight. Solids removal methods that may alter the chemical characteristics of the sample material (e.g. rinsing) shall not be used. If multiple grabs (finger traps) are collected for any sample identified in Table 3-3, the Characterization Engineer shall provide additional instruction for sample analysis based on the sample weight data.

If insufficient sample material is available to complete the analyses listed in Table 4-4, contact the Characterization Engineer with estimates of how much material is needed to complete each analysis and await further direction.

Aliquots shall be taken from sample C301-19-10, C301-19-10DUP, and C301-19-11 for primary and duplicate analyses of volatile organic compounds (VOC) and ammonia. Prior to collecting the aliquots, mix the contents of the jars gently with a spatula.

All remaining material in each sample (or composite) shall be homogenized further with a tissue homogenizer. Mortar and pestle or other size reduction equipment may be used for particle size reduction before homogenization as needed. Subsamples shall be taken from each homogenized sample for the other analyses as directed in Section 4.2.2.

Archive the remainder of each sample, store and disposition per RPP-10226. Sample preparation materials and subsamples may be discarded 30 days after issuance of the laboratory data report.

4.2 REQUIREMENTS FOR ANALYSIS

Requirements for analysis of liquid samples are specified in Section 4.2.1 and for solids samples in Section 4.2.2. Requirements that are applicable to both liquid and solids samples are provided in this section.

RPP-23403 identifies primary and secondary constituents for four methods: inductively coupled plasma/atomic emission spectrometry (ICP/AES), ion chromatography (IC), gamma energy analysis (GEA), and gas chromatography/mass spectrometry for volatile and semi-volatile organic compounds (VOC and SVOC) (See Tables 4-1 and 4-4). Only primary constituents are specified for the other methods.

The laboratory shall handle analytical data from methods for which only primary constituents are identified as follows: The data shall be evaluated against the required detection limits and QC criteria. If a required detection limit is exceeded, the laboratory shall contact the Characterization Engineer and provide recommendations (e.g., re-analyzing the sample(s) using smaller dilutions or a different existing method). If a QC criterion is exceeded, the laboratory shall evaluate whether re-analysis would improve data quality and provide the Characterization

Engineer with recommendations. The laboratory shall report data for all constituents identified for these methods.

For IC and ICP/AES, analytical data for the primary constituents shall be handled the same as those obtained from methods with only primary constituents. The laboratory shall report data for all primary and secondary constituents identified for these methods. Data for the secondary constituents shall be summarized and provided to the Characterization Engineer. If the concentration of a secondary constituent is near a level of concern, the laboratory may be requested to evaluate quality of the data and recommend whether or not to re-analyze (i.e., would re-analysis improve data quality).

For GEA, analytical data for secondary analytes shall be dispositioned in the same manner as those obtained with IC and ICP/AES. The laboratory shall report results for the primary constituents and detected secondary constituents with the exception of ambient levels of naturally occurring radon decay daughters (e.g. Pb-212, Bi-214, and Ti-208). This method is very insensitive for many constituents, and reporting the large detection limits for those constituents would not be useful.

For volatile organic analysis (VOA) and semi-volatile organic analysis (SVOA), the laboratory shall calibrate analytical instruments for the primary constituents at a minimum. The laboratory shall also report all valid results for any of the secondary constituents for which calibration is available. Additionally, any calibrated result that is neither a primary nor secondary constituent and is above the method detection limit shall be reported as a non-requested analyte. If a non-requested constituent is reported for one sample, the results for this constituent shall be reported for all samples, even if the results are below the detection limit. Additionally, tentatively identified compounds (TIC) shall be evaluated against the "Hanford library" of organics (Table 4-3) and the National Institute of Standards and Testing library. The laboratory shall use the following criteria to perform the TIC evaluation: The library match for a TIC should be higher than 75% to proceed with a detailed evaluation. The method-specific tune criteria should be met. Special attention to the tune at low masses should be taken when evaluating volatile compounds. The concentration of a TIC should be greater than 10% of the nearest internal standard or estimated 5 nanograms on column injection, whichever is smaller. Early injection peak and late eluting peaks (column bleed and co-eluting compounds) should have adequate background subtraction to permit use of these TIC criteria. If isotopic patterns are present, the mass ratios should agree with the reference spectrum within 10%. The base mass peak for the sample should be the same as the reference spectrum. If a molecular ion is present in the reference spectrum, the sample should also have a molecular ion mass. Reference spectrum ions greater than 20% should be in the sample spectrum. Sample ions greater than 20% that are not in the reference spectrum need to be evaluated. Major sample ions (greater than 20%) should match relative intensities to the base peak to those same ratios for the reference spectrum within 10-30%. If a peak does not meet the criteria for identification, the criteria for which it failed should be documented so that it will not have to be evaluated again in the future (RPP-23403).

The laboratory shall provide the Characterization Engineer a summary of a preliminary evaluation of TICs (to determine if a TIC concentration/toxicity is near a level of concern and

required further investigation). The primary data shall be treated in the same manner as those from the other methods. The laboratory shall report data for the primary constituents and for all TICs meeting the evaluation criteria.

4.2.1 Requirements for Analysis of Liquid Samples

Analyses of C-301 liquid samples are specified in RPP-45634 and are summarized below in Table 4-1. The laboratory shall perform analyses listed in the Integrated Analyte List on all liquid samples except the trip blank. Perform only volatile organic analysis (VOA) on the trip blank. Primary and secondary organic analytes as required by VOA and semi-volatile organic analysis (SVOA) in Table 4-1 are specified in Tables 4-2 and 4-3.

Table 4-1. Required Analyses for Liquid Samples (4 sheets)

Analytical Technique[7]	Closure Analytes	Compatibility Analytes	BBI Analytes	Liquid Transfer Analytes	Integrated Analyte List	Reporting Unit	Reporting Format
Gravimetric	Density	Density	Bulk density	--	Density	g/mL	IV
Thermogravimetric	Wt% H_2O	Wt% H_2O	Wt% H_2O	--	Wt% H_2O	Wt%	IV
ICP/AES	Primary inorganics: Ag, Al, As, Ba, Be, Cd, Co, Cr, Cu, Fe, Mn, Ni, Pb, Sb, Se, Sr, Tl, U, V, Zn Secondary inorganics: B, Bi, Ca, K, Li, Mo, Mg, Na, P, Rh, S, Si, Sn, Ta, W, Y, Zr, Ce, Eu, La, Nb, Nd, Pd, Pr, Rb, Ru, Sm, Te, Th, Ti	Ag, Al, As, Be, Cd, Co, Cr, Fe, Mn, Ni, Pb, Se, Sr, U, Zn, Bi, Ca, K, Na, Rh, Si, Ta, W, Zr, La	Al, Cr, Fe, Pb, Mn, Ni, Sr, U, Bi, Ca, K, Na, P, S, Si, Zr, La	--	Primary inorganics: Ag, Al, As, Ba, Be, Cd, Co, Cr, Cu, Fe, Mn, Ni, Pb, Sb, Se, Sr, Tl, U, V, Zn, Bi, Ca, K, Na, P, Rh, S, Si, W, Zr, La Secondary inorganics: B, Li, Mo, Mg, Sn, Y, Ce, Eu, Nb, Nd, Pd, Pr, Rb, Ru, Sm, Te, Th, Ti, Ta	µg/mL	IV II for secondary analytes
ICP/MS	^{237}Np, ^{233}U, ^{234}U, ^{235}U, ^{236}U, ^{238}U, ^{230}Th, ^{232}Th, ^{242}Pu, ^{231}Pa, ^{126}Sn	^{237}Np, ^{233}U, ^{235}U, ^{238}U, ^{242}Pu, ^{151}Sm	^{237}Np, ^{233}U, ^{234}U, ^{235}U, ^{236}U, ^{238}U, ^{232}Th, ^{242}Pu, ^{126}Sn, ^{151}Sm, ^{229}Th, ^{243}Am, ^{231}Pa	^{234}U, ^{235}U, ^{238}U, ^{237}Np, ^{242}Pu, ^{243}Am	^{237}Np, ^{233}U, ^{234}U, ^{235}U, ^{236}U, ^{238}U, ^{230}Th, ^{232}Th, ^{242}Pu, ^{231}Pa, ^{126}Sn, ^{151}Sm, ^{229}Th, ^{243}Am	µg/mL	IV
IC	Primary inorganics: F^-, NO_2^-, NO_3^-, $C_2H_3O_2^-$, CHO_2^-, $C_2H_3O_3^-$, $C_2O_4^{2-}$ Secondary inorganics: Br^-, Cl^-, PO_4^-, SO_4^2	NO_2^-, NO_3^-, PO_4^-, SO_4^{2-}, Cl^-, F^-	F^-, NO_2^-, NO_3^-, $C_2O_4^{2-}$, $S_2O_3^{2-}$, Cl^-, PO_4^-, SO_4^{2-}	--	Primary inorganics : F^-, NO_2^-, NO_3^-, $C_2H_3O_2^-$, CHO_2^-, $C_2H_3O_3^-$, $C_2O_4^{2-}$, Cl^-, PO_4^-, SO_4^{2-}, $S_2O_3^{2-}$ Secondary inorganics: Br^-	µg/mL	IV II for secondary analytes

Table 4-1. Required Analyses for Liquid Samples (4 sheets)

Analytical Technique[7]	Closure Analytes	Compatibility Analytes	BBI Analytes	Liquid Transfer Analytes	Integrated Analyte List	Reporting Unit	Reporting Format
IC	NH_4^+	--	--	--	NH_4^+	µg/mL	IV
CVAA	Hg	Hg	Hg	--	Hg	µg/mL	IV
Spectrophotometric[1]	CN^- (to estimate ferrocyanide)	--	--	--	CN^- (to estimate ferrocyanide)	µg/mL	IV
Sep & beta count	$^{90}Sr/^{90}Y$	$^{90}Sr/^{90}Y$	$^{90}Sr/^{90}Y$	$^{90}Sr/^{90}Y$	$^{90}Sr/^{90}Y$ [4]	µCi/mL	IV
Separation, AEA	$^{238, 239/240}Pu$, ^{241}Pu, ^{241}Am, $^{243/244}Cm$, ^{242}Cm, ^{228}Th	$^{238, 239/240}Pu$, ^{241}Am, $^{243/244}Cm$	$^{238, 239/240}Pu$, ^{241}Pu, ^{241}Am, $^{243/244}Cm$, ^{242}Cm	$^{238, 239/240}Pu$, ^{241}Pu, ^{241}Am, ^{242}Cm, $^{243/244}Cm$,	$^{238, 239/240}Pu$, ^{241}Pu, ^{241}Am, $^{243/244}Cm$, ^{242}Cm, ^{228}Th	µCi/mL	IV
Sep/liquid scintillation	^{3}H	--	^{3}H	^{3}H	^{3}H	µCi/mL	IV
Sep/liquid scintillation	^{14}C	--	^{14}C	^{14}C	^{14}C	µCi/mL	IV
Sep/liquid scintillation	^{63}Ni	--	^{63}Ni	^{63}Ni	^{63}Ni	µCi/mL	IV
Sep/liquid scintillation	^{241}Pu	^{241}Pu	^{241}Pu		^{241}Pu	µCi/mL	IV
Anion-cation exchange/distillation/ liquid scintillation	^{79}Se	--	^{79}Se		^{79}Se	µCi/mL	IV
ICP/MS[2]	^{99}Tc	--	^{99}Tc	^{99}Tc	^{99}Tc	µg/g	IV
and liquid scintillation[2]	^{99}Tc	--	^{99}Tc	^{99}Tc	^{99}Tc	µCi/mL	IV
Sep/GEA	^{129}I	--	^{129}I	^{129}I	^{129}I	µCi/mL	IV

Table 4-1. Required Analyses for Liquid Samples (4 sheets)

Analytical Technique[7]	Closure Analytes	Compatibility Analytes	BBI Analytes	Liquid Transfer Analytes	Integrated Analyte List	Reporting Unit	Reporting Format
GEA	Primary gamma emitters: ^{152,154,155}Eu, ^{137}Cs, ^{60}Co, ^{125}Sb Secondary gamma emitters: all other analytes detected by GEA	^{154}Eu, ^{137}Cs, ^{60}Co	^{152,154,155}Eu, ^{137}Cs, ^{60}Co, ^{125}Sb, ^{226}Ra, ^{106}Ru, ^{134}Cs	^{60}Co, ^{137}Cs	Primary gamma emitters: ^{152,154,155}Eu, ^{137}Cs, ^{60}Co, ^{125}Sb, ^{226}Ra, ^{106}Ru/Rh, ^{134}Cs Secondary gamma emitters: all other analytes detected by GEA	µCi/mL	IV II for secondary analytes
GC/MS	Primary VOA (See Table 4-2)[5] Secondary VOA (see Table 4-3)	--	--	--	Primary VOA (See Table 4-2) Secondary VOA (see Table 4-3)	mg/mL	IV II for TICs
GC/MS	Primary SVOA (See Table 4-2)[5] Secondary SVOA (see Table 4-3)	--	--	--	Primary SVOA (See Table 4-2) Secondary SVOA (see Table 4-3)	mg/mL	IV II for TICs
pH Meter	pH	pH	pH	--	pH	Unitless	IV
Potentiometric titration[8]	OH^-	OH^-	OH^-	--	OH^-	µg/mL	IV

Table 4-1. Required Analyses for Liquid Samples (4 sheets)

Analytical Technique[7]	Closure Analytes	Compatibility Analytes	BBI Analytes	Liquid Transfer Analytes	Integrated Analyte List	Reporting Unit	Reporting Format
GC/ECD	PCBs (Aroclors 1016, 1221, 1232, 1242, 1248, 1254, and 1260)	PCBs (Aroclors 1016, 1221, 1232, 1242, 1248, 1254, and 1260)	PCBs (Aroclors 1016, 1221, 1232, 1242, 1248, 1254, and 1260)	--	PCBs (Aroclors 1016, 1221, 1232, 1242, 1248, 1254, and 1260)	µg/mL	IV
Furnace oxidation or persulfate oxidation[3]	--	TIOC/TOC	TIOC/TOC	--	TIOC/TOC	µg/mL	IV
DSC	--	Energetics	--	--	Energetics	J/mL	IV
To be developed	--	--	^{59}Ni, ^{93}Zr, ^{93m}Nb, ^{113m}Cd, ^{137}mBa, ^{227}Ac, ^{228}Ra, ^{232}U[6]	--	^{59}Ni, ^{93}Zr, ^{93m}Nb, ^{113m}Cd, ^{137}mBa, ^{227}Ac, ^{228}Ra, ^{232}U[6]	N/A	N/A

Abbreviations: AEA = alpha energy analysis, BBI = Best-Basis Inventory, CVAA = cold vapor atomic absorption, DSC = differential scanning calorimetry, GC/ECD = gas chromatography/electron capture detector, GC/MS = gas chromatography/mass spectrometer, GEA = gamma energy analysis, IC = ion chromatography, ICP/AES = inductively coupled plasma/atomic emission spectrometry, ICP/MS = inductively coupled plasma mass spectrometry, PCB = polychlorinated biphenyl, sep = separation, SVOA = semivolatile organic analysis, TGA = thermogravimetric analysis, TIOC = total inorganic carbon, TIC = tentatively identified compound, TOC = total organic carbon, VOA = volatile organic analysis, wt% = weight percent, N/A = not applicable

Notes:

[1] Analyze for CN to estimate ferrocyanide

[2] Perform both analytical techniques for Tc-99 to evaluate effectiveness of the techniques on the waste matrix.

[3] Perform both persulfate oxidation and furnace oxidation to compare results.

[4] Filtration of the liquid will likely be required if a tanker truck is used for transferring to a DST. Total Beta is elevated in the 1985 sample possibly due to suspended solids. Perform Sr-90 analyses on both filtered and unfiltered aliquots.

[5] Because C-301 is located in C Farm, the primary organic analytes are the same as those identified in RPP-23403 for C Farm SSTs.

[6] Currently, the 222-S Laboratory does not have analytical methods for these BBI analytes. The BBI uses template values to estimate concentrations of these radionuclides. When a method becomes available for one or more of these radionuclides, the radionuclide(s) should be included in the list of requested analyses.

[7] Except where noted, the laboratory shall select the appropriate preparation methods.

[8] OH by titration is not required if pH is measured below 10.5.

Table 4-2. Primary Organic Analytes

Organic Analyte	CAS Number	Analysis Method
Trichloroethylene	79-01-6	GC/MS for VOA
2-Butanone	78-93-3	GC/MS for VOA
2-Propanone (Acetone)	67-64-1	GC/MS for VOA
4-Methyl-2-pentanone	108-10-1	GC/MS for VOA
Xylenes (Mixed isomers of o-, m-, and p-)	1330-20-7	GC/MS for VOA
o-Xylene	95-47-6	GC/MS for VOA
m-Xylene[1]	108-38-3	GC/MS for VOA
p-Xylene[1]	106-42-3	GC/MS for VOA
Tributyl phosphate	126-73-8	GC/MS for SVOA
PCBs	11104-28-2 11141-16-5 2674-11-2 53969-21-9 126572-29-6 11097-69-1 11096-82-5	GC/ECD for Aroclors

Abbreviation: CAS = Chemical Abstract Services

Note: [1]m-xylene and p-xylenes will be analyzed together as xylenes (m+p).

Table 4-3. Secondary Organic Analytes "Hanford Library" (2 sheets)

Secondary VOA Analytes	CAS	Secondary SVOA Analytes	CAS
cis-1,3 -Dichloropropene	10061-01-5	p-Nitrochlorobenzene	100-00-5
Ethylene dibromide (1,2, Dibromoethane)	106-93-4	1,4-Dinitrobenzene	100-25-4
Butane	106-97-8	1,4-Dichlorobenzene	106-46-7
1,3 - Butadiene	106-99-0	Phenol	108-95-2
Acrolein (propenal)	107-02-8	Hexachlorobenzene	118-74-1
3-Chloropropene (Allyl chloride)	107-05-1	N,N-Diphenylamine	122-39-4
Propionitrile (Ethyl cyanide)	107-12-0	Pentachloronaphthalene	1321-64-8
Acrylonitrile	107-13-1	Hexachloronaphtahlene	1335-87-1
2-Pentanone	107-87-9	Tetrachloronaphthalene	1335-88-2
Methylcyclohexane	108-87-2	Octachloronaphthalene	2234-13-1
n-Pentane	109-66-0	Isodrin	465-73-6
5-Methyl-2-hexanone	110-12-3	Benzo[a]pyrene	50-32-8
2-Heptanone	110-43-0	Dibenz[a,h]anthracene	53-70-3
n-Hexane	110-54-3	1,3-Dichlorobenzene	541-73-1
Cyclohexane	110-82-7	3-Methyl-2-butanone	563-80-4
n-Octane	111-65-9	N-Nitroso-N,N-dimethylamine	62-75-9

Table 4-3. Secondary Organic Analytes "Hanford Library" (2 sheets)

Secondary VOA Analytes	CAS	Secondary SVOA Analytes	CAS
4-Heptanone	123-19-3	Hexafluoroacetone	684-16-2
Acetic acid n-butylester	123-86-4	Pentachloronitrobenzene (PCNB)	82-68-8
1,4-Dioxane	123-91-1	Pentachlorophenol	87-86-5
n-Heptane	142-82-5	2-sec-Butyl-4,6-dinitrophenol (Dinoseb)	88-85-7
Cyclopentane	287-92-3	1,1'-Biphenyl	92-52-4
Ethyl alcohol	64-17-5	Acetophenone	98-86-2
2-Propyl alcohol	67-63-0	Toxaphene	8001-35-2
n-Propyl alcohol (1-propanol)	71-23-8	Nitric acid, propyl ester	627-13-4
Bromomethane	74-83-9	Aldrin	309-00-2
Chloroethane	75-00-3	alpha-BHC	319-84-6
Acetonitrile	75-05-8	beta-BHC	319-85-7
1,1-Dichloroethane	75-34-3	gamma-BHC (Lindane)	58-89-9
Dichlorofluoromethane	75-43-4	Dieldrin	60-57-1
Chlorodifluoromethane	75-45-6	Endrin	72-20-8
3-Methy-2-butanone	563-80-4	1,1-Dimethylhydrazine	57-14-7
Hexafluoroacetone	684-16-2	Methyl hydrazine	60-34-4
2-Butenaldehyde (2-Butenal)	4170-30-3	n-Nitrosomethylethylamine	10595-95-6
Methyl isocyanate	624-83-9	n-Nitrosodi-n-butylamine	924-16-3
n-Propionaldehyde	123-38-6	--	--
3-Heptanone	106-35-4	--	--
Chloromethane	74-87-3	--	--
n-Nonane	111-84-2	--	--
Styrene	100-42-5	--	--
Tetrahydrofuran	109-99-9	--	--
Cyclohexene	110-83-8	--	--
2-Methyl-2-propenenitrile	126-98-7	--	--
2-Hexanone	591-78-6	--	--
Triethylamine	121-44-8	--	--
Oxirane	75-21-8	--	--
2-Methyl-2-propanol	75-65-0	--	--
Dichlorodifluoromethane	75-71-8	--	--
1,2-Dichloro-1,1,2,2-tetrafluoroethane	76-14-2	--	--
Heptachlor	76-44-8	--	--
1,2-Dichloropropane	78-87-5	--	--
1-Methylpropyl alcohol	78-92-2	--	--
3-Pentanone	96-22-0	--	--

4.2.2 Requirements for Analysis of Solids Samples

Analyses of C-301 solids samples are specified in RPP-45634 and are summarized below in Table 4-4. The laboratory shall perform analyses listed in the Integrated Analyte List on all solids samples and the equipment blank. Primary and secondary organic analytes as required by VOA and SVOA in Table 4-4 are specified in Tables 4-2 and 4-3.

Table 4-4. Required Analyses for Solids Samples (4 sheets)

Suggested Analytical Technique[1]	Closure Analytes	Compatibility Analytes	BBI Analytes	Retrieval Method Evaluation Analytes	Integrated Analyte List	Reporting Unit[8]	Reporting Format
Gravimetric	Bulk density	Density	Bulk density	Bulk density	Density	g/mL	IV
TGA	Wt% H_2O	Wt% H_2O	Wt% H_2O	--	Wt% H_2O	Wt%	IV
ICP/AES[7]	Primary inorganics: Ag, Al, As, Ba, Be, Cd, Co, Cr, Cu, Fe, Pb, Mn, Ni, Sb, Se, Sr, Tl, U, V, Zn Secondary inorganics: B, Bi, Ca, K, Li, Mo, Mg, Na, P, Rh, S, Si, Sn, Ta, W, Y, Zr, Ce, Eu, La, Nb, Nd, Pd, Pr, Rb, Ru, Sm, Te, Th, Ti	Ag, Al, As, Be, Cd, Co, Cr, Fe, Mn, Ni, Pb, Se, Sr, Tl, U, Bi, Ca, K, Na, Si, Sn, Zr, La, Pd, Te, Th	Al, Cr, Fe, Pb, Mn, Ni, Sr, U, Bi, Ca, K, Na, P, S, Si, Zr, La	Al, Ca, Cu, Fe, K, Mn, Na, Ni, P, S, Si, U, Zr	Primary inorganics: Ag, Al, As, Ba, Be, Cd, Co, Cr, Cu, Fe, Pb, Mn, Ni, Sb, Se, Sr, Tl, U, V, Zn, Bi, Ca, K, Na, P, S, Si, Sn, Zr, La, Pd, Te, Th Secondary inorganics: B, Li, Mo, Mg, Y, Ce, Eu, Nb, Nd, Pr, Rb, Rh, Ru, Sm, Ti, Ta, W,	µg/g	IV II for secondary analytes
ICP/MS	^{237}Np, ^{233}U, ^{234}U, ^{235}U, ^{236}U, ^{238}U, ^{230}Th, ^{232}Th, ^{242}Pu, ^{231}Pa, ^{126}Sn	^{237}Np, ^{233}U, ^{235}U, ^{238}U, ^{242}Pu, ^{151}Sm	^{237}Np, ^{233}U, ^{234}U, ^{235}U, ^{236}U, ^{238}U, ^{232}Th, ^{242}Pu, ^{126}Sn, ^{151}Sm, ^{229}Th, ^{243}Am, ^{231}Pa	--	^{237}Np, ^{233}U, ^{234}U, ^{235}U, ^{236}U, ^{238}U, ^{230}Th, ^{232}Th, ^{242}Pu, ^{231}Pa, ^{126}Sn, ^{151}Sm, ^{229}Th, ^{243}Am, ^{231}Pa	µg/g	IV
IC	Primary inorganics : F^-, NO_2^-, NO_3^-, $C_2H_3O_2^-$, CHO_2^-, $C_2H_3O_3^-$, $C_2O_4^{2-}$ Secondary inorganics: Br^-, Cl^-, PO_4^-, SO_4^{2-}	NO_2^-, NO_3^-, PO_4^-, SO_4^{2-}, Cl^-, F^-	F^-, NO_2^-, NO_3^-, $C_2O_4^{2-}$, $S_2O_3^{2-}$, Cl^-, PO_4^-, SO_4^{2-}	Cl^-, F^-, NO_3^-, $C_2O_4^{2-}$, CHO_2^-, PO_4^-, SO_4^{2-}	Primary inorganics : F^-, NO_2^-, NO_3^-, $C_2H_3O_2^-$, CHO_2^-, $C_2H_3O_3^-$, $C_2O_4^{2-}$, Cl^-, PO_4^-, SO_4^{2-}, $S_2O_3^{2-}$ Secondary inorganics: Br^-	µg/g	IV II for secondary analytes

Table 4-4. Required Analyses for Solids Samples (4 sheets)

Suggested Analytical Technique[1]	Closure Analytes	Compatibility Analytes	BBI Analytes	Retrieval Method Evaluation Analytes	Integrated Analyte List	Reporting Unit[8]	Reporting Format
IC	NH_4^+	--	--	--	NH_4^+	µg/g	IV
CVAA	Hg	Hg	Hg	--	Hg	µg/g	IV
Spectrophotometric[2]	CN^-	--	--	--	CN^-	µg/g	IV
Sep & beta count	$^{90}Sr/^{90}Y$	$^{90}Sr/^{90}Y$	$^{90}Sr/^{90}Y$	--	$^{90}Sr/^{90}Y$	µCi/g	IV
Separation, AEA	$^{238, 239/240}Pu$, ^{241}Am, $^{243/244}Cm$, ^{242}Cm, ^{228}Th	$^{238, 239/240}Pu$, ^{241}Am, $^{243/244}Cm$	$^{238, 239/240}Pu$, ^{241}Am, $^{243/244}Cm$, ^{242}Cm	--	$^{238, 239/240}Pu$, ^{241}Am, $^{243/244}Cm$, ^{242}Cm, ^{228}Th	µCi/g	IV
Sep/liquid scintillation	^{3}H	--	^{3}H	--	^{3}H	µCi/g	IV
Sep/liquid scintillation	^{14}C	--	^{14}C	--	^{14}C	µCi/g	IV
Sep/liquid scintillation	^{63}Ni	--	^{63}Ni	--	^{63}Ni	µCi/g	IV
Sep/liquid scintillation	^{241}Pu	^{241}Pu	^{241}Pu	--	^{241}Pu	µCi/g	IV
Anion-cation exchange/distillation/ liquid scintillation	^{79}Se	--	^{79}Se	--	^{79}Se	µCi/g	IV
ICP/MS and liquid scintillation[3]	^{99}Tc	--	^{99}Tc	--	^{99}Tc	µg/g	IV
Sep/GEA	^{129}I	--	^{129}I	--	^{129}I	µCi/g	IV

Table 4-4. Required Analyses for Solids Samples (4 sheets)

Suggested Analytical Technique[1]	Closure Analytes	Compatibility Analytes	BBI Analytes	Retrieval Method Evaluation Analytes	Integrated Analyte List	Reporting Unit[8]	Reporting Format
GEA	Primary gamma emitters: ^{152,154,155}Eu, ^{137}Cs, ^{60}Co, ^{125}Sb Secondary gamma emitters: all other analytes detected by GEA	^{154}Eu, ^{137}Cs, ^{60}Co	^{152,154,155}Eu, ^{137}Cs, ^{60}Co, ^{125}Sb, ^{226}Ra, ^{106}Ru, ^{134}Cs	^{137}Cs	Primary gamma emitters: ^{152,154,155}Eu, ^{137}Cs, ^{60}Co, ^{125}Sb, ^{226}Ra, ^{106}Ru/Rh, ^{134}Cs Secondary gamma emitters: all other analytes detected by GEA	µCi/g	IV II for secondary analytes
GC/MS	Primary VOA (See Table 4-2)[5] Secondary VOA (see Table 4-3)	--	--	--	Primary VOA (See Table 4-2) Secondary VOA (see Table 4-3)	mg/kg	IV II for TICs
GC/MS	Primary SVOA (See Table 4-2)[5] Secondary SVOA (see Table 4-3)	--	--	--	Primary SVOA (See Table 4-2) Secondary SVOA (see Table 4-3)	mg/kg	IV II for TICs
pH Meter	pH	pH	pH	--	pH	Unitless	IV
GC/ECD	PCBs (Aroclors 1016, 1221, 1232, 1242, 1248, 1254, and 1260)	PCBs (Aroclors 1016, 1221, 1232, 1242, 1248, 1254, and 1260)	PCBs (Aroclors 1016, 1221, 1232, 1242, 1248, 1254, and 1260)	--	PCBs (Aroclors 1016, 1221, 1232, 1242, 1248, 1254, and 1260)	µg/g dry weight	IV
Persulfate oxidation[4]	--	TIOC/TOC	TIOC/TOC	TIOC/TOC	TIOC/TOC	µg/g	IV
DSC	--	Energetics	--	--	Energetics	J/g	IV
Solid Phase Characterization by SEM, XRD, and PLM	--	--	--	SEM, XRD, and PLM	SEM, XRD, and PLM	N/A	See note 9
Particle size distribution	--	--	--	Particle size distribution	Particle size distribution	N/A	See note 9

Table 4-4. Required Analyses for Solids Samples (4 sheets)

Suggested Analytical Technique[1]	Closure Analytes	Compatibility Analytes	BBI Analytes	Retrieval Method Evaluation Analytes	Integrated Analyte List	Reporting Unit[8]	Reporting Format
Solids rheology (viscosity, shear strength) if necessary	--	--	--	Solids rheology (viscosity, shear strength) if necessary	Solids rheology (viscosity, shear strength) if necessary	Depending on method	See note 9
To be developed	--	--	^{59}Ni, ^{93}Zr, ^{93m}Nb, ^{113m}Cd, ^{137}mBa, ^{227}Ac, ^{228}Ra, ^{232}U[6]		^{59}Ni, ^{93}Zr, ^{93m}Nb, ^{113m}Cd, ^{137}mBa, ^{227}Ac, ^{228}Ra, ^{232}U[6]	N/A	N/A

Abbreviations: AEA = alpha energy analysis, BBI = Best-Basis Inventory, CVAA = cold vapor atomic absorption, DSC = differential scanning calorimetry, GC/ECD = gas chromatography/electron capture detector, GC/MS = gas chromatography/mass spectrometer, GEA = gamma energy analysis, IC = ion chromatography, ICP/AES = inductively coupled plasma/atomic emission spectrometry, ICP/MS = inductively coupled plasma mass spectrometry, PCB = polychlorinated biphenyl, sep = separation, SVOA = semivolatile organic analysis, TGA = thermogravimetric analysis, TIOC = total inorganic carbon, TIC = tentatively identified compound, TOC = total organic carbon, VOA = volatile organic analysis, wt% = weight percent, N/A = not applicable, PLM = polarized light microscopy, SEM = scanning electron microscopy, XRD = x ray diffraction

Notes:

[1] Except where noted, the laboratory shall select the appropriate preparation methods.

[2] Analyze for CN to estimate ferrocyanide

[3] Perform both analytical techniques for Tc-99 to evaluate effectiveness of the techniques on the waste matrix.

[4] Perform persulfate oxidation only; furnace oxidation does not work with solids matrix.

[5] Because C-301 is located in C Farm, the primary organic analytes are the same as those identified in RPP-23403 for C Farm SSTs.

[6] Currently, the 222-S Laboratory does not have analytical methods for these BBI analytes. The BBI uses template values to estimate concentrations of these radionuclides. When a method becomes available for one or more of these radionuclides, the radionuclide(s) should be included in the list of requested analyses.

[7] Perform both fusion and acid digests – Fusion digest provides better dissolution; acid digest provides better detection limits for trace constituents.

[8] Sample results for the EB associated with solids samples shall be reported in per-volume units as appropriate.

[9] Results will be reported separately by Process Chemistry. See Section 8.2.

4.3 INSUFFICIENT SAMPLE RECOVERY

If sample material is insufficient to perform the analyses requested in this sampling and analysis plan, the laboratory shall notify the characterization engineer within one working day. The amounts of material available and the amounts required for the individual analyses shall be provided at that time. If the analyses require prioritization, the general analytical priorities (in order of preference) are radiochemistry (particularly for long half-life radionuclides), inorganic metals, inorganic anions, SVOCs, PCB, and VOCs, as stated in RPP-23403. Any analyses prescribed by this TSAP, but not performed, will be identified in the data report. In addition, justification for not performing the analyses will be provided in the Format IV data package.

5.0 QUALITY ASSURANCE AND QUALITY CONTROL

General QA/QC requirements are described in the QAPjP and only project-specific requirements as identified in the DQOs are discussed here. Project-specific QC acceptance criteria for certain requested analytes are specified in Table 5-1 for solids analyses and Table 5-2 for liquid analyses. For these analytes, the laboratory shall meet both the project acceptance criteria and the QC acceptance requirements in its QAPP. Laboratory blanks shall be evaluated against the method detection limits and sample results (see Section 6.0 for assigning a data qualifier for blank contamination). The QC criteria goals are for demonstrating reliable method performance. The laboratory will use internal QA system for addressing QC failures. If the QC failures are systematic and cannot be resolved by the internal protocols, the characterization engineer shall be consulted to determine the proper action. The laboratory should suggest a course of action at that time. All data not meeting the QC requirements shall be properly noted and the associated QC failures be discussed in the narrative of the data report.

Table 5-1. Quality Control Criteria for Primary Analytes – Solids Analyses (2 sheets)

Analyte	Method	QC Acceptance Criteria		
		LCS % Recovery	Spike % Recovery	Duplicate/MSD RPD
Ag, As, Ba, Be, Cd, Co, Cr, Cu, Fe, Pb, Mn, Ni, Sb, Se, Sr, Tl, U, V, Zn	ICP/AES	80 – 120%	75 – 125%	≤30%
Al, Na	ICP/AES	80 – 120%	75 – 125%	≤30%
Hg	CVAA	80 – 120%	75 – 125%	≤30%
Cl^-, F^-, PO_4^{3-}, SO_4^{2-}	IC	80 – 120%	75 – 125%	≤30%
NO_2^-, NO_3^-,	IC	80 – 120%	75 – 125%	≤30%
F^-, NH_4^+, $C_2H_3O_2^-$, CHO_2^-, $C_2H_3O_3^-$, $C_2O_4^{2-}$	IC	80 – 120%	75 – 125%	≤30%
CN^-	Spectrophotometric	80 – 120%	75 – 125%	≤30%
TIC/TOC	Silver Catalyzed Oxidation/Coulometric Autotitration	80 – 120%	75 – 125%	≤30%
pH	pH meter	± 0.1 pH Units	N/A	N/A
PCB	GC/ECD	70 – 130%	70 – 130%	≤30%
VOC	GC/MS	70 – 130%	70 – 130%	≤30%
SVOC	GC/MS	70 – 130%	70 – 130%	≤30%
% H_2O	TGA	80 – 120%	N/A	≤30%
Density	Gravimetric	80 – 120%	N/A	≤30%
^{235}U, ^{238}U, ^{237}Np, ^{232}Th, ^{126}Sn	ICP/MS	80 – 120%	75 – 125%	≤30%
^{233}U, ^{234}U, ^{236}U, ^{230}Th,	ICP/MS	N/A[c]	N/A[c]	≤30%
^{228}Th	AEA	N/A	N/A	≤30%
^{60}Co, ^{137}Cs, ^{125}Sb	GEA	80 – 120%	N/A[b]	≤30%
^{152}Eu, ^{154}Eu, ^{155}Eu	GEA	N/A	N/A[b]	≤30%
^{129}I	GEA	80 – 120%	N/A[a]	≤30%
^{14}C, ^{3}H	Liquid scintillation counting	80 – 120%	75 – 125%	≤30%
^{63}Ni	Liquid scintillation counting	80 – 120%	N/A[a]	≤30%
^{90}Sr	Beta counting	80 – 120%	N/A[a]	≤30%
^{99}Tc	ICP/MS	80 – 120%	75 – 125%	≤30%
^{79}Se	Liquid scintillation counting	NP	N/A[a]	≤30%
^{231}Pa	ICP/MS	80 – 120%	75 – 125%	≤30%
^{238}Pu	AEA	N/A[c]	N/A[a]	≤30%
$^{239/240}Pu$	AEA	80 – 120%	N/A[a]	≤30%

Table 5-1. Quality Control Criteria for Primary Analytes – Solids Analyses (2 sheets)

Analyte	Method	QC Acceptance Criteria		
		LCS % Recovery	Spike % Recovery	Duplicate/MSD RPD
^{241}Pu	Liquid scintillation counting	N/A	N/A	N/A
^{242}Pu	ICP/MS	80 – 120%	75 – 125%	≤30%
^{241}Am	AEA	80 – 120%	N/A[(a)]	≤30%
^{242}Cm, $^{243/244}$Cm	AEA	N/A	N/A	N/A

Notes:

AEA	Alpha Energy Analysis
CVAA	Cold Vapor Atomic Absorption
GEA	Gamma Energy Analysis
GC/ECD	Gas Chromatography/Electron Capture Detector
GC/MS	Gas Chromatography/Mass Spectrometry
IC	Ion Chromatography
ICP/AES	Inductively Coupled Plasma / Atomic Emission Spectroscopy
ICP/MS	Inductively Coupled Plasma / Mass Spectroscopy
QC	Quality Control
TGA	Thermogravimetric Analysis
N/A	Not applicable
NP	Not performed

(a) Matrix spike analyses are not required for this method because a carrier or tracer is used to correct for constituent loss during sample preparation and analysis. The result generated using the carrier or tracer accounts for any inaccuracy of the method on the matrix. The reported results reflect this correction.

(b) The measurement is a direct reading of the energy and the analysis is not affected by the sample matrix; therefore, a matrix spike is not required.

(c) No standards are available for these constituents.

Table 5-2. Quality Control Criteria for Primary Analytes – Liquid Analyses

Analytes	Method	QC Acceptance Criteria		
		LCS % Recovery	Spike % Recovery	Duplicate/MSD RPD[1]
Al, Sb, As, Ba, Be, Cd, Cr, Co, Cu, Fe, Pb, Mn, Ni, Se, Ag, Sr, Tl, U, V, Zn	ICP/AES	80 – 120%	75 – 125%	≤20%
Hg	CVAA	80 – 120%	75 – 125%	≤20%
F^-, NO_2^-, NO_3^-, NH_4^+, $C_2H_3O_2^-$, CHO_2^{2-}, $C_2H_3O_3^-$, $C_2O_4^{2-}$	IC	80 – 120%	75 – 125%	≤20%
CN^-	Spectrophotometric	80 – 120%	75 – 125%	≤20%
OH^-	Titration	80 – 120%	N/A	≤20%
	pH	± 0.1 pH Units	N/A	N/A
Density	Gravimetric	80-120%	N/A	≤20%
TOC	Combustion/Coulometry	80 – 120%	75 – 125%	≤20%
TIC	Silver Catalyzed Oxidation/Coulometric Autotitration	80 – 120%	75 – 125%	≤32%
VOC	GC/MS	70-130%	70-130%	≤30%
SVOC	GC/MS	70-130%	70-130%	≤30%
PCBs	GC/ECD	70-130%	70-130%	≤30%
Weight percent water	Thermogravimetric	80 - 120%	N/A	≤20%
^{235}U, ^{238}U, ^{237}Np, ^{232}Th	ICP/MS	80 – 120%	75 – 125%	≤20%
^{233}U, ^{234}U, ^{236}U, ^{230}Th	ICP/MS	N/A	N/A	≤20%
^{60}Co, ^{137}Cs	GEA	80 – 120%	N/A	≤20%
^{152}Eu, ^{154}Eu, ^{155}Eu, ^{125}Sb	GEA	N/A	N/A	≤20%
^{129}I	GEA	80 – 120%	N/A	≤20%
^{14}C, ^{3}H	Liquid scintillation counting	80 – 120%	75 – 125%	≤20%
^{63}Ni	Liquid scintillation counting	80 – 120%	N/A	≤20%
^{90}Sr	Beta counting	80 – 120%	N/A	≤20%
^{99}Tc	ICP/MS	80 – 120%	75 – 125%	≤20%
^{79}Se	Liquid scintillation counting	NP	N/A	≤20%
$^{239/240}Pu$, ^{241}Am	Alpha counting	80 – 120%	N/A	≤20%
^{238}Pu, ^{242}Cm, $^{243/244}Cm$	Alpha counting	N/A	N/A	≤20%

Abbreviations: CVAA = Cold Vapor Atomic Absorption, GC/ECD = Gas Chromatography/Electron Capture Detection, GC/MS = Gas Chromatography/Mass Spectrometry, GEA = Gamma Energy Analysis, IC = Ion Chromatography, ICP/AES = Inductively Coupled Plasma /Atomic Emission Spectrometry, ICP/MS = Inductively Coupled Plasma / Mass Spectrometry, ISE = Ion Selective Electrode, LCS = Laboratory Control Sample, MSD = Matrix Spike Duplicate, N/A = Not applicable, NP = Not performed, PCB = Polychlorinated biphenyl, RPD = Relative percent difference, SpG = Specific gravity, SVOC = semi-volatile organic compound, VOC = volatile organic compound

Notes:

[1]If primary and duplicate results are available above detection limits, RPD will be based on these results.

Required detection limits (RDLs) are commonly established at an order of magnitude below the action levels specified in a DQO. Required detection limits for a number of radionuclides were most commonly established in the DQOs in this manner (RPP-23403, RPP-8532, HNF-SD-WM-DQO-001, RPP-RPT-60210). Action levels for other analytes are currently under development. For these analytes, "initial" detection limits were specified. RPP-23403 recognizes that the initial detection limits are conservative (i.e., low) and that many of the limits cannot be met by existing analytical methods. The laboratory shall consider these initial detection limits as targets. The laboratory shall take necessary steps (e.g., use the least dilutions, large sample sizes, etc.) to minimize the method detection limits but is not required to modify or develop new methods/protocols to meet the limits. The "target" detection limits are provided in Tables 5-3 through 5-7. Note that RPP-23403 provides as many as three limits for some radionuclides. For those, the lowest limit was selected as the target detection limit. As discussed in RPP-23403, method detection limits were developed only for primary organic analytes; therefore, RDLs are not specified for secondary organic analytes in this TSAP. RPP-23403 does not specify detection limits for secondary radionuclides. The detection limits are specified in units of µCi/g or µg/g. The laboratory shall use measured density of the liquids to determine if the limits are met.

Target detection limits are developed from Tables 4.9-4.13 in RPP-23403 not including method detection limits. The limits listed in the DQO are for comparisons only and as such do not need to adhere to the order of magnitude below the action levels, as stated in the DQO.

The laboratory shall meet the RDLs. If detected concentration of an analyte is greater than the estimated quantitation limit, then the specified RDL is not applicable. The laboratory shall contact the Characterization Engineer for further instructions if an RDL cannot be met.

Table 5-3. Target Detection Limits for Primary VOA and SVOA Constituents (2 sheets)

CAS	VOA Compound	Target Detection Limits (mg/kg)	CAS	SVOA Compound	Target Detection Limits (mg/kg)
71-55-6	1,1,1-Trichloroethane	1.58E+00	95-48-7	2-Methylphenol (o-cresol)	4.66E+00
127-18-4	1,1,2,2-Tetrachloroethene	9.10E-03	85-68-7	Butylbenzylphthalate	8.93E+02
79-34-5	1,1,2,2-Tetrachloroethane	1.23E-03	95-95-4	2,4,5 Trichlorophenol	5.75E+01
76-13-1	1,1,2-Trichloro-1,2,2-trifluoroethane	1.92E+03	88-06-2	2,4,6-Trichlorophenol	9.24E-02
79-00-5	1,1,2-Trichloroethane	4.27E-03	128-37-0	2,6-Bis(tert-butyl)-4-methylphenol	None
79-01-6	1,1,2-Trichloroethylene	2.60E-02	95-57-8	2-Chlorophenol	9.43E-01
75-35-4	1,1,Dichloroethene	5.22E-04	110-80-5	2-Ethoxyethanol	2.56E+01
107-06-2	1,2-Dichloroethane	2.32E-03	106-44-5	4-Methylphenol (p-cresol)	3.20E-01
75-01-4	Chloroethene (vinyl chloride)	1.84E-04	83-32-9	Acenaphthene	9.79E+01
78-93-3	2-Butanone (MEK)	2.18E+01	1319-77-3	Cresylic acid (cresol, mixed isomers)	None
79-46-9	2-Nitropropane	1.84E-05	108-94-1	Cyclohexanone	3.20E+02
67-64-1	2-Propanone (Acetone)	3.21E+00	84-74-2	Di-n-butylphthalate	1.14E+01
108-10-1	4-methyl-2-pentanone (MIBK)	1.28E+01	117-84-0	Di-n-octylphthalate	5.32E+05
71-43-2	Benzene	4.48E-03	621-64-7	N-nitroso-di-n-propylamine	5.60E-05
75-15-0	Carbon disulfide	5.65E+00	206-44-0	Fluoranthene	6.31E+02
56-23-5	Carbon tetrachloride	3.1E-03	88-75-5	o-Nitrophenol	None
108-90-7	Chlorobenzene	8.74E-01	59-50-7	p-Chloro-m-cresol (4-Chloro-3-methylphenol)	None

Table 5-3. Target Detection Limits for Primary VOA and SVOA Constituents (2 sheets)

CAS	VOA Compound	Target Detection Limits (mg/kg)	CAS	SVOA Compound	Target Detection Limits (mg/kg)
67-66-3	Chloroform	3.81E-02	108-39-4	m-Cresol (3-Methylphenol)	3.20E+00
75-09-2	Dichloromethane (methylene chloride)	2.54E-02	129-00-0	Pyrene	6.55E+02
141-78-6	Ethyl acetate	1.61E+02	59-89-2	N-Nitrosomorpholine	None
100-41-4	Ethylbenzene	6.05E+00	120-82-1	1,2,4-Trichlorobenzene	2.98E+00
60-29-7	Diethyl ether	9.09E+00	121-14-2	2,4-Dinitrotoluene	1.89E-01
108-88-3	Toluene	7.27E+00	67-72-1	Hexachloroethane	2.49E-01
10061-02-6	trans-1,3,-Dichloropropene	1.41E-03	87-68-3	Hexachlorobutadiene	6.05E+00
75-69-4	Trichlorofluoromethane	7.23E+01	98-95-3	Nitrobenzene	5.11E-02
1330-20-7	Xylenes	9.14E+01	91-20-3	Naphthalene	4.46E+00
95-47-6	o-Xylene	9.19E+01	95-50-1	o-Dichlorobenzene	7.03E+00
108-38-3	m-Xylene	8.44E+01	110-86-1	Pyridine	3.87E-01
106-42-3	p-Xylene	1.72E+02	78-83-1	Isobutanol	5.47E+01
			71-36-3	n-Butyl alcohol (1-butanol)	6.62E+00
			126-73-8	Tributyl phosphate	7.0E-01

Table 5-4. Target Detection Limits for PCBs

CAS	PCB Mixture	Target Detection Limit (µg/g)
11104-28-2	Aroclor 1221	0.05 dry weight[1]
11141-16-5	Aroclor 1232	
12674-11-2	Aroclor 1016	
53469-21-9	Aroclor 1242	
12672-29-6	Aroclor 1248	
11097-69-1	Aroclor 1254	
11096-82-5	Aroclor 1260	

Note 1: RPP-23404 specifies a target detection limit of 0.05 µg/g for total PCBs. The laboratory is requested to meet this target detection limit for the individual Aroclors.

Table 5-5. Target Detection Limits for Primary Inorganics (2 sheets)

Analyte	Target Detection Limits (µg/g)
Aluminum [Al]	4.52E+01
Antimony [Sb]	5.42E+00
Arsenic [As]	3.40E-02
Barium [Ba]	9.23E+02
Beryllium [Be]	6.32E+01
Bismuth [Bi]	None
Calcium [Ca]	None
Cadmium [Cd]	5.00E+00
Cobalt [Co]	None

Table 5-5. Target Detection Limits for Primary Inorganics (2 sheets)

Analyte	Target Detection Limits (µg/g)
Copper [Cu]	2.63E+02
Chromium [Cr]	2.00E+00
Iron [Fe]	1.32E+03
Lead [Pb]	2.50E+02
Lanthanum [La]	None
Manganese [Mn]	5.02E+01
Mercury [Hg]	2.09E+00
Nickel [Ni]	1.30E+02
Palladium [Pd]	None
Selenium [Se]	5.20E+00
Silver [Ag]	1.36E+01
Strontium [Sr]	2.92E+03
Sulfur [S]	None
Silicon [Si]	None
Tellurium [Te]	None
Thorium [Th]	None
Tin [Sn]	2.50E+04
Thallium [Tl]	1.59E+00
Uranium [U]	1.32E+00
Vanadium [V]	5.60E+02
Zinc [Zn]	5.97E+03
Zirconium [Zr]	None
Ammonium (NH_4^+)	None
Chloride [Cl^-]	1.00E+03
Cyanide [CN^-]	8.00E-01
Ferrocyanide [$Fe(CN)_6^{3-}$]	None
Fluoride [F^-]	1.60E+01
Hydroxide [OH^-]	1.10E+01
Nitrate [NO_3^-]	1.77E+02
Nitrite [NO_2^-]	1.31E+01
Acetate [$C_2H_3O_2^-$]	None
Formate [CHO_2^-]	None
Glycolate [$C_2H_3O_3^-$]	None
Oxalate [$C_2O_4^{2-}$]	None
Phosphate [PO_4^{3-}]	6.17E+02

Table 5-6. Target Detection Limits for Secondary Inorganics

Analyte	Target Detection Limit (µg/g)
Boron [B]	1.12E+01
Potassium [K]	None
Lithium [Li]	None
Molybdenum [Mo]	1.63E+01
Magnesium [Mg]	None
Sodium [Na]	None
Phosphorus [P]	None
Rhodium [Rh]	None
Tantalum [Ta]	None
Tungsten [W]	None
Yttrium [Y]	None
Cerium [Ce]	None
Europium [Eu]	None
Niobium [Nb]	None
Neodymium [Nd]	None
Praeseodynium [Pr]	None
Rubidium [Rb]	None
Ruthenium [Ru]	None
Samarium [Sm]	None
Titanium [Ti]	None
Bromide [Br]	None
Sulfate [SO_4]	1.00E+03

Table 5-7. Target and Required Detection Limits for Primary Radionuclides (2 sheets)

Analyte	Target Detection Limits (µCi/g)	Required Detection Limits (µCi/g)
^{137}Cs	2.34E-05	3.07E+02
^{60}Co	4.90E-06	None
^{152}Eu	1.14E-05	None
^{154}Eu	1.03E-05	None
^{155}Eu	4.26E-04	None
^{125}Sb	None	None
^{14}C	4.65E-06	5.33E-01
^{3}H	4.82E-05	None
^{129}I	1.20E-07	5.33E-03
^{63}Ni	4.03E-03	4.67E+01
^{90}Sr	3.29E-05	4.67E+02

Table 5-7. Target and Required Detection Limits for Primary Radionuclides (2 sheets)

Analyte	Target Detection Limits (µCi/g)	Required Detection Limits (µCi/g)
^{99}Tc	1.93E-06	2.00E-01
^{79}Se	1.97E-01	None
^{233}U	None	9.0E-04
^{234}U	6.70E-07(as $^{233/234}$U)	9.0E-04
^{235}U	6.70E-08(as $^{235/236}$U)	9.0E-04
^{236}U	none	None
^{238}U	6.50E-07	9.0E-04
^{237}Np	5.92E-05	9.00E-04
^{238}Pu	4.70E-04	9.00E-04
^{239}Pu	4.25E-04	9.00E-04 (as $^{239/240}$Pu)
^{240}Pu	4.26E-04	9.00E-04 (as $^{239/240}$Pu)
^{241}Am	3.35E-04	9.00E-04
^{242}Cm	None	9.00E-04
^{243}Cm	1.10E-04	9.00E-04
^{244}Cm	7.44E-04	9.00E-04
^{230}Th	2.01E-05	None
^{232}Th	4.80E-06	None
^{126}Sn	None	None
^{228}Th	7.73E-06	None
^{241}Pu	1.11E-02	3.50E+02
^{231}Pa	None	None
^{242}Pu	None	None

6.0 EXCEPTIONS AND CLARIFICATIONS

- RPP-23403 requires setting aside solids sample material from each single-shell tank for leach rate testing. Catch tank C-301 solids are expected to be primarily wind-blown sand and dust. Therefore, leach rate testing with these solids is not necessary and solids will not be set aside for this purpose.

- The laboratory shall report all analytical results recovered from ICP/AES and IC analyses, though only specific analytes are requested. Additionally, the laboratory shall report non-requested GEA analytes detected above the method detection limit, with the exception of ambient levels of naturally occurring radon decay elements, so long as no additional preparatory work is required and all associated errors are documented. Data not meeting QC limits shall be flagged accordingly. If the laboratory believes that a non-requested analyte is erroneous, reporting results for that analyte is not required. No reruns or additional analyses will be performed to improve recovery for analytes not specified for these methods unless formally requested by the Characterization Engineer.

- A “B” qualifier shall be used to flag sample results in an analytical batch when an analyte is detected in both the sample and the blank and the blank result is greater than 5% of the sample result.

- A field blank (FB) is required by all DQOs applied to this TSAP. The SB meets requirements of the FB.

- One SB, one trip blank (TB), and one EB are used to address possible contamination during field sampling and shipping for both liquid and solids samples. The SB and TB are specified in Table 3-1. The EB for the finger trap sampler is specified in Table 3-2. An EB for the bottle-on-string is not needed (the SB and TB serve the same purpose for the bottles).

- Lot number for sample containers is to be recorded in the logbook to provide traceability.

- Due to the nature of tank waste sampling, the logbook may be completed within two working days after sampling.

7.0 ORGANIZATION

The organization and responsibility of key personnel involved with this characterization effort are shown in Table 7-1.

Table 7-1. Project Key Personnel

Responsibility	Individual[1]
Characterization Engineer	D. M. Nguyen, 372-3042
222-S Laboratory WHL Project Coordinator	S. Snyder, 372-2525
222-S Laboratory POC (off hours)	222-S Laboratory Leader, 373-2435
222-S Laboratory WRPS Project Coordinator	S. G. McKinney, 372-1945
Tank Farms Shift Office	Production Operations Shift Manager, 373-2689
Waste Compatibility POC	E. M. Uytioco, 376-2612
BBI POC	M. A. Anderson, 376-2082
Tank Waste Information Network System POC	M. A. Anderson, 376-2082
Project Manager	J. G. April, 376-2409
Manager, Tank Farms Sampling	S. M. Withrow, 372-2263
Tank Farms Criticality Safety Representative (Criticality program POC)	D.C. Losey, 373-7700
Manager, Tank Waste Inventory and Characterization	H. L. Baune, 372-3393
Manager, 222-S Laboratory Process Chemistry	G. A. Cooke, 373-7492
Manager, Analytical Project Management	J. M. McKinney, 372-9474

Abbreviation: BBI = Best-Basis Inventory, POC=point-of-contact, WRPS = Washington River Protection Solutions LLC

8.0 DELIVERABLES

WAI Hanford Laboratory and WRPS Process Chemistry will generate separate data reports as required in Sections 8.1 and 8.2.

8.1 DELIVERABLES BY WHL

Analytical results generated by WHL shall be reported in Format II and Format IV as described below (see WHL-MP-1011, *Quality Assurance Project Plan for 222-S Laboratory* for more details).

As required in Tables 4-1 and 4-4, preliminary secondary data for IC, ICP/AES, GEA, and preliminary TICs for VOA and SVOA shall be provided to the characterization engineer when available. Only one report is requested for all Format II data.

The Format IV data report shall include a discussion of analytical results with appropriate data qualifiers and a narrative on the quality of the results, a data summary report, sample breakdown schematics (if applicable), and a section with all the supporting raw data. The report shall also include chain-of-custody forms, sampling data sheets for the sampling event, and characterization Change Notices (CCNs) applicable to the project.

All analytical data, including waste sample analyses, blank analyses, holding time checks, matrix spike analyses, and LCS analyses shall be verified by the laboratory prior to reporting.

The data report shall also include GC/MS chromatograms of TICs found in VOA and SVOA. The report shall include a summary table containing all TICs meeting the TIC evaluation thresholds (see Section 4.2) and the associated estimated concentrations. Those TICs that also appear in Table 4-3 shall be identified as "Hanford Library TICs." A discussion of the TIC evaluation process shall be provided in the narrative.

WAI Hanford Laboratory shall issue the Format IV report within 90 working days following receipt of the last sample to the WRPS Analytical Project Management group. WHL will assist Analytical Project Management in the release of the data report in accordance with TFC-ENG-DESIGN-C-25, "Technical Document Control." Analytical Project Management shall submit the report for release within 5 working days of receipt from WHL. The report shall be issued with the distribution including individuals listed in Table 8-1.

If all samples required by this TSAP are not provided to the laboratory within 90 days of laboratory approval of the TSAP, the specified analytical and/or reporting timeframes will be reevaluated based on current laboratory work loads. Specified analytical and/or reporting timeframes impacted by equipment failures or laboratory facility outages will be reevaluated as needed.

All reviewed and approved data shall be provided to the characterization engineer and the Tank Waste Information Network System point-of-contact in an EXCEL® spreadsheet. The

generation date and time on the spreadsheet shall match, as close as possible, those on the data summary report in the final report.

In addition to this data package, an electronic version of the analytical results, including TICs, shall be provided to the Tank Characterization Database within seven (7) calendar days of release of the data package. The electronic version shall be in the standard electronic format (HNF-3638, *Standard Electronic Format Specification for Tank Characterization Data Loader: Version 3.5* or higher revision).

Table 8-1. Final Data Report Distribution

Recipient	Report Type[1]
M. A. Anderson	E
M. W. Barnes (Ecology)	E or H
H. L. Baune	E
J. G. April	E
G. A. Cooke	E
M. J. Holm	E
A. R. Kersting[2]	E
D. L. Klages	E
R. A. Lobos (ORP)	E
D. C. Losey[2]	E
D. M. Nguyen	E
J. M. McKinney	E
A. D. Pappas	E
D. L. Parker	E
E. M. Uytioco	E

Notes:

[1] E = Electronic, H = hard copy, Ecology = Washington State Department of Ecology, ORP = Department of Energy – Office of River Protection

[2] On distribution to meet requirements in TFC-ENG-CHEM-P-18, "Response to Sample Data Limit Exceedance."

8.2 DELIVERABLES BY WRPS PROCESS CHEMISTRY

Process Chemistry shall report results for solid phase characterization within 45 calendar days of receiving solids material from WHL. Data for particle size distribution and rheology testing if requested shall be reported within 90 calendar days of receiving material. The report(s) shall be released in accordance with TFC-ENG-DESIGN-C-25. Distribution for the report will be as shown in Table 8-1.

9.0 CHANGE CONTROL

Change control shall be conducted as described in Section 3.11 of the QAPjP.

10.0 REFERENCES

HNF-3638, 2001, *Standard Electronic Format Specification for Tank Characterization Data Loader: Version 3.5*, Rev. 3, prepared by Pacific Northwest National Laboratory for CH2M HILL Hanford Group, Inc., Richland, Washington.

HNF-SD-WM-DQO-001, *Data Quality Objectives for Tank Farms Waste Compatibility Program*, as revised, Washington River Protection Solutions LLC, Richland, Washington.

RPP-10226, *Direction for Disposition of Tank Waste Samples in Archive,* as revised, Washington River Protection Solutions LLC, Richland, Washington.

RPP-23403, *Single-Shell Tank Component Closure Data Quality Objectives*, as revised, Washington River Protection Solutions LLC, Richland, Washington.

RPP-45634, *Data Quality Objectives for Tank 241-C-301 Waste Transfer and Component Closure,* as revised, Washington River Protection Solutions LLC, Richland, Washington.

RPP-PLAN-62100, 2018, *Quality Assurance Project Plan for Tank Waste Sampling and Analysis*, Rev. 0, Washington River Protection Solutions LLC, Richland, Washington.

RPP-RPT-45723, *Catch Tank 241-C-301 Retrieval Feasibility Study*, as revised, Washington River Protection Solutions LLC, Richland, Washington.

RPP-RPT-60210, 2017, *Data Quality Objectives to Support Best-Basis Inventory (BBI)*, Rev. 0, Washington River Protection Solutions LLC, Richland, Washington.

TFC-ENG-CHEM-P-18, "Response to Sample Data Limit Exceedance," as revised, Washington River Protection Solutions LLC, Richland, Washington.

TFC-ENG-DESIGN-C-25, "Technical Document Control," as revised, Washington River Protection Solutions LLC, Richland, Washington.

WHL-MP-1011, *Quality Assurance Project Plan for 222-S Laboratory*, as revised, WAI Hanford Laboratory, Richland, Washington.

WRPS-1803745, "FY18 Visual Inspection of Tank 241-C-301," Interoffice Memorandum, Washington River Protection Solutions LLC, Richland, Washington.

APPENDIX A

RADIONUCLIDE ESTIMATES FOR SAMPLE SHIPPING

A1.0 ESTIMATED RADIONUCLIDE ACTIVITY IN CATCH TANK C-301 SAMPLES

As discussed in Section 2.0, there are no sample data for the solids and only limited data for the liquid in catch tank C-301. The liquid was sampled in January 1985 and a few analyses were performed. Analytical results are reported as shown in Table 2-1. The catch tank was isolated in 1985 so no additional waste has entered the catch tank since then. However, it appears that some water intrusion had occurred since 1985 so it is likely that the reported results bound the radionuclide activity of the liquid currently in the catch tank. The reported liquid sample results, decay-corrected to January 1, 2019, are shown in Table A-1. The liquid is expected to be primarily rainwater and/or snowmelt so liquid density is estimated to be 1.0 g/mL.

Table A-1. Estimated Radionuclide Activity for Catch Tank C-301 Liquid Samples – Decay-Corrected to January 1, 2019

Radionuclide	Activity, in µCi/mL	Activity, in µCi per 250-mL Sample
Total Alpha[1]	3.23E-04	8.07E-02
^{137}Cs	4.66E+00	1.16E+03
Total Beta[1]	7.63E+00	1.91E+03

[1]For radioactive decay correction, Total Alpha was assumed to be ^{239}Pu and Total Beta to be ^{90}Sr.

Solids in C-301 are expected to be mostly wind-blown dust, with small amounts of tank waste from leaking process connections or jumper drainage. Bounding activity of radionuclides in the C-301 solids are estimated by assuming tank waste makes up half of the solids volume. Furthermore, the tank waste portion of the solids in C-301 is assumed to have the same activity as solids in C Farm tanks prior to retrieval. The activity of each radionuclide in the C-301 tank waste portion is estimated with a volume-weighted average. The volume-weighted average is calculated by multiplying the volume fraction of each C Farm waste type and the activity of that radionuclide in the waste type to obtain an activity fraction for the waste type, and then summing the activity fractions.

Radionuclide activity in C Farm waste types as estimated in RPP-8847, *Best-Basis Inventory Template Compositions of Common Waste Layers*, is used in the calculation of the volume-weighted averages. Volumes of various waste types in C Farm, except for 241-C-106, prior to retrieval are reported in the fiscal year 2004 First Quarter updates of the Best-Basis Inventory for C Farm tanks. Single-shell tank 241-C-106 was retrieved in 1999 to address a high-heat issue. Pre-retrieval volumes of waste types in 241-C-106 are documented in a Best-Basis Inventory included in WHC-SD-WM-ER-615, Rev. 0A, *Tank Characterization Report for Single-Shell Tank 241-C-106.* Bounding estimates of radioactivity in C-301 solids are provided in Table A-2. The highest template density of the C Farm waste types, 1.8 g/mL, is assumed for catch tank C-301 solids.

Table A-2. Estimated Radionuclide Activity for Catch Tank C-301 Solids Samples – Decay-Corrected to January 1, 2019

Radionuclide	Activity, in µCi/mL	Activity, in µCi per 200-mL Sample
^{3}H	1.41E-02	2.82E+00
^{14}C	6.40E-04	1.28E-01
^{59}Ni	5.19E-03	1.04E+00
^{60}Co	3.72E-03	7.45E-01
^{63}Ni	4.31E-01	8.61E+01
^{79}Se	3.22E-05	6.45E-03
^{90}Sr	6.55E+02	1.31E+05
^{90}Y	6.55E+02	1.31E+05
^{93}Zr	1.17E-03	2.35E-01
^{93m}Nb	1.08E-03	2.15E-01
^{99}Tc	9.23E-03	1.85E+00
^{106}Ru	6.43E-12	1.29E-09
^{113m}Cd	6.44E-04	1.29E-01
^{125}Sb	9.91E-05	1.98E-02
^{126}Sn	6.46E-05	1.29E-02
^{129}I	9.24E-05	1.85E-02
^{134}Cs	1.05E-07	2.10E-05
^{137}Cs	5.33E+01	1.07E+04
^{137m}Ba	5.03E+01	1.01E+04
^{151}Sm	4.33E+01	8.66E+03
^{152}Eu	4.67E-03	9.35E-01
^{154}Eu	2.11E-01	4.23E+01
^{155}Eu	3.22E-02	6.44E+00
^{226}Ra	1.44E-08	2.89E-06
^{227}Ac	1.68E-04	3.37E-02
^{228}Ra	1.67E-04	3.34E-02
^{229}Th	8.77E-05	1.75E-02
^{231}Pa	2.10E-05	4.21E-03
^{232}Th	1.67E-04	3.34E-02
^{232}U	3.14E-04	6.27E-02
^{233}U	2.30E-02	4.60E+00
^{234}U	3.45E-03	6.90E-01
^{235}U	1.41E-04	2.83E-02
^{236}U	7.23E-05	1.45E-02
^{237}Np	1.88E-05	3.76E-03

Table A-2. Estimated Radionuclide Activity for Catch Tank C-301 Solids Samples – Decay-Corrected to January 1, 2019

Radionuclide	Activity, in µCi/mL	Activity, in µCi per 200-mL Sample
^{238}Pu	1.78E-02	3.56E+00
^{238}U	3.26E-03	6.52E-01
^{239}Pu	6.49E-01	1.30E+02
^{240}Pu	1.42E-01	2.85E+01
^{241}Am	9.67E-01	1.93E+02
^{241}Pu	4.15E-01	8.31E+01
^{242}Cm	8.88E-04	1.78E-01
^{242}Pu	7.92E-06	1.58E-03
^{243}Am	5.53E-04	1.11E-01
^{243}Cm	4.74E-05	9.48E-03
^{244}Cm	8.82E-04	1.76E-01

Reference

RPP-8847, *Best-Basis Inventory Template Compositions of Common Waste Layers*, Washington River Protection Solutions LLC, Richland, Washington.

WHC-SD-WM-ER-615, Rev. 0A, *Tank Characterization Report for Single-Shell Tank 241-C-106,* SGN Eurisys Services Corporation, Richland, Washington.

APPENDIX B

CHARACTERIZATION CHANGE NOTICES

(Characterization Change Notices that are generated to support the sampling and analysis will be added here in a revision of this TSAP after completion of sampling and analysis activities).

Attachment 2
20-TPD-0015

DATA QUALITY OBJECTIVES FOR TANK 241-C-301 WASTE TRANSFER AND COMPONENT RPP-45634, REV. 1

(30 Pages Including Cover Sheet)

DOCUMENT RELEASE AND CHANGE FORM

Prepared For the U.S. Department of Energy, Assistant Secretary for Environmental Management
By Washington River Protection Solutions, LLC., PO Box 850, Richland, WA 99352
Contractor For U.S. Department of Energy, Office of River Protection, under Contract DE-AC27-08RV14800

TRADEMARK DISCLAIMER: Reference herein to any specific commercial product, process, or service by trade name, trademark, manufacturer, or otherwise, does not necessarily constitute or imply its endorsement, recommendation, or favoring by the United States government or any agency thereof or its contractors or subcontractors. Printed in the United States of America.

Release Stamp

DATE: Apr 17, 2019 HANFORD RELEASE

1. **Doc No:** RPP-45634 **Rev.** 01

2. **Title:**
DATA QUALITY OBJECTIVES FOR TANK 241-C-301 WASTE TRANSFER AND COMPONENT CLOSURE

3. **Project Number:** ☒ N/A

4. **Design Verification Required:** ☐ Yes ☒ No

5. **USQ Number:** ☒ N/A RPP-27195

6. **PrHA Number** **Rev.** ☒ N/A

Clearance Review Restriction Type: public

7. **Approvals**

Title	Name	Signature	Date
Clearance Review	Raymer, Julia R	*Raymer, Julia R*	04/17/2019
Document Control Approval	Manville, Kira	*Manville, Kira*	04/17/2019
Originator	Nguyen, Duc M	*Nguyen, Duc M*	03/21/2019
Other Approver	April, John G	*April, John G*	03/19/2019
Other Approver	Pappas, Alexander D	*Pappas, Alexander D*	03/26/2019
Other Approver	Holm, Melissa J	*Holm, Melissa J*	03/21/2019
Other Approver	Diedesch, Samuel J	*Diedesch, Samuel J*	03/25/2019
Responsible Manager	Baune, Heather L	*Baune, Heather L*	03/26/2019

8. **Description of Change and Justification**

Completion revision to reflect changes in data needs and tank contents.

9. **TBDs or Holds** ☒ N/A

10. **Related Structures, Systems, and Components**

a. **Related Building/Facilities** ☐ N/A	b. **Related Systems** ☒ N/A	c. **Related Equipment ID Nos. (EIN)** ☒ N/A
241-C-301		

11. **Impacted Documents – Engineering** ☒ N/A

Document Number	Rev.	Title

12. **Impacted Documents (Outside SPF):**

N/A

13. **Related Documents** ☐ N/A

Document Number	Rev.	Title
HNF-SD-WM-DQO-001	24	DATA QUALITY OBJECTIVES FOR TANK FARM WASTE COMPATIBILITY PROGRAM
RPP-23403	06	SINGLE-SHELL TANK COMPONENT CLOSURE DATA QUALITY OBJECTIVES
RPP-RPT-60210	00	Data Quality Objectives to Support Best-Basis Inventory (BBI)

14. **Distribution**

Name	Organization
April, John G	CLOSURE & INTERIM MEASURES
Baune, Heather L	TNK WST INVENTORY & CHARACTZTN
Cockrell, Andy	TANK FARM PROJECTS ENGINEERING
Cooke, Gary A	PROCESS CHEMISTRY
Craft, Tom	SAMPLING OPERATIONS
Diedesch, Samuel J	TNK WST INVENTORY & CHARACTZTN
Hetzer, David C	WASTE TECHNICAL SERVICES
Holm, Melissa J	A/C FARM RETRIEVAL ENGRNG
Klages, Deanna L	RETRVL & CLOSURE/PROJ ENV CMPL
Nguyen, Duc M	TNK WST INVENTORY & CHARACTZTN
Niebuhr, Daniel P	SHIFT OPERATIONS
Olander, Alan R	PROCESS & INTEGRITY ENG
Pappas, Alexander D	CLOSURE & INTERIM MEASURES
Parker, Dan	CLOSURE & INTERIM MEASURES
Radloff, Anna W	CLOSURE & INTERIM MEASURES
Rasmussen, Juergen H	TNK WST INVENTORY & CHARACTZTN
Schramm, Geoff D	QA PROGRAMS & ASSESSMENTS
Uytioco, Elise M	PROD OPERATIONS PROCESS ENGRNG
Vickery, Buzz	PROCESS CHEMISTRY
Withrow, Steve M	TANK FARM SAMPLING

INFORMATION CLEARANCE REVIEW AND RELEASE APPROVAL

Part I: Background Information

Title: DATA QUALITY OBJECTIVES FOR TANK 241-C-301 WASTE TRANSFER AND COMPONENT CLOSURE

Publish to OSTI? ☐ Yes ☑ No

Information Category:
☐ Abstract ☐ Journal Article ☐ Summary
☐ Internet ☐ Visual Aid ☐ Software
☐ Full Paper ☑ Report ☐ Other

Trademark/Copyright "Right to Use" Information or Permission Documentation	Yes	NA
	☐	☑

Document Number: RPP-45634 Revision 1 Date: March 2019

Author: Nguyen, Duc M

Part II: External/Public Presentation Information

Conference Name:

Sponsoring Organization(s): N/A

Date of Conference: Conference Location:

Will Material be Handed Out? ☐ Yes ☑ No Will Information be Published? ☐ Yes ☑ No *(If Yes, attach copy of Conference format instructions/guidance.)*

Part III: WRPS Document Originator Checklist

Description	*Yes*	*N/A*	*Print/Sign/Date*
Information Product meets requirements in TFC-BSM-AD-C-01?	☐	☑	
Document Release Criteria in TFC-ENG-DESIGN-C-25 completed? (Attach checklist)	☐	☑	
If product contains pictures, safety review completed?	☐	☑	

Part IV: WRPS Internal Review

Function	*Organization*	*Date*	*Print Name/Signature/Date*
Subject Matter Expert	WRPS		Nguyen, Duc M Approved via att. IDMS data file.
Responsible Manager	WRPS		Baune, Heather L Approved via att. IDMS data file.
Other:			

Part V: IRM Clearance Services Review

Description	*Yes*	*No*	*Print Name/Signature*
Document Contains Classified Information?	☐	☑	If Answer is "Yes," ADC Approval Required Print Name/Signature/Date
Document Contains Information Restricted by DOE Operational Security Guidelines?	☐	☑	Reviewer Signature: Print Name/Signature/Date
Document is Subject to Release Restrictions? *If the answer is "Yes," please mark category at right and describe limitation or responsible organization below:*	☐	☑	Document contains: ☐ Applied Technology ☐ Protected CRADA ☐ Personal/Private ☐ Export Controlled ☐ Proprietary ☐ Procurement – Sensitive ☐ Patentable Info. ☐ OUO ☐ Predecisional Info. ☐ UCNI ☐ Restricted by Operational Security Guidelines ☐ Other (Specify)
Additional Comments from Information Clearance Specialist Review?	☐	☑	Information Clearance Specialist Approval APPROVED By Julia Raymer at 11:08 am, Apr 17, 2019 Print Name/Signature/Date

When IRM Clearance Review is Complete – Return to WRPS Originator for Final Signature Routing (Part VI)

INFORMATION CLEARANCE REVIEW AND RELEASE APPROVAL

Part VI: Final Review and Approvals

Description	*Approved for Release*		*Print Name/Signature*
	Yes	*N/A*	
WRPS External Affairs	☑	☐	Approved via att. IDMS data file.
WRPS Office of Chief Counsel	☑	☐	Approved via att. IDMS data file.
DOE – ORP Public Affairs/Communications	☑	☐	Approved via att. IDMS data file.
Other: ORP SME & OCC	☑	☐	Approved via att. IDMS data file.
Other:	☐	☐	

Comments Required for WRPS-Indicate Purpose of Document:

This report documents the data quality objective (DQO) process undertaken to develop a waste sampling and analysis approach that will provide appropriate data for catch tank 241 C-301 to support closure of Waste Management Area (WMA) C.

APPROVED
By Julia Raymer at 11:11 am, Apr 17, 2019

Approved for Public Release; Further Dissemination Unlimited

Information Release Station

Was/Is Information Product Approved for Release? ☑ Yes ☐ No

If Yes, what is the Level of Releaser? ☑ Public/Unrestricted ☐ Other (Specify) _____

Date Information Product Stamped/Marked for Release: 4/17/2019

Was/Is Information Product Transferred to OSTI? ☐ Yes ☑ No

Forward Copies of Completed Form to WRPS Originator

```
- <workflow name="(JRR) RPP-45634-01" id="238457810">
  - <task name="Clearance Process" id="0" date-initiated="20190321T1551"
      performer="Julia R Raymer" performer-id="164931488" username="h3310581">
      <comments>Please approve RPP-45634, Rev. 1, for public release. POC: Duc
        Nguyen (509) 372-3042 Thank you, Julia Raymer (509) 373-
        0230</comments>
    </task>
    <task name="Add XML" id="1" date-done="20190321T1552" />
    <task name="Manager Approval" id="41" date-due="20190326T1551" date-
      done="20190321T1617" performer="Heather L Baune" performer-
      id="141017875" username="h2790307" disposition="Approve"
      authentication="true" />
    <task name="Document Reviewer2" id="53" date-due="20190326T1617" date-
      done="20190325T1625" performer="Robert B McPherson" performer-
      id="182455751" username="h0022392" disposition="Public Release"
      authentication="true" />
    <task name="Document Reviewer1" id="54" date-due="20190326T1617" date-
      done="20190327T0720" performer="John C Britton" performer-id="63214817"
      username="h0084103" disposition="Public Release" authentication="true" />
    <task name="Doc Owner Clearance Review" id="13" date-due="20190328T0720"
      date-done="20190327T0804" performer="Duc M Nguyen" performer-
      id="1085768" username="h0051515" disposition="Send On"
      authentication="true" />
    <task name="Milestone 1" id="24" date-done="20190327T0804" />
  - <task name="ORP Document Reviewer1" id="57" date-due="20190329T0804"
      date-done="20190417T0852" performer="Tonja-Maree Davis" performer-
      id="181732204" username="h2711692" disposition="Public Release"
      authentication="true">
      <reviewer performer="Vanessa A Turner" performer-id="161213685"
        username="h8478576" />
      <reviewer performer="Mark D Silberstein" performer-id="158207236"
        username="h5490246" />
      <reviewer performer="Yvonne M Levardi" performer-id="185346745"
        username="h7131303" />
      <comments>Reviewer's Comments Date: 04/16/2019 02:19 PM Step Name:
        RPP-45634 Rev 1 Data Quality Objectives for Tank 241-C-301 Waste
        Transfer and Component 301 Waste Transfer Closure Performer: Levardi,
        Yvonne (h7131303) no comments</comments>
    </task>
    <task name="Doc Owner Reviews ORP Comments" id="61" date-
      due="20190418T0852" date-done="20190417T0917" performer="Duc M
      Nguyen" performer-id="1085768" username="h0051515" disposition="Send On"
      authentication="true" />
    <task name="Milestone 2" id="62" date-done="20190417T0917" />
    <task name="Verify Doc Consistency" id="4" date-due="20190418T0917" date-
      done="20190417T1102" performer="Julia R Raymer" performer-id="164931488"
      username="h3310581" disposition="Cleared" authentication="true" />
  </workflow>
```

RPP-45634
Revision 1

DATA QUALITY OBJECTIVES FOR CATCH TANK 241-C-301 WASTE TRANSFER AND COMPONENT CLOSURE

Prepared by

D. M. Nguyen
Washington River Protection Solutions LLC

On Behalf of a Joint ORP-Ecology-WRPS Data Quality Objective Team

Date Published
April 2019

Prepared for the U.S. Department of Energy
Office of River Protection

Contract No. DE-AC27-08RV14800

Approved for Public Release;
Further Dissemination Unlimited

TABLE OF CONTENTS

1.0 INTRODUCTION 4
- 1.1 TANK BACKGROUND 4
- 1.2 PURPOSE AND SCOPE 6
- 1.3 CATCH TANK C-301 DATA QUALITY OBJECTIVE PROCESS 7

2.0 DQO STEP 1 – STATE THE PROBLEM 9

3.0 DQO STEP 2 – DEVELOP THE DECISION/ESTIMATION STATEMENT 9

4.0 DQO STEP 3 – IDENTIFY INPUTS 9

5.0 DQO STEP 4 – DEFINE POPULATION BOUNDARIES 19

6.0 DQO STEP 5 – DEVELOP THE DECISION RULE OR ANALYTIC APPROACH 20

7.0 DQO STEP 6 – SPECIFY ERROR TOLERANCE 22

8.0 DQO STEP 7 – DEVELOP/OPTIMIZE A SAMPLING DESIGN 22

9.0 REFERENCES 24

LIST OF FIGURES

Figure 1-1. Catch Tank C-301 4
Figure 1-2. Tank Riser Layout 5
Figure 1-3. Location of Catch Tank C-301 6
Figure 5-1. Accessible Solids from Existing Risers 20

LIST OF TABLES

Table 1-1. Liquid Sample Results from 1985 6
Table 1-2. DQO Revision Team 7
Table 4-1. Solids Analyses Required by Existing DQOs 10
Table 4-2. Liquid Analyses Required by Existing DQOs 13
Table 4-3. Primary Organic Analytes for C Farm Tanks 16
Table 4-4. Secondary Organic Analytes “Hanford Library” 16
Table 4-5. Solids Analyses Required for Retrieval Method Evaluation 18
Table 4-6. Liquid Analyses Required for Evaluation of Transfer Methods 18
Table 7-1. Summary of Requirements for Number of Samples 22
Table 8-1. Catch Tank C-301 Integrated Sampling Design 23

LIST OF TERMS

Abbreviations and Acronyms

AEA	Alpha energy analysis
BBI	Best-Basis Inventory
C-301	241-C-301
CAS	Chemical Abstracts Service
CVAA	Cold vapor atomic absorption
DQO	Data quality objective
DSC	Differential scanning calorimetry
DST	Double-shell tanks
Ecology	State of Washington Department of Ecology
EPA	U.S. Environmental Protection Agency
GC/ECD	Gas chromatography/electron capture detector
GC/MS	Gas chromatography/mass spectrometry
GEA	Gamma energy analysis
IC	Ion chromatography
ICP/AES	Inductively coupled plasma/atomic emission spectroscopy
ICP/MS	Inductively coupled plasma/mass spectrometry
ORP	U.S. Department of Energy Office of River Protection
ORSS	Off-riser sampling system
PCB	Polychlorinated biphenyls
PLM	Polarized light microscopy
QA	Quality assurance
QC	Quality control
SEM	Scanning electron microscopy
Sep	Separation
SST	Single-shell tank
SVOA	Semivolatile organic analysis
TGA	Thermo-gravimetric analysis
TIC	Total inorganic carbon
TOC	Total organic carbon
UCL	Upper confidence level
VOA	Volatile organic analysis
WMA	Waste management area
WRPS	Washington River Protection Solutions LLC
XRD	X-ray diffraction

Units of Measure

M	molarity or moles per liter
%	percent
μCi/L	microCuries per liter
μCi/mL	microCuries per milliliter

1.0 INTRODUCTION

This report documents the data quality objective (DQO) process undertaken to develop a waste sampling and analysis approach that will provide appropriate data for catch tank 241-C-301 (C-301) to support closure of Waste Management Area (WMA) C. Although catch tanks were designed for secondary containment and not waste storage, contents of the catch tanks must be evaluated for closure in accordance with Washington Administrative Code WAC 173-303-610, "Closure and Post Closure" and Department of Energy DOE M 435.1, *Radioactive Waste Management Manual*. Catch tank C-301 contains a significant amount of waste including both liquid and solids. Additionally, limited sample data indicate the tank contents may include waste associated with the reprocessing of nuclear fuel, therefore, sampling and analysis will be performed to evaluate the tank contents.

1.1 TANK BACKGROUND

Catch tank C-301 was built in 1944. A detailed description of the catch tank can be found in RPP-RPT-45723, *Catch Tank 241-C-301 Retrieval Feasibility Study*. Catch tank C-301 is a vertical tank with an inside diameter of 20 feet and a height of 15 feet 6 inches, excluding the dome top. The tank walls are constructed of reinforced concrete with an interior application of gunite. The walls are 6 inches thick at the base and taper to 5 inches thick at the top. The bottom slab of the catch tank is 5-3/4 inches thick. The catch tank is buried approximately 10 feet below ground. Access to the tank interior is through two groups of risers located near the tank wall and on opposite sides of the catch tank. Each group consists of four risers, two 12-inch diameter risers and two 4-inch diameter risers (see Figures 1-1 and 1-2).

Figure 1-1. Catch Tank C-301

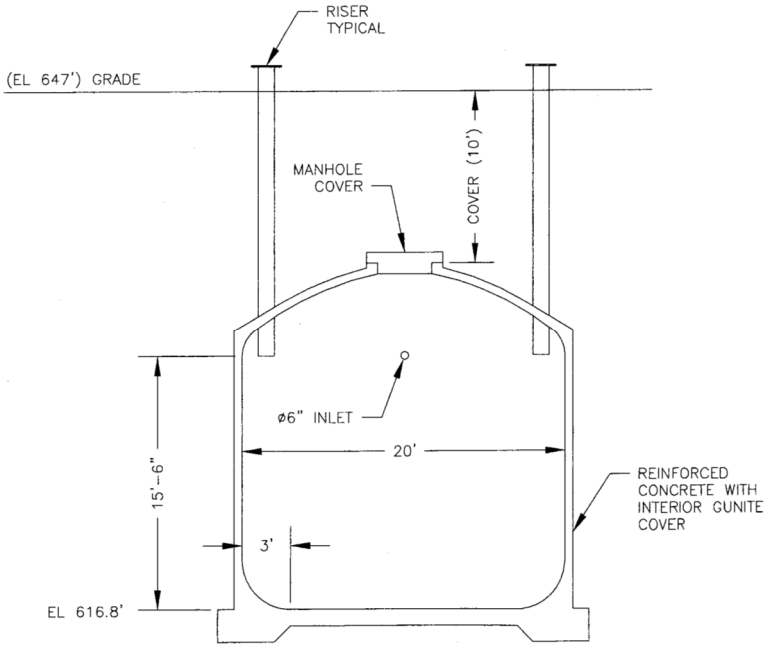

Figure 1-2. Tank Riser Layout

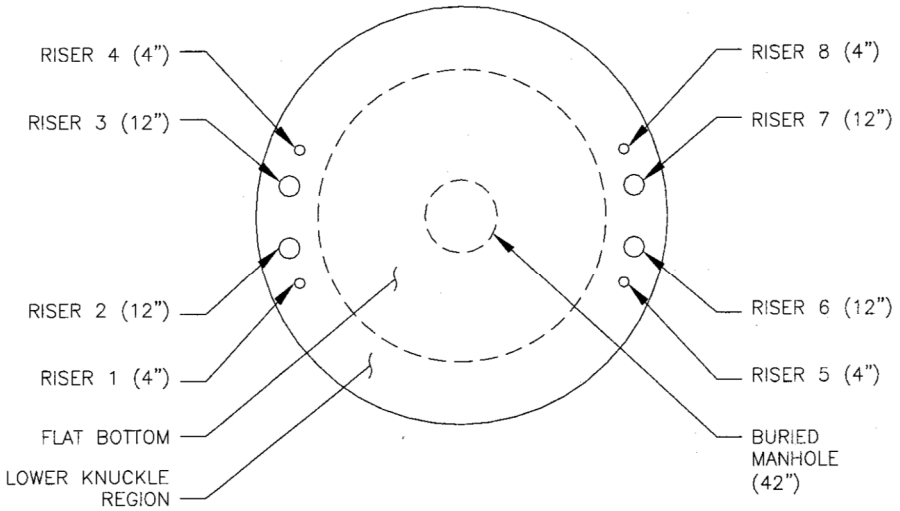

Catch tank C-301 is located northwest of single-shell tank (SST) 241-C-112 in the 241-C tank farm (see Figure 1-3). The catch tank is now inactive but was used in the past to collect drainage from diversion boxes 241-C-151, 241-C-152, 241-C-153, and 241-C-252. The catch tank accumulated waste via leaking process connections or jumper drainage from the interconnected diversion boxes during operation. Additionally, the catch tank received water from rainfall or snowmelt and accumulated windblown dust that entered the diversion boxes and washed into the catch tank via drain lines.

The catch tank was stabilized in May 1985, with a waste level of 53.5 inches and a reported solids level measurement of 46 inches. The solids level measurement was higher than some previous waste (liquid) surface level measurements and its validity was questioned (RPP-RPT-45723). Recent inspection in May 2018 shows a total waste level of approximately 66 inches, indicating continued water intrusion despite the tank stabilization. Solids level was also re-measured in 2018; measurements of 7 and 9 inches were obtained at two separate risers. It appears that the solids level reported in 1985 was in error.

Based on an average solids depth of 8 inches, the solids volume is estimated to be approximately 1,600 gallons. By difference, the catch tank also contains approximately 11,600 gallons of liquid. Liquid in the catch tank was sampled on January 24, 1985 and sample results are summarized in Table 1-1 (RPP-RPT-45723). Although the data are limited and do not directly represent the current waste due to water intrusion and radioactive decay, they provide an indication of the contamination level in the liquid. There are no sample data on the solids.

Figure 1-3. Location of Catch Tank C-301

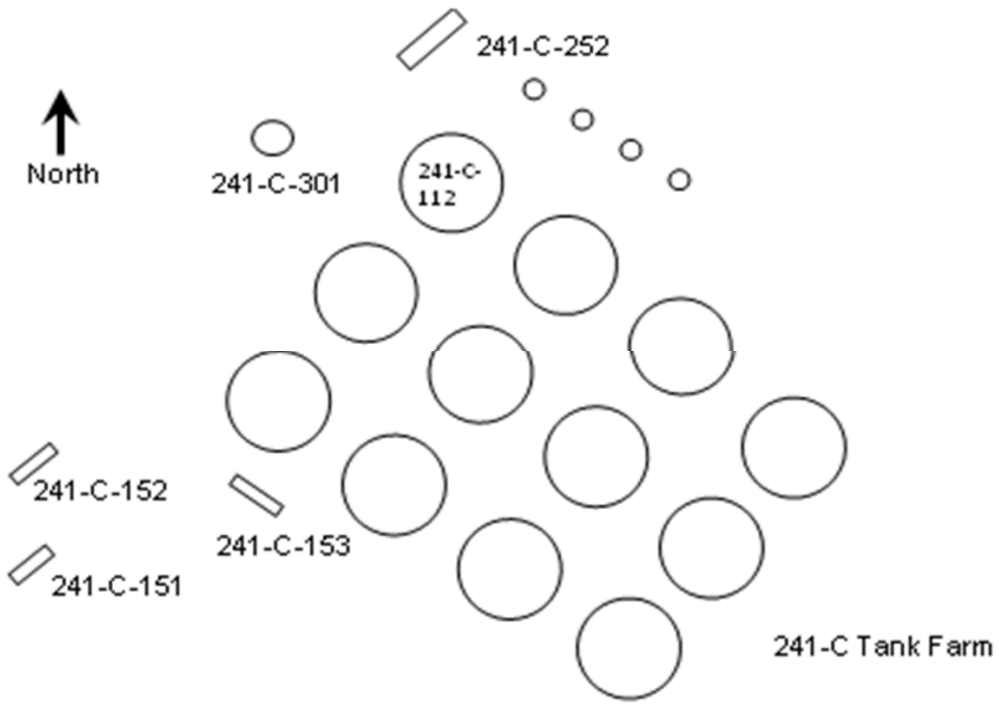

Table 1-1. Liquid Sample Results from 1985

Analysis	Reported Results in Original Unit	Reported Results Converted to Current Standard Unit
NO_2	2.53E-02 M	1.56E+03 ug/mL
NO_3	2.44E-02 M	1.12E+03 ug/mL
Total Alpha	3.23E-01 uCi/L	3.23E-04 uCi/mL
Cs-137	1.02E+04 uCi/L	1.02E+01 uCi/mL
Total Beta	1.73E+04 uCi/L	1.73E+01 uCi/mL
pH	7.52	7.52

1.2 PURPOSE AND SCOPE

This DQO identifies data needs for catch tank C-301 waste to support closure of WMA C. In order to close catch tank C-301 as a component of WMA C, some waste in the catch tank will likely be retrieved and transferred to the double-shell tank (DST) system. Waste composition data are also needed for the transfer into and acceptance of catch tank C-301 waste by the DST system. More specifically, the data needs addressed by this DQO are:

1. Perform risk assessment to support closure and satisfy requirements for near surface disposal of low-level radioactive waste. Analytical requirements for catch tank C-301 need to be consistent with analytical requirements for closure of C Farm SSTs. Therefore, analytical requirements as identified for C Farm SSTs in RPP-23403, *Single-Shell Tank Component Closure Data Quality Objectives*, will be applied to catch tank C-301 samples.
2. Evaluate/develop a solids retrieval method and to select a waste transfer method for catch tank C-301 waste. Specific data requirements for this need are developed in this DQO.
3. Assess compatibility of wastes in catch tank C-301 and the receiver tank for acceptance into the DST system. Specific requirements for this data need are identified in HNF-SD-WM-DQO-001, *Data Quality Objectives for Tank Farms Waste Compatibility Program*).
4. Update waste inventory in the DST receiver. Specific requirements for this data need are identified in RPP-RPT-60210, *Data Quality Objectives to Support Best-Basis Inventory*.

This DQO identifies data requirements for the evaluation of solids retrieval methods and waste transfer methods. The DQO then develops an integrated sampling and analysis approach that will provide data to satisfy all data needs identified above.

1.3 CATCH TANK C-301 DATA QUALITY OBJECTIVE PROCESS

The DQO is an iterative process and DQO documents are revised as new information and data become available. The catch tank C-301 DQO is updated for the following reasons:

- Address additional data needs including waste retrieval method evaluation/development, waste transfer method selection, and DST receiver inventory update.
- Reflect new estimates of waste solids and liquid quantities.
- Take advantage of existing DQOs to simplify the DQO process and document for catch tank C-301.

A DQO team was assembled to address these changes. Team members are identified in Table 1-2.

Table 1-2. DQO Revision Team (2 sheets)

Organization	Member
WRPS	April, J. G. #
WRPS	Nguyen, D. M., facilitator*
WRPS	Craft, T. W.*
WRPS	Vickery, E. A.*
WRPS	Withrow, S. M.*
WRPS	Pappas, A. D.*
WRPS	Cockrell, A. B.*

Table 1-2. DQO Revision Team (2 sheets)

Organization	Member
WRPS	Klages, D. L.*
WRPS	Holm, M. J.*
WRPS	Radloff, A. W.
WRPS	Niebuhr, D. P.
WRPS	Olander, A. R.
WRPS	Rasmussen, J. H.
WRPS	Uytioco, E. M.
WRPS	Diedesch, S. J.
WRPS	Parker, D. L.
ORP	Bovier, J. B.*
ORP	Turner, V. A.*
Ecology	Barnes, M. W.*

Decision maker

* Team member participated in the DQO meeting on February 7, 2019

WRPS = Washington River Protection Solutions LLC, ORP = Department of Energy Office of River Protection, Ecology = Washington State Department of Ecology

The DQO team conducted the DQO process in accordance with the procedure, TFC-ENG-CHEM-C-16, *Data Quality Objectives for Sampling and Analysis.* This procedure follows the U. S. Environmental Protection Agency (EPA) QA/G-4, *Guidance on Systematic Planning Using the Data Quality Objectives Process*, with some modifications to accommodate specific Tank Farms constraints. The DQO development is a seven-step process as outlined below.

1. State the Problem – Define the problem that necessitates the study.

2. Develop Decision/Estimation Statements – Identify the decision to be made or what must be estimated to solve the DQO problem.

3. Identify Inputs – Identify data and information required to make the decision or estimation.

4. Define Population Boundaries – Define spatial and temporal boundaries of the population to be sampled.

5. Develop Decision Rule or Analytic Approach – Define the rule(s) for making the decision or for calculating and using the estimates identified in Step 2.

6. Define Error Tolerances – Establish acceptable uncertainties in order to estimate the minimum number of samples.

7. Develop/Optimize Sampling Design – Develop a sampling and analysis design that when implemented would provide the data necessary to solve the DQO problem.

2.0 DQO STEP 1 – STATE THE PROBLEM

The purpose of this step is to clearly define the problem (the reason sample data are needed) so the focus of the characterization project is unambiguous. The four data needs identified in Section 1.2 are addressed individually in the following Problem Statements:

1. *In order to close catch tank C-301 in manner consistent with final closure of Waste Management Area C, sample data are needed.*
2. *In order to support development and selection of a solids retrieval method and waste transfer method, sample data are needed.*
3. *In order to accept a transfer of waste from catch tank C-301 into the DST system, sample data are needed.*
4. *In order to update waste inventory in the DST receiver, sample data are needed.*

3.0 DQO STEP 2 – DEVELOP THE DECISION/ESTIMATION STATEMENT

In this step, either decision statements or estimation statements or both are developed. A decision statement identifies the decision that must be made based on the sample data to address the problem statement. Where a direct decision is not needed nor appropriate to address a problem statement, an estimation statement is developed in order to obtain data necessary to estimate the waste characteristics of interest.

Decision and estimation statements for tank closure, DST waste compatibility, and inventory update are addressed in existing DQOs: RPP-23403, HNF-SD-WM-DQO-001, and RPP-RPT-60210, respectively. The statements are not duplicated in this document. For retrieval method development and retrieval/transfer method selection, decisions will not be made based directly on the sample data. Instead, technical evaluations that include cost-benefit analysis will be conducted to select the appropriate retrieval and transfer methods. Therefore, only estimation statements are needed as follows:

- *Estimate chemical, physical, and radiological characteristics of waste solids to support development/selection of a solids retrieval system.*
- *Estimate radiological characteristics of waste liquid to support selection of a transfer system (e.g., hose-in-hose, tanker or cask).*

4.0 DQO STEP 3 – IDENTIFY INPUTS

In this step, required data from analysis and testing of catch tank C-301 waste samples are identified. As in the previous step, required sample analyses for tank closure, DST acceptance, and inventory update are identified in existing DQOs. The required analyses for these data needs are integrated and shown in Table 4-1 (for solids samples) and Table 4-2 (for liquid samples).

Table 4-1. Solids Analyses Required by Existing DQOs (3 Sheets)

Analytical Technique	Closure Analytes	Compatibility Analytes	BBI Analytes	Integrated Analyte List
Gravimetric	Bulk density	Density	Bulk density	Bulk density
TGA	Wt% H_2O	Wt% H_2O	Wt% H_2O	Wt% H_2O
ICP/AES[1]	Primary inorganics: Ag, Al, As, Ba, Be, Cd, Co, Cr, Cu, Fe, Pb, Mn, Ni, Sb, Se, Sr, Tl, U, V, Zn Secondary inorganics: B, Bi, Ca, K, Li, Mo, Mg, Na, P, Rh, S, Si, Sn, Ta, W, Y, Zr, Ce, Eu, La, Nb, Nd, Pd, Pr, Rb, Ru, Sm, Te, Th, Ti	Ag, Al, As, Be, Cd, Co, Cr, Fe, Mn, Ni, Pb, Se, Sr, Tl, U, Bi, Ca, K, Na, Si, Sn, Zr, La, Pd, Te, Th	Al, Cr, Cu, Fe, Pb, Mn, Ni, Sr, U, Bi, Ca, K, Na, P, S, Si, Zr, La	Primary inorganics: Ag, Al, As, Ba, Be, Cd, Co, Cr, Cu, Fe, Pb, Mn, Ni, Sb, Se, Sr, Tl, U, V, Zn, Bi, Ca, K, Na, P, S, Si, Sn, Zr, La, Pd, Te, Th Secondary inorganics: B, Li, Mo, Mg, Y, Ce, Eu, Nb, Nd, Pr, Rb, Rh, Ru, Sm, Ti, Ta, W,
ICP/MS	^{237}Np, ^{233}U, ^{234}U, ^{235}U, ^{236}U, ^{238}U, ^{230}Th, ^{232}Th, ^{242}Pu, ^{231}Pa, ^{126}Sn	^{237}Np, ^{233}U, ^{235}U, ^{238}U, ^{242}Pu, ^{151}Sm	^{237}Np, ^{233}U, ^{234}U, ^{235}U, ^{236}U, ^{238}U, ^{232}Th, ^{242}Pu, ^{126}Sn, ^{151}Sm, ^{229}Th, ^{243}Am, ^{231}Pa	^{237}Np, ^{233}U, ^{234}U, ^{235}U, ^{236}U, ^{238}U, ^{230}Th, ^{232}Th, ^{242}Pu, ^{231}Pa, ^{126}Sn, ^{151}Sm, ^{229}Th, ^{243}Am, ^{231}Pa
IC	Primary inorganics : F^-, NO_2^-, NO_3^-, $C_2H_3O_2^-$, CHO_2^-, $C_2H_3O_3^-$, $C_2O_4^{2-}$ Secondary inorganics: Br^-, Cl^-, PO_4^-, SO_4^{2-}	NO_2^-, NO_3^-, PO_4^-, SO_4^{2-}, Cl^-, F^-	F^-, NO_2^-, NO_3^-, $C_2O_4^{2-}$, $S_2O_3^{2-}$, Cl^-, PO_4^-, SO_4^{2-}	Primary inorganics : F^-, NO_2^-, NO_3^-, $C_2H_3O_2^-$, CHO_2^-, $C_2H_3O_3^-$, $C_2O_4^{2-}$, Cl^-, PO_4^-, SO_4^{2-}, $S_2O_3^{2-}$ Secondary inorganics: Br^-
IC	NH_4^+	--	--	NH_4^+
CVAA	Hg	Hg	Hg	Hg
Spectrophotometric[2]	CN^-	--	--	CN^-
Sep & beta count	$^{90}Sr/^{90}Y$	$^{90}Sr/^{90}Y$	$^{90}Sr/^{90}Y$	$^{90}Sr/^{90}Y$
Separation, AEA	$^{238, 239/240}Pu$, ^{241}Am, $^{243/244}Cm$, ^{242}Cm, ^{228}Th	$^{238, 239/240}Pu$, ^{241}Am, $^{243/244}Cm$	$^{238, 239/240}Pu$, ^{241}Am, $^{243/244}Cm$, ^{242}Cm	$^{238, 239/240}Pu$, ^{241}Am, $^{243/244}Cm$, ^{242}Cm, ^{228}Th
Sep/liquid scintillation	^{3}H	--	^{3}H	^{3}H
Sep/liquid scintillation	^{14}C	--	^{14}C	^{14}C
Sep/liquid scintillation	^{63}Ni	--	^{63}Ni	^{63}Ni
Sep/liquid scintillation	^{241}Pu	^{241}Pu	^{241}Pu	^{241}Pu

Table 4-1. Solids Analyses Required by Existing DQOs (3 Sheets)

Analytical Technique	Closure Analytes	Compatibility Analytes	BBI Analytes	Integrated Analyte List
Anion-cation exchange/distillation/ liquid scintillation	^{79}Se	--	^{79}Se	^{79}Se
ICP/MS or liquid scintillation[3]	^{99}Tc	--	^{99}Tc	^{99}Tc
Sep/GEA	^{129}I	--	^{129}I	^{129}I
GEA	Primary gamma emitters: ^{152,154,155}Eu, ^{137}Cs, ^{60}Co, ^{125}Sb Secondary gamma emitters: all other analytes detected by GEA	^{154}Eu, ^{137}Cs, ^{60}Co	^{152,154,155}Eu, ^{137}Cs, ^{60}Co, ^{125}Sb, ^{226}Ra, ^{106}Ru	Primary gamma emitters: ^{152,154,155}Eu, ^{137}Cs, ^{60}Co, ^{125}Sb, ^{226}Ra, ^{106}Ru Secondary gamma emitters: all other analytes detected by GEA
GC/MS	Primary VOA (See Table 4-3)[5] Secondary VOA (see Table 4-4)	--	--	Primary VOA (See Table 4-3) Secondary VOA (see Table 4-4)
GC/MS	Primary SVOA (See Table 4-3)[5] Secondary SVOA (see Table 4-4)	--	--	Primary SVOA (See Table 4-3) Secondary SVOA (see Table 4-4)
pH Meter	pH	pH	pH	pH
GC/ECD	PCBs (Aroclors 1016, 1221, 1232, 1242, 1248, 1254, and 1260)	PCBs (Aroclors 1016, 1221, 1232, 1242, 1248, 1254, and 1260)	PCBs (Aroclors 1016, 1221, 1232, 1242, 1248, 1254, and 1260)	PCBs (Aroclors 1016, 1221, 1232, 1242, 1248, 1254, and 1260)
Persulfate oxidation[4]	--	TIC/TOC	TIC/TOC	TIC/TOC
DSC	--	Energetics	--	Energetics
To be developed	--	--	^{59}Ni, ^{93}Zr, ^{93m}Nb, ^{113m}Cd, ^{134}Cs, ^{137}mBa, ^{227}Ac, ^{228}Ra, ^{232}U[6]	^{59}Ni, ^{93}Zr, ^{93m}Nb, ^{113m}Cd, ^{134}Cs, ^{137}mBa, ^{227}Ac, ^{228}Ra, ^{232}U[6]

Table 4-1. Solids Analyses Required by Existing DQOs (3 Sheets)

Analytical Technique	Closure Analytes	Compatibility Analytes	BBI Analytes	Integrated Analyte List

Abbreviations: AEA = alpha energy analysis, BBI = Best-Basis Inventory, CVAA = cold vapor atomic absorption, DSC = differential scanning calorimetry, GC/ECD = gas chromatography/electron capture detector, GC/MS = gas chromatography/mass spectrometer, GEA = gamma energy analysis, IC = ion chromatography, ICP/AES = inductively coupled plasma/atomic emission spectrometry, ICP/MS = inductively coupled plasma mass spectrometry, PCB = polychlorinated biphenyl, sep = separation, SVOA = semivolatile organic analysis, TGA = thermogravimetric analysis, TIC = total inorganic carbon, TOC = total organic carbon, VOA = volatile organic analysis, wt% = weight percent

Notes:

[1] Perform both fusion and acid digests – Fusion digest provides better dissolution; acid digest provides better detection limits for trace constituents.

[2] Analyze for CN to estimate ferrocyanide

[3] Perform both analytical techniques for Tc-99 to evaluate effectiveness of the techniques on the waste matrix.

[4] Perform persulfate oxidation only; furnace oxidation does not work with solids matrix.

[5] Because catch tank C-301 is located in C Farm, the primary organic analytes are the same as those identified in RPP-23403 for C Farm SSTs.

[6] Currently, the 222-S Laboratory does not have analytical methods for these BBI analytes. The BBI uses template values to estimate concentrations of these radionuclides. When a method becomes available for one or more of these radionuclides, the radionuclide(s) should be included in the list of requested analyses.

Table 4-2. Liquid Analyses Required by Existing DQOs (3 sheets)

Analytical Technique	Closure Analytes	Compatibility Analytes	BBI Analytes	Integrated Analyte List
Gravimetric	Density	Density	Bulk density	Density
Thermogravimetric	Wt% H_2O	Wt% H_2O	Wt% H_2O	Wt% H_2O
ICP/AES	Primary inorganics: Ag, Al, As, Ba, Be, Cd, Co, Cr, Cu, Fe, Mn, Ni, Pb, Sb, Se, Sr, Tl, U, V, Zn Secondary inorganics: B, Bi, Ca, K, Li, Mo, Mg, Na, P, Rh, S, Si, Sn, Ta, W, Y, Zr, Ce, Eu, La, Nb, Nd, Pd, Pr, Rb, Ru, Sm, Te, Th, Ti	Ag, Al, As, Be, Cd, Co, Cr, Fe, Mn, Ni, Pb, Se, Sr, U, Zn, Bi, Ca, K, Na, Rh, Si, Ta, W, Zr, La	Al, Cr, Fe, Pb, Mn, Ni, Sr, U, Bi, Ca, K, Na, P, S, Si, Zr, La	Primary inorganics: Ag, Al, As, Ba, Be, Cd, Co, Cr, Cu, Fe, Mn, Ni, Pb, Sb, Se, Sr, Tl, U, V, Zn, Bi, Ca, K, Na, P, Rh, S, Si, W, Zr, La Secondary inorganics: B, Li, Mo, Mg, Sn, Y, Ce, Eu, Nb, Nd, Pd, Pr, Rb, Ru, Sm, Te, Th, Ti, Ta
ICP/MS	^{237}Np, ^{233}U, ^{234}U, ^{235}U, ^{236}U, ^{238}U, ^{230}Th, ^{232}Th, ^{242}Pu, ^{231}Pa, ^{126}Sn	^{237}Np, ^{233}U, ^{235}U, ^{238}U, ^{242}Pu, ^{151}Sm	^{237}Np, ^{233}U, ^{234}U, ^{235}U, ^{236}U, ^{238}U, ^{232}Th, ^{242}Pu, ^{126}Sn, ^{151}Sm, ^{229}Th, ^{243}Am, ^{231}Pa	^{237}Np, ^{233}U, ^{234}U, ^{235}U, ^{236}U, ^{238}U, ^{230}Th, ^{232}Th, ^{242}Pu, ^{231}Pa, ^{126}Sn, ^{151}Sm, ^{229}Th, ^{243}Am
IC	Primary inorganics: F^-, NO_2^-, NO_3^-, $C_2H_3O_2^-$, CHO_2^-, $C_2H_3O_3^-$, $C_2O_4^{2-}$ Secondary inorganics: Br^-, Cl^-, PO_4^-, SO_4^2	NO_2^-, NO_3^-, PO_4^-, SO_4^{2-}, Cl^-, F^-	F^-, NO_2^-, NO_3^-, $C_2O_4^{2-}$, $S_2O_3^{2-}$, Cl^-, PO_4^-, SO_4^{2-}	Primary inorganics : F^-, NO_2^-, NO_3^-, $C_2H_3O_2^-$, CHO_2^-, $C_2H_3O_3^-$, $C_2O_4^{2-}$, Cl^-, PO_4^-, SO_4^{2-}, $S_2O_3^{2-}$ Secondary inorganics: Br^-
IC	NH_4^+	--	--	NH_4^+
CVAA	Hg	Hg	Hg	Hg
Spectrophotometric[1]	CN^- (to estimate ferrocyanide)	--	--	CN^- (to estimate ferrocyanide)
Sep & beta count	$^{90}Sr/^{90}Y$	$^{90}Sr/^{90}Y$	$^{90}Sr/^{90}Y$	$^{90}Sr/^{90}Y$ [4]
Separation, AEA	$^{238, 239/240}Pu$, ^{241}Pu, ^{241}Am, $^{243/244}Cm$, ^{242}Cm, ^{228}Th	$^{238, 239/240}Pu$, ^{241}Am, $^{243/244}Cm$	$^{238, 239/240}Pu$, ^{241}Pu, ^{241}Am, $^{243/244}Cm$, ^{242}Cm	$^{238, 239/240}Pu$, ^{241}Pu, ^{241}Am, $^{243/244}Cm$, ^{242}Cm, ^{228}Th
Sep/liquid scintillation	^{3}H	--	^{3}H	^{3}H
Sep/liquid scintillation	^{14}C	--	^{14}C	^{14}C
Sep/liquid scintillation	^{63}Ni	--	^{63}Ni	^{63}Ni
Sep/liquid scintillation	^{241}Pu	^{241}Pu	^{241}Pu	^{241}Pu

Table 4-2. Liquid Analyses Required by Existing DQOs (3 sheets)

Analytical Technique	Closure Analytes	Compatibility Analytes	BBI Analytes	Integrated Analyte List
Anion-cation exchange/distillation/ liquid scintillation	^{79}Se	--	^{79}Se	^{79}Se
ICP/MS or liquid scintillation[2]	^{99}Tc	--	^{99}Tc	^{99}Tc
Sep/GEA	^{129}I	--	^{129}I	^{129}I
GEA	Primary gamma emitters: $^{152,154,155}Eu$, ^{137}Cs, ^{60}Co, ^{125}Sb Secondary gamma emitters: all other analytes detected by GEA	^{154}Eu, ^{137}Cs, ^{60}Co	$^{152,154,155}Eu$, ^{137}Cs, ^{60}Co, ^{125}Sb, ^{226}Ra, ^{106}Ru	Primary gamma emitters: $^{152,154,155}Eu$, ^{137}Cs, ^{60}Co, ^{125}Sb, ^{226}Ra, ^{106}Ru Secondary gamma emitters: all other analytes detected by GEA
GC/MS	Primary VOA (See Table 4-3)[5] Secondary VOA (see Table 4-4)	--	--	Primary VOA (See Table 4-3) Secondary VOA (see Table 4-4)
GC/MS	Primary SVOA (See Table 4-3)[5] Secondary SVOA (see Table 4-4)	--	--	Primary SVOA (See Table 4-3) Secondary SVOA (see Table 4-4)
pH Meter	pH	pH	pH	pH
Potentiometric titration	OH^-	OH^-	OH^-	OH^-
GC/ECD	PCBs (Aroclors 1016, 1221, 1232, 1242, 1248, 1254, and 1260)	PCBs (Aroclors 1016, 1221, 1232, 1242, 1248, 1254, and 1260)	PCBs (Aroclors 1016, 1221, 1232, 1242, 1248, 1254, and 1260)	PCBs (Aroclors 1016, 1221, 1232, 1242, 1248, 1254, and 1260)
Furnace oxidation or persulfate oxidation[3]	--	TIC/TOC	TIC/TOC	TIC/TOC
DSC	--	Energetics	--	Energetics
To be developed	--	--	^{59}Ni, ^{93}Zr, ^{93m}Nb, ^{113m}Cd, ^{134}Cs, ^{137}mBa, ^{227}Ac, ^{228}Ra, ^{232}U[6]	^{59}Ni, ^{93}Zr, ^{93m}Nb, ^{113m}Cd, ^{134}Cs, ^{137}mBa, ^{227}Ac, ^{228}Ra, ^{232}U[6]

Table 4-2. Liquid Analyses Required by Existing DQOs (3 sheets)

Analytical Technique	Closure Analytes	Compatibility Analytes	BBI Analytes	Integrated Analyte List

Notes:

[1] Analyze for CN to estimate ferrocyanide

[2] Perform both analytical techniques for Tc-99 to evaluate effectiveness of the techniques on the waste matrix.

[3]Perform both persulfate oxidation and furnace oxidation to compare results.

[4]Filtration of the liquid will likely be required if a tanker truck is used for transferring to a DST. Total Beta is elevated in the 1985 sample possibly due to suspended solids. Perform Sr-90 analyses on both filtered and unfiltered aliquots.

[5] Because catch tank C-301 is located in C Farm, the primary organic analytes are the same as those identified in RPP-23403 for C Farm SSTs.

[6] Currently, the 222-S Laboratory does not have analytical methods for these BBI analytes. The BBI uses template values to estimate concentrations of these radionuclides. When a method becomes available for one or more of these radionuclides, the radionuclide(s) should be included in the list of requested analyses.

Table 4-3. Primary Organic Analytes for C Farm Tanks

Organic Analyte	CAS Number	Analysis Method
Trichloroethylene	79-01-6	GC/MS for VOA
2-Butanone	78-93-3	GC/MS for VOA
2-Propanone (Acetone)	67-64-1	GC/MS for VOA
4-Methyl-2-pentanone	108-10-1	GC/MS for VOA
Xylenes (Mixed isomers of o-, m-, and p-)	1330-20-7	GC/MS for VOA
o-Xylene	95-47-6	GC/MS for VOA
m-Xylene[1]	108-38-3	GC/MS for VOA
p-Xylene[1]	106-42-3	GC/MS for VOA
Tributyl phosphate	126-73-8	GC/MS for SVOA
PCBs	11104-28-2 11141-16-5 2674-11-2 53969-21-9 126572-29-6 11097-69-1 11096-82-5	GC/ECD for Aroclors

Abbreviation: CAS = Chemical Abstract Services

Note: [1]m-xylene and p-xylenes will be analyzed together as xylenes (m+p).

Table 4-4. Secondary Organic Analytes "Hanford Library" (2 sheets)

Secondary VOA Analytes	CAS	Secondary SVOA Analytes	CAS
cis-1,3 -Dichloropropene	10061-01-5	p-Nitrochlorobenzene	100-00-5
Ethylene dibromide (1,2, Dibromoethane)	106-93-4	1,4-Dinitrobenzene	100-25-4
Butane	106-97-8	1,4-Dichlorobenzene	106-46-7
1,3 - Butadiene	106-99-0	Phenol	108-95-2
Acrolein (propenal)	107-02-8	Hexachlorobenzene	118-74-1
3-Chloropropene (Allyl chloride)	107-05-1	N,N-Diphenylamine	122-39-4
Propionitrile (Ethyl cyanide)	107-12-0	Pentachloronaphthalene	1321-64-8
Acrylonitrile	107-13-1	Hexachloronaphtahlene	1335-87-1
2-Pentanone	107-87-9	Tetrachloronaphthalene	1335-88-2
Methylcyclohexane	108-87-2	Octachloronaphthalene	2234-13-1
n-Pentane	109-66-0	Isodrin	465-73-6
5-Methyl-2-hexanone	110-12-3	Benzo[a]pyrene	50-32-8
2-Heptanone	110-43-0	Dibenz[a,h]anthracene	53-70-3
n-Hexane	110-54-3	1,3-Dichlorobenzene	541-73-1
Cyclohexane	110-82-7	3-Methyl-2-butanone	563-80-4
n-Octane	111-65-9	N-Nitroso-N,N-dimethylamine	62-75-9
4-Heptanone	123-19-3	Hexafluoroacetone	684-16-2

Table 4-4. Secondary Organic Analytes "Hanford Library" (2 sheets)

Secondary VOA Analytes	CAS	Secondary SVOA Analytes	CAS
Acetic acid n-butylester	123-86-4	Pentachloronitrobenzene (PCNB)	82-68-8
1,4-Dioxane	123-91-1	Pentachlorophenol	87-86-5
n-Heptane	142-82-5	2-sec-Butyl-4,6-dinitrophenol (Dinoseb)	88-85-7
Cyclopentane	287-92-3	1,1'-Biphenyl	92-52-4
Ethyl alcohol	64-17-5	Acetophenone	98-86-2
2-Propyl alcohol	67-63-0	Toxaphene	8001-35-2
n-Propyl alcohol (1-propanol)	71-23-8	Nitric acid, propyl ester	627-13-4
Bromomethane	74-83-9	Aldrin	309-00-2
Chloroethane	75-00-3	alpha-BHC	319-84-6
Acetonitrile	75-05-8	beta-BHC	319-85-7
1,1-Dichloroethane	75-34-3	gamma-BHC (Lindane)	58-89-9
Dichlorofluoromethane	75-43-4	Dieldrin	60-57-1
Chlorodifluoromethane	75-45-6	Endrin	72-20-8
3-Methy-2-butanone	563-80-4	1,1-Dimethylhydrazine	57-14-7
Hexafluoroacetone	684-16-2	Methyl hydrazine	60-34-4
2-Butenaldehyde (2-Butenal)	4170-30-3	n-Nitrosomethylethylamine	10595-95-6
Methyl isocyanate	624-83-9	n-Nitrosodi-n-butylamine	924-16-3
n-Propionaldehyde	123-38-6	--	--
3-Heptanone	106-35-4	--	--
Chloromethane	74-87-3	--	--
n-Nonane	111-84-2	--	--
Styrene	100-42-5	--	--
Tetrahydrofuran	109-99-9	--	--
Cyclohexene	110-83-8	--	--
2-Methyl-2-propenenitrile	126-98-7	--	--
2-Hexanone	591-78-6	--	--
Triethylamine	121-44-8	--	--
Oxirane	75-21-8	--	--
2-Methyl-2-propanol	75-65-0	--	--
Dichlorodifluoromethane	75-71-8	--	--
1,2-Dichloro-1,1,2,2-tetrafluoroethane	76-14-2	--	--
Heptachlor	76-44-8	--	--
1,2-Dichloropropane	78-87-5	--	--
1-Methylpropyl alcohol	78-92-2	--	--
3-Pentanone	96-22-0	--	--

Solids in catch tank C-301 are expected to be primarily wind-blown sand and dust with possible tank waste precipitates. Limited chemical and physical data are needed to evaluate solids retrieval methods. The liquid in catch tank C-301 is expected to be primarily rainwater and snowmelt; therefore, sample data are not needed for liquid retrieval. However, data on the radionuclide contents of the liquid are needed to evaluate waste transfer methods such as tanker truck, hose-in-hose transfer line, or shipping cask. Required solids and liquid analyses for these data needs are shown in Tables 4-5 and 4-6, respectively.

Table 4-5. Solids Analyses Required for Retrieval Method Evaluation

Analyte	Rationale
Solid Phase Characterization by SEM, XRD, and PLM	Develop retrieval technology.
Particle size distribution	Develop retrieval technology.
Density	Develop retrieval technology.
Solids rheology (viscosity, shear strength) if necessary	Develop retrieval technology.
Al, Ca, Cu, Fe, K, Mn, Na, Ni, P, S, Si, U, Zr	Support dissolution testing if necessary
Cl^-, F^-, $C_2O_4^{2-}$, HCO_2^-, NO_3^-, PO_4^{3-}, SO_4^{2-}	Support dissolution testing if necessary
TIC/TOC	Support dissolution testing if necessary
^{137}Cs	Evaluate radiation shielding

Abbreviations: SEM = scanning electron microscopy, XRD = x-ray diffraction, PLM = polarized light microscopy

Table 4-6. Liquid Analyses Required for Evaluation of Transfer Methods

Analyte	
^{3}H	^{237}Np
^{14}C	^{238}Pu
^{60}Co	^{239}Pu
^{63}Ni	^{240}Pu
^{90}Sr	^{241}Pu
^{99}Tc	^{242}Pu
^{129}I	^{241}Am
^{137}Cs	^{243}Am
^{234}U	^{242}Cm
^{235}U	^{243}Cm
^{238}U	^{244}Cm

5.0 DQO STEP 4 – DEFINE POPULATION BOUNDARIES

In this step, the spatial and temporal boundaries of the population to be sampled are defined. In addition, constraints that might affect the ability to take representative samples from such population are identified and addressed.

The population to be sampled consists of the liquid and solids in catch tank C-301. The liquid consists primarily of water from flushes and natural precipitation. The solids are expected to be primarily wind blown sand and dust and possibly tank waste precipitates. Both liquid and solids are contaminated with tank waste. Waste surface level measurements in 1985 and 2018 indicate possible intrusion – most likely water. The solids are underneath 58 inches of liquid and can be assumed to be unaffected by the intrusion. With water intrusion, liquid level rises and the supernatant gets more dilute. Although liquid concentrations might change with time due to water intrusion, concentration data may be adjusted mathematically to account for the intrusion using liquid level measurements. Even though concentrations of constituents of interest may change due to water intrusion, inventories of these constituents remain unchanged. Therefore, repeated sampling to account for the changing conditions due to water intrusion is not necessary.

Constraints that might affect the ability to collect representative samples from the population are addressed below:

1. All access risers are located near the tank wall – Liquid in catch tank C-301 is expected to be a dilute aqueous solution. Variability in such liquids is due primarily to a density difference, typically in the vertical direction. Therefore, this access restriction has little or no impact on liquid samples. This access restriction may cause bias in solids samples because solids may have significant variability in the horizontal direction. Horizontal variability in the solids will be evaluated by taking samples at two risers on opposite sides of the catch tank (same approach as allowed in RPP-23403 for C Farm SSTs). Vertical variability in the solids will be addressed by taking top-to-bottom samples to the possible extent.
2. Tank floor is sloped directly under the risers; solids below this level (approximately 4 inches) are not accessible if samples were to be taken directly under the riser (see Figure 5-1) - Inaccessible solids account for up to about 40% of the total solids volume. This potential sampling bias is addressed in Step 5.
3. Currently, there is no available solids grab sampler capable of taking 5-inch samples – The finger trap sampler is being modified to take 5-inch samples.

Figure 5-1. Accessible Solids from Existing Risers

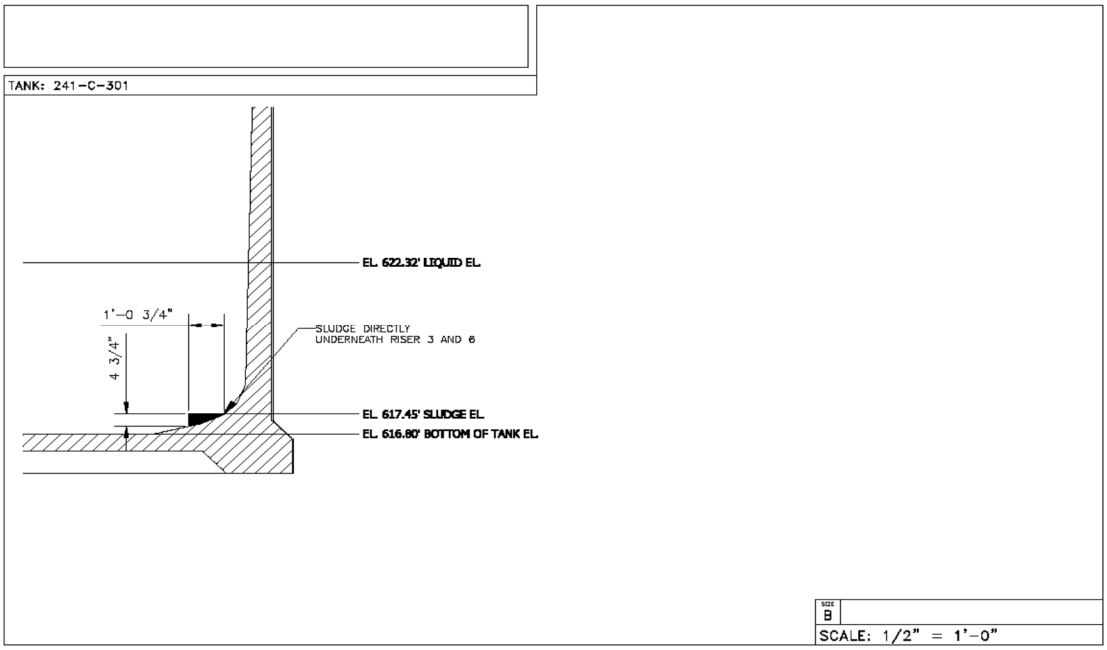

6.0 DQO STEP 5 – DEVELOP THE DECISION RULE OR ANALYTIC APPROACH

In this step, decision rules or analytic approaches are developed for decision statements or estimation statements in Step 2 of the DQO process. Decision rules and analytic approaches for tank closure, DST acceptance, and inventory update are addressed in existing DQOs. For retrieval method development and retrieval/transfer method selection, a combined analytic approach was developed:

> *The means of chemical, radiological, and physical characteristics, as appropriate, of waste liquid and solids in catch tank C-301 will be calculated from sample results to support development/selection of a retrieval/transfer system.*

Note that decision rule in RPP-23403 for residual waste volume in SSTs does not apply to catch tank C-301.

As discussed in the previous step, configuration of the available risers is such that approximately 4 inches of solids immediately above the tank bottom may not be accessible for sampling. Available off-riser sampler such as the remotely operated Off-Riser Sampling System (ORSS) cannot operate in catch tank C-301 because of the supernatant layer. Developing new off-riser sampling equipment for the small amount of inaccessible waste would not be cost-effective. An approach was developed to address the inaccessible solids by incorporating process knowledge. The approach involves calculating average and bounding inventories for solids as follows:

- Calculate the average and bounding inventories based only on sample results (same calculations as performed for C Farm SSTs):
  Average inventory = average concentration x average density x average total volume
  Bounding inventory 1 = 95% upper confidence level (UCL) inventory
- Calculate a second bounding inventory based on sample results and process knowledge:
  Bounding inventory 2 = 95% UCL inventory for the upper 5 inches + bounding inventory for the bottom 4 inches by conservatively assuming tank waste composition (i.e., average concentrations of pre-retrieval solids in C Farm tanks)

Sample results may be used as follows:

- The average and bounding inventories for liquid and solids in the catch tank are used to assess health risk associated with leaving waste in the catch tank.
- The chemical, physical, and radiological means, as appropriate, are used to evaluate effectiveness of potential waste retrieval and transfer methods.
- Results of the risk assessment and retrieval/transfer method evaluation are used to evaluate the need for retrieval and recommend retrieval and transfer methods if needed.

If waste were to be retrieved, further use of sample data should reflect the quantity and composition of the waste transferred to a DST and the residual waste in catch tank C-301. For example,

If only liquid is transferred to a DST, then

- For closure, liquid sample data and an estimate of the residual liquid volume would be used to estimate the liquid inventory. The solids inventory would be estimated as described above.
- For compatibility, chemical, physical, and radiological means of the liquid, as appropriate, are used to assess acceptance of catch tank C-301 waste into the DST system.
- For BBI, chemical, physical, and radiological means, as appropriate, are used to update waste inventory in the DST receiver after completion of the transfer.

If liquid and solids are retrieved and transferred to a DST, pre-retrieval solids inventories bound post-retrieval residual solids inventories in catch tank C-301 and may be used as conservative estimates for closure. Inventory of residual liquid in catch tank C-301 would be estimated as described above. Liquid and solids sample data will be used as appropriate for compatibility assessment and BBI.

If waste were not to be retrieved, liquid sample data and an estimate of the current liquid volume would be used to estimate the liquid inventory. The solids inventory would be estimated as described above.

7.0 DQO STEP 6 – SPECIFY ERROR TOLERANCE

In this step, typically the DQO team agrees to an acceptable error rate or data uncertainty level in order to estimate the minimum number of samples that must be taken. This minimum number of samples is a key piece of information required for developing the sampling design (the ultimate objective of a DQO).

For tank closure, waste acceptance (compatibility), and DST inventory update, the acceptable errors are specified in the cited DQOs as applicable. The DQO documents for these data needs also specify the minimum number of samples. For the evaluation of retrieval and transfer methods, establishing an acceptable uncertainty level in the DQO is not necessary. However, estimates of the uncertainty associated with the sample means will be needed. In order to calculate the uncertainty estimates, multiple samples must be taken to support this data need. The minimum number of samples for the data needs in this DQO are summarized in Table 7-1.

Table 7-1. Summary of Requirements for Number of Samples

DQO/Data Needs	Minimum Number of Samples, Liquid	Minimum Number of Samples, Solids
Tank closure	2 samples (plus 1 field duplicate) from one riser	If sample directly under risers, 1 sample from one riser and 1 sample (plus 1 field duplicate) from a second riser
Waste compatibility	• If the supernatant is between 40 and 100 inches, 2 samples (plus 1 field duplicate) at different depths • Separable organic check, either by sampling or by in situ measurement (e.g., oil-water meter).	1 sample plus 1 field duplicate
Inventory update (BBI)	Two samples plus one field duplicate	Same as tank closure.
Waste retrieval/transfer	More than one sample	More than one sample

8.0 DQO STEP 7 – DEVELOP/OPTIMIZE A SAMPLING DESIGN

In this step, requirements for the minimum number of samples in Step 6 and for sample analyses in Step 3 are integrated and optimized in a sampling design that when implemented would provide data necessary to satisfy all data needs identified in Step 1. The integrated sampling design for catch tank C-301 are shown in Table 8-1.

Sampling and analysis will be conducted in accordance with quality assurance protocols in RPP-PLAN-62100, *Quality Assurance Project Plan for Tank Waste Sampling*. Project-specific quality requirements such as required detection limits cited in the referenced DQOs will be integrated in the implementing tank sampling and analysis plan.

Sampling to support tank closure is typically conducted on the residual waste after completion of retrieval. Sampling for the other data needs in this DQO is conducted before a waste transfer. It is desirable to sample catch tank C-301 only once to minimize cost and personnel radiation exposure. A sampling strategy was developed to achieve this desired objective as follows:

- Collect samples prior to retrieval and perform all analyses including those required for closure on these samples.
- Use the sample results and pre-retrieval volume measurements to calculate a pre-retrieval inventory for closure constituents. Use this inventory as a bounding inventory in the risk assessment to support closure if necessary.

Other benefits of this strategy include:

- Ensure closure data are available in case post-retrieval sampling is not possible.
- Data are available for a risk assessment of a no-retrieval or partial-retrieval scenario (e.g., removing only the liquid).

Table 8-1. Catch Tank C-301 Integrated Sampling Design[(1)]

Phase	Number of Samples	Sampling Method	Sample Location	Field QC Samples	Sample Analyses
Solids	1 sample from one riser and 1 sample (plus 1 field dup) from a second riser.	Modified finger trap	Full depth directly under two available risers, preferably on opposite sides of tank	Equipment blank, field (sampling) blank, and trip blank	Analyses listed in Tables 4-1 and 4-5
Liquid	Bulk Liquid: 3 (2 minimum plus 1 contingency) samples at different depths (plus 1 field duplicate) from one riser	Weighted bottle	Three depths such that the samples represent equal volume of waste	Field (sampling) blank and trip blank	Analyses listed in Tables 4-2 and 4-6.
	Separable organic check (N/A if oil-water meter is used or 1 sample if weighted bottle is used)	Oil-water interface meter or weighted bottle	Liquid surface	Not required	N/A if an oil-water meter is used. Otherwise, visual observation of sample. Density, percent water, or organic analysis may also be performed if necessary to identify the phase.

Note: [(1)] Liquid and solids levels will be measured at the time of sampling to determine sample locations, estimate waste volumes and to verify solids depth.
Abbreviation: QC = quality control, N/A = not applicable

9.0 REFERENCES

DOE M 435.1, *Radioactive Waste Management Manual,* U. S. Department of Energy, Washington, D. C.

HNF-SD-WM-DQO-001, *Data Quality Objectives for Tank Farms Waste Compatibility Program*, Washington River Protection Solutions LLC, Richland, Washington.

QA/G-4, *Guidance on Systematic Planning Using the Data Quality Objectives Process*, U. S. Environmental Protection Agency, Washington, D. C.

RPP-23403, *Single-Shell Tank Component Closure Data Quality Objectives*, Washington River Protection Solutions LLC, Richland, Washington.

RPP-PLAN-62100, *Quality Assurance Project Plan for Tank Waste Sampling*, Washington River Protection Solutions LLC, Richland, Washington.

RPP-RPT-45723, *Catch Tank 241-C-301 Retrieval Feasibility Study*, Columbia Energy and Environmental Services, Inc. for Washington River Protection Solutions LLC, both of Richland, Washington.

RPP-RPT-60210, *Data Quality Objectives to Support Best-Basis Inventory*, Washington River Protection Solutions LLC, Richland, Washington.

TFC-ENG-CHEM-C-16, *Data Quality Objectives for Sampling and Analysis*, Washington River Protection Solutions LLC, Richland, Washington.

WAC 173-303-610, "Closure and Post Closure," Washington Administrative Code, State of Washington Department of Ecology, Lacey, Washington.