Hanford Facility RCRA Permit Change Notice

Part III, Operating Unit Group 3

Liquid Effluent Retention Facility & 200 Area Effluent Treatment Facility

Index

Page	Permit Section
Page 2 of 3:	Permit Conditions
Page 3 of 3:	Addendum A, Part A Form

Submitted by WRPS Co-Operator:

Monica Kembel Digitally signed by Monica Kembel Date: 2020.10.28 06:24:10 -07'00'

Monica R. Kembel Date

Reviewed by DOE-ORP Program Office:

Brian A. Harkins Digitally signed by Brian A. Harkins Date: 2020.11.02 10:43:01 -08'00'

Rob G. Hastings Date

Hanford Facility RCRA Permit Change Notice

Unit:	Permit Part
Liquid Effluent Retention Facility & 200 Area Effluent Treatment Facility	**Part III, Operating Unit Group 3**

Description of Modification:

Permit Conditions:

Update modification approval date for the List of Addenda Specific to Operating Unit Group 3 for:

Addendum A Part A Form, dated TBD ~~June 25, 2020~~

Deleted the following Permit Conditions that have been completed.

III.3.J.6 Prior to receipt of any dangerous waste in Sump Tank (59A-TK-3), the Permittees will submit a revised Addendum A, "Part A Form," to include photograph of Sump Tank (59A-TK-3) to the department.

III.3.J.7 Prior to receipt of any dangerous waste in the Sump Tank 59A-TK-3, an integrity assessment for installation will be submitted to the department.

III.3.J.8 Prior to receipt of any dangerous waste in the Sump Tank 59A-TK-3, the Permittees will submit the leak test for Sump Tank 59A-TK-3 to the department.

WAC 173-303-830 Modification Class	Class 1	Class 1	Class 2	Class 3
Please mark the Modification Class:		X		

Enter relevant WAC 173-303-830, Appendix I Modification citation number: A.8

Enter wording of WAC 173-303-830, Appendix I Modification citation: Changes to remove permit conditions that are no longer applicable (i.e., because the standards upon which they are based are no longer applicable to the facility).

Modification ~~Concurrence~~ Approved: [X] Yes [ ] No (state reason)

Reason for Non-concurrence:

Reviewed by Ecology:

Schleif, Stephanie (ECY) Digitally signed by Schleif, Stephanie (ECY) Date: 2020.11.09 13:16:05 -08'00'

Stephanie Schleif Date

Hanford Facility RCRA Permit Change Notice

Unit:	Permit Part
Liquid Effluent Retention Facility & 200 Area Effluent Treatment Facility	**Part III, Operating Unit Group 3**

Description of Modification:

Addendum A, Part A Form:

Revised Addendum A, "Part A Form," to include Figure A.29, photograph of Load-In Station Filter Drain Tank (59A-TK-3) to complete Permit Condition III.3.J.6.

WAC 173-303-830 Modification Class	Class 1	Class 1	Class 2	Class 3
Please mark the Modification Class:		X		

Enter relevant WAC 173-303-830, Appendix I Modification citation number: A.8

Enter wording of WAC 173-303-830, Appendix I Modification citation: Changes to remove permit conditions that are no longer applicable (i.e., because the standards upon which they are based are no longer applicable to the facility).

Modification Approved: [X] Yes [ ] No (state reason)

Reason for Non-concurrence:

Reviewed by Ecology:

Schleif, Stephanie (ECY) Digitally signed by Schleif, Stephanie (ECY) Date: 2020.11.09 13:18:17 -08'00'

Stephanie Schleif

Date

Replace the Following:

- Permit Conditions
- Addendum A, Part A Form

Integrity Assessment and Leak Test Documentation required by Permit Conditions III.3.J.7 and III.3.J.8:

- RPP-IQRPE-50051, ETF Load-in Filter Drain System IQRPE Installation Assessment Report

PART III, OPERATING UNIT GROUP 3 UNIT-SPECIFIC PERMIT CONDITIONS LIQUID EFFLUENT RETENTION FACILITY & 200 AREA EFFLUENT TREATMENT FACILITY

UNIT DESCRIPTION

The Liquid Effluent Retention Facility (LERF) and 200 Area Effluent Treatment Facility (200 Area ETF) consists of an aqueous waste treatment system that provides treatment, storage integral to the treatment process, and storage of secondary wastes from the treatment process for a variety of aqueous mixed waste. The 200 Area ETF is located in the 200 East Area. Aqueous wastes managed by the 200 Area ETF include process condensate from the LERF and 200 Area ETF and other aqueous waste generated from onsite remediation and waste management activities.

The LERF consists of three lined surface impoundments, or basins. Aqueous waste from LERF is pumped to the 200 Area ETF for treatment in a series of process units, or systems, that remove or destroy essentially all of the dangerous waste constituents. The treated effluent is discharged to a State-Approved Land Disposal Site (SALDS) north of the 200 West Area, under the authority of a Washington State Waste Discharge Permit Number ST0004500 (Ecology 2014) and 200 Area ETF Delisting (40 Code of Federal Regulations [CFR] 261, Appendix IX, Table 2). Construction of the LERF began in 1990. Waste management operations began at LERF in April 1994. Construction of the 200 Area ETF began in 1992. Waste management operations began at 200 Area ETF in November of 1995.

This Chapter provides unit-specific Permit conditions applicable to the dangerous waste management units for LERF and 200 Area ETF.

LIST OF ADDENDA SPECIFIC TO OPERATING UNIT GROUP 3

Addendum A Part A Form, dated TBD~~May 19, 2020~~

Addendum B Waste Analysis Plan, dated May 19, 2020

Addendum C Process Information, dated June 25, 2020

Addendum D Groundwater Monitoring, dated January 23, 2018

Addendum E Security Requirements, dated June 30, 2011

Addendum F Preparedness and Prevention, dated May 19, 2020

Addendum G Personnel Training, dated June 30, 2015

Addendum H Closure Plan, dated May 19, 2020

Addendum I Inspection Requirements, dated May 19, 2020

Addendum J Contingency Plan, dated June 24, 2020

DEFINITIONS

Flow Equalization: Flow equalization is the process by which concentrations of constituents are homogenized through blending of the wastewater in the LERF Basins, resulting in a more uniform loading of constituents prior to entering the appropriate treatment train.

State and Federal Delisting Actions: The state delisting action pursuant to Washington Administrative Code (WAC) 173-303-910(3), August 8, 2005, and the federal delisting action appearing in 40 CFR 261, Appendix IX, Table 2 applicable to the United States, Department of Energy, Richland, Washington.

ACRONYMS

LERF and 200 Area ETF 200-Area Liquids Processing Facility

~~**III.3.J.6** Prior to receipt of any dangerous waste in Sump Tank (59A-TK-3), the Permittees will submit a revised Addendum A, "Part A Form," to include photograph of Sump Tank (59A-TK-3) to the department.~~

~~**III.3.J.7** Prior to receipt of any dangerous waste in the Sump Tank 59A-TK-3, an integrity assessment for installation will be submitted to the department.~~

~~**III.3.J.8** Prior to receipt of any dangerous waste in the Sump Tank 59A-TK-3, the Permittees will submit the leak test for Sump Tank 59A-TK-3 to the department.~~

~~**III.3.J.9**~~**III.3.J.6** Prior to receipt of any dangerous waste in the brine loadout system, the Permittees will submit functional testing for the automatic shutoff valves (60J-334 and 60J-335) to the department.

~~**III.3.J.10**~~**III.3.J.7** Prior to operations of the brine loadout system, the Permittees must provide to Ecology for review and approval information demonstrating that the liquid brine waste stream will be shipped to authorized treatment, storage, or disposal facilities for treatment and disposal.

~~**III.3.J.11**~~**III.3.J.8** The brine loadout system must meet land disposal restriction requirements as specified in Permit Condition II.S and the Hanford Federal Facility Agreement and Consent Order.

III.3.K CLOSURE

III.3.K.1 The Permittees will close dangerous waste management units in the LERF and 200 Area ETF in accordance with Addendum H, "Closure Plan," and Permit Condition II.J. [WAC 173-303-610(3)(a)]

III.3.L POST CLOSURE – RESERVED

III.3.M CRITICAL SYSTEMS – RESERVED

III.3.N RESERVED

III.3.O CONTAINERS

III.3.O.1 Container Storage and Treatment Unit Standards

III.3.O.1.a As part of or in addition to the requirements of Permit Condition III.3.B.2, the Permittees will ensure the integrity of container storage secondary containment and the chemically resistant coating described in Addendum C, Section C.3.4.1 as necessary to ensure any spills or releases to secondary containment do not migrate to the underlying concrete or soils.

III.3.O.1.a.1 Include documentation of any damage and subsequent repairs in the Hanford Facility Operating Record, LERF and 200 Area ETF file required by Permit Condition II.I.I.

III.3.O.2 Container Management Standards

III.3.O.2.a The Permittees will maintain and manage wastes in accordance with the requirements of Addendum C, Section C.3.2. [WAC 173-303-630(2)]

III.3.O.2.b The Permittees will label containers in accordance with the requirements of Addendum C, Section C.3.2, and Section C.3.3. [WAC 173-303-630(3)]

III.3.O.2.c The Permittees will comply with the requirements for managing wastes in containers in WAC 173-303-630(5), incorporated by reference.

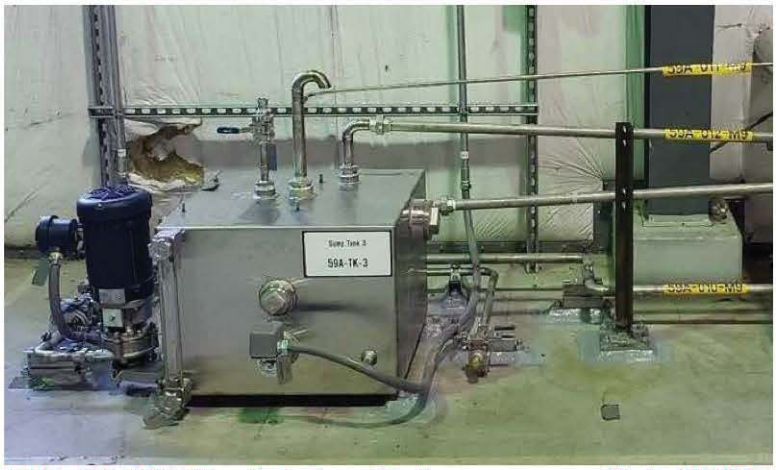

A.29. 59A-TK-3 Filter Drain Sump Tank Photo 10/2020

ADDENDUM A
LIQUID EFFLUENT RETENTION FACILITY & 200 AREA EFFLUENT TREATMENT FACILITY
PART A FORM

This page intentionally left blank.

WASHINGTON STATE DEPARTMENT OF ECOLOGY

Addendum A
Part A Form

Date Received	Reviewed by: Schleif, Stephanie (ECY) Digitally signed by Schleif, Stephanie (ECY) Date: 2020.11.09 13:19:22 -08'00'	Date:
Month Day Year	Approved by: Schleif, Stephanie (ECY) Digitally signed by Schleif, Stephanie (ECY) Date: 2020.11.09 13:19:48 -08'00'	Date:
1 1 0 4 2 0 2 0		

I. This form is submitted to: (place an "X" in the appropriate box)

☒	**Request modification to a final status permit (commonly called a "Part B" permit)**	
☐	**Request a change under interim status**	
☐	**Apply for a final status permit. This includes the application for the initial final status permit for a site or for a permit renewal (i.e., a new permit to replace an expiring permit).**	
☐	**Establish interim status because of the wastes newly regulated on:**	(Date)
	List waste codes:	

II. EPA/State ID Number

W A 7 8 9 0 0 0 8 9 6 7

III. Name of Facility

U.S. Department of Energy – Hanford Facility

IV. Facility Location (Physical address not P.O. Box or Route Number)

A. Street

Refer to Permit Attachment 2, Hanford Facility Permit Legal Description

City or Town	State	ZIP Code
Near Richland	WA	

County Code	County Name
0 0 5	Benton

B. Land Type	C. Geographic Location Latitude (degrees, mins, secs)	Longitude (degrees, mins, secs)	D. Facility Existence Date Month Day Year
F	Refer to TOPO Map (Section XV)		1 1 1 9 1 9 8 0

V. Facility Mailing Address

Street or P.O. Box

P.O. Box 450

City or Town	State	ZIP Code
Richland	WA	99352

VI. Facility contact (Person to be contacted regarding waste activities at facility)		
Name (last)	**(first)**	
Vance	Brian	
Job Title	**Phone Number (area code and number)**	
Manager	(509) 372-2315	
Contact Address		
Street or P.O. Box		
P.O. Box 450		
City or Town	**State**	**ZIP Code**
Richland	WA	99352

VII. Facility Operator Information	
A. Name	**Phone Number**
U.S. Department of Energy Owner/Operator Washington River Protection Solutions, LLC Co-Operator for LERF & 200 Area ETF	(509) 372-2315 (509) 376-2574
Street or P.O. Box	
P.O. Box 450 P.O. Box 850	

City or Town	**State**	**ZIP Code**
Richland	WA	99352

B. Operator Type	F	
C. Does the name in VII.A reflect a proposed change in operator?	☐ Yes ☒ No	
If yes, provide the scheduled date for the change:	**Month**	**Day** / **Year**
D. Is the name listed in VII.A, also the owner? If yes, skip to Section VIII.C.	☐ Yes ☒ No	

VIII. Facility Owner Information	
A. Name	**Phone Number (area code and number)**
U.S. Department of Energy Owner/Operator	(509) 372-2315
Street or P.O. Box	
P.O. Box 450	

City or Town	**State**	**ZIP Code**
Richland	WA	99352

B. Owner Type	F	
C. Does the name in VIII.A reflect a proposed change in owner?	☐ Yes ☒ No	
If yes, provide the scheduled date for the change:	**Month**	**Day** / **Year**

IX. NAICS Codes (5/6 digit codes)

A. First							B. Second						
5	6	2	2	1	1	Waste Treatment & Disposal	5	6	2	9	1	0	Remediation Services
C. Third							**D. Fourth**						
5	4	1	7	1	5	Research & Development in the Physical, Engineering and Life Sciences	9	2	4	1	1	0	Administration of Air & Water Resource & Solid Waste Management Programs

X. Other Environmental Permits (see instructions)

A. Permit Type	B. Permit Number	C. Description
E	AOP00-05-006	Title V Air Operating Permit. Incorporation of current non-radiological Notice of Construction permits and FF-01 radiological licenses into the AOP may be delayed up to 2 years.
E	DELISTING	ETF Delisting, 70 Federal Register (FR) 44496, dated August 3, 2005
E	TSCA	Toxic Substance Control Act Risk-based Disposal approval Application for Management of Polychlorinated Biphenyl Remediation Waste at the 200 Area Liquid Waste Processing Facilities, dated June 8, 2004
E	OAWT-107	Approval of the Request for Approval of Alternate Reuse Practices for the 200 Area Effluent Treatment Facility (ETF) Treated Effluent, 05-AMCP-0378, dated August 3, 2005
E	ST0045000	WAC 173-216, State Waste Discharge Permit for the 200 Area Effluent Treatment Facility State-Approved Land Disposal Site
E	ST0045011	WAC 173-216, State Waste Discharge Permit Program, Sitewide Permit for Miscellaneous Streams

XI. Nature of Business (provide a brief description that includes both dangerous waste and non-dangerous waste areas and activities)

Construction of the Liquid Effluent Retention Facility (LERF) began in 1990, and waste management operations began in April 1994. Construction of the 200 Area ETF began in 1992, and waste management operations began in November of 1995. The LERF and 200 Area ETF comprise an aqueous waste (dilute wastewaters) treatment system located in the 200 East Area that provides storage and treatment for a variety of aqueous mixed waste.

The aqueous waste streams are contaminated with radionuclides, heavy metals, and/or organic constituents. For example, the process condensate from the 242-A Evaporator is a treatment residue; and the primary chemicals that carry over from dewatering process are ammonia and acetone. Leachate from mixed waste landfills is composed of storm water that has leached through a Subtitle C landfill, and could contain a small amount of radionuclides and chemical constituents leached from land disposal restrictions (LDR) compliant wastes. Purgewater is composed of >99% groundwater that may be contaminated with radionuclides and dangerous waste from past-practice spills or releases. This aqueous waste includes process condensate from the 242-A Evaporator and other aqueous waste generated from onsite remediation and waste management activities. As such, Section XIV contains the same waste numbers as the 242-A Evaporator.

S04 and T02 - Surface Impoundment Storage and Treatment

Three lined surface impoundments (LERF Basins 42, 43, and 44) are used to store and treat aqueous waste. Aqueous waste in LERF is treated by pH and flow equalization. Operations of the LERF basins qualified for the surface impoundment treatment exemption from the LDR in accordance with 40 CFR 268.4, incorporated by reference by WAC 173-303-140 (reference Addendum B, Waste Analysis Plan). The aqueous waste from LERF is pumped to the 200 Area ETF for treatment in a series of process units, or systems, that remove or destroy dangerous waste constituents. The treated effluent is discharged to a State-Approved Land Disposal Site north of the 200 West Area, under the authority of a Washington State Waste Discharge Permit (ST0004500) and the 200 Area Final Delisting (40 CFR 261, Appendix IX, Table 2).

S01 and T04 - Container Storage and Treatment

Five container storage and treatment DWMUs are located at the 200 Area ETF. Containers in these areas can be moved between DWMUs. The primary treatment in containers is decanting and the use of absorbents to stabilize free liquids in sludge drained from treatment tanks. Once containers are full, the containers are moved to the 2025E Container Storage Area, the Outside Container Storage Area, sent to another TSD facility, or Environmental Restoration Disposal Facility (ERDF), as appropriate.

The container design capacity 39,000 gallons is an empirical number based on the equivalent of storing 709, 55-gallon drums within the five-container storage areas. The treatment capacity 5,000 gallons is an empirical number based on maximum anticipated treatment. The five container storage and treatment areas are:

XI. Nature of Business (provide a brief description that includes both dangerous waste and non-dangerous waste areas and activities)

- 2025E Process Area. The waste primarily consists of containers that function as part of the waste management process. Waste streams are accumulated into DOT approved containers near a specific operation within the 2025E Process Area. The containers primarily store waste generated from maintenance and operations activities. Treatment activities include decanting and the use of absorbents for liquid stabilization. Another function of the waste management process is to store aqueous waste containers from other Hanford Site sources in the 2025E Process Area and transfer the waste to the 200 Area ETF tanks for processing. Once the Process Area containers are full, the containers are moved to the 2025E Container Storage Area, the Outside Container Storage Area, another TSD facility, or ERDF.
- 2025E Container Storage Area. The containerized waste primarily consists of brine and dry powder treatment residues, aqueous wastes received for treatment, and waste generated from maintenance and operations activities. Treatment activities in this area include decanting and the use of absorbents for liquid stabilization.
- 2025E Truck Bay. This area is used to store containers being moved between the 2025E Process Area, 2025E Container Storage Area, and Outside Container Storage Area. The containerized waste primarily consists of brine and dry powder treatment residues, aqueous wastes received for treatment, and waste generated from maintenance and operations activities. Treatment activities in this area include decanting and the use of absorbents for liquid stabilization. However, container storage and treatment is limited because of the limited space available in the 2025E Truck Bay.
- Outside Container Storage Area. The containerized waste primarily consists of brine and dry powder treatment residues, and waste generated from maintenance and operations activities. Treatment activities in this area include the use of absorbents for liquid stabilization.
- 2025ED Load-In Station. This area is primarily used to store waste generated from maintenance and operations activities, aqueous waste in tanker trucks and other containers (such as drums, or totes) until the waste is transferred into the Load-In Station tank, surge tank, or directly to LERF. Treatment activities in this area include decanting and the use of absorbents for liquid stabilization.

S02 and T01 – Tank Storage and Treatment

The list provided below identifies the tank storage and treatment DWMUs identified in Section XII.C. Aqueous waste is treated and stored in the 2025E Process Area in a series of tank systems. Additionally, three tanks are associated with the 2025ED Load-In Station. The structural design capacity is based on the tank dimensions. Addendum C, Section C.4 contains additional information on the following tanks.

1. 20B-TK-1, Sump Tank 1
2. 20B-TK-2, Sump Tank 2
3. 59A-TK-1, Load-In Station Tank
4. 59A-TK-2, Sump Tank
5. 59A-TK-3, Filter Drain Sump Tank
6. 59A-TK-109, Load-In Station Tank (physically isolated from service; refer to Addendum H, Closure Plan)
7. 59A-TK-117, Load-In Station Tank (physically isolated from service; refer to Addendum H, Closure Plan)
8. 60A-TK-1, Surge Tank
9. 60C-TK-1, pH Adjust Tank
10. 60C-TK-2, Effluent pH Adjust Tank
11. 60F-TK-1, 1st RO Feed Tank
12. 60F-TK-2, 2nd RO Feed Tank
13. 60H-TK-1A, Verification Tank
14. 60H-TK-1B, Verification Tank
15. 60H-TK-1C, Verification Tank
16. 60I-EV-1, Evaporator Vapor Body Vessel
17. 60I-TK-1A, Secondary Waste Receiving Tank
18. 60I-TK-1B, Secondary Waste Receiving Tank
19. 60I-TK-2, Distillate Flash Tank
20. 60J-TK-1A, Concentrate Tank
21. 60J-TK-1B, Concentrate Tank

NAICS Codes

NAICS Codes listed in Section IX.B – IX.D apply to the Hanford Facility and not to this unit.

EXAMPLE FOR COMPLETING ITEMS XII and XIII (shown in lines numbered X-1, X-2, and X-3 below): A facility has two storage tanks that hold 1200 gallons and 400 gallons respectively. There is also treatment in tanks at 20 gallons/hr. Finally, a one-quarter acre area that is two meters deep will undergo in situ *vitrification*.

Section XII. Process Codes and Design Capacities								Section XIII. Other Process Codes								
Line Number		A. Process Codes (enter code)			B. Process Design Capacity		C. Process Total Number of Units	Line Number		A. Process Codes (enter code)			B. Process Design Capacity		C. Process Total Number of Units	D. Process Description
					1. Amount	2. Unit of Measure (enter code)							1. Amount	2. Unit of Measure (enter code)		
X	1	S	0	2	1,600	G	002	X	1	T	0	4	700	C	001	In situ vitrification
X	2	T	0	3	20	E	001									
X	3	T	0	4	700	C	001									
	1	S	0	4	23,400,000	G	003		1	T	0	4	5,000	U	005	container treatment
	2	T	0	2	23,400,000	U	003		2							
	3	S	0	2	2,630,000	G	21		3							
	4	T	0	1	216,000	U	21		4							
	5	S	0	1	39,000	G	005		5							
	6	T	0	4	5,000	U	005		6							
	7								7							
	8								8							
	9								9							
1	0							1	0							
1	1							1	1							
1	2							1	2							
1	3							1	3							
1	4							1	4							
1	5							1	5							
1	6							1	6							
1	7							1	7							
1	8							1	8							
1	9							1	9							
2	0							2	0							
2	1							2	1							
2	2							2	2							
2	3							2	3							
2	4							2	4							
2	5							2	5							

XIV. Description of Dangerous Wastes

Example for completing this section: A facility will receive three non-listed wastes, then store and treat them on-site. Two wastes are corrosive only, with the facility receiving and storing the wastes in containers. There will be about 200 pounds per year of each of these two wastes, which will be neutralized in a tank. The other waste is corrosive and ignitable and will be neutralized then blended into hazardous waste fuel. There will be about 100 pounds per year of that waste, which will be received in bulk and put into tanks.

Line Number	A. Dangerous Waste No.				B. Estimated Annual Quantity of Waste	C. Unit of Measure	D. Processes									
							(1) Process Codes									(2) Process Description [If a code is not entered in D (1)]
X 1	D	0	0	2	400	P	S	0	1	T	0	1				
X 2	D	0	0	1	100	P	S	0	2	T	0	1				
X 3	D	0	0	2												Included with above
1	D	0	0	1	337,000,000	P	S	0	4	T	0	2				Surface Impoundment Storage & Treatment
2	D	0	0	2												Included with above
3	D	0	0	3												Included with above
4	D	0	0	4												Included with above
5	D	0	0	5												Included with above
6	D	0	0	6												Included with above
7	D	0	0	7												Included with above
8	D	0	0	8												Included with above
9	D	0	0	9												Included with above
10	D	0	1	0												Included with above
11	D	0	1	1												Included with above
12	D	0	1	8												Included with above
13	D	0	1	9												Included with above
14	D	0	2	2												Included with above
15	D	0	2	8												Included with above
16	D	0	2	9												Included with above
17	D	0	3	0												Included with above
18	D	0	3	3												Included with above
19	D	0	3	4												Included with above
20	D	0	3	5												Included with above
21	D	0	3	6												Included with above
22	D	0	3	8												Included with above
23	D	0	3	9												Included with above
24	D	0	4	0												Included with above
25	D	0	4	1												Included with above

EPA/State ID Number	W	A	7	8	9	0	0	0	8	9	6	7

Continuation of Section XIV. Description of Dangerous Waste

Line Number	A. Dangerous Waste No. (enter code)				B. Estimated Annual Quantity of Waste	C. Unit of Measure (enter code)	D. Process									
							(1) Process Codes (enter)									(2) Process Description [If a code is not entered in D (1)]
26	D	0	4	3												Included with above
27	F	0	0	1												Included with above
28	F	0	0	2												Included with above
29	F	0	0	3												Included with above
30	F	0	0	4												Included with above
31	F	0	0	5												Included with above
32	F	0	3	9												Included with above
33	W	T	0	1												Included with above
34	W	T	0	2												Included with above
35	U	2	1	0												Included with above
36	D	0	0	1	257,300,000	P	S	0	2	T	0	1				Tank Storage & Treatment
37	D	0	0	2												Included with above
38	D	0	0	3												Included with above
39	D	0	0	4												Included with above
40	D	0	0	5												Included with above
41	D	0	0	6												Included with above
42	D	0	0	7												Included with above
43	D	0	0	8												Included with above
44	D	0	0	9												Included with above
45	D	0	1	0												Included with above
46	D	0	1	1												Included with above
47	D	0	1	8												Included with above
48	D	0	1	9												Included with above
49	D	0	2	2												Included with above
50	D	0	2	8												Included with above
51	D	0	2	9												Included with above
52	D	0	3	0												Included with above
53	D	0	3	3												Included with above
54	D	0	3	4												Included with above
55	D	0	3	5												Included with above
56	D	0	3	6												Included with above

EPA/State ID Number	W	A	7	8	9	0	0	0	8	9	6	7

Continuation of Section XIV. Description of Dangerous Waste

Line Number	A. Dangerous Waste No. (enter code)				B. Estimated Annual Quantity of Waste	C. Unit of Measure (enter code)	D. Process									
							(1) Process Codes (enter)									(2) Process Description [If a code is not entered in D (1)]
57	D	0	3	8												Included with above
58	D	0	3	9												Included with above
59	D	0	4	0												Included with above
60	D	0	4	1												Included with above
61	D	0	4	3												Included with above
62	F	0	0	1												Included with above
63	F	0	0	2												Included with above
64	F	0	0	3												Included with above
65	F	0	0	4												Included with above
66	F	0	0	5												Included with above
67	F	0	3	9												Included with above
68	W	T	0	1												Included with above
69	W	T	0	2												Included with above
70	U	2	1	0												Included with above
71	D	0	0	1	340,000	P	S	0	1							Container Storage Includes Debris
72	D	0	0	2												Included with above
73	D	0	0	3												Included with above
74	D	0	0	4												Included with above
75	D	0	0	5												Included with above
76	D	0	0	6												Included with above
77	D	0	0	7												Included with above
78	D	0	0	8												Included with above
79	D	0	0	9												Included with above
80	D	0	1	0												Included with above
81	D	0	1	1												Included with above
82	D	0	1	8												Included with above
83	D	0	1	9												Included with above
84	D	0	2	2												Included with above
85	D	0	2	8												Included with above
86	D	0	2	9												Included with above
87	D	0	3	0												Included with above

EPA/State ID Number	W	A	7	8	9	0	0	0	8	9	6	7

Continuation of Section XIV. Description of Dangerous Waste

Line Number	A. Dangerous Waste No. (enter code)				B. Estimated Annual Quantity of Waste	C. Unit of Measure (enter code)	D. Process									
							(1) Process Codes (enter)									(2) Process Description [If a code is not entered in D (1)]
88	D	0	3	3												Included with above
89	D	0	3	4												Included with above
90	D	0	3	5												Included with above
91	D	0	3	6												Included with above
92	D	0	3	8												Included with above
93	D	0	3	9												Included with above
94	D	0	4	0												Included with above
95	D	0	4	1												Included with above
96	D	0	4	3												Included with above
97	F	0	0	1												Included with above
98	F	0	0	2												Included with above
99	F	0	0	3												Included with above
100	F	0	0	4												Included with above
101	F	0	0	5												Included with above
102	F	0	3	9												Included with above
103	W	T	0	1												Included with above
104	W	T	0	2												Included with above
105	U	2	1	0												Included with above
106	D	0	0	1	179,000	P	T	0	4							Container Treatment Includes Debris
107	D	0	0	2												Included with above
108	D	0	0	3												Included with above
109	D	0	0	4												Included with above
110	D	0	0	5												Included with above
111	D	0	0	6												Included with above
112	D	0	0	7												Included with above
113	D	0	0	8												Included with above
114	D	0	0	9												Included with above
115	D	0	1	0												Included with above
116	D	0	1	1												Included with above
117	D	0	1	8												Included with above
118	D	0	1	9												Included with above

EPA/State ID Number	W	A	7	8	9	0	0	0	8	9	6	7

Continuation of Section XIV. Description of Dangerous Waste

Line Number	A. Dangerous Waste No. (enter code)				B. Estimated Annual Quantity of Waste	C. Unit of Measure (enter code)	D. Process									
							(1) Process Codes (enter)									(2) Process Description [If a code is not entered in D (1)]
119	D	0	2	2												Included with above
120	D	0	2	8												Included with above
121	D	0	2	9												Included with above
122	D	0	3	0												Included with above
123	D	0	3	3												Included with above
124	D	0	3	4												Included with above
125	D	0	3	5												Included with above
126	D	0	3	6												Included with above
127	D	0	3	8												Included with above
128	D	0	3	9												Included with above
129	D	0	4	0												Included with above
130	D	0	4	1												Included with above
131	D	0	4	3												Included with above
132	F	0	0	1												Included with above
133	F	0	0	2												Included with above
134	F	0	0	3												Included with above
135	F	0	0	4												Included with above
136	F	0	0	5												Included with above
137	F	0	3	9												Included with above
138	W	T	0	1												Included with above
139	W	T	0	2												Included with above
140	U	2	1	0												Included with above
141																
142																
143																
144																
145																
146																
147																
148																
149																

XV. Map

Attach to this application a topographic map of the area extending to at least one (1) mile beyond property boundaries. The map must show the outline of the facility; the location of each of its existing and proposed intake and discharge structures; each of its dangerous waste treatment, storage, recycling, or disposal units; and each well where fluids are injected underground. Include all springs, rivers, and other surface water bodies in this map area, plus drinking water wells listed in public records or otherwise known to the applicant within ¼ mile of the facility property boundary. The instructions provide additional information on meeting these requirements.

XVI. Facility Drawing

All existing facilities must include a scale drawing of the facility (refer to Instructions for more detail).

XVII. Photographs

All existing facilities must include photographs (aerial or ground-level) that clearly delineate all existing structures; existing storage, treatment, recycling, and disposal areas; and sites of future storage, treatment, recycling, or disposal areas (refer to Instructions for more detail).

XVIII. Certifications

I certify under penalty of law that this document and all attachments were prepared under my direction or supervision in accordance with a system designed to assure that qualified personnel properly gather and evaluate the information submitted. Based on my inquiry of the person or persons who manage the system, or those persons directly responsible for gathering the information, the information submitted is, to the best of my knowledge and belief, true, accurate, and complete. I am aware that there are significant penalties for submitting false information, including the possibility of fine and imprisonment for knowing violations.

Operator Name and Official Title (type or print)	Signature	Date Signed
Brian T. Vance, Manager U.S. Department of Energy Office of River Protection	Digitally signed by Brian T. Vance DN: cn=Brian T. Vance, o=Office of River Protection, ou=Department of Energy, email=brian.t.vance@orp.doe.gov, c=US Date: 2020.11.02 14:13:31 -08'00'	
Co-Operator Name and Official Title (type or print) John R. Eschenberg President and Project Manager Washington River Protection Solutions, LLC	**Signature**	**Date Signed** 10/28/20
Co-Operator – Address and Telephone Number P.O. Box 850 Richland, WA 99352 (509) 376-2574		
Facility-Property Owner Name and Official Title (type or print) Brian T. Vance, Manager U.S. Department of Energy Office of River Protection	**Signature** Digitally signed by Brian T. Vance DN: cn=Brian T. Vance, o=Office of River Protection, ou=Department of Energy, email=brian.t.vance@orp.doe.gov, c=US Date: 2020.11.02 14:14:03 -08'00'	**Date Signed**

Comments

Photo 2/2010

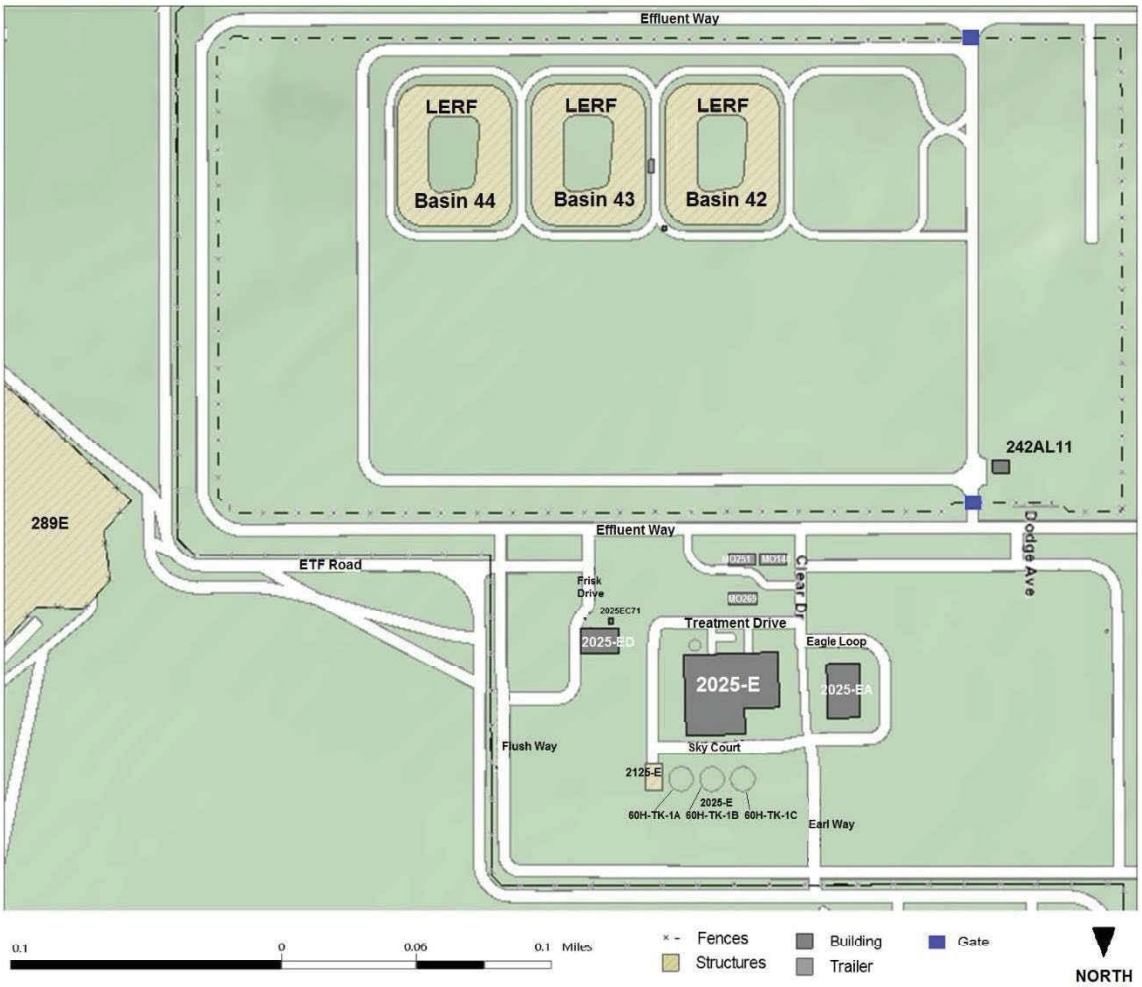

A.1. LERF and 200 Area ETF

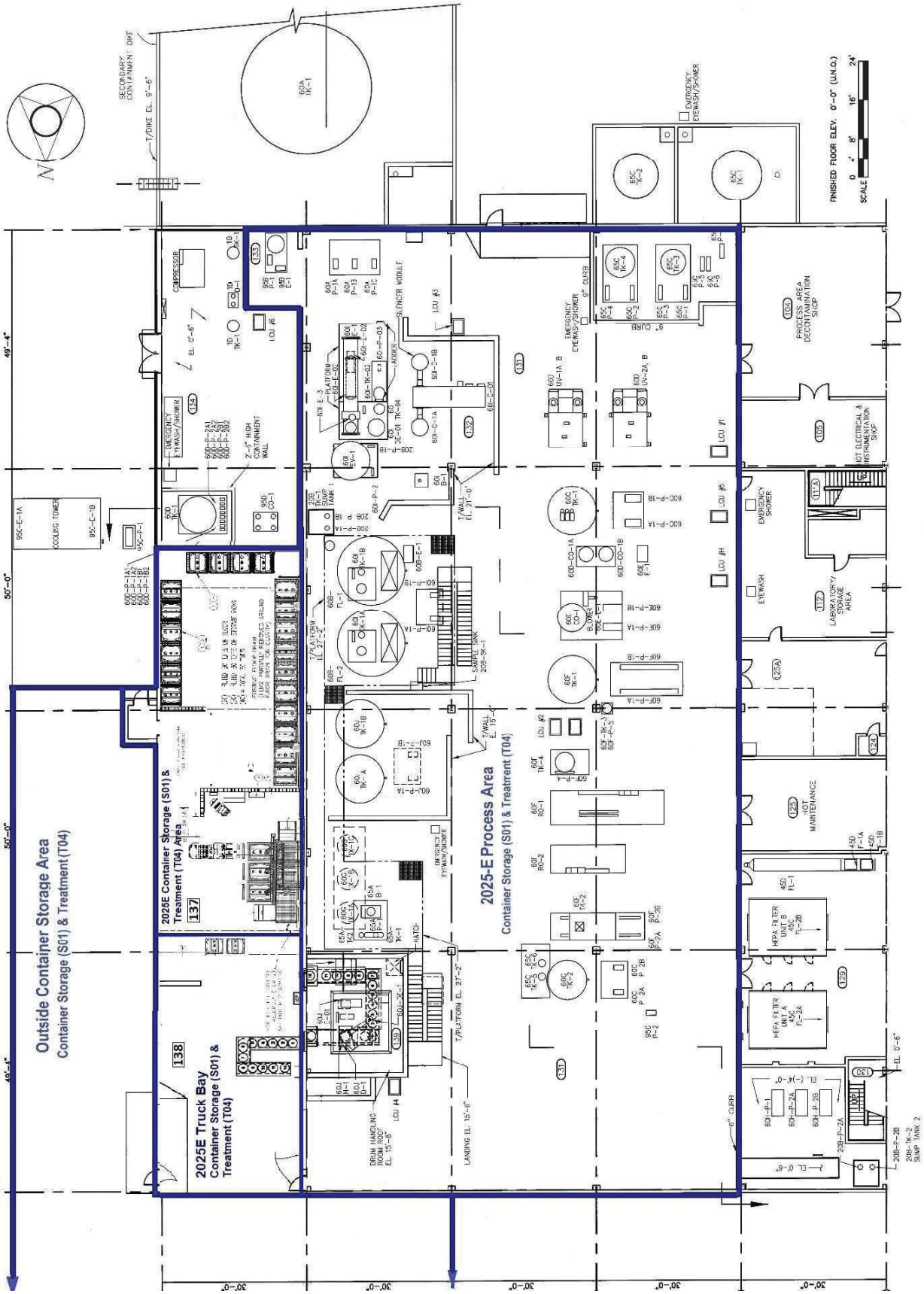

A.2. 2025-E ETF Ground Floor Plan

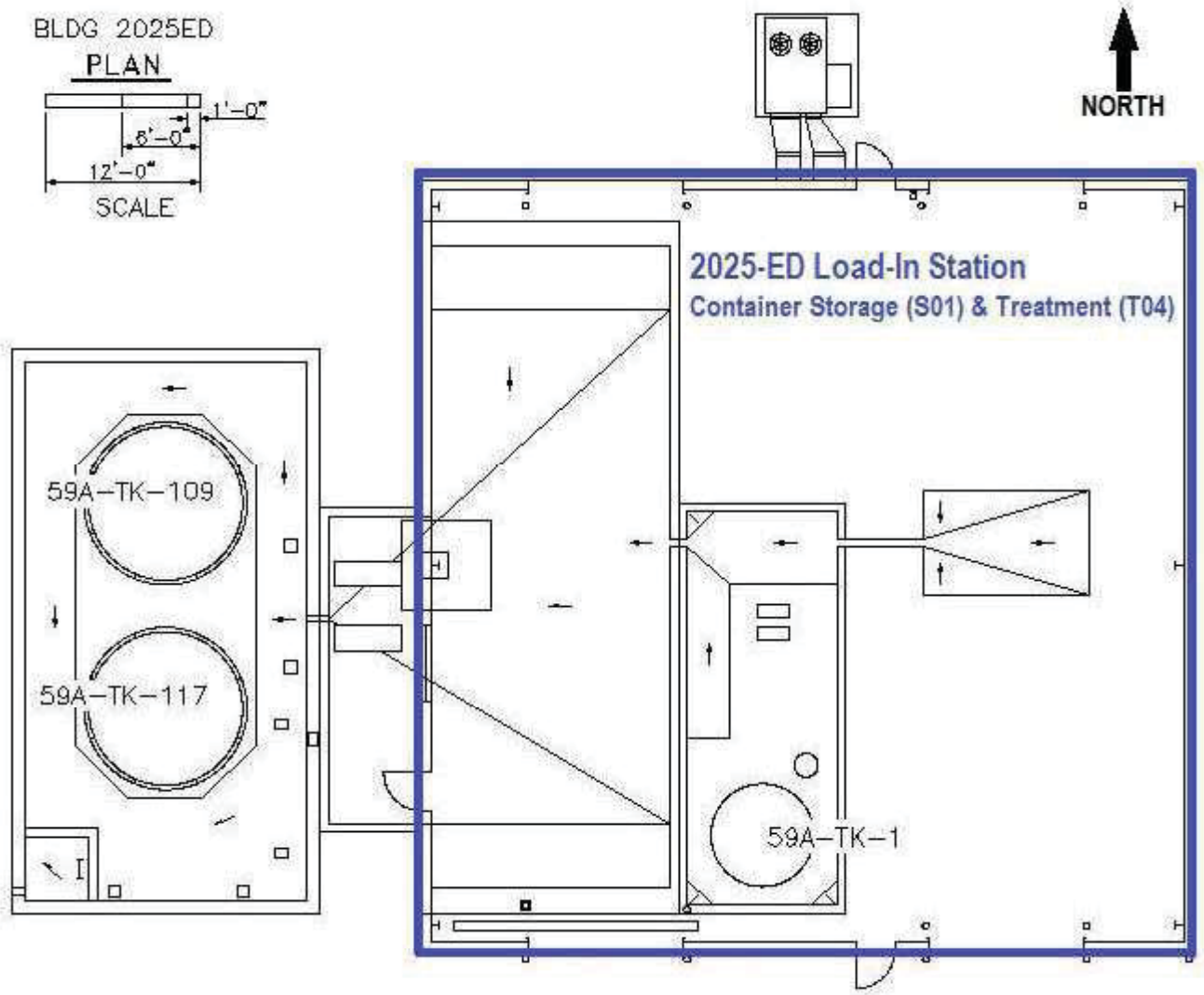

A.3. 2025-ED Load-In Station

A.4. 200 Area ETF Building 2025-E *Photo 9/2016*

A.5. 2025-E Process Area *Photo 3/2016*

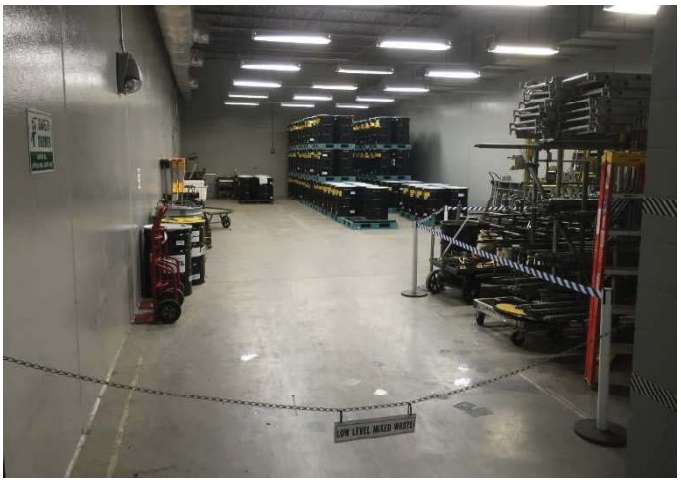

A.6. 2025-E Container Storage Area *Photo 9/2016*

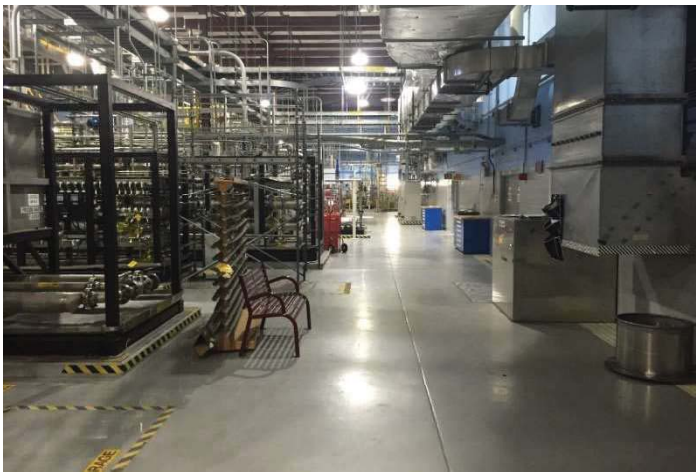

A.7. 2025-E Process Area *Photo 3/2016*

A.8. 2025-E Truck Bay *Photo 3/2016*

A.9. 2025-E Process Area *Photo 3/2016*

A.10. 2025-E Process Area Primary Train *Photo 3/2016*

A.11. Outside Container Storage Area *Photo 3/2016*

A.12. 2025-ED Load-In Station Photo 3/2016

A.13. 2025-ED Load-In Station Photo 3/2016
59A-TK-1 and Tanker Truck

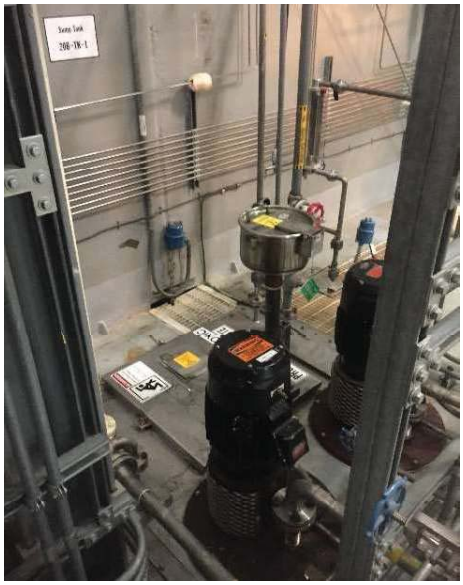

A.14. 20B-TK-1, Sump Tank 1 Photo 2/2017

A.15. 20B-TK-2, Sump Tank 2 Photo 2/2017

A.16. 59A-TK-109 and 59A-TK-117 Photo 8/2016
2025-ED Load-In Station Tanks (permanently isolated)

A.17. 60A-TK-1, Surge Tank Photo 1/2017

A.18. pH Adjustment Tank 60C-TK-1 Photo 1/2017

A.19. Effluent pH Adjustment Tank 60C-TK-2 Photo 1/2017

A.20. 1st RO Feed Tank 60F-TK-1 Photo 1/2017

A.21. 2nd RO Feed Tank 60F-TK-2 Photo 1/2017

A.22. 60H-TK-1A/1B/1C, Verification Tanks Photo 9/2016

A.23. 60I-EV-1 Photo 9/2016
Evaporator Vapor Body Vessel

A.24. 60I-TK-1A Photo 2/2017
Secondary Waste Receiving Tank

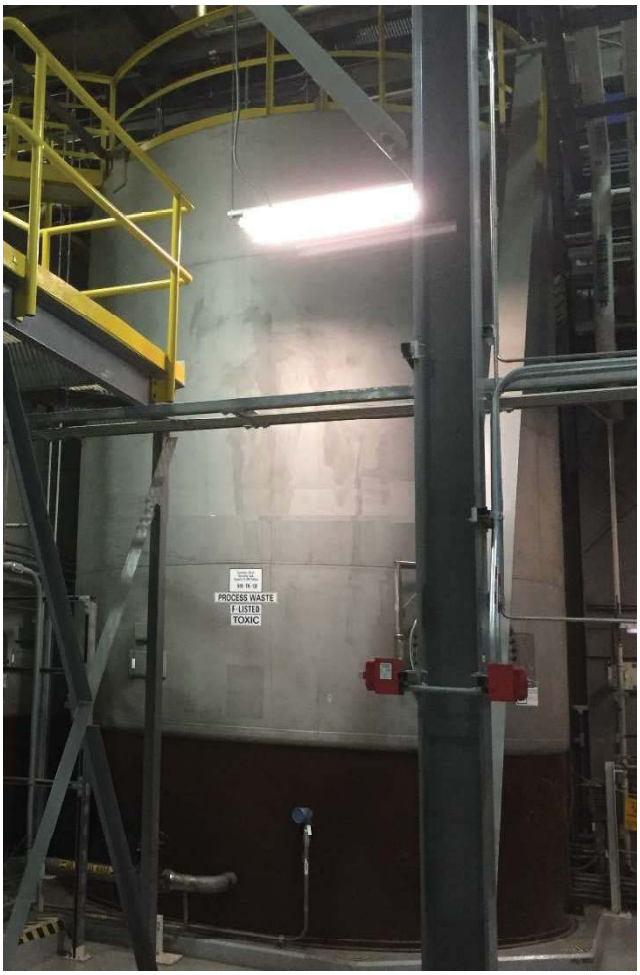

A.25. 60I-TK-1B Photo 2/2017
Secondary Waste Receiving Tank

A.26. 60I-TK-2 Distillate Flash Tank Photo 2/2017

A.27. 60J-TK-1A/1B, Concentrate Tanks Photo 2/2017

A.28. 59A-TK-2 Sump Tank Photo 1/2019

A.29. 59A-TK-3 Filter Drain Sump Tank *Photo 10/2020*

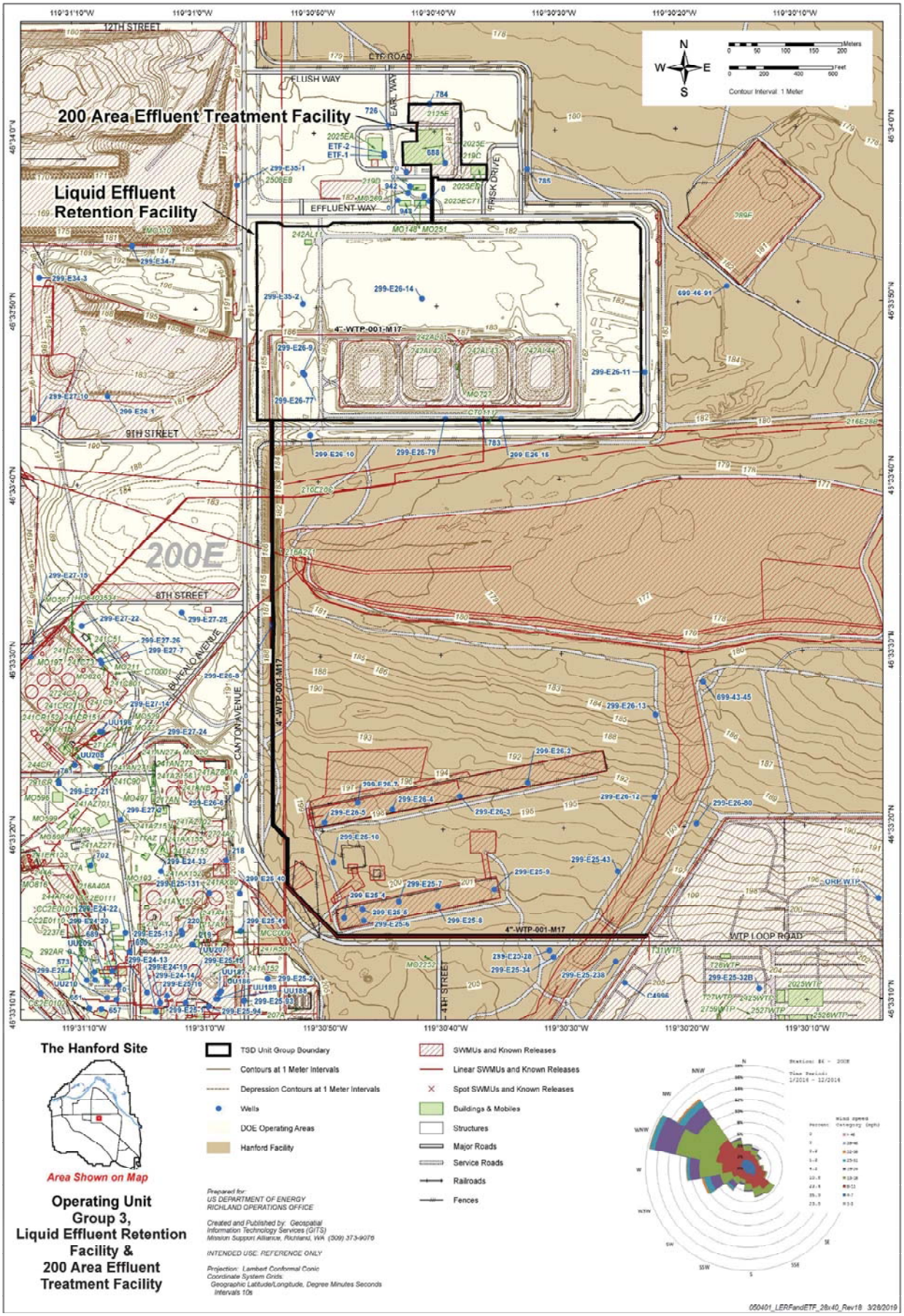
200 Area Effluent Treatment Facility
Liquid Effluent Retention Facility
ETF ROAD
ELLISH WAY
EARL WAY
FRISK DRIVE
EFFLUENT WAY
12TH STREET
9TH STREET
8TH STREET
200E
BUFFALO AVENUE
CANTON AVENUE
4TH STREET
WTP LOOP ROAD
4"-WTP-001-M17
Contour Interval: 1 Meter
The Hanford Site
Area Shown on Map
Operating Unit Group 3, Liquid Effluent Retention Facility & 200 Area Effluent Treatment Facility
TSD Unit Group Boundary
Contours at 1 Meter Intervals
Depression Contours at 1 Meter Intervals
Wells
DOE Operating Areas
Hanford Facility
SWMUs and Known Releases
Linear SWMUs and Known Releases
Spot SWMUs and Known Releases
Buildings & Mobiles
Structures
Major Roads
Service Roads
Railroads
Fences
Prepared for:
US DEPARTMENT OF ENERGY
RICHLAND OPERATIONS OFFICE
Created and Published by: Geospatial Information Technology Services (GITS)
Mission Support Alliance, Richland, WA (509) 373-9076
INTENDED USE: REFERENCE ONLY
Projection: Lambert Conformal Conic
Coordinate System Grids:
Geographic Latitude/Longitude, Degree Minutes Seconds Intervals 10s
050401_LERFandETF_28x40_Rev18 3/28/2019

1

This page intentionally left blank.

Hanford Facility RCRA Permit Change Notice

Part III, Operating Unit Group 3

Liquid Effluent Retention Facility & 200 Area Effluent Treatment Facility

Index

Page	Permit Section
Page 2 of 3:	Permit Conditions
Page 3 of 3:	Addendum A, Part A Form

Submitted by WRPS Co-Operator:

Monica R. Kembel Date

Reviewed by DOE-ORP Program Office:

Glyn D. Trenchard Date

Hanford Facility RCRA Permit Change Notice

Unit:	Permit Part
Liquid Effluent Retention Facility & 200 Area Effluent Treatment Facility	**Part III, Operating Unit Group 3**

Description of Modification:

Permit Conditions:

Update modification approval date for the List of Addenda Specific to Operating Unit Group 3 for:

Addendum A Part A Form, dated TBD ~~June 25, 2020~~

Deleted the following Permit Conditions that have been completed.

III.3.J.6 Prior to receipt of any dangerous waste in Sump Tank (59A-TK-3), the Permittees will submit a revised Addendum A, "Part A Form," to include photograph of Sump Tank (59A-TK-3) to the department.

III.3.J.7 Prior to receipt of any dangerous waste in the Sump Tank 59A-TK-3, an integrity assessment for installation will be submitted to the department.

III.3.J.8 Prior to receipt of any dangerous waste in the Sump Tank 59A-TK-3, the Permittees will submit the leak test for Sump Tank 59A-TK-3 to the department.

WAC 173-303-830 Modification Class	Class 1	Class 1	Class 2	Class 3
Please mark the Modification Class:		X		

Enter relevant WAC 173-303-830, Appendix I Modification citation number: A.8

Enter wording of WAC 173-303-830, Appendix I Modification citation: Changes to remove permit conditions that are no longer applicable (i.e., because the standards upon which they are based are no longer applicable to the facility).

Modification Concurrence: ☐ Yes ☐ No (state reason)

Reason for Non-concurrence:

Reviewed by Ecology:

Stephanie Schleif Date

Hanford Facility RCRA Permit Change Notice

Unit:	Permit Part
Liquid Effluent Retention Facility & 200 Area Effluent Treatment Facility	**Part III, Operating Unit Group 3**

Description of Modification:

Addendum A, Part A Form:

Revised Addendum A, "Part A Form," to include Figure A.29, photograph of Load-In Station Filter Drain Tank (59A-TK-3) to complete Permit Condition III.3.J.6.

WAC 173-303-830 Modification Class	Class 1	Class 1	Class 2	Class 3
Please mark the Modification Class:		X		

Enter relevant WAC 173-303-830, Appendix I Modification citation number: A.8

Enter wording of WAC 173-303-830, Appendix I Modification citation: Changes to remove permit conditions that are no longer applicable (i.e., because the standards upon which they are based are no longer applicable to the facility).

Modification Approved: ☐ Yes ☐ No (state reason)

Reason for Non-concurrence:

Reviewed by Ecology:

Stephanie Schleif Date

Replace the Following:

- Permit Conditions
- Addendum A, Part A Form

Integrity Assessment and Leak Test Documentation required by Permit Conditions III.3.J.7 and III.3.J.8:

- RPP-IQRPE-50051, ETF Load-in Filter Drain System IQRPE Installation Assessment Report

DOCUMENT RELEASE AND CHANGE FORM

Prepared For the U.S. Department of Energy, Assistant Secretary for Environmental Management
By Washington River Protection Solutions, LLC., PO Box 850, Richland, WA 99352
Contractor For U.S. Department of Energy, Office of River Protection, under Contract DE-AC27-08RV14800

TRADEMARK DISCLAIMER: Reference herein to any specific commercial product, process, or service by trade name, trademark, manufacturer, or otherwise, does not necessarily constitute or imply its endorsement, recommendation, or favoring by the United States government or any agency thereof or its contractors or subcontractors. Printed in the United States of America.

Release Stamp

DATE: **Oct 22,2020**

HANFORD RELEASE

1. **Doc No:** RPP-IQRPE-50050 **Rev.** 01

2. **Title:**
Independent Qualified Registered Professional Engineer Design Assessment for ETF Load-In Filter Drain System

3. **Project Number:** T1P208 ☐N/A

4. **Design Verification Required:** ☐Yes ☒No

5. **USQ Number:** ☒ N/A RPP-27195

6. **PrHA Number** **Rev.** ☒ N/A

Clearance Review Restriction Type: public

7. **Approvals**

Title	Name	Signature	Date
Clearance Review	Raymer, Julia R	*Raymer, Julia R*	10/22/2020
Checker	Russell, Rose M	*Russell, Rose M*	10/21/2020
Document Control Approval	Meinecke, Kathryn R	*Meinecke, Kathryn R*	10/22/2020
Environmental Protection	Wall, Jeremy M	*Wall, Jeremy M*	10/21/2020
Originator	Young, Natalie M	*Young, Natalie M*	10/21/2020
Responsible Manager	Lehrman, Scott D	*Lehrman, Scott D*	10/21/2020

8. **Description of Change and Justification**

Updated to reflect as installed design.

9. **TBDs or Holds** ☒N/A

10. **Related Structures, Systems, and Components**

a. **Related Building/Facilities** ☐N/A	b. **Related Systems** ☐N/A	c. **Related Equipment ID Nos. (EIN)** ☐N/A
2025ED ETF FACILITIES	ETF-59A	59A-FL-001 59A-FL-002 59A-FL-003 59A-P-3 59A-TK-3

11. **Impacted Documents – Engineering** ☒N/A

Document Number	Rev.	Title

12. **Impacted Documents (Outside SPF):**

N/A

13. **Related Documents** ☐N/A

Document Number	Rev.	Title
ECN-714608	01	ETF Load-In Filter Drain P&ID ECN
ECN-714609	02	ETF Load-In Filter Drain Mechanical ECN
H-2-817974 SH 001	20	P&ID ETF TRUCK LOAD-IN STATION
H-2-817974 SH 002	04	P&ID ETF TRUCK LOAD-IN STATION
H-2-817975 SH 001	12	PIPING ETF TRUCK LOAD-IN & PURGEWATER UNLOADING STATION PLAN
H-2-817976 SH 001	04	PIPING ETF TRUCK LOAD-IN STATION SECTIONS AND DETAILS
H-2-817976 SH 002	01	PIPING ETF TRK LOAD-IN & PURGEWATER UNLOADING STATION SECT AND DET
H-2-817976 SH 003	01	PIPING ETF TRK LOAD-IN & PURGEWATER UNL STATION SECT & DET
H-2-817976 SH 004	00	PIPING PURGEWATER UNLOADING STATION DETAILS
H-2-817976 SH 005	00	PIPING PURGEWATER UNLOADING STATION SUPPORTS
H-2-817976 SH 006	00	PIPING ETF TRUCK LOAD-IN & PURGEWATER UNLOADING STATION SECTIONS
H-9-6113 SH 001	00	PIPING ETF LOAD-IN FACILITY FILTER DRAIN SUMP TANK
HNF-27957	04	200 Area ETF, Load-In, and LERF Pipe Class Specification
MT-50409	01	ETF Load-In Filter Drain Modification
RPP-CALC-62734	00	ETF Load-In, Filter Drain System Pipe Stress Analysis
RPP-CALC-62877	00	ETF Load-In Filter Drain Modification: Filter Drain Sump Tank Anchorage Analysis
RPP-IQRPE-50043	00	FY19 Effluent Treatment Facility IQRPE Integrity Assessment
RPP-IQRPE-50049	00	ETF Load-In Filter Drain System IQRPE Inspection Plan
RPP-IQRPE-50051	00	Independent Qualified Registered Professional Engineer Installation Assessment Report for ETF Load-In Filter Drain System
RPP-PLAN-60845	01	Effluent Treatment Facility Basin 43 2016 Campaign Process Control Plan

DOCUMENT RELEASE AND CHANGE FORM	**Doc No:** RPP-IQRPE-50050 **Rev.** 01

14. **Distribution**

Name	**Organization**
Domnoske, Lisa A	ETF ENGINEERING
Halgren, Dale L	ETF ENGINEERING
Russell, Rose M	ETF ENGINEERING
Rutherford, Wally	PROD OPERATIONS ENGINEERING
Thompson, Suzette A	RCRA PERMITTING
Wall, Jeremy M	RETRVL & CLOSURE/PROJ ENV CMPL

Figure 1. Technical Report Checklist.

Report Number _RPP-IQRPE-50050_____ Revision: _____01_____

Report Title: _ Independent Qualified Registered Professional Engineer Design Assessment for ETF Load-In Filter Drain System_

The following checklist is used by checkers to ensure technical reports are complete and in compliance with engineering procedures (i.e., TFC-ENG-DESIGN-C-25). This checklist is also applicable to ECNs that revise these types of documents. DRCF required approvers vary according to the type of document being released. Required approvers are identified in SPF.

Item No.	Yes	No	N/A	Item
				Version/Format
1	X			If revising an existing report, are the changes being made against the current revision in SPF?
2	X			Is the Document Release and Change Form (DRCF) properly filled out?
3	X			Are all of the pages properly labeled with Report Number, Revision Number, and Sequential Page Number?
4			X	Are the Subject and Purpose clearly stated and do they meet the end users' needs?
				References
5			X	Are all References properly documented within the report and can they be easily verified within Document Control, online, or within the library, etc.? If reference documents are not readily available, are they attached?
6			X	Have the correct design bases documents been identified (e.g., codes, standards, DOE Orders, TOC standards, regulatory requirements, etc.)?
				Open Items/Input
7			X	Is there a reference/source for each input?
8			X	Do the identified references/sources fully support the inputs?
9			X	Are all assumptions used to support the report individually listed and numbered?
10			X	Is there a justification written for each assumption that includes a technical basis?
11			X	Do the justifications adequately support the assumptions?
12			X	If the report has open items, TBDs, and/or HOLDs, is there a method identified to track them?
				Results/Conclusion
13			X	Are the results of the report consistent with the input and assumptions?
14			X	Do the results of the report affect any other technical documents?
15			X	Do the results substantiate the conclusion?
				Approvals
16	X			Does the DRCF identify the method of verification and checking and does it have a signature block for the verifier/checker?

Item No.	Comments
4 – 15	This document releases a copy of an IQRPE report. The IQRPE is responsible for items 4-15.

Checker: _Rose Russell_____ _Rose Russell_____ _10/15/2020_____

Print Name Signature Date

RPP-IQRPE-50050
Revision 1

Independent Qualified Registered Professional Engineer Design Assessment Report for ETF Load-In Filter Drain System

Prepared by

N. M. Young
Washington River Protection Solutions, LLC

Date Published
October 2020

Prepared for the U.S. Department of Energy
Office of River Protection

Contract No. DE-AC27-08RV14800

Approved for Public Release;
Further Dissemination Unlimited

Independent Qualified Registered Professional Engineer Design Assessment Report For ETF Load-In Filter Drain System

IQRPE Design Assessment Report No. DA-318173-01 Rev. 1

Prepared By

Meier ARCHITECTURE • ENGINEERING

12 W. Kennewick Ave.
Kennewick, WA 99336

At the request of

washington river protection solutions

Richland, Washington 99352

Meier Project No. 19-8463
WRPS Subcontract No. 64658, Release 019

October 8, 2020

Table of Contents

1.0 INTRODUCTION 4
1.1 PROJECT DESCRIPTION 4
1.1.1 Background 4
1.1.2 IQRPE Scope 5
1.2 DESIGN REVIEW REQUIREMENTS 15
1.3 DESIGN OVERVIEW FOR ETF LOAD-IN FILTER DRAIN SYSTEM 16
1.4 SCOPE OF IQRPE DESIGN ASSESSMENT 16
1.4.1 Portions of the ETF Load-In Filter Drain System Included in Scope for IQRPE Certification 16
1.4.2 Portions of the ETF Load-In Filter Drain System Project Not Included in Scope for IQRPE Certification 16

2.0 ASSESSMENT SUMMARY 17
2.1 CODES, STANDARDS, AND REGULATIONS 17
2.2 BASIS OF DESIGN 17
2.2.1 Structural Design Standards 17
2.2.1.1 Structural Design Exceptions 18
2.2.1.2 Structural Design Conclusion 18
2.2.2 Waste Compatibility 18
2.2.2.1 Anticipated Chemistry and Controls 19
2.2.2.2 Waste Compatibility Exceptions 20
2.2.2.3 Waste Compatibility Conclusion 20
2.2.3 Pressure Control System 20
2.2.3.1 Pressure Control System Exceptions 21
2.2.3.2 Pressure Control System Assessment Conclusion 21
2.2.4 Secondary Containment System 21
2.2.4.1 Secondary Containment System Exceptions 21
2.2.4.2 Secondary Containment System Assessment Conclusion 21
2.2.5 Ancillary Equipment Design 21
2.2.5.1 Ancillary Equipment Exceptions 22
2.2.5.2 Ancillary Equipment Conclusion 22
2.2.6 P&ID Review 22
2.2.7 Corrosion Assessment 22
2.2.7.1 Corrosion Assessment Exceptions 22
2.2.7.2 Corrosion Assessment Conclusion 22
2.2.8 Recommended Inspection Schedule 22

3.0 DESIGN REVIEW ASSESSMENT CERTIFICATIONS 24

4.0 REFERENCES 26

Figures

Figure 1: Hanford Map Showing the Location of the 200 East and West Areas.....6

Figure 2: Hanford Site Map Showing the Location of the ETF 7

Figure 3: Aerial Photograph Showing the ETF Facility in the 200 East Area 8

Figure 4: Aerial Photograph Showing an Overview of the ETF Facility 8

Figure 5: Photograph of Outside of the ETF Facility 9

Figure 6: Updated P&ID of Load-In Filter Assembly (H-2-817974, Sheet 2; ECN-714608, Sheet 4) 10

Figure 7: Updated Plan of Load-In Filter Assembly (H-2-817975, Sheet 1; ECN-714609, Sheet 11) 11

Figure 8: Plan View of New Sump Tank 59A-TK-3 (Drawing H-9-6113, Sheet 1).....12

Figure 9: Elevation View “A” of New Sump Tank 59A-TK-3 (Drawing H-9-6113, Sheet 1) 13

Figure 10: Elevation View “B” of New Sump Tank 59A-TK-3 (Drawing H-9-6113, Sheet 1) 14

Figure 11: Photograph of Existing Load-In Filter Assembly 15

Tables

Table 1: ETF Load-In Filter Drain System Materials of Construction.....19

1.0 INTRODUCTION

The Washington Administrative Code (WAC) 173-303-640(3), *Tank Systems*, provide a set of requirements for Owner/Operators of dangerous waste tank systems. This Design Assessment Report is prepared for Washington River Protection Solutions, LLC (WRPS), to meet the Washington Department of Ecology (Ecology) review, by an Independent Qualified Registered Professional Engineer (IQRPE) to certify that the proposed tank system will have sufficient structural integrity and is acceptable for storing and treating dangerous waste per WAC 173-303-640(3)(a).

IP-318173-01, *Independent Qualified Registered Professional Engineer Inspection Plan for ETF Load-In Filter Drain System*, identifies the IQRPE inspections required for the procurement and testing related to the Effluent Treatment Facility (ETF) Load-In Filter Drain System. (There were no fabrication activities associated with IP-318173-01 because all components were procured ready to be installed.)

IA-318173-01, *Independent Qualified Registered Professional Engineer Installation Assessment Report for ETF Load-In Filter Drain System*, was prepared for WRPS by an IQRPE to certify that the tank system installations are in accordance with WAC 173-303-640(3)(c)-(g).

The IQRPE maintains "independence" at all times. However, comments and suggestions by others are considered by the IQRPE during the preparation of reports and plans. Only the IQRPE can implement changes to the master IQRPE documents.

1.1 PROJECT DESCRIPTION

1.1.1 Background

The ETF receives a portion of its waste feed stream via tanker trucks. Waste feed is pumped out of the tankers and through three (3) particulate filters. The waste feed is then pumped to the surge tank, or Liquid Effluent Retention Facility (LERF).

The three (3) load-in filters are not back-flushable and the elements require periodical replacement. In order to replace the filter elements, the filter housings are drained. Currently, the filter housings are drained into the existing secondary containment sump located outside of the truck load-in building. The filter housing contents are then pumped out of the sump using an existing pump.

The new Load-In Filter Drain System will have a small sump tank with a pump (approximately 45 gallons) installed adjacent to the load-in filters. The filter housings will be drained into the sump tank. At the completion of filter maintenance, the contents of the sump tank will be pumped back into the filter housings. The new sump tank will normally be empty. The sump tank will be equipped with a sight glass to indicate level. The sump tank will have an overflow that routes to the existing secondary containment sump. The pump will be manually operated via a local control panel.

The primary scope of this IQRPE design assessment will include the design and installation of a 45-gallon water sump tank, pump, and associated piping in the ETF Load-In Facility. This new system will temporarily store liquid while the load-in filters are being serviced.

This activity constitutes a design modification to an existing facility. In accordance with WAC-173-303-640(3)(a), modification of an existing facility requires that the IQRPE attest that the

modifications will not impact the structural integrity of the component and is acceptable for handling dangerous waste.

1.1.2 IQRPE Scope

Meier Architecture • Engineering (Meier) is the IQRPE of record for the IQRPE Support for the ETF Load-In Filter Drain System Project. Meier will provide IQRPEs and Independent Qualified Installation Inspectors (IQIIs) to review the design, fabrication, and installation activities involving the ETF Load-In Filter Drain System Project per WRPS Statement of Work (SOW) No. 318173, *IQRPE Support to ETF Load-In Filter Drain System (BMA 64658)*.

A review of design documents (drawings, calculations, piping specifications, Engineering Change Notice [ECN], etc.) was completed by the IQRPE. Included within the scope of the IQRPE review are various technical evaluations covering areas dealing with potential waste leak paths, thermal expansion, water hammer, and freeze protection issues associated with the ETF Load-In Filter Drain System Project.

The IQRPE performed the design assessment to the requirements of WAC 173-303-640(3), *Design and Installation of New Tank Systems or Components*. The scope of the IQRPE assessment will include the installation of the new piping and equipment procured and installed to support the ETF Load-In Filter Drain System Project:

- 45 Gallon Sump Tank: 59A-TK-3
- 15 GPM Pump Assembly: 59A-P-3
- Piping Assemblies: 1”-59A-007-M9, 1”-59A-010-M9, and 1”-59A-012-M9
- Tubing Assembly: ½”-59A-011-M9

The overall details of the design change are documented in Modification Traveler MT-50409, *ETF Load-In Filter Drain Modification*; ECN-714608, *ETF Load-In Filter Drain P&ID ECN and* ECN-714609*, ETF Load-In Filter Drain Mechanical ECN*. Relevant codes and standards include ASME B31.3-2016, *Process Piping* and HNF-27957, *200 Area ETF, Load-In, and LERF Pipe Class Specification*.

This IQRPE design assessment takes credit for a previously issued IQRPE Integrity Assessment Report for the ETF detailed in RPP-IQRPE-50043, *FY19 Effluent Treatment Facility IQRPE Integrity Assessment*.

The ETF Load-In Filter Drain System Project task will occur in the ETF Load-In Facility, Building 2025ED, located at the ETF on the Hanford Nuclear Waste Site in the 200 East Area.

The following figures show the general layout of the project location, infrastructure, equipment layout, and other pertinent details:

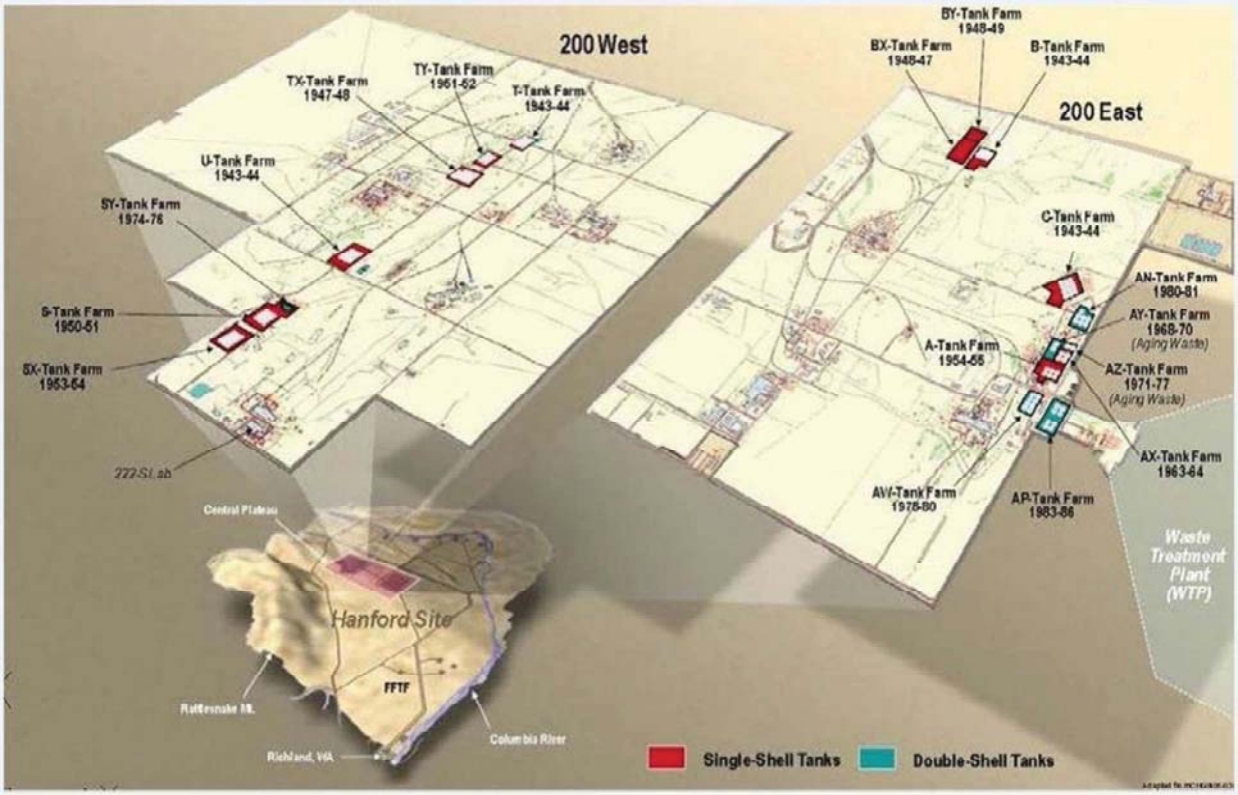

Figure 1: Hanford Map Showing the Location of the 200 East and West Areas

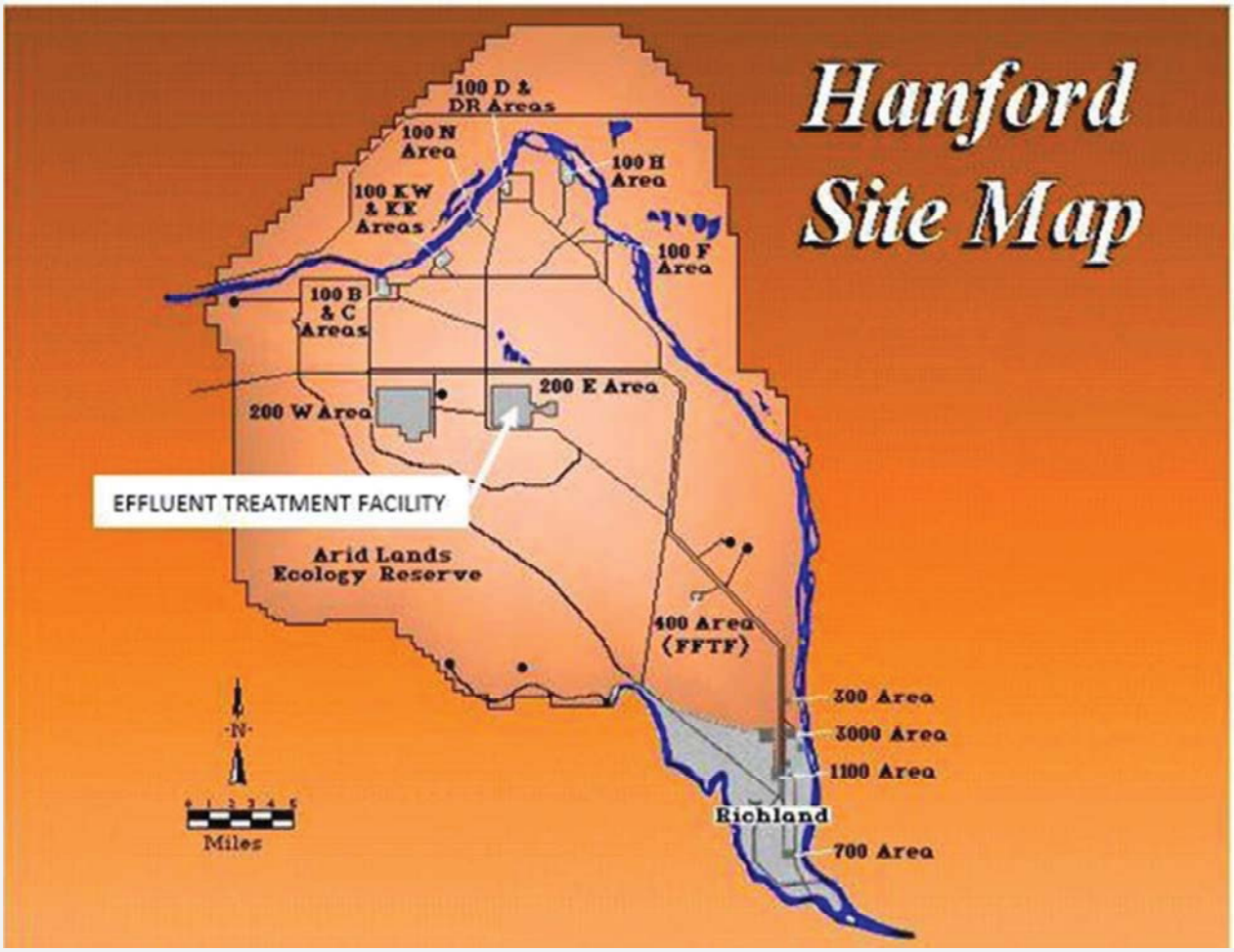

Figure 2: Hanford Site Map Showing the Location of the ETF

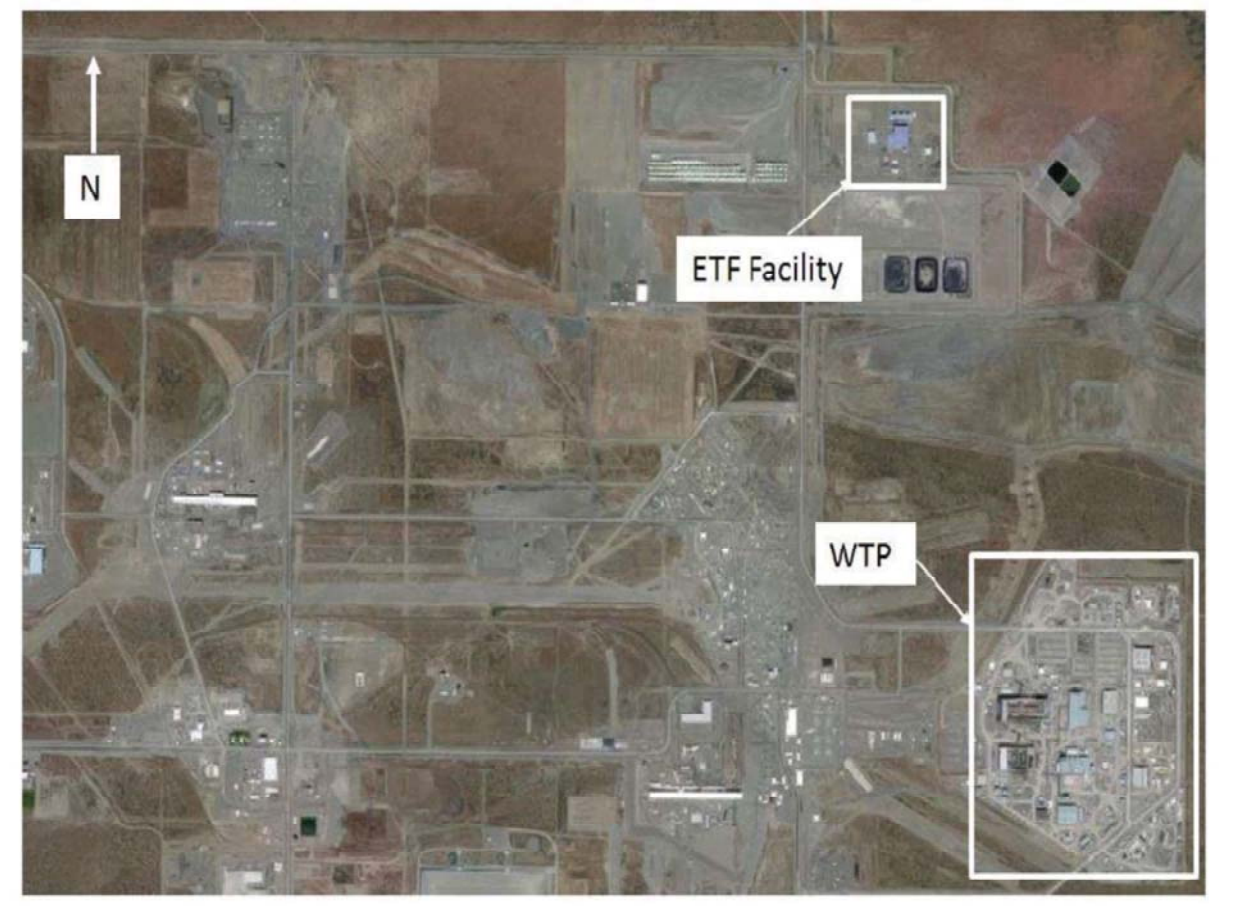

Figure 3: Aerial Photograph Showing the ETF Facility in the 200 East Area

Figure 4: Aerial Photograph Showing an Overview of the ETF Facility

Figure 5: Photograph of Outside of the ETF Facility

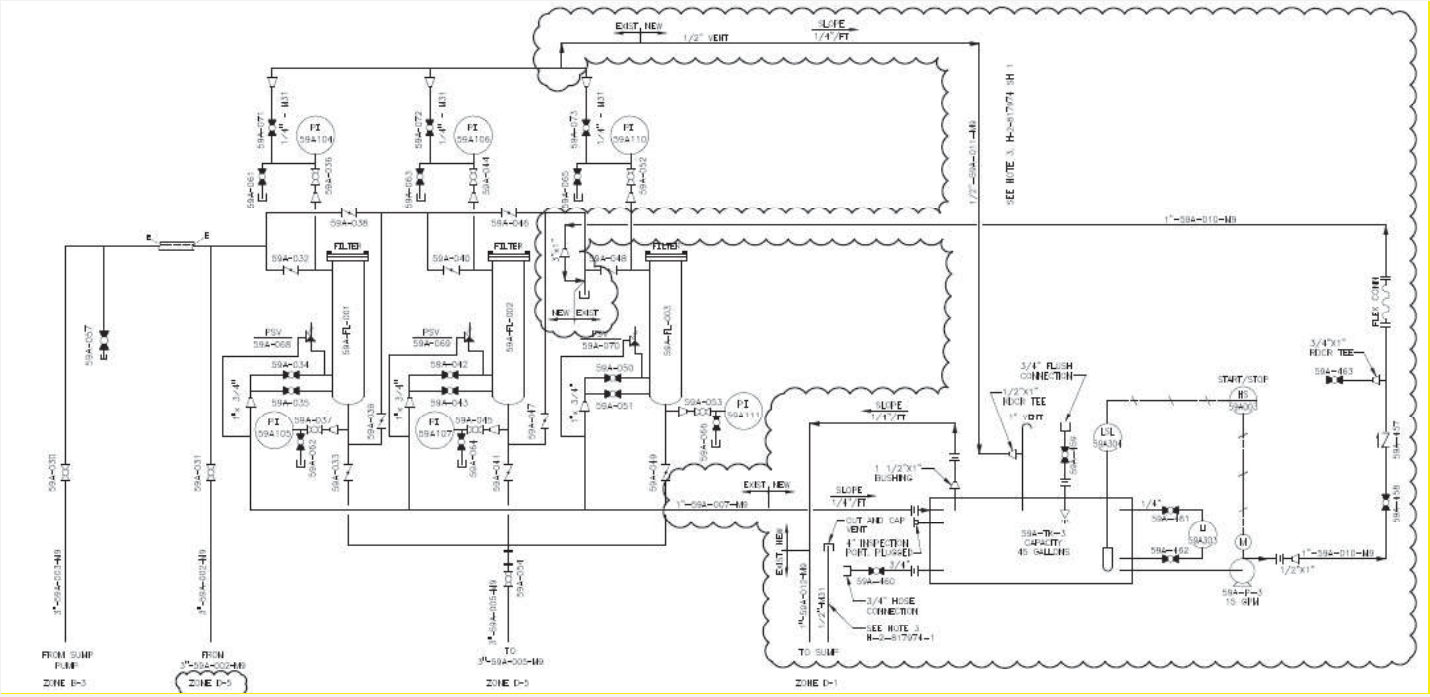

Figure 6: Updated P&ID of Load-In Filter Assembly (H-2-817974, Sheet 2; ECN-714608, Sheet 4)

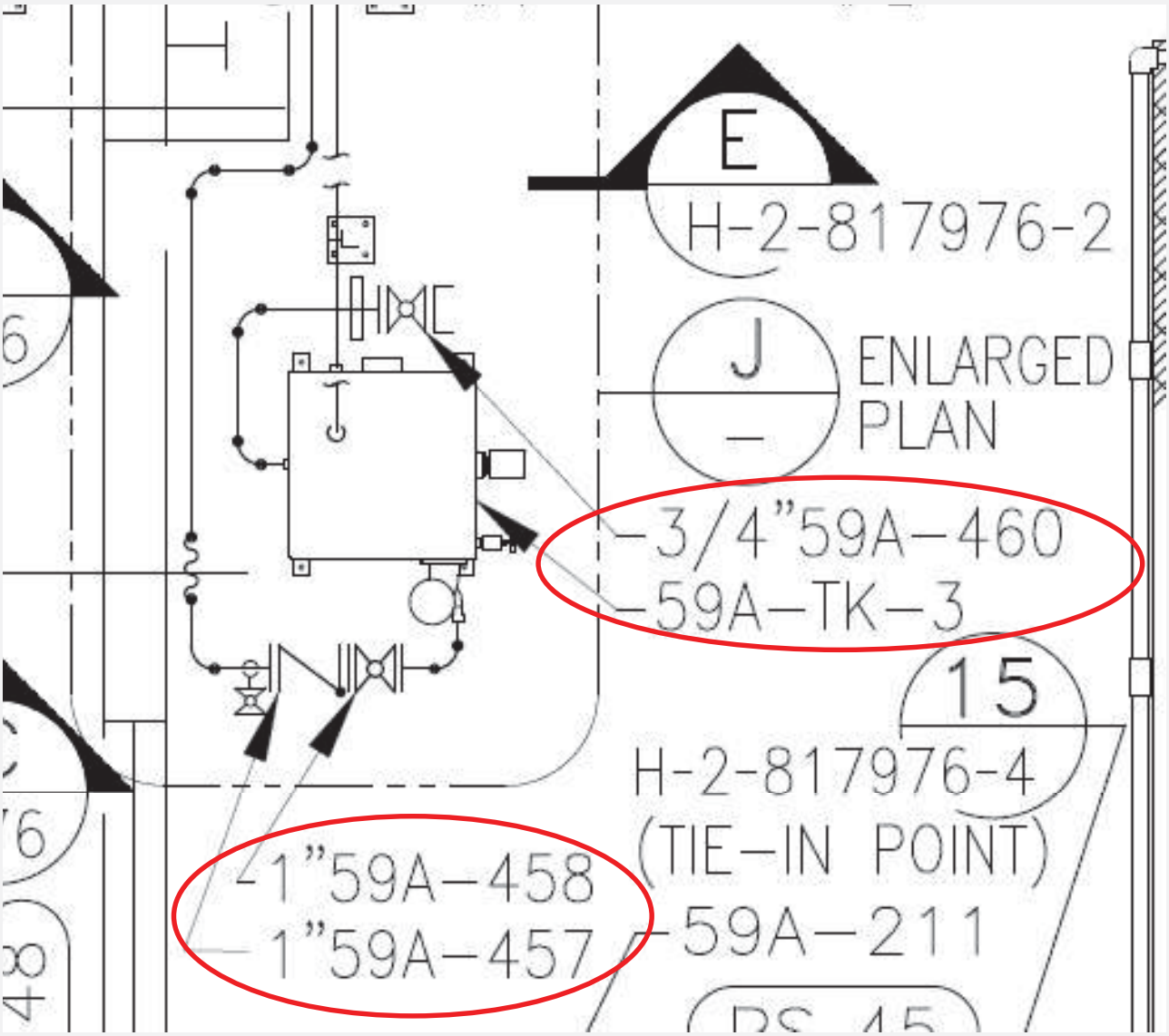

Figure 7: Updated Plan of Load-In Filter Assembly (H-2-817975, Sheet 1; ECN-714609, Sheet 11)

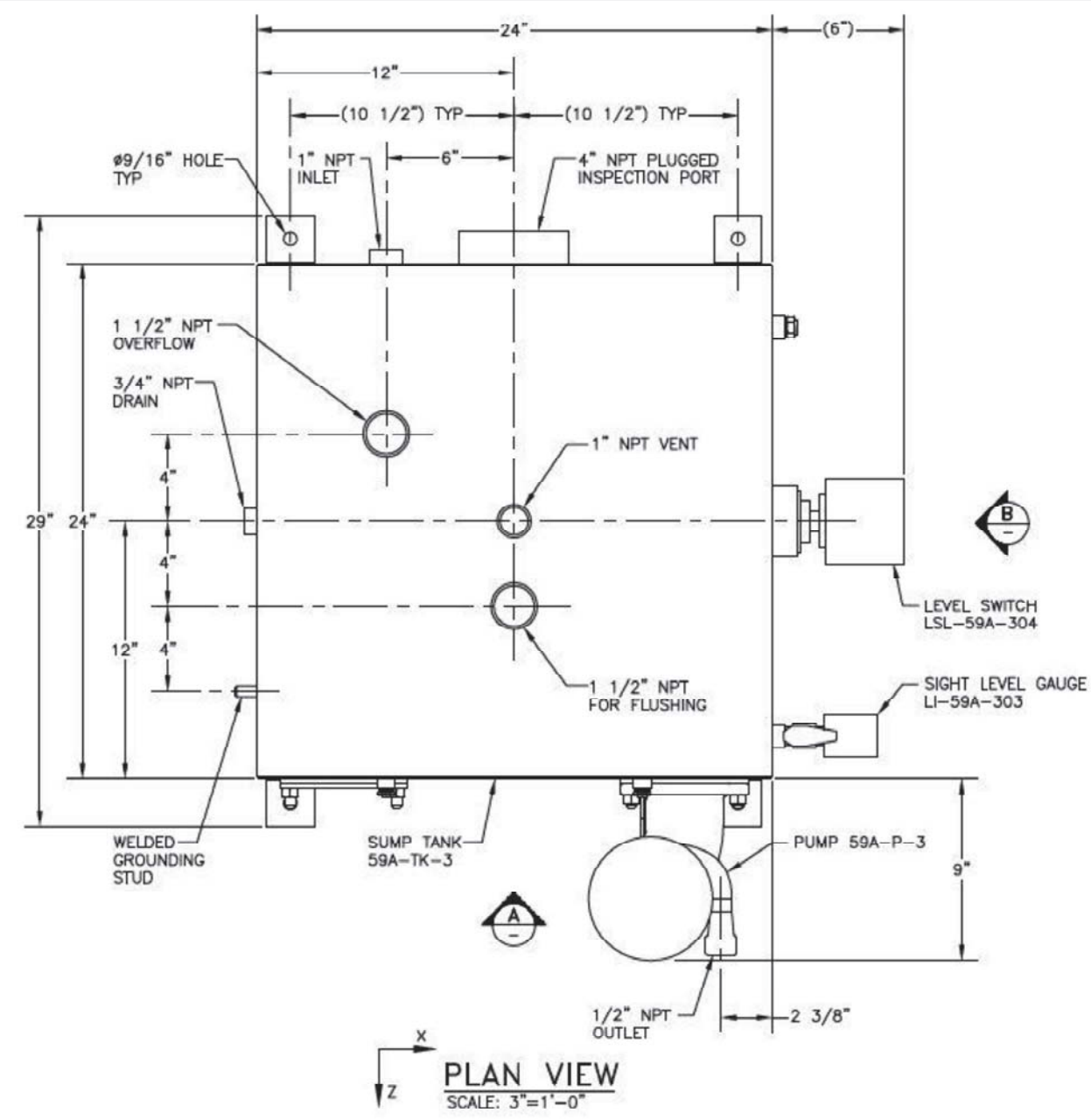

Figure 8: Plan View of New Sump Tank 59A-TK-3 (Drawing H-9-6113, Sheet 1)

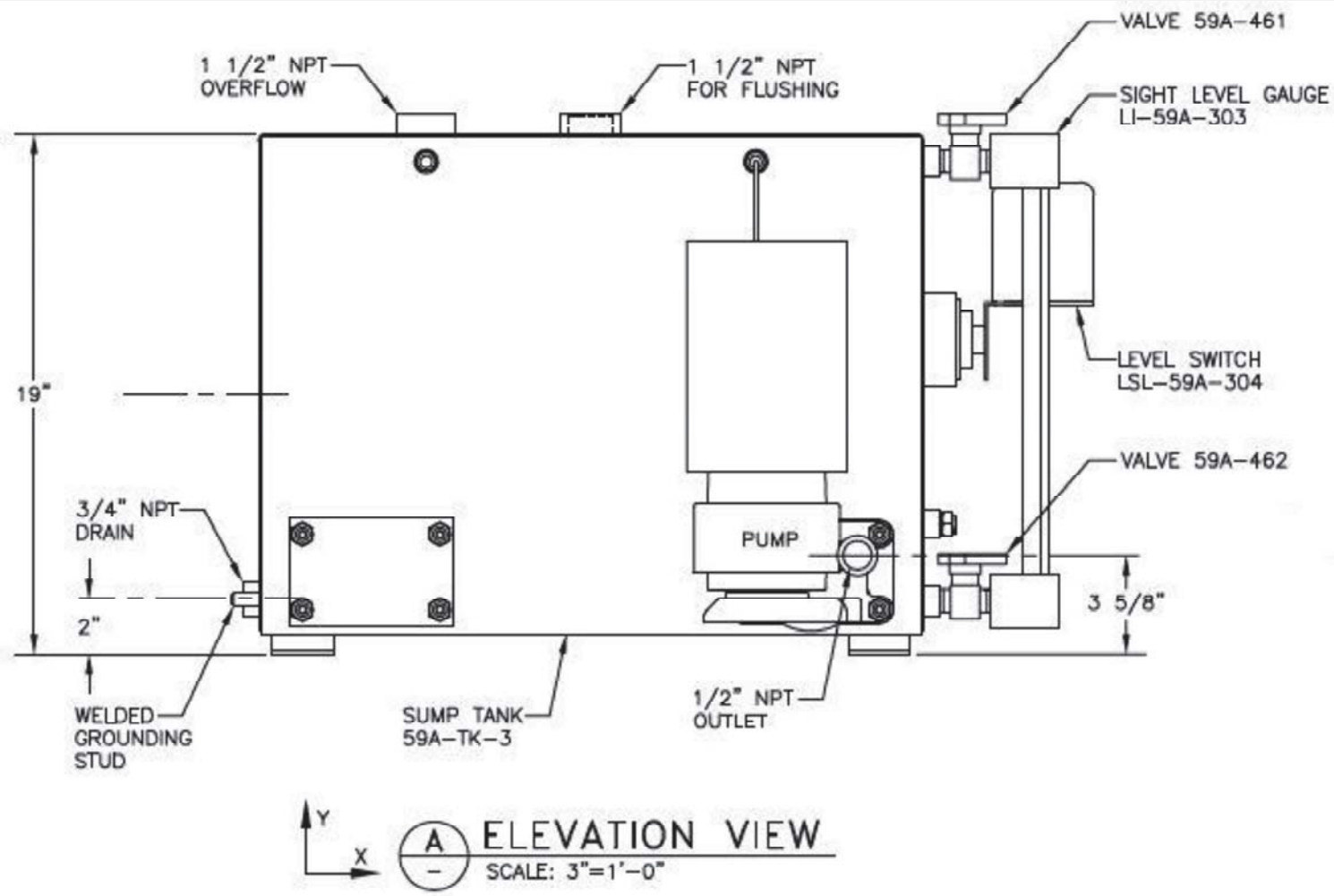

Figure 9: Elevation View "A" of New Sump Tank 59A-TK-3 (Drawing H-9-6113, Sheet 1)

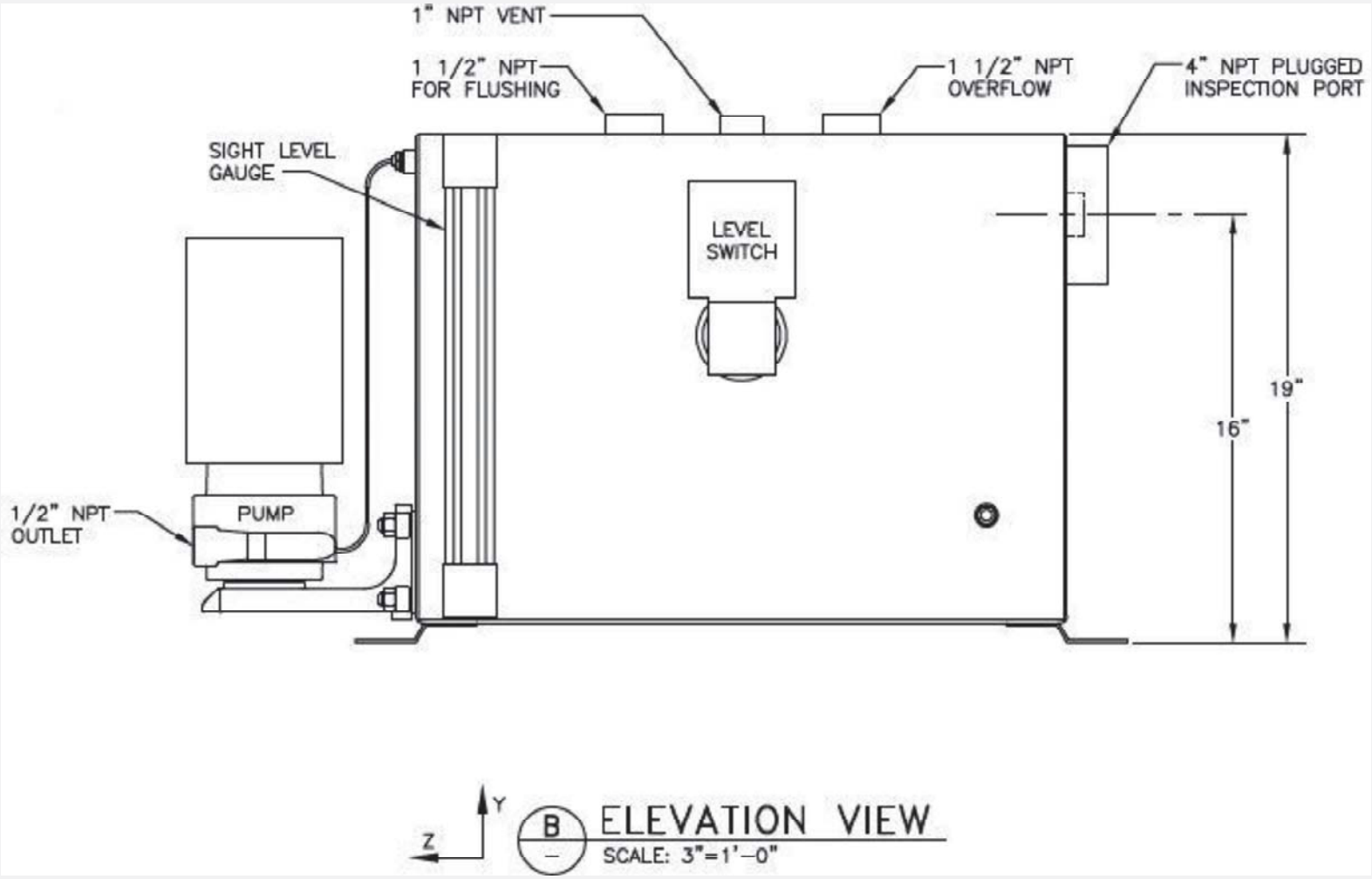

Figure 10: Elevation View "B" of New Sump Tank 59A-TK-3 (Drawing H-9-6113, Sheet 1)

Figure 11: Photograph of Existing Load-In Filter Assembly

1.2 DESIGN REVIEW REQUIREMENTS

Many of the components required for the transfer of dangerous or mixed waste are regulated by WAC 173-303-640(3), *Design and Installation of New Tank Systems or Components*, requirements. WAC codes require an IQRPE's review of the design of these components prior to installation.

As a basis for the IQRPE certification, a review is performed on a final version of the document design package as prepared and reviewed by WRPS. Documents such as drawings, calculations, ECNs, Engineering Design Transmittals (EDTs), Technical Evaluations, and specifications included in the design review package that are marked as final, and have signatures of the preparer, checker, and approver, are reviewed by the IQRPE as a completed document. All other documents will be reviewed as preliminary or supportive information.

The IQRPE maintains "independence" at all times. Comments and suggestions by others are considered by the IQRPE during the preparation of reports and plans. Only the IQRPE can implement changes to the master IQRPE documents.

1.3 DESIGN OVERVIEW FOR ETF LOAD-IN FILTER DRAIN SYSTEM

This IQRPE Design Assessment Report is prepared for the Owner by an IQRPE to certify that the proposed tank system will have sufficient structural integrity and is acceptable for storing and treating dangerous waste per WAC 173-303-640(3)(a).

The components within the scope of this IQRPE design assessment for the ETF Load-In Filter Drain System Project include only those that either will be, or have the potential to be, in direct contact with waste fluids. All components are situated inside temperature-controlled Building 2025ED of the ETF Load-In Facility. The piping installed for the ETF Load-In Filter Drain System Project is required to comply with HNF-27957.

The ETF Load-In Filter Drain System Project components included in this design review include:

- 45 Gallon Sump Tank: 59A-TK-3
- 15 GPM Pump Assembly: 59A-P-3
- Piping Assemblies: 1”-59A-007-M9, 1”-59A-010-M9, and 1”-59A-012-M9
- Tubing Assembly: ½”-59A-011-M9

1.4 SCOPE OF IQRPE DESIGN ASSESSMENT

This IQRPE design assessment includes a comprehensive review of the design package per WAC 173-303-640. Any exceptions taken by the IQRPE to incomplete or unavailable items in the design package are listed in Section 2.1 at the end of each subsection.

1.4.1 Portions of the ETF Load-In Filter Drain System Included in Scope for IQRPE Certification

Documents included in this Design Assessment review for the ETF Load-In Filter Drain System Project include:

- Calculations
- Design and Fabrication Drawings
- ECNs
- Piping class specification
- Piping and Instrumentation Drawings (P&IDs)

A list of documents reviewed by the IQRPE as part of this Design Assessment Report is included in Section 4.0.

1.4.2 Portions of the ETF Load-In Filter Drain System Project Not Included in Scope for IQRPE Certification

This IQRPE design assessment was limited only to the ETF Load-In Filter Drain System Project components that either will be, or have the potential to be, in contact with waste. Components that are not within the scope of this IQRPE design assessment include those that will not be in direct contact with waste fluids, with the exception of those components that are being relied upon to provide protection to other components that do contain waste.

2.0 ASSESSMENT SUMMARY

Systems within the IQRPE scope of this assessment (Section 1.4.1) are adequately designed to prevent failure caused by corrosion or by structural loads imposed by the system's intended service. These conditions are described in more detail below. The system design complies with the applicable requirements of WAC 173-303-640. Design documents that were reviewed as part of this assessment are referenced in Section 4.0.

2.1 CODES, STANDARDS, AND REGULATIONS

The codes, standards, and regulations specifically used during the preparation of this certification are referenced, as necessary, throughout this report. A complete list of applicable references is contained in Section 4.0.

2.2 BASIS OF DESIGN

2.2.1 Structural Design Standards

WAC 173-303-640(3) requires that an IQRPE certify that the proposed tank system will have sufficient structural integrity and is acceptable for storing and treating dangerous waste. This assessment must show, in accordance with WAC 173-303-640(3)(a), *Design and Installation of New Tank Systems or Components*, that the foundation, structural support, seams, connections, and pressure controls are adequately designed and that the tank system has sufficient structural strength, compatibility with the waste to be stored and treated, and corrosion protection to ensure that it will not collapse, rupture, or fail.

The ETF Load-In Filter Drain System Project involves the installation of piping and components above the concrete floor, and entirely inside, temperature-controlled Building 2025ED of the ETF Load-In Facility; this configuration prevents any contact with either soil or water. The nature and location of the task does not introduce any structural concerns related to freeze protection of piping, frost heaving of foundations, and back fill requirements to provide structural support to prevent excessive settlement and corrosion. The above ground and interior installation eliminates any need for cathodic protection measures that could be required if there were contact with soil. The installation will be located near the west wall of Building 2025ED and will be out of the path of incoming tanker trucks so the effects of vehicular traffic is not a concern.

The technical requirements for the design, materials of construction, fabrication, and testing requirements associated with Sump Tank 59A-TK-3 and Pump 59A-P-3 are in accordance with H-9-6113, *Piping ETF Load-In Facility Filter Drain Sump Tank*. All structural welding and weld inspections are required to meet the requirements of AWS D1.1/D1.1M, *Structural Welding Code – Steel*, for the welding of structural carbon steel and AWS D1.6/D1.6M, *Structural Welding Code – Stainless Steel*, for the welding of structural stainless steel and for welding stainless steel to carbon steel. All welding is in accordance with the category of statically loaded criteria (ECN-714609).

The anchorage of Filter Drain Sump Tank 59A-TK-3 was evaluated to assure that the anchors were designed to withstand loads associated with both the operation of the facility and those associated with the effects of Natural Phenomena Hazards (NPH). The anchorage was found to be adequate

in satisfying all anticipated loading conditions in addition to code requirements (RPP-CALC-62877, *ETF Load-In Filter Drain Modification: Filter Drain Sump Tank Anchorage Analysis*).

RPP-CALC-62734, *ETF Load-In Filter Drain System Pipe Stress Analysis*, evaluated the drain and sump tank piping for compliance to ASME B31.3 code requirements. The calculation determined that all segments of the new drainage piping system and sump tank installed per ECN-714608 and ECN-714609 are in compliance with ASME B31.3 stress requirements.

The ETF Load-In Filter Drain System Project will utilize stainless steel piping and fittings. All of these components are commercially purchased items and will not be utilized in any manner that is incompatible with their intended applications. Any structural requirements that must be met by the piping and fittings, classified as ETF Load-In Pipe Class M-9 (System 59A), are inherent to the fact that they must meet the requirements of ASME B31.3. These requirements are established in specification HNF-27957.

It should be noted that ETF Load-In Pipe Class M-9 (System 59A), described in the current revision (Rev. 4) of HNF-27957, is applicable only to pipe sizes from 1-½” through 10”. The ETF Load-In Filter Drain System Project will utilize pipes sizes that are smaller than 1-½”. A future revision to HNF-27957 will be made to specifically include the smaller pipe sizes so that the existing requirements for the Class M-9 (System 59A) code will be identified as clearly applicable to them also.

The IQRPE concludes that the appropriate structural considerations for the ETF Load-In Filter Drain System Project have been made.

2.2.1.1 Structural Design Exceptions

Based on the above review, there are no IQRPE certification exceptions to the structural design of the piping materials used for the ETF Load-In Filter Drain System Project.

2.2.1.2 Structural Design Conclusion

The IQRPE concurs that this structural design meets the requirements of WAC 173-303-640(3)(a).

2.2.2 Waste Compatibility

Regulations located in WAC 173-303-640(3)(a) require tank systems be compatible with the wastes transported or otherwise handled. Piping materials of the ETF Load-In Filter Drain System Project meet the requirements for Class M9 (System 59A) piping per HNF-27957 (MT-50409). Class M9 (System 59A) piping is ASTM A312 TP304L stainless steel (HNF-27957). Component materials that either will be in contact with tank waste or have the possibility of coming into contact are summarized in Table 1, below.

This review does not cover waste compatibility issues that may be associated with secondary containment components such as the ETF Load-In Facility floor itself or floor linings or coatings.

Table 1: ETF Load-In Filter Drain System Materials of Construction

Item	Drawing Location	Description	Item #	Component Materials / Notes
Filter Sump Tank 59A-TK-3	H-9-6113	45 gal.	--	ASTM A240 304/304L Stainless Steel
Filter Load-in Pump 59A-P-3	H-9-6113	1/3 hp; 15 gpm	--	All wetted components: 304/304L Stainless Steel
ETF Load-In Filter Drain System Piping Class M-9 (Syst. 59A)	ECN-714609 (Sheet 7)	Tubing less than ¾”	--	ASTM A213/A269 Seamless 316 SST
		½” Piping	--	ASTM A312 TP 304L SST (Piping) ASTM A403-WP304L SST (Fittings)
		3/4” Piping	--	ASTM A312 TP 304L SST (Piping) ASTM A403-WP304L SST (Fittings)
		1” Piping	--	ASTM A312 TP 304L SST (Piping) ASTM A403-WP304L SST (Fittings)
		Flange Gaskets	--	Flexitallic,® Flexicarb SR, graphite laminate
		Ball Valves: 1” and larger	--	ASTM A351 Grade CF8M Stainless Steel
		Ball Valves: less than 1”	--	ASTM A351 Grade CF8M Stainless Steel
		Unions	--	ASTM A351 Grade CF8 304 Stainless Steel
		Swing check valves	--	ASTM A351 Grade CF8M Stainless Steel
		Branch Connections	--	ASTM A182 Grade F304L stainless steel
		Flanges	--	ASTM A182 Grade F304L stainless steel
		Flexible Connection	--	304 SST hose 304/304L SST End Fittings

All pipe and tubing materials in contact with liquid waste or its vapor are austenitic stainless steel. Flange gaskets are Flexitallic®[1] Flexicarb SR. The Flexitallic® gasket consists of an austenitic stainless steel outer ring with a PTFE filler. Both austenitic stainless steel and PTFE have a long history of successful use with Hanford waste.

2.2.2.1 Anticipated Chemistry and Controls

Information on the composition of the various ETF waste streams can be found in documents CHPRC-01579, *200 Area Effluent Treatment Facility Basin 44 Campaign 2011 Process Control Plan* and RPP-PLAN-60845, *Effluent Treatment Facility Basin 43 2016 Campaign Process Control Plan*.

[1] Flexitallic is a registered trademark of The Flexitallic Group, Houston, Texas.

2.2.2.2 Waste Compatibility Exceptions

Based on the above review, there are no IQRPE certification exceptions to the anticipated waste compatibility or corrosion issues with the piping materials used for the ETF Load-In Filter Drain System Project that may come into contact with the liquid waste stream.

2.2.2.3 Waste Compatibility Conclusion

The IQRPE concurs that this design basis meets the requirements of WAC 173-303-640(3)(a).

2.2.3 Pressure Control System

WAC 173-303-640 requires that an IQRPE certify that the proposed tank system has been designed with appropriate pressure control systems. The piping components of the ETF Load-In Filter Drain System Project were evaluated for pressure control issues in RPP-CALC-62734.

It should be noted that ETF Load-In Pipe Class M-9 (System 59A), described in the current revision (Rev. 4) of HNF-27957, is applicable only to pipe sizes from 1-½” through 10”. The ETF Load-In Filter Drain System Project will utilize pipes sizes that are smaller than 1-½”. A future revision to HNF-27957 will be made to specifically include the smaller pipe sizes so that the existing requirements for the Class M-9 (System 59A) code will be identified as clearly applicable to them also.

In accordance with MT-50409, the piping and components of the ETF Load-In Filter Drain System Project shall meet the following:

- Piping shall be designed, fabricated, installed, inspected, examined, and tested in accordance with ASME B31.3, 2016 edition, Normal Fluid Service Requirements
- All piping shall meet the requirements for class M-9 piping per HNF-27957.
- Piping Design conditions: Maximum pressure 100 psig;, Maximum temperature 150 deg. F; Design life 20 years; Corrosion allowance 0.2 mils per year.
- Filter Sump Tank 59A-TK-3 is an atmospheric tank and has no applicable pressure or vacuum related requirements

The piping is hydrostatically tested at a test pressure of 150 psig. The pump and tank are isolated during the leak pressure testing. The tank, along with the vent and pump, are leak tested with 10 feet of water in accordance with Uniform Plumbing Code (UPC) 712.2 water test (ECN-714609).

RPP-CALC-62734 evaluated the drain and sump tank piping for compliance to ASME B31.3, *Process Piping*, code requirements. The calculation determined that all segments of the new drainage piping system and sump tank installed per ECN-714608 and ECN-714609 are in compliance with ASME B31.3 stress requirements.

A calculation attached to the ECN-714609 was performed to establish an appropriate capacity for Filter Load-in Pump 59A-P-3. The calculation computed the pressure drop from the discharge of the pump to the inlet header of the filter housings and determined that the selected pump would need to deliver a minimum of 15 gpm back to the filter housings. The maximum deadhead pressure of the selected pump is approximately 26 psig. This is significant less than the piping and filter housing design pressures of 100 psig and 150 psig respectively.

The IQRPE concludes that the appropriate pressure control considerations for ETF Load-in Filter System have been made.

2.2.3.1 Pressure Control System Exceptions

Based on the above review, there are no IQRPE certification exceptions to the pressure control system review.

2.2.3.2 Pressure Control System Assessment Conclusion

The IQRPE concurs that this design basis meets the requirements of WAC 173-303-640.

2.2.4 Secondary Containment System

WAC 173-303-640 requires that an IQRPE certify that the proposed tank system has been designed with an appropriate secondary containment system. Secondary containment for tank systems that store, accumulate, or treat dangerous waste must be designed and installed to meet the requirements of WAC 173-303-640(4)(b). Secondary containment for the ETF Load-In Filter Drain System Project is accomplished by the floor and/or floor linings of ETF Load-In Facility Building 2025ED.

2.2.4.1 Secondary Containment System Exceptions

Due to the fact that secondary containment was already incorporated into the ETF Load-In Facility Building 2025ED by virtue of its design, there are no exceptions to the IQRPE certification of the secondary containment review assessment.

2.2.4.2 Secondary Containment System Assessment Conclusion

The IQRPE concurs that this design basis meets the requirements of WAC 173-303-640.

2.2.5 Ancillary Equipment Design

WAC 173-303-640(3) requires that an IQRPE certify that the proposed tank system has been designed with appropriate ancillary equipment in accordance with the requirements of WAC 170-303-640(3)(f) and (4)(f). WAC 173-303-040, *Definitions,* defines “Ancillary Equipment” as any device including, but not limited to, such devices as piping, fittings, flanges, valves, and pumps, that is used to distribute, meter, or control the flow of dangerous waste from its point of generation to a storage or treatment tank(s), between dangerous waste storage and treatment tanks to a point of disposal on-site, or to a point of shipment for disposal off-site. A review of the ancillary equipment design is normally part of the IQRPE review. The scope of this review includes components listed as in-scope in Section 1.4.1 and as described in the review sections above. Piping, fittings, flanges, valves, and pumps have been evaluated by the IQRPE throughout this report, which includes all ancillary equipment in-scope for this design assessment. No other ancillary equipment was identified.

2.2.5.1 Ancillary Equipment Exceptions

Based on the above review, there are no IQRPE certification exceptions to the ancillary equipment design review.

2.2.5.2 Ancillary Equipment Conclusion

The IQRPE concurs that this design basis meets the requirements of WAC 173-303-640(3).

2.2.6 P&ID Review

The P&ID details for the ETF Load-In Filter Drain System Project are depicted on H-2-817974, Sheets 1&2, *P&ID ETF Truck Load-In Station*, and as modified per ECN-714608 and ECN-714609.

The IQRPE concludes that the appropriate P&ID review has been made.

2.2.7 Corrosion Assessment

WAC 173-303-640 requires an IQRPE corrosion assessment of only the external portion of the primary containment that is in direct contact with soil or water.

The components of the ETF Load-In Filter Drain System Project are situated above the floor and are entirely inside temperature-controlled Building 2025ED of the ETF Load-In Facility; they will not be in contact with either soil or water.

The IQRPE concludes that appropriate corrosion considerations have been made.

2.2.7.1 Corrosion Assessment Exceptions

Based on the above requirements, there are no IQRPE certification exceptions to the corrosion assessment review with the materials.

2.2.7.2 Corrosion Assessment Conclusion

The IQRPE concurs that this design basis meets the requirements of WAC 173-303-640(3).

2.2.8 Recommended Inspection Schedule

Inspections completed for the initial installation are described in IA-318173-01. Per the requirements of WAC 173-303-640(3)(c), the Installation Assessment Report provides Inspection Reports documenting installation and any modifications applicable to this design assessment.

Per the requirements of WAC 173-303-640(2)(e), “a schedule for conducting integrity assessments over the life of the tank to ensure that the tank retains its structural integrity and will not collapse, rupture, or fail. The schedule must be based on the results of past integrity assessments, age of the tank system, materials of construction, characteristics of the waste, and any other relevant factors.”

The new equipment installed under this document for the ETF Load-In Filter Drain System Project includes:

- 45 Gallon Sump Tank: 59A-TK-3
- 15 GPM Pump Assembly: 59A-P-3
- Piping Assemblies: 1”-59A-007-M9, 1”-59A-010-M9, and 1”-59A-012-M9
- Tubing Assembly: ½”-59A-011-M9

The ETF Load-In Filter Drain System Project has a system design life of 20 years (MT-50409).

Because these items are new, no prior integrity assessments have been completed. Since these items are expected to be installed in 2020, or later, the age of these elements is new. The materials of construction are compatible with the wastes as detailed in Section 2.2.2 of this report. The characteristics of the wastes is also covered in that section. Additionally, corrosion is evaluated in Section 2.2.7 of this report. To allow time for an integrity assessment, it is recommended that a complete Integrity Assessment Report be completed of the above tank system elements within 15 years after initial installation or first contact with waste, whichever is later. It is anticipated these new elements of the tank system will be evaluated as part of the entire system and will be included in the overall IQRPE Integrity Assessment Report for this system in accordance with the interval for integrity assessment established by the operator for the system, as long as the scheduled integrity assessment falls within the recommended period provided here.

3.0 DESIGN REVIEW ASSESSMENT CERTIFICATIONS

The ETF Load-In Filter Drain System Project, as previously described, has been reviewed by the IQRPE and was assessed to be in compliance with the applicable sections of WAC 173-303-640(3). These results are based on a review of the applicable codes, standards, and documents.

A listing of the IQRPE, Professional Engineers, and other engineers who participated in the preparation of this design assessment report is provided below.

Independent Qualified Registered Professional Engineer

Sohan S. Gahir
- P.E., Mechanical Engineering, License No. 18503

Professional Engineers (PE)

Alexander P. Butterfield
- P.E., Mechanical Engineering, License No. 52255

Andrew S. Klein
- P.E., Chemical, Fire Protection, License No. 47831

Michel J. Langevin
- P.E., Mechanical Engineering, License No. 23759

BS Degreed Engineer

Nathaniel R. Weinman
- E.I.T., Mechanical Engineering, Enrollment Number E-118188

The certification below is in accordance with the requirements of WAC 173-303-810(13)(a), *Certification*.

Report Lead IQRPE:

WAC 173-303-810(13)(a)

I certify under penalty of the law that this document an all attachments were prepared under my direction or supervision in accordance with a system designed to assure that qualified personnel properly gather and evaluate the information submitted. Based on my inquiry of the person or persons who manage the system, or those persons directly responsible for gathering the information, the information submitted is, to the best of my knowledge and belief, true, accurate, and complete. I am aware that there are significant penalties for submitting false information, including the possibility of fine or imprisonment for knowing violations.

SOHAN S. GAHIR
STATE OF WASHINGTON
18503
REGISTERED
PROFESSIONAL ENGINEER

10/8/2020

Report Reviewed by:

Sohan S. Gahir, P.E.
Independent Qualified Registered Professional Engineer

October 8, 2020
Date

4.0 REFERENCES

ASME B31.3, 2016, *Process Piping*, American Society of Mechanical Engineers, New York, New York.

ASTM A182/A182M-18a, 2018, *Standard Specification for Forged or Rolled Alloy and Stainless Steel Pipe Flanges, Forged Fittings, and Valves and Parts for High-Temperature Service*, ASTM International, West Conshohocken, Pennsylvania.

ASTM A213/A213M-19a, 2019, *Standard Specification for Seamless Ferritic and Austenitic Alloy-Steel Boiler, Superheater, and Heat –Exchanger Tubes*, ASTM International, West Conshohocken, Pennsylvania.

ASTM A240/A240M 2018, *Standard Specification for Forged or Rolled Alloy and Stainless Steel Pipe Flanges, Forged Fittings, and Valves and Parts for High-Temperature Service*, ASTM International, West Conshohocken, Pennsylvania.

ASTM A269/A269M-15a, 2019, *Standard Specification for Seamless and Welded Austenitic Stainless Steel Tubing for General Service*, ASTM International, West Conshohocken, Pennsylvania.

ASTM A312/A312M-18a, 2018, *Standard Specification for Seamless, Welded, and Heavily Cold Worked Austenitic Stainless Steel Pipes*, ASTM International, West Conshohocken, Pennsylvania.

ASTM A351/A351M-18e1, 2019, *Standard Specification for Castings, Austenitic, for Pressure-Containing Parts,* ASTM International, West Conshohocken, Pennsylvania.

ASTM A403/A403M-18a, 2018, *Standard Specification for Wrought Austenitic Stainless Steel Piping Fittings*, ASTM International, West Conshohocken, Pennsylvania.

AWS D1.1/D1.1M: 2015, *Structural Welding Code - Steel*, American Welding Society, Miami, Florida.

AWS D1.6/D1.6M: 2017, *Structural Welding Code – Stainless Steel*, American Welding Society, Miami, Florida.

CHPRC-01579, 2011, *200 Area Effluent Treatment Facility Basin 44 Campaign 2011 Process Control Plan*, Rev. 00, CH2MHill Plateau Remediation Company, Richland, Washington.

ECN-714608, 2020, *ETF Load-In Filter Drain P&ID ECN*, Rev. 1, Washington River Protection Solutions, LLC, Richland, Washington.

ECN-714609, 2020, *ETF Load-In Filter Drain Mechanical ECN*, Rev. 2, Washington River Protection Solutions, LLC, Richland, Washington.

H-2-817974, 2019, Sheet 1, *P&ID ETF Truck Load-In Station*, Rev. 19, US Department of Energy, Richland, Washington.

H-2-817974, 2019, Sheet 2, *P&ID ETF Truck Load-In Station*, Rev. 4, US Department of Energy, Richland, Washington.

H-2-817975, Sheet 1, 2019, *Piping ETF Truck Load-In & Purgewater Unloading Station Plan*, Rev. 12, US Department of Energy, Richland, Washington.

H-9-6113, 2019, Sheet 1, *Piping ETF Load-In Facility Filter Drain Sump Tank*, Rev. 00, US Department of Energy, Richland, Washington.

HNF-27957, 2020, *200 Area ETF, Load-In, and LERF Pipe Class Specification*, Rev. 4, Washington River Protection Solutions, LLC, Richland, Washington.

IA-318173-01, 2020, *Independent Qualified Registered Professional Engineer Installation Assessment Report for ETF Load-In Filter Drain System*, Rev. 0, Meier Architecture • Engineering, Kennewick, Washington

IP-318173-01, 2019, *Independent Qualified Registered Professional Engineer Inspection Plan for ETF Load-In filter Drain System*, Rev. 0, Meier Architecture • Engineering, Kennewick, Washington.

MT-50409 2020, *ETF Load-In Filter Drain Modification*, Rev. 1, Washington River Protection Solutions, LLC, Richland, Washington.

RPP-CALC-62734, 2019, *ETF Load-In, Filter Drain System Pipe Stress Analysis*, Rev. 00, Washington River Protection Solutions, LLC, Richland, Washington.

RPP-CALC-62877, 2019, *ETF Load-In Filter Drain Modification: Filter Drain Sump Tank Anchorage Analysis*, Rev. 00, Washington River Protection Solutions, LLC, Richland, Washington.

RPP-IQRPE-50043, 2019, *FY19 Effluent Treatment Facility IQRPE Integrity Assessment*, Rev. 0, Washington River Protection Solutions, LLC, Richland, Washington.

RPP-PLAN-60845, 2017, *Effluent Treatment Facility Basin 43 2016 Campaign Process Control Plan,* Rev. 1, Washington River Protection Solutions, LLC, Richland, Washington.

Statement of Work (SOW) No. 318173, 2019, *IQRPE Support to ETF Load-In Filter Drain System (BMA 64658)*, Rev. 0, Washington River Protection Solutions, LLC, Richland, Washington.

Uniform Plumbing Code, 2018, *The International Association of Plumbing and Mechanical Officials (IAPMO),* Ontario, CA.

WAC 173-303, *"Dangerous Waste Regulations,"* Washington Administrative Code, as amended.

WAC 173-303-040, *"Definitions",* Washington Administrative Code, as amended.

WAC 173-303-640(3), *"Design and Installation of New Tank Systems or Components,"* Washington Administrative Code, as amended.

WAC 173-303-640, *"Tank Systems,"* Washington Administrative Code, as amended.

WAC 173-303-810(13)(a), *"Certification,"* Washington Administrative Code, as amended.