0068656

RPP-RPT-26475, Rev. 1

Retrieval Data Report for Single-Shell Tank 241-C-203

RECEIVED
FEB 22 2006
EDMC

D. L. Parker
CH2M HILL Hanford Group, Inc.
Richland, WA 99352
U.S. Department of Energy Contract DE-AC27-99RL14047

EDT/ECN: DRF
Cost Center: 7F500
B&R Code:
UC:
Charge Code:
Total Pages: 102

Key Words: waste, retrieval, residual, vacuum retrieval system S-112, C-203, 200-series tank, WMA C, technology, limit, HFFACO, TPA, M-45-00

Abstract: This report describes the retrieval of waste from SST 241-C-203, which is one of four 200-series SSTs constructed to store waste in Waste Management Area C. The DOE began retrieval of waste on June 30, 2004, and completed retrieval in compliance with Milestone M-45-00 requirements on March 25, 2005. The limit of the vacuum retrieval system capacity to retrieve waste was reached.

TRADEMARK DISCLAIMER. Reference herein to any specific commercial product, process, or service by trade name, trademark, manufacturer, or otherwise, does not necessarily constitute or imply its endorsement, recommendation, or favoring by the United States Government or any agency thereof or its contractors or subcontractors.

Printed in the United States of America. To obtain copies of this document, contact: Document Control Services, P.O. Box 950, Mailstop H6-08, Richland WA 99352, Phone (509) 372-2420; Fax (509) 376-4989.

JAN 12 2006
DATE:
STA: 15
HANFORD RELEASE
ID: 65

Nancy A. Fouad 1-12-06
Release Approval Date

Release Stamp

Approved For Public Release

Tank Farm Contractor (TFC) RECORD OF REVISION	(1) Document Number RPP-RPT-26475	Page 1

(2) Title
Retrieval Data Report for Single-Shell Tank 241-C-203

Change Control Record

(3) Revision	(4) Description of Change - Replace, Add, and Delete Pages	Authorized for Release	
		(5) Resp. Engr. (print/sign/date)	(6) Resp. Mgr. (print/sign/date)
1 RS	Revised to include U.S. Department of Energy, Office of River Protection review comments	D. L. Parker 1/11/06	R. B. Calmus 1/12/06 for RB Calmus per telecon

CH2M HILL DOCUMENT RELEASE FORM

S

(1) Document Number: RPP-RPT-26475	(2) Revision Number: 1	(3) Effective Date: 1/12/2006	
(4) Document Type: ☐ Digital Image ☒ Hard copy ☐ PDF ☐ Video	(a) Number of pages (including the DRF) or number of digital images: 102		
(5) Release Type: ☐ New ☐ Cancel	☐ Page Change	☒ Complete Revision	
(6) Document Title: Retrieval Data Report for Single-Shell Tank 241-C-203			
(7) Change/Release Description: Revised to include U.S. Department of Energy, Office of River Protection review comments			
(8) Change Justification: Revised to include U.S. Department of Energy, Office of River Protection review comments			

(9) Associated Structure, System, and Component (SSC) and Building Number:		
	(a) Structure Location: 200W, C Tank Farm	(c) Building Number: N/A
	(b) System Designator: 241-C-203	(d) Equipment ID Number (EIN): N/A

(10) Impacted Documents:	(a) Document Type	(b) Document Number	(c) Document Revision
	N/A		

(11) Approvals:

(a) Author (Print/Sign): D. L. Parker	Date: 1/11/06
(b) Responsible Manager (Print/Sign): R. B. Calmus for RB Calmus per telecom	Date: 1/12/06
(c) Reviewer (Optional, Print/Sign): J. G. Field	Date: 1/11/06
(d) Reviewer (Optional, Print/Sign):	Date:

(12) Distribution:

(a) Name	(b) MSIN	(a) Name	(b) MSIN
J. C. Allen-Floyd	H6-64	J. G. Field	H6-62
F. J. Anderson	E6-35	M. N. Jaraysi	H6-03
J. N. Appel	R2-12	N. W. Kirch	R2-58
J. W. Badden	H6-03	J. J. Luke	H6-03
W. B. Barton	S7-70	G. W. Reddick	S7-70
R. B. Calmus	H6-05	W. T. Thompson	S7-67
M. P. Connelly	E6-35	R. A. Dodd	S7-83

Release Stamp: JAN 12 2006 DATE: STA: 15 HANFORD RELEASE ID: 65

(13) Clearance	(a) Cleared for Public Release	(b) Restricted Information?	(c) Restriction Type:
	☒ Yes ☐ No	☐ Yes ☒ No	

(14) Clearance Review (Print/Sign): NANCY A. FOUAD / Nancy A. Fouad — Date: 1-12-06

A-6003-881 (05/05)

CH2M HILL DOCUMENT RELEASE FORM (Continued)

(1) Document Number: RPP-RPT-26475	(2) Revision Number: 1	(3) Effective Date: 1/12/2006

(12) Distribution: (Continued)			
(a) Name	(b) MSIN	(a) Name	(b) MSIN
D. G. Baide	S7-24	K. N. Jordan	S7-66
S. D. Doss	S7-03	D. M. Nguyen	R2-12
M. R. Koch	S7-83	L. M. Sasaki	S7-90
P. C. Miller	R1-51	M. J. Galgout	H6-62
M. J. Sutey	S7-70	P. S. Schaus	H6-03
J. A. Voogd	H6-03		

RPP-RPT-26475
Revision 1

RETRIEVAL DATA REPORT FOR SINGLE-SHELL TANK 241-C-203

Prepared by
D. L. Parker

Date Published
January 2006

CH2MHILL
Hanford Group, Inc.

P.O. Box 1500
Richland, Washington

Contractor for the U S. Department of Energy
Office of River Protection under Contract DE-AC27-99RL14047

TRADEMARK DISCLAIMER. Reference herein to any specific commercial product, process, or service by trade name, trademark, manufacturer, or otherwise does not necessarily constitute or imply its endorsement, recommendation, or favoring by the U.S. Government or any agency thereof or its contractors or subcontractors.

Printed in the United States of America. To obtain copies of this document, contact: Document Control Services P.O. Box 950, Mailstop H6-08, Richland, WA 99352, Phone (509) 372-2420; Fax (509) 376-4989.

EXECUTIVE SUMMARY

This Retrieval Data Report (RDR) presents data showing that single-shell tank 241-C-203 (SST C-203) has been retrieved to the limits of the vacuum retrieval system (VRS) technology and that tank waste residuals in SST C-203 do not exceed 30 ft^3. These achievements satisfy the tank waste retrieval criteria established by Milestone M-45-00 of the *Hanford Federal Facility Agreement and Consent Order* (HFFACO). This RDR also summarizes the potential risk to human health from waste remaining in the tank, provides details on the VRS technology and its performance in the SST C-203 retrieval campaign, and describes measures taken to prevent and detect leaks during retrieval.

The SST C-203 retrieval campaign began June 30, 2004. SST C-203 was retrieved using a VRS, which used vacuum pumps to mobilize and remove waste from the tank. Use of this system minimized both the need to add water to the tank and the in-tank pooling of liquids. Removed waste was diluted with raw water and transferred to double-shell tank 241-AN-106 (DST AN-106).

The SST C-203 leak detection, monitoring, and mitigation program used during retrieval focused on a mitigation strategy to control potential leaks. Based on the available data, there was no evidence of a tank leak occurring during SST C-203 retrieval operations. A minor (30 mL) water leak that occurred in equipment located on a skid was contained and mitigated.

On March 24, 2005, representatives of the U.S. Department of Energy (DOE) and CH2M HILL Hanford Group, Inc. (CH2M HILL) determined that the technical limit of the VRS to retrieve waste from SST C-203 had been reached and briefed the Washington State Department of Ecology. In determining that the VRS's capacity to remove waste from SST C-203 had been reached, DOE and CH2M HILL relied on the following:

a. Decreases over time in the specific gravity of the recovered waste stream.
b. Direct visual observation of the waste remaining in the tank bottom.
c. Analysis of retrieval data on the ratio of water used to waste retrieved.
d. Volume of residual waste at the end of each operating day.

Subsequent measurement of the residual waste in SST C-203 using topographical mapping and survey techniques in accordance with Attachment 1 to HFFACO Appendix H and RPP-23403, *Single-Shell Tank Component Closure Data Quality Objectives*, established that the volume of waste remaining in SST C-203 was 18.5 ft^3, with an upper confidence level of 19.9 ft^3.

SST C-203 held approximately 2,640 gal (353 ft^3) of waste at the start of retrieval. Based on the difference between the starting and ending volume estimates, approximately 2,501 gal (334 ft^3) of waste were retrieved from SST C-203 and transferred to DST AN-106. No leaks from SST C-203 were detected during retrieval operations.

The inventory of constituents in the SST C-203 residual waste was determined by laboratory analysis of waste samples taken after the completion of retrieval. The risk assessment for the residual waste in SST C-203 based on sampling analyses shows that the estimated Incremental Lifetime Cancer Risk, Hazard Index, all pathways farmer dose, target organ dose, and intruder doses are two to four orders of magnitude below the performance objectives prescribed for closure of the Waste Management Area C, which includes SST C-203.

DOE has no recommendations for additional retrieval actions at SST C-203 because Milestone M-45-00 retrieval criteria have been satisfied, and retrieval is complete.

TABLE OF CONTENTS

EXECUTIVE SUMMARY i

1.0 INTRODUCTION AND BACKGROUND 1-1
- 1.1 PURPOSE 1-1
- 1.2 HISTORY 1-1
- 1.3 REGULATORY REQUIREMENTS 1-2
- 1.4 PRE-RETRIEVAL CONDITIONS 1-3
  - 1.4.1 Single-Shell Tank C-203 Description 1-3
  - 1.4.2 Ancillary Equipment Providing Access to Single-Shell Tank C-203 1-3
  - 1.4.3 Waste Description and Conditions 1-6
- 1.5 DOCUMENT STRUCTURE 1-7

2.0 RETRIEVAL SYSTEM DESCRIPTION 2-1
- 2.1 BASIS 2-1
- 2.2 OVERVIEW 2-1
- 2.3 RETRIEVAL SYSTEM EQUIPMENT 2-1
  - 2.3.1 Articulating Mast System 2-1
  - 2.3.2 Vessel/Pump Skid 2-3
  - 2.3.3 Vacuum Skid 2-3
  - 2.3.4 Control Trailer 2-4
  - 2.3.5 Hose-in-Hose Transfer Line 2-4
- 2.4 RETRIEVAL SYSTEM INSTRUMENTATION 2-4
- 2.5 ENVIRONMENTAL CONTROLS 2-5
  - 2.5.1 Exhauster Operation 2-5
  - 2.5.2 Vacuum Routing 2-5
  - 2.5.3 Leak Detection, Monitoring, and Mitigation 2-5
  - 2.5.4 Walkdown of Aboveground Portions of the Tank System 2-6
  - 2.5.5 Secondary Containment 2-6
- 2.6 RETRIEVAL CAMPAIGN CHRONOLOGY 2-6

3.0 RETRIEVAL SYSTEM PERFORMANCE 3-1
- 3.1 RETRIEVAL PROCESS DESCRIPTION 3-1
- 3.2 RETRIEVAL TECHNOLOGY PERFORMANCE 3-3
- 3.3 PREDICTED VERSUS ACTUAL TECHNOLOGY PERFORMANCE 3-5
  - 3.3.1 Residual Waste Volume 3-5
  - 3.3.2 Water Use 3-5
  - 3.3.3 Retrieval Rate 3-14
  - 3.3.4 Retrieval Time 3-15
- 3.4 LESSONS LEARNED 3-16
- 3.5 CONCLUSION 3-17

4.0 LEAK DETECTION, MONITORING, AND MITIGATION 4-1
- 4.1 REQUIREMENTS 4-1
- 4.2 LEAK DETECTION AND MONITORING 4-2

4.2.1 Single-Shell Tank C-203 4-2
4.2.2 Double-Shell Tank AN-106 4-4
4.2.3 Ancillary Equipment—Leak Detectors 4-5
4.3 MITIGATION 4-5
4.3.1 Single-Shell Tank C-203 4-6
4.3.2 Double-Shell Tank AN-106 4-6
4.3.3 Ancillary Equipment 4-6
4.3.4 Mitigation Results 4-7
4.4 CONCLUSION 4-8

5.0 LIMITS OF TECHNOLOGY 5-1
5.1 IDENTIFYING LIMITS OF TECHNOLOGY 5-1
5.2 DETERMINATION THAT LIMITS OF TECHNOLOGY WERE REACHED 5-2
5.2.1 Trend in Specific Gravity of the Waste Slurry 5-2
5.2.2 Results of Visual Observations 5-3
5.2.3 Trend in Ratio of Water Used to Waste Recovered 5-3
5.2.4 Trends in Volume of Residual Waste 5-4
5.3 CONCLUSION 5-5

6.0 SINGLE-SHELL TANK 241-C-203 RESIDUAL WASTE VOLUME MEASUREMENT 6-1
6.1 RESIDUAL WASTE VOLUME MEASUREMENT PROCESS 6-1
6.1.1 Video Camera/CAD Modeling System 6-1
6.1.2 Secondary Approaches 6-3
6.2 VIDEO CAMERA/CAD MODELING SYSTEM RESULTS 6-4
6.3 CONCLUSIONS 6-11

7.0 RESIDUAL TANK WASTE CHARACTERIZATION 7-1
7.1 SAMPLING AND ANALYSIS OF RESIDUAL WASTE 7-1
7.2 SAMPLING AT SST C-203 7-1
7.3 SAMPLE ANALYSES 7-2
7.4 COMPUTATION OF RESIDUAL INVENTORY 7-3
7.4.1 Computation Method 7-3
7.4.2 Results 7-3

8.0 POST-RETRIEVAL SINGLE-SHELL TANK 241-C-203 RISK ASSESSMENT 8-1
8.1 CONSTITUENTS EVALUATED 8-1
8.2 RESULTS FOR INDIVIDUAL CONTAMINANTS FOR POST-RETRIEVAL SINGLE-SHELL TANK 241-C-203 8-3
8.3 CUMULATIVE ANALYSIS RESULTS FOR TANK C-203 AND WMA C 8-6
8.4 INADVERTANT INTRUDER 8-7
8.5 SUMMARY 8-7

9.0 ADDITIONAL RETRIEVAL TECHNOLOGIES 9-1

9.1 FEASIBILITY AND VIABILITY OF OTHER AVAILABLE WASTE RETRIEVAL TECHNOLOGIES 9-1
9.2 FEASIBILITY OF DEVELOPING NEW TECHNOLOGIES 9-1
9.2.1 AEA Technology Power Fluidics™ 9-2
9.2.2 Russian Pulsatile Mixer Pumps/Fluidic Retrieval Systems 9-2
9.2.3 Small Mobile Retrieval Vehicles 9-2
9.2.4 Tank Wall Washing at West Valley Demonstration Project 9-3
9.2.5 Dry Ice Blasting 9-3
9.3 ADDITIONAL WASTE REMOVAL 9-3

10.0 RECOMMENDATIONS FOR FURTHER ACTION 10-1
10.1 RECOMMENDATIONS FOR SST C-203 10-1
10.2 OPPORTUNITIES FOR IMPROVEMENT OF FUTURE WASTE RETRIEVAL OPERATIONS AT OTHER SINGLE-SHELL TANKS 10-1
10.2.1 Vacuum Retrieval System—Future Deployments and Potential Improvements 10-1
10.2.2 Improvements in Supporting Equipment and Instrumentation 10-2
10.2.3 Improvements in Procedures Associated with Retrieval 10-2

11.0 REFERENCES 11-1

APPENDIX A SINGLE-SHELL TANK C-203 RESIDUAL WASTE INVENTORIES A-1

LIST OF FIGURES

Figure 1-1. C-200 Series Tank – Profile View. 1-4
Figure 1-2. Configuration of SST C-203 and Adjacent Facilities. 1-5
Figure 2-1. Vacuum Retrieval System Schematic. 2-2
Figure 2-2. Articulating Mast System Depiction in Single-Shell Tank. 2-2
Figure 2-3. Vacuum Head on Articulating Mast System 2-3
Figure 3-1. C-200 Series Instrumentation Diagram. (Source: p. 27 of RPP-16525, Rev. 6, *C-200-Series Tanks Retrieval Functions and Requirements*) 3-2
Figure 3-2. Residual Tank Waste Volume Trend During Retrieval Campaign per Operating Day. 3-4
Figure 3-3. Daily Comparison of In-tank and Ex-tank Water. 3-12
Figure 3-4. Daily In-tank Water Use.[a] 3-13
Figure 3-5. Overall Proportion of In-tank and Ex-tank Water 3-13
Figure 3-6. Retrieval Rate During Campaign.[a] 3-15
Figure 4-1. Waste Surfaces. 4-3
Figure 5-1. Limits of Technology Model. 5-1
Figure 5-2. Specific Gravity of Retrieval Slurry. 5-3

Figure 5-3. Retrieval Performance Measured by Comparing Water Used to Waste Retrieved per Operating Day. 5-4

Figure 5-4. Residual Tank Waste Volume During Retrieval Campaign. 5-5

Figure 6-1. SST C-203 Section View Showing Camera Elevations Used in March 31, 2005, Video Recording. 6-2

Figure 6-2. SST C-203 *Land Desktop* Post-Retrieval Tank Waste Contour Map (C-203, March 31, 2005, Video). 6-5

Figure 6-3. SST C-203 Land Desktop Post-Retrieval Tank Waste Wire Mesh Isometric Model (C-203, March 31, 2005, Video). 6-6

Figure 6-4. SST C-203 Video Still, Camera Elevation at 23 Feet from Tank Bottom. 6-7

Figure 6-5. SST C-203 Video Still, Camera Elevation at 23 Feet from Tank Bottom. 6-8

Figure 6-6. SST C-203 Video Still, Camera Elevation at 15 Feet from Tank Bottom. 6-9

Figure 6-7. SST C-203 Video Still, Camera Elevation at 5 Feet from Tank Bottom 6-10

Figure 8-1. SST C-203 Residual Waste Inventory and Risk Assessment Process. 8-2

LIST OF TABLES

Table 1-1. SST C-203 Pre-Retrieval Riser and Hatchway Descriptions. 1-6

Table 1-2. Crosswalk of HFFACO Appendix I, Section 2.1.7, Requirements and Corresponding Retrieval Data Report Sections. 1-8

Table 2-1. Chronology of SST C-203 Retrieval Operation 2-6

Table 3-1. C-203 Retrieval Process Flowmeter Summary. 3-3

Table 3-2. SST C-203 Data 3-6

Table 3-3. DST AN-106 Data. 3-7

Table 3-4. Water Use Data 3-8

Table 3-5. C-203 Retrieval Batch Relative Densities 3-10

Table 3-5. C-203 Retrieval Batch Relative Densities 3-11

Table 3-6. Pre-Retrieval System Performance Goals. 3-11

Table 3-7. System Performance Summary. 3-12

Table 3-8. Water Use and Disposition. 3-14

Table 4-1. Leak Detection and Monitoring Methods for Each System Component. 4-2

Table 6-1. SST C-203 Total Waste Volume and Component Waste Volumes 6-4

Table 6-2. SST C-203 Waste Volume in Tank Bottom. 6-4

Table 7-1. SST C-203 Residual Waste Sample Analysis Techniques. 7-2

Table 8-1. Estimated Maximum Incremental Lifetime Cancer Risk/Radiological Dose During the Modeling Period for Primary Radionuclides 8-4

Table 8-2. Estimated Maximum Value for Incremental Lifetime Cancer Risk and Hazard Quotient per Nonradionuclides 8-5

Table 8-3. Cumulative Incremental Lifetime Cancer Risk, Hazard Index, and Radiological Drinking Water Dose from Peak Groundwater Concentration Related to Residual Waste Volume in SST C-203 8-6

Table 8-4. Intruder Dose Summary for C-203 8-7

Table 8-5. Comparison of HTWOS Predicted Inventory used in DOE/ORP-2005-01 and the Nominal Post-Retrieval Inventory. 8-8

LIST OF TERMS

Abbreviations and Acronyms

AEA	*Atomic Energy Act of 1954*
APF	all pathways farmer
AMS	articulating mast system
BBI	best-basis inventory
CCMS	camera/computer-aided design modeling system
CCTV	closed-circuit television system
CH2M HILL	CH2M HILL Hanford Group, Inc.
CTF	Cold Test Facility
DOE	Department of Energy
DQO	data quality objectives
DST AN-106	double-shell tank 241-AN-106
Ecology	Washington State Department of Ecology
EPA	U.S. Environmental Protection Agency
HFFACO	*Hanford Federal Facility Agreement and Consent Order*
HI	Hazard Index
HIHTL	hose-in-hose transfer line
HTWOS	Hanford Tank Waste Operations Simulator
HVAC	heating, ventilation, and air conditioning
ILCR	Incremental Lifetime Cancer Risk
ITV	in-tank vehicle
LDMM	leak detection, monitoring, and mitigation
MBD	Material Balance Discrepancy
MCL	maximum contaminant level
MLDUA	modified light duty utility arm
MRS	mobile retrieval system
PUREX	plutonium-uranium extraction
RDR	Retrieval Data Report
RSD	relative standard deviation
SpG	specific gravity
SST	single-shell tank
SST C-203	single-shell tank 241-C-203
3-D	three dimensional
TPA	Tri-Party Agreement
TWINS	Tank Waste Information Network System
TWRWP	Tank Waste Retrieval Work Plan
UCL	upper confidence level
UPR	unplanned release
VRS	vacuum retrieval system
WAC	Washington Administrative Code
WMA C	Waste Management Area C
WUF	waste unaccounted for

Units

Ci	curie
ft^3	cubic foot
ft	foot
g	gram
gal	gallon
in.	inch
kg	kilogram
mL	milliliter
mrem	millirem
pCi	picocurie
yr	year
µCi	microcurie
µg	microgram

1.0 INTRODUCTION AND BACKGROUND

Hanford Federal Facility Agreement and Consent Order (HFFACO), also known as the Tri-Party Agreement (TPA) (Ecology et al. 1989), Milestone M-45-00 requires the U.S. Department of Energy (DOE) to retrieve waste from all single-shell tanks (SST) at the Hanford Site. This report describes the retrieval of waste from SST 241-C-203 (SST C-203), which is one of four 200-series SSTs constructed to store waste in Waste Management Area C (WMA C). The DOE began retrieval of SST C-203 waste on June 30, 2004, and completed retrieval operations in compliance with Milestone M-45-00 requirements on March 24, 2005.

Please note that source, special nuclear material, and byproduct materials, as defined in the *Atomic Energy Act of 1954* (AEA), as amended, are regulated at DOE facilities exclusively by DOE acting pursuant to its AEA authority. DOE asserts that, under the AEA, it has sole and exclusive responsibility and authority to regulate source, special nuclear, and byproduct materials at DOE-owned facilities. To the extent that this RDR document provides data or discussions about materials regulated by the AEA, that information is provided for informational purposes only.

1.1 PURPOSE

This Retrieval Data Report (RDR) provides information required by Section 2.1.7 of Appendix I to HFFACO. The report documents the SST C-203 retrieval campaign, retrieval system performance, and post-retrieval activities including the residual waste volume determination and sampling and analysis of the residual. This report describes the performance of the vacuum retrieval system (VRS), presents data confirming that the completed retrieval meets Milestone M-45-00 retrieval criteria, and summarizes the potential risk to human health from waste remaining in the tank.

1.2 HISTORY

Construction of SST C-203 began in 1943 and was completed in 1944. The tank was placed in service in 1947, receiving metal waste from the B Plant bismuth phosphate process through January 1948. SST C-203 was subsequently sluiced for uranium recovery from March 1953 through January 1955. A visual inspection was conducted, and the tank was declared empty (RPP-15408, *Origin of Wastes in C-200 Series Single-Shell Tanks*).

In November 1955, SST C-203 received cold uranium waste generated during plutonium-uranium extraction (PUREX) pilot plant studies. This waste was removed in December 1955. Shortly thereafter, SST C-203 began receiving waste from research and development activities conducted at the hot semiworks facility. Waste was transferred from SST C-203 to SSTs C-109 and C-104 during 1970, and SST C-203 was removed from service in 1976 and interim stabilized in 1982 (RPP-15408).

One unplanned release (UPR) is associated with SST C-203 (UPR-200-E-137) when over a period of 2 to 3 years, precipitation entered SST C-203, migrated through the saltcake, and either became entrained in the saltcake or leaked out of the tank). The release was estimated to be

approximately 400 gal (HNF-EP-0182, *Waste Tank Summary Report for Month Ending September 30, 2005*).

1.3 REGULATORY REQUIREMENTS

Retrieval of waste from SST C-203 and submittal of this RDR are necessary requirements for closing the Hanford SST system. The TPA establishes volume and technology criteria for closing SST C-203. TPA Milestone M-45-00 provides in part:

> Closure will follow retrieval of as much tank waste as technically possible, with tank waste residues not to exceed ... 30 ft^3 in each of the 200 series tanks, or the limit of waste retrieval technology capability, whichever is less. If the DOE believes that waste retrieval to these levels is not possible for a tank, then DOE will submit a detailed explanation to EPA and Ecology explaining why these levels cannot be achieved, and specifying the quantities of waste that the DOE proposes to leave in the tank. The request will be approved or disapproved by EPA and Ecology on a tank-by-tank basis.

Section 2.1.7 of Appendix I to the TPA Action Plan provides:

> **2.1.7 Retrieval Data Report/Appendix H Request for Exception**
>
> Once DOE has completed the retrieval actions described in the TWRWP, DOE will either complete and submit to Ecology within 120 days its retrieval data report, or a request for exception to retrieval criteria per Agreement Appendix H. The request for exception to retrieval criteria option is only applicable for SSTs and the requirements of that request are identified in Agreement Appendix H, Attachment 2.
>
> At a minimum, DOE's Retrieval Data Report will include:
>
> - Residual tank waste volume measurement, including associated calculations
> - The results of residual tank waste characterization
> - Retrieval technology performance documentation
> - DOE's updated post-retrieval risk assessment
> - Discussion of feasibility/viability of other available retrieval technologies, the feasibility of developing additional retrieval technologies, associated detailed cost estimates and amount of additional waste that could be removed
> - Opportunities and actions being taken to refine or develop tank waste retrieval technologies, based on lessons learned
> - LDMM monitoring and performance results
> - DOE's recommendation for further action and proposed schedule(s).
>
> Data from this report will be used by Washington State Department of Ecology (Ecology) and DOE in making WMA-, tank- and component-specific closure decisions. Single or multiple tank and component actions will be included in this report as appropriate.

1.4 PRE-RETRIEVAL CONDITIONS

This section summarizes the physical condition of the tank, the ancillary equipment used during retrieval, and the waste residing in the tank when retrieval began.

1.4.1 Single-Shell Tank C-203 Description

SST C-203 is 20 ft in diameter with a 24-ft operating depth, a 25-ft overall height, and an operating capacity of 7,352 ft^3. The structure consists of a carbon-steel liner inside a reinforced-concrete shell with the top of the tank approximately 12 ft below grade. A manual Enraf[1] installed in SST C-203 was brought online in October 2003 to measure waste volume. Figure 1-1 presents a generalized profile view of a C-200 series tank.

The SST C-203 sidewall is a vertical cylinder. The tank knuckle region curves in from the sidewall and about 36 vertical inches down to the tank bottom. The tank bottom is shaped like a shallow dish; the middle of the dish is deeper than the top rim. From the rim, the dish slopes very gradually down and in to the midpoint of the tank bottom. The bottom has a 6-in. depth at the center and a total volume of approximately 43 ft^3 below the rim. A weld line visible when not covered by waste joins plates below the rim. The portion of the tank bottom below the weld line has a volume of approximately 35 ft^3. A single stiffener ring is located at the top of the steel liner at 25 ft 6 in. above the bottom of the tank. Internal tank dimensions are documented in CVI-73550, Drawings D-20, *Typical Sections for 20 ft Tanks and Drawing D-23, Structural Steel Lining for 20 ft Tanks*.

1.4.2 Ancillary Equipment Providing Access to Single-Shell Tank C-203

One pump pit, six risers, and a hatchway penetrate the SST C-203 roof, providing access to the interior of the tank. Two of the risers, R-9 and R-10, are located in the pump pit. The pit and the other risers are located from the tank roof to slightly above grade. Figure 1-2 provides a top-down view of SST C-203 and includes the pit, risers, and hatchway. Table 1-1 provides basic information on the SST C-203 risers and hatchway before retrieval began.

[1] ENRAF is a registered trademark of Enraf-Nonius, N.V. Verenigde Instrumentenfabrieken, Enraf-Nonius Corporation Netherlands, Rontegenweg 1, Delft, Netherlands.

Figure 1-1. C-200 Series Tank – Profile View.

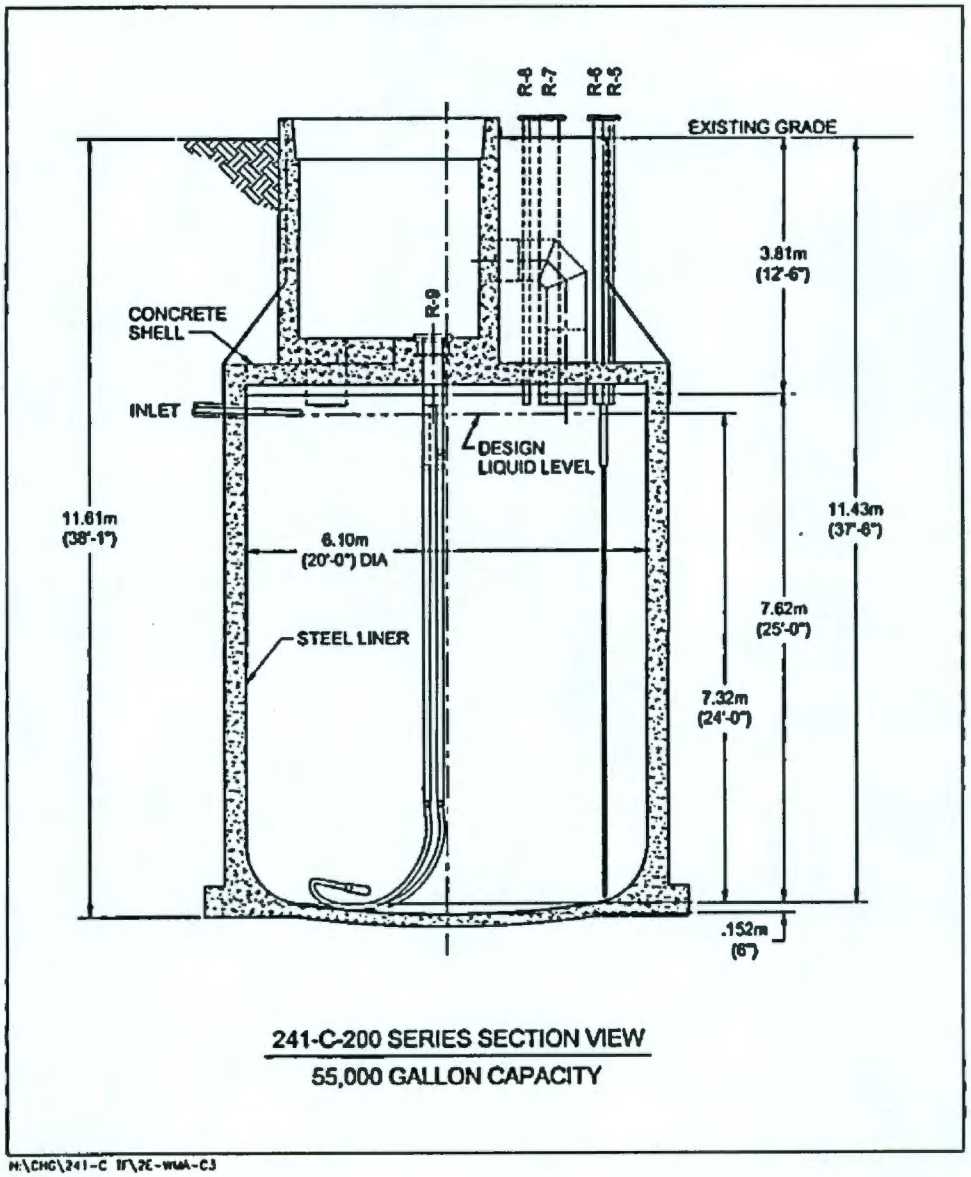

H:\CHG\241-C 1F\2C-WMA-C3

Figure 1-2. Configuration of SST C-203 and Adjacent Facilities.

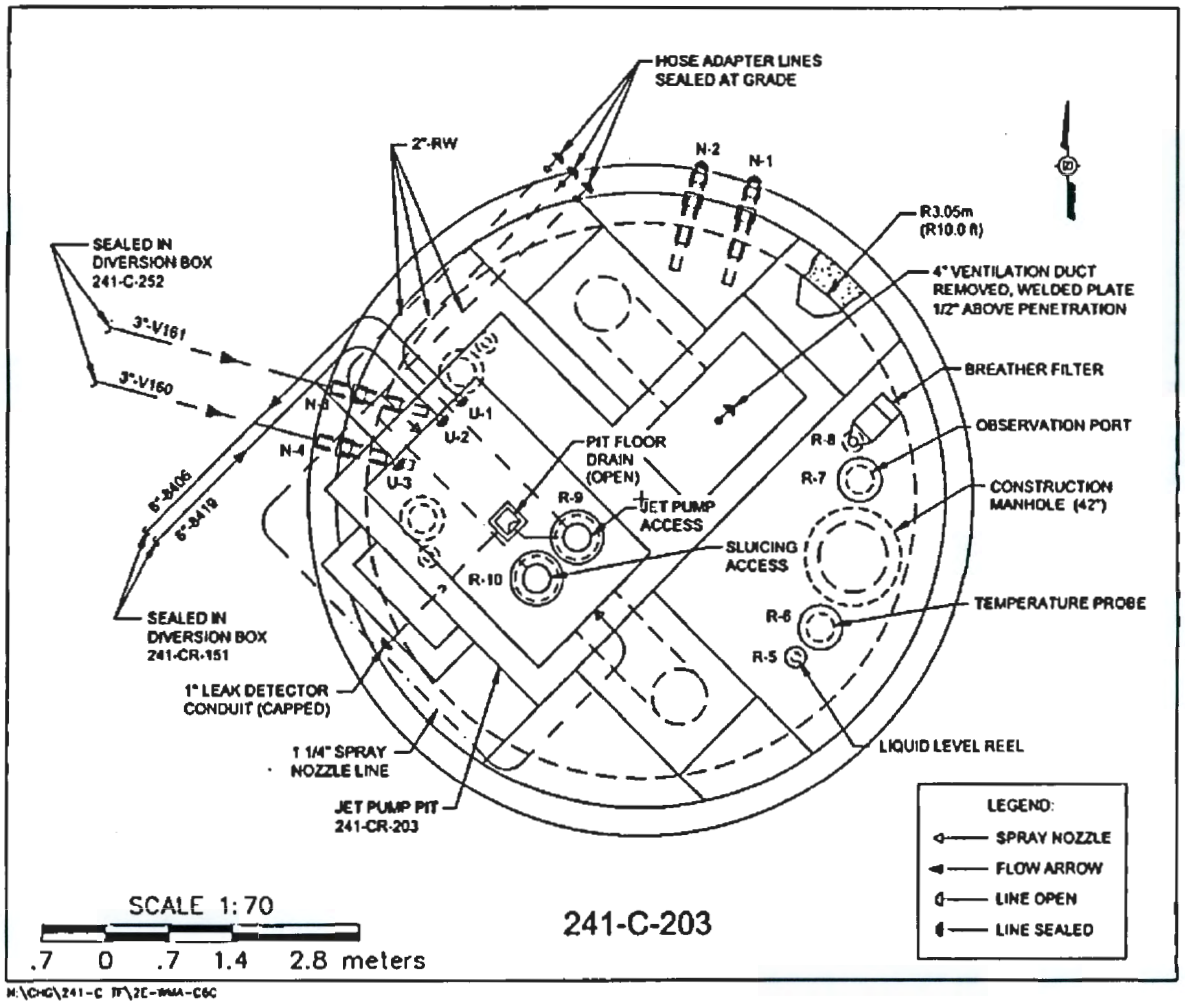

Table 1-1. SST C-203 Pre-Retrieval Riser and Hatchway Descriptions.

Riser ID	Minimum Diameter (in.)	Location	Description and Pre-Retrieval Status/Use	Access
R5	4	East of jet pump pit	Breather filter – used for manual tape access	Above grade
R6	12	East of jet pump pit	Vacuum exhaust – used for temperature control	Above grade
R7	12	East of jet pump pit	Observation port – used for observation	Above grade
R8	4	East of jet pump pit	Liquid level reel – used to emplace an air filter	Above grade
R9	12	Jet pump pit	Sludge jet access, weather-covered – used for sludge jet access	Inside pit
R10	12	Jet pump pit	Sluicing access, weather-covered – used for sluicing access	Inside pit
Hatchway	24	Northeast of jet pump pit	Condenser pit, weather-covered – used for general access	Via HVAC hatchway

Note:

Primary reference sources for above data are H-14-106126, Sheets 3-6; H-2-73354; and WHC-SD-WM-ER-349, *Historical Tank Content Estimate for the Northeast Quadrant of the Hanford 200 East Area.*

HVAC = heating, ventilation, and air conditioning.

1.4.3 Waste Description and Conditions

The waste in SST C-203 consisted of waste from research and development activities conducted at the hot semiworks facility (RPP-15408). An extensive summary of the waste that resided in SST C-203 at the start of retrieval including oxides is provided in the *Tank Waste Information Network System (TWINS) [Best Basis Inventory/Best Basis Calculation Detail]*, http://twins.pnl.gov/data/datamenu.htm.

Analysis indicated the waste in SST C-203 would have minimal heat generating capability and additionally, retrieval process fluids and chemical reactions were not expected to add heat to the tank. Therefore, no temperature monitoring was required during retrieval operations (RPP-17507, *Waiver of Temperature Requirements During Retrieval of 241-C-200 Series Tanks*).

Waste recovered from SST C-203 was scheduled to be stored in double-shell tank AN-106 (DST AN-106) and was not expected to substantially affect the DST AN-106 caustic concentration. However, caustic was added to DST AN-106 before SST C-203 retrieval to offset the decrease in caustic concentration resulting from water used to retrieve and transport SST C-203 waste. After all C-200 series tanks are retrieved, DST AN-106 will be sampled to define the status of waste in the tank.

1.5 DOCUMENT STRUCTURE

This report is organized to present information required by Section 2.1.7 of Appendix I to the HFFACO Action Plan (Table 1-2).

- **Section 1,** *Introduction and Background*, discusses the purpose and scope of SST C-203 retrieval, presents requirements applicable to the retrieval and this report, describes the tank and certain associated equipment, summarizes the operating history and in-tank conditions when retrieval began, and outlines the report structure.
- **Section 2,** *Retrieval System Description*, describes retrieval system design, construction and operation, lists major retrieval system components, depicts the retrieval process, and presents a retrieval chronology.
- **Section 3,** *Retrieval System Performance*, evaluates how well the retrieval system performed and indicates lessons learned and process improvements that may be implemented in future retrievals.
- **Section 4,** *Leak Detection, Monitoring, and Mitigation* (LDMM), describes LDMM methods and procedures, presents an LDMM chronology for SST C-203 retrieval, and summarizes LDMM results.
- **Section 5,** *Limits of Technology*, reports the method and findings used to determine that waste was recovered to the limit of the retrieval technology.
- **Section 6,** *Single-Shell Tank241- C-203 Residual Waste Volume Measurement*, describes the method for determining the volume of residual waste in the tank and presents results of the volume measurement process.
- **Section 7,** *Residual Tank Waste Characterization*, lists requirements for characterization of tank waste, describes methods and procedures used to sample and analyze the waste, and describes the results of laboratory analysis.
- **Section 8,** *Post-Retrieval Single-Shell Tank 241-C-203 Risk Assessment*, summarizes the potential risk to human health from SST C-203 residual waste. This section identifies and discusses constituents of potential concern (COPC) in the waste, describes the effects of retrieval and closure on long-term risk, presents expected cumulative health effects of source terms, relates calculated risk to residual waste volume, and summarizes overall conclusions of the risk assessment.
- **Section 9,** *Additional Retrieval Technologies*, identifies other technologies considered for retrieving waste from SST C-203. The section describes available and future technologies and alternative retrieval scenarios, evaluates alternative methods, and assesses the utility of deploying additional technologies in SST C-203.
- **Section 10,** *Recommendations for Further Actions*, discusses recommendations for future actions associated with SST C-203 and opportunities to refine future retrieval operations at other tanks based on lessons learned.
- **Section 11,** *References*, contains references for material cited in the report.

Table 1-2. Crosswalk of HFFACO Appendix I, Section 2.1.7, Requirements and Corresponding Retrieval Data Report Sections.

Section 2.1.7 Requirements	RDR Section
Residual tank waste volume measurement, including associated calculations	6.0
Residual tank waste characterization data and results	7.0
Retrieval technology performance documentation	3.0, 5.0
An updated post-retrieval risk assessment	8.0
Discussion of feasibility and viability of other available retrieval technologies, the feasibility of developing additional retrieval technologies, associated detailed cost estimates, and amount of additional waste that could be removed	9.0
Opportunities and actions being taken to refine or develop tank waste retrieval technologies based on lessons learned	3.0, 10.0
LDMM monitoring and performance results	4.0
DOE's recommendations for further action and proposed schedules	10.0

2.0 RETRIEVAL SYSTEM DESCRIPTION

2.1 BASIS

The SST C-203 retrieval system was designed and constructed in accordance with RPP-16525, Rev. 6, *C-200-Series Tanks Retrieval Functions and Requirements*. The functions and requirements document is the predecessor to the tank waste retrieval work plan (TWRWP) now prescribed in Appendix I to the HFFACO. The system was operated in accordance with RPP-16945, Rev. 5, *Process Control Plan for the 241-C-200 Series Waste Retrieval System*.

2.2 OVERVIEW

SST C-203 was retrieved using a VRS that consisted of an articulating mast system (AMS) with a vacuum head, a vacuum pump, a slurry vessel, and a number of slurry transfer pumps. Auxiliary components included a ventilation system, control trailers, and associated piping and utilities.

The AMS was remotely manipulated to retrieve waste from SST C-203. Vacuum pumps were used to create a vacuum to draw the waste up through the AMS depositing the waste in the slurry vessel while routing air through the vacuum skid back to the tank being retrieved. The deposited waste in the slurry vessel was handled as a batch. Each batch was further diluted with water as needed and pumped though an aboveground hose-in-hose transfer line (HIHTL) to DST AN-106.

2.3 RETRIEVAL SYSTEM EQUIPMENT

The VRS used the available access ports and risers on SST C-203 to install the AMS and various other supporting equipment and instruments. The AMS was connected above ground to a vessel/pump skid and a vacuum pump skid. A control trailer was deployed to monitor and control the waste retrieval activities and operation of the AMS. Additionally, active ventilation was connected to the tanks using a portable exhauster. The function and operation of the various VRS components and skids are discussed in Sections 2.3.1 through 2.3.5. Refer to Figure 2-1 for a schematic of the VRS.

2.3.1 Articulating Mast System

The AMS consists of a hydraulically powered articulating arm with a vacuum head that could be rotated, extended, and retracted as necessary to reach all sections of the tank floor. Refer to Figure 2-2 for a graphic depiction of the AMS. A photograph of the vacuum head is provided in Figure 2-3. A series of five scarifying, high-pressure, low-volume water jets, located on the outside of the vacuum head, were used to dislodge waste as needed, and air and water were added within the mast to assist in pneumatically transporting the waste up the 40-ft mast and through piping to the slurry vessel.

Figure 2-1. Vacuum Retrieval System Schematic.

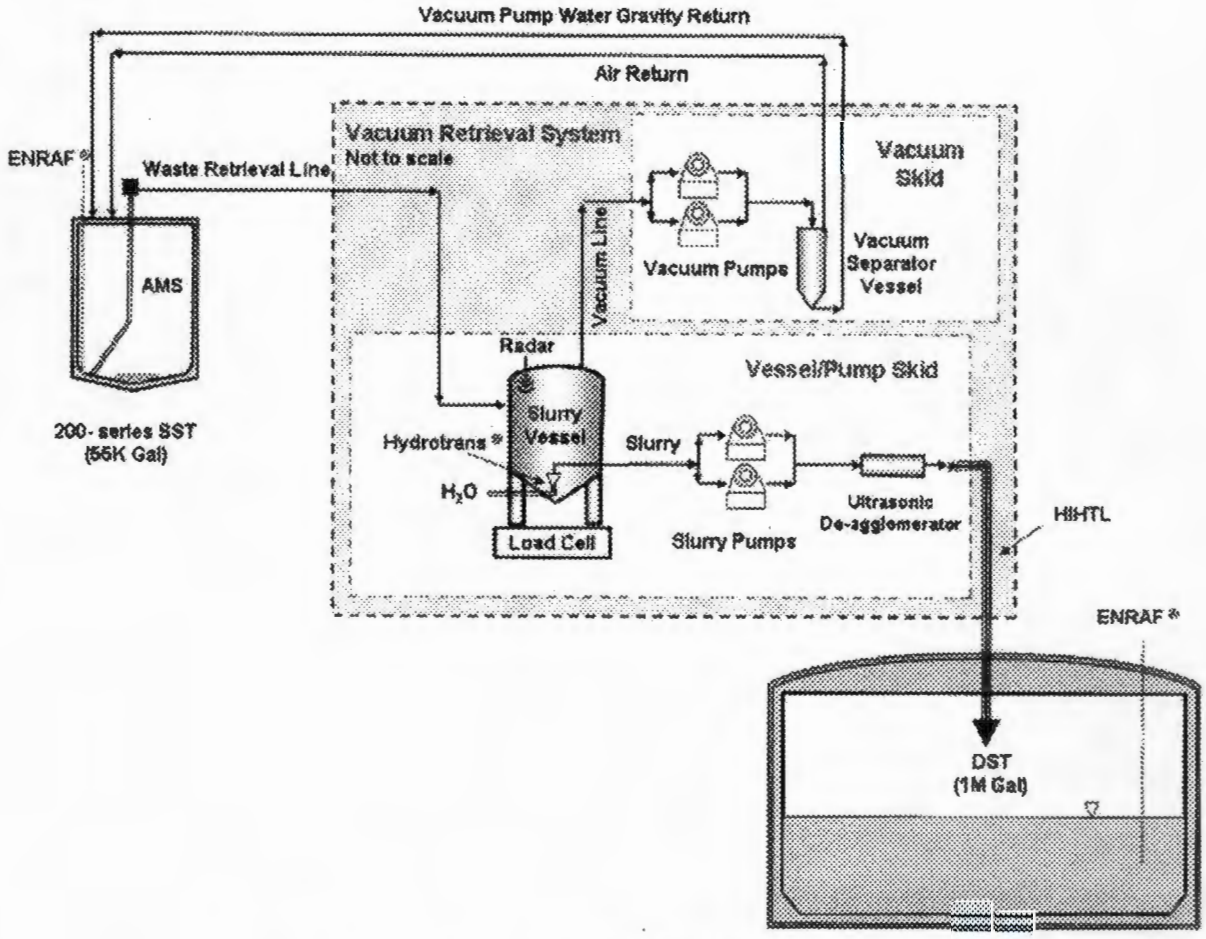

Figure 2-2. Articulating Mast System Depiction in Single-Shell Tank.

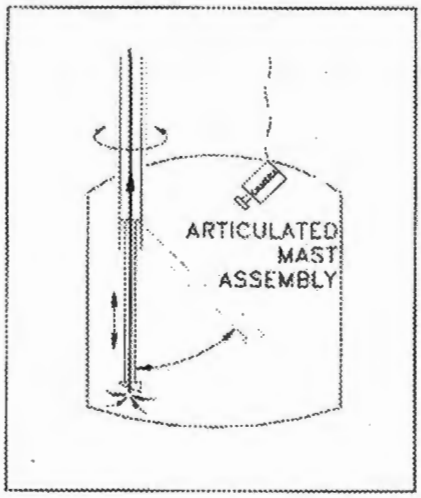

Figure 2-3. Vacuum Head on Articulating Mast System.

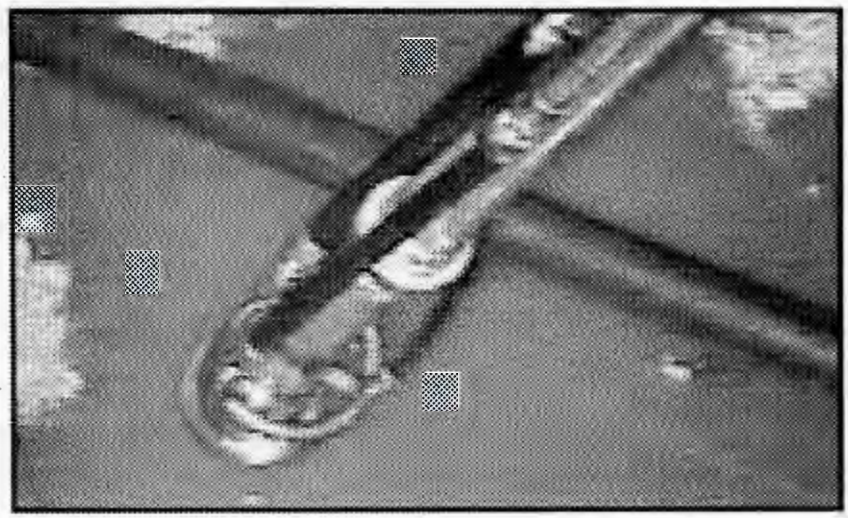

2.3.2 Vessel/Pump Skid

The purpose of the skid was to receive waste from SST C-203, collect the waste in a slurry vessel, exhaust the air to the vacuum skid, and pump the slurry to DST AN-106. The waste entered the skid and was directed to the slurry vessel, which had a working volume of 250 gal. The slurry vessel was positioned on load cells that were used to weigh the amount of waste received. The waste was separated from the entrained gases and when the slurry vessel was filled, waste retrieval activities were stopped.

A vacuum break valve was opened to the slurry vessel to prepare for slurry transfer to DST AN-106 through the HIHTL. The vacuum break line was connected to SST C-203. A Hydrotrans®[2] unit, in conjunction with the slurry pump, was used to mobilize the slurry vessel contents with water and empty the slurry vessel. To prevent plugging, additional water could be added upstream of the slurry pump to maintain sufficient velocity through the HIHTL.

An ultrasonic deagglomerator unit, located downstream from the transfer pump, was used to reduce the waste form into a homogeneous slurry. This enhanced the ability to transport waste at higher densities while minimizing water dilution volume requirements. The operator at the control interface, located inside the control trailer, manipulated dilution control based on feedback from a Coriolis density meter and a pressure meter located at the output of the ultrasonic de-agglomeration unit.

2.3.3 Vacuum Skid

Two liquid-ring vacuum pumps could be operated simultaneously as needed to achieve the desired suction at the vacuum head on the AMS. The entrained gas flow came from the vessel/pump skid. Gases from the vacuum pump combined with the pump water and tangentially flowed into a water separator, effectively separating the gases in a cyclone action. The gases were then returned to SST C-203.

[2] Hydrotrans® is a registered trademark of Dynamic Processing Solutions Ltd., Portishead, Bristol, England.

The water in the separator was used to supply the liquid-ring vacuum pump(s). Water flowed to the pump by gravity and by the vacuum that the vacuum pump created. The water also flowed through a heat exchanger that removed the heat generated by the vacuum pump and kept the water cool. High- and low-level switches in the tank maintained the water level in the water separator. Make-up water was supplied by the utility skid, and excess water was returned to SST C-203.

2.3.4 Control Trailer

Retrieval operations were controlled and monitored remotely from a trailer located more than 100 ft northeast of SST C-203. A closed-circuit television system (CCTV) was used to allow the AMS to be controlled and positioned. The controls and instruments for the vacuum skid, vessel/pump skid, and CCTV and AMS control were located on one console, and video displays monitoring the pump and vessel skids were on another console.

2.3.5 Hose-in-Hose Transfer Line

The waste was transferred from the vessel/pump skid to DST AN-106 through the HIHTL. The transfer system consisted of two hoses, one within the other. The hoses were lined with ethylene propylene diene monomer rubber. The primary hose was a nominal 2-in.-diameter hose that was encased in a nominal 4-in. hose. The HIHTL was insulated and had freeze protection.

The HIHTL was initially flushed with 1.5 line volumes (240 gal) of water after each slurry batch transfer to prevent solids from settling and plugging the lines. The frequency of flushing was decreased to every third batch in November 2004 because the waste was already sufficiently diluted to prevent plugging. Valve and pump configurations in the vessel/pump skid prevented the fluids from draining back to SST C-203.

2.4 RETRIEVAL SYSTEM INSTRUMENTATION

Various instruments were used to measure system performance, retrieval progress, and leak detection monitoring. These instruments included a liquid level gauge (Enraf), flowmeters, load cells, and CCTV cameras.

Liquid levels were measured in the SST and DST using an Enraf-Nonius Series 854 servo tank gauge. The gauge functioned like a bob on a string, sensing when the liquid level changes through buoyancy. This instrumentation has a high degree of resolution and repeatability and is well suited for the volumetric method in tanks with a measurable air-liquid interface, and is used throughout tank farms.

The instrument's accuracy for the SST was affected by the liquid level in the tank. When the liquid level dropped below the height of residual solids (typically the case), the instrument did not accurately reflect the volume of waste remaining. In addition, the Enraf was located near the tank wall, which prevented it from measuring lower than about 11.5 in. above the lowest point of the tank. Therefore, measurement of the liquid level change in the DST receiver tank was a more accurate measure of waste retrieved.

Water use was measured at various points in the retrieval process. The flowmeter locations are provided in Section 3.1. The slurry vessel was mounted on load cells that measure the weight of the vessel and its contents. The capacity of the slurry vessel was also measured using a radar liquid-level instrument.

The CCTV was used during the retrieval campaign to monitor retrieval activities and, in conjunction with water use estimates, generate rough estimates of the remaining waste. When retrieval was completed, a video was used to generate three-dimensional (3-D) images of the contents remaining in the tank. The residual waste volume was calculated using computer aided as-built drawings of the tank and the final configuration of the waste.

2.5 ENVIRONMENTAL CONTROLS

AIR 03-704, *Approval of Notice of Construction for 241-C-200 Series Tanks Retrieval*, and RPP-16525 impose a variety of environmental controls. These are summarized in Sections 2.5.1 through 2.5.5.

2.5.1 Exhauster Operation

A portable exhauster was operated continuously while the AMS was in use to abate fog generation that impaired CCTV visibility. Controls were established to cease retrieval operations if the exhauster was not functioning. Also, retrieval process operators depended on the CCTV to safely and efficiently position the AMS suction head inside the tank to retrieve waste. The exhauster is also used for control of radioactive/nonradioactive air emissions and prevention of flammable gas buildup within the tank.

2.5.2 Vacuum Routing

Vacuum exhaust drawn from the slurry vessel was routed back to SST C-203. SST C-203 was maintained under a negative pressure during retrieval activities.

2.5.3 Leak Detection, Monitoring, and Mitigation

The operating strategy incorporated the philosophy of minimizing liquid available for leakage from the onset of retrieval. This was accomplished by the following:

a. Limiting the power-pack hydraulic pressure of the water feed provided to the AMS to the minimum practical for effective retrieval operations.

b. Providing care not to penetrate the tank bottom during AMS installation.

c. Monitoring liquid levels inside the tank while retrieving using a video camera.

d. Minimizing the presence of liquid pools to the extent practical.

The leak detection and monitoring techniques used are discussed in Section 4.2.

2.5.4 Walkdown of Aboveground Portions of the Tank System

The aboveground portions of the tank system were visually inspected daily to identify any abnormalities in the equipment or processes that could lead to releases to the environment.

2.5.5 Secondary Containment

Leakage from the primary HIHTL (inner hose) would be contained by the secondary confinement system (outer hose) and could be detected by leak detectors, material balance data, or radiological surveys. The secondary confinement system was designed to drain any fluid released from the primary hose to a common point for collection, detection, and removal.

The drains located in the vessel/pump skid, vacuum skid, HVAC, and the slurry vessel were routed to SST C-203. The HIHTL, vessel/pump skid drain, and vacuum skid drain were integrated into the automatic leak detection system to shut down the system in the event of a leak.

2.6 RETRIEVAL CAMPAIGN CHRONOLOGY

Table 2-1 provides a chronological summary of the retrieval operation. Retrieval of the waste (and water used for decontamination or flushing) was performed in batches. A batch refers to the filling and emptying of the slurry vessel, which has a capacity of 250 gal. However, the volume of each batch fluctuated depending on the operations being performed.

Table 2-1. Chronology of SST C-203 Retrieval Operation. (2 sheets)

Date(s)	Description
June 30 and July 2, 2004	Operation of the SST C-203 retrieval system began with two water batches (direct addition of water to the slurry vessel). The water batches were added for leak testing and for additional operator familiarization with the equipment.
July 2–22, 2004	Retrieval operations began and 40 batches were retrieved; two water batches were added.
July 23-27, 2004	Problems arose with the slurry vessel high-level sensor. During this period, two water batches were retrieved. Three batches of water were used to wash the sensor.
July 28-August 20, 2004	Retrieval operations suspended while preparing for and performing testing of varying piping configurations at the Cold Test Facility (CTF). To improve retrieval efficiencies and rates, a recommendation was made to reduce the length of line between the mast and slurry vessel to about 90 ft and remove S-bend and P-traps in the line.
August 21-October 20, 2004	Retrieval operations suspended while general tank farms safety concerns were being addressed.
October 20, 2004	Four water batches were used for slurry vessel high-level sensor maintenance.
October 21, 2004	Replacement of the slurry vessel high-level sensor.

Table 2-1. Chronology of SST C-203 Retrieval Operation. (2 sheets)

Date(s)	Description
November 14-17, 2004	Eleven batches were retrieved. Operations were suspended for reconfiguration of the line between the AMS and slurry vessel to reduce line length and remove S-bend and P-traps.
January 2-February 1, 2005	Retrieval resumed after reconfiguration of the line. A water batch was run on January 2 to test the system; additional water batches were run on January 23 and 27. The number of batches retrieved was 79. Based on videotape, it was estimated that 900 gal of waste remained in SST C-203 as of January 9. Testing was performed on January 22 to determine the effects of varying process parameters.
February 1, 2005	Vacuum pump 1 failed (motor and vacuum system decoupled), and a small leak was observed in the seal on the vacuum water separator vessel. The leak generated an estimated 2 tablespoons of liquid. Retrieval operations were suspended for repairs.
March 15-23, 2005	Retrieval operations resumed following repairs, and 56 waste batches were retrieved; one water batch was used to clear a plugged drain line and four batches of slurry were transferred as a result of the equipment flush water that is part of the shutdown procedure.
March 24, 2005	Retrieval operations were concluded on March 24. Remaining standing liquid was vacuumed to the limits of the AMS.

3.0 RETRIEVAL SYSTEM PERFORMANCE

The goal of the SST C-203 tank retrieval campaign was "...retrieval of as much tank waste as technically possible with tank waste residues not to exceed...30 ft^3 in each of the 200-series tanks, or the limit of waste retrieval technology capability, whichever is less" (HFFACO Milestone M-45-00). This section discusses the SST C-203 retrieval system performance in terms of residual waste, retrieval duration, and water use. In addition, this section compares the achieved retrieval results against predicted performance and evaluates the impact of lessons learned on future vacuum retrievals. Retrieval and performance data are included in this section.

The retrieval system was operated 34 days over a 265-calendar-day period, recovering 2,501 gal of waste in 188 batches. The waste was retrieved at varying rates (4 to 133 gal of C-203 waste per batch) over time. The retrieval system performed to the limit of the technology selected, which is described in Section 5.0.

3.1 RETRIEVAL PROCESS DESCRIPTION

The SST C-203 retrieval strategy consisted of low-volume water retrieval using a VRS to remove waste from the tank while minimizing water additions and liquid pooling in the tank. Vacuum pumps were used to mobilize and recover waste via the AMS and deposit the waste in a slurry vessel located above grade. Mobilized solids were diluted in the slurry vessel with raw water and then pumped to the receiver DST AN-106 through an HIHTL. The entire process was monitored to facilitate waste retrieval and minimize free liquid in the tank. The composite material received at DST AN-106 consisted of mobilized tank waste and water added to assist waste retrieval and transport. In-tank and ex-tank water additions were added to the waste at various stages of the process. In-tank water additions resulted primarily from waste mobilization activities and included (1) scarifying water to break up and move waste, (2) flush water to move waste from the knuckle on the tank floor, (3) drain water from the vacuum separator vessel, (4) drain water from the slurry vessel, and (5) drain water from the exhauster. Ex-tank water was primarily used for transport of waste solids as (1) AMS lubrication water, (2) Hydrotrans® water for mobilizing waste solids in the slurry vessel for transfer, and (3) dilution water to reduce slurry density and flush transfer lines to DST AN-106. The majority of AMS lubrication water remained in the mast, but some could have returned to the tank when the vacuum was stopped or there was insufficient vacuum. Figure 3-1 represents a diagram of the retrieval process. The flowmeters shown in Figure 3-1 are described in Table 3-1.

The two primary sources of water were low pressure (FM-4) and high pressure (FM-2). The sum of the values from these 2 meters accounts for the total water used. High-pressure water was used for one purpose: in-tank scarifying. Low-pressure water was used for multiple purposes as both in-tank and ex-tank water.

Figure 3-1. C-200 Series Instrumentation Diagram. (Source: p. 27 of RPP-16525, Rev. 6, *C-200-Series Tanks Retrieval Functions and Requirements*)

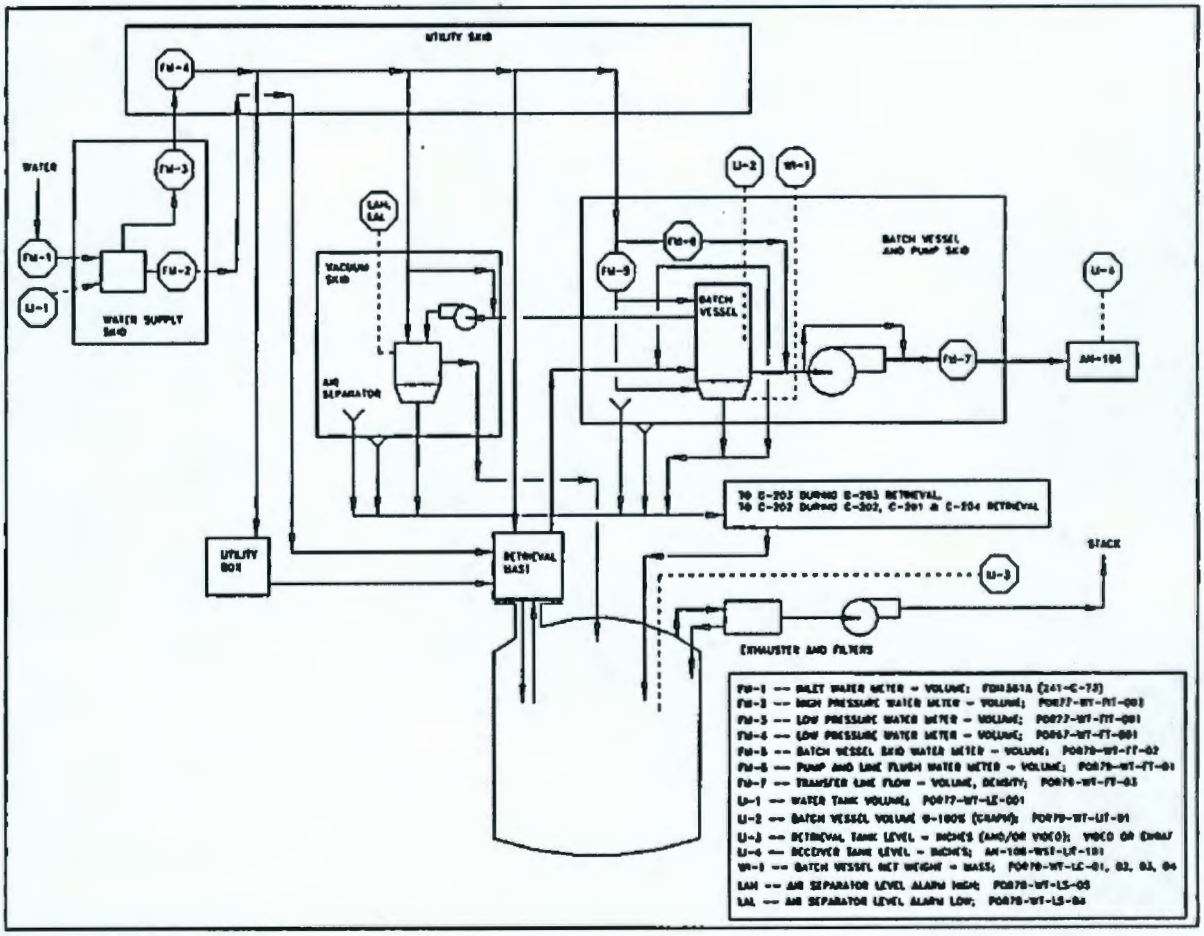

Table 3-1. C-203 Retrieval Process Flowmeter Summary.

Identifier[a]	Tag[b]	Name	Purpose
FM-1	241-C-73	Inlet water meter	Measures raw water delivered to Air and Water Service Building 241-C-73.
FM-2	POR77-WT-FIT-002	High-pressure water meter	Measures high-pressure water delivered to the scarifier on the AMS head.
FM-3	POR77-WT-FIT-001	Low-pressure water meter	Measures the low-pressure water delivered to the utility skid.
FM-4	POR67-WT-FT-001	Low-pressure water meter	Measures the low-pressure water received at the utility skid. Meters the same supply line as FM-3.
FM-5	POR79-WT-FT-02	Batch vessel skid water meter	Measures the amount of water delivered to the AMS for flushing solids from the AMS screen and to mobilize waste (Hydrotrans®) in the slurry vessel for transfer to DST.
FM-6	POR79-WT-FT-01	Pump and line flush water meter	Measures dilution water used to keep solids suspended during transport, to prime and flush transfer pumps, and to maintain waste density within prescribed limits.
FM-7	POR79-WT-FT-03	Transfer line flow	Measures the volume of diluted waste delivered to DST AN-106 and measures the relative density.

[a] Designation given in Figure 3-1.
[b] Equipment tags noted on the piping and instrumentation diagrams. Abbreviations shown in bold.

3.2 RETRIEVAL TECHNOLOGY PERFORMANCE

The performance of the retrieval system was monitored throughout the campaign using various indicators. Water meters were used to determine trends in water use. Material balance was used during retrieval operations to (1) estimate the waste removed from the tank per operating day, (2) determine retrieval efficiency, and (3) determine trends in retrieval performance. Specific gravity of waste transferred to DST AN-106 was also used to monitor retrieval efficiency.

The material balance was calculated as the difference between the measured volume that was added to the system (water) and the measured volume removed from the system (waste and water). There is uncertainty related to these volume measurements as well as to the initial waste volume. A detailed discussion of uncertainties is found in RPP-CALC-26330, *Leak Detection Monitoring Calculation for Single-Shell Tank 241-C-203.*

The material balance calculation was performed every operating day to determine the volume of waste retrieved from SST C-203. An operating day is defined as a day in which retrieval activities were performed, regardless of number of hours operated or waste transfers. The measured volume added to the system was the sum of the daily low-pressure water (FM-4) and daily high-pressure water (FM-2). The measured volume removed from the system was determined by the volume increase in the DST. The material that leaves the SST system should be equivalent to the volume that arrives in the DST system.

The Enraf measurement in the DST provided daily values for liquid level. The difference between the measurement at the end of an operating day and the previous day's measurement was used to determine the volume of waste and water that had entered the tank on that operating day. The DSTs are cylindrical and measure 75 ft. in diameter, which geometrically converts to

2,750 gal of waste per inch. Each day the change in DST level was converted to gallons. The change in DST level includes the water that was added to the system and the waste that was removed from SST C-203. Subtracting the water added to the system from the DST level change provides the waste volume that was removed from SST C-203. It is calculated as follows:

DST change (in) x 2750 (gal/in.) – Total water added (gal) = C-203 Waste Retrieved (gal)

The waste volume retrieved from SST C-203 on each operating day was subtracted from the assumed starting waste volume in SST C-203 to produce Figure 3-2, which illustrates the SST C-203 retrieval system performance trend in terms of volume of waste remaining per operating day based on the assumed starting volume. The trend line in Figure 3-2 dips below the zero residual waste volume, which is not possible. This is the result of uncertainties in the initial best-basis inventory (BBI) waste volume estimate and in material balance calculations using data from process flowmeters. Therefore, the material balance results are not indicative of the actual waste volume in the tank on each day, but they are indicative of the overall retrieval efficiency and trends in performance.

Figure 3-2. Residual Tank Waste Volume Trend During Retrieval Campaign per Operating Day.[a]

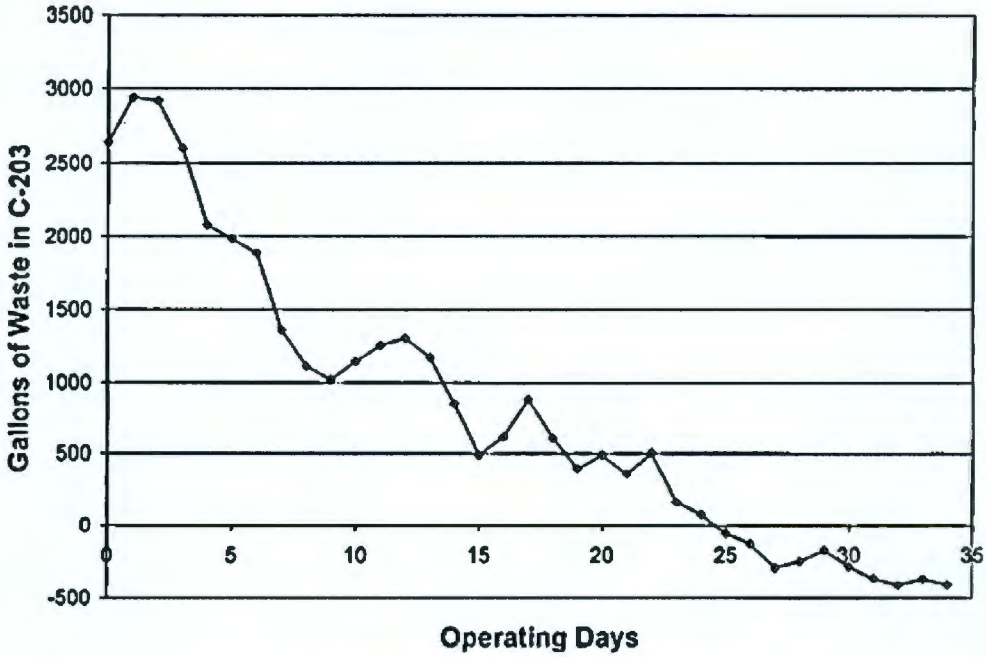

[a] Sporadic increasing values and total negative volume are anomalies of daily material balance calculations resulting from measurement error inherent in the flowmeters, initial waste volume estimate, and system holdups.

The waste remaining in C-203 as calculated through video camera/computer-aided design modeling system (CCMS) and topographical mapping measurements is the method described in RPP-23403, *Single-Shell Tank Component Closure Data Quality Objectives* (DQO) for

determining the final waste volume. The final volume measurement indicated that about 139 gal of waste remained in SST C-203. Further discussion of the residual waste volume measurement is presented in Section 6.0. Detailed data for each operating day for SST C-203 is found in Table 3-2, for DST AN-106 is found in Table 3-3, batch by batch for specific gravity is found in Table 3-4, and for water use is found in Table 3-5.

Pre-retrieval goals for the system performance were provided in various planning documents (Table 3-6) and these were used to evaluate the actual retrieval system performance following the campaign.

3.3 PREDICTED VERSUS ACTUAL TECHNOLOGY PERFORMANCE

The retrieval data was used to evaluate the system's performance against the pre-retrieval goals as shown in Table 3-7. The system exceeded expectations for the residual waste volume estimate. The post-retrieval calculations indicated that the performance indicators for waste volume retrieved, retrieval time, retrieval rate, and total water use fell short of their targets. The performance curves presented in this section indicate that the system performed to expectations until the end of the campaign as less waste was available for retrieval.

3.3.1 Residual Waste Volume

The VRS retrieved to its limits and less than 30 ft^3 of residual tank waste. The performance of the system to its limits and the final residual volume are discussed in Sections 5.0 and 6.0, respectively. The waste retrieval technology was effective enough that a physical change between the initial and final waste was observed. Through retrieval, waste was removed, leaving behind a gravelly, solid waste in SST C-203.

3.3.2 Water Use

The retrieval campaign used an estimated 62,661 gal of water. Water use was significantly reduced when transfer line flushes were decreased from once per batch to every third batch beginning in November 2004 (operating day 12). The reduction was made after trends in operating data showed that the waste was sufficiently diluted prior to entering the DST to minimize the risk of line plugging. Water use increased, however, as the waste behavior became more gravel-like and less mud-like. The retrieval was more effective in removing the mobile, mud-like waste than the solid, gravel-like waste.

Removing the gravel-like waste required greater amounts of both in-tank and ex-tank water. In-tank water use totaled about 15,000 gal and ex-tank water use was nearly 48,000 gal. Figure 3-3 presents water use on each operating day of the SST C-203 retrieval campaign separated into in-tank and ex-tank water. In-tank water use increased noticeably toward the end of the campaign (Figure 3-4). Overall far more ex-tank water was used than in-tank water as indicated in Figure 3-5, reducing the risk of leak loss associated with the volume of water used. Water use and disposition results are explained further in Table 3-8.

Table 3-2. SST C-203 Data.

1	2	3		4		5	
Operating Day[a]	Date	SST Residual Volume[b]		Volume of Waste Retrieved from SST as Calculated from Material Balance[c]		Cumulative Volume of Waste Retrieved from SST per Material Balance	
		(gal)	(ft^3)[d]	(gal)	(ft^3)	(gal)	(ft^3)
0	6/28/04	2,640	352.9	0	0	0	0
1	6/30/04	2,938	392.8	-298	-39.8	-298	-39.8
2	7/2/04	2,916	389.8	22	3.0	-276	-36.8
3	7/7/04	2,601	347.7	315	42.1	39	5.3
4	7/11/04	2,079	278.0	521	69.7	561	75.0
5	7/12/04	1,984	265.2	96	12.8	656	87.7
6	7/13/04	1,860	248.7	123	16.5	780	104.2
7	7/20/04	1,361	182.0	500	66.8	1,279	171.0
8	7/22/04	1,143	152.8	218	29.2	1,497	200.2
9	7/23/04	1,052	140.7	91	12.1	1,588	212.3
10	7/27/04	1,144	153.0	-92	-12.3	1,496	200.0
11	10/20/04	1,256	168.0	-112	-15.0	1,384	185.0
12	11/12/04	1,305	174.5	-49	-6.6	1,335	178.5
13	11/14/04	1,173	156.8	133	17.7	1,467	196.2
14	11/16/04	856	114.5	317	42.3	1,784	238.5
15	11/17/04	492	65.8	364	48.6	2,148	287.1
16	12/28/04	615	82.2	-122	-16.3	2,025	270.8
17	12/29/04	888	118.7	-273	-36.5	1,752	234.2
18	1/2/05	608	81.3	280	37.4	2,032	271.7
19	1/3/05	402	53.8	206	27.5	2,238	299.2
20	1/4/05	495	66.1	-92	-12.3	2,145	286.8
21	1/6/05	366	48.9	129	17.3	2,274	304.1
22	1/9/05	509	68.0	-143	-19.2	2,131	284.9
23	1/11/05	171	22.8	338	45.2	2,469	330.1
24	1/23/05	82	11.0	88	11.8	2,558	341.9
25	1/25/05	-52	-7.0	135	18.0	2,692	360.0
26	1/27/05	-123	-16.5	71	9.5	2,763	369.4
27	1/30/05	-283	-37.9	160	21.4	2,923	390.8
28	2/1/05	-242	-32.4	-41	-5.5	2,882	385.3
29	3/15/05	-164	-21.9	-78	-10.5	2,804	374.9
30	3/17/05	-276	-36.9	112	15.0	2,916	389.9
31	3/20/05	-352	-47.1	76	10.2	2,992	400.1
32	3/21/05	-399	-53.4	47	6.3	3,039	406.3
33	3/22/05	-355	-47.4	-45	-6.0	2,995	400.4
34	3/24/05	-396	-52.9	41	5.5	3,036	405.9

[a] An operating day is defined as a day when activities occurred (maintenance, water additions, transfers, etc.), but there may or may not have been actual waste retrieval (e.g., December 28, 2004, water addition, but no transfer occurred).
[b] Based on the daily starting SST C-203 residual volume minus the volume of waste retrieved from SST C-203 (column 4).
[c] Volume based on total volume of diluted waste transferred to DST AN-106 minus the volume of water added to the system (same as column 4 in Table 3-3). Sporadic negative values are anomalies of daily material balance calculations resulting from measurement error inherent in the flow meters and system holdups.
[d] Conversion to cubic feet is 1 gal = 0.1337 ft^3.

Table 3-3. DST AN-106 Data.

1	2	3	4		5		6	7	
Operating Day[a]	Date	DST Enraf[b]	Volume of Waste Received[c]		Volume of Diluted Waste Received at DST[d]		Space per Gallon of Waste[e]	Remaining Allocated Space for Retrieval[f]	
		(in)	(gal)	(ft^3)[g]	(gal)	(ft^3)		(gal)	(ft^3)
1	6/30/04	315.09	-298	-39.8	0	0.0	NA	107,398	14,359
2	7/2/04	315.33	22	3.0	660	88.2	29.7	106,738	14,271
3	7/7/04	316.26	315	42.1	2,558	341.9	8.1	104,181	13,929
4	7/11/04	317.96	521	69.7	4,675	625.0	9.0	99,506	13,304
5	7/12/04	318.29	96	12.8	908	121.3	9.5	98,598	13,183
6	7/13/04	318.97	123	16.5	1,870	250.0	15.2	96,728	12,933
7	7/20/04	320.89	500	66.8	5,280	705.9	10.6	91,448	12,227
8	7/22/04	322.1	218	29.2	3,328	444.9	15.3	88,120	11,782
9	7/23/04	322.45	91	12.1	962	128.7	10.6	87,158	11,653
10	7/27/04	322.56	-92	-12.3	303	40.4	-3.3	86,855	11,613
11	10/20/04	322.63	-112	-15.0	192	25.7	-1.7	86,663	11,587
12	11/12/04	322.62	-49	-6.6	-27	-3.7	NA	86,690	11,591
13	11/14/04	322.71	133	17.7	247	33.1	1.9	86,443	11,557
14	11/16/04	323.1	317	42.3	1,073	143.4	3.4	85,370	11,414
15	11/17/04	323.89	364	48.6	2,172	290.5	6.0	83,198	11,124
16	12/28/04	323.89	-122	-16.3	0	0.0	NA	83,198	11,124
17	12/29/04	323.89	-273	-36.5	0	0.0	NA	83,198	11,124
18	1/2/05	324.76	280	37.4	2,393	319.9	8.5	80,805	10,804
19	1/3/05	325.06	206	27.5	825	110.3	4.0	79,980	10,693
20	1/4/05	325.38	-92	-12.3	880	117.7	-9.5	79,100	10,576
21	1/6/05	326.3	129	17.3	2,530	338.3	19.6	76,570	10,237
22	1/9/05	326.68	-143	-19.2	1,045	139.7	-7.3	75,525	10,098
23	1/11/05	327.7	338	45.2	2,805	375.0	8.3	72,720	9,723
24	1/23/05	329.12	88	11.8	3,905	522.1	44.2	68,815	9,201
25	1/25/05	330.63	135	18.0	4,152	555.2	30.8	64,663	8,645
26	1/27/05	331.22	71	9.5	1,623	216.9	22.9	63,040	8,429
27	1/30/05	332.54	160	21.4	3,630	485.3	22.7	59,410	7,943
28	2/1/05	332.77	-41	-5.5	632	84.6	-15.4	58,778	7,859
29	3/15/05	332.92	-78	-10.5	413	55.2	-5.3	58,365	7,803
30	3/17/05	333.72	112	15.0	2,200	294.1	19.6	56,165	7,509
31	3/20/05	335.16	76	10.2	3,960	529.5	52.1	52,205	6,980
32	3/21/05	335.79	47	6.3	1,732	231.6	36.8	50,473	6,748
33	3/22/05	337.41	-45	-6.0	4,455	595.6	-99.6	46,018	6,153
34	3/24/05	338.86	41	5.5	3,987	533.1	96.9	42,030	5,619

[a] An operating day is defined as a day where activities occurred (maintenance, flushes, water additions, transfers, etc.), but there may or may not have been actual waste retrieval (e.g., December 28, 2004, water addition was made, but no transfer occurred).
[b] Enraf measurement of liquid level in DST AN-106 (LI-4 in Figure 3-1), accurate to 0.01 in.
[c] Volume is difference between the daily diluted waste received at DST AN-106 (column 4) and the daily water added to the system (the sum of column 3[FM2] and column 5[FM1-4] in Table 3-4).
[d] Total daily volume of water and waste received at DST AN-106 based on surface level change.
[e] Gal of DST space consumed (column 5) per gal of C-203 waste received (column 4) at DST AN-106. NA indicates day that no transfer occurred.
[f] 100,000 gal of water from RPP-18702, *Waste Compatibility Assessment of 241-C-200 Series Tank Waste (SST-R-03-11) with Tank 241-AN-106 Waste* plus the volume of waste in each C-200 series tank was planned for the total retrieval of all C-200 series tanks.
[g] Conversion to cubic feet is 1 gal = 0.1337 ft^3.

Table 3-4. Water Use Data. (2 sheets)

1	2		3		4		5		6		7	
Day of Activity[a]	FM-1 Inlet Water Meter[b]		FM-2 Water Added for Scarifying		FM-3 Low Pressure Water Meter		FM-4 Raw Water Supply		FM-5 Hydrotrans Water		FM-6 Pump/Line Flush Water	
	(gal)	(ft^3)[c]	(gal)	(ft^3)	(gal)	(ft^3)	(gal)	(ft^3)	(gal)	(ft^3)	(gal)	(ft^3)
1	291	38.9	8	1.1	259	34.6	290	38.8	226	30.2	0	0.0
2	699	93.5	1	0.1	437	58.4	637	85.2	176	23.5	254	34.0
3	2,453	328	196	26.2	1620	216.6	2,047	273.7	246	32.9	1,404	187.7
4	--	--	600	80.2	3,223	430.9	3,554	475.2	379	50.7	2,707	361.9
5	4,357	582.6	45	6.0	650	86.9	767	102.5	86	11.5	517	69.1
6	2,655	354.9	180	24.1	1,410	188.5	1,567	209.5	167	22.3	1,020	136.4
7	58	7.7	536	71.7	3,647	487.6	4,245	567.6	342	45.7	3,029	405.0
8	6,975	932.5	208	27.8	2,415	322.9	2,901	387.9	620	82.9	1,554	207.8
9	2,029	271.3	45	6.0	702	93.9	826	110.4	189	25.3	504	67.4
10	393	52.6	0	0.0	381	50.9	395	52.8	364	48.7	0	0.0
11	280	37.4	9	1.2	222	29.7	295	39.4	292	39.0	0	0.0
12	--	--	3	0.4	0	0.0	18	2.4	0	0.0	0	0.0
13	--	--	0	0.0	76	10.2	115	15.4	36	4.8	64	8.6
14	--	--	78	10.4	557	74.5	678	90.6	124	16.6	444	59.4
15	3,052	408.1	414	55.4	1169	156.3	1395	186.5	354	47.3	849	113.5
16	--	--	36	4.8	770	102.9	86	11.5	85	11.4	0	0.0
17	--	--	0	0.0	269	36.0	273	36.5	249	33.3	0	0.0
18	--	--	373	49.9	1555	207.9	1739	232.5	717	95.9	843	112.7
19	--	--	161	21.5	372	49.7	458	61.2	111	14.8	256	34.2
20	--	--	484	64.7	379	50.7	488	65.2	100	13.4	259	34.6
21	--	--	148	19.8	1955	261.4	2253	301.2	923	123.4	901	120.5
22	--	--	64	8.6	991	132.5	1124	150.3	667	89.2	257	34.4
23	10,841	1449.4	227	30.3	1935	258.7	2240	299.5	824	110.2	1,028	137.4
24	--	--	296	39.6	3247	434.1	3521	470.8	1850	247.3	1,039	138.9
25	--	--	85	11.4	3534	472.5	3933	525.8	2085	278.8	1,231	164.6
26	--	--	36	4.8	1410	188.5	1516	202.7	844	112.8	510	68.2
27	--	--	179	23.9	3057	408.7	3291	440.0	1840	246.0	1,030	137.7
28	13,979	1869	15	2.0	645	86.2	658	88.0	279	37.3	335	44.8
29	--	--	20	2.7	718	96.0	801	107.1	330	44.1	254	34.0

Table 3-4. Water Use Data. (2 sheets)

1	2		3		4		5		6		7	
Day of Activity[a]	FM-1 Inlet Water Meter[b]		FM-2 Water Added for Scarifying		FM-3 Low Pressure Water Meter		FM-4 Raw Water Supply		FM-5 Hydrotrans Water		FM-6 Pump/Line Flush Water	
	(gal)	(ft^3)[c]	(gal)	(ft^3)	(gal)	(ft^3)	(gal)	(ft^3)	(gal)	(ft^3)	(gal)	(ft^3)
30	--	--	33	4.4	1883	251.8	2054	274.6	967	129.3	839	112.2
31	--	--	51	6.8	3,324	444.4	3,833	512.5	1,932	258.3	1,221	163.2
32	--	--	101	13.5	1,414	189.1	1,584	211.8	802	107.2	514	68.7
33	--	--	26	3.5	4,078	545.2	4,474	598.2	2,406	321.7	1,258	168.2
34	17,094	2,285.50	0	0.0	3,594	480.5	3,946	527.6	2,199	294.0	1,221	163.2
Total	**65,155**	**8,711.3**	**4,658**	**622.9**	**51,898**	**6,938.8**	**58,003**	**7,755.0**	**22,811**	**3,049.8**	**25,342**	**3,388.2**

[a] An operating day is defined as a day when activities occurred (maintenance, flushes, water additions, transfers, etc.), but there may or may not have been actual waste retrieval (e.g., December 28, 2004, water addition was made, but no transfer occurred).

[b] Derived from weekly meter readings.

[c] Conversion to cubic feet is 1 gal = 0.1337 ft^3.

-- No meter reading taken on this day. Cumulative value reflected in subsequent meter reading.

Table 3-5. C-203 Retrieval Batch Relative Densities. (2 sheets)

Batch[a]	Date	Relative Density[b]
1	7/2/04	1.023
2	7/7/04	1.013
3	7/7/04	1.101
4	7/7/04	0.980
5	7/7/04	1.034
6	7/7/04	1.057
7	7/11/04	1.092
8	7/11/04	1.095
9	7/11/04	0.987
10	7/11/04	0.965
11	7/11/04	1.075
12	7/11/04	1.096
13	7/11/04	1.094
14	7/11/04	1.077
15	7/11/04	1.093
16	7/11/04	1.074
17	7/12/04	1.072
18	7/12/04	1.032
19	7/13/04	1.073
20	7/13/04	1.033
21	7/13/04	1.067
22	7/13/04	1.042
23	7/20/04	1.042
24	7/20/04	1.081
25	7/20/04	1.063
26	7/20/04	1.044
27	7/20/04	1.027
28	7/20/04	1.032
29	7/20/04	1.074
30	7/20/04	1.065
31	7/20/04	1.083
32	7/20/04	1.045
33	7/20/04	1.040
34	7/22/04	1.050
35	7/22/04	1.039
36	7/22/04	0.981
37	7/22/04	1.007
38	7/22/04	1.030
39	7/22/04	1.015
40	7/22/04	1.039
41	7/23/05	1.040
42	7/23/05	1.030
43	11/14/04	1.012
44	11/16/04	1.043
45	11/16/04	1.045
46	11/16/04	1.049
47	11/17/04	--
48	11/17/04	--
49	11/17/04	--
50	11/17/04	--
51	11/17/04	1.069
52	11/17/04	1.054
53	11/17/04	1.015
54	1/2/05	1.013
55	1/2/05	1.069
56	1/2/05	1.076
57	1/2/05	1.057
58	1/2/05	1.019
59	1/2/05	1.012
60	1/2/05	1.039
61	1/3/05	1.038
62	1/3/05	1.071
63	1/3/05	1.043
64	1/4/05	1.073
65	1/4/05	1.081
66	1/4/05	1.078
67	1/6/05	1.034
68	1/6/05	1.028
69	1/6/05	1.021
70	1/6/05	1.064
71	1/6/05	1.018
72	1/6/05	0.986
73	1/6/05	1.010
74	1/6/05	1.033
75	1/9/05	1.016
76	1/9/05	1.022
77	1/9/05	1.012
78	1/9/05	1.018
79	1/9/05	1.001
80	1/11/05	1.018
81	1/11/05	1.012
82	1/11/05	1.010
83	1/11/05	1.052
84	1/11/05	1.045
85	1/11/05	1.023
86	1/11/05	1.023
87	1/23/05	1.018
88	1/23/05	1.024
89	1/23/05	1.020
90	1/23/05	1.009
91	1/23/05	1.010
92	1/23/05	0.955
93	1/23/05	1.016
94	1/23/05	0.993
95	1/23/05	0.987
96	1/23/05	1.010
97	1/23/05	1.008
98	1/23/05	1.016
99	1/23/05	1.006
100	1/25/05	1.012
101	1/25/05	1.010
102	1/25/05	1.013
103	1/25/05	1.014
104	1/25/05	1.020
105	1/25/05	1.029
106	1/25/05	1.031
107	1/25/05	1.028
108	1/25/05	0.991
109	1/25/05	1.009
110	1/25/05	1.020
111	1/25/05	1.012
112	1/25/05	1.007
113	1/25/05	1.013
114	1/27/05	1.018
115	1/27/05	1.018
116	1/27/05	1.028
117	1/27/05	1.029
118	1/27/05	1.022
119	1/30/05	1.013
120	1/30/05	1.054
121	1/30/05	1.023
122	1/30/05	1.030
123	1/30/05	0.991
124	1/30/05	1.015
125	1/30/05	1.011
126	1/30/05	1.009
127	1/30/05	1.005
128	1/30/05	1.007
129	1/30/05	1.022
130	1/30/05	1.014
131	2/1/50	1.013
132	2/1/05	1.013
133	3/15/05	1.011
134	3/15/05	1.022
135	3/15/05	1.011
136	3/17/05	1.007
137	3/17/05	1.013
138	3/17/05	1.016

Table 3-5. C-203 Retrieval Batch Relative Densities. (2 sheets)

Batch[a]	Date	Relative Density[b]	Batch	Date	Relative Density	Batch	Date	Relative Density
139	3/17/05	1.018	156	3/20/05	1.009	173	3/22/05	1.007
140	3/17/05	1.017	157	3/20/05	1.006	174	3/22/05	1.007
141	3/17/05	1.019	158	3/21/05	1.003	175	3/22/05	1.005
142	3/17/05	1.000	159	3/21/05	1.006	176	3/22/05	1.002
143	3/17/05	1.005	160	3/21/05	1.004	177	3/22/05	1.001
144	3/20/05	1.005	161	3/21/05	1.007	178	3/22/05	1.004
145	3/20/05	1.008	162	3/21/05	1.007	179	3/24/05	0.998
146	3/20/05	1.007	163	3/21/05	1.005	180	3/24/05	1.000
147	3/20/05	1.002	164	3/22/05	1.006	181	3/24/05	1.002
148	3/20/05	0.995	165	3/22/05	1.004	182	3/24/05	1.000
149	3/20/05	1.001	166	3/22/05	1.002	183	3/24/05	1.002
150	3/20/05	1.002	167	3/22/05	1.007	184	3/24/05	1.002
151	3/20/05	1.005	168	3/22/05	1.008	185	3/24/05	0.999
152	3/20/05	1.005	169	3/22/05	1.002	186	3/24/05	1.001
153	3/20/05	1.000	170	3/22/05	1.002	187	3/24/05	1.000
154	3/20/05	1.001	171	3/22/05	1.001	188	3/24/05	0.997
155	3/20/05	1.003	172	3/22/05	1.002			

[a] A batch consists of transferred waste pumped out of SST C-203. Each batch may not have been full before the transfer was initiated.

[b] Relative density (also referred to as SpG) measured by Coriolis device on transfer line from SST C-203 to DST AN-106. Data for the first four batches on November, 17, 2004, was unavailable.

Table 3-6. Pre-Retrieval System Performance Goals.

Measurement	Goal	Source
Remaining tank waste residues volume (ft^3)	<30	Section 3.2.1.3b, page 16 of RPP-14075, *Specification for the 241-C-200 Series Waste Retrieval System*, HFFACO Milestone M-45-00[a]
Volume of waste retrieved (gal)	2,600	Figure 10, page 47 of RPP-16525
Retrieval time (days)	7	Table 4, page 16 of RPP-14075
Retrieval rate (gal per batch)	40 to 60	Values from pages 13 and 47 of RPP-16945[b]
Total water use (gal)	14,000 to 42,000	Figure 10, page 47 of RPP-16525

[a] Defined by the HFFACO as "retrieval of as much waste as technically possible, with tank residues not to exceed...30 ft^3 in each of the 200-series tanks, or the limit of waste retrieval technology capability, whichever is less."

[b] This is calculated using a batch volume of 250 gal (RPP-16945, Section 2.3.1, page 13), an SST C-203 initial waste volume of 2,600 gal (RPP-16525, Figure 10, page 47) and a predicted 11,000 to 15,000 gal of waste and water slurried to the batch tank (RPP-16525, Figure 10, page 47):

2,600 gal waste/11,000 gal slurry x 250 gal slurry/batch = 59 gal waste/batch.
2,600 gal waste/15,000 gal slurry x 250 gal slurry/batch = 43 gal waste/batch.

Table 3-7. System Performance Summary.

Measurement	Goal[a]	Actual	Achieved Expectations?
Remaining tank waste residues volume (ft^3)	<30	18.5[b]	Yes
Volume of waste retrieved (gal)	~2,600	2,501[c]	No
Retrieval time (days)	7	34	No
Retrieval rate (gal of waste per batch)	40 to 60	13[d]	No
Total water use (gal)	14,000 to 42,000	62,661[e]	No

[a] See Table 3-6.
[b] Remaining tank waste residues volume reported in RPP-CALC-25672, *Calculation for the Post-Retrieval Waste Volume Determination for Single-Shell Tank 241-C-203*.
[c] This is calculated from the difference between the initial waste volume and the final waste volume:
2,640 gal waste – 139 gal waste = 2,501 gal waste
[d] Retrieval rate was calculated using the volume retrieved from SST C-203 and the total batches, as follows:
Volume of waste retrieved from SST (2,501 gal) ÷ Total number of batches (188) = 13
[e] Total water use = 58,003 gal (FM-4) + 4,658 gal (FM-2) = 62,661 gal.

Figure 3-3. Daily Comparison of In-tank and Ex-tank Water.

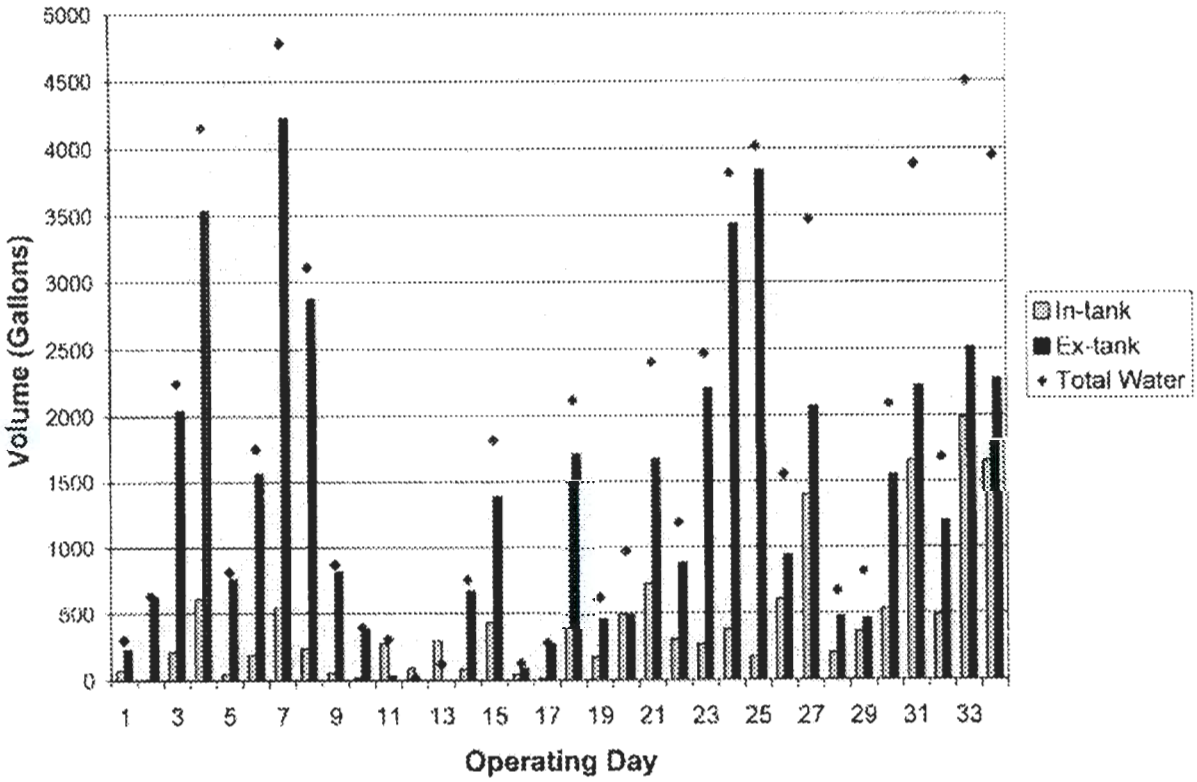

Figure 3-4. Daily In-tank Water Use.[a]

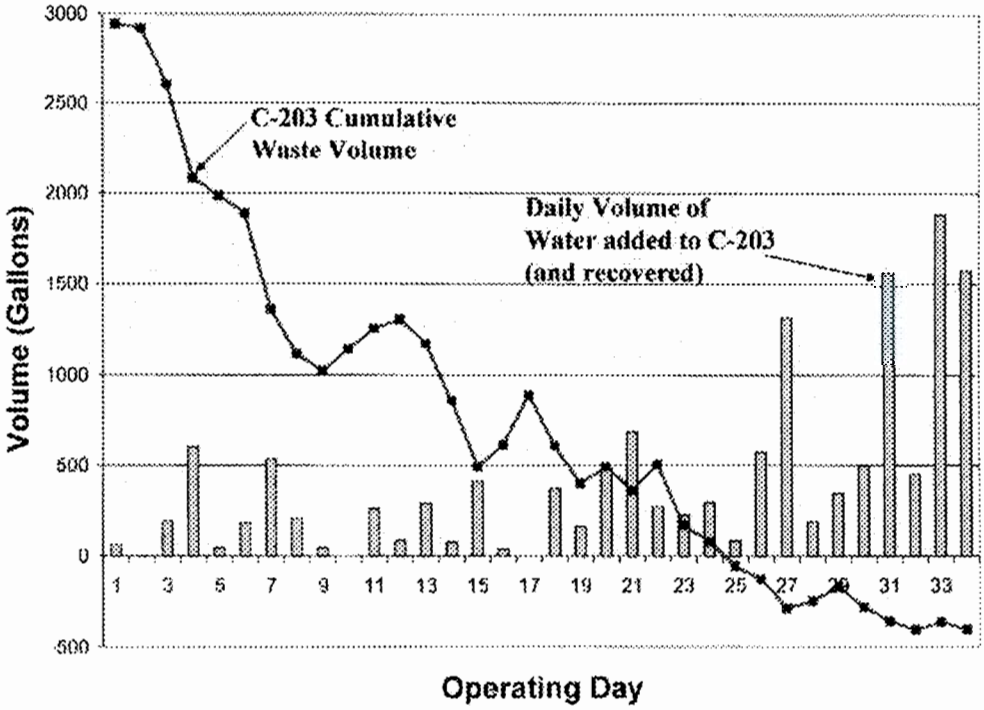

[a] Sporadic increasing C-203 volume and total negative volume are anomalies of daily material balance calculations resulting from measurement error inherent in the flowmeters and system holdups.

Figure 3-5. Overall Proportion of In-tank and Ex-tank Water.

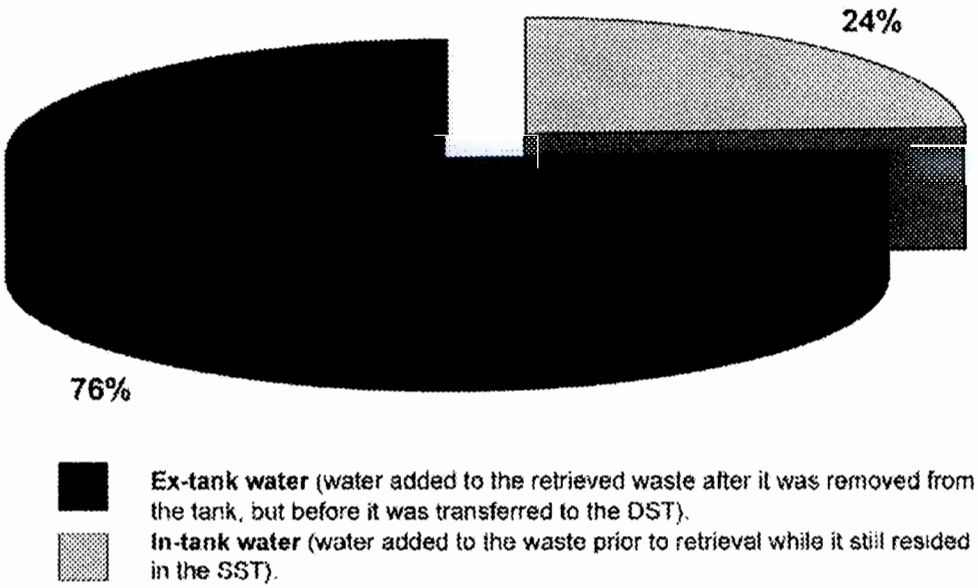

Table 3-8. Water Use and Disposition.

Water Use	Prediction (gal)[a]	Actual (gal)	Entered C-203?	Description of Estimation Method[b]
Transport and mobilize waste solids	30,000	38,753	No	Total amounts recorded by FM-6 and FM-5 less amount returned to SST C-203 from slurry vessel and pump skid.[c]
Water returned to SST C-203 from vessel/pump skid	1,000[d]	9,400	Yes	Values recorded by FM-5 attributed to washing and slurry vessel drains.
AMS lubrication water	4,000	8,850	No[e]	Total amount recorded by FM-4 minus the sum of the total amounts recorded by FM-5 and FM-6 and minus the amount attributed to vacuum separator vessel makeup water.
Scarifying	4,200	4,659	Yes	Total amount recorded by FM-2.
Vacuum separator vessel makeup water	2,800	1,000	Yes	Process knowledge.
Total assumed to have passed through SST C-203 prior to being deposited into DST AN-106 (i.e., in-tank water)	8,000	15,058	Yes	Summation of values above with "Yes" in the fourth column of this table.
Ex-tank water	34,000	47,603	No	Summation of values above with "No" in the fourth column of this table.
Total water used	42,000	62,661	NA	Summation of FM-2 and FM-4.

[a] Pre-retrieval estimates derived from Figure 10, page 47 of RPP-16525.
[b] See Table 3-1 for a description of all FM (flowmeter) numbers.
[c] Hydrotrans water (for mobilizing the waste) was estimated to be 13,411 gal by subtracting the wash water estimate of 9,400 gal from the total for FM-5 (22,811 gal). Water for transporting waste (FM-6) was recorded as 25,342 gal. The sum was 13,411 + 25,342 = 38,753.
[d] Assumed to be the difference between upper bound "total water used" (42,000 gal) and the summation of the other upper bound inputs (high pressure water, AMS water, air separator water, and batch vessel and transfer line water).
[e] Some volume of AMS lubrication water returned to tank C-203; it could have drained to the tank when the vacuum was stopped or when there was insufficient vacuum.

3.3.3 Retrieval Rate

The retrieval rate generally met expectations until day 23 of the campaign. The operating days showing a zero retrieval rate in Figure 3-6 were days that the system operated but waste was not actively retrieved. This typically involved days where system maintenance involved adding water for flushing system components but did not result in retrieval of waste.

Additional testing was performed at the Cold Test Facility (CTF) between August 5 and 20, 2004, to determine whether the retrieval rate could be improved by modifying the transfer line configuration. The testing showed that reducing the line length between the top of the AMS and the slurry vessel from 150 ft to 90 ft and eliminating the S-bend and P-traps in the line should result in increased retrieval rates, higher solids loading, and more efficient line cleanout during line flushing.

Figure 3-6. Retrieval Rate During Campaign.[a]

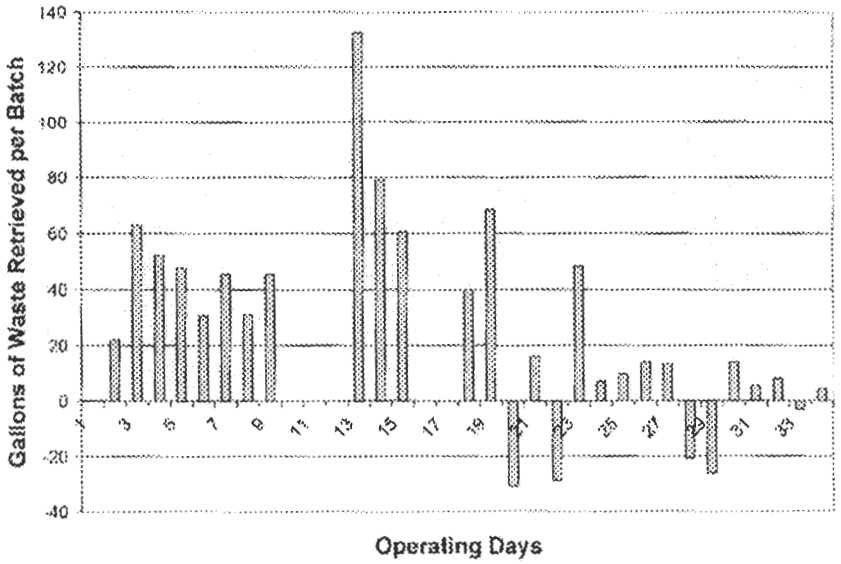

[a] Sporadic values less than zero are anomalies of daily material balance calculations resulting from measurement error inherent in the flowmeters, initial waste volume estimate, and system holdups.

During the testing at the CTF, it was also observed that the retrieval efficiency could be affected by the approach used to "mine" the waste or simulant. Higher retrieval rates with increased solids concentrations were demonstrated during the testing by submerging the vacuum intake of the AMS into the waste versus "skimming" the surface. Test results are documented in RPP-RPT-23156, *C-200 Vacuum Retrieval System Waste Retrieval Simulations Report*.

These changes in transfer line configuration and vacuum intake positioning were implemented at SST C-203 to improve retrieval efficiencies when the retrieval operations were resumed in January 2005. The changes in transfer line configuration and vacuum intake positioning resulted in modest improvements in retrieval performance. It was discovered after the retrieval campaign ended and the system was being relocated to another C-200-series SST, that the transfer piping was restricted between the slurry vessel and the AMS. The area containing the restriction was not visible without disabling the transfer piping, thus would not have been discovered during routine inspections.

3.3.4 Retrieval Time

The pre-retrieval estimate of 7 days was underestimated. The VRS had retrieved more than 50% of the total residual waste by day 7 of the campaign (not including days when no waste was retrieved); however, the system continued to recover measurable volumes of waste through day 27. The campaign was extended another 7 days beyond that to recover additional waste by working to the limits of technology.

The pre-retrieval prediction was based on performance data observed during CTF simulations prior to startup. The simulations were conducted at CH2M HILL CTF using waste simulants derived from generator knowledge contained in RPP-14627. The waste simulant resembled the

sticky viscous material identified in the report. The mock retrieval system was able to suction the waste out of the tank by adding limited quantities of water to change its consistency to a noncohesive mud-like substance.

Initially during retrieval of SST C-203, the waste behaved in a manner similar to that observed at the CTF. As the campaign progressed and waste was removed from the tank, the waste characteristics became less favorable for retrieval. The waste, rather than resembling a mud-like substance after addition of water, broke into chunks having a gravelly appearance. This material required considerably more effort to be lifted out of the tank and remain suspended through the retrieval system process. The material had a tendency to settle quickly, requiring more water and greater agitation to suspend the particles.

The retrieval operations took longer as a result of the lower retrieval rate stemming from the waste behavior changes. The total campaign duration in terms of calendar days was considerably longer than estimated. Lessons learned from the retrieval of SST C-203 will be applied when estimating retrieval times required for future retrievals.

3.4 LESSONS LEARNED

SST C-203 retrieval was the first use of the VRS in a radiological environment for recovery of tank solids. A workshop was held on April 29, 2005, to discuss and document lessons learned during SST C-203 retrieval. Many lessons were learned that will improve pre-retrieval predictions and overall system performance.

The following is feedback of what worked well:

a. The VRS can be used successfully in a radiological environment to achieve the HFFACO Milestone requirement for residual waste volumes.

b. The integration of rugged industrial equipment with proven performance and reliability resulted in a VRS that could perform beyond predicted operating parameters.

c. Trials at the CTF accelerated system improvements and troubleshooting.

d. Supporting technical documents were well developed.

e. Ventilation system improvements from lessons learned at SSTs C-106 and S-112 resulted in greater reliability.

f. Videos and stills (pictures) were invaluable.

g. Data collection systems were reliable and provided an abundance of information.

h. Communication was improved with Ecology, which resulted in greater confidence that the limits of technology had been reached.

Lessons learned that are being reviewed and will be implemented in future SST retrievals as appropriate include the following:

a. Modify schedules to more accurately reflect the appropriate allocation of time to achieve the retrieval goals.

b. Shorten vacuum line length further by relocating the vessel pump skid closer to the AMS.

c. Straighten the vacuum line from the AMS head to the vessel/pump skid as much as possible, and inspect for restrictions during installation.

d. Reduce line flushes further, as appropriate, to limit the amount of water used.

e. Increase the opening area of the AMS suction head screen from 3/8-in. to 5/8-in.

f. Increase the size of the slurry vessel from 250 gal to 400 gal to improve the batch efficiency.

g. Increase communications among waste retrieval system operators to enable lessons learned and improve consistency of operating techniques.

h. Account for interfaces between instrumentation (e.g., install an orifice ahead of FM-4 to restrict flow to the range of downstream meters).

i. Increase the size of the heat exchanger to cool the vacuum pump seal water and reduce tank fogging.

3.5 CONCLUSION

The VRS successfully met HFFACO requirements for the SST C-203 retrieval campaign. However, compared to performance goals, changes in waste behavior affected performance, lengthened retrieval time, and required greater use of water. Many lessons were learned that should improve pre-retrieval planning and system performance.

4.0 LEAK DETECTION, MONITORING, AND MITIGATION

The LDMM program was implemented to protect the workers, public, and environment from leaks of radioactive liquid waste. The LDMM program includes technologies and methods used prior to, during, and after waste retrieval to detect leaks, reduce the potential for a leak to occur, or minimize leak volumes. Additionally, the LDMM program quantifies liquid waste release volumes should a release be detected. There was no evidence of a tank leak during retrieval of SST C-203.

Unlike the 100-series tanks, the C-200-series tanks do not have drywells in the vicinity of the tank wall to detect or measure leaks. SST C-203 was categorized as an "assumed leaker" in 1984 based on liquid loss data exceeding evaporation estimates; 400 gal of waste was estimated to have leaked from SST C-203 (HNF-EP-0182) (see Section 1.3). In the intervening years between its categorization as an "assumed leaker" and recent retrieval, not enough liquid was present in the tank to warrant additional LDMM measures. This tank was given higher priority for retrieval and a leak mitigation strategy was implemented, which strictly controlled the amount of liquids used. RPP-16525 establishes that a mass balance will be performed at the conclusion of retrieval as the leak detection monitoring (LDM) method.

The approach described in RPP-16525 is based on preventing leakage, minimizing leak volumes if a leak should occur, and using available process control data for indication of possible leakage. The strategy implemented was to not allow additional volumes of liquid into SST C-203 beyond that which would be required to break up the waste close to the vacuum head for subsequent removal.

The following sections describe the LDMM requirements, LDM implementation, mitigative approach, chronology, results, and lessons learned. The major results for the LDMM program during SST C-203 retrieval are as follows:

a. There was no evidence of a leak based on results of in-tank liquid level monitoring and skid leak detectors.

b. The vacuum separator vessel released ~2 tablespoons of water, which dried before reaching leak detectors, and was subsequently repaired.

c. The material balance calculation results established no evidence of a leak during retrieval (See Section 4.2.5).

d. Water minimization as part of leak mitigation was rigorously implemented.

e. Typically, about 120 gal of water were added to the tank at a time and were retrieved within 3 minutes.

4.1 REQUIREMENTS

The leak detection and monitoring system incorporating mitigation was established in RPP-16525. Requirements are also contained in the safety basis controls given in RPP-17190, *Safety Evaluation of the Waste Retrieval System Vacuum System for 241-C Tank Farms 200-Series Tanks*, and HNF-SD-WM-TSR-006, *Technical Safety Requirements for Tank Farms* (TSR), specifically TSR Limiting Condition for Operation (LCO) Section 3.1.1, "Transfer Leak

Detection Systems." Material balances during transfers are required by the TSR Administrative Control (AC) Section 5.11, "Transfer Control," and RPP-12711, *Temporary Waste Transfer Line Management Program Plan.*

The primary procedures governing notification and reporting of leaks are TFC-OPS-OPER-C-24, *Occurrence Reporting and Processing of Operations Information*, and TFC-ESHQ-ENV_FS-C-01, *Environmental Notification.*"

4.2 LEAK DETECTION AND MONITORING

Leak detection and monitoring during retrieval of SST C-203 were accomplished by the use of liquid level indicators (Enraf) in DST AN-106, visual inspection, leak detectors, radiological monitoring, and material balances as shown in Table 4-1 and discussed in Sections 4.2.1 through 4.2.3.

Table 4-1. Leak Detection and Monitoring Methods for Each System Component.

Component	LDM Method
SST C-203	Liquid level monitoring, visual inspection, material balance
DST AN-106	Liquid level monitoring, annulus leak detectors, radiation monitoring for annulus exhaust air
Ancillary equipment (skids, HIIITL)	Leak detectors

4.2.1 Single-Shell Tank C-203

4.2.1.1 Liquid Level Monitoring

The Enraf device installed in SST C-203 did not have a consistent liquid surface to measure and was not relied on for leak detection purposes. See Section 2.4 for a description of how the instrument functioned in SST C-203.

4.2.1.2 Visual Inspection

Before initiating waste retrieval operations, a visual assessment and documentation of in-tank conditions in SST C-203 were performed using an in-tank video camera. Throughout retrieval, the CCTV system was used to identify the waste surface condition, qualitatively assess the amount of liquid in the tank, observe any significant changes, and implement the mitigation strategy of minimizing liquid pools.

Observations of the waste surface in SST C-203 indicate that the surface level decrease corresponded with retrieval activities. Unexpected increases or decreases in the surface level of SST C-203 were not observed. Since surface liquid had been minimized in SST C-203 prior to extended downtimes, evaporative loss was not noted during retrieval. Figure 4-1 shows areas in the tank from the in-tank video before extended work stoppages.

Figure 4-1. Waste Surfaces.

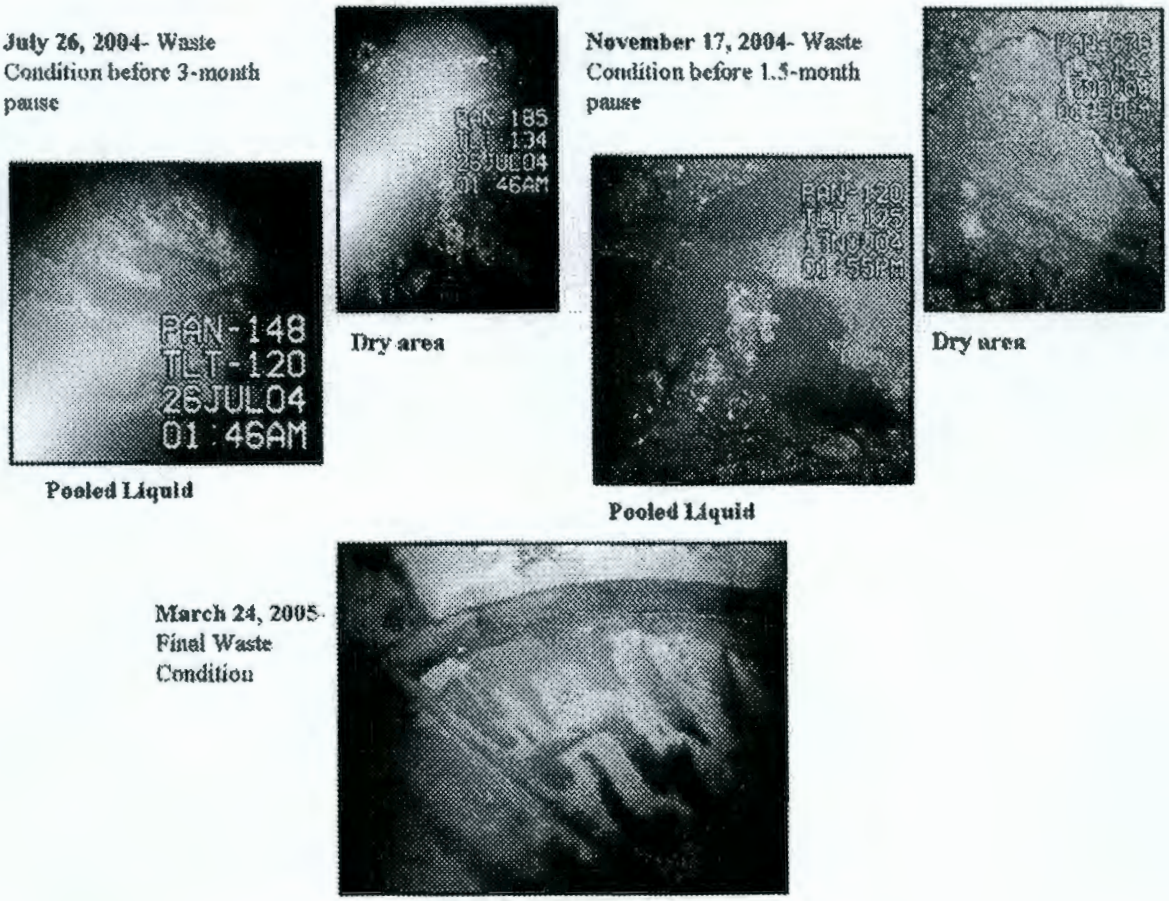

Visual observation was used to detect the only leak in the SST C-203 system, which occurred on February 1, 2005, in the aboveground skid system. Skid-mounted video cameras were used to identify the small vacuum water separator leak in the vacuum vessel skid. According to the daily report for February 1, 2005:

> The vacuum pump decoupled from motor. While troubleshooting the vacuum pump, a tiny leak was observed on the water separator head flange. The leak only occurred when the vacuum pump was started. An estimated 30 mL full had leaked.

The leak was small enough that the liquid dried before it could reach a leak detector located in the secondary containment. The operations crew found it quickly, followed procedures to shut down the system, and did not resume work until the problem was fixed and the dried contamination removed.

4.2.1.3 Material Balance

Material balances are primarily used for process performance measurements (see Section 3.2). However, they also provide useful information for determining gross indications of leaks in the

system. The material balance is performed to account for all of the water and waste that move through the system. A material balance discrepancy (MBD) occurs when the amount of material going in and coming out does not match the change in the system. This calculation is presented in RPP-CALC-26330. The material balance is calculated using this basic equation:

Material balance discrepancy (MBD) = start volume + additions – removals – ending volume

Waste transfers have permissible MBD limits based on system-specific variables and estimated accuracies of instrumentation. The MBD limit was calculated as the limit of error associated with all volume measurements or volume estimates associated with the SST C-203 retrieval process. Should the MBD exceed the limit of error, the difference between the MBD and the limit of error is called waste unaccounted for (WUF). Therefore, if the MBD is

a. Negative, the WUF = 0.

b. Positive but ≤ limit of error associated with the SST C-203 retrieval volume measurements or volume estimates, the WUF = 0.

c. Positive and > limit of error associated with the SST C-203 retrieval volume measurements or volume estimates, the WUF = MBD – limit of error.

The limit of error is assumed to be the following:

limit of error = $(\Sigma\ U_i^2)^{1/2}$

where U_1 = uncertainty with stream 1, U_2 = uncertainty with stream 2, etc.

The square-root-of-the-sum-of-squares method for estimating the limit of error is based on an assumption of independence between the variables. Details of the uncertainty calculations can be found in RPP-CALC-26330.

Because of the greater accuracy associated with the DST AN-106 Enraf gauge when compared to the accuracy of the flowmeter/totalizer, the same system used in Section 3.2, which included the SST C-203 retrieval system and DST AN-106, was selected as the primary system around which the material balance was performed.

The primary system material balance had an MBD of -1,488 gal, well within the uncertainty of ±2,485 gal. The WUF for the primary MBD is zero, thereby establishing no evidence of a leak during retrieval. More detailed results are presented in RPP-CALC-26330.

4.2.2 Double-Shell Tank AN-106

4.2.2.1 Liquid Level Monitoring

Daily liquid level measurements were recorded for the receiving DST AN-106. The Enraf device is capable of accurately measuring liquid level changes of 0.01 in.. See Section 2.4 for a description of how the instrument functions.

During retrieval there was no evidence of a release from tank AN-106 based on results of liquid level monitoring. A consistent increase in liquid level was noted in DST AN-106 throughout retrieval, with the exception of a single measurement (March 15, 2005) where a decrease of 339 gal was observed. This level decrease can be attributed to evaporation during the downtime between February 1, 2005, and March 15, 2005 (RPP-CALC-26330). Additionally, no leak

detectors alarmed, which verifies that the decrease was due to evaporation. The DST AN-106 liquid level increase corresponded with the material balance for SST C-203.

4.2.2.2 Leak Detectors

Double-shell tank AN-106 is monitored for leaks in the inner shell by a conductivity probe leak detection system installed in the tank annulus during tank construction. Slots cut in the concrete that support the tank at the bottom are designed to drain any leakage to the annulus floor. Conductivity probe assemblies on the annulus floor would activate an audible alarm and an annunciator panel light in the event of liquid leaking to the annulus so that mitigation would begin. Throughout the SST C-203 retrieval campaign, no leaks were detected by any of the leak detectors in AN-106.

4.2.2.3 Radiation Monitoring

A continuous air monitor operated to detect airborne radionuclides entrained in the ventilation exhaust stream of the annulus of DST AN-106. Detection of radiation exceeding a set limit in the annulus of the DST would activate an audible alarm and an annunciator panel light, initiating mitigative action.

The continuous air monitor for the DST AN-106 annulus detected no radiation levels above background during retrieval that could have been attributed to leak-induced airborne radionuclides.

4.2.3 Ancillary Equipment—Leak Detectors

Leak detectors were installed in the vessel/pump skid, vacuum skid, and HHHTL (secondary containment structures) to detect the presence of liquid through conductivity, which would activate alarms and shut down the retrieval system. Leak detectors were also placed in skid drain lines that were anticipated to be used in the event of a leak but otherwise should have remained dry. These skid leak detectors would have provided immediate notification of a leak from any ancillary equipment in the SST C-203 retrieval system, allowing initiation of appropriate mitigation actions.

Throughout the SST C-203 retrieval campaign, no leaks were detected by any of the leak detectors on the skids or HHHTL.

4.3 MITIGATION

Leak mitigation was accomplished through design features and the operational strategy developed for the VRS. Mitigation included actions that reduced the chance of a leak and the environmental impact of a leak should one have occurred. Potential leaks were proactively prevented and minimized throughout the retrieval operations.

4.3.1 Single-Shell Tank C-203

A summary of the SST C-203 mitigation strategy is as follows:

a. Addition of water to the retrieval tank was minimized and liquid pools that formed were removed to the extent practical.

b. Waste was retrieved to the extent practical by working from the center of the tank outwards. In the center-out retrieval strategy, dissolved waste and interstitial liquids drain quickly into a central pool and can be rapidly pumped from the tank if a leak is detected.

c. Retrieval activities were performed only while a video camera was in place to observe the AMS vacuum head and waste surface.

d. Equipment handling controls were used to minimize the potential for dropping equipment into the tank, which could potentially penetrate the tank bottom during installation.

e. The hydraulic pressure to the AMS was reduced to the extent practical while still permitting acceptable AMS operation to minimize the potential for putting excessive pressure on the tank wall during retrieval operations.

f. A benchmark level was maintained to ensure low head of introduced liquid. The waste level did not exceed this benchmark. For SST C-203, the benchmark was 17 in. as measured by manual tape from the tank sidewall (2,933 gal of waste).

Initially the SST C-203 retrieval process was predicted to last only 7 days, minimizing the amount of time for liquid to leak from the tank. As discussed in Section 3.0, the retrieval process took longer than planned and more water was used during retrieval than expected. As a result, the mitigative approach was rigorously implemented to ensure that potential leakage from SST C-203 was carefully monitored at all times. Key mitigative actions are described in Sections 4.3.2 and 4.3.3.

4.3.2 Double-Shell Tank AN-106

The only receiver tank used for SST C-203 tank waste was DST AN-106. Mitigating actions of a leak from DST AN-106 primary tank piping into the secondary containment system of the DST system during a waste transfer from SST C-203 would have included (1) stopping the flow of waste into the tank system (stopping the transfer), (2) pumping waste in the primary tank to another DST until the liquid level in the secondary containment was no longer increasing, and (3) removing the waste from the secondary containment system as soon as practicable. Leaks at or near the DST AN-106 tank bottom may also have required saltwell jet pumping to remove trapped liquids from between solid layers in the tank. Transfer line leakage would drain back to the batch vessel/pump skid and subsequently to SST C-203.

4.3.3 Ancillary Equipment

Should a leak have occurred within the skids, the liquid would have drained to SST C-203, not to the surrounding soils. Any water that collected in the skid floor pan would have activated a leak detector, which would shut down all skid operations. Should a leak have occurred within the

skid, the waste retrieval process would be halted automatically when the leak detectors activate and shut down the transfer pumps. The process could also have been halted manually if the leak was visually observed during routine inspections. Any detected leaks would have been mitigated before the process was restarted. The response to a leak would have been the same regardless of leak rate and an occurrence report would have been issued in accordance with requirements established in TFC-OPS-OPER-C-24, "Occurrence Reporting and Processing of Operations Information."

Leakage from an HIHTL transfer line (inner hose) into an encasement (outer hose) would have drained to an alarm location and a collection tank. The transfer would have been shut down when the alarm occurred. Response to transfer leak detection alarms and mitigation actions would be performed in accordance with procedure TO-220-106, "Transfer from 241-C-200 Series Tanks to 241-AN-106."

4.3.4 Mitigation Results

The leak mitigation strategy was implemented throughout retrieval. As a result

a. Retrieval activities were clearly visible under the video camera.
b. The 17-in. liquid level baseline for operating was maintained.
c. The mitigation approach from Section 4.3 was fully implemented.

As described in the mitigation strategy, the hydraulic pressure to the AMS was limited to prevent internal tank damage. Additionally, the AMS speed was limited such that only deliberate, slow movements could be made, protecting tanks walls from accidental blows by the AMS.

Although water use exceeded expectations (62,661 gal as shown in Table 3-7), about 48,000 gal of the water was used for skid line flushes and Hydrotrans® operation, and did not enter SST C-203 (see Section 3.3). This volume of water was necessary to mobilize the slurry uphill to DST AN-106 and flush the lines adequately to prevent line plugging. The remaining ~15,000 gal was used for in-tank purposes: scarifying, flushing solids from the tank knuckle, and water from the vacuum separator. During retrieval no indications of leakage to the environment were observed.

The volume of water in the tank was minimized during retrieval. On a typical day of retrieval, about 120 gal of water were added at a time and about 3 minutes passed between water addition and waste retrieval with the AMS. Out of more than 100 water additions, there were two exceptions to this rule: June 30 and October 20, 2004. On June 30, about 60 gal of water were added to the tank and almost 2 days passed before the liquid waste was retrieved. In October, about 250 gal of water were added to the tank, which sat dormant for almost a month before being retrieved.

The final volume of waste in SST C-203 of 139 gal was determined through topographical mapping. According to RPP-CALC-25672, *Calculation for the Post-Retrieval Waste Volume Determination for Single-Shell Tank 241-C-203*, there is a waste layer with an average thickness of 1.5 in. along the bottom of the tank. By reducing the volume of waste, the available volume for liquid pools, interstitial liquid, or a hydraulic head has been reduced. Consequently, the potential for leaks as well as the volume of a potential leak are minimized.

4.4 CONCLUSION

Based on the available data presented in Sections 4.2 and 4.3, no evidence of a tank leak occurred during SST C-203 retrieval operations. A minor leak in equipment positioned on a skid of approximately 30 mL of water was contained and mitigated as described in Section 4.3. The SST C-203 LDMM program focused on a mitigation strategy to successfully control potential leaks. This strategy included the following:

a. Minimization of residual tank waste.

b. Minimization of in-tank water use.

c. Minimization of standing liquid pools in the tank.

d. Controlled and monitored additions of water.

e. Visual monitoring of tank conditions and retrieval operations.

f. Retrieval from the center of the tank out to minimize water accumulation around the tank knuckle.

The goal of the LDMM program for SST C-203, according to the plan set forth in RPP-16525, was successfully achieved.

5.0 LIMITS OF TECHNOLOGY

The HFFACO Milestone M-45-00 requires "Closure will follow retrieval of as much tank waste as technically possible, with tank waste residues not to exceed ... 30 ft^3 in each of the 200 series tanks, or the limit of waste retrieval technology capability, whichever is less." The requirement intended that retrieval would continue in SST C-203 until the VRS had recovered as much waste as technically possible.

This section presents information showing that the requirement of removing as much waste as technically possible from SST C-203 using the VRS was achieved and that the limits of the technology selected were met. Performance of the SST C-203 VRS decreased over time after system improvements were implemented midway through the campaign to where only negligible waste was being retrieved with each additional batch.

Unless otherwise noted, data in this section were developed in accordance with procedure TFC-ENG-CHEM-P-47, "Single-Shell Tank Retrieval Completion Evaluation."

5.1 IDENTIFYING LIMITS OF TECHNOLOGY

M-45-00 does not prescribe a method or criteria for deciding when a technology has reached the limit of its capability to retrieve waste. Figure 5-1 illustrates the general concept of diminishing returns over time as retrieval progresses and the retrieval technology reaches its limit.[4]

Figure 5-1. Limits of Technology Model.

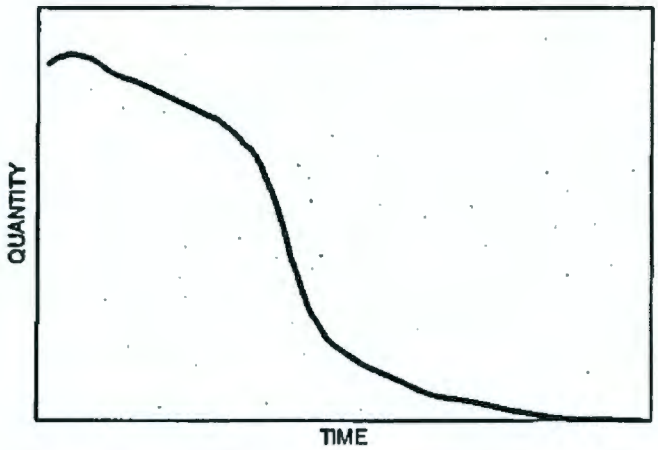

During the earliest portion of the hypothetical campaign, relatively small volumes of waste are removed as adjustments are made to the system to maximize the efficiency of the technology. During the middle period, the operational parameters have been optimized and efficient operation of the technology removes relatively large volumes of waste. In later stages, the small volume of waste remaining and the reduced operational efficiencies cause retrieval time to

[4] Figure 5-1 does not represent actual retrieval results. Actual results for SST C-203 are shown graphically in Figure 3-2.

increase in relation to volume of waste recovered. In the final days, the decline in quantity of waste recovered approaches zero, indicating that retrieval efficiency has diminished to the point where the limit of the technology has been reached.

Several types of data were available to establish that the limit of the VRS capacity to retrieve waste from SST C-203 had been reached. DOE and CH2M HILL relied on the following:

a. Decreases over time in the specific gravity of the recovered waste stream.
b. Direct visual observation of the volume of waste remaining in the tank bottom.
c. Ratio of water used to waste recovered.
d. The volume of residual waste at the end of each operating day.

5.2 DETERMINATION THAT LIMITS OF TECHNOLOGY WERE REACHED

Real time data from instrumentation and direct visual observation indicated that by March 24, 2005, no additional waste was being recovered by the VRS. Onsite representatives of DOE and CH2M HILL concurred that the limit of the VRS capacity to retrieve waste from SST C-203 had been reached, and Ecology was briefed.

Subsequently retrieval operations were terminated, the system was flushed, and steps were initiated to start post-retrieval sampling and residual volume measurements. Sections 5.2.1 through 5.2.4 describe the various factors contributing to the confirmation that the limit had been reached.

5.2.1 Trend in Specific Gravity of the Waste Slurry

The SpG of undiluted waste from SST C-203 was substantially higher than the SpG of water used to transport the waste. Water, however, composed most of the waste slurry volume. Initially, the composite SpG of the slurry was higher than the SpG of water but lower than the SpG of undiluted waste. As the volume of retrieved waste diminished over time, the SpG of the slurry declined until it approximated the SpG of water.

Figure 5-2 shows the SpG of the waste slurry on a per batch basis. On most operating days, several slurry batches were transferred to DST AN-106. While the SpG of individual batches varied from one batch to another, a clear trend of declining SpG (the SpG of the slurry declined toward 1.0) was indicated over the course of the campaign. In the later stages of the campaign, the SpG of the slurry did not vary greatly from 1.0, indicating that the content of the slurry was approximating water, and that the limit of the VRS to retrieve waste had been reached. The data shown in Figure 5-2 are taken from Table 3-5.

5.2.2 Results of Visual Observations

Physical characteristics of the tank and objects in the tank aided in measuring residual waste volumes at the end of retrieval. A video camera inside SST C-203 allowed for real-time viewing of retrieval activities and results throughout the retrieval campaign. The value of visual observation for assessing whether the technology was reaching its limit increased as the waste surface receded below the rim of SST C-203.

Figure 5-2. Specific Gravity of Retrieval Slurry.

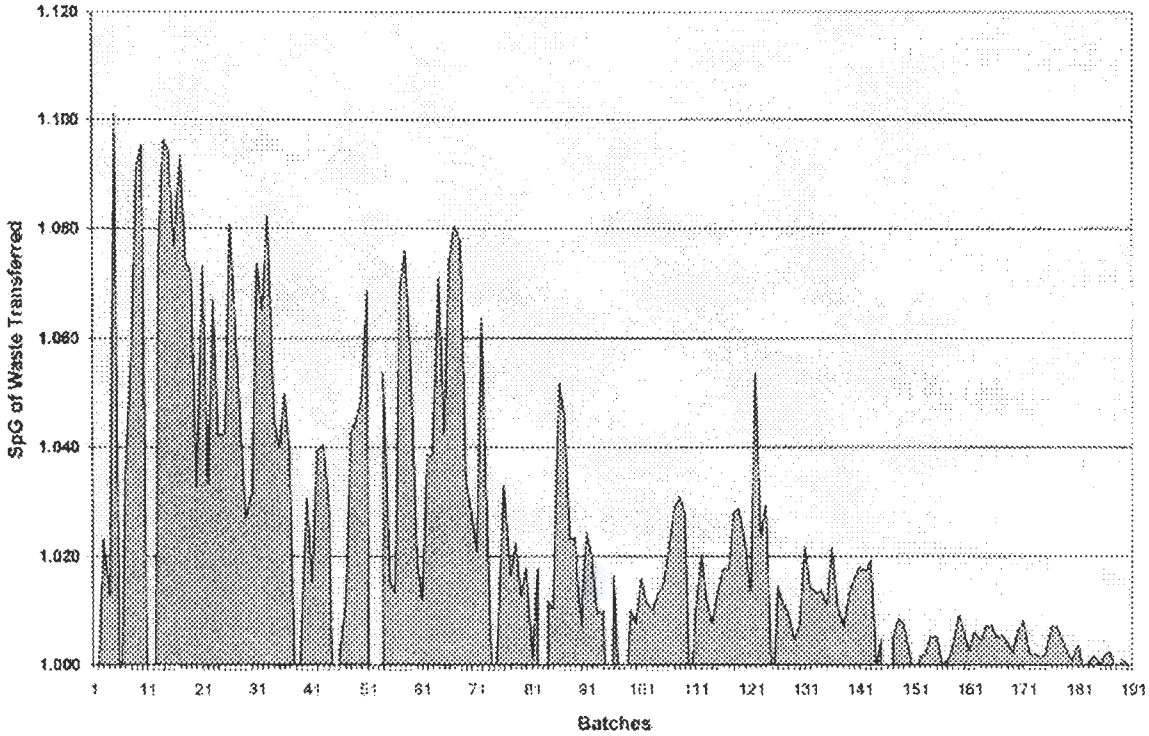

The dish bottom in the C-200-series tanks has an approximate 43 ft^3 capacity at the rim and an approximate 35 ft^3 capacity at the weld line (RPP-13019, *Determination of Hanford Waste Tank Volumes*). When the surface of the residual waste dropped below the rim and then below the weld line, estimates of the volume of remaining waste were made. At the point where the limit of the VRS technology to retrieve waste was reached, it was observed that retrieval operations were no longer changing the level of the remaining waste and also that the waste surface was sufficiently beneath the weld line to ensure that the volume of residual waste in the dish was well below 30 ft^3.

5.2.3 Trend in Ratio of Water Used to Waste Recovered

Water was used to scarify (break up) waste forms in SST C-203 and to transport waste slurry from SST C-203 to DST AN-106, the receiving tank, and for other purposes described in Section 3.1. Volumes of water used for some or all of these purposes were measured on each operating day. The ratio of waste retrieved to water used was an indicator of retrieval efficiency. Approaching the limits of technology was indicated by diminishing waste recovery on a constant or increasing water use.

Figure 5-3 measures the capacity of the VRS to recover waste from SST C-203 by comparing waste retrieved and total water used on each operating day. The trend shown in Figure 5-3 during the last 5 operating days is that very large amounts of water were used (all but 1 day

exceeding 2,000 gal) and very small volumes of waste were retrieved. In contrast, earlier operating days show a higher return in terms of retrieved waste indicating limits of technology were reached.

Figure 5-3. Retrieval Performance Measured by Comparing Water Used to Waste Retrieved per Operating Day.

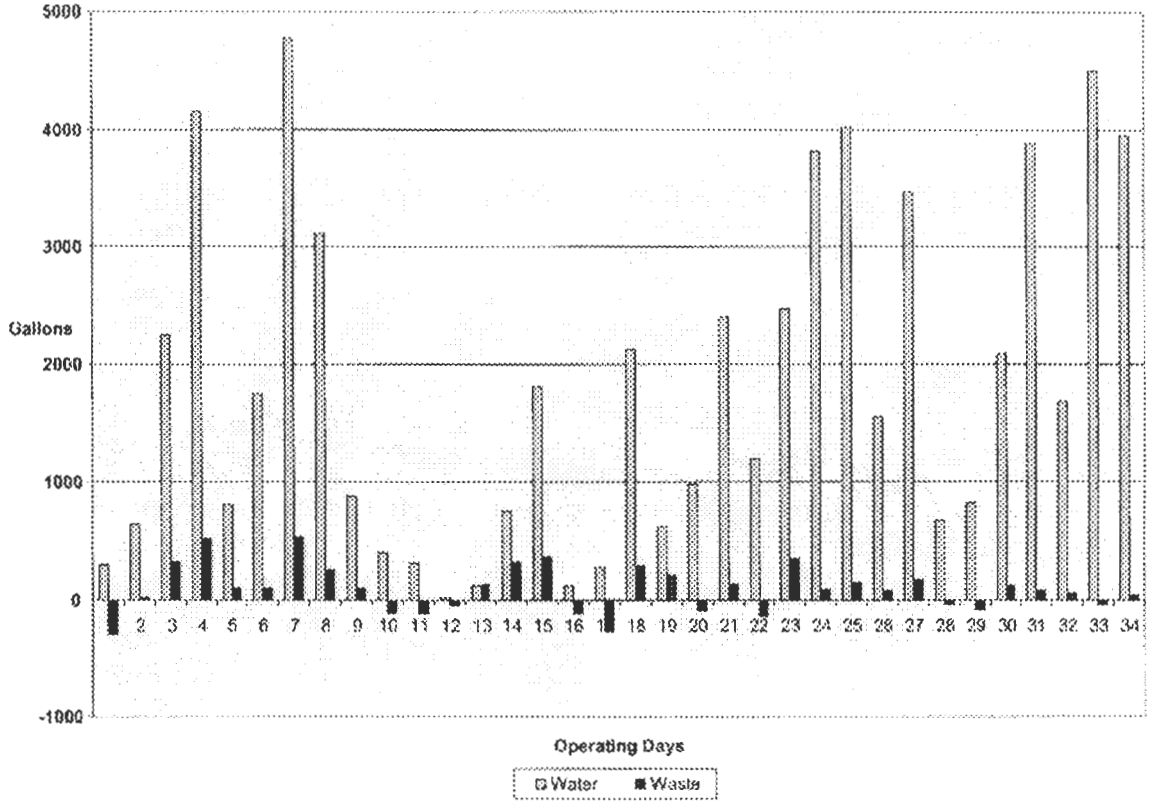

Note: Figure 5-3 shows a negative quantity for waste recovered on 11 operating days. Three factors account for the negative quantities: On some days, no recovery occurred; on other days, the volume of water inserted into the tank exceeded the total volume of material recovered; finally, metering was subject to a 4%± margin of error.

5.2.4 Trends in Volume of Residual Waste

Another indicator of retrieval efficiency was the residual waste volume at the end of each operating day tracked over time. The residual waste volume at the end of each operating day was determined by subtracting the total volume of waste removed per day from the residual volume at the start of that day's operations. A plot of the residual volumes or cumulative volume retrieved at the end of each successive operating day presented data that indicated the relative efficiency of the technology over time.

Figure 5-4, which presents data taken from Table 3-2, plots the residual waste in SST C-203 at the end of each operating day, as derived from material balances. The trend reported in this

figure corresponds to that of a technology meeting its limits as indicated by a diminishing change in the residual waste volume over time and no measurable change over the last 4 operating days.

Figure 5-4. Residual Tank Waste Volume During Retrieval Campaign.

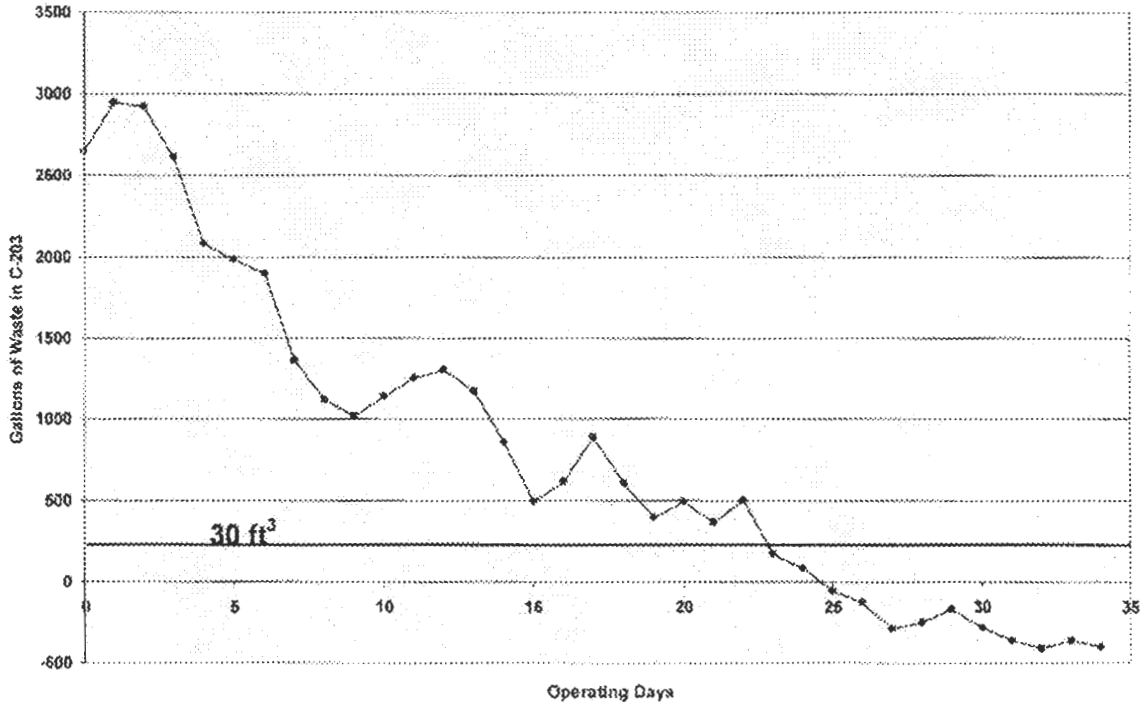

The trend toward diminishing returns shown in Figure 5-4 compares well with the model for reaching the limit of technology shown in Figure 5-1. The trend for the last 4 operating days shown in Figure 5-4 is nearly level, indicating that no more than a small amount of waste was being recovered on any day. Figure 5-4 shows the trend line dipping below zero residual waste volume for the last 9 operating days, an inconsistency that resulted from uncertainties in the BBI and material balance calculations but does not affect the validity of the trend line.

5.3 CONCLUSION

The limits of technology requirement established in HFFACO Milestone M-45-00 were met for SST C-203 retrieval. Data from instrumentation and direct observation confirmed that the VRS reached the limit of its capacity to retrieve waste from SST C-203.

6.0 SINGLE-SHELL TANK 241-C-203 RESIDUAL WASTE VOLUME MEASUREMENT

This section presents information demonstrating that substantially less than 30 ft^3 of residual waste was in SST C-203, thereby meeting one of the two retrieval criteria contained in HFFACO Milestone M-45-00. Retrieval operations continued until the limit of the VRS capacity to remove waste from SST C-203 was reached, as described in Section 5.0. A post-retrieval measurement of the residual waste was performed using the topographical mapping and survey techniques required by RPP-23403. This measurement established that the volume of the waste remaining in SST C-203 was 18.5 ft^3, with an upper bounding limit of 19.9 ft^3.

6.1 RESIDUAL WASTE VOLUME MEASUREMENT PROCESS

The use of the CCMS for final calculation of the volume of residual waste, as described in RPP-23403, met the standard prescribed in HFFACO Appendix H, Attachment 1, for determining if retrieval criteria were met. The CCMS approach for determining the residual volume is summarized in this section and is described in full in RPP-CALC-25672. Secondary volume estimation methods using data taken from the operation of the VRS, the cumulative material balance calculations, and the observation results were also used. The secondary approaches were used for measuring progress during operations, preliminary estimates of the final volume, and confirmation of the CCMS result.

6.1.1 Video Camera/CAD Modeling System

The total measured volume of residual waste in SST C-203 was the sum of volumes remaining in the tank dish, on tank walls, on the stiffener ring (all shown in Figure 6-1), and in the void spaces in equipment left in the tank. The CCMS method was used to calculate the volume remaining in the dish. The waste volumes remaining on the tank wall, stiffener ring, and in void spaces were estimated using video observations, records, and equipment drawings.

To implement the CCMS method, an in-tank video of SST C-203 was recorded on March 31, 2005. The video was taken by a camera in Riser 5 at heights of 23 ft 6-in., 15 ft, and 5 ft above the bottom of the tank. Supplemental lighting was used at the 23-ft 6-in. and 8-ft heights. The video documented the location of the equipment, residual solids, and liquid waste remaining in the tank. Figure 6-1 presents a section view of SST C-203 showing representative camera elevations used for the March 31 video.

Autodesk® Land Desktop[5] Release R16 software was used as part of the CCMS approach and calculated volumes within 3-D coordinates of a series of points identified on the waste surface from the March 31 video record. Autodesk® Land Desktop was first used to build a 3-D computer model of the SST C-203 interior. Then it was used to determine point coordinates for the residual waste using observations from the video camera imaging system in conjunction with tank geometry and modeled residual waste configurations in the tank dish. The result was a digital terrain model of the waste surface in the tank dish that was used to determine the residual waste volume.

[5] Autodesk® Land Desktop is a registered trademark of Autodesk, Inc., San Rafael, California.

Figure 6-1. SST C-203 Section View Showing Camera Elevations Used in March 31, 2005, Video Recording.

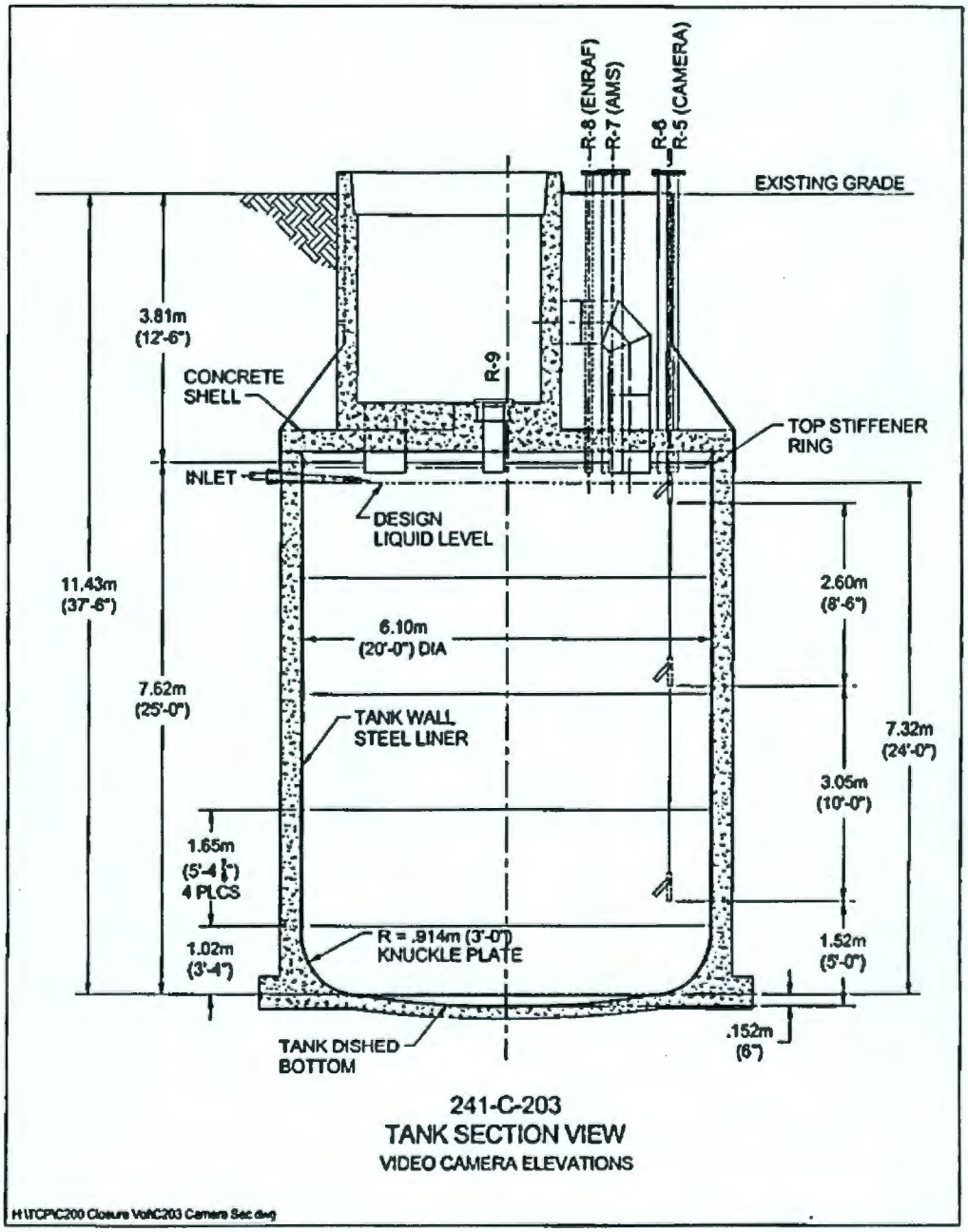

To estimate uncertainty in volume measurements, various methods were evaluated for determining a 95% upper confidence level (UCL) for the volume of waste in the tank dish. RPP-RPT-22891, *Revised Methodology to Calculating Residual Waste Volume at 95% Confidence*

Interval, describes the methods evaluated and contains a recommendation for use of the Bootstrap method. RPP-23403 accepted the Bootstrap method for estimating the 95% UCL.

The Bootstrap method is a robust statistical method. The method assumes that data is representative of the underlying distribution but requires no assumptions about the shape of that distribution. The 95% UCL for the waste volume at the bottom of the tank was determined with the following regression equation (RPP-RPT-22891, RPP-23403):

$$\textit{Actual Waste Volume @ 95\% UCL, } ft^3 = 1.043 \times \textit{CCMS In-Tank Volume Est. } ft^3 + 0.852\, ft^3$$

By observing video recordings taken on July 16, 2002; January 25, 2005; and March 31, 2005 (before, during, and after retrieval), it was determined that small amounts of waste remained on the tank wall. The total amount of waste on the tank wall, including the knuckle, was estimated by calculating the average waste thickness and percentage of waste coverage on the tank wall.

SST C-203 has a single stiffener ring located at the top of the tank's steel liner, 25 ft 6 in. above the bottom of the tank (see Figure 6-1). The potential for waste on the stiffener ring was evaluated by visual examination to determine the presence and size of any waste clumps or waste film and by reviewing the history of waste storage in the tank.

The volume of residual waste in equipment left in SST C-203 was calculated by using (1) the in-tank video, (2) records identifying equipment remaining in the tank, (3) equipment drawings, and (4) process knowledge to estimate the dimensions of equipment and void spaces in the tank as well as debris. The AMS and the thermocouple tree were the only equipment with void space that potentially contains waste.

6.1.2 Secondary Approaches

As noted in Section 5.0, the structure of the SST C-203 walls and tank dish permitted geometrical assessment of residual waste volume levels once sufficient waste had been retrieved to expose the complete tank knuckle portion of the structure. Below the point where the bottom of the tank knuckle meets the rim of the tank dish, the residual waste volume of the tank could not exceed 43 ft^3, the capacity of the dish. When the level receded to the weld seam joining plates within the dish, the residual volume in the bottom could not exceed 35 ft^3. Because the diameter, curvature, slope, and remaining depth at the point of the weld were all known, subsequent waste volumes could be estimated with reasonable assurance as the retrieval progressed.

On completion of retrieval, SST C-203 was given a final flush and a metered amount of water was introduced into the tank to cover the residual waste. The surface level of the material within the dish was observed before the water was withdrawn and the depth and total volume of material in the dish were calculated using known dimensions of the dish. The metered volume of water introduced into the tank was subtracted from the total material volume resulting in an estimated volume of 34 gal (4.5 ft^3) of residual waste in the tank dish. RPP-CALC-25450, *Estimate of Remaining Waste Volume in 241-C-203 at Halting of Retrieval*, contains the results of these calculations.

6.2 VIDEO CAMERA/CAD MODELING SYSTEM RESULTS

Waste was retrieved from SST C-203 until the limits of the technology selected were met. RPP-23403 defines the final residual waste volume as the residual waste volume in the tank dish at the 95% UCL plus the actual residual waste volume on the stiffener rings, equipment void space, and tank walls. Using this definition, the upper bounding limit for post-retrieval waste in SST C-203 is estimated to be a volume no greater than 19.9 ft^3. Table 6-1 presents the total post-retrieval volume together with waste volumes associated with various tank components.

Table 6-1. SST C-203 Total Waste Volume and Component Waste Volumes.

Component	Waste Volume (ft^3)	Upper Bounding Estimate (ft^3)
In the bottom (dish) of the tank (solids and liquids)	13.4	14.8[a]
In equipment in the tank[b]	0	0
On the stiffener ring[b]	0	0
On the tank wall[b]	5.1	NA[c]
Total[d]	18.5	19.9

[a] RPP-23403 estimated error for waste in bottom of tank is calculated using volume at 95%UCL, ft^3 = 1.043 x volume, ft^3 + 0.852 ft^3.
[b] Discussed in Section 6.2.
[c] A conservative calculation of 65% was made for the percentage of the tank wall covered with 1/16-in.-thick waste.
[d] Total of upper bounding estimate for volume in dish bottom and waste volumes for other components.

In the video record, residual solids appeared to be spread out, covering a large portion of the tank dish at an average thickness of approximately 1.5 in. Several raised areas of solids, ranging from 1.5 in. to 3 in. in height were also observed; however, the majority of raised areas were in the form of small ridges located on the northwest side of the dish. A small pool of liquid was located in the center of the dish on top of the solid waste layer; a second small pool was located in the north section of the dish. Table 6-2 shows the volumes of solids and liquids estimated by the CCMS.

Table 6-2. SST C-203 Waste Volume in Tank Bottom.

Component	Waste Volume (ft^3)
Solid phase	11.7
Supernatant phase	1.7
Total	13.4

The post-retrieval tank waste contour map (Figure 6-2) shows the configuration of residual waste in the dish bottom, and the SST C-203 isometric model (Figure 6-3) portrays the volume of the residual waste in relation to the volume and configuration of SST C-203. Figures 6-4, 6-5, 6-6, and 6-7 are still pictures taken from the March 31, 2005, video and show a small amount of waste remaining in parts of the tank dish. Also visible in these pictures are large portions of the tank dish itself with no waste covering the metal.

Figure 6-2. SST C-203 *Land Desktop* Post-Retrieval Tank Waste Contour Map (C-203, March 31, 2005, Video).

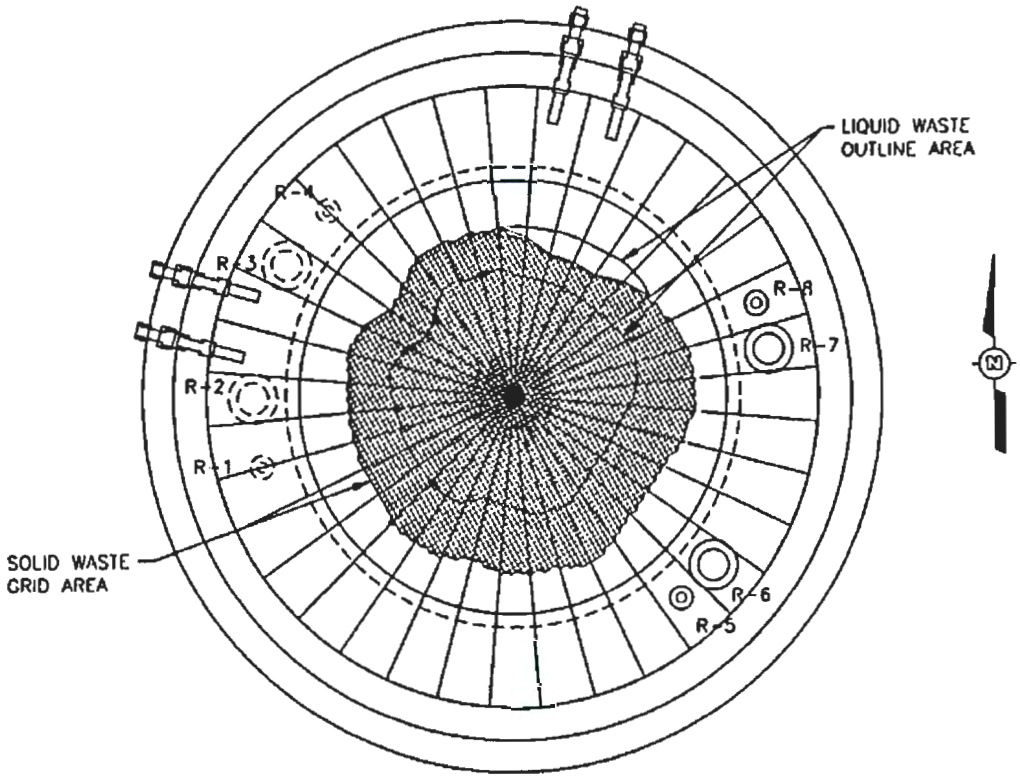

Figure 6-3. SST C-203 Land Desktop Post-Retrieval Tank Waste Wire Mesh Isometric Model (C-203, March 31, 2005, Video).

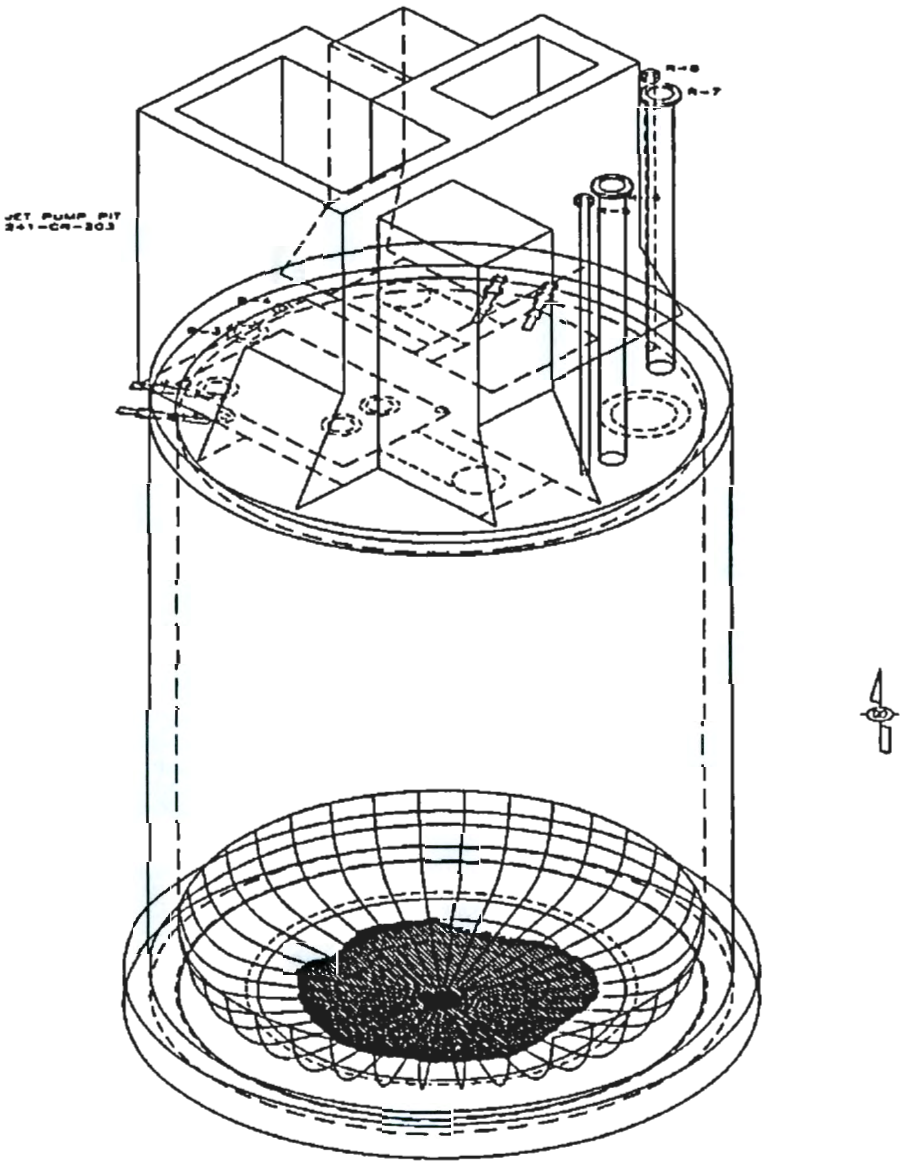

Figure 6-4. SST C-203 Video Still, Camera Elevation at 23 Feet from Tank Bottom.

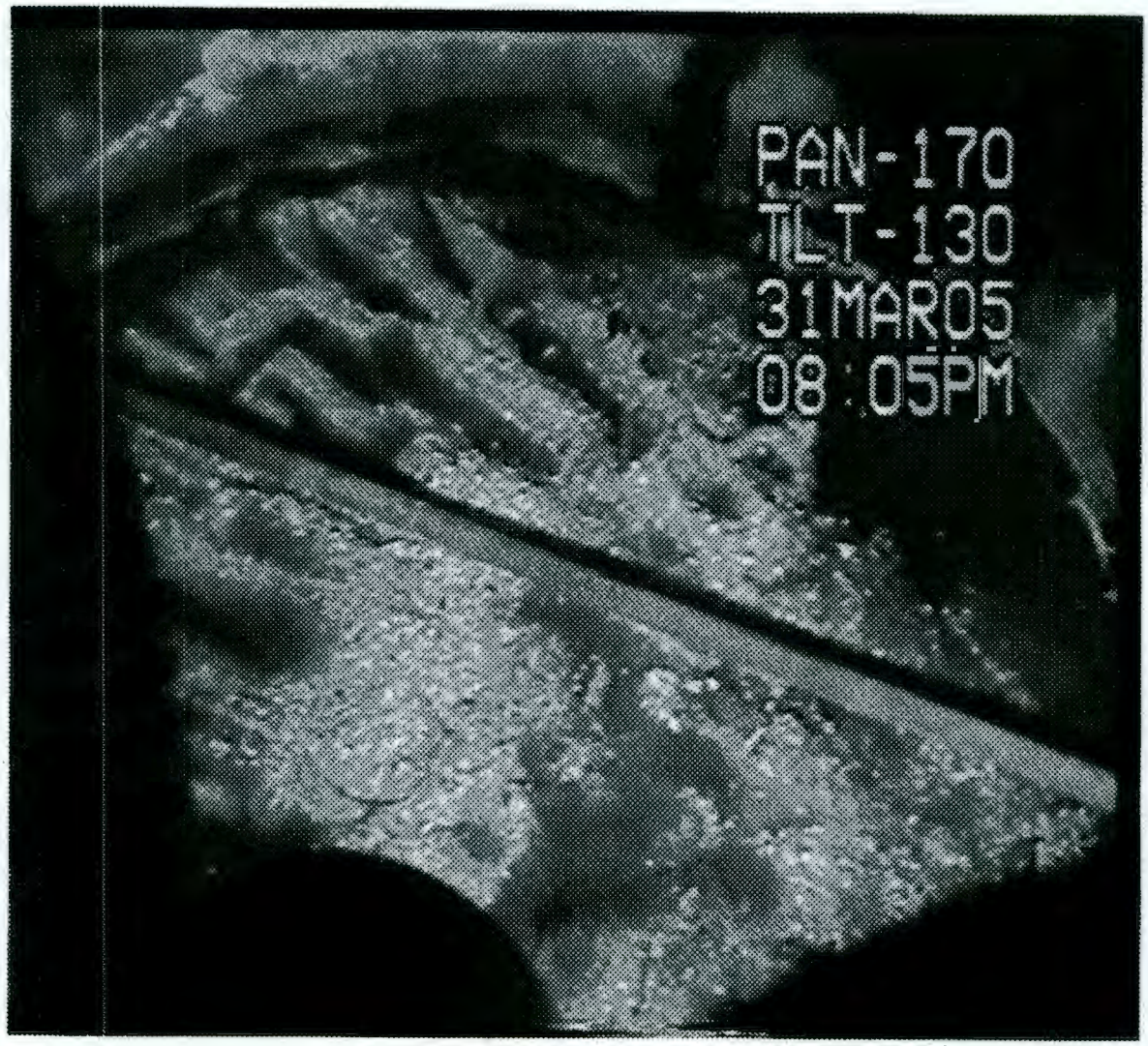

Figure 6-5. SST C-203 Video Still, Camera Elevation at 23 Feet from Tank Bottom.

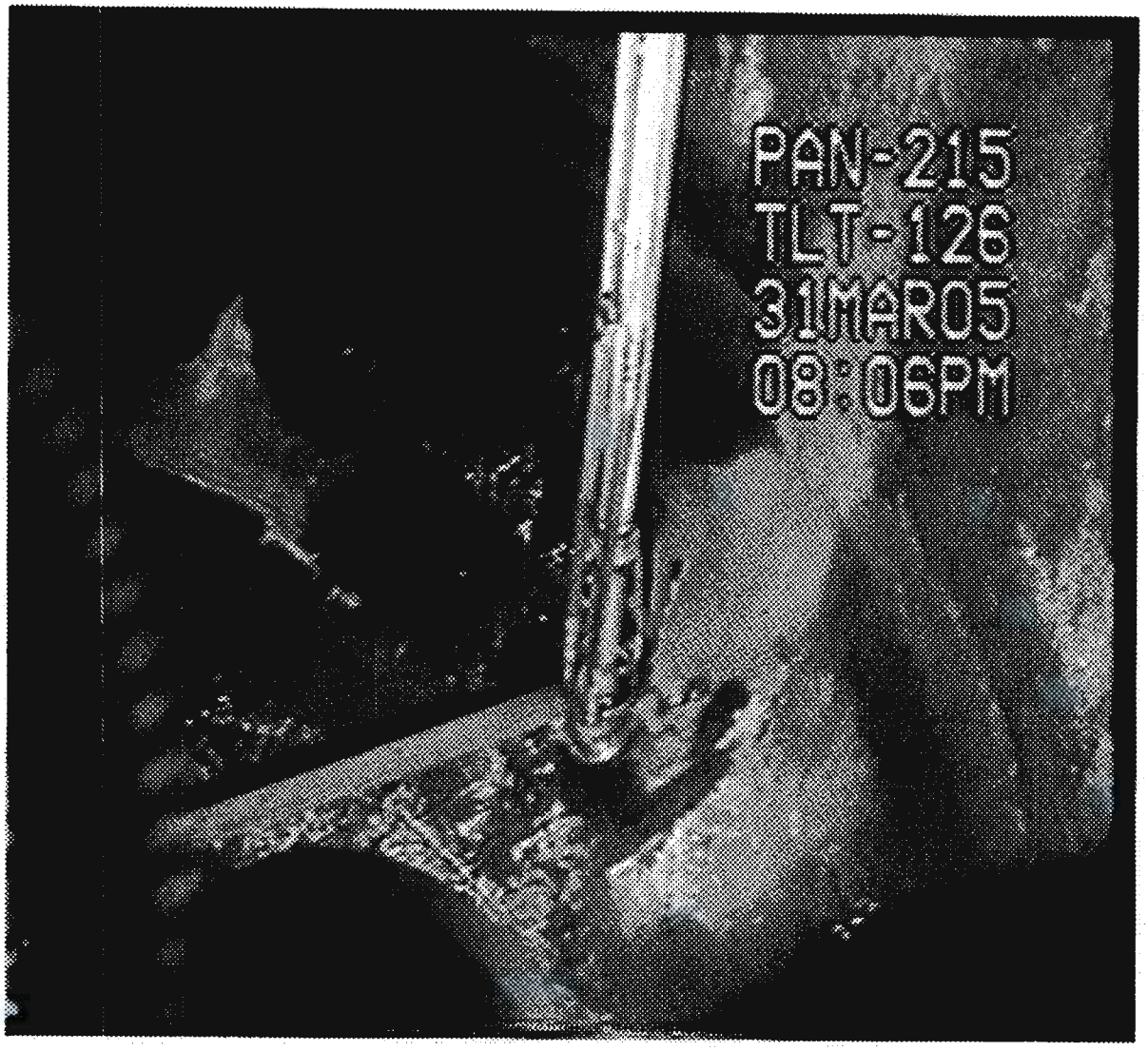

Figure 6-6. SST C-203 Video Still, Camera Elevation at 15 Feet from Tank Bottom.

Figure 6-7. SST C-203 Video Still, Camera Elevation at 5 Feet from Tank Bottom.

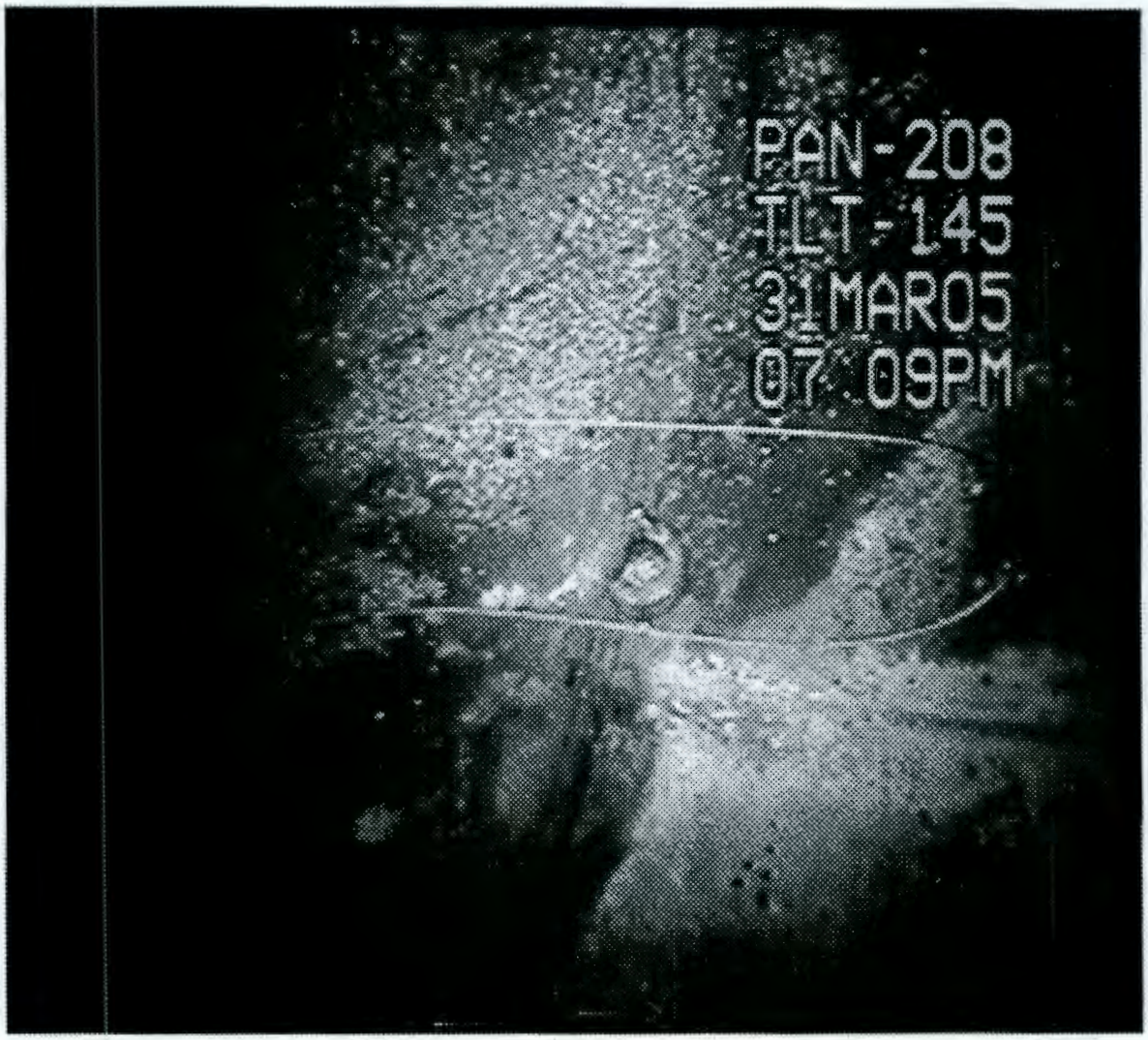

On completion of retrieval, the AMS was flushed and drained to remove any waste. It was then assumed that no residual waste was left in the AMS. For most of the retrieval campaign, the thermocouple tree stood on the bottom of the tank with its top end leaning against the tank wall. Toward the end of retrieval operations, it was repositioned to allow waste around it to be retrieved. The top of the thermocouple tree remained above the waste at all times and was therefore also assumed to contain no residual waste. Other equipment in the tank included plummets previously used to measure sludge levels, a lead brick, steel tapes and braided steel cable, and electrical cord. None of these items contained void spaces or hollow cores.

Based on the evaluation of the March 31, 2005, video, the knuckle appeared to be clean. The majority of waste in this region appeared to have been rinsed or flushed into the tank dish. The remainder of the tank wall had small amounts of waste spattered on it and the average waste

thickness was observed to be 1/16-in. from the contrast of shadows cast in the video recording by auxiliary lighting. A conservative calculation of 65% was made for the percentage of tank wall covered. The calculation is presented in RPP-CALC-25672. It was estimated that coverage could be from 60% to 70%. Dividing the 5% variance by the 65% estimate produces a ±7.7% uncertainty. This uncertainty is not additive with the upper bounding estimate for residual waste in the tank bottom because the two figures were calculated by numerically and qualitatively different methods

No waste was observed on the stiffener ring. This observation was supported by the following: (1) the location of the tank overflow lines at 24 ft 6-in., i.e., approximately 1 ft below the stiffener ring, meaning no waste should have come in direct contact with the ring, and (2) the maximum historical and the maximum recorded tank waste level was approximately 24 ft, which was about 18 in. below the stiffener ring.

6.3 CONCLUSIONS

The calculated volume of residual waste in SST C-203 is 18.5 ft^3. The upper bounding estimate of the residual waste volume is 19.9 ft^3. Even using the upper bounding limits for residual waste, the total residual waste volume in SST C-203 is well below 30 ft^3.

In the SST C-203 retrieval, photographic information and observational evaluations provided results that were consistent with the CCMS calculations regarding the residual volume in the tank dish.

7.0 RESIDUAL TANK WASTE CHARACTERIZATION

This section describes the results of residual tank waste characterization for SST C-203. Two statistical estimates of residual waste inventory are presented based on laboratory analysis of waste samples taken after completion of retrieval.

The calculated inventories for all the 158 constituents analyzed in the SST C-203 residual waste will be used as input for calculating the potential risk to human health that arises from the residual waste. This post-retrieval risk assessment is discussed in Section 8.0.

7.1 SAMPLING AND ANALYSIS OF RESIDUAL WASTE

The following three documents provide guidance and requirements for sampling and analysis of residual waste:

a. RPP-PLAN-23827, *Sampling and Analysis Plan for Single-Shell Tank Component Closure*. This document identifies regulatory requirements for field sampling, laboratory analysis, and data reporting for residual waste samples to ensure collection of appropriate data that supports closure activities conducted at the SSTs.

b. RPP-23403, *Single-Shell Tank Component Closure Data Quality Objectives*. This document describes the analytical strategy and the DQO process to ensure appropriate data are collected to support the component closure activities for all SSTs.

c. RPP-PLAN-23680, *Sampling and Analysis Plan for Residual Waste Solids in the C-200 Series Tanks*. This document summarizes the sampling and analytical requirements in items a. and b. and provides additional guidance and clarification for satisfying the requirements. The guidance and clarification are necessary to address conditions that are specific to the C-200-series tanks including SSTs C-201, 202, 203, and 204.

Estimating the inventory of constituents in the SST C-203 residual waste based on sampling and analyses is described in RPP-RPT-27233, *Tank 241-C-203 Residual Waste Inventory Estimates for Tank Component Closure Risk Assessment*, and summarized in Section 7.2.

7.2 SAMPLING AT SST C-203

The fingertrap method was used to obtain samples of residual waste at SST C-203. This is one of two methods considered acceptable for collecting samples of residual solids in a tank (RPP-23403). Sampling guided by a video camera was conducted through Riser 6 (see configuration in Figure 1-2) on May 17, 2005, collecting four solid samples. Because the recoveries were poor (1.5 to 15.6 g per sample), four more samples were collected on May 25, 2005. Minor adjustments were made to the sampling technique, and substantial recoveries up to 130 g per sample were achieved on the second day. The four samples collected on May 25 were subsequently analyzed in accordance with requirements established in RPP-23403, RPP-PLAN-23827, and RPP-PLAN-23680.

7.3 SAMPLE ANALYSES

The 222-S Laboratory at Hanford used a total of 21 analytical techniques to measure the concentration of various organic constituents, inorganic constituents, and radionuclides. A list of the techniques is presented in Table 7-1. Analysis of the samples resulted in concentration estimates for 158 constituents in the SST C-203 residual waste.

Table 7-1. SST C-203 Residual Waste Sample Analysis Techniques.

Analysis Technique	SW-846 Method[a]	Constituents
Inorganic Analyses		
Gravimetric	Not applicable	Bulk density
pH measurement	9045C	pH
Ion selective electrode	9215	Sulfide
Thermogravimetric	Not applicable	Wt% water
Spectrophotometric	9014	Cyanide
Cold vapor atomic absorption	7471A	Mercury
Ion chromatography	EPA 300.7	Ammonium
Ion chromatography	9056	Anions
Inductively coupled plasma/mass spectrometry	6020	Uranium, neptunium, thorium isotopes, ^{99}Tc
Inductively coupled plasma/atomic emission spectrometry	6010B	Cations (metals)
Radiochemical Analyses		
Gamma energy analysis	Not applicable	Gamma emitters
Separation/beta counting	Not applicable	^{90}Sr
Liquid scintillation	Not applicable	^{14}C
Separation/gamma energy analysis	Not applicable	^{129}I
Liquid scintillation	Not applicable	^{79}Se
Liquid scintillation	Not applicable	Tritium
Alpha energy analysis	Not applicable	Alpha emitters
Liquid scintillation	Not applicable	^{63}Ni
Organic Analyses		
Volatile organic analysis by gas chromatography/mass spectrometry	8260B	Volatile organic compounds
Semivolatile organic analysis by gas chromatography/mass spectrometry	8270C	Semivolatile organic compounds
Gas chromatography/electron capture detection	8082	Polychlorinated biphenyls

[a] SW-846, *Test Methods for Evaluating Solid Waste, Physical/Chemical Methods.*

Uncertainty in the concentration estimates (means) due to waste heterogeneity and sampling and analytical errors was analyzed. The document HNF-SD-CP-QAPP-016, *222-S Laboratory Quality Assurance Plan*, establishes quality and documentation controls for the sample analyses; in addition, the DQO specifies precision and accuracy criteria to ensure the data meet quality objectives that are specific to the closure project. The analyses were performed according to the laboratory's quality assurance plan and the data satisfied the DQO requirements. The mean concentration for each constituent and its uncertainty, presented as a relative standard deviation, is presented in Appendix A, Table A-1.

A description of the analysis techniques and analytical data appears in RPP-RPT-26925, *Final Report for Tank 241-C-203 Post-Retrieval Solid Finger Trap Grab Samples*. Electronic data were also loaded into the Hanford Tank Waste Information Network System (TWINS).

7.4 COMPUTATION OF RESIDUAL INVENTORY

7.4.1 Computation Method

This section describes the method for computing two inventories: the nominal inventory and the 95% UCL inventory. The nominal inventory for residual waste constituents in SST C-203 was computed by multiplying the mean concentration, the mean density, and the waste volume (i.e., inventory = concentration x density x volume). Because residual waste concentration data were reported on a per unit weight basis (see Table A-1 in Appendix A), a mean density was used to convert the concentration data to per unit volume basis.

Analytical data and the statistical model used for estimating the mean concentration, mean density, variances, and standard deviations for constituents are discussed in RPP-RPT-27233. For constituents that had concentrations below the detection limits, the value of the detection limits were used for calculating the mean concentrations. In accordance with BBI protocol, the relative standard deviations for nondetected constituents are assumed to be 100% (RPP-6924, *Statistical Methods for Estimating the Uncertainty in the Best-Basis Inventories*). Based on the mean concentration and mean density calculated above and the residual waste volume, the nominal inventory of constituents in the residual solid waste was developed.

The 95% UCL inventory is an upper-bounding estimate of the inventory; it was calculated using a statistical method described in RPP-6924. The input for this calculation includes the means and variances for sample concentrations, sample density, and total residual waste volume. Details of the method and formula used for deriving this inventory are described in RPP-RPT-27233.

7.4.2 Results

Results of the estimated nominal inventory and 95% UCL inventory for all 158 constituents analyzed in the SST C-203 residual waste are presented in Appendix A, Tables A-2 and A-3.

8.0 POST-RETRIEVAL SINGLE-SHELL TANK 241-C-203 RISK ASSESSMENT

The potential impacts to human health posed by the residual waste in SST C-203 were calculated using the methodology documented in DOE/ORP-2005-01, *Single-Shell Tank Performance Assessment*. Figure 8-1 provides a schematic of the process used for the SST C-203 risk assessment, and this methodology is described in detail in Chapter 3 of DOE/ORP-2005-01. It should be noted that the DOE/ORP-2005-01 methodology supersedes the WMA C risk assessment methodology provided in RPP-13774, *Single-Shell Tank System Closure Plan*.

As noted above, the risk assessment results presented in this RDR were developed using the same methodology as that used in DOE/ORP-2005-01. However, the source term used in this SST C-203 risk assessment was derived from post-retrieval measured residual waste volume (see Section 6.0) and post-retrieval sample results (see Section 7.0) that were not available for use in DOE/ORP-2005-01. The source term presented in this RDR will be incorporated into future revisions of DOE/ORP-2005-01and the WMA C performance assessment.

Effects were calculated using the nominal and 95% UCL inventory. Results show that for both the groundwater pathway and inadvertent intruder scenarios, the effects associated with SST C-203 were well below performance objectives.

8.1 CONSTITUENTS EVALUATED

Following retrieval, the residual sludge was sampled and analyzed. This risk assessment is based on the analytical results from the post-retrieval sample (Section 7.0).

Analytical data for SST C-203 were collected and analyzed in accordance with the procedures described in RPP-23403, *Single-Shell Tank Component Closure Action Data Quality Objectives*, and RPP-PLAN-23827, *Sampling and Analysis Plan for Single-Shell Tank Component Closure*. The retrieval samples were analyzed for 158 constituents [i.e., radionuclides, volatile organic compounds, semivolatile organic compounds, polychlorinated biphenyls, and inorganics (including metals and conventional parameters)] in accordance with approved 222-S Laboratory procedures based on U.S. Environmental Protection Agency (EPA) approved methods.
All analytes with toxicity values were evaluated. However, analytes flagged as a nondetect were evaluated at one-half the detection limit in accordance with EPA/540/1-89/002, *Risk Assessment Guidance for Superfund Volume I Human Health Evaluation Manual (Part A) Interim Final*.

Figure 8-1. SST C-203 Residual Waste Inventory and Risk Assessment Process.[a]

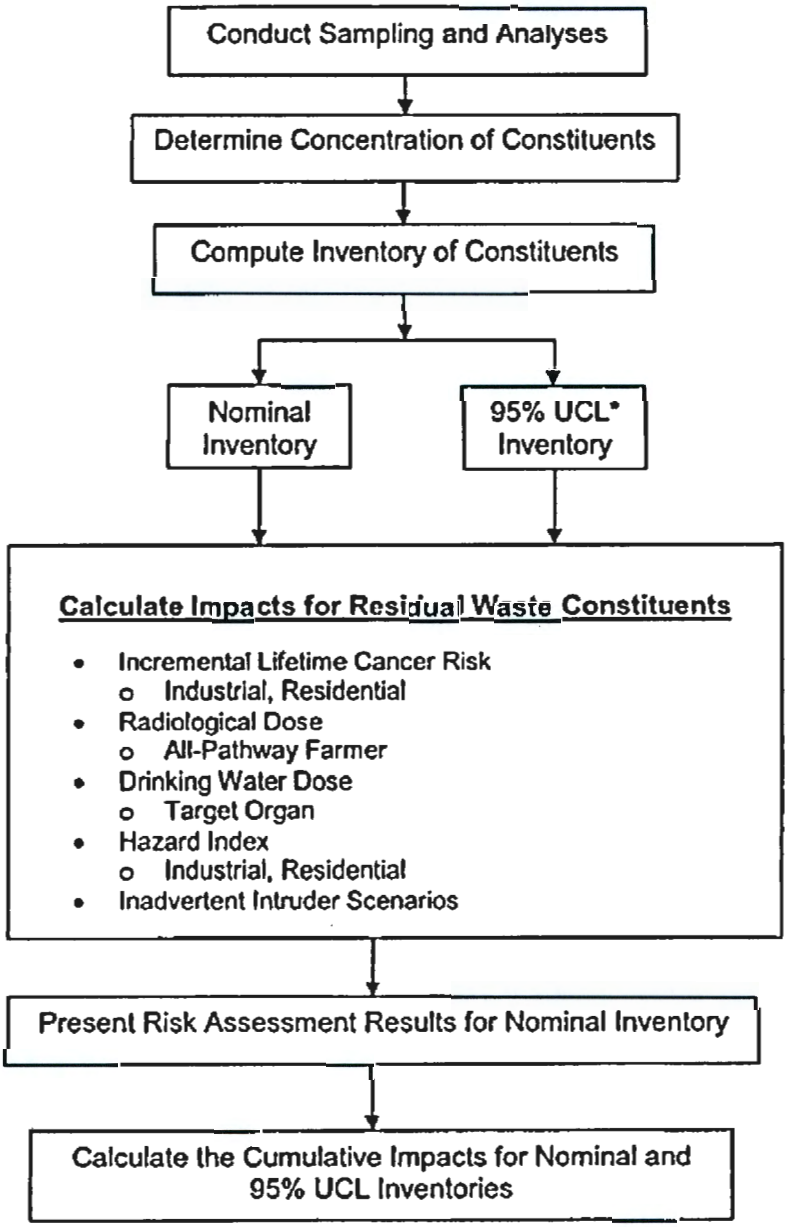

* UCL Upper Confidence Level

[a] This process is described in detail in Chapter 3 of DOE/ORP-2005-01.

8.2 RESULTS FOR INDIVIDUAL CONTAMINANTS FOR POST-RETRIEVAL SINGLE-SHELL TANK 241-C-203

Table 8-1 provides the main contributors to the ILCR (industrial and residential scenarios), groundwater dose [all pathways farmer (APF) scenario], and drinking water dose for radiological components of the residual waste remaining in SST C-203. Table 8-2 shows the primary groundwater constituents that contribute to ILCR and the Hazard Quotient. In each of these tables the following columns are provided.

a. **Analyte Name.**

b. **Inventory** from RPP-RPT-27233. The inventory shown here for nondetects is calculated at one-half the detection limit

c. **Detect** is an indicator whether an analyte was detected in the laboratory.

d. **WMA C Fenceline Concentration** is the maximum modeled concentration for a constituent at the WMA C fenceline over the modeling period. In some cases, individual analytes may not have a corresponding concentration at the fenceline because short-lived radionuclides will decay away before the contaminant can arrive at the WMA C fenceline. Relatively immobile contaminants (i.e., K_d greater than 0.6 mg/L) will also result in a zero concentration at the fenceline as they will not reach the fenceline within 10,000 years.

e. K_d is the mobility factor used in the groundwater modeling for the analyte. The smaller the K_d, the more mobile the contaminant; if the K_d is zero, the contaminant moves with the groundwater.

f. **Half-life** is the duration in years for a radionuclide to decay to half its activity. Organic compounds were assumed not to decay.

g. **ILCR Scenarios** (groundwater) are described in HNF-SD-WM-TI-707, *Exposure Scenarios and Unit Dose Factors for Hanford Tank Waste Performance Assessments*, for the industrial and residential exposure scenarios.

h. **Radiological Dose Groundwater** is the estimated drinking water dose for the APF exposure scenario (radionuclides only).

i. **Radiological Dose Beta/Photon** is the drinking water dose for radionuclides using equivalent dose (radionuclides only).

j. **Hazard Quotient Scenarios** are for residential and industrial scenarios described in HNF-SD-WM-TI-707 (nonradionuclides only).

Table 8-1. Estimated Maximum Incremental Lifetime Cancer Risk/Radiological Dose During the Modeling Period for Primary Radionuclides.

Analyte	Inventory (Ci)	Detect	WMA C Fence Line Concentration (pCi/L)	K_d (mL/g)[a]	Half-Life (yr)	Incremental Lifetime Cancer Risk Scenarios (Groundwater)[b]		Radiological Dose Groundwater (mrem/yr)[b]	Radiological Dose Beta/Photon (mrem/yr)[b]
						Industrial	Residential	All Pathway Farmer	Drinking Water
^{99}Tc	2.56E-03	Yes	1.02E-02	0	211,097	1.41E-10	3.43E-09	1.79E-05	4.54E-05
^{129}I	1.62E-05	Yes	9.17E-11	0.2	15,700,000	6.80E-17	3.52E-16	4.82E-11	3.67E-10
^{234}U	1.24E-01	Yes	0	0.6	245,694	0	0	0	N/A
$^{235+D}U$	5.27E-03	Yes	0	0.6	703,700,000	0	0	0	N/A
^{236}U	9.17E-04	Yes	0	0.6	23,420,000	0	0	0	N/A
$^{238+D}U$	1.20E-01	Yes	0	0.6	4,468,000,000	0	0	0	N/A
^{14}C	4.39E-04	No	6.77E-04	0	5,730	5.26E-12	3.80E-11	3.28E-06	1.35E-06
^{233}U	3.49E-02	No	0	0.6	159,198	0	0	0	N/A
Performance objective[c]						1-0E-6 to 1.0E-4[d]	1-0E-6 to 1.0E-4[d]	25 mrem/yr[e]	4 mrem/yr[f]

[a] See PNNL-13895, *Hanford Contaminant Distribution Coefficient Database and Users Guide*, Rev. 1, for the basis for the K_d values listed for the radionuclides.
[b] All exposure scenarios are described in HNF-SD-WM-TI-707.
[c] Performance objectives apply to the cumulative (i.e., all contaminants) for the entire WMA.
[d] EPA/540/R-99/006, *Radiation Risk Assessment at CERCLA Sites: Q & A, Directive* 9200.4-31P.
[e] DOE O 435.1, *Radioactive Waste Management.*
[f] 66 FR 76708, "National Primary Drinking Water Regulations; Radionuclides; Final Rule."

Notes:
Shaded cells are nondetect and the inventory used in the risk assessment is calculated at one-half the minimum detection limit. The inventory shown here is one-half the reported inventory given in RPP-RPT-27233.
N/A radionuclide is not a beta/photon emitter.

Table 8-2. Estimated Maximum Value for Incremental Lifetime Cancer Risk and Hazard Quotient per Nonradionuclides.

Analyte	Inventory (kg)	Detected	WMA C Fence Line Concentration (mg/L)	K_d (mL/g)[a]	Incremental Lifetime Cancer Risk Scenarios (Groundwater)[b]		Hazard Quotient Scenarios (Groundwater)[b]	
					WAC-173-340 Method B	WAC-173-340 Method C	WAC-173-340 Method B	WAC-173-340 Method C
Chromium	2.86E+00	Yes	1.17E-05	0	NTF	NTF	3.02E-04	1.21E-04
Fluoride	1.80E+00	Yes	7.41E-06	0	NTF	NTF	7.72E-06	3.53E-06
Nitrate	4.13E+00	Yes	1.70E-05	0	NTF	NTF	6.63E-07	3.03E-07
Cobalt	2.64E-02	Yes	7.27E-10	0.1	NTF	NTF	4.21E-09	1.68E-09
2-Propanone (Acetone)	2.22E-04	Yes	9.13E-10	0	NTF	NTF	1.27E-10	5.80E-11
2-Butanone(MEK)	7.99E-05	Yes	3.28E-10	0	NTF	NTF	6.83E-11	3.12E-11
Xylenes	2.02E-05	Yes	6.61E-11	0.02	NTF	NTF	4.13E-11	1.89E-11
N-nitroso-di-n-propylamine	3.99E-04	No	1.64E-09	0	1.31E-10	1.31E-10	NTF	NTF
Chloroethene(vinyl chloride)	1.72E-06	No	7.06E-12	0	2.26E-13	1.16E-13	2.94E-10	1.34E-10
1, 1, 2-Trichloroethylene	4.90E-06	No	1.60E-11	0.02	1.47E-13	1.47E-13	6.68E-09	3.05E-09
Nitrite	5.47E-01	No	2.24E-06	0	NTF	NTF	1.40E-06	6.41E-07
Nitrobenzene	4.46E-04	No	1.46E-09	0.02	NTF	NTF	1.82E-07	8.34E-08
Pyridine	3.94E-04	No	1.62E-09	0	NTF	NTF	1.01E-07	4.62E-08
2-Chlorophenol	4.08E-04	No	1.67E-09	0	NTF	NTF	2.09E-08	9.56E-09
2, 4, 6-Trichlorophenol	4.03E-04	No	1.11E-11	0.1	1.39E-15	1.39E-15	6.93E-09	3.17E-09
n-Butyl alcohol (1-butanol)	1.72E-03	No	7.06E-09	0	NTF	NTF	4.41E-09	2.02E-09
Carbon tetrachloride	4.57E-06	No	1.49E-11	0.02	4.43E-14	4.43E-14	2.66E-09	1.22E-09
Performance objective[c]					1.0E-06[d]	1.0E-06[e]	1.0[f]	1.0[g]

[a] See PNNL-13895, *Hanford Contaminant Distribution Coefficient Database and Users Guide*, Rev. 1, for the basis for the K_d values listed for chromium and nitrate. The K_d values listed for the organic chemical compounds are determined from the chemicals' organic carbon/water partitioning coefficient and an estimate of 0.03% for the Hanford Site sediments fraction of organic content (PNNL-13895, Rev. 1, page 11, paragraph 3).
[b] All exposure scenarios are described in HNF-SD-WM-TI-707.
[c] Performance objectives apply to entire WMA, not just a single component of the WMA.
[d] WAC 173-340-705 (2)(c)(ii).
[e] WAC 173-340-706 (2)(c)(ii).
[f] WAC 173-340-705 (2)(c)(i).
[g] WAC 173-340-706 (2)(c)(i).

Notes:
NTF = No toxicity factor available (i. e., Reference Dose or Cancer Slope Factor are not available).
Shaded cells are nondetect and the inventory used in the risk assessment is calculated at one-half the minimum detection limit. The inventory shown here is one-half the reported inventory given in RPP-RPT-27233.

8.3 CUMULATIVE ANALYSIS RESULTS FOR TANK C-203 AND WMA C

The cumulative analysis (i. e., sum of the risk metrics) for the tank C-203 residual nominal and 95% UCL risk levels were calculated.

a. **Nominal Inventory**—best estimate of the residual waste inventory computed using mean sample concentrations, mean sample density, and best estimate of the residual volume.

b. **95% Upper Confidence Level Inventory**—considered the bounding inventory. The 95% UCL of the nominal inventory was calculated based on uncertainties associated with the concentration, volume, and density (for solids) measurements (see Section 7.0).

The effects per performance metric associated with each inventory are given in Table 8-3. Two land use scenarios (industrial and residential) were evaluated for HI and ILCR. All effects for both the nominal and 95% UCL inventories were two to four orders of magnitude below the performance objectives.

Table 8-3. Cumulative Incremental Lifetime Cancer Risk, Hazard Index, and Radiological Drinking Water Dose from Peak Groundwater Concentration Related to Residual Waste Volume in SST C-203.

Metric[a]	Industrial Receptor[b]		Residential Receptor[b]		Performance Objective[c]
	Nominal	95% UCL	Nominal	95% UCL	
Radioactive chemicals ILCR (unitless)	1.46E-10	2.51E-10	3.46E-09	5.89E-9	1.0E-06 to 1.0E-4[d]
Nonradioactive chemicals ILCR (unitless)	1.31E-10	3.95E-10	1.32E-10	3.95E-10	1.0E-5[e]
Hazard Index (unitless)	1.25E-04	1.77E-04	3.12E-04	4.41E-04	1.0[e]
Dose	**Nominal**		**95% UCL**		**Dose**
APF (mrem/yr)	2.11E-05		3.84E-05		25 mrem/yr[f]
EPA MCL beta/photon emitters (mrem/yr target organ dose)	4.67E-05		8.00E-05		4 mrem/yr[g]
Groundwater Concentration	**Nominal**		**95% UCL**		**MCL**
^{99}Tc (pCi/L)	1.02E-02		1.73E-02		900 pCi/L
^{129}I (pCi/L)	9.2E-11		2.39E-10		1 pCi/L
Chromium (mg/L)	1.17E-05		1.65E-05		0.1 mg/L
Uranium (mg/L)	0		0		0.03 mg/L

[a] Metric ILCR-Rad were evaluated using industrial and residential land use scenarios described in HNF-SD-WM-TI-707. ILCR-non-Rad and Hazard Index were evaluated using WAC 173-340 Method C (industrial) and Method B (residential).
[b] Exposure scenarios from HNF-SD-WM-TI-707.
[c] Performance objectives apply to entire WMA, not just a single component of the WMA
[d] EPA/540/R-99/006, *Radiation Risk Assessment at CERCA Sites: Q & A, Directive 9200.4-31P.*
[e] WAC 173-340-705 (4) and WAC 173-340-706 (4).
[f] DOE O 435.1, *Radioactive Waste Management.*
[g] 66 FR 76708, "National Primary Drinking Water Regulations; Radionuclides; Final Rule."

8.4 INADVERTANT INTRUDER

The DOE intends to control the Hanford Site after closure of the SSTs for as long as the waste may be dangerous to an intruder. However, DOE recognizes that an inadvertent intruder may be onsite and not be discovered until after exposure has occurred. The radiological dose to an inadvertent intruder is therefore estimated as a part of this risk assessment.

The dose calculated for the intruder scenarios defined in HNF-SD-WM-TI-707 are provided in Table 8-4 for the nominal and bounding inventories. Except for the suburban gardener, the intruder dose is greater than a factor of 100 below the performance objectives at 100 years after closure. The suburban gardener is approximately a factor of 6 to 9 below the performance objective at 100 years after closure and approximately 15 to 20 below the performance objective at 500 years after closure.

Table 8-4. Intruder Dose Summary for C-203.

Intruder Scenario	Nominal Inventory		95th Percentile UCL Inventory	
	100 Years after Closure	500 Years after Closure	100 Years after Closure	500 Years after Closure
Well driller	2.3 mrem	0.73 mrem	2.8 mrem	1.1 mrem
Rural pasture	0.76 mrem/yr	0.18 mrem/yr	0.93 mrem/yr	0.26 mrem/yr
Suburban garden	11 mrem/yr	4.5 mrem/yr	15 mrem/yr	6.8 mrem/yr
Commercial farm	0.011 mrem/yr	0.0051 mrem/yr	0.014 mrem/yr	0.0073 mrem/yr

Notes:
Site closure is assumed to occur on January 1, 2032.
The performance objective for the well driller is 500 mrem. The performance objective for the other scenarios is 100 mrem/yr.

8.5 SUMMARY

This risk assessment is summarized in the following points:

a. The effects estimated for SST C-203, using the nominal inventory, are two to four orders of magnitude below the performance objectives.

b. The following analytes had the most impact per performance metric:

   1. **ILCR-Rad:** ^{99}Tc and ^{14}C contributed 96% and 4%, respectively, of the total for the industrial land use scenario; and for the residential land use scenario, these same analytes contributed 99% and 1%, respectively. Note that ^{14}C was not detected in the post-retrieval sample and was evaluated at one-half the detection limit.

   2. **ILCR-Nonrad:** No detected analyte provided impacts. Of the nondetected analytes, N-nitroso-di-n-propylamine had the largest impact with an ILCR of 1.31E-10, and all other analytes (all nondetected) had ILCR values that were several orders of magnitude below that of N-nitroso-di-n-propylamine.

3. **III:** Cr^{+6} and fluoride contributed 96.8% and 2.5%, respectively, of the total for the industrial land use scenario; and for the residential land use scenario, these same analytes contributed 96.8% and 2.8%, respectively.

4. **APF:** ^{99}Tc and ^{14}C contributed 84% and 16%, respectively, of the total for the APF.

5. **Drinking Water Dose (Target Organ):** ^{99}Tc and ^{14}C contributed 97% and 3%, respectively, of the total for drinking water dose.

6. **Intruder Dose:** ^{137}Cs, ^{90}Sr, and plutonium isotopes contribute most of the dose in the first 300 years; after that it is plutonium isotopes, uranium isotopes, and ^{237}Np.

c. Table 8-5 provides a comparison of the inventory used in DOE/ORP-2005-01 with the inventory calculated from the post-retrieval sample. With the exception of ^{238}Pu and ^{137}Cs, the inventory used in DOE/ORP-2005-01 is either slightly less than the post-retrieval sample inventory (^{99}Tc and uranium) or greater than the post-retrieval sample inventory.

Table 8-5. Comparison of IITWOS Predicted Inventory used in DOE/ORP-2005-01 and the Nominal Post-Retrieval Inventory.

Analyte	DOE/ORP-2005-01[a] (IITWOS Predicted)	Nominal Post-Retrieval[a]	Ratio of Nominal Inventory/IITWOS
^{99}Tc (Ci)	0.00188	0.00256	1.36
^{90}Sr (Ci)	27.8	2.51	0.09
^{137}Cs (Ci)	2.02	14	6.93
^{238}Pu (Ci)	0.0492	0.535	10.87
^{239}Pu (Ci)	1.55	0.116	0.07
^{240}Pu (Ci)	0.334	0.0333	0.10
$^{241+D}Pu$ (Ci)	1.77	0.66	0.37
Chromium (kg)	16.9	2.86	0.17
Fluoride (kg)	6.8	1.8	0.26
Uranium (kg)	219.0	343	1.57

[a] Inventories for contaminants having the greatest impact for groundwater or inadvertent intruder pathway.

9.0 ADDITIONAL RETRIEVAL TECHNOLOGIES

This section discusses the feasibility of available retrieval technologies, the feasibility of developing additional retrieval technologies, and the amount of additional waste that could be removed from SST C-203.

The SST C-203 waste retrieval campaign was the first time the VRS, described in Section 2.0, was used to retrieve waste from a Hanford SST. The VRS retrieval satisfied M-45-00 retrieval criteria by retrieving waste from SST C-203 to the limit of the VRS, and leaving a residual with a calculated volume of 18.5ft^3.

9.1 FEASIBILITY AND VIABILITY OF OTHER AVAILABLE WASTE RETRIEVAL TECHNOLOGIES

Several variations of sluicing described in RPP-20577, *Stage II Retrieval Data Report for Single Shell Tank 241-C-106*, and RPP-RPT-27406, *Demonstration Retrieval Data Report for Single Shell Tank 241-S-112*, were evaluated. These include raw water modified sluicing, modified circulation system, remote water lancing, and ex-tank water heater on a recirculation line. However, RPP-16525, *C-200-Series Tanks Functions and Requirements*, precludes the use of sluicing technologies for tanks designated "assumed leakers" to minimize water additions and mitigate potential leaks during retrieval. As a result, sluicing technologies were not considered further.

The only other available technology reviewed was the mobile retrieval system (MRS). The MRS is currently the preferred technology for 100-Series SSTs designated as assumed leakers. The MRS is similar to the VRS system in many respects but also deploys an in-tank vehicle (ITV). The ITV may have the capacity to move waste to the vacuum head, possibly retrieving more waste from the tank compared to using the VRS alone. However, the existing VRS with its AMS can reach all areas of the tank bottom, so any benefit from deploying the ITV would be negligible. Additionally, existing risers for the 200-series tanks are not large enough to accommodate the MRS system and would require some modification or construction of new risers to allow the use of the MRS. This is deemed impractical due to expected high worker exposure during construction of risers. As a result, MRS was also eliminated from consideration.

9.2 FEASIBILITY OF DEVELOPING NEW TECHNOLOGIES

New technologies are under development that could possibly enhance retrieval performance for future tanks, but these were not available for SST C-203. A brief description of these technologies follows in Sections 9.2.1 through 9.2.5. The technologies discussed are at varying stages of development. Some require substantial investment in research and development while others have already been deployed elsewhere but would need to be adapted for use at the Hanford Site. Activities needed to deploy these technologies could include engineering, procurement, testing, and construction. More detailed information regarding these technologies is included in RPP-20577.

9.2.1 AEA Technology Power Fluidics™[6]

The power fluidic process for sampling, mixing, and pumping tank waste at the Hanford Site has been evaluated for several years. This fluidic mixing and pumping system was tested by the Hanford Site SST retrieval program to demonstrate potential for dissolution of saltcake waste and mobilization and retrieval of insoluble solids (e.g., sludge waste). Testing results indicated that the fluidic mixing and pumping system did not fully meet objectives and that further development and demonstration would be required. Operation of this system appears to require use of high water volumes, which would preclude its use in an "assumed leaker" such as SST C-203.

9.2.2 Russian Pulsatile Mixer Pumps/Fluidic Retrieval Systems

The Russian Integrated Mining and Chemical Combine fluidic concept for mixing and pumping tank waste is similar to the power fluidics system but has design details different for the pump mechanism and nozzles. While the power fluidics system has no moving parts in the pump, the Russian unit uses a simple check valve mechanism. Both systems use two distinct cycles, fill and discharge, to perform a mixing action. Operation of this system, like the power fluidics system, appears to require use of high water volumes, which would preclude its use in an "assumed leaker" such as SST C-203.

9.2.3 Small Mobile Retrieval Vehicles

The following mobile retrieval systems were assessed.

a. Remotely Operated Vehicle Systems at Oak Ridge—In the 1996-1998 period, Oak Ridge National Laboratory deployed a series of hydraulically powered, remotely operated vehicles. The equipment was redesigned and improved. As redesigned, the equipment was a 4 ft x 5 ft parallelogram-style frame. Folding the frame enabled the device to deploy through a 24-in. tank riser (it is unclear whether this equipment could be deployed through the 24-in. SST C-203 hatchway, which is the largest opening in the tank roof). Many hardware failures occurred during deployment, requiring repair or replacement. The equipment was later used in other tanks in conjunction with a wall-washing tool (the linear scarifying end-effector), a confined sluicing end-effector, and a modified light duty utility arm[7] (MLDUA).

   The MLDUA was used at Oak Ridge to clean seven underground tanks, but shortcomings were observed in its operation. Although lessons learned were documented for both design and operations, the lessons have not been incorporated into any subsequent versions of the MLDUA.

b. Scarab III[8]—The Scarab III vehicles use four rubber-treaded wheels for traction on slick surfaces and four metal wheels for biting into thin layers of waste. The Scarab can climb over 8-in. obstacles and has a manipulator arm. The manipulator gripper end-effector has a payload limit of 5 lb and requires an 18-in.-diameter access. The unit has three on-board cameras for viewing deployment, retrieval, and driving operations. This system

[6] AEA Technology Power Fluidics™ is a registered trademark of AEA Technology, Glengarnock, United Kingdom.
[7] Modified Light Duty Utility Arm is a trademark of SPAR Aerospace, Ltd., Edmonton, Alberta, Canada.
[8] Scarab III is a trademark of R.O.V. Technologies, Inc., Vernon, Vermont.

has been used primarily for sampling at Hanford but has not been demonstrated for retrieval and requires additional development and testing.

c. TMR Associates VAC TRAX[9]—The VAC TRAX is a remote-operated rotating high-pressure water jetting tool that directs ultra-high-pressure water to remove material coverings from a variety of surfaces, e.g., contaminated paint from concrete walls and floors. At higher pressures, the equipment can perform light scabbling or deep scarification of concrete surfaces. The equipment is fully encapsulated with water and debris vacuumed from a manifold through a flexible vacuum hose. The system supplies water up to 36,000 psi through a rotating manifold containing orifices to produce a concentrated stream. However, this system operates in a submerged environment and would be precluded in an "assumed leaker" such as SST C-203.

9.2.4 Tank Wall Washing at West Valley Demonstration Project

The retrieval process was very efficient during early stages of waste removal at the West Valley Demonstration Project. As the process moved from bulk removal to heel and residue retrieval, the number of transfers and associated time per transfer climbed steadily (Hamel and Damerow, *Completing HLW Vitrification at the WVDP; The Approach to Final Retrieval, Flushing, and Characterization*). Riser-mounted arms and positioning systems were developed to provide capability to wash residues from internal tank surfaces. Oxalic acid and mixed organic acids were not used because of concerns for tank integrity. This system may remove additional waste from tank walls, but because only a minimal amount of waste is left on the SST C-203 walls, there is little benefit in removing additional waste compared to the time and cost to test and deploy this system.

9.2.5 Dry Ice Blasting

Decontaminating surfaces using dry ice blasting is a relatively new cleaning process using solid CO_2 pellets. The pellets sublimate (convert directly from a solid blast pellet to a vapor) leaving no residue. This is envisioned as a sandless sandblasting approach to dislodge hard-to-remove residue from the tank surfaces. The dry ice is accelerated by compressed air and requires between 80 psi to 100 psi and 120 cfm to 150 cfm (Lapointe, *Sand-less Sandblasting*). On a fact sheet for alternatives to trichloroethane, EPA identified dry ice blasting with solid pellets as a desirable alternative for cleaning metal surfaces [EPA-905-F-00-026, *Technical Fact Sheet for 1,1,1-Trichloroethane (TCA) Hazards and Alternatives*]. Like tank wall washing, this system may remove additional waste from tank walls, but because only a minimal amount of waste is left on the SST C-203 walls, there is little benefit in removing additional waste compared to the time and cost to test and deploy this system.

9.3 ADDITIONAL WASTE REMOVAL

The SST-C-203 VRS successfully removed waste to the limit of the technology and satisfied requirements set out in HFFACO Milestone M-45-00. Schedules and cost estimates for additional technologies are not included here because no feasible or practical available technologies or developing technologies were identified to retrieve additional waste from the tank.

[9] VAC TRAX is a registered trademark of TMR Associates, Rutherford, New Jersey.

10.0 RECOMMENDATIONS FOR FURTHER ACTION

This section provides recommendations for further actions and discusses opportunities to refine waste retrieval technologies based on lessons learned from the C-203 retrieval.

10.1 RECOMMENDATIONS FOR SST C-203

As demonstrated by information presented in this RDR, retrieval of SST C-203 is complete. DOE has no recommendation for additional retrieval actions at SST C-203 because M-45-00 retrieval criteria for this tank are satisfied as shown in Sections 5.0 and 6.0 of this RDR.

10.2 OPPORTUNITIES FOR IMPROVEMENT OF FUTURE WASTE RETRIEVAL OPERATIONS AT OTHER SINGLE-SHELL TANKS

Opportunities to improve future waste retrieval operations at other SSTs are based on formal lessons learned developed from the SST C-203 Retrieval Lessons Learned Workshop held on April 29, 2005. The workshop identified successful aspects of the SST C-203 retrieval campaign that could improve waste retrieval at other SSTs and adjustments to certain SST-C-203 procedures that could produce improved results in future retrievals. Opportunities to improve retrieval operations at other SSTs were identified in three major areas:

a. Use of the VRS.
b. Supporting equipment and instrumentation.
c. Retrieval procedures.

Potential improvements are discussed in Section 10.2.1 through 10.2.3.

10.2.1 Vacuum Retrieval System—Future Deployments and Potential Improvements

The C-203 retrieval campaign proved that the VRS can be used successfully in a radiological environment to satisfy M-45-00 retrieval criteria for Hanford SSTs. The VRS combined rugged industrial equipment with proven reliability. The VRS performed beyond the parameters predicted and should be strongly considered for use in other SSTs with appropriate operating environments and waste composition.

The lessons-learned process identified specific measures that could further improve VRS operations. Vacuum line-related improvements include shortening the line length by relocating the vessel pump skid closer to the AMS, straightening the line as much as possible, and inspecting the line for restrictions during installation.

Enlarging opening areas of the AMS suction head screen from 3/8 in. to 5/8 in. would permit removal of larger pieces of waste. Increasing the size of the heat exchanger would promote cooling of the vacuum pump seal water and reduce tank fogging. An increase in the size of the slurry vessel from 250 gal to 400 gal could improve batch efficiency. Appropriate reductions in the number of line flushes could reduce water use.

10.2.2 Improvements in Supporting Equipment and Instrumentation

The C-203 retrieval campaign and the lessons learned produced specific results and ideas for improving the performance of supporting equipment and instrumentation. Video and still camera equipment were extensively used. These proved valuable in assessing retrieval progress, communicating the status of the campaign to persons not directly involved in retrieval operations, and developing information on the tank interior, including retrieval equipment, other objects in the tank, and the extent of residual waste.

Lessons learned from the retrieval campaign included the desirability of making adjustments to instruments monitoring fluids. Additional metering could provide better quantification of water added to an SST during retrieval. Constructing a metering array in a manner that accounts for interfaces between instrumentation could increase accuracy.

10.2.3 Improvements in Procedures Associated with Retrieval

Several procedural improvements made as part of the C-203 campaign would likely benefit future retrievals at other tanks. Vacuum retrieval system performance improvements and troubleshooting efforts made during the campaign were accelerated and enhanced by trials at the CTF. Ventilation system improvements derived from lessons learned at SSTs C-106 and S-112 resulted in greater reliability. Improved communication with the Washington State Department of Ecology resulted in greater confidence that M-45-00 retrieval criteria are satisfied. Careful development of supporting technical documents and data collection systems increased the reliability and accessibility of information and reduced the likelihood of delays.

11.0 REFERENCES

66 FR 76708, 2000, "National Primary Drinking Water Regulations; Radionuclides; Final Rule," *Federal Register*, Vol. 65, pp. 76707-76753 (December 7).

AIR 03-704, NOC ID 579, 2003, *Approval of Notice of Construction for 241-C-200 Series Tanks Retrieval*, Washington State Department of Health, Olympia, Washington.

CVI-73550, 1943, Drawing D-20, *Typical Sections for 20 ft Tanks*, and Drawing D-23, *Structural Steel Lining for 20 ft Tanks*, Richland, Washington.

DOE O 435.1, 1999, *Radioactive Waste Management*, U.S. Department of Energy, Washington, D.C.

DOE/ORP-2005-01, 2006, *Single-Shell Tank Performance Assessment*, Rev. 0, U.S. Department of Energy, Office of River Protection, Richland, Washington.

Ecology, EPA, and DOE, 1989, *Hanford Federal Facility Agreement and Consent Order*, as amended, State of Washington Department of Ecology, U.S. Environmental Protection Agency, and U.S. Department of Energy, Olympia, Washington.

EPA/540/1-89/002, 1989, *Risk Assessment Guidance for Superfund Volume I Human Health Evaluation Manual (Part A) Interim Final*, U.S. Environmental Protection Agency, Washington D.C.

EPA/540/R-99/006, 1999, *Radiation Risk Assessment at CERCLA Sites: Q & A*, Directive 9200.4-31P, Office of Radiation and Indoor Air, U.S. Environmental Protection Agency, Washington D.C.

EPA 905F-00-026, 2000, *Technical Fact Sheet for 1,1,1-Trichloroethane (TCA) Hazards and Alternatives*, U.S. Environmental Protection Agency, Region 5, Chicago, Illinois.

H-2-73354, 1986, *Piping Waste Tank Isolation 241-C-203*, Rev. 2, U.S. Department of Energy, Richland Operations Office, Richland, Washington.

H-14-106126-3, 2004, *C-201 Tank/Riser P & I D*, Drawing H-14-106126, Sheet 3, Rev. 7, U.S. Department of Energy, Office of River Protection, Richland, Washington.

H-14-106126-4, 2004, *C-202 Tank/Riser P & I D*, Drawing H-14-106126, Sheet 4, Rev. 7, U.S. Department of Energy, Office of River Protection, Richland, Washington.

H-14-106126-5, 2004, *C-203Tank/Riser P & I D*, Drawing H-14-106126, Sheet 5, Rev. 9, U.S. Department of Energy, Office of River Protection, Richland, Washington.

H-14-106126-6, 2004, *C-204 Tank/Riser P & I D*, Drawing H-14-106126, Sheet 6, Rev. 7, U.S. Department of Energy, Office of River Protection, Richland, Washington.

Hamel, W. F., Jr., and F. W. Damerow, 2001, "Completing HLW Vitrification at the WVDP; The Approach to Final Retrieval, Flushing, and Characterization," in *Proc. Int. Conf. WM'01*, Tucson, Arizona.

HNF-EP-0182, 2005, *Waste Tank Summary Report for Month Ending September 30, 2005*, Rev. 210, CH2M HILL Hanford Company, Inc., Richland, Washington.

HNF-SD-CP-QAPP-016, 2005, *222-S Laboratory Quality Assurance Plan*, as revised, CH2M HILL Hanford Group, Inc., Richland, Washington.

HNF-SD-WM-TI-707, 2004, *Exposure Scenarios and Unit Dose Factors for Hanford Tank Waste Performance Assessments*, Rev. 4, CH2M HILL Hanford Group, Inc., Richland, Washington.

HNF-SD-WM-TSR-006, 2003, *Tank Farms Technical Safety Requirements*, Rev. 4-F, CH2M HILL Hanford Group, Inc., Richland, Washington.

Lapointe, J., 2004, "Sand-less Sandblasting," *Pollution Engineering Magazine*, February.

PNNL-13895, 2003, *Hanford Contaminant Distribution Database and User's Guide*, Rev. 1, Pacific Northwest National Laboratory, Richland, Washington.

RPP-6924, 2000, *Statistical Methods for Estimating the Uncertainty in the Best-Basis Inventories*, Rev. 0, CH2M HILL Hanford Group, Inc., Richland, Washington.

RPP-12711, 2004, *Temporary Waste Transfer Line Management Program Plan*, Rev. 3A, Cogema Engineering, Richland, Washington.

RPP-13019, 2003, *Determination of Hanford Waste Tank Volumes*, Rev. 0, CH2M HILL Hanford Group, Inc., Richland, Washington.

RPP-13774, 2004, *Single-Shell Tank System Closure Plan*, Rev. 2, CH2M HILL Hanford Group, Inc., Richland, Washington.

RPP-14075, 2003, *Specification for the 241-C-200 Series Waste Retrieval System*, Rev. 1, CH2M HILL Hanford Group, Inc., Richland, Washington.

RPP-14283, 2004, *Performance Objectives for Tank Farm Closure Performance Assessments*, Rev. 1, CH2M HILL Hanford Group, Inc., Richland, Washington.

RPP-14627, 2003, *Characteristics of Waste in the C-200 Series of Hanford Underground Waste Tanks*, Rev. 0, CH2M HILL Hanford Group, Inc., Richland, Washington.

RPP-15408, 2003, *Origin of Wastes in C-200-Series Single-Shell Tanks*, Rev. 0, CH2M HILL Hanford Group, Inc., Richland, Washington.

RPP-16525, 2004, *C-200-Series Tanks Retrieval Functions and Requirements*, Rev. 6, CH2M HILL Hanford Group, Inc., Richland, Washington.

RPP-16945, 2005, *Process Control Plan for the 241-C-200 Series Waste Retrieval System*, Rev. 5, CH2M HILL Hanford Group, Inc., Richland, Washington.

RPP-17190, 2004, *Safety Evaluation of the Waste Retrieval System Vacuum System for 241-C Tank Farms 200-Series Tanks*, Rev. 4, CH2M HILL Hanford Group, Inc., Richland, Washington.

RPP-17507, 2003, *Waiver of Temperature Requirements During Retrieval of 241-C-200 Series Tanks*, Rev. 0, CH2M HILL Hanford Group, Inc., Richland, Washington.

RPP-18702, 2003, *Waste Compatibility Assessment of 241-C-200 Series Tank Retrieval Waste (SST-R-03-11) with Tank 241-AN-106 Waste*, Rev. 0, CH2M HILL Hanford Group, Inc., Richland, Washington.

RPP-20577, 2004, *Stage II Retrieval Data Report for Single-Shell Tank 241-C-106*, Rev. 0, CH2M HILL Hanford Group, Inc., Richland, Washington.

RPP-23403, 2005, *Single-Shell Tank Component Closure Data Quality Objectives*, Rev. 0, CH2M HILL Hanford Group, Inc., Richland, Washington.

RPP-CALC-25450, *Estimate of Remaining Waste Volume in 241-C-203 at Halting of Retrieval*, Rev. 0, CH2M HILL Hanford Group, Inc., Richland, Washington.

RPP-CALC-25672, 2005, *Calculation for the Post-Retrieval Waste Volume Determination for Single-Shell Tank 241-C-203*, Rev. 0, CH2M HILL Hanford Group, Inc., Richland, Washington.

RPP-CALC-26330, 2005, *Leak Detection Monitoring Calculation for Single-Shell Tank 241-C-203*, Rev. 0, CH2M HILL Hanford Group, Inc., Richland, Washington.

RPP-PLAN-23680, 2005, *Sampling and Analysis Plan for Residual Waste Solids in the C-200 Series Tanks*, Rev. 0, CH2M HILL Hanford Group, Inc., Richland, Washington.

RPP-PLAN-23827, 2005, *Sampling and Analysis Plan for Single-Shell Tank Component Closure*, Rev. 1, CH2M HILL Hanford Group, Inc., Richland, Washington.

RPP-RPT-22891, 2004, *Revised Methodology to Calculating Residual Waste Volume at 95% Confidence Interval*, Rev. 0, CH2M HILL Hanford Group, Inc., Richland, Washington.

RPP-RPT-23156, 2004, *C-200 Vacuum Retrieval System Waste Retrieval Simulations Report*, Rev. 0, CH2M HILL Hanford Group, Inc., Richland, Washington.

RPP-RPT-26925, 2005, *Final Report for Tank 241-C-203 Post-Retrieval Solid Finger Trap Grab Samples*, Rev. 0, ATL International, Inc., Richland, Washington.

RPP-RPT-27233, 2005, *Tank 241-C-203 Residual Waste Inventory Estimates for Tank Component Closure Risk Assessment*, Rev. 0, CH2M HILL Hanford Group, Inc., Richland, Washington.

RPP-RPT-27406, 2005, *Demonstration Retrieval Data Report for Single-Shell Tank 241-S-112*, Rev. 1, CH2M HILL Hanford Group, Inc., Richland, Washington.

SW-846, *Test Methods for Evaluating Solid Waste, Physical/Chemical Methods*, Third Edition, as amended, http://www.epa.gov/epaoswer/hazwaste/test/sw846.htm , U.S. Environmental Protection Agency, Washington, D.C.

Tank Waste Information Network System (TWINS), [Best-Basis Calculation Detail Report], available at http://twins.pnl.gov/data/datamenu.htm .

TFC-ENG-CHEM-P-47, 2005, *Single-Shell Tank Retrieval Completion Evaluation*, Rev. A-1, CH2M HILL Hanford Group, Inc., Richland, Washington.

TFC-ESHQ-ENV_FS-C-01, 2005, *Environmental Notification*, Rev. B-3, CH2M HILL Hanford Group, Inc., Richland, Washington.

TFC-OPS-OPER-C-24, 2005, *Occurrence Reporting and Processing of Operations Information*, Rev. B-3, CH2M HILL Hanford Group, Inc., Richland, Washington.

TO-220-106, 2005, *Transfer From 241-C-200 Series Tanks to 241-AN-106*, Rev. A-14, CH2M HILL Hanford Group, Inc., Richland, Washington.

WAC 173-340, "Model Toxics Control Act – Cleanup," *Washington Administrative Code*, as amended.

WHC-EP-0645, 1995, *Performance Assessment for the Disposal of Low-Level Waste in the 200 West Area Burial Grounds*, Westinghouse Hanford Company, Richland, Washington.

WHC-SD-WM-TI-730, 1996, *Performance Assessment for the Disposal of Low-Level Waste in the 200 East Area Burial Grounds*, Rev. 0, Westinghouse Hanford Company, Richland, Washington.

APPENDIX A

SINGLE-SHELL TANK C-203 RESIDUAL WASTE INVENTORIES

Table A-1. Mean Concentrations and Relative Standard Deviations of Constituents Analyzed in the SST C-203 Residual Waste. (4 sheets)

Constituent Name	CAS	<Detection Limit	Mean	Units	RSD (%)
1,1,1-Trichloroethane	71-55-6	<	6.87E-03	µg/g	100
1,1,2,2-Tetrachloroethane	79-34-5	<	5.03E-03	µg/g	100
1,1,2-Trichloro-1,2,2-trifluoroethane	76-13-1	<	7.80E-03	µg/g	100
1,1,2-Trichloroethane	79-00-5	<	5.03E-03	µg/g	100
1,1-Dichloroethene	75-35-4	<	7.93E-03	µg/g	100
1,2,4-Trichlorobenzene	120-82-1	<	7.87E-03	µg/g	100
1,2-Dichlorobenzene	95-50-1	<	1.33E+00	µg/g	100
1,2-Dichloroethane	107-06-2	<	4.93E-03	µg/g	100
1,4-Dichlorobenzene	106-46-7	<	8.23E-01	µg/g	100
1-Butanol	71-36-3	<	3.40E+00	µg/g	100
2,4,5-Trichlorophenol	95-95-4	<	7.70E-01	µg/g	100
2,4,6-Trichlorophenol	88-06-2	<	7.97E-01	µg/g	100
2,4-Dinitrotoluene	121-14-2	<	8.83E-01	µg/g	100
2,6-Bis(1,1-dimethylethyl)-4-methylphenol	128-37-0	<	2.33E+00	µg/g	100
2-Butanone	78-93-3		7.90E-02	µg/g	27
2-Chlorophenol	95-57-8	<	8.07E-01	µg/g	100
2-Ethoxyethanol	110-80-5	<	1.80E+00	µg/g	100
2-Methylphenol	95-48-7	<	8.40E-01	µg/g	100
2-Nitrophenol	88-75-5	<	7.40E-01	µg/g	100
2-Nitropropane	79-46-9	<	1.20E-02	µg/g	100
4-Chloro-3-methylphenol	59-50-7	<	8.27E-01	µg/g	100
4-Nitrophenol	100-02-7	<	7.83E-01	µg/g	100
Acenaphthene	83-32-9	<	8.53E-01	µg/g	100
Acetate	71-50-1		1.39E+02	µg/g	16
Acetone	67-64-1		2.20E-01	µg/g	21
Aluminum	7429-90-5	<	3.98E+02	µg/g	100
^{241}Am	14596-10-2		3.30E-02	µCi/g	18
Ammonium ion by IC	14798-03-9	<	9.82E+01	µg/g	100
Antimony	7440-36-0	<	1.99E+02	µg/g	100
^{125}Sb	14234-35-6	<	1.59E-01	µCi/g	100
Aroclor 1016 (dry weight)	12674-11-2	<	9.75E-02	µg/g	100
Aroclor 1221 (dry weight)	11104-28-2	<	1.33E-02	µg/g	100
Aroclor 1232 (dry weight)	11141-16-5	<	2.28E-02	µg/g	100
Aroclor 1242 (dry weight)	53469-21-9	<	5.43E-02	µg/g	100
Aroclor 1248 (dry weight)	12672-29-6	<	3.08E-02	µg/g	100
Aroclor 1254 (dry weight)	11097-69-1	<	1.94E-01	µg/g	100
Aroclor 1260 (dry weight)	11096-82-5	<	3.18E-02	µg/g	100
Arsenic	7440-38-2	<	1.99E+02	µg/g	100
Barium	7440-39-3		5.12E+01	µg/g	3
Benzene	71-43-2	<	4.83E-03	µg/g	100
Beryllium	7440-41-7	<	3.18E+01	µg/g	100
Bismuth	7440-69-9		1.40E+03	µg/g	1
Boron	7440-42-8	<	5.97E+01	µg/g	100

Table A-1. Mean Concentrations and Relative Standard Deviations of Constituents Analyzed in the SST C-203 Residual Waste. (4 sheets)

Constituent Name	CAS	<Detection Limit	Mean	Units	RSD (%)
Bromide	24959-67-9	<	5.53E+01	µg/g	100
Bulk density	NA		1.93E+00	g/mL	1
Butylbenzylphthalate	85-68-7	<	1.63E+00	µg/g	100
Cadmium	7440-43-9	<	2.10E+01	µg/g	100
Calcium	7440-70-2		2.20E+03	µg/g	5
Carbon disulfide	75-15-0	<	7.10E-03	µg/g	100
Carbon tetrachloride	56-23-5	<	9.03E-03	µg/g	100
^{14}C	14762-75-5	<	8.69E-04	µCi/g	100
Cerium	7440-45-1	<	2.78E+02	µg/g	100
^{137}Cs	10045-97-3		1.38E+01	µCi/g	4
Chloride	16887-00-6		6.37E+01	µg/g	9
Chlorobenzene	108-90-7	<	5.93E-03	µg/g	100
Chloroform	67-66-3	<	7.27E-03	µg/g	100
Chromium	7440-47-3		2.83E+03	µg/g	19
Cobalt	7440-48-4		2.61E+01	µg/g	5
^{60}Co	10198-40-0	<	1.59E-02	µCi/g	100
Copper	7440-50-8		5.22E+01	µg/g	23
Cresol	1319-77-3	<	3.67E+00	µg/g	100
Cresol (m)	108-39-4	<	8.13E-01	µg/g	100
Cresol (p)	106-44-5	<	8.13E-01	µg/g	100
^{60}Cm	15510-73-3	<	5.89E-03	µCi/g	100
$^{243/244}Cm$	NA	<	5.89E-03	µCi/g	100
Cyanide	57-12-5	<	4.54E+00	µg/g	100
Cyclohexanone	108-94-1	<	5.50E+00	µg/g	100
Di-n-butylphthalate	84-74-2	<	5.57E+00	µg/g	100
Di-n-octylphthalate	117-84-0	<	9.83E-01	µg/g	100
Ethyl acetate	141-78-6	<	7.50E-03	µg/g	100
Ethyl ether	60-29-7	<	6.80E-03	µg/g	100
Ethylbenzene	100-41-4	<	1.17E-02	µg/g	100
Europium	7440-53-1		9.92E+01	µg/g	1
^{152}Eu	14683-23-9	<	7.45E-02	µCi/g	100
^{154}Eu	15585-10-1	<	5.29E-02	µCi/g	100
^{155}Eu	14391-16-3	<	1.64E-01	µCi/g	100
Fluoranthene	206-44-0	<	8.77E-01	µg/g	100
Fluoride	16984-48-8		1.79E+03	µg/g	14
Formate	12311-97-6		7.94E+01	µg/g	11
Glycolate	666-14-8	<	3.66E+03	µg/g	100
Hexachlorobutadiene	87-68-3	<	8.87E-01	µg/g	100
Hexachloroethane	67-72-1	<	4.53E-03	µg/g	100
Hexone	108-10-1	<	1.01E-02	µg/g	100
^{129}I	15046-84-1		1.60E-05	µCi/g	80
Iron	7439-89-6		1.40E+04	µg/g	22
Isobutanol	78-83-1	<	4.57E+00	µg/g	100
Lanthanum	7439-91-0	<	2.39E+01	µg/g	100

Table A-1. Mean Concentrations and Relative Standard Deviations of Constituents Analyzed in the SST C-203 Residual Waste. (4 sheets)

Constituent Name	CAS	<Detection Limit	Mean	Units	RSD (%)
Lead	7439-92-1		3.34E+03	µg/g	12
Lithium	7439-93-2	<	3.18E+01	µg/g	100
Magnesium	7439-95-4	<	1.59E+02	µg/g	100
Manganese	7439-96-5		5.58E+02	µg/g	16
Mercury	7439-97-6		2.43E+00	µg/g	14
Methylenechloride	75-09-2	<	5.90E-03	µg/g	100
Molybdenum	7439-98-7	<	3.98E+01	µg/g	100
Morpholine, 4-nitroso-	59-89-2	<	1.90E+00	µg/g	100
Naphthalene	91-20-3	<	8.47E-01	µg/g	100
Neodymium	7440-00-8	<	1.59E+02	µg/g	100
^{237}Np	13994-20-2	<	2.15E+01	µg/g	100
Nickel	7440-02-0		2.22E+02	µg/g	22
^{63}Ni-	13981-37-8		6.67E-02	µCi/g	8
Niobium	7440-03-1	<	1.99E+02	µg/g	100
Nitrate	14797-55-8		4.09E+03	µg/g	8
Nitrite	14797-65-0	<	1.08E+03	µg/g	100
Nitrobenzene	98-95-3	<	8.83E-01	µg/g	100
N-Nitroso-di-n-propylamine	621-64-7	<	7.90E-01	µg/g	100
Oxalate	338-70-5	<	1.08E+03	µg/g	100
Palladium	7440-05-3	<	3.98E+02	µg/g	100
Pentachlorophenol	87-86-5	<	6.60E-01	µg/g	100
Percent water	NA		3.55E+01	%	2
Phenol	108-95-2	<	8.13E-01	µg/g	100
Phosphorus	7723-14-0		2.57E+04	µg/g	1
^{238}Pu	13981-16-3	<	2.12E-02	µCi/g	100
$^{239/240}$Pu	NA		6.44E-01	µCi/g	24
Potassium	7440-09-7	<	1.99E+03	µg/g	100
Praseodymium	7440-10-0		1.76E+03	µg/g	2
Pyrene	129-00-0	<	8.47E-01	µg/g	100
Pyridine	110-86-1	<	7.80E-01	µg/g	100
Rhodium	7440-16-6	<	7.96E+02	µg/g	100
Rubidium	7440-17-7	<	1.19E+04	µg/g	100
Ruthenium	7440-18-8	<	2.39E+02	µg/g	100
^{106}Ru/Rb	NA	<	6.41E-01	µCi/g	100
Samarium	7440-19-9	<	7.96E+01	µg/g	100
Selenium	7782-49-2	<	1.99E+02	µg/g	100
^{79}Se	15758-45-9	<	8.41E-04	µCi/g	100
Silicon	7440-21-3		2.19E+03	µg/g	20
Silver	7440-22-4	<	2.39E+01	µg/g	100
Sodium	7440-23-5		6.08E+04	µg/g	2
Strontium	7440-24-6		2.50E+02	µg/g	5
$^{89/90}$Sr	10098-97-2		2.48E+00	µCi/g	13
Sulfide	18496-25-8	<	1.18E+01	µg/g	100
Sulfur	7704-34-9	<	2.39E+02	µg/g	100

Table A-1. Mean Concentrations and Relative Standard Deviations of Constituents Analyzed in the SST C-203 Residual Waste. (4 sheets)

Constituent Name	CAS	<Detection Limit	Mean	Units	RSD (%)
Tantalum	7440-25-7	<	1.59E+02	µg/g	100
^{99}Tc	14133-76-7		1.49E-01	µg/g	34
Tellurium	13494-80-9	<	3.18E+02	µg/g	100
Tetrachloroethene	127-18-4	<	6.30E-03	µg/g	100
Thallium	7440-28-0	<	3.98E+02	µg/g	100
Thorium	7440-29-1	<	3.97E+02	µg/g	100
^{230}Th	14269-63-7	<	2.78E-01	µg/g	100
^{232}Th	NA		1.88E+01	µg/g	66
Tin	7440-31-5	<	1.59E+02	µg/g	100
Titanium	7440-32-6		4.82E+01	µg/g	16
Toluene	108-88-3	<	5.85E-03	µg/g	100
Trans-1,3-Dichloropropene	10061-02-6	<	4.90E-03	µg/g	100
Tributyl phosphate	126-73-8		9.44E+03	µg/g	3
Trichloroethene	79-01-6	<	9.70E-03	µg/g	100
Trichlorofluoromethane	75-69-4	<	7.17E-03	µg/g	100
Tritium	15086-10-9	<	6.59E-04	µCi/g	100
Tungsten	7440-33-7	<	2.39E+02	µg/g	100
Uranium	7440-61-1		3.39E+05	µg/g	2
^{233}U	13968-55-3	<	7.16E+00	µg/g	100
^{234}U	13966-29-5		1.97E+01	µg/g	8
^{235}U	15117-96-1		2.41E+03	µg/g	1
^{236}U	13982-70-2		1.40E+01	µg/g	10
^{238}U	NA		3.53E+05	µg/g	1
Vanadium	7440-62-2		1.82E+02	µg/g	3
Vinyl chloride	75-01-4	<	3.40E-03	µg/g	100
Xylene (m)	108-38-3		1.40E-02	µg/g	46
Xylene (o)	95-47-6		8.15E-03	µg/g	41
Xylene (p)	106-42-3		1.40E-02	µg/g	46
Xylenes (total)	1330-20-7		2.00E-02	µg/g	60
Yttrium	7440-65-5	<	1.99E+01	µg/g	100
Zinc	7440-66-6		4.46E+02	µg/g	40
Zirconium	7440-67-7		1.14E+02	µg/g	3

CAS Chemical Abstracts Service Registry Number
< Below
RSD Relative Standard Deviation, representing the overall uncertainty of the concentration estimate

Table A-2. Nominal Inventory for SST C-203 Residual Waste. (4 sheets)

Constituent Name	CAS Number	<	Inventory	Inventory Units
1,1,1-Trichloroethane	71-55-6	<	6.94E-06	kg
1,1,2,2-Tetrachloroethane	79-34-5	<	5.09E-06	kg
1,1,2-Trichloro-1,2,2-trifluoroethane	76-13-1	<	7.88E-06	kg
1,1,2-Trichloroethane	79-00-5	<	5.09E-06	kg
1,1-Dichloroethene	75-35-4	<	8.02E-06	kg
1,2,4-Trichlorobenzene	120-82-1	<	7.95E-06	kg
1,2-Dichlorobenzene	95-50-1	<	1.35E-03	kg
1,2-Dichloroethane	107-06-2	<	4.99E-06	kg
1,4-Dichlorobenzene	106-46-7	<	8.32E-04	kg
1-Butanol	71-36-3	<	3.44E-03	kg
2,4,5-Trichlorophenol	95-95-4	<	7.78E-04	kg
2,4,6-Trichlorophenol	88-06-2	<	8.05E-04	kg
2,4-Dinitrotoluene	121-14-2	<	8.93E-04	kg
2,6-Bis(1,1-dimethylethyl)-4-methylphenol	128-37-0	<	2.36E-03	kg
2-Butanone	78-93-3		7.99E-05	kg
2-Chlorophenol	95-57-8	<	8.15E-04	kg
2-Ethoxyethanol	110-80-5	<	1.82E-03	kg
2-Methylphenol	95-48-7	<	8.49E-04	kg
2-Nitrophenol	88-75-5	<	7.48E-04	kg
2-Nitropropane	79-46-9	<	1.21E-05	kg
4-Chloro-3-methylphenol	59-50-7	<	8.36E-04	kg
4-Nitrophenol	100-02-7	<	7.92E-04	kg
Acenaphthene	83-32-9	<	8.63E-04	kg
Acetate	71-50-1		1.41E-01	kg
Acetone	67-64-1		2.22E-04	kg
Aluminum	7429-90-5	<	4.02E-01	kg
^{241}Am	14596-10-2		3.33E-02	Ci
Ammonium ion by IC	14798-03-9	<	9.92E-02	kg
Antimony	7440-36-0	<	2.01E-01	kg
^{125}Sb	14234-35-6	<	1.61E-01	Ci
Aroclors (total PCB)	1336-36-3	<	1.26E-04	kg
Arsenic	7440-38-2	<	2.01E-01	kg
Barium	7440-39-3		5.17E-02	kg
Benzene	71-43-2	<	4.89E-06	kg
Beryllium	7440-41-7	<	3.22E-02	kg
Bismuth	7440-69-9		1.42E+00	kg
Boron	7440-42-8	<	6.03E-02	kg
Bromide	24959-67-9	<	5.59E-02	kg
Butylbenzylphthalate	85-68-7	<	1.65E-03	kg
Cadmium	7440-43-9	<	2.12E-02	kg
Calcium	7440-70-2		2.22E+00	kg
Carbon disulfide	75-15-0	<	7.18E-06	kg
Carbon tetrachloride	56-23-5	<	9.13E-06	kg
^{14}C	14762-75-5	<	8.79E-04	Ci
Cerium	7440-45-1	<	2.81E-01	kg

Table A-2. Nominal Inventory for SST C-203 Residual Waste. (4 sheets)

Constituent Name	CAS Number	<	Inventory	Inventory Units
^{137}Cs	10045-97-3		1.40E+01	Ci
Chloride	16887-00-6		6.44E-02	kg
Chlorobenzene	108-90-7	<	6.00E-06	kg
Chloroform	67-66-3	<	7.35E-06	kg
Chromium	7440-47-3		2.86E+00	kg
Cobalt	7440-48-4		2.64E-02	kg
^{60}Co	10198-40-0	<	1.61E-02	Ci
Copper	7440-50-8		5.28E-02	kg
Cresol	1319-77-3	<	3.71E-03	kg
Cresol (m)	108-39-4	<	8.22E-04	kg
Cresol (p)	106-44-5	<	8.22E-04	kg
^{242}Cm	15510-73-3	<	5.95E-03	Ci
^{243}Cm	15757-87-6	<	2.38E-04	Ci
^{244}Cm	13981-15-2	<	5.71E-03	Ci
Cyanide	57-12-5	<	4.59E-03	kg
Cyclohexanone	108-94-1	<	5.56E-03	kg
Di-n-butylphthalate	84-74-2	<	5.63E-03	kg
Di-n-octylphthalate	117-84-0	<	9.94E-04	kg
Ethyl acetate	141-78-6	<	7.58E-06	kg
Ethyl ether	60-29-7	<	6.87E-06	kg
Ethylbenzene	100-41-4	<	1.18E-05	kg
Europium	7440-53-1		1.00E-01	kg
^{152}Eu	14683-23-9	<	7.53E-02	Ci
^{154}Eu	15585-10-1	<	5.35E-02	Ci
^{155}Eu	14391-16-3	<	1.66E-01	Ci
Fluoranthene	206-44-0	<	8.86E-04	kg
Fluoride	16984-48-8		1.80E+00	kg
Formate	12311-97-6		8.03E-02	kg
Glycolate	666-14-8	<	3.70E+00	kg
Hexachlorobutadiene	87-68-3	<	8.96E-04	kg
Hexachloroethane	67-72-1	<	4.58E-06	kg
Hexone	108-10-1	<	1.02E-05	kg
^{129}I	15046-84-1		1.62E-05	Ci
Iron	7439-89-6		1.41E+01	kg
Isobutanol	78-83-1	<	4.62E-03	kg
Lanthanum	7439-91-0	<	2.41E-02	kg
Lead	7439-92-1		3.38E+00	kg
Lithium	7439-93-2	<	3.22E-02	kg
Magnesium	7439-95-4	<	1.61E-01	kg
Manganese	7439-96-5		5.64E-01	kg
Mercury	7439-97-6		2.45E-03	kg
Methylenechloride	75-09-2	<	5.96E-06	kg
Molybdenum	7439-98-7	<	4.02E-02	kg
Morpholine, 4-nitroso-	59-89-2	<	1.92E-03	kg
Naphthalene	91-20-3	<	8.56E-04	kg
Neodymium	7440-00-8	<	1.61E-01	kg

Table A-2. Nominal Inventory for SST C-203 Residual Waste. (4 sheets)

Constituent Name	CAS Number	<	Inventory	Inventory Units
^{237}Np	13994-20-2	<	1.53E-02	Ci
Nickel	7440-02-0		2.25E-01	kg
^{63}Ni	13981-37-8		6.74E-02	Ci
Niobium	7440-03-1	<	2.01E-01	kg
Nitrate	14797-55-8		4.13E+00	kg
Nitrite	14797-65-0	<	1.09E+00	kg
Nitrobenzene	98-95-3	<	8.93E-04	kg
N-Nitroso-di-n-propylamine	621-64-7	<	7.99E-04	kg
Oxalate	338-70-5	<	1.09E+00	kg
Palladium	7440-05-3	<	4.02E-01	kg
Pentachlorophenol	87-86-5	<	6.67E-04	kg
Phenol	108-95-2	<	8.22E-04	kg
Phosphorus	7723-14-0		2.60E+01	kg
^{238}Pu	13981-16-3	<	2.14E-02	Ci
^{239}Pu	15117-48-3		5.35E-01	Ci
^{240}Pu	14119-33-6		1.16E-01	Ci
^{241}Pu	14119-32-5		6.60E-01	Ci
Potassium	7440-09-7	<	2.01E+00	kg
Praseodymium	7440-10-0		1.78E+00	kg
Pyrene	129-00-0	<	8.56E-04	kg
Pyridine	110-86-1	<	7.88E-04	kg
Rhodium	7440-16-6	<	8.04E-01	kg
Rubidium	7440-17-7	<	1.21E+01	kg
Ruthenium	7440-18-8	<	2.41E-01	kg
Samarium	7440-19-9	<	8.04E-02	kg
Selenium	7782-49-2	<	2.01E-01	kg
^{79}Se	15758-45-9	<	8.50E-04	Ci
Silicon	7440-21-3		2.21E+00	kg
Silver	7440-22-4	<	2.41E-02	kg
Sodium	7440-23-5		6.15E+01	kg
Strontium	7440-24-6		2.53E-01	kg
$^{89,90}Sr$	10098-97-2		2.51E+00	Ci
Sulfide	18496-25-8	<	1.19E-02	kg
Sulfur	7704-34-9	<	2.41E-01	kg
Tantalum	7440-25-7	<	1.61E-01	kg
^{99}Tc	14133-76-7		2.56E-03	Ci
Tellurium	13494-80-9	<	3.22E-01	kg
Tetrachloroethene	127-18-4	<	6.37E-06	kg
Thallium	7440-28-0	<	4.02E-01	kg
Thorium	7440-29-1		1.93E-02	kg
^{228}Th	14274-82-9		1.04E-05	Ci
^{230}Th	14269-63-7	<	5.80E-03	Ci
^{232}Th	NA		2.09E-06	Ci
Tin	7440-31-5	<	1.61E-01	kg
Titanium	7440-32-6		4.87E-02	kg
Toluene	108-88-3	<	5.92E-06	kg

Table A-2. Nominal Inventory for SST C-203 Residual Waste. (4 sheets)

Constituent Name	CAS Number	<	Inventory	Inventory Units
Trans-1,3-Dichloropropene	10061-02-6	<	4.95E-06	kg
Tributyl phosphate	126-73-8		9.54E+00	kg
Trichloroethene	79-01-6	<	9.81E-06	kg
Trichlorofluoromethane	75-69-4	<	7.24E-06	kg
Tritium	15086-10-9	<	6.66E-04	Ci
Tungsten	7440-33-7	<	2.41E-01	kg
Uranium	7440-61-1		3.43E+02	kg
^{233}U	13968-55-3	<	6.98E-02	Ci
^{234}U	13966-29-5		1.24E-01	Ci
^{235}U	15117-96-1		5.27E-03	Ci
^{236}U	13982-70-2		9.17E-04	Ci
^{238}U	NA		1.20E-01	Ci
Vanadium	7440-62-2		1.84E-01	kg
Vinyl chloride	75-01-4	<	3.44E-06	kg
Xylene (m)	108-38-3		1.42E-05	kg
Xylene (o)	95-47-6		8.24E-06	kg
Xylene (p)	106-42-3		1.42E-05	kg
Xylenes (total)	1330-20-7		2.02E-05	kg
Yttrium	7440-65-5	<	2.01E-02	kg
Zinc	7440-66-6		4.50E-01	kg
Zirconium	7440-67-7		1.15E-01	kg

CAS Chemical Abstracts Service Registry Number
< Below

Table A-3. 95% Upper Confidence Level Inventory for SST C-203 Residual Waste. (4 sheets)

Constituent Name	CAS Number	<	Inventory 95% UL	Inventory Units
1,1,1-Trichloroethane	71-55-6	<	2.08E-05	kg
1,1,2,2-Tetrachloroethane	79-34-5	<	1.53E-05	kg
1,1,2-Trichloro-1,2,2-trifluoroethane	76-13-1	<	2.37E-05	kg
1,1,2-Trichloroethane	79-00-5	<	1.53E-05	kg
1,1-Dichloroethene	75-35-4	<	2.41E-05	kg
1,2,4-Trichlorobenzene	120-82-1	<	2.39E-05	kg
1,2-Dichlorobenzene	95-50-1	<	4.05E-03	kg
1,2-Dichloroethane	107-06-2	<	1.50E-05	kg
1,4-Dichlorobenzene	106-46-7	<	2.50E-03	kg
1-Butanol	71-36-3	<	1.03E-02	kg
2,4,5-Trichlorophenol	95-95-4	<	2.34E-03	kg
2,4,6-Trichlorophenol	88-06-2	<	2.42E-03	kg
2,4-Dinitrotoluene	121-14-2	<	2.68E-03	kg
2,6-Bis(1,1-dimethylethyl)-4-methylphenol	128-37-0	<	7.08E-03	kg
2-Butanone	78-93-3		1.23E-04	kg
2-Chlorophenol	95-57-8	<	2.45E-03	kg
2-Ethoxyethanol	110-80-5	<	5.46E-03	kg
2-Methylphenol	95-48-7	<	2.55E-03	kg
2-Nitrophenol	88-75-5	<	2.25E-03	kg
2-Nitropropane	79-46-9	<	3.64E-05	kg
4-Chloro-3-methylphenol	59-50-7	<	2.51E-03	kg
4-Nitrophenol	100-02-7	<	2.38E-03	kg
Acenaphthene	83-32-9	<	2.59E-03	kg
Acetate	71-50-1		1.84E-01	kg
Acetone	67-64-1		3.17E-04	kg
Aluminum	7429-90-5	<	1.21E+00	kg
^{241}Am	14596-10-2		4.43E-02	Ci
Ammonium Ion by IC	14798-03-9	<	2.94E-01	kg
Antimony	7440-36-0	<	6.04E-01	kg
^{125}Sb	14234-35-6	<	4.85E-01	Ci
Aroclors (total PCB)	1336-36-3	<	3.79E-04	kg
Arsenic	7440-38-2	<	6.04E-01	kg
Barium	7440-39-3		5.76E-02	kg
Benzene	71-43-2	<	1.47E-05	kg
Beryllium	7440-41-7	<	9.67E-02	kg
Bismuth	7440-69-9		1.56E+00	kg
Boron	7440-42-8	<	1.81E-01	kg
Bromide	24959-67-9	<	1.68E-01	kg
Butylbenzylphthalate	85-68-7	<	4.96E-03	kg
Cadmium	7440-43-9	<	6.36E-02	kg
Calcium	7440-70-2		2.52E+00	kg
Carbon disulfide	75-15-0	<	2.15E-05	kg
Carbon tetrachloride	56-23-5	<	2.74E-05	kg
^{14}C	14762-75-5	<	2.25E-03	Ci

Table A-3. 95% Upper Confidence Level Inventory for SST C-203 Residual Waste. (4 sheets)

Constituent Name	CAS Number	<	Inventory 95% UL	Inventory Units
Cerium	7440-45-1	<	8.46E-01	kg
^{137}Cs	10045-97-3		1.57E+01	Ci
Chloride	16887-00-6		7.69E-02	kg
Chlorobenzene	108-90-7	<	1.80E-05	kg
Chloroform	67-66-3	<	2.21E-05	kg
Chromium	7440-47-3		4.17E+00	kg
Cobalt	7440-48-4		3.00E-02	kg
^{60}Co	10198-40-0	<	4.86E-02	Ci
Copper	7440-50-8		6.58E-02	kg
Cresol	1319-77-3	<	1.11E-02	kg
Cresol (m)	108-39-4	<	2.47E-03	kg
Cresol (p)	106-44-5	<	2.47E-03	kg
^{242}Cm	15510-73-3	<	1.82E-02	Ci
^{243}Cm	15757-87-6	<	7.28E-04	Ci
^{244}Cm	13981-15-2	<	1.75E-02	Ci
Cyanide	57-12-5	<	1.36E-02	kg
Cyclohexanone	108-94-1	<	1.67E-02	kg
Di-n-butylphthalate	84-74-2	<	1.69E-02	kg
Di-n-octylphthalate	117-84-0	<	2.98E-03	kg
Ethyl acetate	141-78-6	<	2.28E-05	kg
Ethyl ether	60-29-7	<	2.06E-05	kg
Ethylbenzene	100-41-4	<	3.54E-05	kg
Europium	7440-53-1		1.10E-01	kg
^{152}Eu	14683-23-9	<	2.33E-01	Ci
^{154}Eu	15585-10-1	<	1.60E-01	Ci
^{155}Eu	14391-16-3	<	4.98E-01	Ci
Fluoranthene	206-44-0	<	2.66E-03	kg
Fluoride	16984-48-8		2.28E+00	kg
Formate	12311-97-6		9.90E-02	kg
Glycolate	666-14-8	<	1.11E+01	kg
Hexachlorobutadiene	87-68-3	<	2.69E-03	kg
Hexachloroethane	67-72-1	<	1.38E-05	kg
Hexone	108-10-1	<	3.07E-05	kg
^{129}I	15046-84-1		4.21E-05	Ci
Iron	7439-89-6		1.74E+01	kg
Isobutanol	78-83-1	<	1.39E-02	kg
Lanthanum	7439-91-0	<	7.25E-02	kg
Lead	7439-92-1		3.88E+00	kg
Lithium	7439-93-2	<	9.67E-02	kg
Magnesium	7439-95-4	<	4.83E-01	kg
Manganese	7439-96-5		6.74E-01	kg
Mercury	7439-97-6		3.09E-03	kg
Methylenechloride	75-09-2	<	1.79E-05	kg
Molybdenum	7439-98-7	<	1.21E-01	kg
Morpholine, 4-nitroso-	59-89-2	<	5.77E-03	kg

Table A-3. 95% Upper Confidence Level Inventory for SST C-203 Residual Waste. (4 sheets)

Constituent Name	CAS Number	<	Inventory 95% UL	Inventory Units
Naphthalene	91-20-3	<	2.57E-03	kg
Neodymium	7440-00-8	<	4.83E-01	kg
^{237}Np	13994-20-2	<	4.60E-02	Ci
Nickel	7440-02-0		2.80E-01	kg
^{63}Ni	13981-37-8		7.88E-02	Ci
Niobium	7440-03-1	<	6.04E-01	kg
Nitrate	14797-55-8		4.87E+00	kg
Nitrite	14797-65-0	<	3.28E+00	kg
Nitrobenzene	98-95-3	<	2.68E-03	kg
N-Nitroso-di-n-propylamine	621-64-7	<	2.40E-03	kg
Oxalate	338-70-5	<	3.28E+00	kg
Palladium	7440-05-3	<	1.21E+00	kg
Pentachlorophenol	87-86-5	<	2.00E-03	kg
Phenol	108-95-2	<	2.47E-03	kg
Phosphorus (as phosphate)	7723-14-0		2.85E+01	kg
^{238}Pu	13981-16-3	<	6.87E-02	Ci
Plutonium-239	15117-48-3		7.59E-01	Ci
Plutonium-240	14119-33-6		1.64E-01	Ci
Plutonium-241	14119-32-5		9.37E-01	Ci
Potassium	7440-09-7	<	6.04E+00	kg
Praseodymium	7440-10-0		1.96E+00	kg
Pyrene	129-00-0	<	2.57E-03	kg
Pyridine	110-86-1	<	2.37E-03	kg
Rhodium	7440-16-6	<	2.42E+00	kg
Rubidium	7440-17-7	<	3.63E+01	kg
Ruthenium	7440-18-8	<	7.25E-01	kg
Samarium	7440-19-9	<	2.42E-01	kg
Selenium	7782-49-2	<	6.04E-01	kg
Selenium-79	15758-45-9	<	2.55E-03	Ci
Silicon	7440-21-3		3.00E+00	kg
Silver	7440-22-4	<	7.25E-02	kg
Sodium	7440-23-5		6.79E+01	kg
Strontium	7440-24-6		3.06E-01	kg
Strontium-89/90	10098-97-2		2.91E+00	Ci
Sulfide	18496-25-8	<	3.63E-02	kg
Sulfur (as sulfate)	7704-34-9	<	7.25E-01	kg
Tantalum	7440-25-7	<	4.83E-01	kg
Technetium-99	14133-76-7		4.32E-03	Ci
Tellurium	13494-80-9	<	9.67E-01	kg
Tetrachloroethene	127-18-4	<	1.91E-05	kg
Thallium	7440-28-0	<	1.21E+00	kg
Thorium	7440-29-1	<	1.21E+00	kg
Thorium-228	14274-82-9		3.49E-06	Ci
Thorium-230	14269-63-7	<	1.74E-02	Ci
Thorium-232	NA		3.49E-06	Ci

Table A-3. 95% Upper Confidence Level Inventory for SST C-203 Residual Waste. (4 sheets)

Constituent Name	CAS Number	<	Inventory 95% UL	Inventory Units
Tin	7440-31-5	<	4.83E-01	kg
Titanium	7440-32-6		5.75E-02	kg
Toluene	108-88-3	<	1.83E-05	kg
Trans-1,3-Dichloropropene	10061-02-6	<	1.49E-05	kg
Tributyl phosphate	126-73-8		1.04E+01	kg
Trichloroethene	79-01-6	<	2.94E-05	kg
Trichlorofluoromethane	75-69-4	<	2.18E-05	kg
Tritium	15086-10-9	<	2.00E-03	Ci
Tungsten	7440-33-7	<	7.25E-01	kg
Uranium	7440-61-1		3.78E+02	kg
^{233}U	13968-55-3	<	2.10E-01	Ci
^{234}U	13966-29-5		1.44E-01	Ci
^{235}U	15117-96-1		5.79E-03	Ci
^{236}U	13982-70-2		1.07E-03	Ci
^{238}U	NA		1.31E-01	Ci
Vanadium	7440-62-2		2.06E-01	kg
Vinyl chloride	75-01-4	<	1.03E-05	kg
Xylene (m)	108-38-3		2.63E-05	kg
Xylene (o)	95-47-6		1.46E-05	kg
Xylene (p)	106-42-3		2.63E-05	kg
Xylenes (total)	1330-20-7		4.18E-05	kg
Yttrium	7440-65-5	<	6.04E-02	kg
Zinc	7440-66-6		6.35E-01	kg
Zirconium	7440-67-7		1.28E-01	kg

CAS Chemical Abstracts Service Registry Number
< Below