0038647

STF J
SEP 23 1994

# ENGINEERING DATA TRANSMITTAL

Page 1 of 1

1. EDT 603575

| | | |
|---|---|---|
| 2. To: (Receiving Organization) Distribution | 3. From: (Originating Organization) Facility Compliance - K Basins | 4. Related EDT No.: N/A |
| 5. Proj./Prog./Dept./Div.: K Basins | 6. Cog. Engr.: G. S. Hunacek | 7. Purchase Order No.: N/A |
| 8. Originator Remarks: Attached is the KE Basin Water Dispositioning Engineering Study which is being processed for public release. | | 9. Equip./Component No.: N/A |
| | | 10. System/Bldg./Facility: 59-07/105KE/100K |
| 11. Receiver Remarks: Sign the EDT for public release. | | 12. Major Assm. Dwg. No.: N/A |
| | | 13. Permit/Permit Application No.: N/A |
| | | 14. Required Response Date: August 12, 1994 |

15. DATA TRANSMITTED

| (A) Item No. | (B) Document/Drawing No. | (C) Sheet No. | (D) Rev. No. | (E) Title or Description of Data Transmitted | (F) Approval Designator | (G) Reason for Transmittal | (H) Originator Disposition | (I) Receiver Disposition |
|---|---|---|---|---|---|---|---|---|
| 1 | WHC-SD-SNF-ES-001 | All | 0 | KE Basin Water Dispositioning Engineering Study | E | 1 | 1 | 1 |

16. KEY

| Approval Designator (F) | Reason for Transmittal (G) | | Disposition (H) & (I) | |
|---|---|---|---|---|
| E, S, Q, D or N/A (see WHC-CM-3-5, Sec.12.7) | 1. Approval<br>2. Release<br>3. Information | 4. Review<br>5. Post-Review<br>6. Dist. (Receipt Acknow. Required) | 1. Approved<br>2. Approved w/comment<br>3. Disapproved w/comment | 4. Reviewed no/comment<br>5. Reviewed w/comment<br>6. Receipt acknowledged |

17. SIGNATURE/DISTRIBUTION (See Approval Designator for required signatures)

| (G) Reason | (H) Disp. | (J) Name | (K) Signature | (L) Date | (M) MSIN | (J) Name | (K) Signature | (L) Date | (M) MSIN | (G) Reason | (H) Disp. |
|---|---|---|---|---|---|---|---|---|---|---|---|
| 1 | 1 | Cog.Eng. G.S. Hunacek | G.S. Hunacek | 8/15/94 | X0-41 | Central Files | | | L8-04 | | |
| 1 | 1 | Cog. Mgr. D.J. Watson | D.J. Watson | 9-20-94 | X0-41 | O.S.T.T (2) | | | L8-07 | | |
| | | QA | | | | | | | | | |
| | | Safety | | 9-23-94 | | | | | | | |
| 1 | 1 | Env. E. Powell per telcom | D.J. Watson | | | | | | | | |
| 1 | 1 | S.S. Gahir | | 8/15/94 | X0-36 | | | | | | |
| 1 | 1 | C.L. Bennett | C.L. Bennett | 9/6/94 | X0-36 | | | | | | |

| 18. | 19. | 20. | 21. DOE APPROVAL (if required) |
|---|---|---|---|
| G.S. Hunacek Jr. G.S. Hunacek 8/15/94<br>Signature of EDT Originator Date | D.J. Watson D.J. Watson 9-20-94<br>Authorized Representative for Receiving Organization Date | D. J. Watson D.J. Watson 9-20-94<br>Cognizant Manager Date | Ctrl. No.<br>☐ Approved<br>☐ Approved w/comments<br>☐ Disapproved w/comments |

OCT 1994 RECEIVED EDMC

BD-7400-172-2 (04/94) GEF097

THIS PAGE INTENTIONALLY
LEFT BLANK

# SUPPORTING DOCUMENT

1. Total Pages 153

| 2. Title | 3. Number | 4. Rev No. |
|---|---|---|
| KE BASIN DISPOSITIONING ENGINEERING STUDY | WHC-SD-SNF-ES-001 | 0 |

5. Key Words

KE, Basin Water, Water Dispositioning, Tritium

APPROVED FOR PUBLIC RELEASE

KMB 9/23/94

6. Author


Name: G.S. Hunacek/S.S. Gahir

Signature

Organization/Charge Code 2A100/KK412


7. Abstract


This engineering study is a feasibility study of KE Basin Water treatment to an acceptable level and dispositioning the treated water to Columbia River, ground through ETF or to air through evaporation


8. PURPOSE AND USE OF DOCUMENT - This document was prepared for use within the U.S. Department of Energy and its contractors. It is to be used only to perform, direct, or integrate work under U.S. Department of Energy contracts. This document is not approved for public release until reviewed.

PATENT STATUS - This document copy, since it is transmitted in advance of patent clearance, is made available in confidence solely for use in performance of work under contracts with the U.S. Department of Energy. This document is not to be published nor its contents otherwise disseminated or used for purposes other than specified above before patent approval for such release or use has been secured, upon request, from the Patent Counsel, U.S. Department of Energy Field Office, Richland, WA.


DISCLAIMER - This report was prepared as an account of work sponsored by an agency of the United States Government. Neither the United States Government nor any agency thereof, nor any of their employees, nor any of their contractors, subcontractors or their employees, makes any warranty, express or implied, or assumes any legal liability or responsibility for the accuracy, completeness, or any third party's use or the results of such use of any information, apparatus, product, or process disclosed, or represents that its use would not infringe privately owned rights. Reference herein to any specific commercial product, process, or service by trade name, trademark, manufacturer, or otherwise, does not necessarily constitute or imply its endorsement, recommendation, or favoring by the United States Government or any agency thereof or its contractors or subcontractors. The views and opinions of authors expressed herein do not necessarily state or reflect those of the United States Government or any agency thereof.


9. Impact Level E

10. RELEASE STAMP


OFFICIAL RELEASE BY WHC

DATE SEP 23 1994

STA 4

THIS PAGE INTENTIONALLY
LEFT BLANK

## RELEASE AUTHORIZATION

| | |
|---|---|
| **Document Number:** | WHC-SD-SNF-ES-001, REV 0 |
| **Document Title:** | KE BASIN DISPOSITIONING ENGINEERING STUDY |
| **Release Date:** | 9/23/94 |

* * * * * * * * * * * * * *

**This document was reviewed following the procedures described in WHC-CM-3-4 and is:**

**APPROVED FOR PUBLIC RELEASE**

* * * * * * * * * * * * * *

**WHC Information Release Administration Specialist:**

Kara Broz
(Signature)

9/23/94
(Date)

THIS PAGE INTENTIONALLY
LEFT BLANK

WHC-SD-SNF-ES-001
Revision 0

# KE Basin Water Dispositioning Engineering Study

Prepared for the U.S. Department of Energy
Office of Environmental Restoration
and Waste Management

Westinghouse
Hanford Company Richland, Washington

Hanford Operations and Engineering Contractor for the
U.S. Department of Energy under Contract DE-AC06-87RL10930

Approved for Public Release

**LEGAL DISCLAIMER**

This report was prepared as an account of work sponsored by an agency of the United States Government. Neither the United States Government nor any agency thereof, nor any of their employees, nor any of their contractors, subcontractors or their employees, makes any warranty, express or implied, or assumes any legal liability or responsibility for the accuracy, completeness, or any third party's use or the results of such use of any information, apparatus, product, or process disclosed, or represents that its use would not infringe privately owned rights. Reference herein to any specific commercial product, process, or service by trade name, trademark, manufacturer, or otherwise, does not necessarily constitute or imply its endorsement, recommendation, or favoring by the United States Government or any agency thereof or its contractors or subcontractors. The views and opinions of authors expressed herein do not necessarily state or reflect those of the United States Government or any agency thereof.

This report has been reproduced from the best available copy.
Available in paper copy and microfiche.

Available to the U.S. Department of Energy
and its contractors from
Office of Scientific and Technical Information
P.O. Box 62
Oak Ridge, TN 37831
(615) 576-8401

Available to the public from the U.S. Department of Commerce
National Technical Information Service
5285 Port Royal Road
Springfield, VA 22161
(703) 487-4650

Printed in the United States of America

DISCLM-1.CHP (1-91)

## CONTENTS


1.0 OBJECTIVE . . . . . 1-1
1.1 BACKGROUND . . . . . 1-1
1.2 PURPOSE AND SCOPE . . . . . 1-2

2.0 SUMMARY . . . . . 2-1
2.1 RIVER DISCHARGE . . . . . 2-1
2.2 GROUND DISCHARGE . . . . . 2-2
2.3 SOLAR EVAPORATION . . . . . 2-2

3.0 RECOMMENDATIONS AND CONCLUSIONS . . . . . 3-1
3.1 RECOMMENDATIONS . . . . . 3-1
3.2 CONCLUSIONS . . . . . 3-1

4.0 UNCERTAINTIES . . . . . 4-1
4.1 OPERATIONAL UNCERTAINTIES . . . . . 4-1
4.2 RADIATION EXPOSURE UNCERTAINTIES . . . . . 4-1
4.3 ENVIRONMENTAL UNCERTAINTIES . . . . . 4-2
4.4 COSTS AND SCHEDULES UNCERTAINTIES . . . . . 4-2
4.5 UNCERTAINTIES CHANGES . . . . . 4-2

5.0 DESCRIPTION OF ALTERNATIVES . . . . . 5-1
5.1 CRITERIA . . . . . 5-1
5.2 ASSUMPTIONS . . . . . 5-1
5.2.1 Operations Assumptions . . . . . 5-1
5.2.2 Radiation Exposure Assumptions . . . . . 5-2
5.2.3 Environmental Assumptions . . . . . 5-2
5.2.4 Cost Assumptions . . . . . 5-3
5.3 ALTERNATIVES . . . . . 5-3
5.3.1 Alternative A: 105KE Basin Water Treatment for Disposal to Columbia River Through Outfall 004 . . . . . 5-3
5.3.2 Alternative B: 105KE Basin Water Treatment for Ground Disposal Through ETF (C018) . . . . . 5-17
5.3.3 Alternative C: 105KE Basin Water Treatment for Air Discharge Through Evaporation . . . . . 5-24
5.3.4 Treatment Unit Sizing . . . . . 5-34

6.0 DISCUSSION OF PREFERRED TREATMENT SYSTEM AND THE THREE DISPOSAL OPTIONS . . . . . 6-1

7.0 NO ACTION ALTERNATIVE . . . . . 7-1

8.0 REFERENCES . . . . . 8-1

CONTENTS (continued)

APPENDIXES

A TECHNOLOGY SCREENING . . . . . A-1

B BASIN WATER . . . . . B-1

C TREATMENT SYSTEM DISPOSAL PATHWAY EVALUATION CRITERIA . . . . . C-1

D HANFORD FEDERAL FACILITY AGREEMENT AND CONSENT ORDER . . . . . D-1

E EFFLUENT TREATMENT FACILITY WASTE ACCEPTANCE CRITERIA (DRAFT COPY) . . . . . E-1

F SCHEDULES . . . . . F-1

## LIST OF FIGURES

5-1 Alternative A: 105KE Basin Water Treatment and Disposal to Columbia River Through 004 Outfall . . . . . 5-9

5-2 105KE Basin Water Cooling and Existing Treatment Systems . . . . . 5-10

5-3 Alternative B: 105KE Basin Water Treatment and Disposal to Ground Through ETF (C018) . . . . . 5-22

5-4 Alternative C: 105KE Basin Water Treatment and Disposal for Air Discharge Through Evaporation . . . . . 5-31

## LIST OF TABLES

5-1 Alternative A - 105KE Basin Water Treatment for Disposal at Columbia River Through Outfall 004 . . . . . 5-4

5-2 Alternative B - 105KE Basin Water Treatment for Ground Disposal Through ETF (C018) . . . . . 5-18

5-3 Alternative C - 105KE Basin Water Treatment for Air Discharge Through Evaporation . . . . . 5-25

5-4 Costs for Alternative A Treated Effluent Discharged to Columbia River . . . . . 5-29

5-5 Costs for Alternative B Treated Effluent Discharged to Ground Through ETF . . . . . 5-30

5-6 Costs for Alternative C Treated Effluent Evaporation Air Discharge . . . . . 5-33

This page intentionally left blank.

## LIST OF TERMS

| | |
|---|---|
| ALARA | As low as reasonably achievable (radiation exposure) |
| ASIL | Ambient source impact levels |
| ASME | American Society of Mechanical Engineers |
| BAT | Best available technology (economically achievable) |
| CFR | *Code of Federal Regulations* |
| DCG | Derived concentration guidelines |
| DF | Decontamination factor |
| DOE | U.S. Department of Energy |
| DOH | Washington State Department of Health |
| EA | Environmental assessment |
| EPA | U.S. Environmental Protection Agency |
| ETF | Effluent Treatment Facility |
| FSAR | Final safety analysis report |
| FTE | Full time exempt |
| gal/min | gallons per minute |
| HBL | Hanford Base Limit |
| IXC | ion-exchange column |
| IXM | ion-exchange module |
| LDR | Land disposal restriction |
| LERF | Liquid Effluent Retention Facility |
| LOEL | Lowest observed effects levels |
| MCL | Maximum contaminant levels |
| MCLG | Maximum contaminant level goals |
| NEPA | *National Environmental Policy Act of 1969* |
| NPDES | National Pollutant Discharge Elimination System |
| PCB | Polychlorinated biphenyls |
| RCRA | *Resource Conservation and Recovery Act of 1976* |
| RCW | Revised Code of Washington |
| RO | Reverse osmosis |
| ROI | Rate of interest |
| SALDS | State approved land discharge site |
| SEPA | *Washington State Environmental Policy Act* |
| SMCL | Secondary maximum contaminant levels |
| TAP | Toxic air pollutants |
| T-BACT | Best available control technology |
| Tri-Party | *Agreement Hanford Federal Facility Agreement and Consent Order* |
| TRU | Transuranic radionuclides |
| UV | ultra-violet (light) |
| WAC | *Washington Administrative Code* |
| WHC | Westinghouse Hanford Company |
| WPCA | *Water Pollution Control Act* |
| WQC | Water Quality Criteria |

This page intentionally left blank.

# KE BASIN WATER DISPOSITIONING ENGINEERING STUDY

## 1.0 OBJECTIVE

### 1.1 BACKGROUND

The 100K Area Fuel Storage Basins (K Basins) were built in the early 1950's to receive and provide temporary storage for irradiated fuel from the KE and KW Production Reactors, which was awaiting shipment to other processing facilities at the Hanford Site. The KE and KW Reactors were shutdown in 1971 and 1970, respectively, and the K Basins were taken out of service. During the mid-1970's and early 1980's, the 105KE/KW Spent Fuel Storage Basins were modified to provide temporary storage of N Reactor fuel.

In 1977, the KE Basin experienced a leak rate of approximately 51 L/min (13.5 gal/min). The source of the leak was located and repaired and in 1980 the rate of leakage was measured at 7.5 to 11 L/hr (2 to 3 gal/hr). In February 1993, a water-loss rate of approximately 227 L/hr (60 gal/hr) from the KE Basin was detected. A nominal evaporation rate during the winter can be up to 114 L/hr (30 gal/hr), depending on the basin water temperature. The temperature of the KE Basin has been raised in response to an observed correlation between leak rate and water temperature. Since June 1993, the leak rate from the 105KE Basin has decreased from approximately 95 L/hr (25 gal/hr) to a nominal 0 L/hr (0 gal/hr).

DOE, federal, and state agencies involved with the Hanford Site are concerned about the KE Basin leakage and its effect on the environment. A *Hanford Federal Facility Agreement and Consent Order* (Tri-Party Agreement) milestone, M-34-00-T03 (Appendix D), has been established to submit an engineering study to determine the feasibility of moving the irradiated fuel and sludge (once encapsulated) currently stored in the KE Basin to the KW Basin for temporary storage. A Tri-Party Agreement target milestone, M-34-00-T08 (Appendix D), has been established for removal of all fuel and sludge from both KE and KW Basins in an encapsulated form by December 31, 2002.

A Tri-Party Agreement target milestone, M-34-00-T04 (Appendix D), has been established to submit a schedule describing activities for the final disposition of contaminated KE Basin water for planning purposes to support the 100-KR-4 Record of Decision by October 1994. If the K-East fuel and sludge, once encapsulated, can be moved to the K-West Basin per Tri-Party Agreement milestone M-34-00-T03 (Appendix D), the removal and disposal of the contaminated water shall be completed by September 2000. This date is an eighteen month action, starting in March 1999, three months after fuel and sludge encapsulation is completed. If the transfer of encapsulated KE Basin fuel to KW Basin is not feasible, contaminated KE Basin water will be replaced by fresh water, starting in September, 1996 at a rate of two million gallons per year and will continue until such time that the tritium concentration in the KE Basin is decreased and is maintained at or below 300,000 pCi/L.

See Appendix D for further information on Tri-Party Agreement milestones. See Section 5.3 for the existing and additional treatment systems required to meet the Tri-Party Agreement milestone, M-34-01.

The contaminated water will be disposed of in accordance with reasonable available Hanford Site treatment and/or disposal processes and methods, available at the time of this action. This contaminated water treatment and disposal is the subject of this engineering study.

## 1.2 PURPOSE AND SCOPE

This engineering study will examine feasible options for disposition of the 105KE Spent Fuel Storage Basin water, as necessary, to reduce tritium levels to 300,000 pCi/L in compliance with Tri-Party Agreement milestones. The study will include possible alternatives for treatment and disposal options (that meet applicable water, ground or air effluent comparative levels for various disposal methods) under the following conditions.

1. If the fuel and sludge were removed from the 105KE Basin and placed in the 105KW Basin by 1999 (Appendix D); or

2. If the fuel and sludge were not removed from the 105KE Basin until 2002 (Appendix D).

# 2.0 SUMMARY

One alternative treatment process is identified to treat the 105KE Spent Fuel Storage Basin water. The selected treatment includes the present treatment system of using a sandfilter and an ion-exchange module (IXM) for ALARA, and adding a new microfilter/ultrafilter and polishing IXM for additional treatment.

The selected treatment will meet effluent comparative levels as listed in Appendix A (Table A-1) for river, ground or air disposal. Further testing is required to confirm proposed treatment is adequate to meet requirements. The treatment system will remove most of the dissolved/suspended solids and radionuclides from the basin water. No treatment system has been identified for removing tritium from the basin water. Currently, no cost-effective demonstrated wastewater treatment technologies for tritium exists.

After treatment there are three disposal alternatives available. The disposal alternatives are (A) Columbia River discharge at the NPDES 004 outfall; (B) ground disposal after further treatment at the Effluent Treatment Facility (ETF) (C018); and (C) solar evaporation at the 100K Area.

The preferred disposal alternative is selected based on a set of evaluation criteria listed in Appendix C. These criteria includes the schedule, cost, and implementation.

The disposal system (river, ground or air) will require necessary permits from federal, state or county programs. DOE NEPA will need to be developed or revised on existing facilities to treat and dispose of 100K Area Basin water. Because current effluent characterization data for the 105KE/KW Spent Fuel Storage Basin water were not available, historical data from 105KE/KW sampling and 100 N Basin characterization were used to determine the effluent constituents for this study.

The estimated equivalent uniform annualized cost (EUAC) for the selected treatment alternatives and disposal options range from $2.00 million for river disposal, $2.46 million for solar evaporation, and $3.00 million for further treatment at the Effluent Treatment Facility (ETF, C018) before discharge at the ground. Table 2-1 summarizes the schedule, cost, and implementation data developed in Section 5.

The differences in ranking in Table 2-1 could change if the quantity of disposable water changes from the assumed 2 million gallons of water. Also the ranking could change if some of the uncertainties for NPDES or groundwater disposal through C018 are resolved at the time of final selection.

## 2.1 RIVER DISCHARGE

River discharge combined with the treatment technology of sandfilter, IXM, microfilter/ultrafilter, polishing IXM and discharge tanks was ranked the highest in terms of cost and implementation data. The lower ranking in

Table 2-1. Weighing Factors and Scores for Disposal Options.

| Screening factors | Weight | River Alternative A | | Ground Alternative B | | Solar Alternative C | |
|---|---|---|---|---|---|---|---|
| | | Raw score | Weighted score | Raw score | Weighted score | Raw score | Weighted score |
| Schedule | 30 | 3 | 90 | 4 | 120 | 2 | 60 |
| Cost | 15 | 4 | 60 | 2 | 30 | 3 | 45 |
| Implementation | 20 | 4 | 80 | 3 | 60 | 2 | 40 |
| Total score | | 230 | | 210 | | 145 | |

schedule was due to NPDES permitting time. See Appendix F for schedules. This was the lowest cost system. See Section 5.3.1 for discussion of river discharge.

## 2.2 GROUND DISCHARGE

Ground discharge would require further treatment of 105KE Spent Fuel Storage Basin Water at the ETF (C018). Scheduling for environmental permit is rated high because the environmental permit for C018 should be completed by June 1995. The C018 permit will be modified to include 105KE Basin treated effluent for disposal to meet the Tri-Party Agreement milestone. See Section 5.3.2 for discussion of ground disposal.

## 2.3 SOLAR EVAPORATION

Solar evaporation would require new evaporation ponds to be constructed. Also the groundwater monitoring due to any leakage from the ponds and air monitoring would increase cost. See Section 5.3.3 for the discussion on solar evaporation.

# 3.0 RECOMMENDATIONS AND CONCLUSIONS

The 105KE Basin water dispositioning study shows that the water from 105KE Basin can be treated for disposal to either river, ground or solar evaporation. Also that there is available technology at the Hanford Site that could be used to treat the effluent from the basins.

## 3.1 RECOMMENDATIONS

Based on Section 5.3.1, alternative A , 105KE Basin water treated for disposal to the Columbia River through the NPDES outfall 004 is the alternative of least cost. Table 2-1 summarizes the schedule, cost and implementation screening facts. Again alternative A (river discharge) was the one with the highest score. Because treatment by this engineering study is the same for all waste water disposal systems, all permitting pathways should be explored to finalize the alternative. DOE Order 6430.1A, *General Design Criteria* and other applicable DOE order requirements must be applied to the final approved disposal alternative.

## 3.2 CONCLUSIONS

The treatment of the 105KE Basin water is feasible for the removal of inorganics and radionuclides to an acceptable level for disposal. There are three disposal alternatives reviewed in this study. The time needed to implement the disposal systems are presented in Appendix F. There is currently no permitted discharge at the Hanford Site for 105KE Basin water. The treatment cost of approximately $520,000 would be the same for each alternative. The disposal facilities required and associated costs will vary for each disposal alternative as listed in Tables 5-4, 5-5, and 5-6.

This page intentionally left blank.

# 4.0 UNCERTAINTIES

In completing this engineering study, it is important to recognize that there are many uncertainties with respect to operations, radiation exposure, environmental issues, costs and schedules which may have an effect on water disposal at K Basins.

## 4.1 OPERATIONAL UNCERTAINTIES

- The time necessary to load and unload basin effluent to be shipped to ETF (C018) has not been established, which could result in high shipping cost.

- It is important to recognize that there are no operational treatment plants at the Hanford Site that discharge basin effluent to the river, ground or air. ETF (C018) is being built and should be online before the K Basin Recommended Treatment Plant is operational. Any operational problems with C018 would be reviewed to eliminate similar problems at K Basins Treatment Facility.

- In many cases, detailed, current data to characterize basin water streams for treatment were not available for use in preparing this report. In these instances, best professional judgement was used to extend available data to develop a design basis for the treatment system. Before final design of the recommended treatment system, these estimates must be confirmed through additional sampling and analysis of the wastewater.

- The predicted treated effluent composition and treatment system performance are based upon typical reported decontamination factors (DFs) and unit-process operating characteristics, not site-specific testing. Treatability testing to verify the assumed DFs and predicted performance of the treatment system is strongly recommended prior to final design and construction.

- During encapsulation and sludge removal some of the particles which are settled down may get resuspended. This will reduce the efficiencies of the filter and treatment system resulting in more secondary waste.

## 4.2 RADIATION EXPOSURE UNCERTAINTIES

- Commercial grade microfilter/ultrafilter shielding.

- Hydrogen buildup in the spent IXMs.

## 4.3 ENVIRONMENTAL UNCERTAINTIES

- More restrictive requirements to the acceptable comparative effluent levels for water disposal to the Columbia River, ground, or air.
- Changes to permitted times listed in Appendix F may impact the selection.

## 4.4 COSTS AND SCHEDULES UNCERTAINTIES

EAUC cost estimates presented in this report were developed specifically for the comparison of treatment/disposal alternatives, and are not to be construed as total project implementation cost for budgeting purposes.

## 4.5 UNCERTAINTIES CHANGES

If all or any of the above uncertainties change, the water disposal selection system listed in Table 2-1 may change also.

# 5.0 DESCRIPTION OF ALTERNATIVES

## 5.1 CRITERIA

The criteria that will be used to evaluate the 105 KE Spent Fuel Storage Basin wastewater disposal options and their associated weights factors are listed in Section 2 and discussed in Appendix C.

## 5.2 ASSUMPTIONS

### 5.2.1 Operations Assumptions

- For the purposes of evaluating treatment and disposal options for the 105KE Basin water, it has been assumed that an average of 7,570,800 L (2,000,000 gal) of basin water per Tri-Party Agreement milestone, will be treated and disposed of each year.

- For each alternative involving treatment at 105KE Basin, a treatment system design flow rate of 95 L/min(25 gal/min) was assumed. This is based on 37,854 L/day (10,000 gal/day) basin water disposal and 200 work days per year. Therefore, all treatment systems will operate in a campaign-mode, with treated water collected in the discharge tanks as shown on Figure 5-1 until sufficient volume has been collected for disposal.

- It is also assumed that the second IXM called the polishing IXM will have 99.9 % efficiency (1,000 DF) for removal of radionuclides. This will be verified through sampling/analysis of waste water.

- All alternatives assumed that the treatment system will be located in the high bay of the 105KE Building or outside close to the basin.

- Existing utility services within the 105KE Building will be used to the maximum extent possible with no additional utilities added.

- The Hanford Site has studied water disposal by the Best Available Technology (BAT) process for N Reactor, ETF (C018) and 300 Area Water Disposal Facility (L045) through a NPDES outfall. Each BAT study has recommended treatment for removing particles inorganic, organic and radionuclides. A large part of this water disposal study relied on these previously developed BATs. See Appendix A for the discussion on technology screening.

- Roads are capable of transporting basin effluent with only minor repairs.

- The material condition of the KE Basin and associated systems can be successfully maintained over its intended life.

- The KE Basin can be modified to satisfy safety requirements associated with the treatment and disposal systems installations.

- Process standards will be modified to support water treatment and disposal.
- Operator staffing and experience levels are adequate for water treatment and shipment of KE Basin water.
- Use of commercial Department of Transportation (DOT) certified tankers are used for water transportation.
- The transportable route can be isolated from general public and non essential personnel as required to transport basin water.
- This study assumes and plans that DOE Orders (e.g., DOE 6430.1A), industry standards, and Washington State regulations will be met in design and transportation of basin water for disposal.
- Sandfilter and microfilter/ultrafilter backflush will be discharged to the basin to reduce secondary waste.
- Performance testing of treatment equipment will be done before the project scope and final design.

### 5.2.2 Radiation Exposure Assumptions

- A thorough ALARA plan meeting the requirements of DOE Orders and Westinghouse Hanford Company (WHC) administrative control manual requirements will be developed, approved, and implemented specifically for this work.
- Fuel and sludge will be put into fully enclosed containers, thereby reducing the basin water source term over time.
- One exsisting IXM will run continuously to reduce the basin water source term.
- The basin chiller will run continuously to reduce the cesium leach rate in the basin.
- The treatment equipment will have adequate shielding for ALARA consideration.
- Spent IXMs will remain non TRU for disposal.

### 5.2.3 Environmental Assumptions

- This engineering study assumes that NEPA environmental assessment requirements, DOE Orders, and all permitting requirements will be completed prior to treatment and transfer of basin water for disposal.

- Untreated tritium is assumed to be acceptable for disposal.

### 5.2.4 Cost Assumptions

- Purchased equipment costs were obtained through contacts with vendors, or through the use of previous recent quotes for similar equipment.
- Purchased equipment costs are converted to installed equipment costs using a series of factors proposed by Chilton (1979).
- The equivalent uniform annualized cost (EUAC) is calculated using a 7 percent time value of money and a project life of 6 years.
- Maintenance cost is assumed to be 10 percent of equipment cost.
- Cost of the equipment is based on the 757,080 L (2,000,000 gal) of basin water to be treated per year. If the amount of water to be treated changes, equipment cost and operating cost will change accordingly.
- If tritium treatment technology becomes available, the cost figures will change according to the equipment required.

## 5.3 ALTERNATIVES

Three different alternatives of disposition of 105KE Basin water have been considered after the water is treated in an acceptable level for disposal. All of the three disposal alternatives use one treatment system which satisfies the water quality for disposal. Further testing is required to confirm proposed treatment is adequate to meet the requirements.

### 5.3.1 Alternative A: 105KE Basin Water Treatment for Disposal to Columbia River Through Outfall 004

This alternative is based on the evaluation of the inorganic and radionuclides in the existing basin water and comparing with the acceptable river discharge comparative levels. The river discharge comparative levels were derived from different federal and Washington State standards as shown in Table 5-1. The existing basin water does not meet the criteria set forth for

Table 5-1. Alternative A - 105KE Basin Water Treatment for Disposal at Columbia River Through Outfall 004. (4 sheets)

| Analyte/ species | K Basin raw water | | River discharge comparative levels | | | | | | | | Filtration and treatment | | | | | | | | | Treated K Basin water to river |
|---|---|---|---|---|---|---|---|---|---|---|---|---|---|---|---|---|---|---|---|---|
| | Conc. | Source | Chronic | | Acute | | Human Health Conc. | Source | Ambient river | Source | Sand filter | | Existing IXM | | Micro/ultrafilter | | Pol. IXM | | Total DF | Conc. |
| | | | Conc. | Source | Conc. | Source | | | | | DF | Source | DF | Source | DF | Source | DF | Source | | |
| INORGANIC | (ug/L) | | (ug/L) | | (ug/L) | | (ug/L) | | (ug/L) | | | | | | | | | | | (ug/L) |
| Aluminum | 8.20E+02 | m | 5.00E+01 | d | -- | -- | -- | -- | 2.56E+01 | v | -- | -- | 100 | t | 7.1 | w | 10 | t | 7.10E+03 | 1.15E-01 |
| Antimony | N/D | -- | 1.60E+03 | b | 9.00E+03 | b | 1.40E+01 | q,r | -- | -- | -- | -- | -- | -- | -- | -- | -- | -- | -- | -- |
| Arsenic | N/D | -- | 1.90E+02 | a,b,q | 3.60E+02 | a,b,q | 1.80E-02 | q,r | 1.20E+00 | v | -- | -- | -- | -- | -- | -- | -- | -- | -- | -- |
| Barium | 1.72E+03 | v | 1.00E+03 | b | -- | -- | -- | -- | 2.65E+01 | v | -- | -- | 100 | t | 1.3 | w | 10 | t | 1.30E+03 | 1.32E+00 |
| Beryllium | N/D | -- | -- | -- | -- | -- | 7.70E-03 | q,r | -- | -- | -- | -- | -- | -- | -- | -- | -- | -- | -- | -- |
| Cadmium | N/D | -- | 6.57E-01 | a,l | 1.91E+00 | a,j | 5.00E+00 | b | -- | -- | -- | -- | -- | -- | -- | -- | -- | -- | -- | -- |
| Calcium | 3.35E+02 | u | -- | -- | -- | -- | -- | -- | 1.64E+04 | v | -- | -- | 100 | t | 1.0 | w | 10 | t | 1.00E+03 | 3.35E-01 |
| Chromium | N/D | -- | 1.10E+01 | a,l,o | 1.60E+01 | a,j,o | 1.00E+02 | a | -- | -- | -- | -- | -- | -- | -- | -- | -- | -- | -- | -- |
| Cobalt | N/D | -- | -- | -- | -- | -- | -- | -- | -- | -- | -- | -- | -- | -- | -- | -- | -- | -- | -- | -- |
| Copper | N/D | -- | 6.59E+00 | a,k | 9.44E+00 | a,j | 1.30E+04 | q,r | -- | -- | -- | -- | -- | -- | -- | -- | -- | -- | -- | -- |
| Iron | 3.43E+02 | v | 1.00E+03 | b | -- | -- | -- | -- | 5.07E+01 | v | -- | -- | 100 | t | 17.3 | w | 10 | t | 1.73E+04 | 1.98E-02 |
| Lead | N/D | -- | 1.14E+00 | a,j | 2.93E+01 | a,j | 5.00E+01 | q,r | -- | -- | -- | -- | -- | -- | -- | -- | -- | -- | -- | -- |
| Lithium | N/D | -- | -- | -- | -- | -- | -- | -- | -- | -- | -- | -- | -- | -- | -- | -- | -- | -- | -- | -- |
| Mercury | N/D | -- | 1.20E-02 | a | 2.40E+00 | a,q | 1.40E-01 | q,r | -- | -- | -- | -- | -- | -- | -- | -- | -- | -- | -- | -- |
| Magnesium | 1.15E+01 | m | -- | -- | -- | -- | -- | -- | 3.65E+03 | v | -- | -- | 100 | t | 1.0 | w | 10 | t | 1.00E+03 | 1.15E-02 |
| Manganese | 3.32E+00 | m | 5.00E+01 | b | -- | -- | -- | -- | 8.78E+00 | v | -- | -- | 100 | t | 3.0 | w | 10 | t | 3.00E+03 | 1.10E-03 |
| Molybdenum | N/D | -- | -- | -- | -- | -- | -- | -- | -- | -- | -- | -- | -- | -- | -- | -- | -- | -- | -- | -- |
| Neodymium | N/D | -- | -- | -- | -- | -- | -- | -- | -- | -- | -- | -- | -- | -- | -- | -- | -- | -- | -- | -- |
| Nickel | N/D | -- | 9.72E+01 | a | 8.75E+02 | a,j | 1.00E+02 | c | 8.18E+00 | v | -- | -- | -- | -- | -- | -- | -- | -- | -- | -- |
| Potassium | N/D | -- | -- | -- | -- | -- | -- | -- | 6.41E+02 | v | -- | -- | -- | -- | -- | -- | -- | -- | -- | -- |
| Phosphorus | N/D | -- | -- | -- | -- | -- | | | 2.00E+01 | v | -- | -- | -- | -- | -- | -- | -- | -- | -- | -- |
| Samarium | N/D | -- | -- | -- | -- | -- | -- | -- | -- | -- | -- | -- | -- | -- | -- | -- | -- | -- | -- | -- |
| Selenium | 1.07E+02 | m | 5.00E+00 | a,l | 2.00E+01 | a,h | 5.00E+01 | c | -- | -- | -- | -- | 100 | t | 1.0 | w | 10 | t | 1.00E+03 | 1.07E-01 |
| Silver | 1.11E+01 | u | 1.20E-01 | b | 8.95E-01 | a,h | 1.05E+02 | q,r | -- | -- | -- | -- | 100 | t | 1.2 | w | 10 | t | 1.20E+03 | 9.25E-02 |

Table 5-1. Alternative A - 105KE Basin Water Treatment for Disposal at Columbia River Through Outfall 004. (4 sheets)

| Analyte/ species | K Basin raw water | | River discharge comparative levels | | | | | | | | Filtration and treatment | | | | | | | | | Treated K Basin water to river |
|---|---|---|---|---|---|---|---|---|---|---|---|---|---|---|---|---|---|---|---|---|
| | Conc. | Source | Chronic | | Acute | | Human Health Conc. | Source | Ambient river | Source | Sand filter | | Existing IXM | | Micro/ultrafilter | | Pol. IXM | | Total DF | Conc. |
| | | | Conc. | Source | Conc. | Source | | | | | DF | Source | DF | Source | DF | Source | DF | Source | | |
| Sodium | 1.76E+02 | m | -- | -- | -- | -- | -- | -- | 1.63E+03 | v | -- | -- | 100 | t | 1.0 | w | 10 | t | 1.00E+03 | 1.76E-01 |
| Sulfur | 1.01E+02 | u | -- | -- | -- | -- | -- | -- | -- | -- | -- | -- | 100 | t | -- | -- | 10 | t | 1.00E+03 | 1.01E-01 |
| Tin | N/D | -- | -- | -- | -- | -- | -- | -- | -- | -- | -- | -- | -- | -- | -- | -- | -- | -- | -- | -- |
| Titanium | N/D | -- | -- | -- | -- | -- | -- | -- | -- | -- | -- | -- | -- | -- | -- | -- | -- | -- | -- | -- |
| Thallium | N/D | -- | -- | -- | -- | -- | 1.70E+00 | q,r | -- | -- | -- | -- | -- | -- | -- | -- | -- | -- | -- | -- |
| Uranium | N/D | -- | -- | -- | -- | -- | -- | -- | 8.06E-01 | v | -- | -- | -- | -- | -- | -- | -- | -- | -- | -- |
| Vanadium | N/D | -- | -- | -- | -- | -- | -- | -- | 1.62E+00 | v | -- | -- | -- | -- | -- | -- | -- | -- | -- | -- |
| Zinc | 2.18E+01 | v | 6.13E+01 | a,k | 6.76E+01 | a,j | -- | -- | 5.75E+00 | v | -- | -- | 100 | t | 2.2 | w | 10 | t | 2.2E+03 | 9.90E-03 |
| Zirconium | 6.01E+01 | v | -- | -- | -- | -- | -- | -- | -- | -- | -- | -- | 100 | t | -- | -- | 10 | t | 1.00E+03 | 6.01E-02 |
| Ammonia (Total) | N/D | -- | 2.00E+03 | a,l | 1.65E+04 | a,j | -- | -- | 8.00E+01 | v | -- | -- | -- | -- | -- | -- | -- | -- | -- | -- |
| Ammonia | N/D | -- | -- | -- | -- | -- | -- | -- | -- | -- | -- | -- | -- | -- | -- | -- | -- | -- | -- | -- |
| Ammonium | N/D | -- | -- | -- | -- | -- | -- | -- | -- | -- | -- | -- | -- | -- | -- | -- | -- | -- | -- | -- |
| Chloride | N/D | -- | 2.30E+05 | a | 8.60E+05 | a | -- | -- | 196E+03 | v | -- | -- | -- | -- | -- | -- | -- | -- | -- | -- |
| Chloride by IC | N/D | -- | -- | -- | -- | -- | -- | -- | -- | -- | -- | -- | -- | -- | -- | -- | -- | -- | -- | -- |
| Fluoride | N/D | -- | -- | -- | -- | -- | 4.00E+03 | c | 1.00E+02 | v | -- | -- | -- | -- | -- | -- | -- | -- | -- | -- |
| Nitrite | N/D | -- | -- | -- | -- | -- | 1.00E+03 | c | -- | -- | -- | -- | -- | -- | -- | -- | -- | -- | -- | -- |
| Nitrate | N/D | -- | 1.00E+04 | b | -- | -- | 1.00E+04 | c | -- | -- | -- | -- | -- | -- | -- | -- | -- | -- | -- | -- |
| Phosphate | N/D | -- | -- | -- | -- | -- | -- | -- | -- | -- | -- | -- | -- | -- | -- | -- | -- | -- | -- | -- |
| Sulfate | N/D | -- | -- | -- | -- | -- | -- | -- | 9.76E+03 | v | -- | -- | -- | -- | -- | -- | -- | -- | -- | -- |
| RADIONUCLIDES | pCi/L | | pCi/L | | pCi/L | | pCi/L | | pCi/L | | | | | | | | | | | pCi/L |
| Total Alpha | 5.40E+04 | l | -- | -- | -- | -- | -- | -- | -- | -- | 1.11 | m | 5.21 | x | 10 | w | 1,000 | bb | 5.78E+04 | 9.35E-01 |
| Total Beta | N/D | -- | -- | -- | -- | -- | -- | -- | -- | -- | -- | -- | -- | -- | -- | -- | -- | -- | -- | -- |
| AM-241 | N/D | -- | 3.00E+01 | e | -- | -- | -- | -- | -- | -- | -- | -- | -- | -- | -- | -- | -- | -- | -- | -- |
| Cm-242 | N/D | -- | 1.00E+03 | e | -- | -- | -- | -- | -- | -- | -- | -- | -- | -- | -- | -- | -- | -- | -- | -- |

Table 5-1. Alternative A - 105KE Basin Water Treatment for Disposal at Columbia River Through Outfall 004. (4 sheets)

| Analyte/ species | K Basin raw water | | River discharge comparative levels | | | | | | | | Filtration and treatment | | | | | | | | | Treated K Basin water to river |
|---|---|---|---|---|---|---|---|---|---|---|---|---|---|---|---|---|---|---|---|---|
| | Conc. | Source | Chronic | | Acute | | Human Health Conc. | Source | Ambient river | Source | Sand filter | | Existing IXM | | Micro/ultrafilter | | Pol. IXM | | Total DF | Conc. |
| | | | Conc. | Source | Conc. | Source | | | | | DF | Source | DF | Source | DF | Source | DF | Source | | |
| CM-244 | N/D | -- | 6.00E+01 | e | -- | -- | -- | -- | -- | -- | -- | -- | -- | -- | -- | -- | -- | -- | -- | -- |
| Co-60 | 4.27E+03 | m | 1.00E+04 | e | -- | -- | -- | -- | -- | -- | 1.11 | m | 21.41 | x | 7.4 | w | 1,000 | bb | 1.76E+05 | 2.42E-02 |
| Cs-134 | 5.99E+03 | m | 2.00E+03 | e | -- | -- | -- | -- | -- | -- | 1.11 | m | 17.09 | x | 1.1 | w | 1,000 | bb | 2.08E+04 | 2.88E-01 |
| Cs-137 | 6.08E+06 | n | 3.00E+03 | e | -- | -- | -- | -- | -- | -- | 1.11 | m | 12.79 | y | 1.1 | w | 1,000 | bb | 1.56E+04 | 3.88E+02 |
| C-14 | N/D | -- | 7.00E+04 | e | -- | -- | -- | -- | -- | -- | -- | -- | -- | -- | -- | -- | -- | -- | -- | -- |
| H-3 | 3.17E+06 | m | 2.00E+06 | e | -- | -- | -- | -- | 3.74E+02 | v | -- | -- | -- | -- | 1.0 | w | -- | -- | 1.00E+00 | 3.17E+06 |
| K-40 | 1.90E+03 | m | 7.00E+03 | e | -- | -- | -- | -- | -- | -- | 1.11 | m | -- | -- | -- | -- | -- | -- | -- | -- |
| Mn-54 | 1.98E+03 | n | 5.00E+04 | e | -- | -- | -- | -- | -- | -- | 1.11 | m | 33.54 | x | 3.0 | w | 1,000 | bb | 1.12E+05 | 1.77E-02 |
| Pb-210 | N/D | -- | 3.00E+01 | e | -- | -- | -- | -- | -- | -- | -- | -- | -- | -- | -- | -- | -- | -- | -- | -- |
| Pu-238 | 6.94E+04 | m | 4.00E+01 | e | -- | -- | -- | -- | 1.32E-01 | v | 1.11 | m | 70.02 | n | 10 | w | 1,000 | bb | 7.7E+05 | 8.93E-02 |
| Pu-239/240 | 3.27E+05 | m | 3.00E+01 | e | -- | -- | -- | -- | 7.00E-02 | v | 1.11 | m | 3.69 | y | 10 | w | 1,000 | bb | 4.09E+04 | 7.99E+00 |
| Radium | N/D | -- | 1.00E+02 | e | -- | -- | -- | -- | 1.42E-01 | v | -- | -- | -- | -- | -- | -- | -- | -- | -- | -- |
| Ru-106 | 4.85E+03 | m | 6.00E+03 | e | -- | -- | -- | -- | -- | -- | 1.11 | m | -- | -- | 1.7 | w | 1,000 | bb | 1.88E+03 | 2.58E+00 |
| Sb-125 | 4.91E+03 | m | 5.00E+04 | e | -- | -- | -- | -- | -- | -- | 1.11 | m | 2.99 | n | -- | -- | 1,000 | bb | 3.31E+03 | 1.48E+00 |
| Sr-90 | 3.99E+07 | m | 1.00E+03 | e | -- | -- | -- | -- | 3.48E-01 | v | 1.11 | m | 35.97 | y | 1.1 | w | 1,000 | bb | 4.39E+04 | 9.09E+02 |
| U-234 | N/D | -- | 5.00E+02 | e | -- | -- | -- | -- | -- | -- | -- | -- | -- | -- | -- | -- | -- | -- | -- | -- |
| U-235 | N/D | -- | 6.00E+02 | e | -- | -- | -- | -- | -- | -- | -- | -- | -- | -- | -- | -- | -- | -- | -- | -- |

Table 5-1. Alternative A - 105KE Basin Water Treatment for Disposal at Columbia River Through Outfall 004. (4 sheets)

| Analyte/ species | K Basin raw water | | River discharge comparative levels | | | | | | | | Filtration and treatment | | | | | | | | | Treated K Basin water to river |
|---|---|---|---|---|---|---|---|---|---|---|---|---|---|---|---|---|---|---|---|---|
| | | | Chronic | | Acute | | Human Health Conc. | Source | Ambient river | Source | Sand filter | | Existing IXM | | Micro/ultrafilter | | Pol. IXM | | Total DF | |
| | Conc. | Source | Conc. | Source | Conc. | Source | | | | | DF | Source | DF | Source | DF | Source | DF | Source | | Conc. |
| U-238 | N/D | -- | 6.00E+02 | e | -- | -- | -- | -- | -- | -- | -- | -- | -- | -- | -- | -- | -- | -- | -- | -- |
| Eu-154 | 7.25E+03 | m | 2.00E+04 | e | -- | -- | -- | -- | -- | -- | -- | -- | -- | -- | -- | -- | -- | -- | -- | -- |
| Eu-155 | 3.63E+03 | m | 1.00E+05 | e | -- | -- | -- | -- | -- | -- | -- | -- | -- | -- | -- | -- | -- | -- | -- | -- |

N/D = Not detected

REFERENCES FOR TABLES 5-1, 5-2, 5-3, AND A-1

a. Values reported are specifically listed in WAC 173-201A-040 or were calculated using equations as defined in WAC 173-201A-040. Equation inputs for Columbia River were: pH = 7.41, Temperature = 16.4 C, Hardness = 80 mg/L as CaCO3, and Salmonids present.
b. EPA Gold Book
c. 40 CFR 141 Primary Drinking Water Standards
d. 40 CFR 143 Secondary Drinking Water Standards.
e. DOE Order 5400.5 Radiation Protection of the Public and the Environment DCG for Ingestion
f. Land Disposal Restriction guidelines (40 CFR Part 268) for F039 Wastewater.
g. Chapter 173-200 WAC, Water Quality Standards for Ground Waters of the State of Washington, October 31, 1990.
h. An instantaneous concentration not to be exceeded any time.
i. A 24 hour average not to be exceeded.
j. A 1-hour average concentration not to be exceeded more than once every three years.
k. A 4-day average concentration not to be exceeded more than once every three years.
l. PNL 1990, 105KE NLOP Water Analysis (PNL93-07046)
l.1. Chapter 173-460 WAC ASIL, annual average (proposed 1993 revisions).
m. WHC-SD-NR-ES-016 Transport Mechanism of Radionuclides in 105KE Fuel Storage Basin to Airborne Effluent Releases.
m.1. Chapter 173-460 WAC ASIL, 24-hr average (proposed 1993 revisions).
n. Center of Basin Sample Point 10, November 1992.
n.1. Based upon 10% of DOE Order 5400.5 DCG for Inhalation.
o. Based upon 4% of DOE Order 5400.5 DCG for water ingestion.
p. Not used in the study.
q. Based on 40 CFR 131.36(b) as of 12/22/92.
r. Based on human consumption of water and organisms.
s. Based on hexavalent chromium.
t. WHC-SD-NR-ES-013, Rev. 0, N Reactor Effluent Treatment Study Table 5-9, January 1992.
u. Center of basin sample, November 1992.
v. WHC-SD-NR-ES-014, Rev. 0, N Reactor Wastewater Treatment System Summary Engineering Report Tables 2-2 and 2-3 105N Fuel Basin February 1992 Sample Data (unpublished).
w. WHC-SD-NR-ES-014, Rev. 0, N Reactor Wastewater Treatment System Summary Engineering Report Table 4-7 105N Fuel Basin February 1992 Sample Data (unpublished).
x. Sample data 1-5-94 to 2-16-94 105KE IXM inlet and outlet concentrations from WHC 100K Hazardous and Radiological Waste Control Section.
y. Sample data 8/11/93 to 1/5/94 105KE IXM inlet and outlet concentrations from WHC Engineering and Environmental Documentation Laboratory.
z. N Reactor Wastewater Pretreatment Engineering Study (unpublished document) dated 1/3/93 by SAIC, Richland, WA.
aa. Technical Memo, Updated Basin Assumptions for N Reactor Effluent Engineering Study (unpublished document) dated 2/22/94 by SAIC, Richland, WA.
bb. Polishing IXM efficiency justification, DSI from Keith Larkin to Sohan Gohir dated 3/29/94 (unpublished document).

water disposal to the river. A combination of the existing water treatment and additional new treatment has been recommended to lower the concentration of inorganic and radionuclides with the exception of tritium (H-3) to meet the water disposal to the Columbia River.

Presently there is no proven technology available to treat the tritium. Organic analysis of the basin water or makeup water was not performed because the water is of a highly purified nature by the time it reaches the KE Basin according to WHC-SD-NR-ES-016 (WHC 1993a).

The following paragraphs describe the existing treatment systems and new required treatment system and interconnected equipment as shown on Figure 5-1. Present treatment system does not satisfy the comparative water quality requirement for disposal to Columbia River as shown on Table 5-1. The predicted treated effluent quality for this alternative is tabulated in Table 5-1. In this disposal method, treated effluent will be discharged to the Columbia River under a NPDES permit. Because tritium concentrations in the effluent exceed ambient water quality criteria, a mixing zone within the river would be required. Wastewater held within one of the two 75,708 L (20,000 gal) tanks would be sampled to ensure permit conditions are met. After sampling, the treated effluent will be pumped from the discharge (collection) tanks to the 004 outfall via existing 20 cm (8 in.) CW-A-2 chiller piping (Ref. H-1-51837) at a rate of 95 L/min (25 gal/min), where it will be discharged to the Columbia River. The existing portable demineralized system will be upgraded from 45 L/min (12 gal/min) to 189 L/min (50 gal/min) to make up for the water discharged to the Columbia River and regular demineralized water requirement for the basin.

5.3.1.1 **Existing Treatment System.** The basin water treatment systems as shown on Figure 5-2 consists of the following components; skimmer pump, sand filter, ion-exchange modules (IXMs), ion-exchange columns (IXCs) and cartridge filters. With the exception of the IXCs, which are interconnected with the piping of the basin recirculation system and supplied with basin water from the recirculation pumps, all of the other components are supplied with basin water from the skimmer pump. The skimmer pump, sand filter and IXMs are more commonly referred to as the IXM system. The IXM system obtains and treats the water that is drawn from the surface of the fuel storage basin. This is in contrast to the recirculation system which draws water from a level two to three feet below the surface of the basin. The IXC treatment system is not being used any more in 105KE.

Basin water enters the IXM system through three adjustable, screened weirs located along the north wall of the basin. The single skimmer pump (1,514 L/min [400 gal/min]) draws water from the weirs and pumps it to the sand filter, which is a carbon steel tank filled with a filtration media of sand. The steel tank is enclosed within a concrete vault for shielding purposes. The sand filter which collects particulate matter from the basin water, is periodically backwashed. The sand filter backwash water is discharged into the northwest loadout pit. After passing through the sand filter a significant portion of the water is typically routed through one or two of the IXMs (606 L/min [160 gal/min] capacity each) before being returned to the basin via the south west loadout pit. The IXMs are configured to operate in parallel to each other. The IXMs remain in service until their

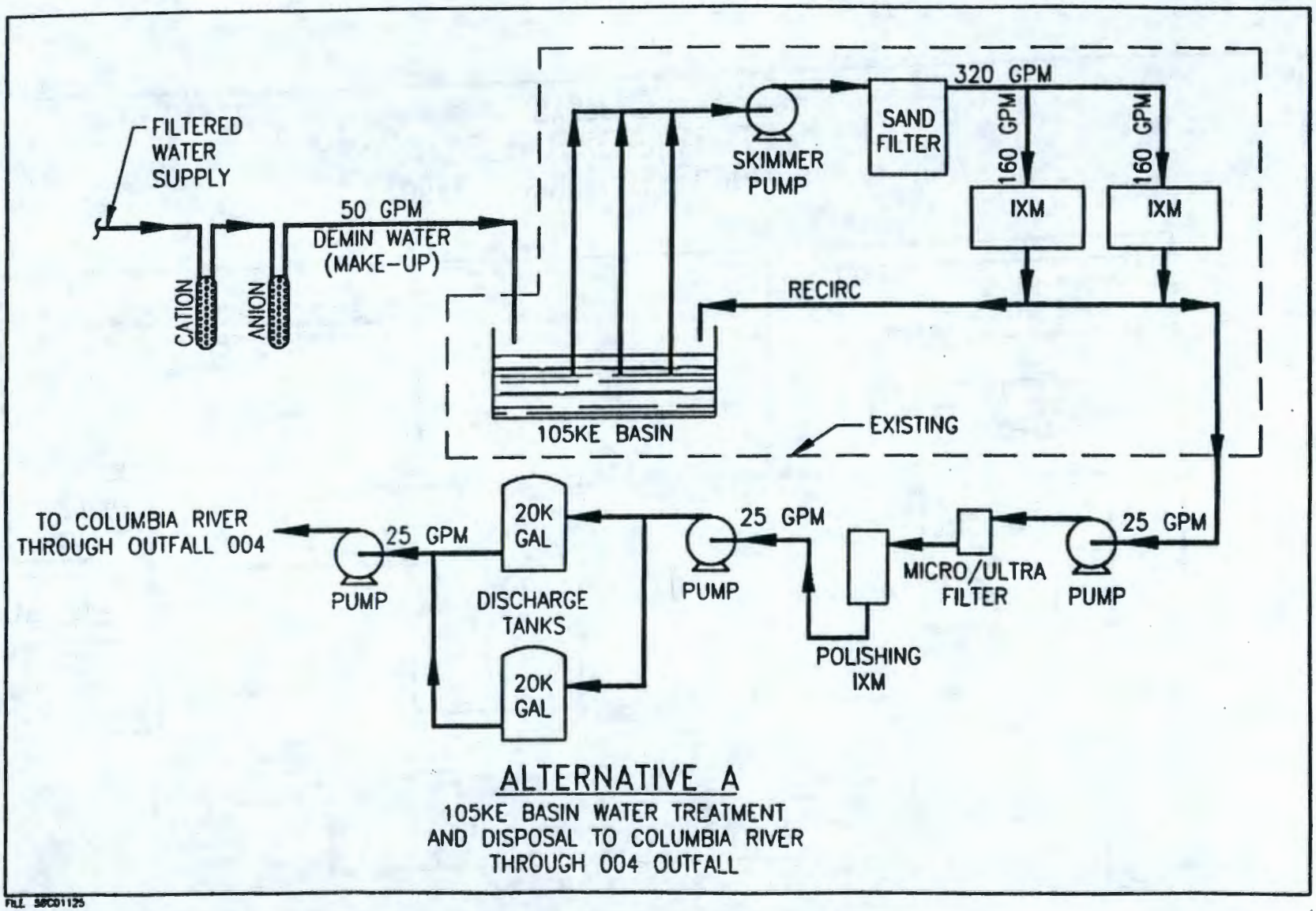


FILE 98C01125

**Figure 5-1. Alternative A: 105KE Basin Water Treatment and Disposal to Columbia River Through 004 Outfall.**

Figure 5-2. 105KE Basin Water Cooling and Existing Treatment Systems.

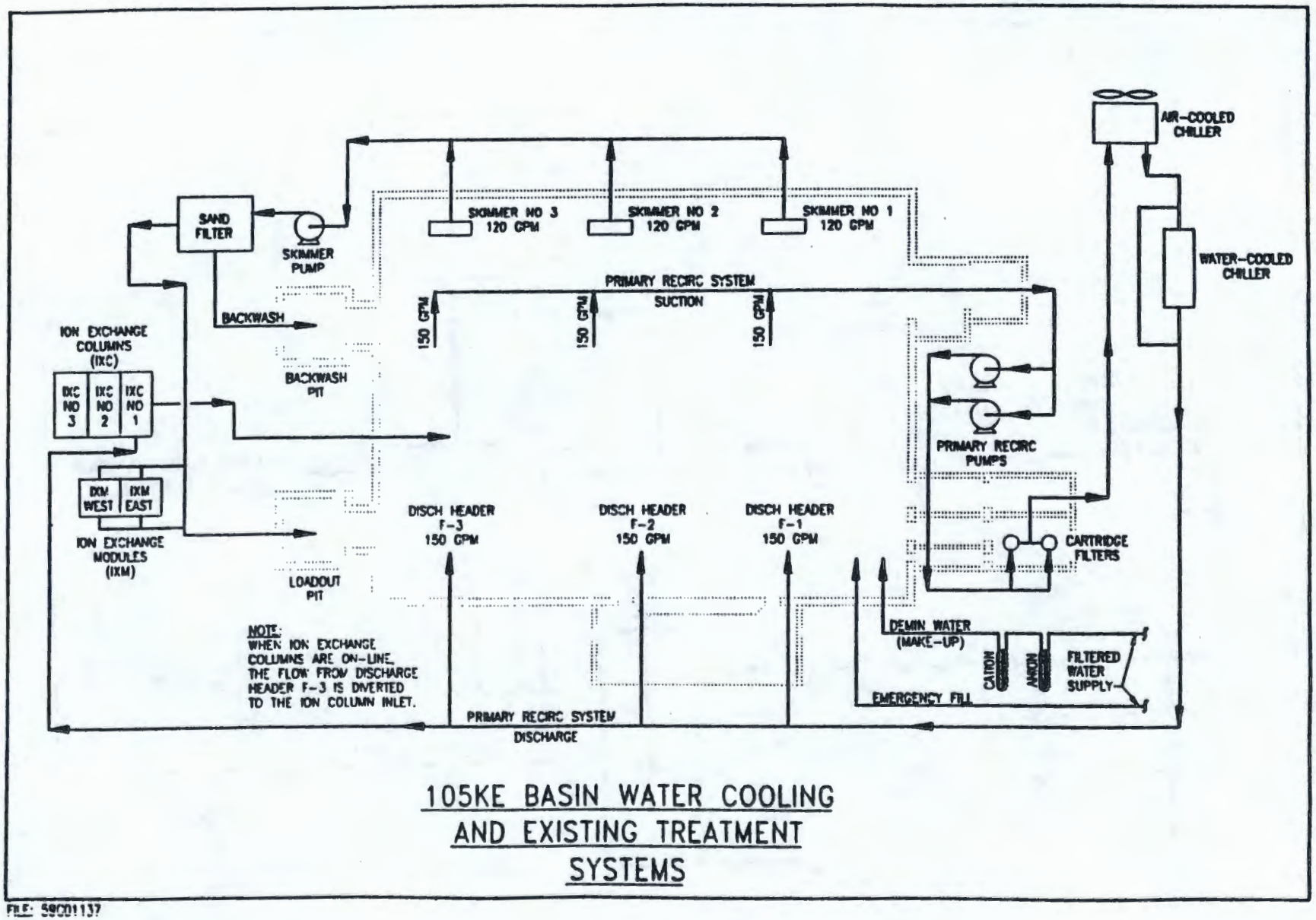


FILE: 59CD1137

resins are no longer effective in removing radionuclides from the basin water. At that time they are removed and replaced. Threshold for module replacement is determined based on the efficiency of $Cs^{137}$ removal falling below 70%. Water samples taken from the inlet and outlet side of the IXM are analyzed on a weekly basis for determining the efficiency of the IXM for $Cs^{137}$, $Pu^{239/240}$ and $Sr^{90}$ radionuclides. An IXM is disposed of as a complete unit; it serves as its own disposal container.

## ION-EXCHANGE COLUMN

The IXCs are treatment and disposal columns constructed of carbon steel (Drawing H-1-34789) which contain ion-exchange resins used for treating the basin water. In contrast to the IXMs which are filled with ion-exchange resin during their manufacture, the IXC are filled with ion-exchange resin by plant maintenance personnel just prior to their use in the basin. When the tanks are in service they are situated in concrete enclosures for radiation shielding. The water supply to the tanks is provided by the recirculation pump via the recirculation piping. The columns operate in parallel to each other; each column has a capacity of 189 L/min (50 gal/min) and a total of three columns can be in service at any one time. When the resin within the tanks is depleted, the tanks are removed and disposed of as a complete unit and transported to a disposal location in a shipping cask.

Because of the transuranic waste disposal problems created by the spent IXCs at 105KE, the IXC units are no longer in use there. The skimmer pump system and IXMs function as the primary method for radionuclide removal from the basin water at this time. The major equipment components for the existing IXM system are as below.

## SKIMMER PUMP

The skimmer pump is 1,514 L/min (400 gal/min) capacity Gorman Rup model 03E1-B horizontal self-priming pump directly coupled to a 30 hp electric motor.

## SAND FILTER

The sandfilter is a Baker Filtration Company Model 2 HRB-78 filter unit with an effective filtration area of 3.1 $m^2$ (33.2 $ft^2$). The filter vessel is a 198 cm (78 in.) O.D. by 137 cm (54 in.) shell side carbon steel tank built to ASME Section VIII code. The tank is rated for a working pressure of 90 psi at 450 °F and a design flow capacity of 1,514 L/min (400 gal/min). For filtration media the unit uses 8700# of 0.3 mm size filtration sand. The entire tank is surrounded by a concrete enclosure for radiological shielding purposes. The concrete enclosure has a removable lid to allow access to the filtration sand for periodic sand sampling.

ION-EXCHANGE MODULE

The IXMs are single-use disposal water treatment units used for the removal of radionuclides from the water of the 105KE spent fuel storage basins. The modules, which have a flow capacity of 606 L/min (160 gal/min), are operated in conjunction with the sand filter which filters the water before it is routed to the IXM. The IXMs are self contained units 178 cm x 218 cm x 179 cm (70 in. by 86 in. by 70.5 in.) consisting of six carbon steel tanks, constructed to ASME Boiler and Pressure Vessel Code Section VIII requirements. The six tanks operate in parallel to each other; they are all connected to a common inlet and outlet header. During IXM construction the tanks are filled with ion- exchange media. The media used in the most recent IXMs is Purolite NRW 37 mixed bed resin with a 1:1 anion to cation ratio. The steel tanks containing the ion-exchange media are encased within a block of concrete during the final steps in IXM fabrication. When the units are in service, the concrete serves as shielding for internal radiation which emanates from the radionuclides entrapped within. An IXM typically remains in service until it is no longer effective in removing radionuclides from the basin water. At that time, the IXM is disconnected from the basin piping and transported to a disposal location. Depletion of the resins is determined based on the efficiency of $Cs^{137}$ removal falling below 70 %. Water samples taken from the inlet and outlet side of the IXM are analyzed on a weekly basis for determining the efficiency of the IXM for $Cs^{137}$, $Pu^{239/240}$ and $Sr^{90}$ radionuclides.

MAKEUP WATER

A demineralized water system provides basin makeup water. Service water passes through a commercial (Culligan brand) portable exchange, two bed strong base unit with fiberglass tanks. The unit has a nominal flow rating of 45 L/min (12 gal/min) with a pressure drop of 23 psi. The system uses two fiberglass tanks, one filled with cation and the other with anion. When the resins are depleted as indicated by conductivity light indicator on the outlet side piping, the tanks are replaced with new tanks by the vendor.

5.3.1.2 Additional Treatment System for Alternative "A". The additional treatment system and disposal system for alternative "A" is comprised of one microfilter/ultrafilter, one polishing IXM, two discharge tanks, three pumps, upgraded demineralized water system and piping to 004 outfall as shown in Figure 5-1.

MICROFILTER

Water from the existing 8 cm (3 in.) dia IXM return piping will be bled off and pumped to the microfilter at a flow rate of 95 L/min (25 gal/min). The microfilter is the first treatment component. The purpose of the filter is to remove particles, 1 micron ($\mu$m) and larger. In addition to removing the particles, the filter may also remove some of the heavy metals that are absorbed to the particles. There are several viable options for filters in this application. The selected option uses a tubular filter element constructed of sintered ceramic or metal particles. These filters capture

solids on the surface of the filter element while allowing water and dissolved matter to pass through. This type of filter can be back-flushed in place to avoid producing waste filters typical of conventional cartridge filtration.

To enhance solids removal, both precoat and body feed will be used. Before filtering basin water, a precoat slurry of filter aid (such as diatomaceous earth) in clean water will be run through the filter, building up a porous cake that enhances the performance of the filter element. Approximately 0.1 to 0.2 $lb/ft^2$ of precoat per unit of filter area will be used. This precoat will also be applied to the filter element following each filter back-flush. When solids accumulate to the point where filter performance is impaired as determined by the differential pressure measured across the filter element, the filter will be automatically back flushed. The back-flush will consist of approximately 380 L (100 gal) of waste water and service water pulsed through the filter element with compressed air. For example, Pall porous metal backwash filter systems or Mott Metallurgical Corporation backflush filter systems may suit the application. For the purpose of this study Mott LSI filter model 841660-24-2-2 with 5.5 $m^2$ (58.8 $ft^2$) area was considered. This unit is designed for 95 L/min (25 gal/min) flow at 18.5 °C. ALARA consideration will be considered for facility worker exposure.

## ULTRAFILTRATION

Ultrafiltration is similar to a microfiltration system except it addresses particles in a size range from 0.001 to o.1 $\mu m$ (10 to 1,000A). Water coming from microfilter will be routed through ultrafiltration unit. There are similar design constraints on materials of construction. The membranes consists of a very thin skin supported on a spongy sub-layer of membrane material. Like microfiltration, ultrafilters are usually operated in a recirculation cross-flow mode. The recirculation feature maintains velocity across the filter membranes to prolong on-stream time by avoiding solids accumulation at the membrane surfaces. Use of ultrafiltration system will eliminate most of the colloidal particles from the effluent. The ultrafilter will be backflushed back to the basin.

## POLISHING IXM

Basin filtered water from the microfilter/ultrafilter will be routed to the polishing IXM similar to the existing IXM designed for 95 L/min (25 gal/min). Existing IXM uses six tanks set at 100 L/min (26.5 gal/min) (drawing H-1-46279). A new IXM is installed in series to further clean the water coming out of microfilter/ultrafilter. This new IXM called a polishing IXM will use one tank encased in the concrete for radiation shielding and easy disposal. This polishing IXM will be installed close to the existing IXMs at a suitable location and to be serviced by the 30 ton overhead crane. The polishing IXM is assumed to have a 99.9% efficiency for the removal of dissolved inorganics and radionuclides species. During IXM construction, the tank will be filled with ion-exchange media. Purolite NRW 37 mixed bed resin with a 1:1 anion to cation ratio could be used in the polishing IXM. This media is presently used in the existing two IXMs. Upon depletion of the resin, the whole polishing unit is replaced with a new polishing unit. One of

the existing IXMs will be used at a time. This unit will act as a primary column. A second IXM is used as a reserve. When the first module becomes exhausted, the second module is valved in and becomes the primary. The exhausted module will be replaced with a new module. The polishing IXMs will last longer than the existing IXMs because it receives cleaner water having less dissolved inorganics and radionuclides as compared to the water entering the first IXM. The polishing IXMs will be replaced when depleted but for this study it is expected they will be replaced four times a year.

**DISCHARGE TANK**

Treated effluent will be collected in one of two new tanks located to the north west of the 105KE Building. These tanks will each have a working volume of 75,708 L (20,000 gal) and will have level sensing elements which will be interlocked to the microfilter/ultrafilter pump. This interlock will prevent overflow of a full tank.

The pH of the effluent will be adjusted through the addition of sodium hydroxide before discharge. Treated effluent will be pumped from the collection tanks to the 004 outfall via an 20 cm (8 in.) CW-A-2 chiller piping (Drawing H-1-51837) at a rate of 95 L/min (25 gal/min), where it will be discharged to the Columbia River.

These tanks will be installed with a secondary containment berm for collection of any leakage or dripping of water.

**5.3.1.3 Schedule.** All equipment needed to implement alternative A is readily available. This alternative mainly relies on the permitting documentation. Most time consuming permit is modification to NPDES which is estimated to take about 36 months after the detailed design is completed.

**5.3.1.4 Implementation.** The existing 100K outfall #004 is available for this discharge. Outfall #004 may provide suitable mixing characteristics for tritium releases once NPDES permit approval is obtained.

**5.3.1.5 Cost for Alternative "A".** The cost estimate for Alternative A is summarized in Table 5-4. The estimate is divided into costs and annual operating costs. The total estimated purchased equipment cost is $520,000. Process equipment includes micro filter, the polishing IXM, three pumps, and two holding tanks.

Cost of purchased equipment was obtained through contacts with vendors, or through the use of previous recent quotes for similar equipment. Where previous quotes were used, new equipment costs were scaled using the formula:

$$Cost_{New} = Cost_{Prev} \, (Size_{New} \, / \, Size_{Prev})^{Pwr}$$

where:

Cost = Cost of purchased equipment, new or previous
Size = Critical equipment capacity, new or previous (e.g., volume)
Pwr = Size-cost relationship factor, generally 0.6.

Purchased equipment costs were converted to installed equipment costs using a series of factors proposed by Chilton (1979). In this method, installed equipment costs are obtained from purchased equipment costs using the following relationship.

$$\text{Installed Cost} = \text{Purchased Cost } (F1)(F2)(F3)$$

where:

F1 = Installation factor
F2 = 1+f1+f2+f3+f4+f5
F3 = 1+f6+f7+f8.

Each factor in the above equation was assigned a value based upon established factors used for previous Hanford Site wastewater treatment system evaluations, and the specific characteristics of the proposed K Basin water treatment system. These factors are provided in Table 5-4, and are discussed in further detail below.

The F1 or "installation" factor is used to account for the relative complexities of various types of processing facilities, with F1 ranging from 1.39 for mixed fluid/solid handling processes to 1.47 for fluid processing. For the K Basin water treatment system alternatives, a factor of 1.47 was chosen.

The f1 "piping" or "auxiliary equipment" factor is used to adjust costs for piping installation for various types of processes, and ranges from 0.05 to 0.10 for a solids processing plant to 0.3 to 0.6 for a fluid processing plant. A value of 0.45 was chosen for the alternative effluent treatment systems, based on factors used in previous Hanford Site effluent treatment system evaluations using pre-packaged treatment equipment.

The f2 or "instrumentation" factor is used to account for instrumentation costs for the process. This factor ranges from 0.02 to 0.05 for a process where few if any automatic controls are used, to 0.10 to 0.15 for a process where a complex control system is installed. A value of 0.08, was chosen for the K Basin water treatment alternatives; this factor is consistent with that used for similar Hanford Site treatment processes.

The f3 or "building" factor is used to adjust costs based upon whether equipment is to be installed inside or outside, and ranges from 0.05 to 0.20 for outdoor units to 0.60 to 1.0 for indoor units. A value of 0.50 was used for the K Basin water disposal alternatives.

The f4 or "facilities" factor accounts for cost differences between modifications to existing facilities and new, stand alone installations, and includes the cost for new or significantly modified buildings. Suggested ranges for this factor run from 0.0 to 0.5 for minor additions, up to 0.25 to 1.0 for a new site. For the K Basin water disposal alternative, f4 was set to 0.15, consistent with the factor used for similar Hanford Site treatment processes.

The f5 or "outside lines" factor is used to adjust the costs of providing utilities to the new process and ranges from 0.0 to 0.05 for a modification to an existing facility, up to 0.15 to 0.25 for new, widely scattered installations. A value of 0.1, corresponding to the midpoint for the "separated units" range, was chosen to allow for the possibility of performing some unit operations in existing locations, with other unit operations performed in different new or existing facilities. This factor is consistent with that used for similar Hanford Site treatment processes.

The f6 or "engineering/construction" factor ranges form 0.20 to 0.35 for simple processes, to 0.35 to 0.50 for complex plants. A value of 0.27 was chosen for the K Basin water disposal alternatives, consistent with that used for other Hanford Site wastewater treatment systems using pre-packaged treatment equipment.

The f7 "administration: or "size" factor adds the cost of project management/administration to the total equipment costs. This factor ranges from 0.0 to 0.05 for large (expensive) plant, to 0.15 to 0.35 for experimental (pilot production) facilities. For the K Basins water disposal alternatives, a value of 0.31 was used. This factor is consistent with that used for previous Hanford Site BAT studies.

The f8 "contingency" factor adjusts the cost estimate for the level of detail and certainty associated with the process flowsheet, and ranges from 0.10 to 0.20 for a firm process, to 0.30 to 0.50 for a "tentative" process. Based upon the relative uncertainties about ultimate process conditions for the K Basin water disposal alternatives, a value of 0.40 was chosen (WHC 1992a).

Using this technique, the installed equipment cost for Alternative A is estimated to be approximately $4.01 million, as detailed in Table 5-4. The estimated annual operations and maintenance (O&M) cost for Alternative A is $1.15 million.

The equivalent uniform annualized cost (EUAC) of Alternative A was calculated using a 7 percent time value of money and a project life of 6 years. The EUAC provides the annual operating and maintenance costs for the treatment system, including costs associated with the capital equipment investment. The estimated EUAC for Alternative A is $2.00 million (Table 5-4).

5.3.1.5 Advantages and Disadvantages.

ADVANTAGES:

1. Existing NPDES permit modification will take less time than starting a new permit.

2. Less equipment and facility modifications needed.

3. 100K operations will have full control of water disposal.

4. Less operating cost.

5. Less worker exposure.

6. Less D&D work after disposal of the basin water.

**DISADVANTAGES:**

1. Hard to have pubic perception of tritium mixing with river.

2. Permit approval may require expensive and time consuming testing of aquatic species.

3. Long term monitoring of Columbia river water.

### 5.3.2 Alternative B: 105KE Basin Water Treatment for Ground Disposal Through ETF (C018)

This alternative B is based on the evaluation of the inorganics and radionuclides in the existing basin water and comparing with the acceptable ETF effluent limits. The ETF effluent limits were derived from the model used to estimate the compositions of the treated effluent and secondary wastes generated by the 200 Area ETF, assuming a feed with the same composition as untreated 105N Fuel Basin wastewater (SAIC 1994) as shown in the Table 5-2. See Appendix E for a draft copy of the 200 Area ETF waste acceptance criteria. The existing basin water does not meet the criteria for the ETF input stream as shown on Table 5-2. A water treatment has been recommended to lower the concentration of inorganics and radionuclides with the exception of tritium (H3) in order to meet the input stream criteria for the ETF (C018).

Presently there is no proven technology available to treat the tritium. Organic analysis of the basin water or makeup water was not performed because the water is of a highly purified nature by the time it reaches the KE Basin per WHC-SD-NR-ES-016 (WHC 1993a).

The additional treatment system is same as for alternative A and is comprised of one microfilter/ultrafilter, one polishing IXM, two discharge tanks, three pumps, upgraded demineralized system and interconnected piping. The disposal system is comprised of tank trailers, a loading and unloading facility, and effluent treatment facility (ETF-C018) for ground disposal. See Figure 5-3 for alternative B for general configuration. The major equipment is the same as described in Section 5.3.1.2 with the exception of the tank trailers, and the loading/unloading facility described below.

The predicted treated effluent quality for this alternative is tabulated in Table 5-2. The treated 105KE Basin water will be pumped from the discharge tanks at a flow rate of 95 L/min (25 gal/min) into one of the two 18,927 L (5,000 gal) tank trailer and transported to the 200 Area ETF (C018). The 18,927 L (5,000 gal) tanker trucks are similar to those currently available onsite. Other transportation options considered were; pipe to C018, rail-mounted cargo truck and hyrail (a road vehicle/truck modified for use on a rail line) but truck mounted truck option was selected due to the advantages listed below in Section 5.3.2.4.

Table 5-2. Alternative B - 105KE Basin Water Treatment for Ground Disposal Through ETF (C018). (4 sheets)

| Analyte/ species | K Basin raw water | | ETF effluent limits | Source | Filtration and treatment | | | | | | | | | Treated K Basin water to ETF |
|---|---|---|---|---|---|---|---|---|---|---|---|---|---|---|
| | | | | | Sand filter | | Existing IXM | | Micro/ultrafilter | | Pol. IXM | | Total DF | Conc. |
| | Conc. | Source | | | DF | Source | DF | Source | DF | Source | DF | Source | | |
| INORGANIC | (ug/L) | | (ug/L) | | | | | | | | | | | (ug/L) |
| Aluminum | 8.20E+02 | m | 50.00 | z | -- | -- | 100 | t | 7.1 | w | 10 | t | 7.10E+03 | 1.15E-01 |
| Antimony | N/D | -- | 6.00 | z | -- | -- | -- | -- | -- | -- | -- | -- | -- | -- |
| Arsenic | N/D | -- | 0.05 | z | -- | -- | -- | -- | -- | -- | -- | -- | -- | -- |
| Barium | 1.72E+03 | v | 1000.00 | z | -- | -- | 100 | t | 1.3 | w | 10 | t | 1.30E+03 | 1.32E+00 |
| Beryllium | N/D | -- | 4.00 | z | -- | -- | -- | -- | -- | -- | -- | -- | -- | -- |
| Cadmium | N/D | -- | 5.00 | z | -- | -- | -- | -- | -- | -- | -- | -- | -- | -- |
| Calcium | 3.35E+02 | u | N/A | -- | -- | -- | 100 | t | 1.0 | w | 10 | t | 1.00E+03 | 3.35E-01 |
| Chromium | N/D | -- | 50.00 | z | -- | -- | -- | -- | -- | -- | -- | -- | -- | -- |
| Cobalt | N/D | -- | N/A | -- | -- | -- | -- | -- | -- | -- | -- | -- | -- | -- |
| Copper | N/D | -- | 1000.00 | z | -- | -- | -- | -- | -- | -- | -- | -- | -- | -- |
| Iron | 3.43E+02 | v | 300.00 | z | -- | -- | 100 | t | 17.3 | w | 10 | t | 1.73E+04 | 1.98E-02 |
| Lead | N/D | -- | 15.00 | z | -- | -- | -- | -- | -- | -- | -- | -- | -- | -- |
| Lithium | N/D | -- | N/A | -- | -- | -- | -- | -- | -- | -- | -- | -- | -- | -- |
| Mercury | N/D | -- | 2.00 | z | -- | -- | -- | -- | -- | -- | -- | -- | -- | -- |
| Magnesium | 1.15E+01 | m | N/A | -- | -- | -- | 100 | t | 1.0 | w | 10 | t | 1.00E+03 | 1.15E-02 |
| Manganese | 3.32E+00 | m | 50.00 | z | -- | -- | 100 | t | 3.0 | w | 10 | t | 3.00E+03 | 1.10E-03 |
| Molybdenum | N/D | -- | N/A | -- | -- | -- | -- | -- | -- | -- | -- | -- | -- | -- |
| Neodymium | N/D | -- | N/A | -- | -- | -- | -- | -- | -- | -- | -- | -- | -- | -- |
| Nickel | N/D | -- | 100.00 | z | -- | -- | -- | -- | -- | -- | -- | -- | -- | -- |
| Potassium | N/D | -- | N/A | -- | -- | -- | -- | -- | -- | -- | -- | -- | -- | -- |
| Phosphorus | N/D | -- | N/A | -- | -- | -- | -- | -- | -- | -- | -- | -- | -- | -- |
| Samarium | N/D | -- | N/A | -- | -- | -- | -- | -- | -- | -- | -- | -- | -- | -- |
| Selenium | 1.07E+02 | m | 10.00 | z | -- | -- | 100 | t | 1.0 | w | 10 | t | 1.00E+03 | 1.07E-01 |

Table 5-2. Alternative B - 105KE Basin Water Treatment for Ground Disposal Through ETF (C018). (4 sheets)

| Analyte/ species | K Basin raw water | | ETF effluent limits | Source | Filtration and treatment | | | | | | | | | Treated K Basin water to ETF |
|---|---|---|---|---|---|---|---|---|---|---|---|---|---|---|
| | | | | | Sand filter | | Existing IXM | | Micro/ultrafilter | | Pol. IXM | | Total DF | |
| | Conc. | Source | | | DF | Source | DF | Source | DF | Source | DF | Source | | Conc. |
| Silver | 1.11E+01 | u | 50.00 | z | -- | -- | 100 | t | 1.2 | w | 10 | t | 1.20E+03 | 9.25E-02 |
| Sodium | 1.78E+02 | m | N/A | -- | -- | -- | 100 | t | 1.0 | w | 10 | t | 1.00E+03 | 1.78E-01 |
| Sulfur | 1.01E+02 | u | N/A | -- | -- | -- | 100 | t | -- | -- | -- | -- | 1.00E+03 | 1.01E-01 |
| Tin | N/D | -- | N/A | -- | -- | -- | -- | -- | -- | -- | -- | -- | -- | -- |
| Titanium | N/D | -- | N/A | -- | -- | -- | -- | -- | -- | -- | -- | -- | -- | -- |
| Thallium | N/D | -- | 2.00 | z | -- | -- | -- | -- | -- | -- | -- | -- | -- | -- |
| Uranium | N/D | -- | N/A | -- | -- | -- | -- | -- | -- | -- | -- | -- | -- | -- |
| Vanadium | N/D | -- | N/A | -- | -- | -- | -- | -- | -- | -- | -- | -- | -- | -- |
| Zinc | 2.18E+01 | v | 5000.00 | z | -- | -- | 100 | t | 2.2 | w | 10 | t | 2.2E+03 | 9.90E-03 |
| Zirconium | 5.01E+01 | v | N/A | -- | -- | -- | 100 | t | -- | -- | 10 | t | 1.00E+03 | 5.01E-02 |
| Ammonia (Total) | N/D | -- | N/A | -- | -- | -- | -- | -- | -- | -- | -- | -- | -- | -- |
| Ammonia | N/D | -- | N/A | -- | -- | -- | -- | -- | -- | -- | -- | -- | -- | -- |
| Ammonium | N/D | -- | N/A | -- | -- | -- | -- | -- | -- | -- | -- | -- | -- | -- |
| Chloride | N/D | -- | N/A | -- | -- | -- | -- | -- | -- | -- | -- | -- | -- | -- |
| Chloride by IC | N/D | -- | N/A | -- | -- | -- | -- | -- | -- | -- | -- | -- | -- | -- |
| Flouride | N/D | -- | N/A | -- | -- | -- | -- | -- | -- | -- | -- | -- | -- | -- |
| Nitrite | N/D | -- | N/A | -- | -- | -- | -- | -- | -- | -- | -- | -- | -- | -- |
| Nitrate | N/D | -- | N/A | -- | -- | -- | -- | -- | -- | -- | -- | -- | -- | -- |
| Phosphate | N/D | -- | N/A | -- | -- | -- | -- | -- | -- | -- | -- | -- | -- | -- |
| Sulfate | N/D | -- | 250000.00 | z | -- | -- | -- | -- | -- | -- | -- | -- | -- | -- |
| RADIONUCLIDE | pCi/L | | pCi/L | | | | | | | | | | | pCi/L |
| Total Alpha | 5.40E+04 | l | N/A | -- | 1.11 | m | 5.21 | x | 10 | w | 1,000 | bb | 5.78E+04 | 9.35E-01 |
| Total Beta | N/D | -- | N/A | -- | -- | -- | -- | -- | -- | -- | -- | -- | -- | -- |

Table 5-2. Alternative B - 105KE Basin Water Treatment for Ground Disposal Through ETF (C018). (4 sheets)

| Analyte/ species | K Basin raw water | | ETF effluent limits | Source | Filtration and treatment | | | | | | | | | Treated K Basin water to ETF |
|---|---|---|---|---|---|---|---|---|---|---|---|---|---|---|
| | | | | | Sand filter | | Existing IXM | | Micro/ultrafilter | | Pol. IXM | | Total DF | Conc. |
| | Conc. | Source | | | DF | Source | DF | Source | DF | Source | DF | Source | | |
| AM-241 | N/D | -- | 3.00E+01 | z | -- | -- | -- | -- | -- | -- | -- | -- | -- | -- |
| Cm-242 | N/D | -- | N/A | -- | -- | -- | -- | -- | -- | -- | -- | -- | -- | -- |
| CM-244 | N/D | -- | N/A | -- | -- | -- | -- | -- | -- | -- | -- | -- | -- | -- |
| Co-60 | 4.27E+03 | m | 5.00E+03 | z | 1.11 | m | 21.41 | x | 7.4 | w | 1,000 | bb | 1.76E+06 | 2.42E-02 |
| Co-134 | 5.99E+03 | m | 2.00E+03 | z | 1.11 | m | 17.09 | x | 1.1 | w | 1,000 | bb | 2.08E+04 | 2.88E-01 |
| Co-137 | 6.00E+06 | n | 3.00E+03 | z | 1.11 | m | 12.79 | y | 1.1 | w | 1,000 | bb | 1.56E+04 | 3.86E+02 |
| C-14 | N/D | -- | N/A | -- | -- | -- | -- | -- | -- | -- | -- | -- | -- | -- |
| H-3 | 3.17E+06 | m | 2.00E+06 | z | -- | -- | -- | -- | 1.0 | w | -- | -- | 1.0E+00 | 3.17E+06 |
| K-40 | 1.90E+03 | m | 7.00E+03 | z | 1.11 | m | -- | -- | -- | -- | -- | -- | -- | -- |
| Mn54 | 1.96E+03 | n | 5.00E+04 | z | 1.11 | m | 33.56 | x | 3.0 | w | 1,000 | bb | 1.12E+06 | 1.77E-02 |
| Pb-210 | N/D | -- | N/A | -- | -- | -- | -- | -- | -- | -- | -- | -- | -- | -- |
| Pu-238 | 6.94E+04 | m | 4.00E+01 | z | 1.11 | m | 70.02 | n | 10 | w | 1,000 | bb | 7.7E+06 | 8.93E-02 |
| Pu-239/240 | 3.27E+06 | m | 3.00E+01 | z | 1.11 | m | 3.69 | y | 10 | w | 1,000 | bb | 4.09E+04 | 7.99E+00 |
| Radium | N/D | -- | N/A | -- | -- | -- | -- | -- | -- | -- | -- | -- | -- | -- |
| Ru-106 | 4.95E+03 | m | 6.00E+03 | r | 1.11 | m | -- | -- | 1.7 | w | 1,000 | bb | 1.88E+03 | 2.59E+00 |
| Sb-125 | 4.91E+03 | m | 6.00E+04 | r | 1.11 | m | 2.98 | n | -- | -- | 1,000 | bb | 3.31E+03 | 1.48E+00 |
| Sr-90 | 3.99E+07 | m | 1.00E+03 | r | 1.11 | m | 35.97 | y | 1.1 | w | 1,000 | bb | 4.38E+04 | 9.09E+02 |

Table 5-2. Alternative B - 105KE Basin Water Treatment for Ground Disposal Through ETF (C018). (4 sheets)

| Analyte/ species | K Basin raw water | | ETF effluent limits | Source | Filtration and treatment | | | | | | | | | Treated K Basin water to ETF |
|---|---|---|---|---|---|---|---|---|---|---|---|---|---|---|
| | | | | | Sand filter | | Existing IXM | | Micro/ultrafilter | | Pol. IXM | | Total DF | Conc. |
| | Conc. | Source | | | DF | Source | DF | Source | DF | Source | DF | Source | | |
| U-234 | N/D | -- | N/A | -- | -- | -- | -- | -- | -- | -- | -- | -- | -- | -- |
| U-235 | N/D | -- | N/A | -- | -- | -- | -- | -- | -- | -- | -- | -- | -- | -- |
| U-238 | N/D | -- | N/A | -- | -- | -- | -- | -- | -- | -- | -- | -- | -- | -- |
| Eu-154 | 7.25E+03 | m | N/A | -- | -- | -- | -- | -- | -- | -- | -- | -- | -- | -- |
| Eu-155 | 3.63E+03 | m | N/A | -- | -- | -- | -- | -- | -- | -- | -- | -- | -- | -- |

ND = Not Detected

REFERENCES FOR TABLES 5-1, 5-2, 5-3, AND A-1.

a. Values reported are specifically listed in WAC 173-201A-040 or were calculated using equations as defined in WAC 173-201A-040. Equation inputs for Columbia River were: pH = 7.41, Temperature = 16.4 C, Hardness = 60 mg/L as CaCO3, and Salmonids present.
b. EPA Gold Book
c. 40 CFR 141 Primary Drinking Water Standards
d. 40 CFR 143 Secondary Drinking Water Standards.
e. DOE Order 5400.5 Radiation Protection of the Public and the Environment DCG for ingestion
f. Land Disposal Restriction guidelines (40 CFR Part 268) for F039 Wastewater.
g. Chapter 173-200 WAC, Water Quality Standards for Ground Waters of the State of Washington, October 31, 1990.
h. An instantaneous concentration not to be exceeded any time.
i. A 24 hour average not to be exceeded.
j. A 1-hour average concentration not to be exceeded more than once every three years.
k. A 4-day average concentration not to be exceeded more than once every three years.
l. PNL 1990, 105KE NLOP Water Analysis (PNL93-07046)
l.1. Chapter 173-460 WAC ASIL, annual average (proposed 1993 revisions)
m. WHC-SD-NR-ES-016 Transport Mechanism of Radionuclides in 105KE Fuel Storage Basin to Airborne Effluent Releases.
m.1. Chapter 173-460 WAC ASIL, 24-hr average (proposed 1993 revisions).
n. Center of Basin Sample Point 10, November 1992.
n.1. Based upon 10% of DOE Order 5400.5 DCG for inhalation.
o. Based upon 4% of DOE Order 5400.5 DCG for water ingestion.
p. Not used in the study.
q. Based on 40 CFR 131.36(b) as of 12/22/92.
r. Based on human consumption of water and organisms.
s. Based on hexavalent chromium.
t. WHC-SD-NR-ES-013, Rev. 0, N Reactor Effluent Treatment Study, Table 5-9, January 1992.
u. Center of basin sample, November 1992.
v. WHC-SD-NR-ES-014, Rev. 0, N Reactor Wastewater Treatment System Summary Engineering Report Tables 2-2 and 2-3 105N Fuel Basin February 1992 Sample Data (unpublished).
w. WHC-SD-NR-ES-014, Rev. 0, N Reactor Wastewater Treatment System Summary Engineering Report Table 4-7 105N Fuel Basin February 1992 Sample Data (unpublished).
x. Sample data 1-5-94 to 2-16-94 105KE IXM inlet and outlet concentrations from WHC 100K Hazardous and Radiological Waste Control Section.
y. Sample data 9/11/93 to 1/5/94 105KE IXM inlet and outlet concentrations from WHC Engineering and Environmental Documentation Laboratory.
z. N Reactor Wastewater Pretreatment Engineering Study (unpublished document) dated 1/3/93 by SAIC, Richland, WA.
aa. Technical Memo, Updated Basin Assumptions for N Reactor Effluent Engineering Study (unpublished document) dated 2/22/94 by SAIC, Richland, WA.
bb. Polishing IXM efficiency justification, DSI from Keith Larkin to Sohan Gahir dated 3/29/94 (unpublished document).

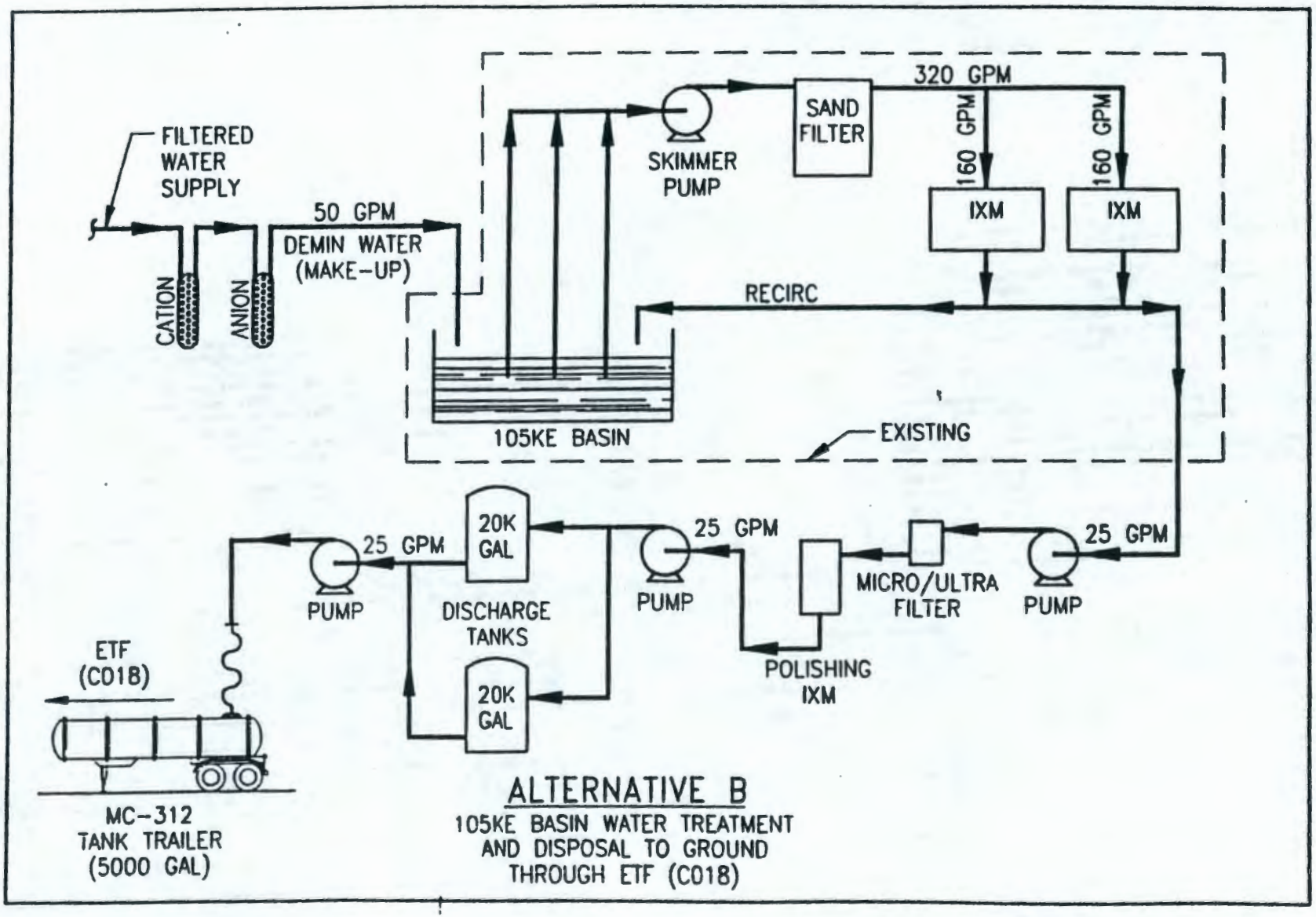


Figure 5-3. Alternative B: 105KE Basin Water Treatment and Disposal to Ground Through ETF (C018).

The existing portable demineralized system will be upgraded from 45 L/min (12 gal/min) to 189 L/min (50 gal/min) to make up for the water discharged to the ground through the ETF (C018). Concentration of radionuclides in the pretreated wastewater will be low enough to use trucks similar to the existing vehicles used for radioactive water transported at the Hanford Site. To support the Tri-Party Agreement milestone of 757,800 L (2,000,000 gal) of water removal per year from 105KE Basin, two truck shipments per operating shift will be required. Currently, two tanker trucks are available; additional tanker trucks may be required to ensure that sufficient tanker capacity exists.

**5.3.2.1 Schedule.** This alternative relies upon completion of construction of the ETF (C018) Facility before implementation. The C018 Facility is currently anticipated to be operational in June 1995. Implementation will require modification of the current C018 Facility design to include a tanker truck loading/unloading system by June 1995. The total scheduled time for this alternative to be operational is about 30 months (18 months permitting time after detailed design and pilot testing).

**5.3.2.2 Implementation.** Once the ETF (C018) Facility and tanker trailer loading/unloading facility are ready this alternative B can be implemented easily. Permits under state and federal ground discharge regulation would be required.

**5.3.2.3 Cost for Alternative "B".** Estimated installed equipment and operating costs for alternative B are provided in Table 5-5. The installed equipment cost is estimated to be $5.37 million, using the method described in Section 5.1.4. Annual O&M costs are estimated to be approximately $1.88 million. The EUAC is approximately $3.00 million per year.

**5.3.2.4 Advantages and Disadvantages.**

**ADVANTAGES:**

1. Infiltration of tritiated water into the soil column and groundwater system at ETF (C018) being far from the Columbia river will allow tritium concentrations to diminish through radioactive decay before the treated water reaches the Columbia River.

2. No rail lines or rail line extension costs to install/remove.

3. No pipe cost between 100K and C018.

4. No Hyrail modification equipment costs.

5. Proven existing technology at Hanford Site.

6. Existing/new tank trailers can be shared with other facilities to cut down the costs.

**DISADVANTAGES:**

1. More worker exposure.

2. More D&D work for disposal equipment.

3. Great number of trips, handling and transportation accidents potential and possible radioactive spills.

4. Increased cost due to ETF (C018) operations.

5. Schedules may be impacted due to other ETF priorities.

6. More equipment as compared to first alternative and associated costs.

### 5.3.3 Alternative C: 105KE Basin Water Treatment for Air Discharge Through Evaporation

This alternative is based on the evaluation of the inorganics and radionuclides in the existing basin water and comparing with the acceptable air emission comparative levels. The air emission comparative levels are derived from different federal and Washington State standards as shown in the Table 5-3. The maximum ambient air concentrations can be approximated at various distances from an evaporation pond by using an EPA approved model computer program called "SCREEN" for estimating air emission. A similar program was run for treating 100N waste water evaporation treatment. Maximum liquid concentrations at 67m, 1200m and 10km allowable for the air emission are listed in Table 5-3 (Gerboth 1994). The existing basin water does not meet the criteria set forth for liquid concentration required at 67 m (conservative approach) from the air monitoring location. A combination of the existing water treatment and additional new treatment has been recommended to lower the concentration of inorganics and radionuclides with the exception of tritium (H3) to meet the air emission standard before water goes to evaporating ponds.

Presently there is no proven technology available to treat the tritium. Organic analysis of the basin water or makeup water was not performed because the water is of a highly purified nature by the time it reaches the KE Basin per WHC-SD-NR-ES-016 (WHC 1993a).

Section 5.3.1.1 describes the existing treatment system and new required treatment system and interconnected equipment. Figure 5-4 shows the Alternative C treatment and disposal configuration. The predicted treated effluent quality for this alternative is tabulated in Table 5-3. The treated effluent will be pumped from the discharge (collection) tanks to the evaporating ponds at a rate of 95 L/min (25 gal/min). The existing portable demineralized system will be upgraded from 45 L/min (12 gal/min) to 189 L/min (50 gal/min) to makeup for the water discharged to the evaporating ponds.

The additional treatment system is same as for alternative A and B and is comprised of one microfilter/ultrafilter, one polishing IXM, two discharge tanks, three pumps, upgraded demineralized system, and interconnected piping. The disposal system is comprised of evaporating ponds and piping from treatment system to evaporating ponds. See Figure 5-4 for alternative C for

Table 5-3. Alternative C - 105KE Basin Water Treatment for Air Discharge Through Evaporation. (4 sheets)

| Analyte/ species | K Basin raw water | | Air emissions comparative levels | | | | | | Filtration and treatment | | | | | | | | | Treated K Basin evap. pond |
|---|---|---|---|---|---|---|---|---|---|---|---|---|---|---|---|---|---|---|
| | Conc. | Source | Ambient air standards | | Max. liquid concentrations | | | | Sand filter | | Existing IXM | | Micro/ultrafilter | | Pol. IXM | | Total DF | Conc. |
| | | | Conc. | Source | 87 m | 1200 m | 10 km | Source | DF | Source | DF | Source | DF | Source | DF | Source | | |
| INORGANIC | (ug/L) | | (ug/m3) | | (ug/L) | (ug/L) | (ug/L) | | | | | | | | | | | (ug/L) |
| Aluminum | 8.20E+02 | m | 8.70E+00 | m.1 | 3.65E+06 | 6.44E+07 | 1.06E+09 | aa | -- | -- | 100 | t | 7.1 | w | 10 | t | 7.10E+03 | 1.15E-01 |
| Antimony | N/D | -- | 1.70E+00 | m.1 | 9.25E+05 | 1.63E+07 | 2.68E+08 | aa | -- | -- | -- | -- | -- | -- | -- | -- | -- | -- |
| Arsenic | N/D | -- | 2.30E-03 | l.1 | 3.15E+03 | 5.57E+04 | 9.14E+05 | aa | -- | -- | -- | -- | -- | -- | -- | -- | -- | -- |
| Barium | 1.72E+03 | v | 1.70E+00 | m.1 | 9.25E+05 | 1.63E+07 | 2.68E+08 | aa | -- | -- | 100 | t | 1.3 | w | 10 | t | 1.30E+03 | 1.32E+00 |
| Beryllium | N/D | -- | 4.20E-04 | m.1 | 2.29E+02 | 4.04E+03 | 6.62E+04 | aa | -- | -- | -- | -- | -- | -- | -- | -- | -- | -- |
| Cadmium | N/D | -- | 5.60E-04 | m.1 | 3.05E+02 | 5.38E+03 | 8.83E+04 | aa | -- | -- | -- | -- | -- | -- | -- | -- | -- | -- |
| Calcium | 3.35E+02 | u | 6.70E+00 | m.1 | 3.65E+06 | 6.44E+07 | 1.06E+09 | aa | -- | -- | 100 | t | 1.0 | w | 10 | t | 1.00E+03 | 3.35E-01 |
| Chromium | N/D | -- | 8.30E-05 | m.1 | 1.14E+02 | 2.01E+03 | 3.30E+04 | aa | -- | -- | -- | -- | -- | -- | -- | -- | -- | -- |
| Cobalt | N/D | -- | 2.00E-01 | m.1 | 1.09E+05 | 1.92E+06 | 3.15E+07 | aa | -- | -- | -- | -- | -- | -- | -- | -- | -- | -- |
| Copper | N/D | -- | 3.30E+00 | m.1 | 1.80E+06 | 3.17E+07 | 5.20E+08 | aa | -- | -- | -- | -- | -- | -- | -- | -- | -- | -- |
| Iron | 3.43E+02 | v | 3.30E+00 | m.1 | 1.80E+06 | 3.17E+07 | 5.20E+08 | aa | -- | -- | 100 | t | 17.3 | w | 10 | t | 1.73E+04 | 1.98E-02 |
| Lead | N/D | -- | -- | -- | -- | -- | -- | -- | -- | -- | -- | -- | -- | -- | -- | -- | -- | -- |
| Lithium | N/D | -- | -- | -- | -- | -- | -- | -- | -- | -- | -- | -- | -- | -- | -- | -- | -- | -- |
| Mercury | N/D | -- | 3.00E-01 | m.1 | 1.63E+05 | 2.88E+06 | 4.73E+07 | aa | -- | -- | -- | -- | -- | -- | -- | -- | -- | -- |
| Magnesium | 1.15E+01 | m | 3.33E+01 | m.1 | 1.81E+07 | 3.20E+08 | 5.25E+09 | aa | -- | -- | 100 | t | 1.0 | w | 10 | t | 1.00E+03 | 1.15E-02 |
| Manganese | 3.32E+00 | m | 1.67E+01 | m.1 | 9.09E+06 | 1.61E+08 | 2.63E+09 | aa | -- | -- | 100 | t | 3.0 | w | 10 | t | 3.00E+03 | 1.10E-03 |
| Molybdenum | N/D | -- | 1.67E+01 | m.1 | 9.09E+06 | 1.61E+08 | 2.63E+09 | aa | -- | -- | -- | -- | -- | -- | -- | -- | -- | -- |
| Neodymium | N/D | -- | -- | -- | -- | -- | -- | -- | -- | -- | -- | -- | -- | -- | -- | -- | -- | -- |
| Nickel | N/D | -- | 3.30E+00 | m.1 | 1.80E+06 | 3.17E+07 | 5.20E+08 | aa | -- | -- | -- | -- | -- | -- | -- | -- | -- | -- |
| Potassium | N/D | -- | -- | -- | -- | -- | -- | -- | -- | -- | -- | -- | -- | -- | -- | -- | -- | -- |

Table 5-3. Alternative C - 105KE Basin Water Treatment for Air Discharge Through Evaporation. (4 sheets)

| Analyte/ species | K Basin raw water | | Air emissions comparative levels | | | | | | Filtration and treatment | | | | | | | | | Treated K Basin evap. pond |
|---|---|---|---|---|---|---|---|---|---|---|---|---|---|---|---|---|---|---|
| | Conc. | Source | Ambient air standards | | Max. liquid concentrations | | | | Sand filter | | Existing IXM | | Micro/ultrafilter | | Pol. IXM | | Total DF | Conc. |
| | | | Conc. | Source | 67 m | 1200 m | 10 km | Source | DF | Source | DF | Source | DF | Source | DF | Source | | |
| Phosphorus | N/D | -- | 3.00E-01 | m.1 | 1.63E+06 | 2.66E+06 | 4.73E+07 | ao | -- | -- | -- | -- | -- | -- | -- | -- | -- | -- |
| Samarium | N/D | -- | -- | -- | -- | -- | -- | -- | -- | -- | -- | -- | -- | -- | -- | -- | -- | -- |
| Selenium | 1.07E+02 | m | 7.00E-01 | m.1 | 3.81E+06 | 6.73E+06 | 1.10E+08 | ao | -- | -- | 100 | t | 1.0 | w | 10 | t | 1.00E+03 | 1.07E-01 |
| Silver | 1.11E+01 | u | 3.00E-02 | m.1 | 1.63E+04 | 2.66E+06 | 4.73E+06 | ao | -- | -- | 100 | t | 1.2 | w | 10 | t | 1.20E+03 | 9.25E-02 |
| Sodium | 1.70E+02 | m | -- | -- | -- | -- | -- | -- | -- | -- | 100 | t | 1.0 | w | 10 | t | 1.00E+03 | 1.70E-01 |
| Sulfur | 1.01E+02 | u | -- | -- | -- | -- | -- | -- | -- | -- | 100 | t | -- | -- | 10 | t | 1.00E+03 | 1.01E-01 |
| Tin | N/D | -- | 6.70E+00 | m.1 | 3.66E+06 | 6.44E+07 | 1.06E+08 | ao | -- | -- | -- | -- | -- | -- | -- | -- | -- | -- |
| Titanium | N/D | -- | -- | -- | -- | -- | -- | -- | -- | -- | -- | -- | -- | -- | -- | -- | -- | -- |
| Thallium | N/D | -- | 3.00E-01 | m.1 | 1.63E+06 | 2.66E+06 | 4.73E+07 | ao | -- | -- | -- | -- | -- | -- | -- | -- | -- | -- |
| Uranium | N/D | -- | 7.00E-01 | m.1 | 3.81E+06 | 6.73E+06 | 1.10E+08 | ao | -- | -- | -- | -- | -- | -- | -- | -- | -- | -- |
| Vanadium | N/D | -- | 2.00E-01 | m.1 | 1.09E+06 | 1.92E+06 | 3.15E+07 | ao | -- | -- | -- | -- | -- | -- | -- | -- | -- | -- |
| Zinc | 2.16E+01 | v | 1.67E+01 | m.1 | 9.09E+06 | 1.61E+08 | 2.63E+09 | ao | -- | -- | 100 | t | 2.2 | w | 10 | t | 2.2E+03 | 9.90E-03 |
| Zirconium | 5.01E+01 | v | 1.67E+01 | m.1 | 9.09E+06 | 1.61E+08 | 2.63E+08 | ao | -- | -- | 100 | t | -- | -- | 10 | t | 1.00E+03 | 5.01E-02 |
| Ammonia (Total) | N/D | -- | 1.00E+02 | m.1 | 5.44E+07 | 9.61E+09 | 1.58E+10 | ao | -- | -- | -- | -- | -- | -- | -- | -- | -- | -- |
| Ammonia | N/D | -- | -- | -- | -- | -- | -- | -- | -- | -- | -- | -- | -- | -- | -- | -- | -- | -- |
| Ammonium | N/D | -- | -- | -- | -- | -- | -- | -- | -- | -- | -- | -- | -- | -- | -- | -- | -- | -- |
| Chloride | N/D | -- | -- | -- | -- | -- | -- | -- | -- | -- | -- | -- | -- | -- | -- | -- | -- | -- |
| Chloride by IC | N/D | -- | -- | -- | -- | -- | -- | -- | -- | -- | -- | -- | -- | -- | -- | -- | -- | -- |
| Fluoride | N/D | -- | 8.30E+00 | m.1 | 4.52E+06 | 7.98E+07 | 1.31E+09 | ao | -- | -- | -- | -- | -- | -- | -- | -- | -- | -- |
| Nitrite | N/D | -- | -- | -- | -- | -- | -- | -- | -- | -- | -- | -- | -- | -- | -- | -- | -- | -- |
| Nitrate | N/D | -- | -- | -- | -- | -- | -- | -- | -- | -- | -- | -- | -- | -- | -- | -- | -- | -- |
| Phosphate | N/D | -- | -- | -- | -- | -- | -- | -- | -- | -- | -- | -- | -- | -- | -- | -- | -- | -- |
| Sulfate | N/D | -- | -- | -- | -- | -- | -- | -- | -- | -- | -- | -- | -- | -- | -- | -- | -- | -- |

Table 5-3. Alternative C - 105KE Basin Water Treatment for Air Discharge Through Evaporation. (4 sheets)

| Analyte/ species | K Basin raw water | | Air emissions comparative levels | | | | | | Filtration and treatment | | | | | | | | | Treated K Basin evap. pond |
|---|---|---|---|---|---|---|---|---|---|---|---|---|---|---|---|---|---|---|
| | Conc. | Source | Ambient air standards | | Max. liquid concentrations | | | | Sand filter | | Existing IXM | | Micro/ultrafilter | | Pol. IXM | | Total DF | Conc. |
| | | | Conc. | Source | 67 m | 1200 m | 10 km | Source | DF | Source | DF | Source | DF | Source | DF | Source | | |
| RADIONUCLIDE | (pCi/L) | | (Ci/m3) | | (pCi/L) | (pCi/L) | (pCi/L) | | | | | | | | | | | (pCi/L) |
| Total Alpha | 5.40E+04 | l | -- | -- | -- | -- | -- | aa | 1.11 | m | 5.21 | x | 10 | w | 1,000 | bb | 5.78E+04 | 9.35E-01 |
| Total Beta | N/D | -- | -- | -- | -- | -- | -- | aa | -- | -- | -- | -- | -- | -- | -- | -- | -- | -- |
| AM-241 | N/D | -- | 2.00E-15 | n.1 | 2.74E+03 | 4.84E+04 | 7.94E+05 | aa | -- | -- | -- | -- | -- | -- | -- | -- | -- | -- |
| Cm-242 | N/D | -- | 7.00E-14 | n.1 | 9.59E+04 | 1.69E+06 | 2.78E+07 | aa | -- | -- | -- | -- | -- | -- | -- | -- | -- | -- |
| CM-244 | N/D | -- | 4.00E-15 | n.1 | 5.48E+03 | 9.68E+04 | 1.59E+06 | aa | -- | -- | -- | -- | -- | -- | -- | -- | -- | -- |
| Co-60 | 4.27E+03 | m | 8.00E-12 | n.1 | 1.10E+07 | 1.94E+08 | 3.18E+09 | aa | 1.11 | m | 21.41 | x | 7.4 | w | 1,000 | bb | 1.76E+05 | 2.42E-02 |
| Cs-134 | 5.99E+03 | m | 2.00E-11 | n.1 | 2.74E+07 | 4.84E+08 | 7.94E+09 | aa | 1.11 | m | 17.09 | x | 1.1 | w | 1,000 | bb | 2.08E+04 | 2.88E-01 |
| Cs-137 | 6.06E+06 | n | 4.00E-11 | n.1 | 5.48E+07 | 9.68E+08 | 1.59E+10 | aa | 1.11 | m | 12.79 | y | 1.1 | w | 1,000 | bb | 1.56E+04 | 3.88E+02 |
| C-14 | N/D | -- | 6.00E-10 | n.1 | 8.22E+05 | 1.45E+07 | 2.38E+08 | aa | -- | -- | -- | -- | -- | -- | -- | -- | -- | -- |
| H-3 | 3.17E+06 | m | 1.00E-08 | n.1 | 1.37E+07 | 2.42E+08 | 3.97E+09 | aa | -- | -- | -- | -- | 1.0 | w | -- | -- | 1.0E+00 | 3.17E+06 |
| K-40 | 1.90E+03 | m | 9.00E-11 | n.1 | 1.23E+08 | 2.18E+09 | 3.57E+10 | aa | 1.11 | m | -- | -- | -- | -- | -- | -- | -- | -- |
| Mn-54 | 1.98E+03 | n | 2.00E-10 | n.1 | 2.74E+08 | 4.84E+09 | 7.94E+10 | aa | 1.11 | m | 33.56 | x | 3.0 | w | 1,000 | bb | 1.12E+05 | 1.77E-02 |
| Pb-210 | N/D | -- | 9.00E-14 | n.1 | 1.23E+05 | 2.18E+06 | 3.57E+07 | aa | -- | -- | -- | -- | -- | -- | -- | -- | -- | -- |
| Pu-238 | 6.94E+04 | m | 3.00E-15 | n.1 | 4.11E+03 | 7.26E+04 | 1.19E+06 | aa | 1.11 | m | 70.02 | n | 10 | w | 1,000 | bb | 7.7E+05 | 8.93E-02 |
| Pu-239/240 | 3.27E+05 | m | 2.00E-15 | n.1 | 2.74E+03 | 4.84E+04 | 7.94E+05 | aa | 1.11 | m | 3.69 | y | 10 | w | 1,000 | bb | 4.09E+04 | 7.99E+00 |
| Radium | N/D | -- | 1.00E-13 | n.1 | 1.37E+05 | 2.42E+06 | 3.97E+07 | aa | -- | -- | -- | -- | -- | -- | -- | -- | -- | -- |
| Ru106 | 4.85E+03 | m | 3.00E-12 | n.1 | 4.11E+06 | 7.26E+07 | 1.19E+09 | aa | 1.11 | m | -- | -- | 1.7 | w | 1,000 | bb | 1.88E+03 | 2.58E+00 |
| Sb-125 | 4.91E+03 | m | 1.00E-10 | n.1 | 1.37E+08 | 2.42E+09 | 3.97E+10 | aa | 1.11 | m | 2.98 | n | -- | -- | 1,000 | bb | 3.31E+03 | 1.48E+00 |
| Sr-90 | 3.99E+07 | m | 9.00E-12 | n.1 | 1.23E+07 | 2.18E+08 | 3.57E+09 | aa | 1.11 | m | 35.97 | y | 1.1 | w | 1,000 | bb | 4.39E+04 | 9.09E+02 |
| U-234 | N/D | -- | 9.00E-15 | n.1 | 1.23E+04 | 2.18E+05 | 3.57E+06 | aa | -- | -- | -- | -- | -- | -- | -- | -- | -- | -- |

Table 5-3. Alternative C - 105KE Basin Water Treatment for Air Discharge Through Evaporation. (4 sheets)

| Analyte/ species | K Basin raw water | | Air emissions comparative levels | | | | | | Filtration and treatment | | | | | | | | | Treated K Basin evap. pond |
|---|---|---|---|---|---|---|---|---|---|---|---|---|---|---|---|---|---|---|
| | Conc. | Source | Ambient air standards | | Max. liquid concentrations | | | | Sand filter | | Existing IXM | | Micro/ultrafilter | | Pol. IXM | | Total DF | Conc. |
| | | | Conc. | Source | 67 m | 1200 m | 10 km | Source | DF | Source | DF | Source | DF | Source | DF | Source | | |
| U-235 | N/D | -- | 1.00E-14 | n.1 | 1.37E+04 | 2.42E+05 | 3.97E+06 | aa | -- | -- | -- | -- | -- | -- | -- | -- | -- | -- |
| U-238 | N/D | -- | 1.00E-14 | n.1 | 1.37E+04 | 2.42E+05 | 3.97E+06 | aa | -- | -- | -- | -- | -- | -- | -- | -- | -- | -- |
| Eu-154 | 7.25E+03 | m | 5.00E-12 | n.1 | 6.85E+06 | 1.21E+08 | 1.99E+09 | aa | -- | -- | -- | -- | -- | -- | -- | -- | -- | -- |
| Eu-155 | 3.63E+03 | m | 3.00E-11 | n.1 | 4.11E+07 | 7.26E+08 | 1.19E+10 | aa | -- | -- | -- | -- | -- | -- | -- | -- | -- | -- |

ND = Not Detected

REFERENCES FOR TABLES 5-1, 5-2, 5-3, AND A-1.

a. Values reported are specifically listed in WAC 173-201A-040 or were calculated using equations as defined in WAC 173-201A-040. Equation inputs for Columbia River were: pH = 7.41, Temperature = 16.4 C, Hardness = 60 mg/L as CaCO3, and Salmonids present.
b. EPA Gold Book
c. 40 CFR 141 Primary Drinking Water Standards
d. 40 CFR 143 Secondary Drinking Water Standards.
e. DOE Order 5400.5 Radiation Protection of the Public and the Environment DCG for Ingestion
f. Land Disposal Restriction guidelines (40 CFR Part 268) for F039 Wastewater.
g. Chapter 173-200 WAC, Water Quality Standards for Ground Waters of the State of Washington, October 31, 1990.
h. An instantaneous concentration not to be exceeded any time.
i. A 24 hour average not to be exceeded.
j. A 1-hour average concentration not to be exceeded more than once every three years.
k. A 4-day average concentration not to be exceeded more than once every three years.
l. PNL 1990, 105KE NLOP Water Analysis (PNL93-07046)
l.1. Chapter 173-460 WAC ASIL, annual average (proposed 1993 revisions).
m. WHC-SD-NR-ES-018 Transport Mechanism of Radionuclides in 105KE Fuel Storage Basin to Airborne Effluent Releases.
m.1. Chapter 173-460 WAC ASIL, 24-hr average (proposed 1993 revisions)
n. Center of Basin Sample Point 10, November 1992
n.1. Based upon 10% of DOE Order 5400.5 DCG for inhalation.
o. Based upon 4% of DOE Order 5400.5 DCG for water ingestion.
p. Not used in this study.
q. Based on 40 CFR 131.36(b) as of 12/22/92.
r. Based on human consumption of water and organisms.
s. Based on hexavalent chromium.
t. WHC-SD-NR-ES-013, Rev. 0, N Reactor Effluent Treatment Study, Table 6-9, January 1992
u. Center of basin sample, November 1992.
v. WHC-SD-NR-ES-014, Rev. 0, N Reactor Wastewater Treatment System Summary Engineering Report Tables 2-2 and 2-3 105N Fuel Basin February 1992 Sample Data (unpublished).
w. WHC-SD-NR-ES-014, Rev. 0, N Reactor Wastewater Treatment System Summary Engineering Report Table 4-7 105N Fuel Basin February 1992 Sample Data (unpublished).
x. Sample date 1-5-94 to 2-16-94 105KE IXM inlet and outlet concentrations from WHC 100K Hazardous and Radiological Waste Control Section.
y. Sample date 8/11/93 to 1/5/94 105KE IXM inlet and outlet concentrations from WHC Engineering and Environmental Documentation Laboratory.
z. N Reactor Wastewater Pretreatment Engineering Study (unpublished document) dated 1/3/93 by SAIC, Richland, WA.
aa. Technical Memo, Updated Basin Assumptions for N Reactor Effluent Engineering Study (unpublished document) dated 2/22/94 by SAIC, Richland, WA.
bb. Polishing IXM efficiency justification, DSI from Keith Larkin to Sohan Gahir dated 3/29/94 (unpublished document).

Table 5-4. Costs for Alternative A Treated Effluent Discharged to Columbia River.

| Item | Unit | Unit cost | Quantity | Cost |
|---|---|---|---|---|
| Removing Existing Equipment | | | | |
| Demolition | $ft^2$ | $150 | 200 | $30,000 |
| Disposal | $ft^2$ | $69 | 150 | $10,350 |
| 1. Total Equipment Removal Cost | | | | $40,350 |
| Process Equipment | | | | |
| Microfilter/ultrafilter | Ea | $246,000 | 1 | $246,000 |
| IXM | Ea | $32,000 | 1 | $32,000 |
| Discharge tanks (20K gal) | Ea | $70,000 | 2 | $140,000 |
| Berms around tanks | Ls | $25,000 | 1 | $25,000 |
| Pumps | Ls | $12,000 | 3 | $36,000 |
| Piping | Lf | $82 | 500 | $41,000 |
| 2. Total Purchased Equipment Cost | | | | $520,000 |
| Installed Cost Factors | | | | |
| Item | Factor | Multiplier | | |
| A. Installation | 1.47 | $F_1$=1.47 | | |
| B. Piping | $f_1$=0.45 | | | |
| C. Instrumentation | $f_2$=0.08 | | | |
| D. Building | $f_3$=0.50 | | | |
| E. Facilities | $f_4$=0.15 | | | |
| F. Outside Lines | $f_5$=0.10 | $F_2$=2.28 | | |
| G. Engineering/Construction | $f_6$=0.27 | | | |
| H. Administration | $f_7$=0.31 | | | |
| I. Contingency | $f_8$=0.40 | $F_3$=1.98 | | |
| Multiplier = F1XF2XF3=6.636 | | | | |
| 3. Total Installing Cost = Multiplier X Equipment Cost = (2)X6.636 | | | | $3,450,720 |
| 4. Subtotal = (1)+(2)+(3) | | | | $4,011,070 |
| Annual Operating Costs | | | | |
| Maintenance @ 10% Equipment (2) | Ls | $52,000 | 1 | $52,000 |
| Outfall Analysis | Ea | $4,000 | 4 | $16,000 |
| Operators (two men 16 hours) | Hr | $57 | 3520 | $200,640 |
| Discharge Tank Analysis | Ea | $1,000 | 220 | $220,000 |
| Culligan Demin. Sys. | Gal | $0.10 | 2,000,000 | $200,000 |
| Portable Crane | Hr | $150 | 192 | $28,800 |
| Secondary Waste | | | | |
| IXM Change Out | Ea | $32,000 | 4 | $128,000 |
| IXM Disposal | $ft^3$ | $300 | 1000 | $300,000 |
| 5. Total Annual Operating Cost | | | | $1,145,440 |
| 6. Total Present Worth for Alternative A (6 year life, 7% ROI) = (5)X4.7665+(4) | | | | $9,470,810 |
| 7. Equivalent Uniform Annualized Cost (EUAC) (6 yrs life, 7% ROI) (4)X0.2098+(5) | | | | $1,986,963 |

Table 5-5. Costs for Alternative B Treated Effluent Discharged to Ground Through ETF.

| Item | Unit | Unit Cost | Quantity | Cost |
|---|---|---|---|---|
| Removing Existing Equipment | | | | |
| Demolition | $ft^2$ | $150 | 200 | $30,000 |
| Disposal | $ft^2$ | $69 | 150 | $10,350 |
| 1. Total Equipment Removal Cost | | | | $40,350 |
| Process Equipment | | | | |
| Microfilter/ultrafilter | Ea | $246,000 | 1 | $246,000 |
| IXM | Ea | $32,000 | 1 | $32,000 |
| Discharge tanks (20K gal) | Ea | $70,000 | 2 | $140,000 |
| Berms around tanks | Ls | $25,000 | 1 | $25,000 |
| Pumps | Ls | $12,000 | 3 | $36,000 |
| Piping | Lf | $82 | 500 | $41,000 |
| 2. Total Purchased Equipment Cost | | | | $520,000 |
| Tanker Facility | | | | |
| Pre Eng bldg | Ea | $32,000 | 1 | $32,000 |
| Excavation | Cy | $50 | 425 | $21,250 |
| Concrete | Cy | $200 | 350 | $70,000 |
| Piping | Lf | $100 | 200 | $20,000 |
| Pumps | Ls | $5,500 | 1 | $5,500 |
| Connections | Ls | $10,000 | 1 | $10,000 |
| 3. Total Tanker Facilities Cost | | | | $158,750 |
| Installed Cost Factors | | | | |
| Item | Factor | Multiplier | | |
| A. Installation | 1.47 | $F_1$=1.47 | | |
| B. Piping | $f_1$=0.45 | | | |
| C. Instrumentation | $f_2$=0.08 | | | |
| D. Building | $f_3$=0.50 | | | |
| E. Facilities | $f_4$=0.15 | | | |
| F. Outside Lines | $f_5$=0.10 | $F_2$=2.28 | | |
| G. Engineering/Construction | $f_6$=0.27 | | | |
| H. Administration | $f_7$=0.31 | | | |
| I. Contingency | $f_8$=0.40 | $F_3$=1.98 | | |
| MULTIPLIER = F1XF2XF3=6.636 | | | | |
| 4. Total Installing Cost = Multiplier X Equipment Cost = (2+3)X6.636 | | | | $4,504,185 |
| 5. Tanker Truck (5,000 gal) | Ea | $75,000 | 2 | $150,000 |
| 6. Sub Total = (1+2+3+4+5) | | | | $5,373,285 |
| Annual Operating Costs | | | | |
| Maintenance @ 10% Equipment (2+3) | Ls | $67,875 | 1 | $67,875 |
| Discharge Truck Analysis | Ea | $500 | 52 | $26,000 |
| Operators (two men 16 hours) | Hr | $57 | 3520 | $200,640 |
| Culligan Demin. Sys. | Gal | $0.10 | 2,000,000 | $200,000 |
| Portable Crane (Rental) | Hr | $150 | 192 | $28,800 |
| Tanker Truck Shipping | | | | |
| (5000 gal/shipment, 2,000,000 gal/yr) | | | | |
| Drivers (2 men 12 hours) | Hr | $57 | 12 | $684 |
| Materials per Shipment | Ls | $800 | 1 | $800 |
| Tanker Certification per Shipment | Ls | $200 | 1 | $200 |
| G&A @ 25% | | | | $421 |
| Total Cost per Shipment | | | | $ 2,105 |
| Total Shipping Cost per year (440 shipments) | | | | $926,200 |
| Secondary Waste | | | | |
| IXM Change Out | Ea | $32,000 | 4 | $128,000 |
| IXM Disposal | $ft^3$ | $300 | 1000 | $300,000 |
| 7. Total Annual Operating Cost | | | | $1,877,515 |
| 8. Total Present Worth for Alternative B (6 year life, 7% ROI) = (7)X4.7665+(6) | | | | $14,322,460 |
| 9. Equivalent Uniform Annualized Cost (EUAC) (6 year life, 7% ROI) = (6)X0.2098+(7) | | | | $3,004,830 |

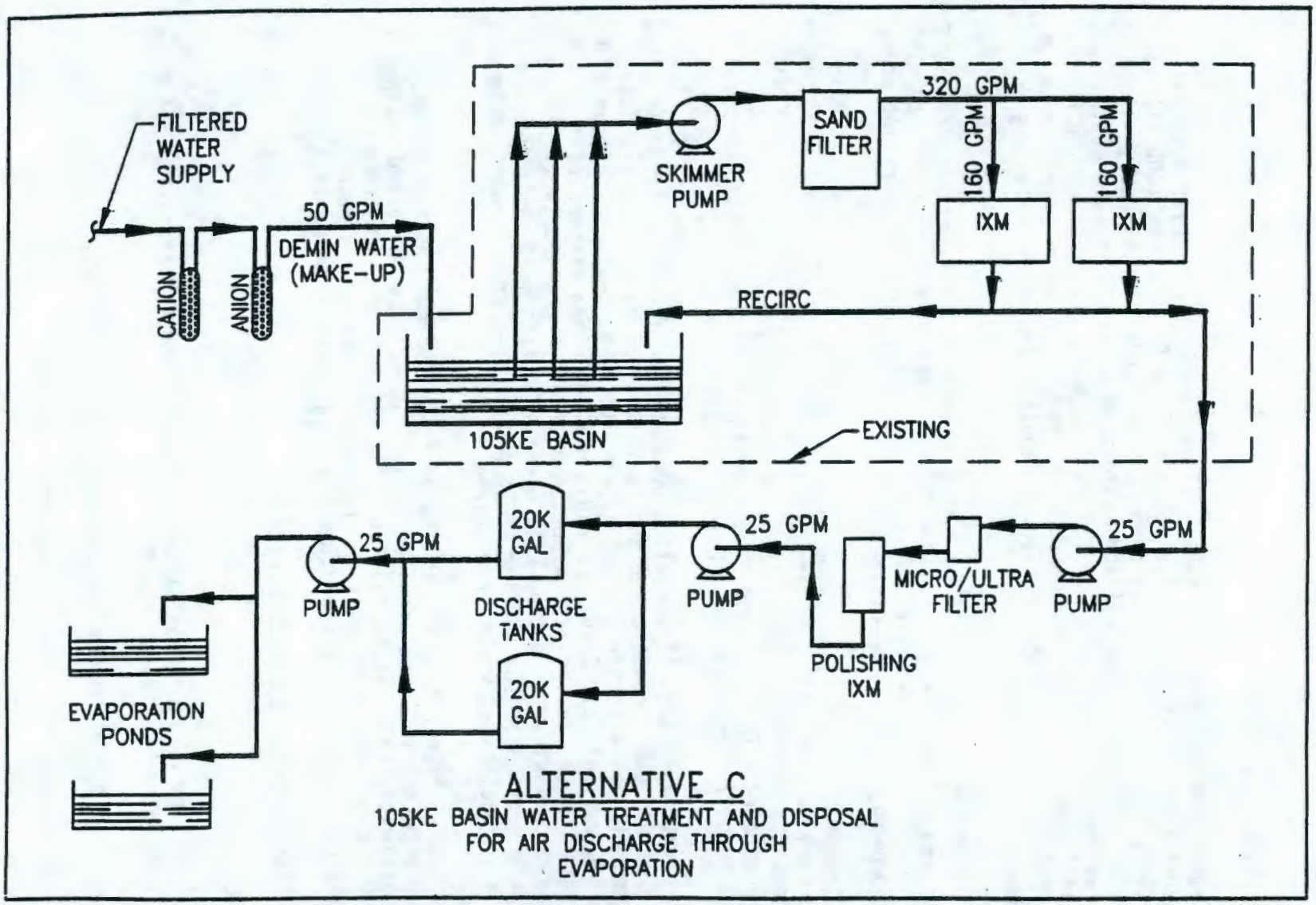


Figure 5-4. Alternative C: 105KE Basin Water Treatment and Disposal for Air Discharge Through Evaporation.

general configuration. The major equipment is the same as described in Section 5.3.1.2 with the exception of the evaporating ponds which are described below.

**EVAPORATION POND**

Water from the discharge tank will be pumped in to solar evaporation pond for evaporation. The evaporation ponds will be 91 m, 44 cm (300 ft) by 91 m, 44 cm (300 ft) and 1.8 m (6 ft) deep. These ponds will be double lined and capable of evaporating two million gallons of water. The pond depth accounts for an evaporation rate of 94 cm (37 in.) of water per year at the Hanford Site and 0.6 m (2 ft) of free board. One pond will be in operation while the second pond is being cleaned for scale deposits and other necessary maintenance related work.

**5.3.3.1 Schedule.** All of the equipment needed to implement alternative C is readily available except evaporating ponds. This alternative will take about 24 months to obtain DOH notice of construction for solar evaporating ponds, after detailed design is completed.

Alternative C relies on supporting Hanford Site facilities for management of secondary wastes. All facilities that will be used for secondary waste management are currently operational and have the capacity to accept the wastes generated. Dredged pond sludge would be shipped to the Low-Level Burial Grounds for disposal as low-level radioactive waste.

**5.3.3.2 Implementation.** Evaporating ponds needed for this disposal option needs to be designed, constructed and installed. Onsite radiation doses associated with this option are anticipated to be minimal, but higher than for disposal to the Columbia River, as radionuclides other than tritium will be concentrated in the solids at the bottom of the evaporating tanks. Because no discharge to the river or ground will occur, the treatment system will not require a permit under the SWDP or NPDES programs. Permits under state and federal air regulations would be required.

**5.3.3.3 Cost - Alternative C.** Estimated installed equipment and operating costs for alternative C are provided in Table 5-6. The installed equipment cost is estimated to be $5.65 million using the method described in Section 5.1.4. Annual O&M costs are estimated to be approximately $1.28 million. The EUAC is approximately $2.46 million per year.

**5.3.3.4 Advantages and Disadvantages.**

**ADVANTAGES:**

1. Tritium can more easily be eliminated though evaporation due to atmospheric mixing.

2. Lower operating cost as compared to C018 disposal alternative.

3. No dependency on other facility than 100K.

Table 5-6. Costs for Alternative C Treated Effluent Evaporation Air Discharge.

| Item | Unit | Unit cost | Quantity | Cost |
|---|---|---|---|---|
| Removing Existing Equipment | | | | |
| Demolition | $ft^2$ | $150 | 200 | $30,000 |
| Disposal | $ft^2$ | $69 | 150 | $10,350 |
| 1. Total Equipment Removal Cost | | | | $40,350 |
| Process Equipment | | | | |
| Microfilter/ultrafilter | Ea | $246,000 | 1 | $246,000 |
| IXM | Ea | $32,000 | 1 | $32,000 |
| Discharge tanks (20K gal) | Ea | $70,000 | 2 | $140,000 |
| Berms around tanks | Ls | $25,000 | 1 | $25,000 |
| Pumps | Ls | $12,000 | 3 | $36,000 |
| Piping | Lf | $82 | 500 | $41,000 |
| 2. Total Purchased Equipment Cost | | | | $520,000 |
| Capital Costs for Solar Ponds | | | | |
| Mobilization | Ls | $10,000 | 1 | $10,000 |
| Construct Ponds | $Ft^2$ | $15 | 86,730 | $1,300,950 |
| Misc. Connections | Ls | $30,000 | 1 | $30,000 |
| Installation of Monitoring Wells | Ls | $100,000 | 3 | $300,000 |
| 3. Total Capital Cost | | | | $1,640,950 |
| Installed Cost Factors | | | | |
| Item | Factor | Multiplier | | |
| A. Installation | 1.47 | $F_1$=1.47 | | |
| B. Piping | $f_1$=0.45 | | | |
| C. Instrumentation | $f_2$=0.08 | | | |
| D. Building | $f_3$=0.50 | | | |
| E. Facilities | $f_4$=0.15 | | | |
| F. Outside Lines | $f_5$=0.10 | $F_2$=2.28 | | |
| G. Engineering/Construction | $f_6$=0.27 | | | |
| H. Administration | $f_7$=0.31 | | | |
| I. Contingency | $f_8$=0.40 | $F_3$=1.98 | | |
| MULTIPLIER = F1XF2XF3=6.636 | | | | |
| 4. Total Installing Cost = Multiplier X Equipment Cost = (2)X6.636 | | | | $3,450,720 |
| 5. Subtotal = (1)+(2)+(3)+(4) | | | | $5,652,020 |
| Annual Operating Costs | | | | |
| Maintenance @ 10% Equipment (2) | Ls | $52,000 | 1 | $52,000 |
| Discharge Analysis | Ea | $1,000 | 12 | $12,000 |
| Air Sampling at Ponds | Ea | $500 | 522 | $26,100 |
| Quarterly Groundwater Sampling | Ls | $70,000 | 1 | $70,000 |
| Operators (2 men 16 hours) | Hr | $57 | 3520 | $200,640 |
| Culligan Demin. Sys. | Gal | $0.10 | 2,000,000 | $200,000 |
| Portable Crane (Rental) | Hr | $150 | 192 | 28,800 |
| Secondary Waste | | | | |
| IXM Change Out | Ea | $32,000 | 4 | $128,000 |
| IXM Disposal | $Ft^3$ | $300 | 1000 | $300,000 |
| Miscellaneous | | | | |
| Pond Sludge Excavation (Assuming Low Level Waste) | Cy | $57 | 380 | $21,660 |
| Pond Sludge Disposal (Assuming Low Level Waste) | $Ft^3$ | $69 | 3,420 | $235,980 |
| 6. Total Annual Operating Cost | | | | $1,275,180 |
| 7. Total Present Worth for Alternative C (6 year life, 7% ROI) = (6)X4.7665+(5) | | | | $11,730,165 |
| 8. Equivalent Uniform Annualized Cost (EUAC) (6 year life, 7% ROI) = (5)X0.2098+(6) | | | | $2,460,974 |

**DISADVANTAGES:**

1. Increased secondary waste due to evaporation ponds exposed to windblown sand and tumble weeds.

2. Likelihood of birds, animals and other insects/species contaminated due to open evaporating ponds.

3. Weather variations may impact the anticipated rate of evaporation.

4. Increased cost due to seismic qualification, installation, and maintenance cost.

5. Evaporation alternative would require permits from State of Washington. Could be long delays before getting approved.

### 5.3.4 Treatment Unit Sizing

This section presents the design bases and sizing calculations for the treatment operations.

#### 5.3.4.1 Discharge Tanks.

**5.3.4.1.1 Design Basis.** Two storage tanks will be provided, each sized to contain up to 8 hours of pretreated waste water generated by the new treatment system at an operating rate of 95 L/min (25 gal/min). One tank will allow two tank trailers to be filled with waste water awaiting transfer to the 200 Area ETF with a second tank receiving additional waste water from the pretreatment process. To provide freeboard, the working volume of the tank will be equal to a minimum of 80% of the total capacity. These tanks will also act as storage tanks before the treated water is disposed to the Columbia River or newly constructed or existing evaporation pond.

**5.3.4.1.2 Sizing Calculations.** The minimum tank size is given by the following equations.

Working volume = (95 L/min [25 gal]/min) x (480 min) = 45,425 L (12,000 gal)

Selected volume = (45,425 L [12,000 gal])/(0.8) = 56,781 L (15,000 gal) use 75,708 L (20,000 gal) tank

#### 5.3.4.2 Filtration.

**5.3.4.2.1 Design Basis.** The microfilter has been sized by a vendor experienced in radioactive waste filtration processes to ensure a maximum waste water flux of 0.5 gal/min/ft$^2$, with 100% theoretical retention of spherical particles 5 $\mu$m and larger. The following particle size distribution was also assumed per WHC-SD-NR-ES-014 (WHC 1992b).

- 100 volume percent (vol %) of the particles greater than 1.5 $\mu$m
- 50 vol % of the particles between 1.5 and 25 $\mu$m
- 90 vol % of the particles between 1.5 and 49 $\mu$m

**5.3.4.2.2 Sizing Calculations.** The minimum filter surface area is given by the following equation:

Minimum area = (95 m [25 gal]/min)/(1.9 L [0.5 gal]/min/$ft^2$) = 4.6 $m^2$(50 $ft^2$)

Chosen surface area = 5.5 $m^2$ (58.8 $ft^2$)

Based on data provided by the vendor, a filter with a bubble pressure of 51 cm (20 in.) of water will theoretically retain 100% of spherical particles 5 $\mu m$ and larger on its surface. Actual performance is generally considerably better, as depth-filtration occurs as the particles penetrate into the porus media. Vendor data indicates that a filter rated at 2 $\mu m$ has an average bubble pressure of 43 to 61 cm (17 to 24 in.) of water. Therefore, a 2 $\mu m$ nominal filter element was selected. A suitable ultrafilter shall be sized after sufficient vendor data is available.

**5.3.4.3 Evaporation Pond.**

**5.3.4.3.1 Design Basis.** The evaporation pond has been sized to accommodate two million gallons of treated water from the 105KE Basin for solar evaporation. A margin of 0.6 m (2 ft) depth for free board has been taken into consideration. Water is assumed to be evaporating at an average of 94 cm (37 in.) depth per year (WHC 1992a).

**5.3.4.3.2 Sizing Calculations.** The minimum evaporation pond size is given by the following equation.

Working Volume = length X width X depth

Water to be evaporated per year = 2,000,000 gal (2,000,000 gal)/ (7.48 gal/$ft^3$) = 267379.68 $ft^3$

Surface area required to evaporate 94 cm (37 in.) of water per year = (267379.68)/(37/12) = 86,717.73 $ft^2$

Assuming the pond to be square shape, the pond size = square root of 86717.73 = 80 m (300 ft)

Depth = 0.9 m, 2.5 cm (3 ft, 1 in.) + 5.1 m, 0 cm (2 ft, 0 in.) = 1.5 m, 2.5 cm (5 ft, 1 in.) Say 1.8 m, 0 cm (6 ft, 0 in.)

This page intentionally left blank.

# 6.0 DISCUSSION OF PREFERRED TREATMENT SYSTEM AND THE THREE DISPOSAL OPTIONS

The preferred treatment system uses the current treatment system in the 105KE Basin. This system has a sandfilter and IXM module. In addition, a microfilter/ultrafilter and an IXM will be added for polishing the effluent before discharge to a permitted disposal system.

The three disposal system options are the Columbia River, ground through ETF (C018), and air evaporation as described in Section 5.3. For each disposal system, a permitting approval is required before the system is implemented. The various agencies' permitting requirements and estimated times for completion are listed in Appendix F.

As recommended in Section 3.0, water disposal to the Columbia River after treatment is the preferred alternative. See Figure 5-1 for various equipment used for this alternative. The most time consuming route is to obtain the permit from federal, state, and local authorities. This disposal system requires piping from the collection tanks connected to the 20 cm (8 in.) CW-A-2 line. Existing 20 cm (8 in.) line is connected to outfall 004. Water is pumped from the collection tanks to 004 outfall at a rate of 95 L/min (25 gal/min). Water going through the outfall will be analyzed to control the water discharged into the river. In this alternative, tritium concentrations will be hard to lower. In addition, this alternative application will depend on the approval of NPDES.

This page intentionally left blank.

# 7.0 NO ACTION ALTERNATIVE

The objective of applying BAT is to reduce the quantity of harmful radionuclide levels in 105KE Basin water to levels that are consistent with guidelines developed from relevant effluent comparative levels. An examination of the 105KE Basin water characteristics indicates that treatment is necessary to achieve this objective. Currently, treatment technologies have been identified and are available to implement the objective.

This page intentionally left blank.

# 8.0 REFERENCES

40 CFR 61, "EPA Regulations on National Emission Standards for Hazardous Air Pollutants," Title 40, *Code of Federal Regulations*, Part 61, as amended, U.S. Environmental Protection Agency, Washington, D.C.

40 CFR 131, "Environmental Protection Agency Procedures for Approving State Water Quality Standards," Title 40, *Code of Federal Regulations*, Part 131, as amended, U.S. Environmental Protection Agency, Washington, D.C.

40 CFR 141, "National Primary Drinking Water Regulations," Title 40, *Code of Federal Regulations*, Part 141, as amended, U.S. Environmental Protection Agency, Washington, D.C.

40 CFR 143, "National Secondary Drinking Water Regulations," Title 40, *Code of Federal Regulations*, Part 143, as amended, U.S. Environmental Protection Agency, Washington, D.C.

40 CFR 268, "EPA Regulations on Land Disposal Restrictions," Title 40, *Code of Federal Regulations*, Part 268, as amended, U.S. Environmental Protection Agency, Washington, D.C.

40 CFR 423, "Steam Electric Power Generating Point Source Category," Title 40, *Code of Federal Regulations*, Part 423268, as amended, U.S. Environmental Protection Agency, Washington, D.C.

ANSI/ANS, 1979, *American National Standard - Liquid Radioactive Waste Processing System for Light Water Reactor Plants*, ANSI/ANS055.6-1979, American Nuclear Society.

Chilton, 1979, Chemical Engineering.

DOE, 1990, *Radiation Protection of the Public and the Environment*, DOE Order 5400.5, U.S. Department of Energy, Washington, D.C.

EPA, 1986, *Quality Criteria for Water*, U.S. Environmental Protection Agency (EPA 440/5-86-001), Washington D.C.

Gerboth, D. M., 1994, Technical Memo, "Updated Baseline Assumptions for N Reactor Effluent Engineering Study," unpublished document, February 1994, Hart Crowser Inc., Richland, Washington.

RCRA, *Resource Conservation and Recovery Act of 1976*, 42 USC 6901 et seq.

WAC 173-200, "Water Quality Standards for Ground Waters of the State of Washington," *Washington Administrative Code 173-200*, as amended, Washington State Department of Ecology, Olympia, Washington.

WAC 173-201, "Water Quality Standards for Waters of the State of Washington," *Washington Administrative Code 173-201*, as amended, Washington State Department of Ecology, Olympia, Washington.

WAC 173-303, "Dangerous Waste Regulations," *Washington Administrative Code 173-303*, as amended, Washington State Department of Ecology, Olympia, Washington.

WAC 402-80, "Monitoring and Enforcement of Air Quality and Emissions Standards for Radionuclides," *Washington Administrative Code 402-80*, as amended, Washington State Department of Ecology, Olympia, Washington.

WHC, 1988, *Best Available Technology (Economically Achievable) Guidance Document for the Hanford Site*, WHC-EP-0137, Westinghouse Hanford Company Waste Management Systems Engineering, Richland, Washington.

WHC-173-660, "Control of New Toxic Air Pollutants," *Washington Administrative Code 173-660*, as amended, Washington State Department of Ecology, Olympia, Washington.

WHC, 1992a, *N Reactor Effluent Treatment Technology Study*, WHC-SD-NR-ES-013, Westinghouse Hanford Company, Richland, Washington.

WHC, 1992b, *N Reactor Wastewater Treatment System Summary Engineering Report*, WHC-SD-NR-ES-014, Westinghouse Hanford Company, Richland, Washington.

WHC, 1993a, *Topical Report Radionuclides*, WHC-SD-NR-ES-016, Westinghouse Hanford Company, Richland, Washington.

WHC, 1993b, *N Reactor Wastewater Management Alternative Study*, WHC-SD-NR-ES-015, Westinghouse Hanford Company, Richland, Washington.

WPCA, *Water Pollution Control Act of 1972*, 33 USC 1251 et seq.

# APPENDIX A

## TECHNOLOGY SCREENING

Appendix A consists of the best available technology screening process and a table showing the comparative effluent levels for ETF, river discharge, soil discharge, and air emission to be used as the basis for treating 105KE Basin water for different alternatives discussed in Section 5.3.

This page intentionally left blank.

# APPENDIX A

# TECHNOLOGY SCREENING

## 1.0 THE BEST AVAILABLE TECHNOLOGY PROCESS

The procedure used for determining the Best Available Technology (BAT) to be used in managing effluent stress at the 105KE Spent Fuel Storage Basin is contained in the *Best Available Technology (Economically Achievable) Guidance Document for the Hanford Site* (WHC 1988). The BAT selection process has been organized into a series of five steps that can be applied in sequence to determine BAT for 105KE Spent Fuel Storage Basin Water.

### 1.1 STEP 1: 105KE SPENT FUEL STORAGE BASIN WATER CHARACTERIZATION

The first step in the BAT selection process involves assembling all basin characterization data. Results of the effluent are presented in Appendix B.

### 1.2 STEP 2: EFFLUENT GUIDELINES METHOD

Water quality standards, criteria, and guidance that may be applied to treat 105KE Spent Fuel Storage Basin water for discharge to the Columbia River, ground or air are discussed below. Effluent comparative levels for various constituents of concern present in the treated 105KE Spent Fuel Storage Basin are developed upon these standards.

#### 1.2.1 Clean Water Act

Effluent limits have been set under the *Clean Water Act of 1977* for 50 industrial source categories and eight key priority pollutants, including polychlorinated biphenyls and certain herbicides and pesticides. Part 423 of Title 40 of the *Code of Federal Regulations* (40 CFR 423) establishes effluent guidelines and standards for primarily engaged in the generation of electricity for distribution and sale, which results primarily from a process using nuclear fuel in conjunction with a thermal cycle employing the steam water system as the thermodynamic medium. These requirements along with other water quality guidelines and standards are used in establishing effluent comparative levels for evaluating potential treatment systems for the 105KE Spent Fuel Storage Basin water (WHC 1992b).

#### 1.2.2 Radiation Exposure Limits

For U.S. Department of Energy (DOE) defense production facilities, DOE Order 5400.5 establishes a public exposure limit of 100 mrem/year from all facility sources via all exposure pathways, with limits of 10 mrem/year for exposure to airborne releases and 4 mrem/year for exposure through consumption

of drinking water (DOE 1990). To implement these exposure-based limits, the order establishes ambient derived concentration guidelines (DCG) for releases to surface water and groundwater, with 1 DCG being the annual average concentration needed to exceed the 100 mrem/year limit, assuming that the only exposure pathway is through drinking water, and assuming that 730 L/year of contaminated drinking water is consumed.

The order sets DOE policy with respect to the treatment of wastewater discharges, establishing 1 DCG as the screening level that triggers evaluation of potential treatment technologies for the wastewater discharge via the BAT process. The order also requires that treatment be consistent with DOE's As Low As Reasonably Achievable (ALARA) policy. As such, applying the DOE BAT process to wastewater streams may result in an additional level of control, as well as contribute to the overall ALARA program at the 105KE Spent Fuel Storage Basin (WHC 1992b).

### 1.2.3 Drinking Water Standards

Both Washington State Department of Ecology (Ecology) and the U.S. Environmental Protection Agency (EPA) use drinking water standards to determine the potential for adverse impacts that could be caused by wastewater discharges to surface water. The Washington State Department of Health has promulgated drinking water standards in WAC 248-54, "Public Water Supplies." Federal drinking water standards appear in 40 CFR 141 and 143. Drinking water standards considered in this report include the following.

- Maximum contaminant levels (MCL) established for toxic and carcinogens are to be set at nontoxic levels, and as close as possible to maximum contaminant level goals (MCLGs), with some allowance for economic and technical factors.

- Secondary maximum contaminant levels (SMCL) established primarily on the basis of secondary water effects such as color, odor, and taste are generally set for compounds that are not considered to be toxic or carcinogenic to humans (WHC 1992b).

### 1.2.4 Ambient Surface Water Quality Standards

Ecology and EPA have developed ambient surface water quality criteria (WQC) designed to prevent adverse effects to aquatic organisms and to humans who may be consuming aquatic organisms or surface water. Ecology has promulgated surface water regulations pursuant to Chapter 90.48 of the Revised Code of Washington (RCW) *Water Pollution Control Act* (WPCA). The EPA has established WQC (although not yet promulgated in regulations) pursuant to its authority under the *Clean Water Act of 1977*. The focus of these standards and criteria is to define ambient levels of chemical concentrations that are not expected to pose adverse effects if present in the aquatic environment.

Federal surface water criteria are established in EPA program guidance documents, principally *Quality Criteria for Water*, commonly known as the Gold Book (EPA 1986). Ecology has generally adopted the Gold Book criteria

introits regulations, either directly or by reference. Ecology regulations are currently found in WAC 174-201, "Water Quality Standards for Surface Waters of the State of Washington."

### 1.2.5 Protection of Aquatic Life

One goal of the ambient surface water standards is to protect aquatic species from direct toxic effects. Toxicity is addressed in terms of acute (short-term) and chronic (long-term) effects.

Many of the acute and chronic toxicity criteria are based on lowest observed effects levels (LOEL) for sensitive aquatic species. In some cases, the LOEL or the species of interest may not be pertinent to a particular surface water body. In addition, some of the criteria depend on temperature, hardness, or pH. The derivation of particular toxicity criteria may affect their relevance to a specific discharge scenario (WHC 1992b).

### 1.2.6 Protection of Human Health

A second goal of the surface water standards is to protect human health. Criteria are established for organism consumption only, where the water does not also serve as a source of drinking water (e.g., marine or estuarine waters). Criteria also exist for consumption of organisms and water, where the surface water is used as a drinking water source. The latter criteria are typically more restrictive, because it assumes an additional route of exposure to chemical compounds.

Human consumption criteria may also reflect certain factors related to the tendency of some compounds (typically carcinogens) to accumulate and/or bioconcentrate in aquatic species before consumption. Thus, the EPA Gold Book lists a range of criteria reflecting 1 in 100,000; 1 in 1,000,000; and 1 in 10,000,000 incremental human cancer risk from consuming affected aquatic organisms, or organisms and water. The 1 in 1,000,000 risk criteria have been used where appropriate to establish effluent comparative levels for this report (WHC 1992b).

### 1.2.7 Groundwater Quality Standards

Ecology has adopted regulations (WAC 173-200) pursuant to WPCA that set forth standards for protection of groundwater. The purpose of these standards is to establish criteria that must not be exceeded to protect existing and potential future uses of groundwater. The presumption by Ecology is that groundwater, other than naturally contaminated or non-usable waters (e.g., perched and seasonal, brackish), should be preserved and protected for use as drinking water. Discharges of wastewater or treated effluent to ground or lined surface impoundments are among the wastewater management options being considered. Thus, Ecology may consider the groundwater standards when deciding if a particular wastewater management alternative should be regulated under the state WPCA, and when setting limits on discharges with the potential to impact groundwater (WHC 1993b).

### 1.2.8 Land Disposal Restrictions

EPA has adopted regulations that restrict certain hazardous wastes from management in land disposal units (e.g., surface impoundments, such as a pond). These land disposal restrictions (LDRs) are promulgated in 40 CFR 268. Ecology has not yet incorporated the federal LDRs into the state dangerous waste regulations (WAC 173-303). Many of the LDRs are based on allowable concentrations of hazardous constituents in proscribed hazardous wastes. If analyses show that allowable concentrations are not exceeded, then the waste is not prohibited from land disposal. This does not mean that the waste is no longer designated as hazardous waste, only that it is acceptable for management in Resource Conservation and Recovery Act of 1976 (RCRA)-permitted land disposal units.

The LDRs are strictly applicable only to systems that treat or dispose of a hazardous waste. K Area wastewater is not a hazardous waste. Additionally, many of the numerical limits established for individual compounds were derived primarily from EPA data indicating the level of treatability that can be achieved for various hazardous waste streams using demonstrated and generally available treatment technologies. Thus, the LDRs are often specific to the waste type and treatment methods evaluated by EPA, and in some cases were established for streams containing only a single hazardous component. It is often more difficult to treat streams contaminated with multiple hazardous components to the levels specified by the LDRs. Nevertheless, the LDRs represent compound concentration limits that can generally be achieved through the application of available and established management practices, and therefore may be considered when determining if treatment for a particular compound is possible or warranted (WHC 1993b).

### 1.2.9 National Emissions Standards For Hazardous Air Pollution

Air emissions of radionuclides from the Hanford Site are regulated under 40 CFR Part 61, Subpart H. These regulations specify that the combined effective dose to the maximally exposed member of the public from all sources of emissions at each DOE facility must be less than 10 mrem/year, parallelling the standard established under DOE Order 5400.5.

Under 40 CFR Part 61, Subpart H regulations, sources that would emit quantities of radionuclides that would result in a dose to the public of greater than 0.1 mrem/year after implementation of emissions controls, must file a notice of construction with the appropriate regulatory authority (in this instance, the Washington State Department of Health) as described in 40 CFR Part 61, Subpart A. State regulations found in WAC 402-80 require that the Washington State Department of health be notified before the construction of any new or significantly modified source of radioactive air emissions operated by DOE, and that the source of emissions be registered.

All point sources which, if no emissions controls were installed, would emit quantities of radionuclides that would result in a dose to the public of greater than 0.1 mrem/year (1% of the effective dose limit) must perform

emissions monitoring as described in 40 CFR Part 61, Subpart H. Estimates of emissions from proposed facilities are to be made using source terms derived as described in 40 CFR Part 61, Appendix D.

Radiation dose limits established under 40 CFR Part 61, Subpart H must be considered when evaluating any wastewater management alternative that would involve disposal of treated effluent or untreated wastewater to the air through such means as evaporation (WHC 1993b).

### 1.2.10 Air Toxic Regulations

Ecology has implemented regulations, found in WAC 173-460, which limit emissions of certain listed toxic air pollutants (TAPs). These regulations require that new or modified sources of TAP emissions install best available control technology for toxic (T-BACT), and that air emissions be controlled such that air quality at the facility boundary does not exceed specified ambient source impact levels (ASILs). WAC 173-460 does not establish de minimis values below which emissions controls are not required; economic and technical arguments for not installing emissions controls are generally made during the top-down engineering analysis performed as part of determining T-BACT for the emission source.

Ambient air quality limits for TAPs established under WAC 173-460 must be considered when evaluating any wastewater management alternative that would involve disposal of treated effluent or untreated wastewater to the air (WHC 1993b).

### 1.2.11 Effluent Guidelines Summary

Table A-1 presents the effluent comparative levels derived for the K Area wastewater management alternatives. These effluent comparative levels include discharges to surface water, discharges to the soil column and discharge to the air. These effluent comparative levels have been developed generally based upon ambient quality limits for the media in question. Therefore, the effluent comparative levels found in Table A-1 should not be considered limits on discharge concentrations for the various wastewater management evaluations (WHC 1993b).

**1.2.11.1 Columbia River Discharge.** For river discharge, chemical constituent effluent comparative levels were developed using the following guidelines and criteria:

- Chronic ambient surface WAC for freshwater species and human consumption of water and organisms from the EPA Gold Book and WAC 173-201
- Federal MCLs for drinking water
- Federal SMCLs for drinking water

Table A-1. Comparative Effluent Levels for 105KE Spent Fuel Storage Basin Waste Water. (4 sheets)

| Analyte/ species | River discharge comparative levels | | | | | | | | Soil discharge comparative levels | | Air emissions comparative levels | | | | | |
|---|---|---|---|---|---|---|---|---|---|---|---|---|---|---|---|---|
| | Chronic | | Acute | | Human health conc. | Source | Ambient river | Source | | | Ambient air standards | | Max. liquid concentrations | | | |
| | Conc. | Source | Conc. | Source | | | | | Conc. | Source | Conc. | Source | 87 m | 1200 m | 10 km | Source |
| INORGANIC | (ug/L) | | (ug/L) | | (ug/L) | | (ug/L) | | (ug/L) | | (ug/m3) | | (ug/L) | (ug/L) | (ug/L) | |
| Aluminum | 5.00E+01 | d | -- | -- | -- | -- | 2.56E+01 | v | 1.00E+02 | d | 6.70E+00 | m.1 | 3.65E+06 | 6.44E+07 | 1.06E+09 | aa |
| Antimony | 1.60E+03 | b | 9.00E+03 | b | 1.4E+01 | q,r | -- | -- | 6.00E+00 | e | 1.70E+00 | m.1 | 9.25E+05 | 1.63E+07 | 2.68E+08 | aa |
| Arsenic | 1.90E+02 | a,b,q | 3.60E+02 | a,b,q | 1.60E-02 | q,r | 1.20E+00 | v | 5.00E-02 | g | 2.30-03 | l.1 | 3.15E+03 | 5.57E+04 | 9.14E+05 | aa |
| Barium | 1.00E+03 | b | -- | -- | -- | -- | 2.65E+01 | v | 1.00E+03 | g | 1.70E+00 | m.1 | 9.25E+05 | 1.63E+07 | 2.68E+08 | aa |
| Beryllium | -- | -- | -- | -- | 7.70E-03 | q,r | -- | -- | 4.00E+00 | e | 4.20E+04 | m.1 | 2.29E+02 | 4.04E+03 | 6.62E+04 | aa |
| Cadmium | 6.57E-01 | a,l | 1.91E+00 | a,j | 5.00E+00 | e | -- | -- | 1.00E+01 | g | 5.60E-04 | m.1 | 3.05E+02 | 5.38E+03 | 8.83E+04 | aa |
| Calcium | -- | -- | -- | -- | -- | -- | 1.64E+04 | v | -- | -- | 6.70E+00 | m.1 | 3.65E+06 | 6.44E+07 | 1.06E+09 | aa |
| Chromium | 1.10E+01 | a,l,o | 1.60E+01 | a,j,o | 1.00E+02 | e | -- | -- | 5.00E+01 | g | 8.30E-05 | m.1 | 1.14E+02 | 2.01E+03 | 3.30E+04 | aa |
| Cobalt | -- | -- | -- | -- | -- | -- | -- | -- | -- | -- | 2.00E-01 | m.1 | 1.09E+05 | 1.92E+06 | 3.15E+07 | aa |
| Copper | 6.59E+00 | a,k | 9.44E+00 | a,j | 1.30E+04 | q,r | -- | -- | 1.00E+03 | g | 3.30E+00 | m.1 | 1.80E+06 | 3.17E+07 | 5.20E+08 | aa |
| Iron | 1.00E+03 | b | -- | -- | -- | -- | 5.07E+01 | v | 3.00E+02 | g | 3.30E+00 | m.1 | 1.80E+06 | 3.17E+07 | 5.20E+08 | aa |
| Lead | 1.14E+00 | a,j | 2.93E+01 | a,j | 5.00E+01 | q,r | -- | -- | 5.00E+01 | g | -- | -- | -- | -- | -- | - |
| Lithium | -- | -- | -- | -- | -- | -- | -- | -- | -- | -- | -- | -- | -- | -- | -- | - |
| Mercury | 1.20E-02 | a | 2.40E+00 | a,q | 1.40E-01 | q,r | -- | -- | 2.00E+00 | g | 3.00E-01 | m.1 | 1.63E+05 | 2.88E+06 | 4.73E+07 | aa |
| Magnesium | -- | -- | -- | -- | -- | -- | 3.65E+03 | v | -- | -- | 3.33E+01 | m.1 | 1.81E+07 | 3.20E+08 | 5.25E+09 | aa |
| Manganese | 5.00E+01 | b | -- | -- | -- | -- | 6.78E+00 | v | 5.00E+01 | g | 1.67E+01 | m.1 | 9.09E+06 | 1.61E+08 | 2.63E+09 | aa |
| Molybdenum | -- | -- | -- | -- | -- | -- | -- | -- | -- | -- | 1.67E+01 | m.1 | 9.09E+06 | 1.61E+08 | 2.63E+09 | aa |
| Neodymium | -- | -- | -- | -- | -- | -- | -- | -- | -- | -- | -- | -- | -- | -- | -- | - |
| Nickel | 9.72E+01 | a | 8.75E+02 | a,j | 1.00E+02 | e | 8.18E+00 | v | 1.00E+02 | e | 3.30E+00 | m.1 | 1.80E+06 | 3.17E+07 | 5.20E+08 | aa |
| Potassium | -- | -- | -- | -- | -- | -- | 6.14E+02 | v | -- | -- | -- | -- | -- | -- | -- | - |
| Phosphorus | -- | -- | -- | -- | -- | -- | 2.00E+01 | v | -- | -- | 3.00E-01 | m.1 | 1.63E+05 | 2.88E+06 | 4.73E+07 | aa |
| Samarium | -- | -- | -- | -- | -- | -- | -- | -- | -- | -- | -- | -- | -- | -- | -- | - |

Table A-1. Comparative Effluent Levels for 105KE Spent Fuel Storage Basin Waste Water. (4 sheets)

| Analyte/ species | River discharge comparative levels | | | | | | | | Soil discharge comparative levels | | Air emissions comparative levels | | | | | |
|---|---|---|---|---|---|---|---|---|---|---|---|---|---|---|---|---|
| | Chronic | | Acute | | Human health conc. | Source | Ambient river | Source | | | Ambient air standards | | Max. liquid concentrations | | | |
| | Conc. | Source | Conc. | Source | | | | | Conc. | Source | Conc. | Source | 67 m | 1200 m | 10 km | Source |
| Selenium | 5.00E+00 | a,l | 2.00E+01 | a,h | 5.00E+01 | c | -- | -- | 1.00E+01 | g | 7.00E-01 | m,1 | 3.18E+05 | 6.73E+06 | 1.10E+08 | aa |
| Silver | 1.20E-01 | b | 8.95E-01 | a,h | 1.05E+02 | q,r | -- | -- | 5.00E+01 | g | 3.00E-02 | m,1 | 1.63E+04 | 2.88E+05 | 4.73E+06 | aa |
| Sodium | -- | -- | -- | -- | -- | -- | 1.63E+03 | v | -- | -- | -- | -- | -- | -- | -- | -- |
| Sulfur | -- | -- | -- | -- | -- | -- | -- | -- | -- | -- | -- | -- | -- | -- | -- | -- |
| Tin | -- | -- | -- | -- | -- | -- | -- | -- | -- | -- | 6.70E+00 | m,1 | 3.65E+06 | 8.44E+07 | 1.06E+09 | aa |
| Titanium | -- | -- | -- | -- | -- | -- | -- | -- | -- | -- | -- | -- | -- | -- | -- | -- |
| Thallium | -- | -- | -- | -- | 1.70E+00 | q,r | -- | -- | 2.00E+00 | e | 3.00E-01 | m,1 | 1.63E+05 | 2.88E+06 | 4.73E+07 | aa |
| Uranium | -- | -- | -- | -- | -- | -- | 8.08E-01 | v | -- | -- | 7.00E-01 | m,1 | 3.81E+05 | 6.73E+06 | 1.10E+08 | aa |
| Vanadium | -- | -- | -- | -- | -- | -- | 1.62E+00 | v | 4.20E+01 | f | 2.00E-01 | m,1 | 1.09E+05 | 1.92E+06 | 3.15E+07 | aa |
| Zinc | 6.13E+01 | a,k | 6.76E+01 | a,j | -- | -- | 5.75E+00 | v | 5.00E+03 | g | 1.67E+01 | m,1 | 9.90E+08 | 1.61E+09 | 2.63E+09 | aa |
| Zirconium | -- | -- | -- | -- | -- | -- | -- | -- | -- | -- | 1.67E+01 | m,1 | 9.09E+08 | 1.61E+09 | 2.63E+09 | aa |
| Ammonia (Total) | 2.00E+03 | a,l | 1.65E+04 | a,j | -- | -- | 6.00E+01 | v | -- | -- | 1.00E+02 | m,1 | 5.44E+07 | 9.61E+08 | 1.58E+10 | aa |
| Ammonia | -- | -- | -- | -- | -- | -- | -- | -- | -- | -- | -- | -- | -- | -- | -- | -- |
| Ammonium | -- | -- | -- | -- | -- | -- | -- | -- | -- | -- | -- | -- | -- | -- | -- | -- |
| Chloride | 2.30E+05 | a | 8.60E+05 | a | -- | -- | -- | -- | 2.50E+05 | g | -- | -- | -- | -- | -- | -- |
| Chloride by IC | -- | -- | -- | -- | -- | -- | -- | -- | -- | -- | -- | -- | -- | -- | -- | -- |
| Flouride | -- | -- | -- | -- | 4.00E+03 | c | 1.00E+02 | v | 4.00E+03 | g | 8.30E+00 | m,1 | 4.52E+06 | 7.98E+07 | 1.31E+08 | aa |
| Nitrite | -- | -- | -- | -- | 1.00E+03 | e | -- | -- | 1.00E+03 | e | -- | -- | -- | -- | -- | -- |
| Nitrate | 1.00E+04 | b | -- | -- | 1.00E+04 | c | -- | -- | 1.00E+04 | g | -- | -- | -- | -- | -- | -- |
| Phosphate | -- | -- | -- | -- | -- | -- | -- | -- | -- | -- | -- | -- | -- | -- | -- | -- |
| Sulfate | -- | -- | -- | -- | -- | -- | 9.76E+03 | v | 2.50E+05 | g | -- | -- | -- | -- | -- | -- |

Table A-1. Comparative Effluent Levels for 105KE Spent Fuel Storage Basin Waste Water. (4 sheets)

| Analyte/ species | River discharge comparative levels | | | | | | | | Soil discharge comparative levels | | Air emissions comparative levels | | | | | |
|---|---|---|---|---|---|---|---|---|---|---|---|---|---|---|---|---|
| | Chronic | | Acute | | Human health conc. | Source | Ambient river | Source | | | Ambient air standards | | Max. liquid concentrations | | | |
| | Conc. | Source | Conc. | Source | | | | | Conc. | Source | Conc. | Source | 67 m | 1200 m | 10 km | Source |
| RADIONUCLIDE | (pCi/L) | | (pCi/L) | | (pCi/L) | | (pCi/L) | | | | (Ci/m3) | | (pCi/L) | (pCi/L) | (pCi/L) | |
| Total Alpha | -- | -- | -- | -- | -- | -- | -- | -- | -- | -- | -- | -- | -- | -- | -- | -- |
| Total Beta | -- | -- | -- | -- | -- | -- | -- | -- | -- | -- | -- | -- | -- | -- | -- | -- |
| AM-241 | 3.00E+01 | e | -- | -- | -- | -- | -- | -- | 1.20E-00 | e | 2.00E-15 | n.1 | 2.74E+03 | 4.84E+04 | 7.94E+05 | aa |
| Cm-242 | 1.00E+03 | e | -- | -- | -- | -- | -- | -- | 4.00E+01 | e | 7.00E-14 | n.1 | 9.59E+04 | 1.69E+06 | 2.78E+07 | aa |
| CM-244 | 6.00E+01 | e | -- | -- | -- | -- | -- | -- | 2.40E+00 | e | 4.00E-15 | n.1 | 5.48E+03 | 9.68E+04 | 1.59E+06 | aa |
| Co-60 | 1.00E+04 | e | -- | -- | -- | -- | -- | -- | 4.00E+02 | e | 8.00E-12 | n.1 | 1.10E+07 | 1.94E+08 | 3.18E+08 | aa |
| Co-134 | 2.00E+03 | e | -- | -- | -- | -- | -- | -- | 8.00E+01 | e | 2.00E-11 | n.1 | 2.74E+07 | 4.84E+08 | 7.94E+08 | aa |
| Co-137 | 3.00E+03 | e | -- | -- | -- | -- | -- | -- | 1.20E+02 | e | 4.00E-11 | n.1 | 5.48E+07 | 9.68E+08 | 1.59E+10 | aa |
| C-14 | 7.00E+04 | e | -- | -- | -- | -- | -- | -- | 2.80E+03 | e | 6.00E-10 | n.1 | 8.22E+05 | 1.45E+07 | 2.38E+08 | aa |
| H-3 | 2.00E+06 | e | -- | -- | -- | -- | 3.74E+02 | v | 2.00E+04 | g | 1.00E-08 | n.1 | 1.37E+07 | 2.42E+08 | 3.97E+08 | aa |
| K-40 | 7.00E+03 | e | -- | -- | -- | -- | -- | -- | 2.80E+02 | e | 9.00E-11 | n.1 | 1.23E+08 | 2.18E+08 | 3.57E+10 | aa |
| Mn-54 | 5.00E+04 | e | -- | -- | -- | -- | -- | -- | 2.00E+03 | e | 2.00E-10 | n.1 | 2.74E+08 | 4.84E+08 | 7.94E+10 | aa |
| Pb-210 | 3.00E+01 | e | -- | -- | -- | -- | -- | -- | 1.20E+00 | e | 9.00E-14 | n.1 | 1.23E+05 | 2.18E+08 | 3.57E+07 | aa |
| Pu-238 | 4.00E+01 | e | -- | -- | -- | -- | 1.32E-01 | v | 1.60E+00 | e | 3.00E-15 | n.1 | 4.11E+03 | 7.26E+04 | 1.19E+08 | aa |
| Pu-239/240 | 3.00E+01 | e | -- | -- | -- | -- | 7.00E-02 | v | 1.20E+00 | e | 2.00E-15 | n.1 | 2.74E+03 | 4.84E+04 | 7.94E+05 | aa |
| Radium | 1.00E+02 | e | -- | -- | -- | -- | 1.42E-01 | v | 4.00E+00 | e | 1.00E-13 | n.1 | 1.37E+05 | 2.42E+08 | 3.97E+07 | aa |
| Ru-106 | 6.00E+03 | e | -- | -- | -- | -- | -- | -- | 2.40E+02 | e | 3.00E-12 | n.1 | 4.11E+08 | 7.26E+07 | 1.19E+08 | aa |
| Sb-125 | 5.00E+04 | e | -- | -- | -- | -- | -- | -- | 2.00E+03 | e | 1.00E-10 | n.1 | 1.37E+08 | 2.42E+08 | 3.97E+10 | aa |
| Sr-90 | 1.00E+03 | e | -- | -- | -- | -- | 3.46E-01 | v | 8.00E+00 | g | 9.00E-12 | n.1 | 1.23E+07 | 2.18E+08 | 3.57E+08 | aa |
| U-234 | 5.00E+02 | e | -- | -- | -- | -- | -- | -- | 2.00E+01 | e | 9.00E-15 | n.1 | 1.23E+04 | 2.18E+05 | 3.57E+06 | aa |
| U-235 | 6.00E+02 | e | -- | -- | -- | -- | -- | -- | 2.40E+01 | e | 1.00E-14 | n.1 | 1.37E+04 | 2.42E+05 | 3.97E+06 | aa |

Table A-1. Comparative Effluent Levels for 105KE Spent Fuel Storage Basin Waste Water. (4 sheets)

| Analyte/ species | River discharge comparative levels | | | | | | | | Soil discharge comparative levels | | Air emissions comparative levels | | | | | |
|---|---|---|---|---|---|---|---|---|---|---|---|---|---|---|---|---|
| | Chronic | | Acute | | Human health conc. | Source | Ambient river | Source | | | Ambient air standards | | Max. liquid concentrations | | | |
| | Conc. | Source | Conc. | Source | | | | | Conc. | Source | Conc. | Source | 67 m | 1200 m | 10 km | Source |
| U-238 | 6.00E+02 | e | -- | -- | -- | -- | -- | -- | 2.40E+01 | e | 1.00E-14 | n.1 | 1.37E+04 | 2.42E+05 | 3.97E+06 | aa |
| Eu-154 | 2.00E+04 | e | -- | -- | -- | -- | -- | -- | 8.00E+02 | e | 5.00E-12 | n.1 | 6.85E+06 | 1.21E+08 | 1.99E+09 | aa |
| Eu-155 | 1.00E+05 | e | -- | -- | -- | -- | -- | -- | 4.00E+03 | e | 3.00E-11 | n.1 | 4.11E+07 | 7.26E+08 | 1.19E+10 | aa |

ND = Not Detected

REFERENCES FOR TABLES 5-1, 5-2, 5-3, AND A-1.

a. Values reported are specifically listed in WAC 173-201A-040 or were calculated using equations as defined in WAC 173-201A-040. Equation inputs for Columbia River were: pH = 7.41, Temperature = 18.4 C, Hardness = 60 mg/L as CaCO3, and Salmonids present.
b. EPA Gold Book
c. 40 CFR 141 Primary Drinking Water Standards
d. 40 CFR 143 Secondary Drinking Water Standards.
e. DOE Order 5400.5 Radiation Protection of the Public and the Environment DCG for Ingestion
f. Land Disposal Restriction guidelines (40 CFR Part 268) for F039 Wastewater.
g. Chapter 173-200 WAC, Water Quality Standards for Ground Waters of the State of Washington, October 31, 1990.
h. An instantaneous concentration not to be exceeded any time.
i. A 24 hour average not to be exceeded.
j. A 1-hour average concentration not to be exceeded more than once every three years.
k. A 4-day average concentration not to be exceeded more than once every three years.
l. PNL 1990, 105KE NLOP Water Analysis (PNL93-07046)
l.1. Chapter 173-460 WAC ASIL, annual average (proposed 1993 revisions)
m. WHC-SD-NR-ES-016 Transport Mechanism of Radionuclides in 105KE Fuel Storage Basin to Airborne Effluent Releases.
m.1. Chapter 173-460 WAC ASIL, 24-hr average (proposed 1993 revisions)
n. Center of Basin Sample Point 10, November 1992
n.1. Based upon 10% of DOE Order 5400.5 DCG for Inhalation
o. Based upon 4% of DOE Order 5400.5 DCG for water ingestion.
p. Not used in this study.
q. Based on 40 CFR 131.36(b) as of 12/22/92.
r. Based on human consumption of water and organisms.
s. Based on hexavalent chromium.
t. WHC-SD-NR-ES-013, Rev. 0, N Reactor Effluent Treatment Study, Table 5-8, January 1992
u. Center of basin sample, November 1992.
v. WHC-SD-NR-ES-014, Rev. 0, N Reactor Wastewater Treatment System Summary Engineering Report Tables 2-2 and 2-3 105N Fuel Basin February 1992 Sample Data (unpublished).
w. WHC-SD-NR-ES-014, Rev. 0, N Reactor Wastewater Treatment System Summary Engineering Report Table 4-7 105N Fuel Basin February 1992 Sample Data (unpublished).
x. Sample date 1-5-94 to 2-16-94 105KE IXM inlet and outlet concentrations from WHC 100K Hazardous and Radiological Waste Control Section.
y. Sample date 8/11/93 to 1/5/94 105KE IXM inlet and outlet concentrations from WHC Engineering and Environmental Documentation Laboratory.
z. N Reactor Wastewater Pretreatment Engineering Study (unpublished document) dated 1/3/93 by SAIC, Richland, WA.
aa. Technical Memo, Updated Basin Assumptions for N Reactor Effluent Engineering Study (unpublished document) dated 2/22/94 by SAIC, Richland, WA.
bb. Polishing IXM efficiency justification, DSI from Keith Larkin to Sohan Gahir dated 3/29/94 (unpublished document).

In all cases, the WQC from the Gold Book and WAC 173-201 were consulted first to determine the appropriate effluent comparative level. If no WQC had been established, MCLs and SMCLs were used to establish the appropriate effluent comparative level.

For radionuclides, all effluent comparative levels are based upon the DCGs published in DOE Order 5400.5 (DOE 1990, WHC 1993b).

1.2.11.2 **Soil Discharge.** For soil discharge, chemical constituents effluent comparative levels were developed using the following guidelines and criteria.

- "Water Quality Standards for Ground Waters of the State of Washington" (WAC 173-200)
- Land disposal restriction guidelines for F039 wastewater (40 CFR Part 268).

In all cases, the WQC from WAC 173-200 were consulted first to determine the appropriate effluent comparative level. If no WQC had been established, LDR guidelines were used to establish the appropriate effluent comparative level. If no WQC or LDR has been established, then no effluent comparative level has been listed for the compound.

Effluent comparative levels for radionuclides are based upon 4% of the DCGs published in DOE Order 5400.5 (WHC 1993b).

1.2.11.3 **Air Emissions.** For chemical constituents, ambient air concentrations for TAPs at the closest point to the 105KE Spent Fuel Storage Basin which is reasonably subject to public access must not exceed the ASILs established by WAC 173-460. In this study the point of compliance has been assumed to be the following:

- 762 m (2,500 ft) from any solar evaporation pond, corresponding to the approximate distance to the bank of the Columbia River in the vicinity of 105KE Spent Fuel Storage Basins.

For radiochemical constituent, the sum of the dose contributions for each radionuclide must not exceed 10 mrem/year at any offsite point where there is a residence, school, business or office, the limit imposed by 40 CFR 61 Subpart H. In this study, the point of compliance for radiation exposure has been assumed to be a point (6.2 miles) from any emission source at the 105KE Spent Fuel Storage Basin. This corresponds to the approximate distance from K Area to the Langguth Winery, located on State Highway 24 to the northeast of the K Area (WHC 1993b).

## 1.3 STEP 3: TECHNOLOGY TRANSFER METHOD

The technology transfer method for determining BAT requires the identification of streams that are nearly identical to the 105KE Spent Fuel Storage Basin Water that are being successfully treated at other sites.

The K Basins is unique in that, unlike commercial reactor plants, K Basin sought to store special nuclear materials such as plutonium. Therefore, the relative and absolute concentrations of many radionuclides in the K Basins effluent may be somewhat different than those found in wastewater from commercial reactors. In most commercial reactor facilities, fuel storage basin water is treated and recycled, with only a small stream of treated water being "bled" off to prevent contaminant buildup. Therefore, BAT for the K Basins effluent cannot be solely established through the technology transfer method (WHC 1992a).

## 1.4 STEP 4: TREATABILITY STUDIES METHOD

The treatability studies method may be used to identify BAT when neither effluent guidelines nor technology transfer is applicable. This method uses treatability study results to suggest control options that may be BAT. Use of this method is possible if either one of the two following conditions are met:

- A level of treated effluent quality has been accepted for discharge by regulatory agencies
- Current control practices establish a pattern of control efficiency (i.e., percentage removal) or treatment intensity (i.e., number and type of treatment steps).

The first of these conditions does not apply, as permits for discharges sufficiently similar to the K Basin effluent are not known to have been issued. Furthermore, there has been no control procedures established because there has been no discharge from K Basins. Therefore, existing treatability data do not by themselves establish BAT for the K Basins wastewater (WHC 1992a).

## 1.5 STEP 5: GENERIC TREATMENT SYSTEMS METHOD

As described in the preceding sections, technology transfer and treatability studies are not solely appropriate methods for determining BAT for treatment of K Basins effluent. Therefore, it was necessary to apply the generic treatment systems method. The generic treatment method requires that alternative treatment processes be developed for the wastewater using selected common treatment technologies that appear applicable (WHC 1992a).

This page intentionally left blank.

# APPENDIX B

## BASIN WATER

Appendix B consists of volatile and semi-volatile organic analysis of water samples collected from 105KE Basin discharge chute area. It also includes tables showing the ion-exchange modules efficiency for treating various radionuclides present in the 105KE Basin water.

This page intentionally left blank.

From: Organic Chemistry
Phone: 373-2872
Date: April 4, 1994
Subject: Analytical Results

To: M. A. Green XO-35

The following analytical results have been obtained for the indicated sample which was submitted to the laboratory. The analysis was performed using EPA SW846 based methodology. Modifications to the methods were made due to radiological concerns, matrix problems, safety concerns and to attempt to achieve needed detection limits. Quantitation limits and detection limits are highly matrix dependent and maximum contaminant levels (MCLs) were not always achievable.

Laboratory ID: R4957

Submitted by: M. A. Green
Matrix: Water

Customer ID: 0214KEB

Laboratory submittal date: 03/09/94

SEMIVOLATILE ORGANIC ANALYSIS BY PROCEDURE: LA-523-402

| Parameter | Results | Units | Quantitation limit | Analyst |
|---|---|---|---|---|
| Phenol | ND | ug/L | 250 | DRH |
| bis(-2-Chloroethyl) Ether | ND | ug/L | 250 | DRH |
| 2-Chlorophenol | ND | ug/L | 250 | DRH |
| 1, 3-Dichlorobenzene | ND | ug/L | 250 | DRH |
| 1, 4-Dichlorobenzene | ND | ug/L | 250 | DRH |
| 1, 2-Dichlorobenzene | ND | ug/L | 250 | DRH |
| 2-Methylphenol | ND | ug/L | 250 | DRH |
| 2, 2'-oxybis (1-Chloropropane) | ND | ug/L | 250 | DRH |
| 4-Methylphenol | ND | ug/L | 250 | DRH |
| N-Nitroso-di-n-propylamine | ND | ug/L | 250 | DRH |
| Hexachloroethane | ND | ug/L | 250 | DRH |
| Nitrobenzene | ND | ug/L | 250 | DRH |
| Isophorone | ND | ug/L | 250 | DRH |
| 2-Nitrophenol | ND | ug/L | 250 | DRH |
| 2, 4-Dimethyphenol | ND | ug/L | 250 | DRH |
| bis(-2-Chloroethoxy)methane | ND | ug/L | 250 | DRH |
| 2, 4-Dichlorophenol | ND | ug/L | 250 | DRH |
| 1, 2, 4-Trichlorobenzene | ND | ug/L | 250 | DRH |
| Naphthalene | ND | ug/L | 250 | DRH |
| 4-Chloroaniline | ND | ug/L | 250 | DRH |
| Hexachlorobutadiene | ND | ug/L | 250 | DRH |
| 4-Chloro-3-Methylphenol | ND | ug/L | 250 | DRH |
| 2-Methylnaphthalene | ND | ug/L | 250 | DRH |
| Hexachlorocyclopentadiene | ND | ug/L | 250 | DRH |
| 2, 4, 6-Trichlorophenol | ND | ug/L | 250 | DRH |

RECEIVED
APR 07 1994
HAZARDOUS & RADIOLOGICAL WASTE CONTROL

| | | | | |
|---|---|---|---|---|
| 2, 4, 5-Trichlorphenol | ND | ug/L | 620 | DRH |
| 2-Chloronaphthalene | ND | ug/L | 250 | DRH |
| 2-Nitroaniline | ND | ug/L | 620 | DRH |
| Dimethylphthalate | ND | ug/L | 250 | DRH |
| Acenaphthylene | ND | ug/L | 250 | DRH |
| 2, 6-Dinitrotoluene | ND | ug/L | 250 | DRH |
| 3-Nitroaniline | ND | ug/L | 620 | DRH |
| Acenaphthene | ND | ug/L | 250 | DRH |
| 2, 4-Dinitrophenol | ND | ug/L | 620 | DRH |
| 4-Nitrophenol | ND | ug/L | 620 | DRH |
| Dibenzofuran | ND | ug/L | 250 | DRH |
| 2,4-Dinitrotoluene | ND | ug/L | 250 | DRH |
| Diethylphthalate | ND | ug/L | 250 | DRH |
| 4-Chlorophenyl-phenylether | ND | ug/L | 250 | DRH |
| Fluorene | ND | ug/L | 250 | DRH |
| 4-Nitroaniline | ND | ug/L | 620 | DRH |
| 4, 6-Dinitro-2-methylphenol | ND | ug/L | 620 | DRH |
| N-nitrosodiphenylamine (1) | ND | ug/L | 250 | DRH |
| 4-Bromophenyl-phenylether | ND | ug/L | 250 | DRH |
| Hexachlorobenzene | ND | ug/L | 250 | DRH |
| Pentachlorophenol | ND | ug/L | 620 | DRH |
| Phenanthrene | ND | ug/L | 250 | DRH |
| Anthracene | ND | ug/L | 250 | DRH |
| Carbazole | ND | ug/L | 250 | DRH |
| Di-n-butylphthalate | ND | ug/L | 250 | DRH |
| Fluoranthene | ND | ug/L | 250 | DRH |
| Pyrene | ND | ug/L | 250 | DRH |
| Butylbenzylphthalate | ND | ug/L | 250 | DRH |
| 3, 3'-Dichlorobenzidine | ND | ug/L | 250 | DRH |
| Benzo(a)anthracene | ND | ug/L | 250 | DRH |
| Chrysene | ND | ug/L | 250 | DRH |
| bis(2-Ethylhexyl)phthalate | BQL | ug/L | 250 | DRH |
| Di-n-octylphthalate | ND | ug/L | 250 | DRH |
| Benzo(b)fluoranthene | ND | ug/L | 250 | DRH |
| Benzo(k)fluoranthene | ND | ug/L | 250 | DRH |
| Benzo(a)pyrene | ND | ug/L | 250 | DRH |
| Indeno(1, 2, 3-cd)pyrene | ND | ug/L | 250 | DRH |
| Dibenzo(a,h)anthracene | ND | ug/L | 250 | DRH |
| Benzo(g, h, i)perylene | ND | ug/L | 250 | DRH |

ND = none detected BQL = below quantitation limit

Other compounds tentatively identified: 3,3,3-trichloro-1-Propene, Decamethylcyclopentasiloxane, Benzoic Acid, Unknown Dichloro-Benzoic Acid

If there are any questions regarding this data, please call.

K.B. Wehner, Organic Chemistry
Manager

RECEIVED
APR 07 1994
HAZARDOUS & RADIOLOGICAL
WASTE CONTROL

From: Organic Chemistry
Phone: 373-2872
Date: April 4, 1994
Subject: Analytical Results

To: M. A. Green XO-35

The following analytical results have been obtained for the indicated sample which was submitted to the laboratory. The analysis was performed using EPA SW846 based methodology. Modifications to the methods were made due to radiological concerns, matrix problems, safety concerns and to attempt to achieve needed detection limits. Quantitation limits and detection limits are highly matrix dependent and maximum contaminant levels (MCLs) were not always achievable.

Laboratory ID: R4956

Submitted by: M. A. Green
Matrix: Water

Customer ID: 0213KEB

Laboratory submittal date: 03/09/94

VOLATILE ORGANICS ANALYSIS BY PROCEDURE: LA-523-405

| Parameter | Results | Units | Quantitation limit | Analyst |
|---|---|---|---|---|
| Chloromethane | ND | ug/l | 10 | DEN |
| Bromomethane | ND | ug/l | 10 | DEN |
| Vinyl Chloride | ND | ug/l | 10 | DEN |
| Chloroethane | ND | ug/l | 10 | DEN |
| Methylene-Chloride | <10 | ug/l | 10 | DEN |
| Acetone | ND | ug/l | 10 | DEN |
| Carbon Disulfide | ND | ug/l | 10 | DEN |
| 1, 1-Dichloroethene | ND | ug/l | 10 | DEN |
| 1, 1-Dichloroethane | ND | ug/l | 10 | DEN |
| 1, 2-Dichloroethene (Total) | ND | ug/l | 10 | DEN |
| Chloroform | ND | ug/l | 10 | DEN |
| 1, 2-Dichloroethane | ND | ug/l | 10 | DEN |
| 2-Butanone | ND | ug/l | 10 | DEN |
| 1, 1, 1-Trichloroethane | ND | ug/l | 10 | DEN |
| Carbon Tetrachloride | ND | ug/l | 10 | DEN |
| Bromodichloromethane | ND | ug/l | 10 | DEN |
| 1, 2-Dichloropropane | ND | ug/l | 10 | DEN |
| cis-1, 3-Dichloropropene | ND | ug/l | 10 | DEN |
| Trichloroethene | ND | ug/l | 10 | DEN |
| Dibromochloromethane | ND | ug/l | 10 | DEN |
| 1, 1, 2-Trichloroethane | ND | ug/l | 10 | DEN |
| Benzene | ND | ug/l | 10 | DEN |
| trans-1, 3-Dichloropropene | ND | ug/l | 10 | DEN |
| Bromoform | ND | ug/l | 10 | DEN |
| 2-Hexanone | ND | ug/l | 10 | DEN |

RECEIVED
APR 07 1994
HAZARDOUS & RADIOLOGICAL WASTE CONTROL

| | | | | |
|---|---|---|---|---|
| Tetrachloroethene | ND | ug/l | 10 | DEN |
| 1, 1, 2, 2-Tetrachloroethane | ND | ug/l | 10 | DEN |
| Toluene | ND | ug/l | 10 | DEN |
| Chlorobenzene | ND | ug/l | 10 | DEN |
| Ethylbenzene | ND | ug/l | 10 | DEN |
| Styrene | ND | ug/l | 10 | DEN |
| 4-methyl-2-Pentanone | ND | ug/l | 10 | DEN |
| Xylene (Total) | ND | ug/l | 10 | DEN |

ND = none detected

Sample holding time was exceeded by 1 day.

If there are any questions regarding this data, please call.

K.B. Wehner, Organic Chemistry
Manager

RECEIVED
APR 07 1994
HAZARDOUS & RADIOLOGICAL
WASTE CONTROL

From: Organic Chemistry
Phone: 373-2872
Date: April 4, 1994
Subject: Analytical Results

To: M. A. Green X0-35

The following analytical results have been obtained for the indicated sample which was submitted to the laboratory. The analysis was performed using EPA SW846 based methodology. Modifications to the methods were made due to radiological concerns, matrix problems, safety concerns and to attempt to achieve needed detection limits. Quantitation limits and detection limits are highly matrix dependent and maximum contaminant levels (MCLs) were not always achievable.

Laboratory ID: R4958

Submitted by: M. A. Green
Matrix: Water

Customer ID: 0217KEB

Laboratory submittal date: 03/09/94

VOLATILE ORGANICS ANALYSIS BY PROCEDURE: LA-523-405

| Parameter | Results | Units | Quantitation limit | Analyst |
|---|---|---|---|---|
| Chloromethane | ND | ug/l | 10 | DEN |
| Bromomethane | ND | ug/l | 10 | DEN |
| Vinyl Chloride | ND | ug/l | 10 | DEN |
| Chloroethane | ND | ug/l | 10 | DEN |
| Methylene-Chloride | ND | ug/l | 10 | DEN |
| Acetone | ND | ug/l | 10 | DEN |
| Carbon Disulfide | ND | ug/l | 10 | DEN |
| 1, 1-Dichloroethene | ND | ug/l | 10 | DEN |
| 1, 1-Dichloroethane | ND | ug/l | 10 | DEN |
| 1, 2-Dichloroethene (Total) | ND | ug/l | 10 | DEN |
| Chloroform | ND | ug/l | 10 | DEN |
| 1, 2-Dichloroethane | ND | ug/l | 10 | DEN |
| 2-Butanone | ND | ug/l | 10 | DEN |
| 1, 1, 1-Trichloroethane | ND | ug/l | 10 | DEN |
| Carbon Tetrachloride | ND | ug/l | 10 | DEN |
| Bromodichloromethane | ND | ug/l | 10 | DEN |
| 1, 2-Dichloropropane | ND | ug/l | 10 | DEN |
| cis-1, 3-Dichloropropene | ND | ug/l | 10 | DEN |
| Trichloroethene | ND | ug/l | 10 | DEN |
| Dibromochloromethane | ND | ug/l | 10 | DEN |
| 1, 1, 2-Trichloroethane | ND | ug/l | 10 | DEN |
| Benzene | ND | ug/l | 10 | DEN |
| trans-1, 3-Dichloropropene | ND | ug/l | 10 | DEN |
| Bromoform | ND | ug/l | 10 | DEN |
| 2-Hexanone | ND | ug/l | 10 | DEN |

RECEIVED
APR 07 1994
HAZARDOUS & RADIOLOGICAL WASTE CONTROL

| | | | | |
|---|---|---|---|---|
| Tetrachloroethene | ND | ug/l | 10 | DEN |
| 1, 1, 2, 2-Tetrachloroethane | ND | ug/l | 10 | DEN |
| Toluene | ND | ug/l | 10 | DEN |
| Chlorobenzene | ND | ug/l | 10 | DEN |
| Ethylbenzene | ND | ug/l | 10 | DEN |
| Styrene | ND | ug/l | 10 | DEN |
| 4-methyl-2-Pentanone | ND | ug/l | 10 | DEN |
| Xylene (Total) | ND | ug/l | 10 | DEN |

* ND = none detected

Sample holding time was exceeded by 5 days.

If there are any questions regarding this data, please call.

K.B. Wehner, Organic Chemistry
Manager

RECEIVED
APR 07 1994
HAZARDOUS & RADIOLOGICAL
WASTE CONTROL

From: Organic Chemistry
Phone: 373-2872
Date: April 4, 1994
Subject: Analytical Results

To: M. A. Green XO-35

The following analytical results have been obtained for the indicated sample which was submitted to the laboratory. The analysis was performed using EPA SW846 based methodology. Modifications to the methods were made due to radiological concerns, matrix problems, safety concerns and to attempt to achieve needed detection limits. Quantitation limits and detection limits are highly matrix dependent and maximum contaminant levels (MCLs) were not always achievable.

Laboratory ID: R4959

Submitted by: M. A. Green
Matrix: Water

Customer ID: 0218KEB

Laboratory submittal date: 03/09/94

SEMIVOLATILE ORGANIC ANALYSIS BY PROCEDURE: LA-523-402

| Parameter | Results | Units | Quantitation limit | Analyst |
|---|---|---|---|---|
| Phenol | ND | ug/L | 250 | DRH |
| bis(-2-Chloroethyl) Ether | ND | ug/L | 250 | DRH |
| 2-Chlorophenol | ND | ug/L | 250 | DRH |
| 1, 3-Dichlorobenzene | ND | ug/L | 250 | DRH |
| 1, 4-Dichlorobenzene | ND | ug/L | 250 | DRH |
| 1, 2-Dichlorobenzene | ND | ug/L | 250 | DRH |
| 2-Methylphenol | ND | ug/L | 250 | DRH |
| 2, 2'-oxybis (1-Chloropropane) | ND | ug/L | 250 | DRH |
| 4-Methylphenol | ND | ug/L | 250 | DRH |
| N-Nitroso-di-n-propylamine | ND | ug/L | 250 | DRH |
| Hexachloroethane | ND | ug/L | 250 | DRH |
| Nitrobenzene | ND | ug/L | 250 | DRH |
| Isophorone | ND | ug/L | 250 | DRH |
| 2-Nitrophenol | ND | ug/L | 250 | DRH |
| 2, 4-Dimethyphenol | ND | ug/L | 250 | DRH |
| bis(-2-Chloroethoxy)methane | ND | ug/L | 250 | DRH |
| 2, 4-Dichlorophenol | ND | ug/L | 250 | DRH |
| 1, 2, 4-Trichlorobenzene | ND | ug/L | 250 | DRH |
| Naphthalene | ND | ug/L | 250 | DRH |
| 4-Chloroaniline | ND | ug/L | 250 | DRH |
| Hexachlorobutadiene | ND | ug/L | 250 | DRH |
| 4-Chloro-3-Methylphenol | ND | ug/L | 250 | DRH |
| 2-Methylnaphthalene | ND | ug/L | 250 | DRH |
| Hexachlorocyclopentadiene | ND | ug/L | 250 | DRH |
| 2, 4, 6-Trichlorophenol | ND | ug/L | 250 | DRH |

RECEIVED
APR 07 1994
HAZARDOUS & RADIOLOGICAL WASTE CONTROL

| | | | | |
|---|---|---|---|---|
| 2, 4, 5-Trichlorphenol | ND | ug/L | 620 | DRH |
| 2-Chloronaphthalene | ND | ug/L | 250 | DRH |
| 2-Nitroaniline | ND | ug/L | 620 | DRH |
| Dimethylphthalate | ND | ug/L | 250 | DRH |
| Acenaphthylene | ND | ug/L | 250 | DRH |
| 2, 6-Dinitrotoluene | ND | ug/L | 250 | DRH |
| 3-Nitroaniline | ND | ug/L | 620 | DRH |
| Acenaphthene | ND | ug/L | 250 | DRH |
| 2, 4-Dinitrophenol | ND | ug/L | 620 | DRH |
| 4-Nitrophenol | ND | ug/L | 620 | DRH |
| Dibenzofuran | ND | ug/L | 250 | DRH |
| 2,4-Dinitrotoluene | ND | ug/L | 250 | DRH |
| Diethylphthalate | ND | ug/L | 250 | DRH |
| 4-Chlorophenyl-phenylether | ND | ug/L | 250 | DRH |
| Fluorene | ND | ug/L | 250 | DRH |
| 4-Nitroaniline | ND | ug/L | 620 | DRH |
| 4, 6-Dinitro-2-methylphenol | ND | ug/L | 620 | DRH |
| N-nitrosodiphenylamine (1) | ND | ug/L | 250 | DRH |
| 4-Bromophenyl-phenylether | ND | ug/L | 250 | DRH |
| Hexachlorobenzene | ND | ug/L | 250 | DRH |
| Pentachlorophenol | ND | ug/L | 620 | DRH |
| Phenanthrene | ND | ug/L | 250 | DRH |
| Anthracene | ND | ug/L | 250 | DRH |
| Carbazole | ND | ug/L | 250 | DRH |
| Di-n-butylphthalate | BQL | ug/L | 250 | DRH |
| Fluoranthene | ND | ug/L | 250 | DRH |
| Pyrene | ND | ug/L | 250 | DRH |
| Butylbenzylphthalate | ND | ug/L | 250 | DRH |
| 3, 3'-Dichlorobenzidine | ND | ug/L | 250 | DRH |
| Benzo(a)anthracene | ND | ug/L | 250 | DRH |
| Chrysene | ND | ug/L | 250 | DRH |
| bis(2-Ethylhexyl)phthalate | ND | ug/L | 250 | DRH |
| Di-n-octylphthalate | BQL | ug/L | 250 | DRH |
| Benzo(b)fluoranthene | ND | ug/L | 250 | DRH |
| Benzo(k)fluoranthene | ND | ug/L | 250 | DRH |
| Benzo(a)pyrene | ND | ug/L | 250 | DRH |
| Indeno(1, 2, 3-cd)pyrene | ND | ug/L | 250 | DRH |
| Dibenzo(a,h)anthracene | ND | ug/L | 250 | DRH |
| Benzo(g, h, i)perylene | ND | ug/L | 250 | DRH |

ND = none detected BQL = below quantitation limit

Other compounds tentatively identified: Decamethylcyclopentasiloxane, Unknown Dichloro-benzoic acid

If there are any questions regarding this data, please call.

RECEIVED
APR 07 1994
HAZARDOUS & RADIOLOGICAL WASTE CONTROL

K.B. Wehner, Organic Chemistry
Manager

Table B-1. IXM Radionuclide Concentrations at Inlet and Outlet with Removal Efficiency. (2 sheets)

| Sample date | Am-241 inlet (uCi/L) | Am-241 outlet (uCi/L) | Am-241 Eff. (%) | Co-60 inlet (uCi/L0 | Co-60 outlet (uCi/L) | Co-60 Eff. (%) | Cs-134 inlet (uCi/L) | Cs-134 outlet (uCi/L) | Cs-134 Eff. (%) | Mn-54 inlet (uCi/L) | Mn-54 outlet (uCi/L) | Mn-54 Eff. (%) | Sb-125 inlet (uCi/L) | Sb-125 outlet (uCi/L) | Sb-125 Eff. (%) |
|---|---|---|---|---|---|---|---|---|---|---|---|---|---|---|---|
| 01/05/94 | 6.99E-03 | 3.75E-03 | 46.35 | 1.95E-03 | 1.92E-04 | 90.66 | 2.32E-03 | 2.91E-04 | 87.46 | 1.83E-03 | 3.64E-05 | 98.01 | 1.53E-02 | 6.13E-03 | 59.33 |
| 01/19/94 | 2.51E-03 | 1.75E-03 | 30.60 | 4.75E-04 | 2.56E-05 | 94.61 | 3.44E-03 | 3.09E-05 | 99.10 | 5.31E-04 | 2.62E-05 | 95.07 | 8.36E-06 | 1.31E-03 | 84.33 |
| 01/26/94 | 3.11E-03 | 1.05E-03 | 66.23 | 2.34E-03 | 2.46E-05 | 98.95 | 2.05E-03 | 2.94E-05 | 98.56 | 1.96E-03 | 2.61E-05 | 98.68 | 1.92E-02 | 5.10E-03 | 73.44 |
| 02/02/94 | 5.68E-03 | 1.09E-03 | 60.81 | 1.71E-03 | 5.68E-05 | 96.68 | 1.44E-03 | 5.68E-05 | 96.05 | 9.96E-04 | 5.81E-05 | 94.17 | 2.12E-02 | 1.20E-02 | 43.39 |
| 02/06/94 | 5.75E-03 | 9.61E-04 | 83.28 | 1.71E-03 | 3.01E-05 | 96.24 | 1.58E-03 | 2.95E-05 | 98.13 | 1.28E-03 | 2.86E-05 | 97.76 | 2.20E-02 | 5.93E-03 | 73.04 |
| 02/16/94 | 2.82E-03 | 9.04E-04 | 67.94 | 1.70E-03 | 1.21E-04 | 92.86 | 2.59E-03 | 3.72E-04 | 85.63 | 2.22E-03 | 3.55E-05 | 98.40 | 2.33E-02 | 8.26E-03 | 64.59 |
| Average Eff. (%) | -- | -- | 62.49 | -- | -- | 95.33 | -- | -- | 94.15 | -- | -- | 97.02 | -- | -- | 66.45 |
| DF | -- | -- | 2.67 | -- | -- | 21.41 | -- | -- | 17.09 | -- | -- | 33.56 | -- | -- | 2.98 |

| Sample date | Alpha FLT inlet (uCi/L) | Alpha FLT outlet (uCi/L) | Alpha FLT Eff. (%) | Cs-137 inlet (uCi/L) | Cs-137 outlet (uCi/L) | Cs-137 Eff. (%) | H3 inlet (uCi/L) | H3 outlet (uCi/L) | H3 Eff. (%) | Pu-238 inlet (uCi/L) | Pu-238 outlet (uCi/L) | Pu-238 Eff. (%) | Pu-239/240 inlet (uCi/L) | Pu-239/240 outlet (uCi/L) | Pu-239/240 Eff. (%) |
|---|---|---|---|---|---|---|---|---|---|---|---|---|---|---|---|
| 01/05/94 | 2.33E-02 | 7.41E-03 | 68.19 | 2.30E+00 | 3.31E-01 | 85.60 | -- | -- | -- | 1.67E-03 | 9.12E-04 | 41.91 | 8.77E-03 | 6.13E-03 | 37.26 |
| 01/19/94 | 2.79E-02 | 1.45E-03 | 94.60 | 4.05E+00 | 1.27E-01 | 96.86 | 2.95E+00 | 3.02E+00 | 0 | 4.86E-03 | 6.42E-05 | 98.67 | 1.49E-02 | 4.49E-04 | 96.98 |
| 01/26/94 | 2.19E-02 | 2.49E-03 | 88.63 | 3.88E+00 | 9.54E-02 | 97.54 | 1.84E+00 | 3.12E+00 | 0 | 1.00E-03 | 1.79E-04 | 82.10 | 1.05E-02 | 1.08E-03 | 89.71 |
| 02/02/94 | 3.08E-02 | 4.16E-03 | 86.33 | 3.79E+00 | 1.16E.01 | 96.88 | 2.95E+00 | 2.86E+00 | 0 | 4.02E-03 | 3.69E-04 | 90.08 | 1.96E-02 | 2.43E-03 | 87.60 |
| 02/06/94 | 2.92E-02 | 3.73E-03 | 87.22 | 4.18E+00 | 6.36E-02 | 98.48 | 3.02E+00 | 3.07E+00 | 0 | 2.49E-03 | 4.45E-04 | 82.13 | 1.84E-02 | 2.82E-03 | 82.60 |
| 02/16/94 | 2.85E-02 | 1.15E-02 | 59.55 | 4.92E+00 | 4.42E-01 | 91.01 | 3.41E+00 | 3.15E+00 | 0 | 2.61E-03 | 1.95E-03 | 25.28 | 1.79E-02 | 8.32E-03 | 53.52 |
| Average Eff. (%) | -- | -- | 80.80 | -- | -- | 94.40 | -- | -- | 0 | -- | -- | 70.02 | -- | -- | 74.84 |
| DF | -- | -- | 5.21 | -- | -- | 17.84 | -- | -- | 0 | -- | -- | 3.34 | -- | -- | 3.94 |

Table B-1. IXM Radionuclide Concentrations at Inlet and Outlet with Removal Efficiency. (2 sheets)

| Sample date | Sr-90 Inlet (uCi/L) | Sr-90 outlet (uCi/L) | Sr-90 Eff. (%) | U Inlet (g/L) | U outlet (g/L) | U Eff. (%) |
|---|---|---|---|---|---|---|
| 01/05/94 | 9.70E-01 | 2.44E-02 | 97.19 | 4.15E-05 | 1.49E-05 | 64.09 |
| 01/19/94 | 2.46E+00 | 9.31E-03 | 99.62 | 2.96E-05 | 7.62E-06 | 74.20 |
| 01/26/94 | 2.07E+00 | 1.28E-02 | 99.38 | 2.93E-05 | 1.17E-05 | 60.09 |
| 02/02/94 | 1.87E+00 | 1.18E-02 | 99.40 | 1.75E-05 | 8.13E-06 | 53.54 |
| 02/09/94 | 1.91E+00 | 1.99E-02 | 98.95 | 2.52E-05 | 6.75E-06 | 73.21 |
| 02/16/94 | 2.02E+00 | 8.10E-02 | 95.99 | 3.15E-05 | 7.51E-06 | 76.16 |
| Average Eff. (%) | -- | -- | 98.42 | -- | -- | 66.68 |
| DF | -- | -- | 63.29 | -- | -- | 3.02 |

Table B-2. IXM Radionuclide Concentrations at Inlet and Outlet with Removal Efficiency.

| Sample date | Cs-137 Inlet (uCi/L) | Cs-137 outlet (uCi/L) | Cs-137 Eff. (%) | Sr-90 Inlet (uCi/L) | Sr-90 outlet (uCi/L) | Sr-90 Eff. (%) | Pu-239/240 Inlet (uCi/L) | Pu-239/240 outlet (uCi/L) | Pu-239/240 Eff. (%) |
|---|---|---|---|---|---|---|---|---|---|
| 08/11/93 | 153.E+00 | 8.01E-03 | 99.48 | 9.55E-01 | 6.62E-03 | 99.31 | 7.11E-03 | 1.66E-04 | 97.62 |
| 08/18/93 | 1.41E+00 | 2.33E-01 | 83.48 | 6.61E-01 | 1.68E-02 | 97.46 | 8.21E-03 | 7.77E-04 | 90.54 |
| 08/25/93 | 9.12E-01 | 1.41E-01 | 84.54 | 4.01E-01 | 1.30E-02 | 96.76 | 4.30E-03 | 5.41E-04 | 87.42 |
| 09/01/93 | 9.26E-01 | 1.79E-01 | 80.65 | 4.50E-01 | 1.01E-02 | 97.76 | 5.16E-03 | 5.63E-04 | 89.13 |
| 09/08/93 | 8.55E-01 | 7.67E-02 | 91.03 | 3.74E-01 | 9.97E-03 | 97.33 | 4.41E-03 | 6.00E-04 | 86.36 |
| 09/15/93 | 4.52E-01 | 4.41E-02 | 90.24 | 3.73E-01 | 7.92E-03 | 97.88 | 4.64E-03 | 7.88E-04 | 83.02 |
| 09/22/93 | 5.23E-01 | 2.97E-02 | 94.32 | 3.59E-01 | 6.60E-03 | 98.11 | 3.84E-03 | 5.11E-04 | 86.69 |
| 10/29/93 | 7.54E-01 | 6.22E-01 | 91.75 | 3.90E-01 | 7.50E-03 | 98.08 | 5.37E-03 | 6.30E-04 | 88.27 |
| 11/03/93 | 1.66E+00 | 1.27E-02 | 99.24 | 1.20E+01 | 1.36E-02 | 98.87 | 7.21E-03 | 1.66E-03 | 77.12 |
| 11/10/93 | 1.22E+00 | 5.71E-02 | 95.32 | 1.12E+00 | 1.23E-02 | 98.90 | 7.68E-03 | 1.86E-03 | 75.91 |
| 11/17/93 | 9.06E-01 | 5.23E-02 | 94.23 | 7.37E-01 | 1.12E-02 | 98.48 | 4.00E-03 | 3.12E-03 | 22.00 |
| 11/24/93 | 1.06E+00 | 2.83E-02 | 97.34 | 6.64E-01 | 1.15E-02 | 97.96 | 3.32E-03 | 3.32E-03 | 445.28 |
| 12/01/93 | 1.07E+00 | 4.05E-02 | 96.21 | 2.42E-01 | 1.36E-02 | 94.38 | 9.09E-03 | 3.56E-03 | 55.76 |
| 12/08/93 | 1.17E+00 | 5.62E-02 | 95.20 | 5.23E-01 | 1.44E-02 | 97.26 | 1.06E-02 | 3.22E-03 | 69.62 |
| 12/15/93 | 1.52E+00 | 8.17E-02 | 94.62 | 6.83E-01 | 7.06E-02 | 89.66 | 6.18E-03 | 2.54E-03 | 62.70 |
| 12/21/93 | 1.83E+00 | 1.02E-01 | 94.43 | 5.96E-01 | 1.72E-02 | 97.12 | 8.95E-03 | 2.01E-03 | 77.54 |
| 12/29/93 | 2.19E+00 | 1.66E-01 | 91.51 | 7.65E-01 | 1.95E-02 | 97.45 | 9.90E-03 | 2.96E-03 | 70.10 |
| 01/05/94 | 2.30E+00 | 3.31E+01 | 85.61 | 8.70E-01 | 2.44E-02 | 97.20 | 9.77E-03 | 6.13E-03 | 37.26 |
| Average Eff. (%) | -- | -- | 92.18 | -- | -- | 97.22 | -- | -- | 72.90 |
| DF | -- | -- | 12.76 | -- | -- | 36.97 | -- | -- | 3.69 |

This page intentionally left blank.

# APPENDIX C

## TREATMENT SYSTEM DISPOSAL PATHWAY EVALUATION CRITERIA

Appendix C discusses the treatment system disposal pathway evaluation criteria based on schedule, implement scheduling, and cost.

This page intentionally left blank.

# APPENDIX C

# TREATMENT SYSTEM DISPOSAL PATHWAY EVALUATION CRITERIA

## 1.0 CRITERIA

The wastewater treatment system is described in detail in Section 5.0 of this report. The treated effluent disposal methods also are discussed in Section 5.0. The following elements are evaluated for the treatment system and disposal methods.

- Schedule 30
- Implementation 20
- Cost 15

These will be the bases for comparing the treatment alternative combined with the disposal methods (air, ground, river).

To estimate treatment system performance, several sources of data on the unit operation under evaluation have been used. These sources include average treatment efficiency reported in Best Available Technology (BAT) reports done on N Reactor and average decontamination factors (DFs) for radionuclides published in nuclear industry standards (ANSI/ANS 1979).

In some cases, engineering judgement has been used to apply DFs for similar compounds for which no 105KE Spent Fuel Storage Basin water analysis exists. In all instances, this information should be considered an estimate of system performance; actual performance and details such as treatment for inorganic/radionuclides and should be verified before processing with detailed process design.

## 2.0 SCHEDULE

Alternatives are ranked based on their ability to support the current schedule for removal of 105KE Spent Fuel Storage Basin water starting in September 1996, using the following scale.

- Meets commitment for disposal of 105KE Spent Fuel Storage Basin water; few if any potential impacts to K Basin encapsulation schedule due to unavailability of equipment, facilities, or permit equals a score of 4.

- Meets commitment for disposal of 105KE Spent Fuel Storage Basin water; potential impacts to K Basin encapsulation schedules due to unavailability of equipment, facilities, or permits are possible equals a score of 3.

- Some risk of not meeting commitment for disposal of 105KE Spent Fuel Storage Basin water, or many potential impacts to encapsulation due to unavailability of equipment, facilities, or permit equals a score of 2

- High risk of not meeting the disposal of 105KE Spent Fuel Storage Basin water; definite impacts to encapsulation schedule equals a score of 1.

## 3.0 COST

The treatment system and disposal methods with the lowest total present worth was given the highest ranking, with the alternative having the highest total present worth receiving the lowest ranking. The total present worth was calculated by adding installed equipment costs to the present worth of the annual operational costs. The present worth of the annual operating cost was calculated using a 7% annual rate of interest (ROI) and a six year system life.

## 4.0 IMPLEMENTATION

The treatment alternative combined with the disposal method are assessed in terms of (1) As Low as Reasonable Achievable (ALARA); (2) maintainability; (3) reliability and technological maturity; (4) time required for design, procurement and construction; (5) the availability of pre-engineered systems; and (6) manpower requirements for operation.

Treatment alternative and disposal methods are ranked on their ability to support the implementation of the disposal of 105KE Spent Fuel Storage Basin water starting in September 1996, using the following scale:

- Meets commitment for disposal of 105KE Spent Fuel Storage Basin water; few if any potential impacts to K Basin encapsulation schedule due to ALARA; maintainability; reliability, and technological materials; time required for designing; procurement and construction; the availability of pre-engineered systems; and manpower requirements for operations equals a score of 4

- Meets commitment for disposal of 105KE Spent Fuel Storage Basin water; potential impact to K Basin encapsulation schedules due to ALARA equals a score of 3

- Some risk of not meeting commitment for disposal of 105KE Spent Fuel Storage Basin water or many potential impacts to encapsulation due to ALARA equals a score of 2

- High risk of not meeting the disposal of 105KE Spent Fuel Storage Basin water; definite impact to encapsulation schedule equals a score of 1.

This page intentionally left blank.

# APPENDIX D

## HANFORD FEDERAL FACILITY AGREEMENT AND CONSENT ORDER

Appendix D consists of different *Hanford Federal Facility Agreement and Consent Order* (Tri-Party Agreement) milestones and their due dates for completion.

This page intentionally left blank.

# APPENDIX D

## HANFORD FEDERAL FACILITY AGREEMENT AND CONSENT ORDER

Table D. Major and Interim Milestones

| Number | Milestone | Due Date |
|---|---|---|
| M-34-00 | COMPLETE ACTIONS SPECIFIED BY AGREED INTERIM MILESTONES RELATED TO REMEDIATION OF THE K-EAST BASINS. | TBD |
| M-34-00-T01 | ISSUE NOTICE OF INTENT FOR N-REACTOR FUEL EIS. | 6/30/1994 |
| M-34-00-T02 | INITIATE K-EAST BASIN FUEL ENCAPSULATION. | 6/30/1994 |
| M-34-00-T03 | SUBMIT AN ENGINEERING STUDY TO DETERMINE THE FEASIBILITY OF MOVING AND TEMPORARILY STORING K-EAST FUEL AND SLUDGE (ONCE ENCAPSULATED) TO THE K-WEST BASIN. | 9/30/1994 |
| M-34-00-T04 | SUBMIT A SCHEDULE DESCRIBING ACTIVITIES FOR THE FINAL DISPOSITION OF CONTAMINATED K-EAST BASIN WATER FOR PLANNING PURPOSES TO SUPPORT THE 100-KR-4 RECORD OF DECISION. | 10/31/1994 |
| M-34-00-T05 | DOE SHALL PROVIDE A SCHEDULE FOR FUEL AND SLUDGE ENCAPSULATION AND CONTAMINATED WATER REMOVAL OR REPLACEMENT TO ECOLOGY AND EPA THAT SUPPORTS THE TPA MILESTONE. | 3/31/1995 |
| M-34-00-T06 | INITIATE K-EAST BASIN SLUDGE ENCAPSULATION. | 6/30/1996 |
| M-34-00-T07 | COMPLETE ENCAPSULATION OF THE FUEL AND SLUDGE WITHIN K-EAST BASIN. | 12/31/1998 |
| M-34-00-T08 | REMOVE ALL FUEL AND SLUDGE FROM BOTH K-EAST AND K-WEST BASINS IN AN ENCAPSULATED FORM. | 12/31/2002 |
| M-34-01 | CONTAMINATED K-EAST BASIN WATER WILL BE REMOVED, REPLACED, OR TREATED. THE TIMING OF THIS ACTION MUST BE COORDINATED WITH ENCAPSULATION AND THE CLEANING OF THE RESIDUAL CONTAMINATION IN THE BASIN AND (AS NOTED BELOW) THE ALTERNATIVE SELECTION IS DEPENDANT ON THE FEASIBILITY OF MOVING ENCAPSULATED K-EAST BASIN FUEL AND SLUDGE TO THE K-WEST BASIN. THE CONTAMINATED WATER WILL BE DISPOSITIONED IN ACCORDANCE WITH REASONABLE AVAILABLE HANFORD SITE TREATMENT AND/OR DISPOSAL PROCESSES AND METHODS, AVAILABLE AT THE TIME OF THIS ACTION. UNLESS A BETTER OPTION BECOMES AVAILABLE, THE WATER WILL BE TRUCKED TO C-018 FOR DISPOSAL. | TBD |

Table D. Major and Interim Milestones

| Number | Milestone | Due Date |
|---|---|---|
| | IF THE K-EAST FUEL AND SLUDGE, ONCE ENCAPSULATED, CAN BE MOVED TO THE K-WEST BASIN (DETERMINED THROUGH A SEPTEMBER 1994 ENGINEERING STUDY TARGET DATE) THE REMOVAL AND DISPOSAL OF THE CONTAMINATED WATER SHALL BE COMPLETED BY SEPTEMBER 2000. THIS DATE IS AN EIGHTEEN MONTH ACTION, STARTING IN MARCH 1999, THREE MONTHS AFTER FUEL AND SLUDGE ENCAPSULATION IS COMPLETED. IF THE TRANSFER OF ENCAPSULATED K-EAST BASIN FUEL AND SLUDGE TO K-WEST BASIN IS INFEASIBLE, CONTAMINATED K-EAST BASIN WATER WILL BE REPLACED BY FRESH WATER, STARTING IN SEPTEMBER, 1996 AT A RATE OF TWO MILLION GALLONS/YEAR AND WILL CONTINUE UNTIL SUCH TIME THAT THE TRITIUM CONCENTRATION IN THE BASIN IS DECREASED AND IS MAINTAINED AT OR BELOW 300,000 pCi/L (THE GOAL IS TO REDUCE THE TRITIUM CONCENTRATION IN THE BASIN SUCH THAT RESULTING GROUNDWATER TRITIUM CONCENTRATION MEET DRINKING WATER CONCENTRATION STANDARDS, RECOGNIZING A LAG BETWEEN BASIN AND GROUNDWATER CONCENTRATIONS. | |
| M-34-02 | INITIATED NEGOTIATIONS WITH ECOLOGY AND EPA ON INCORPORATION OF TRANSITION ACTIVITIES INCLUDING STABILIZATION OF THE BASINS, CONSISTENT WITH SECTION 3.1 OF THE AGREEMENT (AS AMENDED) AND THE RECORD OF DECISION REGARDING LONG-TERM STORAGE AND ULTIMATE DISPOSITION OF THE IRRADIATED FUEL. DOE WILL SUBMIT A SIGNED TRI-PARTY AGREEMENT CHANGE REQUEST PROPOSING MILESTONES FOR (1) THE COMPLETION OF REMOVAL OF FUEL AND SLUDGES FROM THE K-BASINS AND (2) THE COMPLETION OF STABILIZATION OF THE BASINS. | 6/30/1996 |

# APPENDIX E

## EFFLUENT TREATMENT FACILITY WASTE ACCEPTANCE CRITERIA (DRAFT COPY)

Appendix E consists of the draft copy of the 200 Area Effluent Treatment Facility waste acceptance criteria.

This page intentionally left blank.

# APPENDIX E

## EFFLUENT TREATMENT FACILITY WASTE ACCEPTANCE CRITERIA (DRAFT COPY)

NOTE: This draft acceptance criteria was obtained from Effluent Treatment Facility operations. This criteria may not apply to 105KE Basin water disposal study in its entirety.

## 200 AREA ETF WASTE ACCEPTANCE CRITERIA

1. No separable organics. Basis: Physical Limitation of UV/OX.

2. No colloidal matter sufficient to plug filters in the ETF. Basis: Physical Limitation of filters.

3. No significant concentrations of scale forming compounds (e.g., calcium sulfate, calcium phosphate, and metal silicates). Basis: Physical Limitation of UV/OX and RO.

4. Nothing outside of Delisting Envelope. Be especially mindful of low molecular weight chlorinated organics and ketones. Basis: Regulatory Limitation based upon demonstrated testing done in support of the Delisting Petition.

5. Nothing when concentrated into secondary (powdered) waste exceeds 100 mR/hr at contact with the 55-gallon drum surface. Basis: Solid Waste can only accept up to these levels in the 616 Building.

6. Nothing when concentrated into secondary (powdered) waste exceeds 100 nCi/g of transuranic (TRU) radionuclides. Basis: The ETF is not built to handle TRU concentrations.

7. Per the Radionuclide Air Emission Program (RAEP) permit, the absorbed dose of a hypothetical individual at the site boundary cannot increase over permitted levels. Influent concentrations must remain low enough such that this remains true. Radionuclides here-to-for not accounted for, will force a reevaluation. Basis: Washington State Department of Health (DOH) regulations.

8. Per the 216 Permit, the release of regulated organics and inorganics cannot exceed permitted levels. Influent concentrations must remain low enough such that this remains true. Regulated constituents here-to-for not accounted for, will force a reevaluation. Basis: WAC 173-216 and to-be-negotiated concentration levels.

9. No significant concentrations of neutral radionuclide species such as some plutonium and ruthenium species, unless it can be shown that such species are altered to ionic forms during treatment or efficiently separated by RO. Basis: Neutral species cannot be collected on ion exchange columns. If the concentrations exceed discharge limits by several orders of magnitude, then the RO will not be nearly efficient enough to remove the neutral species to below regulated levels.

10. Annual tritium releases to the ground shall not exceed 20,000 curies per year. Basis: WHC-CM-7-5, section 8.4.2.3.1.e, pg 31 of section 8.0, Revision 1. Therefore, a running total of the tritium in the influent/effluent needs to be kept. However, it is extremely unlikely that this will ever be reached because there are an estimated 3300 curies in the tank farm system.

11. The total inventory of curies is limited by what is documented in the FSAR for the ETF. A calculation involving a sum of the fractions has

been done to confirm that the inventory is below Hazard Category 2. Basis: DOE STD-1027-92.

12. Only the waste codes listed in the Part A Permit can be accepted for treatment at the ETF.

This page intentionally left blank.

# APPENDIX F

## SCHEDULES

Appendix F consists of schedules for different alternatives. Facility modifications and the regulatory permitting process can be started concurrently once the preferred alternative is selected. This appendix also includes a memo from the Regulatory Program Integration group discussing the strategy for removal and disposal of 105KE Basin effluents. Not all strategies were evaluated in this engineering study.

This page intentionally left blank.

# APPENDIX F

## SCHEDULES

| Activity | Estimated time for completion |
|---|---|
| Facility modifications | |
| NEPA 105KE/KW | 8 months |
| Collect/analyze samples | 3 months |
| Detailed process design | 6 months |
| Pilot scale testing | 6 months |
| Prepare procurement specifications | 2 months |
| Bid/award controls | 2 months |
| Equipment Fabrication/delivery/installation | 12 months |
| Facility ATP/OTP | 1 month |
| Resolve ATP/OTP | 1 month |
| Operator training | 1 month |
| River discharge | |
| Modification of NPDES permit | 36 months |
| U.S. Army dredge and fill permit | 16 months |
| Washington Department of Natural Resources, lease of river bottom | 13 months |
| Washington Department of Fisheries hydraulic project permit | 13 months |
| U.S. Park Service Review of Project for Wild and Scenic River Act | 6 months |
| U.S. Environmental Protection Agency Notice of Intent and State Water Pollution Prevention Plan for Construction | 6 months |
| Benton County Department, shoreline development permit | 5 months |
| DOH, modification to existing notice of construction | 8 months |

| Activity | Estimated time for completion |
|---|---|
| Ground discharge at ETF (C018) | |
| NEPA for ETF to include 105KE Basin | 18 months |
| Modify WAC 173-216 permit | 6 months |
| Additional SEPA for State Approval of Land Discharge Site for any new source of tritium | 10 months |
| Delisting petition for ETF/SALDS may need modification | 18 months |
| DOH, modification to existing notice of construction | 8 months |
| Solar Evaporation at K Area | |
| NEPA for solar evaporation pond | 12 months |
| SEPA for solar evaporation pond | 12 months |
| DOH, modification to existing notice of construction | 8 months |
| DOH notice of construction for solar evaporation ponds | 24 months |
| Ground water monitoring plan for solar evaporation pond (Ecology) | 12 months |
| U.S. Park Service review project for Wild and Scenic River Act | 6 months |

**Westinghouse Hanford Company** | **Internal Memo**

From: Environmental Policy 88500-94-034
Phone: 372-2066 H6-22
Date: July 15, 1994
Subject: OPTIONS FOR REMOVAL AND DISPOSAL OF THE 105-KE BASIN EFFLUENTS

To: G. S. Hunacek X0-41

cc: D. J. Carrell H6-22
R. H. Engelmann H6-26
M. T. Jansky H6-26
N. M. Menard H6-25
J. E. Turnbaugh H6-25
P. D. Vedder H6-66
D. J. Watson X0-41
J. D. Williams H6-28
DWF:EP File/LB

The attachment to this memo evaluates alternatives for the disposal of the 105-KE Basin liquid effluent. This is a revision to the strategy, Internal Memo, D. W. Fritz to G. S. Hunacek, "Suggested Strategy for the Removal & Disposal of the 105-KE Basin Effluents" dated April 22, 1994. Included are the requested disposal options, regulatory requirements, and estimated costs for the disposal of the 105-KE Basin effluents as required to meet Tri-Party Agreement milestones.

It is understood that a full characterization of the 105-KE Basin liquid effluent has been requested to determine if any RCRA requirements will be applicable. This characterization must be completed to determine if the liquid will be designated as a dangerous waste, which may affect the proposed alternatives that are provided.

Should you have any questions regarding the attached information, please contact me on 372-2066, or Mr. D. J. Carrell on 372-2359.

Don W. Fritz

D. W. Fritz
Senior Engineer

dak

Attachment

## FUEL STORAGE BASIN PROCESS DESCRIPTION BACKGROUND

The 105-KE and 105-KW Reactors were shut down in February 1970 and February 1971, respectively. Their fuel storage facilities, the 105-KE and 105-KW Basins, provided shielding and cooling for irradiated fuel during operation. In the mid-1970's and early 1980's, the 105-KE and 105-KW Basins were modified to provide temporary storage of N Reactor fuel until it was processed at the 200 East PUREX facility. In 1989, all of the remaining fuel assemblies in the N Reactor fuel storage basin were encapsulated and shipped to the 105-KW Basin.

The N Reactor fuel consists of slightly enriched metallic uranium bonded to a layer of zirconium alloy (Zircaloy-2) cladding. The cladding provides the primary barrier against the escape of fission products and fissile materials from the fuel assembly. The fuel assembly includes two components, an inner and an outer tube-shaped element, assembled into a tube-in-tube arrangement. N Reactor fuel differs from commercial reactor fuel in that it is co-extruded and fully bonded to the cladding, thus eliminating the potential for any macroscopic voids between the metallic uranium and the cladding. The oxide fuels used in commercial reactors have such voids which serve as accumulation centers for volatile fission products. Because the fuel from N Reactor was exposed to less than half the burnup (megawatt-days) of commercial reactor fuel, the fission product inventory per gram of fuel is proportionally lower.

The fuel stored in the K Basins was discharged from N Reactor between four and twenty-one years ago, and has had sufficient decay time to essentially eliminate $_{131}I$, as well as other short half life radionuclides. Upon its discharge, the fuel was allowed to cool for a minimum of 150 days in the Reactor fuel storage basin. The fuel was then either placed in open top (MK 0, I, and II canisters and transported to 105-KE Basin or sealed in (MK I and II) canisters and transported to 105-KW Basin for temporary storage.

The 105-KE Basin currently contains 3,668 open-top canisters filled with N Reactor fuel and two baskets (the equivalent of five canisters) filled with aluminum-clad fuel assemblies from the retired single pass reactors. The fuel was not encapsulated because PUREX operations had been scheduled to process the fuel in the mid-1980's. However, since the primary barrier (cladding) on approximately 7 percent of the stored fuel had been breached, fission products have escaped from these fuel assemblies, contaminating the basin cooling water. The continuing contamination of the basin cooling water is an environmental concern because the 105-KE Basin has leaked in the past and the basin is located near the Columbia River. Federal and State agencies involved with Hanford are concerned about the KE Basin leakage and the effects that they may have on the environment.

## K-EAST (KE) BASIN DESCRIPTION

KE Basin is an unlined rectangular, reinforced concrete basin, 125 feet long, 67 feet wide, 21 feet deep, with a cooling/shielding water depth of approximately 16 feet. The basin has water recirculation system including filters, ion exchange and chillers. KE Basin was constructed in the early 1950's and operated in support of KE Reactor until 1971. The basin was reactivated in 1975 for short-term storage of N Reactor fuel. Approximately 1144 metric tons of irradiated metallic uranium fuel, contained in open-ended canisters and approximately 2,000 empty canisters are stored in the KE Basin. Approximately 800 cubic feet of sludge and approximately 500 cubic feet of debris rest on the basin floor. Unlike the KW Basin it is not epoxy lined and the nuclear materials stored there are not encapsulated.

A Tri-Party Agreement Milestone (M-34-00-T04) has been established to submit a schedule describing activities for final disposition of the contaminated KE Basin water for planning purposes to support the 100-KR-4 Record of Decision by October 1994. If the KE fuel and sludge, once encapsulated can be moved to the KW Basin per the Tri-Party Agreement Milestone M-34-00-T03, the removal and disposal of the contaminated water shall be completed by September 2000. This date is an eighteen month action, starting in March 1999, three months after the fuel and sludge encapsulation has been completed.

## HANFORD FEDERAL FACILITY AGREEMENT AND CONSENT ORDER INFORMATION

Under the Tri-Party Agreement M-34-93-01, it is the common goal of U.S. DOE, EPA, and Ecology to reduce a source of groundwater contamination from nuclear materials that have leached in the KE Basin water. It is also the common goal of DOE, Ecology and the EPA to move the fuel and sludge (once encapsulated) from KE Basin and the encapsulated materials from KW Basin to a safer longterm storage facility and to remediate both basins as part of the 100-KR-02 CERCLA Past Practice Operable Unit activities. To meet these goals, the following Tri-Party Agreement milestones have been established:

- M-34-01, Contaminated K Basin water will be removed, replaced or treated. The timing of this action must be coordinated with encapsulation and the cleaning of the residual contamination in the basin and (as noted below) the alternative selection dependant on the feasibility of moving the encapsulated KE Basin fuel and sludge to the KW Basin. The contaminated water will be dispositioned in accordance with reasonable available Hanford Site treatment and/or disposal process and methods, available at the time of this action. Unless a better option becomes available the water will be trucked to C-018 for disposal.

If the KE fuel and sludge, once encapsulated, can be moved to the KW Basin (determined through a September 1994 engineering study target date) the removal and disposal of the contaminated water shall be completed by September 2000. This date is an eighteen month action, starting in March 1999, three months after fuel and sludge encapsulation is completed.

If the transfer of encapsulated K Basin fuel and sludge to KW Basin is infeasible, contaminated KE Basin water will be replaced by fresh water, starting in September 1996 at the rate of two million gallons per/year and will continue until such time that the tritium concentration in the basin is decreased and is maintained at or below 300,000 pCi/L. The goal is to reduce the tritium concentration in the basin such that resulting groundwater tritium concentrations meet drinking water standards, recognizing a time lag between basin and groundwater concentrations.

- M-34-02 June 1996, Initiate negotiations with Ecology and EPA on incorporation of transportation of transition activities including remediation of the basins, consistent with Section 3.1 of the Agreement (as amended) and the Record of Decision regarding long-term storage and ultimate disposition of the irradiated fuel. The DOE will submit a signed Tri-Party Agreement change request proposing milestones for, (1) the completion of removal of fuel and sludge from the K Basins; and (2) the completion of stabilization of the basins.

- M-34-00, Complete actions specified by agreed interim milestones related to remediation of the K Basins. Due Date: TBD

The following target dates have been selected:

| | |
|---|---|
| M-34-00-T01 June 1994 | Issue Notice of Intent for N Reactor Fuel Environmental Impact Statement EIS. |
| M-34-00-T02 June 1994 | Initiate K Basin fuel encapsulation. |
| M-34-00-T03 September 1994 | Submit an engineering study to determine the feasibility of moving and temporarily storing KE Basin fuel and sludge (once encapsulated) to the KW Basin. |
| M-34-00-T04 October 1994 | Submit a schedule describing activities for the final disposition of contaminated KE Basin water for planning purposes to support the 100-KR-4 Record of Decision. |
| M-34-00-T05 March 1995 | DOE shall provide a schedule for fuel and sludge encapsulation and contaminated water removal or replacement to Ecology and EPA that supports the Tri-Party Agreement milestone. |

| | |
|---|---|
| M-34-00-T06 June 1996 | Initiate K Basin sludge encapsulation. |
| M-34-00-T07 December 1998 | Complete encapsulation of the fuel and sludge within K Basin. |
| M-34-00-T08 December 2002 | Remove all fuel and sludge from both KE and KW Basins in an encapsulation form. |

## ALTERNATIVES FOR DISPOSING OF THE 105-KE BASIN LIQUID

This evaluation has been prepared to identify alternatives for the disposal of approximately two million gallons of 105-KE Basin effluent in accordance with Tri-Party Agreement milestones. Five potential alternatives have been identified as disposal options for the 105-Basin liquid effluent and are listed below.

## OPTIONS EVALUATED FOR LIQUID EFFLUENT DISPOSAL ALTERNATIVES

### OPTION 1

**Transferring 105-KE Basin Liquid to the Effluent Treatment Facility (ETF) for final disposal to the State Approved Land Disposal Site (SALDS).**

The 105-KE basin effluents will be processed through an Ion Exchange Column before the liquid is transferred into a 5,000 gallon truck tanker and transported to the ETF for disposal. The facility has indicated that two shipments will be required per day.

An off loading area at the ETF will be required at the facility in order to accept the 105-KE Basin Effluent. (Note: An off loading area and a surge tank is to be built by Project W-291. However, additional piping may be required to route the KE effluent to the Liquid Effluent Retension Facility [LERF] basins). ETF Waste Acceptance Decision Tree Analysis is currently under development by Liquid Effluent Systems Engineering. Startup of the ETF is targeted to be completed by June 1995.

The NEPA documentation for the ETF is the Hanford Environmental Compliance (HEC) EA. Additional NEPA review would be required to address the 105-KE Basin Effluent. The NEPA review process may take one and a half to two years to complete.

Estimated Cost: 1 Full-Time Exempt (FTE) may be required for this option for the NEPA determination and decision tree analysis.

- Additional SEPA determination may be required to utilize the SALDS for any new source of tritium. (Preliminary discussions with Ecology indicate that there is only a low probability of this being required).

Estimated Cost: 1/8 FTE for SEPA determination.

- A delisting petition for the ETF/SALDS may need to be modified to include the 105-KE Basin effluent if the characterization falls outside the constituent envelope presented in the final delisting petition. If the effluent contains RCRA regulated listed wastes, a time frame of up to 18 months is required to modify the delisting petition.

Estimated Cost: 1 FTE for modification of delisting petition.

OPTION 2

**Transferring 105-KE Liquid to the LERF for storage until further treatment can be accomplished at the ETF with discharge to the SALDS.**

The 105-KE basin effluents will be processed through an Ion Exchange Column before the liquid is transferred into a 5,000 gallon truck tanker and transported to the LERF for disposal. The facility has indicated that two shipments will be required per day. The LERF facility may need to modify receiving area to except any liquid.

According to Mr. P. G. Haigh, of 200 Area Liquid Effluent Facility Regulatory Compliance, the LERF currently has space available for the additional liquid from the 105-KE Basin.

The 242-A Evaporator discharge of regulated effluent will need to be batch released so there is no dilution or mixing with the 105-KE Basin effluent. If 105-KE liquid does not contain any RCRA regulated wastes, there are still Washington Administrative Code (WAC) requirements that may have to be addressed, such as liner compatibility and 90/90 testing.

The current NEPA documentation for the LERF Basin is a Modernization Task Force which does not include the 105-KE Basin effluents. Additional NEPA review may be required to address the proposed action.

**Estimated Cost:** 1 FTE for modification of the current LERF NEPA.

OPTION 3

**Transferring 105-KE liquids to 204-AR/200 West Area, and disposed of in double-shell tanks**

The 105-KE basin effluents will be processed through an Ion Exchange Column before the liquid is transferred into rail tanker and transported to the 204-AR facility for disposal.

A railroad tanker will be needed for this effort to transfer the 105-KE effluent to the 204-AR receiving facility. Additionally, the effluent will have to meet the 204-AR Waste Acceptance Criteria. Rail Tanker Car availability and certification may be factors that need to be evaluated.

Since there will be about two million gallons of liquid that could be transferred from the 105-KE Basin, available space in DST's may be a factor. Additional NEPA review may be required to address the proposed action. Additionally, discharges to any watch list tank should be avoided since DOE-HQ approval may be necessary per Mr. Wyden Bill, Public Law 101-510, Section 3137.

**Estimated Cost:** 1 FTE for modification of the current NEPA.

OPTION 4

Transferring 105-KE Basin liquids to 1706-KE Test Pilot Plant for the ETF prior to disposal. This option is similar to OPTION 2 except that the waste is stored at 1706-KE rather than the LERF prior to disposal.

Available tank storage space is provided by two 3,000 gallon tanks. This is a limiting factor that would have to be taken into consideration.

- Additional NEPA review may be required to address these activities.

Estimated Cost: 1 FTE will be required for any additional NEPA documentation that may be needed. This would require a minimum of 18 months.

- Using this option rather then OPTION 2 would eliminate modification of the LERF NEPA documentation (1 FTE) described in OPTION 2. The delisting petition (1 FTE) and SEPA determination (1/8 FTE) may still be required.

OPTION 5

Discharge 105-KE Basin effluent through existing National Pollutant Discharge Elimination System (NPDES) Permit Number 004 Outfall Structure.

The NPDES permit must be modified to include the additional discharge of the 105-KE basin effluents to the Columbia River. Permitting time for this modification is estimated at 36 months for completion. If a modification is made to the permit, it may become more restrictive, and will require additional permitting. The following permits may be triggered.

NOTE: The possibility exists, that EPA could require a mixing zone to meet any other limit actions in a revised NPDES permit. This would require modification to the existing outfall or a new outfall. The permitting requirements listed below would then be triggered. It has been proposed that the EPA would regulate radioactive liquid effluent discharges to surface waters from federal facilities under the CWA. These factors could further complicate the implementation of this alternative.

Estimated Cost: 1/4 FTE for NPDES permit modifications.

- U.S. Army Corps of Engineers; Dredge and Fill Permit; 16 months permitting time.

Estimated Cost: 1/8 FTE

- State of Washington Department of Natural Resources; Lease of River Bottom; 13 months permitting time.

Estimated Cost: 1/8 FTE

- State of Washington Department of Fisheries; Hydraulic Project Permit; 13 months permitting time.

Estimated Cost: 1/8 FTE

- U.S. Park Service; Review of Project for Wild and Scenic River Act; 6 months permitting time.

Estimated Cost: 1/8 FTE

- EPA; Notice of Intent and State Water Pollution Prevention Plan for construction; 6 months permitting time.

Estimated Cost: 1/8 FTE

- Benton County Planning Department; Shoreline Development Permit; 5 months permitting time.

Estimated Cost: 1/8 FTE

- Washington State Department of Health (DOH); Modification to existing Notice of Construction; 8 months permitting time.

Estimated Cost: 1/8 FTE

- Additional NEPA review would be needed to include these activities.

Estimated Cost: 1/8 FTE

OTHER OPTIONS IDENTIFIED BUT NOT EVALUATED

Identified below are options that were evaluated for the disposal of the 105-KE Basin effluents, but were found to be impractical. This determination was based on regulatory issues, time frames, and/or cost involved.

1. Construction of a New Solar Evaporation Basin

   - Additional information would be required for a complete regulatory evaluation an emissions evaluation would be needed to verify if there would be air permitting issues associated with the storage of effluents in an open basin. Associated construction cost and NEPA and SEPA impacts would also need to be evaluated.

2. Storage of the 105-KE Basin liquid in the existing 100-N Area Solar Collection Basin.

   - There is no additional space available at the 100-N Solar Collection Basin.