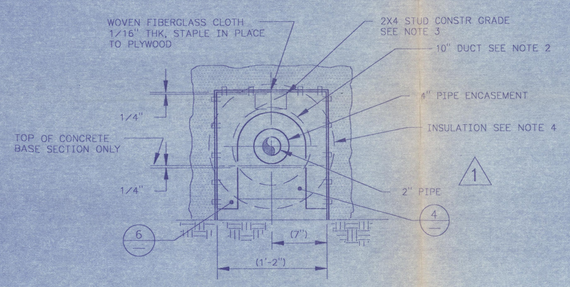

SECTION A
SCALE: NONE

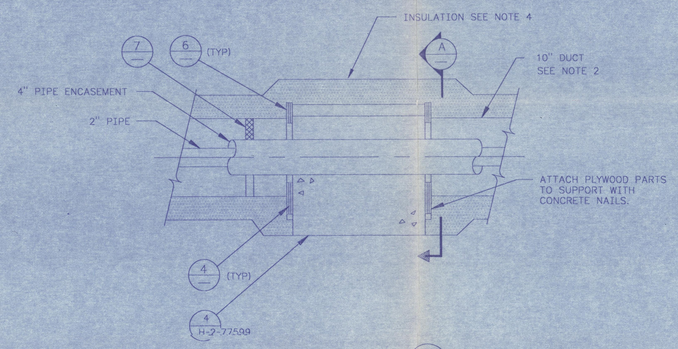

DETAIL 13
SCALE: NONE
H-2-77598 & H-2-77611 SH2

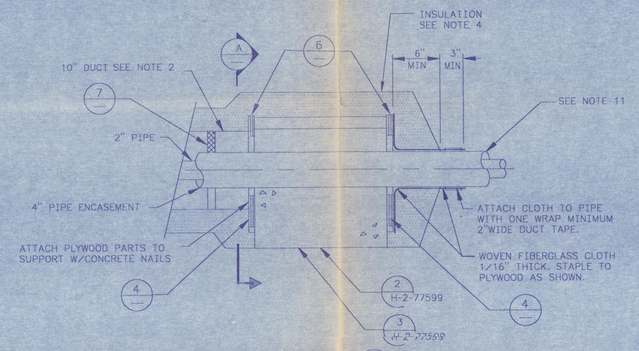

DETAIL 16
SCALE: NONE
H-2-77598 & H-2-77611 SH2

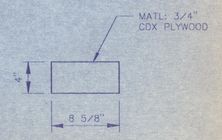

DETAIL 4
SCALE:NONE

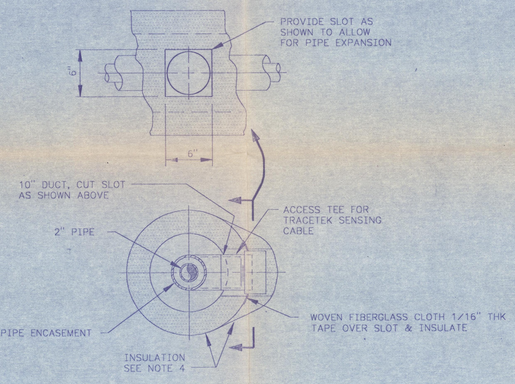

DETAIL 14
SCALE: NONE
H-2-77598 & H-2-77611 SH2

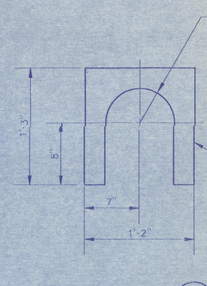

DETAIL 6
SCALE:NONE

NOTES

1. FOR GENERAL NOTES SEE DWG H-2-77596.
2. WIRE WOUND POLYESTER FILM CORE LINER CASCO FLEX AIRDUCT #CF-25 LINER ONLY C.A. SCHROEDER, INC STAPLE IN PLACE TO PLYWOOD.
3. NAIL WOOD PARTS TOGETHER IN PLACE WITH 8d GALVANIZED NAILS EXCEPT WHERE NOTED.
4. COVER ALL DUCTING, WOOD, AND FIBERGLASS CLOTH AS SHOWN WITH 3" MINIMUM OF POLYURETHANE.
5. IF FLEXIBLE DUCT BECOMES DAMAGED PRYOR TO SPRAYING POLYURETHANE, REPAIR TEARS WITH DUCT TAPE.
6. APPLY 3M SPRAY 90 ADHESIVE TO CARBON STEEL PIPE PER MFR RECOMMENDATION AND ALLOW TO DRY 3 OR 4 MINUTES BEFORE ATTACHING SPACERS.
7. SPACE AT 2'-0" CENTERS ON STRAIGHT PIPE AND AT 6" CENTERS ON PIPE BENDS.
8. SPACE DRAIN FITTINGS & HOSE AS SHOWN BETWEEN EACH SET OF SUPPORTS - APPROX 2'-0" FROM EOW END.
9. ALL PLYWOOD AND LUMBER SHALL BE WOLMANIZED (CCA) PRESSURE - TREATED WOOD MEETING AWPA STANDARD P-5 AND FEDERAL STANDARD TT-W-550. USE WILL BE .25 LBS/CUBIC FOOT OF WOOD IN ACCORDANCE WITH AWPA STD C-2.
10. POLYESTER FILM CORE LINER MUST BE PLACED AROUND PIPE BEFORE SUPPORTS ARE PERMANENTLY INSTALLED.
11. COAT DIRECT BURIED PIPE PER CONSTR SPEC B-714-C2 COATING SHALL EXTEND 1'-0" INSIDE EXPANSION VOID.

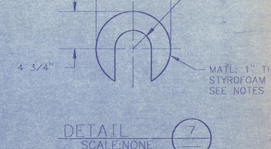

DETAIL 7
SCALE:NONE

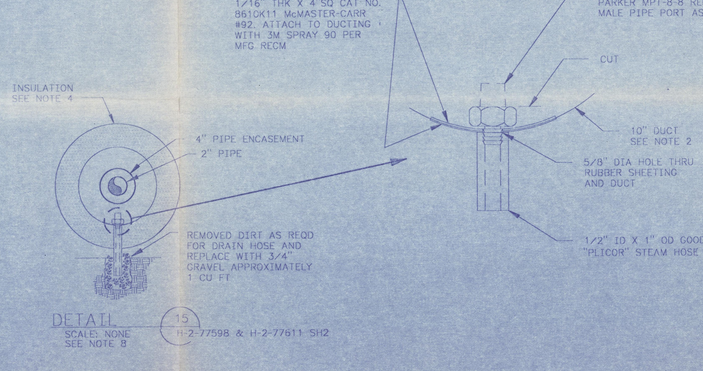

DETAIL 15
SCALE: NONE
SEE NOTE 8
H-2-77598 & H-2-77611 SH2

JAN 1991 RECEIVED EDMC

CHARLES R. COOK STATE OF WASHINGTON REGISTERED PROFESSIONAL ENGINEER

DOES NOT CONTAIN CLASSIFIED OR UNCLASSIFIED CONTROLLED NUCLEAR INFORMATION

REVIEWING OFFICIAL/ADC: [signature]

DATE: 11-28-90

NUMBER	TITLE
H-2-77573	DRAWING LIST

DRAWING TRACEABILITY LIST

NUMBER	TITLE

REFERENCES

NEXT USED ON

REV	DESCRIPTION	REV BY DATE	BY-DATE	BY-DATE
R3	B-714-22 ZN-F7 THRU B-714-61 GEN REV. INCORP ALL ECNs	11-6 90 GD		

REVISIONS

COMMENT REVIEW

WHC APPROVAL	DATE	IMPACT LEVEL 2	EDT #101089
BY SR BRIGGS	12-28 1988	U.S. DEPARTMENT OF ENERGY RICHLAND OPERATIONS OFFICE	
PROJ ENGR JD CLOUD	12-28 1988	KAISER ENGINEERS HANFORD COMPANY	
QA H. HENRIKSON	7-29 1988	M PIPING EXPANSION VOID DETAILS	
APPROVED BY WWJM/ RM LIEN	7-27 1988		
SAFETY JLH/AG MINISTER	7-21 1988		
APPROVED BY CRZ/JR COLLINS	7-19 1988	PROJECT TITLE GROUT VAULT PAIR 218-E-16-102&103	
CHECKED BY L.HALL	7-19 1988		
DRAWN BY RL PASCUA	1-18 1988	PROJ B-714	WO ER1060	JOB 242500
DESIGNED BY RL PASCUA	1-18 1988	SCALE SHOWN	BLDG 218-E-16	INDEX 8511
CAD TITLE B07760 7A		DRAWING NUMBER H-2-77607	SHEET 1	OF 1	REV 1
CAD FILE 2B:DFC:ACD2:9.13:NN		KEHCAD		"FPLT SCF 1-8	

M MICROFILMED

WHC APPROVAL | KEH APPROVAL

9001243 93