1245187
(0069326H)

CHPRC-03365
Revision 0

PUREX Tunnel 2 Engineering Evaluation

Prepared for the U.S. Department of Energy
Assistant Secretary for Environmental Management

Contractor for the U.S. Department of Energy
under Contract DE-AC06-08RL14788

P.O. Box 1600
Richland, Washington 99352

RECEIVED
JUL 06 2017
EDMC

A-010-01 S-2-1

Approved for Public Release;
Further Dissemination Unlimited

Attached to: 1245185, 1245186

CHPRC-03365
Revision 0

PUREX Tunnel 2 Engineering Evaluation

M. D. Hasty
CH2M HILL Plateau Remediation Company

Date Published
June 2017

Prepared for the U.S. Department of Energy
Assistant Secretary for Environmental Management

Contractor for the U.S. Department of Energy
under Contract DE-AC06-08RL14788

P.O. Box 1600
Richland, Washington 99352

APPROVED
By Lana Perry at 3:48 pm, Jun 27, 2017

Release Approval Date

Approved for Public Release;
Further Dissemination Unlimited

TRADEMARK DISCLAIMER

Reference herein to any specific commercial product, process, or service by tradename, trademark, manufacturer, or otherwise, does not necessarily constitute or imply its endorsement, recommendation, or favoring by the United States Government or any agency thereof or its contractors or subcontractors.

This report has been reproduced from the best available copy.

Printed in the United States of America

Title: *PUREX TUNNEL 2 ENGINEERING EVALUATION*
Project Number 693839

Craig Barrett
Originator:
Craig Barrett, PE
Senior Structural Engineer, CH2M

Signature 6-27-17
Date

Mark Kacmarcik
Mark Kacmarcik. PE
Geotechnical Engineer, CH2M

Signature 6/27/2017
Date

Kent Soelberg
Peer Review:
Kent Soelberg, SE
Senior Structural Engineer, CH2M

Signature 6-27-2017
Date

ch2m	Calculation Title: PUREX Tunnel 2 Engineering Evaluation	Project Number: 693839.BS Project: PUREX Tunnel 2 Client: CHPRC

1. Purpose

This engineering evaluation of PUREX Tunnel 2 was conducted to:

- Provide a structural evaluation for PUREX Tunnel 2
- Assess if there is an immediate risk of failure in PUREX Tunnel 2

It will be submitted to the State of Washington Department of Ecology to fulfill Administrative Order Docket #14156, dated May 10, 2017, Corrective Action 1.

2. Introduction

On May 9, 2017, a portion of the PUREX Tunnel 1 wood timber roof structure was observed to have collapsed into the tunnel resulting in a hole approximately 19 ft wide by 17 ft long. The actual time of the collapse and cause of the failure has not been determined. Potential factors contributing to the collapse are speculated to include heavy rainfall on May 4 and 5, 2017 deterioration of tunnel wood timber structural support members due to prolonged exposure to high levels of radioactivity, and influence of low vibration sources near the site such as local thunderstorms or distant low-magnitude seismic activity. Due to the uncertainty of the condition and structural integrity of the remaining roof and wall timber supports, measures were taken to prevent additional roof loads or personnel from being placed over the top of Tunnel 1 and within the roof load zone of influence until permanent stabilization measures can be taken.

Construction of the PUREX Tunnel 2 addition was completed in 1964 involving placement of the cast-in-place tunnel spur between Tunnels 1 and 2 and installation of the 1,688 ft storage tunnel extension to the south. The Tunnel 2 consists of three sections, a water-fillable door, a storage area, and a ventilation shaft. The water-filled door is housed in a concrete structure and located at the north end of the storage area. The door serves as a barrier between the storage area and the railroad extension tunnel. The water-fillable door is 24.5 ft high, 22 ft wide, and 7 ft deep, constructed of 0.5 inch thick steel plate and hollow to permit filling with water for radiation shielding. The storage area of Tunnel 2 extends from the water-filled door south to the ventilation shaft. The tunnel is constructed in the shape of a Quonset hut with a series of transverse steel rib support beams on a 17 ft rolled radius (approximately 38 inches on-center spacing) that support 3/16 inch thick by 16 inch wide stamped corrugated steel plate roof panels that span between and bolt to steel rib supports. Interior and exterior surfaces of the roof system are coated with a bituminous material. Steel ribs are supported by a 21 inch minimum thick by 6 ft wide by continuous reinforced concrete wall thrust block foundation system. The steel roof structure was then further supported by a retrofit addition of a series of longitudinal steel wale beam wide flange supports that are supported by underhung anchor bolt connections embedded in 15 inch wide by 36 inch deep (minimum) reinforced arched concrete rib girders (approximately 16 ft on-center spacing). Concrete ribs are supported by additional 18 inch thick by 6 ft wide by 6.5 ft long reinforced concrete thrust blocks placed over the top of existing wall footings. A minimum depth of 8 ft of uncompacted soil fill was then placed over the tunnel storage area and the fill was contoured to provide slope stability. The nominal inside dimensions of the tunnel are 26 ft in height, 34 ft in width, and 1,688 ft in length with a downward slope of 0.1% grade from north to south. Due to the water-filled door clearance constraints, the usable storage area is 22 ft in height and 19 ft in width above the top of the rail which is the same as Tunnel 1. The floor consists of two railroad track rails supported by transverse 6 inch by 8 inch railroad ties at 2 ft spacing laid over a gravel bed. The spaces between ties are filled to the top of the ties with gravel ballast. The ventilation shaft is located at the south end of the tunnel. The shaft is approximately 5 ft by 5 ft in cross section and constructed of reinforced concrete. The ventilation shaft protrudes approximately 1 ft above grade and is capped with a single-stage high-efficiency particulate air filter, an exhaust fan, and a 20 ft tall stack. The ventilation system is not in operation. The tunnel is filled with 28 railcars containing radioactive process equipment.

ch2m	Calculation Title: PUREX Tunnel 2 Engineering Evaluation	Project Number: 693839.BS Project: PUREX Tunnel 2 Client: CHPRC

As denoted in CAC-964, *PUREX Equipment Disposal Tunnel Inspection Report*, dated March 17, 1964, portions of Tunnel 2 catastrophically collapsed on two separate occasions during backfilling operations performed at different locations. The events led to design modifications including addition of interior steel Wale beams underhung and supported by new exterior arched concrete rib girders and to changes in construction soil placement procedures to prevent uneven placement of soil fill along both sides of the tunnel during backfilling operations.

3. Design Input

Design input used in the structural evaluation consists of the following:

A. Tunnel No. 2 Drawings and Specifications
- H-2-58191 (drawing), *Plot Plan*, 1962 Tunnel 2
- H-2-58192 (drawing), *Plot Plan & Profile – Arch Liner*, 1962 Tunnel 2
- H-2-58193 (drawing), *Architectural Plans*, 1962 Tunnel 2
- H-2-58194 (drawing), *Structural Sections & Details*, 1962 Tunnel 2
- H-2-58195 (drawing), *Structural Sections & Details*, 1962 Tunnel 2
- H-2-58196 (drawing), *Roof Plan Structural Sections & Details*, 1962 Tunnel 2
- H-2-58532 (drawing), *PUREX Tunnel Reinforcement Plan*, 1964 Tunnel 2 Modifications
- H-2-58533 (drawing), *PUREX Tunnel Reinforcement Sections & Details*, 1964 Tunnel 2 Modifications
- H-2-58731 (drawing), *Clearance Diagram for Tunnel Section*, 1964 Tunnel 2 Modifications
- H-2-58738 (drawing), *Survey Controls and Data*, 1964 Tunnel 2 Modifications
- HWS-8262, *Specification for PUREX Equipment Disposal*, dated October 5, 1962 (Tunnel 2), Project CCC-964
- HW-4798-S, *Standard Specification for Placing Reinforced Concrete*, (revised Dec 20, 1962)
- HW-4926-S, *Standard Specification for Welding Carbon Steels*, (revised July 10, 1968)

B. Structure Performance Category = PC-1, General Service in accordance with PRC-PRO-EN-097, *Engineering Design and Evaluation (Natural Phenomena Hazard)*, Rev2

C. Soil Design Parameters (see Appendix B):
- Soil Density = 110 pcf (moist condition)
- Lateral Earth Pressure (at-rest condition): K_o = 0.50 for horizontal ground surface conditions
- Allowable Bearing Capacity: 3,000 psf (average soil strength using industry standard 3.0 factor of safety)

D. Ground Snow Load = 15 psf (PRC-PRO-EN-097)

E. Live Load: None Permitted (includes personnel and equipment)

F. Load and Resistance Factor Design (LRFD) Load Factors: 1.2 Dead (self-weight + vertical soil weight)
1.6 Snow
1.6 Lateral Earth Pressures

ch2m	Calculation Title: PUREX Tunnel 2 Engineering Evaluation	Project Number: 693839.BS Project: PUREX Tunnel 2 Client: CHPRC

G. Structural Steel Properties

- Structural Steel: ASTM A36, F_y = 36 ksi (includes WF beams, angles, and plates unless otherwise noted)
- Liner Plate: ASTM A283-58 Grade C (90 in. radius, 2 in. flanges, bolted end and side connections)
- Bolts: ASTM A36, F_y = 36 ksi minimum yield strength
  ASTM A325, F_y = 92 ksi minimum yield strength, F_t = 120 ksi minimum tensile strength

H. Concrete

- Steel Rib Concrete Wall Footings: 3,000 psi compressive strength at 28-days (per Note 1 on drawing H-2-58194)
- Retrofit Arched Concrete Rib Girder Supports (includes foundation): 4,000 psi compressive strength at 28-days (per General Note 1 on drawing H-2-58532)

I. Reinforcing: F_y = 40 ksi for ASTM A15-58T Intermediate Grade (per Specification HW-4798-S)

4. Methodology

Engineering evaluation of Tunnel 2 steel structure is based on 2012 International Building Code (IBC) design standards using LRFD methods when subjected to soil and snow loading conditions. The evaluation did not include the potential for degradation of structural steel supports and bolt and welded connections due to adverse effects from corrosion, material defects, and long-term exposure to high levels of radioactivity.

Structural evaluation of Tunnel 2 was performed on primary structural support elements based on a series of hand calculations used to estimate applied soil design loads and interaction between radial and longitudinal structural supports. Due to the overall complexity of Tunnel 2 including arched structural steel and retrofit concrete supports, soil fill configuration, variable soil loading, and sloped conditions at foundation supports, a complete three-dimensional finite element analysis addressing interaction between soil and structure would be required to determine actual structural member design loads and foundation support bearing pressures. Original design calculations were not available through the Document Control Management System (DMCS) for review or comparison with evaluation results.

The 2008 Light, Data, and Ranging (LIDAR) topographic survey data was utilized to provide an initial estimate of existing grade elevations associated with the Tunnel 2 structure. This information was compared to 1962 design drawing tunnel geometry to determine depth of soil fill and soil loading conditions used in the engineering evaluation. Field surveys of finish grade and tunnel structure elevations would be required to determine actual soil depth and soil loading conditions that are applied to the structure.

Based on information provided in RHO-RH-34-3, *Geologic and Seismic Investigation of the PUREX Building Site*, there are no known geotechnical investigation or design reports associated with the PUREX facility including Tunnel 2. Estimated geotechnical soil properties for undisturbed native soil and for soil fill placed over the tunnel used in this engineering evaluation were based on best available geotechnical information further described in Appendix B. Sampling and testing of existing soils at or near Tunnel 2 would be required to determine actual soil design properties of soil fill and native soils used in the construction of Tunnel 2.

5. Computations

Calculations are performed in U.S. customary units and are included in the attachments.

ch2m	Calculation Title: PUREX Tunnel 2 Engineering Evaluation	Project Number: 693839.BS Project: PUREX Tunnel 2 Client: CHPRC

6. Computer Software

None

7. Assumptions

Subsurface soil conditions are similar to those reported by others in the project vicinity. Topography of existing cover soil over Tunnel 2 is consistent with the 2008 LIDAR topographic survey and with Tunnel 2 design drawings listed in Section 12.

8. Results

Comparison of structural support member demand to capacity summarized by individual Design-to-Capacity Ratio (DCR) for each design check are as follows (DCR greater than 1.0 exceed design code requirements). For detailed calculations, see Appendix A.

A. Arched Steel Rib Beams (6I12.6, ASTM A36, spaced at ~ 37 inch on center, fabricated on ~ 17 ft rolled radius):

DCR	Design Check
0.55	Axial Compression
0.60	Bending
1.04	Combined Bending and Axial Compression
0.50	Shear

Note: red value(s) listed in table above indicate design force exceeds member structural design capacity

B. Arched Steel Rib Beam Splice (L4x6x3/8 angle with 3/8 inch gusset plate, typical top & bottom on each side of splice)

DCR	Design Check
0.14	Shear Yielding of Angle Leg
0.26	Shear Rupture of Angle Leg
0.38	Bolt Shear Yielding
0.21	Bolt Bearing Strength
1.09	Weld Connection

Note: red value(s) listed in table above indicate design force exceeds member structural design capacity

C. Steel Wale Beams (W10x25 @ W1, W12x31 @ W2-W4, and W12x27 @ W5; extend in tunnel longitudinal direction):

Design Check	W1 DCR	W2 DCR	W3 DCR	W4 DCR	W5 DCR
Shear	0.16	0.50	0.46	0.45	0.30
Bending Stress	0.51	1.12	1.04	1.01	0.77

Note: red value(s) listed in table above indicate design force exceeds member structural design capacity

ch2m	Calculation Title: PUREX Tunnel 2 Engineering Evaluation	Project Number: 693839.BS Project: PUREX Tunnel 2 Client: CHPRC

D. Wale Splice Connection (5/16 inch or 3/8 inch thick tab plate fully welded on one side of Wale beam web)

Design Check	W10x25 DCR	W12x27 DCR	W12x31 DCR
Weld	0.10	0.25	0.25
Bending	0.08	0.17	0.17
Shear Yielding	0.05	0.13	0.13
Shear Rupture	0.06	0.18	0.18

E. Arched Concrete Rib Girders (15 inch wide x 36 inch min concrete arch on ~ 19 ft radius spaced at ~ 15.75 ft o.c.)

DCR	Design Check
0.28	Axial Compression
0.20	Bending
0.58	Shear

F. Wale Underhung Support Bolted Connection (four 1.125 inch to 1.375 inch dia A36 bolts with 0.75 inch to 1.00 inch thick plate)

Design Check	W1 DCR	W2 DCR	W3 DCR	W4 DCR	W5 DCR
Bolts	0.12	0.34	0.32	0.34	0.22
Plate	0.05	0.15	0.14	0.15	0.08
Concrete Breakout	0.25	1.04	0.96	0.94	0.55

Note: red value(s) listed in table above indicate design force exceeds member structural design capacity

G. Concrete Rib Girder Thrust Block Support (18 inch thick x 6 ft x 6.5 ft reinforced concrete ftg)

DCR	Design Check
0.37	Punching Shear
0.60	Shear
0.72	Bending
1.03	Soil Bearing Capacity at Concrete Rib Girder Supports

Note: red value(s) listed above indicate design force exceeds member structural design capacity

ch2m	Calculation Title: PUREX Tunnel 2 Engineering Evaluation	Project Number: 693839.BS Project: PUREX Tunnel 2 Client: CHPRC

9. Conclusions

This structural evaluation of Tunnel 2 indicates that design loads on several structural support members exceed building code design capacities including arched steel rib supports, wide flange steel wale supports (members, splice connection, and failure sensitive underhung tension bolt connections), and foundation soil bearing pressures. Structural evaluation does not address further reduction in the structural capacity of members and connections due to adverse effects from corrosion, material defects, and increased stresses induced from documented unbalanced loading conditions applied to the structure during original construction backfill operations.

Based on overstressed conditions in structural support members and connections and uncertainty of additional unknown stresses induced during original construction, Tunnel 2 has a potential high risk of localized collapse. Foundation support conditions are further subject to increased risk of failure during moderate to strong seismic activity. Although removal of soil fill over the tunnel could result in reduced applied loads, the potential reduction in loads may not eliminate all overstressed conditions and adverse effects from extended deterioration (e.g. corrosion, radiation exposure, etc.) but could in turn result in initiating a localized collapse caused by construction activities. Stabilization of the tunnel is recommended to be implemented as soon as possible to minimize risk of failure. For safety purposes (e.g. avoid potential collapse, avoid high level radiation exposure, etc.), placement of personnel and equipment on top of the tunnel and within the roof load zone of influence is not recommended without further evaluation.

10. Risk of Future Failure

The Tunnel 2 arched steel structure including retrofit addition of cast-in-place arched concrete rib supports with underhung structural steel wale supports has been in service for more than 50 years which is beyond the typical design life for similar structures. The risk of future failure of the tunnel (partial or global collapse) is considered high based on identified design overstress conditions and problems encountered during original construction including lateral displacement/distortion, partial collapse of the structure, and failure of a number of welded and bolted steel connections during backfill operations. As a result, the existing Tunnel 2 structure presents a high potential collapse hazard until such time that physical evaluation of the structural members including bolted and welded connections can be performed.

11. References

CAC-964, 1964, *PUREX Equipment Disposal Tunnel, Inspection Report,* Vitro Engineering Corporation, Richland, Washington, dated March 17, 1964 (Tunnel 2).

H-2-58191 (drawing), 1962, *Plot Plan*, Rev 6, Rockwell Hanford Operations, Richland, Washington.

H-2-58192 (drawing), 1962, *Plot Plan & Profile – Arch Liner,* Rev 3, Bovay Engineers, Inc., Richland, Washington.

H-2-58193 (drawing), 1962, *Architectural Plans*, Rev. 3, Bovay Engineers, Inc., Richland, Washington.

H-2-58194 (drawing), 1962, *Structural Sections & Details*, Rev 4, Bovay Engineering, Inc., Richland, Washington.

H-2-58195 (drawing), 1962, *Structural Sections & Details*, Rev 1, Bovay Engineering, Inc., Richland, Washington.

H-2-58196 (drawing), 1962, *Roof Plan Structural Sections & Details*, Rev 2, Bovay Engineering, Inc., Richland, Washington.

H-2-58532 (drawing), 1964, *PUREX Tunnel Reinforcement Plan*, Rev 1, Vitro Engineering Company, Richland, Washington.

ch2m	Calculation Title: PUREX Tunnel 2 Engineering Evaluation	Project Number: 693839.BS Project: PUREX Tunnel 2 Client: CHPRC

H-2-58533 (drawing), 1964, *PUREX Tunnel Reinforcement Sections & Details*, Rev 1, Vitro Engineering Company, Richland, Washington.

H-2-58731 (drawing), 1964, *PUREX Tunnel 2 Clearance Diagram for Tunnel Section,* Rev 2, Vitro Engineering Company, Richland, Washington.

H-2-58738 (drawing), 1965, *Survey Controls and Data*, Rev 1, General Electric Company, Richland, Washington.

HWS-8262, 1962, *Specification for PUREX Equipment Disposal*, dated October 5, 1962 (Tunnel 2), Project CCC-964, General Electric Company, Richland, Washington.

HW-4798-S, 1962, *Standard Specification for Placing Reinforced Concrete,* Rev 6, General Electric Company, Richland, Washington.

HW 4926-S, 1953, *Standard Specification of Welding Carbon Steels*, Hanford Works Standards Committee, Richland, Washington.

PRC-PRO-EN-097, 2015, *Engineering Design and Evaluation (Natural Phenomena Hazard)*, Rev. 2, Change 0, CH2M HILL Plateau Remediation Company, Richland, Washington.

ASTM A36/A36M-14, 2014, *Standard Specification for Carbon Structural Steel,* ASTM International, West Conshohocken, Pennsylvania.

ASTM A283/A283M-13, 2013, *Standard Specification for Low and Intermediate Tensile Strength Carbon Steel Plates,* ASTM International, West Conshohocken, Pennsylvania.

ASTM A325/A325M-10, 2010, *Standard Specification for Structural Bolts, Steel, Heat Treated, 120/105 ksi Minimum Tensile Strength,* ASTM International, West Conshohocken, Pennsylvania.

ASTM A15, 1958, *Standard Specification for Billet-Steel Bars for Concrete Reinforcing,* ASTM International, West Conshohocken, Pennsylvania.

2012 International Building Code (IBC), International Code Council.

FLUOR Hanford LIDAR Digital Elevation Model(s) & Topographic Contour Maps, 2008, prepared by Aero-Metric, Seattle, Washington.

RHO-R-34-3, 1981, *Geologic and Seismic Investigation of the PUREX Building Site*, URS/John A. Blume & Associates, San Francisco, California.

ch2m	Calculation Title: PUREX Tunnel 2 Engineering Evaluation	Project Number: 693839.BS Project: PUREX Tunnel 2 Client: CHPRC

Appendix A

Calculations

Scope: Following the partial roof collapse of Tunnel 1 at the PUREX facility at the Hanford Nuclear Reservation, CH2M was requested to perform an initial structural evaluation of Tunnel No. 2 to determine the overall structural capacity of the tunnel and soil bearing conditions when subjected to current design load conditions. Tunnel 2, which was designed and constructed in 1962-1963, consists of a continuous below-grade arched hangar-style steel structure enclosure used to support 8ft minimum soil cover over the tunnel for radiation shielding purposes. The tunnel was modified during construction in 1964-1965 with a series of retrofit arched cast-in-place concrete ribs using under-hung bolted structural steel supports to further support the original arched steel enclosure after a couple of localized failures occurred during construction backfill operations. The condition of existing structural support members including adverse effects from radiation exposure and corrosion are not known because of the soil back fill along exterior surfaces and inability to physically access the tunnel interior due to high levels of radioactive contamination from the materials stored within the tunnel. This evaluation does not include potential degradation effects from radiation or corrosion.

Codes/References:

- 2012 IBC
- ASCE 7-10
- ACI 318-11
- AISC 360-10 (14th edition LRFD method)
- AWS D1.1/2008

Design Parameters:

- Soil Fill Over Tunnel Roof — 8ft deep
- Soil Unit Weight — 110 pcf (moist in situ)
- Soil Lateral Earth Pressure — per Soil Design Load Parameters Calculations for at-rest pressures
- Ground Snow Load — 15psf
- Concrete Strength — 3,000psi @ 28 days for original continuous wall footings (per Note 1 on Dwg H-2-58194)
  4,000psi @ 28 days for retrofit designed concrete arched ribs and associated concrete thrust block foundations (per General Note 1 on Dwg H-2-58532)
- Reinforcing Bars — ASTM A15-52T, Grade 40 (intermediate grade)
- Bolts — A325-61T
- Tunnel No. 2 — 1962 Design Drawings and 1964 Retrofit Repair Drawings
- Radiation Effects — Unknown, not included in evaluation
- Corrosion Effects — Unknown, not included in evaluation
- Tunnel Slope — 0.1% (downward from north to south)
- LRFD Load Factors:
  - Dead Load (DL) — 1.2
  - Soil Weight (DL) — 1.2
  - Snow Load (S) — 1.6
  - Lateral Earth Pressure (H) — 1.6

Controlling LRFD Load Combination = 1.2(DL) + 1.6(S) + 1.6(H)

Determine Loads Applied to Structural Support Elements

Unfactored design load pressures were determined in the Soil Design Parameter calculations. The diagram below shows overall tunnel geometry and general design loading conditions.

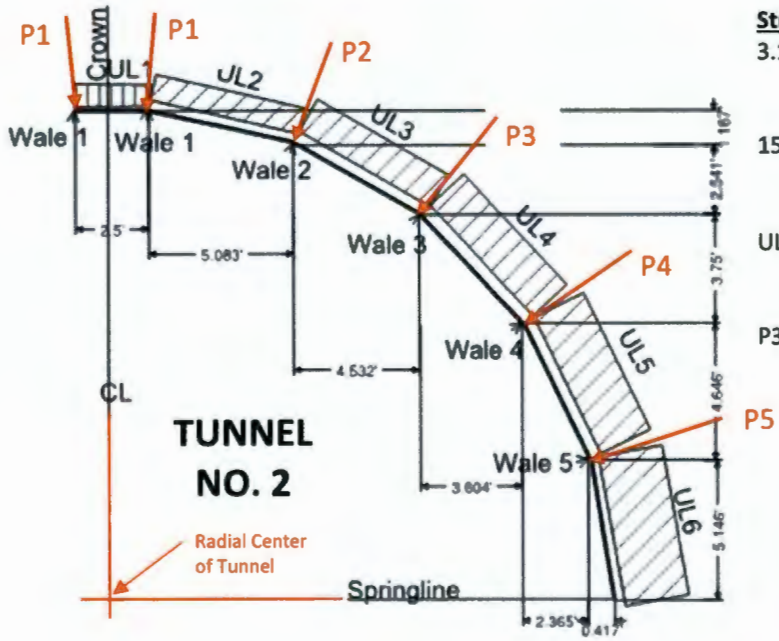

Structural Supports:

3.14ft o.c. Arched Steel Ribs (37 11/16" spacing)

15.73ft o.c. Arched Concrete Ribs (15'-8.75" spacing)

UL2 = average uniform design load pressure between Wale supports

P3 = design load pressure at Wale Support location

TUNNEL 2 - Geometry Summary

Support	Coordinates X*1 (ft)	Coordinates Y*2 (ft)	Load Segment	Location Start	Location End	Segment*3 Length (ft)	Wale Member	Tributary*4 Width (ft)
E Wale 1	(1.250)	17.753	-	-	-	-	-	-
Crown	-	17.753	UL1	E Wale 1	W Wale 1	2.500	-	-
W Wale 1	1.250	17.753	UL2	Wale 1	Wale 2	5.350	Wale 1	3.925
Wale 2	6.333	16.083	UL3	Wale 2	Wale 3	5.196	Wale 2	5.273
Wale 3	10.865	13.542	UL4	Wale 3	Wale 4	5.201	Wale 3	5.198
Wale 4	14.469	9.792	UL5	Wale 4	Wale 5	5.213	Wale 4	5.207
Wale 5	16.834	5.146	UL6	Wale 5	Springlilne	5.163	Wale 5	5.188
Springline	17.251	-	-	-	-	-	Base	-

FOOTNOTES:

(*1) distance from tunnel crown (at centerline)

(*2) distance from base of tunnel (at centerline)

(*3) load segment length based on coordinate locations = $[(X_2-X_1)2+(Y_2-Y_1)2]^{1/2}$

(*4) load segment tributary to Wale Support: Example Wale 2 = (UL2+UL3)/2 = (5.350+5.196)/2 = 5.273

TUNNEL NO. 2

SUMMARY	Normal Stress component of Vertical Effective Stress (psf)			Normal Stress component of Horizontal Lateral Earth Pressure (psf)			Normal Stress Component of Snow Load due to Vertical and Horizontal Componentsl (psf)			Total Normal Stress on Tunnel (psf)		
Point No.	MIN	AVG	MAX	MIN	AVG	MAX	MIN	AVG	MAX	MIN	AVG	MAX
E. SPRINGLINE	0.0	0.0	0.0	601.8	711.28	892.0	7.5	7.5	7.5	609.3	718.8	899.5
E. WALE 5	479.8	547.4	605.9	413.5	503.58	647.3	11.9	11.9	11.9	905.3	1062.8	1265.1
E. WALE 4	650.2	769.5	854.2	264.7	334.50	431.1	14.8	14.8	14.8	929.7	1118.8	1300.0
E. WALE 3	713.3	865.6	948.2	159.8	206.80	256.1	16.5	16.5	16.5	889.6	1088.8	1194.6
E. WALE 2	853.0	923.2	986.6	162.8	176.15	188.2	16.7	16.7	16.7	1032.4	1116.1	1191.5
E. WALE 1	801.0	891.2	965.6	28.3	31.46	34.1	15.5	15.5	15.5	844.8	938.2	1015.2
CROWN	792.0	889.8	968.0	0.0	0.00	0.0	15.0	15.0	15.0	807.0	904.8	983.0
W. WALE 1	801.0	891.2	965.6	28.3	31.46	34.1	15.5	15.5	15.5	844.8	938.2	1015.2
W. WALE 2	811.9	888.4	966.1	154.9	169.51	184.3	16.7	16.7	16.7	983.5	1074.6	1167.1
W. WALE 3	748.1	833.2	948.2	175.4	208.24	243.6	16.5	16.5	16.5	967.0	1057.9	1200.7
W. WALE 4	682.1	756.1	847.8	280.8	344.21	403.0	14.8	14.8	14.8	980.6	1115.1	1246.1
W. WALE 5	500.8	547.2	602.4	424.6	527.75	622.5	11.9	11.9	11.9	937.3	1086.8	1194.8
W. SPRINGLINE	0.0	0.0	0.0	613.9	746.62	882.4	7.5	7.5	7.5	621.4	754.1	889.9

NOTES:

1. For details of soil geometry and design load development summarized in this table, see Appendix B Soil Design Parameters
2. Highlighted values represent controlling design load used in this Tunnel 2 structural evaluation.

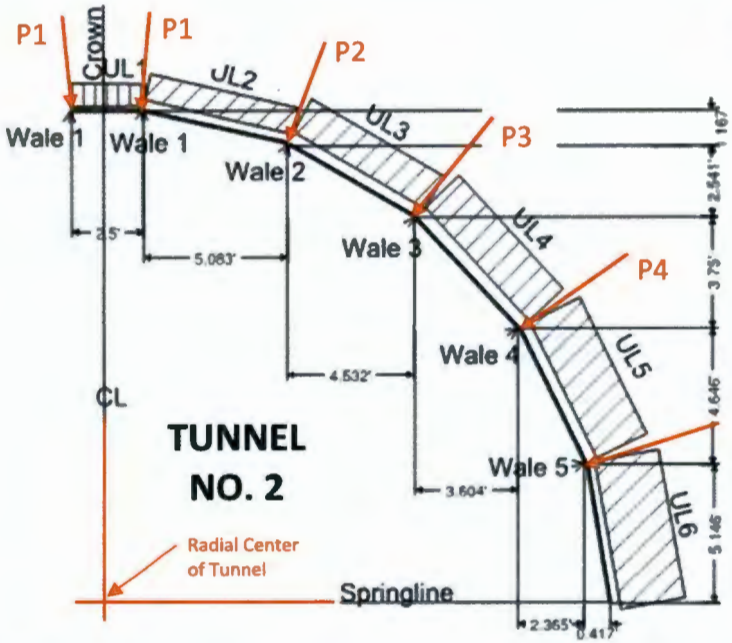

Structural Supports:

3.14ft o.c. — Arched Steel Ribs (37 11/16" spacing)

15.73ft o.c. — Arched Concrete Ribs (15'-8.75" spacing)

UL2 = average uniform design load pressure between Wale supports

P3 = design load pressure at Wale Support location

	Unfactored Normal Applied Loads*1			Unfactored Uniform Load Segments*2						Unfactored Normal Applied Loads*3							Factored Normal Applied Loads*6				
										Steel Rib Supports (6112.5)*4				LRFD Design Load Factors*5			Steel Rib Supports (6112.5)*4				
Location	Vert Soil Component (psf)	Horiz Soil Component (psf)	(Vert+Horiz) Snow (psf)	LOAD SEGMENT	Segment Length (ft)	Vert Soil Component (psf)	Horiz Soil Component (psf)	(Vert+Horiz) Snow (psf)	Total Load (psf)	Trib Width (ft)	Vert Soil (klf)	Horiz Soil (klf)	Snow (klf)	Vert Soil Load	Horiz Soil Load	Snow	Trib Width (ft)	Vert Soil (klf)	Horiz Soil (klf)	Snow (klf)	Total (klf)
Crown	968.0	0.0	15.0	-	-	-	-	-	-	-	-	-	-	-	-	-	-	-	-	-	0.0
Wale 1	965.6	34.1	15.5	UL1	2.500	968.0	0.0	15.0	983.0	3.146	3.05	0.00	0.05	1.2	1.6	1.6	3.146	3.65	0.00	0.08	3.73
Wale 2	986.6	188.2	16.7	UL2	5.350	976.1	111.2	16.1	1103.4	3.146	3.07	0.35	0.05	1.2	1.6	1.6	3.146	3.68	0.56	0.08	4.33
Wale 3	948.2	256.1	16.5	UL3	5.196	967.4	222.2	16.6	1206.2	3.146	3.04	0.70	0.05	1.2	1.6	1.6	3.146	3.65	1.12	0.08	4.85
Wale 4	854.2	431.1	14.8	UL4	5.201	901.2	343.6	15.7	1260.5	3.146	2.84	1.08	0.05	1.2	1.6	1.6	3.146	3.40	1.73	0.08	5.21
Wale 5	605.9	647.3	11.9	UL5	5.213	730.1	539.2	13.4	1282.6	3.146	2.30	1.70	0.04	1.2	1.6	1.6	3.146	2.76	2.71	0.07	5.54
Springline	0.0	892.0	7.5	UL6	5.163	303.0	769.7	9.7	1082.3	3.146	0.95	2.42	0.03	1.2	1.6	1.6	3.146	1.14	3.87	0.05	5.07

FOOTNOTES:

*1 Values listed represent maximum service load design pressures acting radially inward toward center of arched tunnel base (see Soil Design Parameter Calcs).

*2 Average uniform design load pressure between Wale support locations: Example **UL2** = (Wale 2 + Wale 1)/2 = (986.6 + 965.6)/2 = 976.1 psf; **UL1** = Crown = 968.0 psf; **UL6** = (Springline + Wale 5)/2 = (0.0 + 605.9)/2 = 303.0 psf

*3 Unfactored service load pressure applied at Steel Rib Supports: Example UL1 (vert soil) = 968 psf * 3.146 ft = 3.05 klf

*4 Tributary width based on steel rib spacing of 37.75 inches = 3.146 ft

*5 LRFD design load factors per 2012 IBC.

*6 LRFD factored uniform design loads applied to Steel Rib support members.

STEEL RIB BEAMS

Per the existing drawings, all steel rib beams are A36, 6I12.5, spaced at 3.14ft (Tributary Width), spanning 5.2ft max between wale beams.

Section Index and Nominal Size	District Rolled	Weight per Foot	Area of Section	Depth of Beam	Width of Flange	Aver. Flange Thickness	Web Thickness	Axis 1-1			Axis 2-2		
								I	S	r	I	S	r
		Lbs.	In.²	In.	In.	In.	In.	In.⁴	In.³	In.	In.⁴	In.³	In.
● "I"													
★ B 14	P.C.B.G.S.	17.25	5.02	6	3.565	.359	.465	26.0	8.7	2.28	2.3	1.3	0.68
6 x 3½	P.C.B.G.S.	12.5	3.61		3.330	.359	.230	21.8	7.3	2.46	1.8	1.1	0.72
R = .33													

Properties are similar to **S6x12.5, which are:**

$I_{XX} = 22\text{-in}^4$ $S_{XX} = 7.34\text{-in}^3$ $Z_{XX} = 8.45\text{-in}^3$ $r_{XX} = 2.45\text{-in}$

WALE BEAMS

Per the existing drawings (see excerpt below), there are 5 Wale Beams (each side of tunnel). They span 15.73ft between concrete ribs and are spaced at 5.2ft. They are spliced at eavery other support, creating a propped cantilever system. The beams are specified as 12WF31, 12WF27, and 10WF25.

Section Index and Nominal Size	Weight per Foot	Area of Section	Depth of Section	Flange		Web Thickness	Axis 1-1			Axis 2-2		
				Width	Thickness		I	S	r	I	S	r
	Lbs.	In.²	In.	In.	In.	In.	In.⁴	In.³	In.	In.⁴	In.³	In.
12" WF	36	10.59	12.24	6.565	.540	.305	280.8	45.9	5.15	23.7	7.2	1.50
CB 121	31	9.12	12.09	6.525	.465	.265	238.4	39.4	5.11	19.8	6.1	1.47
12 x 6½	27	7.97	11.96	6.500	.400	.240	204.1	34.1	5.06	16.6	5.1	1.44
R = .37												
10" WF	29	8.53	10.22	5.799	.500	.289	157.3	30.8	4.29	15.2	5.2	1.34
CB 101	25	7.35	10.08	5.762	.430	.252	133.2	26.4	4.26	12.7	4.4	1.31
10 x 5¾	21	6.19	9.90	5.750	.340	.240	106.3	21.5	4.14	9.7	3.4	1.25
R = .32												

The 12WFs are very similar to W12x30, W12x26, while the properties of the 10WF25 fall between a W10x22 and a W10x26. A W10x22 will be used in the analysis, with the understanding that there is additional 13% +/- capacity in the actual existing beam.

ch2m	Calculation Title: PUREX Tunnel 2 Engineering Evaluation	Project Number: 693839.BS Project: PUREX Tunnel 2 Client: CHPRC

Arched Steel Rib Beam Analysis

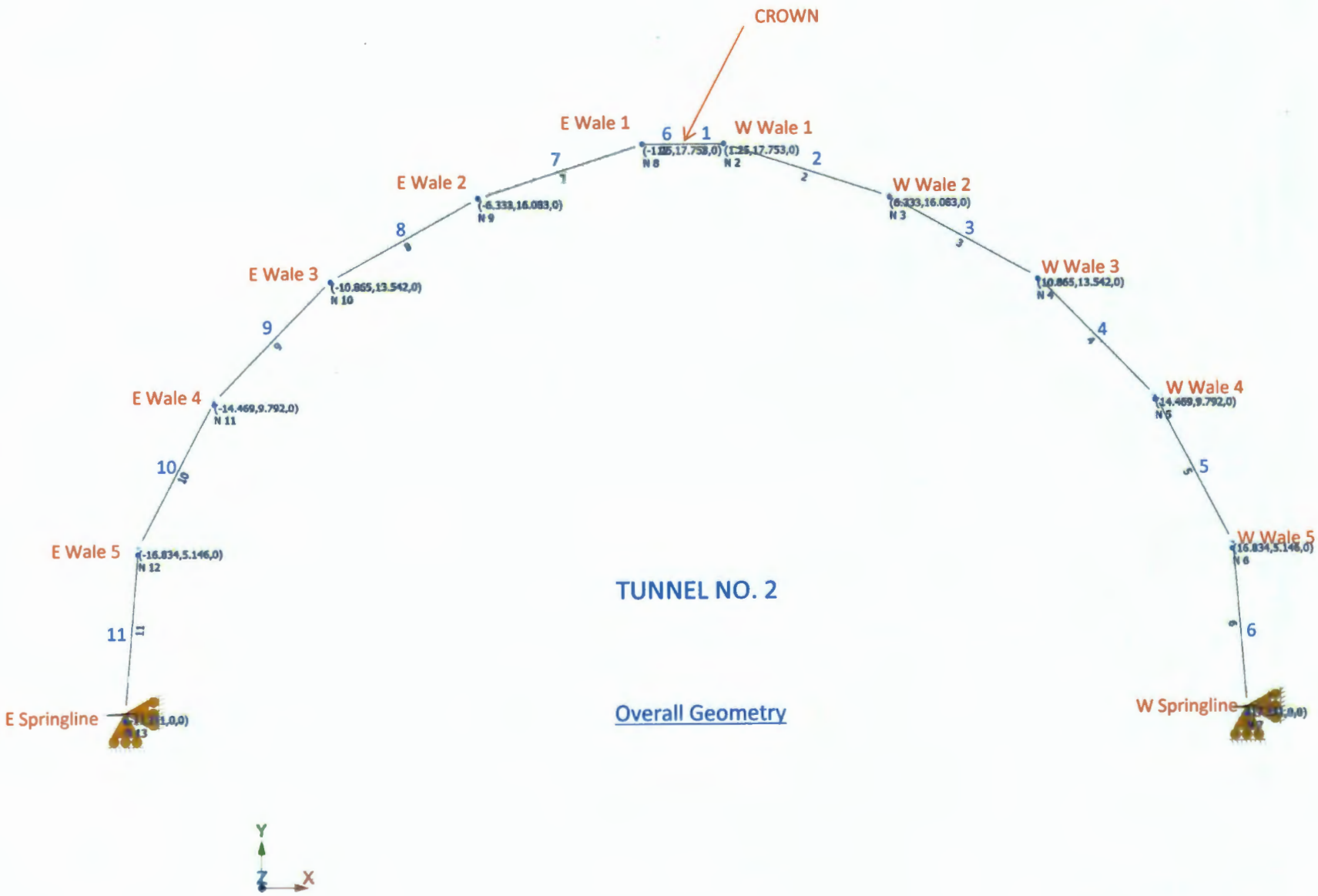

TUNNEL NO. 2

Overall Geometry

STEEL RIB - WALE INTERACTION

THE ORIGINAL STEEL RIBS FORMING THE "QUONSET" SHAPE ARE SUPPORTED INTERNALLY BY LONGITUDINAL WALE BEAMS, WHICH SPAN TO CONCRETE ARCHES INSTALLED EVERY FIFTH RIB. THE INTERACTION OF THE RIBS AND WALES IS BASED ON THEIR RELATIVE STIFFNESS.

AN APPROXIMATION OF THE STIFFNESS OF THE WALES IS MADE BY CALCULATING THE DEFLECTED SHAPE OF THE WALE UNDER A SERIES OF UNIT LOADS (1 KIP) SPACED TO MATCH THE STEEL RIB LAYOUT. THE WALE IS PINNED TO EACH CONCRETE ARCH, AND THE PROPPED-CANTILEVER CONFIGURATION IS TAKEN INTO ACCOUNT. SEE THE ATTACHED SKETCH.

NOTE:
This structural behavior of the arched steel ribs/wale beams/arched concrete rib girder system is a function of the relative stiffnesses of the components at their respective points of interaction (attachments). The current structural evaluation is based on a two-dimensional (2-D) analysis using an approximation of one such point of interaction – the relative stiffness of wale beam at the steel rib/wale beam attachment located approximately at the third point of the wale span between arched concrete rib girders. Additional analysis would be required to more accurately account for the variable relative stiffness of the wale beam member along its full length. Arched steel rib supports located near concrete rib girders would see stiffer support from the wale beam than those located between concrete rib girders which means more of the applied load would be carried by the wale beam than by that steel rib in arching action at that location. A more rigorous three-dimensional (3-D) analysis of the tunnel structure would be required to account for this complex 2-way behavior interaction in order to more accurately determine distribution of design loads and forces to each member.

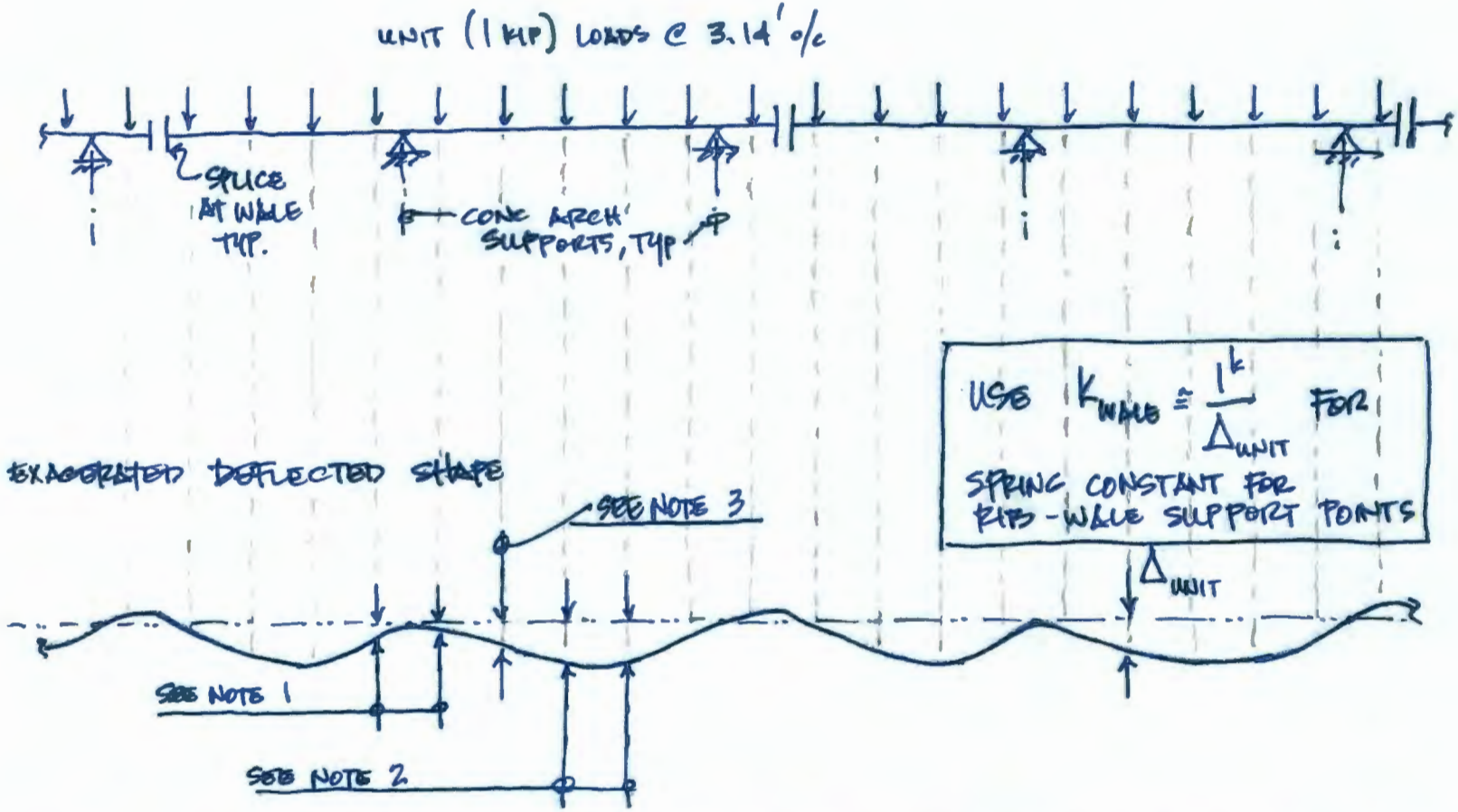

NOTES

1. THE RIBS CLOSEST TO THE CONCRETE ARCH WILL RECIEVE THE STIFFEST SUPPORT FROM THE WALE, SINCE THE WALE CANNOT DEFLECT AS MUCH NEAR THE CONCRETE ARCH.
2. THE RIBS LOCATED NEAR THE WALE MIDSPAN WILL RECIEVE THE LEAST SUPPORT FROM THE WALE, CONSEQUENTLY THE STRESSES IN THESE RIBS ESTABLISH A RELATIVE UPPER BOUND FOR THE PURPOSES OF THIS ANALYSIS.
3. THE RIBS AT ROUGHLY THIRD POINTS OF THE WALE SPAN CAN BE TAKEN AS AN AVERAGE CONDITION. AN ARCH MODELED WITH SPRING SUPPORTS WILL PROVIDE REACTION VALUES FOR WALE, WALE SUPPORT ANCHORAGE, AND CONCRETE ARCH ANALYSIS

Unit Load Analysis to obtain Member Displacements for determination of Spring Support Values at Steel Rib Locations

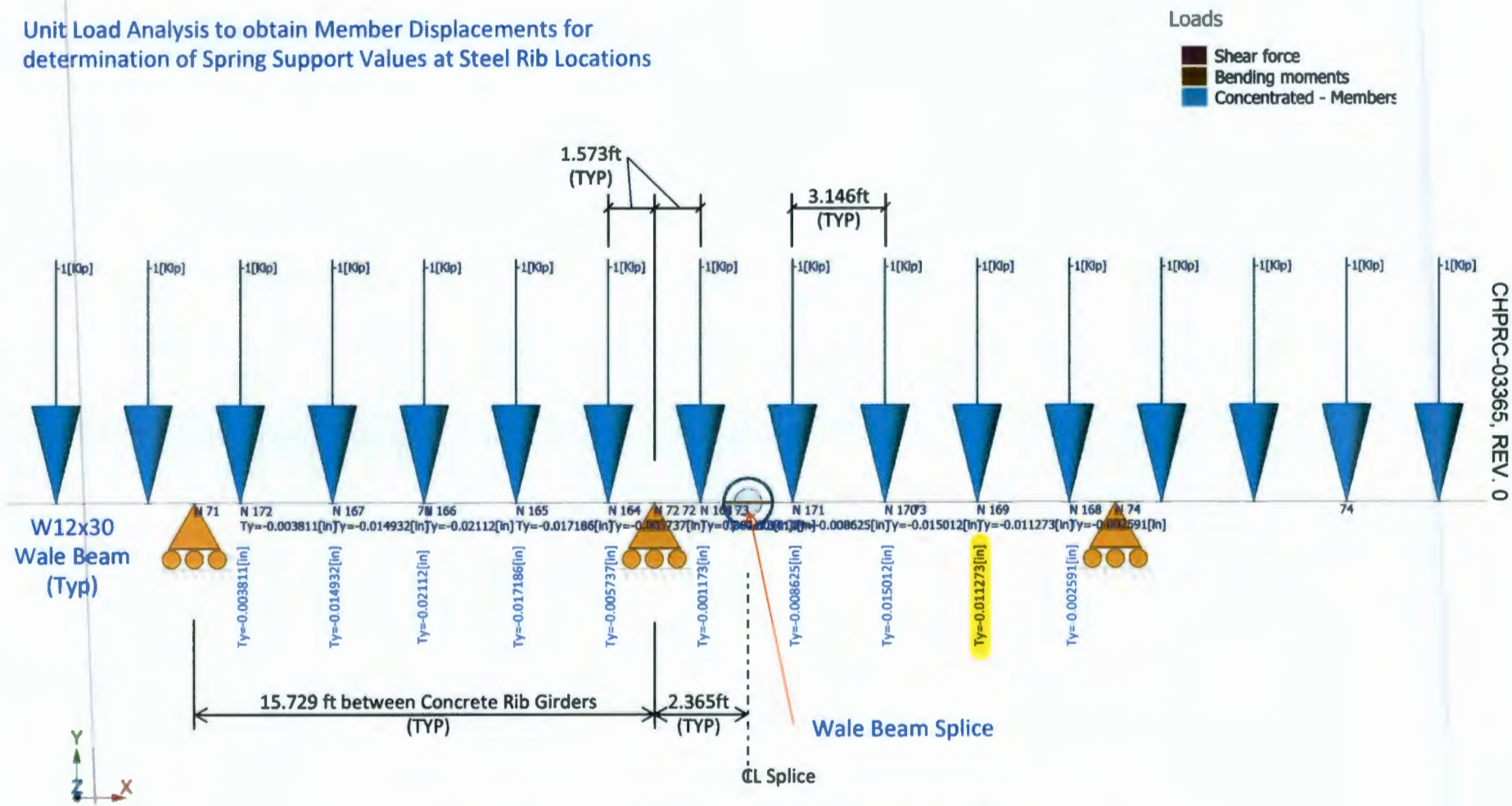

$P = k\Delta$ where $P = 1.0$ kip and $\Delta = 0.011273''$ (representative design displacement)

W12x30 Wale Beam Spring Support Constant = 1.00 k / 0.011273 in =88.7 k/in

Tunnel 2

Arched Steel Rib Spring Supports

Location	X (ft)	Y (ft)	R (ft)	Actual: Wale Section	Actual: I_{XX} (in^4)	Analysis Basis: Member Section	Analysis Basis: I_{XXI} (in^4)	Deflect Adjust Factor	Wale I.D.	Nominal Support Stiffness: R_o *1 (k/in)	Nominal Support Stiffness: R_{ox} (k/in)	Nominal Support Stiffness: R_{oy} (k/in)	Adjusted Support Stiffness: R_{tot} *2 (k/in)	Adjusted Support Stiffness: R_x (k/in)	Adjusted Support Stiffness: R_y (k/in)
Crown	-	17.750	17.750	-	-	-	-	-	-	-	-	-	-	-	-
Wale 1	1.250	17.708	17.752	W10x25	133.2	W12x30	238.0	0.56	**P1**	88.7	6.2	88.5	49.7	3.5	49.5
Wale 2	6.333	16.583	17.752	W12x31	238.4	W12x30	238.0	1.00	**P2**	88.7	31.6	82.9	88.7	31.6	82.9
Wale 3	10.865	14.042	17.754	W12x31	238.4	W12x30	238.0	1.00	**P3**	88.7	54.3	70.2	88.7	54.3	70.2
Wale 4	14.469	10.292	17.756	W12x31	238.4	W12x30	238.0	1.00	**P4**	88.7	72.3	51.4	88.7	72.3	51.4
Wale 5	16.833	5.646	17.755	W12x27	204.1	W12x30	238.0	0.86	**P5**	88.7	84.1	28.2	76.3	72.3	24.3
Springline	17.750	-	17.750	-	-	-	-	-	-	-	-	-	-	-	-

Equivalency: $(R_{tot} / R) = (R_x / X_i) = (R_y / Y_i)$ $R_x = (R_{tot} / R) * X$ $R_y = (R_{tot} / R) * Y$

NOTES:

1. R_o = determined based on 0.011273-inch design deflection for continuous longitudinal W12x30 Wale beam
2. $R_{tot} = R_o$ * (adjustment factor); Wale 1: R_{tot} = (88.7k/in)*(0.56) = 49.7 k/in
3. Example (Wale 4): R_{ox} = ([88.7k/in]/17.756ft) * 14.469ft = 72.3 k/in R_x = ([88.7k/in]/17.756ft) * 14.469ft = 72.3 k/in
   R_{oy} = ([88.7k/in]/17.756ft) * 10.292ft = 51.4 k/in R_y = ([88.7k/in]/17.756ft) * 10.292ft = 51.4 k/in

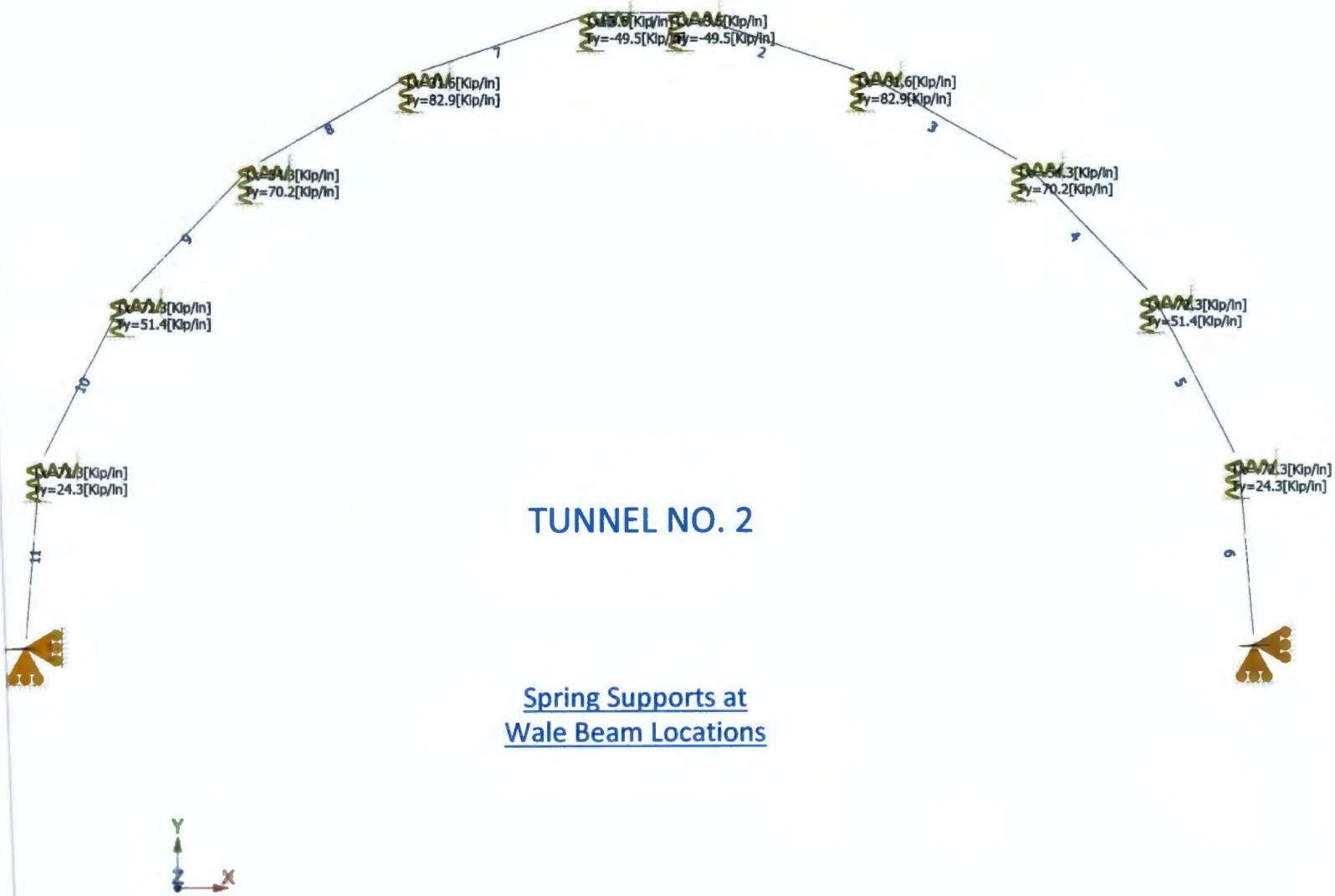

TUNNEL NO. 2

Spring Supports at
Wale Beam Locations

Geometry data

GLOSSARY

Cb22, Cb33	: Moment gradient coefficients
Cm22, Cm33	: Coefficients applied to bending term in interaction formula
d0	: Tapered member section depth at J end of member
DJX	: Rigid end offset distance measured from J node in axis X
DJY	: Rigid end offset distance measured from J node in axis Y
DJZ	: Rigid end offset distance measured from J node in axis Z
DKX	: Rigid end offset distance measured from K node in axis X
DKY	: Rigid end offset distance measured from K node in axis Y
DKZ	: Rigid end offset distance measured from K node in axis Z
dL	: Tapered member section depth at K end of member
Ig factor	: Inertia reduction factor (Effective Inertia/Gross Inertia) for reinforced concrete members
K22	: Effective length factor about axis 2
K33	: Effective length factor about axis 3
L22	: Member length for calculation of axial capacity
L33	: Member length for calculation of axial capacity
LB pos	: Lateral unbraced length of the compression flange in the positive side of local axis 2
LB neg	: Lateral unbraced length of the compression flange in the negative side of local axis 2
RX	: Rotation about X
RY	: Rotation about Y
RZ	: Rotation about Z
TO	: 1 = Tension only member 0 = Normal member
TX	: Translation in X
TY	: Translation in Y
TZ	: Translation in Z

Nodes

Node	X [ft]	Y [ft]	Z [ft]	Rigid Floor
1	0.00	17.753	0.00	0
2	1.25	17.753	0.00	0
3	6.333	16.083	0.00	0
4	10.865	13.542	0.00	0
5	14.469	9.792	0.00	0
6	16.834	5.146	0.00	0
7	17.251	0.00	0.00	0
8	-1.25	17.753	0.00	0
9	-6.333	16.083	0.00	0
10	-10.865	13.542	0.00	0
11	-14.469	9.792	0.00	0
12	-16.834	5.146	0.00	0
13	-17.251	0.00	0.00	0

Restraints

Node	TX	TY	TZ	RX	RY	RZ
7	1	1	1	0	0	0
13	1	1	1	0	0	0

Springs

Node	TX [Kip/in]	TY [Kip/in]	TZ [Kip/in]	RX [Kip*ft/rad]	RY [Kip*ft/rad]	RZ [Kip*ft/rad]
2	-3.50	-49.50	0.00	0.00	0.00	0.00
3	-31.60	82.90	0.00	0.00	0.00	0.00
4	-54.30	70.20	0.00	0.00	0.00	0.00
5	-72.30	51.40	0.00	0.00	0.00	0.00
6	-72.30	24.30	0.00	0.00	0.00	0.00
8	3.50	-49.50	0.00	0.00	0.00	0.00
9	31.60	82.90	0.00	0.00	0.00	0.00
10	54.30	70.20	0.00	0.00	0.00	0.00
11	72.30	51.40	0.00	0.00	0.00	0.00
12	72.30	24.30	0.00	0.00	0.00	0.00

Members

Member	NJ	NK	Description	Section	Material	d0 [in]	dL [in]	Ig factor
1	1	2	Arched Steel Rib	S 6X12.5	A36	0.00	0.00	0.00
2	2	3	Arched Steel Rib	S 6X12.5	A36	0.00	0.00	0.00
3	3	4	Arched Steel Rib	S 6X12.5	A36	0.00	0.00	0.00
4	4	5	Arched Steel Rib	S 6X12.5	A36	0.00	0.00	0.00
5	5	6	Arched Steel Rib	S 6X12.5	A36	0.00	0.00	0.00
6	6	7	Arched Steel Rib	S 6X12.5	A36	0.00	0.00	0.00
7	8	9	Arched Steel Rib	S 6X12.5	A36	0.00	0.00	0.00
8	9	10	Arched Steel Rib	S 6X12.5	A36	0.00	0.00	0.00
9	10	11	Arched Steel Rib	S 6X12.5	A36	0.00	0.00	0.00
10	11	12	Arched Steel Rib	S 6X12.5	A36	0.00	0.00	0.00
11	12	13	Arched Steel Rib	S 6X12.5	A36	0.00	0.00	0.00
12	1	8	Arched Steel Rib	S 6X12.5	A36	0.00	0.00	0.00

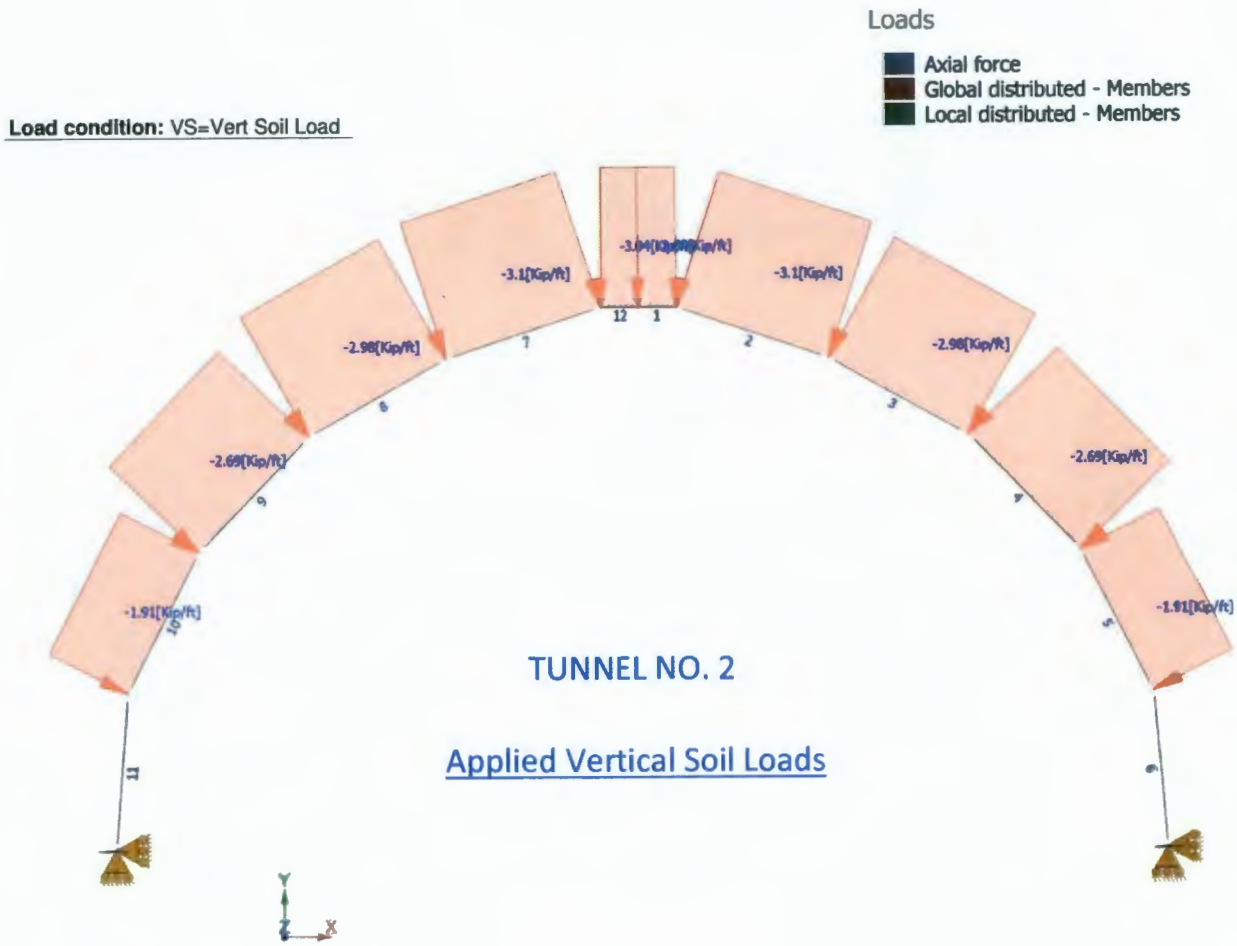
Loads
Axial force
Global distributed - Members
Local distributed - Members
Load condition: VS=Vert Soil Load
-3.1[Kip/ft]
-3.1[Kip/ft]
-2.98[Kip/ft]
-2.98[Kip/ft]
-2.69[Kip/ft]
-2.69[Kip/ft]
-1.91[Kip/ft]
-1.91[Kip/ft]
TUNNEL NO. 2
Applied Vertical Soil Loads

Load condition: HS=Horiz Soil Load
-0.99[Kip/ft]
-0.81[Kip/ft]
-1.36[Kip/ft]
-2.04[Kip/ft]
-2.81[Kip/ft]
TUNNEL NO. 2
Applied Lateral Earth Pressure Loads

Loads
Axial force
Global distributed - Members
Local distributed - Members
Load condition: S=Snow Load
-0.05[Kip/ft]
-0.04[Kip/ft]
-0.02[Kip/ft]
12
1
2
3
4
5
6
7
8
9
10
11
TUNNEL NO. 2
Applied Snow Loads
(combined vertical+horizontal)
Y
X

Load data

GLOSSARY

Comb : Indicates if load condition is a load combination

Load conditions

Condition	Description	Comb.	Category
DL	Dead Load	No	DL
VS	Vert Soil Load	No	EARTH
HS	Horiz Soil Load	No	EARTH
S	Snow Load	No	SNOW
S1	DL+VS+HS+S	Yes	
C1	1.2DL+1.2VS+1.6HS+1.6S	Yes	

Distributed force on members

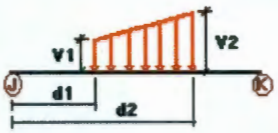

Condition	Member	Dir1	Val1 [Kip/ft]	Val2 [Kip/ft]	Dist1 [ft]	%	Dist2 [ft]	%
VS	1	2	-3.04	0.00	0.00	No	0.00	No
	2	2	-3.10	0.00	0.00	No	0.00	No
	3	2	-2.98	0.00	0.00	No	0.00	No
	4	2	-2.69	0.00	0.00	No	0.00	No
	5	2	-1.91	0.00	0.00	No	0.00	No
	6	2	0.00	0.00	0.00	No	0.00	No
	7	2	-3.10	0.00	0.00	No	0.00	No
	8	2	-2.98	0.00	0.00	No	0.00	No
	9	2	-2.69	0.00	0.00	No	0.00	No
	10	2	-1.91	0.00	0.00	No	0.00	No
	11	2	0.00	0.00	0.00	No	0.00	No
	12	2	-3.04	0.00	0.00	No	0.00	No
HS	1	2	-0.11	0.00	0.00	No	0.00	No
	2	2	-0.59	0.00	0.00	No	0.00	No
	3	2	-0.81	0.00	0.00	No	0.00	No
	4	2	-1.36	0.00	0.00	No	0.00	No
	5	2	-2.04	0.00	0.00	No	0.00	No
	6	2	-2.81	0.00	0.00	No	0.00	No
	7	2	-0.59	0.00	0.00	No	0.00	No
	8	2	-0.81	0.00	0.00	No	0.00	No
	9	2	-1.36	0.00	0.00	No	0.00	No
	10	2	-2.04	0.00	0.00	No	0.00	No
	11	2	-2.81	0.00	0.00	No	0.00	No
	12	2	-0.11	0.00	0.00	No	0.00	No
S	1	2	-0.05	0.00	0.00	No	0.00	No
	2	2	-0.05	0.00	0.00	No	0.00	No
	3	2	-0.05	0.00	0.00	No	0.00	No

4	2	-0.05	0.00	0.00	No	0.00	No
5	2	-0.04	0.00	0.00	No	0.00	No
6	2	-0.02	0.00	0.00	No	0.00	No
7	2	-0.05	0.00	0.00	No	0.00	No
8	2	-0.05	0.00	0.00	No	0.00	No
9	2	-0.05	0.00	0.00	No	0.00	No
10	2	-0.04	0.00	0.00	No	0.00	No
11	2	-0.02	0.00	0.00	No	0.00	No
12	2	-0.05	0.00	0.00	No	0.00	No

Self weight multipliers for load conditions

Condition	Description	Self weight multiplier			
		Comb.	MultX	MultY	MultZ
DL	Dead Load	No	0.00	-1.00	0.00
VS	Vert Soil Load	No	0.00	0.00	0.00
HS	Horiz Soil Load	No	0.00	0.00	0.00
S	Snow Load	No	0.00	0.00	0.00
S1	DL+VS+HS+S	Yes	0.00	0.00	0.00
C1	1.2DL+1.2VS+1.6HS+1.6S	Yes	0.00	0.00	0.00

Earthquake (Dynamic analysis only)

Condition	a/g	Ang. [Deg]	Damp. [%]
DL	0.00	0.00	0.00
VS	0.00	0.00	0.00
HS	0.00	0.00	0.00
S	0.00	0.00	0.00
S1	0.00	0.00	0.00
C1	0.00	0.00	0.00

Load condition: C1=1.2DL+1.2VS+1.6HS+1.6S

Px = Spring Support Reaction at Wale Support Location (radial direction)
= Load Applied to Wale Beam Supports

Example: $P3 = [(F_x^2)+(F_y^2)]^{0.5} = [(6.89k)^2+(9.6k)^2]^{0.5} = 11.8\ k$

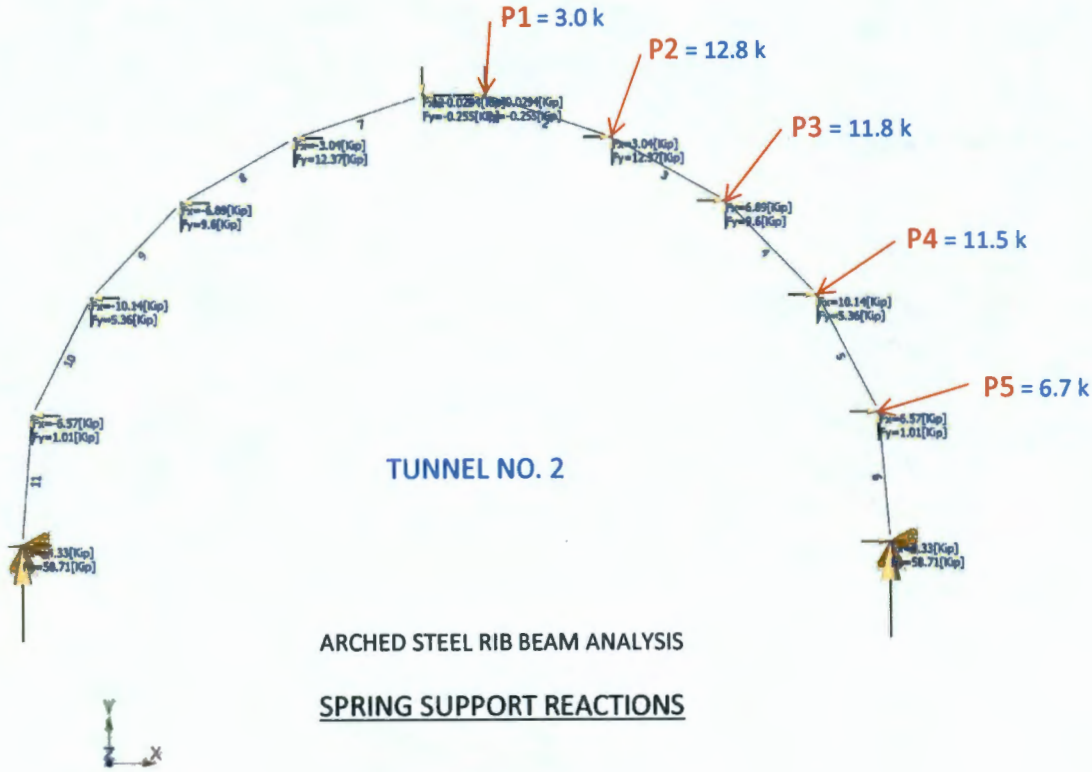

ARCHED STEEL RIB BEAM ANALYSIS

SPRING SUPPORT REACTIONS

LRFD FACTORED LOADS
1.2(DL) + 1.6(S) + 1.6(H)

Steel Code Check

Report: Comprehensive

Members: Hot-rolled
Design code: AISC 360-2010 LRFD

Member	:	**1 (Arched Steel Rib)**
Design status	:	**OK**

Section information

Section name: S 6X12.5 **(US)**

Dimensions

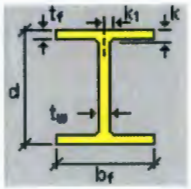

bf	=	3.330	[in]	Width
d	=	6.000	[in]	Depth
k	=	0.813	[in]	Distance k
k1	=	0.813	[in]	Distance k1
tf	=	0.359	[in]	Flange thickness
tw	=	0.232	[in]	Web thickness

Properties

Section properties	**Unit**	**Major axis**	**Minor axis**
Gross area of the section. (Ag)	[in2]	3.660	
Moment of Inertia (local axes) (I)	[in4]	22.000	1.800
Moment of Inertia (principal axes) (I')	[in4]	22.000	1.800
Bending constant for moments (principal axis) (J')	[in]	0.000	0.000
Radius of gyration (local axes) (r)	[in]	2.452	0.701
Radius of gyration (principal axes) (r')	[in]	2.452	0.701
Saint-Venant torsion constant. (J)	[in4]	0.167	
Section warping constant. (Cw)	[in6]	14.300	
Distance from centroid to shear center (principal axis) (xo,yo)	[in]	0.000	0.000
Top elastic section modulus of the section (local axis) (Ssup)	[in3]	7.340	1.080
Bottom elastic section modulus of the section (local axis) (Sinf)	[in3]	7.340	1.080
Top elastic section modulus of the section (principal axis) (S'sup)	[in3]	7.340	1.080
Bottom elastic section modulus of the section (principal axis) (S'inf)	[in3]	7.340	1.080
Plastic section modulus (local axis) (Z)	[in3]	8.450	1.860
Plastic section modulus (principal axis) (Z')	[in3]	8.450	1.860
Polar radius of gyration. (ro)	[in]	2.550	
Area for shear (Aw)	[in2]	2.390	1.390
Torsional constant. (C)	[in3]	0.352	

Material : A36

Properties	Unit	Value
Yield stress (Fy):	[Kip/in2]	36.00
Tensile strength (Fu):	[Kip/in2]	58.00
Elasticity Modulus (E):	[Kip/in2]	29000.00
Shear modulus for steel (G):	[Kip/in2]	11507.94

DESIGN CRITERIA

Description	Unit	Value
Length for tension slenderness ratio (L)	[ft]	1.00

Distance between member lateral bracing points

Length (Lb) [ft] Top	Bottom
1.25	1.25

Laterally unbraced length

Length [ft] Major axis(L33)	Minor axis(L22)	Torsional axis(Lt)	Effective length factor Major axis(K33)	Minor axis(K22)	Torsional axis(Kt)
1.25	1.00	1.25	1.0	1.0	1.0

Additional assumptions

Continuous lateral torsional restraint	No
Tension field action	No
Continuous flexural torsional restraint	No
Effective length factor value type	None
Major axis frame type	Sway
Minor axis frame type	Sway

DESIGN CHECKS

AXIAL TENSION DESIGN ✔

Axial tension

Ratio	:	0.00		
Capacity	:	118.58 [Kip]	Reference	: Eq. Sec. D2
Demand	:	0.00 [Kip]	Ctrl Eq.	: C1 at 0.00%

Intermediate results	Unit	Value	Reference
Factored axial tension capacity(ϕP_n)	[Kip]	118.58	Eq. Sec. D2
Nominal axial tension capacity (P_n)	[Kip]	131.76	Eq. D2-1

AXIAL COMPRESSION DESIGN ✔

Compression in the major axis 33

Ratio	:	0.50		
Capacity	:	118.35 [Kip]	Reference	: Sec. E1
Demand	:	59.49 [Kip]	Ctrl Eq.	: C1 at 0.00%

Intermediate results	Unit	Value	Reference
Section classification			
Unstiffened element classification	--	Non slender	
Unstiffened element slenderness (λ)	--	4.64	
Unstiffened element limiting slenderness (λ_r)	--	15.89	
Stiffened element classification	--	Non slender	
Stiffened element slenderness (λ)	--	18.85	
Stiffened element limiting slenderness (λ_r)	--	42.29	
Factored flexural buckling strength(ϕP_{n33})	[Kip]	118.35	Sec. E1
Effective length factor (K_{33})	--	1.00	
Unbraced length (L_{33})	[ft]	1.25	
Effective slenderness ($(KL/r)_{33}$)	--	6.12	Eq. E3-4
Elastic critical buckling stress (F_{e33})	[Kip/in2]	7646.40	Eq. E3-4
Reduction factor for slender unstiffened elements (Q_{s33})	--	1.00	
Effective area of the cross section based on the effective width (A_{eff33})	[in2]	3.66	Eq. E3-2
Reduction factor for slender stiffened elements (Q_{a33})	--	1.00	
Full reduction factor for slender elements (Q_{33})	--	1.00	Sec. E7
Critical stress for flexural buckling (F_{cr33})	[Kip/in2]	35.93	Eq. E3-2
Nominal flexural buckling strength (P_{n33})	[Kip]	131.50	Eq. E3-1

Compression in the minor axis 22

Ratio	:	0.51		
Capacity	:	116.49 [Kip]	Reference	: Sec. E4
Demand	:	59.49 [Kip]	Ctrl Eq.	: C1 at 0.00%

Intermediate results	Unit	Value	Reference
Section classification			
Unstiffened element classification	--	Non slender	
Unstiffened element slenderness (λ)	--	4.64	
Unstiffened element limiting slenderness (λ_r)	--	15.89	
Stiffened element classification	--	Non slender	
Stiffened element slenderness (λ)	--	18.85	
Stiffened element limiting slenderness (λ_r)	--	42.29	
Factored flexural buckling strength(ϕP_{n22})	[Kip]	116.77	Sec. E1
Effective length factor (K_{22})	--	1.00	
Unbraced length (L_{22})	[ft]	1.00	
Effective slenderness ($(KL/r)_{22}$)	--	17.11	Eq. E3-4
Elastic critical buckling stress (F_{e22})	[Kip/in2]	977.52	Eq. E3-4
Reduction factor for slender unstiffened elements (Q_{s22})	--	1.00	
Effective area of the cross section based on the effective width (A_{eff22})	[in2]	3.66	Eq. E3-2
Reduction factor for slender stiffened elements (Q_{a22})	--	1.00	
Full reduction factor for slender elements (Q_{22})	--	1.00	Sec. E7
Critical stress for flexural buckling (F_{cr22})	[Kip/in2]	35.45	Eq. E3-2
Nominal flexural buckling strength (P_{n22})	[Kip]	129.74	Eq. E3-1
Factored torsional or flexural-torsional buckling strength(ϕP_{n11})	[Kip]	116.49	Sec. E4
Effective length factor (K_{11})	--	1.00	
Unbraced length (L_{11})	[ft]	1.25	
Flexural constant (H)	--	1.00	Eq. E4-10
Torsional or flexural-torsional elastic buckling stress (F_{e11})	[Kip/in2]	845.07	Eq. E4-4
Elastic torsional buckling stress (F_{ez})	[Kip/in2]	845.07	Eq. E4-9
Reduction factor for slender unstiffened elements (Q_{s11})	--	1.00	
Effective area of the cross section based on the effective width (A_{eff11})	[in2]	3.66	Eq. E3-2
Reduction factor for slender stiffened elements (Q_{a11})	--	1.00	
Full reduction factor for slender elements (Q_{11})	--	1.00	Sec. E7
Critical stress for torsional or flexural-torsional buckling (F_{cr11})	[Kip/in2]	35.36	Eq. E3-2
Nominal torsional or flexural-torsional buckling strength (P_{n11})	[Kip]	129.43	Eq. E4-1

FLEXURAL DESIGN ✔

Bending about major axis, M33

Ratio	:	0.55		
Capacity	:	22.82 [Kip*ft]	Reference	: Sec. F1
Demand	:	-12.54 [Kip*ft]	Ctrl Eq.	: C1 at 100.00%

Intermediate results	Unit	Value	Reference
Section classification			
Unstiffened element classification	--	Compact	
Unstiffened element slenderness (λ)	--	4.64	
Limiting slenderness for noncompact unstiffened element (λ_r)	--	28.38	
Limiting slenderness for compact unstiffened element (λ_p)	--	10.79	
Stiffened element classification	--	Compact	
Stiffened element slenderness (λ)	--	18.85	
Limiting slenderness for noncompact stiffened element (λ_r)	--	161.78	
Limiting slenderness for compact stiffened element (λ_p)	--	106.72	
Factored yielding strength(ϕM_n)	[Kip*ft]	22.82	Sec. F1
Yielding (M_n)	[Kip*ft]	25.35	Eq. F2-1

Bending about minor axis, M22

Ratio	:	0.00		
Capacity	:	4.67 [Kip*ft]	Reference	: Sec. F1
Demand	:	0.00 [Kip*ft]	Ctrl Eq.	: C1 at 0.00%

Intermediate results	Unit	Value	Reference
Section classification			
Unstiffened element classification	--	Compact	
Unstiffened element slenderness (λ)	--	4.64	
Limiting slenderness for noncompact unstiffened element (λ_r)	--	28.38	
Limiting slenderness for compact unstiffened element (λ_p)	--	10.79	
Stiffened element classification	--	Compact	
Stiffened element slenderness (λ)	--	18.85	
Limiting slenderness for noncompact stiffened element (λ_r)	--	161.78	
Limiting slenderness for compact stiffened element (λ_p)	--	106.72	
Factored yielding strength(ϕM_n)	[Kip*ft]	4.67	Sec. F1
Yielding (M_n)	[Kip*ft]	5.18	Eq. F6-1

DESIGN FOR SHEAR ✔

Shear in major axis 33

Ratio	:	0.00		
Capacity	:	46.46 [Kip]		
Demand	:	0.00 [Kip]	Ctrl Eq.	: C1 at 0.00%

Intermediate results	Unit	Value	Reference
Factored shear capacity(ϕV_n)	[Kip]	46.46	
Web slenderness (λ_w)	--	4.64	Sec. G2
Shear area (A_w)	[in2]	2.39	
Web buckling coefficient (k_v)	--	1.20	Sec. G7
Web buckling coefficient (C_v)	--	1.00	Eq. G2-3
Nominal shear strength (V_n)	[Kip]	51.62	Eq. G2-1

Shear in minor axis 22

Ratio	:	0.16		
Capacity	:	30.02 [Kip]	Reference	: Sec. G2.1(a)
Demand	:	-4.90 [Kip]	Ctrl Eq.	: C1 at 100.00%

Intermediate results	Unit	Value	Reference
Factored shear capacity(ϕV_n)	[Kip]	30.02	Sec. G2.1(a)
Web slenderness (λ_w)	--	18.85	Sec. G2
Shear area (A_w)	[in2]	1.39	
Web buckling coefficient (C_v)	--	1.00	Eq. G2-2
Nominal shear strength (V_n)	[Kip]	30.02	Eq. G2-1

COMBINED ACTIONS DESIGN ✔

Combined flexure and axial compression

Ratio	:	0.99		
Ctrl Eq.	:	C1 at 100.00%	Reference	: Eq. H1-1a

Intermediate results	Unit	Value	Reference
Interaction for doubly symmetric members for in-plane bending	--	0.99	Eq. H1-1a
In-plane required flexural strength (M_{r33})	[Kip*ft]	-12.54	
In-plane available flexural strength (M_{c33})	[Kip*ft]	22.82	Sec. F1
In-plane required axial compressive strength (P_r)	[Kip]	59.49	
In-plane available axial compressive strength (P_c)	[Kip]	118.35	Sec. E1
Interaction for doubly symmetric members for out-of-plane bending	--	0.86	Eq. H1-2
Out-of-plane required flexural strength (M_{r33})	[Kip*ft]	-12.54	
Out-of-plane available flexural-torsional strength (M_{c33})	[Kip*ft]	22.82	Sec. F1
Out-of-plane required axial compressive strength (P_r)	[Kip]	59.49	
Out-of-plane available axial compressive strength (P_{co})	[Kip]	116.49	Sec. E4

Combined flexure and axial tension

Ratio	:	0.55		
Ctrl Eq.	:	C1 at 100.00%	Reference	: Eq. H1-1b

Intermediate results	Unit	Value	Reference
Required flexural strength about strong axis (M_{r33})	[Kip*ft]	-12.54	
Available flexural strength about strong axis (M_{c33})	[Kip*ft]	22.82	Sec. F1
Required flexural strength about weak axis (M_{r22})	[Kip*ft]	0.00	
Available flexural strength about weak axis (M_{c22})	[Kip*ft]	4.67	Sec. F1
Required axial tensile strength (P_r)	[Kip]	0.00	
Available axial tensile strength (P_c)	[Kip]	118.58	Eq. Sec. D2

Combined flexure and axial compression about local axis

Ratio	:	N/A		
Ctrl Eq.	:	--	Reference	:

Combined flexure and axial tension about local axis

Ratio	:	N/A		
Ctrl Eq.	:	--	Reference	:

Member : **2 (Arched Steel Rib)**
Design status : **OK**

Section information

Section name: S 6X12.5 **(US)**

Dimensions

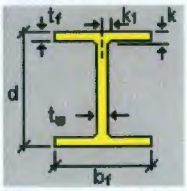

bf	=	3.330	[in]	Width
d	=	6.000	[in]	Depth
k	=	0.813	[in]	Distance k
k1	=	0.813	[in]	Distance k1
tf	=	0.359	[in]	Flange thickness
tw	=	0.232	[in]	Web thickness

Properties

Section properties	**Unit**	**Major axis**	**Minor axis**
Gross area of the section. (Ag)	[in2]	3.660	
Moment of Inertia (local axes) (I)	[in4]	22.000	1.800
Moment of Inertia (principal axes) (I')	[in4]	22.000	1.800
Bending constant for moments (principal axis) (J')	[in]	0.000	0.000
Radius of gyration (local axes) (r)	[in]	2.452	0.701
Radius of gyration (principal axes) (r')	[in]	2.452	0.701
Saint-Venant torsion constant. (J)	[in4]	0.167	
Section warping constant. (Cw)	[in6]	14.300	
Distance from centroid to shear center (principal axis) (xo,yo)	[in]	0.000	0.000
Top elastic section modulus of the section (local axis) (Ssup)	[in3]	7.340	1.080
Bottom elastic section modulus of the section (local axis) (Sinf)	[in3]	7.340	1.080
Top elastic section modulus of the section (principal axis) (S'sup)	[in3]	7.340	1.080
Bottom elastic section modulus of the section (principal axis) (S'inf)	[in3]	7.340	1.080
Plastic section modulus (local axis) (Z)	[in3]	8.450	1.860
Plastic section modulus (principal axis) (Z')	[in3]	8.450	1.860
Polar radius of gyration. (ro)	[in]	2.550	
Area for shear (Aw)	[in2]	2.390	1.390
Torsional constant. (C)	[in3]	0.352	

Material : A36

Properties	**Unit**	**Value**
Yield stress (Fy):	[Kip/in2]	36.00
Tensile strength (Fu):	[Kip/in2]	58.00
Elasticity Modulus (E):	[Kip/in2]	29000.00
Shear modulus for steel (G):	[Kip/in2]	11507.94

DESIGN CRITERIA

Description	**Unit**	**Value**
Length for tension slenderness ratio (L)	[ft]	5.35

Distance between member lateral bracing points

Length (Lb) [ft] Top	Bottom
5.35	5.35

Laterally unbraced length

Length [ft] Major axis(L33)	Minor axis(L22)	Torsional axis(Lt)	Effective length factor Major axis(K33)	Minor axis(K22)	Torsional axis(Kt)
5.35	1.00	5.35	1.0	1.0	1.0

Additional assumptions

Continuous lateral torsional restraint	No
Tension field action	No
Continuous flexural torsional restraint	No
Effective length factor value type	None
Major axis frame type	Sway
Minor axis frame type	Sway

DESIGN CHECKS

AXIAL TENSION DESIGN ✔

Axial tension

Ratio	:	0.00		
Capacity	:	118.58 [Kip]	Reference	: Eq. Sec. D2
Demand	:	0.00 [Kip]	Ctrl Eq.	: C1 at 0.00%

Intermediate results	Unit	Value	Reference
Factored axial tension capacity(ϕP_n)	[Kip]	118.58	Eq. Sec. D2
Nominal axial tension capacity (P_n)	[Kip]	131.76	Eq. D2-1

AXIAL COMPRESSION DESIGN ✔

Compression in the major axis 33

Ratio	:	0.51		
Capacity	:	114.38 [Kip]	Reference	: Sec. E1
Demand	:	58.18 [Kip]	Ctrl Eq.	: C1 at 100.00%

Intermediate results	Unit	Value	Reference
Section classification			
Unstiffened element classification	--	Non slender	
Unstiffened element slenderness (λ)	--	4.64	
Unstiffened element limiting slenderness (λ_r)	--	15.89	
Stiffened element classification	--	Non slender	
Stiffened element slenderness (λ)	--	18.85	
Stiffened element limiting slenderness (λ_r)	--	42.29	
Factored flexural buckling strength(ϕP_{n33})	[Kip]	114.38	Sec. E1
Effective length factor (K_{33})	--	1.00	
Unbraced length (L_{33})	[ft]	5.35	
Effective slenderness ($(KL/r)_{33}$)	--	26.19	Eq. E3-4
Elastic critical buckling stress (F_{e33})	[Kip/in2]	417.37	Eq. E3-4
Reduction factor for slender unstiffened elements (Q_{s33})	--	1.00	
Effective area of the cross section based on the effective width (A_{eff33})	[in2]	3.66	Eq. E3-2
Reduction factor for slender stiffened elements (Q_{a33})	--	1.00	

Full reduction factor for slender elements (Q_{33})	--	1.00	Sec. E7
Critical stress for flexural buckling (F_{cr33})	[Kip/in2]	34.72	Eq. E3-2
Nominal flexural buckling strength (P_{n33})	[Kip]	127.09	Eq. E3-1

Compression in the minor axis 22

Ratio	:	0.55		
Capacity	:	104.86 [Kip]	Reference	: Sec. E4
Demand	:	58.18 [Kip]	Ctrl Eq.	: C1 at 100.00%

Intermediate results	Unit	Value	Reference
Section classification			
Unstiffened element classification	--	Non slender	
Unstiffened element slenderness (λ)	--	4.64	
Unstiffened element limiting slenderness (λ_r)	--	15.89	
Stiffened element classification	--	Non slender	
Stiffened element slenderness (λ)	--	18.85	
Stiffened element limiting slenderness (λ_r)	--	42.29	
Factored flexural buckling strength(ϕP_{n22})	[Kip]	116.77	Sec. E1
Effective length factor (K_{22})	--	1.00	
Unbraced length (L_{22})	[ft]	1.00	
Effective slenderness ($(KL/r)_{22}$)	--	17.11	Eq. E3-4
Elastic critical buckling stress (F_{e22})	[Kip/in2]	977.52	Eq. E3-4
Reduction factor for slender unstiffened elements (Q_{s22})	--	1.00	
Effective area of the cross section based on the effective width (A_{eff22})	[in2]	3.66	Eq. E3-2
Reduction factor for slender stiffened elements (Q_{a22})	--	1.00	
Full reduction factor for slender elements (Q_{22})	--	1.00	Sec. E7
Critical stress for flexural buckling (F_{cr22})	[Kip/in2]	35.45	Eq. E3-2
Nominal flexural buckling strength (P_{n22})	[Kip]	129.74	Eq. E3-1
Factored torsional or flexural-torsional buckling strength(ϕP_{n11})	[Kip]	104.86	Sec. E4
Effective length factor (K_{11})	--	1.00	
Unbraced length (L_{11})	[ft]	5.35	
Flexural constant (H)	--	1.00	Eq. E4-10
Torsional or flexural-torsional elastic buckling stress (F_{e11})	[Kip/in2]	122.47	Eq. E4-4
Elastic torsional buckling stress (F_{ez})	[Kip/in2]	122.47	Eq. E4-9
Reduction factor for slender unstiffened elements (Q_{s11})	--	1.00	
Effective area of the cross section based on the effective width (A_{eff11})	[in2]	3.66	Eq. E3-2
Reduction factor for slender stiffened elements (Q_{a11})	--	1.00	
Full reduction factor for slender elements (Q_{11})	--	1.00	Sec. E7
Critical stress for torsional or flexural-torsional buckling (F_{cr11})	[Kip/in2]	31.83	Eq. E3-2
Nominal torsional or flexural-torsional buckling strength (P_{n11})	[Kip]	116.51	Eq. E4-1

FLEXURAL DESIGN ✔

Bending about major axis, M33

Ratio	:	0.55		
Capacity	:	22.82 [Kip*ft]	Reference	: Sec. F1
Demand	:	-12.54 [Kip*ft]	Ctrl Eq.	: C1 at 0.00%

Intermediate results	Unit	Value	Reference
Section classification			
Unstiffened element classification	--	Compact	
Unstiffened element slenderness (λ)	--	4.64	
Limiting slenderness for noncompact unstiffened element (λ_r)	--	28.38	
Limiting slenderness for compact unstiffened element (λ_p)	--	10.79	
Stiffened element classification	--	Compact	
Stiffened element slenderness (λ)	--	18.85	
Limiting slenderness for noncompact stiffened element (λ_r)	--	161.78	
Limiting slenderness for compact stiffened element (λ_p)	--	106.72	
Factored yielding strength(ϕM_n)	[Kip*ft]	22.82	Sec. F1

Yielding (M_n)	[Kip*ft]	25.35	Eq. F2-1
Factored lateral-torsional buckling strength(ϕM_n)	[Kip*ft]	22.82	Sec. F1
Limiting laterally unbraced length for yielding (L_p)	[ft]	2.92	Eq. F2-5
Effective radius of gyration used in the determination of Lr (r_{ts})	[in]	0.83	Eq. F2-7
Lateral-torsional factor (c)	--	1.00	Eq. F2-8a
Limiting laterally unbraced length for inelastic lateral-torsional buckling (Lr	[ft]	14.47	Eq. F2-6
Lateral-torsional buckling modification factor (Cb)	--	2.06	Eq. F1-1
Critical stress (F_{cr})	[Kip/in2]	167.38	Eq. F2-4
Lateral-torsional buckling (M_n)	[Kip*ft]	25.35	Eq. F2-2

Bending about minor axis, M22

Ratio	:	0.00		
Capacity	:	4.67 [Kip*ft]	Reference	: Sec. F1
Demand	:	0.00 [Kip*ft]	Ctrl Eq.	: C1 at 0.00%

Intermediate results	Unit	Value	Reference
Section classification			
Unstiffened element classification	--	Compact	
Unstiffened element slenderness (λ)	--	4.64	
Limiting slenderness for noncompact unstiffened element (λ_r)	--	28.38	
Limiting slenderness for compact unstiffened element (λ_p)	--	10.79	
Stiffened element classification	--	Compact	
Stiffened element slenderness (λ)	--	18.85	
Limiting slenderness for noncompact stiffened element (λ_r)	--	161.78	
Limiting slenderness for compact stiffened element (λ_p)	--	106.72	
Factored yielding strength(ϕM_n)	[Kip*ft]	4.67	Sec. F1
Yielding (M_n)	[Kip*ft]	5.18	Eq. F6-1

DESIGN FOR SHEAR ✔

Shear in major axis 33

Ratio	:	0.00		
Capacity	:	46.46 [Kip]		
Demand	:	0.00 [Kip]	Ctrl Eq.	: C1 at 0.00%

Intermediate results	Unit	Value	Reference
Factored shear capacity(ϕV_n)	[Kip]	46.46	
Web slenderness (λ_w)	--	4.64	Sec. G2
Shear area (A_w)	[in2]	2.39	
Web buckling coefficient (k_v)	--	1.20	Sec. G7
Web buckling coefficient (C_v)	--	1.00	Eq. G2-3
Nominal shear strength (V_n)	[Kip]	51.62	Eq. G2-1

Shear in minor axis 22

Ratio	:	0.46		
Capacity	:	30.02 [Kip]	Reference	: Sec. G2.1(a)
Demand	:	13.68 [Kip]	Ctrl Eq.	: C1 at 0.00%

Intermediate results	Unit	Value	Reference
Factored shear capacity(ϕV_n)	[Kip]	30.02	Sec. G2.1(a)
Web slenderness (λ_w)	--	18.85	Sec. G2
Shear area (A_w)	[in2]	1.39	
Web buckling coefficient (C_v)	--	1.00	Eq. G2-2
Nominal shear strength (V_n)	[Kip]	30.02	Eq. G2-1

COMBINED ACTIONS DESIGN ✔

Combined flexure and axial compression

Ratio	:	1.00		
Ctrl Eq.	:	C1 at 0.00%	Reference	: Eq. H1-1a

Intermediate results	Unit	Value	Reference
Interaction for doubly symmetric members for in-plane bending	--	1.00	Eq. H1-1a
In-plane required flexural strength (M_{r33})	[Kip*ft]	-12.54	
In-plane available flexural strength (M_{c33})	[Kip*ft]	22.82	Sec. F1
In-plane required axial compressive strength (P_r)	[Kip]	58.16	
In-plane available axial compressive strength (P_c)	[Kip]	114.38	Sec. E1
Interaction for doubly symmetric members for out-of-plane bending	--	0.75	Eq. H1-2
Out-of-plane required flexural strength (M_{r33})	[Kip*ft]	-12.54	
Out-of-plane available flexural-torsional strength (M_{c33})	[Kip*ft]	22.82	Sec. F1
Out-of-plane required axial compressive strength (P_r)	[Kip]	58.16	
Out-of-plane available axial compressive strength (P_{co})	[Kip]	104.86	Sec. E4

Combined flexure and axial tension

Ratio	:	0.55		
Ctrl Eq.	:	C1 at 0.00%	Reference	: Eq. H1-1b

Intermediate results	Unit	Value	Reference
Required flexural strength about strong axis (M_{r33})	[Kip*ft]	-12.54	
Available flexural strength about strong axis (M_{c33})	[Kip*ft]	22.82	Sec. F1
Required flexural strength about weak axis (M_{r22})	[Kip*ft]	0.00	
Available flexural strength about weak axis (M_{c22})	[Kip*ft]	4.67	Sec. F1
Required axial tensile strength (P_r)	[Kip]	0.00	
Available axial tensile strength (P_c)	[Kip]	118.58	Eq. Sec. D2

Combined flexure and axial compression about local axis

Ratio	:	N/A		
Ctrl Eq.	:	--	Reference	:

Combined flexure and axial tension about local axis

Ratio	:	N/A		
Ctrl Eq.	:	--	Reference	:

Member : 3 (Arched Steel Rib)
Design status : OK

Section information

Section name: S 6X12.5 **(US)**

Dimensions

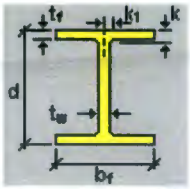

bf	=	3.330	[in]	Width
d	=	6.000	[in]	Depth
k	=	0.813	[in]	Distance k
k1	=	0.813	[in]	Distance k1
tf	=	0.359	[in]	Flange thickness
tw	=	0.232	[in]	Web thickness

Properties

Section properties	Unit	Major axis	Minor axis
Gross area of the section. (Ag)	[in2]	3.660	
Moment of Inertia (local axes) (I)	[in4]	22.000	1.800
Moment of Inertia (principal axes) (I')	[in4]	22.000	1.800
Bending constant for moments (principal axis) (J')	[in]	0.000	0.000
Radius of gyration (local axes) (r)	[in]	2.452	0.701
Radius of gyration (principal axes) (r')	[in]	2.452	0.701
Saint-Venant torsion constant. (J)	[in4]	0.167	
Section warping constant. (Cw)	[in6]	14.300	
Distance from centroid to shear center (principal axis) (xo,yo)	[in]	0.000	0.000
Top elastic section modulus of the section (local axis) (Ssup)	[in3]	7.340	1.080
Bottom elastic section modulus of the section (local axis) (Sinf)	[in3]	7.340	1.080
Top elastic section modulus of the section (principal axis) (S'sup)	[in3]	7.340	1.080
Bottom elastic section modulus of the section (principal axis) (S'inf)	[in3]	7.340	1.080
Plastic section modulus (local axis) (Z)	[in3]	8.450	1.860
Plastic section modulus (principal axis) (Z')	[in3]	8.450	1.860
Polar radius of gyration. (ro)	[in]	2.550	
Area for shear (Aw)	[in2]	2.390	1.390
Torsional constant. (C)	[in3]	0.352	

Material : A36

Properties	Unit	Value
Yield stress (Fy):	[Kip/in2]	36.00
Tensile strength (Fu):	[Kip/in2]	58.00
Elasticity Modulus (E):	[Kip/in2]	29000.00
Shear modulus for steel (G):	[Kip/in2]	11507.94

DESIGN CRITERIA

Description	Unit	Value
Length for tension slenderness ratio (L)	[ft]	5.20

Distance between member lateral bracing points

Length (Lb) [ft] Top	Bottom
5.20	5.20

Laterally unbraced length

Length [ft]			Effective length factor		
Major axis(L33)	Minor axis(L22)	Torsional axis(Lt)	Major axis(K33)	Minor axis(K22)	Torsional axis(Kt)
5.20	1.00	5.20	1.0	1.0	1.0

Additional assumptions

Continuous lateral torsional restraint	No
Tension field action	No
Continuous flexural torsional restraint	No
Effective length factor value type	None
Major axis frame type	Sway
Minor axis frame type	Sway

DESIGN CHECKS

AXIAL TENSION DESIGN ✔

Axial tension

Ratio	:	0.00		
Capacity	:	118.58 [Kip]	Reference	: Eq. Sec. D2
Demand	:	0.00 [Kip]	Ctrl Eq.	: C1 at 0.00%

Intermediate results	Unit	Value	Reference
Factored axial tension capacity(ϕP_n)	[Kip]	118.58	Eq. Sec. D2
Nominal axial tension capacity (P_n)	[Kip]	131.76	Eq. D2-1

AXIAL COMPRESSION DESIGN ✔

Compression in the major axis 33

Ratio	:	0.49		
Capacity	:	114.61 [Kip]	Reference	: Sec. E1
Demand	:	56.00 [Kip]	Ctrl Eq.	: C1 at 100.00%

Intermediate results	Unit	Value	Reference
Section classification			
Unstiffened element classification	--	Non slender	
Unstiffened element slenderness (λ)	--	4.64	
Unstiffened element limiting slenderness (λ_r)	--	15.89	
Stiffened element classification	--	Non slender	
Stiffened element slenderness (λ)	--	18.85	
Stiffened element limiting slenderness (λ_r)	--	42.29	
Factored flexural buckling strength(ϕP_{n33})	[Kip]	114.61	Sec. E1
Effective length factor (K_{33})	--	1.00	
Unbraced length (L_{33})	[ft]	5.20	
Effective slenderness ($(KL/r)_{33}$)	--	25.43	Eq. E3-4
Elastic critical buckling stress (F_{e33})	[Kip/in2]	442.57	Eq. E3-4
Reduction factor for slender unstiffened elements (Q_{s33})	--	1.00	
Effective area of the cross section based on the effective width (A_{eff33})	[in2]	3.66	Eq. E3-2
Reduction factor for slender stiffened elements (Q_{a33})	--	1.00	
Full reduction factor for slender elements (Q_{33})	--	1.00	Sec. E7
Critical stress for flexural buckling (F_{cr33})	[Kip/in2]	34.79	Eq. E3-2
Nominal flexural buckling strength (P_{n33})	[Kip]	127.35	Eq. E3-1

Compression in the minor axis 22

Ratio	: 0.53			
Capacity	: 105.12 [Kip]	Reference	: Sec. E4	
Demand	: 56.00 [Kip]	Ctrl Eq.	: C1 at 100.00%	

Intermediate results	Unit	Value	Reference
Section classification			
Unstiffened element classification	--	Non slender	
Unstiffened element slenderness (λ)	--	4.64	
Unstiffened element limiting slenderness (λ_r)	--	15.89	
Stiffened element classification	--	Non slender	
Stiffened element slenderness (λ)	--	18.85	
Stiffened element limiting slenderness (λ_r)	--	42.29	
Factored flexural buckling strength(ϕP_{n22})	[Kip]	116.77	Sec. E1
Effective length factor (K_{22})	--	1.00	
Unbraced length (L_{22})	[ft]	1.00	
Effective slenderness ($(KL/r)_{22}$)	--	17.11	Eq. E3-4
Elastic critical buckling stress (F_{e22})	[Kip/in2]	977.52	Eq. E3-4
Reduction factor for slender unstiffened elements (Q_{s22})	--	1.00	
Effective area of the cross section based on the effective width (A_{eff22})	[in2]	3.66	Eq. E3-2
Reduction factor for slender stiffened elements (Q_{a22})	--	1.00	
Full reduction factor for slender elements (Q_{22})	--	1.00	Sec. E7
Critical stress for flexural buckling (F_{cr22})	[Kip/in2]	35.45	Eq. E3-2
Nominal flexural buckling strength (P_{n22})	[Kip]	129.74	Eq. E3-1
Factored torsional or flexural-torsional buckling strength(ϕP_{n11})	[Kip]	105.12	Sec. E4
Effective length factor (K_{11})	--	1.00	
Unbraced length (L_{11})	[ft]	5.20	
Flexural constant (H)	--	1.00	Eq. E4-10
Torsional or flexural-torsional elastic buckling stress (F_{e11})	[Kip/in2]	124.99	Eq. E4-4
Elastic torsional buckling stress (F_{ez})	[Kip/in2]	124.99	Eq. E4-9
Reduction factor for slender unstiffened elements (Q_{s11})	--	1.00	
Effective area of the cross section based on the effective width (A_{eff11})	[in2]	3.66	Eq. E3-2
Reduction factor for slender stiffened elements (Q_{a11})	--	1.00	
Full reduction factor for slender elements (Q_{11})	--	1.00	Sec. E7
Critical stress for torsional or flexural-torsional buckling (F_{cr11})	[Kip/in2]	31.91	Eq. E3-2
Nominal torsional or flexural-torsional buckling strength (P_{n11})	[Kip]	116.80	Eq. E4-1

FLEXURAL DESIGN ✔

Bending about major axis, M33

Ratio	: 0.55			
Capacity	: 22.82 [Kip*ft]	Reference	: Sec. F1	
Demand	: -12.58 [Kip*ft]	Ctrl Eq.	: C1 at 100.00%	

Intermediate results	Unit	Value	Reference
Section classification			
Unstiffened element classification	--	Compact	
Unstiffened element slenderness (λ)	--	4.64	
Limiting slenderness for noncompact unstiffened element (λ_r)	--	28.38	
Limiting slenderness for compact unstiffened element (λ_p)	--	10.79	
Stiffened element classification	--	Compact	
Stiffened element slenderness (λ)	--	18.85	
Limiting slenderness for noncompact stiffened element (λ_r)	--	161.78	
Limiting slenderness for compact stiffened element (λ_p)	--	106.72	
Factored yielding strength(ϕM_n)	[Kip*ft]	22.82	Sec. F1
Yielding (M_n)	[Kip*ft]	25.35	Eq. F2-1
Factored lateral-torsional buckling strength(ϕM_n)	[Kip*ft]	22.82	Sec. F1
Limiting laterally unbraced length for yielding (L_p)	[ft]	2.92	Eq. F2-5
Effective radius of gyration used in the determination of Lr (r_{ts})	[in]	0.83	Eq. F2-7
Lateral-torsional factor (c)	--	1.00	Eq. F2-8a
Limiting laterally unbraced length for inelastic lateral-torsional buckling (Lr	[ft]	14.47	Eq. F2-6

Lateral-torsional buckling modification factor (Cb)	--	2.13	Eq. F1-1
Critical stress (Fcr)	[Kip/in2]	180.41	Eq. F2-4
Lateral-torsional buckling (Mn)	[Kip*ft]	25.35	Eq. F2-2

Bending about minor axis, M22

Ratio	:	0.00		
Capacity	:	4.67 [Kip*ft]	Reference	: Sec. F1
Demand	:	0.00 [Kip*ft]	Ctrl Eq.	: C1 at 0.00%

Intermediate results	Unit	Value	Reference
Section classification			
Unstiffened element classification	--	Compact	
Unstiffened element slenderness (λ)	--	4.64	
Limiting slenderness for noncompact unstiffened element (λ_r)	--	28.38	
Limiting slenderness for compact unstiffened element (λ_p)	--	10.79	
Stiffened element classification	--	Compact	
Stiffened element slenderness (λ)	--	18.85	
Limiting slenderness for noncompact stiffened element (λ_r)	--	161.78	
Limiting slenderness for compact stiffened element (λ_p)	--	106.72	
Factored yielding strength(ϕM_n)	[Kip*ft]	4.67	Sec. F1
Yielding (Mn)	[Kip*ft]	5.18	Eq. F6-1

DESIGN FOR SHEAR ✔

Shear in major axis 33

Ratio	:	0.00		
Capacity	:	46.46 [Kip]		
Demand	:	0.00 [Kip]	Ctrl Eq.	: C1 at 0.00%

Intermediate results	Unit	Value	Reference
Factored shear capacity(ϕV_n)	[Kip]	46.46	
Web slenderness (λ_w)	--	4.64	Sec. G2
Shear area (Aw)	[in2]	2.39	
Web buckling coefficient (kv)	--	1.20	Sec. G7
Web buckling coefficient (Cv)	--	1.00	Eq. G2-3
Nominal shear strength (Vn)	[Kip]	51.62	Eq. G2-1

Shear in minor axis 22

Ratio	:	0.46		
Capacity	:	30.02 [Kip]	Reference	: Sec. G2.1(a)
Demand	:	-13.89 [Kip]	Ctrl Eq.	: C1 at 100.00%

Intermediate results	Unit	Value	Reference
Factored shear capacity(ϕV_n)	[Kip]	30.02	Sec. G2.1(a)
Web slenderness (λ_w)	--	18.85	Sec. G2
Shear area (Aw)	[in2]	1.39	
Web buckling coefficient (Cv)	--	1.00	Eq. G2-2
Nominal shear strength (Vn)	[Kip]	30.02	Eq. G2-1

COMBINED ACTIONS DESIGN ✔

Combined flexure and axial compression

Ratio	:	0.98		
Ctrl Eq.	:	C1 at 100.00%	Reference	: Eq. H1-1a

Intermediate results	Unit	Value	Reference
Interaction for doubly symmetric members for in-plane bending	--	0.98	Eq. H1-1a
In-plane required flexural strength (M_{r33})	[Kip*ft]	-12.58	
In-plane available flexural strength (M_{c33})	[Kip*ft]	22.82	Sec. F1
In-plane required axial compressive strength (P_r)	[Kip]	56.00	
In-plane available axial compressive strength (P_c)	[Kip]	114.61	Sec. E1
Interaction for doubly symmetric members for out-of-plane bending	--	0.72	Eq. H1-2
Out-of-plane required flexural strength (M_{r33})	[Kip*ft]	-12.58	
Out-of-plane available flexural-torsional strength (M_{c33})	[Kip*ft]	22.82	Sec. F1
Out-of-plane required axial compressive strength (P_r)	[Kip]	56.00	
Out-of-plane available axial compressive strength (P_{co})	[Kip]	105.12	Sec. E4

Combined flexure and axial tension

Ratio	:	0.55		
Ctrl Eq.	:	C1 at 100.00%	Reference	: Eq. H1-1b

Intermediate results	Unit	Value	Reference
Required flexural strength about strong axis (M_{r33})	[Kip*ft]	-12.58	
Available flexural strength about strong axis (M_{c33})	[Kip*ft]	22.82	Sec. F1
Required flexural strength about weak axis (M_{r22})	[Kip*ft]	0.00	
Available flexural strength about weak axis (M_{c22})	[Kip*ft]	4.67	Sec. F1
Required axial tensile strength (P_r)	[Kip]	0.00	
Available axial tensile strength (P_c)	[Kip]	118.58	Eq. Sec. D2

Combined flexure and axial compression about local axis

Ratio	:	N/A		
Ctrl Eq.	:	--	Reference	:

Combined flexure and axial tension about local axis

Ratio	:	N/A		
Ctrl Eq.	:	--	Reference	:

Member : 4 (Arched Steel Rib)
Design status : OK

Section information

Section name: S 6X12.5 **(US)**

Dimensions

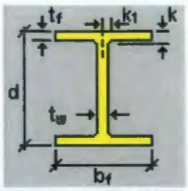

bf	=	3.330	[in]	Width
d	=	6.000	[in]	Depth
k	=	0.813	[in]	Distance k
k1	=	0.813	[in]	Distance k1
tf	=	0.359	[in]	Flange thickness
tw	=	0.232	[in]	Web thickness

Properties

Section properties	Unit	Major axis	Minor axis
Gross area of the section. (Ag)	[in2]	3.660	
Moment of Inertia (local axes) (I)	[in4]	22.000	1.800
Moment of Inertia (principal axes) (I')	[in4]	22.000	1.800
Bending constant for moments (principal axis) (J')	[in]	0.000	0.000
Radius of gyration (local axes) (r)	[in]	2.452	0.701
Radius of gyration (principal axes) (r')	[in]	2.452	0.701
Saint-Venant torsion constant. (J)	[in4]	0.167	
Section warping constant. (Cw)	[in6]	14.300	
Distance from centroid to shear center (principal axis) (xo,yo)	[in]	0.000	0.000
Top elastic section modulus of the section (local axis) (Ssup)	[in3]	7.340	1.080
Bottom elastic section modulus of the section (local axis) (Sinf)	[in3]	7.340	1.080
Top elastic section modulus of the section (principal axis) (S'sup)	[in3]	7.340	1.080
Bottom elastic section modulus of the section (principal axis) (S'inf)	[in3]	7.340	1.080
Plastic section modulus (local axis) (Z)	[in3]	8.450	1.860
Plastic section modulus (principal axis) (Z')	[in3]	8.450	1.860
Polar radius of gyration. (ro)	[in]	2.550	
Area for shear (Aw)	[in2]	2.390	1.390
Torsional constant. (C)	[in3]	0.352	

Material : A36

Properties	Unit	Value
Yield stress (Fy):	[Kip/in2]	36.00
Tensile strength (Fu):	[Kip/in2]	58.00
Elasticity Modulus (E):	[Kip/in2]	29000.00
Shear modulus for steel (G):	[Kip/in2]	11507.94

DESIGN CRITERIA

Description	Unit	Value
Length for tension slenderness ratio (L)	[ft]	5.20

Distance between member lateral bracing points

Length (Lb) [ft] Top	Bottom
5.20	5.20

Laterally unbraced length

Length [ft]			Effective length factor		
Major axis(L33)	Minor axis(L22)	Torsional axis(Lt)	Major axis(K33)	Minor axis(K22)	Torsional axis(Kt)
5.20	1.00	5.20	1.0	1.0	1.0

Additional assumptions

Continuous lateral torsional restraint	No
Tension field action	No
Continuous flexural torsional restraint	No
Effective length factor value type	None
Major axis frame type	Sway
Minor axis frame type	Sway

DESIGN CHECKS

AXIAL TENSION DESIGN ✔

Axial tension

Ratio	:	0.00		
Capacity	:	118.58 [Kip]	Reference	: Eq. Sec. D2
Demand	:	0.00 [Kip]	Ctrl Eq.	: C1 at 0.00%

Intermediate results	Unit	Value	Reference
Factored axial tension capacity(ϕP_n)	[Kip]	118.58	Eq. Sec. D2
Nominal axial tension capacity (P_n)	[Kip]	131.76	Eq. D2-1

AXIAL COMPRESSION DESIGN ✔

Compression in the major axis 33

Ratio	:	0.48		
Capacity	:	114.61 [Kip]	Reference	: Sec. E1
Demand	:	55.53 [Kip]	Ctrl Eq.	: C1 at 100.00%

Intermediate results	Unit	Value	Reference
Section classification			
Unstiffened element classification	--	Non slender	
Unstiffened element slenderness (λ)	--	4.64	
Unstiffened element limiting slenderness (λ_r)	--	15.89	
Stiffened element classification	--	Non slender	
Stiffened element slenderness (λ)	--	18.85	
Stiffened element limiting slenderness (λ_r)	--	42.29	
Factored flexural buckling strength(ϕP_{n33})	[Kip]	114.61	Sec. E1
Effective length factor (K_{33})	--	1.00	
Unbraced length (L_{33})	[ft]	5.20	
Effective slenderness ($(KL/r)_{33}$)	--	25.46	Eq. E3-4
Elastic critical buckling stress (F_{e33})	[Kip/in2]	441.66	Eq. E3-4
Reduction factor for slender unstiffened elements (Q_{s33})	--	1.00	
Effective area of the cross section based on the effective width (A_{eff33})	[in2]	3.66	Eq. E3-2
Reduction factor for slender stiffened elements (Q_{a33})	--	1.00	
Full reduction factor for slender elements (Q_{33})	--	1.00	Sec. E7
Critical stress for flexural buckling (F_{cr33})	[Kip/in2]	34.79	Eq. E3-2
Nominal flexural buckling strength (P_{n33})	[Kip]	127.34	Eq. E3-1

Compression in the minor axis 22

Ratio	:	0.53		
Capacity	:	105.11 [Kip]	Reference	: Sec. E4
Demand	:	55.53 [Kip]	Ctrl Eq.	: C1 at 100.00%

Intermediate results	Unit	Value	Reference
Section classification			
Unstiffened element classification	--	Non slender	
Unstiffened element slenderness (λ)	--	4.64	
Unstiffened element limiting slenderness (λ_r)	--	15.89	
Stiffened element classification	--	Non slender	
Stiffened element slenderness (λ)	--	18.85	
Stiffened element limiting slenderness (λ_r)	--	42.29	
Factored flexural buckling strength(ϕP_{n22})	[Kip]	116.77	Sec. E1
Effective length factor (K_{22})	--	1.00	
Unbraced length (L_{22})	[ft]	1.00	
Effective slenderness ($(KL/r)_{22}$)	--	17.11	Eq. E3-4
Elastic critical buckling stress (F_{e22})	[Kip/in2]	977.52	Eq. E3-4
Reduction factor for slender unstiffened elements (Q_{s22})	--	1.00	
Effective area of the cross section based on the effective width (A_{eff22})	[in2]	3.66	Eq. E3-2
Reduction factor for slender stiffened elements (Q_{a22})	--	1.00	
Full reduction factor for slender elements (Q_{22})	--	1.00	Sec. E7
Critical stress for flexural buckling (F_{cr22})	[Kip/in2]	35.45	Eq. E3-2
Nominal flexural buckling strength (P_{n22})	[Kip]	129.74	Eq. E3-1
Factored torsional or flexural-torsional buckling strength(ϕP_{n11})	[Kip]	105.11	Sec. E4
Effective length factor (K_{11})	--	1.00	
Unbraced length (L_{11})	[ft]	5.20	
Flexural constant (H)	--	1.00	Eq. E4-10
Torsional or flexural-torsional elastic buckling stress (F_{e11})	[Kip/in2]	124.90	Eq. E4-4
Elastic torsional buckling stress (F_{ez})	[Kip/in2]	124.90	Eq. E4-9
Reduction factor for slender unstiffened elements (Q_{s11})	--	1.00	
Effective area of the cross section based on the effective width (A_{eff11})	[in2]	3.66	Eq. E3-2
Reduction factor for slender stiffened elements (Q_{a11})	--	1.00	
Full reduction factor for slender elements (Q_{11})	--	1.00	Sec. E7
Critical stress for torsional or flexural-torsional buckling (F_{cr11})	[Kip/in2]	31.91	Eq. E3-2
Nominal torsional or flexural-torsional buckling strength (P_{n11})	[Kip]	116.79	Eq. E4-1

FLEXURAL DESIGN ✔

Bending about major axis, M33

Ratio	:	0.55		
Capacity	:	22.82 [Kip*ft]	Reference	: Sec. F1
Demand	:	-12.58 [Kip*ft]	Ctrl Eq.	: C1 at 0.00%

Intermediate results	Unit	Value	Reference
Section classification			
Unstiffened element classification	--	Compact	
Unstiffened element slenderness (λ)	--	4.64	
Limiting slenderness for noncompact unstiffened element (λ_r)	--	28.38	
Limiting slenderness for compact unstiffened element (λ_p)	--	10.79	
Stiffened element classification	--	Compact	
Stiffened element slenderness (λ)	--	18.85	
Limiting slenderness for noncompact stiffened element (λ_r)	--	161.78	
Limiting slenderness for compact stiffened element (λ_p)	--	106.72	
Factored yielding strength(ϕM_n)	[Kip*ft]	22.82	Sec. F1
Yielding (M_n)	[Kip*ft]	25.35	Eq. F2-1
Factored lateral-torsional buckling strength(ϕM_n)	[Kip*ft]	22.82	Sec. F1
Limiting laterally unbraced length for yielding (L_p)	[ft]	2.92	Eq. F2-5
Effective radius of gyration used in the determination of Lr (r_{ts})	[in]	0.83	Eq. F2-7
Lateral-torsional factor (c)	--	1.00	Eq. F2-8a
Limiting laterally unbraced length for inelastic lateral-torsional buckling (Lr	[ft]	14.47	Eq. F2-6

Lateral-torsional buckling modification factor (Cb)	--	2.22	Eq. F1-1
Critical stress (Fcr)	[Kip/in2]	187.83	Eq. F2-4
Lateral-torsional buckling (Mn)	[Kip*ft]	25.35	Eq. F2-2

Bending about minor axis, M22

Ratio	:	0.00		
Capacity	:	4.67 [Kip*ft]	Reference	: Sec. F1
Demand	:	0.00 [Kip*ft]	Ctrl Eq.	: C1 at 0.00%

Intermediate results	Unit	Value	Reference
Section classification			
Unstiffened element classification	--	Compact	
Unstiffened element slenderness (λ)	--	4.64	
Limiting slenderness for noncompact unstiffened element (λ_r)	--	28.38	
Limiting slenderness for compact unstiffened element (λ_p)	--	10.79	
Stiffened element classification	--	Compact	
Stiffened element slenderness (λ)	--	18.85	
Limiting slenderness for noncompact stiffened element (λ_r)	--	161.78	
Limiting slenderness for compact stiffened element (λ_p)	--	106.72	
Factored yielding strength(ϕM_n)	[Kip*ft]	4.67	Sec. F1
Yielding (M_n)	[Kip*ft]	5.18	Eq. F6-1

DESIGN FOR SHEAR ✔

Shear in major axis 33

Ratio	:	0.00		
Capacity	:	46.46 [Kip]		
Demand	:	0.00 [Kip]	Ctrl Eq.	: C1 at 0.00%

Intermediate results	Unit	Value	Reference
Factored shear capacity(ϕV_n)	[Kip]	46.46	
Web slenderness (λ_w)	--	4.64	Sec. G2
Shear area (A_w)	[in2]	2.39	
Web buckling coefficient (k_v)	--	1.20	Sec. G7
Web buckling coefficient (C_v)	--	1.00	Eq. G2-3
Nominal shear strength (V_n)	[Kip]	51.62	Eq. G2-1

Shear in minor axis 22

Ratio	:	0.49		
Capacity	:	30.02 [Kip]	Reference	: Sec. G2.1(a)
Demand	:	14.56 [Kip]	Ctrl Eq.	: C1 at 0.00%

Intermediate results	Unit	Value	Reference
Factored shear capacity(ϕV_n)	[Kip]	30.02	Sec. G2.1(a)
Web slenderness (λ_w)	--	18.85	Sec. G2
Shear area (A_w)	[in2]	1.39	
Web buckling coefficient (C_v)	--	1.00	Eq. G2-2
Nominal shear strength (V_n)	[Kip]	30.02	Eq. G2-1

COMBINED ACTIONS DESIGN ✔

Combined flexure and axial compression

Ratio	:	0.97		
Ctrl Eq.	:	C1 at 0.00%	Reference	: Eq. H1-1a

Intermediate results	Unit	Value	Reference
Interaction for doubly symmetric members for in-plane bending	--	0.97	Eq. H1-1a
In-plane required flexural strength (M_{r33})	[Kip*ft]	-12.58	
In-plane available flexural strength (M_{c33})	[Kip*ft]	22.82	Sec. F1
In-plane required axial compressive strength (P_r)	[Kip]	55.48	
In-plane available axial compressive strength (P_c)	[Kip]	114.61	Sec. E1
Interaction for doubly symmetric members for out-of-plane bending	--	0.71	Eq. H1-2
Out-of-plane required flexural strength (M_{r33})	[Kip*ft]	-12.58	
Out-of-plane available flexural-torsional strength (M_{c33})	[Kip*ft]	22.82	Sec. F1
Out-of-plane required axial compressive strength (P_r)	[Kip]	55.48	
Out-of-plane available axial compressive strength (P_{co})	[Kip]	105.11	Sec. E4

Combined flexure and axial tension

Ratio	:	0.55		
Ctrl Eq.	:	C1 at 0.00%	Reference	: Eq. H1-1b

Intermediate results	Unit	Value	Reference
Required flexural strength about strong axis (M_{r33})	[Kip*ft]	-12.58	
Available flexural strength about strong axis (M_{c33})	[Kip*ft]	22.82	Sec. F1
Required flexural strength about weak axis (M_{r22})	[Kip*ft]	0.00	
Available flexural strength about weak axis (M_{c22})	[Kip*ft]	4.67	Sec. F1
Required axial tensile strength (P_r)	[Kip]	0.00	
Available axial tensile strength (P_c)	[Kip]	118.58	Eq. Sec. D2

Combined flexure and axial compression about local axis

Ratio	:	N/A		
Ctrl Eq.	:	--	Reference	:

Combined flexure and axial tension about local axis

Ratio	:	N/A		
Ctrl Eq.	:	--	Reference	:

Member : **5 (Arched Steel Rib)**
Design status : **N.G.**

Section information

Section name: S 6X12.5 **(US)**

Dimensions

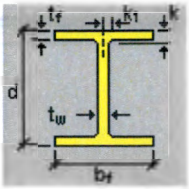

bf	=	3.330	[in]	Width
d	=	6.000	[in]	Depth
k	=	0.813	[in]	Distance k
k1	=	0.813	[in]	Distance k1
tf	=	0.359	[in]	Flange thickness
tw	=	0.232	[in]	Web thickness

Properties

Section properties	**Unit**	**Major axis**	**Minor axis**
Gross area of the section. (Ag)	[in2]	3.660	
Moment of Inertia (local axes) (I)	[in4]	22.000	1.800
Moment of Inertia (principal axes) (I')	[in4]	22.000	1.800
Bending constant for moments (principal axis) (J')	[in]	0.000	0.000
Radius of gyration (local axes) (r)	[in]	2.452	0.701
Radius of gyration (principal axes) (r')	[in]	2.452	0.701
Saint-Venant torsion constant. (J)	[in4]	0.167	
Section warping constant. (Cw)	[in6]	14.300	
Distance from centroid to shear center (principal axis) (xo,yo)	[in]	0.000	0.000
Top elastic section modulus of the section (local axis) (Ssup)	[in3]	7.340	1.080
Bottom elastic section modulus of the section (local axis) (Sinf)	[in3]	7.340	1.080
Top elastic section modulus of the section (principal axis) (S'sup)	[in3]	7.340	1.080
Bottom elastic section modulus of the section (principal axis) (S'inf)	[in3]	7.340	1.080
Plastic section modulus (local axis) (Z)	[in3]	8.450	1.860
Plastic section modulus (principal axis) (Z')	[in3]	8.450	1.860
Polar radius of gyration. (ro)	[in]	2.550	
Area for shear (Aw)	[in2]	2.390	1.390
Torsional constant. (C)	[in3]	0.352	

Material : A36

Properties	**Unit**	**Value**
Yield stress (Fy):	[Kip/in2]	36.00
Tensile strength (Fu):	[Kip/in2]	58.00
Elasticity Modulus (E):	[Kip/in2]	29000.00
Shear modulus for steel (G):	[Kip/in2]	11507.94

DESIGN CRITERIA

Description	**Unit**	**Value**
Length for tension slenderness ratio (L)	[ft]	5.21

Distance between member lateral bracing points

Length (Lb) [ft] Top	Bottom
5.21	5.21

Laterally unbraced length

Length [ft]			Effective length factor		
Major axis(L33)	Minor axis(L22)	Torsional axis(Lt)	Major axis(K33)	Minor axis(K22)	Torsional axis(Kt)
5.21	1.00	5.21	1.0	1.0	1.0

Additional assumptions

Continuous lateral torsional restraint	No
Tension field action	No
Continuous flexural torsional restraint	No
Effective length factor value type	None
Major axis frame type	Sway
Minor axis frame type	Sway

DESIGN CHECKS

AXIAL TENSION DESIGN ✔

Axial tension

Ratio	:	0.00		
Capacity	:	118.58 [Kip]	Reference	: Eq. Sec. D2
Demand	:	0.00 [Kip]	Ctrl Eq.	: C1 at 0.00%

Intermediate results	Unit	Value	Reference
Factored axial tension capacity(ϕP_n)	[Kip]	118.58	Eq. Sec. D2
Nominal axial tension capacity (P_n)	[Kip]	131.76	Eq. D2-1

AXIAL COMPRESSION DESIGN ✔

Compression in the major axis 33

Ratio	:	0.50		
Capacity	:	114.59 [Kip]	Reference	: Sec. E1
Demand	:	57.10 [Kip]	Ctrl Eq.	: C1 at 100.00%

Intermediate results	Unit	Value	Reference
Section classification			
Unstiffened element classification	--	Non slender	
Unstiffened element slenderness (λ)	--	4.64	
Unstiffened element limiting slenderness (λ_r)	--	15.89	
Stiffened element classification	--	Non slender	
Stiffened element slenderness (λ)	--	18.85	
Stiffened element limiting slenderness (λ_r)	--	42.29	
Factored flexural buckling strength(ϕP_{n33})	[Kip]	114.59	Sec. E1
Effective length factor (K_{33})	--	1.00	
Unbraced length (L_{33})	[ft]	5.21	
Effective slenderness ($(KL/r)_{33}$)	--	25.52	Eq. E3-4
Elastic critical buckling stress (F_{e33})	[Kip/in2]	439.59	Eq. E3-4
Reduction factor for slender unstiffened elements (Q_{s33})	--	1.00	
Effective area of the cross section based on the effective width (A_{eff33})	[in2]	3.66	Eq. E3-2
Reduction factor for slender stiffened elements (Q_{a33})	--	1.00	
Full reduction factor for slender elements (Q_{33})	--	1.00	Sec. E7
Critical stress for flexural buckling (F_{cr33})	[Kip/in2]	34.79	Eq. E3-2
Nominal flexural buckling strength (P_{n33})	[Kip]	127.32	Eq. E3-1

Compression in the minor axis 22

Ratio	: 0.54			
Capacity	: 105.09 [Kip]	Reference	: Sec. E4	
Demand	: 57.10 [Kip]	Ctrl Eq.	: C1 at 100.00%	

Intermediate results	Unit	Value	Reference
Section classification			
Unstiffened element classification	--	Non slender	
Unstiffened element slenderness (λ)	--	4.64	
Unstiffened element limiting slenderness (λ_r)	--	15.89	
Stiffened element classification	--	Non slender	
Stiffened element slenderness (λ)	--	18.85	
Stiffened element limiting slenderness (λ_r)	--	42.29	
Factored flexural buckling strength(ϕP_{n22})	[Kip]	116.77	Sec. E1
Effective length factor (K_{22})	--	1.00	
Unbraced length (L_{22})	[ft]	1.00	
Effective slenderness ($(KL/r)_{22}$)	--	17.11	Eq. E3-4
Elastic critical buckling stress (F_{e22})	[Kip/in2]	977.52	Eq. E3-4
Reduction factor for slender unstiffened elements (Q_{s22})	--	1.00	
Effective area of the cross section based on the effective width (A_{eff22})	[in2]	3.66	Eq. E3-2
Reduction factor for slender stiffened elements (Q_{a22})	--	1.00	
Full reduction factor for slender elements (Q_{22})	--	1.00	Sec. E7
Critical stress for flexural buckling (F_{cr22})	[Kip/in2]	35.45	Eq. E3-2
Nominal flexural buckling strength (P_{n22})	[Kip]	129.74	Eq. E3-1
Factored torsional or flexural-torsional buckling strength(ϕP_{n11})	[Kip]	105.09	Sec. E4
Effective length factor (K_{11})	--	1.00	
Unbraced length (L_{11})	[ft]	5.21	
Flexural constant (H)	--	1.00	Eq. E4-10
Torsional or flexural-torsional elastic buckling stress (F_{e11})	[Kip/in2]	124.69	Eq. E4-4
Elastic torsional buckling stress (F_{ez})	[Kip/in2]	124.69	Eq. E4-9
Reduction factor for slender unstiffened elements (Q_{s11})	--	1.00	
Effective area of the cross section based on the effective width (A_{eff11})	[in2]	3.66	Eq. E3-2
Reduction factor for slender stiffened elements (Q_{a11})	--	1.00	
Full reduction factor for slender elements (Q_{11})	--	1.00	Sec. E7
Critical stress for torsional or flexural-torsional buckling (F_{cr11})	[Kip/in2]	31.90	Eq. E3-2
Nominal torsional or flexural-torsional buckling strength (P_{n11})	[Kip]	116.76	Eq. E4-1

FLEXURAL DESIGN ✔

Bending about major axis, M33

Ratio	: 0.60			
Capacity	: 22.82 [Kip*ft]	Reference	: Sec. F1	
Demand	: -13.61 [Kip*ft]	Ctrl Eq.	: C1 at 100.00%	

Intermediate results	Unit	Value	Reference
Section classification			
Unstiffened element classification	--	Compact	
Unstiffened element slenderness (λ)	--	4.64	
Limiting slenderness for noncompact unstiffened element (λ_r)	--	28.38	
Limiting slenderness for compact unstiffened element (λ_p)	--	10.79	
Stiffened element classification	--	Compact	
Stiffened element slenderness (λ)	--	18.85	
Limiting slenderness for noncompact stiffened element (λ_r)	--	161.78	
Limiting slenderness for compact stiffened element (λ_p)	--	106.72	
Factored yielding strength(ϕM_n)	[Kip*ft]	22.82	Sec. F1
Yielding (M_n)	[Kip*ft]	25.35	Eq. F2-1
Factored lateral-torsional buckling strength(ϕM_n)	[Kip*ft]	22.82	Sec. F1
Limiting laterally unbraced length for yielding (L_p)	[ft]	2.92	Eq. F2-5
Effective radius of gyration used in the determination of Lr (r_{ts})	[in]	0.83	Eq. F2-7
Lateral-torsional factor (c)	--	1.00	Eq. F2-8a
Limiting laterally unbraced length for inelastic lateral-torsional buckling (Lr	[ft]	14.47	Eq. F2-6

Lateral-torsional buckling modification factor (Cb)	--	2.34	Eq. F1-1
Critical stress (Fcr)	[Kip/in2]	197.15	Eq. F2-4
Lateral-torsional buckling (Mn)	[Kip*ft]	25.35	Eq. F2-2

Bending about minor axis, M22

Ratio	:	0.00		
Capacity	:	4.67 [Kip*ft]	Reference	: Sec. F1
Demand	:	0.00 [Kip*ft]	Ctrl Eq.	: C1 at 0.00%

Intermediate results	Unit	Value	Reference
Section classification			
Unstiffened element classification	--	Compact	
Unstiffened element slenderness (λ)	--	4.64	
Limiting slenderness for noncompact unstiffened element (λ_r)	--	28.38	
Limiting slenderness for compact unstiffened element (λ_p)	--	10.79	
Stiffened element classification	--	Compact	
Stiffened element slenderness (λ)	--	18.85	
Limiting slenderness for noncompact stiffened element (λ_r)	--	161.78	
Limiting slenderness for compact stiffened element (λ_p)	--	106.72	
Factored yielding strength(ϕM_n)	[Kip*ft]	4.67	Sec. F1
Yielding (M_n)	[Kip*ft]	5.18	Eq. F6-1

DESIGN FOR SHEAR ✔

Shear in major axis 33

Ratio	:	0.00		
Capacity	:	46.46 [Kip]		
Demand	:	0.00 [Kip]	Ctrl Eq.	: C1 at 0.00%

Intermediate results	Unit	Value	Reference
Factored shear capacity(ϕV_n)	[Kip]	46.46	
Web slenderness (λ_w)	--	4.64	Sec. G2
Shear area (A_w)	[in2]	2.39	
Web buckling coefficient (k_v)	--	1.20	Sec. G7
Web buckling coefficient (C_v)	--	1.00	Eq. G2-3
Nominal shear strength (V_n)	[Kip]	51.62	Eq. G2-1

Shear in minor axis 22

Ratio	:	0.50		
Capacity	:	30.02 [Kip]	Reference	: Sec. G2.1(a)
Demand	:	-15.14 [Kip]	Ctrl Eq.	: C1 at 100.00%

Intermediate results	Unit	Value	Reference
Factored shear capacity(ϕV_n)	[Kip]	30.02	Sec. G2.1(a)
Web slenderness (λ_w)	--	18.85	Sec. G2
Shear area (A_w)	[in2]	1.39	
Web buckling coefficient (C_v)	--	1.00	Eq. G2-2
Nominal shear strength (V_n)	[Kip]	30.02	Eq. G2-1

COMBINED ACTIONS DESIGN ✘

Combined flexure and axial compression

Ratio	:	1.03		
Ctrl Eq.	:	C1 at 100.00%	Reference	: Eq. H1-1a

Intermediate results	Unit	Value	Reference
Interaction for doubly symmetric members for in-plane bending	--	1.03	Eq. H1-1a
In-plane required flexural strength (M_{r33})	[Kip*ft]	-13.61	
In-plane available flexural strength (M_{c33})	[Kip*ft]	22.82	Sec. F1
In-plane required axial compressive strength (P_r)	[Kip]	57.10	
In-plane available axial compressive strength (P_c)	[Kip]	114.59	Sec. E1
Interaction for doubly symmetric members for out-of-plane bending	--	0.73	Eq. H1-2
Out-of-plane required flexural strength (M_{r33})	[Kip*ft]	-13.61	
Out-of-plane available flexural-torsional strength (M_{c33})	[Kip*ft]	22.82	Sec. F1
Out-of-plane required axial compressive strength (P_r)	[Kip]	57.10	
Out-of-plane available axial compressive strength (P_{co})	[Kip]	105.09	Sec. E4

Combined flexure and axial tension

Ratio	:	0.60		
Ctrl Eq.	:	C1 at 100.00%	Reference	: Eq. H1-1b

Intermediate results	Unit	Value	Reference
Required flexural strength about strong axis (M_{r33})	[Kip*ft]	-13.61	
Available flexural strength about strong axis (M_{c33})	[Kip*ft]	22.82	Sec. F1
Required flexural strength about weak axis (M_{r22})	[Kip*ft]	0.00	
Available flexural strength about weak axis (M_{c22})	[Kip*ft]	4.67	Sec. F1
Required axial tensile strength (P_r)	[Kip]	0.00	
Available axial tensile strength (P_c)	[Kip]	118.58	Eq. Sec. D2

Combined flexure and axial compression about local axis

Ratio	:	N/A		
Ctrl Eq.	:	--	Reference	:

Combined flexure and axial tension about local axis

Ratio	:	N/A		
Ctrl Eq.	:	--	Reference	:

Member : 6 (Arched Steel Rib)
Design status : N.G.

Section information

Section name: S 6X12.5 **(US)**

Dimensions

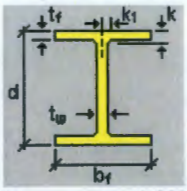

bf	=	3.330	[in]	Width
d	=	6.000	[in]	Depth
k	=	0.813	[in]	Distance k
k1	=	0.813	[in]	Distance k1
tf	=	0.359	[in]	Flange thickness
tw	=	0.232	[in]	Web thickness

Properties

Section properties	Unit	Major axis	Minor axis
Gross area of the section. (Ag)	[in2]	3.660	
Moment of Inertia (local axes) (I)	[in4]	22.000	1.800
Moment of Inertia (principal axes) (I')	[in4]	22.000	1.800
Bending constant for moments (principal axis) (J')	[in]	0.000	0.000
Radius of gyration (local axes) (r)	[in]	2.452	0.701
Radius of gyration (principal axes) (r')	[in]	2.452	0.701
Saint-Venant torsion constant. '(J)	[in4]	0.167	
Section warping constant. (Cw)	[in6]	14.300	
Distance from centroid to shear center (principal axis) (xo,yo)	[in]	0.000	0.000
Top elastic section modulus of the section (local axis) (Ssup)	[in3]	7.340	1.080
Bottom elastic section modulus of the section (local axis) (Sinf)	[in3]	7.340	1.080
Top elastic section modulus of the section (principal axis) (S'sup)	[in3]	7.340	1.080
Bottom elastic section modulus of the section (principal axis) (S'inf)	[in3]	7.340	1.080
Plastic section modulus (local axis) (Z)	[in3]	8.450	1.860
Plastic section modulus (principal axis) (Z')	[in3]	8.450	1.860
Polar radius of gyration. (ro)	[in]	2.550	
Area for shear (Aw)	[in2]	2.390	1.390
Torsional constant. (C)	[in3]	0.352	

Material : A36

Properties	Unit	Value
Yield stress (Fy):	[Kip/in2]	36.00
Tensile strength (Fu):	[Kip/in2]	58.00
Elasticity Modulus (E):	[Kip/in2]	29000.00
Shear modulus for steel (G):	[Kip/in2]	11507.94

DESIGN CRITERIA

Description	Unit	Value
Length for tension slenderness ratio (L)	[ft]	5.16

Distance between member lateral bracing points

Length (Lb) [ft] Top	Bottom
5.16	5.16

Laterally unbraced length

Length [ft]			Effective length factor		
Major axis(L33)	Minor axis(L22)	Torsional axis(Lt)	Major axis(K33)	Minor axis(K22)	Torsional axis(Kt)
5.16	1.00	5.16	1.0	1.0	1.0

Additional assumptions

Continuous lateral torsional restraint	No
Tension field action	No
Continuous flexural torsional restraint	No
Effective length factor value type	None
Major axis frame type	Sway
Minor axis frame type	Sway

DESIGN CHECKS

AXIAL TENSION DESIGN ✔

Axial tension

Ratio	:	0.00		
Capacity	:	118.58 [Kip]	Reference	: Eq. Sec. D2
Demand	:	0.00 [Kip]	Ctrl Eq.	: C1 at 0.00%

Intermediate results	Unit	Value	Reference
Factored axial tension capacity(ϕP_n)	[Kip]	118.58	Eq. Sec. D2
Nominal axial tension capacity (P_n)	[Kip]	131.76	Eq. D2-1

AXIAL COMPRESSION DESIGN ✔

Compression in the major axis 33

Ratio	:	0.51		
Capacity	:	114.66 [Kip]	Reference	: Sec. E1
Demand	:	58.17 [Kip]	Ctrl Eq.	: C1 at 100.00%

Intermediate results	Unit	Value	Reference
Section classification			
Unstiffened element classification	--	Non slender	
Unstiffened element slenderness (λ)	--	4.64	
Unstiffened element limiting slenderness (λ_r)	--	15.89	
Stiffened element classification	--	Non slender	
Stiffened element slenderness (λ)	--	18.85	
Stiffened element limiting slenderness (λ_r)	--	42.29	
Factored flexural buckling strength(ϕP_{n33})	[Kip]	114.66	Sec. E1
Effective length factor (K_{33})	--	1.00	
Unbraced length (L_{33})	[ft]	5.16	
Effective slenderness ($(KL/r)_{33}$)	--	25.27	Eq. E3-4
Elastic critical buckling stress (F_{e33})	[Kip/in2]	448.22	Eq. E3-4
Reduction factor for slender unstiffened elements (Q_{s33})	--	1.00	
Effective area of the cross section based on the effective width (A_{eff33})	[in2]	3.66	Eq. E3-2
Reduction factor for slender stiffened elements (Q_{a33})	--	1.00	
Full reduction factor for slender elements (Q_{33})	--	1.00	Sec. E7
Critical stress for flexural buckling (F_{cr33})	[Kip/in2]	34.81	Eq. E3-2
Nominal flexural buckling strength (P_{n33})	[Kip]	127.40	Eq. E3-1

Compression in the minor axis 22

Ratio	:	0.55		
Capacity	:	105.17 [Kip]	Reference	: Sec. E4
Demand	:	58.17 [Kip]	Ctrl Eq.	: C1 at 100.00%

Intermediate results	Unit	Value	Reference
Section classification			
Unstiffened element classification	--	Non slender	
Unstiffened element slenderness (λ)	--	4.64	
Unstiffened element limiting slenderness (λ_r)	--	15.89	
Stiffened element classification	--	Non slender	
Stiffened element slenderness (λ)	--	18.85	
Stiffened element limiting slenderness (λ_r)	--	42.29	
Factored flexural buckling strength(ϕP_{n22})	[Kip]	116.77	Sec. E1
Effective length factor (K_{22})	--	1.00	
Unbraced length (L_{22})	[ft]	1.00	
Effective slenderness ($(KL/r)_{22}$)	--	17.11	Eq. E3-4
Elastic critical buckling stress (F_{e22})	[Kip/in2]	977.52	Eq. E3-4
Reduction factor for slender unstiffened elements (Q_{s22})	--	1.00	
Effective area of the cross section based on the effective width (A_{eff22})	[in2]	3.66	Eq. E3-2
Reduction factor for slender stiffened elements (Q_{a22})	--	1.00	
Full reduction factor for slender elements (Q_{22})	--	1.00	Sec. E7
Critical stress for flexural buckling (F_{cr22})	[Kip/in2]	35.45	Eq. E3-2
Nominal flexural buckling strength (P_{n22})	[Kip]	129.74	Eq. E3-1
Factored torsional or flexural-torsional buckling strength(ϕP_{n11})	[Kip]	105.17	Sec. E4
Effective length factor (K_{11})	--	1.00	
Unbraced length (L_{11})	[ft]	5.16	
Flexural constant (H)	--	1.00	Eq. E4-10
Torsional or flexural-torsional elastic buckling stress (F_{e11})	[Kip/in2]	125.55	Eq. E4-4
Elastic torsional buckling stress (F_{ez})	[Kip/in2]	125.55	Eq. E4-9
Reduction factor for slender unstiffened elements (Q_{s11})	--	1.00	
Effective area of the cross section based on the effective width (A_{eff11})	[in2]	3.66	Eq. E3-2
Reduction factor for slender stiffened elements (Q_{a11})	--	1.00	
Full reduction factor for slender elements (Q_{11})	--	1.00	Sec. E7
Critical stress for torsional or flexural-torsional buckling (F_{cr11})	[Kip/in2]	31.93	Eq. E3-2
Nominal torsional or flexural-torsional buckling strength (P_{n11})	[Kip]	116.86	Eq. E4-1

FLEXURAL DESIGN ✔

Bending about major axis, M33

Ratio	:	0.60		
Capacity	:	22.82 [Kip*ft]	Reference	: Sec. F1
Demand	:	-13.61 [Kip*ft]	Ctrl Eq.	: C1 at 0.00%

Intermediate results	Unit	Value	Reference
Section classification			
Unstiffened element classification	--	Compact	
Unstiffened element slenderness (λ)	--	4.64	
Limiting slenderness for noncompact unstiffened element (λ_r)	--	28.38	
Limiting slenderness for compact unstiffened element (λ_p)	--	10.79	
Stiffened element classification	--	Compact	
Stiffened element slenderness (λ)	--	18.85	
Limiting slenderness for noncompact stiffened element (λ_r)	--	161.78	
Limiting slenderness for compact stiffened element (λ_p)	--	106.72	
Factored yielding strength(ϕM_n)	[Kip*ft]	22.82	Sec. F1
Yielding (M_n)	[Kip*ft]	25.35	Eq. F2-1
Factored lateral-torsional buckling strength(ϕM_n)	[Kip*ft]	22.82	Sec. F1
Limiting laterally unbraced length for yielding (L_p)	[ft]	2.92	Eq. F2-5
Effective radius of gyration used in the determination of Lr (r_{ts})	[in]	0.83	Eq. F2-7
Lateral-torsional factor (c)	--	1.00	Eq. F2-8a
Limiting laterally unbraced length for inelastic lateral-torsional buckling (L_r)	[ft]	14.47	Eq. F2-6

Lateral-torsional buckling modification factor (Cb)	--	1.81	Eq. F1-1
Critical stress (Fcr)	[Kip/in2]	154.25	Eq. F2-4
Lateral-torsional buckling (Mn)	[Kip*ft]	25.35	Eq. F2-2

Bending about minor axis, M22

Ratio	:	0.00		
Capacity	:	4.67 [Kip*ft]	Reference	: Sec. F1
Demand	:	0.00 [Kip*ft]	Ctrl Eq.	: C1 at 0.00%

Intermediate results	Unit	Value	Reference
Section classification			
Unstiffened element classification	--	Compact	
Unstiffened element slenderness (λ)	--	4.64	
Limiting slenderness for noncompact unstiffened element (λ_r)	--	28.38	
Limiting slenderness for compact unstiffened element (λ_p)	--	10.79	
Stiffened element classification	--	Compact	
Stiffened element slenderness (λ)	--	18.85	
Limiting slenderness for noncompact stiffened element (λ_r)	--	161.78	
Limiting slenderness for compact stiffened element (λ_p)	--	106.72	
Factored yielding strength(ϕM_n)	[Kip*ft]	4.67	Sec. F1
Yielding (M_n)	[Kip*ft]	5.18	Eq. F6-1

DESIGN FOR SHEAR ✔

Shear in major axis 33

Ratio	:	0.00		
Capacity	:	46.46 [Kip]		
Demand	:	0.00 [Kip]	Ctrl Eq.	: C1 at 0.00%

Intermediate results	Unit	Value	Reference
Factored shear capacity(ϕV_n)	[Kip]	46.46	
Web slenderness (λ_w)	--	4.64	Sec. G2
Shear area (A_w)	[in2]	2.39	
Web buckling coefficient (k_v)	--	1.20	Sec. G7
Web buckling coefficient (C_v)	--	1.00	Eq. G2-3
Nominal shear strength (V_n)	[Kip]	51.62	Eq. G2-1

Shear in minor axis 22

Ratio	:	0.48		
Capacity	:	30.02 [Kip]	Reference	: Sec. G2.1(a)
Demand	:	14.33 [Kip]	Ctrl Eq.	: C1 at 0.00%

Intermediate results	Unit	Value	Reference
Factored shear capacity(ϕV_n)	[Kip]	30.02	Sec. G2.1(a)
Web slenderness (λ_w)	--	18.85	Sec. G2
Shear area (A_w)	[in2]	1.39	
Web buckling coefficient (C_v)	--	1.00	Eq. G2-2
Nominal shear strength (V_n)	[Kip]	30.02	Eq. G2-1

COMBINED ACTIONS DESIGN ✘

Combined flexure and axial compression

Ratio	:	1.04		
Ctrl Eq.	:	C1 at 0.00%	Reference	: Eq. H1-1a

Intermediate results	Unit	Value	Reference
Interaction for doubly symmetric members for in-plane bending	--	1.04	Eq. H1-1a
In-plane required flexural strength (M_{r33})	[Kip*ft]	-13.61	
In-plane available flexural strength (M_{c33})	[Kip*ft]	22.82	Sec. F1
In-plane required axial compressive strength (P_r)	[Kip]	58.10	
In-plane available axial compressive strength (P_c)	[Kip]	114.66	Sec. E1
Interaction for doubly symmetric members for out-of-plane bending	--	0.79	Eq. H1-2
Out-of-plane required flexural strength (M_{r33})	[Kip*ft]	-13.61	
Out-of-plane available flexural-torsional strength (M_{c33})	[Kip*ft]	22.82	Sec. F1
Out-of-plane required axial compressive strength (P_r)	[Kip]	58.10	
Out-of-plane available axial compressive strength (P_{co})	[Kip]	105.17	Sec. E4

Combined flexure and axial tension

Ratio	:	0.60		
Ctrl Eq.	:	C1 at 0.00%	Reference	: Eq. H1-1b

Intermediate results	Unit	Value	Reference
Required flexural strength about strong axis (M_{r33})	[Kip*ft]	-13.61	
Available flexural strength about strong axis (M_{c33})	[Kip*ft]	22.82	Sec. F1
Required flexural strength about weak axis (M_{r22})	[Kip*ft]	0.00	
Available flexural strength about weak axis (M_{c22})	[Kip*ft]	4.67	Sec. F1
Required axial tensile strength (P_r)	[Kip]	0.00	
Available axial tensile strength (P_c)	[Kip]	118.58	Eq. Sec. D2

Combined flexure and axial compression about local axis

Ratio	:	N/A		
Ctrl Eq.	:	--	Reference	:

Combined flexure and axial tension about local axis

Ratio	:	N/A		
Ctrl Eq.	:	--	Reference	:

Member : 7 (Arched Steel Rib)
Design status : OK

Section information

Section name: S 6X12.5 **(US)**

Dimensions

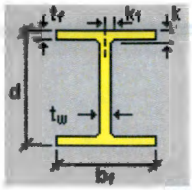

bf	=	3.330	[in]	Width
d	=	6.000	[in]	Depth
k	=	0.813	[in]	Distance k
k1	=	0.813	[in]	Distance k1
tf	=	0.359	[in]	Flange thickness
tw	=	0.232	[in]	Web thickness

Properties

Section properties	Unit	Major axis	Minor axis
Gross area of the section. (Ag)	[in2]	3.660	
Moment of Inertia (local axes) (I)	[in4]	22.000	1.800
Moment of Inertia (principal axes) (I')	[in4]	22.000	1.800
Bending constant for moments (principal axis) (J')	[in]	0.000	0.000
Radius of gyration (local axes) (r)	[in]	2.452	0.701
Radius of gyration (principal axes) (r')	[in]	2.452	0.701
Saint-Venant torsion constant. (J)	[in4]	0.167	
Section warping constant. (Cw)	[in6]	14.300	
Distance from centroid to shear center (principal axis) (xo,yo)	[in]	0.000	0.000
Top elastic section modulus of the section (local axis) (Ssup)	[in3]	7.340	1.080
Bottom elastic section modulus of the section (local axis) (Sinf)	[in3]	7.340	1.080
Top elastic section modulus of the section (principal axis) (S'sup)	[in3]	7.340	1.080
Bottom elastic section modulus of the section (principal axis) (S'inf)	[in3]	7.340	1.080
Plastic section modulus (local axis) (Z)	[in3]	8.450	1.860
Plastic section modulus (principal axis) (Z')	[in3]	8.450	1.860
Polar radius of gyration. (ro)	[in]	2.550	
Area for shear (Aw)	[in2]	2.390	1.390
Torsional constant. (C)	[in3]	0.352	

Material : A36

Properties	Unit	Value
Yield stress (Fy):	[Kip/in2]	36.00
Tensile strength (Fu):	[Kip/in2]	58.00
Elasticity Modulus (E):	[Kip/in2]	29000.00
Shear modulus for steel (G):	[Kip/in2]	11507.94

DESIGN CRITERIA

Description	Unit	Value
Length for tension slenderness ratio (L)	[ft]	5.35

Distance between member lateral bracing points

Length (Lb) [ft] Top	Bottom
5.35	5.35

Laterally unbraced length

Length [ft]			Effective length factor		
Major axis(L33)	Minor axis(L22)	Torsional axis(Lt)	Major axis(K33)	Minor axis(K22)	Torsional axis(Kt)
5.35	1.00	5.35	1.0	1.0	1.0

Additional assumptions

Continuous lateral torsional restraint	No
Tension field action	No
Continuous flexural torsional restraint	No
Effective length factor value type	None
Major axis frame type	Sway
Minor axis frame type	Sway

DESIGN CHECKS

AXIAL TENSION DESIGN ✔

Axial tension

Ratio	:	0.00		
Capacity	:	118.58 [Kip]	Reference	: Eq. Sec. D2
Demand	:	0.00 [Kip]	Ctrl Eq.	: C1 at 0.00%

Intermediate results	Unit	Value	Reference
Factored axial tension capacity(ϕP_n)	[Kip]	118.58	Eq. Sec. D2
Nominal axial tension capacity (P_n)	[Kip]	131.76	Eq. D2-1

AXIAL COMPRESSION DESIGN ✔

Compression in the major axis 33

Ratio	:	0.51		
Capacity	:	114.38 [Kip]	Reference	: Sec. E1
Demand	:	58.18 [Kip]	Ctrl Eq.	: C1 at 100.00%

Intermediate results	Unit	Value	Reference
Section classification			
Unstiffened element classification	--	Non slender	
Unstiffened element slenderness (λ)	--	4.64	
Unstiffened element limiting slenderness (λ_r)	--	15.89	
Stiffened element classification	--	Non slender	
Stiffened element slenderness (λ)	--	18.85	
Stiffened element limiting slenderness (λ_r)	--	42.29	
Factored flexural buckling strength(ϕP_{n33})	[Kip]	114.38	Sec. E1
Effective length factor (K_{33})	--	1.00	
Unbraced length (L_{33})	[ft]	5.35	
Effective slenderness ($(KL/r)_{33}$)	--	26.19	Eq. E3-4
Elastic critical buckling stress (F_{e33})	[Kip/in2]	417.37	Eq. E3-4
Reduction factor for slender unstiffened elements (Q_{s33})	--	1.00	
Effective area of the cross section based on the effective width (A_{eff33})	[in2]	3.66	Eq. E3-2
Reduction factor for slender stiffened elements (Q_{a33})	--	1.00	
Full reduction factor for slender elements (Q_{33})	--	1.00	Sec. E7
Critical stress for flexural buckling (F_{cr33})	[Kip/in2]	34.72	Eq. E3-2
Nominal flexural buckling strength (P_{n33})	[Kip]	127.09	Eq. E3-1

Compression in the minor axis 22

Ratio	:	0.55		
Capacity	:	104.86 [Kip]	Reference	: Sec. E4
Demand	:	58.18 [Kip]	Ctrl Eq.	: C1 at 100.00%

Intermediate results	Unit	Value	Reference
Section classification			
Unstiffened element classification	--	Non slender	
Unstiffened element slenderness (λ)	--	4.64	
Unstiffened element limiting slenderness (λ_r)	--	15.89	
Stiffened element classification	--	Non slender	
Stiffened element slenderness (λ)	--	18.85	
Stiffened element limiting slenderness (λ_r)	--	42.29	
Factored flexural buckling strength(ϕP_{n22})	[Kip]	116.77	Sec. E1
Effective length factor (K_{22})	--	1.00	
Unbraced length (L_{22})	[ft]	1.00	
Effective slenderness ($(KL/r)_{22}$)	--	17.11	Eq. E3-4
Elastic critical buckling stress (F_{e22})	[Kip/in2]	977.52	Eq. E3-4
Reduction factor for slender unstiffened elements (Q_{s22})	--	1.00	
Effective area of the cross section based on the effective width (A_{eff22})	[in2]	3.66	Eq. E3-2
Reduction factor for slender stiffened elements (Q_{a22})	--	1.00	
Full reduction factor for slender elements (Q_{22})	--	1.00	Sec. E7
Critical stress for flexural buckling (F_{cr22})	[Kip/in2]	35.45	Eq. E3-2
Nominal flexural buckling strength (P_{n22})	[Kip]	129.74	Eq. E3-1
Factored torsional or flexural-torsional buckling strength(ϕP_{n11})	[Kip]	104.86	Sec. E4
Effective length factor (K_{11})	--	1.00	
Unbraced length (L_{11})	[ft]	5.35	
Flexural constant (H)	--	1.00	Eq. E4-10
Torsional or flexural-torsional elastic buckling stress (F_{e11})	[Kip/in2]	122.47	Eq. E4-4
Elastic torsional buckling stress (F_{ez})	[Kip/in2]	122.47	Eq. E4-9
Reduction factor for slender unstiffened elements (Q_{s11})	--	1.00	
Effective area of the cross section based on the effective width (A_{eff11})	[in2]	3.66	Eq. E3-2
Reduction factor for slender stiffened elements (Q_{a11})	--	1.00	
Full reduction factor for slender elements (Q_{11})	--	1.00	Sec. E7
Critical stress for torsional or flexural-torsional buckling (F_{cr11})	[Kip/in2]	31.83	Eq. E3-2
Nominal torsional or flexural-torsional buckling strength (P_{n11})	[Kip]	116.51	Eq. E4-1

FLEXURAL DESIGN ✔

Bending about major axis, M33

Ratio	:	0.55		
Capacity	:	22.82 [Kip*ft]	Reference	: Sec. F1
Demand	:	-12.54 [Kip*ft]	Ctrl Eq.	: C1 at 0.00%

Intermediate results	Unit	Value	Reference
Section classification			
Unstiffened element classification	--	Compact	
Unstiffened element slenderness (λ)	--	4.64	
Limiting slenderness for noncompact unstiffened element (λ_r)	--	28.38	
Limiting slenderness for compact unstiffened element (λ_p)	--	10.79	
Stiffened element classification	--	Compact	
Stiffened element slenderness (λ)	--	18.85	
Limiting slenderness for noncompact stiffened element (λ_r)	--	161.78	
Limiting slenderness for compact stiffened element (λ_p)	--	106.72	
Factored yielding strength(ϕM_n)	[Kip*ft]	22.82	Sec. F1
Yielding (M_n)	[Kip*ft]	25.35	Eq. F2-1
Factored lateral-torsional buckling strength(ϕM_n)	[Kip*ft]	22.82	Sec. F1
Limiting laterally unbraced length for yielding (L_p)	[ft]	2.92	Eq. F2-5
Effective radius of gyration used in the determination of Lr (r_{ts})	[in]	0.83	Eq. F2-7
Lateral-torsional factor (c)	--	1.00	Eq. F2-8a
Limiting laterally unbraced length for inelastic lateral-torsional buckling (L_r	[ft]	14.47	Eq. F2-6

Lateral-torsional buckling modification factor (Cb)	--	2.06	Eq. F1-1
Critical stress (Fcr)	[Kip/in2]	167.38	Eq. F2-4
Lateral-torsional buckling (Mn)	[Kip*ft]	25.35	Eq. F2-2

Bending about minor axis, M22

Ratio	:	0.00		
Capacity	:	4.67 [Kip*ft]	Reference	: Sec. F1
Demand	:	0.00 [Kip*ft]	Ctrl Eq.	: C1 at 0.00%

Intermediate results	Unit	Value	Reference
Section classification			
Unstiffened element classification	--	Compact	
Unstiffened element slenderness (λ)	--	4.64	
Limiting slenderness for noncompact unstiffened element (λ_r)	--	28.38	
Limiting slenderness for compact unstiffened element (λ_p)	--	10.79	
Stiffened element classification	--	Compact	
Stiffened element slenderness (λ)	--	18.85	
Limiting slenderness for noncompact stiffened element (λ_r)	--	161.78	
Limiting slenderness for compact stiffened element (λ_p)	--	106.72	
Factored yielding strength(ϕM_n)	[Kip*ft]	4.67	Sec. F1
Yielding (Mn)	[Kip*ft]	5.18	Eq. F6-1

DESIGN FOR SHEAR ✔

Shear in major axis 33

Ratio	:	0.00		
Capacity	:	46.46 [Kip]		
Demand	:	0.00 [Kip]	Ctrl Eq.	: C1 at 0.00%

Intermediate results	Unit	Value	Reference
Factored shear capacity(ϕV_n)	[Kip]	46.46	
Web slenderness (λ_w)	--	4.64	Sec. G2
Shear area (Aw)	[in2]	2.39	
Web buckling coefficient (kv)	--	1.20	Sec. G7
Web buckling coefficient (Cv)	--	1.00	Eq. G2-3
Nominal shear strength (Vn)	[Kip]	51.62	Eq. G2-1

Shear in minor axis 22

Ratio	:	0.46		
Capacity	:	30.02 [Kip]	Reference	: Sec. G2.1(a)
Demand	:	13.68 [Kip]	Ctrl Eq.	: C1 at 0.00%

Intermediate results	Unit	Value	Reference
Factored shear capacity(ϕV_n)	[Kip]	30.02	Sec. G2.1(a)
Web slenderness (λ_w)	--	18.85	Sec. G2
Shear area (Aw)	[in2]	1.39	
Web buckling coefficient (Cv)	--	1.00	Eq. G2-2
Nominal shear strength (Vn)	[Kip]	30.02	Eq. G2-1

COMBINED ACTIONS DESIGN ✔

Combined flexure and axial compression

Ratio	:	1.00		
Ctrl Eq.	:	C1 at 0.00%	Reference	: Eq. H1-1a

Intermediate results	Unit	Value	Reference
Interaction for doubly symmetric members for in-plane bending	--	1.00	Eq. H1-1a
In-plane required flexural strength (M_{r33})	[Kip*ft]	-12.54	
In-plane available flexural strength (M_{c33})	[Kip*ft]	22.82	Sec. F1
In-plane required axial compressive strength (P_r)	[Kip]	58.16	
In-plane available axial compressive strength (P_c)	[Kip]	114.38	Sec. E1
Interaction for doubly symmetric members for out-of-plane bending	--	0.75	Eq. H1-2
Out-of-plane required flexural strength (M_{r33})	[Kip*ft]	-12.54	
Out-of-plane available flexural-torsional strength (M_{c33})	[Kip*ft]	22.82	Sec. F1
Out-of-plane required axial compressive strength (P_r)	[Kip]	58.16	
Out-of-plane available axial compressive strength (P_{co})	[Kip]	104.86	Sec. E4

Combined flexure and axial tension

Ratio	:	0.55		
Ctrl Eq.	:	C1 at 0.00%	Reference	: Eq. H1-1b

Intermediate results	Unit	Value	Reference
Required flexural strength about strong axis (M_{r33})	[Kip*ft]	-12.54	
Available flexural strength about strong axis (M_{c33})	[Kip*ft]	22.82	Sec. F1
Required flexural strength about weak axis (M_{r22})	[Kip*ft]	0.00	
Available flexural strength about weak axis (M_{c22})	[Kip*ft]	4.67	Sec. F1
Required axial tensile strength (P_r)	[Kip]	0.00	
Available axial tensile strength (P_c)	[Kip]	118.58	Eq. Sec. D2

Combined flexure and axial compression about local axis

Ratio	:	N/A		
Ctrl Eq.	:	--	Reference	:

Combined flexure and axial tension about local axis

Ratio	:	N/A		
Ctrl Eq.	:	--	Reference	:

Member : 8 (Arched Steel Rib)
Design status : OK

Section information

Section name: S 6X12.5 **(US)**

Dimensions

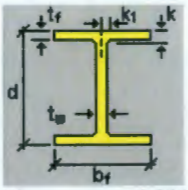

bf	=	3.330	[in]	Width
d	=	6.000	[in]	Depth
k	=	0.813	[in]	Distance k
k1	=	0.813	[in]	Distance k1
tf	=	0.359	[in]	Flange thickness
tw	=	0.232	[in]	Web thickness

Properties

Section properties	Unit	Major axis	Minor axis
Gross area of the section. (Ag)	[in2]	3.660	
Moment of Inertia (local axes) (I)	[in4]	22.000	1.800
Moment of Inertia (principal axes) (I')	[in4]	22.000	1.800
Bending constant for moments (principal axis) (J')	[in]	0.000	0.000
Radius of gyration (local axes) (r)	[in]	2.452	0.701
Radius of gyration (principal axes) (r')	[in]	2.452	0.701
Saint-Venant torsion constant. (J)	[in4]	0.167	
Section warping constant. (Cw)	[in6]	14.300	
Distance from centroid to shear center (principal axis) (xo,yo)	[in]	0.000	0.000
Top elastic section modulus of the section (local axis) (Ssup)	[in3]	7.340	1.080
Bottom elastic section modulus of the section (local axis) (Sinf)	[in3]	7.340	1.080
Top elastic section modulus of the section (principal axis) (S'sup)	[in3]	7.340	1.080
Bottom elastic section modulus of the section (principal axis) (S'inf)	[in3]	7.340	1.080
Plastic section modulus (local axis) (Z)	[in3]	8.450	1.860
Plastic section modulus (principal axis) (Z')	[in3]	8.450	1.860
Polar radius of gyration. (ro)	[in]	2.550	
Area for shear (Aw)	[in2]	2.390	1.390
Torsional constant. (C)	[in3]	0.352	

Material : A36

Properties	Unit	Value
Yield stress (Fy):	[Kip/in2]	36.00
Tensile strength (Fu):	[Kip/in2]	58.00
Elasticity Modulus (E):	[Kip/in2]	29000.00
Shear modulus for steel (G):	[Kip/in2]	11507.94

DESIGN CRITERIA

Description	Unit	Value
Length for tension slenderness ratio (L)	[ft]	5.20

Distance between member lateral bracing points

Length (Lb) [ft] Top	Bottom
5.20	5.20

Laterally unbraced length

Length [ft]			Effective length factor		
Major axis(L33)	Minor axis(L22)	Torsional axis(Lt)	Major axis(K33)	Minor axis(K22)	Torsional axis(Kt)
5.20	1.00	5.20	1.0	1.0	1.0

Additional assumptions

Continuous lateral torsional restraint	No
Tension field action	No
Continuous flexural torsional restraint	No
Effective length factor value type	None
Major axis frame type	Sway
Minor axis frame type	Sway

DESIGN CHECKS

AXIAL TENSION DESIGN ✔

Axial tension

Ratio	:	0.00		
Capacity	:	118.58 [Kip]	Reference	: Eq. Sec. D2
Demand	:	0.00 [Kip]	Ctrl Eq.	: C1 at 0.00%

Intermediate results	Unit	Value	Reference
Factored axial tension capacity(ϕP_n)	[Kip]	118.58	Eq. Sec. D2
Nominal axial tension capacity (P_n)	[Kip]	131.76	Eq. D2-1

AXIAL COMPRESSION DESIGN ✔

Compression in the major axis 33

Ratio	:	0.49		
Capacity	:	114.61 [Kip]	Reference	: Sec. E1
Demand	:	56.00 [Kip]	Ctrl Eq.	: C1 at 100.00%

Intermediate results	Unit	Value	Reference
Section classification			
Unstiffened element classification	--	Non slender	
Unstiffened element slenderness (λ)	--	4.64	
Unstiffened element limiting slenderness (λ_r)	--	15.89	
Stiffened element classification	--	Non slender	
Stiffened element slenderness (λ)	--	18.85	
Stiffened element limiting slenderness (λ_r)	--	42.29	
Factored flexural buckling strength(ϕP_{n33})	[Kip]	114.61	Sec. E1
Effective length factor (K_{33})	--	1.00	
Unbraced length (L_{33})	[ft]	5.20	
Effective slenderness ($(KL/r)_{33}$)	--	25.43	Eq. E3-4
Elastic critical buckling stress (F_{e33})	[Kip/in2]	442.57	Eq. E3-4
Reduction factor for slender unstiffened elements (Q_{s33})	--	1.00	
Effective area of the cross section based on the effective width (A_{eff33})	[in2]	3.66	Eq. E3-2
Reduction factor for slender stiffened elements (Q_{a33})	--	1.00	
Full reduction factor for slender elements (Q_{33})	--	1.00	Sec. E7
Critical stress for flexural buckling (F_{cr33})	[Kip/in2]	34.79	Eq. E3-2
Nominal flexural buckling strength (P_{n33})	[Kip]	127.35	Eq. E3-1

Compression in the minor axis 22

Ratio	:	0.53		
Capacity	:	105.12 [Kip]	Reference	: Sec. E4
Demand	:	56.00 [Kip]	Ctrl Eq.	: C1 at 100.00%

Intermediate results	Unit	Value	Reference
Section classification			
Unstiffened element classification	--	Non slender	
Unstiffened element slenderness (λ)	--	4.64	
Unstiffened element limiting slenderness (λ_r)	--	15.89	
Stiffened element classification	--	Non slender	
Stiffened element slenderness (λ)	--	18.85	
Stiffened element limiting slenderness (λ_r)	--	42.29	
Factored flexural buckling strength(ϕP_{n22})	[Kip]	116.77	Sec. E1
Effective length factor (K_{22})	--	1.00	
Unbraced length (L_{22})	[ft]	1.00	
Effective slenderness ($(KL/r)_{22}$)	--	17.11	Eq. E3-4
Elastic critical buckling stress (F_{e22})	[Kip/in2]	977.52	Eq. E3-4
Reduction factor for slender unstiffened elements (Q_{s22})	--	1.00	
Effective area of the cross section based on the effective width (A_{eff22})	[in2]	3.66	Eq. E3-2
Reduction factor for slender stiffened elements (Q_{a22})	--	1.00	
Full reduction factor for slender elements (Q_{22})	--	1.00	Sec. E7
Critical stress for flexural buckling (F_{cr22})	[Kip/in2]	35.45	Eq. E3-2
Nominal flexural buckling strength (P_{n22})	[Kip]	129.74	Eq. E3-1
Factored torsional or flexural-torsional buckling strength(ϕP_{n11})	[Kip]	105.12	Sec. E4
Effective length factor (K_{11})	--	1.00	
Unbraced length (L_{11})	[ft]	5.20	
Flexural constant (H)	--	1.00	Eq. E4-10
Torsional or flexural-torsional elastic buckling stress (F_{e11})	[Kip/in2]	124.99	Eq. E4-4
Elastic torsional buckling stress (F_{ez})	[Kip/in2]	124.99	Eq. E4-9
Reduction factor for slender unstiffened elements (Q_{s11})	--	1.00	
Effective area of the cross section based on the effective width (A_{eff11})	[in2]	3.66	Eq. E3-2
Reduction factor for slender stiffened elements (Q_{a11})	--	1.00	
Full reduction factor for slender elements (Q_{11})	--	1.00	Sec. E7
Critical stress for torsional or flexural-torsional buckling (F_{cr11})	[Kip/in2]	31.91	Eq. E3-2
Nominal torsional or flexural-torsional buckling strength (P_{n11})	[Kip]	116.80	Eq. E4-1

FLEXURAL DESIGN ✔

Bending about major axis, M33

Ratio	:	0.55		
Capacity	:	22.82 [Kip*ft]	Reference	: Sec. F1
Demand	:	-12.58 [Kip*ft]	Ctrl Eq.	: C1 at 100.00%

Intermediate results	Unit	Value	Reference
Section classification			
Unstiffened element classification	--	Compact	
Unstiffened element slenderness (λ)	--	4.64	
Limiting slenderness for noncompact unstiffened element (λ_r)	--	28.38	
Limiting slenderness for compact unstiffened element (λ_p)	--	10.79	
Stiffened element classification	--	Compact	
Stiffened element slenderness (λ)	--	18.85	
Limiting slenderness for noncompact stiffened element (λ_r)	--	161.78	
Limiting slenderness for compact stiffened element (λ_p)	--	106.72	
Factored yielding strength(ϕM_n)	[Kip*ft]	22.82	Sec. F1
Yielding (M_n)	[Kip*ft]	25.35	Eq. F2-1
Factored lateral-torsional buckling strength(ϕM_n)	[Kip*ft]	22.82	Sec. F1
Limiting laterally unbraced length for yielding (L_p)	[ft]	2.92	Eq. F2-5
Effective radius of gyration used in the determination of Lr (r_{ts})	[in]	0.83	Eq. F2-7
Lateral-torsional factor (c)	--	1.00	Eq. F2-8a
Limiting laterally unbraced length for inelastic lateral-torsional buckling (L_r	[ft]	14.47	Eq. F2-6

Lateral-torsional buckling modification factor (C_b)	--	2.13	Eq. F1-1
Critical stress (F_{cr})	[Kip/in2]	180.41	Eq. F2-4
Lateral-torsional buckling (M_n)	[Kip*ft]	25.35	Eq. F2-2

Bending about minor axis, M22

Ratio	:	0.00		
Capacity	:	4.67 [Kip*ft]	Reference	: Sec. F1
Demand	:	0.00 [Kip*ft]	Ctrl Eq.	: C1 at 0.00%

Intermediate results	Unit	Value	Reference
Section classification			
Unstiffened element classification	--	Compact	
Unstiffened element slenderness (λ)	--	4.64	
Limiting slenderness for noncompact unstiffened element (λ_r)	--	28.38	
Limiting slenderness for compact unstiffened element (λ_p)	--	10.79	
Stiffened element classification	--	Compact	
Stiffened element slenderness (λ)	--	18.85	
Limiting slenderness for noncompact stiffened element (λ_r)	--	161.78	
Limiting slenderness for compact stiffened element (λ_p)	--	106.72	
Factored yielding strength(ϕM_n)	[Kip*ft]	4.67	Sec. F1
Yielding (M_n)	[Kip*ft]	5.18	Eq. F6-1

DESIGN FOR SHEAR ✔

Shear in major axis 33

Ratio	:	0.00		
Capacity	:	46.46 [Kip]		
Demand	:	0.00 [Kip]	Ctrl Eq.	: C1 at 0.00%

Intermediate results	Unit	Value	Reference
Factored shear capacity(ϕV_n)	[Kip]	46.46	
Web slenderness (λ_w)	--	4.64	Sec. G2
Shear area (A_w)	[in2]	2.39	
Web buckling coefficient (k_v)	--	1.20	Sec. G7
Web buckling coefficient (C_v)	--	1.00	Eq. G2-3
Nominal shear strength (V_n)	[Kip]	51.62	Eq. G2-1

Shear in minor axis 22

Ratio	:	0.46		
Capacity	:	30.02 [Kip]	Reference	: Sec. G2.1(a)
Demand	:	-13.89 [Kip]	Ctrl Eq.	: C1 at 100.00%

Intermediate results	Unit	Value	Reference
Factored shear capacity(ϕV_n)	[Kip]	30.02	Sec. G2.1(a)
Web slenderness (λ_w)	--	18.85	Sec. G2
Shear area (A_w)	[in2]	1.39	
Web buckling coefficient (C_v)	--	1.00	Eq. G2-2
Nominal shear strength (V_n)	[Kip]	30.02	Eq. G2-1

COMBINED ACTIONS DESIGN ✔

Combined flexure and axial compression

Ratio	:	0.98		
Ctrl Eq.	:	C1 at 100.00%	Reference	: Eq. H1-1a

Intermediate results	Unit	Value	Reference
Interaction for doubly symmetric members for in-plane bending	--	0.98	Eq. H1-1a
In-plane required flexural strength (M_{r33})	[Kip*ft]	-12.58	
In-plane available flexural strength (M_{c33})	[Kip*ft]	22.82	Sec. F1
In-plane required axial compressive strength (P_r)	[Kip]	56.00	
In-plane available axial compressive strength (P_c)	[Kip]	114.61	Sec. E1
Interaction for doubly symmetric members for out-of-plane bending	--	0.72	Eq. H1-2
Out-of-plane required flexural strength (M_{r33})	[Kip*ft]	-12.58	
Out-of-plane available flexural-torsional strength (M_{c33})	[Kip*ft]	22.82	Sec. F1
Out-of-plane required axial compressive strength (P_r)	[Kip]	56.00	
Out-of-plane available axial compressive strength (P_{co})	[Kip]	105.12	Sec. E4

Combined flexure and axial tension

Ratio	:	0.55		
Ctrl Eq.	:	C1 at 100.00%	Reference	: Eq. H1-1b

Intermediate results	Unit	Value	Reference
Required flexural strength about strong axis (M_{r33})	[Kip*ft]	-12.58	
Available flexural strength about strong axis (M_{c33})	[Kip*ft]	22.82	Sec. F1
Required flexural strength about weak axis (M_{r22})	[Kip*ft]	0.00	
Available flexural strength about weak axis (M_{c22})	[Kip*ft]	4.67	Sec. F1
Required axial tensile strength (P_r)	[Kip]	0.00	
Available axial tensile strength (P_c)	[Kip]	118.58	Eq. Sec. D2

Combined flexure and axial compression about local axis

Ratio	:	N/A		
Ctrl Eq.	:	--	Reference	:

Combined flexure and axial tension about local axis

Ratio	:	N/A		
Ctrl Eq.	:	--	Reference	:

Member : **9 (Arched Steel Rib)**
Design status : **OK**

Section information

Section name: S 6X12.5 **(US)**

Dimensions

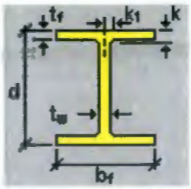

bf	=	3.330	[in]	Width
d	=	6.000	[in]	Depth
k	=	0.813	[in]	Distance k
k1	=	0.813	[in]	Distance k1
tf	=	0.359	[in]	Flange thickness
tw	=	0.232	[in]	Web thickness

Properties

Section properties	**Unit**	**Major axis**	**Minor axis**
Gross area of the section. (Ag)	[in2]	3.660	
Moment of Inertia (local axes) (I)	[in4]	22.000	1.800
Moment of Inertia (principal axes) (I')	[in4]	22.000	1.800
Bending constant for moments (principal axis) (J')	[in]	0.000	0.000
Radius of gyration (local axes) (r)	[in]	2.452	0.701
Radius of gyration (principal axes) (r')	[in]	2.452	0.701
Saint-Venant torsion constant. (J)	[in4]	0.167	
Section warping constant. (Cw)	[in6]	14.300	
Distance from centroid to shear center (principal axis) (xo,yo)	[in]	0.000	0.000
Top elastic section modulus of the section (local axis) (Ssup)	[in3]	7.340	1.080
Bottom elastic section modulus of the section (local axis) (Sinf)	[in3]	7.340	1.080
Top elastic section modulus of the section (principal axis) (S'sup)	[in3]	7.340	1.080
Bottom elastic section modulus of the section (principal axis) (S'inf)	[in3]	7.340	1.080
Plastic section modulus (local axis) (Z)	[in3]	8.450	1.860
Plastic section modulus (principal axis) (Z')	[in3]	8.450	1.860
Polar radius of gyration. (ro)	[in]	2.550	
Area for shear (Aw)	[in2]	2.390	1.390
Torsional constant. (C)	[in3]	0.352	

Material : A36

Properties	**Unit**	**Value**
Yield stress (Fy):	[Kip/in2]	36.00
Tensile strength (Fu):	[Kip/in2]	58.00
Elasticity Modulus (E):	[Kip/in2]	29000.00
Shear modulus for steel (G):	[Kip/in2]	11507.94

DESIGN CRITERIA

Description	**Unit**	**Value**
Length for tension slenderness ratio (L)	[ft]	5.20

Distance between member lateral bracing points

Length (Lb) [ft]	
Top	Bottom
5.20	5.20

Laterally unbraced length

Length [ft]			Effective length factor		
Major axis(L33)	Minor axis(L22)	Torsional axis(Lt)	Major axis(K33)	Minor axis(K22)	Torsional axis(Kt)
5.20	1.00	5.20	1.0	1.0	1.0

Additional assumptions

Continuous lateral torsional restraint	No
Tension field action	No
Continuous flexural torsional restraint	No
Effective length factor value type	None
Major axis frame type	Sway
Minor axis frame type	Sway

DESIGN CHECKS

AXIAL TENSION DESIGN ✔

Axial tension

Ratio	:	0.00		
Capacity	:	118.58 [Kip]	Reference	: Eq. Sec. D2
Demand	:	0.00 [Kip]	Ctrl Eq.	: C1 at 0.00%

Intermediate results	Unit	Value	Reference
Factored axial tension capacity(ϕP_n)	[Kip]	118.58	Eq. Sec. D2
Nominal axial tension capacity (P_n)	[Kip]	131.76	Eq. D2-1

AXIAL COMPRESSION DESIGN ✔

Compression in the major axis 33

Ratio	:	0.48		
Capacity	:	114.61 [Kip]	Reference	: Sec. E1
Demand	:	55.53 [Kip]	Ctrl Eq.	: C1 at 100.00%

Intermediate results	Unit	Value	Reference
Section classification			
Unstiffened element classification	--	Non slender	
Unstiffened element slenderness (λ)	--	4.64	
Unstiffened element limiting slenderness (λ_r)	--	15.89	
Stiffened element classification	--	Non slender	
Stiffened element slenderness (λ)	--	18.85	
Stiffened element limiting slenderness (λ_r)	--	42.29	
Factored flexural buckling strength(ϕP_{n33})	[Kip]	114.61	Sec. E1
Effective length factor (K_{33})	--	1.00	
Unbraced length (L_{33})	[ft]	5.20	
Effective slenderness ($(KL/r)_{33}$)	--	25.46	Eq. E3-4
Elastic critical buckling stress (F_{e33})	[Kip/in2]	441.66	Eq. E3-4
Reduction factor for slender unstiffened elements (Q_{s33})	--	1.00	
Effective area of the cross section based on the effective width (A_{eff33})	[in2]	3.66	Eq. E3-2
Reduction factor for slender stiffened elements (Q_{a33})	--	1.00	
Full reduction factor for slender elements (Q_{33})	--	1.00	Sec. E7
Critical stress for flexural buckling (F_{cr33})	[Kip/in2]	34.79	Eq. E3-2
Nominal flexural buckling strength (P_{n33})	[Kip]	127.34	Eq. E3-1

Compression in the minor axis 22

Ratio	: 0.53			
Capacity	: 105.11 [Kip]	Reference	: Sec. E4	
Demand	: 55.53 [Kip]	Ctrl Eq.	: C1 at 100.00%	

Intermediate results	Unit	Value	Reference
Section classification			
Unstiffened element classification	--	Non slender	
Unstiffened element slenderness (λ)	--	4.64	
Unstiffened element limiting slenderness (λ_r)	--	15.89	
Stiffened element classification	--	Non slender	
Stiffened element slenderness (λ)	--	18.85	
Stiffened element limiting slenderness (λ_r)	--	42.29	
Factored flexural buckling strength(ϕP_{n22})	[Kip]	116.77	Sec. E1
Effective length factor (K_{22})	--	1.00	
Unbraced length (L_{22})	[ft]	1.00	
Effective slenderness ($(KL/r)_{22}$)	--	17.11	Eq. E3-4
Elastic critical buckling stress (F_{e22})	[Kip/in2]	977.52	Eq. E3-4
Reduction factor for slender unstiffened elements (Q_{s22})	--	1.00	
Effective area of the cross section based on the effective width (A_{eff22})	[in2]	3.66	Eq. E3-2
Reduction factor for slender stiffened elements (Q_{a22})	--	1.00	
Full reduction factor for slender elements (Q_{22})	--	1.00	Sec. E7
Critical stress for flexural buckling (F_{cr22})	[Kip/in2]	35.45	Eq. E3-2
Nominal flexural buckling strength (P_{n22})	[Kip]	129.74	Eq. E3-1
Factored torsional or flexural-torsional buckling strength(ϕP_{n11})	[Kip]	105.11	Sec. E4
Effective length factor (K_{11})	--	1.00	
Unbraced length (L_{11})	[ft]	5.20	
Flexural constant (H)	--	1.00	Eq. E4-10
Torsional or flexural-torsional elastic buckling stress (F_{e11})	[Kip/in2]	124.90	Eq. E4-4
Elastic torsional buckling stress (F_{ez})	[Kip/in2]	124.90	Eq. E4-9
Reduction factor for slender unstiffened elements (Q_{s11})	--	1.00	
Effective area of the cross section based on the effective width (A_{eff11})	[in2]	3.66	Eq. E3-2
Reduction factor for slender stiffened elements (Q_{a11})	--	1.00	
Full reduction factor for slender elements (Q_{11})	--	1.00	Sec. E7
Critical stress for torsional or flexural-torsional buckling (F_{cr11})	[Kip/in2]	31.91	Eq. E3-2
Nominal torsional or flexural-torsional buckling strength (P_{n11})	[Kip]	116.79	Eq. E4-1

FLEXURAL DESIGN ✔

Bending about major axis, M33

Ratio	: 0.55			
Capacity	: 22.82 [Kip*ft]	Reference	: Sec. F1	
Demand	: -12.58 [Kip*ft]	Ctrl Eq.	: C1 at 0.00%	

Intermediate results	Unit	Value	Reference
Section classification			
Unstiffened element classification	--	Compact	
Unstiffened element slenderness (λ)	--	4.64	
Limiting slenderness for noncompact unstiffened element (λ_r)	--	28.38	
Limiting slenderness for compact unstiffened element (λ_p)	--	10.79	
Stiffened element classification	--	Compact	
Stiffened element slenderness (λ)	--	18.85	
Limiting slenderness for noncompact stiffened element (λ_r)	--	161.78	
Limiting slenderness for compact stiffened element (λ_p)	--	106.72	
Factored yielding strength(ϕM_n)	[Kip*ft]	22.82	Sec. F1
Yielding (M_n)	[Kip*ft]	25.35	Eq. F2-1
Factored lateral-torsional buckling strength(ϕM_n)	[Kip*ft]	22.82	Sec. F1
Limiting laterally unbraced length for yielding (L_p)	[ft]	2.92	Eq. F2-5
Effective radius of gyration used in the determination of Lr (r_{ts})	[in]	0.83	Eq. F2-7
Lateral-torsional factor (c)	--	1.00	Eq. F2-8a
Limiting laterally unbraced length for inelastic lateral-torsional buckling (Lr	[ft]	14.47	Eq. F2-6

Lateral-torsional buckling modification factor (Cb)	--	2.22	Eq. F1-1
Critical stress (Fcr)	[Kip/in2]	187.83	Eq. F2-4
Lateral-torsional buckling (Mn)	[Kip*ft]	25.35	Eq. F2-2

Bending about minor axis, M22

Ratio	:	0.00		
Capacity	:	4.67 [Kip*ft]	Reference	: Sec. F1
Demand	:	0.00 [Kip*ft]	Ctrl Eq.	: C1 at 0.00%

Intermediate results	Unit	Value	Reference
Section classification			
Unstiffened element classification	--	Compact	
Unstiffened element slenderness (λ)	--	4.64	
Limiting slenderness for noncompact unstiffened element (λ_r)	--	28.38	
Limiting slenderness for compact unstiffened element (λ_p)	--	10.79	
Stiffened element classification	--	Compact	
Stiffened element slenderness (λ)	--	18.85	
Limiting slenderness for noncompact stiffened element (λ_r)	--	161.78	
Limiting slenderness for compact stiffened element (λ_p)	--	106.72	
Factored yielding strength(ϕM_n)	[Kip*ft]	4.67	Sec. F1
Yielding (M_n)	[Kip*ft]	5.18	Eq. F6-1

DESIGN FOR SHEAR ✔

Shear in major axis 33

Ratio	:	0.00		
Capacity	:	46.46 [Kip]		
Demand	:	0.00 [Kip]	Ctrl Eq.	: C1 at 0.00%

Intermediate results	Unit	Value	Reference
Factored shear capacity(ϕV_n)	[Kip]	46.46	
Web slenderness (λ_w)	--	4.64	Sec. G2
Shear area (A_w)	[in2]	2.39	
Web buckling coefficient (k_v)	--	1.20	Sec. G7
Web buckling coefficient (C_v)	--	1.00	Eq. G2-3
Nominal shear strength (V_n)	[Kip]	51.62	Eq. G2-1

Shear in minor axis 22

Ratio	:	0.49		
Capacity	:	30.02 [Kip]	Reference	: Sec. G2.1(a)
Demand	:	14.56 [Kip]	Ctrl Eq.	: C1 at 0.00%

Intermediate results	Unit	Value	Reference
Factored shear capacity(ϕV_n)	[Kip]	30.02	Sec. G2.1(a)
Web slenderness (λ_w)	--	18.85	Sec. G2
Shear area (A_w)	[in2]	1.39	
Web buckling coefficient (C_v)	--	1.00	Eq. G2-2
Nominal shear strength (V_n)	[Kip]	30.02	Eq. G2-1

COMBINED ACTIONS DESIGN ✔

Combined flexure and axial compression

Ratio	:	0.97		
Ctrl Eq.	:	C1 at 0.00%	Reference	: Eq. H1-1a

Intermediate results	Unit	Value	Reference
Interaction for doubly symmetric members for in-plane bending	--	0.97	Eq. H1-1a
In-plane required flexural strength (M_{r33})	[Kip*ft]	-12.58	
In-plane available flexural strength (M_{c33})	[Kip*ft]	22.82	Sec. F1
In-plane required axial compressive strength (P_r)	[Kip]	55.48	
In-plane available axial compressive strength (P_c)	[Kip]	114.61	Sec. E1
Interaction for doubly symmetric members for out-of-plane bending	--	0.71	Eq. H1-2
Out-of-plane required flexural strength (M_{r33})	[Kip*ft]	-12.58	
Out-of-plane available flexural-torsional strength (M_{c33})	[Kip*ft]	22.82	Sec. F1
Out-of-plane required axial compressive strength (P_r)	[Kip]	55.48	
Out-of-plane available axial compressive strength (P_{co})	[Kip]	105.11	Sec. E4

Combined flexure and axial tension

Ratio	:	0.55		
Ctrl Eq.	:	C1 at 0.00%	Reference	: Eq. H1-1b

Intermediate results	Unit	Value	Reference
Required flexural strength about strong axis (M_{r33})	[Kip*ft]	-12.58	
Available flexural strength about strong axis (M_{c33})	[Kip*ft]	22.82	Sec. F1
Required flexural strength about weak axis (M_{r22})	[Kip*ft]	0.00	
Available flexural strength about weak axis (M_{c22})	[Kip*ft]	4.67	Sec. F1
Required axial tensile strength (P_r)	[Kip]	0.00	
Available axial tensile strength (P_c)	[Kip]	118.58	Eq. Sec. D2

Combined flexure and axial compression about local axis

Ratio	:	N/A		
Ctrl Eq.	:	--	Reference	:

Combined flexure and axial tension about local axis

Ratio	:	N/A		
Ctrl Eq.	:	--	Reference	:

Member : 10 (Arched Steel Rib)
Design status : N.G.

Section information

Section name: S 6X12.5 **(US)**

Dimensions

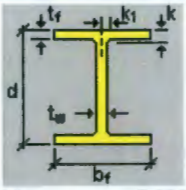

bf	=	3.330	[in]	Width
d	=	6.000	[in]	Depth
k	=	0.813	[in]	Distance k
k1	=	0.813	[in]	Distance k1
tf	=	0.359	[in]	Flange thickness
tw	=	0.232	[in]	Web thickness

Properties

Section properties	Unit	Major axis	Minor axis
Gross area of the section. (Ag)	[in2]	3.660	
Moment of Inertia (local axes) (I)	[in4]	22.000	1.800
Moment of Inertia (principal axes) (I')	[in4]	22.000	1.800
Bending constant for moments (principal axis) (J')	[in]	0.000	0.000
Radius of gyration (local axes) (r)	[in]	2.452	0.701
Radius of gyration (principal axes) (r')	[in]	2.452	0.701
Saint-Venant torsion constant. (J)	[in4]	0.167	
Section warping constant. (Cw)	[in6]	14.300	
Distance from centroid to shear center (principal axis) (xo,yo)	[in]	0.000	0.000
Top elastic section modulus of the section (local axis) (Ssup)	[in3]	7.340	1.080
Bottom elastic section modulus of the section (local axis) (Sinf)	[in3]	7.340	1.080
Top elastic section modulus of the section (principal axis) (S'sup)	[in3]	7.340	1.080
Bottom elastic section modulus of the section (principal axis) (S'inf)	[in3]	7.340	1.080
Plastic section modulus (local axis) (Z)	[in3]	8.450	1.860
Plastic section modulus (principal axis) (Z')	[in3]	8.450	1.860
Polar radius of gyration. (ro)	[in]	2.550	
Area for shear (Aw)	[in2]	2.390	1.390
Torsional constant. (C)	[in3]	0.352	

Material : A36

Properties	Unit	Value
Yield stress (Fy):	[Kip/in2]	36.00
Tensile strength (Fu):	[Kip/in2]	58.00
Elasticity Modulus (E):	[Kip/in2]	29000.00
Shear modulus for steel (G):	[Kip/in2]	11507.94

DESIGN CRITERIA

Description	Unit	Value
Length for tension slenderness ratio (L)	[ft]	5.21

Distance between member lateral bracing points

Length (Lb) [ft] Top	Bottom
5.21	5.21

Laterally unbraced length

Length [ft]			Effective length factor		
Major axis(L33)	Minor axis(L22)	Torsional axis(Lt)	Major axis(K33)	Minor axis(K22)	Torsional axis(Kt)
5.21	1.00	5.21	1.0	1.0	1.0

Additional assumptions

Continuous lateral torsional restraint	No
Tension field action	No
Continuous flexural torsional restraint	No
Effective length factor value type	None
Major axis frame type	Sway
Minor axis frame type	Sway

DESIGN CHECKS

AXIAL TENSION DESIGN ✔

Axial tension

Ratio	:	0.00		
Capacity	:	118.58 [Kip]	Reference	: Eq. Sec. D2
Demand	:	0.00 [Kip]	Ctrl Eq.	: C1 at 0.00%

Intermediate results	Unit	Value	Reference
Factored axial tension capacity(ϕP_n)	[Kip]	118.58	Eq. Sec. D2
Nominal axial tension capacity (P_n)	[Kip]	131.76	Eq. D2-1

AXIAL COMPRESSION DESIGN ✔

Compression in the major axis 33

Ratio	:	0.50		
Capacity	:	114.59 [Kip]	Reference	: Sec. E1
Demand	:	57.10 [Kip]	Ctrl Eq.	: C1 at 100.00%

Intermediate results	Unit	Value	Reference
Section classification			
Unstiffened element classification	--	Non slender	
Unstiffened element slenderness (λ)	--	4.64	
Unstiffened element limiting slenderness (λ_r)	--	15.89	
Stiffened element classification	--	Non slender	
Stiffened element slenderness (λ)	--	18.85	
Stiffened element limiting slenderness (λ_r)	--	42.29	
Factored flexural buckling strength(ϕP_{n33})	[Kip]	114.59	Sec. E1
Effective length factor (K_{33})	--	1.00	
Unbraced length (L_{33})	[ft]	5.21	
Effective slenderness ($(KL/r)_{33}$)	--	25.52	Eq. E3-4
Elastic critical buckling stress (F_{e33})	[Kip/in2]	439.59	Eq. E3-4
Reduction factor for slender unstiffened elements (Q_{s33})	--	1.00	
Effective area of the cross section based on the effective width (A_{eff33})	[in2]	3.66	Eq. E3-2
Reduction factor for slender stiffened elements (Q_{a33})	--	1.00	
Full reduction factor for slender elements (Q_{33})	--	1.00	Sec. E7
Critical stress for flexural buckling (F_{cr33})	[Kip/in2]	34.79	Eq. E3-2
Nominal flexural buckling strength (P_{n33})	[Kip]	127.32	Eq. E3-1

Compression in the minor axis 22

Ratio	:	0.54		
Capacity	:	105.09 [Kip]	Reference	: Sec. E4
Demand	:	57.10 [Kip]	Ctrl Eq.	: C1 at 100.00%

Intermediate results	Unit	Value	Reference
Section classification			
Unstiffened element classification	--	Non slender	
Unstiffened element slenderness (λ)	--	4.64	
Unstiffened element limiting slenderness (λ_r)	--	15.89	
Stiffened element classification	--	Non slender	
Stiffened element slenderness (λ)	--	18.85	
Stiffened element limiting slenderness (λ_r)	--	42.29	
Factored flexural buckling strength(ϕP_{n22})	[Kip]	116.77	Sec. E1
Effective length factor (K_{22})	--	1.00	
Unbraced length (L_{22})	[ft]	1.00	
Effective slenderness ($(KL/r)_{22}$)	--	17.11	Eq. E3-4
Elastic critical buckling stress (F_{e22})	[Kip/in2]	977.52	Eq. E3-4
Reduction factor for slender unstiffened elements (Q_{s22})	--	1.00	
Effective area of the cross section based on the effective width (A_{eff22})	[in2]	3.66	Eq. E3-2
Reduction factor for slender stiffened elements (Q_{a22})	--	1.00	
Full reduction factor for slender elements (Q_{22})	--	1.00	Sec. E7
Critical stress for flexural buckling (F_{cr22})	[Kip/in2]	35.45	Eq. E3-2
Nominal flexural buckling strength (P_{n22})	[Kip]	129.74	Eq. E3-1
Factored torsional or flexural-torsional buckling strength(ϕP_{n11})	[Kip]	105.09	Sec. E4
Effective length factor (K_{11})	--	1.00	
Unbraced length (L_{11})	[ft]	5.21	
Flexural constant (H)	--	1.00	Eq. E4-10
Torsional or flexural-torsional elastic buckling stress (F_{e11})	[Kip/in2]	124.69	Eq. E4-4
Elastic torsional buckling stress (F_{ez})	[Kip/in2]	124.69	Eq. E4-9
Reduction factor for slender unstiffened elements (Q_{s11})	--	1.00	
Effective area of the cross section based on the effective width (A_{eff11})	[in2]	3.66	Eq. E3-2
Reduction factor for slender stiffened elements (Q_{a11})	--	1.00	
Full reduction factor for slender elements (Q_{11})	--	1.00	Sec. E7
Critical stress for torsional or flexural-torsional buckling (F_{cr11})	[Kip/in2]	31.90	Eq. E3-2
Nominal torsional or flexural-torsional buckling strength (P_{n11})	[Kip]	116.76	Eq. E4-1

FLEXURAL DESIGN ✔

Bending about major axis, M33

Ratio	:	0.60		
Capacity	:	22.82 [Kip*ft]	Reference	: Sec. F1
Demand	:	-13.61 [Kip*ft]	Ctrl Eq.	: C1 at 100.00%

Intermediate results	Unit	Value	Reference
Section classification			
Unstiffened element classification	--	Compact	
Unstiffened element slenderness (λ)	--	4.64	
Limiting slenderness for noncompact unstiffened element (λ_r)	--	28.38	
Limiting slenderness for compact unstiffened element (λ_p)	--	10.79	
Stiffened element classification	--	Compact	
Stiffened element slenderness (λ)	--	18.85	
Limiting slenderness for noncompact stiffened element (λ_r)	--	161.78	
Limiting slenderness for compact stiffened element (λ_p)	--	106.72	
Factored yielding strength(ϕM_n)	[Kip*ft]	22.82	Sec. F1
Yielding (M_n)	[Kip*ft]	25.35	Eq. F2-1
Factored lateral-torsional buckling strength(ϕM_n)	[Kip*ft]	22.82	Sec. F1
Limiting laterally unbraced length for yielding (L_p)	[ft]	2.92	Eq. F2-5
Effective radius of gyration used in the determination of Lr (r_{ts})	[in]	0.83	Eq. F2-7
Lateral-torsional factor (c)	--	1.00	Eq. F2-8a
Limiting laterally unbraced length for inelastic lateral-torsional buckling (Lr	[ft]	14.47	Eq. F2-6

Lateral-torsional buckling modification factor (C_b)	--	2.34	Eq. F1-1
Critical stress (F_{cr})	[Kip/in2]	197.15	Eq. F2-4
Lateral-torsional buckling (M_n)	[Kip*ft]	25.35	Eq. F2-2

Bending about minor axis, M22

Ratio	:	0.00		
Capacity	:	4.67 [Kip*ft]	Reference	: Sec. F1
Demand	:	0.00 [Kip*ft]	Ctrl Eq.	: C1 at 0.00%

Intermediate results	Unit	Value	Reference
Section classification			
Unstiffened element classification	--	Compact	
Unstiffened element slenderness (λ)	--	4.64	
Limiting slenderness for noncompact unstiffened element (λ_r)	--	28.38	
Limiting slenderness for compact unstiffened element (λ_p)	--	10.79	
Stiffened element classification	--	Compact	
Stiffened element slenderness (λ)	--	18.85	
Limiting slenderness for noncompact stiffened element (λ_r)	--	161.78	
Limiting slenderness for compact stiffened element (λ_p)	--	106.72	
Factored yielding strength(ϕM_n)	[Kip*ft]	4.67	Sec. F1
Yielding (M_n)	[Kip*ft]	5.18	Eq. F6-1

DESIGN FOR SHEAR ✔

Shear in major axis 33

Ratio	:	0.00		
Capacity	:	46.46 [Kip]		
Demand	:	0.00 [Kip]	Ctrl Eq.	: C1 at 0.00%

Intermediate results	Unit	Value	Reference
Factored shear capacity(ϕV_n)	[Kip]	46.46	
Web slenderness (λ_w)	--	4.64	Sec. G2
Shear area (A_w)	[in2]	2.39	
Web buckling coefficient (k_v)	--	1.20	Sec. G7
Web buckling coefficient (C_v)	--	1.00	Eq. G2-3
Nominal shear strength (V_n)	[Kip]	51.62	Eq. G2-1

Shear in minor axis 22

Ratio	:	0.50		
Capacity	:	30.02 [Kip]	Reference	: Sec. G2.1(a)
Demand	:	-15.14 [Kip]	Ctrl Eq.	: C1 at 100.00%

Intermediate results	Unit	Value	Reference
Factored shear capacity(ϕV_n)	[Kip]	30.02	Sec. G2.1(a)
Web slenderness (λ_w)	--	18.85	Sec. G2
Shear area (A_w)	[in2]	1.39	
Web buckling coefficient (C_v)	--	1.00	Eq. G2-2
Nominal shear strength (V_n)	[Kip]	30.02	Eq. G2-1

COMBINED ACTIONS DESIGN ✘

Combined flexure and axial compression

Ratio	:	1.03		
Ctrl Eq.	:	C1 at 100.00%	Reference	: Eq. H1-1a

Intermediate results	Unit	Value	Reference
Interaction for doubly symmetric members for in-plane bending	--	1.03	Eq. H1-1a
In-plane required flexural strength (M_{r33})	[Kip*ft]	-13.61	
In-plane available flexural strength (M_{c33})	[Kip*ft]	22.82	Sec. F1
In-plane required axial compressive strength (P_r)	[Kip]	57.10	
In-plane available axial compressive strength (P_c)	[Kip]	114.59	Sec. E1
Interaction for doubly symmetric members for out-of-plane bending	--	0.73	Eq. H1-2
Out-of-plane required flexural strength (M_{r33})	[Kip*ft]	-13.61	
Out-of-plane available flexural-torsional strength (M_{c33})	[Kip*ft]	22.82	Sec. F1
Out-of-plane required axial compressive strength (P_r)	[Kip]	57.10	
Out-of-plane available axial compressive strength (P_{co})	[Kip]	105.09	Sec. E4

Combined flexure and axial tension

Ratio	:	0.60		
Ctrl Eq.	:	C1 at 100.00%	Reference	: Eq. H1-1b

Intermediate results	Unit	Value	Reference
Required flexural strength about strong axis (M_{r33})	[Kip*ft]	-13.61	
Available flexural strength about strong axis (M_{c33})	[Kip*ft]	22.82	Sec. F1
Required flexural strength about weak axis (M_{r22})	[Kip*ft]	0.00	
Available flexural strength about weak axis (M_{c22})	[Kip*ft]	4.67	Sec. F1
Required axial tensile strength (P_r)	[Kip]	0.00	
Available axial tensile strength (P_c)	[Kip]	118.58	Eq. Sec. D2

Combined flexure and axial compression about local axis

Ratio	:	N/A		
Ctrl Eq.	:	--	Reference	:

Combined flexure and axial tension about local axis

Ratio	:	N/A		
Ctrl Eq.	:	--	Reference	:

Member : 11 (Arched Steel Rib)
Design status : N.G.

Section information

Section name: S 6X12.5 **(US)**

Dimensions

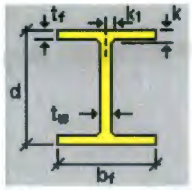

bf	=	3.330	[in]	Width
d	=	6.000	[in]	Depth
k	=	0.813	[in]	Distance k
k1	=	0.813	[in]	Distance k1
tf	=	0.359	[in]	Flange thickness
tw	=	0.232	[in]	Web thickness

Properties

Section properties	**Unit**	**Major axis**	**Minor axis**
Gross area of the section. (Ag)	[in2]	3.660	
Moment of Inertia (local axes) (I)	[in4]	22.000	1.800
Moment of Inertia (principal axes) (I')	[in4]	22.000	1.800
Bending constant for moments (principal axis) (J')	[in]	0.000	0.000
Radius of gyration (local axes) (r)	[in]	2.452	0.701
Radius of gyration (principal axes) (r')	[in]	2.452	0.701
Saint-Venant torsion constant. (J)	[in4]	0.167	
Section warping constant. (Cw)	[in6]	14.300	
Distance from centroid to shear center (principal axis) (xo,yo)	[in]	0.000	0.000
Top elastic section modulus of the section (local axis) (Ssup)	[in3]	7.340	1.080
Bottom elastic section modulus of the section (local axis) (Sinf)	[in3]	7.340	1.080
Top elastic section modulus of the section (principal axis) (S'sup)	[in3]	7.340	1.080
Bottom elastic section modulus of the section (principal axis) (S'inf)	[in3]	7.340	1.080
Plastic section modulus (local axis) (Z)	[in3]	8.450	1.860
Plastic section modulus (principal axis) (Z')	[in3]	8.450	1.860
Polar radius of gyration. (ro)	[in]	2.550	
Area for shear (Aw)	[in2]	2.390	1.390
Torsional constant. (C)	[in3]	0.352	

Material : A36

Properties	**Unit**	**Value**
Yield stress (Fy):	[Kip/in2]	36.00
Tensile strength (Fu):	[Kip/in2]	58.00
Elasticity Modulus (E):	[Kip/in2]	29000.00
Shear modulus for steel (G):	[Kip/in2]	11507.94

DESIGN CRITERIA

Description	**Unit**	**Value**
Length for tension slenderness ratio (L)	[ft]	5.16

Distance between member lateral bracing points

Length (Lb) [ft]	
Top	Bottom
5.16	5.16

Laterally unbraced length

Length [ft]			Effective length factor		
Major axis(L33)	Minor axis(L22)	Torsional axis(Lt)	Major axis(K33)	Minor axis(K22)	Torsional axis(Kt)
5.16	1.00	5.16	1.0	1.0	1.0

Additional assumptions

Continuous lateral torsional restraint	No
Tension field action	No
Continuous flexural torsional restraint	No
Effective length factor value type	None
Major axis frame type	Sway
Minor axis frame type	Sway

DESIGN CHECKS

AXIAL TENSION DESIGN ✔

Axial tension

Ratio	:	0.00		
Capacity	:	118.58 [Kip]	Reference	: Eq. Sec. D2
Demand	:	0.00 [Kip]	Ctrl Eq.	: C1 at 0.00%

Intermediate results	Unit	Value	Reference
Factored axial tension capacity(ϕP_n)	[Kip]	118.58	Eq. Sec. D2
Nominal axial tension capacity (P_n)	[Kip]	131.76	Eq. D2-1

AXIAL COMPRESSION DESIGN ✔

Compression in the major axis 33

Ratio	:	0.51		
Capacity	:	114.66 [Kip]	Reference	: Sec. E1
Demand	:	58.17 [Kip]	Ctrl Eq.	: C1 at 100.00%

Intermediate results	Unit	Value	Reference
Section classification			
Unstiffened element classification	--	Non slender	
Unstiffened element slenderness (λ)	--	4.64	
Unstiffened element limiting slenderness (λ_r)	--	15.89	
Stiffened element classification	--	Non slender	
Stiffened element slenderness (λ)	--	18.85	
Stiffened element limiting slenderness (λ_r)	--	42.29	
Factored flexural buckling strength(ϕP_{n33})	[Kip]	114.66	Sec. E1
Effective length factor (K_{33})	--	1.00	
Unbraced length (L_{33})	[ft]	5.16	
Effective slenderness ($(KL/r)_{33}$)	--	25.27	Eq. E3-4
Elastic critical buckling stress (F_{e33})	[Kip/in2]	448.22	Eq. E3-4
Reduction factor for slender unstiffened elements (Q_{s33})	--	1.00	
Effective area of the cross section based on the effective width (A_{eff33})	[in2]	3.66	Eq. E3-2
Reduction factor for slender stiffened elements (Q_{a33})	--	1.00	
Full reduction factor for slender elements (Q_{33})	--	1.00	Sec. E7
Critical stress for flexural buckling (F_{cr33})	[Kip/in2]	34.81	Eq. E3-2
Nominal flexural buckling strength (P_{n33})	[Kip]	127.40	Eq. E3-1

Compression in the minor axis 22

Ratio	:	0.55		
Capacity	:	105.17 [Kip]	Reference	: Sec. E4
Demand	:	58.17 [Kip]	Ctrl Eq.	: C1 at 100.00%

Intermediate results	Unit	Value	Reference
Section classification			
Unstiffened element classification	--	Non slender	
Unstiffened element slenderness (λ)	--	4.64	
Unstiffened element limiting slenderness (λ_r)	--	15.89	
Stiffened element classification	--	Non slender	
Stiffened element slenderness (λ)	--	18.85	
Stiffened element limiting slenderness (λ_r)	--	42.29	
Factored flexural buckling strength(ϕP_{n22})	[Kip]	116.77	Sec. E1
Effective length factor (K_{22})	--	1.00	
Unbraced length (L_{22})	[ft]	1.00	
Effective slenderness ($(KL/r)_{22}$)	--	17.11	Eq. E3-4
Elastic critical buckling stress (F_{e22})	[Kip/in2]	977.52	Eq. E3-4
Reduction factor for slender unstiffened elements (Q_{s22})	--	1.00	
Effective area of the cross section based on the effective width (A_{eff22})	[in2]	3.66	Eq. E3-2
Reduction factor for slender stiffened elements (Q_{a22})	--	1.00	
Full reduction factor for slender elements (Q_{22})	--	1.00	Sec. E7
Critical stress for flexural buckling (F_{cr22})	[Kip/in2]	35.45	Eq. E3-2
Nominal flexural buckling strength (P_{n22})	[Kip]	129.74	Eq. E3-1
Factored torsional or flexural-torsional buckling strength(ϕP_{n11})	[Kip]	105.17	Sec. E4
Effective length factor (K_{11})	--	1.00	
Unbraced length (L_{11})	[ft]	5.16	
Flexural constant (H)	--	1.00	Eq. E4-10
Torsional or flexural-torsional elastic buckling stress (F_{e11})	[Kip/in2]	125.55	Eq. E4-4
Elastic torsional buckling stress (F_{ez})	[Kip/in2]	125.55	Eq. E4-9
Reduction factor for slender unstiffened elements (Q_{s11})	--	1.00	
Effective area of the cross section based on the effective width (A_{eff11})	[in2]	3.66	Eq. E3-2
Reduction factor for slender stiffened elements (Q_{a11})	--	1.00	
Full reduction factor for slender elements (Q_{11})	--	1.00	Sec. E7
Critical stress for torsional or flexural-torsional buckling (F_{cr11})	[Kip/in2]	31.93	Eq. E3-2
Nominal torsional or flexural-torsional buckling strength (P_{n11})	[Kip]	116.86	Eq. E4-1

FLEXURAL DESIGN ✔

Bending about major axis, M33

Ratio	:	0.60		
Capacity	:	22.82 [Kip*ft]	Reference	: Sec. F1
Demand	:	-13.61 [Kip*ft]	Ctrl Eq.	: C1 at 0.00%

Intermediate results	Unit	Value	Reference
Section classification			
Unstiffened element classification	--	Compact	
Unstiffened element slenderness (λ)	--	4.64	
Limiting slenderness for noncompact unstiffened element (λ_r)	--	28.38	
Limiting slenderness for compact unstiffened element (λ_p)	--	10.79	
Stiffened element classification	--	Compact	
Stiffened element slenderness (λ)	--	18.85	
Limiting slenderness for noncompact stiffened element (λ_r)	--	161.78	
Limiting slenderness for compact stiffened element (λ_p)	--	106.72	
Factored yielding strength(ϕM_n)	[Kip*ft]	22.82	Sec. F1
Yielding (M_n)	[Kip*ft]	25.35	Eq. F2-1
Factored lateral-torsional buckling strength(ϕM_n)	[Kip*ft]	22.82	Sec. F1
Limiting laterally unbraced length for yielding (L_p)	[ft]	2.92	Eq. F2-5
Effective radius of gyration used in the determination of Lr (r_{ts})	[in]	0.83	Eq. F2-7
Lateral-torsional factor (c)	--	1.00	Eq. F2-8a
Limiting laterally unbraced length for inelastic lateral-torsional buckling (L_r)	[ft]	14.47	Eq. F2-6

Lateral-torsional buckling modification factor (Cb)	--	1.81	Eq. F1-1
Critical stress (F_{cr})	[Kip/in2]	154.25	Eq. F2-4
Lateral-torsional buckling (M_n)	[Kip*ft]	25.35	Eq. F2-2

Bending about minor axis, M22

Ratio	:	0.00		
Capacity	:	4.67 [Kip*ft]	Reference	: Sec. F1
Demand	:	0.00 [Kip*ft]	Ctrl Eq.	: C1 at 0.00%

Intermediate results	Unit	Value	Reference
Section classification			
Unstiffened element classification	--	Compact	
Unstiffened element slenderness (λ)	--	4.64	
Limiting slenderness for noncompact unstiffened element (λ_r)	--	28.38	
Limiting slenderness for compact unstiffened element (λ_p)	--	10.79	
Stiffened element classification	--	Compact	
Stiffened element slenderness (λ)	--	18.85	
Limiting slenderness for noncompact stiffened element (λ_r)	--	161.78	
Limiting slenderness for compact stiffened element (λ_p)	--	106.72	
Factored yielding strength(ϕM_n)	[Kip*ft]	4.67	Sec. F1
Yielding (M_n)	[Kip*ft]	5.18	Eq. F6-1

DESIGN FOR SHEAR ✔

Shear in major axis 33

Ratio	:	0.00		
Capacity	:	46.46 [Kip]		
Demand	:	0.00 [Kip]	Ctrl Eq.	: C1 at 0.00%

Intermediate results	Unit	Value	Reference
Factored shear capacity(ϕV_n)	[Kip]	46.46	
Web slenderness (λ_w)	--	4.64	Sec. G2
Shear area (A_w)	[in2]	2.39	
Web buckling coefficient (k_v)	--	1.20	Sec. G7
Web buckling coefficient (C_v)	--	1.00	Eq. G2-3
Nominal shear strength (V_n)	[Kip]	51.62	Eq. G2-1

Shear in minor axis 22

Ratio	:	0.48		
Capacity	:	30.02 [Kip]	Reference	: Sec. G2.1(a)
Demand	:	14.33 [Kip]	Ctrl Eq.	: C1 at 0.00%

Intermediate results	Unit	Value	Reference
Factored shear capacity(ϕV_n)	[Kip]	30.02	Sec. G2.1(a)
Web slenderness (λ_w)	--	18.85	Sec. G2
Shear area (A_w)	[in2]	1.39	
Web buckling coefficient (C_v)	--	1.00	Eq. G2-2
Nominal shear strength (V_n)	[Kip]	30.02	Eq. G2-1

COMBINED ACTIONS DESIGN ✘

Combined flexure and axial compression

Ratio	:	1 04		
Ctrl Eq.	:	C1 at 0.00%	Reference	: Eq. H1-1a

Intermediate results	Unit	Value	Reference
Interaction for doubly symmetric members for in-plane bending	--	1.04	Eq. H1-1a
In-plane required flexural strength (M_{r33})	[Kip*ft]	-13.61	
In-plane available flexural strength (M_{c33})	[Kip*ft]	22.82	Sec. F1
In-plane required axial compressive strength (P_r)	[Kip]	58.10	
In-plane available axial compressive strength (P_c)	[Kip]	114.66	Sec. E1
Interaction for doubly symmetric members for out-of-plane bending	--	0.79	Eq. H1-2
Out-of-plane required flexural strength (M_{r33})	[Kip*ft]	-13.61	
Out-of-plane available flexural-torsional strength (M_{c33})	[Kip*ft]	22.82	Sec. F1
Out-of-plane required axial compressive strength (P_r)	[Kip]	58.10	
Out-of-plane available axial compressive strength (P_{co})	[Kip]	105.17	Sec. E4

Combined flexure and axial tension

Ratio	:	0.60		
Ctrl Eq.	:	C1 at 0.00%	Reference	: Eq. H1-1b

Intermediate results	Unit	Value	Reference
Required flexural strength about strong axis (M_{r33})	[Kip*ft]	-13.61	
Available flexural strength about strong axis (M_{c33})	[Kip*ft]	22.82	Sec. F1
Required flexural strength about weak axis (M_{r22})	[Kip*ft]	0.00	
Available flexural strength about weak axis (M_{c22})	[Kip*ft]	4.67	Sec. F1
Required axial tensile strength (P_r)	[Kip]	0.00	
Available axial tensile strength (P_c)	[Kip]	118.58	Eq. Sec. D2

Combined flexure and axial compression about local axis

Ratio	:	N/A		
Ctrl Eq.	:	--	Reference	:

Combined flexure and axial tension about local axis

Ratio	:	N/A		
Ctrl Eq.	:	--	Reference	:

Member : 12 (Arched Steel Rib)
Design status : OK

Section information

Section name: S 6X12.5 **(US)**

Dimensions

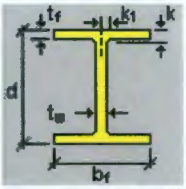

bf	=	3.330	[in]	Width
d	=	6.000	[in]	Depth
k	=	0.813	[in]	Distance k
k1	=	0.813	[in]	Distance k1
tf	=	0.359	[in]	Flange thickness
tw	=	0.232	[in]	Web thickness

Properties

Section properties	Unit	Major axis	Minor axis
Gross area of the section. (Ag)	[in2]	3.660	
Moment of Inertia (local axes) (I)	[in4]	22.000	1.800
Moment of Inertia (principal axes) (I')	[in4]	22.000	1.800
Bending constant for moments (principal axis) (J')	[in]	0.000	0.000
Radius of gyration (local axes) (r)	[in]	2.452	0.701
Radius of gyration (principal axes) (r')	[in]	2.452	0.701
Saint-Venant torsion constant. (J)	[in4]	0.167	
Section warping constant. (Cw)	[in6]	14.300	
Distance from centroid to shear center (principal axis) (xo,yo)	[in]	0.000	0.000
Top elastic section modulus of the section (local axis) (Ssup)	[in3]	7.340	1.080
Bottom elastic section modulus of the section (local axis) (Sinf)	[in3]	7.340	1.080
Top elastic section modulus of the section (principal axis) (S'sup)	[in3]	7.340	1.080
Bottom elastic section modulus of the section (principal axis) (S'inf)	[in3]	7.340	1.080
Plastic section modulus (local axis) (Z)	[in3]	8.450	1.860
Plastic section modulus (principal axis) (Z')	[in3]	8.450	1.860
Polar radius of gyration. (ro)	[in]	2.550	
Area for shear (Aw)	[in2]	2.390	1.390
Torsional constant. (C)	[in3]	0.352	

Material : A36

Properties	Unit	Value
Yield stress (Fy):	[Kip/in2]	36.00
Tensile strength (Fu):	[Kip/in2]	58.00
Elasticity Modulus (E):	[Kip/in2]	29000.00
Shear modulus for steel (G):	[Kip/in2]	11507.94

DESIGN CRITERIA

Description	Unit	Value
Length for tension slenderness ratio (L)	[ft]	1.00

Distance between member lateral bracing points

Length (Lb) [ft] Top	Bottom
1.25	1.25

Laterally unbraced length

Length [ft]			Effective length factor		
Major axis(L33)	Minor axis(L22)	Torsional axis(Lt)	Major axis(K33)	Minor axis(K22)	Torsional axis(Kt)
1.25	1.00	1.25	1.0	1.0	1.0

Additional assumptions

Continuous lateral torsional restraint	No
Tension field action	No
Continuous flexural torsional restraint	No
Effective length factor value type	None
Major axis frame type	Sway
Minor axis frame type	Sway

DESIGN CHECKS

AXIAL TENSION DESIGN ✔

Axial tension

Ratio	:	0.00		
Capacity	:	118.58 [Kip]	Reference	: Eq. Sec. D2
Demand	:	0.00 [Kip]	Ctrl Eq.	: C1 at 0.00%

Intermediate results	Unit	Value	Reference
Factored axial tension capacity(ϕP_n)	[Kip]	118.58	Eq. Sec. D2
Nominal axial tension capacity (P_n)	[Kip]	131.76	Eq. D2-1

AXIAL COMPRESSION DESIGN ✔

Compression in the major axis 33

Ratio	:	0.50		
Capacity	:	118.35 [Kip]	Reference	: Sec. E1
Demand	:	59.49 [Kip]	Ctrl Eq.	: C1 at 0.00%

Intermediate results	Unit	Value	Reference
Section classification			
Unstiffened element classification	--	Non slender	
Unstiffened element slenderness (λ)	--	4.64	
Unstiffened element limiting slenderness (λ_r)	--	15.89	
Stiffened element classification	--	Non slender	
Stiffened element slenderness (λ)	--	18.85	
Stiffened element limiting slenderness (λ_r)	--	42.29	
Factored flexural buckling strength(ϕP_{n33})	[Kip]	118.35	Sec. E1
Effective length factor (K_{33})	--	1.00	
Unbraced length (L_{33})	[ft]	1.25	
Effective slenderness ($(KL/r)_{33}$)	--	6.12	Eq. E3-4
Elastic critical buckling stress (F_{e33})	[Kip/in2]	7646.40	Eq. E3-4
Reduction factor for slender unstiffened elements (Q_{s33})	--	1.00	
Effective area of the cross section based on the effective width (A_{eff33})	[in2]	3.66	Eq. E3-2
Reduction factor for slender stiffened elements (Q_{a33})	--	1.00	
Full reduction factor for slender elements (Q_{33})	--	1.00	Sec. E7
Critical stress for flexural buckling (F_{cr33})	[Kip/in2]	35.93	Eq. E3-2
Nominal flexural buckling strength (P_{n33})	[Kip]	131.50	Eq. E3-1

Compression in the minor axis 22

Ratio	:	0.51		
Capacity	:	116.49 [Kip]	Reference	: Sec. E4
Demand	:	59.49 [Kip]	Ctrl Eq.	: C1 at 0.00%

Intermediate results	Unit	Value	Reference
Section classification			
Unstiffened element classification	--	Non slender	
Unstiffened element slenderness (λ)	--	4.64	
Unstiffened element limiting slenderness (λ_r)	--	15.89	
Stiffened element classification	--	Non slender	
Stiffened element slenderness (λ)	--	18.85	
Stiffened element limiting slenderness (λ_r)	--	42.29	
Factored flexural buckling strength(ϕP_{n22})	[Kip]	116.77	Sec. E1
Effective length factor (K_{22})	--	1.00	
Unbraced length (L_{22})	[ft]	1.00	
Effective slenderness ($(KL/r)_{22}$)	--	17.11	Eq. E3-4
Elastic critical buckling stress (F_{e22})	[Kip/in2]	977.52	Eq. E3-4
Reduction factor for slender unstiffened elements (Q_{s22})	--	1.00	
Effective area of the cross section based on the effective width (A_{eff22})	[in2]	3.66	Eq. E3-2
Reduction factor for slender stiffened elements (Q_{a22})	--	1.00	
Full reduction factor for slender elements (Q_{22})	--	1.00	Sec. E7
Critical stress for flexural buckling (F_{cr22})	[Kip/in2]	35.45	Eq. E3-2
Nominal flexural buckling strength (P_{n22})	[Kip]	129.74	Eq. E3-1
Factored torsional or flexural-torsional buckling strength(ϕP_{n11})	[Kip]	116.49	Sec. E4
Effective length factor (K_{11})	--	1.00	
Unbraced length (L_{11})	[ft]	1.25	
Flexural constant (H)	--	1.00	Eq. E4-10
Torsional or flexural-torsional elastic buckling stress (F_{e11})	[Kip/in2]	845.07	Eq. E4-4
Elastic torsional buckling stress (F_{ez})	[Kip/in2]	845.07	Eq. E4-9
Reduction factor for slender unstiffened elements (Q_{s11})	--	1.00	
Effective area of the cross section based on the effective width (A_{eff11})	[in2]	3.66	Eq. E3-2
Reduction factor for slender stiffened elements (Q_{a11})	--	1.00	
Full reduction factor for slender elements (Q_{11})	--	1.00	Sec. E7
Critical stress for torsional or flexural-torsional buckling (F_{cr11})	[Kip/in2]	35.36	Eq. E3-2
Nominal torsional or flexural-torsional buckling strength (P_{n11})	[Kip]	129.43	Eq. E4-1

FLEXURAL DESIGN ✔

Bending about major axis, M33

Ratio	:	0.55		
Capacity	:	22.82 [Kip*ft]	Reference	: Sec. F1
Demand	:	-12.54 [Kip*ft]	Ctrl Eq.	: C1 at 100.00%

Intermediate results	Unit	Value	Reference
Section classification			
Unstiffened element classification	--	Compact	
Unstiffened element slenderness (λ)	--	4.64	
Limiting slenderness for noncompact unstiffened element (λ_r)	--	28.38	
Limiting slenderness for compact unstiffened element (λ_p)	--	10.79	
Stiffened element classification	--	Compact	
Stiffened element slenderness (λ)	--	18.85	
Limiting slenderness for noncompact stiffened element (λ_r)	--	161.78	
Limiting slenderness for compact stiffened element (λ_p)	--	106.72	
Factored yielding strength(ϕM_n)	[Kip*ft]	22.82	Sec. F1
Yielding (M_n)	[Kip*ft]	25.35	Eq. F2-1

Bending about minor axis, M22

Ratio	:	0.00		
Capacity	:	4.67 [Kip*ft]	Reference	: Sec. F1
Demand	:	0.00 [Kip*ft]	Ctrl Eq.	: C1 at 0.00%

Intermediate results	Unit	Value	Reference
Section classification			
Unstiffened element classification	--	Compact	
Unstiffened element slenderness (λ)	--	4.64	
Limiting slenderness for noncompact unstiffened element (λ_r)	--	28.38	
Limiting slenderness for compact unstiffened element (λ_p)	--	10.79	
Stiffened element classification	--	Compact	
Stiffened element slenderness (λ)	--	18.85	
Limiting slenderness for noncompact stiffened element (λ_r)	--	161.78	
Limiting slenderness for compact stiffened element (λ_p)	--	106.72	
Factored yielding strength(ϕM_n)	[Kip*ft]	4.67	Sec. F1
Yielding (M_n)	[Kip*ft]	5.18	Eq. F6-1

DESIGN FOR SHEAR ✔

Shear in major axis 33

Ratio	:	0.00		
Capacity	:	46.46 [Kip]		
Demand	:	0.00 [Kip]	Ctrl Eq.	: C1 at 0.00%

Intermediate results	Unit	Value	Reference
Factored shear capacity(ϕV_n)	[Kip]	46.46	
Web slenderness (λ_w)	--	4.64	Sec. G2
Shear area (A_w)	[in2]	2.39	
Web buckling coefficient (k_v)	--	1.20	Sec. G7
Web buckling coefficient (C_v)	--	1.00	Eq. G2-3
Nominal shear strength (V_n)	[Kip]	51.62	Eq. G2-1

Shear in minor axis 22

Ratio	:	0.16		
Capacity	:	30.02 [Kip]	Reference	: Sec. G2.1(a)
Demand	:	-4.90 [Kip]	Ctrl Eq.	: C1 at 100.00%

Intermediate results	Unit	Value	Reference
Factored shear capacity(ϕV_n)	[Kip]	30.02	Sec. G2.1(a)
Web slenderness (λ_w)	--	18.85	Sec. G2
Shear area (A_w)	[in2]	1.39	
Web buckling coefficient (C_v)	--	1.00	Eq. G2-2
Nominal shear strength (V_n)	[Kip]	30.02	Eq. G2-1

COMBINED ACTIONS DESIGN ✔

Combined flexure and axial compression

Ratio	:	0.99		
Ctrl Eq.	:	C1 at 100.00%	Reference	: Eq. H1-1a

Intermediate results	Unit	Value	Reference
Interaction for doubly symmetric members for in-plane bending	--	0.99	Eq. H1-1a
In-plane required flexural strength (M_{r33})	[Kip*ft]	-12.54	
In-plane available flexural strength (M_{c33})	[Kip*ft]	22.82	Sec. F1
In-plane required axial compressive strength (P_r)	[Kip]	59.49	
In-plane available axial compressive strength (P_c)	[Kip]	118.35	Sec. E1
Interaction for doubly symmetric members for out-of-plane bending	--	0.86	Eq. H1-2
Out-of-plane required flexural strength (M_{r33})	[Kip*ft]	-12.54	
Out-of-plane available flexural-torsional strength (M_{c33})	[Kip*ft]	22.82	Sec. F1
Out-of-plane required axial compressive strength (P_r)	[Kip]	59.49	
Out-of-plane available axial compressive strength (P_{co})	[Kip]	116.49	Sec. E4

Combined flexure and axial tension

Ratio : 0.55
Ctrl Eq. : C1 at 100.00% Reference : Eq. H1-1b

Intermediate results	Unit	Value	Reference
Required flexural strength about strong axis (M_{r33})	[Kip*ft]	-12.54	
Available flexural strength about strong axis (M_{c33})	[Kip*ft]	22.82	Sec. F1
Required flexural strength about weak axis (M_{r22})	[Kip*ft]	0.00	
Available flexural strength about weak axis (M_{c22})	[Kip*ft]	4.67	Sec. F1
Required axial tensile strength (P_r)	[Kip]	0.00	
Available axial tensile strength (P_c)	[Kip]	118.58	Eq. Sec. D2

Combined flexure and axial compression about local axis

Ratio : N/A
Ctrl Eq. : -- Reference :

Combined flexure and axial tension about local axis

Ratio : N/A
Ctrl Eq. : -- Reference :

ch2m	Calculation Title: PUREX Tunnel 2 Engineering Evaluation	Project Number: 693839.BS Project: PUREX Tunnel 2 Client: CHPRC

Arched Steel Rib Beam Splice Analysis

I6 Rib Splice

Demands (from Steel Rib Beam Analysis at Members 2 or 7)

Maximum Shear	$V_u := 13.68kip$
Maximum Moment	$M_u := 12.54kip \cdot ft$
Maximum Compression	$P_u := 58.18kip$

Material Properties

Nominal Steel Yield Stress	$F_{yl} := 36ksi$
Minimum Steel Ultimate Stress	$F_{ul} := 58ksi$
Weld Strength	$F_{EXX} := 60ksi$

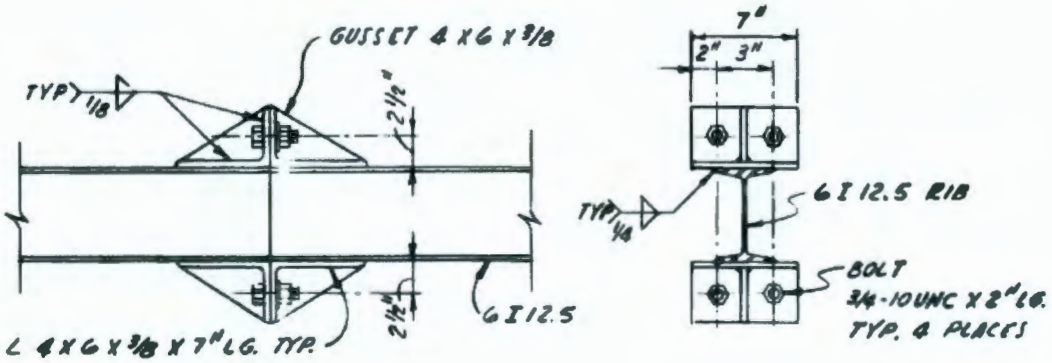

DETAIL 5

SCALE 1 1/2" = 1'-0"

Bolt Properties

Bolt Diameter	$d_b := \frac{3}{4}in$	Number of Bolts	$n_b := 4$
Hole Diameter	$h_b := d_b + \frac{1}{16}in = \frac{13}{16} \cdot in$		

Angle Dimensions

Angle thickness	$t_L := \frac{3}{8}in$	Angle Width	$w_L := 7in$
OS Leg Length	$l_{OS} := 4in$		
Horiz. Leg Length	$l_{HZ} := 6in$		
# of sixteenths of weld	$D_{weld} := 4$		

Shear Yielding of OS Angle Leg

Resistance Factor for Shear Yielding $\phi_{sy} := 1.00$

Gross Area of OS Angle Leg $A_{gv} := t_L \cdot w_L = 2.625 \cdot in^2$

Shear Yield Strength of Angle OS Leg $\phi Rn_{sy} := \phi_{sy} \cdot F_{yl} \cdot A_{gv} = 94.5 \cdot kip$

$$SYDCR := \frac{V_u}{\phi Rn_{sy}} = 0.14$$

Shear Rupture of OS Angle Leg

Resistance Factor for Shear Rupture $\phi_{sr} := 0.75$

Net Area of OS Angle Leg $A_{nv} := t_L \cdot (w_L - 2 \cdot h_b) = 2.016 \cdot in^2$

Shear Rupture Strength OS Angle Leg $\phi Rn_{sr} := \phi_{sr} \cdot 0.60 \cdot F_{ul} \cdot A_{nv} = 52.608 \cdot kip$

$$SRDCR := \frac{V_u}{\phi Rn_{sr}} = 0.26$$

Shear Yield on Bolts

Bolt Shear Strength $\phi r_n := 8.97 kip$ *(AISC Table 7-1 for A307 Bolts*

Bolt group shear strength $\phi r_{ng} := n_b \cdot \phi r_n = 35.88 \cdot kip$

$$SYbDCR := \frac{V_u}{\phi r_{ng}} = 0.38$$

Bearing Strength of Bolts

Bolt Bearing Strength $\phi r_{nb} := 44.0 \frac{kip}{in}$ *(AISC Table 7-5,std hole, 1-1/4" min edge distance)*

Bolt Group Bearing Strength $\phi r_{nbg} := \phi r_{nb} \cdot t_L \cdot n_b = 66 \cdot kip$

$$BrgDCR := \frac{V_u}{\phi r_{nbg}} = 0.21$$

weld check at rib splice angles

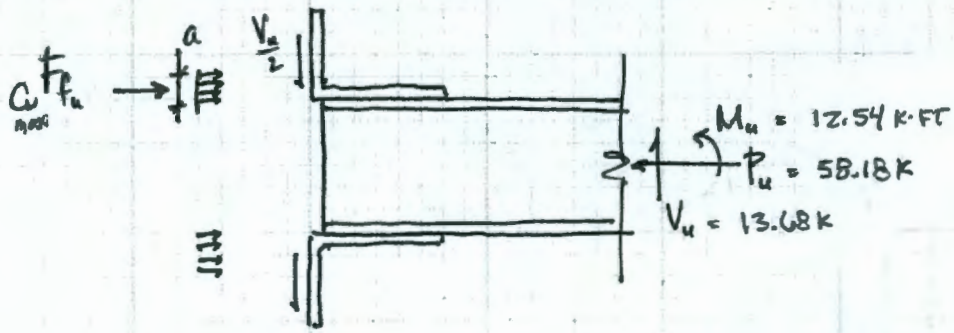

note: flexural demand is low enough that the bolts in the splice will never see net tension

$$C_{u(max)} = \frac{58.18}{2} + \frac{12.54 \times 12}{(6" - 0.28")} = \text{Flange force } F_{fu} = 55.4^k$$

$$\text{bearing area req'd} = \frac{55.4k}{.9(36\ ksi)} = 1.7\ in^2$$

for effective bearing width = b_f of I-section = 3"

$$a = \frac{2}{3} = \frac{2}{3}" \text{ say } 1"$$

CHECK WELD

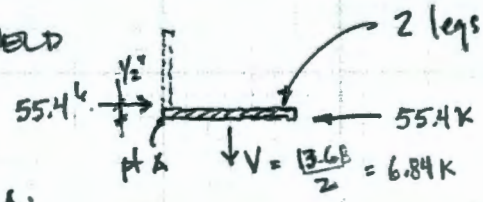

at critical pt A:

$$f'_x = \frac{55.4}{2(5.5)} = 5.04\ k/in \qquad f'_y = \frac{6.84K}{2(5.5)} = 0.62\ k/in$$

$$f''_x = 0 \qquad f''_y = \frac{55.4 \times \frac{1}{2}"}{2\left(\frac{5.5^2}{6}\right)} = 2.75\ k/in$$

$$R_u = \left[(5.04)^2 + (0.62 + 2.75)^2\right]^{1/2}$$

$$= 6.06\ k/"$$

for E70xx electrodes, 1/4" FILLET → $\phi R_n = 5.57\ k/"$ DCR = 1.09

ch2m	Calculation Title: PUREX Tunnel 2 Engineering Evaluation	Project Number: 693839.BS Project: PUREX Tunnel 2 Client: CHPRC

Steel Wale Beam Support Analysis

Load condition: TL=Total Factored Load

Wale Beam No. 1

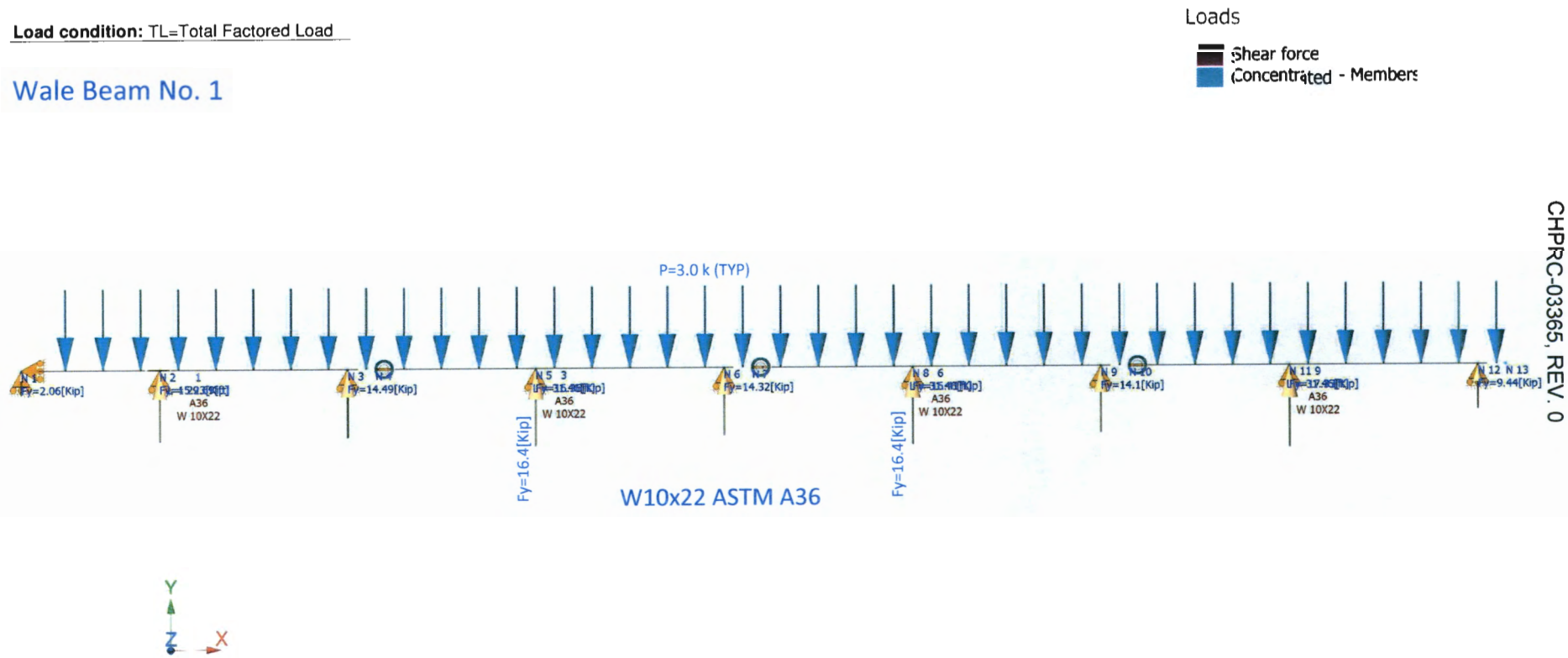

Load condition: TL=Total Factored Load

Wale Beam No. 1

Internal forces / Loads

- Shear force
- Concentrated - Members

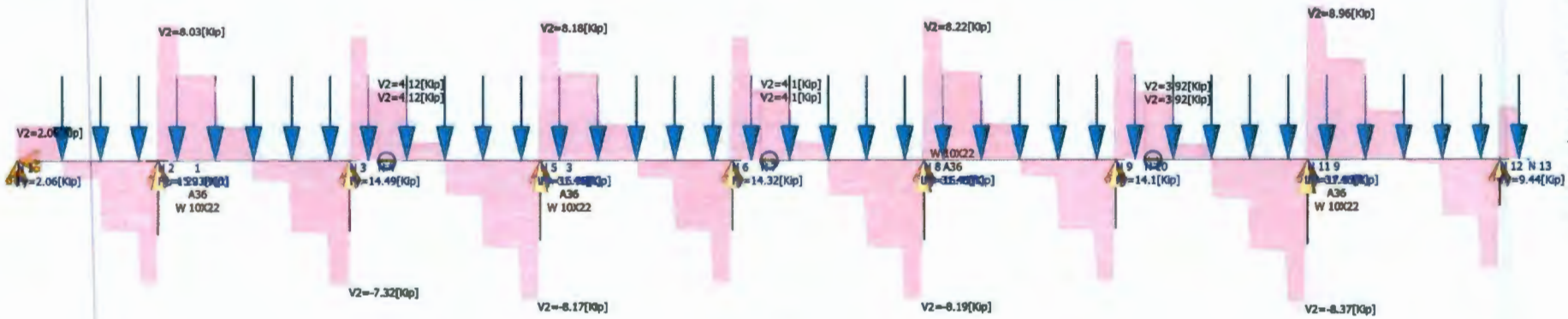

W10x22 ASTM A36

MEMBER SHEAR DIAGRAM RESULTS

Wale Beam No. 1

Steel Code Check

Report: Comprehensive

Members: Hot-rolled
Design code: AISC 360-2010 LRFD

Member	:	**6 (Wale 1)**
Design status	:	**OK**

Section information

Section name: W 10X22 **(US)**

Dimensions

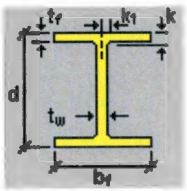

bf	=	5.750	[in]	Width
d	=	10.200	[in]	Depth
k	=	0.660	[in]	Distance k
k1	=	0.625	[in]	Distance k1
tf	=	0.360	[in]	Flange thickness
tw	=	0.240	[in]	Web thickness

Properties

Section properties	**Unit**	**Major axis**	**Minor axis**
Gross area of the section. (Ag)	[in2]	6.490	
Moment of Inertia (local axes) (I)	[in4]	118.000	11.400
Moment of Inertia (principal axes) (I')	[in4]	118.000	11.400
Bending constant for moments (principal axis) (J')	[in]	0.000	0.000
Radius of gyration (local axes) (r)	[in]	4.264	1.325
Radius of gyration (principal axes) (r')	[in]	4.264	1.325
Saint-Venant torsion constant. (J)	[in4]	0.239	
Section warping constant. (Cw)	[in6]	275.000	
Distance from centroid to shear center (principal axis) (xo,yo)	[in]	0.000	0.000
Top elastic section modulus of the section (local axis) (Ssup)	[in3]	23.200	3.970
Bottom elastic section modulus of the section (local axis) (Sinf)	[in3]	23.200	3.970
Top elastic section modulus of the section (principal axis) (S'sup)	[in3]	23.200	3.970
Bottom elastic section modulus of the section (principal axis) (S'inf)	[in3]	23.200	3.970
Plastic section modulus (local axis) (Z)	[in3]	26.000	6.100
Plastic section modulus (principal axis) (Z')	[in3]	26.000	6.100
Polar radius of gyration. (ro)	[in]	4.465	
Area for shear (Aw)	[in2]	4.140	2.450
Torsional constant. (C)	[in3]	0.623	

Material : A36

Properties	Unit	Value
Yield stress (Fy):	[Kip/in2]	36.00
Tensile strength (Fu):	[Kip/in2]	58.00
Elasticity Modulus (E):	[Kip/in2]	29000.00
Shear modulus for steel (G):	[Kip/in2]	11507.94

DESIGN CRITERIA

Description	Unit	Value
Length for tension slenderness ratio (L)	[ft]	31.46

Distance between member lateral bracing points

Length (Lb) [ft] Top	Bottom
31.46	31.46

Laterally unbraced length

Length [ft] Major axis(L33)	Minor axis(L22)	Torsional axis(Lt)	Effective length factor Major axis(K33)	Minor axis(K22)	Torsional axis(Kt)
31.46	31.46	31.46	1.0	1.0	1.0

Additional assumptions

Continuous lateral torsional restraint	No
Tension field action	No
Continuous flexural torsional restraint	No
Effective length factor value type	None
Major axis frame type	Sway
Minor axis frame type	Sway

DESIGN CHECKS

AXIAL TENSION DESIGN ✔

Axial tension

Ratio	:	0.00		
Capacity	:	210.28 [Kip]	Reference	: Eq. Sec. D2
Demand	:	0.00 [Kip]	Ctrl Eq.	: C1 at 0.00%

Intermediate results	Unit	Value	Reference
Factored axial tension capacity(ϕP_n)	[Kip]	210.28	Eq. Sec. D2
Nominal axial tension capacity (P_n)	[Kip]	233.64	Eq. D2-1

AXIAL COMPRESSION DESIGN ✔

Compression in the major axis 33

Ratio	:	0.00		
Capacity	:	139.19 [Kip]	Reference	: Sec. E1
Demand	:	0.00 [Kip]	Ctrl Eq.	: C1 at 0.00%

Intermediate results	Unit	Value	Reference
Section classification			
Unstiffened element classification	--	Non slender	
Unstiffened element slenderness (λ)	--	7.99	
Unstiffened element limiting slenderness (λ_r)	--	15.89	
Stiffened element classification	--	Non slender	
Stiffened element slenderness (λ)	--	37.00	
Stiffened element limiting slenderness (λ_r)	--	42.29	
Factored flexural buckling strength(ϕP_{n33})	[Kip]	139.19	Sec. E1
Effective length factor (K_{33})	--	1.00	
Unbraced length (L_{33})	[ft]	31.46	
Effective slenderness ($(KL/r)_{33}$)	--	88.53	Eq. E3-4
Elastic critical buckling stress (F_{e33})	[Kip/in2]	36.52	Eq. E3-4
Reduction factor for slender unstiffened elements (Q_{s33})	--	1.00	
Effective area of the cross section based on the effective width (A_{eff33})	[in2]	6.49	Eq. E3-2
Reduction factor for slender stiffened elements (Q_{a33})	--	1.00	
Full reduction factor for slender elements (Q_{33})	--	1.00	Sec. E7
Critical stress for flexural buckling (F_{cr33})	[Kip/in2]	23.83	Eq. E3-2
Nominal flexural buckling strength (P_{n33})	[Kip]	154.65	Eq. E3-1

Compression in the minor axis 22

Ratio	:	0.00		
Capacity	:	18.07 [Kip]	Reference	: Sec. E1
Demand	:	0.00 [Kip]	Ctrl Eq.	: C1 at 0.00%

Intermediate results	Unit	Value	Reference
Section classification			
Unstiffened element classification	--	Non slender	
Unstiffened element slenderness (λ)	--	7.99	
Unstiffened element limiting slenderness (λ_r)	--	15.89	
Stiffened element classification	--	Non slender	
Stiffened element slenderness (λ)	--	37.00	
Stiffened element limiting slenderness (λ_r)	--	42.29	
Factored flexural buckling strength(ϕP_{n22})	[Kip]	18.07	Sec. E1
Effective length factor (K_{22})	--	1.00	
Unbraced length (L_{22})	[ft]	31.46	
Effective slenderness ($(KL/r)_{22}$)	--	284.83	Eq. E3-4
Elastic critical buckling stress (F_{e22})	[Kip/in2]	3.53	Eq. E3-4
Reduction factor for slender unstiffened elements (Q_{s22})	--	1.00	
Effective area of the cross section based on the effective width (A_{eff22})	[in2]	6.49	Eq. E3-3
Reduction factor for slender stiffened elements (Q_{a22})	--	1.00	
Full reduction factor for slender elements (Q_{22})	--	1.00	Sec. E7
Critical stress for flexural buckling (F_{cr22})	[Kip/in2]	3.09	Eq. E3-3
Nominal flexural buckling strength (P_{n22})	[Kip]	20.08	Eq. E3-1
Factored torsional or flexural-torsional buckling strength(ϕP_{n11})	[Kip]	116.52	Sec. E4
Effective length factor (K_{11})	--	1.00	
Unbraced length (L_{11})	[ft]	31.46	
Flexural constant (H)	--	1.00	Eq. E4-10
Torsional or flexural-torsional elastic buckling stress (F_{e11})	[Kip/in2]	25.52	Eq. E4-4
Elastic torsional buckling stress (F_{ez})	[Kip/in2]	25.52	Eq. E4-9
Reduction factor for slender unstiffened elements (Q_{s11})	--	1.00	
Effective area of the cross section based on the effective width (A_{eff11})	[in2]	6.49	Eq. E3-2
Reduction factor for slender stiffened elements (Q_{a11})	--	1.00	
Full reduction factor for slender elements (Q_{11})	--	1.00	Sec. E7
Critical stress for torsional or flexural-torsional buckling (F_{cr11})	[Kip/in2]	19.95	Eq. E3-2
Nominal torsional or flexural-torsional buckling strength (P_{n11})	[Kip]	129.47	Eq. E4-1

FLEXURAL DESIGN ✔

Bending about major axis, M33

Ratio	:	0.51		
Capacity	:	40.25 [Kip*ft]	Reference	: Sec. F1
Demand	:	-20.55 [Kip*ft]	Ctrl Eq.	: C1 at 41.67%

Intermediate results	Unit	Value	Reference
Section classification			
Unstiffened element classification	--	Compact	
Unstiffened element slenderness (λ)	--	7.99	
Limiting slenderness for noncompact unstiffened element (λ_r)	--	28.38	
Limiting slenderness for compact unstiffened element (λ_p)	--	10.79	
Stiffened element classification	--	Compact	
Stiffened element slenderness (λ)	--	37.00	
Limiting slenderness for noncompact stiffened element (λ_r)	--	161.78	
Limiting slenderness for compact stiffened element (λ_p)	--	106.72	
Factored yielding strength(ϕM_n)	[Kip*ft]	70.20	Sec. F1
Yielding (M_n)	[Kip*ft]	78.00	Eq. F2-1
Factored lateral-torsional buckling strength(ϕM_n)	[Kip*ft]	40.25	Sec. F1
Limiting laterally unbraced length for yielding (L_p)	[ft]	5.52	Eq. F2-5
Effective radius of gyration used in the determination of Lr (r_{ts})	[in]	1.55	Eq. F2-7
Lateral-torsional factor (c)	--	1.00	Eq. F2-8a
Limiting laterally unbraced length for inelastic lateral-torsional buckling (L_r	[ft]	17.28	Eq. F2-6
Lateral-torsional buckling modification factor (C_b)	--	1.98	Eq. F1-1
Critical stress (F_{cr})	[Kip/in2]	23.13	Eq. F2-4
Lateral-torsional buckling (M_n)	[Kip*ft]	44.73	Eq. F2-3

Bending about minor axis, M22

Ratio	:	0.00		
Capacity	:	16.47 [Kip*ft]	Reference	: Sec. F1
Demand	:	0.00 [Kip*ft]	Ctrl Eq.	: C1 at 0.00%

Intermediate results	Unit	Value	Reference
Section classification			
Unstiffened element classification	--	Compact	
Unstiffened element slenderness (λ)	--	7.99	
Limiting slenderness for noncompact unstiffened element (λ_r)	--	28.38	
Limiting slenderness for compact unstiffened element (λ_p)	--	10.79	
Stiffened element classification	--	Compact	
Stiffened element slenderness (λ)	--	37.00	
Limiting slenderness for noncompact stiffened element (λ_r)	--	161.78	
Limiting slenderness for compact stiffened element (λ_p)	--	106.72	
Factored yielding strength(ϕM_n)	[Kip*ft]	16.47	Sec. F1
Yielding (M_n)	[Kip*ft]	18.30	Eq. F6-1

DESIGN FOR SHEAR ✔

Shear in major axis 33

Ratio	:	0.00		
Capacity	:	80.48 [Kip]		
Demand	:	0.00 [Kip]	Ctrl Eq.	: C1 at 0.00%

Intermediate results	Unit	Value	Reference
Factored shear capacity(ϕV_n)	[Kip]	80.48	
Web slenderness (λ_w)	--	7.99	Sec. G2
Shear area (A_w)	[in2]	4.14	
Web buckling coefficient (k_v)	--	1.20	Sec. G7
Web buckling coefficient (C_v)	--	1.00	Eq. G2-3
Nominal shear strength (V_n)	[Kip]	89.42	Eq. G2-1

Shear in minor axis 22

Ratio	:	0.16		
Capacity	:	52.92 [Kip]	Reference	: Sec. G2.1(a)
Demand	:	8.21 [Kip]	Ctrl Eq.	: C1 at 43.75%

Intermediate results	Unit	Value	Reference
Factored shear capacity(ϕV_n)	[Kip]	52.92	Sec. G2.1(a)
Web slenderness (λ_w)	--	37.00	Sec. G2
Shear area (A_w)	[in2]	2.45	
Web buckling coefficient (C_v)	--	1.00	Eq. G2-2
Nominal shear strength (V_n)	[Kip]	52.92	Eq. G2-1

COMBINED ACTIONS DESIGN ✔

Combined flexure and axial compression

Ratio	:	0.51		
Ctrl Eq.	:	C1 at 41.67%	Reference	: Eq. H1-1b

Intermediate results	Unit	Value	Reference
Interaction of flexure and axial force	--	0.51	Eq. H1-1b
Required flexural strength about strong axis (M_{r33})	[Kip*ft]	-20.55	
Available flexural strength about strong axis (M_{c33})	[Kip*ft]	40.25	Sec. F1
Required flexural strength about weak axis (M_{r22})	[Kip*ft]	0.00	
Available flexural strength about weak axis (M_{c22})	[Kip*ft]	16.47	Sec. F1
Required axial compressive strength (P_r)	[Kip]	0.00	
Available axial compressive strength (P_c)	[Kip]	18.07	Sec. E1

Combined flexure and axial tension

Ratio	:	0.51		
Ctrl Eq.	:	C1 at 41.67%	Reference	: Eq. H1-1b

Intermediate results	Unit	Value	Reference
Required flexural strength about strong axis (M_{r33})	[Kip*ft]	-20.55	
Available flexural strength about strong axis (M_{c33})	[Kip*ft]	40.25	Sec. F1
Required flexural strength about weak axis (M_{r22})	[Kip*ft]	0.00	
Available flexural strength about weak axis (M_{c22})	[Kip*ft]	16.47	Sec. F1
Required axial tensile strength (P_r)	[Kip]	0.00	
Available axial tensile strength (P_c)	[Kip]	210.28	Eq. Sec. D2

Load condition: TL=Total Factored Load

Wale Beam No. 2

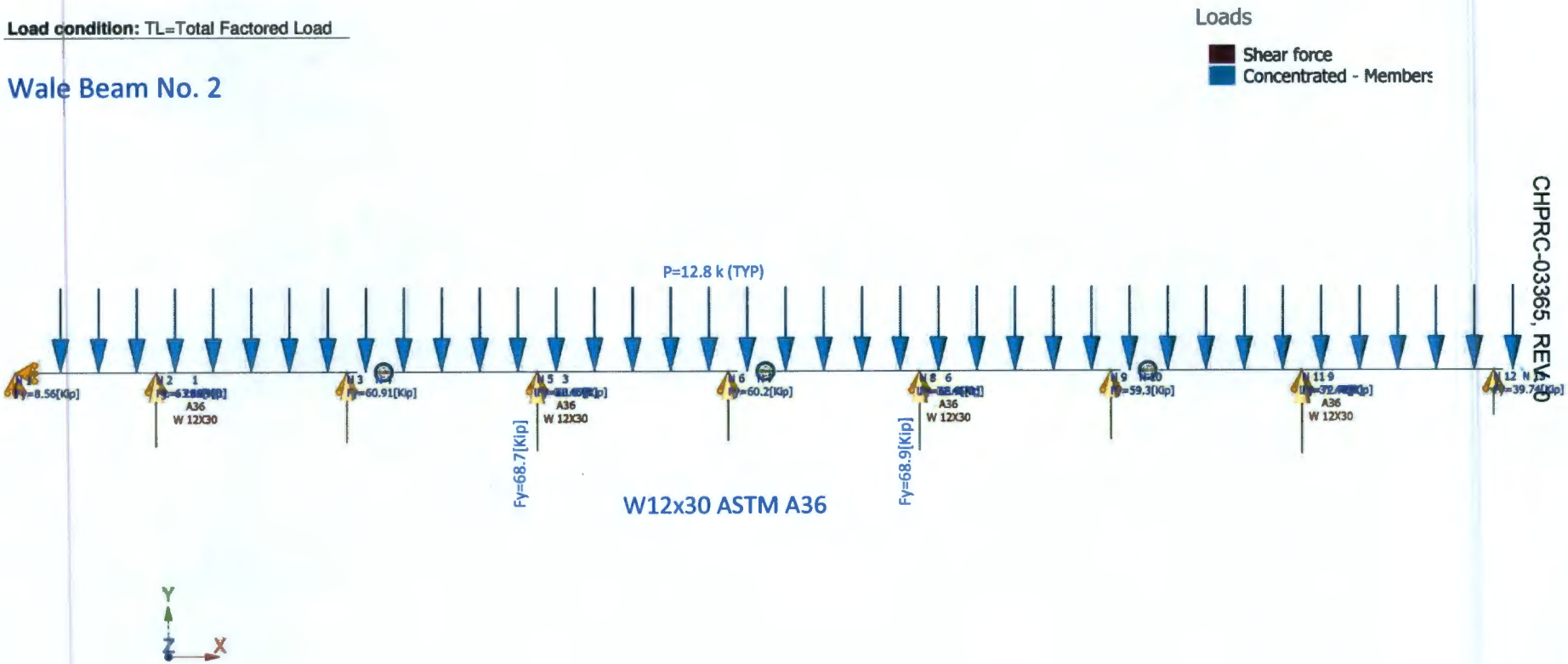

Load condition: TL=Total Factored Load

Wale Beam No. 2

Internal forces / Loads

- Shear force
- Concentrated - Members

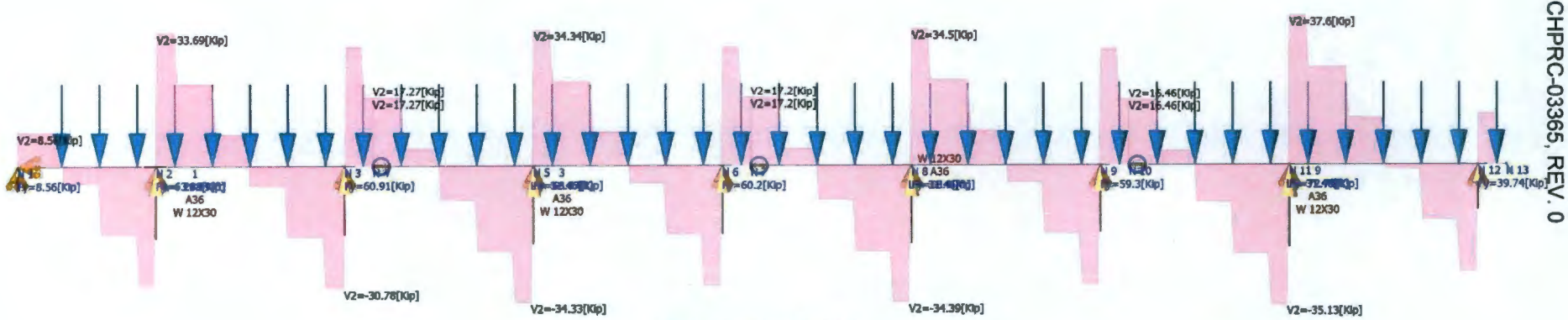

W12x30 ASTM A36

MEMBER SHEAR DIAGRAM RESULTS

Wale Beam No. 2

Steel Code Check

Report: Comprehensive

Members: Hot-rolled
Design code: AISC 360-2010 LRFD

Member	:	**6 (Wale 2)**
Design status	:	**N.G.**

Section information

Section name: W 12X30 **(US)**

Dimensions

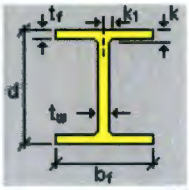

bf	=	6.520	[in]	Width
d	=	12.300	[in]	Depth
k	=	0.740	[in]	Distance k
k1	=	0.750	[in]	Distance k1
tf	=	0.440	[in]	Flange thickness
tw	=	0.260	[in]	Web thickness

Properties

Section properties	**Unit**	**Major axis**	**Minor axis**
Gross area of the section. (Ag)	[in2]	8.790	
Moment of Inertia (local axes) (I)	[in4]	238.000	20.300
Moment of Inertia (principal axes) (I')	[in4]	238.000	20.300
Bending constant for moments (principal axis) (J')	[in]	0.000	0.000
Radius of gyration (local axes) (r)	[in]	5.203	1.520
Radius of gyration (principal axes) (r')	[in]	5.203	1.520
Saint-Venant torsion constant. (J)	[in4]	0.457	
Section warping constant. (Cw)	[in6]	720.000	
Distance from centroid to shear center (principal axis) (xo,yo)	[in]	0.000	0.000
Top elastic section modulus of the section (local axis) (Ssup)	[in3]	38.600	6.240
Bottom elastic section modulus of the section (local axis) (Sinf)	[in3]	38.600	6.240
Top elastic section modulus of the section (principal axis) (S'sup)	[in3]	38.600	6.240
Bottom elastic section modulus of the section (principal axis) (S'inf)	[in3]	38.600	6.240
Plastic section modulus (local axis) (Z)	[in3]	43.100	9.560
Plastic section modulus (principal axis) (Z')	[in3]	43.100	9.560
Polar radius of gyration. (ro)	[in]	5.421	
Area for shear (Aw)	[in2]	5.740	3.200
Torsional constant. (C)	[in3]	0.999	

Material : A36

Properties	Unit	Value
Yield stress (Fy):	[Kip/in2]	36.00
Tensile strength (Fu):	[Kip/in2]	58.00
Elasticity Modulus (E):	[Kip/in2]	29000.00
Shear modulus for steel (G):	[Kip/in2]	11507.94

DESIGN CRITERIA

Description	Unit	Value
Length for tension slenderness ratio (L)	[ft]	31.46

Distance between member lateral bracing points

Length (Lb) [ft] Top	Bottom
31.46	31.46

Laterally unbraced length

Length [ft] Major axis(L33)	Minor axis(L22)	Torsional axis(Lt)	Effective length factor Major axis(K33)	Minor axis(K22)	Torsional axis(Kt)
31.46	31.46	31.46	1.0	1.0	1.0

Additional assumptions

Continuous lateral torsional restraint	No
Tension field action	No
Continuous flexural torsional restraint	No
Effective length factor value type	None
Major axis frame type	Sway
Minor axis frame type	Sway

DESIGN CHECKS

AXIAL TENSION DESIGN ✔

Axial tension

Ratio	: 0.00			
Capacity	: 284.80 [Kip]	Reference	: Eq. Sec. D2	
Demand	: 0.00 [Kip]	Ctrl Eq.	: C1 at 0.00%	

Intermediate results	Unit	Value	Reference
Factored axial tension capacity(ϕP_n)	[Kip]	284.80	Eq. Sec. D2
Nominal axial tension capacity (P_n)	[Kip]	316.44	Eq. D2-1

AXIAL COMPRESSION DESIGN ✔

Compression in the major axis 33

Ratio	: 0.00		
Capacity	: 215.88 [Kip]	Reference	: Sec. E1
Demand	: 0.00 [Kip]	Ctrl Eq.	: C1 at 0.00%

Intermediate results	Unit	Value	Reference
Section classification			
Unstiffened element classification	--	Non slender	
Unstiffened element slenderness (λ)	--	7.41	
Unstiffened element limiting slenderness (λ_r)	--	15.89	
Stiffened element classification	--	Non slender	
Stiffened element slenderness (λ)	--	41.62	
Stiffened element limiting slenderness (λ_r)	--	42.29	
Factored flexural buckling strength(ϕP_{n33})	[Kip]	215.88	Sec. E1
Effective length factor (K_{33})	--	1.00	
Unbraced length (L_{33})	[ft]	31.46	
Effective slenderness ($(KL/r)_{33}$)	--	72.55	Eq. E3-4
Elastic critical buckling stress (F_{e33})	[Kip/in2]	54.38	Eq. E3-4
Reduction factor for slender unstiffened elements (Q_{s33})	--	1.00	
Effective area of the cross section based on the effective width (A_{eff33})	[in2]	8.79	Eq. E3-2
Reduction factor for slender stiffened elements (Q_{a33})	--	1.00	
Full reduction factor for slender elements (Q_{33})	--	1.00	Sec. E7
Critical stress for flexural buckling (F_{cr33})	[Kip/in2]	27.29	Eq. E3-2
Nominal flexural buckling strength (P_{n33})	[Kip]	239.86	Eq. E3-1

Compression in the minor axis 22

Ratio	:	0.00		
Capacity	:	32.18 [Kip]	Reference	: Sec. E1
Demand	:	0.00 [Kip]	Ctrl Eq.	: C1 at 0.00%

Intermediate results	Unit	Value	Reference
Section classification			
Unstiffened element classification	--	Non slender	
Unstiffened element slenderness (λ)	--	7.41	
Unstiffened element limiting slenderness (λ_r)	--	15.89	
Stiffened element classification	--	Non slender	
Stiffened element slenderness (λ)	--	41.62	
Stiffened element limiting slenderness (λ_r)	--	42.29	
Factored flexural buckling strength(ϕP_{n22})	[Kip]	32.18	Sec. E1
Effective length factor (K_{22})	--	1.00	
Unbraced length (L_{22})	[ft]	31.46	
Effective slenderness ($(KL/r)_{22}$)	--	248.40	Eq. E3-4
Elastic critical buckling stress (F_{e22})	[Kip/in2]	4.64	Eq. E3-4
Reduction factor for slender unstiffened elements (Q_{s22})	--	1.00	
Effective area of the cross section based on the effective width (A_{eff22})	[in2]	8.79	Eq. E3-3
Reduction factor for slender stiffened elements (Q_{a22})	--	1.00	
Full reduction factor for slender elements (Q_{22})	--	1.00	Sec. E7
Critical stress for flexural buckling (F_{cr22})	[Kip/in2]	4.07	Eq. E3-3
Nominal flexural buckling strength (P_{n22})	[Kip]	35.76	Eq. E3-1
Factored torsional or flexural-torsional buckling strength(ϕP_{n11})	[Kip]	159.39	Sec. E4
Effective length factor (K_{11})	--	1.00	
Unbraced length (L_{11})	[ft]	31.46	
Flexural constant (H)	--	1.00	Eq. E4-10
Torsional or flexural-torsional elastic buckling stress (F_{e11})	[Kip/in2]	25.96	Eq. E4-4
Elastic torsional buckling stress (F_{ez})	[Kip/in2]	25.96	Eq. E4-9
Reduction factor for slender unstiffened elements (Q_{s11})	--	1.00	
Effective area of the cross section based on the effective width (A_{eff11})	[in2]	8.79	Eq. E3-2
Reduction factor for slender stiffened elements (Q_{a11})	--	1.00	
Full reduction factor for slender elements (Q_{11})	--	1.00	Sec. E7
Critical stress for torsional or flexural-torsional buckling (F_{cr11})	[Kip/in2]	20.15	Eq. E3-2
Nominal torsional or flexural-torsional buckling strength (P_{n11})	[Kip]	177.10	Eq. E4-1

FLEXURAL DESIGN ✗

Bending about major axis, M33

Ratio	:	1.12		
Capacity	:	76.69 [Kip*ft]	Reference	: Sec. F1
Demand	:	-86.08 [Kip*ft]	Ctrl Eq.	: C1 at 41.67%

Intermediate results	Unit	Value	Reference
Section classification			
Unstiffened element classification	--	Compact	
Unstiffened element slenderness (λ)	--	7.41	
Limiting slenderness for noncompact unstiffened element (λ_r)	--	28.38	
Limiting slenderness for compact unstiffened element (λ_p)	--	10.79	
Stiffened element classification	--	Compact	
Stiffened element slenderness (λ)	--	41.62	
Limiting slenderness for noncompact stiffened element (λ_r)	--	161.78	
Limiting slenderness for compact stiffened element (λ_p)	--	106.72	
Factored yielding strength(ϕM_n)	[Kip*ft]	116.37	Sec. F1
Yielding (M_n)	[Kip*ft]	129.30	Eq. F2-1
Factored lateral-torsional buckling strength(ϕM_n)	[Kip*ft]	76.69	Sec. F1
Limiting laterally unbraced length for yielding (L_p)	[ft]	6.33	Eq. F2-5
Effective radius of gyration used in the determination of Lr (r_{ts})	[in]	1.77	Eq. F2-7
Lateral-torsional factor (c)	--	1.00	Eq. F2-8a
Limiting laterally unbraced length for inelastic lateral-torsional buckling (Lr	[ft]	19.49	Eq. F2-6
Lateral-torsional buckling modification factor (Cb)	--	1.98	Eq. F1-1
Critical stress (F_{cr})	[Kip/in2]	26.49	Eq. F2-4
Lateral-torsional buckling (M_n)	[Kip*ft]	85.21	Eq. F2-3

Bending about minor axis, M22

Ratio	:	0.00		
Capacity	:	25.81 [Kip*ft]	Reference	: Sec. F1
Demand	:	0.00 [Kip*ft]	Ctrl Eq.	: C1 at 0.00%

Intermediate results	Unit	Value	Reference
Section classification			
Unstiffened element classification	--	Compact	
Unstiffened element slenderness (λ)	--	7.41	
Limiting slenderness for noncompact unstiffened element (λ_r)	--	28.38	
Limiting slenderness for compact unstiffened element (λ_p)	--	10.79	
Stiffened element classification	--	Compact	
Stiffened element slenderness (λ)	--	41.62	
Limiting slenderness for noncompact stiffened element (λ_r)	--	161.78	
Limiting slenderness for compact stiffened element (λ_p)	--	106.72	
Factored yielding strength(ϕM_n)	[Kip*ft]	25.81	Sec. F1
Yielding (M_n)	[Kip*ft]	28.68	Eq. F6-1

DESIGN FOR SHEAR ✔

Shear in major axis 33

Ratio	:	0.00		
Capacity	:	111.59 [Kip]		
Demand	:	0.00 [Kip]	Ctrl Eq.	: C1 at 0.00%

Intermediate results	Unit	Value	Reference
Factored shear capacity(ϕV_n)	[Kip]	111.59	
Web slenderness (λ_w)	--	7.41	Sec. G2
Shear area (A_w)	[in2]	5.74	
Web buckling coefficient (k_v)	--	1.20	Sec. G7
Web buckling coefficient (C_v)	--	1.00	Eq. G2-3
Nominal shear strength (V_n)	[Kip]	123.98	Eq. G2-1

Shear in minor axis 22

Ratio	:	0.50		
Capacity	:	69.12 [Kip]	Reference	: Sec. G2.1(a)
Demand	:	34.49 [Kip]	Ctrl Eq.	: C1 at 43.75%

Intermediate results	Unit	Value	Reference
Factored shear capacity(ϕV_n)	[Kip]	69.12	Sec. G2.1(a)
Web slenderness (λ_w)	--	41.62	Sec. G2
Shear area (A_w)	[in2]	3.20	
Web buckling coefficient (C_v)	--	1.00	Eq. G2-2
Nominal shear strength (V_n)	[Kip]	69.12	Eq. G2-1

COMBINED ACTIONS DESIGN ✗

Combined flexure and axial compression

Ratio	:	1.12		
Ctrl Eq.	:	C1 at 41.67%	Reference	: Eq. H1-1b

Intermediate results	Unit	Value	Reference
Interaction of flexure and axial force	--	1.12	Eq. H1-1b
Required flexural strength about strong axis (M_{r33})	[Kip*ft]	-86.08	
Available flexural strength about strong axis (M_{c33})	[Kip*ft]	76.69	Sec. F1
Required flexural strength about weak axis (M_{r22})	[Kip*ft]	0.00	
Available flexural strength about weak axis (M_{c22})	[Kip*ft]	25.81	Sec. F1
Required axial compressive strength (P_r)	[Kip]	0.00	
Available axial compressive strength (P_c)	[Kip]	32.18	Sec. E1

Combined flexure and axial tension

Ratio	:	1 12		
Ctrl Eq.	:	C1 at 41.67%	Reference	: Eq. H1-1b

Intermediate results	Unit	Value	Reference
Required flexural strength about strong axis (M_{r33})	[Kip*ft]	-86.08	
Available flexural strength about strong axis (M_{c33})	[Kip*ft]	76.69	Sec. F1
Required flexural strength about weak axis (M_{r22})	[Kip*ft]	0.00	
Available flexural strength about weak axis (M_{c22})	[Kip*ft]	25.81	Sec. F1
Required axial tensile strength (P_r)	[Kip]	0.00	
Available axial tensile strength (P_c)	[Kip]	284.80	Eq. Sec. D2

Load condition: TL=Total Factored Load

Wale Beam No. 3

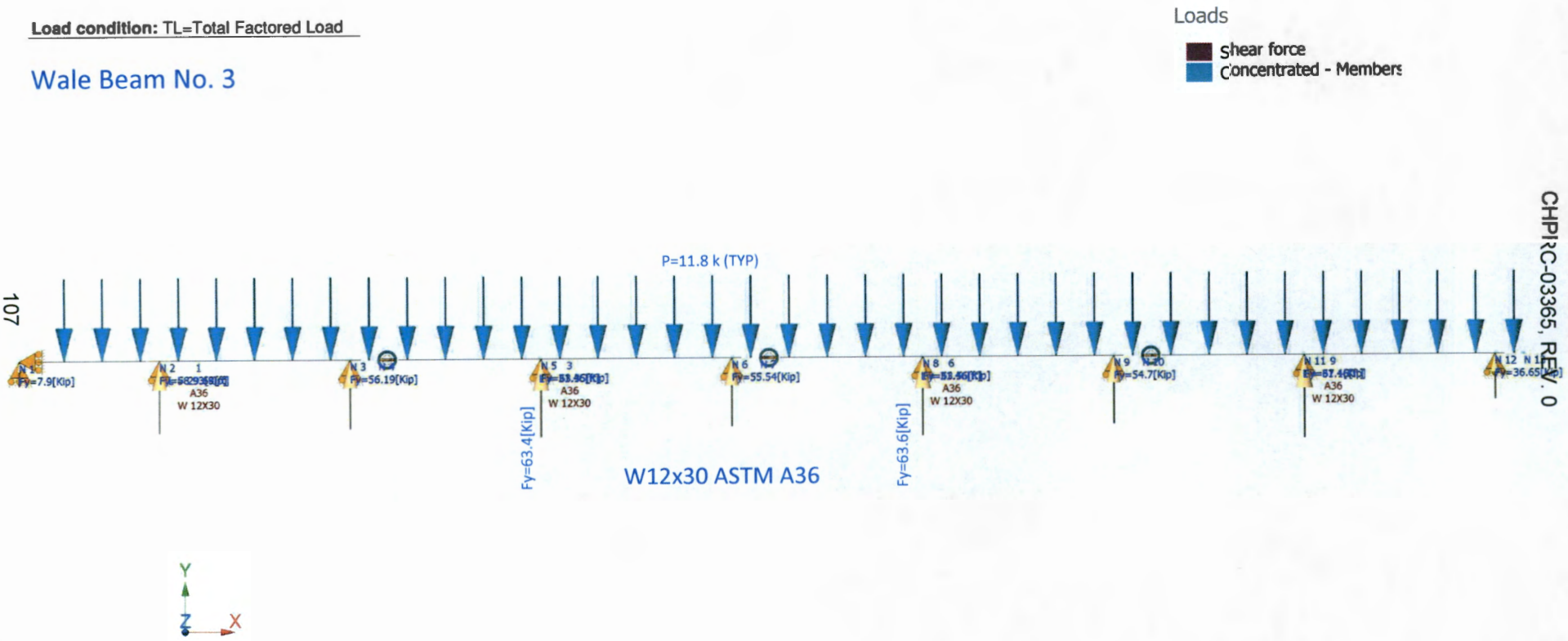

Load condition: TL=Total Factored Load

Wale Beam No. 3

Internal forces / Loads

Shear force
Concentrated - Members

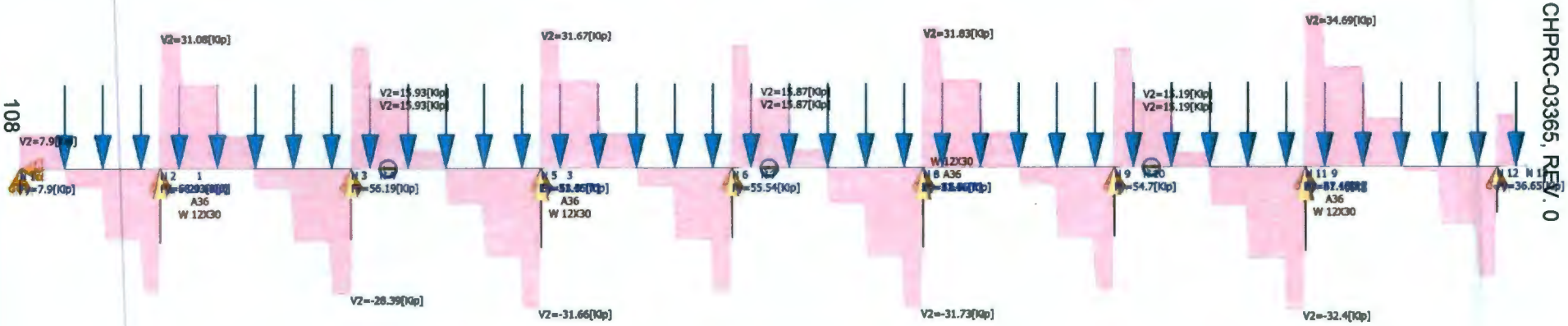

W12x30 ASTM A36

MEMBER SHEAR DIAGRAM RESULTS

Wale Beam No. 3

Steel Code Check

Report: Comprehensive

Members: Hot-rolled
Design code: AISC 360-2010 LRFD

Member	:	**6 (Wale 3)**
Design status	:	**N.G.**

Section information

Section name: W 12X30 **(US)**

Dimensions

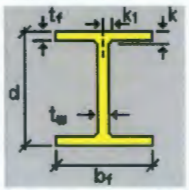

bf	=	6.520	[in]	Width
d	=	12.300	[in]	Depth
k	=	0.740	[in]	Distance k
k1	=	0.750	[in]	Distance k1
tf	=	0.440	[in]	Flange thickness
tw	=	0.260	[in]	Web thickness

Properties

Section properties	**Unit**	**Major axis**	**Minor axis**
Gross area of the section. (Ag)	[in2]	8.790	
Moment of Inertia (local axes) (I)	[in4]	238.000	20.300
Moment of Inertia (principal axes) (I')	[in4]	238.000	20.300
Bending constant for moments (principal axis) (J')	[in]	0.000	0.000
Radius of gyration (local axes) (r)	[in]	5.203	1.520
Radius of gyration (principal axes) (r')	[in]	5.203	1.520
Saint-Venant torsion constant. (J)	[in4]	0.457	
Section warping constant. (Cw)	[in6]	720.000	
Distance from centroid to shear center (principal axis) (xo,yo)	[in]	0.000	0.000
Top elastic section modulus of the section (local axis) (Ssup)	[in3]	38.600	6.240
Bottom elastic section modulus of the section (local axis) (Sinf)	[in3]	38.600	6.240
Top elastic section modulus of the section (principal axis) (S'sup)	[in3]	38.600	6.240
Bottom elastic section modulus of the section (principal axis) (S'inf)	[in3]	38.600	6.240
Plastic section modulus (local axis) (Z)	[in3]	43.100	9.560
Plastic section modulus (principal axis) (Z')	[in3]	43.100	9.560
Polar radius of gyration. (ro)	[in]	5.421	
Area for shear (Aw)	[in2]	5.740	3.200
Torsional constant. (C)	[in3]	0.999	

Material : A36

Properties	Unit	Value
Yield stress (Fy):	[Kip/in2]	36.00
Tensile strength (Fu):	[Kip/in2]	58.00
Elasticity Modulus (E):	[Kip/in2]	29000.00
Shear modulus for steel (G):	[Kip/in2]	11507.94

DESIGN CRITERIA

Description	Unit	Value
Length for tension slenderness ratio (L)	[ft]	31.46

Distance between member lateral bracing points

Length (Lb) [ft] Top	Bottom
31.46	31.46

Laterally unbraced length

Length [ft] Major axis(L33)	Minor axis(L22)	Torsional axis(Lt)	Effective length factor Major axis(K33)	Minor axis(K22)	Torsional axis(Kt)
31.46	31.46	31.46	1.0	1.0	1.0

Additional assumptions

Continuous lateral torsional restraint	No
Tension field action	No
Continuous flexural torsional restraint	No
Effective length factor value type	None
Major axis frame type	Sway
Minor axis frame type	Sway

DESIGN CHECKS

AXIAL TENSION DESIGN ✔

Axial tension

Ratio	:	0.00		
Capacity	:	284.80 [Kip]	Reference	: Eq. Sec. D2
Demand	:	0.00 [Kip]	Ctrl Eq.	: C1 at 0.00%

Intermediate results	Unit	Value	Reference
Factored axial tension capacity(ϕP_n)	[Kip]	284.80	Eq. Sec. D2
Nominal axial tension capacity (P_n)	[Kip]	316.44	Eq. D2-1

AXIAL COMPRESSION DESIGN ✔

Compression in the major axis 33

Ratio	:	0.00		
Capacity	:	215.88 [Kip]	Reference	: Sec. E1
Demand	:	0.00 [Kip]	Ctrl Eq.	: C1 at 0.00%

Intermediate results	Unit	Value	Reference
Section classification			
Unstiffened element classification	--	Non slender	
Unstiffened element slenderness (λ)	--	7.41	
Unstiffened element limiting slenderness (λ_r)	--	15.89	
Stiffened element classification	--	Non slender	
Stiffened element slenderness (λ)	--	41.62	
Stiffened element limiting slenderness (λ_r)	--	42.29	
Factored flexural buckling strength(ϕP_{n33})	[Kip]	215.88	Sec. E1
Effective length factor (K_{33})	--	1.00	
Unbraced length (L_{33})	[ft]	31.46	
Effective slenderness ($(KL/r)_{33}$)	--	72.55	Eq. E3-4
Elastic critical buckling stress (F_{e33})	[Kip/in2]	54.38	Eq. E3-4
Reduction factor for slender unstiffened elements (Q_{s33})	--	1.00	
Effective area of the cross section based on the effective width (A_{eff33})	[in2]	8.79	Eq. E3-2
Reduction factor for slender stiffened elements (Q_{a33})	--	1.00	
Full reduction factor for slender elements (Q_{33})	--	1.00	Sec. E7
Critical stress for flexural buckling (F_{cr33})	[Kip/in2]	27.29	Eq. E3-2
Nominal flexural buckling strength (P_{n33})	[Kip]	239.86	Eq. E3-1

Compression in the minor axis 22

Ratio	:	0.00		
Capacity	:	32.18 [Kip]	Reference	: Sec. E1
Demand	:	0.00 [Kip]	Ctrl Eq.	: C1 at 0.00%

Intermediate results	Unit	Value	Reference
Section classification			
Unstiffened element classification	--	Non slender	
Unstiffened element slenderness (λ)	--	7.41	
Unstiffened element limiting slenderness (λ_r)	--	15.89	
Stiffened element classification	--	Non slender	
Stiffened element slenderness (λ)	--	41.62	
Stiffened element limiting slenderness (λ_r)	--	42.29	
Factored flexural buckling strength(ϕP_{n22})	[Kip]	32.18	Sec. E1
Effective length factor (K_{22})	--	1.00	
Unbraced length (L_{22})	[ft]	31.46	
Effective slenderness ($(KL/r)_{22}$)	--	248.40	Eq. E3-4
Elastic critical buckling stress (F_{e22})	[Kip/in2]	4.64	Eq. E3-4
Reduction factor for slender unstiffened elements (Q_{s22})	--	1.00	
Effective area of the cross section based on the effective width (A_{eff22})	[in2]	8.79	Eq. E3-3
Reduction factor for slender stiffened elements (Q_{a22})	--	1.00	
Full reduction factor for slender elements (Q_{22})	--	1.00	Sec. E7
Critical stress for flexural buckling (F_{cr22})	[Kip/in2]	4.07	Eq. E3-3
Nominal flexural buckling strength (P_{n22})	[Kip]	35.76	Eq. E3-1
Factored torsional or flexural-torsional buckling strength(ϕP_{n11})	[Kip]	159.39	Sec. E4
Effective length factor (K_{11})	--	1.00	
Unbraced length (L_{11})	[ft]	31.46	
Flexural constant (H)	--	1.00	Eq. E4-10
Torsional or flexural-torsional elastic buckling stress (F_{e11})	[Kip/in2]	25.96	Eq. E4-4
Elastic torsional buckling stress (F_{ez})	[Kip/in2]	25.96	Eq. E4-9
Reduction factor for slender unstiffened elements (Q_{s11})	--	1.00	
Effective area of the cross section based on the effective width (A_{eff11})	[in2]	8.79	Eq. E3-2
Reduction factor for slender stiffened elements (Q_{a11})	--	1.00	
Full reduction factor for slender elements (Q_{11})	--	1.00	Sec. E7
Critical stress for torsional or flexural-torsional buckling (F_{cr11})	[Kip/in2]	20.15	Eq. E3-2
Nominal torsional or flexural-torsional buckling strength (P_{n11})	[Kip]	177.10	Eq. E4-1

FLEXURAL DESIGN ✗

Bending about major axis, M33

Ratio	:	1.04		
Capacity	:	76.69 [Kip*ft]	Reference	: Sec. F1
Demand	:	-79.41 [Kip*ft]	Ctrl Eq.	: C1 at 41.67%

Intermediate results	Unit	Value	Reference
Section classification			
Unstiffened element classification	--	Compact	
Unstiffened element slenderness (λ)	--	7.41	
Limiting slenderness for noncompact unstiffened element (λ_r)	--	28.38	
Limiting slenderness for compact unstiffened element (λ_p)	--	10.79	
Stiffened element classification	--	Compact	
Stiffened element slenderness (λ)	--	41.62	
Limiting slenderness for noncompact stiffened element (λ_r)	--	161.78	
Limiting slenderness for compact stiffened element (λ_p)	--	106.72	
Factored yielding strength(ϕM_n)	[Kip*ft]	116.37	Sec. F1
Yielding (M_n)	[Kip*ft]	129.30	Eq. F2-1
Factored lateral-torsional buckling strength(ϕM_n)	[Kip*ft]	76.69	Sec. F1
Limiting laterally unbraced length for yielding (L_p)	[ft]	6.33	Eq. F2-5
Effective radius of gyration used in the determination of Lr (r_{ts})	[in]	1.77	Eq. F2-7
Lateral-torsional factor (c)	--	1.00	Eq. F2-8a
Limiting laterally unbraced length for inelastic lateral-torsional buckling (L_r)	[ft]	19.49	Eq. F2-6
Lateral-torsional buckling modification factor (C_b)	--	1.98	Eq. F1-1
Critical stress (F_{cr})	[Kip/in2]	26.49	Eq. F2-4
Lateral-torsional buckling (M_n)	[Kip*ft]	85.21	Eq. F2-3

Bending about minor axis, M22

Ratio	:	0.00		
Capacity	:	25.81 [Kip*ft]	Reference	: Sec. F1
Demand	:	0.00 [Kip*ft]	Ctrl Eq.	: C1 at 0.00%

Intermediate results	Unit	Value	Reference
Section classification			
Unstiffened element classification	--	Compact	
Unstiffened element slenderness (λ)	--	7.41	
Limiting slenderness for noncompact unstiffened element (λ_r)	--	28.38	
Limiting slenderness for compact unstiffened element (λ_p)	--	10.79	
Stiffened element classification	--	Compact	
Stiffened element slenderness (λ)	--	41.62	
Limiting slenderness for noncompact stiffened element (λ_r)	--	161.78	
Limiting slenderness for compact stiffened element (λ_p)	--	106.72	
Factored yielding strength(ϕM_n)	[Kip*ft]	25.81	Sec. F1
Yielding (M_n)	[Kip*ft]	28.68	Eq. F6-1

DESIGN FOR SHEAR ✓

Shear in major axis 33

Ratio	:	0.00		
Capacity	:	111.59 [Kip]		
Demand	:	0.00 [Kip]	Ctrl Eq.	: C1 at 0.00%

Intermediate results	Unit	Value	Reference
Factored shear capacity(ϕV_n)	[Kip]	111.59	
Web slenderness (λ_w)	--	7.41	Sec. G2
Shear area (A_w)	[in2]	5.74	
Web buckling coefficient (k_v)	--	1.20	Sec. G7
Web buckling coefficient (C_v)	--	1.00	Eq. G2-3
Nominal shear strength (V_n)	[Kip]	123.98	Eq. G2-1

Shear in minor axis 22

Ratio	:	0.46		
Capacity	:	69.12 [Kip]	Reference	: Sec. G2.1(a)
Demand	:	31.82 [Kip]	Ctrl Eq.	: C1 at 43.75%

Intermediate results	Unit	Value	Reference
Factored shear capacity(ϕV_n)	[Kip]	69.12	Sec. G2.1(a)
Web slenderness (λ_w)	--	41.62	Sec. G2
Shear area (A_w)	[in2]	3.20	
Web buckling coefficient (C_v)	--	1.00	Eq. G2-2
Nominal shear strength (V_n)	[Kip]	69.12	Eq. G2-1

COMBINED ACTIONS DESIGN ✗

Combined flexure and axial compression

Ratio	:	1.04		
Ctrl Eq.	:	C1 at 41.67%	Reference	: Eq. H1-1b

Intermediate results	Unit	Value	Reference
Interaction of flexure and axial force	--	1.04	Eq. H1-1b
Required flexural strength about strong axis (M_{r33})	[Kip*ft]	-79.41	
Available flexural strength about strong axis (M_{c33})	[Kip*ft]	76.69	Sec. F1
Required flexural strength about weak axis (M_{r22})	[Kip*ft]	0.00	
Available flexural strength about weak axis (M_{c22})	[Kip*ft]	25.81	Sec. F1
Required axial compressive strength (P_r)	[Kip]	0.00	
Available axial compressive strength (P_c)	[Kip]	32.18	Sec. E1

Combined flexure and axial tension

Ratio	:	1.04		
Ctrl Eq.	:	C1 at 41.67%	Reference	: Eq. H1-1b

Intermediate results	Unit	Value	Reference
Required flexural strength about strong axis (M_{r33})	[Kip*ft]	-79.41	
Available flexural strength about strong axis (M_{c33})	[Kip*ft]	76.69	Sec. F1
Required flexural strength about weak axis (M_{r22})	[Kip*ft]	0.00	
Available flexural strength about weak axis (M_{c22})	[Kip*ft]	25.81	Sec. F1
Required axial tensile strength (P_r)	[Kip]	0.00	
Available axial tensile strength (P_c)	[Kip]	284.80	Eq. Sec. D2

Load condition: TL=Total Factored Load

Wale Beam No. 4

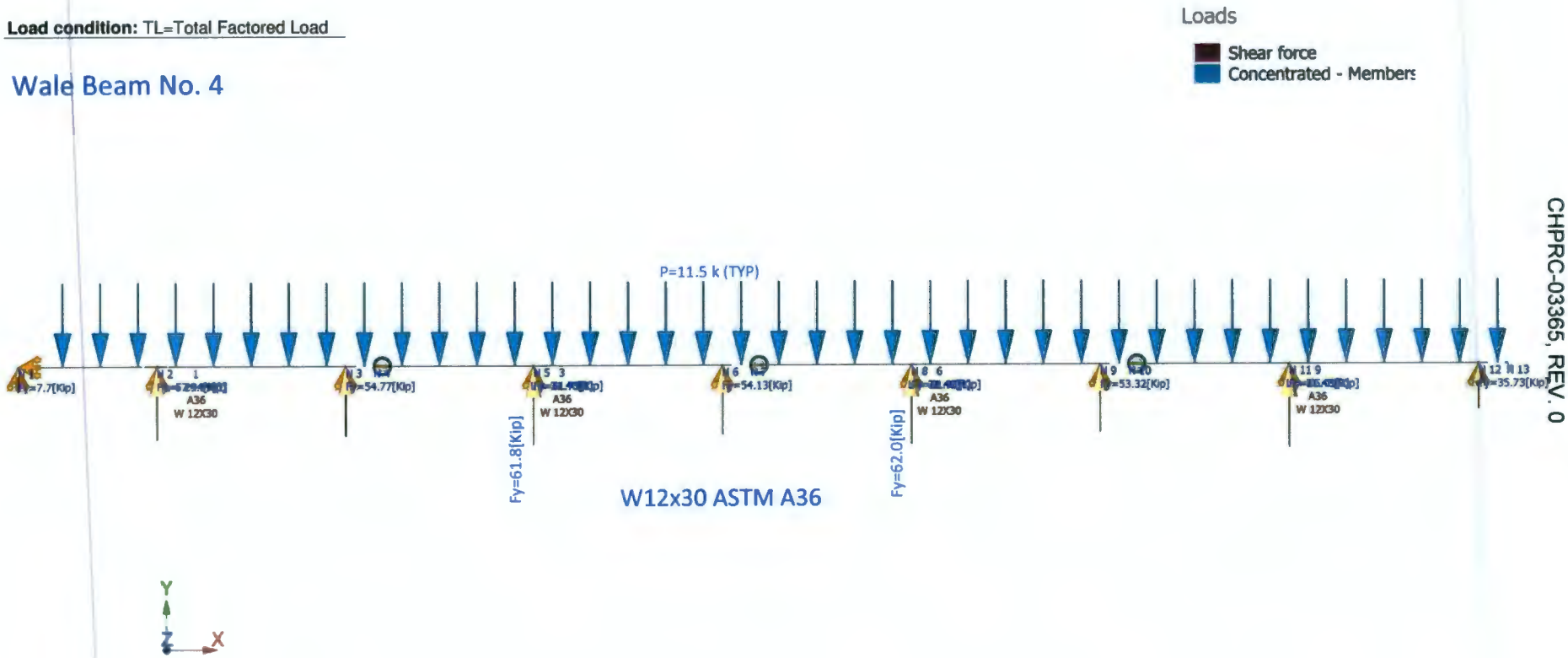

Load condition: TL=Total Factored Load

Wale Beam No. 4

Internal forces / Loads

- Shear force
- Concentrated - Members

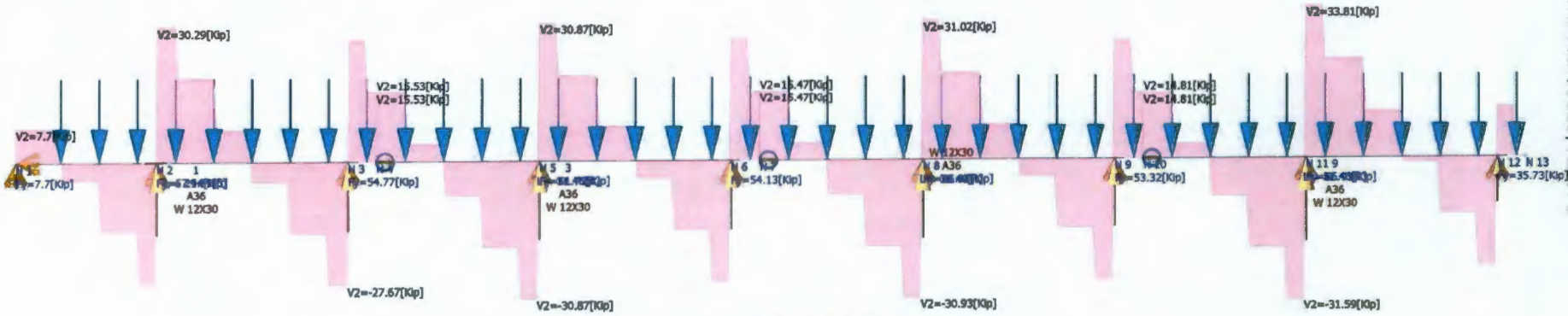

W12x30 ASTM A36

MEMBER SHEAR DIAGRAM RESULTS

Wale Beam No. 4

Steel Code Check

Report: Comprehensive

Members: Hot-rolled
Design code: AISC 360-2010 LRFD

Member	:	**6 (Wale 4)**
Design status	:	**N.G.**

Section information

Section name: W 12X30 **(US)**

Dimensions

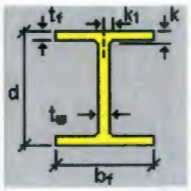

bf	=	6.520	[in]	Width
d	=	12.300	[in]	Depth
k	=	0.740	[in]	Distance k
k1	=	0.750	[in]	Distance k1
tf	=	0.440	[in]	Flange thickness
tw	=	0.260	[in]	Web thickness

Properties

Section properties	**Unit**	**Major axis**	**Minor axis**
Gross area of the section. (Ag)	[in2]	8.790	
Moment of Inertia (local axes) (I)	[in4]	238.000	20.300
Moment of Inertia (principal axes) (I')	[in4]	238.000	20.300
Bending constant for moments (principal axis) (J')	[in]	0.000	0.000
Radius of gyration (local axes) (r)	[in]	5.203	1.520
Radius of gyration (principal axes) (r')	[in]	5.203	1.520
Saint-Venant torsion constant. (J)	[in4]	0.457	
Section warping constant. (Cw)	[in6]	720.000	
Distance from centroid to shear center (principal axis) (xo,yo)	[in]	0.000	0.000
Top elastic section modulus of the section (local axis) (Ssup)	[in3]	38.600	6.240
Bottom elastic section modulus of the section (local axis) (Sinf)	[in3]	38.600	6.240
Top elastic section modulus of the section (principal axis) (S'sup)	[in3]	38.600	6.240
Bottom elastic section modulus of the section (principal axis) (S'inf)	[in3]	38.600	6.240
Plastic section modulus (local axis) (Z)	[in3]	43.100	9.560
Plastic section modulus (principal axis) (Z')	[in3]	43.100	9.560
Polar radius of gyration. (ro)	[in]	5.421	
Area for shear (Aw)	[in2]	5.740	3.200
Torsional constant. (C)	[in3]	0.999	

Material : A36

Properties	Unit	Value
Yield stress (Fy):	[Kip/in2]	36.00
Tensile strength (Fu):	[Kip/in2]	58.00
Elasticity Modulus (E):	[Kip/in2]	29000.00
Shear modulus for steel (G):	[Kip/in2]	11507.94

DESIGN CRITERIA

Description	Unit	Value
Length for tension slenderness ratio (L)	[ft]	31.46

Distance between member lateral bracing points

Length (Lb) [ft] Top	Bottom
31.46	31.46

Laterally unbraced length

Length [ft] Major axis(L33)	Minor axis(L22)	Torsional axis(Lt)	Effective length factor Major axis(K33)	Minor axis(K22)	Torsional axis(Kt)
31.46	31.46	31.46	1.0	1.0	1.0

Additional assumptions

Continuous lateral torsional restraint	No
Tension field action	No
Continuous flexural torsional restraint	No
Effective length factor value type	None
Major axis frame type	Sway
Minor axis frame type	Sway

DESIGN CHECKS

AXIAL TENSION DESIGN ✔

Axial tension

Ratio	:	0.00		
Capacity	:	284.80 [Kip]	Reference	: Eq. Sec. D2
Demand	:	0.00 [Kip]	Ctrl Eq.	: C1 at 0.00%

Intermediate results	Unit	Value	Reference
Factored axial tension capacity(ϕP_n)	[Kip]	284.80	Eq. Sec. D2
Nominal axial tension capacity (P_n)	[Kip]	316.44	Eq. D2-1

AXIAL COMPRESSION DESIGN ✔

Compression in the major axis 33

Ratio	:	0.00		
Capacity	:	215.88 [Kip]	Reference	: Sec. E1
Demand	:	0.00 [Kip]	Ctrl Eq.	: C1 at 0.00%

Intermediate results	Unit	Value	Reference
Section classification			
Unstiffened element classification	--	Non slender	
Unstiffened element slenderness (λ)	--	7.41	
Unstiffened element limiting slenderness (λ_r)	--	15.89	
Stiffened element classification	--	Non slender	
Stiffened element slenderness (λ)	--	41.62	
Stiffened element limiting slenderness (λ_r)	--	42.29	
Factored flexural buckling strength(ϕP_{n33})	[Kip]	215.88	Sec. E1
Effective length factor (K_{33})	--	1.00	
Unbraced length (L_{33})	[ft]	31.46	
Effective slenderness ($(KL/r)_{33}$)	--	72.55	Eq. E3-4
Elastic critical buckling stress (F_{e33})	[Kip/in2]	54.38	Eq. E3-4
Reduction factor for slender unstiffened elements (Q_{s33})	--	1.00	
Effective area of the cross section based on the effective width (A_{eff33})	[in2]	8.79	Eq. E3-2
Reduction factor for slender stiffened elements (Q_{a33})	--	1.00	
Full reduction factor for slender elements (Q_{33})	--	1.00	Sec. E7
Critical stress for flexural buckling (F_{cr33})	[Kip/in2]	27.29	Eq. E3-2
Nominal flexural buckling strength (P_{n33})	[Kip]	239.86	Eq. E3-1

Compression in the minor axis 22

Ratio	:	0.00			
Capacity	:	32.18 [Kip]	Reference	:	Sec. E1
Demand	:	0.00 [Kip]	Ctrl Eq.	:	C1 at 0.00%

Intermediate results	Unit	Value	Reference
Section classification			
Unstiffened element classification	--	Non slender	
Unstiffened element slenderness (λ)	--	7.41	
Unstiffened element limiting slenderness (λ_r)	--	15.89	
Stiffened element classification	--	Non slender	
Stiffened element slenderness (λ)	--	41.62	
Stiffened element limiting slenderness (λ_r)	--	42.29	
Factored flexural buckling strength(ϕP_{n22})	[Kip]	32.18	Sec. E1
Effective length factor (K_{22})	--	1.00	
Unbraced length (L_{22})	[ft]	31.46	
Effective slenderness ($(KL/r)_{22}$)	--	248.40	Eq. E3-4
Elastic critical buckling stress (F_{e22})	[Kip/in2]	4.64	Eq. E3-4
Reduction factor for slender unstiffened elements (Q_{s22})	--	1.00	
Effective area of the cross section based on the effective width (A_{eff22})	[in2]	8.79	Eq. E3-3
Reduction factor for slender stiffened elements (Q_{a22})	--	1.00	
Full reduction factor for slender elements (Q_{22})	--	1.00	Sec. E7
Critical stress for flexural buckling (F_{cr22})	[Kip/in2]	4.07	Eq. E3-3
Nominal flexural buckling strength (P_{n22})	[Kip]	35.76	Eq. E3-1
Factored torsional or flexural-torsional buckling strength(ϕP_{n11})	[Kip]	159.39	Sec. E4
Effective length factor (K_{11})	--	1.00	
Unbraced length (L_{11})	[ft]	31.46	
Flexural constant (H)	--	1.00	Eq. E4-10
Torsional or flexural-torsional elastic buckling stress (F_{e11})	[Kip/in2]	25.96	Eq. E4-4
Elastic torsional buckling stress (F_{ez})	[Kip/in2]	25.96	Eq. E4-9
Reduction factor for slender unstiffened elements (Q_{s11})	--	1.00	
Effective area of the cross section based on the effective width (A_{eff11})	[in2]	8.79	Eq. E3-2
Reduction factor for slender stiffened elements (Q_{a11})	--	1.00	
Full reduction factor for slender elements (Q_{11})	--	1.00	Sec. E7
Critical stress for torsional or flexural-torsional buckling (F_{cr11})	[Kip/in2]	20.15	Eq. E3-2
Nominal torsional or flexural-torsional buckling strength (P_{n11})	[Kip]	177.10	Eq. E4-1

FLEXURAL DESIGN ✗

Bending about major axis, M33

Ratio	:	1.01		
Capacity	:	76.69 [Kip*ft]	Reference	: Sec. F1
Demand	:	-77.40 [Kip*ft]	Ctrl Eq.	: C1 at 41.67%

Intermediate results	Unit	Value	Reference
Section classification			
Unstiffened element classification	--	Compact	
Unstiffened element slenderness (λ)	--	7.41	
Limiting slenderness for noncompact unstiffened element (λ_r)	--	28.38	
Limiting slenderness for compact unstiffened element (λ_p)	--	10.79	
Stiffened element classification	--	Compact	
Stiffened element slenderness (λ)	--	41.62	
Limiting slenderness for noncompact stiffened element (λ_r)	--	161.78	
Limiting slenderness for compact stiffened element (λ_p)	--	106.72	
Factored yielding strength(ϕM_n)	[Kip*ft]	116.37	Sec. F1
Yielding (M_n)	[Kip*ft]	129.30	Eq. F2-1
Factored lateral-torsional buckling strength(ϕM_n)	[Kip*ft]	76.69	Sec. F1
Limiting laterally unbraced length for yielding (L_p)	[ft]	6.33	Eq. F2-5
Effective radius of gyration used in the determination of Lr (r_{ts})	[in]	1.77	Eq. F2-7
Lateral-torsional factor (c)	--	1.00	Eq. F2-8a
Limiting laterally unbraced length for inelastic lateral-torsional buckling (L_r	[ft]	19.49	Eq. F2-6
Lateral-torsional buckling modification factor (C_b)	--	1.98	Eq. F1-1
Critical stress (F_{cr})	[Kip/in2]	26.49	Eq. F2-4
Lateral-torsional buckling (M_n)	[Kip*ft]	85.21	Eq. F2-3

Bending about minor axis, M22

Ratio	:	0.00		
Capacity	:	25.81 [Kip*ft]	Reference	: Sec. F1
Demand	:	0.00 [Kip*ft]	Ctrl Eq.	: C1 at 0.00%

Intermediate results	Unit	Value	Reference
Section classification			
Unstiffened element classification	--	Compact	
Unstiffened element slenderness (λ)	--	7.41	
Limiting slenderness for noncompact unstiffened element (λ_r)	--	28.38	
Limiting slenderness for compact unstiffened element (λ_p)	--	10.79	
Stiffened element classification	--	Compact	
Stiffened element slenderness (λ)	--	41.62	
Limiting slenderness for noncompact stiffened element (λ_r)	--	161.78	
Limiting slenderness for compact stiffened element (λ_p)	--	106.72	
Factored yielding strength(ϕM_n)	[Kip*ft]	25.81	Sec. F1
Yielding (M_n)	[Kip*ft]	28.68	Eq. F6-1

DESIGN FOR SHEAR ✓

Shear in major axis 33

Ratio	:	0.00		
Capacity	:	111.59 [Kip]		
Demand	:	0.00 [Kip]	Ctrl Eq.	: C1 at 0.00%

Intermediate results	Unit	Value	Reference
Factored shear capacity(ϕV_n)	[Kip]	111.59	
Web slenderness (λ_w)	--	7.41	Sec. G2
Shear area (A_w)	[in2]	5.74	
Web buckling coefficient (k_v)	--	1.20	Sec. G7
Web buckling coefficient (C_v)	--	1.00	Eq. G2-3
Nominal shear strength (V_n)	[Kip]	123.98	Eq. G2-1

Shear in minor axis 22

Ratio	:	0.45		
Capacity	:	69.12 [Kip]	Reference	: Sec. G2.1(a)
Demand	:	31.01 [Kip]	Ctrl Eq.	: C1 at 43.75%

Intermediate results	Unit	Value	Reference
Factored shear capacity(ϕV_n)	[Kip]	69.12	Sec. G2.1(a)
Web slenderness (λ_w)	--	41.62	Sec. G2
Shear area (A_w)	[in2]	3.20	
Web buckling coefficient (C_v)	--	1.00	Eq. G2-2
Nominal shear strength (V_n)	[Kip]	69.12	Eq. G2-1

COMBINED ACTIONS DESIGN ✗

Combined flexure and axial compression

Ratio	:	1.01		
Ctrl Eq.	:	C1 at 41.67%	Reference	: Eq. H1-1b

Intermediate results	Unit	Value	Reference
Interaction of flexure and axial force	--	1.01	Eq. H1-1b
Required flexural strength about strong axis (M_{r33})	[Kip*ft]	-77.40	
Available flexural strength about strong axis (M_{c33})	[Kip*ft]	76.69	Sec. F1
Required flexural strength about weak axis (M_{r22})	[Kip*ft]	0.00	
Available flexural strength about weak axis (M_{c22})	[Kip*ft]	25.81	Sec. F1
Required axial compressive strength (P_r)	[Kip]	0.00	
Available axial compressive strength (P_c)	[Kip]	32.18	Sec. E1

Combined flexure and axial tension

Ratio	:	1.01		
Ctrl Eq.	:	C1 at 41.67%	Reference	: Eq. H1-1b

Intermediate results	Unit	Value	Reference
Required flexural strength about strong axis (M_{r33})	[Kip*ft]	-77.40	
Available flexural strength about strong axis (M_{c33})	[Kip*ft]	76.69	Sec. F1
Required flexural strength about weak axis (M_{r22})	[Kip*ft]	0.00	
Available flexural strength about weak axis (M_{c22})	[Kip*ft]	25.81	Sec. F1
Required axial tensile strength (P_r)	[Kip]	0.00	
Available axial tensile strength (P_c)	[Kip]	284.80	Eq. Sec. D2

Load condition: TL=Total Factored Load

Wale Beam No. 5

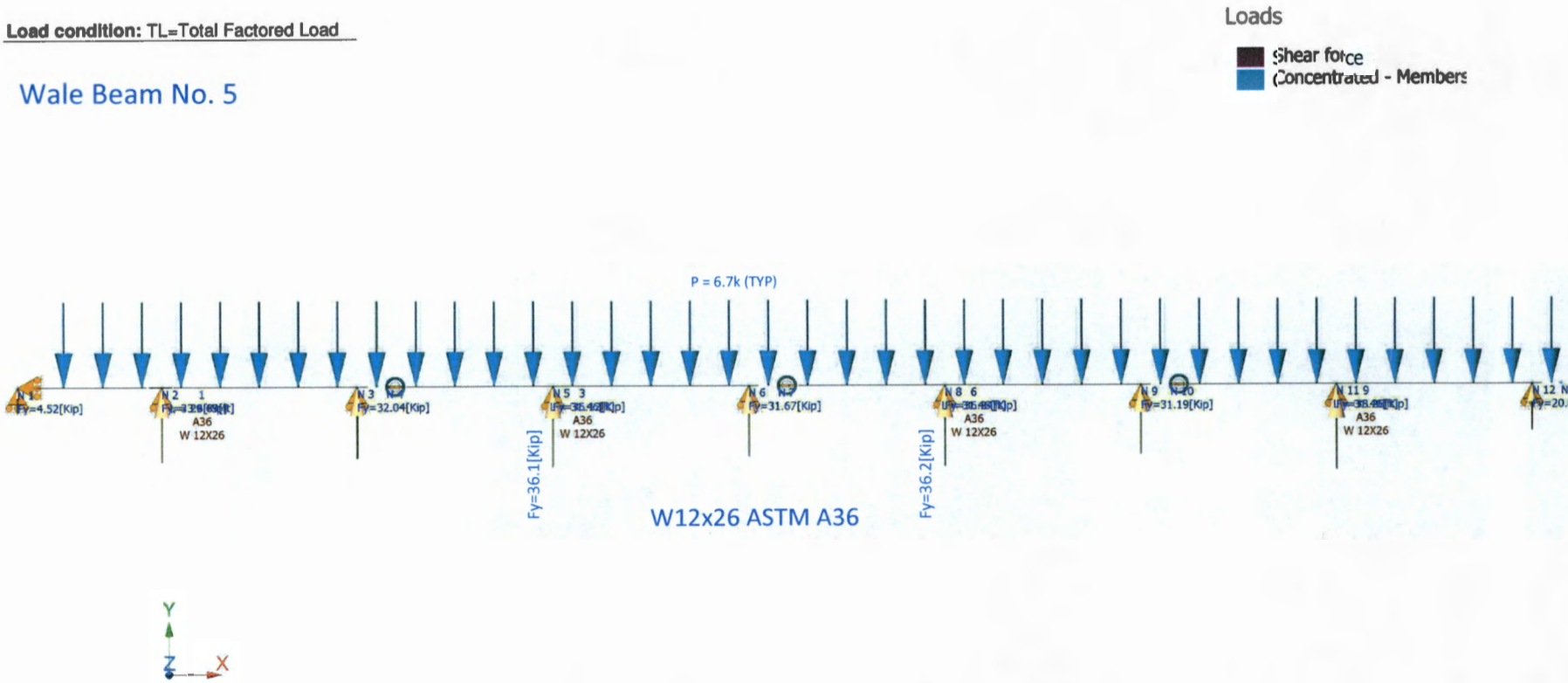

Load condition: TL=Total Factored Load

Wale Beam No. 5

Internal forces / Loads

- Shear force
- Concentrated - Members

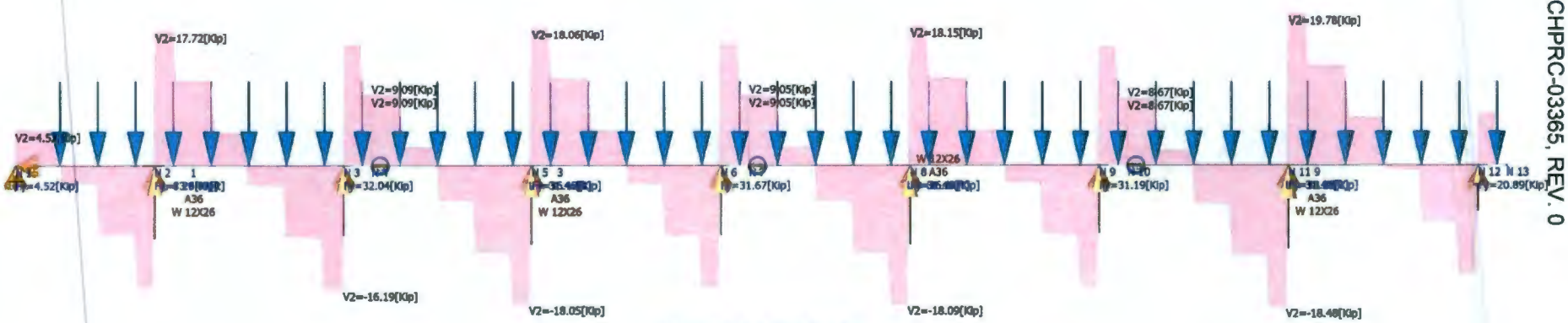

W12x26 ASTM A36

MEMBER SHEAR DIAGRAM RESULTS

Wale Beam No. 5

Steel Code Check

Report: Comprehensive

Members: Hot-rolled
Design code: AISC 360-2010 LRFD

Member	:	**6 (Wale 5)**
Design status	:	**OK**

Section information

Section name: W 12X26 **(US)**

Dimensions

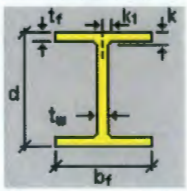

bf	=	6.490	[in]	Width
d	=	12.200	[in]	Depth
k	=	0.680	[in]	Distance k
k1	=	0.750	[in]	Distance k1
tf	=	0.380	[in]	Flange thickness
tw	=	0.230	[in]	Web thickness

Properties

Section properties	**Unit**	**Major axis**	**Minor axis**
Gross area of the section. (Ag)	[in2]	7.650	
Moment of Inertia (local axes) (I)	[in4]	204.000	17.300
Moment of Inertia (principal axes) (I')	[in4]	204.000	17.300
Bending constant for moments (principal axis) (J')	[in]	0.000	0.000
Radius of gyration (local axes) (r)	[in]	5.164	1.504
Radius of gyration (principal axes) (r')	[in]	5.164	1.504
Saint-Venant torsion constant. (J)	[in4]	0.300	
Section warping constant. (Cw)	[in6]	607.000	
Distance from centroid to shear center (principal axis) (xo,yo)	[in]	0.000	0.000
Top elastic section modulus of the section (local axis) (Ssup)	[in3]	33.400	5.340
Bottom elastic section modulus of the section (local axis) (Sinf)	[in3]	33.400	5.340
Top elastic section modulus of the section (principal axis) (S'sup)	[in3]	33.400	5.340
Bottom elastic section modulus of the section (principal axis) (S'inf)	[in3]	33.400	5.340
Plastic section modulus (local axis) (Z)	[in3]	37.200	8.170
Plastic section modulus (principal axis) (Z')	[in3]	37.200	8.170
Polar radius of gyration. (ro)	[in]	5.378	
Area for shear (Aw)	[in2]	4.930	2.810
Torsional constant. (C)	[in3]	0.751	

Material : A36

Properties	Unit	Value
Yield stress (Fy):	[Kip/in2]	36.00
Tensile strength (Fu):	[Kip/in2]	58.00
Elasticity Modulus (E):	[Kip/in2]	29000.00
Shear modulus for steel (G):	[Kip/in2]	11507.94

DESIGN CRITERIA

Description	Unit	Value
Length for tension slenderness ratio (L)	[ft]	31.46

Distance between member lateral bracing points

Length (Lb) [ft] Top	Bottom
31.46	31.46

Laterally unbraced length

Length [ft] Major axis(L33)	Minor axis(L22)	Torsional axis(Lt)	Effective length factor Major axis(K33)	Minor axis(K22)	Torsional axis(Kt)
31.46	31.46	31.46	1.0	1.0	1.0

Additional assumptions

Continuous lateral torsional restraint	No
Tension field action	No
Continuous flexural torsional restraint	No
Effective length factor value type	None
Major axis frame type	Sway
Minor axis frame type	Sway

DESIGN CHECKS

AXIAL TENSION DESIGN ✔

Axial tension

Ratio	:	0.00		
Capacity	:	247.86 [Kip]	Reference	: Eq. Sec. D2
Demand	:	0.00 [Kip]	Ctrl Eq.	: C1 at 0.00%

Intermediate results	Unit	Value	Reference
Factored axial tension capacity(ϕP_n)	[Kip]	247.86	Eq. Sec. D2
Nominal axial tension capacity (P_n)	[Kip]	275.40	Eq. D2-1

AXIAL COMPRESSION DESIGN ✔

Compression in the major axis 33

Ratio	:	0.00		
Capacity	:	187.08 [Kip]	Reference	: Sec. E1
Demand	:	0.00 [Kip]	Ctrl Eq.	: C1 at 0.00%

Intermediate results	Unit	Value	Reference
Section classification			
Unstiffened element classification	--	Non slender	
Unstiffened element slenderness (λ)	--	8.54	
Unstiffened element limiting slenderness (λ_r)	--	15.89	
Stiffened element classification	--	Slender	
Stiffened element slenderness (λ)	--	47.13	
Stiffened element limiting slenderness (λ_r)	--	42.29	
Factored flexural buckling strength(ϕP_{n33})	[Kip]	187.08	Sec. E1
Effective length factor (K_{33})	--	1.00	
Unbraced length (L_{33})	[ft]	31.46	
Effective slenderness ($(KL/r)_{33}$)	--	73.10	Eq. E3-4
Elastic critical buckling stress (F_{e33})	[Kip/in2]	53.56	Eq. E3-4
Reduction factor for slender unstiffened elements (Q_{s33})	--	1.00	
Effective area of the cross section based on the effective width (A_{eff33})	[in2]	7.65	Eq. E7-2
Reduction factor for slender stiffened elements (Q_{a33})	--	1.00	Eq. E7-16
Full reduction factor for slender elements (Q_{33})	--	1.00	Sec. E7
Critical stress for flexural buckling (F_{cr33})	[Kip/in2]	27.17	Eq. E7-2
Nominal flexural buckling strength (P_{n33})	[Kip]	207.87	Eq. E7-1

Compression in the minor axis 22

Ratio	:	0.00		
Capacity	:	27.43 [Kip]	Reference	: Sec. E1
Demand	:	0.00 [Kip]	Ctrl Eq.	: C1 at 0.00%

Intermediate results	Unit	Value	Reference
Section classification			
Unstiffened element classification	--	Non slender	
Unstiffened element slenderness (λ)	--	8.54	
Unstiffened element limiting slenderness (λ_r)	--	15.89	
Stiffened element classification	--	Slender	
Stiffened element slenderness (λ)	--	47.13	
Stiffened element limiting slenderness (λ_r)	--	42.29	
Factored flexural buckling strength(ϕP_{n22})	[Kip]	27.43	Sec. E1
Effective length factor (K_{22})	--	1.00	
Unbraced length (L_{22})	[ft]	31.46	
Effective slenderness ($(KL/r)_{22}$)	--	251.03	Eq. E3-4
Elastic critical buckling stress (F_{e22})	[Kip/in2]	4.54	Eq. E3-4
Reduction factor for slender unstiffened elements (Q_{s22})	--	1.00	
Effective area of the cross section based on the effective width (A_{eff22})	[in2]	7.65	Eq. E7-3
Reduction factor for slender stiffened elements (Q_{a22})	--	1.00	Eq. E7-16
Full reduction factor for slender elements (Q_{22})	--	1.00	Sec. E7
Critical stress for flexural buckling (F_{cr22})	[Kip/in2]	3.98	Eq. E7-3
Nominal flexural buckling strength (P_{n22})	[Kip]	30.47	Eq. E7-1
Factored torsional or flexural-torsional buckling strength(ϕP_{n11})	[Kip]	121.40	Sec. E4
Effective length factor (K_{11})	--	1.00	
Unbraced length (L_{11})	[ft]	31.46	
Flexural constant (H)	--	1.00	Eq. E4-10
Torsional or flexural-torsional elastic buckling stress (F_{e11})	[Kip/in2]	21.11	Eq. E4-4
Elastic torsional buckling stress (F_{ez})	[Kip/in2]	21.11	Eq. E4-9
Reduction factor for slender unstiffened elements (Q_{s11})	--	1.00	
Effective area of the cross section based on the effective width (A_{eff11})	[in2]	7.65	Eq. E7-2
Reduction factor for slender stiffened elements (Q_{a11})	--	1.00	Eq. E7-16
Full reduction factor for slender elements (Q_{11})	--	1.00	Sec. E7
Critical stress for torsional or flexural-torsional buckling (F_{cr11})	[Kip/in2]	17.63	Eq. E7-2
Nominal torsional or flexural-torsional buckling strength (P_{n11})	[Kip]	134.89	Eq. E7-1

FLEXURAL DESIGN ✔

Bending about major axis, M33

Ratio	:	0.77		
Capacity	:	59.09 [Kip*ft]	Reference	: Sec. F1
Demand	:	-45.28 [Kip*ft]	Ctrl Eq.	: C1 at 41.67%

Intermediate results	Unit	Value	Reference
Section classification			
Unstiffened element classification	--	Compact	
Unstiffened element slenderness (λ)	--	8.54	
Limiting slenderness for noncompact unstiffened element (λ_r)	--	28.38	
Limiting slenderness for compact unstiffened element (λ_p)	--	10.79	
Stiffened element classification	--	Compact	
Stiffened element slenderness (λ)	--	47.13	
Limiting slenderness for noncompact stiffened element (λ_r)	--	161.78	
Limiting slenderness for compact stiffened element (λ_p)	--	106.72	
Factored yielding strength(ϕM_n)	[Kip*ft]	100.44	Sec. F1
Yielding (M_n)	[Kip*ft]	111.60	Eq. F2-1
Factored lateral-torsional buckling strength(ϕM_n)	[Kip*ft]	59.09	Sec. F1
Limiting laterally unbraced length for yielding (L_p)	[ft]	6.26	Eq. F2-5
Effective radius of gyration used in the determination of Lr (r_{ts})	[in]	1.75	Eq. F2-7
Lateral-torsional factor (c)	--	1.00	Eq. F2-8a
Limiting laterally unbraced length for inelastic lateral-torsional buckling (L_r	[ft]	18.37	Eq. F2-6
Lateral-torsional buckling modification factor (C_b)	--	1.98	Eq. F1-1
Critical stress (F_{cr})	[Kip/in2]	23.59	Eq. F2-4
Lateral-torsional buckling (M_n)	[Kip*ft]	65.65	Eq. F2-3

Bending about minor axis, M22

Ratio	:	0.00		
Capacity	:	22.06 [Kip*ft]	Reference	: Sec. F1
Demand	:	0.00 [Kip*ft]	Ctrl Eq.	: C1 at 0.00%

Intermediate results	Unit	Value	Reference
Section classification			
Unstiffened element classification	--	Compact	
Unstiffened element slenderness (λ)	--	8.54	
Limiting slenderness for noncompact unstiffened element (λ_r)	--	28.38	
Limiting slenderness for compact unstiffened element (λ_p)	--	10.79	
Stiffened element classification	--	Compact	
Stiffened element slenderness (λ)	--	47.13	
Limiting slenderness for noncompact stiffened element (λ_r)	--	161.78	
Limiting slenderness for compact stiffened element (λ_p)	--	106.72	
Factored yielding strength(ϕM_n)	[Kip*ft]	22.06	Sec. F1
Yielding (M_n)	[Kip*ft]	24.51	Eq. F6-1

DESIGN FOR SHEAR ✔

Shear in major axis 33

Ratio	:	0.00		
Capacity	:	95.84 [Kip]		
Demand	:	0.00 [Kip]	Ctrl Eq.	: C1 at 0.00%

Intermediate results	Unit	Value	Reference
Factored shear capacity(ϕV_n)	[Kip]	95.84	
Web slenderness (λ_w)	--	8.54	Sec. G2
Shear area (A_w)	[in2]	4.93	
Web buckling coefficient (k_v)	--	1.20	Sec. G7
Web buckling coefficient (C_v)	--	1.00	Eq. G2-3
Nominal shear strength (V_n)	[Kip]	106.49	Eq. G2-1

Shear in minor axis 22

Ratio	:	0.30		
Capacity	:	60.70 [Kip]	Reference	: Sec. G2.1(a)
Demand	:	18.14 [Kip]	Ctrl Eq.	: C1 at 43.75%

Intermediate results	Unit	Value	Reference
Factored shear capacity(ϕV_n)	[Kip]	60.70	Sec. G2.1(a)
Web slenderness (λ_w)	--	47.13	Sec. G2
Shear area (A_w)	[in2]	2.81	
Web buckling coefficient (C_v)	--	1.00	Eq. G2-2
Nominal shear strength (V_n)	[Kip]	60.70	Eq. G2-1

COMBINED ACTIONS DESIGN ✔

Combined flexure and axial compression

Ratio	:	0.77		
Ctrl Eq.	:	C1 at 41.67%	Reference	: Eq. H1-1b

Intermediate results	Unit	Value	Reference
Interaction of flexure and axial force	--	0.77	Eq. H1-1b
Required flexural strength about strong axis (M_{r33})	[Kip*ft]	-45.28	
Available flexural strength about strong axis (M_{c33})	[Kip*ft]	59.09	Sec. F1
Required flexural strength about weak axis (M_{r22})	[Kip*ft]	0.00	
Available flexural strength about weak axis (M_{c22})	[Kip*ft]	22.06	Sec. F1
Required axial compressive strength (P_r)	[Kip]	0.00	
Available axial compressive strength (P_c)	[Kip]	27.43	Sec. E1

Combined flexure and axial tension

Ratio	:	0.77		
Ctrl Eq.	:	C1 at 41.67%	Reference	: Eq. H1-1b

Intermediate results	Unit	Value	Reference
Required flexural strength about strong axis (M_{r33})	[Kip*ft]	-45.28	
Available flexural strength about strong axis (M_{c33})	[Kip*ft]	59.09	Sec. F1
Required flexural strength about weak axis (M_{r22})	[Kip*ft]	0.00	
Available flexural strength about weak axis (M_{c22})	[Kip*ft]	22.06	Sec. F1
Required axial tensile strength (P_r)	[Kip]	0.00	
Available axial tensile strength (P_c)	[Kip]	247.86	Eq. Sec. D2

ch2m	Calculation Title: PUREX Tunnel 2 Engineering Evaluation	Project Number: 693839.BS Project: PUREX Tunnel 2 Client: CHPRC

Steel Wale Beam Splice Connection Analysis

Wale Splice Connection

Demands (from Member Analysis)

Maximum Shear Wale #1 $R_{u10} := 4.1kip$

Maximum Shear Wales 2, 3, 4, 5 $R_{u12} := 17.2kip$

(Vu12 = 17.2k, 15.9k, 15.5k, 9.1k at Wale Beams 2, 3, 4, and 5)

Material Properties

Nominal Steel Yield Stress $F_{yp} := 36ksi$

Minimum Steel Ultimate Stress $F_{up} := 58ksi$

Weld Strength $F_{EXX} := 60ksi$

Member Properties

Wale #1 (W10x25)	*(use W10x22)*	$t_{w25} := 0.24in$
Wales #2, 3, & 4 (W12x31)	*(use W12x30)*	$t_{w31} := 0.25in$
Wale #5 (W12x27)	*(use W12x26)*	$t_{w27} := 0.23in$

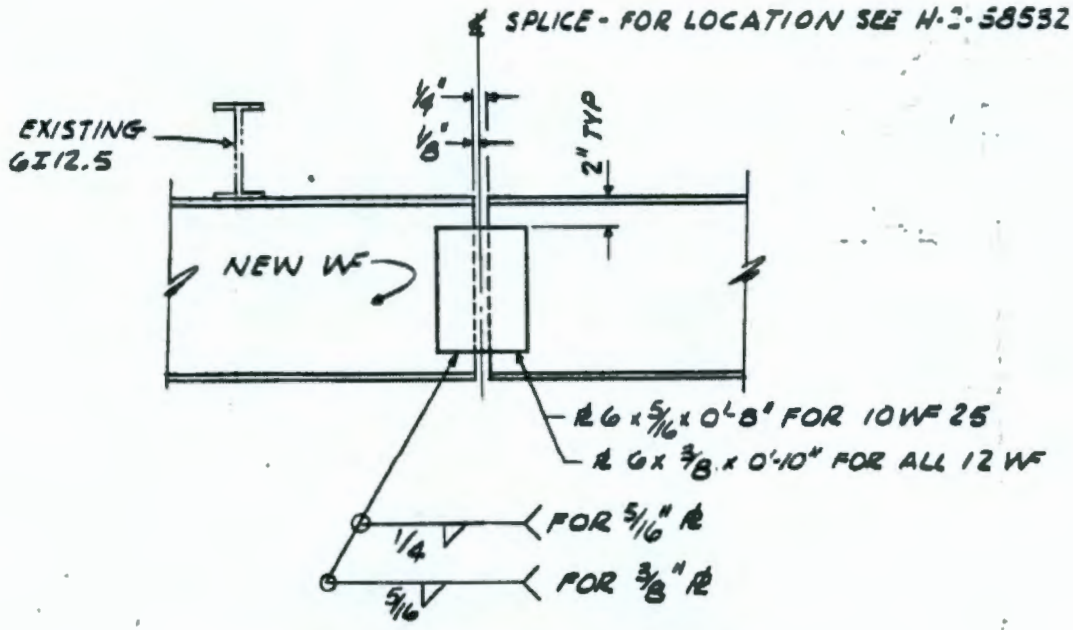

TYPICAL WALE SPLICE

Splice Plate Dimensions

W10 Plate

thickness	$t_{p10} := \frac{5}{16}in$	Weld Thickness (# sixteenths)	$t_{weld10} := 4$
width	$w_{p10} := 6in$		
length	$l_{p10} := 8in$		

W12 Plate

thickness	$t_{p12} := \frac{3}{8}in$	Weld Thickness (# sixteenths)	$t_{weld12} := 5$
width	$w_{p12} := 6in$		
length	$l_{p12} := 10in$		

WALE SPLICE CHECK

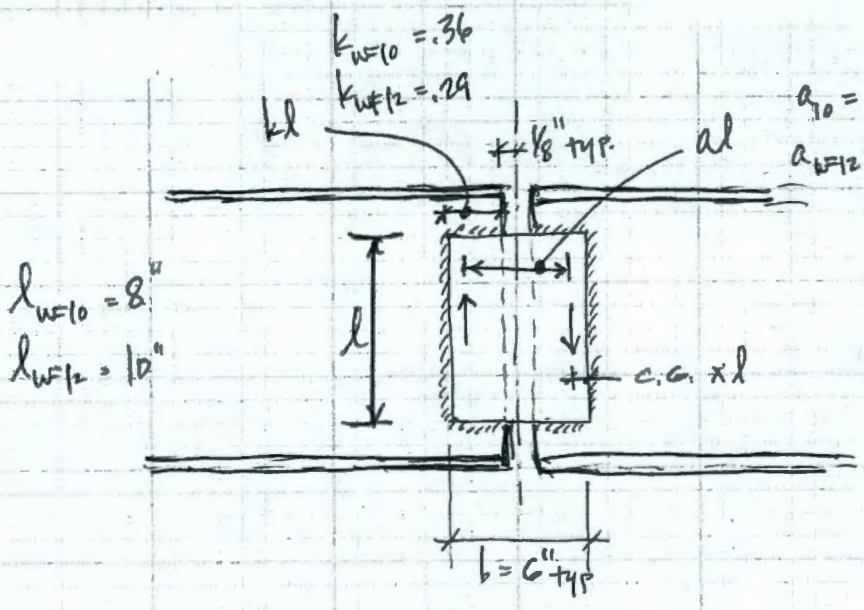

$a_{10} = 6 - \frac{2}{\pi_{10}}(.075) = 5.85/8 = 0.73$

$a_{WF12} = 6 - 2(.052) = 5.9/10 = 0.59$

$X_{WF10} = .075$

$X_{WF12} = .052$

From AISC Table 8-8 (Angle = 0°)

$R_n = \phi C C_1 D l$

$\phi = 0.75$ LRFD

$C_1 = 1.0$ for E70xx electrodes

$D_{WF10} = 4$

$D_{WF12} = 5$

for WF10 $a = 0.73$ $k = 0.36$ interpolate $\Rightarrow C_{WF10} = 1.77$

$\phi R_{n(WF10)} = 0.75 \times 1.77 \times 1.0 \times 4 \times 8 = \underline{\underline{42.5^k}}$

for $R_{u\,WF10} = 4.1^k$ $DCR_{WF10} = 0.10$

for WF12 $a = 0.59$ $k = 0.29$ interpolate $\Rightarrow C_{WF12} = 1.87$

$\phi R_n(WF12) = 0.75 * 1.87 * 1.0 \times 5 \times 10 \Rightarrow \underline{\underline{70.3^k}}$

for $R_{u\,WF12} = 17.2^k$ $DCR_{WF12} = 0.25$

Flexural Yielding of Splice Plate

Resistance Factor for Flexural Yielding $\phi_f := 0.90$

Flexural Demands

W10 Splice Plate

$$M_{u10} := R_{u10} \cdot \frac{w_{p10}}{2} = 12.3 \cdot kip \cdot in$$

W12 Splice Plate

$$M_{u12} := R_{u12} \cdot \frac{w_{p12}}{2} = 51.6 \cdot kip \cdot in$$

Splice Plate Capacity

W10 Splice Plate

$$Z_{10} := \frac{t_{p10} \cdot l_{p10}^2}{4} = 5 \cdot in^3$$

$$\phi M_{nf10} := \phi_f \cdot F_{yp} \cdot Z_{10} = 162 \cdot kip \cdot in$$

$$FlexDCR_{10} := \frac{M_{u10}}{\phi M_{nf10}} = 0.08$$

W12 Splice Plate

$$Z_{12} := \frac{t_{p12} \cdot l_{p12}^2}{4} = 9.375 \cdot in^3$$

$$\phi M_{nf12} := \phi_f \cdot F_{yp} \cdot Z_{12} = 303.75 \cdot kip \cdot in$$

$$FlexDCR_{12} := \frac{M_{u12}}{\phi M_{nf12}} = 0.17$$

Shear Yielding of Splice Plate

Resistance Factor for Shear Yielding $\phi_{sy} := 1.00$

W10 Splice Plate

$$A_{gv10} := t_{p10} \cdot l_{p10} = 2.5 \cdot in^2$$

$$\phi Rn_{sy10} := \phi_{sy} \cdot F_{yp} \cdot A_{gv10} = 90 \cdot kip$$

$$SYDCR_{10} := \frac{R_{u10}}{\phi Rn_{sy10}} = 0.05$$

W12 Splice Plate

$$A_{gv12} := t_{p12} \cdot l_{p12} = 3.75 \cdot in^2$$

$$\phi Rn_{sy12} := \phi_{sy} \cdot F_{yp} \cdot A_{gv12} = 135 \cdot kip$$

$$SYDCR_{12} := \frac{R_{u12}}{\phi Rn_{sy12}} = 0.13$$

Shear Rupture of Splice Plate

Resistance Factor for Shear Rupture $\phi_{sr} := 0.75$

W10 Splice Plate

$$\phi Rn_{sr10} := \phi_{sr} \cdot 0.60 \cdot F_{up} \cdot A_{gv10} = 65.25 \cdot kip$$

$$SRDCR_{10} := \frac{R_{u10}}{\phi Rn_{sr10}} = 0.06$$

W12 Splice Plate

$$\phi Rn_{sr12} := \phi_{sr} \cdot 0.60 F_{up} \cdot A_{gv12} = 97.9 \cdot kip$$

$$SRDCR_{12} := \frac{R_{u12}}{\phi Rn_{sr12}} = 0.18$$

ch2m	Calculation Title: PUREX Tunnel 2 Engineering Evaluation	Project Number: 693839.BS Project: PUREX Tunnel 2 Client: CHPRC

Arched Concrete Rib Girder Analysis

Tunnel 2

Concrete Rib Girder Design Load Components

Location	X (ft)	Y (ft)	R (ft)	Wale I.D.	Wale Load (LRFD) $P_{u(tot)}$ *1 (k)	P_{ux} (k)	P_{uy} (k)
Crown	-	17.750	17.750	-	-	-	-
Wale 1	1.250	17.708	17.752	P1	16.4	1.2	16.4
Wale 2	6.333	16.583	17.752	P2	68.9	24.6	64.4
Wale 3	10.865	14.042	17.754	P3	63.6	38.9	50.3
Wale 4	14.469	10.292	17.756	P4	62.0	50.5	35.9
Wale 5	16.833	5.646	17.755	P5	36.2	34.3	11.5
Springline	17.750	-	17.750				

Equivalency: $(P_{u(tot)} / R) = (P_{ux} / X_i) = (P_{uy} / Y_i)$

Example: Wale 4: P_{ux} = (62.0k / 17.756ft) * 14.469ft = 50.5k

P_{uy} = (62.0k / 17.756ft) * 10.292ft = 35.9k

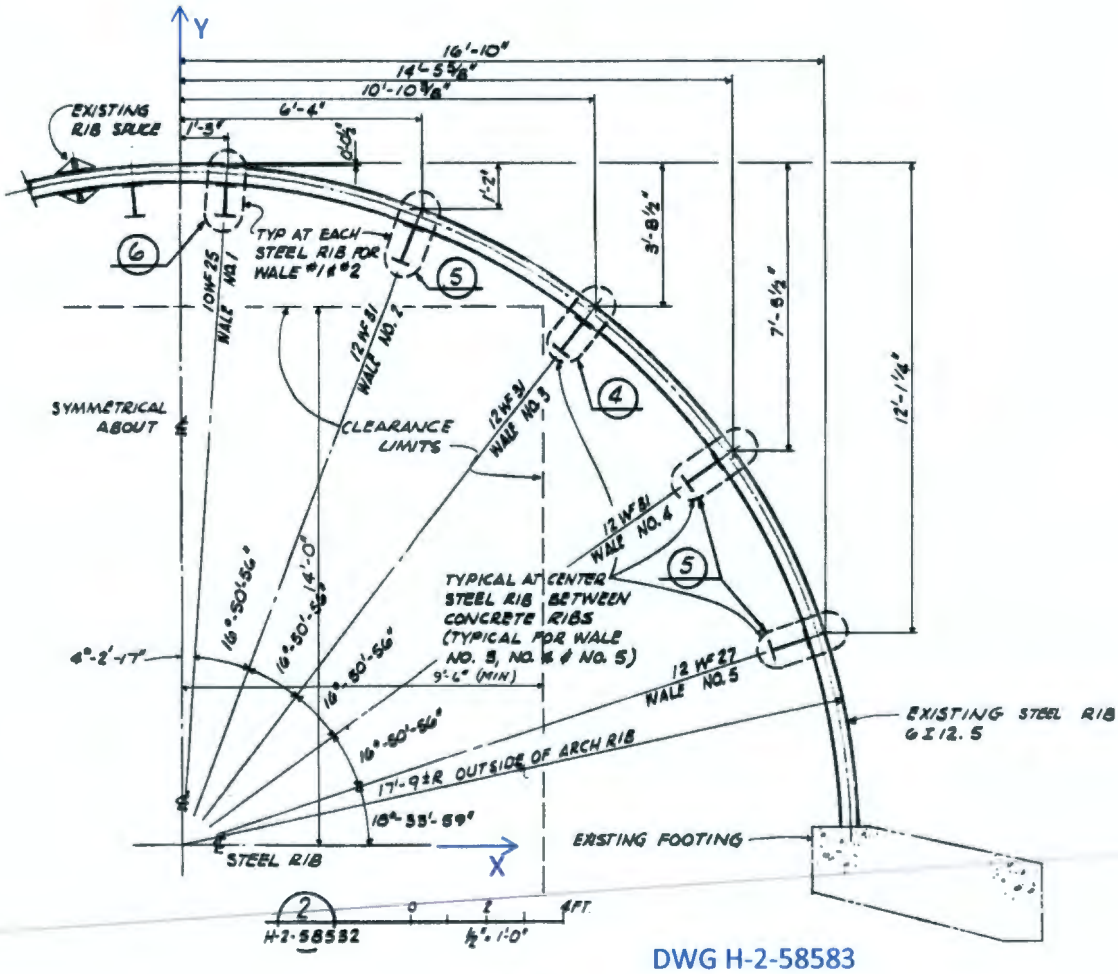

DWG H-2-58583

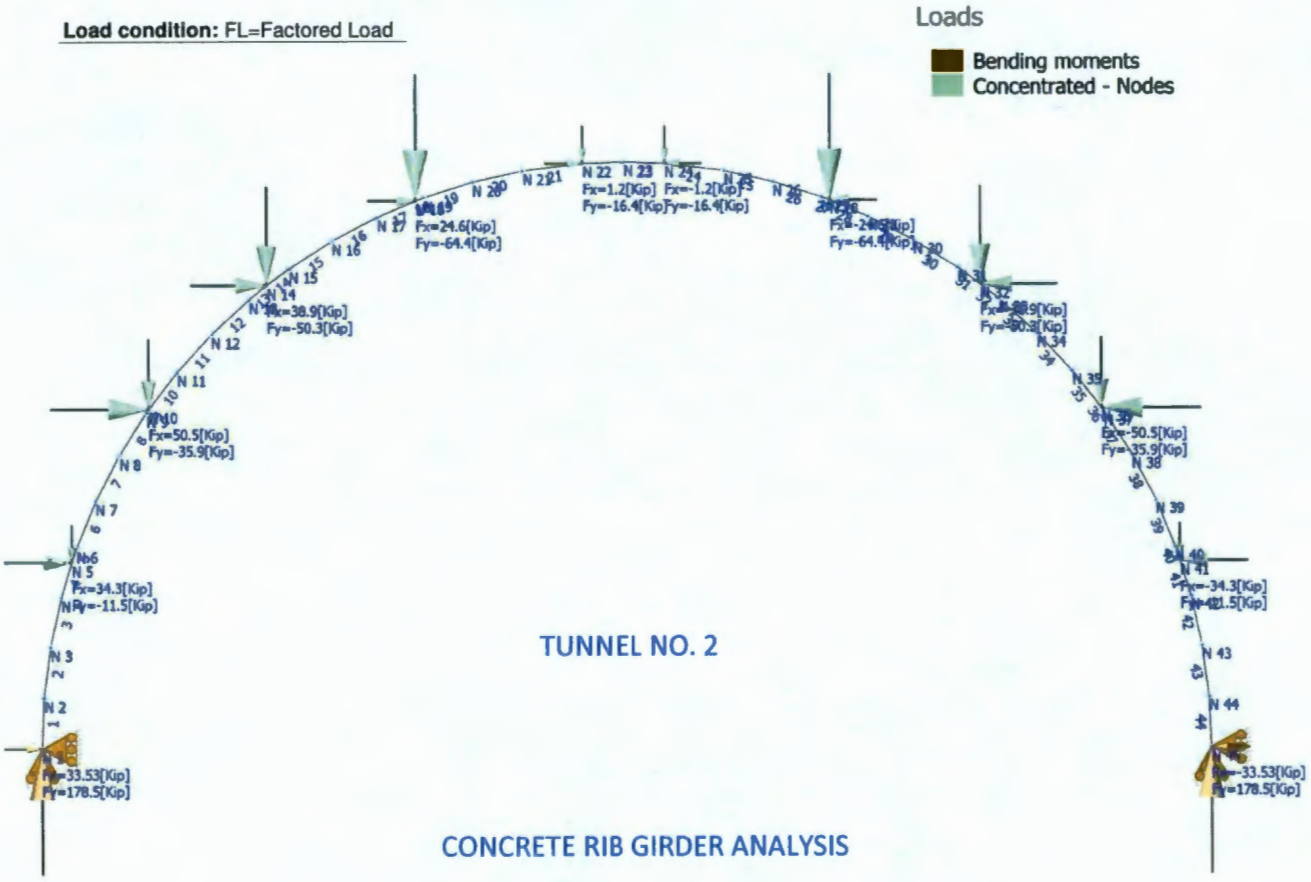

TUNNEL NO. 2

CONCRETE RIB GIRDER ANALYSIS

LRFD FACTORED LOAD SUPPORT REACTIONS

Load condition: C1=1.2DL+FL

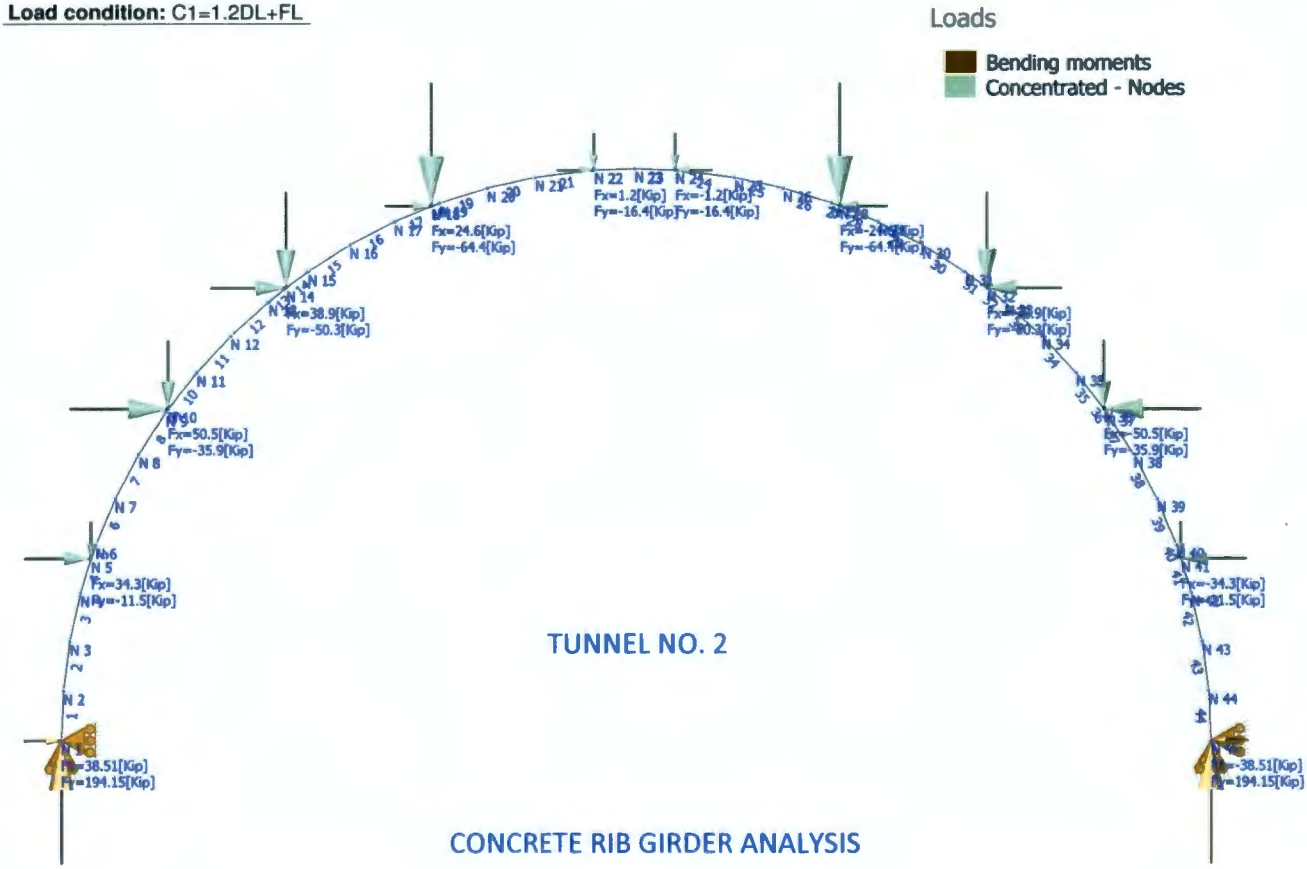

TUNNEL NO. 2

CONCRETE RIB GIRDER ANALYSIS

LRFD TOTAL FACTORED LOAD SUPPORT REACTIONS

(includes concrete arch self weight)

Load condition: S1=DL+0.71FL

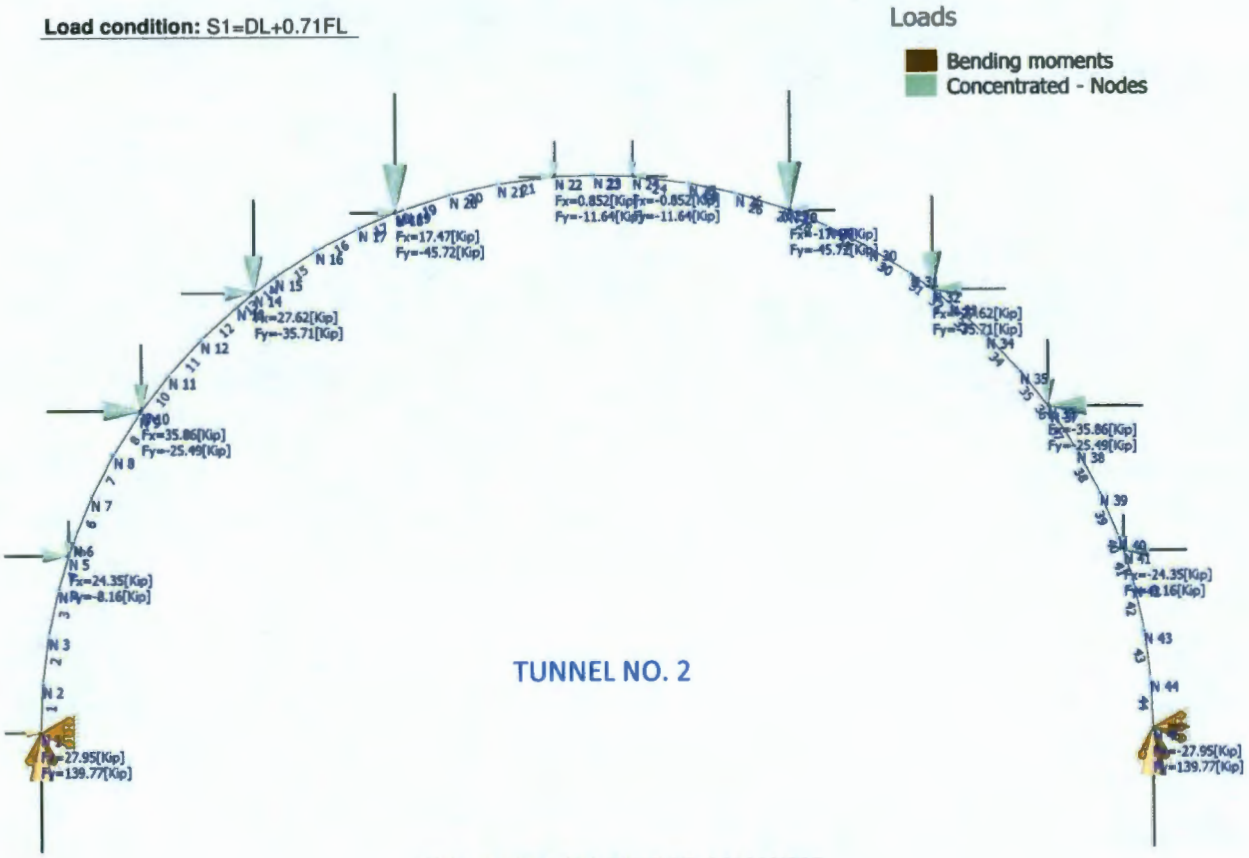

TUNNEL NO. 2

CONCRETE RIB GIRDER ANALYSIS

ASD SERVICE LOAD SUPPORT REACTIONS

ARCHED CONCRETE RIB GIRDER

Geometry data

GLOSSARY

Cb22, Cb33	: Moment gradient coefficients
Cm22, Cm33	: Coefficients applied to bending term in interaction formula
d0	: Tapered member section depth at J end of member
DJX	: Rigid end offset distance measured from J node in axis X
DJY	: Rigid end offset distance measured from J node in axis Y
DJZ	: Rigid end offset distance measured from J node in axis Z
DKX	: Rigid end offset distance measured from K node in axis X
DKY	: Rigid end offset distance measured from K node in axis Y
DKZ	: Rigid end offset distance measured from K node in axis Z
dL	: Tapered member section depth at K end of member
Ig factor	: Inertia reduction factor (Effective Inertia/Gross Inertia) for reinforced concrete members
K22	: Effective length factor about axis 2
K33	: Effective length factor about axis 3
L22	: Member length for calculation of axial capacity
L33	: Member length for calculation of axial capacity
LB pos	: Lateral unbraced length of the compression flange in the positive side of local axis 2
LB neg	: Lateral unbraced length of the compression flange in the negative side of local axis 2
RX	: Rotation about X
RY	: Rotation about Y
RZ	: Rotation about Z
TO	: 1 = Tension only member 0 = Normal member
TX	: Translation in X
TY	: Translation in Y
TZ	: Translation in Z

Nodes

Node	X [ft]	Y [ft]	Z [ft]	Rigid Floor
1	-19.00	0.00	0.00	0
2	-18.9277	1.656	0.00	0
3	-18.7113	3.2993	0.00	0
4	-18.3526	4.9176	0.00	0
5	-18.0112	6.0497	0.00	0
6	-17.8542	6.4984	0.00	0
7	-17.2198	8.0297	0.00	0
8	-16.4545	9.50	0.00	0
9	-15.5639	10.898	0.00	0
10	-15.4845	11.0105	0.00	0
11	-14.5548	12.213	0.00	0
12	-13.435	13.435	0.00	0
13	-12.213	14.5548	0.00	0
14	-11.6284	15.026	0.00	0
15	-10.898	15.5639	0.00	0
16	-9.50	16.4545	0.00	0
17	-8.0297	17.2198	0.00	0
18	-6.774	17.7514	0.00	0
19	-6.4984	17.8542	0.00	0
20	-4.9176	18.3526	0.00	0
21	-3.2993	18.7113	0.00	0
22	-1.338	18.9528	0.00	0
23	0.00	19.00	0.00	0
24	1.338	18.9528	0.00	0
25	3.2993	18.7113	0.00	0
26	4.9176	18.3526	0.00	0

27	6.4984	17.8542	0.00	0
28	6.774	17.7514	0.00	0
29	8.0297	17.2198	0.00	0
30	9.50	16.4545	0.00	0
31	10.898	15.5639	0.00	0
32	11.6284	15.026	0.00	0
33	12.213	14.5548	0.00	0
34	13.435	13.435	0.00	0
35	14.5548	12.213	0.00	0
36	15.4845	11.0105	0.00	0
37	15.5639	10.898	0.00	0
38	16.4545	9.50	0.00	0
39	17.2198	8.0297	0.00	0
40	17.8542	6.4984	0.00	0
41	18.0112	6.0497	0.00	0
42	18.3526	4.9176	0.00	0
43	18.7113	3.2993	0.00	0
44	18.9277	1.656	0.00	0
45	19.00	0.00	0.00	0

Restraints

Node	TX	TY	TZ	RX	RY	RZ
1	1	1	0	0	0	0
45	1	1	0	0	0	0

Members

Member	NJ	NK	Description	Section	Material	d0 [in]	dL [in]	Ig factor
1	1	2	Conc Rib Girder	RcBeam 14x30in	C 4-40	0.00	0.00	0.00
2	2	3	Conc Rib Girder	RcBeam 14x30in	C 4-40	0.00	0.00	0.00
3	3	4	Conc Rib Girder	RcBeam 14x30in	C 4-40	0.00	0.00	0.00
4	4	5	Conc Rib Girder	RcBeam 14x30in	C 4-40	0.00	0.00	0.00
5	5	6	Conc Rib Girder	RcBeam 14x30in	C 4-40	0.00	0.00	0.00
6	6	7	Conc Rib Girder	RcBeam 14x30in	C 4-40	0.00	0.00	0.00
7	7	8	Conc Rib Girder	RcBeam 14x30in	C 4-40	0.00	0.00	0.00
8	8	9	Conc Rib Girder	RcBeam 14x30in	C 4-40	0.00	0.00	0.00
9	9	10	Conc Rib Girder	RcBeam 14x30in	C 4-40	0.00	0.00	0.00
10	10	11	Conc Rib Girder	RcBeam 14x30in	C 4-40	0.00	0.00	0.00
11	11	12	Conc Rib Girder	RcBeam 14x30in	C 4-40	0.00	0.00	0.00
12	12	13	Conc Rib Girder	RcBeam 14x30in	C 4-40	0.00	0.00	0.00
13	13	14	Conc Rib Girder	RcBeam 14x30in	C 4-40	0.00	0.00	0.00
14	14	15	Conc Rib Girder	RcBeam 14x30in	C 4-40	0.00	0.00	0.00
15	15	16	Conc Rib Girder	RcBeam 14x30in	C 4-40	0.00	0.00	0.00
16	16	17	Conc Rib Girder	RcBeam 14x30in	C 4-40	0.00	0.00	0.00
17	17	18	Conc Rib Girder	RcBeam 14x30in	C 4-40	0.00	0.00	0.00
18	18	19	Conc Rib Girder	RcBeam 14x30in	C 4-40	0.00	0.00	0.00
19	19	20	Conc Rib Girder	RcBeam 14x30in	C 4-40	0.00	0.00	0.00
20	20	21	Conc Rib Girder	RcBeam 14x30in	C 4-40	0.00	0.00	0.00
21	21	22	Conc Rib Girder	RcBeam 14x30in	C 4-40	0.00	0.00	0.00
22	22	23	Conc Rib Girder	RcBeam 14x30in	C 4-40	0.00	0.00	0.00
23	23	24	Conc Rib Girder	RcBeam 14x30in	C 4-40	0.00	0.00	0.00
24	24	25	Conc Rib Girder	RcBeam 14x30in	C 4-40	0.00	0.00	0.00
25	25	26	Conc Rib Girder	RcBeam 14x30in	C 4-40	0.00	0.00	0.00

26	26	27	Conc Rib Girder	RcBeam 14x30in	C 4-40	0.00	0.00	0.00
27	27	28	Conc Rib Girder	RcBeam 14x30in	C 4-40	0.00	0.00	0.00
28	28	29	Conc Rib Girder	RcBeam 14x30in	C 4-40	0.00	0.00	0.00
29	29	30	Conc Rib Girder	RcBeam 14x30in	C 4-40	0.00	0.00	0.00
30	30	31	Conc Rib Girder	RcBeam 14x30in	C 4-40	0.00	0.00	0.00
31	31	32	Conc Rib Girder	RcBeam 14x30in	C 4-40	0.00	0.00	0.00
32	32	33	Conc Rib Girder	RcBeam 14x30in	C 4-40	0.00	0.00	0.00
33	33	34	Conc Rib Girder	RcBeam 14x30in	C 4-40	0.00	0.00	0.00
34	34	35	Conc Rib Girder	RcBeam 14x30in	C 4-40	0.00	0.00	0.00
35	35	36	Conc Rib Girder	RcBeam 14x30in	C 4-40	0.00	0.00	0.00
36	36	37	Conc Rib Girder	RcBeam 14x30in	C 4-40	0.00	0.00	0.00
37	37	38	Conc Rib Girder	RcBeam 14x30in	C 4-40	0.00	0.00	0.00
38	38	39	Conc Rib Girder	RcBeam 14x30in	C 4-40	0.00	0.00	0.00
39	39	40	Conc Rib Girder	RcBeam 14x30in	C 4-40	0.00	0.00	0.00
40	40	41	Conc Rib Girder	RcBeam 14x30in	C 4-40	0.00	0.00	0.00
41	41	42	Conc Rib Girder	RcBeam 14x30in	C 4-40	0.00	0.00	0.00
42	42	43	Conc Rib Girder	RcBeam 14x30in	C 4-40	0.00	0.00	0.00
43	43	44	Conc Rib Girder	RcBeam 14x30in	C 4-40	0.00	0.00	0.00
44	44	45	Conc Rib Girder	RcBeam 14x30in	C 4-40	0.00	0.00	0.00

ARCHED CONCRETE RIB GIRDER

Load data

GLOSSARY

Comb : Indicates if load condition is a load combination

Load conditions

Condition	Description	Comb.	Category
DL	Dead	No	DL
FL	Factored Load	No	DL
S1	DL+0.71FL	Yes	
C1	1.2DL+FL	Yes	

Load on nodes

Condition	Node	FX [Kip]	FY [Kip]	FZ [Kip]	MX [Kip*ft]	MY [Kip*ft]	MZ [Kip*ft]
FL	5	34.30	-11.50	0.00	0.00	0.00	0.00
	10	50.50	-35.90	0.00	0.00	0.00	0.00
	14	38.90	-50.30	0.00	0.00	0.00	0.00
	18	24.60	-64.40	0.00	0.00	0.00	0.00
	22	1.20	-16.40	0.00	0.00	0.00	0.00
	24	-1.20	-16.40	0.00	0.00	0.00	0.00
	28	-24.60	-64.40	0.00	0.00	0.00	0.00
	32	-38.90	-50.30	0.00	0.00	0.00	0.00
	36	-50.50	-35.90	0.00	0.00	0.00	0.00
	41	-34.30	-11.50	0.00	0.00	0.00	0.00

Self weight multipliers for load conditions

Condition	Description	Self weight multiplier			
		Comb.	MultX	MultY	MultZ
DL	Dead	No	0.00	-1.00	0.00
FL	Factored Load	No	0.00	0.00	0.00
S1	DL+0.71FL	Yes	0.00	0.00	0.00
C1	1.2DL+FL	Yes	0.00	0.00	0.00

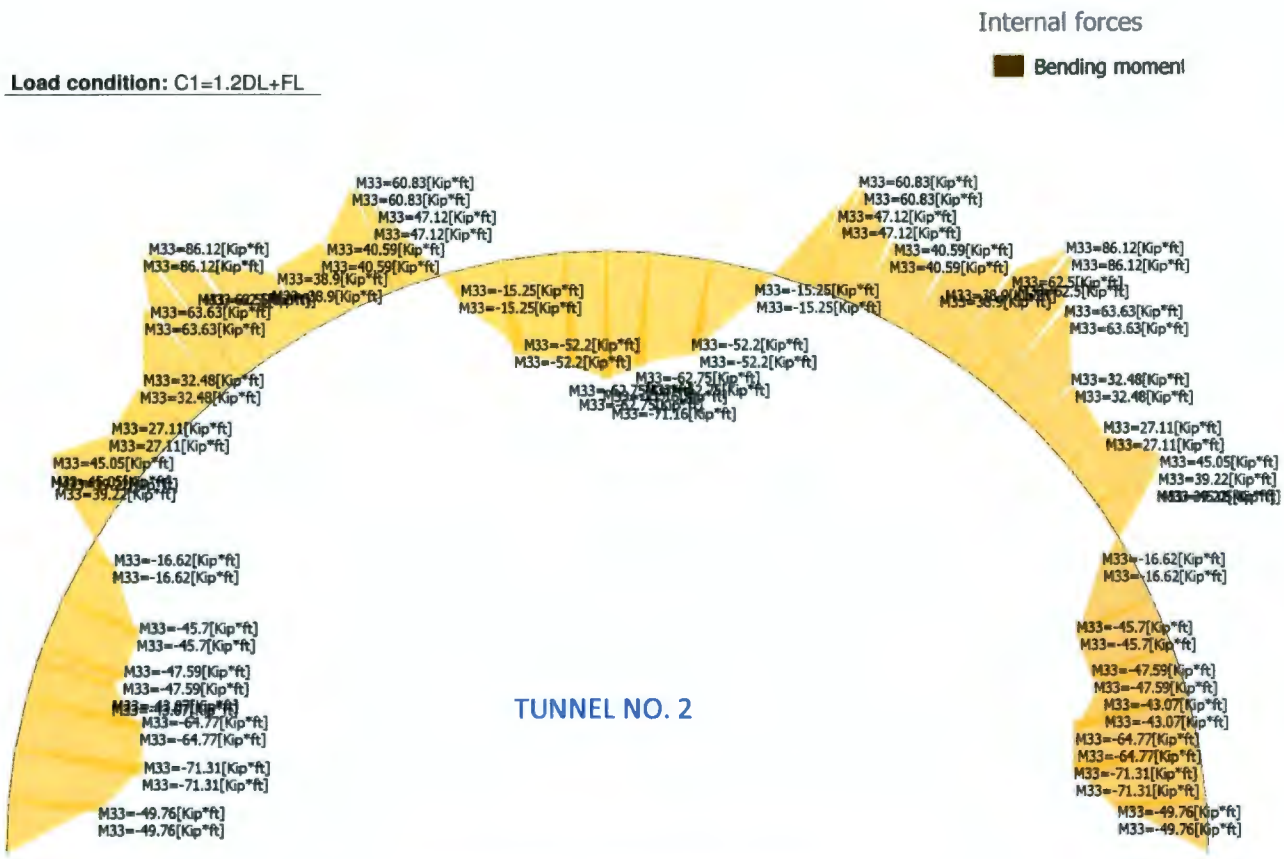

TUNNEL NO. 2

CONCRETE RIB GIRDER ANALYSIS

MEMBER BENDING MOMENT DESIGN FORCES

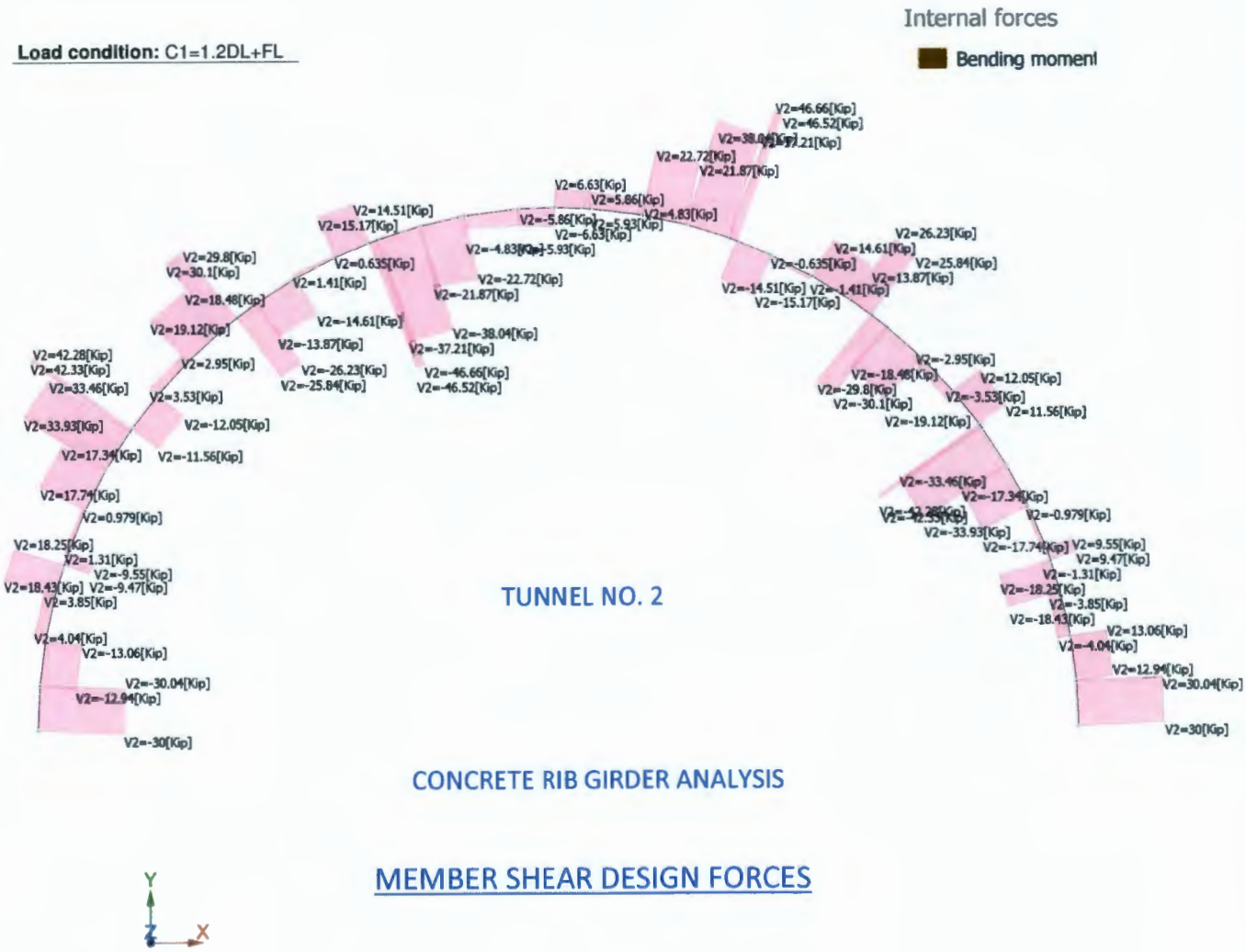

CONCRETE RIB GIRDER ANALYSIS

MEMBER SHEAR DESIGN FORCES

ARCHED CONCRETE RIB GIRDER LOAD DIAGRAM:

Concentrated loads applied to the concrete arch have been developed in the Wale Support analysis. These loads are applied at anchorage points as noted on the design drawings.

P1	=	16.4 kips
P2	=	68.9 kips
P3	=	63.6 kips
P4	=	62.0 kips
P5	=	36.2 kips

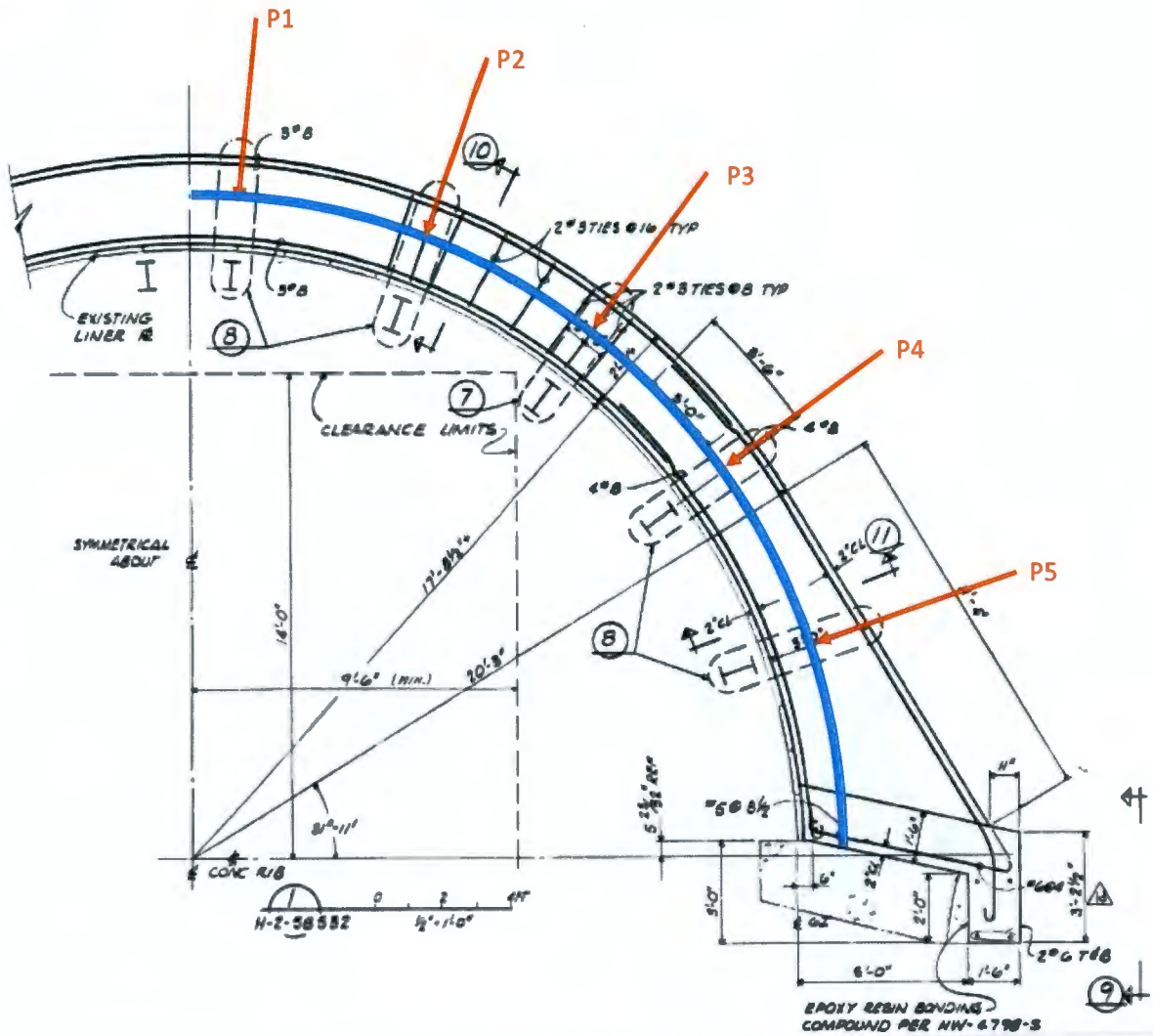

ARCHED CONCRETE RIB GIRDER ANALYSIS RESULTS:

AXIAL DEMANDS

Note: Graph provided for demonstration of variance of values (not to be scaled).

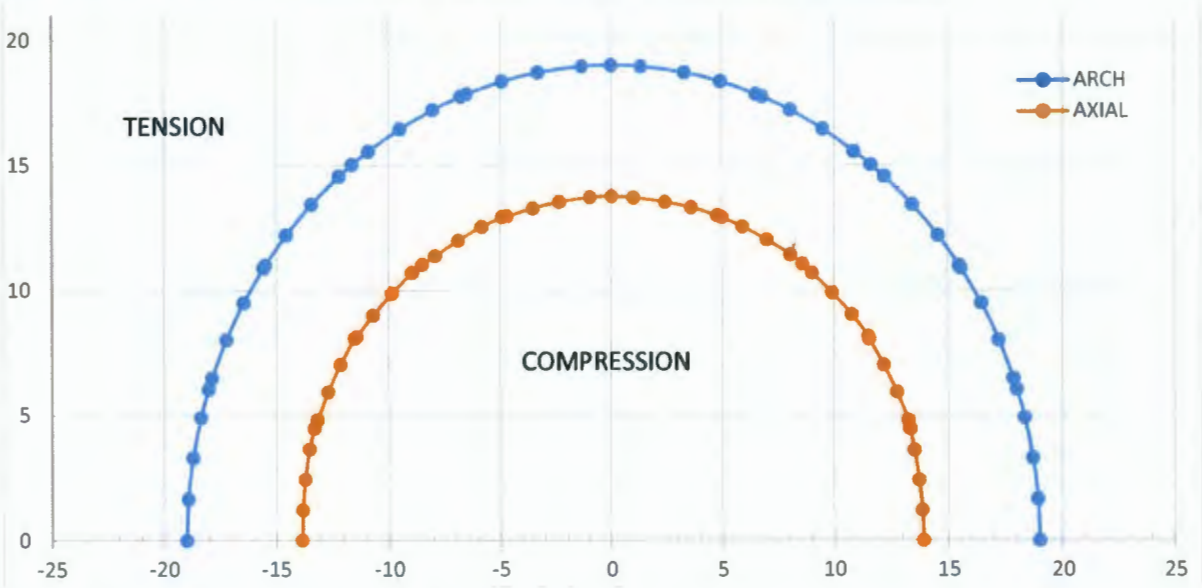

MAXIMUM	-	196.7 kips	(Compression)	=	P_U
MINIMUM	-	182.0 kips	(Compression)		

BENDING DEMANDS

Note: Graph provided for demonstration of variance of values (not to be scaled).

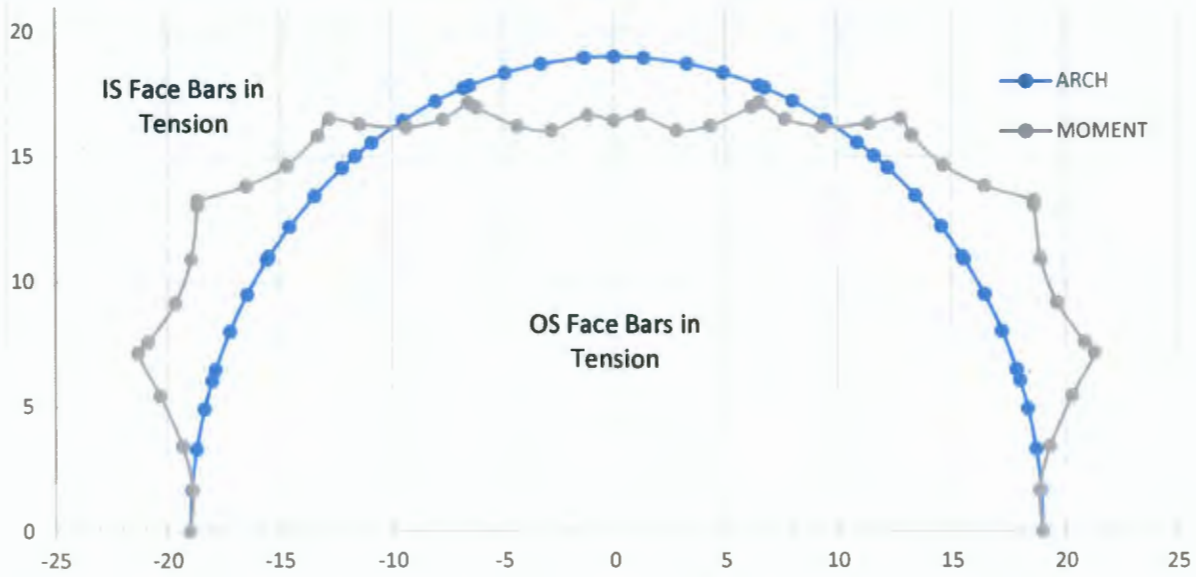

MAXIMUM - 86.1 ft-kips (OS Face Bars in Tension) = M_U

MINIMUM - 71.3 ft-kips (IS Face Bars in Tension)

SHEAR DEMANDS

Note: Graph provided for demonstration of variance of values. It is not to be scaled.

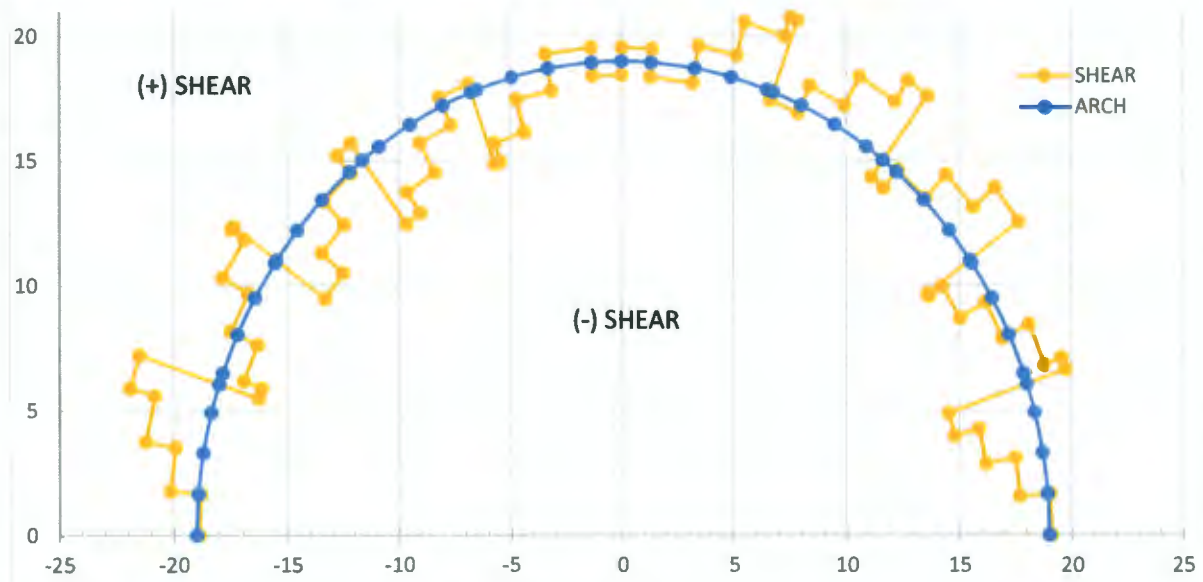

MAXIMUM - 46.7 kips (Absolute Value) = V_U

ARCHED CONCRETE RIB GIRDER CAPACITIES:

DESIGN SECTION PROPERTIES:

Concrete Compressive Strength	f'c	=	4000 psi
Steel Reinforcement Yield Strength	fy	=	40,000 psi
O/S Face Reinforcement	(3) - #8 Bars		
I/S Face Reinforcement	(3) - #8 Bars		
Stirrups	(2) - #3 Closed Loops		

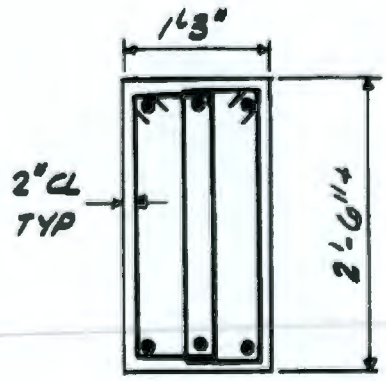

AXIAL & BENDING INTERACTION CAPACITY CALCULATIONS:

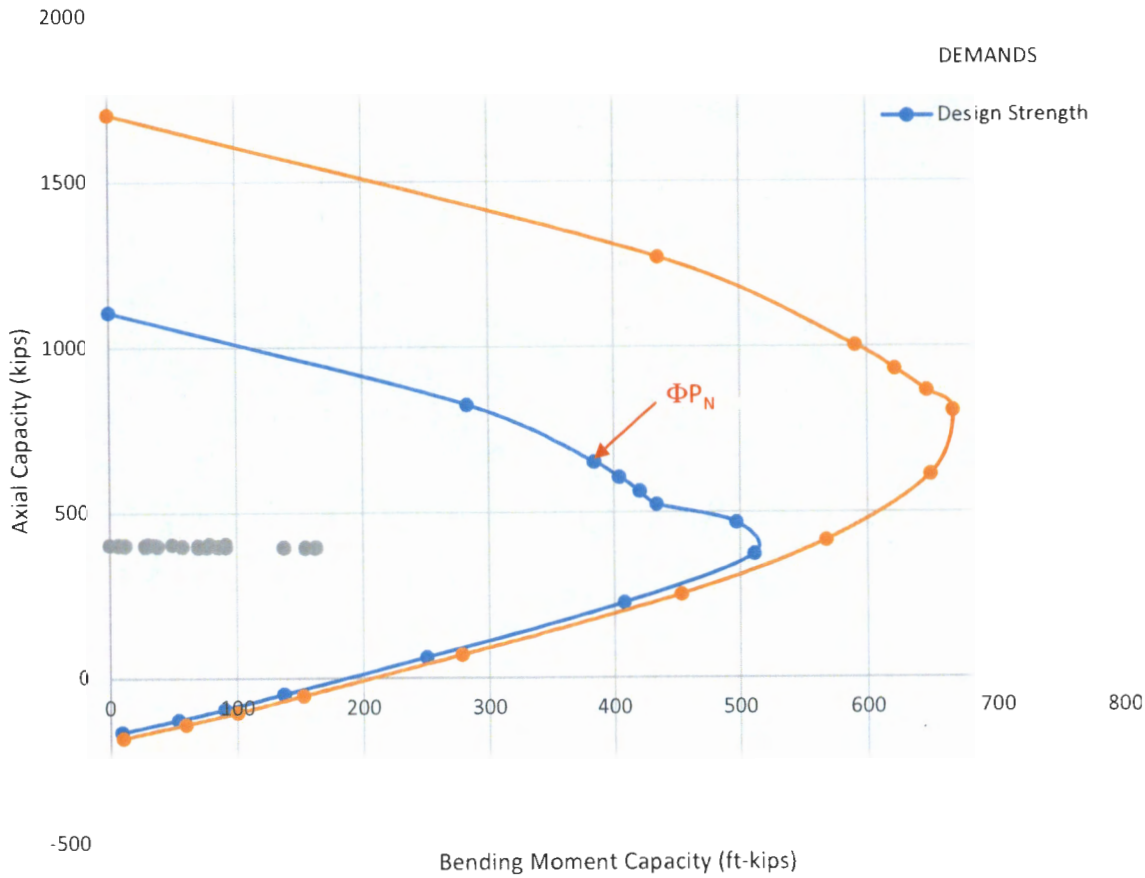

Sample Calculation for data point on Interaction Curve (Balanced Condition):

Concrete Compressive Strength	$f_c := 4ksi$
Beam Width	$b := 15in$
Total Beam Depth	$h := 30in$
Clear Cover to Tension Reinforcing	$C_c := 2in$
Reinforcing Yield Strength	$f_y := 40ksi$
Steel Modulus of Elasticity	$E_s := 29000ksi$

$P_U / \Phi P_N = 196.7 / 523.6 = 0.38$

Quantity of Tension Rebar	$n_{t.rebar} := 3$	
Size of Tension Rebar	#6	
Diameter of Tension Rebar	$d_{t.rebar} := 1.0in$	
Area of Tension Reinforcing	$A_s := n_{t.rebar} \cdot \frac{\pi \cdot d_{t.rebar}^2}{4}$	$A_s = 2.356 in^2$
Quantity of Compression Rebar	$n_{c.rebar} := 3$	
Size of Compression Rebar	#3	
Diameter of Compression Rebar	$d_{c.rebar} := 1.0in$	
Area of Compression Reinforcing	$A'_s := n_{c.rebar} \cdot \frac{\pi \cdot d_{c.rebar}^2}{4}$	$A'_s = 2.356 in^2$
Quantity of Effective Stirrup Legs	$n_{stirrup} := 4$	
Size of Stirrups	#3	
Diameter of Stirrups	$d_{stirrup} := 0.375in$	
Area of Stirrup Leg	$A_{stirrup} := \frac{\pi \cdot d_{stirrup}^2}{4}$	$A_{stirrup} = 0.11 in^2$
Total Stirrup Area	$A_v := n_{stirrup} \cdot A_{stirrup}$	$A_v = 0.442 in^2$
Depth to Tension Reinforcing	$d := h - C_c - d_{stirrup} - \frac{d_{t.rebar}}{2}$	$d = 27.125 in$
Depth to Compression Reinforcing	$d' := (C_c + d_{stirrup}) + \frac{d_{t.rebar}}{2}$	$d' = 2.875 in$
Steel Yeilding Strain	$\varepsilon_y := \frac{f_y}{E_s}$	$\varepsilon_y = 0.00138$
Assumed Tensile Steel Strain	$\varepsilon_s := \varepsilon_y$	$\varepsilon_s = 0.00138$
Depth to Neutral Axis	$c_{NA} := 0.003 \cdot \frac{d}{\varepsilon_s + 0.003}$	$c_{NA} = 18.582 in$

$M_U / \Phi M_N =$ 86.1 / 433.7 = 0.20

FLEXURE BENDING CALCULATION

Compression Block Factor $\beta_1 := \begin{cases} 0.85 & \text{if } f'_c \le 4000\text{psi} \\ 0.65 & \text{if } f'_c \ge 8000\text{psi} \\ \left(\left(1.05 - 0.05 \cdot \frac{f'_c}{1000 \cdot \text{psi}}\right)\right) & \text{otherwise} \end{cases}$ $\beta_1 = 0.85$

Depth of Rectangular Stress Block $a := \beta_1 \cdot c_{NA}$ $a = 15.794\,\text{in}$

Compressive Force Due to Concrete $C_{conc} := 0.85 \cdot f'_c \cdot b \cdot a$ $C_{conc} = 805.516\,\text{kip}$

Compressive Steel Strain $\varepsilon'_s := 0.003 \cdot \frac{(c_{NA} - d')}{c_{NA}}$ $\varepsilon'_s = 0.00254$

Axial Force Due to A's $C_s := A'_s \cdot E_s \cdot \min(\varepsilon'_s, \varepsilon_y)$ $C_s = 94.248\,\text{kip}$

Tension Force Due to As $T_s := A_s \cdot E_s \cdot \min(\varepsilon_s, \varepsilon_y)$ $T_s = 94.248\,\text{kip}$

Nominal Axial Strength $P_n := C_{conc} + C_s - T_s$ $P_n = 805.516\,\text{kip}$

Nominal Flexural Strength $M_n := C_{conc} \cdot \left(\frac{h}{2} - \frac{a}{2}\right) + C_s \cdot \left(\frac{h}{2} - d'\right) + T_s \cdot \left(d - \frac{h}{2}\right)$

$M_n = 667.243\,\text{ft} \cdot \text{kip}$

Strength Reduction Factor $\phi_d := \min\left[0.65 + 0.25 \cdot \frac{(\varepsilon_s - \varepsilon_y)}{0.005 - \varepsilon_y}, 0.9\right]$

$\phi_d = 0.65$

Design Axial Strength $\phi P_n := \phi_d \cdot P_n$ $\phi P_n = 523.586\,\text{kip}$

Design Flexural Strength $\phi M_n := \phi_d \cdot M_n$ $\phi M_n = 433.708\,\text{ft} \cdot \text{kip}$

SHEAR CAPACITY CALCULATION:

Input Data

Reinforcing Yield Strength	$f_y := 40ksi$
Concrete Compressive Strength	$f_c := 4ksi$
Beam Width	$b := 15in$
Depth to Tension Reinforcing	$d := 27.125in$
Total Beam Depth	$h := 30in$
Total Stirrup Area	$A_v := 0.441in^2$
Tie/Stirrup Spacing	$s_{stirrup} := 16in$
Compressive Demand on Section	$N_u := 470kip$

Calculations

Gross Area of Section $A_g := b \cdot h$ $A_g = 450in^2$

$\phi_v := 0.75$

$$V_c := 2 \cdot \left(1 + \frac{N_u}{2000 \cdot A_g \cdot psi}\right) \sqrt{\frac{f_c}{psi}} \cdot psi \cdot b \cdot d \qquad V_c = 78.3 \cdot kip \qquad \textit{[EQN 11-4]}$$

$$V_s := \frac{f_y \cdot d \cdot A_v}{s_{stirrup}} \qquad V_s = 29.9 \cdot kip \qquad \textit{[EQN 11-15]}$$

$$V_{s_max} := 8 \cdot \sqrt{\frac{f_c}{psi}} \cdot psi \cdot b \cdot d \qquad V_{s_max} = 205.9 \cdot kip \qquad \textit{[§ 11.4.7.9]}$$

$$\phi V_n := \phi_v \cdot (V_c + \min(V_s, V_{s_max})) \qquad \phi V_n = 81.2 \cdot kip \qquad \textit{[EQN 11-2]}$$

$V_U / \Phi V_N = 46.7 / 81.2 = 0.58$

ch2m	Calculation Title: PUREX Tunnel 2 Engineering Evaluation	Project Number: 693839.BS Project: PUREX Tunnel 2 Client: CHPRC

Wale Underhung Support Bolted Connection

Concrete Arch to Wale Connection

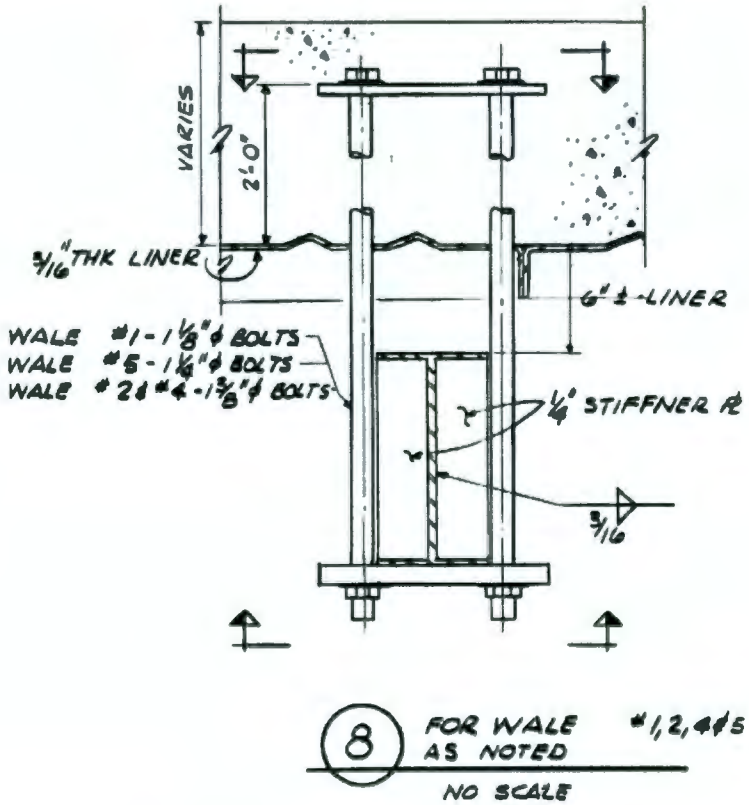

Figure: Wale 1, 2, 4, & 5 to Concrete Arch Connection

Loading (from Wale Beam analysis - maximum factored support reaction)

Wale #1 (W10x25) $P_{W1} := 16.4kip$

Wale #2 (W12x31) $P_{W2} := 68.9kip$

Wale #3 (W12x31) $P_{W3} := 63.6kip$

Wale #4 (W12x31) $P_{W4} := 62.0kip$

Wale #5 (W12x27) $P_{W5} := 36.2kip$

Bolt Properties

Bolt and Plate Type $ASTM := A36$ *(Drawing H-2-58532)*

Bolt Tensile Strength $F_{nt} := 45ksi$

Bolt Shear Strength $F_{nv} := 27ksi$

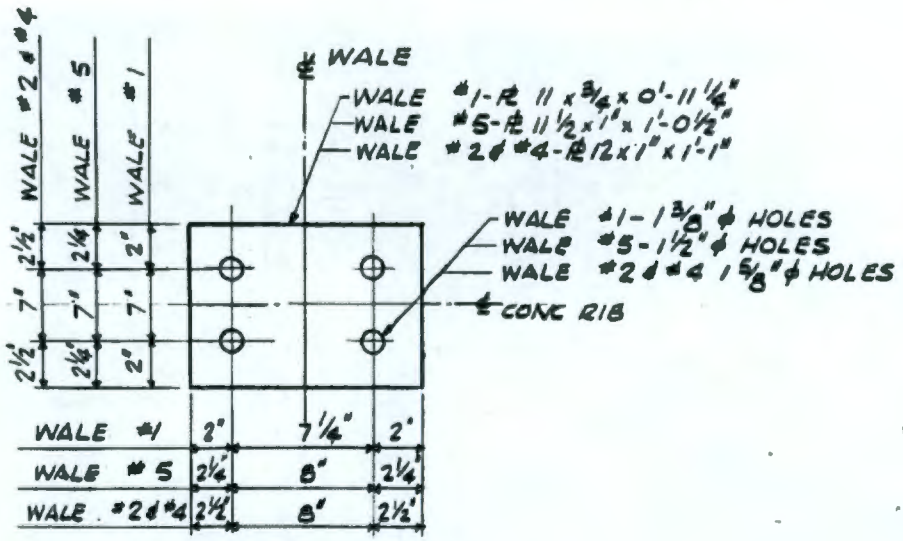

Figure: Wale 1, 2, 4, & 5 Plates

Member Properties

Wale 1 Bolt Properties at Concrete Arch

Wale 1 Bolt Diameter $dbc_{W1} := 1.125in$

Wale 1 Bolt Area $Abc_{W1} := \pi \cdot \left(\frac{dbc_{W1}}{2}\right)^2 = 0.994 \cdot in^2$

Wale 1 Plate Properties at Concrete Arch

Plate Minimum Yield Stress $Fy_p := 36ksi$

Plate Tensile Stress $Fu_p := 58ksi$

Wale 1 Arch Plate Thickness $tc_{W1} := 0.75in$

Wale 1 Arch Plate Depth $dc_{W1} := 11in$

Wale 1 Arch Plate Width $wc_{W1} := 11.25in$

Wale 1 Bolt Hole Diameter $hole_{W1} := dbc_{W1} + \frac{1}{4}in = 1.375 \cdot in$

Wale 2 & 4 Bolt Properties at Concrete Arch

Wale 2 Bolt Diameter $dbc_{W2_4} := 1.375in$

Wale 2 Bolt Area $Abc_{W2_4} := \pi \cdot \left(\frac{dbc_{W2_4}}{2}\right)^2 = 1.485 \cdot in^2$

Wale 2 & 4 Plate Properties at Concrete Arch

Wale 2 & 4 Arch Plate Thickness $tc_{W2_4} := 1in$

Wale 2 & 4 Arch Plate Depth $dc_{W2_4} := 12in$

Wale 2 & 4 Arch Plate Width $wc_{W2_4} := 13in$

Wale 2 & 4 Bolt Hole Diameter $hole_{W2_4} := dbc_{W2_4} + \frac{1}{4}in = 1.625 \cdot in$

Wale 5 Bolt Properties at Concrete Arch

Wale 5 Bolt Diameter $dbc_{W5} := 1.25in$

Wale 5 Bolt Area $Abc_{W5} := \pi \cdot \left(\frac{dbc_{W5}}{2}\right)^2 = 1.227 \cdot in^2$

Wale 5 Plate Properties at Concrete Arch

Wale 5 Arch Plate Thickness $tc_{W5} := 1.0in$

Wale 5 Arch Plate Depth $dc_{W5} := 11.5in$

Wale 5 Arch Plate Width $wc_{W5} := 12.5in$

Wale 5 Bolt Hole Diameter $hole_{W5} := dbc_{W5} + \frac{1}{4}in = 1.5 \cdot in$

Bolt Tensile Strength

Tension Resistance Factor $\phi_t := 0.75$

Wale 1 Arch Bolt Tensile Strength $\phi Rnb_{W1} := \phi_t \cdot F_{nt} \cdot Abc_{W1} = 33.55 \cdot kip$

Wale 2 & 4 Arch Bolt Tensile Strength $\phi Rnb_{W2_4} := \phi_t \cdot F_{nt} \cdot Abc_{W2_4} = 50.12 \cdot kip$

Wale 5 Arch Bolt Tensile Strength $\phi Rnb_{W5} := \phi_t \cdot F_{nt} \cdot Abc_{W5} = 41.42 \cdot kip$

Plate Capacity

Resistance Factor for shear yielding $\phi_{sy} := 1.0$

Resistance Factor for shear rupture $\phi_{sr} := 0.75$

Wale 1

Wale 1 Plate Gross Area $Agv_{W1} := 2dc_{W1} \cdot tc_{W1} = 16.5 \cdot in^2$

Wale 1 Plate Net Area $Ant_{W1} := 2(dc_{W1} - 2 \cdot hole_{W1}) \cdot tc_{W1} = 12.375 \cdot in^2$

Wale 1 Plate shear yield capacity $\phi Rny_{W1} := \phi_{sy} \cdot 0.6Fy_p \cdot Agv_{W1} = 356.4 \cdot kip$

Wale 1 Plate shear rupture capacity $\phi Rnu_{W1} := \phi_{sr} \cdot 0.6Fu_p \cdot Ant_{W1} = 322.99 \cdot kip$

Wale 1 Plate Shear Capacity $\phi Rns_{W1} := \min(\phi Rny_{W1}, \phi Rnu_{W1}) = 322.99 \cdot kip$

Wale 2 & 4

Wale 2 & 4 Plate Gross Area $Agv_{W2_4} := 2dc_{W2_4} \cdot tc_{W2_4} = 24 \cdot in^2$

Wale 2 & 4 Plate Net Area $Ant_{W2_4} := 2(dc_{W2_4} - 2 \cdot hole_{W2_4}) \cdot tc_{W2_4} = 17.5 \cdot in^2$

Wale 2 & 4 Plate shear yield capacity $\phi Rny_{W2_4} := \phi_{sy} \cdot 0.6Fy_p \cdot Agv_{W2_4} = 518.4 \cdot kip$

Wale 2 & 4 Plate shear rupture capacity $\phi Rnu_{W2_4} := \phi_{sr} \cdot 0.6Fu_p \cdot Ant_{W2_4} = 456.75 \cdot kip$

Wale 2 & 4 Plate Shear Capacity $\phi Rns_{W2_4} := \min(\phi Rny_{W2_4}, \phi Rnu_{W2_4}) = 456.75 \cdot kip$

Wale 5

Wale 5 Plate Gross Area $Agv_{W5} := 2dc_{W5} \cdot tc_{W5} = 23 \cdot in^2$

Wale 5 Plate Net Area $Ant_{W5} := 2(dc_{W5} - 2 \cdot hole_{W5}) \cdot tc_{W5} = 17 \cdot in^2$

Wale 5 Plate shear yield capacity $\phi Rny_{W5} := \phi_{sy} \cdot 0.6Fy_p \cdot Agv_{W5} = 496.8 \cdot kip$

Wale 5 Plate shear rupture capacity $\phi Rnu_{W5} := \phi_{sr} \cdot 0.6Fu_p \cdot Ant_{W5} = 443.7 \cdot kip$

Wale 5 Plate Shear Capacity $\phi Rns_{W5} := \min(\phi Rny_{W5}, \phi Rnu_{W5}) = 443.7 \cdot kip$

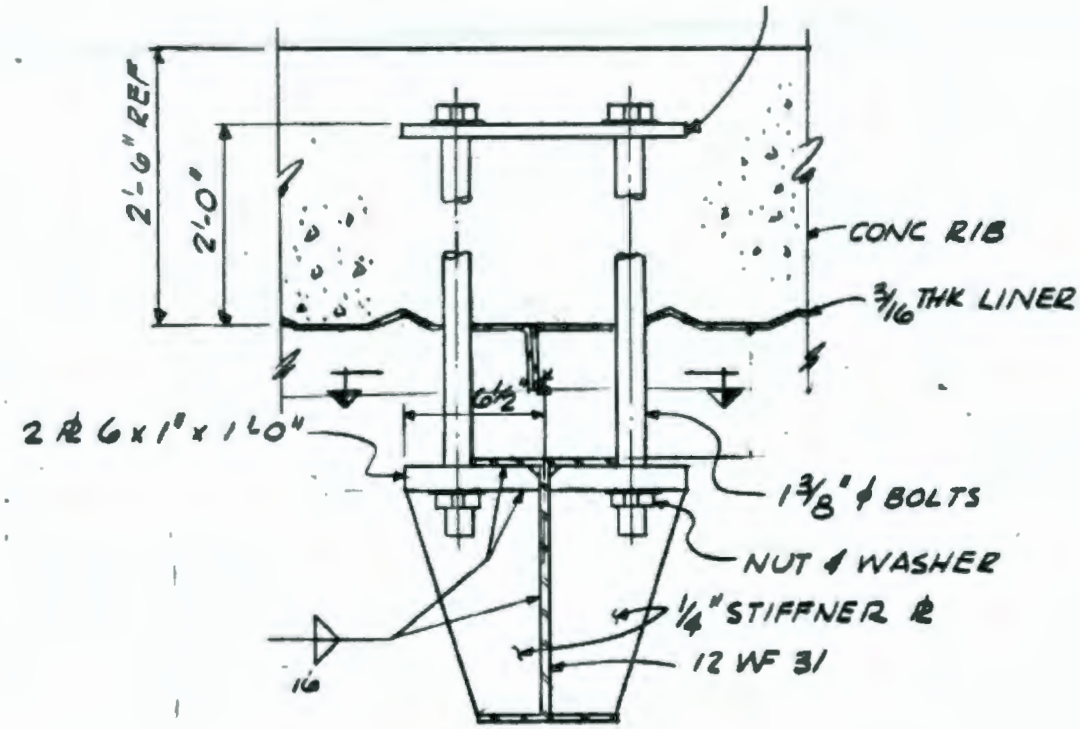

Figure: Wale 3 to Concrete Arch Connection

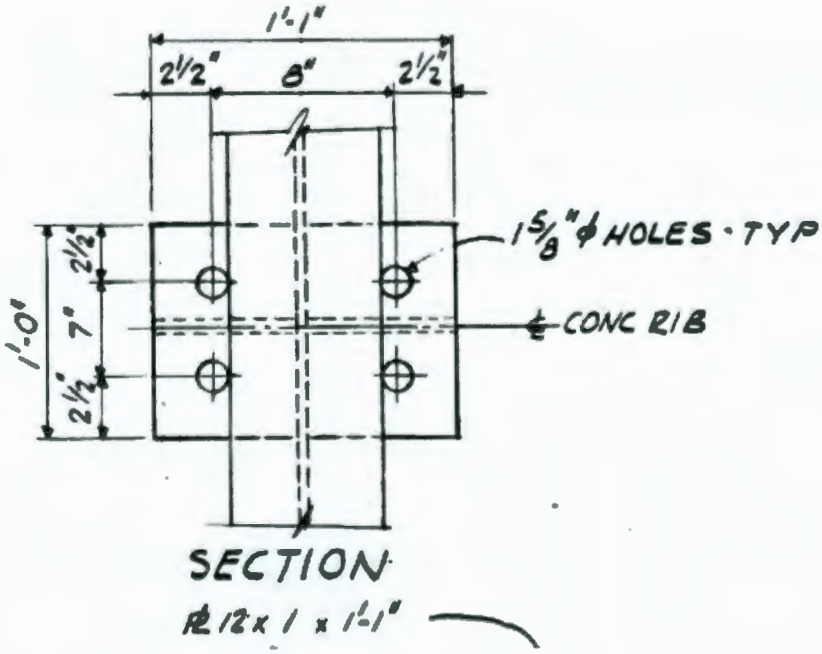

Figure: Wale 3 Plate

Member Properties

Concrete Arch to Wale 3

Wale 3 Bolt Properties at Concrete Arch

Wale 3 Bolt Diameter $dbc_{W3} := 1.375in$

Wale 3 Bolt Area $Abc_{W3} := \pi \cdot \left(\frac{dbc_{W3}}{2}\right)^2 = 1.485 \cdot in^2$

Wale 3 Plate Properties at Concrete Arch

Plate Minimum Yield Stress $Fy_p = 36 \cdot ksi$

Plate Tensile Stress $Fu_p = 58 \cdot ksi$

Wale 3 Arch Plate Thickness $tc_{W3} := 1.0in$

Wale 3 Arch Plate Depth $dc_{W3} := 12in$

Wale 3 Arch Plate Width $wc_{W3} := 6in$

Wale 3 Bolt Hole Diameter $hole_{W3} := dbc_{W3} + \frac{1}{4}in = 1.625 \cdot in$

Bolt Tensile Strength

Tension Resistance Factor $\phi_t = 0.75$

Wale 3 Arch Bolt Tensile Strength $\phi Rnb_{W3} := \phi_t \cdot F_{nt} \cdot Abc_{W3} = 50.115 \cdot kip$

Plate Capacity

Resistance Factor for shear yielding $\phi_{sy} = 1.0$

Resistance Factor for shear rupture $\phi_{sr} = 0.75$

Wale 3 Plate Gross Area $Agv_{W3} := 2dc_{W3} \cdot tc_{W3} = 24 \cdot in^2$

Wale 3 Plate Net Area $Ant_{W3} := 2\left(dc_{W3} - 2 \cdot hole_{W3}\right) \cdot tc_{W3} = 17.5 \cdot in^2$

Wale 3 Plate shear yield capacity $\phi Rny_{W3} := \phi_{sy} \cdot 0.6Fy_p \cdot Agv_{W3} = 518.4 \cdot kip$

Wale 3 Plate shear rupture capacity $\phi Rnu_{W3} := \phi_{sr} \cdot 0.6Fu_p \cdot Ant_{W3} = 456.75 \cdot kip$

Wale 3 Plate Shear Capacity $\phi Rns_{W3} := \min\left(\phi Rny_{W3}, \phi Rnu_{W3}\right) = 456.75 \cdot kip$

Demand / Capacity Ratios Recall Reactions at Arch Connections

Wale #1 (W10x25) $P_{W1} = 16.4 \cdot kip$

Wale #2 (W12x31) $P_{W2} = 68.9 \cdot kip$

Wale #3 (W12x31) $P_{W3} = 63.6 \cdot kip$

Wale #4 (W12x31) $P_{W4} = 62 \cdot kip$

Wale #5 (W12x27) $P_{W5} = 36.2 \cdot kip$

Controlling 2 & 4 Wale Reaction $P_{W2_4} := \max(P_{W2}, P_{W4}) = 68.9 \cdot kip$

Arch Bolt DCR

Wale 1 Arch Bolt DCR $DCRb_{W1} := \frac{P_{W1}}{4 \cdot \phi Rnb_{W1}} = 0.12$

Wale 2 & 4 Arch Bolt DCR $DCRb_{W2_4} := \frac{P_{W2_4}}{4 \cdot \phi Rnb_{W2_4}} = 0.34$

Wale 3 Arch Bolt DCR $DCRb_{W3} := \frac{P_{W3}}{4 \cdot \phi Rnb_{W3}} = 0.32$

Wale 5 Arch Bolt DCR $DCRb_{W5} := \frac{P_{W5}}{4 \cdot \phi Rnb_{W5}} = 0.22$

Arch Plate DCR

Wale 1 Arch Plate DCR $DCRp_{W1} := \frac{P_{W1}}{\phi Rns_{W1}} = 0.05$

Wale 2 & 4 Arch Plate DCR $DCRp_{W2_4} := \frac{P_{W2_4}}{\phi Rns_{W2_4}} = 0.15$

Wale 3 Arch Plate DCR $DCRp_{W3} := \frac{P_{W3}}{\phi Rns_{W3}} = 0.14$

Wale 5 Arch Plate DCR $DCRp_{W5} := \frac{P_{W5}}{\phi Rns_{W5}} = 0.08$

WALE ANCHORAGE TO CONC ARCH

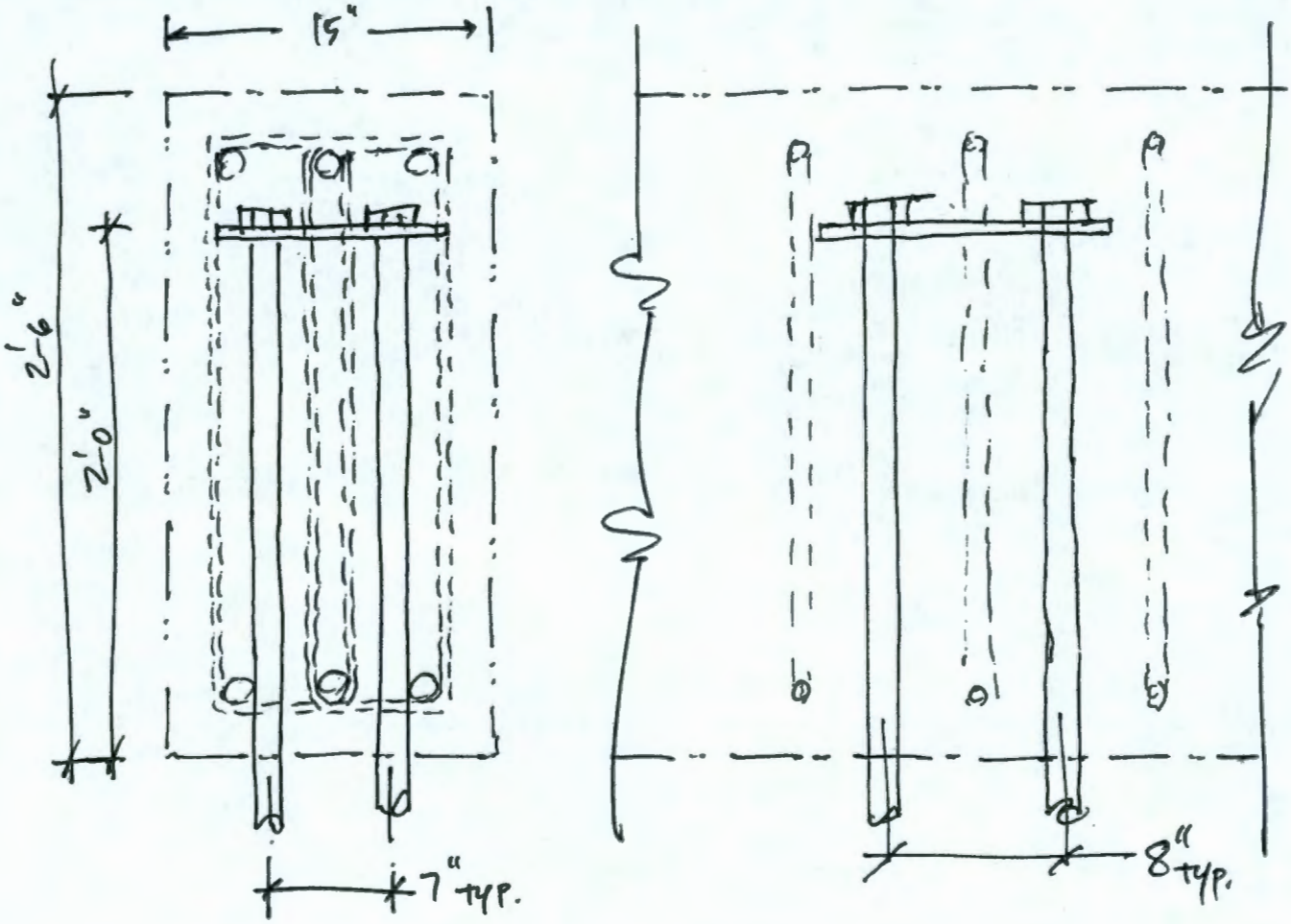

ACI 318 APPENDIX D CHECKS for TENSION:

D.4.1

a) steel strength in tension (D.5.1)

b) conc. breakout strength (D.5.2) see attached

c) pull-out strength in tension (D.5.3) does not govern by insp.

d) conc side-face blow-out (D.5.4) see attached

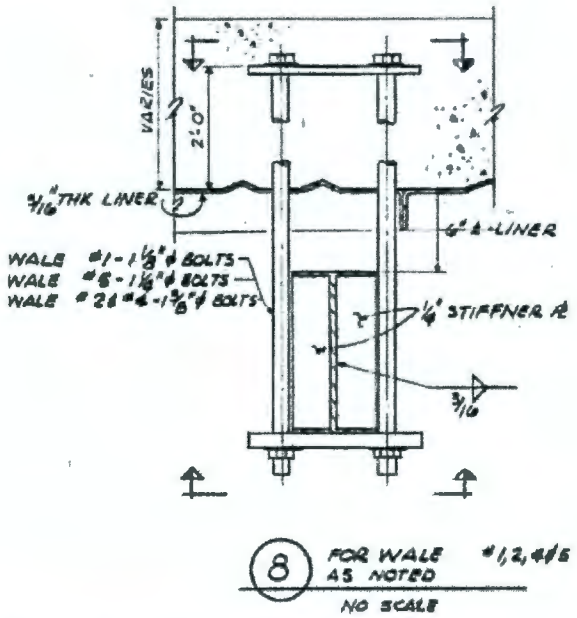

Figure: Wale 1, 2, 4, & 5 to Concrete Arch Connection

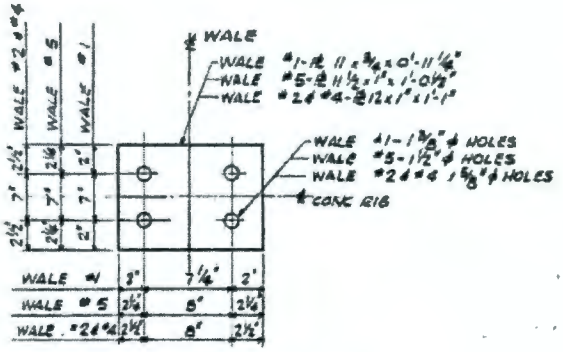

Figure: Wale 1, 2, 4, & 5 Plates

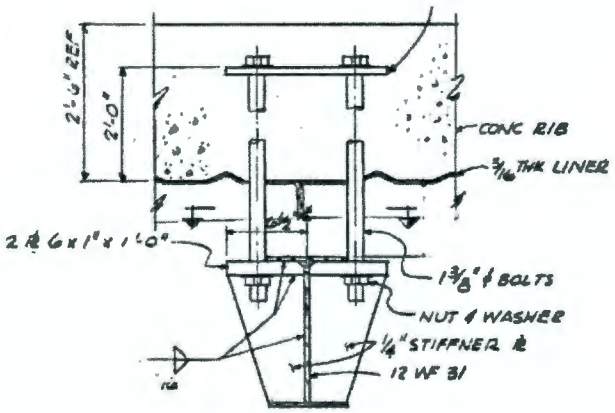

Figure: Wale 3 to Concrete Arch Connection

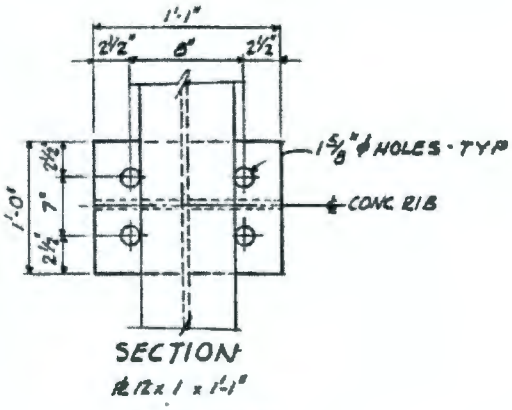

Figure: Wale 3 Plate

$f'_c = 4000$ psi

ACI 318 APPENDIX D

SECTION D.5.2 - Concrete Breakout Strength, Tension

D.5.2: for group of anchors:

$$(D\text{-}4)\quad N_{cbg} \le \frac{A_{Nc}}{A_{Nco}} * \psi_{ec,N} * \psi_{ed,N} * \psi_{c,N} * \psi_{cp,N} * N_b$$

where $A_{Nc} = 84 \times 15 = 1260$

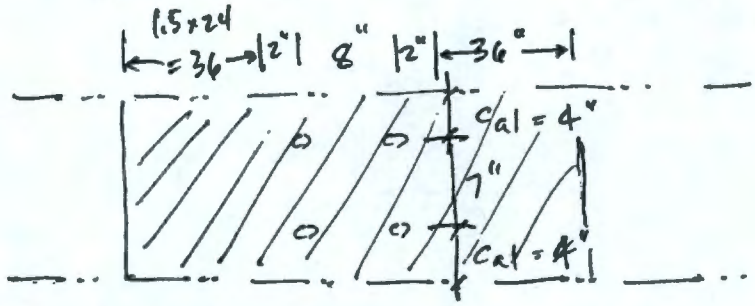

$$(D\text{-}5)\quad A_{Nco} = 9(h_{ef})^2 = 9(24)^2 = 5184$$

$$(D\text{-}6)\quad N_b = k_c \lambda_a \sqrt{f'_c}\,(h_{ef})^{1.5} = 24 * 1.0 * \frac{\sqrt{4000}}{1000} * (24)^{1.5} = 178.5^k$$

$$(D\text{-}8)\quad \psi_{ec,N} = 1.0 \quad \text{(no eccentricity)}$$

$$(D\text{-}10)\quad \psi_{ed,N} = 0.7 + 0.3\left[\frac{c_{a,min}}{1.5 h_{ef}}\right]$$

$$= 0.7 + .3\left[\frac{4}{1.5(24)}\right] = 0.733$$

$$\psi_{c,N} = 1.25 \text{ for cast-in place}$$

$$\psi_{cp,N} = 1.0$$

$$N_{cbg} = \frac{1260}{5184} * 1.0 * .733 * 1.25 * 1.0 * 178.5^k = 39.8^k$$

$$\phi N_{cbg} = .75(39.8) = 29.8^k$$

D5.2.9 for anchor reinforcement developed per Chpt 12 on both sides of the breakout surface use design strength of reinforcement

$A_s = 20 * .11 \# = 2.20$

\# of legs #3 bars

$\phi N_n = .75 * 2.20 * 40 = 66^k$ ← governs.

$$\text{Brk DCR}_{\text{WBLS 1}} = \frac{16.4\text{ k}}{66.0\text{ k}} = 0.25$$

$$\text{Brk DCR}_{\text{WBLS 2}} = \frac{68.9\text{ k}}{66.0\text{ k}} = 1.04$$ > 1.0 EXCEEDS DESIGN CODE LIMITS

$$\text{Brk DCR}_{\text{WBLS 3}} = \frac{63.6\text{ k}}{66.0\text{ k}} = 0.96$$

$$\text{Brk DCR}_{\text{WBLS 4}} = \frac{62.0\text{ k}}{66.0\text{ k}} = 0.94$$

$$\text{Brk DCR}_{\text{WBLS 5}} = \frac{36.2\text{ k}}{66.0\text{ k}} = 0.55$$

ACI 318 APPENDIX D
SECTION D.5.4 - SIDE-FACE BLOWOUT

D.5.4.2 : deep embedment close to an edge? yes.

$h_{ef} > 2.5\, c_{a1}$ where $c_{a1} = 4''$

$h_{ef} = 24'' > 2.5(4) = 10''$

$s = 8''$

$$N_{sbg} = \left(1 + \frac{s}{6\, c_{a1}}\right) N_{sb}$$

N_{sb} (from Eq D-16)

$= (160\, c_{a1} \sqrt{A_{brg}})(\lambda_a)\sqrt{f'_c}$

$= 160 * 4 * \sqrt{4'' \times 4''}\,(1.0)\sqrt{4000}$

EFFECT OF ANCHOR PL, ASSUMED

$= 161.9^k$

$$N_{sbg} = \left(1 + \frac{8}{6(4)}\right)(161.9) = 215.9^k \text{ for 2 rods}$$

ϕ for side-face blow-out, with Condition A (ties act as supplemental reinforcement) = 0.75

TOTAL CAPACITY SIDE-FACE BLOW-OUT $= 2 * (.75)(215.9) = 323.8^k$ FOR ALL WALE ANCHORAGES.

2 sets of 2 "edge" anchors.

(DOES NOT GOVERN)

ch2m	Calculation Title: PUREX Tunnel 2 Engineering Evaluation	Project Number: 693839.BS Project: PUREX Tunnel 2 Client: CHPRC

Concrete Rib Girder Thrust Block Foundation

Concrete Rib Girder Thrust Block Support

Reactions from Arched Concrete Rib Girder onto Foundation

Maximum factored reactions from analysis of concrete arch:

$P_{u(vert)}$ = 194.2 k (max factored vertical support reaction) $P_{(vert)}$ = 139.8 k (service load reaction)

$H_{u(lat)}$ = 38.5 k (max factored horizontal support reaction) $H_{(lat)}$ = 28.0 k (service load reaction)

Foundation Analysis

The new footing which supports the concrete rib was placed on top of the existing continuous footing for the steel hangar structure and turned down.

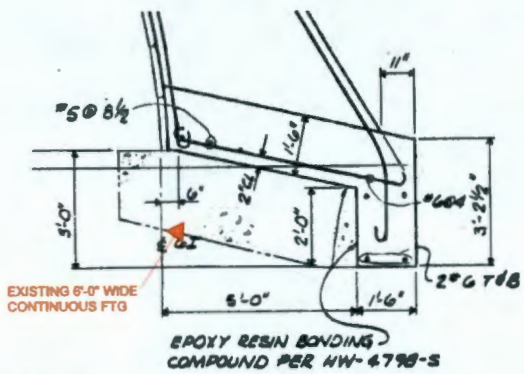

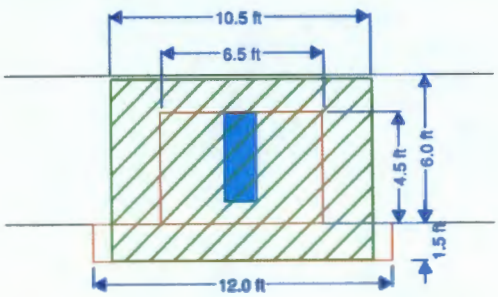

EXIST FTG" 6'-0" X CONT
NEW TURNED DOWN FTG ON TOP OF EXIST FTG
ASSUMED AREA FOR BEARING: 7'-6 "x10'-6"
CONCRETE RIB

PLAN VIEW LOOKING DOWN ON FOOTING

Sliding:

Passive pressure γ_{pass} = 300 pcf
Depth to surface from thrust block d = 12 ft
Length of turn down L = 12 ft
Height of turn down d_{stem} = 3.21 ft
qallow = 3,000 psf (allowable soil bearing capacity)

Calculate the resisting force on the vertical surface of the thrust block:

$H_{res} = \gamma_{pass} \times d \times L \times d_{stem}$ = 139 kips

$FS_{sliding} = H_{res}/H_{lat}$ = 139 k / 28.0 k = 4.96 $DCR_{sliding} = H_{lat} / H_{res}$ = 0.20

Bearing:

Dimensions for Bearing Calculation:
B_{brg} = 7.5 ft
L_{brg} = 10.5 ft

Bearing pressure is equal to the un-factored reaction due to the arch plus the weight of the soil over the footing:

$q = [(P_{vert})+(110pcf \times d \times B_{brg} \times L_{brg})]/(B_{brg} \times L_{brg})$ = (139.8+104.0) / (7.5*10.5) = 243.8 / 78.8 = 3,100 psf

DCR_{brg} = q / qallow = 3100 / 3000 = 1.03

Shear:

Check punching shear on the new footing:

Column Dimensions:

b_{col} = 1.25 ft

d_{col} = 5.583 ft

$\beta_{col} = d_{col} / b_{col}$ = 4.47

Vu = P_{vert} = 194.2 kips

ϕ_{shear} = 0.75

d_{new_ftg} = 16.5in

bo = $2\times(d_{col} + d_{new_ftg}) + 2\times(b_{col} + d_{new_ftg})$ = 230 in

$\phi Vc_{punch} = \phi_{shear} \times (2+(4/\beta_{col}))\times 1psi\times\sqrt{(4000)}\times bo\times d_{new_ftg}$ = 521 kips

Vu / ϕVc_{punch} = 194.2k / 521k = 0.37 OK

By Inspection, the punching shear on the existing footing is okay because bo and d for the existing footing are larger.

Check beam shear on the new footing:

Critical Length for 1 ft section at face of column:

$L_{crit} = (1/2)\times(6.5ft - b_{col})$ = 2.63 ft

$Vu_{_beam_new} = 1.4\times q\times 1ft\times L_{crit}$ = 11.4 kips

$\phi Vc_{beam_new} = \phi_{shear} \times 2\times 1psi\times\sqrt{(4000)}\times 12in\times d_{new_ftg}$ = 19 kips

$Vu_{_beam_new} / \phi Vc_{beam_new}$ = 11.4 k / 19 k = 0.60 OK

Check reinforcement in the new footing:

$Mu_{_beam_new} = 1.4\times q\times 1ft\times L_{crit}\times L_{crit}/2$ = 15.0 kip-ft per ft

Fy = 40ksi

ϕ_b = 0.9

As_{new} = 0.44in^2 per ft

$a_{new} = (Fy\times As_{new}) / (0.85\times 4ksi\times 12in)$ = 0.43 in

$\phi Mn_{new} = \phi_b\times Fy\times As_{new}\times(d_{new_ftg} - (a_{new}/2))$ = 21 kip-ft per ft

$Mu_{_beam_new} / \phi Mn_{new}$ = 15.0 k-ft / 21.0 k-ft = 0.72 OK

By Inspection, the beam shear and moment on the existing footing is okay: "d" for the existing footing is larger and the idealized critical length is shorter.

ch2m	Calculation Title: PUREX Tunnel 2 Engineering Evaluation	Project Number: 693839.BS Project: PUREX Tunnel 2 Client: CHPRC

Original Design Drawings

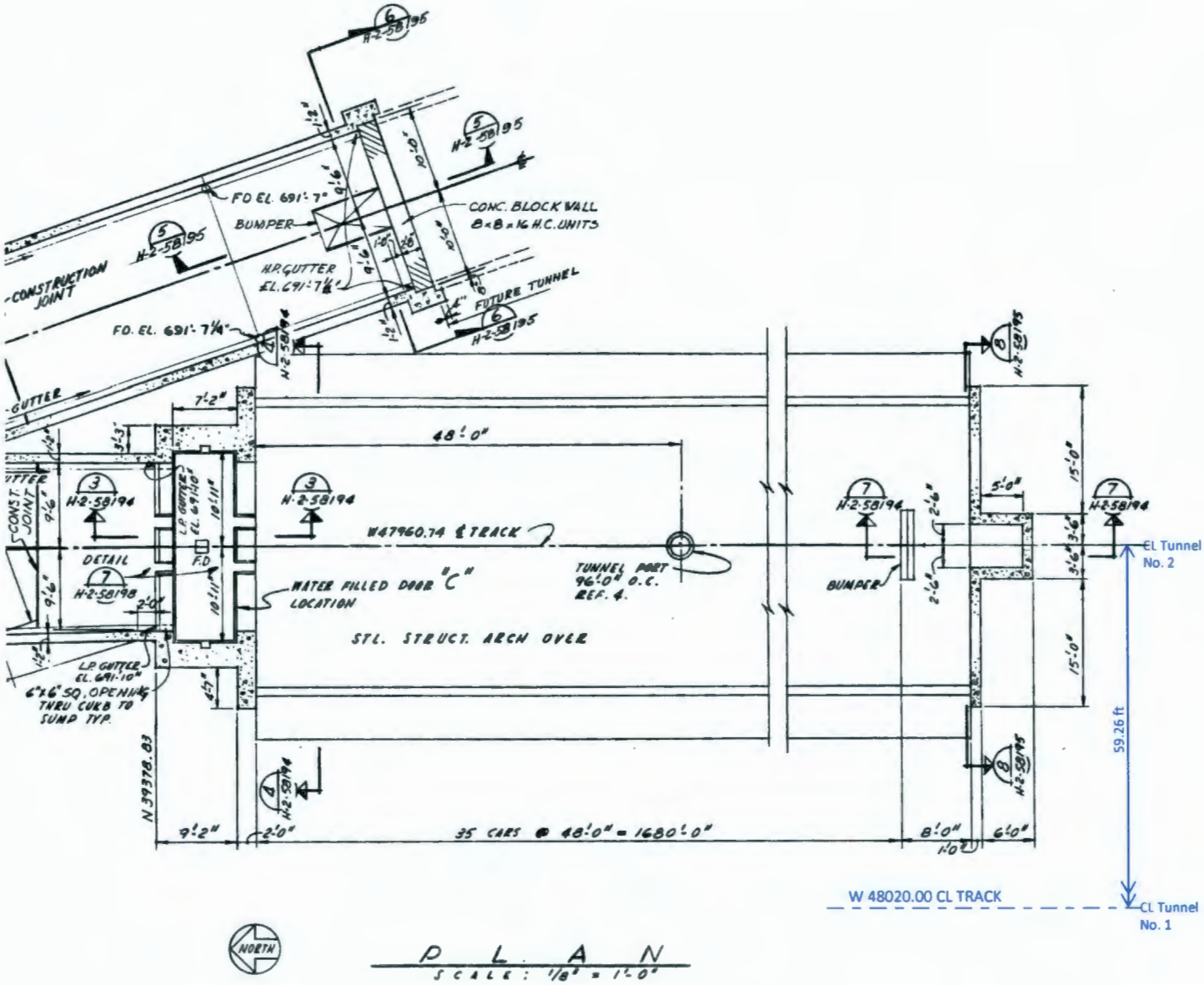

1962 DWG H-2-58193

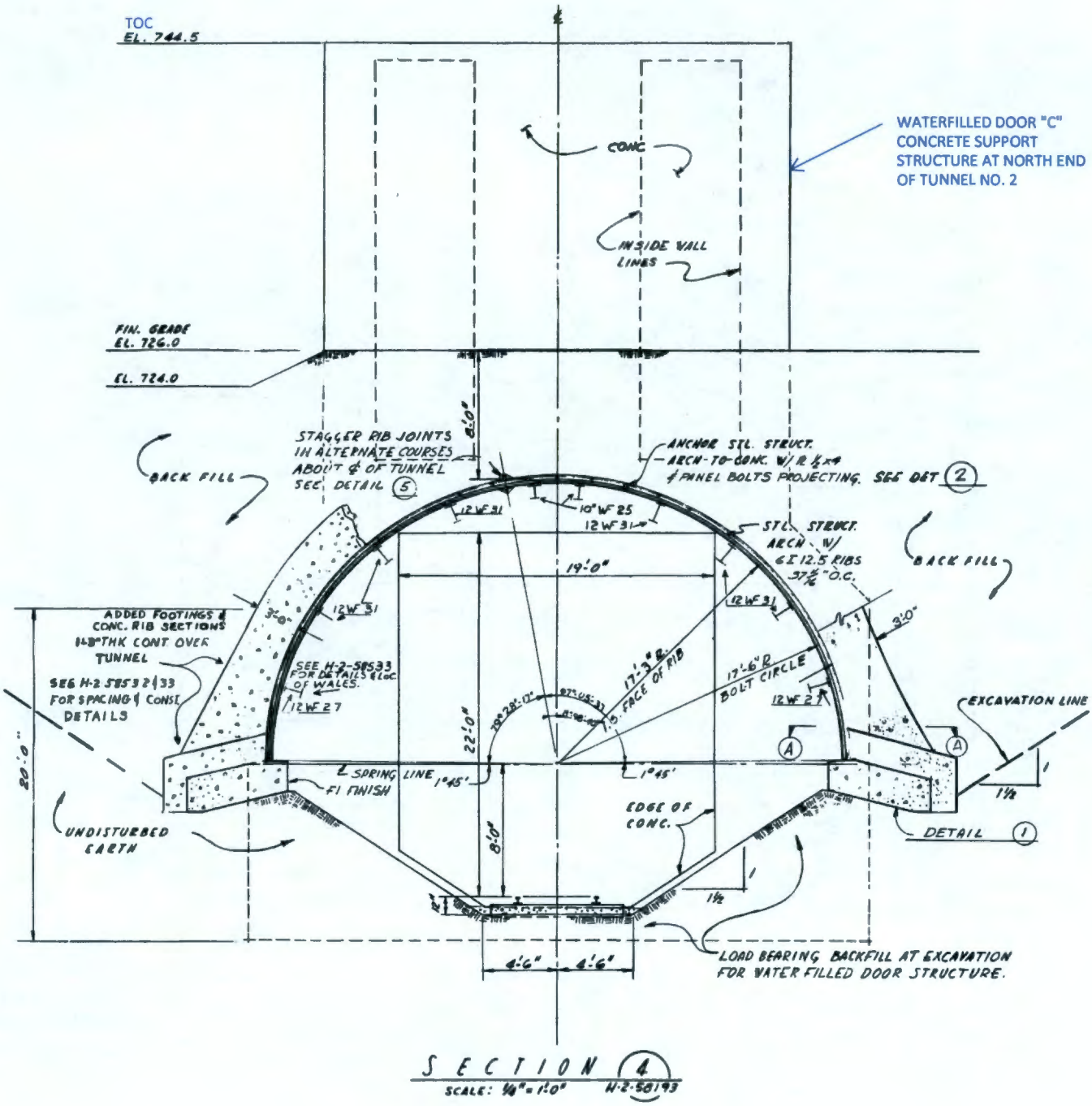

1962 DWG H-2-58194

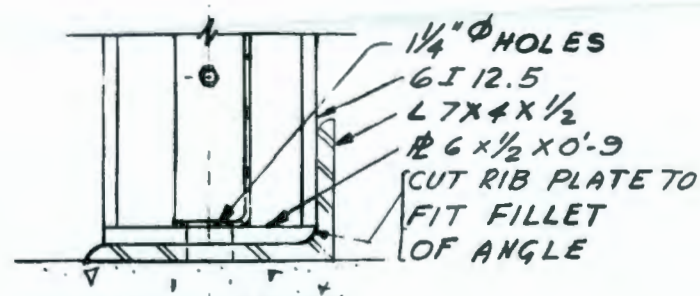

SECTION "B-B"
SCALE 3" = 1'-0"

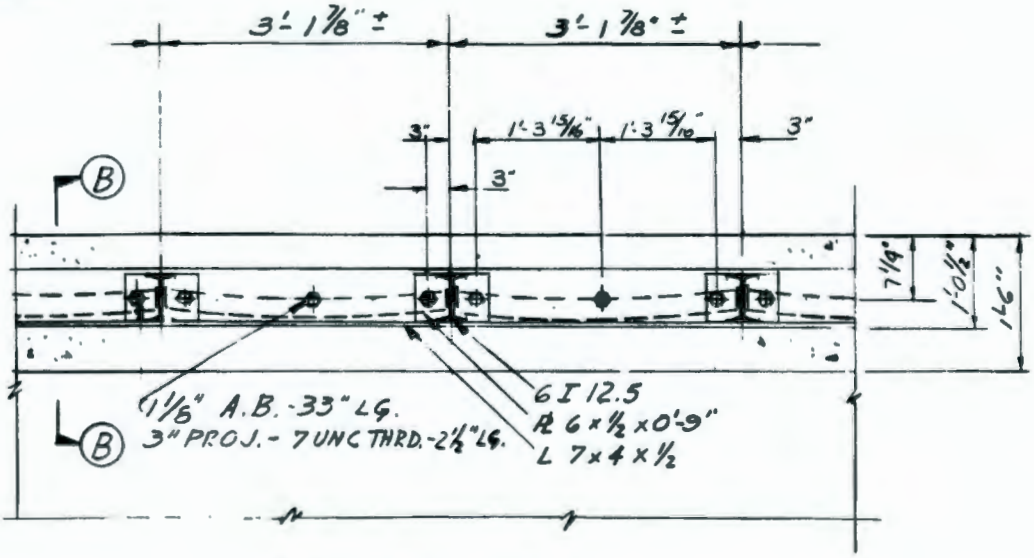

SECTION "A-A"
SCALE ¾" = 1'-0"

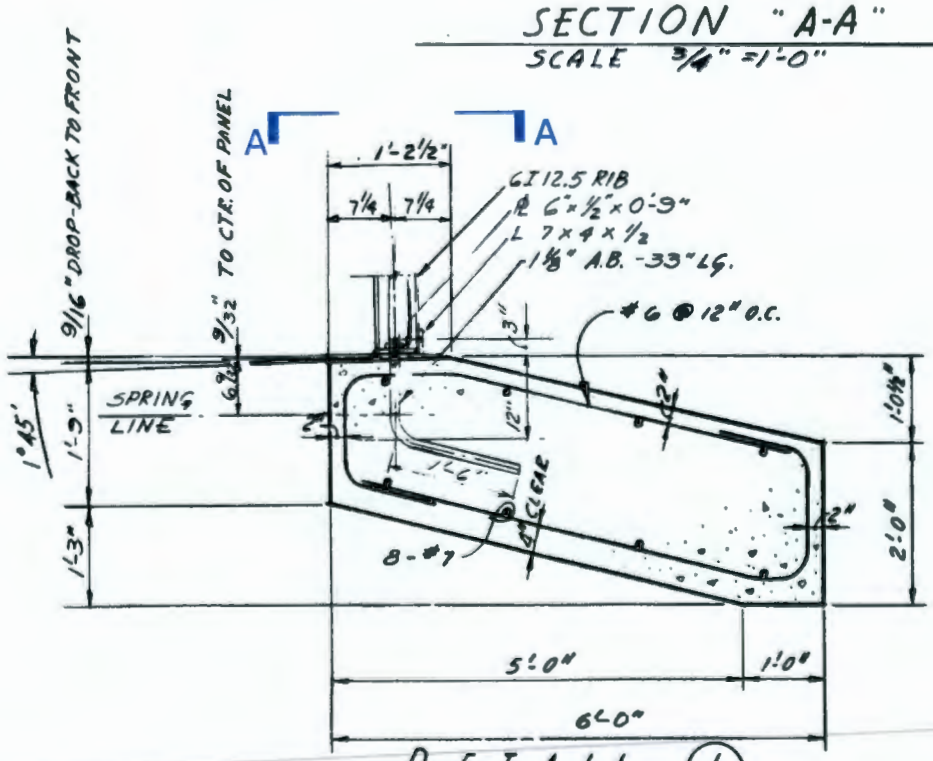

DETAIL 1
SCALE: ¾" = 1'-0"

1962 DWG H-2-58194

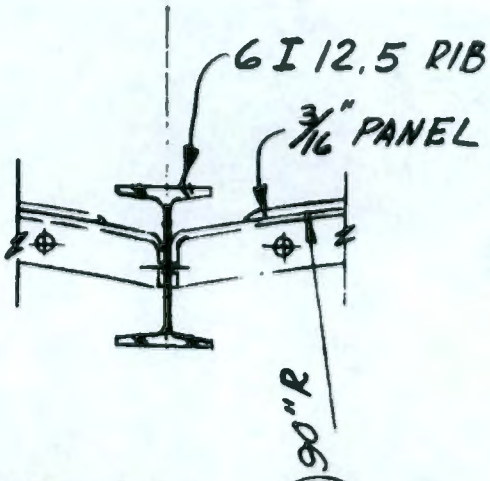

DETAIL 3

SCALE 1 1/2" = 1'-0"

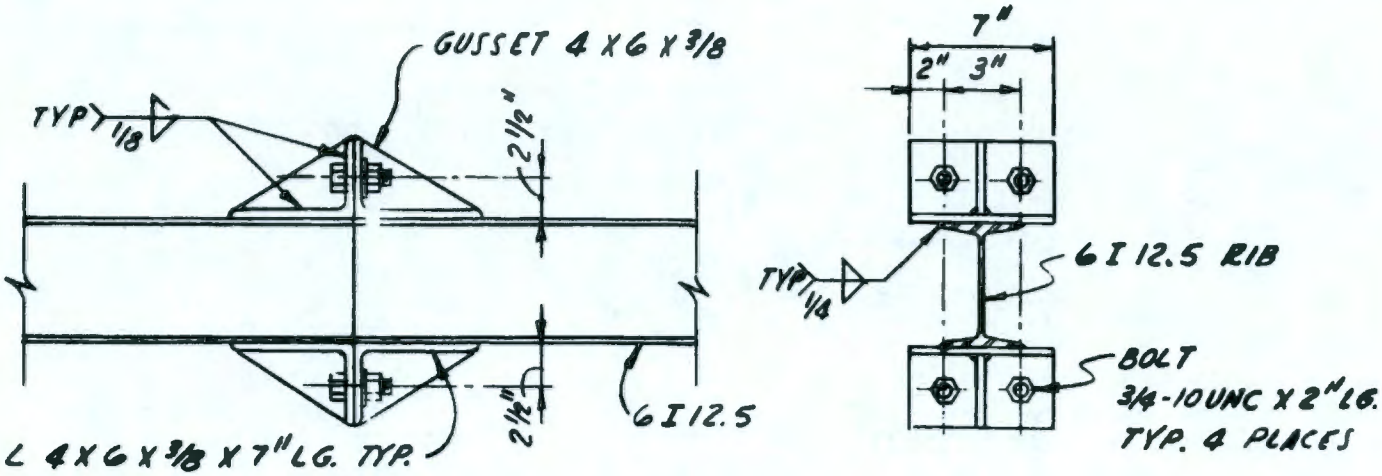

DETAIL 5

SCALE 1 1/2" = 1'-0"

1962 DWG H-2-58194

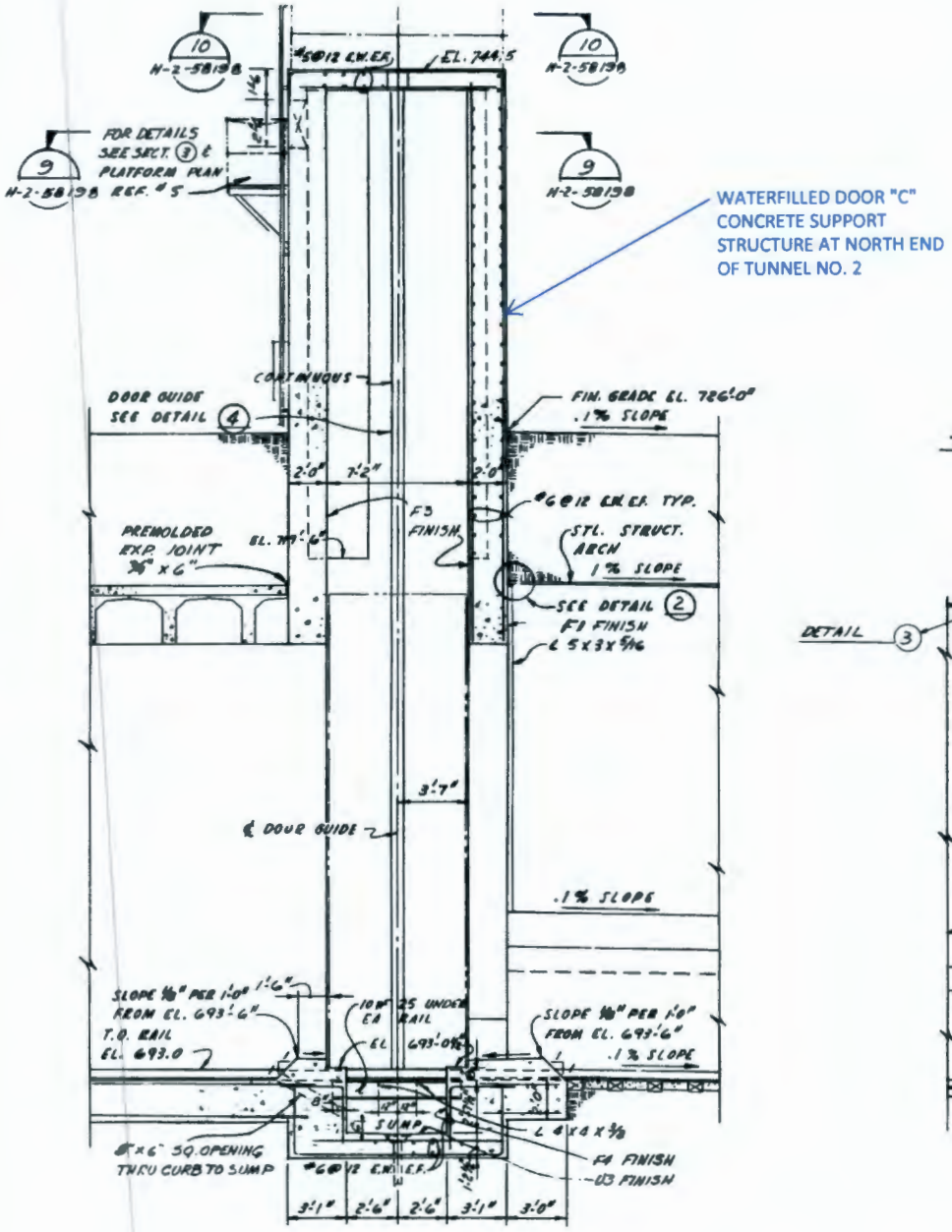

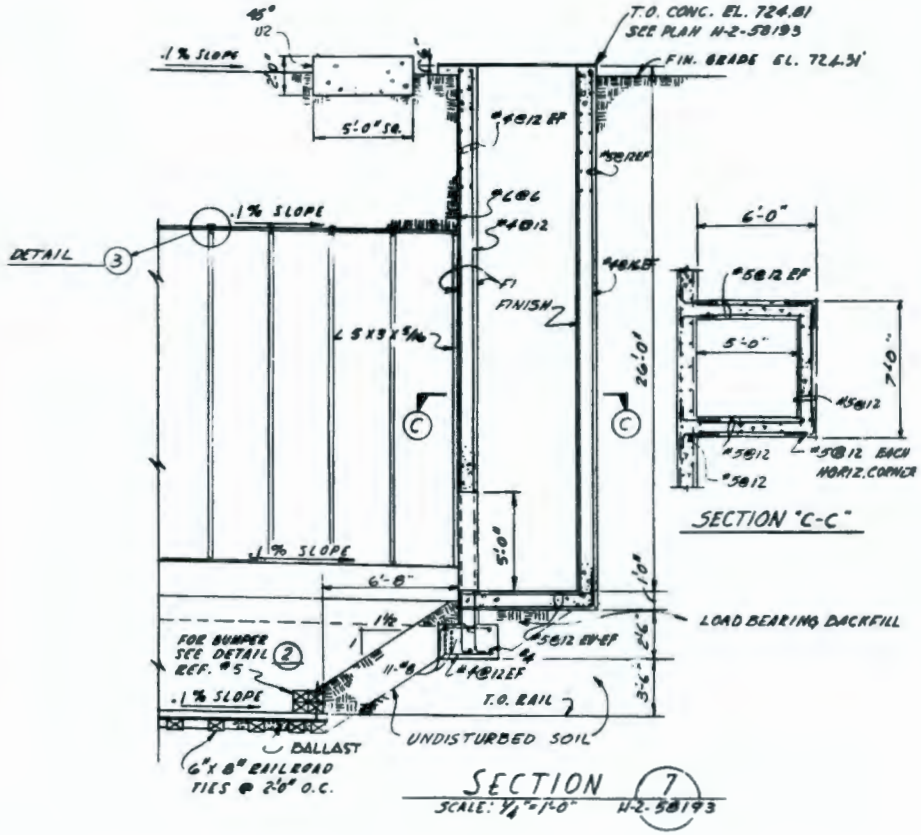

1962 DWG H-2-58194

CHPRC-03365, REV. 0

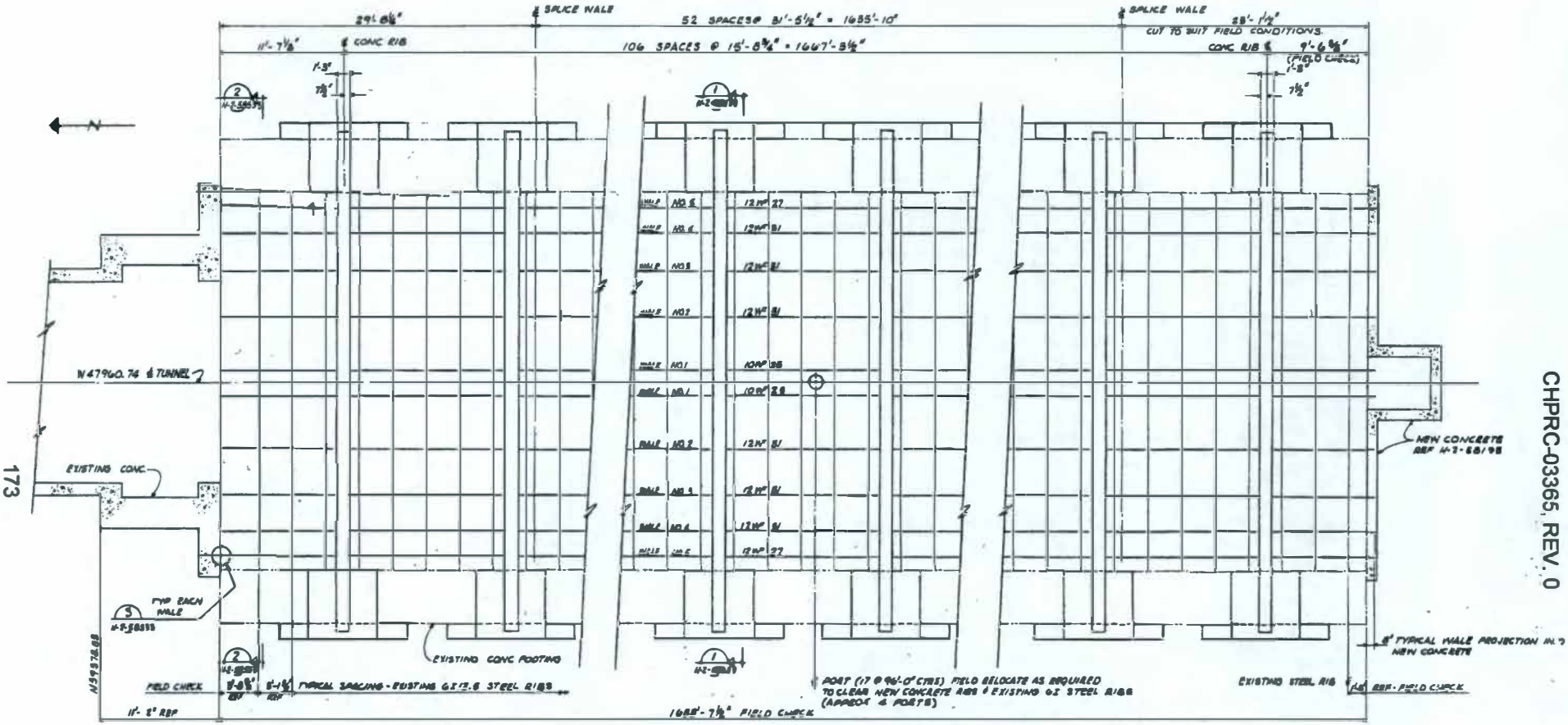

INTERNAL STEEL WALE LIST				
WALE NO.	SIZE	QTY	LENGTH	SPLICE ℄
1	10WF26 10WF26 10WF26	2 104 2	29'-8⅛" 31'-5¼" 23'-9⅜" *	106-6 x ⅝ x 0'-8"
2	12WF31 12WF31 12WF31	2 104 2	29'-8⅛" 31'-5¼" 23'-9⅜" *	106-6 x ⅝ x 0'-10"
3	12WF31 12WF31 12WF31	2 106 2	29'-8⅛" 31'-5¼" 23'-9⅜" *	106-6 x ⅝ x 0'-10"
4	12WF31 12WF31 12WF31	2 106 2	29'-8⅛" 31'-5¼" 23'-9⅜" *	106-6 x ⅝ x 0'-10"
5	12WF27 12WF27 12WF27	2 106 2	29'-8⅛" 31'-5¼" 23'-9⅜" *	106-6 x ⅝ x 0'-10"

* CUT TO SUIT FIELD CONDITIONS

PLAN

0 4 8 FT

⅛" = 1'-0"

GENERAL NOTES

1. CONCRETE TO DEVELOP A COMPRESSIVE STRENGTH OF 4000 # PSI PRIOR TO ANY BACKFILL LOADING
2. REINFORCING STEEL TO BE ASTM-A-432.
3. STRUCTURAL STEEL, PLATES & BOLTS TO BE ASTM-A-36.
4. NW-4798-S STANDARD SPECIFICATION FOR PLACING REINFORCED CONCRETE.
5. NW-4926-S STANDARD SPECIFICATION FOR WELDING CARBON STEELS.
7. PAINTING: ALL EXPOSED STEEL SHALL RECEIVE A 30 MIL DRY THICKNESS COATING COMPOUND, BITUMINOUS, SOLVENT COAL TAR BASE CONFORMING TO MIL SPEC MIL-C-18480 (OCEAN) (MIL.) (KOPPERS BITUMASTIC #50)

⚠ SLOPES ON INTERIOR OF TUNNEL SECTION SHALL BE MAINTAINED DURING CONSTRUCTION.

1964 DWG H-2-58532

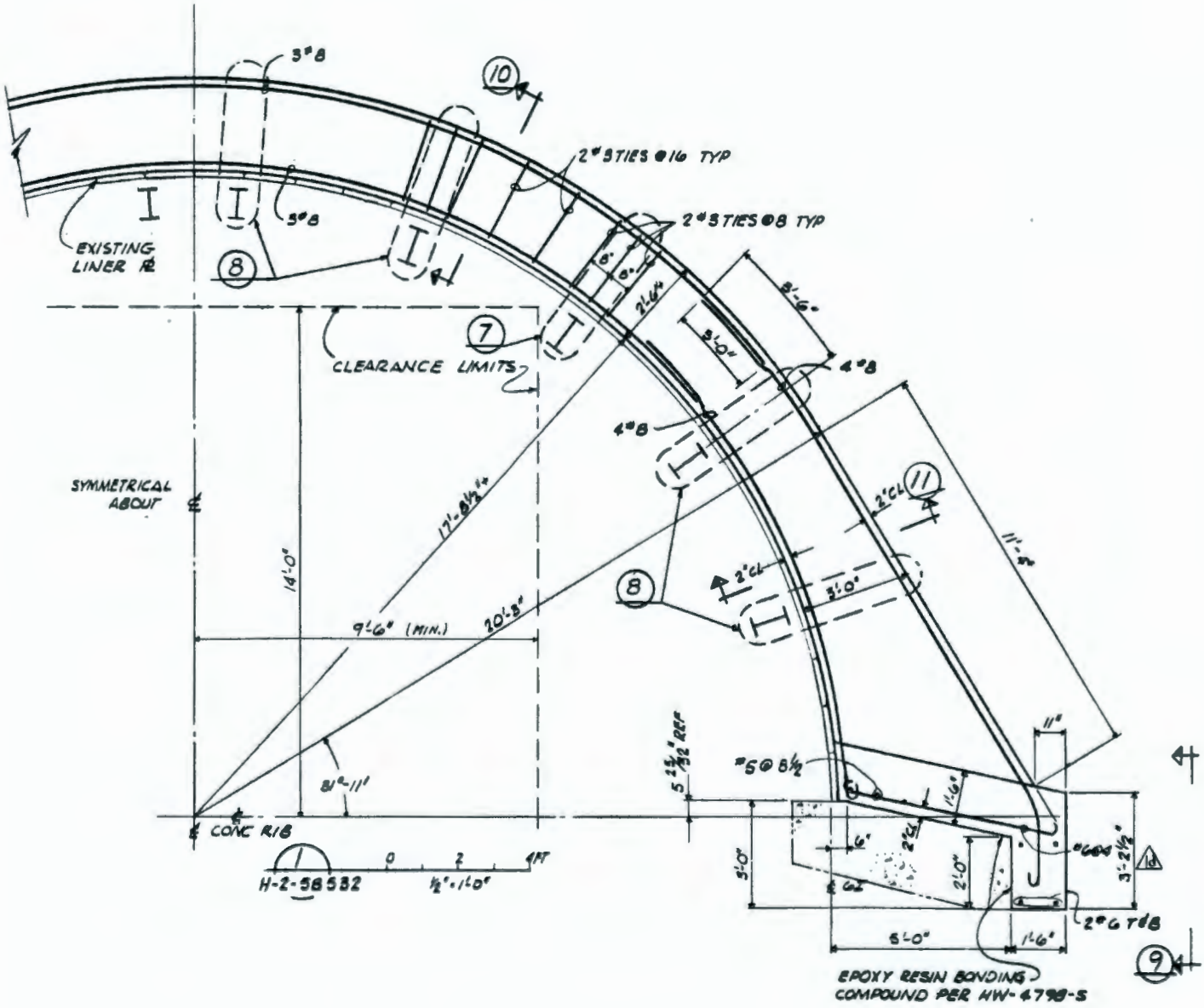

1964 DWG H-2-58533

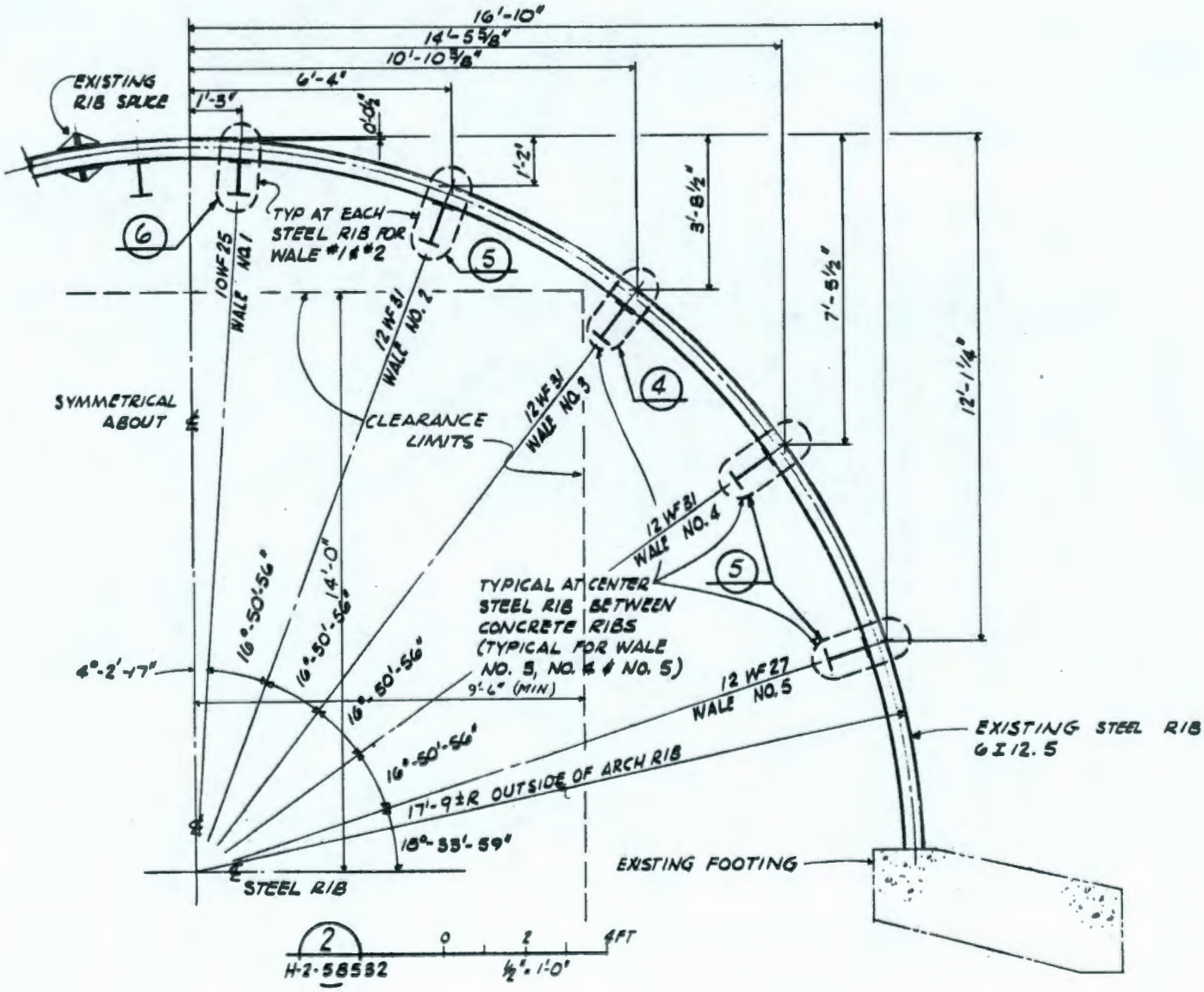

1964 DWG H-2-58533

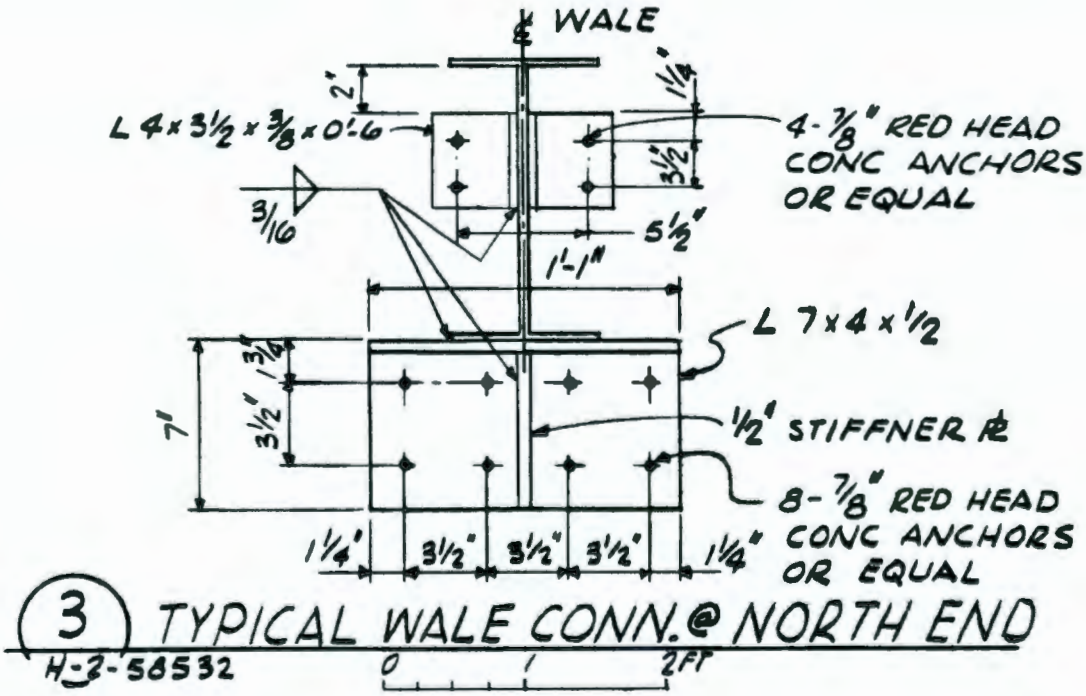

3 TYPICAL WALE CONN. @ NORTH END

H-2-58532

1964 DWG H-2-58533

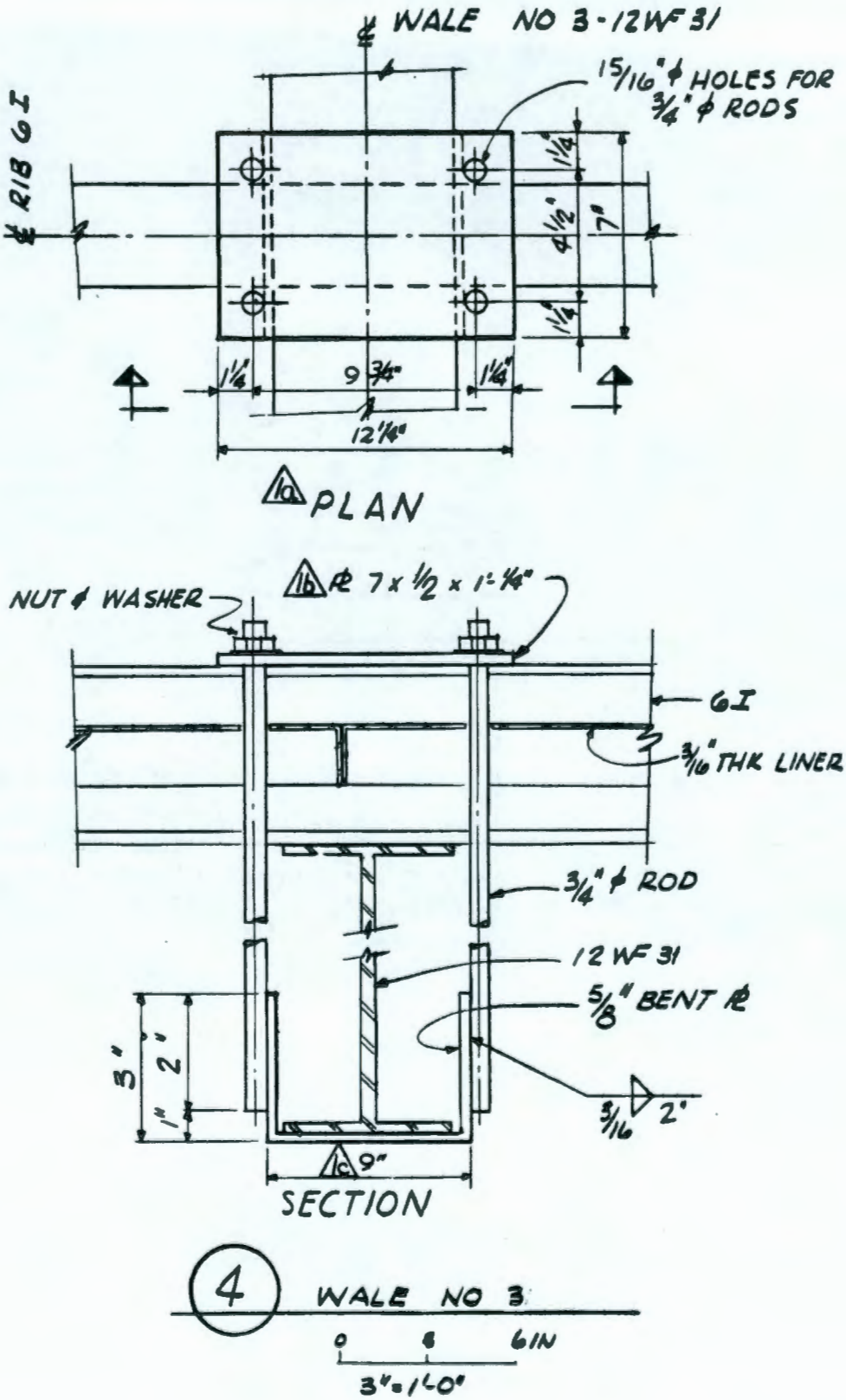

1964 DWG H-2-58533

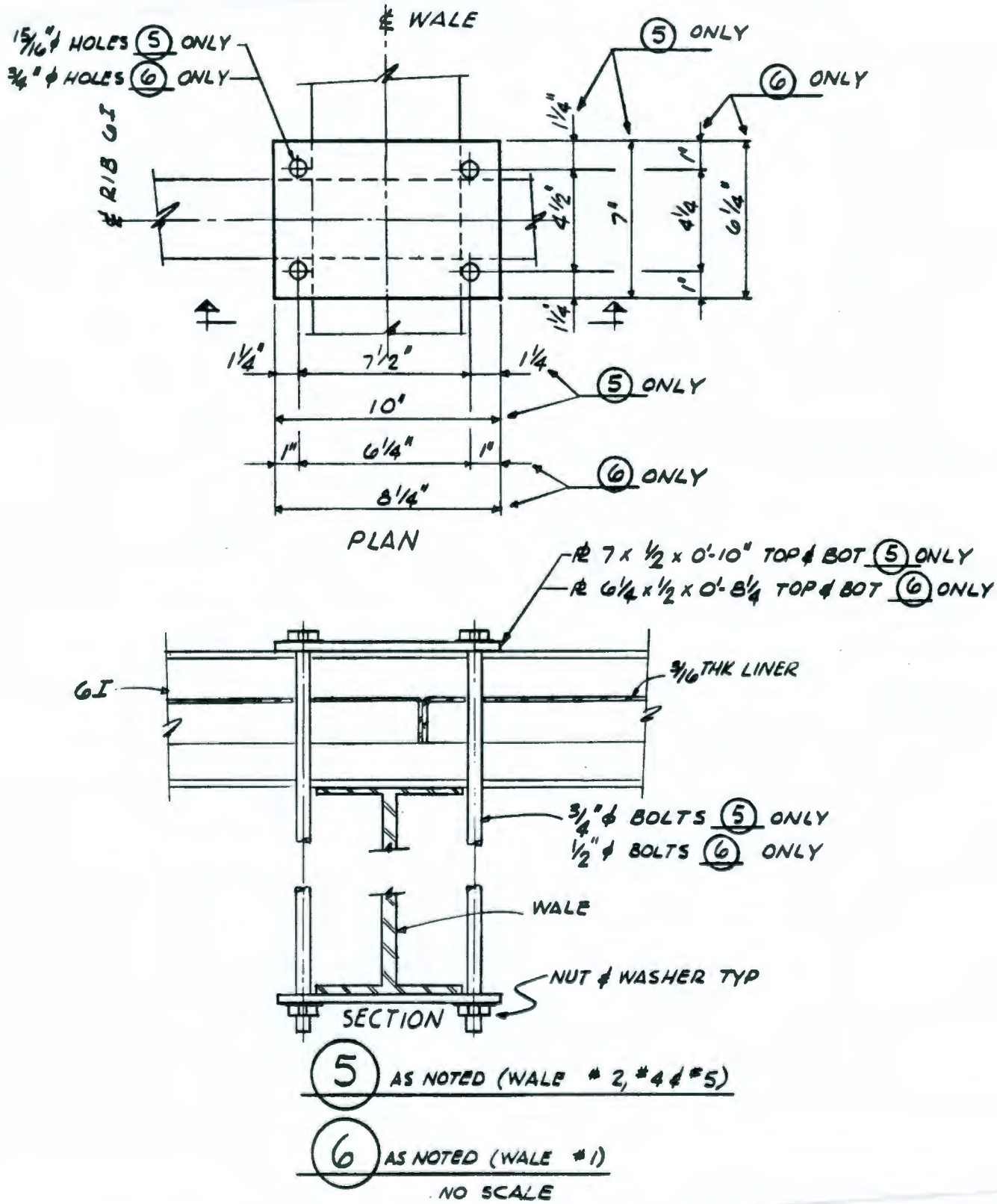

1964 DWG H-2-58533

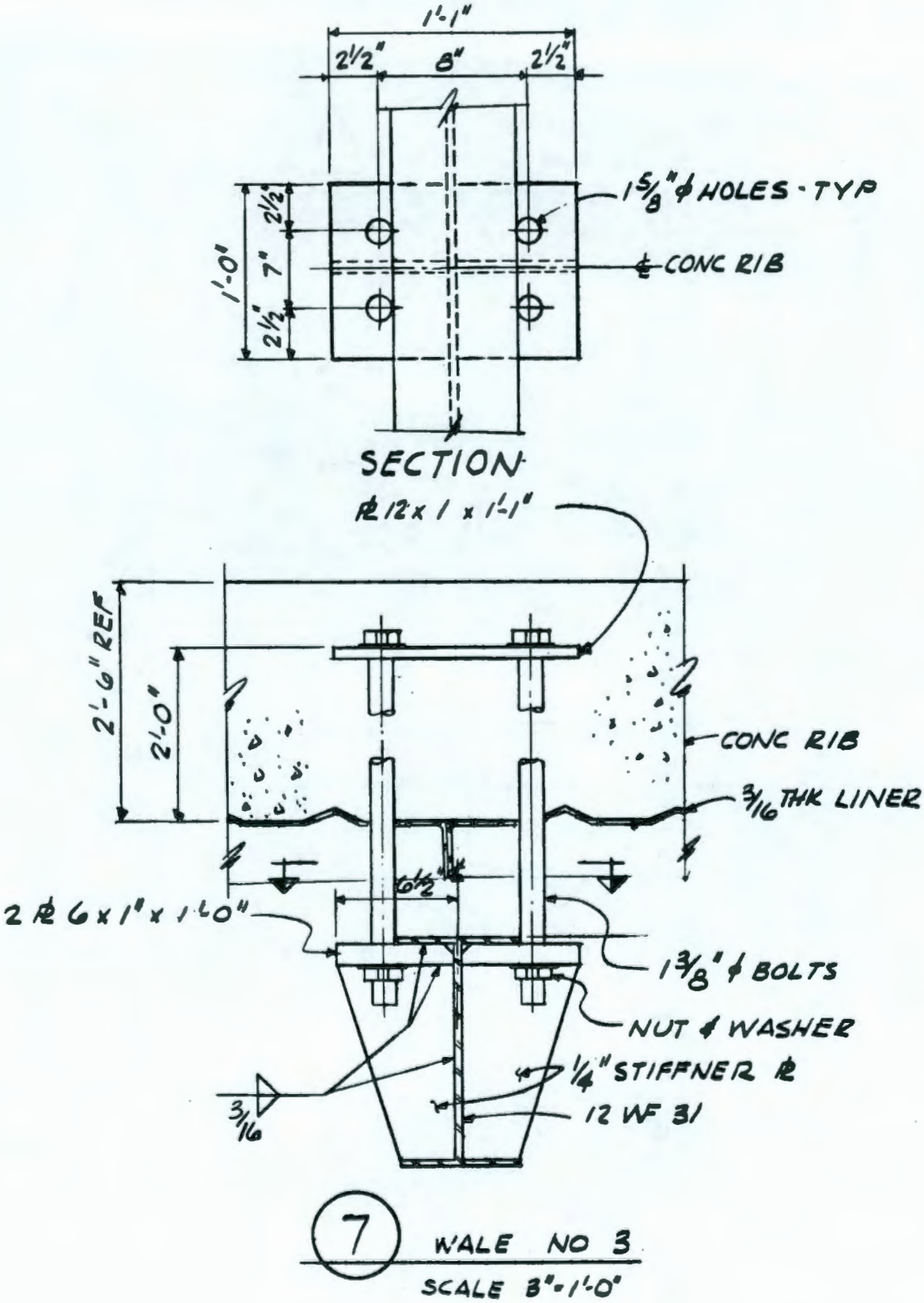

1964 DWG H-2-58533

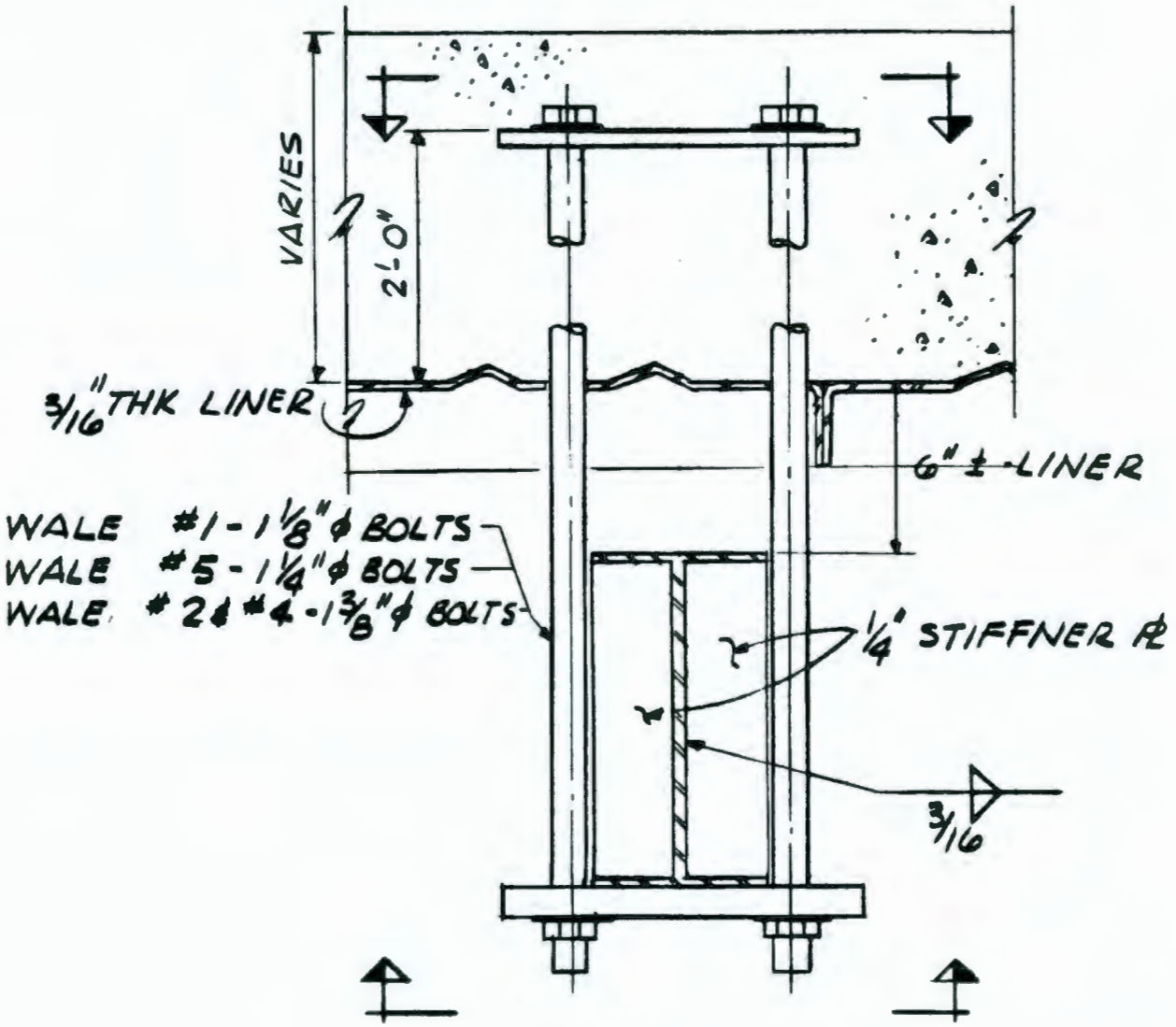

8 FOR WALE #1, 2, 4 & 5
AS NOTED

NO SCALE

1964 DWG H-2-58533

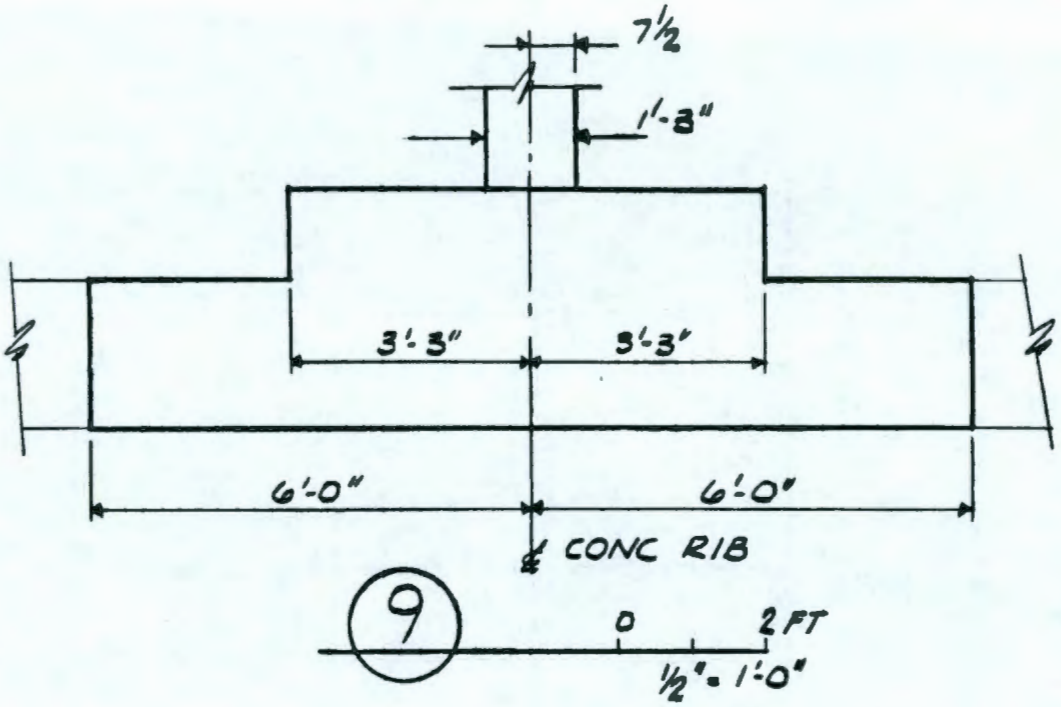

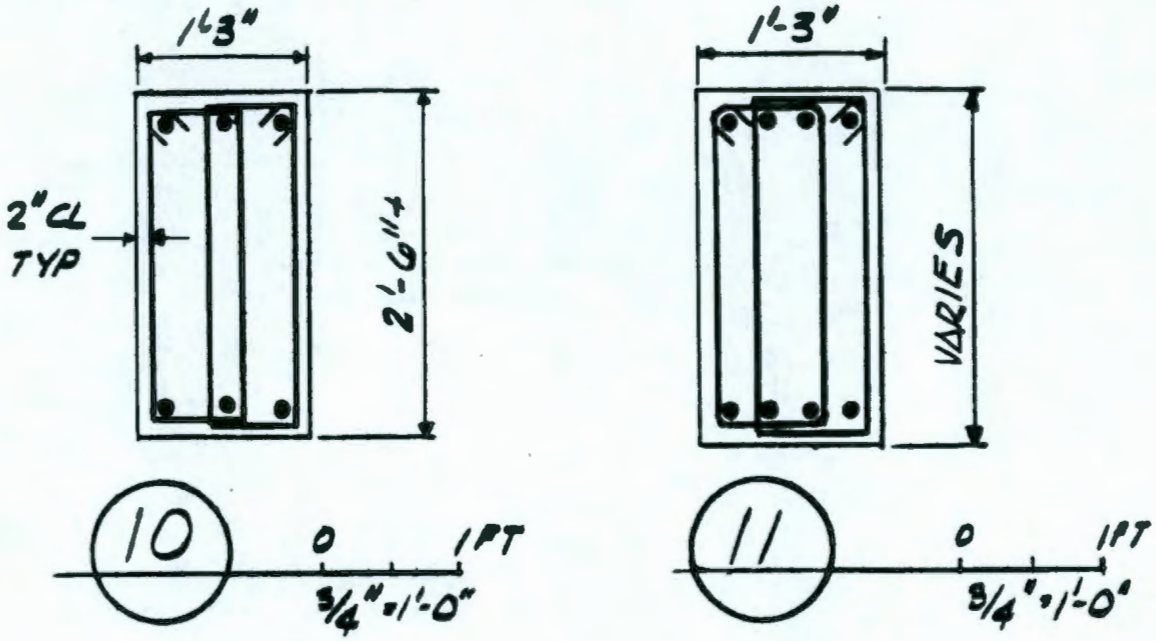

1964 DWG H-2-58533

ch2m	Calculation Title: PUREX Tunnel 2 Engineering Evaluation	Project Number: 693839.BS Project: PUREX Tunnel 2 Client: CHPRC

Appendix B

Soil Design Parameters

Geotechnical Soil Design Parameters for Engineering Evaluation of PUREX Tunnel 2

PREPARED FOR:	Pete Hopkins/CH2M
COPY TO:	Craig Barrett/CH2M
	Mark Hasty/PRC
PREPARED BY:	Mark Kacmarcik/CH2M
DATE:	June 14, 2017
PROJECT NUMBER:	693839.BS
REVISION NO.:	0
REVIEWED BY:	Nason McCullough/CH2M

Introduction

Geotechnical soil design parameters are presented herein for use in preliminary structural evaluation of PUREX Failed Equipment Storage Tunnel No. 2, Facility 218-E-15 (hereinafter described as Tunnel 2). Structure-specific geotechnical data is not available for this Tunnel. This memorandum describes the methodologies employed to estimate tunnel soil geometry, geotechnical engineering properties of soils, earth pressures on the outer skin of the tunnel, and bearing capacity of footings. A brief discussion of considerations for soil structure interaction (SSI) analysis is also provided in the event that more-refined analysis methodologies are warranted as a next-step beyond the methods described herein.

Limitations

At the time of issue of this report, site-specific geotechnical data was not available for use in the evaluation of Tunnel 2. Available geotechnical data generally consists of historical photographs, regional geologic studies, or site-specific studies for other facilities in the project vicinity. All evaluations and recommendations provided herein are derived from interpretation of data reported by others. As such, errors or misrepresentation of site information by others would affect our recommendations. In the event that additional geotechnical data is made available, or subsurface investigation programs are performed, analysis results should be updated accordingly.

Geotechnical Properties of Cover Soil

Geotechnical properties of Tunnel 2 cover soils were estimated for use in evaluation of soil loading on the outer skin of the structure. At this time, there is no known geotechnical investigation data which has characterized the Tunnel 2 cover soil, and original design calculations for the tunnel are not available.

Soil properties were estimated considering review of as-built drawings, construction specifications, construction photographs, previous geotechnical investigation results in the vicinity of Tunnel 2, regional geologic studies, and other investigations performed by others. From construction photos, it is interpreted that the cover soil was not placed in lifts and compacted as specified, but was placed loosely with a dragline and bulldozer (Exhibit 1). These placement methods were documented to have caused two failures during original construction of Tunnel 2, prior to re-design to incorporate cast-in-place structural concrete arch supports.

Exhibit 1 – Cover soil placement operations at Tunnel 2; note loose placement of fill over concrete-reinforced Tunnel with a dragline

The recommended cover soil properties for Tunnel 2 are as follows:

- Unified Soil Classification System (USCS) classification: Silty Sand with Gravel (SM)
- Moist unit weight, γ_m = 110 pcf (Expected range: 105 to 115 pcf)
- Internal friction angle, ϕ' = 30 degrees
- Cohesion, c' = 0 psf

The selection of soil parameters for the cover soils is complicated due to the lack of clear documentation of material properties or fill placement methods. Variability in the dry density of the soil and the in-situ moisture content are expected to contribute to corresponding variations moist unit weight of the overlying soil. The soil unit weight may change seasonally in response to seasonal weather patterns, variations in with depth and location are likely. Discussion of the selection of these parameters is included in Attachment A.

Cover Soil Geometry

The geometry of the Tunnel 2 cover soil was evaluated by comparing the existing site topography to the as-built geometry of the tunnel. Light, Data, and Ranging (LIDAR) topographic survey data was collected in 2008 for the Central Plateau of the Hanford site by Aero-Metric, Inc. of Seattle, Washington. Examples of this topography are shown in Exhibits 2 and 3.

The collected data for the Central Plateau is arranged in 343 tiles arranged across the site. Tiles 153, 154, 177, and 178 provide coverage of PUREX Storage Tunnel 1 and Tunnel 2 and were provided to CHPRC by MSA of Richland, Washington for use in the analysis. The LIDAR survey data in the provided tiles consisted of a "bare earth" digital elevation model (DEM) processed by Aero-Metric to remove projections from the ground surface such as structures and vegetation as well as a "first return" DEM which includes all data points regardless of impacted surface.

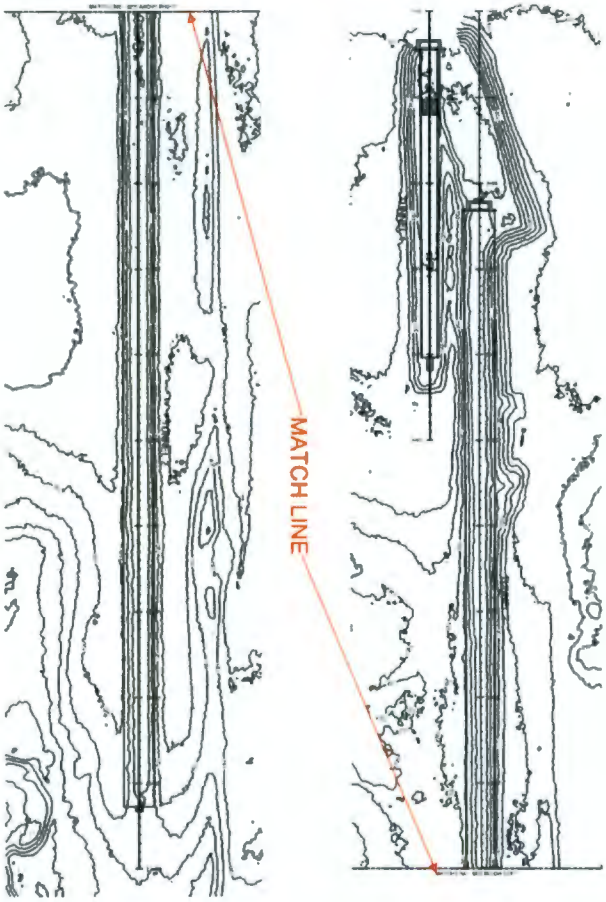

Exhibit 2 – Example view showing of LIDAR topography and as-built geometry of Tunnel 2. North is (refer to Attachment B)

The horizontal coordinate system for the LIDAR data is State Plane, NAD83, Washington South Zone, meters. The vertical elevation system was NAVD88, meters. The LIDAR data was converted from the original coordinate system to match the 200E survey datum using survey monument data for brass-cap Monument 2E-41. This conversion allows direct comparison of topographic survey data to the as-built plan and elevation of the Tunnel 2 structure. The results of the LIDAR analysis, including site topography, tunnel profile, tunnel cross sections, and conversion factors between datums are included in Attachment B.

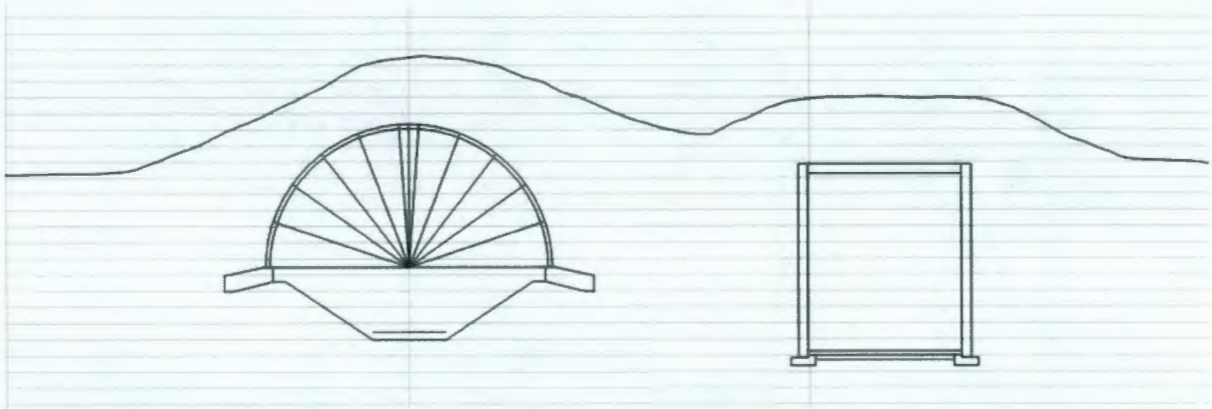

Exhibit 3 – Cross Section at STA 4+00, looking south, showing geometry of Tunnel 1 (right), Tunnel 2 (left), and Tunnel Cover Soil Topography

At this time, no known recent survey data is available to confirm the horizontal or vertical position of the tunnel or cover soil. The most recent LIDAR data was collected in 2008, and at the time of this analysis was greater than 9 years old. It is possible that changes in the ground surface may have occurred since the data was collected. The geometry of Tunnel 2 was reproduced from horizontal and vertical coordinates shown on the 1962 as-built drawings (refer to specific drawings noted in the References sections). Plan, profile, and cross sections of Tunnel 2 were then generated for evaluation of cover soil geometry as shown in Attachment B. Considering the age of the data, it is emphasized that the elevations and locations developed for this study are approximate.

To investigate the accuracy of the tunnel and cover soil geometries, "first return" LIDAR elevation data for the exposed portions of the Tunnel 1 and Tunnel 2 water-filled door structures was compared to the as-built design elevations of the structures reported in 1955 and 1962, respectively. First-return elevation data was found to generally be within 0.3 feet of the as-built elevation of the water-filled door structures. To our knowledge, the elevation of the water-filled door structures have not been recently surveyed to confirm the as-built elevations; some movement of these structures over time is possible.

The LIDAR elevation data is expected to be the best-available topographic data for the site. The agreement between the LIDAR data and the as-built water-filled door elevations supports the use of these two data sources in development of preliminary evaluations of earth pressures on the tunnel with reasonable accuracy. If improved topography or tunnel geometry data becomes available, the cover soil geometry should be re-evaluated and incorporated in revised earth pressure calculations.

Earth Pressures

Earth pressures were estimated for the Tunnel 2 structure at wales 1 thru 5 on both sides (east and west) of the structure as well as the tunnel crown and springline (see Exhibit 4). Earth loads were estimated using the 2008 LIDAR cover soil topography, the as-built tunnel geometry, and the estimated geotechnical properties of the cover soils. Estimation earth pressures was performed considering the

combined influence of vertical overburden pressure, horizontal at-rest lateral earth pressure, and both the horizontal and vertical components of snow load (15 psf). These loads were resolved into their normal and shear components, and the normal stresses acting orthogonal to the tunnel structure were provided to the structural engineer. Cross sections were evaluated every 100 feet along the tunnel length as a means of considering the variation in cover soil geometry.

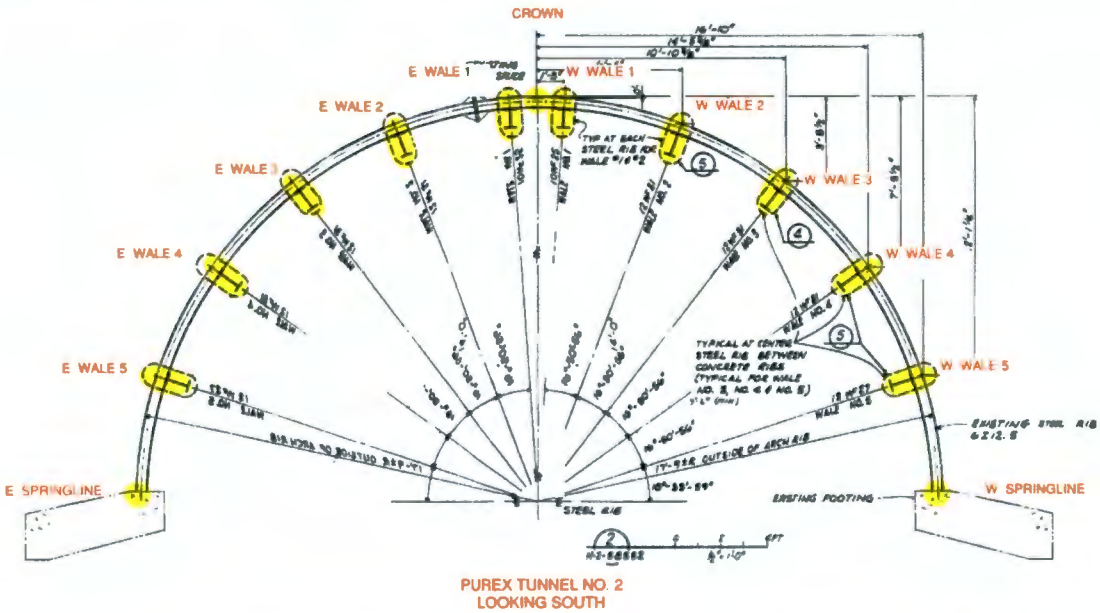

Exhibit 4 – Schematic representation of Tunnel 2 Geometry. Earth pressures are provided at each wale, the crown, and the springlines of the structure.

Normal Stresses due to Vertical Overburden Soil Height

Normal stress due to the vertical overburden soil over the tunnel wales were estimated by taking scaled measurements of the cover soil height over the tunnel roof. Measurements were taken each location shown in Exhibit 4. The soil height was multiplied by the estimated moist unit weight of the cover soil to determine the vertical effective stress, then multiplied by the cosine of the angle between the vertical stress and the wale position. Shear stresses were also calculated but not incorporated into the analysis. An example free-body diagram showing the forces applied to the tunnel wales is included in Exhibit 5.

Normal Stresses on Tunnel due to Lateral Earth Pressures

Normal stress due to the at-rest lateral earth pressures on the tunnel were estimated by taking the vertical effective stresses estimated at each wale location and multiplying by the adjusted at-rest lateral earth pressure coefficient. Adjustments were made to the lateral earth pressure coefficient for wales 3, 4, 5, and the springline to account for the sloping ground surface. The slope was measured as the approximate average slope of the tunnel cover soil as represented by the LIDAR cross sections. At-rest lateral earth pressure coefficients for wales 1, 2, and the tunnel crown were not adjusted, as the overlying ground surface above these locations is generally horizontal. The lateral earth pressures at

each location on the tunnel surface were then multiplied by the sine of the angle between the vertical stress and the wale position. Shear stresses were also calculated but not incorporated into the analysis. An example free-body diagram showing the forces applied to the tunnel wales is included in Exhibit 5.

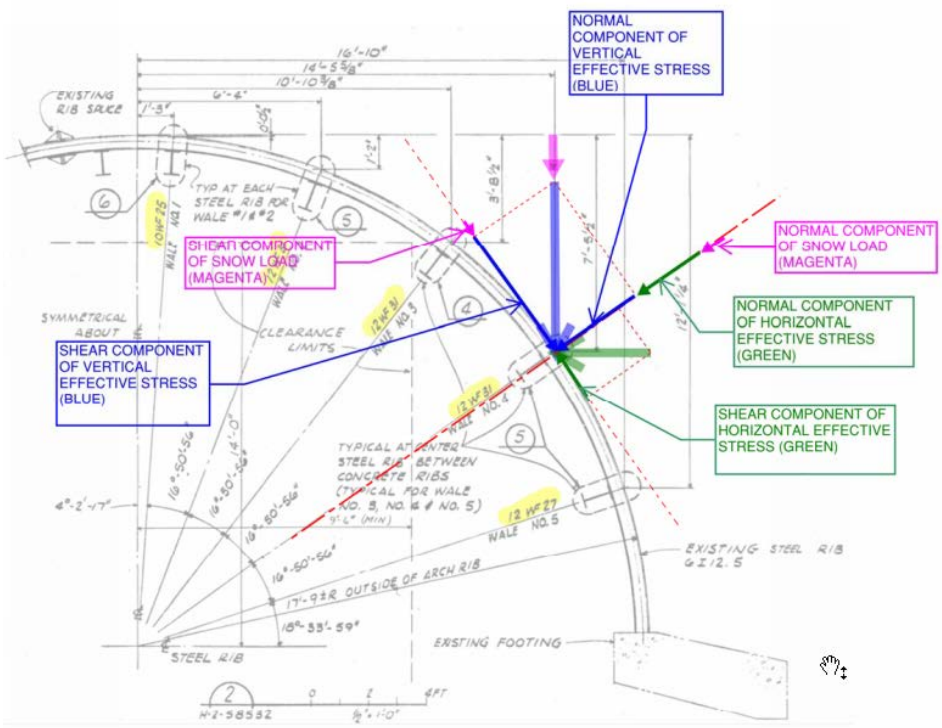

Exhibit 5 – Example of Normal Stresses and Shear Stresses resulting from vertical effective stress (blue), horizontal at-rest lateral earth pressures (green), and snow loading (magenta) at Wale No. 4. (not to scale)

Normal Stresses on Tunnel due to Snow Loading

Normal stresses due to the snow load (15 psf) were estimated assuming a uniform wide-area distribution of the snow load and a corresponding uniform stress increase across the tunnel. Snow loading was converted to the normal stress component of the corresponding vertical effective stress and increase in horizontal at-rest lateral earth pressure using similar constructions as described above. An example free-body diagram showing the forces applied to the tunnel wales is included in Exhibit 5.

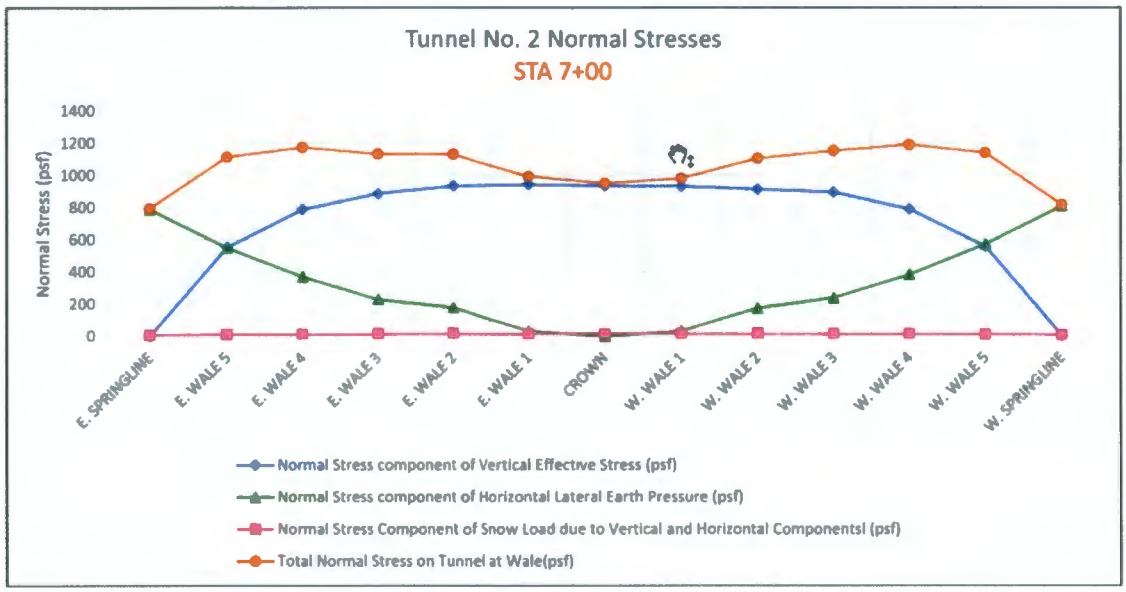

Exhibit 6 – Example showing estimated normal stresses contributions of Vertical Effective Stress, Horizontal lateral earth pressure, and snow loading on tunnel perimeter.

The lateral earth pressure component of the normal stresses on the tunnel were estimated assuming at-rest lateral earth pressures act against the structure relative to the vertical effective stress at the wale locations, and that the wale locations beneath the cover soil side slopes (Wales 3, 4, 5, and the springline) were adjusted to account for the influence of sloping ground

The at-rest lateral earth pressure coefficient was estimated using the material properties described herein and adjusted to account for sloping ground surface.

At-rest Earth Pressure Coefficient, $K_O = 1 - \sin(\phi')$

Adjusted At-Rest Earth Pressure Coefficient, $K_{Oi} = K_O \cdot (1 + \sin(i))$

where:

ϕ' is the drained internal friction angle of the soil

i is the slope of the ground surface in degrees

The slope of the ground surface measured as the average slope of the ground surface on the side slopes of the cover soil. The adjusted lateral earth pressure coefficient was multiplied by the estimated vertical effective stress at the wale location to obtain a lateral earth pressure. Detailed earth pressure calculations are included in format in Attachment C. Exhibit 6 shows an example plot of the relative distribution of stresses on the tunnel perimeter, along with the combined total stress. Exhibit 7 shows the interpreted soil heights at each wale.

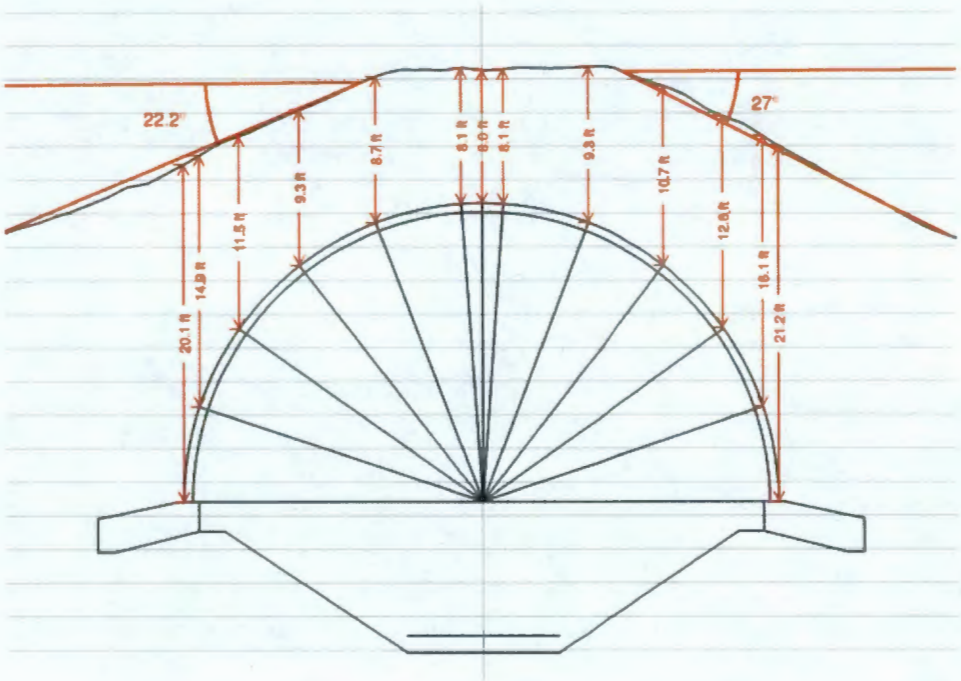

Exhibit 7 – Example showing typical interpretation of cover soil geometry over tunnel perimeter.

Footing Bearing Capacity

The ultimate bearing capacity of the Tunnel 2 footings was estimated using the SLIDE version 7.022 two-dimensional limit equilibrium analysis program (Rocscience, 2017) to evaluate the complex footing and soil geometry within Tunnel 2. SLIDE was first calibrated using manual calculations for a simplified geometry using Vesic's extended bearing capacity equation, then the calibrated approach was applied to the as-built tunnel geometry.

Footing Geometry

The footing geometry was simplified to represent a single equivalent strip footing with a width approximately equal to the average width of the existing footings. The geometry of the footings is shown in Exhibits 8, 9, and 10. The footings were modeled considering the as-built footing shape, which includes an approximate 10 degree footing inclination angle.

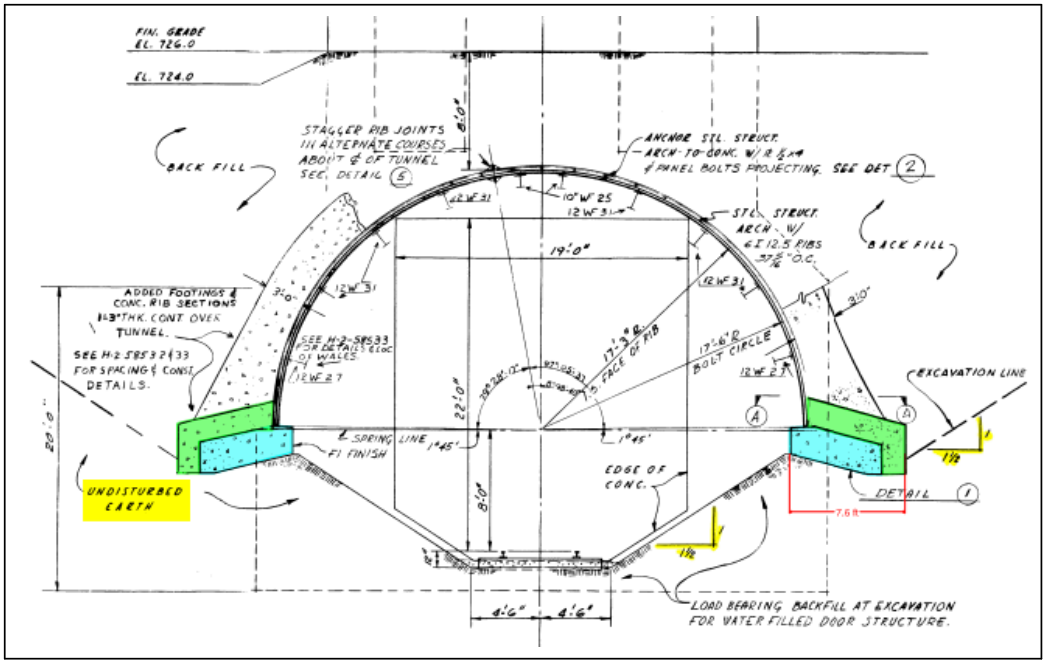

Exhibit 8 – Cross-sectional view of Tunnel 2 as-built footing geometry

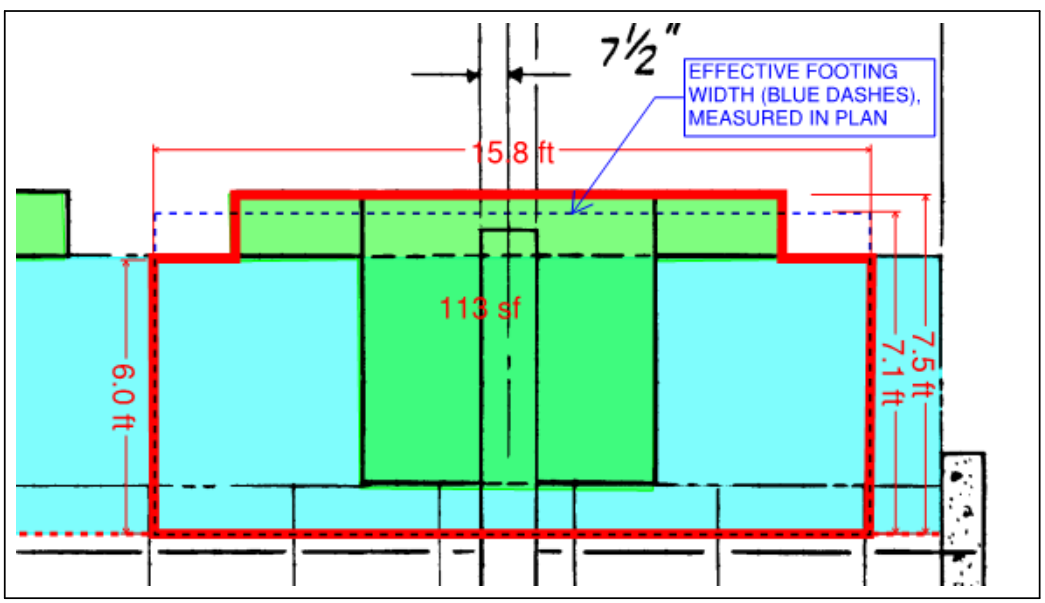

Exhibit 9 – Plan view of typical strip footing showing evaluation of effective footing width

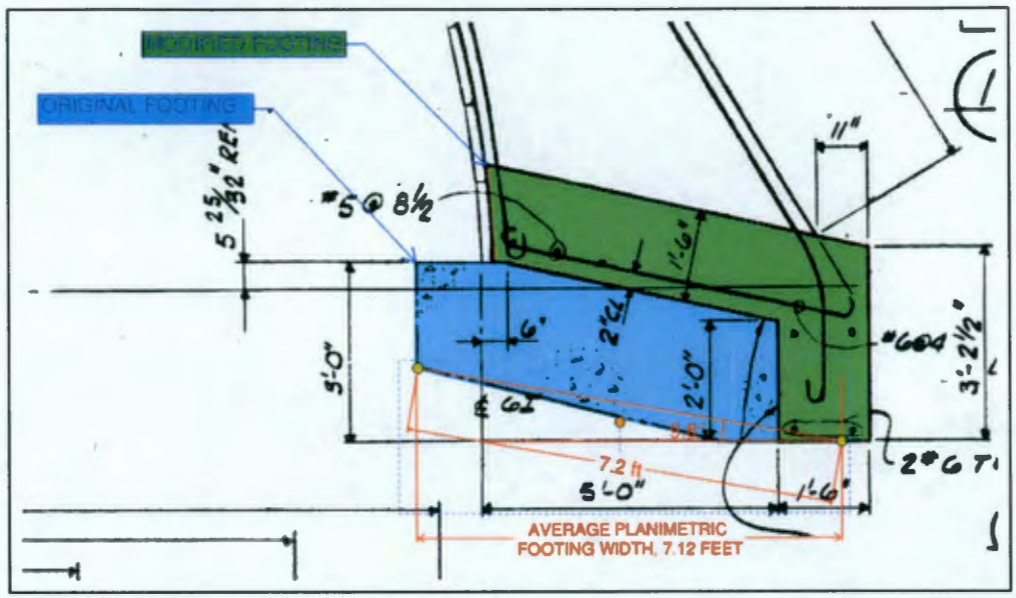

Exhibit 10 – Cross-sectional detail showing application of equivalent footing width

Slope Geometry

The slope geometry shown in the as-built drawings and confirmed by construction photographs indicates that the tunnel was constructed with 1.5:1 (Horizontal:Vertical) slopes. These slopes were modeled in SLIDE along with the equivalent footing geometry to investigate the relationship between footing load and bearing capacity, represented as a factor of safety against bearing capacity failure. The footing geometry modeled in SLIDE is presented in Exhibit 11.

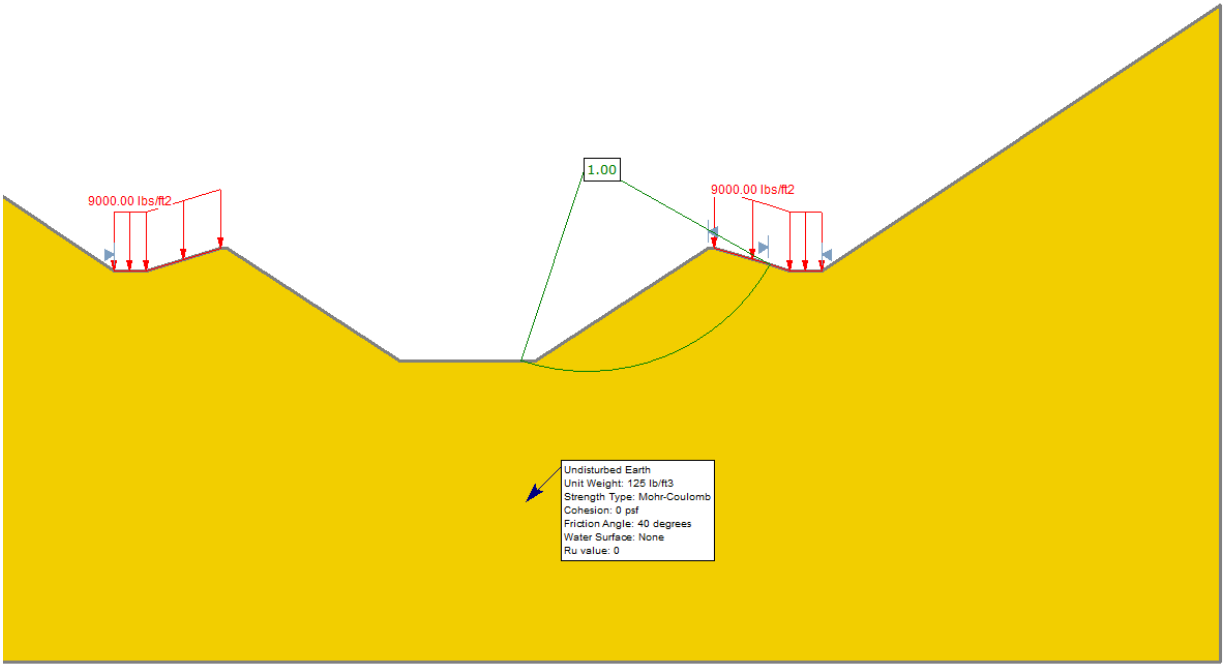

Exhibit 11 – Footing geometry evaluated in SLIDE to evaluate footing bearing capacity for in-situ geometry

In-situ Bearing Pressure

Bearing pressures on the existing footings were scaled from cross sections cut through Tunnel 2 and showing the LIDAR topography. Tributary areas were identified and multiplied by the unit weight of the cover soil, then divided by the footing width to obtain an approximate average bearing pressure. A snow load was applied considering uniform application of a 15 psf snow loading over the tributary area over the footings. An example of the in-situ bearing pressure estimation geometry is shown in Exhibit 12.

These values were estimated for 6 cross-sections through Tunnel 2 and soil pressures were estimated for both the east and west footings, totaling 12 evaluations of footing bearing pressure along the tunnel length. The resulting bearing pressures were estimated to vary from approximately 4,600 psf to 5,600 psf with an average of approximately 5,100 psf.

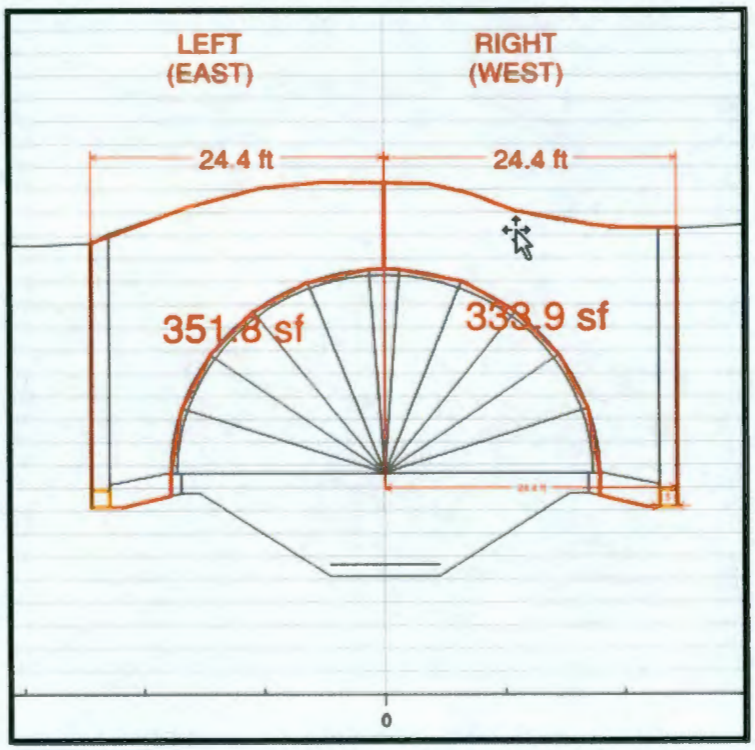

Exhibit 12 – Example showing evaluation of geometry for estimation of in-situ bearing pressures on Tunnel 2 footings

Bearing Capacity Estimation

The Tunnel 2 footing subgrade was assumed to be relatively undisturbed native material as identified on the as-built drawings and visible in construction photographs. The strength of the foundation material is not well understood, and there is no known facility-specific geotechnical data available at this time.

Shannon and Wilson (2015) reported that the Hanford Formation, which underlies PUREX and other locations on the Hanford Plateau, has the following properties:

- Moist unit weight, γ_m: 120 to 130 pcf
- Internal friction angle, ϕ' = 38 to 54 degrees
- Cohesion, c' = 0 psf

Dames and Moore (1984) in their evaluation of subsurface conditions for the proposed Process Facility Modification Project, located approximately 0.25 miles west of Tunnel 2, provided the following recommendations for site soils which are expected to be similar to those at Tunnel 2:

- Moist unit weight, γ_m: 110 pcf
- Internal friction angle, ϕ' = 34 degrees
- Cohesion, c' = 0 psf

Groundwater is not expected at the Tunnel 2 location, and was noted to be greater than 300 feet deep below the project site by URS/Blume (1981).

The range of internal friction angle values provided by these sources spans 20 degrees and complicates the evaluation of ultimate bearing capacity for the tunnel footings. Considering a lower bound range of soil strength for the Tunnel 2 footing subgrade of 34 to 45 degrees, a range of plausible ultimate bearing pressures can be developed for comparison to the estimated footing bearing pressures discussed above.

The following soil strengths were used in evaluation of bearing capacity of the equivalent footing width at Tunnel 2:

- Drained shear strength, lower bound: $\phi' = 34$ deg, $c'=0$psf
- Drained shear strength, average: $\phi' = 40$ deg, $c'=0$ psf
- Drained shear strength, upper bound: $\phi' = 45$ deg, $c'=0$ psf

The corresponding ultimate bearing capacity values were determined in SLIDE as follows:

- Ultimate bearing capacity, lower bound, $q_{ult} = 3{,}000$ psf
- Ultimate bearing capacity, average, $q_{ult} = 9{,}000$ psf
- Ultimate bearing capacity, upper bound $q_{ult} = 2{,}4{,}000$ psf

The standard of practice for conventional geotechnical design is to incorporate a factor of safety of 3.0 into the development of allowable bearing capacities. Larger factors of safety could be justified considering the uncertainty in subsurface conditions and the consequences of failure.

- Allowable bearing capacity, lower bound, $q_{allow} = 1{,}000$ psf
- Allowable bearing capacity, average, $q_{allow} = 3{,}000$ psf
- Allowable bearing capacity, upper bound, $q_{allow} = 8{,}000$ psf
- Factor of Safety = 3.0

Comparison of in-situ foundation bearing pressures to the range of allowable bearing capacity values is inconclusive with regard to the adequacy of the footings to provide long term support of the Tunnel 2 structure and cover soils. Results for lower bound soil strengths indicate bearing capacity failure of the foundation; upper bound strengths indicate acceptable foundation performance. Average strengths do not result in failure of the foundation, but have factors of safety less than the standard of practice for foundation design.

Considering that Tunnel 2 has been in place for over 50 years and has not shown evidence of loss of foundation support, it can be reasonably assumed that the structure foundations have a factor of safety greater than about 1.1. The standard of practice for geotechnical design of footings is to incorporate a factor of safety of 3.0 when proportioning footings. At this time, it cannot be definitively concluded that the Tunnel 2 footings have factors of safety in conformance with the standard of practice. Additional investigation to characterize in-situ materials could provide valuable clarification of material strength and more-accurate assessment of footing bearing capacity. Such subsurface investigation techniques as pressuremeter testing would be effective tools for confirming the geotechnical properties of the foundation soils. Soil bearing capacity calculations are included in Attachment D.

Evaluation of Global Stability of Tunnel 2 Footings

The global stability of Tunnel 2 footings was evaluated in SLIDE (Exhibit 13). This analysis evaluated the possibility of failure of the soil mass from the existing ground surface outside the tunnel, to the tunnel invert. This was conservatively analyzed assuming no overlying cover soil, and only the adding bearing pressure of the tunnel strip footings. The minimum factor of safety for this analysis was found to be greater than 1.5, which is acceptable. Global stability failure is not expected to influence the Tunnel 2 footings.

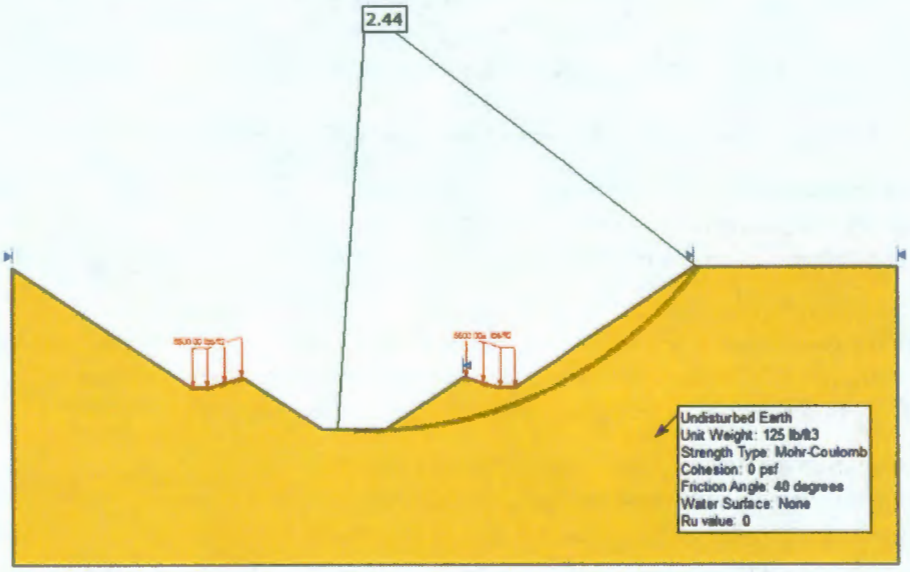

Exhibit 13 – Global stability of Tunnel 2 foundation, critical factor of safety of 2.4 shown.

Soil-Structure Interaction Analysis Considerations

Soil pressures were developed for Tunnel 2 using classical soil mechanics methodology adapted to the complex tunnel geometry. Soil pressures were estimated assuming a moist unit weight of loose placed cover soil of 105 to 115 pcf, an internal friction angle of 30 degrees, and zero cohesion. For each wale, soil pressures were estimated considering the relative contributions of the vertical height of cover soil, the corresponding at-rest lateral earth pressure adjusted for sloping ground, and the contribution of a

15 psf design snow load. Unfactored soil pressures were presented to the structural engineer as forces acting normal to the tunnel shell at each wale for incorporation into LRFD structural analysis.

Classically derived soil pressures are reasonable for a preliminary evaluation of soil stresses on the structure to investigate the expected stresses of structural elements; however, these classical methods are limited by the complex geometry of Tunnel 2 and the uncertainty in the geotechnical properties of the soils. These methods do not capture the strain or performance of the soil or structure. While classical methods are well-suited for engineering evaluation of conventional structures, the improved understanding of structure performance may be developed provided through more rigorous analysis methodologies which account for the complex geometry and Soil-Structure Interaction (SSI) considerations appropriate for the tunnel.

If performed, SSI analyses must be compared against clear performance criteria (e.g. design life, stress limits, strain limits, etc.) to be used effectively. The SSI analyses would include interface elements to capture the normal and shear behavior between the soil and structure and include the performance of the structure and the foundation. The SSI analyses would provide an improved understanding of failure modes, deformations, and to bound the influence of variation in geotechnical engineering parameters and geometry of native foundation soils and fill cover soils. However, these analyses will still be limited by the quality of the existing site information, including the soil properties and the existing condition of the structure.

The Tunnel 2 geometry is well suited for analysis using two-dimensional finite element analysis methods, such as those employed in two commonly used SSI programs, FLAC (Fast Lagrangian Analysis of Continua) or PLAXIS.

Further refinement of the advanced analyses can be realized through collection of field data to define cover soils and native foundation soils, as the analysis results are only as good as the data used in the analyses. Tunnel 2 cover soils can be sampled and evaluated in the laboratory to estimate strength, unit weight, and modulus properties; and if possible in-situ testing such as pressuremeter and/or flat-blade dilatometer testing. Native foundation soils can be evaluated using in-situ field methods such as pressuremeter testing, flat-blade dilatometer testing, or other methods. Such field investigation methods must be carefully planned to manage site constraints.

References

CHPRC-03241 Revision 0. PUREX Burial Tunnels, dated March 2017, prepared for the U.S. Department of Energy Assistant Secretary of Environmental Management, prepared by M. A. Maloof CH2M HILL Plateau Remediation Company.

FLUOR Hanford LIDAR Digital elevation Model(s) & Topographic Contour Maps, prepared by Aero-Metric, Seattle, dated 2008.

Geotechnical Engineering Study (Rev2) West Replacement Footings for 324 Building 'B' Cell Excavation Hanford Reservation, Washington. 2201003078-010. Submitted to Kurion, Inc., dated February 27, 2015, prepared by Shannon & Wilson.

H-2-58191 (drawing) 218-E-15, Disposal Tunnel #2 for Failed Equipment, Plot Plan. 1962 Tunnel 2.

H-2-58192 (drawing) Plot Plan & Profile, Arch Liner. 1962 Tunnel 2.

H-2-58193 (drawing) Architectural Plans. 1962 Tunnel 2.

H-2-58194 (drawing) Structural Sections and Details. 1962 Tunnel 2.

H-2-58195 (drawing) Structural Sections and Details. 1962 Tunnel 2.

H-2-58532 (drawing) PUREX Tunnel Reinforcement Plan. 1962 Tunnel 2.

H-2-58533 (drawing) PUREX Tunnel Reinforcement Sections & Details. 1962 Tunnel 2.

Fovay Engineers (1962) HWS-8262 *Specification for Equipment Disposal*, Project CCC 964. Prepared for General Electric Company. October 5.

Report of Soils Investigation, Proposed Process Facility Modification Project, PUREX Plant, Hanford, Washington for US Department of Energy, dated January 4, 1984, prepared by Dames & Moore.

RHO-R-34-3, Geologic and Seismic Investigation of the PUREX Building Site near Richland, Washington, prepared for Vitro Engineering Corporation, Richland Washington, dated March 1981, prepared by URS/John A. Blume and Associates, Engineers.

ch2m	Calculation Title: PUREX Tunnel 2 Engineering Evaluation	Project Number: 693839.BS Project: PUREX Tunnel 2 Client: CHPRC

Attachment A

Cover Soil Parameters

Geotechnical Properties of Tunnel 2 Cover Soil

PREPARED FOR:	Project File
COPY TO:	Craig Barrett/CH2M
	Pete Hopkins/CH2M
	Mark Hasty/CH2M
PREPARED BY:	Mark Kacmarcik/CH2M
CHECKED BY:	Youssef Bougataya/CH2M
DATE:	June 24, 2017
PROJECT NUMBER:	693839.BS.02
REVISION NO.:	0

This memorandum documents the selection of geotechnical properties for the Tunnel 2 Cover soils for use in structural evaluation of Tunnel 2. Specifically, this memorandum summarizes the available information and provides recommended strength and unit weight values.

Review of Available Subsurface Information

There is very limited geotechnical information available for Tunnel 2. Collection of site-specific geotechnical data was beyond the scope of this evaluation. Recommendations provided herein are derived from interpretation of geotechnical data reported by others. Much of the available data is fragmentary or otherwise developed for other purposes. No responsibility can be taken for errors or misrepresentation of site information by others.

Construction Drawings (1962)

Original construction drawings are available for Tunnel 2. The drawings include limited information on the cover soils. The drawings indicate that the cover soil was to be placed 8'-0" thick over the tunnel crown as shown in Exhibit 1.

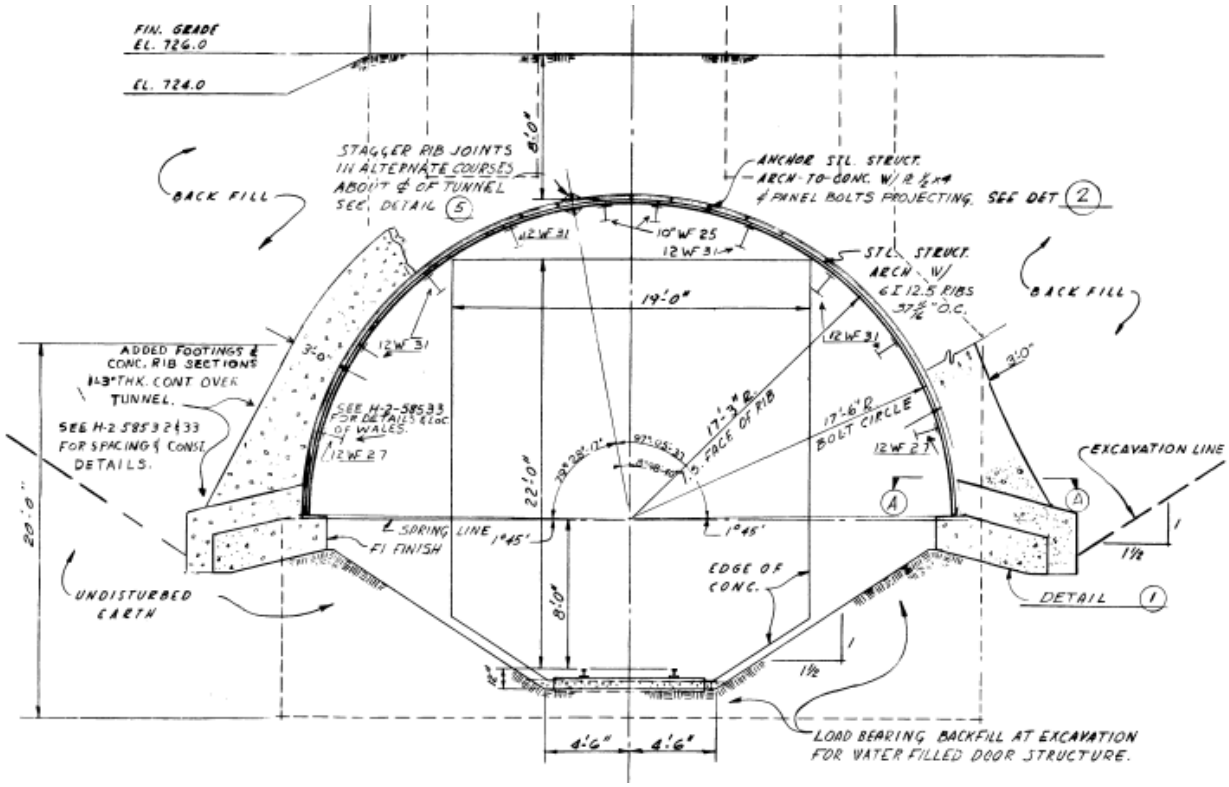

Exhibit 1 – Design Cross section of Tunnel 2 showing proposed finish grade relative to tunnel structure and configuration of "Undisturbed Earth" forming the lower interior of the tunnel

Construction Specifications (1962)

Original construction specifications for Tunnel 2 were available for review. Excerpts from these specifications are included as Exhibits 2a and 2b. Considering the available construction photos (discussed hereinafter), it is not known to what extent these specifications were enforced during in construction of the tunnel. The following are noted from review of the backfill specifications:

1. Frozen fill materials were not to be used
2. Materials were to be screened to remove particles larger than 8 inches; large particles were not discernable in construction photos.
3. Fill materials were to be free from vegetable matter or trash. Tumbleweeds are visible in tunnel excavations prior to backfilling, it is unclear whether these materials were removed prior to fill placement.
4. Trash is not allowed in spaces to be backfilled.
5. Structural backfill shall be placed in layers to not exceed 24 inches loose measurement and thoroughly compacted. Compaction by loaded scrapers and/or tractors will be considered.

Construction photos suggest that this material was not placed in horizontal lifts as specified, but rather was placed in mass using a combination of bulldozers and cranes with dragline buckets.

6. Care shall be exercised during backfilling to prevent excessive loads on walls and to insure balanced loading on opposite walls. It is documented that the original Tunnel 2 structure collapsed, in part, due to unbalanced loading during fill placement.

7. Compaction methods were not specified, except as to prohibit sluicing or flooding. It is unclear if the cover soils were compacted.

7. BACKFILL, METAL TUNNEL, RIBBED ARCH DESIGN

Backfill and embankment around the ribbed arch design tunnel shall conform to Sections 6b except stone size within two feet of tunnel section shall be 3" minus.

8. BACKFILL, METAL TUNNEL, ELIPTICAL DESIGN

Backfill for the eliptical design tunnel shall conform to the following:

a. Zone 1 backfill shall consist of 3/4" minus material and shall be compacted by vibration to a density conforming to the following:

When tested in the field in accordance with AASHO (American Association of State Highway Officials) Designation T-147-49 "Field Determination of Density of Soil in Place," each layer of compacted embankment shall have a density not less than the following: (All equipment and labor for performing the tests shall be provided by the Contractor.)

(1) For clayey and silty materials - 90% of the "maximum density" as determined in accordance with AASHO Designation: T-99-49 "Standard Method of Test for the Compaction and Density of Soils. The moisture content of the material shall be uniform throughout the layer and shall be such that the specified density can be obtained. In no case shall the moisture content vary more than 3 percentage points above or below the optimum moisture content as determined by AASHO Designation T-99-49.

-2- HWS-8262

Exhibit 2a – Backfill specifications for Tunnel 2

WORKMANSHIP (Cont'd)

(2) For cohesionless free-draining material - such as sands and gravels, 75% relative density as determined by the Standard U. S. Bureau of Reclamation relative density tests for cohesionless free-draining soils. The relative density of cohesionless free-draining soil, expressed as a percentage, is defined as its state of compactness with respect to the loosest and most compact states at which it can be placed by laboratory procedures. The relative density will be based on the following formula, wherein the maximum density is the highest unit weight of the soil, minimum density is the lowest unit weight of the soil and in-place density is the unit weight of the soil in place. Tests for moisture content are made on the materials and unit weights are expressed in terms of oven-dry weights.

$$\text{Relative density} = \frac{\text{max. den.} \times (\text{in-place den.} - \text{min. den.})}{\text{in-place den.} \times (\text{max. den.} - \text{min. den.})} \times 100$$

The particular test to be used, depending on the type of soil, shall be as determined by the Commission.

b. Zone 2 backfill shall consist of 3" minus material and shall be brought up evenly on each side of the structure in 12" lifts and shall conform to the compaction specified in Section 8a of this division.

c. Zone 3 backfill and embankment shall conform to Sections 6b, c, d and e of this Division, except that material shall be 3" minus within 2' of the tunnel.

d. Load bearing backfill shall be compacted by vibration.

Exhibit 2b – Backfill specifications for Tunnel 2 (continued)

Design Documentation

At this time, no design documentation, design calculations, design reports, or related materials are known to exist.

Construction Photographs (various)

Tunnel 2 construction photographs documented in CH2M (2017) were reviewed. Particularly relevant photos are included herein as Exhibits 3 through 7. The following observations were made from review of the photos:

- Tunnel 2 was constructed without concrete ribs and failed upon backfilling. Following the failure, the tunnel was redesigned in 1964 and retrofitted with concrete ribs.
- Tunnel excavation geometry (i.e. trench) does not appear to allow adequate access for compaction of backfill soils in lifts against tunnel walls.
- Material appears to have been placed loosely using a crane and dragline bucket.
- Backfill material generally appears to be fine or sandy in nature, there is no evidence of cobbles, gravels, or coarse materials.

Exhibit 3 – Original construction of Tunnel 2. Note excavation geometry and steep slopes adjacent to tunnel walls

Exhibit 4 – Original construction photo of Tunnel 2.

Exhibit 5 – Tunnel 2 construction. Note concrete ribs and narrow, difficult geometry for soil backfilling.

Exhibit 6 – Alternate view of Tunnel 2 construction with concrete ribs.

Exhibit 7 – Placement of loose fill over tunnel with crane-mounted dragline bucket. Note loose placement of soil and absence of compaction equipment. Individual on top of placed fill likely assisting with survey to confirm fill height over crown.

Studies by Others

1.0 Report of Soils Investigation for Proposed Process Facility Modification Project (1984)

Dames & Moore (1984) submitted a soil investigation report for a proposed Process Facility Modification at the PUREX plant site. Four boreholes were advanced for the facility and geotechnical design parameters were developed. The facility was never constructed. URS (1981) noted that no known direct subsurface investigations were performed for the design or construction of the PUREX facility. As such, the Dames & Moore (1984) investigation is thought to represent the best available subsurface information in the vicinity of the PUREX Storage Tunnels. It is assumed that subsurface conditions at the PUREX Storage Tunnels are similar to those encountered by Dames & Moore (1984).

The following notes were made from this report:

1. 4 boreholes were advanced for this study. Boreholes were located approximately 1230 to 1350 feet west of PUREX Tunnel 1. The locations of these boreholes are presented in Exhibit 8, and the borehole logs are presented in Exhibits 9 and 10. Borehole were advanced with rotary hollow-stem auger methods and sampled using Dames & Moore proprietary U-type sampler.

   B-1, Total depth = 54.5 feet

   B-2, Total depth = 19.5 feet

   B-3, Total depth = 59.5 feet

   B-4, Total depth = 19.5 feet

2. Field classifications and laboratory testing were performed on selected samples to support evaluating shear strength, moisture content, density, grain-size distributions, resistivity, and pH.

3. The following geotechnical engineering parameters were recommended for use in design of the proposed facility:

   Angle of Internal Friction, ϕ = 34 degrees

   Cohesion, c' = 0 psf

   Mass Density, γ = 110 pcf

   Poisson's ratio, μ = 0.25

   Coefficient of Active Earth Pressure, Ka = 0.28

   Coefficient of At-Rest Earth Pressure, Ko = 0.44

   Coefficient of Passive Earth Pressure, Kp = 3.5

4. Lateral earth pressures:

   Active Equivalent Fluid Unit Weight = 30 pcf

   At-Rest Equivalent Fluid Unit Weight = 50 pcf

   *At-Rest Pressure for relatively rigid structures (psf) = 26*H (where H is the height of the wall in feet)*

   Passive Equivalent Fluid Unit Weight = 250 pcf (includes FS=1.5)

5. General Soil Description:

   The near-surface soils generally consist of a thin fill layer of gravelly sand (SW) to sandy gravel (GW). This fill was probably placed at the time that the subject area was

temporarily used during construction of the nearby PUREX plant. Under this fill and down to depths ranging from 3.5 to 6 to 7 feet, all borings encountered a layer of loose silty fine sand (SM) containing variable amounts of coarser sand and fine gravel with depth. In each of the shallow borings (B-2 and B-4), about 4 to 5 feet of medium dense to dense fine to coarse sands with occasional gravel (SW) were encountered below the silty fine sand (SM); however, this well-graded sandy material was not encountered in either of the deeper borings (B-1 and B-3).

Below a depth ranging from 3.5 to approximately 6 to 7 feet, all borings encountered medium dense to dense poorly graded sands (SP). These soils generally appear to grade back and forth between the limits of a fine to medium sand with a trace of silt to a medium to coarse sand with variable amounts of fine gravel. ... It is believed that this strata of poorly graded sand with varying amounts of silt and fine gravel can be assumed to extend under the entire project site to depths in excess of 60 feet. This assumption is based on our field engineer's inspection of a 64-foot-deep excavation to elevation 622 that exists approximately 2300 feet to the northeast of the subject area. This tank farm excavation was made in soils consisting of interbedded sands and gravelly sands overlying poorly graded sands that are similar to those encountered in our exploratory borings.

No groundwater was encountered in any of the four borings. Based on previous geologic and seismic investigations at the PUREX building site, it is believed that the water table is at a depth of approximately 300 feet beneath the subject area.

6. Applicability to PUREX Tunnel Evaluation

Although the boreholes are located nearly 0.25 miles west of the PUREX storage tunnels, Dames & Moore noted that similar materials were observed in a tank farm excavation nearly 2300 feet northeast of the boreholes and surmised that conditions could be expected to be relatively similar between this area, which approximately includes the PUREX storage tunnels.

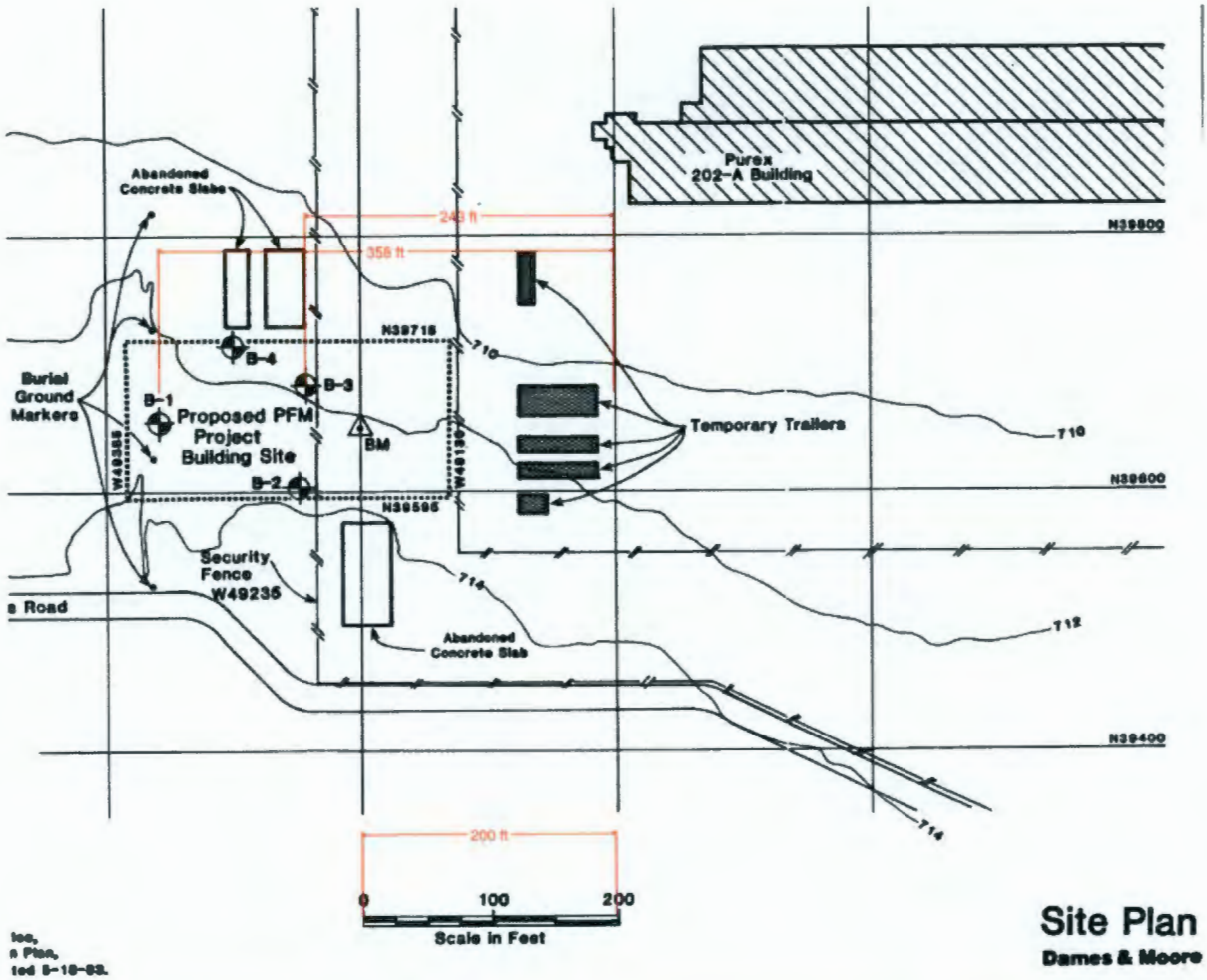

Exhibit 8 – Dames & Moore Site Plan Showing Borehole Locations relative to PUREX Facility. PUREX storage tunnels are not shown in this view.

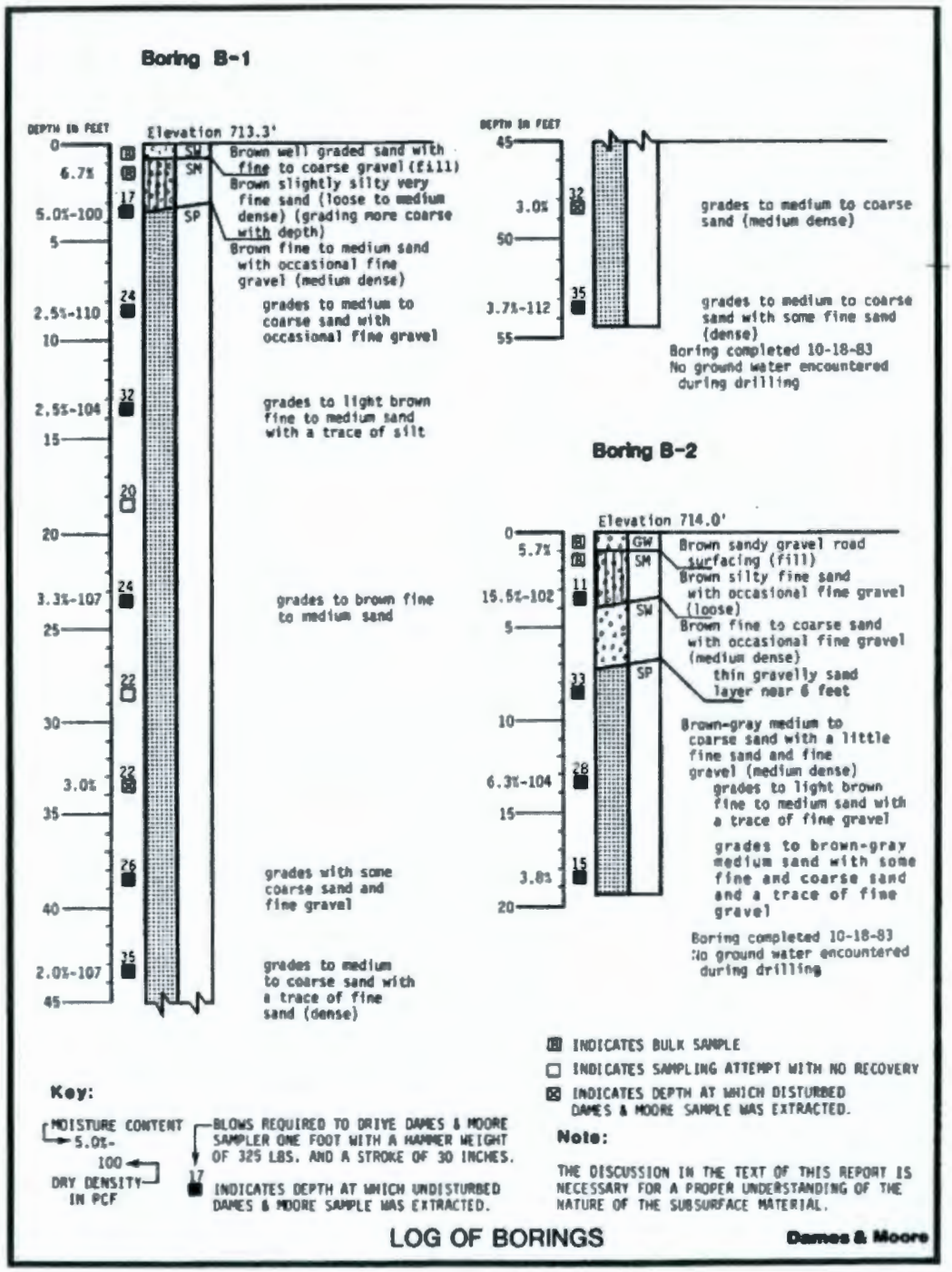

Exhibit 9 – Log of Borings B-1 and B-2

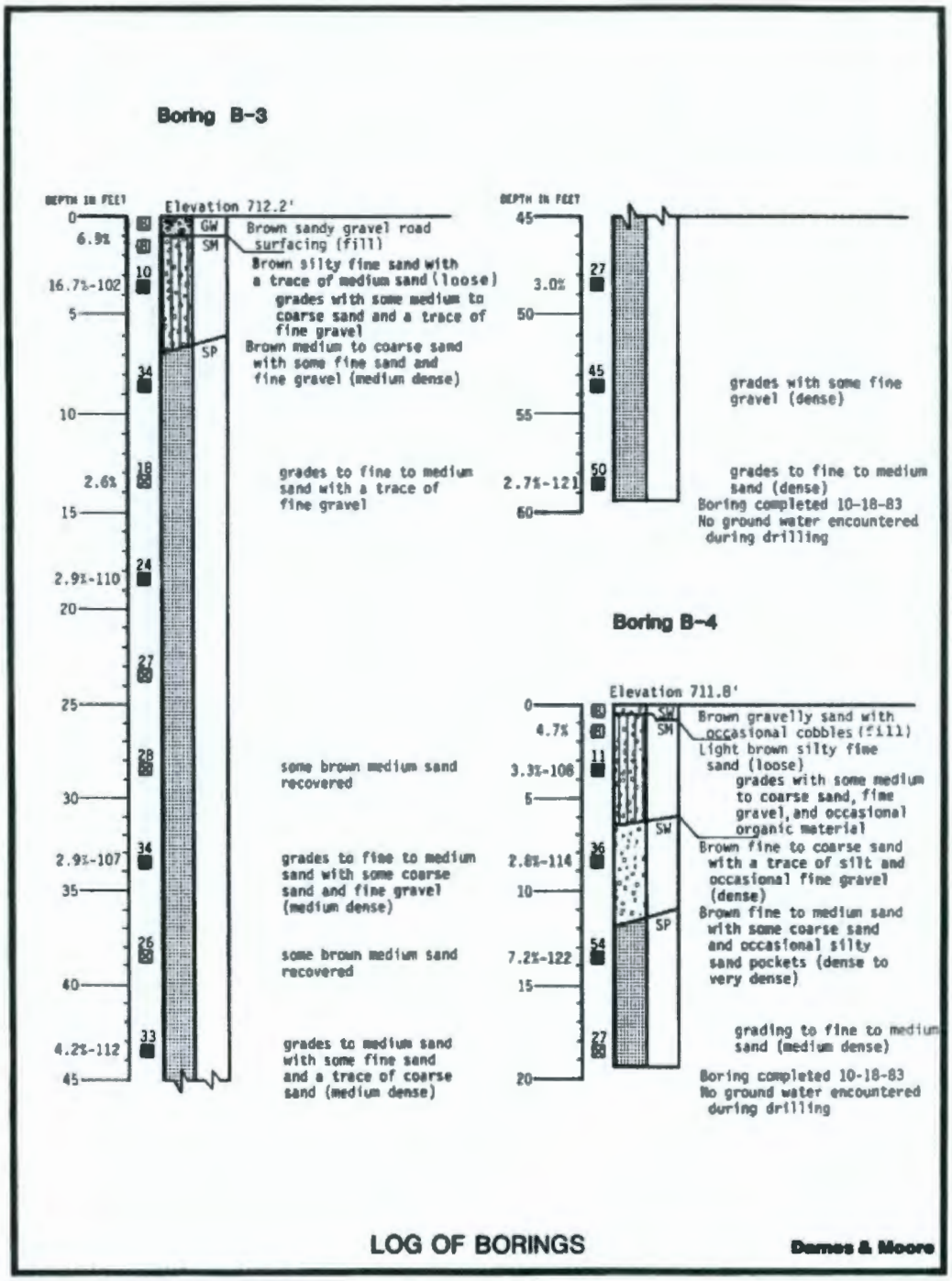

Exhibit 10 – Log of Borings B-3 and B-4

2.0 Geologic and Seismic Investigation of the PUREX Building Site (URS, 1981)

URS (1981) prepared a discussion of the regional geology setting the PUREX facility. This information provides a relevant geologic context for comparison to available geotechnical data, primarily for purposes of confirming expected extents and continuity of site materials. Cross sections of the expected site geology, prepared by URS, are presented in Exhibits 11 and 12.

The project site is underlain by three major geologic units:

1. *The Pasco (glaciofluvial) gravels and associated sediments of the late Pleistocene age at the ground surface* [also known as the Hanford Formation]
2. *Pleistocene-age Ringold formation*
3. *Basaltic lavas and intercalated sediments of the Columbia River basalt group.*

The Pasco basin was formed by downwarping and downfaulting of the basalt flows that underlie the basin. The basin then became the site of deposition of Pliocene sediments of the Ringold Formation and Pleistocene glaciofluvial deposits. The ground surface of the Pasco basin is now largely covered by windblown sand.

Deposition of the Ringold Formation ceased in late Pliocene time, one to two million years ago. Later, ice sheets of the Pleistocene glacial stages advanced from the north but stopped before reaching the Pasco basin. At the close of glaciation, while the ice sheets were retreating, great quantities of water were suddenly released. These huge floods scoured vast areas of basalt terrain in northeastern Washington, swept across the Hanford Reservation area, and crossed the Horse Heaven Hills anticline at Wallula Gap.

...

Locally, within the Pasco Basin, zones of medium-dense to loose sands and gravels, probably resulting from rapid accumulation during glacial floods, are encountered.

The Pasco Gravels are compact, though uncemented, deposits of late Pleistocene and early Recent times. They were laid down by glacial meltwaters and glacial lake floodwaters between about 100,000 and 10,000 years ago. Evidence suggests that in some places the sediments were buried by perhaps an additional 200 feet of gravel that was later swept away.

The Pasco Gravels occur at the surface, or under a thin cover of loessal materials. The water table is controlled by the Columbia River elevation. The Ringold formation occurs near the river level. The [Pasco] gravels, therefore, are typically unsaturated.

Within the 200-East area, where PUREX Building 202-A is located, the uppermost sands and silts were largely reworked during construction activities []. Although the soils beneath the PUREX building have been explored using seismic refraction, other direct exploration methods, such as drilling and sampling, have not been employed.

The water table is at a depth of about 300 feet beneath the plant; there is no liquefaction hazard.

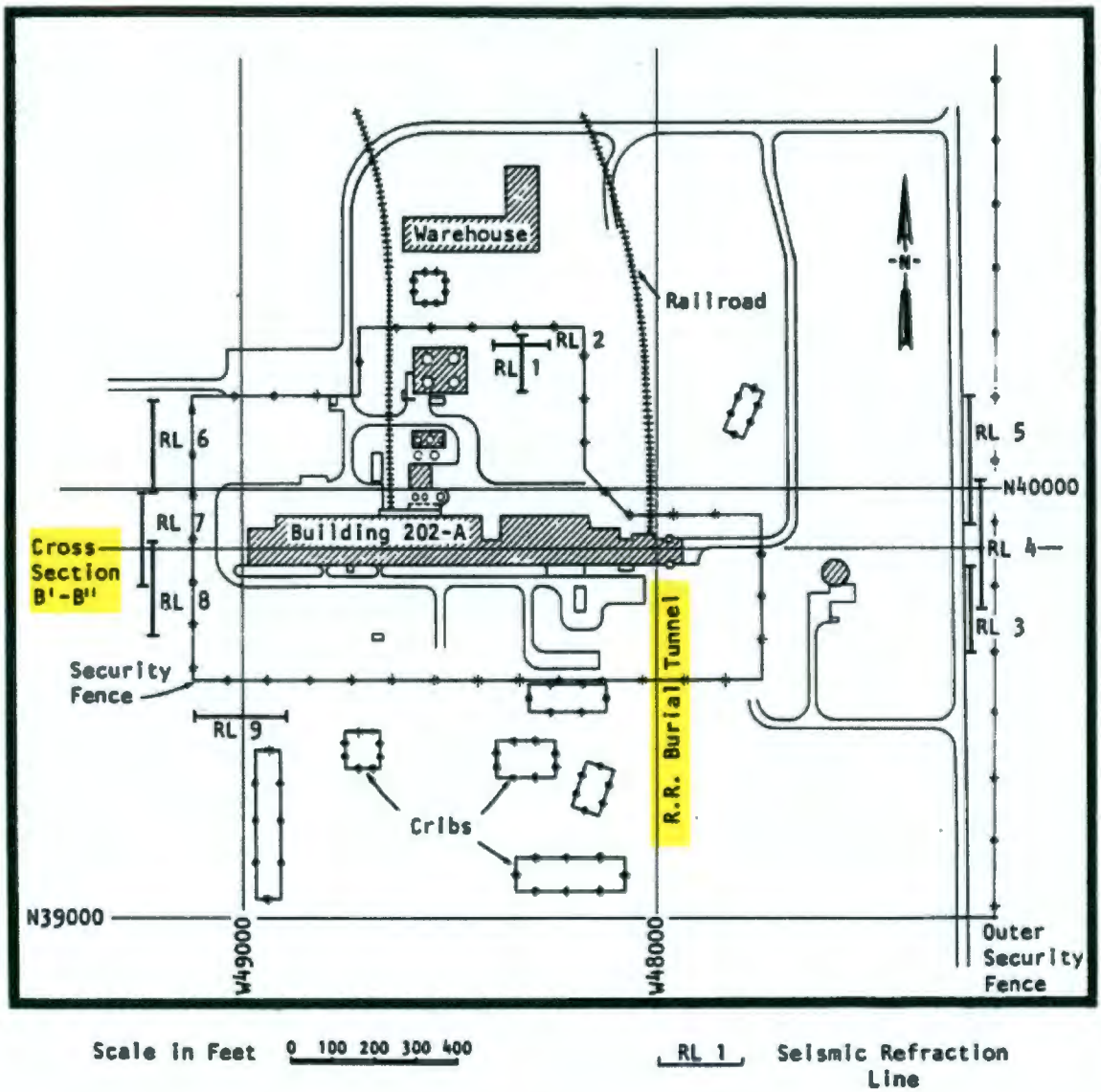

FIGURE 5 PUREX BUILDING SITE PLAN AND SEISMIC REFRACTION LINE LOCATIONS

Exhibit 11 – Site Plan showing location of Cross Section B'-B", located near the northern extent of Tunnel 2

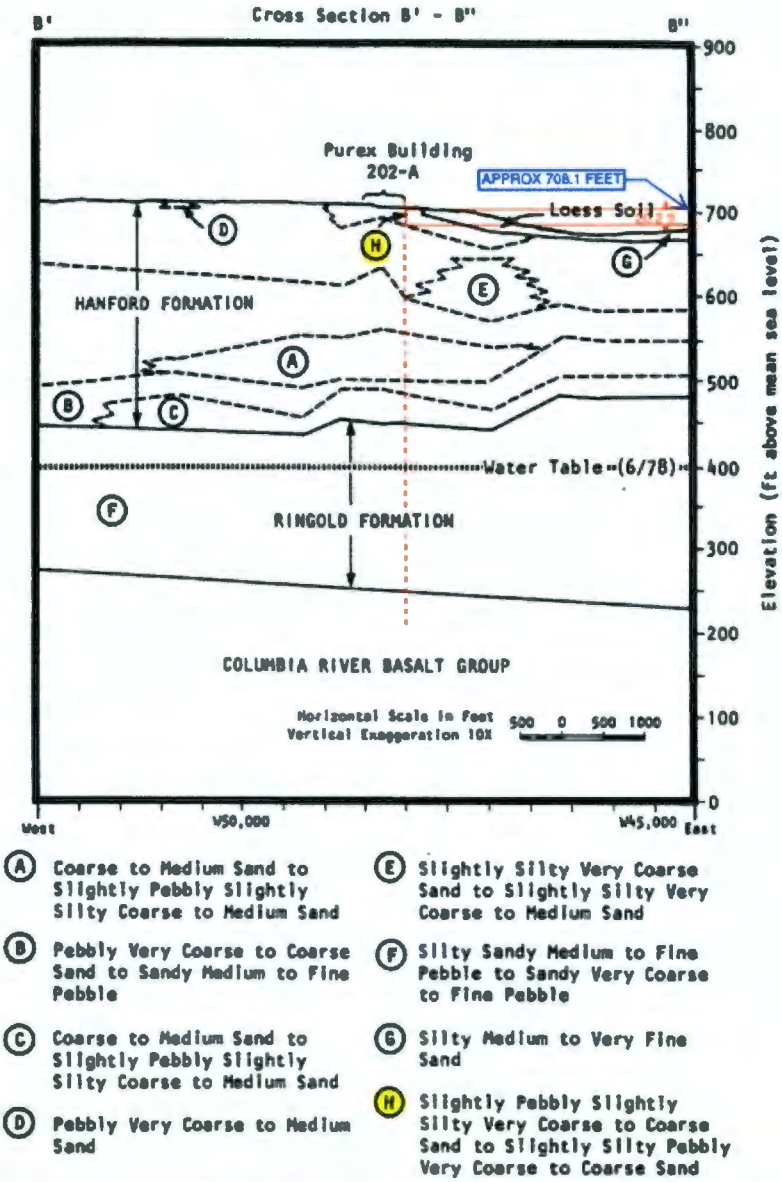

FIGURE 4 GENERALIZED GEOLOGIC CROSS SECTION SHOWING FORMATION NAMES AND SOIL CLASSIFICATION (adapted from Tallman et al., 1979)

Exhibit 12 – Cross Section B'-B". Note descriptions and relative depths of materials and groundwater underlying the PUREX facility. The red dashed line indicates the approximate alignment of the PUREX Storage Tunnels.

Interpretation

Cover soil materials placed over Tunnel 2 were derived from local site soils and processed to remove organic materials and coarse materials larger than 8 inches in diameter.

Project specifications indicate that cover soils were to be "thoroughly compacted," and there is some confusion over which backfill zones were to be applied to the tunnel cover soils. Review of the photos of fill placement with crane and dragline casts doubt on whether the soil was compacted. Construction photos show that the space between the tunnel walls and the tunnel excavation was relatively narrow, and likely did not permit use of compaction equipment, this was further complicated by the challenging dental compaction between the exterior concrete ribs. There are no photos indicating use of lightweight walk-behind compaction equipment.

It is assumed that the material placed against the tunnel walls is silty sand material with occasional gravel as described in the boring logs (Dames & Moore, 1984); geologic descriptions of the Hanford Formation / Pasco Gravels (URS, 1981), and construction photographs (CHPRC, 2017).

Assuming that boring logs from Dames & Moore (1984) are similar to the materials at PUREX Tunnel 2, and that the materials are reasonably well mixed, the fill material is assumed to be as described in the following sections.

3.0 Soil Classification

- The Tunnel 2 cover soils are fill materials obtained from the Tunnel 2 excavation.
- The USCS classification of the soils is Silty Sand with Gravel (SM).
- Fines are expected to be non-plastic.
- Sand is primarily fine to medium size.
- Gravel is fine to medium, subrounded to rounded as visible in photos.

4.0 Specific Gravity

The specific gravity of solid soil particles is assumed to be 2.65.

5.0 Moisture Content

The in-situ moisture content of site soils was estimated by selecting the average in-situ moisture content for 17 samples collected by Dames & Moore (1984) in the top 25 feet of the soil profile. For the reported measurements, the maximum water content observed was 16.7 percent and the minimum was 2.5 percent. The **average in-situ moisture content for the 17 samples was 6 percent** and is recommended for use in tunnel evaluations. Note that actual moisture contents may vary with depth, season, and location along the tunnel alignment.

6.0 Dry Unit Weight

The unit weight of the fill material is difficult to estimate due to the uncertainties in fill placement. Dames & Moore (1984) measured the in-situ dry density of site soils near the PUREX facility. For the 11 field measurements of density taken in the upper 25 feet of the soil profile, the minimum was 100 pcf, the maximum was 122 pcf, and the average was 108 pcf.

Based on a review of site photographs, it is assumed that the cover soils were not well compacted during construction. As such, **the recommended dry unit weight of the loosely placed cover soil is 100 pcf** be used in estimation of moist unit weights.

7.0 Moist Unit Weight

The moist unit weight of the Tunnel 2 cover soil can be estimated using the dry unit weight and the moisture content, using the following fundamental relationship:

$$\gamma_{moist} = \gamma_d \cdot (1 + w\% / 100)$$

where:

- γ_m is the moist unit weight
- γ_d is the dry unit weight
- w(%) is the in-situ water content, as a percent

Substituting 100 pcf for the dry unit weight, and 6% for the moisture content, gives 106 pcf.

Substituting 108 pcf for the dry unit weight and 6% for the moisture content gives 114 pcf.

For structural evaluation of the tunnel, it is recommended that moist unit weights varying form 105 to 115 pcf be considered, with an expected average value of 110 pcf. This recommendation is in general agreement with calculations performed by Rockwell (1980) which used 110 pcf in soil loading calculations.

8.0 Shear Strength

The shear strength of the cover soil was estimated using the published charts in the 1986 Naval Facilities Engineering Command (NAVFAC) Foundations and Earth Structures Design Manual 7.02 (Exhibit 12). Assuming a dry unit weight of 100 pcf and a relative density of 25 to 30 percent for uncompacted soils, **the angle of internal friction, ϕ' is estimated to be approximately 30 degrees. The soil is assumed to be cohesionless ($c' = 0$ psf)**. Drained (effective stress) conditions are expected to govern all loading short term and long term loading scenarios.

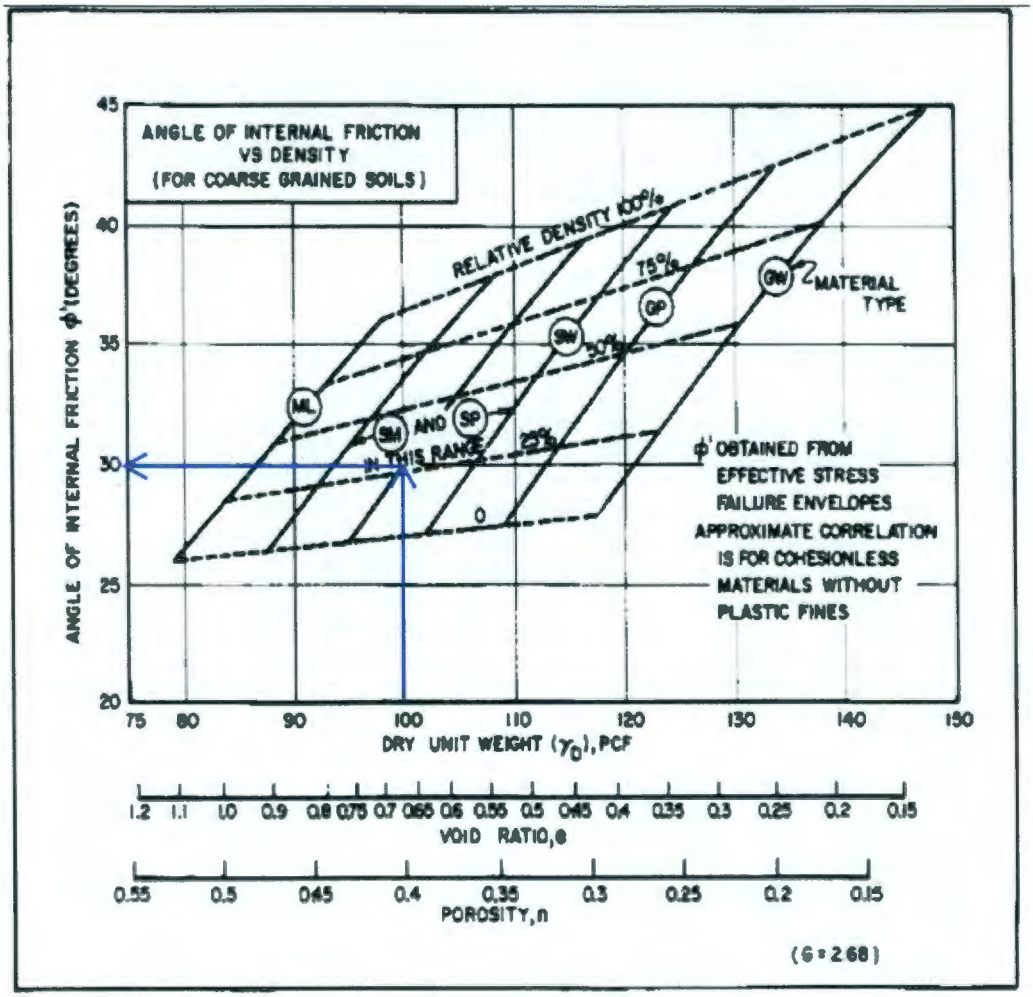

FIGURE 7
Correlations of Strength Characteristics for Granular Soils

Exhibit 12 – Correlation between Dry Unit Weight and Internal Friction Angle for Coarse Grained Soils, Adapted from NAVFAC DM7.02 (1986)

References

CHPRC-03241 Revision 0. PUREX Burial Tunnels, dated March 2017, prepared for the U.S. Department of Energy Assistant Secretary for Environmental Management, prepared by M. A. Maloof CH2M HILL Plateau Remediation Company.

FLUOR Hanford LIDAR Digital elevation Model(s) & Topographic Contour Maps, prepared by Aero-Metric, Seattle, dated 2008.

Fovay Engineers (1962) *HWS-8262 Specification for Equipment Disposal, Project CCC 964*. Prepared for General Electric Company. October 5.

Geotechnical Engineering Study (Rev2) West Replacement Footings for 324 Building 'B' Cell Excavation Hanford Reservation, Washington. 22-1-03078-010. Submitted to Kurion, Inc. dated February 27, 2015, prepared by Shannon & Wilson.

H-2-58191 (drawing) 218-E-15, Disposal Tunnel #2 for Failed Equipment, Plot Plan. 1962 Tunnel 2.

H-2-58192 (drawing) Plot Plan & Profile, Arch Liner. 1962 Tunnel 2.

H-2-58193 (drawing) Architectural Plans. 1962 Tunnel 2.

H-2-58194 (drawing) Structural Sections and Details. 1962 Tunnel 2.

H-2-58195 (drawing) Structural Sections and Details. 1962 Tunnel 2.

H-2-58532 (drawing) PUREX Tunnel Reinforcement Plan. 1962 Tunnel 2.

H-2-58533 (drawing) PUREX Tunnel Reinforcement Sections & Details. 1962 Tunnel 2.

Naval Facilities Engineering Command (NAVFAC) *Foundations & Earth Structures Design Manual* 7.02, September 1986.

Report of Soils Investigation, Proposed Process Facility Modification Project, PUREX Plant, Hanford Washington for US Department of Energy, dated January 4, 1084, prepared by Dames & Moore.

RHO-R-34-3, Geologic and Seismic Investigation of the PUREX Building Site near Richland, Washington, prepared for Vitro Engineering Corporation, Richland, Washington, dated March 1981, prepared by URS/John A. Blume and Associates, Engineers.

Shannon & Wilson, Inc. (2015) *Geotechnical Engineering Study—West Replacement Footings for 324 Building 'B' Cell Excavation, Hanford Reservation, Washington*. Submitted to Kurion, Inc. 22-1-03078-010. February 27.

ch2m	Calculation Title: PUREX Tunnel 2 Engineering Evaluation	Project Number: 693839.BS Project: PUREX Tunnel 2 Client: CHPRC

Attachment B

LIDAR Topography Results

TOPOGRAPHY FROM 2008 *LIDAR CENTRAL PLATEAU REPORT* PREPARED BY AERO-METRIC FOR FLUOR HANFORD. DATA ACQUISITION APRIL 13, 2008. HORIZONTAL DATUM: STATE PLANE NAD83, WASHINGTON SOUTH ZONE, METERS. VERTICAL DATUM: NAVD88, METERS.

HORIZONTAL SYSTEM CONVERTED TO HANFORD SITE DATUM, AREA 200E (PUREX CONTROL), FEET, USING SURVEY MONUMENT COORDINATE DATA FOR MONUMENT 2E-41.

VERTICAL SYSTEM CONVERTED TO HANFORD SITE DATUM, AREA 200E (PUREX CONTROL), FEET, USING SURVEY MONUMENT COORDINATE DATA FOR MONUMENT 2E-41. VERTICAL DATUM SHIFT FROM LIDAR TOPOGRAPHY, -1.100 METERS.

TUNNEL 1 GEOMETRY FROM 1955 AS-BUILT DRAWINGS. FACILITY 218-E-14, DISPOSAL TUNNEL NO. 1 FOR FAILED EQUIPMENT. PROJECT CA-513-A. ISSUED MARCH 10, 1955.

TUNNEL 2 GEOMETRY FROM 1962 AS-BUILT DRAWINGS. FACILITY 218-E-15, DISPOSAL TUNNEL NO. 2 FOR FAILED EQUIPMENT. PROJECT CGC 964. ISSUED SEPTEMBER 1962.

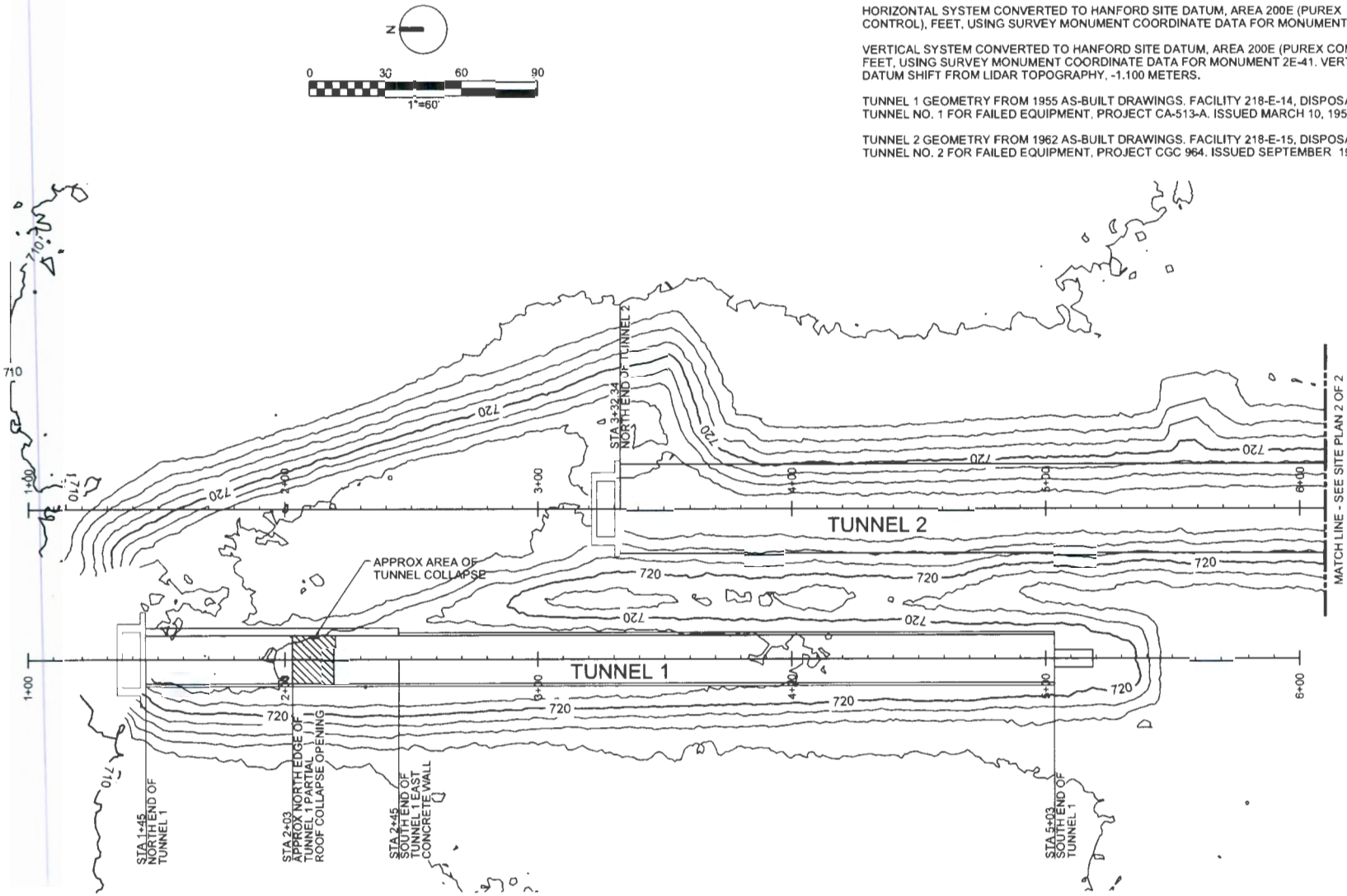

TOPOGRAPHIC SITE PLAN
1 OF 2
PUREX TUNNEL 1
ENGINEERING EVALUATION

CHIPRC-03365, REV. 0

TOPOGRAPHY FROM 2008 *LIDAR CENTRAL PLATEAU REPORT* PREPARED BY AERO-METRIC FOR FLUOR HANFORD. DATA ACQUISITION APRIL 13, 2008. HORIZONTAL DATUM: STATE PLANE NAD83, WASHINGTON SOUTH ZONE, METERS. VERTICAL DATUM: NAVD88, METERS.

HORIZONTAL SYSTEM CONVERTED TO HANFORD SITE DATUM, AREA 200E (PUREX CONTROL), FEET, USING SURVEY MONUMENT COORDINATE DATA FOR MONUMENT 2E-41.

VERTICAL SYSTEM CONVERTED TO HANFORD SITE DATUM, AREA 200E (PUREX CONTROL), FEET, USING SURVEY MONUMENT COORDINATE DATA FOR MONUMENT 2E-41. VERTICAL DATUM SHIFT FROM LIDAR TOPOGRAPHY, -1.100 METERS.

TUNNEL 1 GEOMETRY FROM 1955 AS-BUILT DRAWINGS. FACILITY 218-E-14, DISPOSAL TUNNEL NO. 1 FOR FAILED EQUIPMENT, PROJECT CA-513-A. ISSUED MARCH 10, 1955.

TUNNEL 2 GEOMETRY FROM 1962 AS-BUILT DRAWINGS. FACILITY 218-E-15, DISPOSAL TUNNEL NO. 2 FOR FAILED EQUIPMENT, PROJECT CGC 964. ISSUED SEPTEMBER 1962.

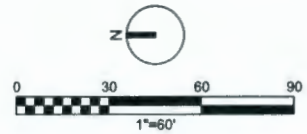

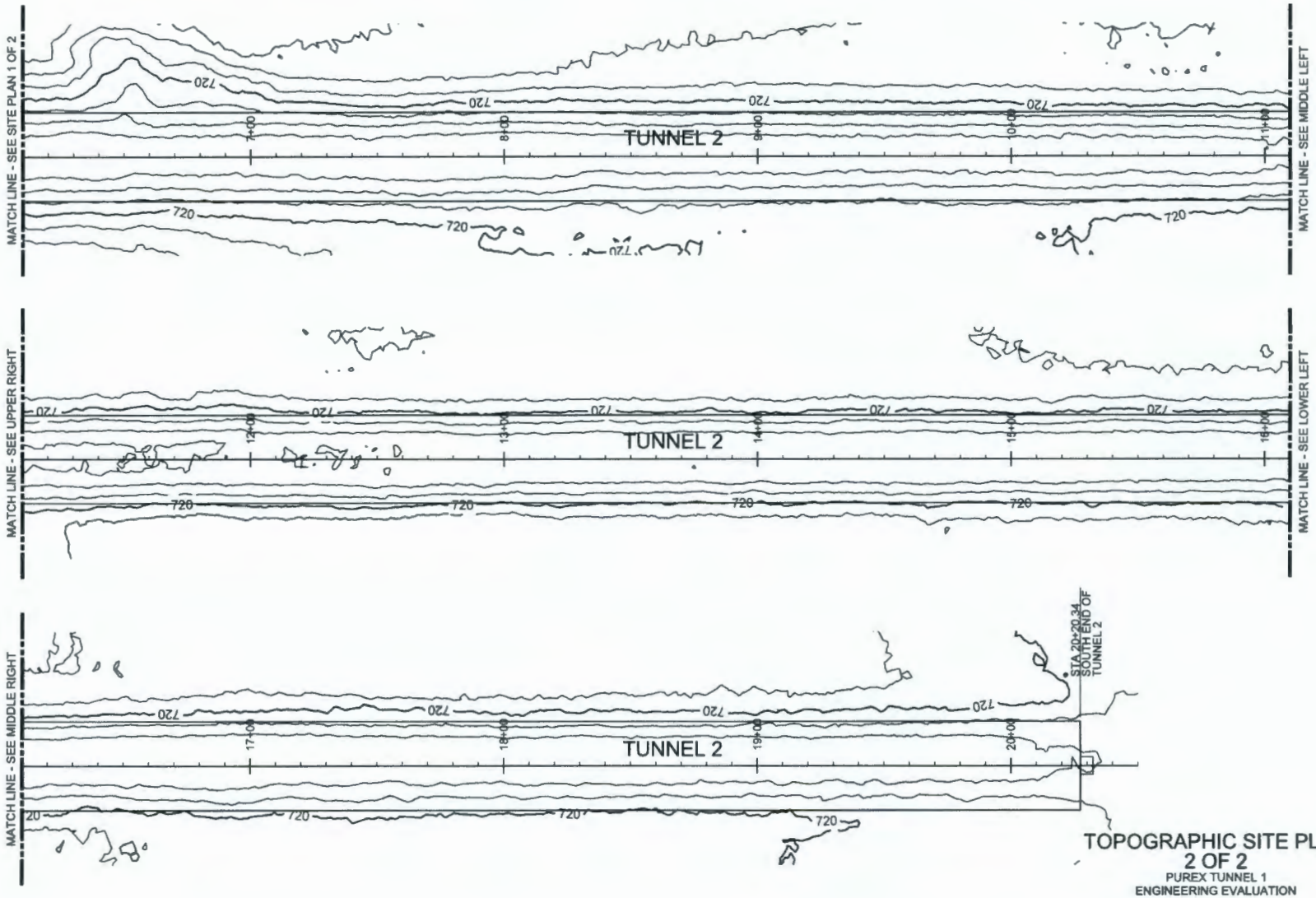

TOPOGRAPHIC SITE PLAN
2 OF 2
PUREX TUNNEL 1
ENGINEERING EVALUATION

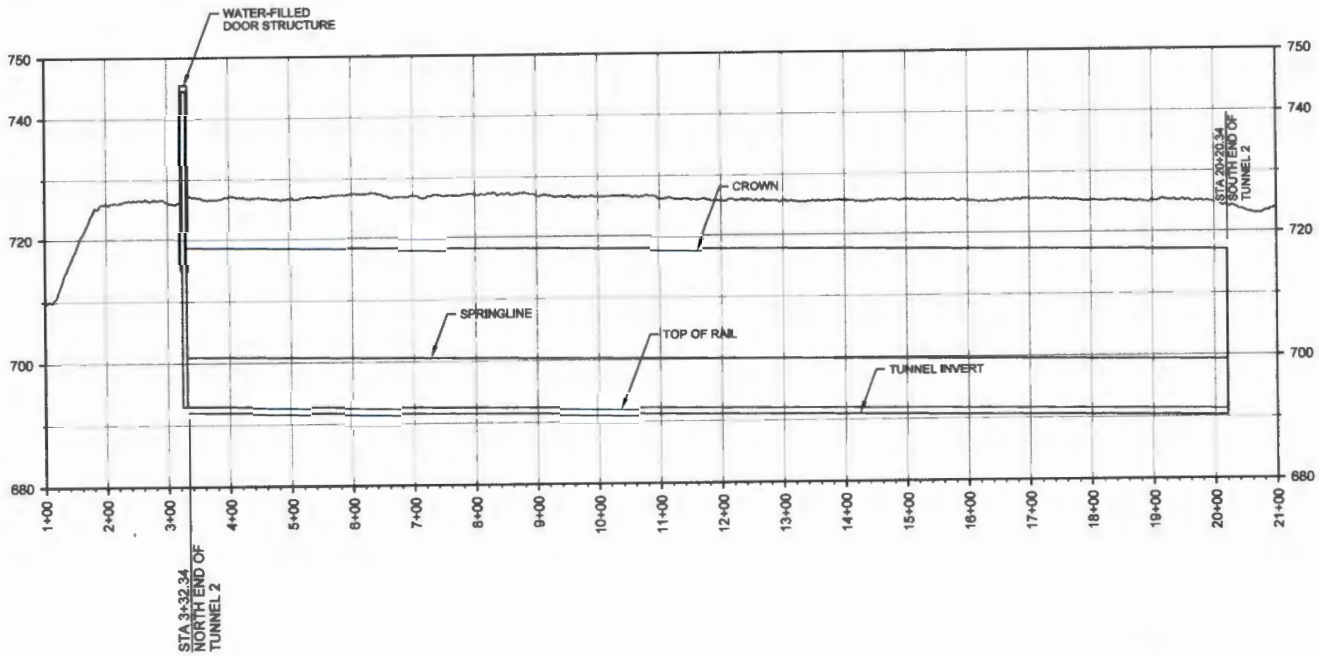

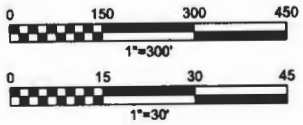

TUNNEL 2 PROFILE

PUREX TUNNEL 1
ENGINEERING EVALUATION

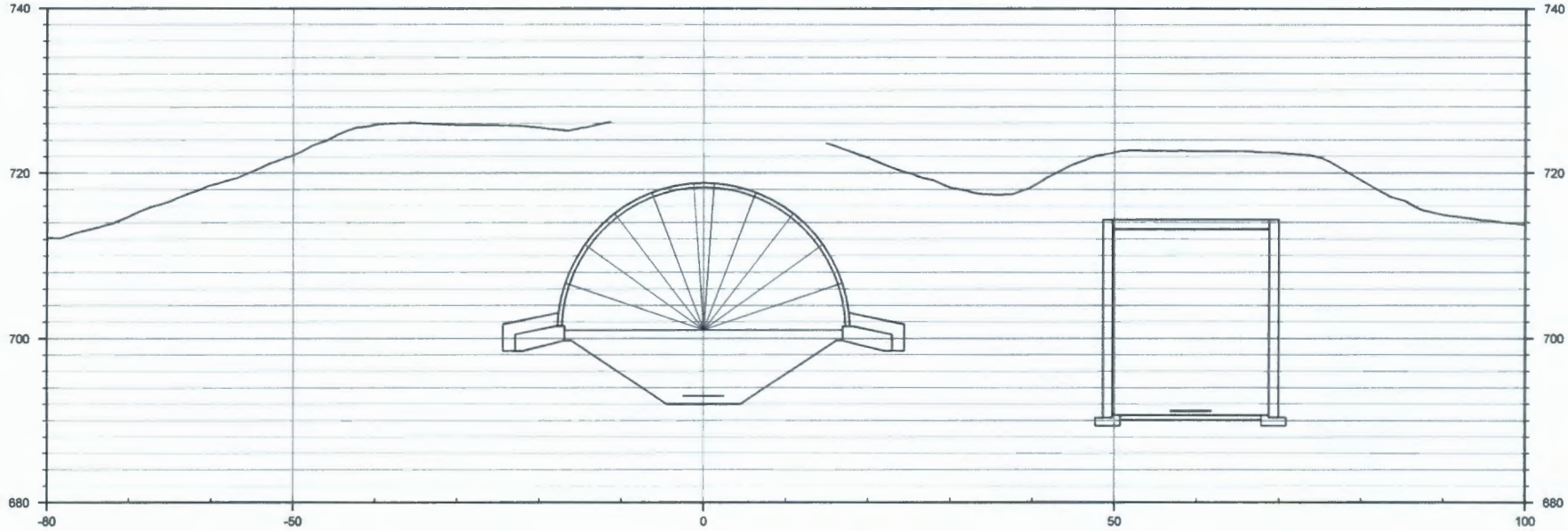

3+32.34 - NORTH END OF TUNNEL 2

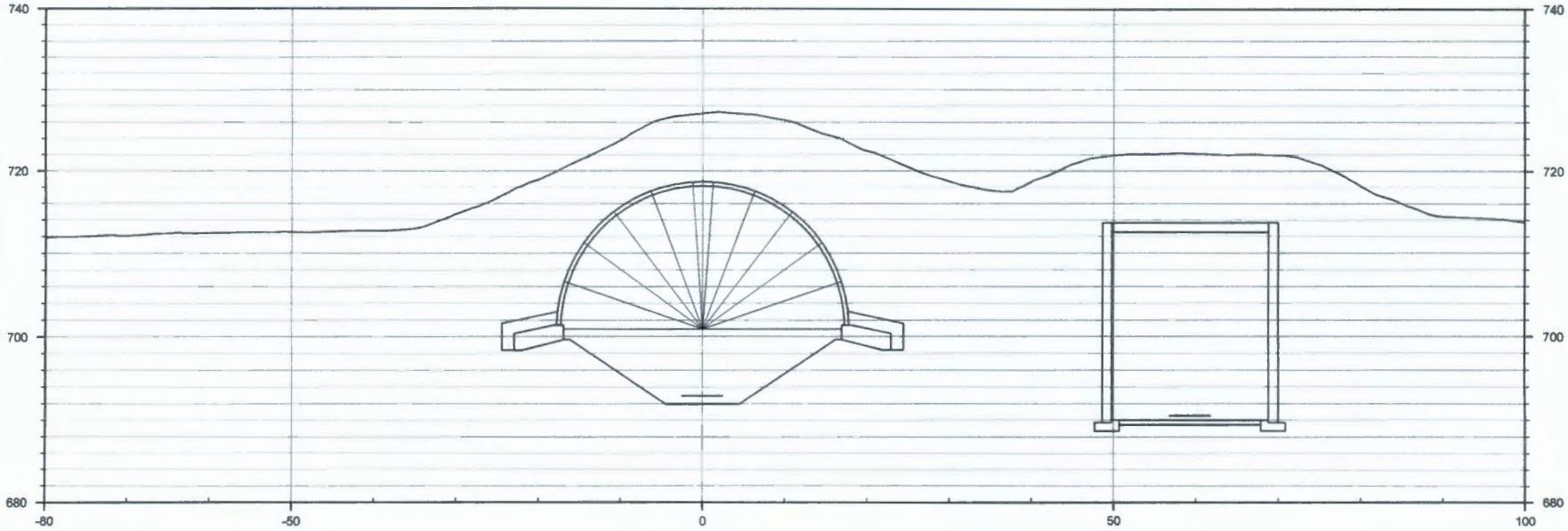

4+00

CROSS SECTIONS
3+32.34 AND 4+00
PUREX TUNNEL 1
ENGINEERING EVALUATION

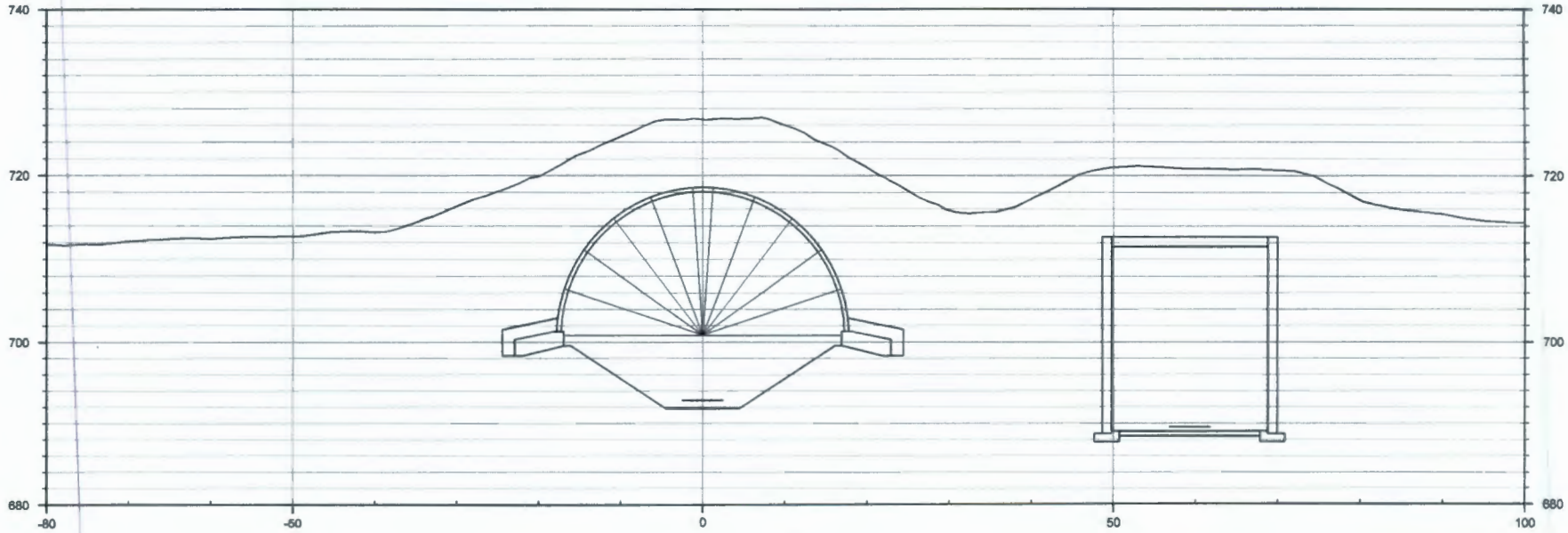

5+00

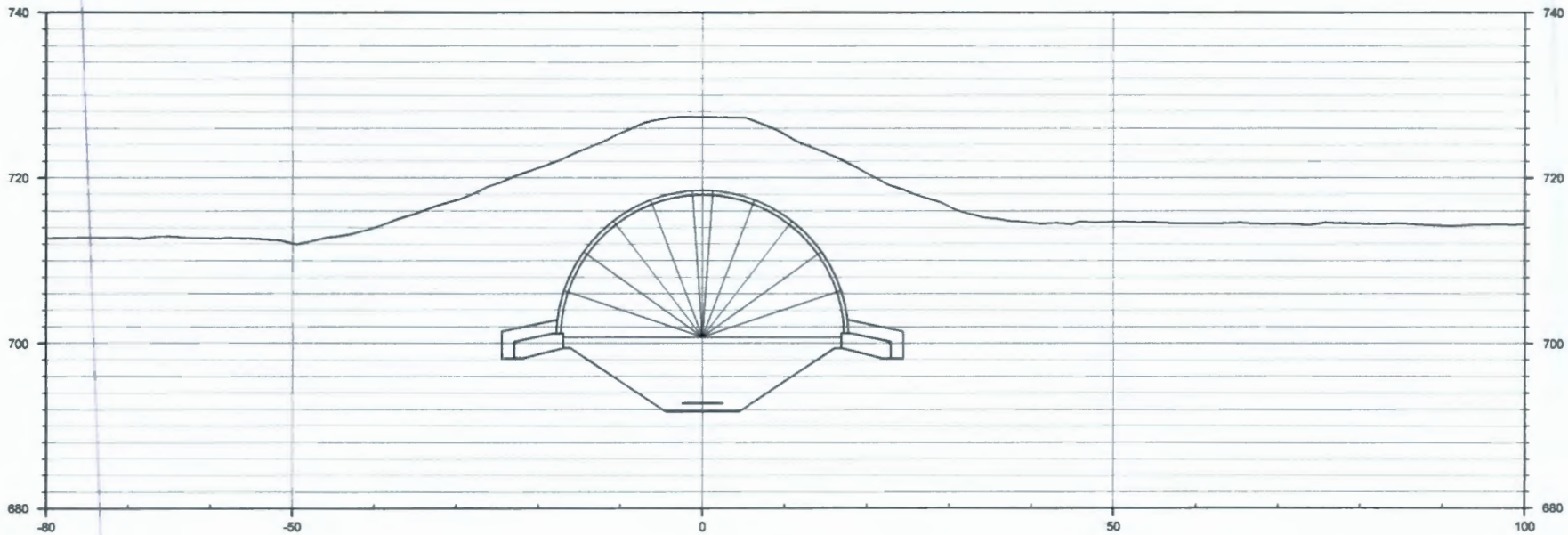

6+00

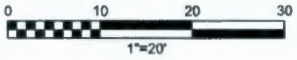

CROSS SECTIONS
5+00 AND 6+00
PUREX TUNNEL 1
ENGINEERING EVALUATION

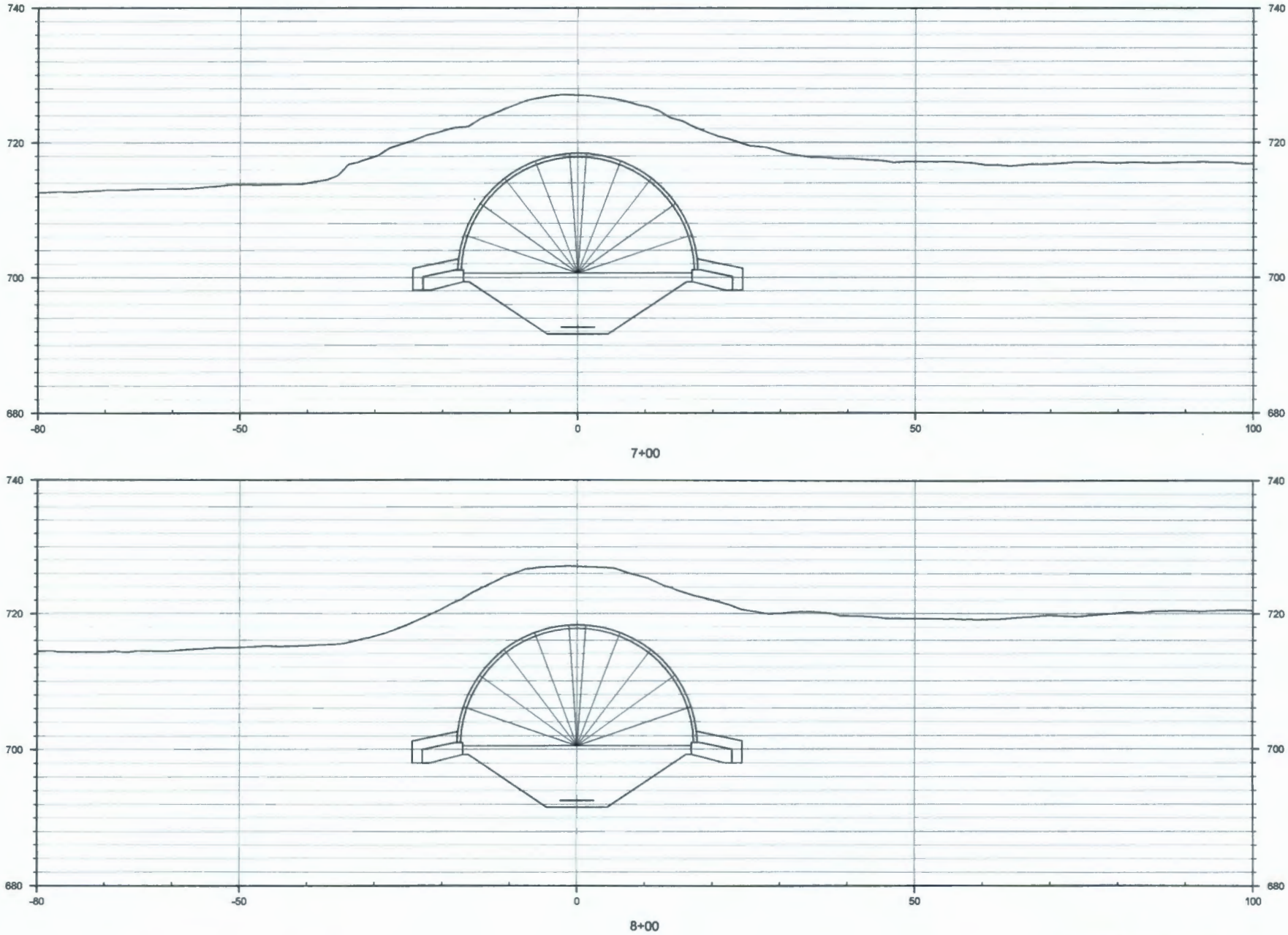

0 10 20 30
1"=20'

CROSS SECTIONS
7+00 AND 8+00
PUREX TUNNEL 1
ENGINEERING EVALUATION

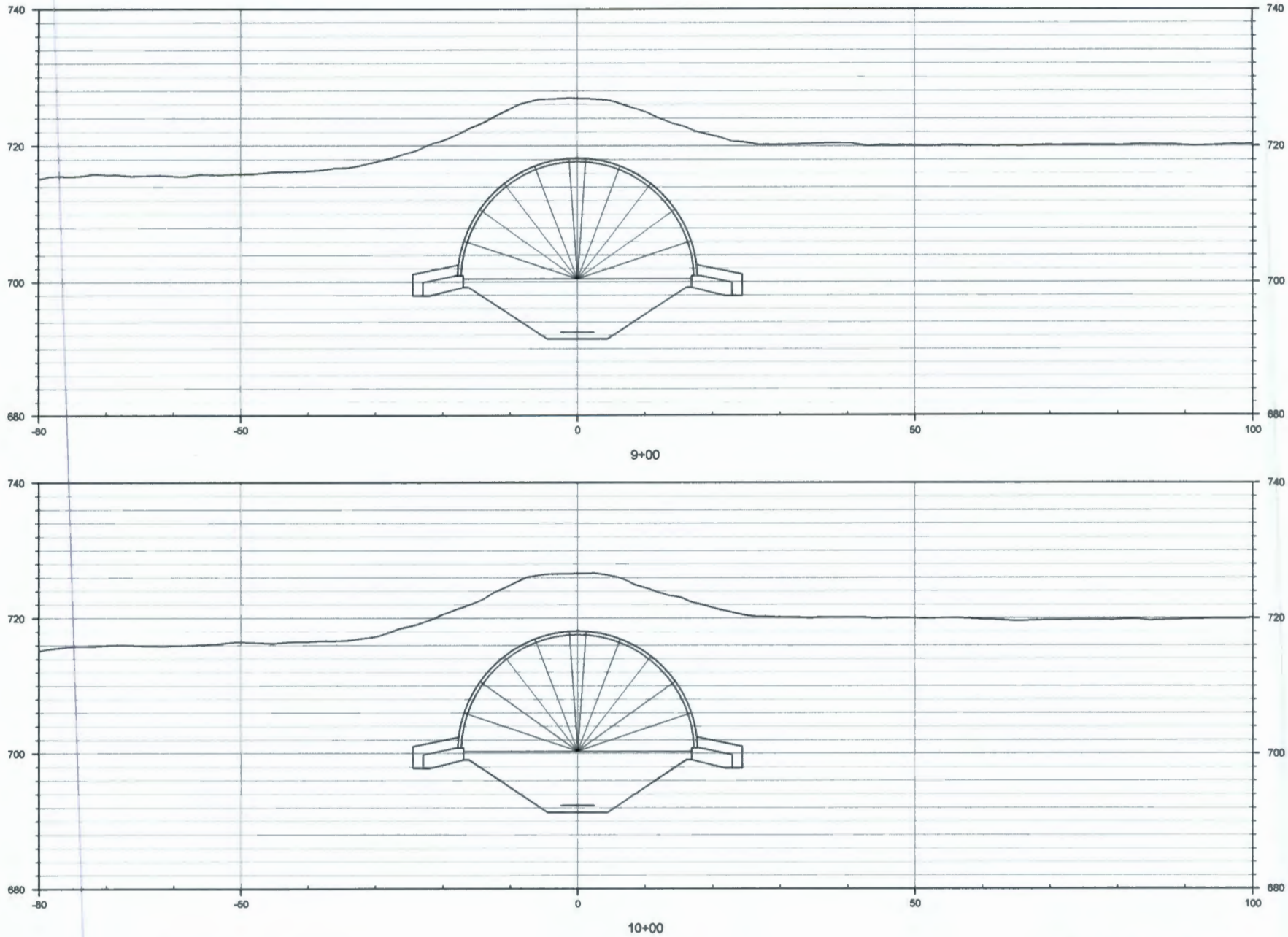

CROSS SECTIONS
9+00 AND 10+00
PUREX TUNNEL 1
ENGINEERING EVALUATION

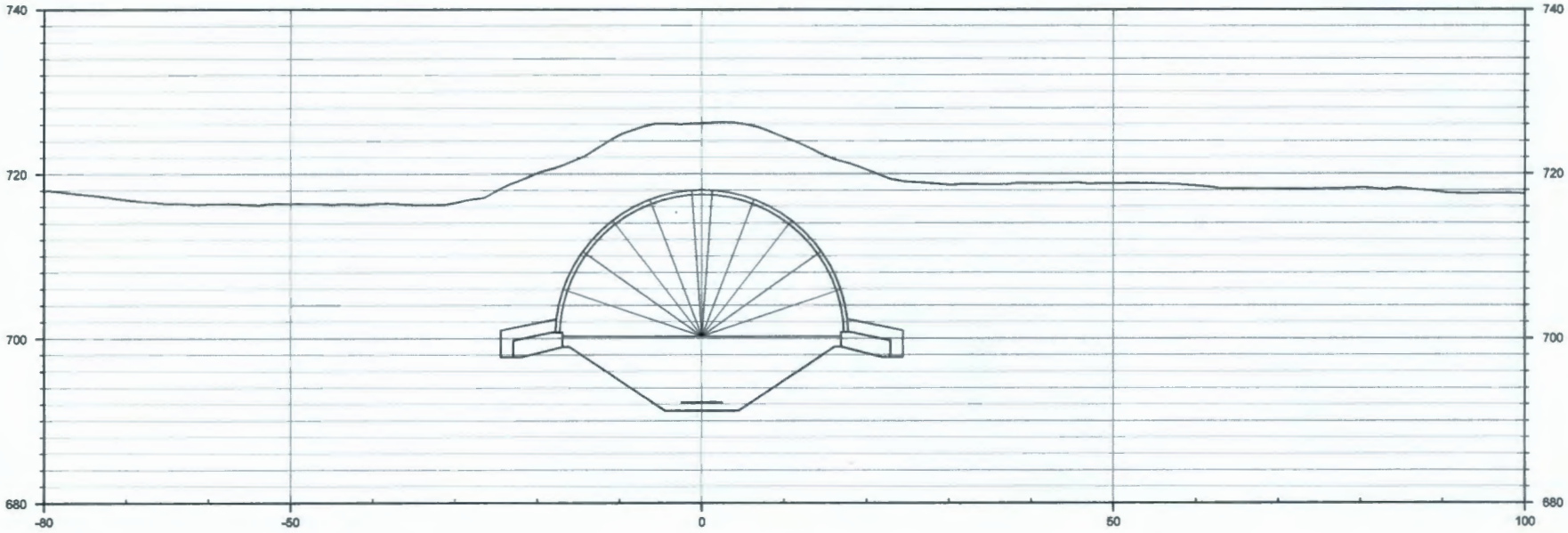

11+00

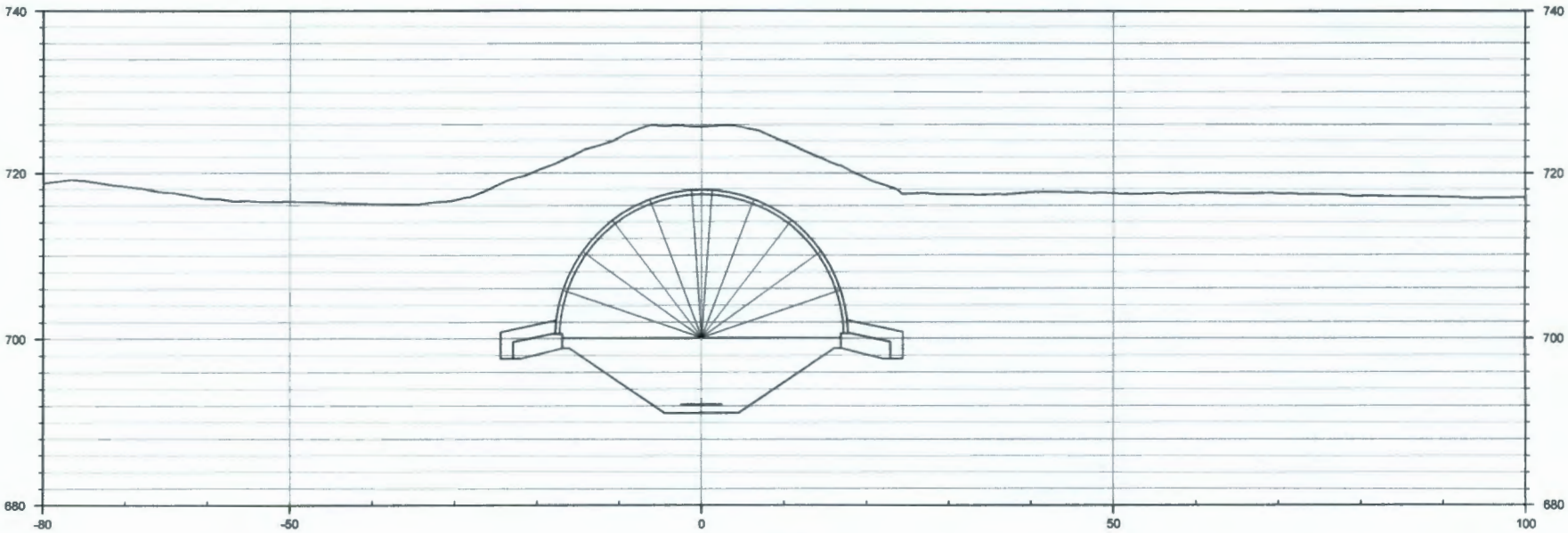

12+00

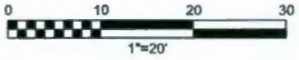

CROSS SECTIONS
11+00 AND 12+00
PUREX TUNNEL 1
ENGINEERING EVALUATION

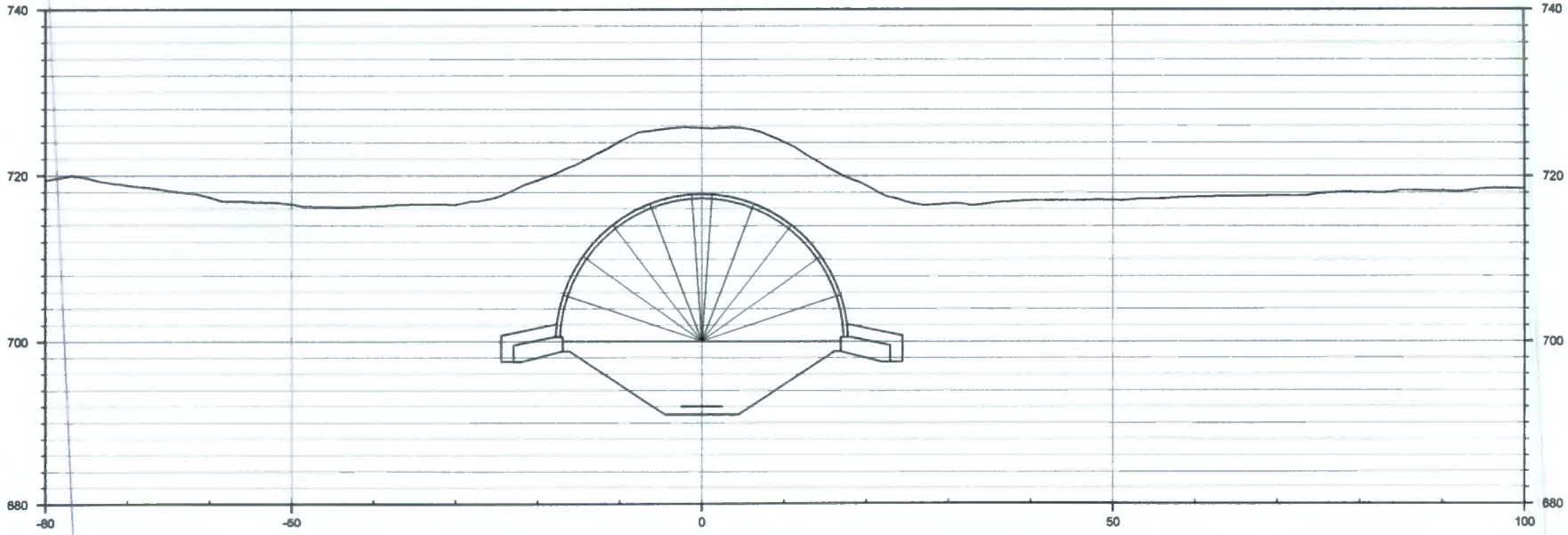

13+00

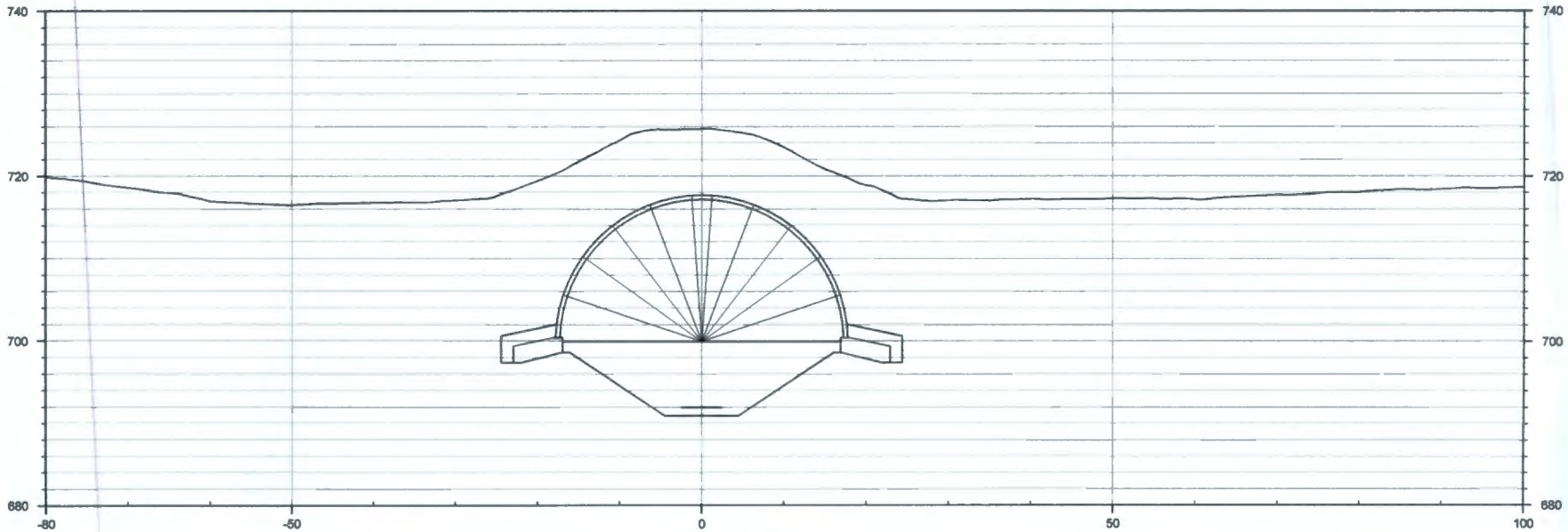

14+00

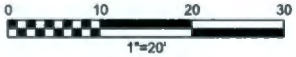

CROSS SECTIONS
13+00 AND 14+00
PUREX TUNNEL 1
ENGINEERING EVALUATION

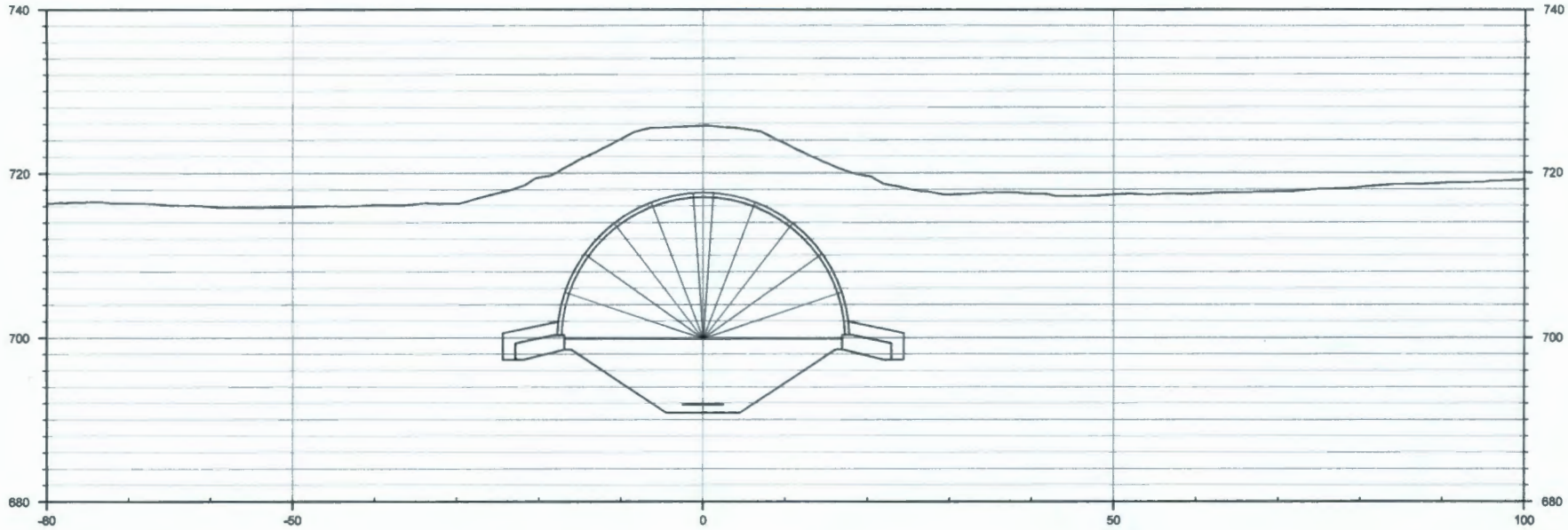

15+00

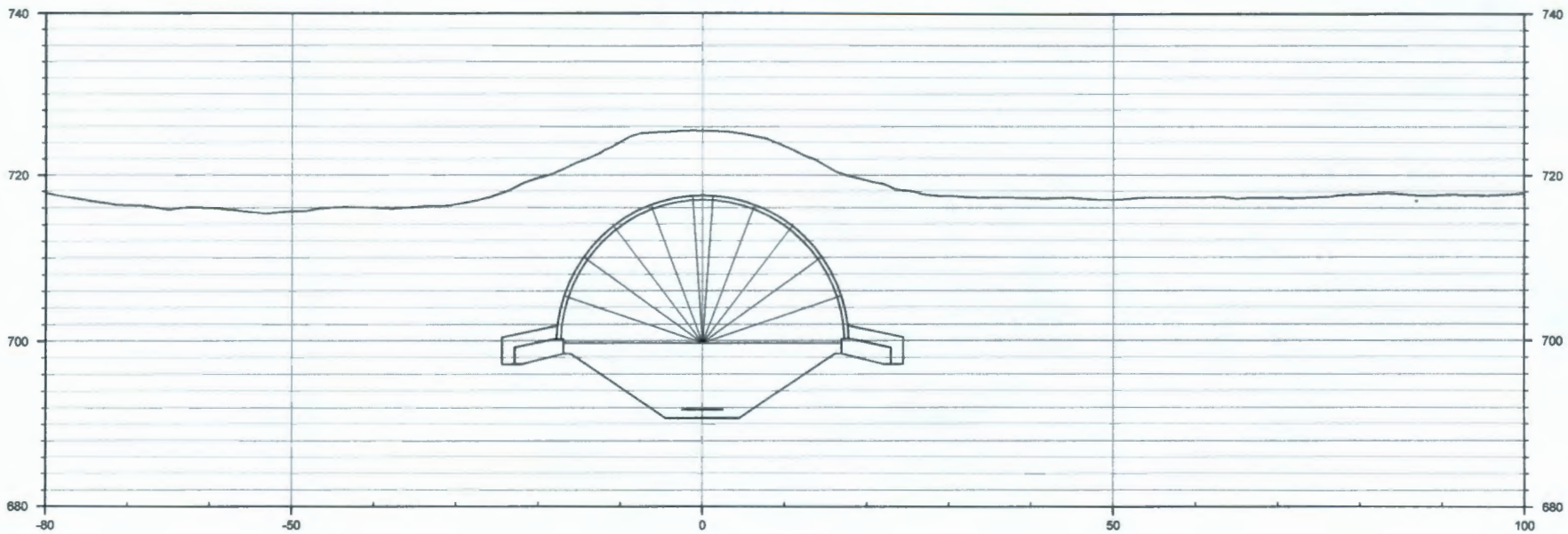

16+00

CROSS SECTIONS
15+00 AND 16+00
PUREX TUNNEL 1
ENGINEERING EVALUATION

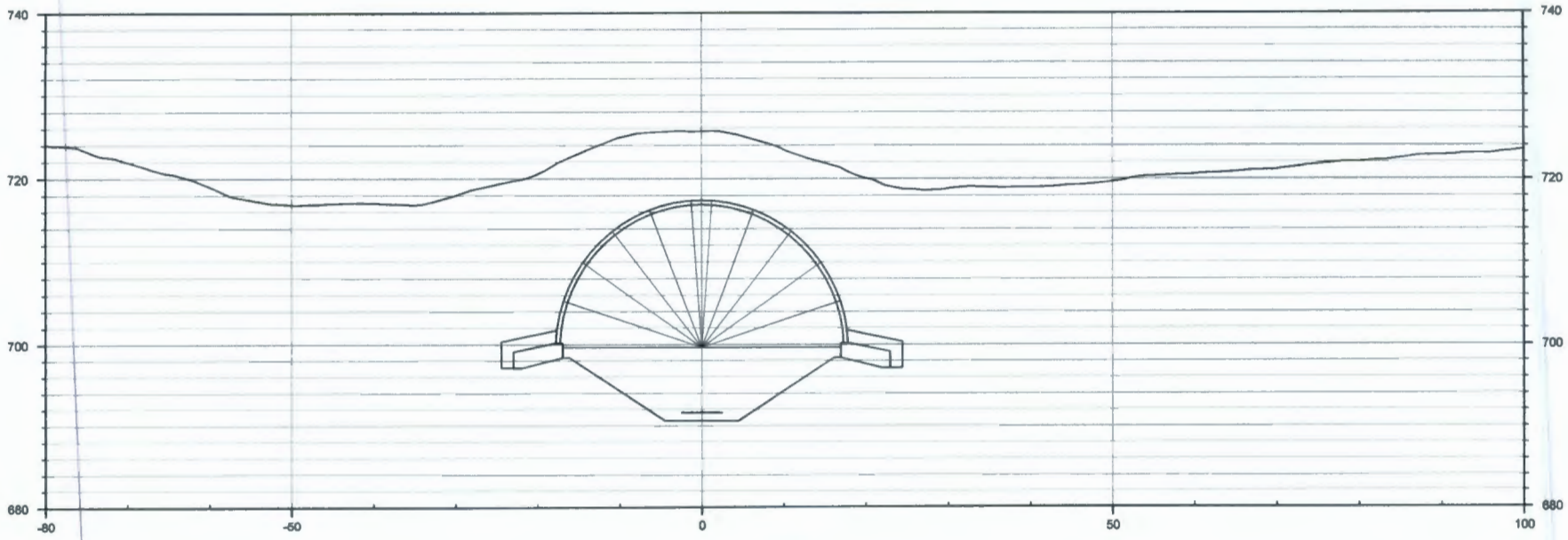

17+00

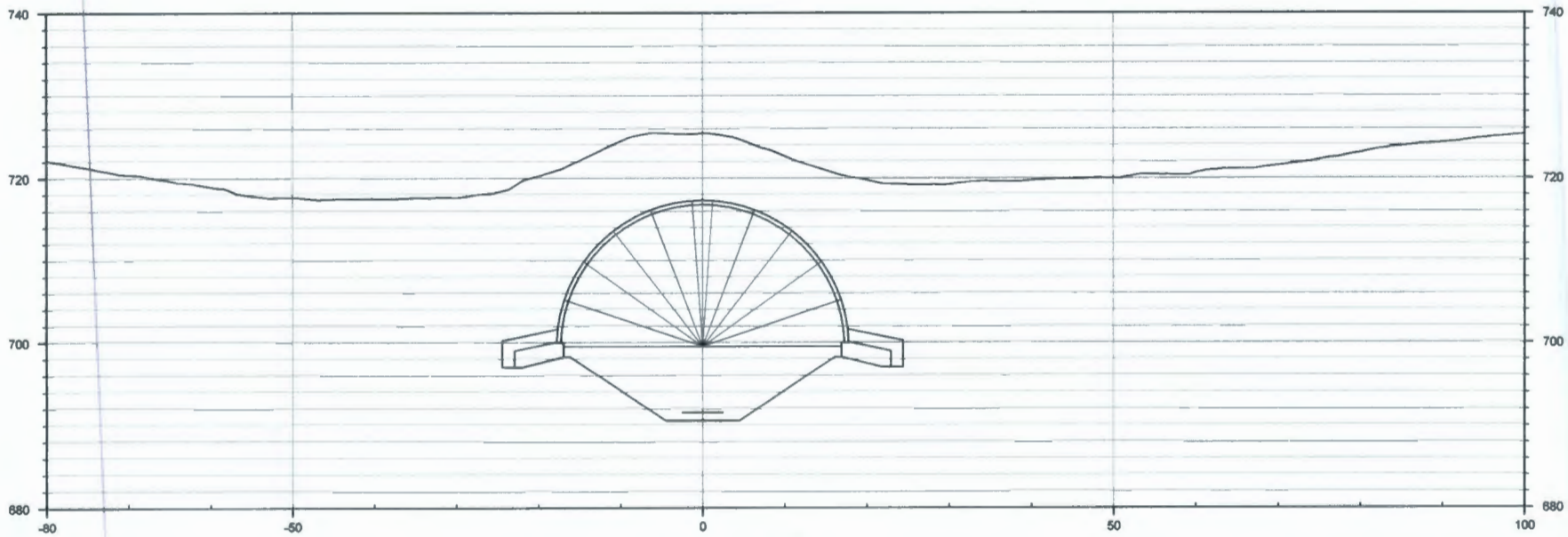

18+00

CROSS SECTIONS
17+00 AND 18+00
PUREX TUNNEL 1
ENGINEERING EVALUATION

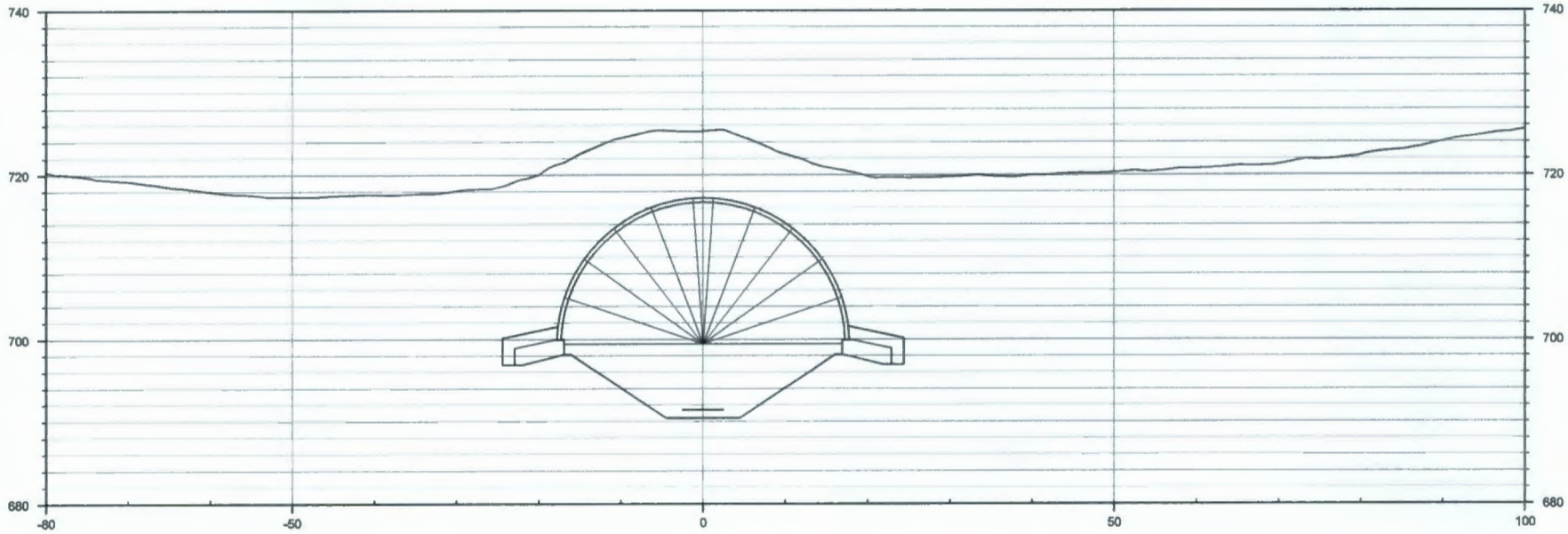

19+00

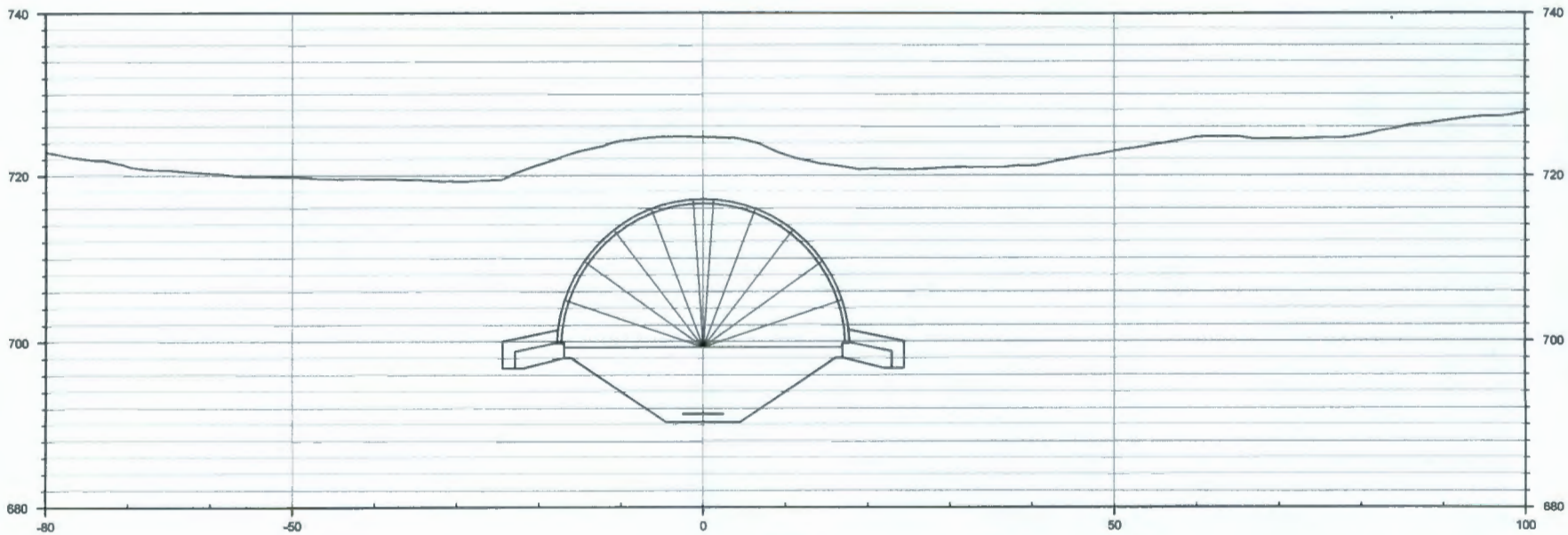

20+00

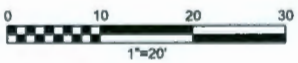

CROSS SECTIONS
19+00 AND 20+00
PUREX TUNNEL 1
ENGINEERING EVALUATION

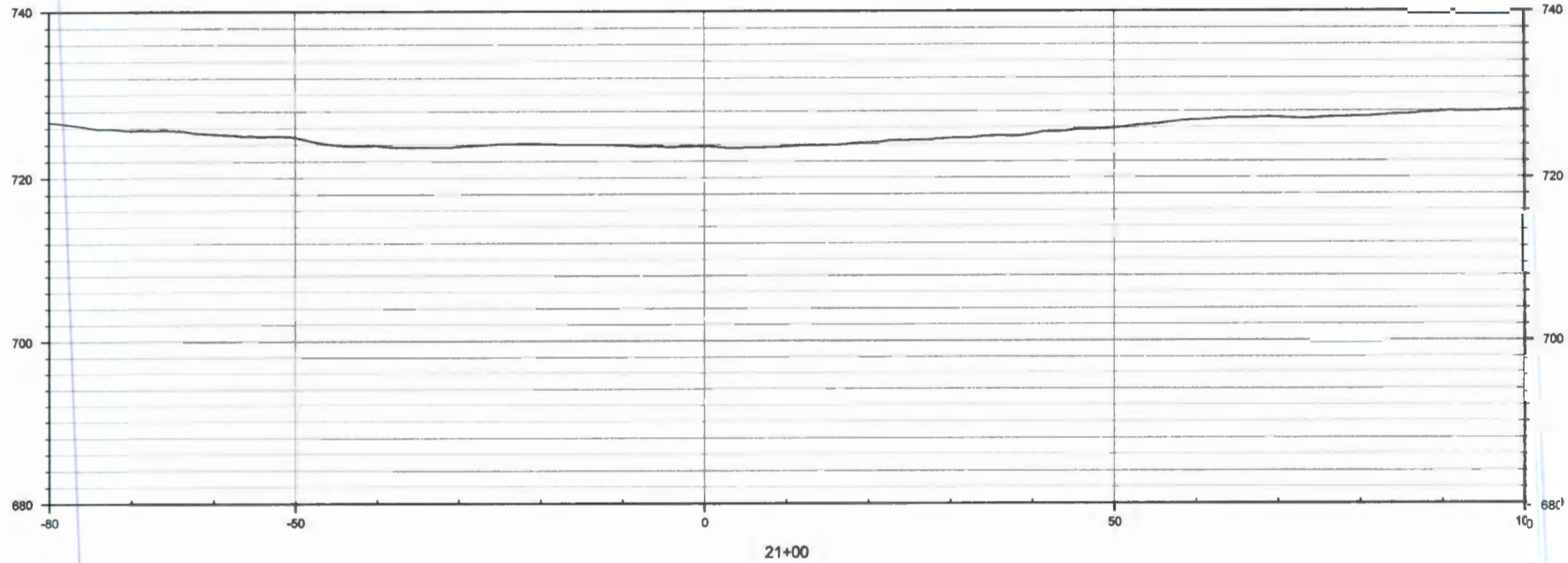

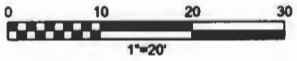

CROSS SECTION 21+00
PUREX TUNNEL 1
ENGINEERING EVALUATION

AERO-METRIC
SEATTLE

FLUOR HANFORD

LiDAR Digital elevation Model(s)
&
Topographic Contour Maps

TABLE OF CONTENTS

1. Project Area & Synopsis
2. LiDAR Survey
    a. Flight Specifications
    b. QA/QC Profiles
    c. Data Pre-Processing
    d. Data Editing & Contour Generation
3. Product Deliverables
    a. DEM Grids
    b. ASCII
    c. LAS - Point-cloud Classified and Edited Data
    d. Contours
    e. Final Report

AERO-METRIC
SEATTLE

1 Project Area & Synopsis

- This contract consists of obtaining DEM and contour data for the Central Plateau of the Hanford Site. Under a separate contract with Washington Closure Hanford, Aero-Metric completed a LiDAR data acquisition for the entire Hanford site and included most of the Central Plateau. See Exhibit A for project limits. The project area consists of approximately 38,000 acres.
- Aero-Metric obtained Airborne LiDAR data at sufficient density and accuracy to allow for the generation of 0.5m posting DEM grids and 0.3m contours.
- LiDAR survey was supported by on-board Airborne GPS and IMU observations.
- Rogers Surveying was responsible for the ground observations on two base stations during all aerial missions. Aero-Metric was responsible for the computations for the ABGP and IMU measurements.
- Rogers Surveying surveyed and computed the coordinates for approximately 234 vertical points along six profiles and well distributed within the entire Hanford area and representing different terrain types. These points served as true check points to further analyze and correct biases in the LiDAR data.
- See Exhibit B for location of the six selected profiles.

1.1 Coordinate System

- Horizontal system: State Plane NAD83, Washington South Zone, Meters
- Vertical system: NAVD88, Meters

2 LiDAR Survey

2.1 Flight Specifications – See exhibit C for Flight Line Coverage

- Sensor: Optech ALTM.
- Date of data acquisition: April 13, 2008
- Flying Height: 800m / 2634 ft above ground.
- Overlap between flight lines: 50% (100% double coverage)
- System Frequency: 100 KHz
- Scan Frequency: 65 Hz
- Scan Angle: net 24 degrees (12deg on each side)
- Air Speed: 135 kts
- Number of Flight lines: 145
- Geo-Referencing: ABGPS, IMU, and nine ground targets
- Nominal ground resolution: 0.4m
- Mission length: About seven days

2.2 QA/QC Profiles

- See exhibit B for location of the selected QA/QC point profiles.
- See Exhibit D for Point Residual Listing
- About 234 QA/QC points to support analysis and correction to LiDAR data.
- Survey work by Rogers Surveying.

2.3 LiDAR Data Post-Flight / Pre-Processing

- All ABGPS and IMU data, and GPS-obserevations on two base stations are integrated within the computation of the final geo-referencing of each of the flight lines.
- All discrepancies between flight lines are minimized through a number of post-processing algorithms.
- QA/QC points coordinates are used to verify the final accuracy of the derived LiDAR products as described earlier.
- Software used: Optech DASHMAP, Microstation Version 8, TerraSolids TMATCH and TSCAN packages.

2.4 LiDAR Data Editing and Contour Generation

- Post-processed LiDAR data is reduced to 750m by 750m tiles. See exhibit E for Tile Layout and Numbering.
- Classified LiDAR data is visually checked, analyzed, and re-classified if needed. Erroneous points are eliminated.
- After the completion of all editing steps, a LiDAR QC specialist reviewed all data to ensure completeness, conformity to standards, and the accuracy of the data.
- Software used: MicroStation version 8, Terrasolids TSCAN, TMODEL, and TMATCH packages.

3 Final Packaging and Delivery

- The final products are checked against a deliverable list to ensure product completeness. All data used for the project has been archived on permanent archival media for future use if needed by the client.
- The following products are delivered along with this report.
    - Contour data in Microstation Version 8 format.
    - Contour data in Digital Exchange Format (DXF)
    - Contour data in Arc Shapefile format
    - LiDAR data in ASCII .xyz format (All points, First return, Ground, Non-Ground)
    - LiDAR data in .las format
    - DEM Grids in Arc Grid format (All points, First return, Ground, Non-Ground)
    - This LiDAR report including the QA/QC points residuals

AERO-METRIC
SEATTLE

EXHIBIT A – PROJECT AREA

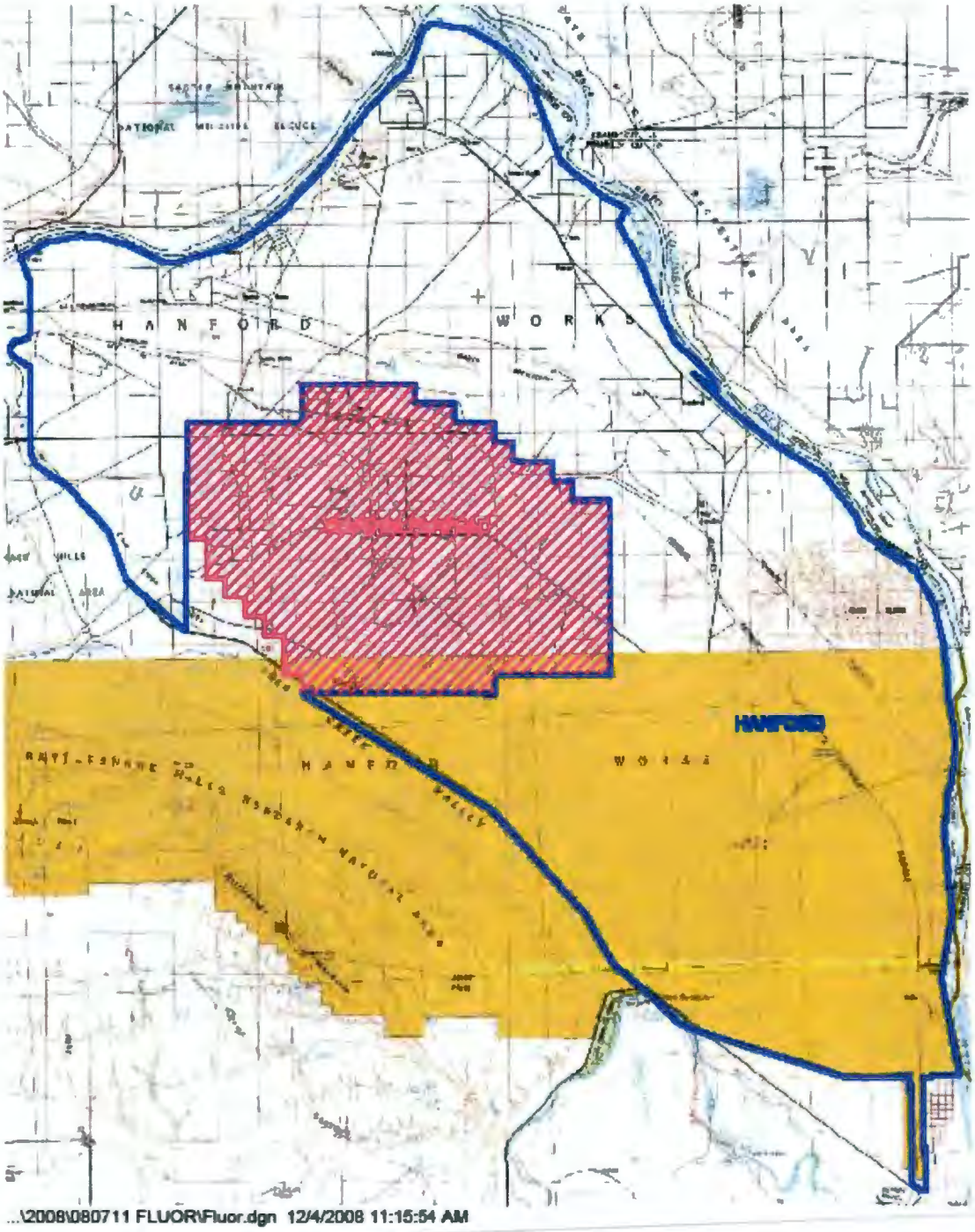

AERO-METRIC
SEATTLE

EXHIBIT B – QA/QC LiDAR PROFILES LOCATION

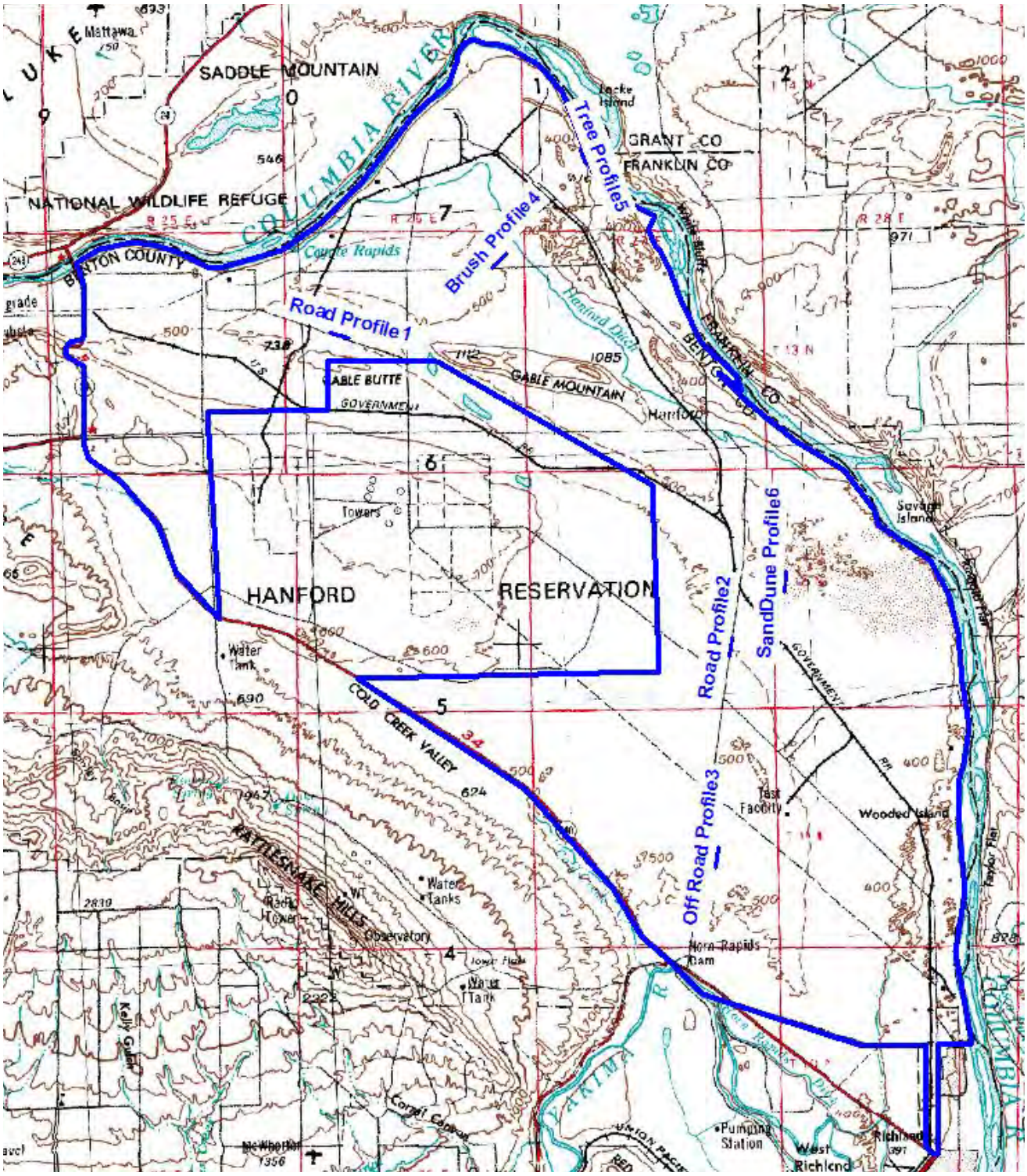

AERO-METRIC
SEATTLE

EXHIBIT C – LiDAR FLIGHT LINE COVERAGE

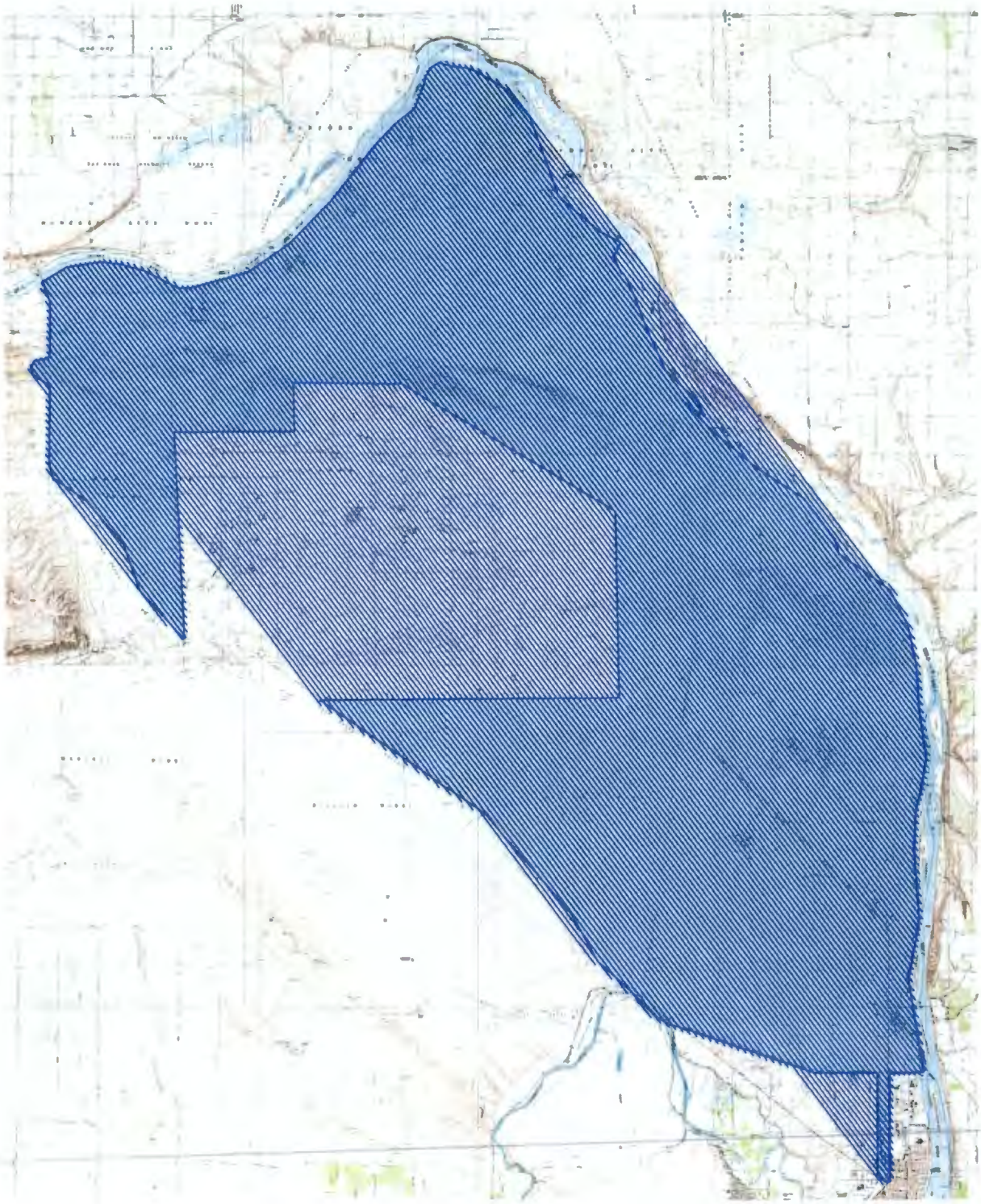

EXHIBIT D – GROUND SURVEYED QA/QC POINTS RESIDUALS (LiDAR minus Survey)

Number	Easting	Northing	Known Z	Laser Z	Dz
1060	587475.238	132228.964	143.798	144.280	+0.482
1249	579340.993	149856.447	118.679	118.970	+0.291
1251	579354.060	149816.955	117.872	118.140	+0.268
1257	579398.173	149685.686	117.363	117.580	+0.217
1250	579348.422	149834.166	118.097	118.270	+0.173
1256	579373.489	149694.794	118.975	119.140	+0.165
1258	579408.160	149654.826	118.016	118.160	+0.144
1263	579450.924	149526.348	117.780	117.920	+0.140
1247	579321.640	149916.351	119.914	120.050	+0.136
1260	579429.732	149589.940	118.158	118.280	+0.122
1259	579419.576	149621.120	118.200	118.310	+0.110
1205	575725.372	145382.413	153.510	153.610	+0.100
1206	575734.716	145392.197	153.144	153.240	+0.096
1235	576160.150	145857.677	140.360	140.450	+0.090
1029	585334.472	130096.641	145.601	145.690	+0.089
1242	579280.772	150039.035	120.312	120.400	+0.088
1084	587531.404	132654.877	148.093	148.180	+0.087
1046	585393.347	130504.843	140.355	140.440	+0.085
1229	576067.969	145757.301	143.657	143.740	+0.083
1074	587504.092	132451.257	144.460	144.540	+0.080
1225	576008.265	145692.311	144.430	144.510	+0.080
1111	584732.979	121081.044	161.161	161.240	+0.079
1106	584722.465	120983.923	162.562	162.640	+0.078
1037	585356.787	130251.641	142.384	142.460	+0.076
1252	579358.353	149803.759	117.784	117.860	+0.076
1063	587481.152	132273.435	144.935	145.010	+0.075
1107	584723.326	120993.677	162.786	162.860	+0.074
1043	585381.737	130425.046	139.898	139.970	+0.072
1104	584718.804	120948.671	160.868	160.940	+0.072
1127	584775.960	121488.399	162.498	162.570	+0.072
1047	585397.229	130530.652	140.739	140.810	+0.071
1090	587543.694	132745.898	144.630	144.700	+0.070
1238	576207.541	145909.804	139.670	139.740	+0.070
1209	575781.473	145443.937	152.011	152.080	+0.069
1239	579254.962	150117.591	120.811	120.880	+0.069
1033	585345.655	130173.495	143.872	143.940	+0.068
1087	587535.486	132683.870	143.213	143.280	+0.067
1241	579270.765	150068.564	120.543	120.610	+0.067
1234	576143.187	145839.927	140.815	140.880	+0.065
1105	584720.514	120966.552	161.768	161.830	+0.062
1034	585348.104	130190.540	143.500	143.560	+0.060
1044	585385.662	130451.978	139.930	139.990	+0.060
1013	585285.770	129762.754	159.731	159.790	+0.059
1113	584737.235	121121.823	160.511	160.570	+0.059
1203	575697.710	145352.397	154.161	154.220	+0.059
1068	587493.500	132364.239	147.042	147.100	+0.058
1119	584755.026	121290.156	162.702	162.760	+0.058
1079	587517.153	132544.162	143.644	143.700	+0.056
1233	576126.535	145821.649	141.154	141.210	+0.056
1048	585400.833	130555.520	141.045	141.100	+0.055
1067	587490.288	132341.425	143.815	143.870	+0.055
1202	575684.795	145338.702	154.425	154.480	+0.055
1031	585339.057	130128.201	144.916	144.970	+0.054
1129	584780.205	121525.340	162.716	162.770	+0.054
1058	587470.086	132193.265	145.097	145.150	+0.053
1056	587468.194	132178.359	147.378	147.430	+0.052
1246	579311.631	149944.598	119.948	120.000	+0.052
1262	579444.609	149546.715	117.958	118.010	+0.052
1200	575649.474	145299.913	155.988	156.040	+0.052
1065	587485.476	132308.395	144.339	144.390	+0.051
1240	579262.006	150095.471	120.599	120.650	+0.051
1032	585343.442	130157.930	144.230	144.280	+0.050
1243	579289.207	150013.874	120.320	120.370	+0.050
1244	579297.440	149987.930	120.431	120.480	+0.049
1040	585369.572	130340.238	140.922	140.970	+0.048
1092	587549.771	132792.058	145.612	145.660	+0.048
1095	587555.680	132838.165	145.482	145.530	+0.048
1039	585365.902	130314.026	141.343	141.390	+0.047
1224	575993.975	145676.430	144.603	144.650	+0.047
1248	579330.740	149888.793	119.423	119.470	+0.047
1054	587466.279	132160.286	146.184	146.230	+0.046
1078	587515.376	132531.208	144.984	145.030	+0.046
1254	579351.470	149761.925	120.035	120.080	+0.045
1053	585417.062	130667.336	141.175	141.220	+0.045
1219	575922.100	145597.732	147.805	147.850	+0.045
1066	587486.884	132318.500	143.376	143.420	+0.044
1024	585322.692	130014.839	147.557	147.600	+0.043
1109	584729.398	121043.603	161.517	161.560	+0.043
1226	576025.399	145710.966	143.857	143.900	+0.043
1101	587570.353	132945.220	146.418	146.460	+0.042
1208	575766.562	145427.564	152.239	152.280	+0.041
1006	585262.488	129602.806	162.470	162.510	+0.040

Number	Easting	Northing	Known Z	Laser Z	Dz
1035	585352.545	130221.264	142.901	142.940	+0.039
1030	585336.726	130112.466	145.282	145.320	+0.038
1228	576052.502	145740.052	143.252	143.290	+0.038
1110	584730.962	121062.110	161.533	161.570	+0.037
1253	579341.285	149792.516	120.363	120.400	+0.037
1064	587483.223	132290.597	143.904	143.940	+0.036
1094	587552.304	132812.394	145.675	145.710	+0.035
1207	575750.411	145409.761	152.525	152.560	+0.035
1227	576037.938	145724.396	143.285	143.320	+0.035
1216	575856.934	145526.814	149.476	149.510	+0.034
1073	587502.724	132438.206	147.827	147.860	+0.033
1210	575796.525	145460.724	151.277	151.310	+0.033
1237	576190.571	145891.082	139.908	139.940	+0.032
1080	587519.405	132561.432	143.929	143.960	+0.031
1100	587568.481	132936.009	146.499	146.530	+0.031
1245	579303.030	149972.045	120.070	120.100	+0.030
1261	579438.794	149564.664	118.360	118.390	+0.030
1026	585327.239	130047.124	146.662	146.690	+0.028
1028	585331.994	130079.151	145.972	146.000	+0.028
1108	584725.530	121014.277	161.683	161.710	+0.027
1017	585301.952	129873.589	153.884	153.910	+0.026
1204	575711.747	145367.563	153.994	154.020	+0.026
1236	576176.449	145875.905	140.004	140.030	+0.026
1036	585354.638	130236.508	142.604	142.630	+0.026
1052	585414.120	130646.630	141.215	141.240	+0.025
1083	587529.062	132635.560	145.155	145.180	+0.025
1218	575900.312	145574.535	148.485	148.510	+0.025
1220	575937.207	145614.189	147.205	147.230	+0.025
1093	587551.306	132802.381	145.146	145.170	+0.024
1077	587512.095	132506.571	145.116	145.140	+0.024
1214	575834.228	145501.400	149.636	149.660	+0.024
1115	584744.477	121190.555	160.397	160.420	+0.023
1221	575952.192	145630.292	146.527	146.550	+0.023
1015	585293.665	129816.196	156.978	157.000	+0.022
1021	585313.338	129950.528	149.899	149.920	+0.021
1062	587478.885	132256.844	144.919	144.940	+0.021
1004	585257.252	129565.131	162.220	162.240	+0.020
1022	585316.063	129969.702	149.060	149.080	+0.020
1075	587507.324	132472.236	142.870	142.890	+0.020
1096	587559.724	132865.958	145.550	145.570	+0.020
1009	585271.984	129666.647	162.731	162.750	+0.019
1217	575878.912	145550.191	149.131	149.150	+0.019
1027	585329.591	130063.183	146.312	146.330	+0.018

Number	Easting	Northing	Known Z	Laser Z	Dz
1223	575985.550	145667.458	145.123	145.140	+0.017
1011	585278.672	129712.912	161.833	161.850	+0.017
1019	585308.711	129919.113	151.453	151.470	+0.017
1116	584747.972	121223.200	160.274	160.290	+0.016
1038	585361.199	130281.578	141.915	141.930	+0.015
1076	587510.869	132493.952	143.015	143.030	+0.015
1137	584797.178	121687.712	161.266	161.280	+0.014
1222	575968.795	145648.424	146.196	146.210	+0.014
1000	585246.671	129492.270	161.737	161.750	+0.013
1102	587571.431	132954.897	147.827	147.840	+0.013
1213	575831.101	145497.699	149.727	149.740	+0.013
1117	584751.321	121255.658	160.448	160.460	+0.012
1042	585377.796	130397.331	140.069	140.080	+0.011
1005	585259.702	129583.398	162.299	162.310	+0.011
1128	584777.534	121507.256	162.779	162.790	+0.011
1061	587478.126	132249.504	143.640	143.650	+0.010
1141	584805.858	121768.837	160.970	160.980	+0.010
1122	584760.344	121339.695	163.011	163.020	+0.009
1134	584790.705	121626.756	164.801	164.810	+0.009
1255	579363.387	149725.734	119.651	119.660	+0.009
1057	587468.520	132182.242	147.091	147.100	+0.009
1215	575835.194	145502.674	149.841	149.850	+0.009
1230	576084.177	145775.166	143.871	143.880	+0.009
1192	569862.857	142446.807	162.902	162.910	+0.008
1232	576114.464	145808.402	142.592	142.600	+0.008
1098	587566.081	132914.210	147.343	147.350	+0.007
1201	575671.847	145324.480	155.603	155.610	+0.007
1010	585275.209	129689.221	162.454	162.460	+0.006
1097	587564.037	132898.331	146.784	146.790	+0.006
1126	584772.523	121455.126	161.684	161.690	+0.006
1140	584804.218	121751.800	161.454	161.460	+0.006
1050	585407.594	130601.992	141.325	141.330	+0.005
1086	587533.314	132667.314	147.765	147.770	+0.005
1199	569932.756	142401.189	163.135	163.140	+0.005
1088	587536.923	132696.760	143.995	144.000	+0.005
1023	585320.291	129998.692	148.027	148.030	+0.003
1125	584768.839	121420.448	162.887	162.890	+0.003
1124	584766.584	121399.722	164.638	164.640	+0.002
1211	575812.652	145478.706	150.638	150.640	+0.002
1091	587548.132	132778.387	145.349	145.350	+0.001
1041	585373.808	130368.986	140.440	140.440	+0.000
1114	584740.801	121155.878	160.291	160.290	-0.001
1045	585389.520	130478.627	140.093	140.090	-0.003

Number	Easting	Northing	Known Z	Laser Z	Dz
1089	587540.288	132723.323	142.843	142.840	-0.003
1003	585254.801	129548.103	162.133	162.130	-0.003
1025	585324.996	130030.991	147.073	147.070	-0.003
1071	587498.852	132409.974	143.704	143.700	-0.004
1008	585268.861	129644.743	162.734	162.730	-0.004
1049	585404.251	130579.220	141.234	141.230	-0.004
1007	585265.531	129623.343	162.595	162.590	-0.005
1103	587573.207	132968.568	147.715	147.710	-0.005
1130	584783.234	121555.343	162.065	162.060	-0.005
1131	584784.841	121571.940	163.065	163.060	-0.005
1018	585306.447	129903.713	152.287	152.280	-0.007
1138	584800.327	121720.404	162.597	162.590	-0.007
1002	585251.722	129525.940	161.938	161.930	-0.008
1118	584753.793	121272.855	161.348	161.340	-0.008
1133	584788.533	121609.581	164.980	164.970	-0.010
1051	585410.866	130624.061	141.312	141.300	-0.012
1139	584802.055	121733.653	162.622	162.610	-0.012
1014	585289.664	129788.968	158.363	158.350	-0.013
1177	569628.397	142530.490	163.243	163.230	-0.013
1012	585282.180	129737.468	160.914	160.900	-0.014
1191	569848.162	142452.023	162.914	162.900	-0.014
1069	587494.380	132371.971	147.055	147.040	-0.015
1135	584792.679	121646.923	163.746	163.730	-0.016
1112	584735.214	121104.017	162.159	162.140	-0.019
1070	587495.528	132385.484	142.999	142.980	-0.019
1182	569706.150	142502.735	163.059	163.040	-0.019
1136	584794.917	121668.615	161.131	161.110	-0.021
1020	585311.009	129934.725	150.683	150.660	-0.023
1123	584763.534	121367.574	162.844	162.820	-0.024
1212	575830.018	145496.613	149.854	149.830	-0.024
1231	576097.714	145790.088	142.735	142.710	-0.025
1016	585297.757	129844.389	155.466	155.440	-0.026
1179	569658.787	142519.618	163.147	163.120	-0.027
1121	584758.670	121323.442	163.868	163.840	-0.028
1195	569908.362	142430.497	162.828	162.800	-0.028
1072	587501.372	132428.969	147.999	147.970	-0.029
1082	587527.493	132623.357	145.660	145.630	-0.030
1099	587567.080	132924.839	149.243	149.210	-0.033
1173	569566.925	142552.223	163.494	163.460	-0.034
1193	569878.215	142441.384	162.844	162.810	-0.034
1178	569643.461	142525.105	163.186	163.150	-0.036
1180	569674.172	142514.127	163.112	163.070	-0.042
1132	584786.451	121589.690	164.235	164.190	-0.045

Number	Easting	Northing	Known Z	Laser Z	Dz
1196	569923.688	142425.157	162.775	162.730	-0.045
1001	585248.956	129507.996	161.826	161.780	-0.046
1197	569938.539	142419.792	162.706	162.660	-0.046
1188	569801.879	142468.503	162.889	162.840	-0.049
1120	584756.750	121307.326	163.880	163.830	-0.050
1194	569893.434	142436.026	162.820	162.770	-0.050
1181	569689.956	142508.539	163.101	163.050	-0.051
1168	569487.341	142580.612	163.714	163.660	-0.054
1198	569953.261	142414.648	162.647	162.590	-0.057
1161	569375.906	142620.454	164.080	164.020	-0.060
1163	569406.553	142609.476	163.960	163.900	-0.060
1185	569752.675	142486.048	162.983	162.920	-0.063
1183	569722.146	142497.138	163.018	162.950	-0.068
1186	569770.259	142479.803	162.948	162.880	-0.068
1174	569581.657	142547.040	163.420	163.350	-0.070
1184	569736.533	142491.981	162.964	162.890	-0.074
1164	569425.572	142602.690	163.896	163.820	-0.076
1172	569550.840	142558.164	163.559	163.480	-0.079
1158	569330.482	142636.593	164.052	163.970	-0.082
1190	569831.975	142457.913	162.892	162.810	-0.082
1153	569246.648	142666.541	164.233	164.150	-0.083
1151	569216.008	142677.606	164.225	164.140	-0.085
1150	569200.706	142683.108	164.215	164.130	-0.085
1176	569612.442	142536.096	163.326	163.240	-0.086
1148	569169.730	142694.183	164.237	164.150	-0.087
1165	569440.403	142597.353	163.857	163.770	-0.087
1169	569502.527	142575.177	163.697	163.610	-0.087
1170	569518.665	142569.451	163.660	163.570	-0.090
1081	587523.830	132593.560	146.301	146.210	-0.091
1159	569345.229	142631.411	164.051	163.960	-0.091
1167	569471.549	142586.268	163.791	163.700	-0.091
1171	569534.668	142563.805	163.611	163.520	-0.091
1160	569360.614	142625.943	164.082	163.990	-0.092
1156	569300.130	142647.349	164.125	164.030	-0.095
1146	569138.005	142705.530	164.279	164.180	-0.099
1143	569092.588	142721.835	164.329	164.230	-0.099
1189	569816.997	142463.222	162.890	162.790	-0.100
1154	569262.345	142660.946	164.172	164.070	-0.102
1157	569314.751	142642.178	164.092	163.990	-0.102
1055	587467.086	132172.439	149.014	148.910	-0.104
1162	569391.019	142614.984	164.016	163.910	-0.106
1166	569456.249	142591.751	163.830	163.720	-0.110
1149	569185.447	142688.599	164.214	164.100	-0.114

AERO-METRIC

SEATTLE

Number	Easting	Northing	Known Z	Laser Z	Dz
1145	569123.233	142710.848	164.295	164.180	-0.115
1085	587532.544	132661.711	148.386	148.270	-0.116
1175	569596.356	142541.784	163.387	163.270	-0.117
1144	569108.301	142716.259	164.329	164.210	-0.119
1187	569786.206	142474.105	162.944	162.820	-0.124
1147	569153.788	142699.953	164.268	164.140	-0.128
1152	569230.707	142672.242	164.238	164.100	-0.138
1155	569282.224	142653.724	164.129	163.990	-0.139
1059	587473.812	132219.970	148.368	148.180	-0.188

Average dz	+0.011
Minimum dz	-0.188
Maximum dz	+0.482
Average magnitude	0.051
Root mean square	0.072
Std deviation	0.071

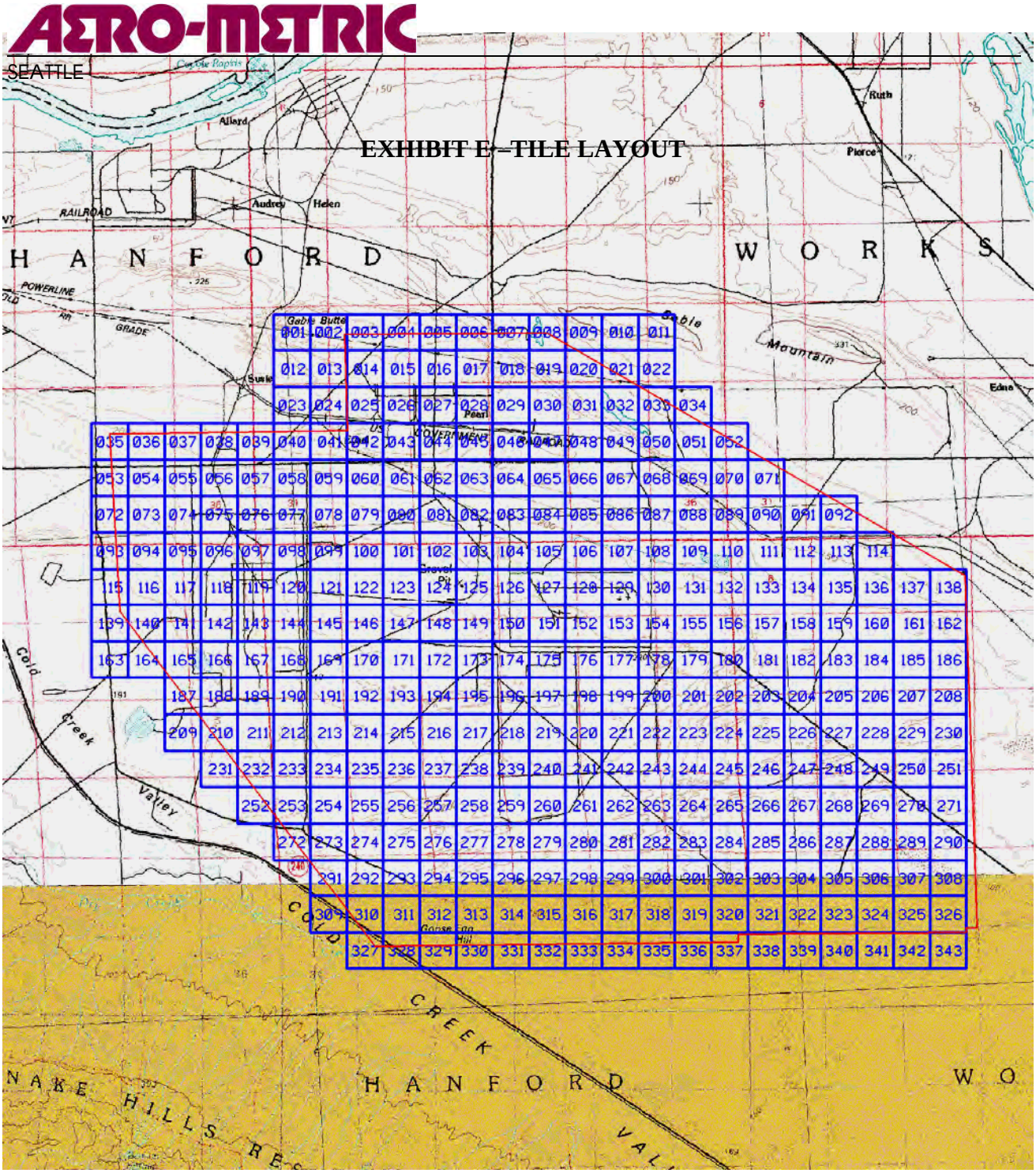

- **Number of Tiles within project area: 343**
- **Tile size: 750m**

AERO-METRIC
SEATTLE

EXHIBIT E –TILE LAYOUT

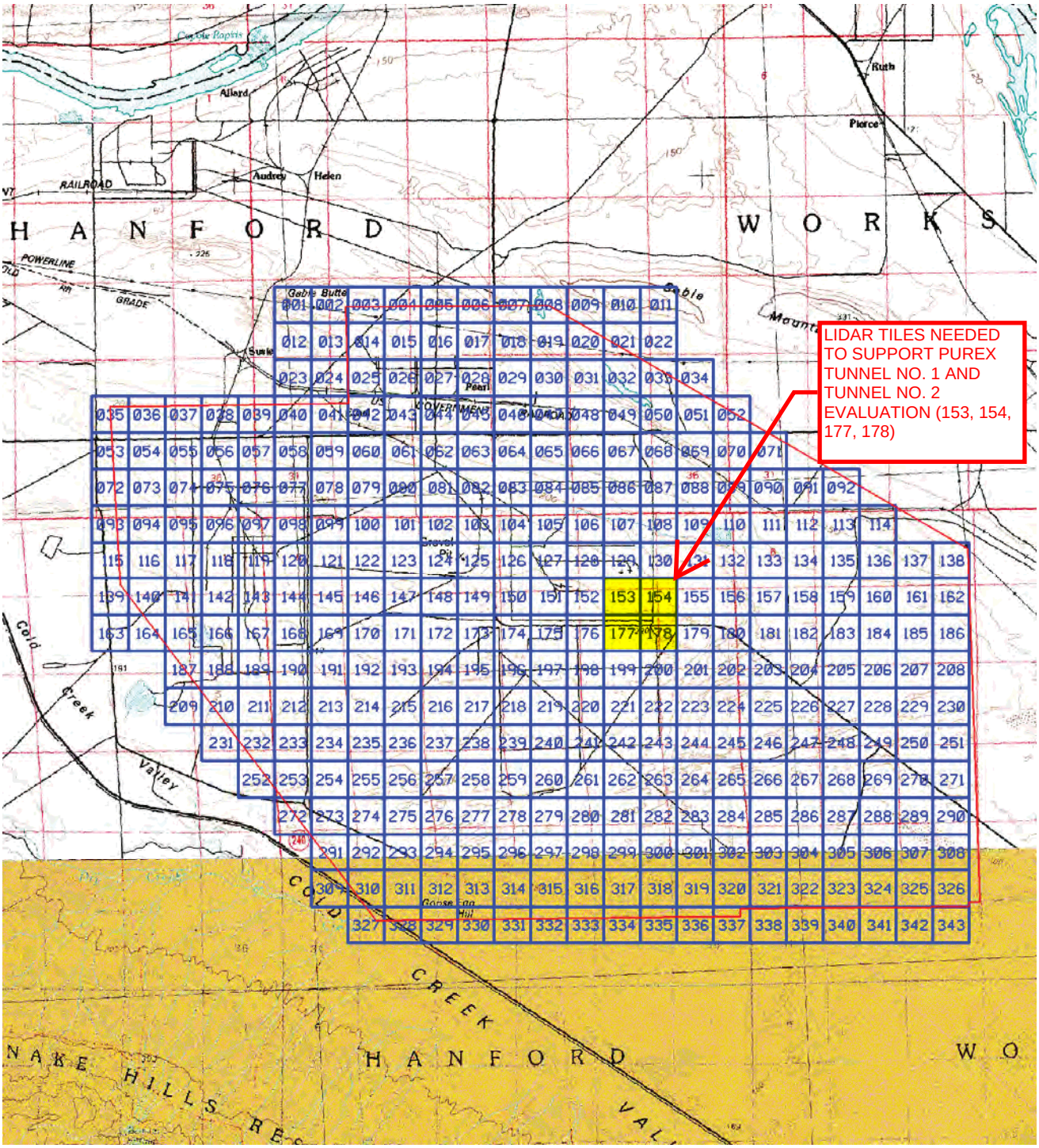

- **Number of Tiles within project area: 343**
- **Tile size: 750m**

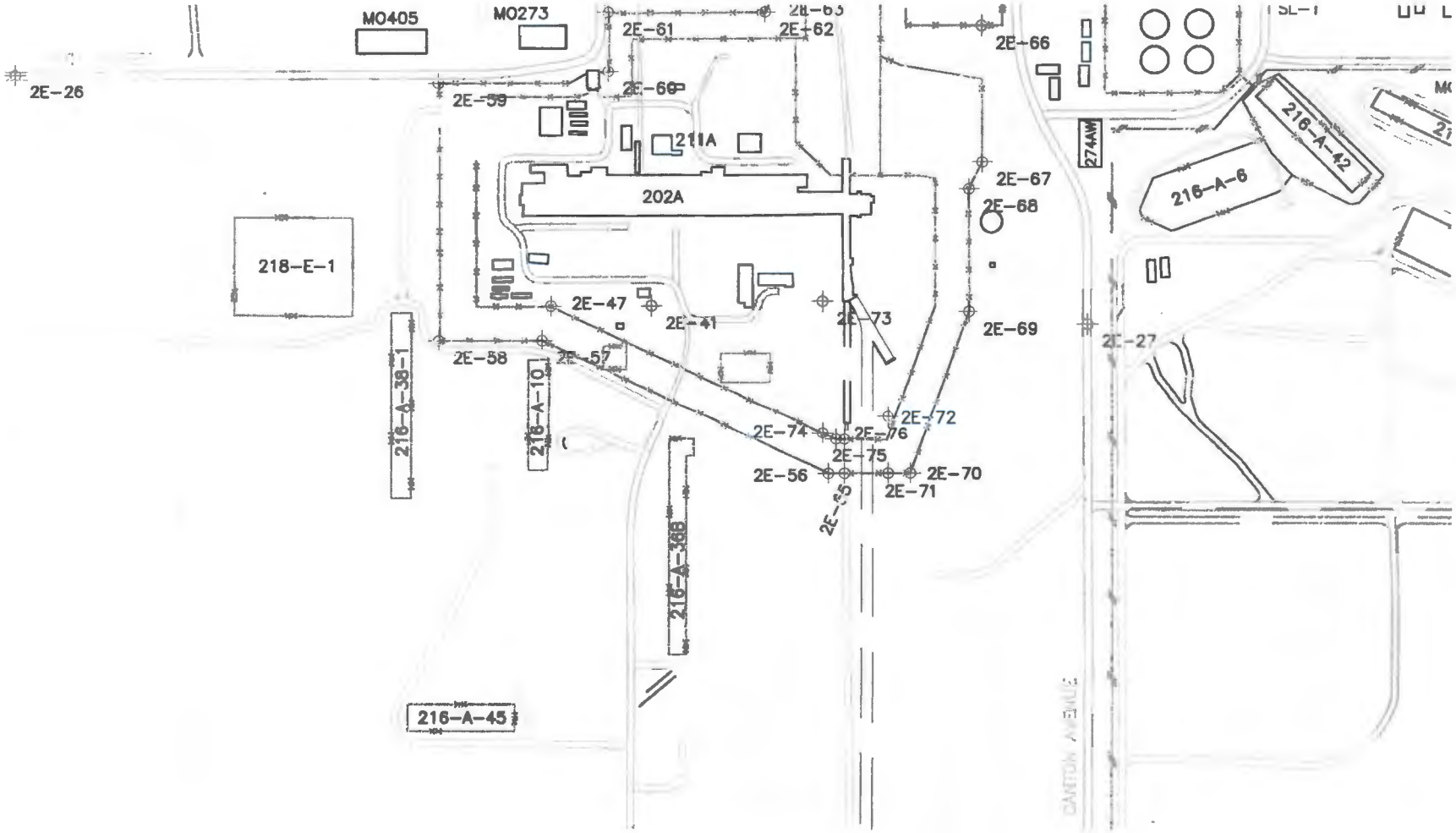
M0405
M0273
2E-26
2E-61
2E-62
2E-63
2E-66
2E-59
2E-60
211A
202A
274AW
216-A-42
216-A-6
2E-67
2E-68
218-E-1
2E-47
2E-41
2E-73
2E-69
2E-27
2E-58
2E-57
216-A-38-1
216-A-10
2E-74
2E-76
2E-72
2E-75
2E-56
2E-70
2E-71
2E-65
216-A-38B
216-A-45
DAVISON AVENUE

SURVEY MONUMENT DATA

STATION: 2E-41			LOCATION CODE: 200E	
HORIZONTAL			VERTICAL	
DATUM	COORDINATES		DATUM	HEIGHTS
	LATITUDE	LONGITUDE		ELLIPSOIDAL
NAD83(1991)	46°32'54.878454"	119°31'15.333733"	NAD83(1991)	196.737 m
	NORTHING	EASTING		ORTHOMETRIC
WCS83S(1991)	135,539.989 m	575,080.970 m	NAVD88	218.115 m
200E AREA (PUREX CONTROL)	N	W		ORTHOMETRIC
	39,557.00	48,600.00	NGVD29	712.216 usft
				ORTHOMETRIC
			200E (STAMPED)	711.99

DESCRIPTION

BRASS CAP MONUMENT ON SOUTH SIDE PUREX BLDG 202-A, INSIDE PUREX YARD FENCE. SOUTHEAST OF PIPEFITTERS SHOP, SOUTH OF STEAMLINE.

HORIZONTAL CONTROL

DATUM	INST./METHOD	MONUMENTS USED	LENGTH	MISCLOSURE	ADJUST
NAD 83/91	GPS/NETWORK	USACE GPS NET			TRIMNET
WCS83S/91	"	"			"
200E	— HELD STAMPED VALUES FOR PUREX CONTROL —			NOT TIED TO 200E NETWORK	

VERTICAL CONTROL

DATUM	INST./METHOD	MONUMENTS USED	LENGTH	MISC. (mm/√k)	ADJUST
NAVD 88	NA-2 / 3-WIRE	USACE VERTICAL NET			TRIMNET
NGVD29	"	"			"

REFERENCE

DATUM	FILE NO.	REQ. NO.	BERNOULLI	OTHER
NAD 83/91	2ESE-087	962-108		
200E (H&V)	HELD STAMPED VALUES FOR PUREX CONTROL			
NAVD 88	2ESE-087, 2EXX-001	971-032	PROJ 1 200E 88	L-272
NGVD29	"	"	" 200E 29	"

ch2m	Calculation Title: PUREX Tunnel 2 Engineering Evaluation	Project Number: 693839.BS Project: PUREX Tunnel 2 Client: CHPRC

Attachment C

Earth Pressure Recommendations

Tunnel 2 Soil Loading

Prepared by: M. Kacmarcik 6/12/2017
Reviewed by: Y. Bougataya 6/13/2017

Embankment Soil Unit Weight	110 pcf	*Range is 105 to 115*
Internal Friction Angle of Cover Soil	30 deg	
At-Rest Lateral Earth Pressure Coefficient	0.5 --	Horizontal ground surface
Snow Load	15 psf	Provided by Structural Engineer

Location of Wales around Tunnel Perimeter (angle from vertical):

Deg	Min	Sec	Dec Deg	Cum Deg	Loc
0	0	0	0.00	0.0	Crown
4	2	17	4.04	4.0	Wale No. 1
16	50	56	16.85	20.9	Wale No. 2
16	50	56	16.85	37.7	Wale No. 3
16	50	56	16.85	54.6	Wale No. 4
16	50	56	16.85	71.4	Wale No. 5
18	33	59	18.57	90.0	Springline

POSITION OF WALES AROUND PERIMETER OF TUNNEL (*adapted from 1962 design drawings*):

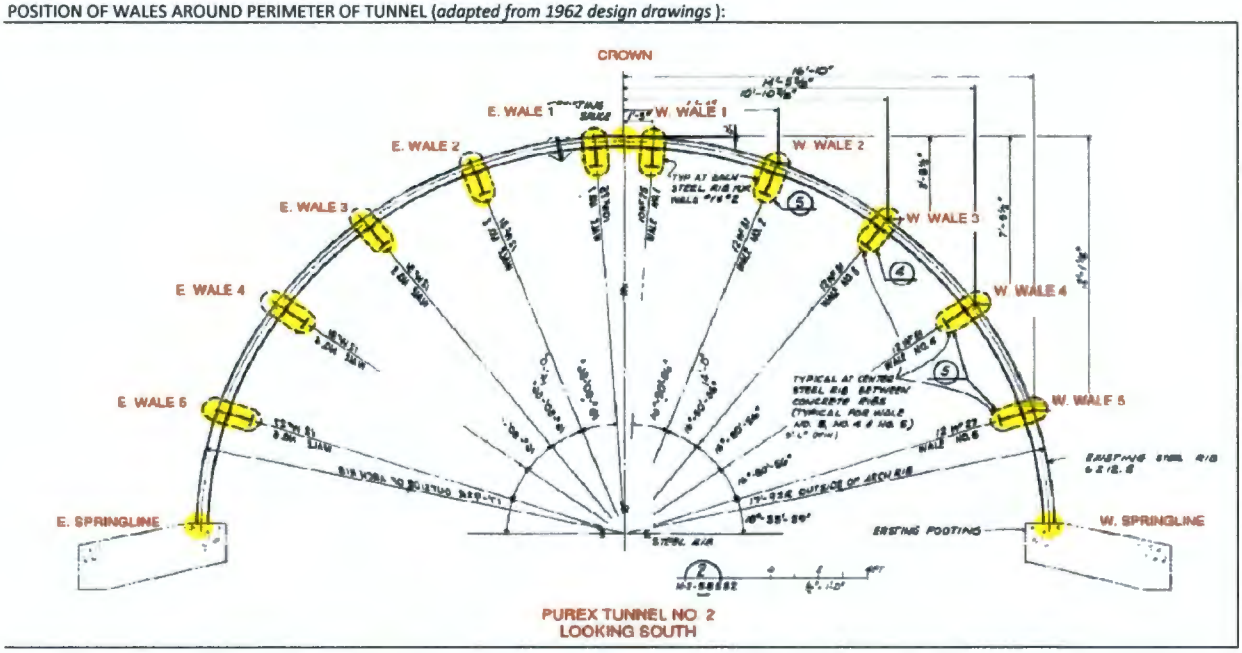

EXAMPLE OF SOIL PRESSURE DISTRIBUTION ON TUNNEL SEGMENTS PROVIDED BY STRUCTURAL ENGINEER:

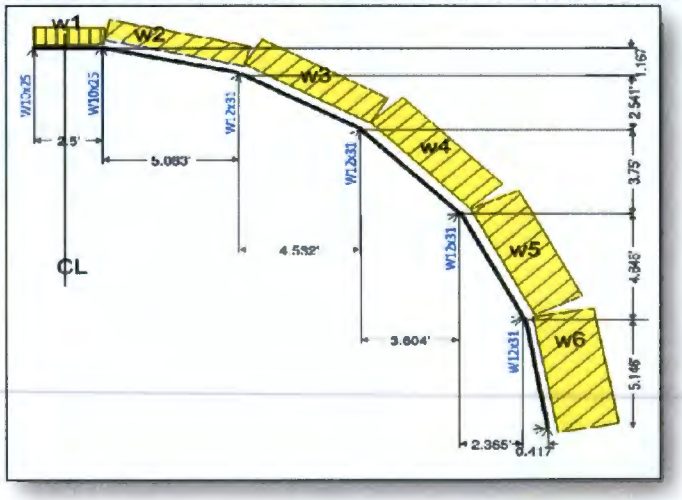

TUNNEL NO. 2

STA 3+32.34

Point No.	Height of Soil Fill (feet)	Vertical Effective Stress (psf)	Average Ground Surface Slope (deg from horizontal)	Adjusted At-Rest Earth Pressure Coefficient, Koi	Horizontal Lateral Earth Pressure (psf)	Angle from Horizontal (deg)	Angle from Horizontal (rad)	Normal Stress: Normal Stress component of Vertical Effective Stress (psf)	Normal Stress: Normal Stress component of Horizontal Lateral Earth Pressure (psf)	Normal Stress: Normal Stress Component of Snow Load due to Vertical and Horizontal Componentsl (psf)	Total Normal Stress on Tunnel at Wale(psf)
E. SPRINGLINE	23.7	2607.0	0.0	0.50	1303.5	0.0	0.00	0.0	1303.5	7.5	**1311.0**
E. WALE 5	18.4	2024.0	0.0	0.50	1012.0	18.6	0.32	644.4	959.3	11.9	**1615.7**
E. WALE 4	14.2	1562.0	0.0	0.50	781.0	35.4	0.62	905.2	636.5	14.8	**1556.5**
E. WALE 3	11.1	1221.0	0.0	0.50	610.5	52.3	0.91	965.6	373.6	16.5	**1355.7**
E. WALE 2	8.6	946.0	0.0	0.50	473.0	69.1	1.21	883.8	168.6	16.7	**1069.2**
E. WALE 1	7.4	814.0	0.0	0.50	407.0	86.0	1.50	812.0	28.7	15.5	**856.1**
CROWN	7.4	814.0	0.0	0.50	407.0	90.0	1.57	814.0	0.0	15.0	**829.0**
W. WALE 1	7.4	814.0	0.0	0.50	407.0	86.0	1.50	812.0	28.7	15.5	**856.1**
W. WALE 2	8.6	946.0	0.0	0.50	473.0	69.1	1.21	883.8	168.6	16.7	**1069.2**
W. WALE 3	10.0	1100.0	19.0	0.34	370.9	52.3	0.91	869.9	227.0	16.5	**1113.4**
W. WALE 4	12.5	1375.0	19.0	0.34	463.7	35.4	0.62	796.8	377.9	14.8	**1189.5**
W. WALE 5	16.2	1782.0	19.0	0.34	600.9	18.6	0.32	567.4	569.6	11.9	**1148.9**
W. SPRINGLINE	21.1	2321.0	19.0	0.34	782.7	0.0	0.00	0.0	782.7	7.5	**790.2**

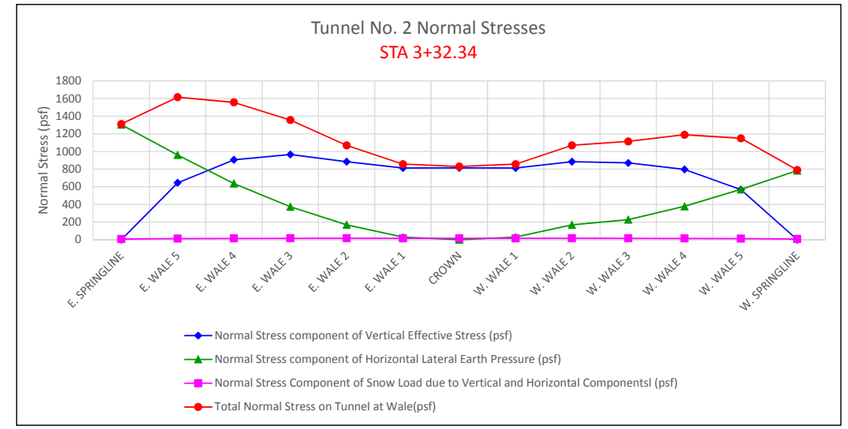

Segment	Average Orthogonal Soil Pressure (psf)
W6 EAST	1463.3
W5 EAST	1586.1
W4 EAST	1456.1
W3 EAST	1212.4
W2 EAST	962.6
W1	847.1
W2 WEST	962.6
W3 WEST	1091.3
W4 WEST	1151.4
W5 WEST	1169.2
W6 WEST	969.6

TUNNEL NO. 2

STA 4+00

Point No.	Height of Soil Fill (feet)	Vertical Effective Stress (psf)	Average Ground Surface Slope (deg from horizontal)	Adjusted At-Rest Earth Pressure Coefficient, Koi	Horizontal Lateral Earth Pressure (psf)	Angle from Horizontal (deg)	Angle from Horizontal (rad)	Normal Stress: Normal Stress component of Vertical Effective Stress (psf)	Normal Stress: Normal Stress component of Horizontal Lateral Earth Pressure (psf)	Normal Stress: Normal Stress Component of Snow Load due to Vertical and Horizontal Componentsl (psf)	Total Normal Stress on Tunnel at Wale(psf)
E. SPRINGLINE	18.6	2046.0	24.0	0.30	606.9	0.0	0.00	0.0	606.9	7.5	**614.4**
E. WALE 5	13.8	1518.0	24.0	0.30	450.3	18.6	0.32	483.3	426.9	11.9	**922.1**
E. WALE 4	10.3	1133.0	24.0	0.30	336.1	35.4	0.62	656.6	273.9	14.8	**945.3**
E. WALE 3	8.3	913.0	24.0	0.30	270.8	52.3	0.91	722.0	165.8	16.5	**904.2**
E. WALE 2	8.3	913.0	0.0	0.50	456.5	69.1	1.21	853.0	162.8	16.7	**1032.4**
E. WALE 1	8.3	913.0	0.0	0.50	456.5	86.0	1.50	910.7	32.1	15.5	**958.4**
CROWN	8.4	924.0	0.0	0.50	462.0	90.0	1.57	924.0	0.0	15.0	**939.0**
W. WALE 1	8.5	935.0	0.0	0.50	467.5	86.0	1.50	932.7	32.9	15.5	**981.1**
W. WALE 2	9.4	1034.0	0.0	0.50	517.0	69.1	1.21	966.1	184.3	16.7	**1167.1**
W. WALE 3	11.0	1210.0	21.0	0.32	388.2	52.3	0.91	956.9	237.6	16.5	**1210.9**
W. WALE 4	13.3	1463.0	21.0	0.32	469.4	35.4	0.62	847.8	382.5	14.8	**1245.1**
W. WALE 5	17.3	1903.0	21.0	0.32	610.5	18.6	0.32	605.9	578.7	11.9	**1196.5**
W. SPRINGLINE	22.1	2431.0	21.0	0.32	779.9	0.0	0.00	0.0	779.9	7.5	**787.4**

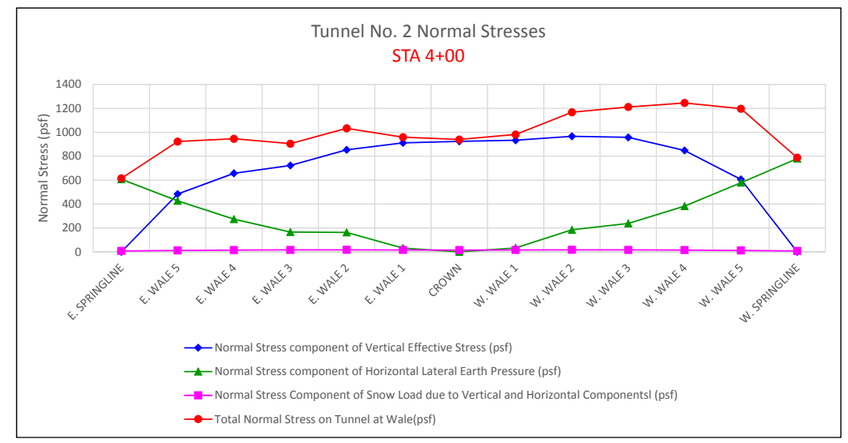

Segment	Average Orthogonal Soil Pressure (psf)
W6 EAST	768.2
W5 EAST	933.7
W4 EAST	924.8
W3 EAST	968.3
W2 EAST	995.4
W1	959.5
W2 WEST	1074.1
W3 WEST	1189.0
W4 WEST	1228.0
W5 WEST	1220.8
W6 WEST	992.0

TUNNEL NO. 2

STA 5+00

Point No.	Height of Soil Fill (feet)	Vertical Effective Stress (psf)	Average Ground Surface Slope (deg from horizontal)	Adjusted At-Rest Earth Pressure Coefficient, Koi	Horizontal Lateral Earth Pressure (psf)	Angle from Horizontal (deg)	Angle from Horizontal (rad)	Normal Stress: Normal Stress component of Vertical Effective Stress (psf)	Normal Stress: Normal Stress component of Horizontal Lateral Earth Pressure (psf)	Normal Stress: Normal Stress Component of Snow Load due to Vertical and Horizontal Componentsl (psf)	Total Normal Stress on Tunnel at Wale(psf)
E. SPRINGLINE	19.7	2167.0	22.0	0.31	677.6	0.0	0.00	0.0	677.6	7.5	**685.1**
E. WALE 5	15.0	1650.0	22.0	0.31	515.9	18.6	0.32	525.4	489.1	11.9	**1026.3**
E. WALE 4	11.6	1276.0	22.0	0.31	399.0	35.4	0.62	739.4	325.2	14.8	**1079.4**
E. WALE 3	9.3	1023.0	22.0	0.31	319.9	52.3	0.91	809.0	195.8	16.5	**1021.3**
E. WALE 2	8.8	968.0	0.0	0.50	484.0	69.1	1.21	904.4	172.6	16.7	**1093.6**
E. WALE 1	8.2	902.0	0.0	0.50	451.0	86.0	1.50	899.8	31.8	15.5	**947.0**
CROWN	8.1	891.0	0.0	0.50	445.5	90.0	1.57	891.0	0.0	15.0	**906.0**
W. WALE 1	8.2	902.0	0.0	0.50	451.0	86.0	1.50	899.8	31.8	15.5	**947.0**
W. WALE 2	9.4	1034.0	0.0	0.50	517.0	69.1	1.21	966.1	184.3	16.7	**1167.1**
W. WALE 3	10.8	1188.0	24.0	0.30	352.4	52.3	0.91	939.5	215.7	16.5	**1171.6**
W. WALE 4	12.8	1408.0	24.0	0.30	417.7	35.4	0.62	815.9	340.4	14.8	**1171.1**
W. WALE 5	16.3	1793.0	24.0	0.30	531.9	18.6	0.32	570.9	504.2	11.9	**1087.0**
W. SPRINGLINE	20.8	2288.0	24.0	0.30	678.7	0.0	0.00	0.0	678.7	7.5	**686.2**

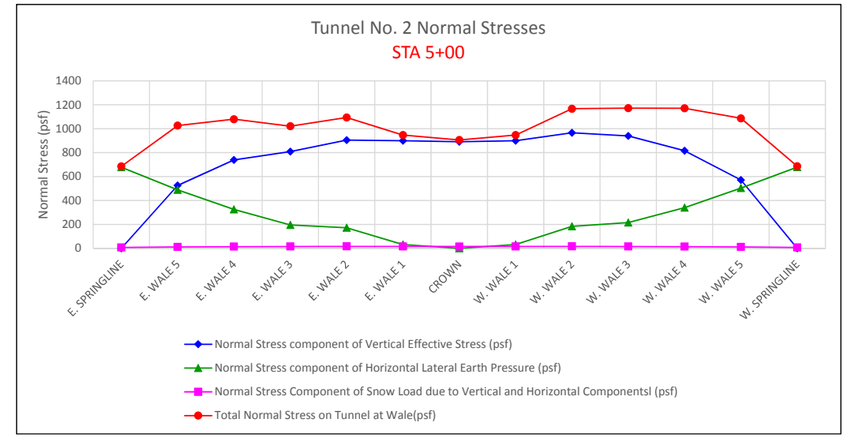

Segment	Average Orthogonal Soil Pressure (psf)
W6 EAST	855.7
W5 EAST	1052.9
W4 EAST	1050.3
W3 EAST	1057.4
W2 EAST	1020.3
W1	933.3
W2 WEST	1057.0
W3 WEST	1169.4
W4 WEST	1171.4
W5 WEST	1129.0
W6 WEST	886.6

TUNNEL NO. 2

STA 6+00

Point No.	Height of Soil Fill (feet)	Vertical Effective Stress (psf)	Average Ground Surface Slope (deg from horizontal)	Adjusted At-Rest Earth Pressure Coefficient, Koi	Horizontal Lateral Earth Pressure (psf)	Angle from Horizontal (deg)	Angle from Horizontal (rad)	Normal Stress: Normal Stress component of Vertical Effective Stress (psf)	Normal Stress: Normal Stress component of Horizontal Lateral Earth Pressure (psf)	Normal Stress: Normal Stress Component of Snow Load due to Vertical and Horizontal Componentsl (psf)	Total Normal Stress on Tunnel at Wale(psf)
E. SPRINGLINE	20.8	2288.0	22.0	0.31	715.5	0.0	0.00	0.0	715.5	7.5	**723.0**
E. WALE 5	16.0	1760.0	22.0	0.31	550.3	18.6	0.32	560.4	521.7	11.9	**1094.0**
E. WALE 4	12.4	1364.0	22.0	0.31	426.5	35.4	0.62	790.4	347.6	14.8	**1152.8**
E. WALE 3	10.2	1122.0	22.0	0.31	350.8	52.3	0.91	887.3	214.7	16.5	**1118.5**
E. WALE 2	9.5	1045.0	0.0	0.50	522.5	69.1	1.21	976.3	186.3	16.7	**1179.3**
E. WALE 1	8.9	979.0	0.0	0.50	489.5	86.0	1.50	976.6	34.5	15.5	**1026.5**
CROWN	8.9	979.0	0.0	0.50	489.5	90.0	1.57	979.0	0.0	15.0	**994.0**
W. WALE 1	8.9	979.0	0.0	0.50	489.5	86.0	1.50	976.6	34.5	15.5	**1026.5**
W. WALE 2	9.5	1045.0	0.0	0.50	522.5	69.1	1.21	976.3	186.3	16.7	**1179.3**
W. WALE 3	10.0	1100.0	24.0	0.30	326.3	52.3	0.91	869.9	199.7	16.5	**1086.1**
W. WALE 4	12.2	1342.0	24.0	0.30	398.1	35.4	0.62	777.7	324.4	14.8	**1116.9**
W. WALE 5	15.8	1738.0	24.0	0.30	515.5	18.6	0.32	553.4	488.7	11.9	**1054.0**
W. SPRINGLINE	20.5	2255.0	24.0	0.30	668.9	0.0	0.00	0.0	668.9	7.5	**676.4**

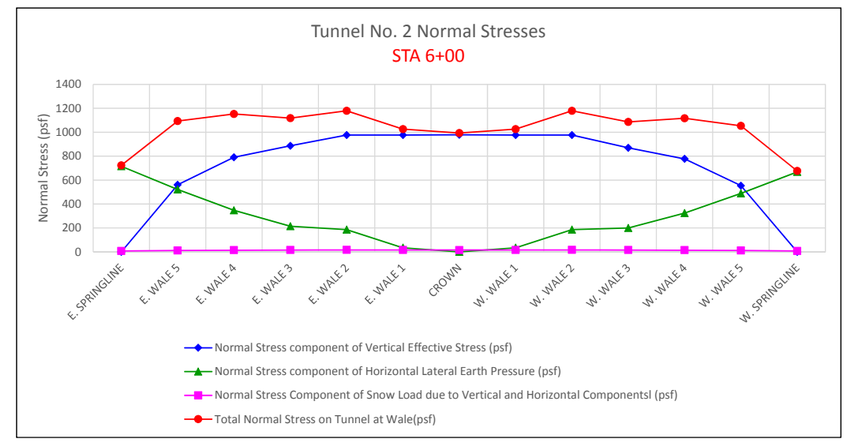

Segment	Average Orthogonal Soil Pressure (psf)
W6 EAST	908.5
W5 EAST	1123.4
W4 EAST	1135.7
W3 EAST	1148.9
W2 EAST	1102.9
W1	1015.7
W2 WEST	1102.9
W3 WEST	1132.7
W4 WEST	1101.5
W5 WEST	1085.5
W6 WEST	865.2

TUNNEL NO. 2

STA 7+00

Point No.	Height of Soil Fill (feet)	Vertical Effective Stress (psf)	Average Ground Surface Slope (deg from horizontal)	Adjusted At-Rest Earth Pressure Coefficient, Koi	Horizontal Lateral Earth Pressure (psf)	Angle from Horizontal (deg)	Angle from Horizontal (rad)	Normal Stress: Normal Stress component of Vertical Effective Stress (psf)	Normal Stress: Normal Stress component of Horizontal Lateral Earth Pressure (psf)	Normal Stress: Normal Stress Component of Snow Load due to Vertical and Horizontal Componentsl (psf)	Total Normal Stress on Tunnel at Wale(psf)
E. SPRINGLINE	21.1	2321.0	19.0	0.34	782.7	0.0	0.00	0.0	782.7	7.5	**790.2**
E. WALE 5	16.0	1760.0	19.0	0.34	593.5	18.6	0.32	560.4	562.6	11.9	**1134.9**
E. WALE 4	12.5	1375.0	19.0	0.34	463.7	35.4	0.62	796.8	377.9	14.8	**1189.5**
E. WALE 3	10.3	1133.0	19.0	0.34	382.1	52.3	0.91	896.0	233.8	16.5	**1146.3**
E. WALE 2	9.3	1023.0	0.0	0.50	511.5	69.1	1.21	955.8	182.4	16.7	**1154.8**
E. WALE 1	8.7	957.0	0.0	0.50	478.5	86.0	1.50	954.6	33.7	15.5	**1003.8**
CROWN	8.6	946.0	0.0	0.50	473.0	90.0	1.57	946.0	0.0	15.0	**961.0**
W. WALE 1	8.6	946.0	0.0	0.50	473.0	86.0	1.50	943.7	33.3	15.5	**992.5**
W. WALE 2	9.0	990.0	0.0	0.50	495.0	69.1	1.21	924.9	176.5	16.7	**1118.1**
W. WALE 3	10.4	1144.0	20.0	0.33	376.4	52.3	0.91	904.7	230.3	16.5	**1151.5**
W. WALE 4	12.5	1375.0	20.0	0.33	452.4	35.4	0.62	796.8	368.7	14.8	**1180.3**
W. WALE 5	16.1	1771.0	20.0	0.33	582.6	18.6	0.32	563.9	552.3	11.9	**1128.1**
W. SPRINGLINE	20.9	2299.0	20.0	0.33	756.3	0.0	0.00	0.0	756.3	7.5	**763.8**

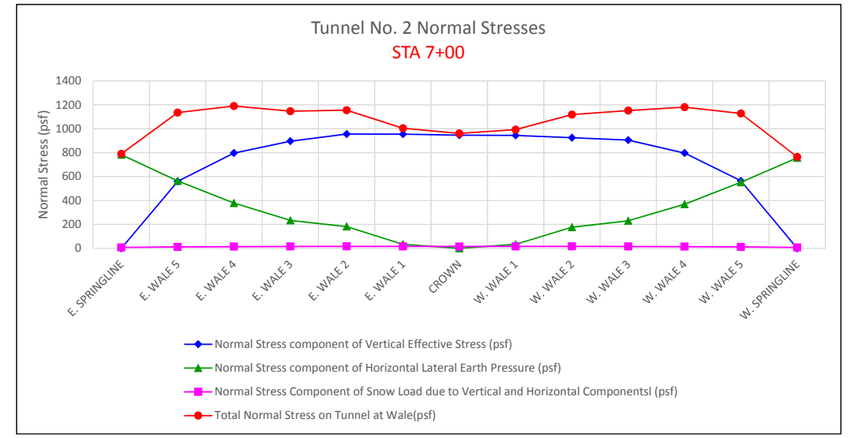

Segment	Average Orthogonal Soil Pressure (psf)
W6 EAST	962.5
W5 EAST	1162.2
W4 EAST	1167.9
W3 EAST	1150.6
W2 EAST	1079.3
W1	985.8
W2 WEST	1055.3
W3 WEST	1134.8
W4 WEST	1165.9
W5 WEST	1154.2
W6 WEST	946.0

TUNNEL NO. 2

STA 8+00

Point No.	Height of Soil Fill (feet)	Vertical Effective Stress (psf)	Average Ground Surface Slope (deg from horizontal)	Adjusted At-Rest Earth Pressure Coefficient, Koi	Horizontal Lateral Earth Pressure (psf)	Angle from Horizontal (deg)	Angle from Horizontal (rad)	Normal Stress: Normal Stress component of Vertical Effective Stress (psf)	Normal Stress: Normal Stress component of Horizontal Lateral Earth Pressure (psf)	Normal Stress: Normal Stress Component of Snow Load due to Vertical and Horizontal Componentsl (psf)	Total Normal Stress on Tunnel at Wale(psf)
E. SPRINGLINE	20.9	2299.0	27.0	0.27	627.6	0.0	0.00	0.0	627.6	7.5	**635.1**
E. WALE 5	16.2	1782.0	27.0	0.27	486.5	18.6	0.32	567.4	461.2	11.9	**1040.5**
E. WALE 4	12.8	1408.0	27.0	0.27	384.4	35.4	0.62	815.9	313.3	14.8	**1144.0**
E. WALE 3	10.9	1199.0	27.0	0.27	327.3	52.3	0.91	948.2	200.3	16.5	**1165.0**
E. WALE 2	9.7	1067.0	0.0	0.50	533.5	69.1	1.21	996.9	190.2	16.7	**1203.8**
E. WALE 1	8.9	979.0	0.0	0.50	489.5	86.0	1.50	976.6	34.5	15.5	**1026.5**
CROWN	8.8	968.0	0.0	0.50	484.0	90.0	1.57	968.0	0.0	15.0	**983.0**
W. WALE 1	8.8	968.0	0.0	0.50	484.0	86.0	1.50	965.6	34.1	15.5	**1015.2**
W. WALE 2	9.4	1034.0	0.0	0.50	517.0	69.1	1.21	966.1	184.3	16.7	**1167.1**
W. WALE 3	10.5	1155.0	18.0	0.35	399.0	52.3	0.91	913.4	244.2	16.5	**1174.1**
W. WALE 4	12.8	1408.0	18.0	0.35	486.5	35.4	0.62	815.9	396.4	14.8	**1227.2**
W. WALE 5	16.6	1826.0	18.0	0.35	630.9	18.6	0.32	581.4	598.0	11.9	**1191.3**
W. SPRINGLINE	21.6	2376.0	18.0	0.35	820.9	0.0	0.00	0.0	820.9	7.5	**828.4**

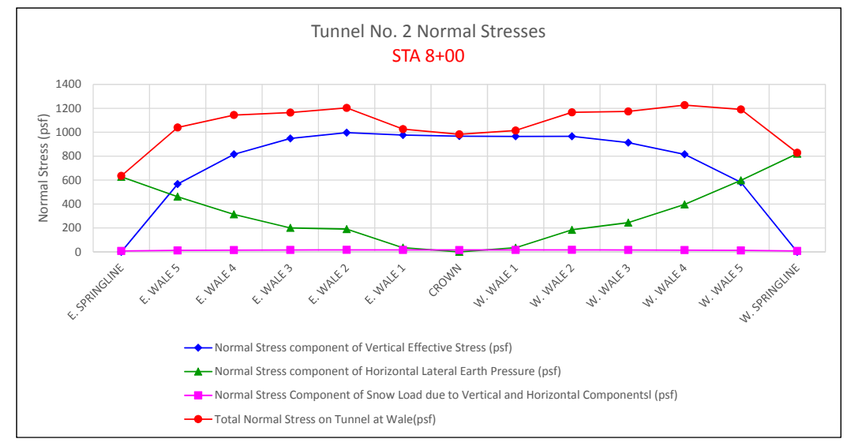

Segment	Average Orthogonal Soil Pressure (psf)
W6 EAST	837.8
W5 EAST	1092.2
W4 EAST	1154.5
W3 EAST	1184.4
W2 EAST	1115.2
W1	1008.2
W2 WEST	1091.1
W3 WEST	1170.6
W4 WEST	1200.6
W5 WEST	1209.3
W6 WEST	1009.9

TUNNEL NO. 2

STA 9+00

Point No.	Height of Soil Fill (feet)	Vertical Effective Stress (psf)	Average Ground Surface Slope (deg from horizontal)	Adjusted At-Rest Earth Pressure Coefficient, Koi	Horizontal Lateral Earth Pressure (psf)	Angle from Horizontal (deg)	Angle from Horizontal (rad)	Normal Stress: Normal Stress component of Vertical Effective Stress (psf)	Normal Stress: Normal Stress component of Horizontal Lateral Earth Pressure (psf)	Normal Stress: Normal Stress Component of Snow Load due to Vertical and Horizontal Componentsl (psf)	Total Normal Stress on Tunnel at Wale(psf)
E. SPRINGLINE	20.7	2277.0	24.0	0.30	675.4	0.0	0.00	0.0	675.4	7.5	**682.9**
E. WALE 5	16.0	1760.0	24.0	0.30	522.1	18.6	0.32	560.4	494.9	11.9	**1067.2**
E. WALE 4	12.4	1364.0	24.0	0.30	404.6	35.4	0.62	790.4	329.7	14.8	**1135.0**
E. WALE 3	10.4	1144.0	24.0	0.30	339.3	52.3	0.91	904.7	207.7	16.5	**1128.9**
E. WALE 2	9.5	1045.0	0.0	0.50	522.5	69.1	1.21	976.3	186.3	16.7	**1179.3**
E. WALE 1	8.8	968.0	0.0	0.50	484.0	86.0	1.50	965.6	34.1	15.5	**1015.2**
CROWN	8.7	957.0	0.0	0.50	478.5	90.0	1.57	957.0	0.0	15.0	**972.0**
W. WALE 1	8.7	957.0	0.0	0.50	478.5	86.0	1.50	954.6	33.7	15.5	**1003.8**
W. WALE 2	9.1	1001.0	0.0	0.50	500.5	69.1	1.21	935.2	178.4	16.7	**1130.3**
W. WALE 3	10.1	1111.0	19.0	0.34	374.6	52.3	0.91	878.6	229.3	16.5	**1124.4**
W. WALE 4	12.4	1364.0	19.0	0.34	460.0	35.4	0.62	790.4	374.9	14.8	**1180.1**
W. WALE 5	16.3	1793.0	19.0	0.34	604.6	18.6	0.32	570.9	573.2	11.9	**1155.9**
W. SPRINGLINE	21.1	2321.0	19.0	0.34	782.7	0.0	0.00	0.0	782.7	7.5	**790.2**

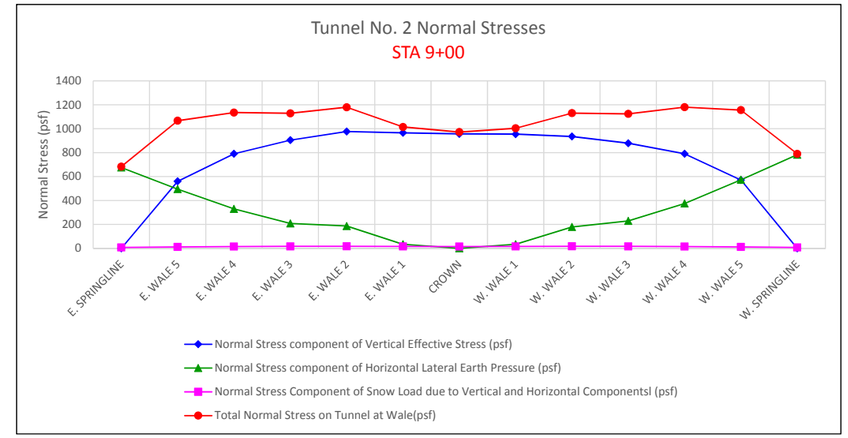

Segment	Average Orthogonal Soil Pressure (psf)
W6 EAST	875.1
W5 EAST	1101.1
W4 EAST	1131.9
W3 EAST	1154.1
W2 EAST	1097.2
W1	997.0
W2 WEST	1067.1
W3 WEST	1127.4
W4 WEST	1152.2
W5 WEST	1168.0
W6 WEST	973.1

TUNNEL NO. 2

STA 10+00

Point No.	Height of Soil Fill (feet)	Vertical Effective Stress (psf)	Average Ground Surface Slope (deg from horizontal)	Adjusted At-Rest Earth Pressure Coefficient, Koi	Horizontal Lateral Earth Pressure (psf)	Angle from Horizontal (deg)	Angle from Horizontal (rad)	Normal Stress: Normal Stress component of Vertical Effective Stress (psf)	Normal Stress: Normal Stress component of Horizontal Lateral Earth Pressure (psf)	Normal Stress: Normal Stress Component of Snow Load due to Vertical and Horizontal Componentsl (psf)	Total Normal Stress on Tunnel at Wale(psf)
E. SPRINGLINE	20.5	2255.0	23.0	0.30	687.0	0.0	0.00	0.0	687.0	7.5	**694.5**
E. WALE 5	15.7	1727.0	23.0	0.30	526.1	18.6	0.32	549.9	498.7	11.9	**1060.5**
E. WALE 4	12.0	1320.0	23.0	0.30	402.1	35.4	0.62	764.9	327.7	14.8	**1107.5**
E. WALE 3	10.1	1111.0	23.0	0.30	338.4	52.3	0.91	878.6	207.1	16.5	**1102.2**
E. WALE 2	9.3	1023.0	0.0	0.50	511.5	69.1	1.21	955.8	182.4	16.7	**1154.8**
E. WALE 1	8.6	946.0	0.0	0.50	473.0	86.0	1.50	943.7	33.3	15.5	**992.5**
CROWN	8.5	935.0	0.0	0.50	467.5	90.0	1.57	935.0	0.0	15.0	**950.0**
W. WALE 1	8.6	946.0	0.0	0.50	473.0	86.0	1.50	943.7	33.3	15.5	**992.5**
W. WALE 2	9.1	1001.0	0.0	0.50	500.5	69.1	1.21	935.2	178.4	16.7	**1130.3**
W. WALE 3	9.8	1078.0	18.0	0.35	372.4	52.3	0.91	852.5	227.9	16.5	**1096.9**
W. WALE 4	12.6	1386.0	18.0	0.35	478.9	35.4	0.62	803.2	390.3	14.8	**1208.2**
W. WALE 5	16.4	1804.0	18.0	0.35	623.3	18.6	0.32	574.4	590.8	11.9	**1177.1**
W. SPRINGLINE	21.4	2354.0	18.0	0.35	813.3	0.0	0.00	0.0	813.3	7.5	**820.8**

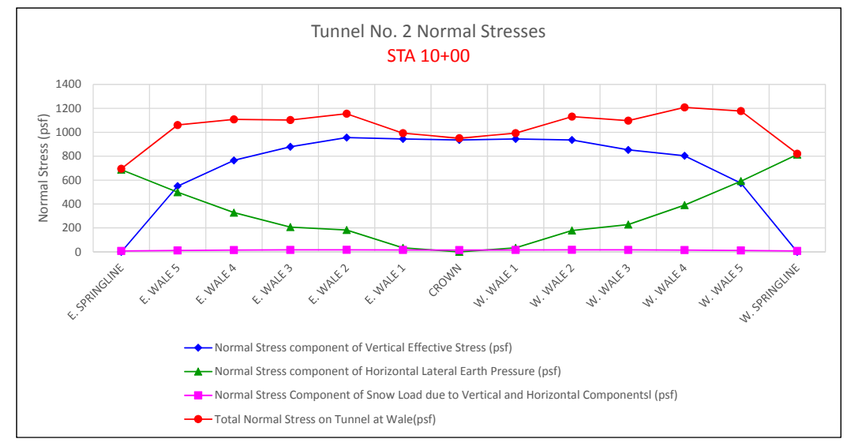

Segment	Average Orthogonal Soil Pressure (psf)
W6 EAST	877.5
W5 EAST	1084.0
W4 EAST	1104.8
W3 EAST	1128.5
W2 EAST	1073.6
W1	978.3
W2 WEST	1061.4
W3 WEST	1113.6
W4 WEST	1152.6
W5 WEST	1192.7
W6 WEST	999.0

TUNNEL NO. 2

STA 11+00

Point No.	Height of Soil Fill (feet)	Vertical Effective Stress (psf)	Average Ground Surface Slope (deg from horizontal)	Adjusted At-Rest Earth Pressure Coefficient, Koi	Horizontal Lateral Earth Pressure (psf)	Angle from Horizontal (deg)	Angle from Horizontal (rad)	Normal Stress: Normal Stress component of Vertical Effective Stress (psf)	Normal Stress: Normal Stress component of Horizontal Lateral Earth Pressure (psf)	Normal Stress: Normal Stress Component of Snow Load due to Vertical and Horizontal Componentsl (psf)	Total Normal Stress on Tunnel at Wale(psf)
E. SPRINGLINE	20.0	2200.0	24.0	0.30	652.6	0.0	0.00	0.0	652.6	7.5	**660.1**
E. WALE 5	15.2	1672.0	24.0	0.30	496.0	18.6	0.32	532.4	470.2	11.9	**1014.4**
E. WALE 4	11.5	1265.0	24.0	0.30	375.2	35.4	0.62	733.1	305.8	14.8	**1053.7**
E. WALE 3	9.9	1089.0	24.0	0.30	323.0	52.3	0.91	861.2	197.7	16.5	**1075.4**
E. WALE 2	9.1	1001.0	0.0	0.50	500.5	69.1	1.21	935.2	178.4	16.7	**1130.3**
E. WALE 1	8.1	891.0	0.0	0.50	445.5	86.0	1.50	888.8	31.4	15.5	**935.7**
CROWN	8.2	902.0	0.0	0.50	451.0	90.0	1.57	902.0	0.0	15.0	**917.0**
W. WALE 1	8.3	913.0	0.0	0.50	456.5	86.0	1.50	910.7	32.1	15.5	**958.4**
W. WALE 2	8.9	979.0	0.0	0.50	489.5	69.1	1.21	914.7	174.5	16.7	**1105.9**
W. WALE 3	9.7	1067.0	21.0	0.32	342.3	52.3	0.91	843.8	209.5	16.5	**1069.8**
W. WALE 4	11.9	1309.0	21.0	0.32	419.9	35.4	0.62	758.6	342.2	14.8	**1115.6**
W. WALE 5	15.6	1716.0	21.0	0.32	550.5	18.6	0.32	546.4	521.9	11.9	**1080.1**
W. SPRINGLINE	20.5	2255.0	21.0	0.32	723.4	0.0	0.00	0.0	723.4	7.5	**730.9**

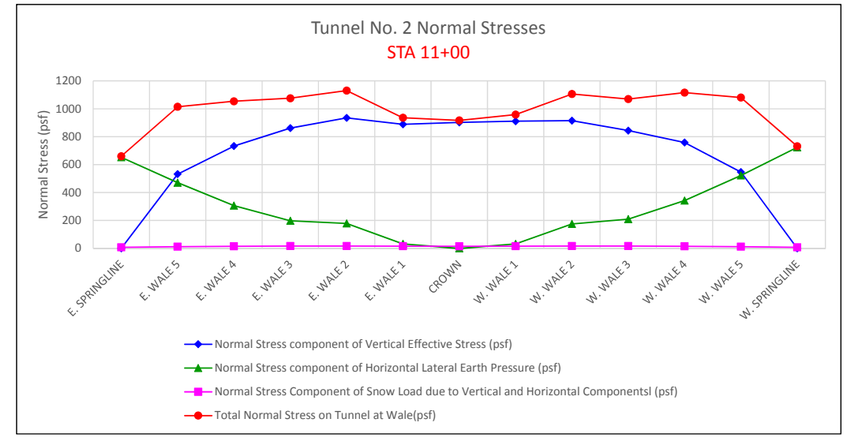

Segment	Average Orthogonal Soil Pressure (psf)
W6 EAST	837.3
W5 EAST	1034.0
W4 EAST	1064.5
W3 EAST	1102.9
W2 EAST	1033.0
W1	937.0
W2 WEST	1032.1
W3 WEST	1087.8
W4 WEST	1092.7
W5 WEST	1097.9
W6 WEST	905.5

TUNNEL NO. 2

STA 12+00

Point No.	Height of Soil Fill (feet)	Vertical Effective Stress (psf)	Average Ground Surface Slope (deg from horizontal)	Adjusted At-Rest Earth Pressure Coefficient, Koi	Horizontal Lateral Earth Pressure (psf)	Angle from Horizontal (deg)	Angle from Horizontal (rad)	Normal Stress: Normal Stress component of Vertical Effective Stress (psf)	Normal Stress: Normal Stress component of Horizontal Lateral Earth Pressure (psf)	Normal Stress: Normal Stress Component of Snow Load due to Vertical and Horizontal Componentsl (psf)	Total Normal Stress on Tunnel at Wale(psf)
E. SPRINGLINE	20.6	2266.0	22.0	0.31	708.6	0.0	0.00	0.0	708.6	7.5	**716.1**
E. WALE 5	15.8	1738.0	22.0	0.31	543.5	18.6	0.32	553.4	515.2	11.9	**1080.5**
E. WALE 4	12.3	1353.0	22.0	0.31	423.1	35.4	0.62	784.1	344.8	14.8	**1143.7**
E. WALE 3	9.8	1078.0	22.0	0.31	337.1	52.3	0.91	852.5	206.3	16.5	**1075.3**
E. WALE 2	9.2	1012.0	0.0	0.50	506.0	69.1	1.21	945.5	180.4	16.7	**1142.6**
E. WALE 1	7.9	869.0	0.0	0.50	434.5	86.0	1.50	866.8	30.6	15.5	**912.9**
CROWN	7.7	847.0	0.0	0.50	423.5	90.0	1.57	847.0	0.0	15.0	**862.0**
W. WALE 1	7.9	869.0	0.0	0.50	434.5	86.0	1.50	866.8	30.6	15.5	**912.9**
W. WALE 2	8.6	946.0	0.0	0.50	473.0	69.1	1.21	883.8	168.6	16.7	**1069.2**
W. WALE 3	9.3	1023.0	24.0	0.30	303.5	52.3	0.91	809.0	185.7	16.5	**1011.2**
W. WALE 4	11.4	1254.0	24.0	0.30	372.0	35.4	0.62	726.7	303.2	14.8	**1044.6**
W. WALE 5	15.1	1661.0	24.0	0.30	492.7	18.6	0.32	528.9	467.1	11.9	**1007.8**
W. SPRINGLINE	19.8	2178.0	24.0	0.30	646.1	0.0	0.00	0.0	646.1	7.5	**653.6**

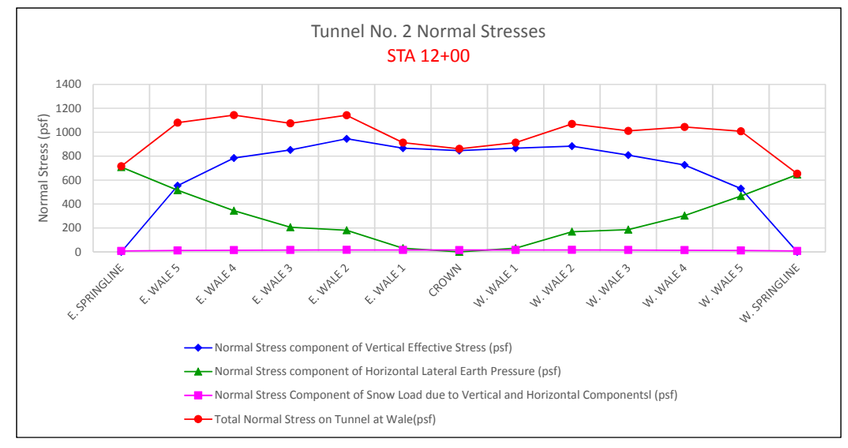

Segment	Average Orthogonal Soil Pressure (psf)
W6 EAST	898.3
W5 EAST	1112.1
W4 EAST	1109.5
W3 EAST	1108.9
W2 EAST	1027.8
W1	896.0
W2 WEST	991.0
W3 WEST	1040.2
W4 WEST	1027.9
W5 WEST	1026.2
W6 WEST	830.7

TUNNEL NO. 2

STA 13+00

Point No.	Height of Soil Fill (feet)	Vertical Effective Stress (psf)	Average Ground Surface Slope (deg from horizontal)	Adjusted At-Rest Earth Pressure Coefficient, Koi	Horizontal Lateral Earth Pressure (psf)	Angle from Horizontal (deg)	Angle from Horizontal (rad)	Normal Stress: Normal Stress component of Vertical Effective Stress (psf)	Normal Stress: Normal Stress component of Horizontal Lateral Earth Pressure (psf)	Normal Stress: Normal Stress Component of Snow Load due to Vertical and Horizontal Componentsl (psf)	Total Normal Stress on Tunnel at Wale(psf)
E. SPRINGLINE	19.7	2167.0	25.0	0.29	625.6	0.0	0.00	0.0	625.6	7.5	**633.1**
E. WALE 5	15.0	1650.0	25.0	0.29	476.3	18.6	0.32	525.4	451.5	11.9	**988.8**
E. WALE 4	11.4	1254.0	25.0	0.29	362.0	35.4	0.62	726.7	295.0	14.8	**1036.5**
E. WALE 3	9.5	1045.0	25.0	0.29	301.7	52.3	0.91	826.4	184.6	16.5	**1027.5**
E. WALE 2	8.7	957.0	0.0	0.50	478.5	69.1	1.21	894.1	170.6	16.7	**1081.4**
E. WALE 1	8.0	880.0	0.0	0.50	440.0	86.0	1.50	877.8	31.0	15.5	**924.3**
CROWN	8.0	880.0	0.0	0.50	440.0	90.0	1.57	880.0	0.0	15.0	**895.0**
W. WALE 1	7.9	869.0	0.0	0.50	434.5	86.0	1.50	866.8	30.6	15.5	**912.9**
W. WALE 2	8.8	968.0	0.0	0.50	484.0	69.1	1.21	904.4	172.6	16.7	**1093.6**
W. WALE 3	9.3	1023.0	27.0	0.27	279.3	52.3	0.91	809.0	170.9	16.5	**996.4**
W. WALE 4	11.1	1221.0	27.0	0.27	333.3	35.4	0.62	707.6	271.7	14.8	**994.0**
W. WALE 5	14.4	1584.0	27.0	0.27	432.4	18.6	0.32	504.4	409.9	11.9	**926.2**
W. SPRINGLINE	19.2	2112.0	27.0	0.27	576.6	0.0	0.00	0.0	576.6	7.5	**584.1**

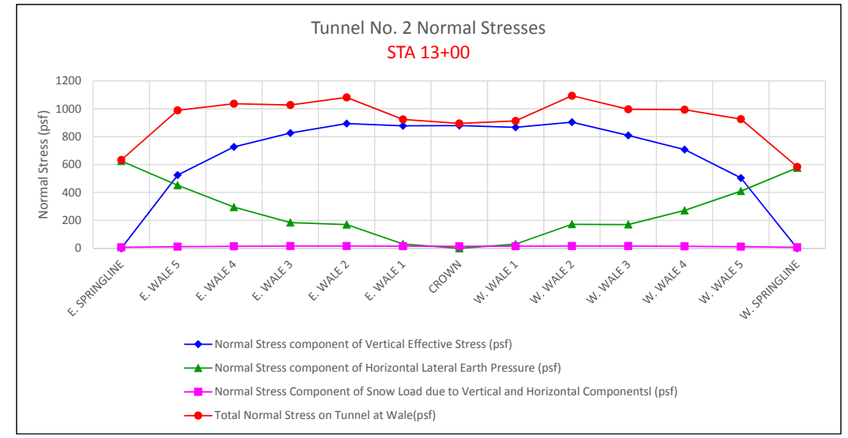

Segment	Average Orthogonal Soil Pressure (psf)
W6 EAST	810.9
W5 EAST	1012.7
W4 EAST	1032.0
W3 EAST	1054.5
W2 EAST	1002.8
W1	910.7
W2 WEST	1003.3
W3 WEST	1045.0
W4 WEST	995.2
W5 WEST	960.1
W6 WEST	755.1

TUNNEL NO. 2

STA 14+00

Point No.	Height of Soil Fill (feet)	Vertical Effective Stress (psf)	Average Ground Surface Slope (deg from horizontal)	Adjusted At-Rest Earth Pressure Coefficient, Koi	Horizontal Lateral Earth Pressure (psf)	Angle from Horizontal (deg)	Angle from Horizontal (rad)	Normal Stress: Normal Stress component of Vertical Effective Stress (psf)	Normal Stress: Normal Stress component of Horizontal Lateral Earth Pressure (psf)	Normal Stress: Normal Stress Component of Snow Load due to Vertical and Horizontal Componentsl (psf)	Total Normal Stress on Tunnel at Wale(psf)
E. SPRINGLINE	19.9	2189.0	25.0	0.29	631.9	0.0	0.00	0.0	631.9	7.5	**639.4**
E. WALE 5	15.2	1672.0	25.0	0.29	482.7	18.6	0.32	532.4	457.6	11.9	**1001.8**
E. WALE 4	11.8	1298.0	25.0	0.29	374.7	35.4	0.62	752.2	305.4	14.8	**1072.4**
E. WALE 3	9.9	1089.0	25.0	0.29	314.4	52.3	0.91	861.2	192.4	16.5	**1070.1**
E. WALE 2	9.0	990.0	0.0	0.50	495.0	69.1	1.21	924.9	176.5	16.7	**1118.1**
E. WALE 1	8.0	880.0	0.0	0.50	440.0	86.0	1.50	877.8	31.0	15.5	**924.3**
CROWN	8.0	880.0	0.0	0.50	440.0	90.0	1.57	880.0	0.0	15.0	**895.0**
W. WALE 1	8.0	880.0	0.0	0.50	440.0	86.0	1.50	877.8	31.0	15.5	**924.3**
W. WALE 2	8.4	924.0	0.0	0.50	462.0	69.1	1.21	863.3	164.7	16.7	**1044.7**
W. WALE 3	9.0	990.0	23.0	0.30	301.6	52.3	0.91	782.9	184.6	16.5	**984.0**
W. WALE 4	10.8	1188.0	23.0	0.30	361.9	35.4	0.62	688.4	294.9	14.8	**998.2**
W. WALE 5	14.5	1595.0	23.0	0.30	485.9	18.6	0.32	507.9	460.6	11.9	**980.3**
W. SPRINGLINE	19.4	2134.0	23.0	0.30	650.1	0.0	0.00	0.0	650.1	7.5	**657.6**

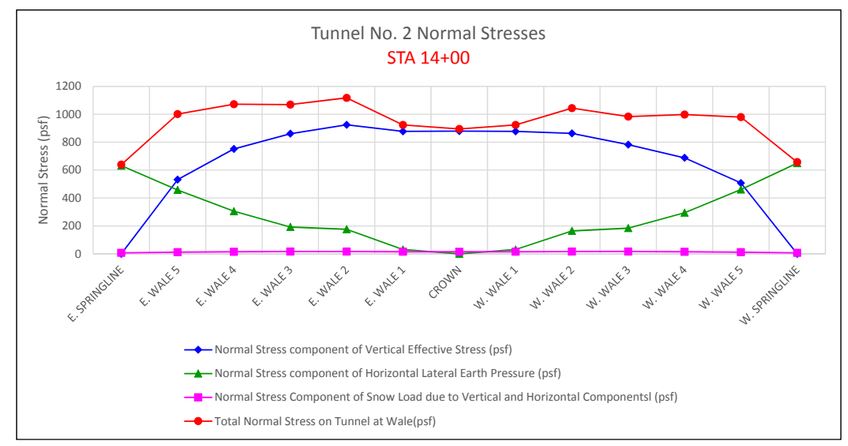

Segment	Average Orthogonal Soil Pressure (psf)
W6 EAST	820.6
W5 EAST	1037.1
W4 EAST	1071.2
W3 EAST	1094.1
W2 EAST	1021.2
W1	914.5
W2 WEST	984.5
W3 WEST	1014.3
W4 WEST	991.1
W5 WEST	989.3
W6 WEST	819.0

TUNNEL NO. 2

STA 15+00

Point No.	Height of Soil Fill (feet)	Vertical Effective Stress (psf)	Average Ground Surface Slope (deg from horizontal)	Adjusted At-Rest Earth Pressure Coefficient, Koi	Horizontal Lateral Earth Pressure (psf)	Angle from Horizontal (deg)	Angle from Horizontal (rad)	Normal Stress: Normal Stress component of Vertical Effective Stress (psf)	Normal Stress: Normal Stress component of Horizontal Lateral Earth Pressure (psf)	Normal Stress: Normal Stress Component of Snow Load due to Vertical and Horizontal Componentsl (psf)	Normal Stress: Total Normal Stress on Tunnel at Wale(psf)
E. SPRINGLINE	19.8	2178.0	26.0	0.28	611.6	0.0	0.00	0.0	611.6	7.5	**619.1**
E. WALE 5	15.2	1672.0	26.0	0.28	469.5	18.6	0.32	532.4	445.1	11.9	**989.3**
E. WALE 4	11.8	1298.0	26.0	0.28	364.5	35.4	0.62	752.2	297.1	14.8	**1064.0**
E. WALE 3	9.8	1078.0	26.0	0.28	302.7	52.3	0.91	852.5	185.3	16.5	**1054.2**
E. WALE 2	9.0	990.0	0.0	0.50	495.0	69.1	1.21	924.9	176.5	16.7	**1118.1**
E. WALE 1	8.1	891.0	0.0	0.50	445.5	86.0	1.50	888.8	31.4	15.5	**935.7**
CROWN	8.1	891.0	0.0	0.50	445.5	90.0	1.57	891.0	0.0	15.0	**906.0**
W. WALE 1	8.1	891.0	0.0	0.50	445.5	86.0	1.50	888.8	31.4	15.5	**935.7**
W. WALE 2	8.7	957.0	0.0	0.50	478.5	69.1	1.21	894.1	170.6	16.7	**1081.4**
W. WALE 3	9.2	1012.0	24.0	0.30	300.2	52.3	0.91	800.3	183.7	16.5	**1000.5**
W. WALE 4	11.2	1232.0	24.0	0.30	365.5	35.4	0.62	713.9	297.8	14.8	**1026.6**
W. WALE 5	14.9	1639.0	24.0	0.30	486.2	18.6	0.32	521.9	460.9	11.9	**994.6**
W. SPRINGLINE	19.8	2178.0	24.0	0.30	646.1	0.0	0.00	0.0	646.1	7.5	**653.6**

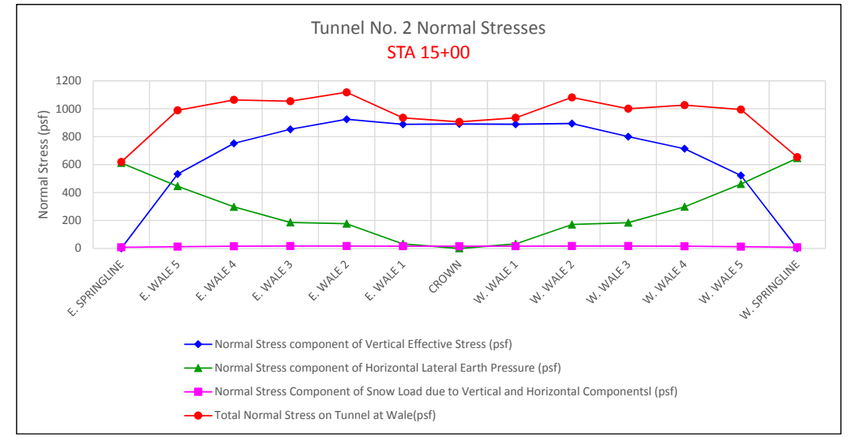

Segment	Average Orthogonal Soil Pressure (psf)
W6 EAST	804.2
W5 EAST	1026.7
W4 EAST	1059.1
W3 EAST	1086.2
W2 EAST	1026.9
W1	925.8
W2 WEST	1008.5
W3 WEST	1041.0
W4 WEST	1013.5
W5 WEST	1010.6
W6 WEST	824.1

TUNNEL NO. 2

STA 16+00

Point No.	Height of Soil Fill (feet)	Vertical Effective Stress (psf)	Average Ground Surface Slope (deg from horizontal)	Adjusted At-Rest Earth Pressure Coefficient, Koi	Horizontal Lateral Earth Pressure (psf)	Angle from Horizontal (deg)	Angle from Horizontal (rad)	Normal Stress: Normal Stress component of Vertical Effective Stress (psf)	Normal Stress: Normal Stress component of Horizontal Lateral Earth Pressure (psf)	Normal Stress: Normal Stress Component of Snow Load due to Vertical and Horizontal Componentsl (psf)	Normal Stress: Total Normal Stress on Tunnel at Wale(psf)
E. SPRINGLINE	20.2	2222.0	24.0	0.30	659.1	0.0	0.00	0.0	659.1	7.5	**666.6**
E. WALE 5	15.4	1694.0	24.0	0.30	502.5	18.6	0.32	539.4	476.3	11.9	**1027.6**
E. WALE 4	12.0	1320.0	24.0	0.30	391.6	35.4	0.62	764.9	319.1	14.8	**1098.8**
E. WALE 3	9.8	1078.0	24.0	0.30	319.8	52.3	0.91	852.5	195.7	16.5	**1064.7**
E. WALE 2	8.9	979.0	0.0	0.50	489.5	69.1	1.21	914.7	174.5	16.7	**1105.9**
E. WALE 1	8.1	891.0	0.0	0.50	445.5	86.0	1.50	888.8	31.4	15.5	**935.7**
CROWN	8.0	880.0	0.0	0.50	440.0	90.0	1.57	880.0	0.0	15.0	**895.0**
W. WALE 1	8.0	880.0	0.0	0.50	440.0	86.0	1.50	877.8	31.0	15.5	**924.3**
W. WALE 2	8.5	935.0	0.0	0.50	467.5	69.1	1.21	873.6	166.7	16.7	**1056.9**
W. WALE 3	9.4	1034.0	23.0	0.30	315.0	52.3	0.91	817.7	192.8	16.5	**1027.0**
W. WALE 4	11.3	1243.0	23.0	0.30	378.7	35.4	0.62	720.3	308.6	14.8	**1043.7**
W. WALE 5	14.8	1628.0	23.0	0.30	495.9	18.6	0.32	518.4	470.1	11.9	**1000.4**
W. SPRINGLINE	19.7	2167.0	23.0	0.30	660.1	0.0	0.00	0.0	660.1	7.5	**667.6**

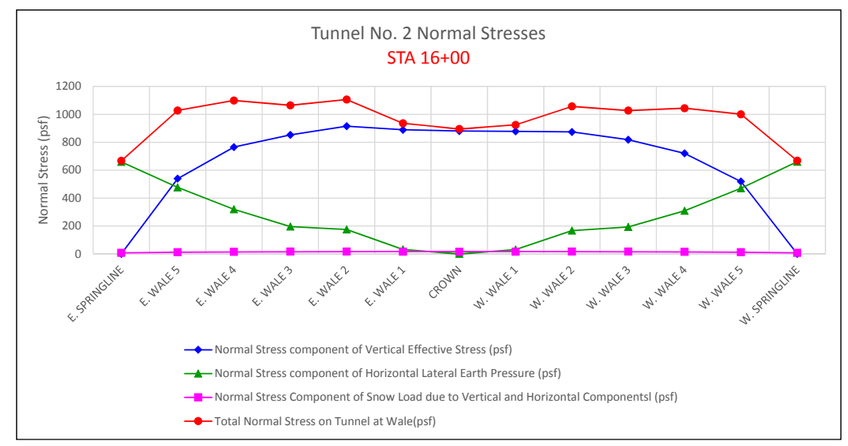

Segment	Average Orthogonal Soil Pressure (psf)
W6 EAST	847.1
W5 EAST	1063.2
W4 EAST	1081.8
W3 EAST	1085.3
W2 EAST	1020.8
W1	918.3
W2 WEST	990.6
W3 WEST	1041.9
W4 WEST	1035.3
W5 WEST	1022.0
W6 WEST	834.0

TUNNEL NO. 2

STA 17+00

Point No.	Height of Soil Fill (feet)	Vertical Effective Stress (psf)	Average Ground Surface Slope (deg from horizontal)	Adjusted At-Rest Earth Pressure Coefficient, Koi	Horizontal Lateral Earth Pressure (psf)	Angle from Horizontal (deg)	Angle from Horizontal (rad)	Normal Stress: Normal Stress component of Vertical Effective Stress (psf)	Normal Stress: Normal Stress component of Horizontal Lateral Earth Pressure (psf)	Normal Stress: Normal Stress Component of Snow Load due to Vertical and Horizontal Componentsl (psf)	Total Normal Stress on Tunnel at Wale(psf)
E. SPRINGLINE	21.6	2376.0	21.0	0.32	762.3	0.0	0.00	0.0	762.3	7.5	**769.8**
E. WALE 5	17.0	1870.0	21.0	0.32	599.9	18.6	0.32	595.4	568.7	11.9	**1176.0**
E. WALE 4	13.2	1452.0	21.0	0.32	465.8	35.4	0.62	841.4	379.6	14.8	**1235.9**
E. WALE 3	10.9	1199.0	21.0	0.32	384.7	52.3	0.91	948.2	235.4	16.5	**1200.1**
E. WALE 2	9.3	1023.0	0.0	0.50	511.5	69.1	1.21	955.8	182.4	16.7	**1154.8**
E. WALE 1	8.3	913.0	0.0	0.50	456.5	86.0	1.50	910.7	32.1	15.5	**958.4**
CROWN	8.3	913.0	0.0	0.50	456.5	90.0	1.57	913.0	0.0	15.0	**928.0**
W. WALE 1	8.3	913.0	0.0	0.50	456.5	86.0	1.50	910.7	32.1	15.5	**958.4**
W. WALE 2	8.4	924.0	0.0	0.50	462.0	69.1	1.21	863.3	164.7	16.7	**1044.7**
W. WALE 3	9.4	1034.0	19.0	0.34	348.7	52.3	0.91	817.7	213.4	16.5	**1047.6**
W. WALE 4	12.0	1320.0	19.0	0.34	445.1	35.4	0.62	764.9	362.8	14.8	**1142.5**
W. WALE 5	16.0	1760.0	19.0	0.34	593.5	18.6	0.32	560.4	562.6	11.9	**1134.9**
W. SPRINGLINE	20.7	2277.0	19.0	0.34	767.8	0.0	0.00	0.0	767.8	7.5	**775.3**

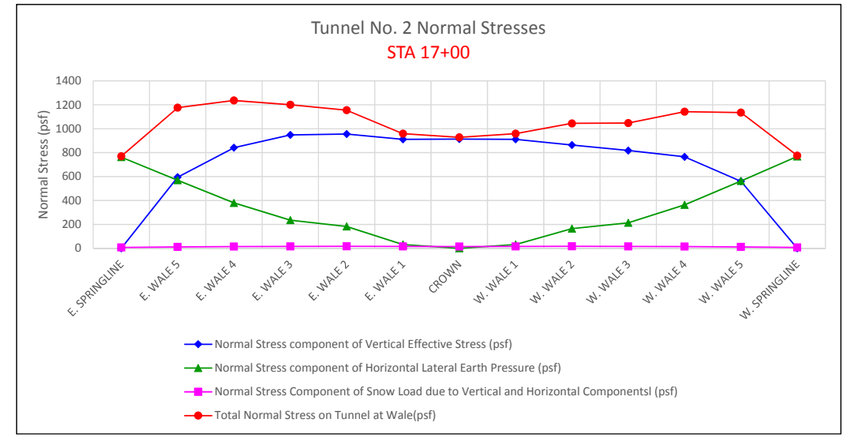

Segment	Average Orthogonal Soil Pressure (psf)
W6 EAST	972.9
W5 EAST	1205.9
W4 EAST	1218.0
W3 EAST	1177.5
W2 EAST	1056.6
W1	948.2
W2 WEST	1001.5
W3 WEST	1046.1
W4 WEST	1095.0
W5 WEST	1138.7
W6 WEST	955.1

TUNNEL NO. 2

STA 18+00

Point No.	Height of Soil Fill (feet)	Vertical Effective Stress (psf)	Average Ground Surface Slope (deg from horizontal)	Adjusted At-Rest Earth Pressure Coefficient, Koi	Horizontal Lateral Earth Pressure (psf)	Angle from Horizontal (deg)	Angle from Horizontal (rad)	Normal Stress: Normal Stress component of Vertical Effective Stress (psf)	Normal Stress: Normal Stress component of Horizontal Lateral Earth Pressure (psf)	Normal Stress: Normal Stress Component of Snow Load due to Vertical and Horizontal Componentsl (psf)	Total Normal Stress on Tunnel at Wale(psf)
E. SPRINGLINE	20.9	2299.0	23.0	0.30	700.4	0.0	0.00	0.0	700.4	7.5	**707.9**
E. WALE 5	16.1	1771.0	23.0	0.30	539.5	18.6	0.32	563.9	511.4	11.9	**1087.2**
E. WALE 4	12.5	1375.0	23.0	0.30	418.9	35.4	0.62	796.8	341.4	14.8	**1153.0**
E. WALE 3	10.4	1144.0	23.0	0.30	348.5	52.3	0.91	904.7	213.3	16.5	**1134.5**
E. WALE 2	9.4	1034.0	0.0	0.50	517.0	69.1	1.21	966.1	184.3	16.7	**1167.1**
E. WALE 1	8.0	880.0	0.0	0.50	440.0	86.0	1.50	877.8	31.0	15.5	**924.3**
CROWN	8.1	891.0	0.0	0.50	445.5	90.0	1.57	891.0	0.0	15.0	**906.0**
W. WALE 1	8.1	891.0	0.0	0.50	445.5	86.0	1.50	888.8	31.4	15.5	**935.7**
W. WALE 2	8.0	880.0	0.0	0.50	440.0	69.1	1.21	822.2	156.9	16.7	**995.7**
W. WALE 3	8.7	957.0	19.0	0.34	322.7	52.3	0.91	756.8	197.5	16.5	**970.8**
W. WALE 4	11.3	1243.0	19.0	0.34	419.2	35.4	0.62	720.3	341.6	14.8	**1076.7**
W. WALE 5	15.1	1661.0	19.0	0.34	560.1	18.6	0.32	528.9	531.0	11.9	**1071.7**
W. SPRINGLINE	20.2	2222.0	19.0	0.34	749.3	0.0	0.00	0.0	749.3	7.5	**756.8**

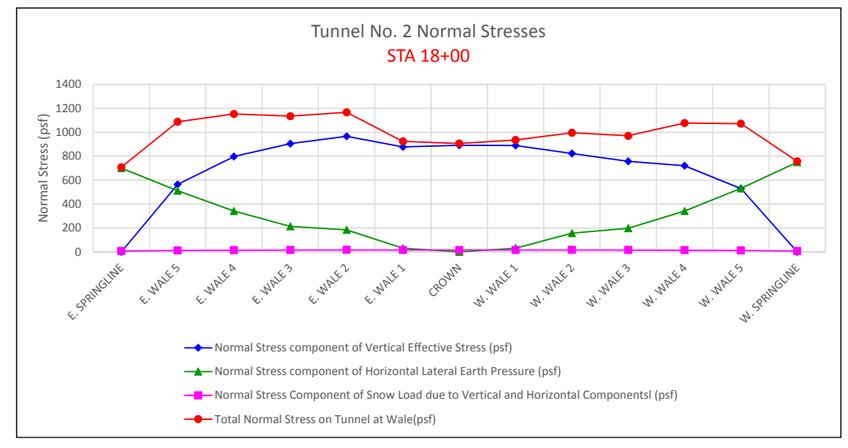

Segment	Average Orthogonal Soil Pressure (psf)
W6 EAST	897.5
W5 EAST	1120.1
W4 EAST	1143.7
W3 EAST	1150.8
W2 EAST	1045.7
W1	922.0
W2 WEST	965.7
W3 WEST	983.3
W4 WEST	1023.8
W5 WEST	1074.2
W6 WEST	914.3

TUNNEL NO. 2

STA 19+00

Point No.	Height of Soil Fill (feet)	Vertical Effective Stress (psf)	Average Ground Surface Slope (deg from horizontal)	Adjusted At-Rest Earth Pressure Coefficient, Koi	Horizontal Lateral Earth Pressure (psf)	Angle from Horizontal (deg)	Angle from Horizontal (rad)	Normal Stress: Normal Stress component of Vertical Effective Stress (psf)	Normal Stress: Normal Stress component of Horizontal Lateral Earth Pressure (psf)	Normal Stress: Normal Stress Component of Snow Load due to Vertical and Horizontal Componentsl (psf)	Total Normal Stress on Tunnel at Wale(psf)
E. SPRINGLINE	21.3	2343.0	22.0	0.31	732.6	0.0	0.00	0.0	732.6	7.5	**740.1**
E. WALE 5	16.5	1815.0	22.0	0.31	567.5	18.6	0.32	577.9	538.0	11.9	**1127.8**
E. WALE 4	13.0	1430.0	22.0	0.31	447.2	35.4	0.62	828.7	364.4	14.8	**1207.9**
E. WALE 3	10.8	1188.0	22.0	0.31	371.5	52.3	0.91	939.5	227.4	16.5	**1183.3**
E. WALE 2	9.3	1023.0	0.0	0.50	511.5	69.1	1.21	955.8	182.4	16.7	**1154.8**
E. WALE 1	8.1	891.0	0.0	0.50	445.5	86.0	1.50	888.8	31.4	15.5	**935.7**
CROWN	8.1	891.0	0.0	0.50	445.5	90.0	1.57	891.0	0.0	15.0	**906.0**
W. WALE 1	8.3	913.0	0.0	0.50	456.5	86.0	1.50	910.7	32.1	15.5	**958.4**
W. WALE 2	8.0	880.0	0.0	0.50	440.0	69.1	1.21	822.2	156.9	16.7	**995.7**
W. WALE 3	8.8	968.0	18.0	0.35	334.4	52.3	0.91	765.5	204.7	16.5	**986.7**
W. WALE 4	11.3	1243.0	18.0	0.35	429.4	35.4	0.62	720.3	350.0	14.8	**1085.1**
W. WALE 5	15.5	1705.0	18.0	0.35	589.1	18.6	0.32	542.9	558.4	11.9	**1113.2**
W. SPRINGLINE	20.5	2255.0	18.0	0.35	779.1	0.0	0.00	0.0	779.1	7.5	**786.6**

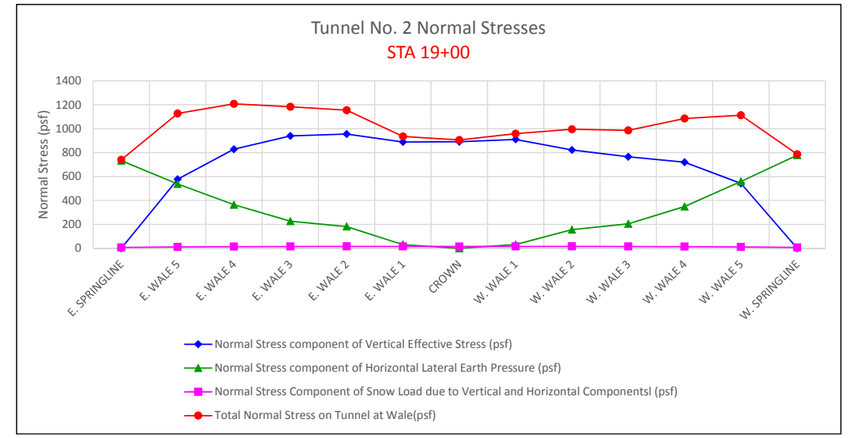

Segment	Average Orthogonal Soil Pressure (psf)
W6 EAST	934.0
W5 EAST	1167.9
W4 EAST	1195.6
W3 EAST	1169.1
W2 EAST	1045.2
W1	933.3
W2 WEST	977.1
W3 WEST	991.2
W4 WEST	1035.9
W5 WEST	1099.1
W6 WEST	949.9

TUNNEL NO. 2

STA 20+00

Point No.	Height of Soil Fill (feet)	Vertical Effective Stress (psf)	Average Ground Surface Slope (deg from horizontal)	Adjusted At-Rest Earth Pressure Coefficient, Koi	Horizontal Lateral Earth Pressure (psf)	Angle from Horizontal (deg)	Angle from Horizontal (rad)	Normal Stress: Normal Stress component of Vertical Effective Stress (psf)	Normal Stress: Normal Stress component of Horizontal Lateral Earth Pressure (psf)	Normal Stress: Normal Stress Component of Snow Load due to Vertical and Horizontal Componentsl (psf)	Total Normal Stress on Tunnel at Wale(psf)
E. SPRINGLINE	22.2	2442.0	17.0	0.35	864.0	0.0	0.00	0.0	864.0	7.5	**871.5**
E. WALE 5	17.4	1914.0	17.0	0.35	677.2	18.6	0.32	609.4	642.0	11.9	**1263.3**
E. WALE 4	13.5	1485.0	17.0	0.35	525.4	35.4	0.62	860.6	428.2	14.8	**1303.6**
E. WALE 3	10.7	1177.0	17.0	0.35	416.4	52.3	0.91	930.8	254.9	16.5	**1202.1**
E. WALE 2	8.7	957.0	0.0	0.50	478.5	69.1	1.21	894.1	170.6	16.7	**1081.4**
E. WALE 1	7.7	847.0	0.0	0.50	423.5	86.0	1.50	844.9	29.8	15.5	**890.2**
CROWN	7.6	836.0	0.0	0.50	418.0	90.0	1.57	836.0	0.0	15.0	**851.0**
W. WALE 1	7.6	836.0	0.0	0.50	418.0	86.0	1.50	833.9	29.4	15.5	**878.9**
W. WALE 2	8.1	891.0	0.0	0.50	445.5	69.1	1.21	832.4	158.8	16.7	**1008.0**
W. WALE 3	8.9	979.0	15.0	0.37	362.8	52.3	0.91	774.2	222.0	16.5	**1012.7**
W. WALE 4	11.8	1298.0	15.0	0.37	481.0	35.4	0.62	752.2	392.0	14.8	**1159.0**
W. WALE 5	16.1	1771.0	15.0	0.37	656.3	18.6	0.32	563.9	622.2	11.9	**1197.9**
W. SPRINGLINE	21.1	2321.0	15.0	0.37	860.1	0.0	0.00	0.0	860.1	7.5	**867.6**

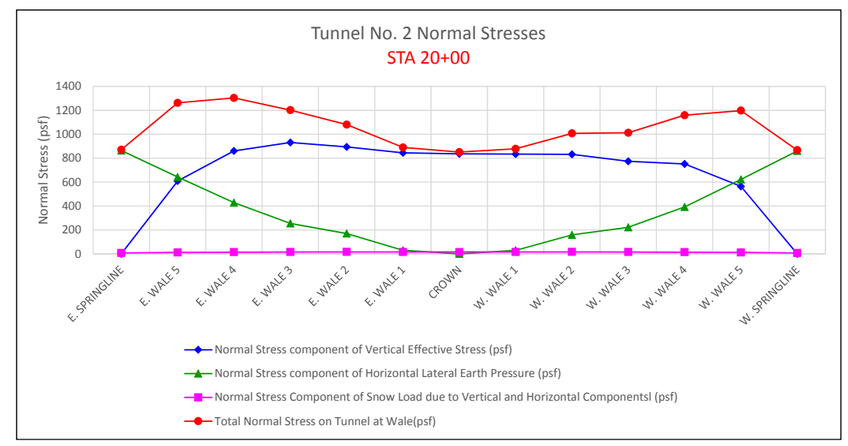

Segment	Average Orthogonal Soil Pressure (psf)
W6 EAST	1067.4
W5 EAST	1283.4
W4 EAST	1252.9
W3 EAST	1141.8
W2 EAST	985.8
W1	873.4
W2 WEST	943.4
W3 WEST	1010.4
W4 WEST	1085.9
W5 WEST	1178.5
W6 WEST	1032.8

TUNNEL NO. 2

SUMMARY	Normal Stress component of Vertical Effective Stress (psf)			Normal Stress component of Horizontal Lateral Earth Pressure (psf)			Normal Stress Component of Snow Load due to Vertical and Horizontal Componentsl (psf)			Total Normal Stress on Tunnel (psf)		
Point No.	MIN	AVG	MAX	MIN	AVG	MAX	MIN	AVG	MAX	MIN	AVG	MAX
E. SPRINGLINE	0.0	0.0	0.0	606.9	723.60	1303.5	7.5	7.5	7.5	614.4	731.1	1311.0
E. WALE 5	483.3	556.3	644.4	426.9	527.24	959.3	11.9	11.9	11.9	922.1	1095.4	1615.7
E. WALE 4	656.6	783.4	905.2	273.9	350.70	636.5	14.8	14.8	14.8	945.3	1148.9	1556.5
E. WALE 3	722.0	880.1	965.6	165.8	216.21	373.6	16.5	16.5	16.5	904.2	1112.7	1355.7
E. WALE 2	853.0	934.1	996.9	162.8	178.22	190.2	16.7	16.7	16.7	1032.4	1129.0	1203.8
E. WALE 1	812.0	902.8	976.6	28.7	31.87	34.5	15.5	15.5	15.5	856.1	950.2	1026.5
CROWN	814.0	901.4	979.0	0.0	0.00	0.0	15.0	15.0	15.0	829.0	916.4	994.0
W. WALE 1	812.0	903.4	976.6	28.7	31.89	34.5	15.5	15.5	15.5	856.1	950.8	1026.5
W. WALE 2	822.2	901.5	976.3	156.9	172.01	186.3	16.7	16.7	16.7	995.7	1090.2	1179.3
W. WALE 3	756.8	842.4	956.9	170.9	209.81	244.2	16.5	16.5	16.5	970.8	1068.6	1210.9
W. WALE 4	688.4	762.1	847.8	271.7	345.57	396.4	14.8	14.8	14.8	994.0	1122.5	1245.1
W. WALE 5	504.4	550.7	605.9	409.9	528.90	622.2	11.9	11.9	11.9	926.2	1091.4	1197.9
W. SPRINGLINE	0.0	0.0	0.0	576.6	730.12	860.1	7.5	7.5	7.5	584.1	737.6	867.6

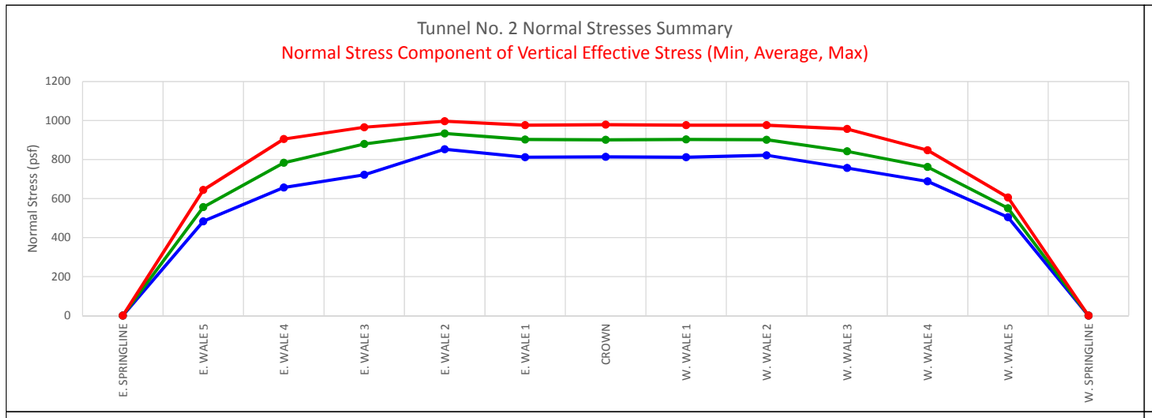

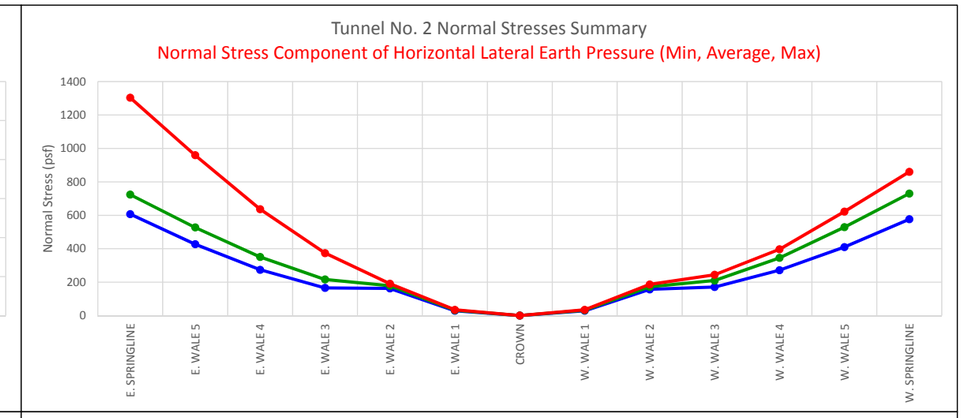

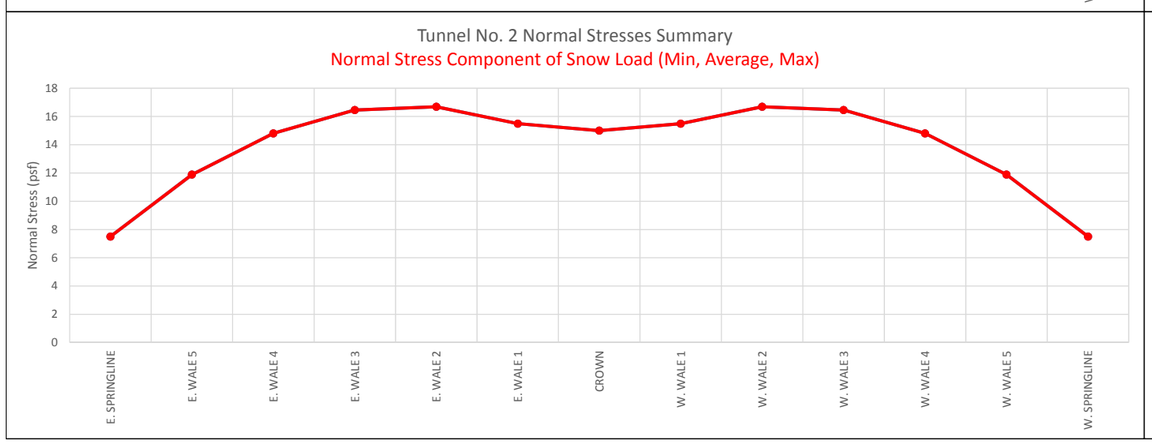

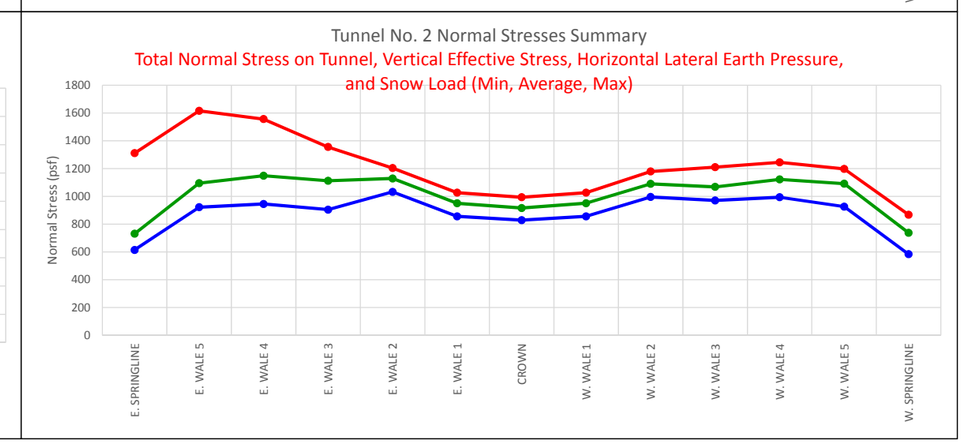

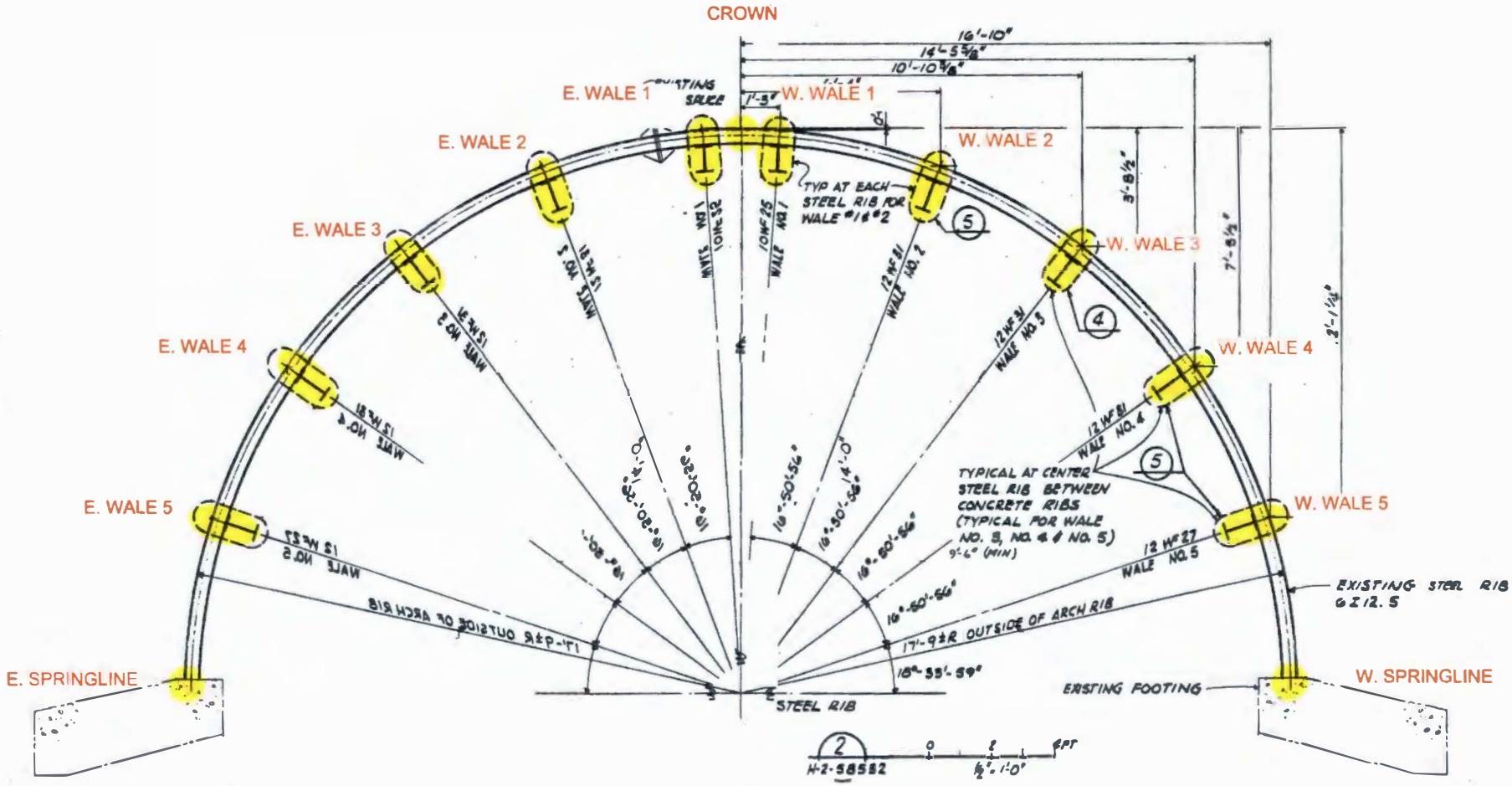

PUREX TUNNEL NO. 2
LOOKING SOUTH

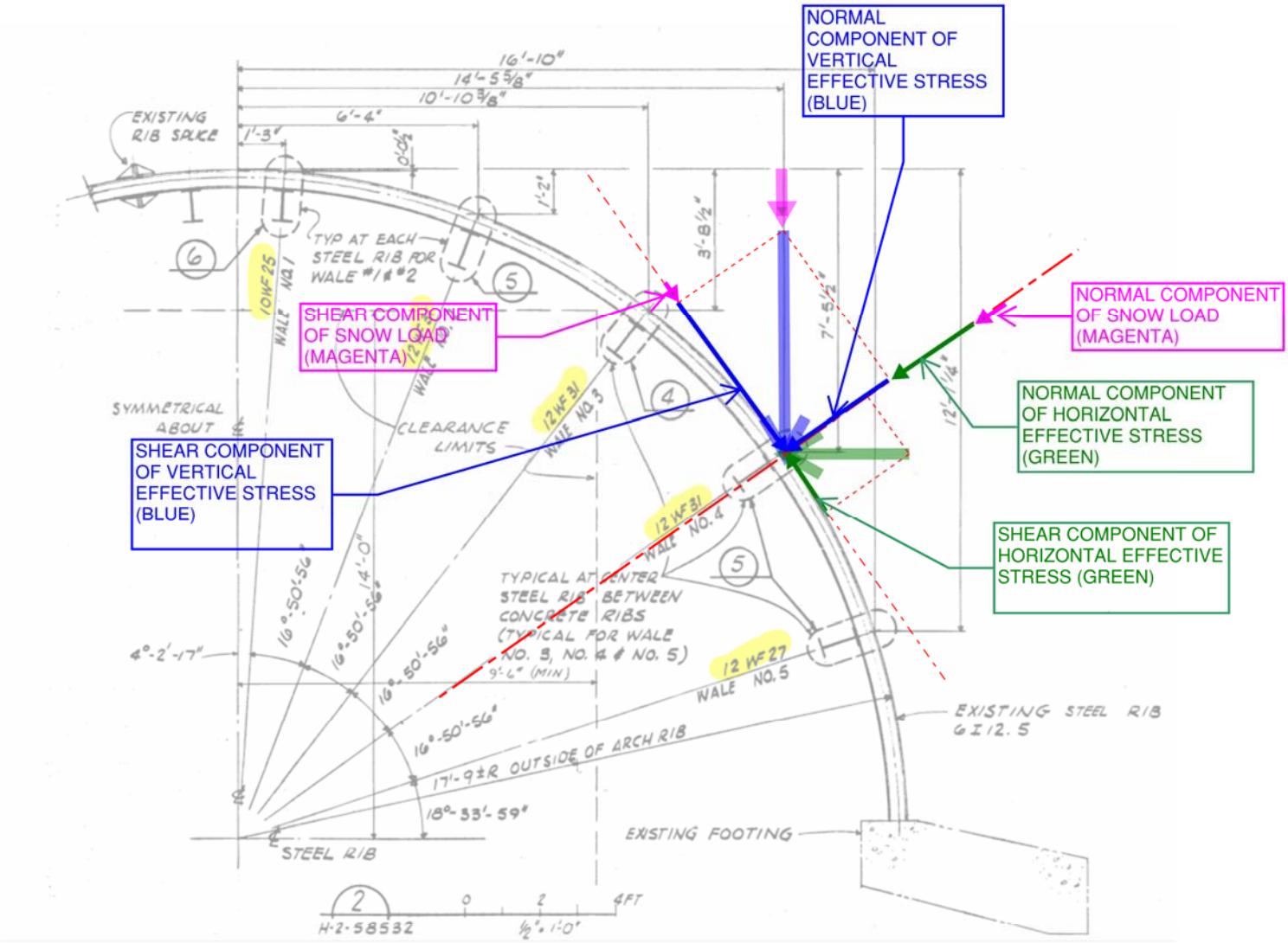

EXAMPLE OF NORMAL STRESSES AND SHEAR STRESSES RESULTING FROM VERTICAL EFFECTIVE STRESS (BLUE), HORIZONTAL LATERAL EARTH PRESSURES (GREEN), AND SNOW LOAD (MAGENTA) AT WALE NO. 4. [NOT TO SCALE]

TOPOGRAPHY FROM 2008 *LIDAR CENTRAL PLATEAU REPORT* PREPARED BY AERO-METRIC FOR FLUOR HANFORD. DATA ACQUISITION APRIL 13, 2008. HORIZONTAL DATUM: STATE PLANE NAD83, WASHINGTON SOUTH ZONE, METERS. VERTICAL DATUM: NAVD88, METERS.

HORIZONTAL SYSTEM CONVERTED TO HANFORD SITE DATUM, AREA 200E (PUREX CONTROL), FEET, USING SURVEY MONUMENT COORDINATE DATA FOR MONUMENT 2E-41.

VERTICAL SYSTEM CONVERTED TO HANFORD SITE DATUM, AREA 200E (PUREX CONTROL), FEET, USING SURVEY MONUMENT COORDINATE DATA FOR MONUMENT 2E-41. VERTICAL DATUM SHIFT FROM LIDAR TOPOGRAPHY, -1.100 METERS.

TUNNEL 1 GEOMETRY FROM 1955 AS-BUILT DRAWINGS. FACILITY 218-E-14, DISPOSAL TUNNEL NO. 1 FOR FAILED EQUIPMENT, PROJECT CA-513-A. ISSUED MARCH 10, 1955.

TUNNEL 2 GEOMETRY FROM 1962 AS-BUILT DRAWINGS. FACILITY 218-E-15, DISPOSAL TUNNEL NO. 2 FOR FAILED EQUIPMENT, PROJECT CGC 964. ISSUED SEPTEMBER 1962.

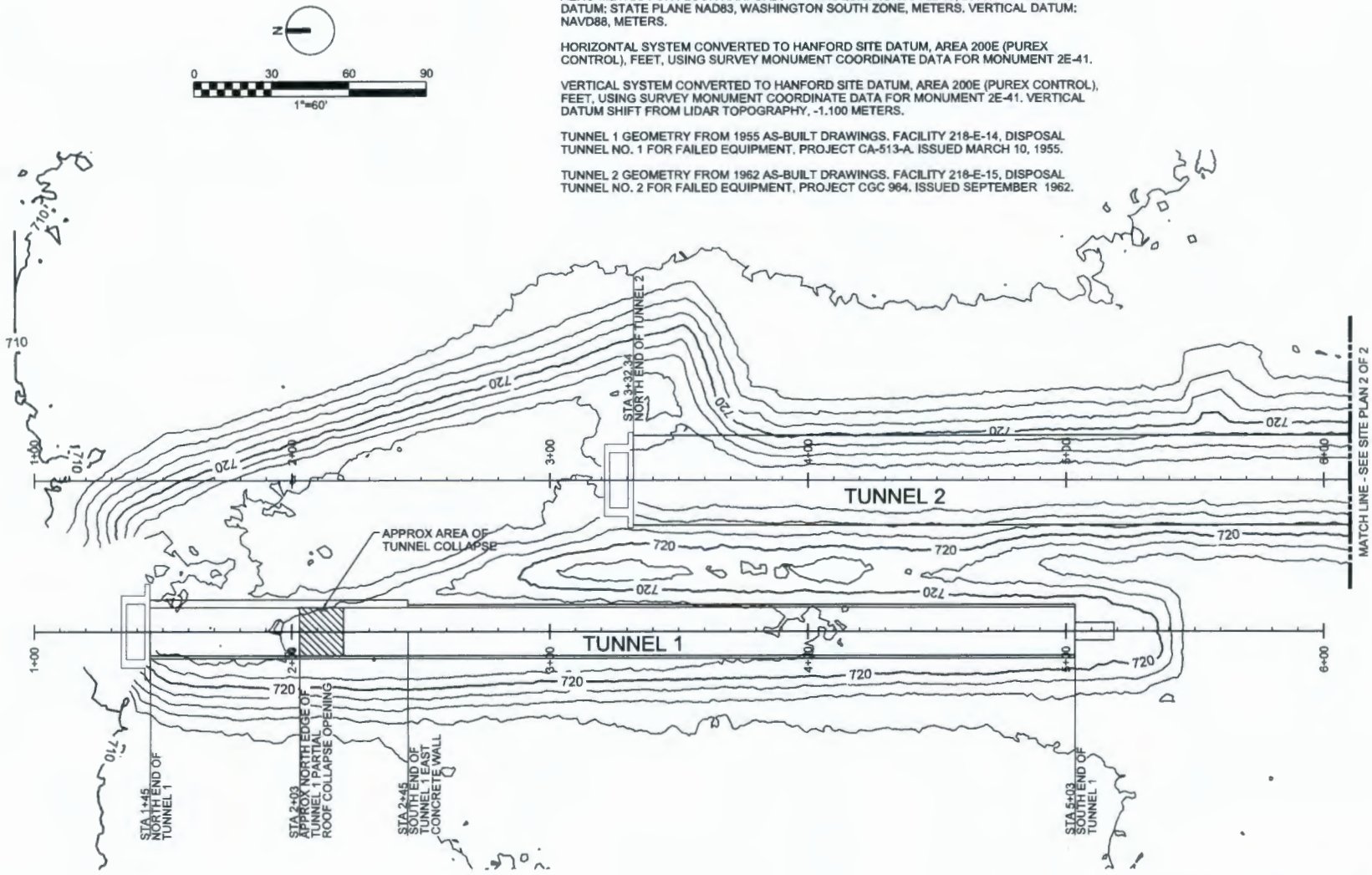

TOPOGRAPHIC SITE PLAN
1 OF 2

PUREX TUNNEL 1
ENGINEERING EVALUATION

TOPOGRAPHY FROM 2008 *LIDAR CENTRAL PLATEAU REPORT* PREPARED BY AERO-METRIC FOR FLUOR HANFORD. DATA ACQUISITION APRIL 13, 2008. HORIZONTAL DATUM: STATE PLANE NAD83, WASHINGTON SOUTH ZONE, METERS. VERTICAL DATUM: NAVD88, METERS.

HORIZONTAL SYSTEM CONVERTED TO HANFORD SITE DATUM, AREA 200E (PUREX CONTROL), FEET, USING SURVEY MONUMENT COORDINATE DATA FOR MONUMENT 2E-41.

VERTICAL SYSTEM CONVERTED TO HANFORD SITE DATUM, AREA 200E (PUREX CONTROL), FEET, USING SURVEY MONUMENT COORDINATE DATA FOR MONUMENT 2E-41. VERTICAL DATUM SHIFT FROM LIDAR TOPOGRAPHY, -1.100 METERS.

TUNNEL 1 GEOMETRY FROM 1955 AS-BUILT DRAWINGS. FACILITY 218-E-14, DISPOSAL TUNNEL NO. 1 FOR FAILED EQUIPMENT, PROJECT CA-513-A. ISSUED MARCH 10, 1955.

TUNNEL 2 GEOMETRY FROM 1962 AS-BUILT DRAWINGS. FACILITY 218-E-15, DISPOSAL TUNNEL NO. 2 FOR FAILED EQUIPMENT, PROJECT CGC 964. ISSUED SEPTEMBER 1962.

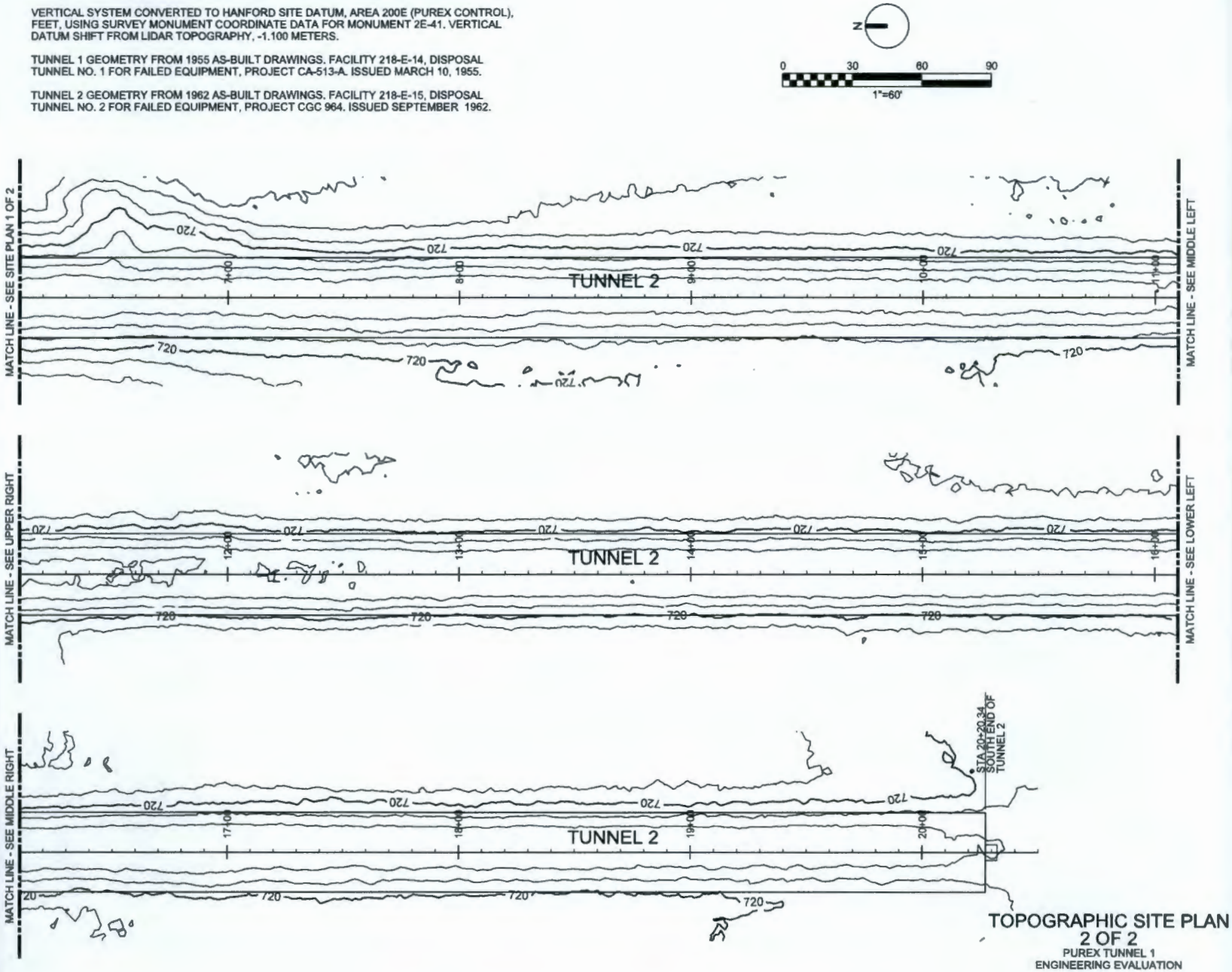

TOPOGRAPHIC SITE PLAN
2 OF 2
PUREX TUNNEL 1
ENGINEERING EVALUATION

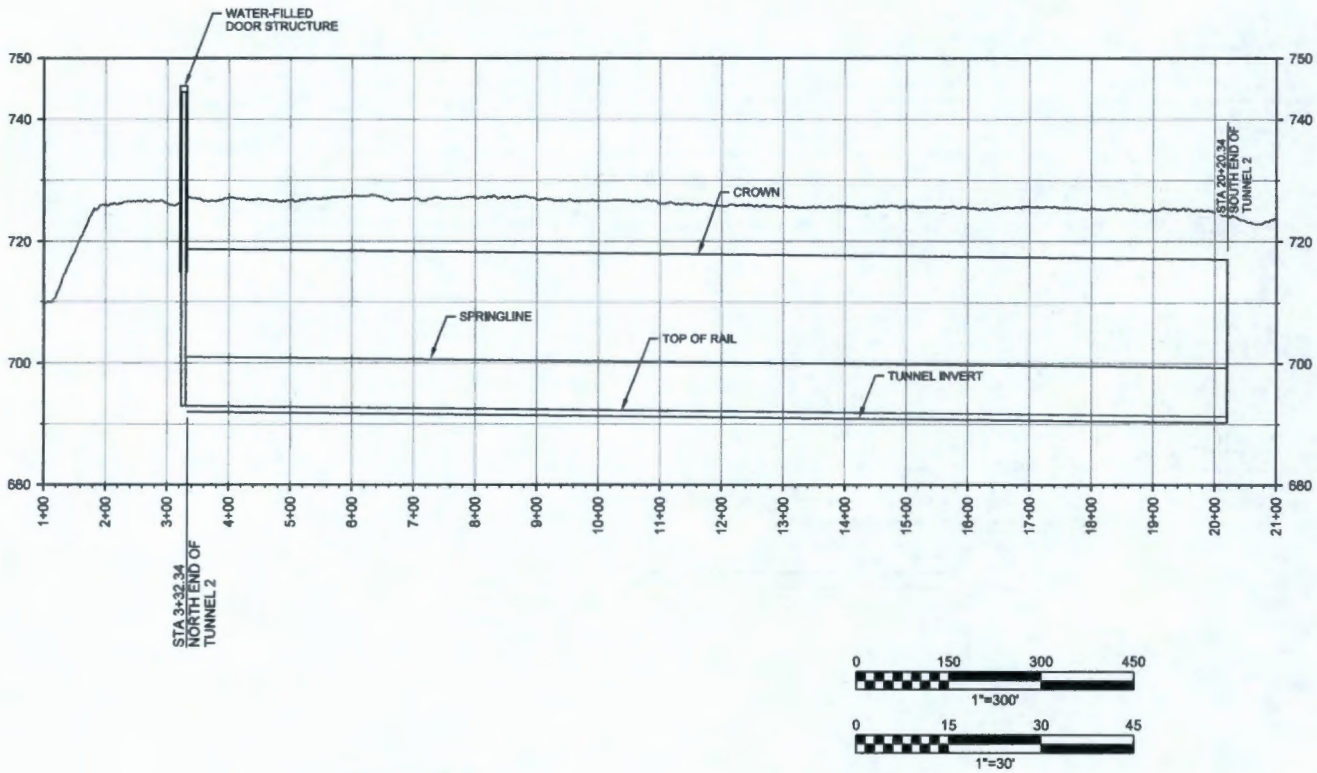

TUNNEL 2 PROFILE

PUREX TUNNEL 1
ENGINEERING EVALUATION

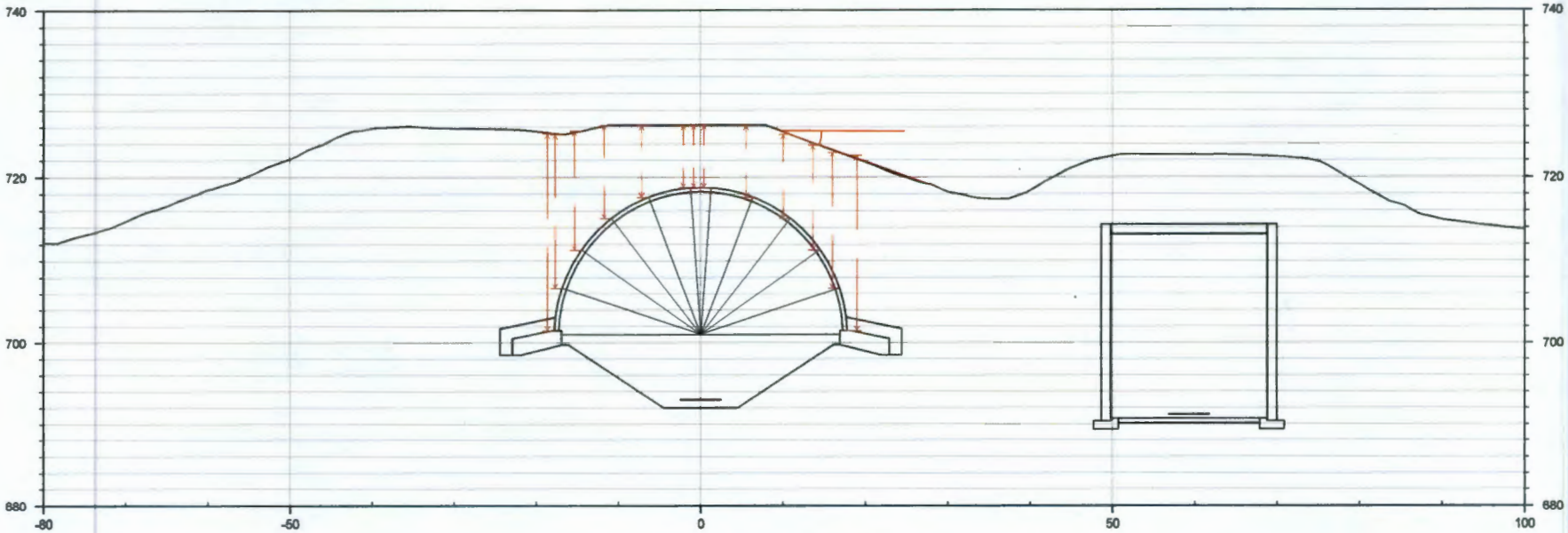

3+32.34 - NORTH END OF TUNNEL 2

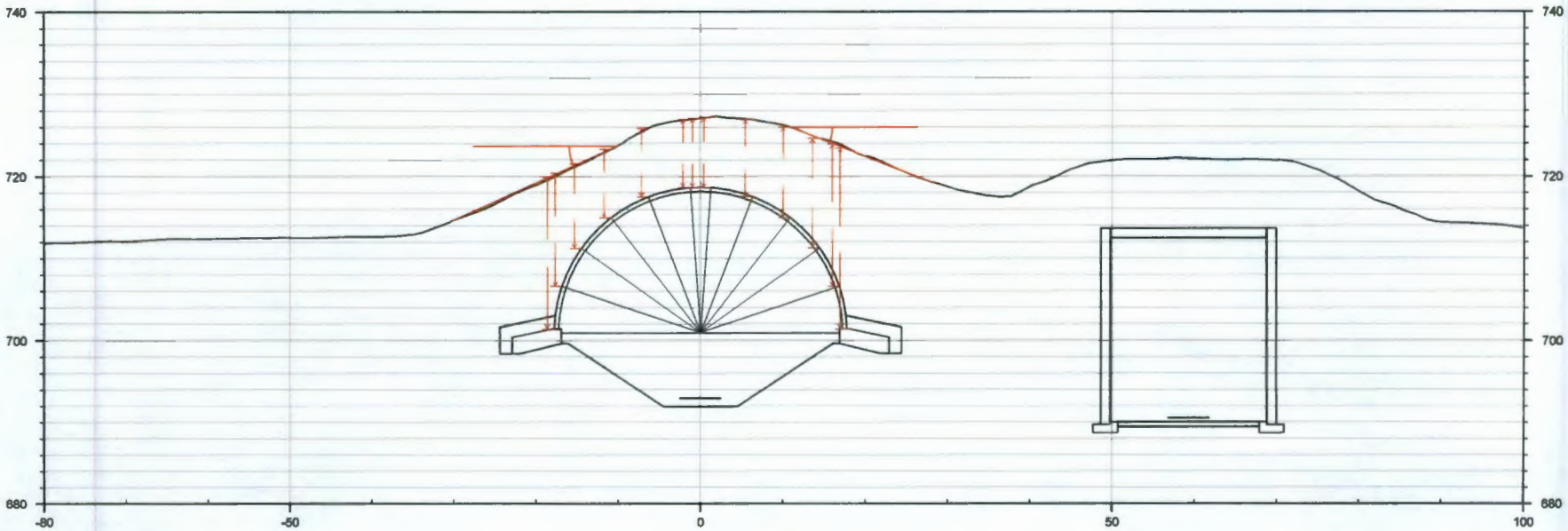

4+00

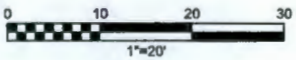

CROSS SECTIONS
3+32.34 AND 4+00
PUREX TUNNEL 1
ENGINEERING EVALUATION

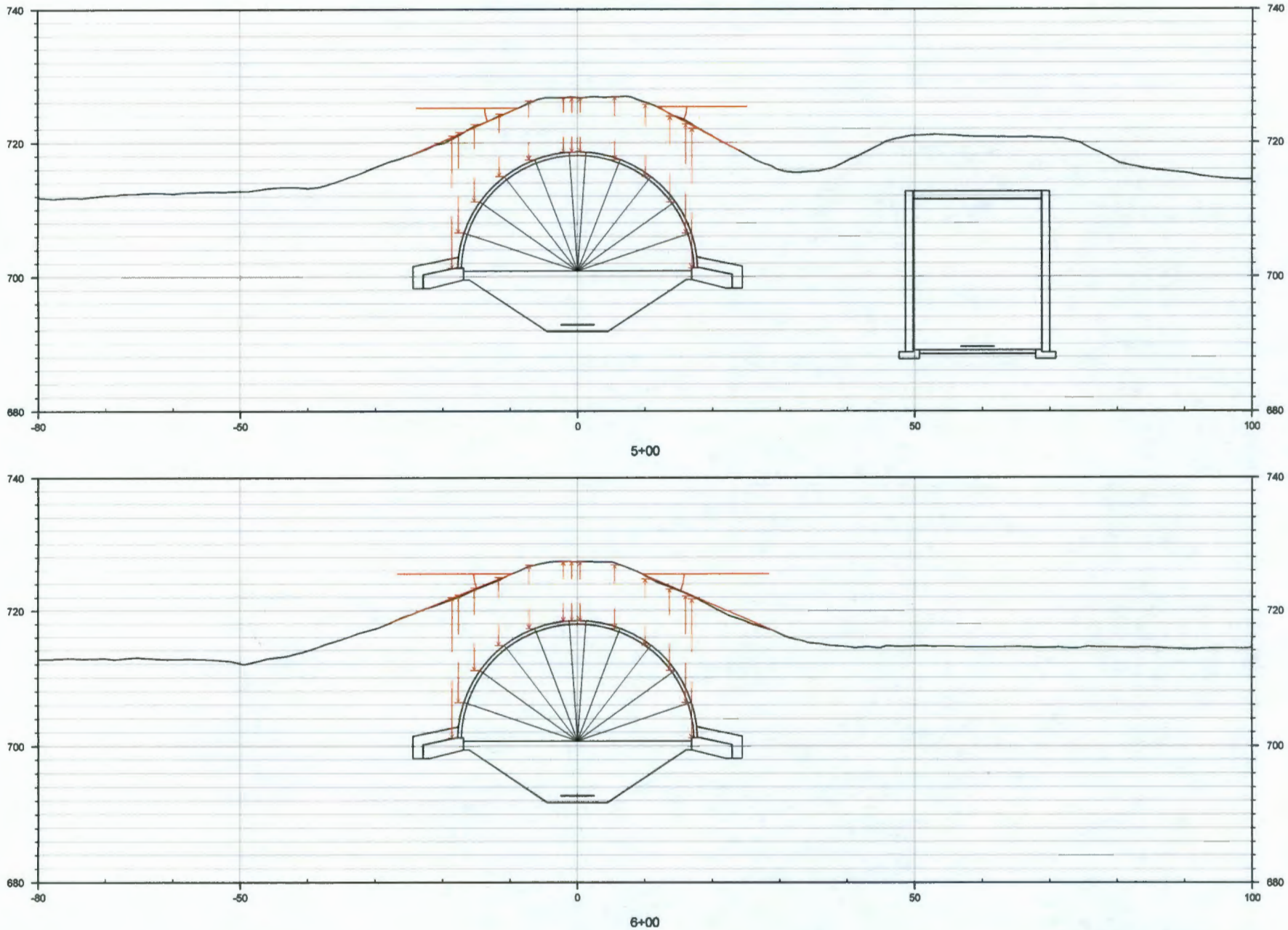

CROSS SECTIONS
5+00 AND 6+00
PUREX TUNNEL 1
ENGINEERING EVALUATION

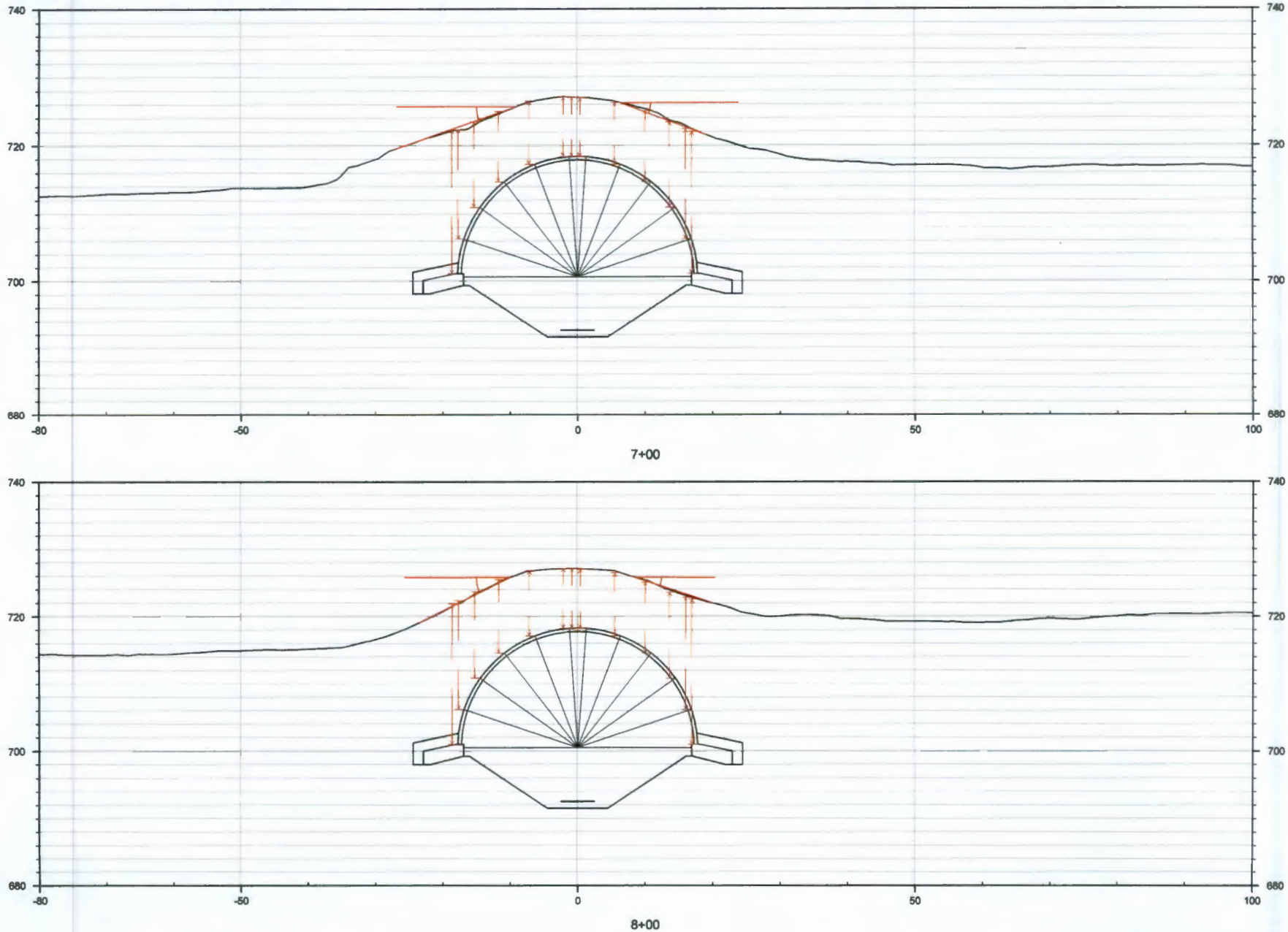

CROSS SECTIONS
7+00 AND 8+00
PUREX TUNNEL 1
ENGINEERING EVALUATION

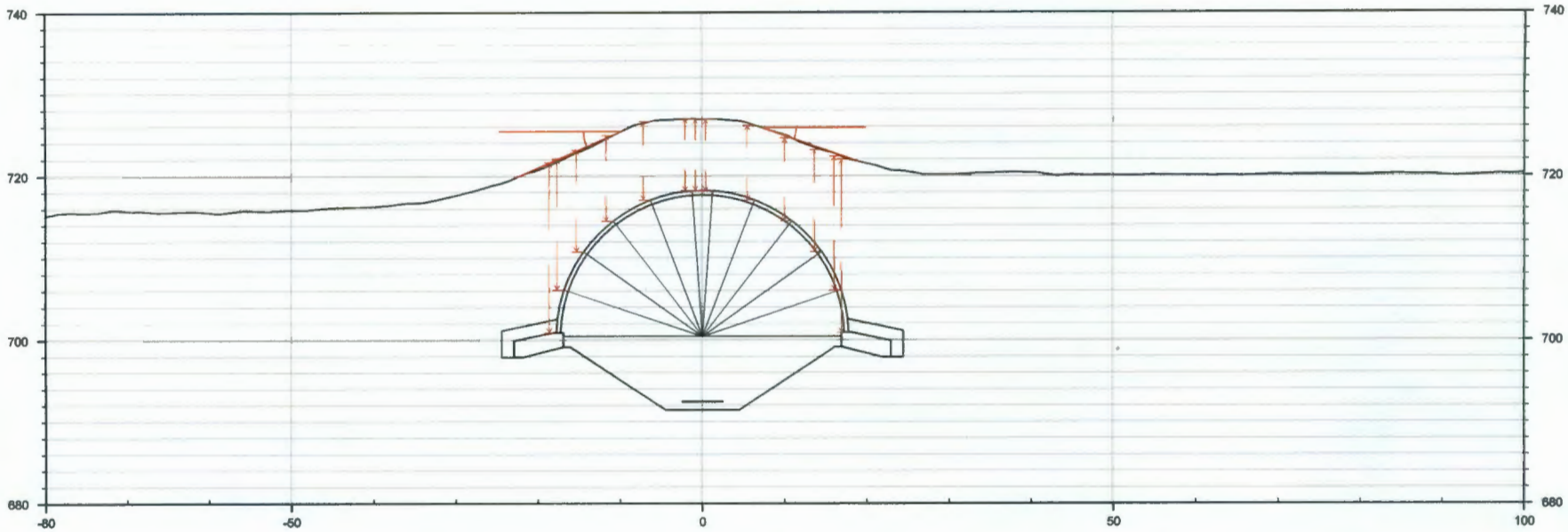

9+00

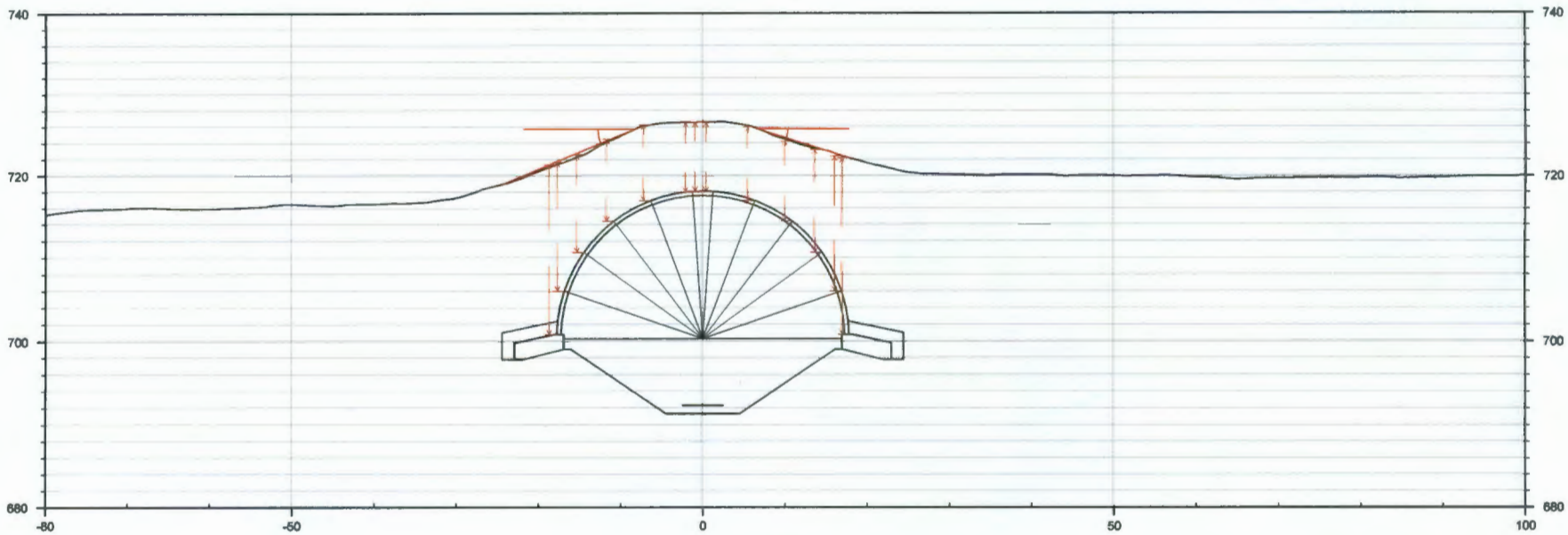

10+00

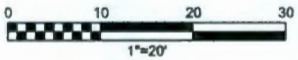

CROSS SECTIONS
9+00 AND 10+00
PUREX TUNNEL 1
ENGINEERING EVALUATION

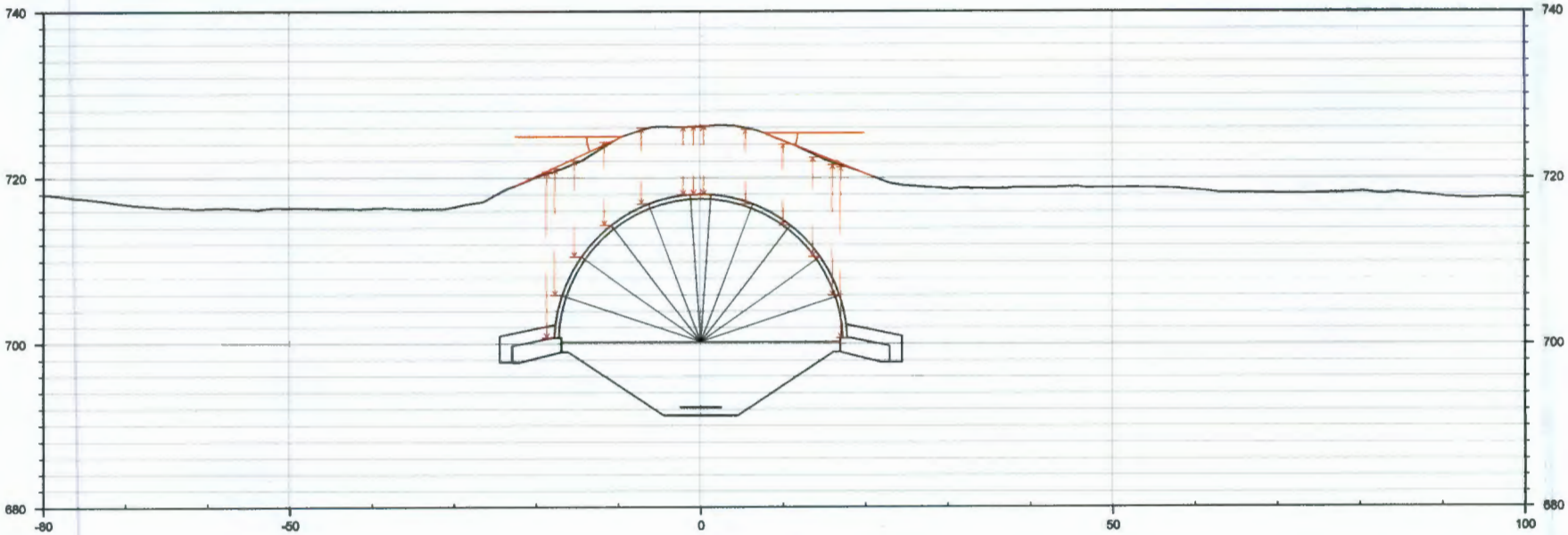

11+00

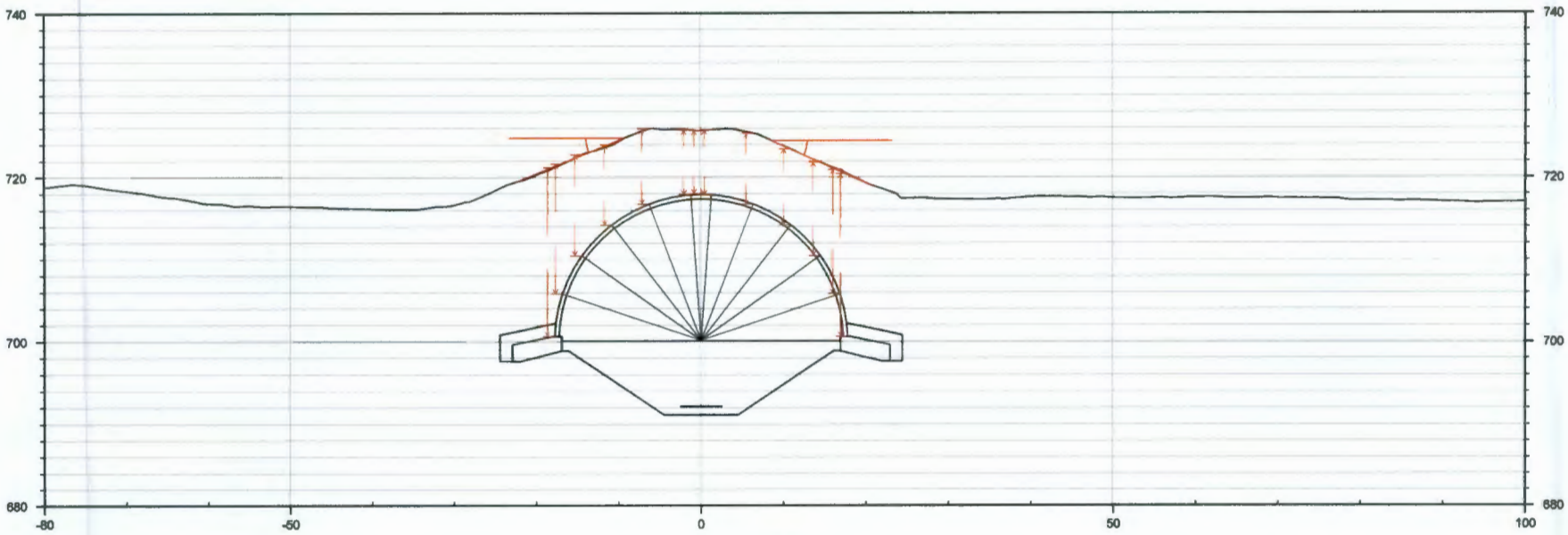

12+00

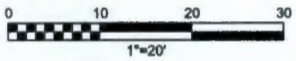

CROSS SECTIONS
11+00 AND 12+00
PUREX TUNNEL 1
ENGINEERING EVALUATION

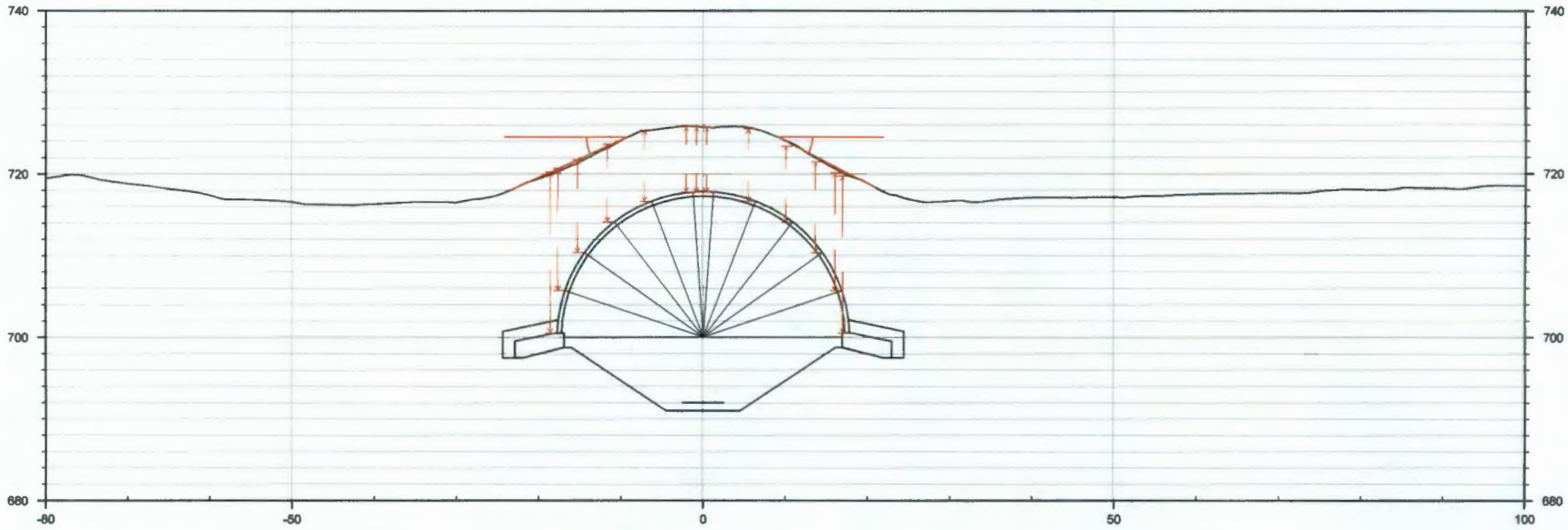

13+00

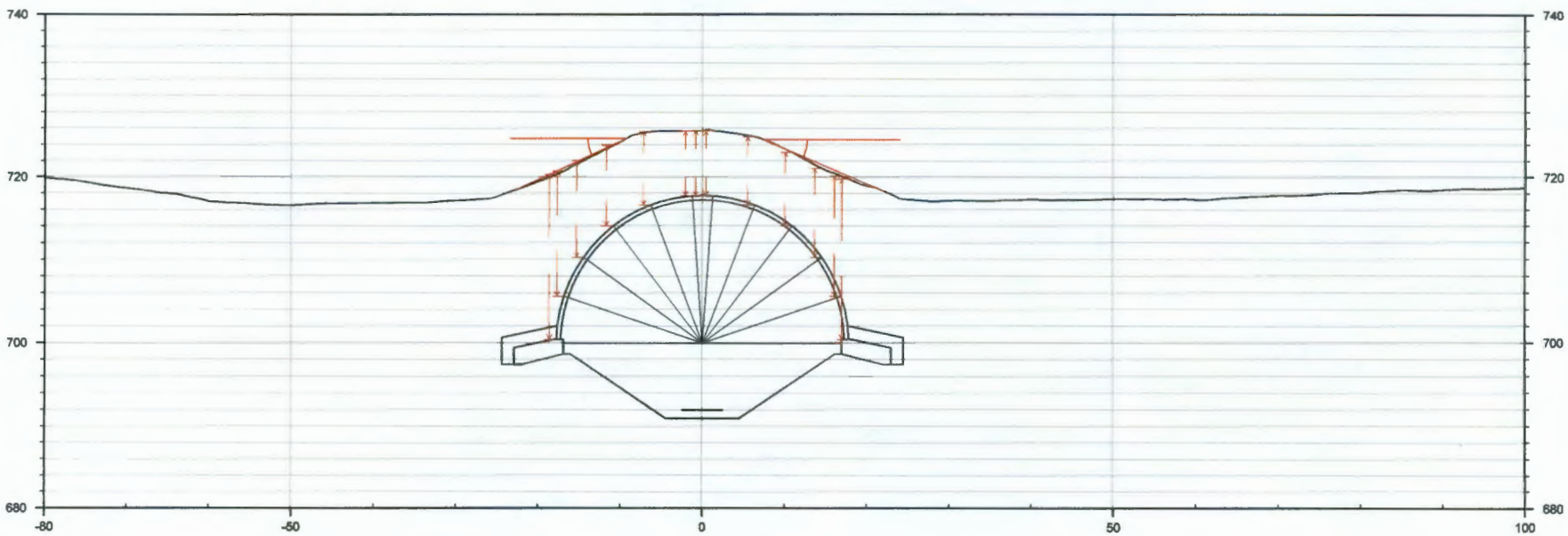

14+00

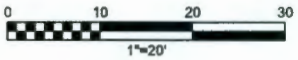

CROSS SECTIONS
13+00 AND 14+00
PUREX TUNNEL 1
ENGINEERING EVALUATION

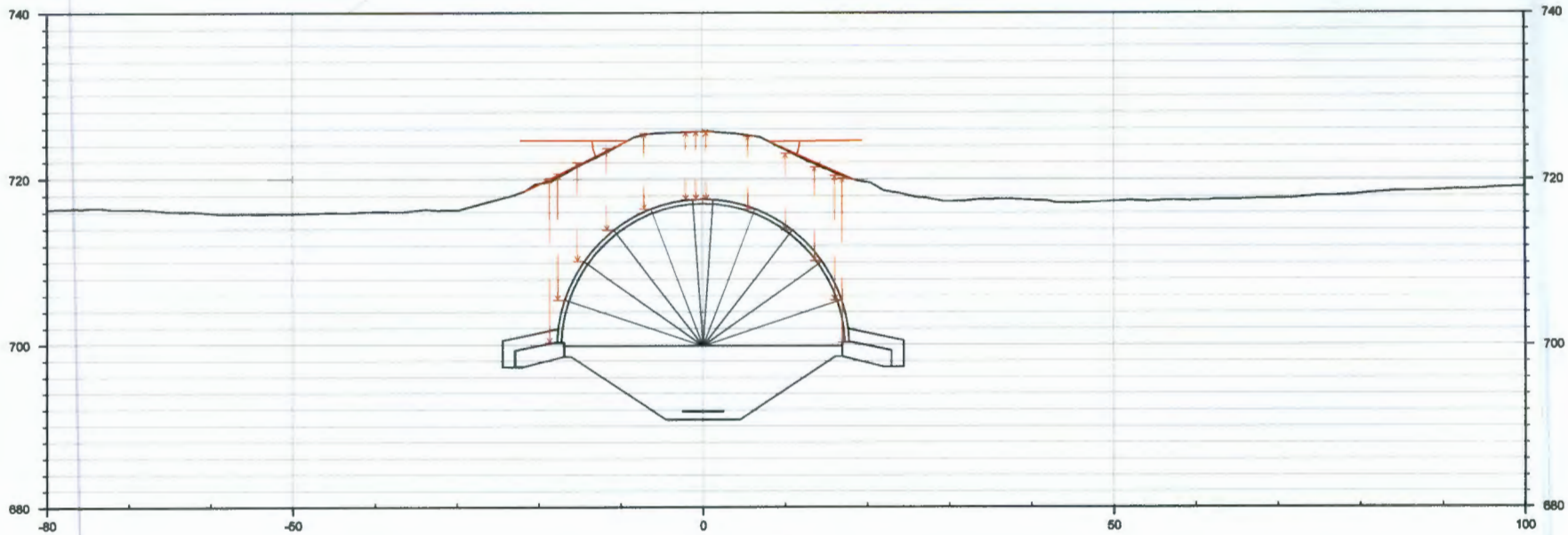

15+00

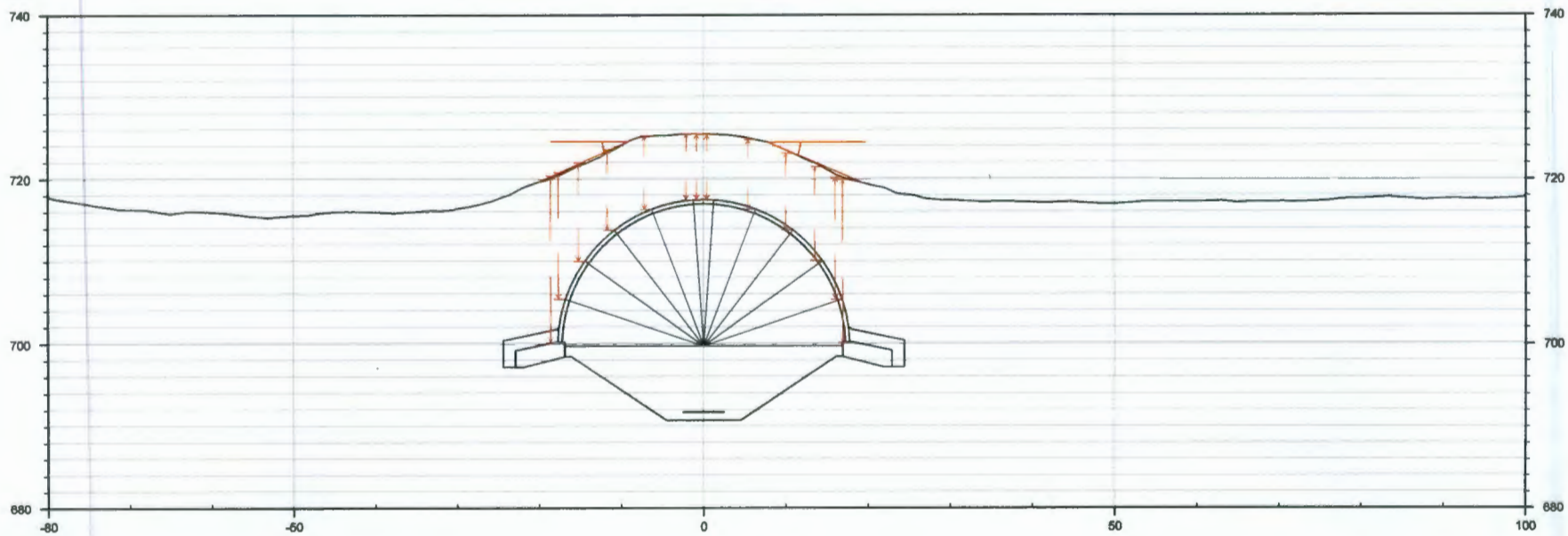

16+00

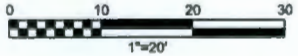

CROSS SECTIONS
15+00 AND 16+00
PUREX TUNNEL 1
ENGINEERING EVALUATION

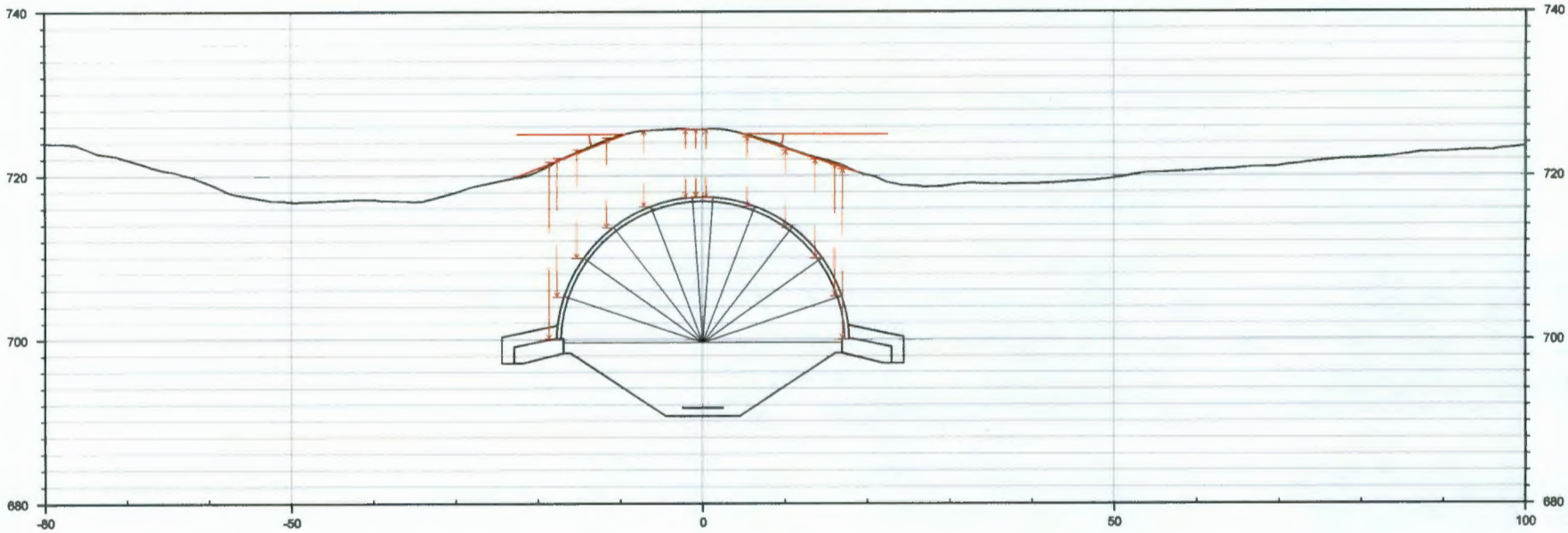

17+00

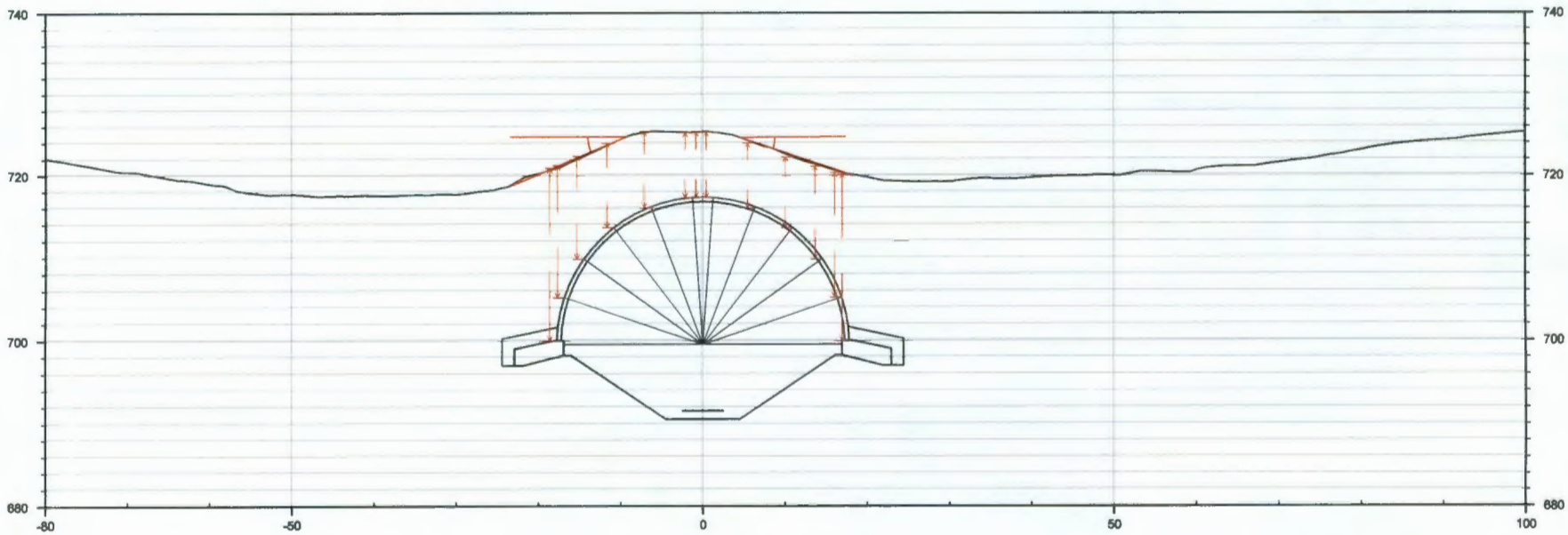

18+00

CROSS SECTIONS
17+00 AND 18+00
PUREX TUNNEL 1
ENGINEERING EVALUATION

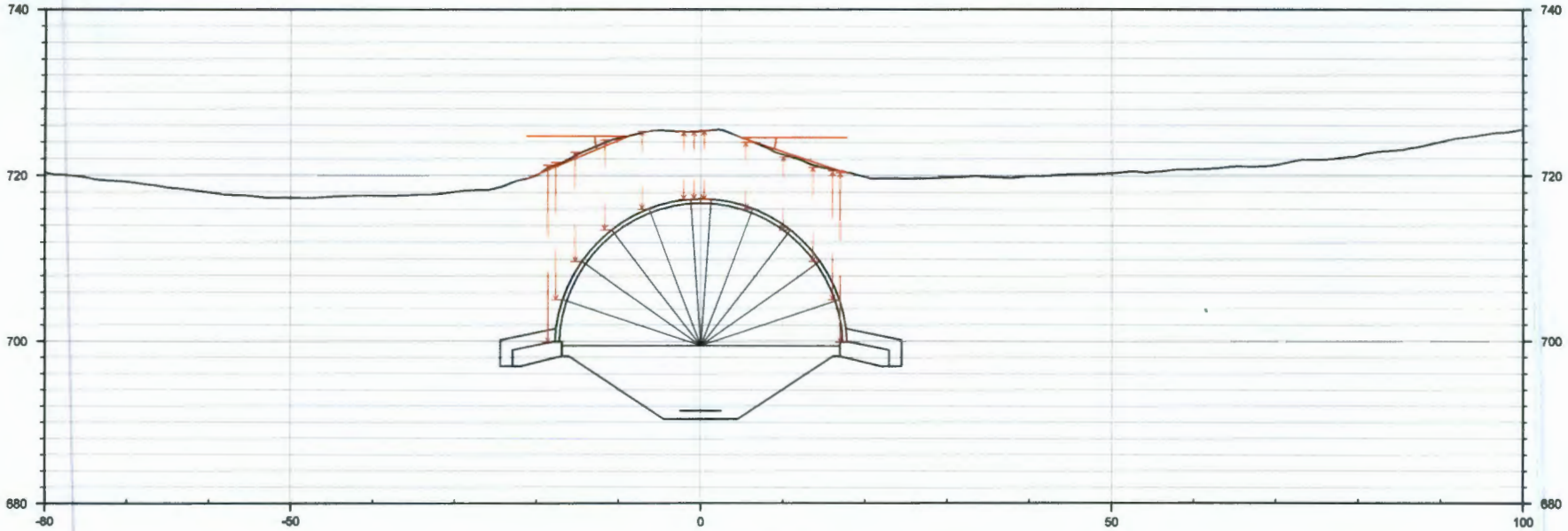

19+00

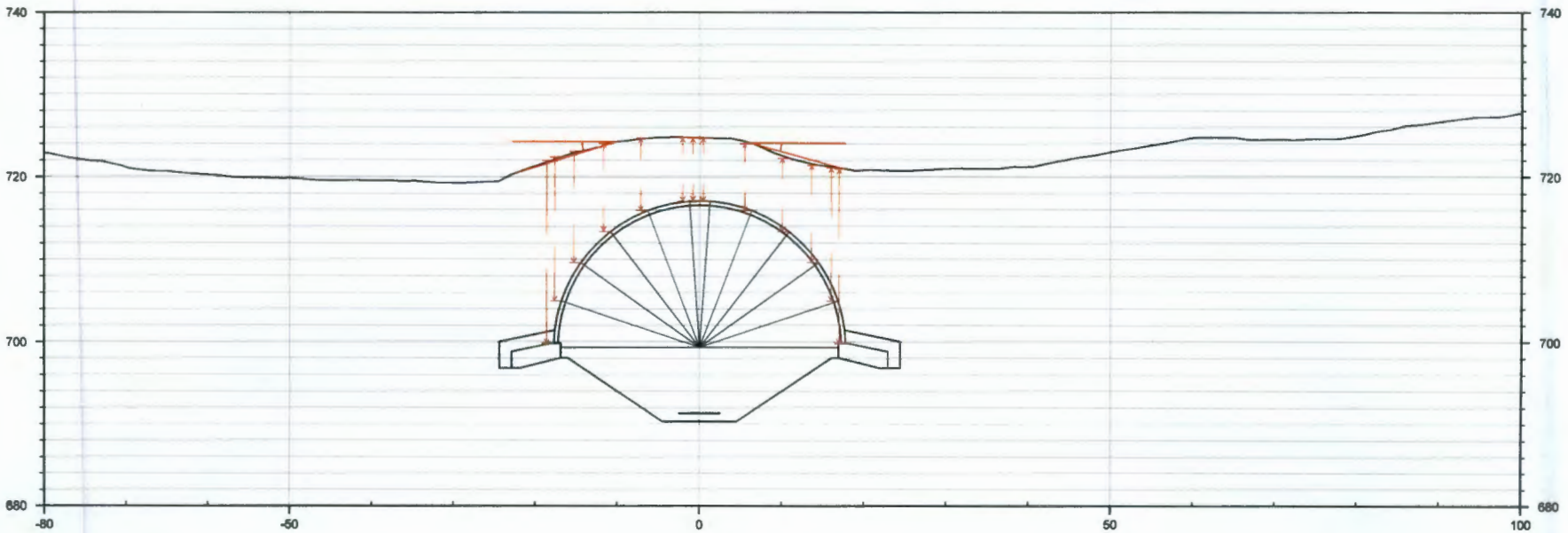

20+00

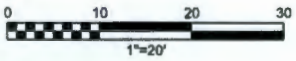

CROSS SECTIONS
19+00 AND 20+00
PUREX TUNNEL 1
ENGINEERING EVALUATION

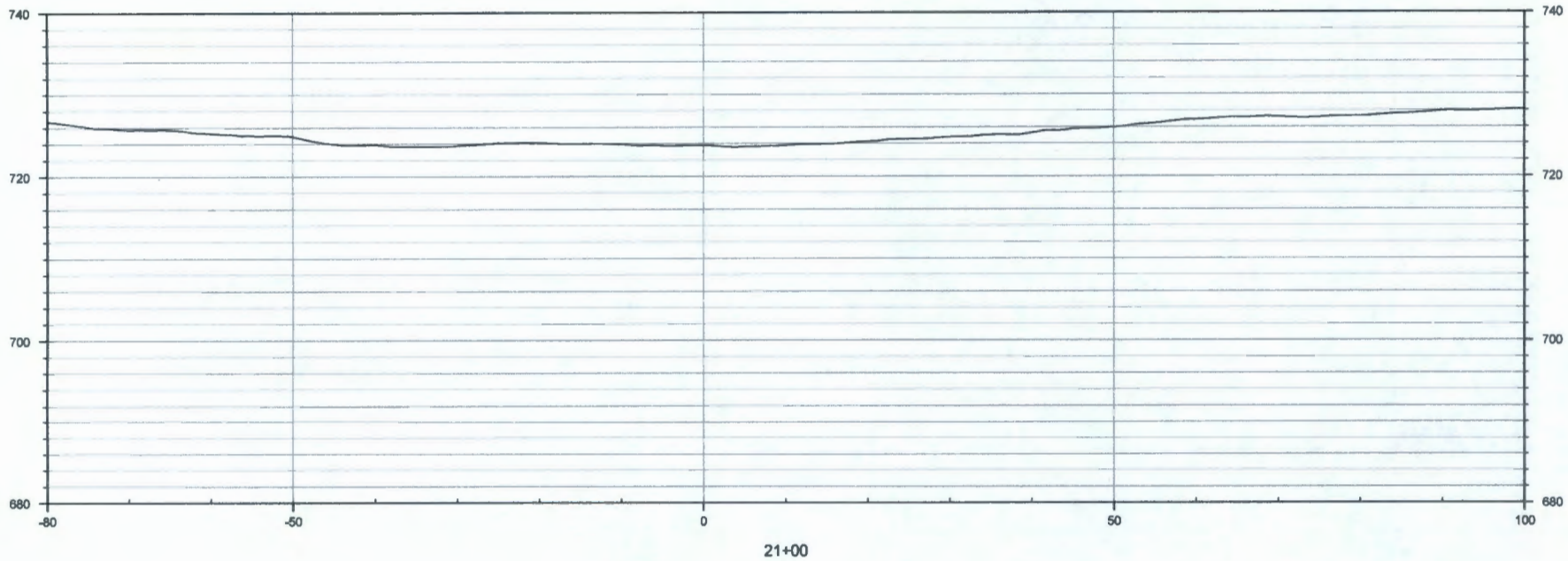

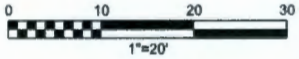

CROSS SECTION 21+00
PUREX TUNNEL 1
ENGINEERING EVALUATION

ch2m	Calculation Title: PUREX Tunnel 2 Engineering Evaluation	Project Number: 693839.BS Project: PUREX Tunnel 2 Client: CHPRC

Attachment D

Foundation Bearing Pressure Evaluation

Bearing Capacity Evaluation

ch2m

PROJECT: Hanford PUREX Tunnel No. 2 Evaluation
PROJECT #: 693839.BS.02
CREATED BY: Mark Kacmarcik/CVO **DATE:** 6/9/2017 **MODIFIED:** 6/24/2017
REVIEWED BY: Youssef Bougataya/SEA **DATE:** 6/12/2017

Given: Tunnel No. 2 Design Drawings
Tunnel No. 2 Construction Specification
Tunnel No. 2 Historical Photos

Find: Ultimate Bearing Capacity of Tunnel 2 Strip Footings
Recommended Allowable Bearing Capacity of Tunnel 2 Strip Footings

Assumptions: Noted below in calculation.

References:
Coduto, D. *Foundation Design*. Prentice Hall. New Jersey. 2000.
Gemperline, M.C. 1988. Centrifuge Modeling of Shallow Foundations. Proc, ASCE Spring Convention. ASCE.
Shields, D., Chandler, N., and Garnier, J. 1990. Bearing Capacity of Foundations in Slopes. Journal of Geotechnical Engineering, 116 (3), March.
McCarthy, D. 2002. Essentials of Soil Mechanics and Foundations. 6th Ed. Prentice Hall.

1.0 Soil Properties

At this time, there is no site specific geotechnical data available. Soil properties are based uon the interpretation of construction photographs, and from a 1984 Dames and Moore report which provides foundation recommendations for a proposed Process Facility Modifications approximately 0.25 miles west of the PUREX storage tunnels, in similar subsurface materials.

Original Tunnel 2 Construction Photograph. Original strip footings 6 feet wide cast against undisturbed earth.

Subsurface Properties:

From construction photos, undisturbed earth appears to be dense fluvial/glaciofluvial deposits of the Hanford Formation. Excavation walls stand vertical to near vertical in many places, with some ravelling to angle of repose. There is no apparent shoring used. There is neither groundwater nor dewatering infrastructure visible, and groundwater is noted to be deep at the PUREX facility. Photos of footing subgrade are not available. It is assumed that the material beneath the footings is similar to the material visible at and above the footings. Ravelling may be due to loss of apparent coehsion due to negative pore pressure in moist soils, or may be attributed to natural cementation. Properties assumed herein should be checked against available geologic literature and available geotechnical studies in similar materials, if available.

$\phi := 34deg$ Internal friction angle, from 1984 Dames and Moore Report

$c := 0psf$ Effective stress cohesion, from 1984 Dames and Moore Report

$\gamma_{moist} := 125pcf$ Assumed average moist unit weight of in-situ soils.

$\gamma_{water} := 62.4pcf$ Unit weight of water.

2.0 Subsurface Profile

The subsurface profile is assumed to be uniform within the depths of stress influence beneath the footings.
The drawings indicate that footings were to be cast against undisturbed earth, this is assumed to be the case.
Groundwater is assumed to be significantly deeper than the footings, and total stresses are equal to effective stresses.

3.0 Footing Geometry

The footings for Tunnel 2 consist of two parallel strip footings.
The footings were initally constructed as strip footings 6.0 feet wide as indicated in CYAN below, then later modified to include 12 foot wide arch support footings (indicated in GREEN below) at 15.8 foot center-to-center spacing.
For analysis footings are treated as individual footings at the spacing of the concrete ribs (15.8 feet)

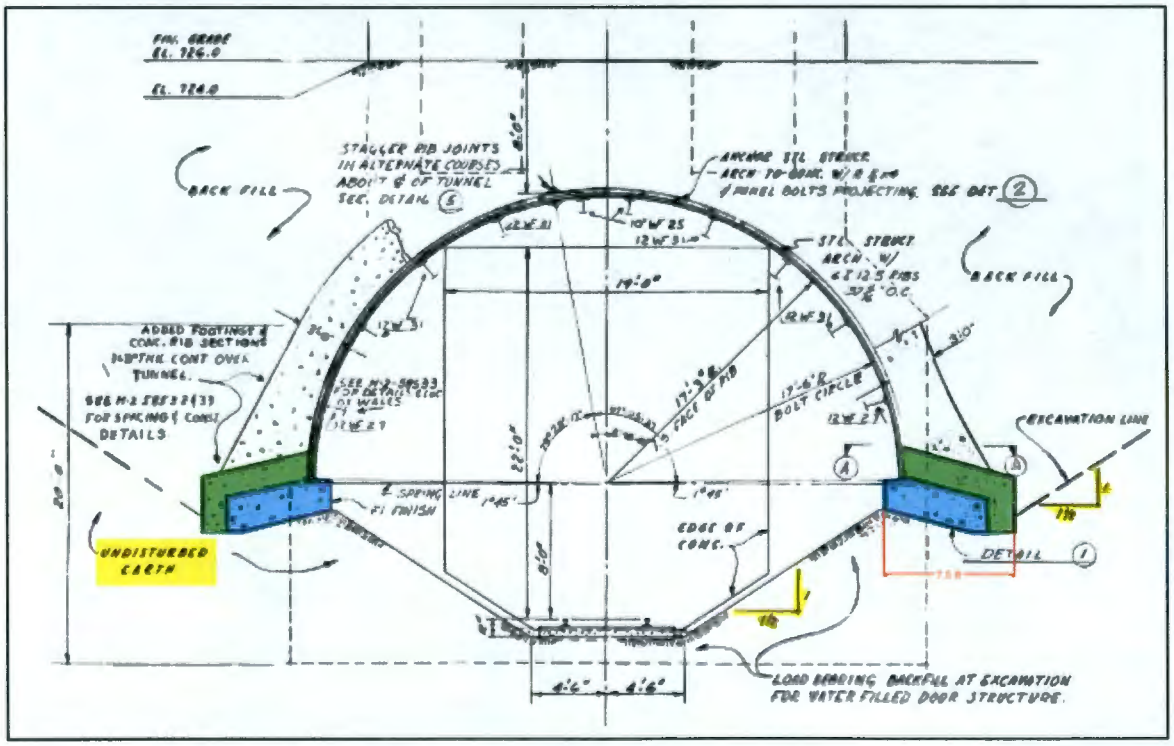

Typical Plan View of Footing (Original in CYAN, Modification in GREEN)

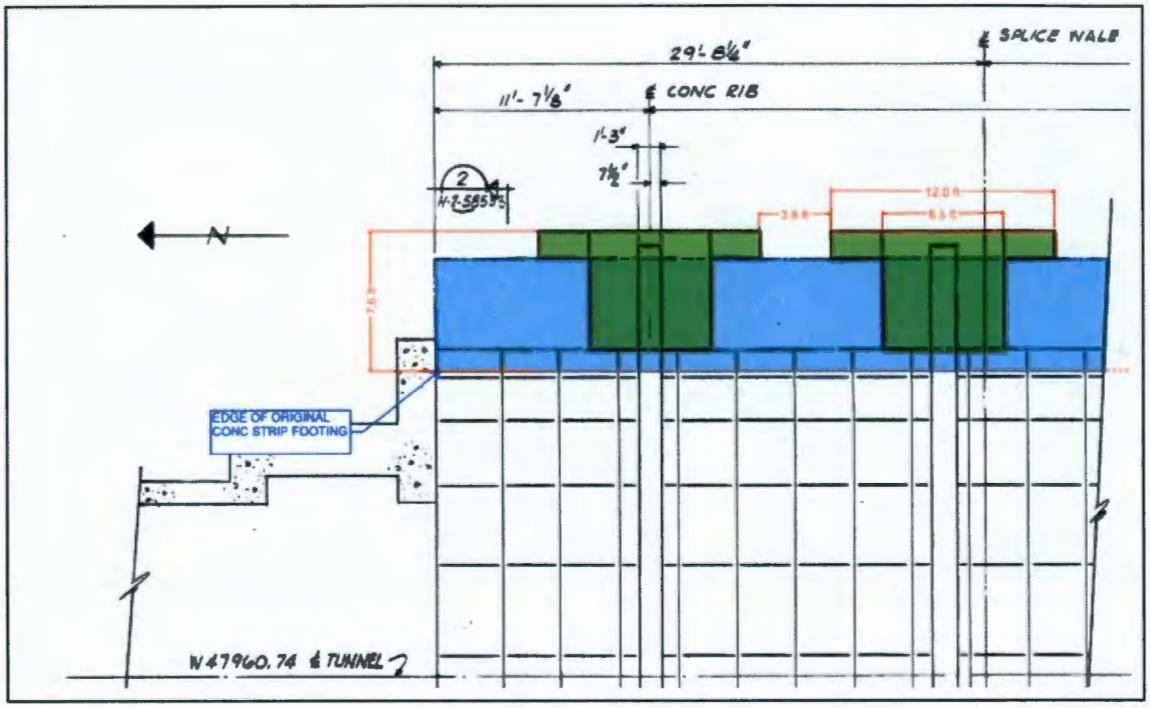

Profile View of Footing (Original in CYAN, Modification in GREEN):

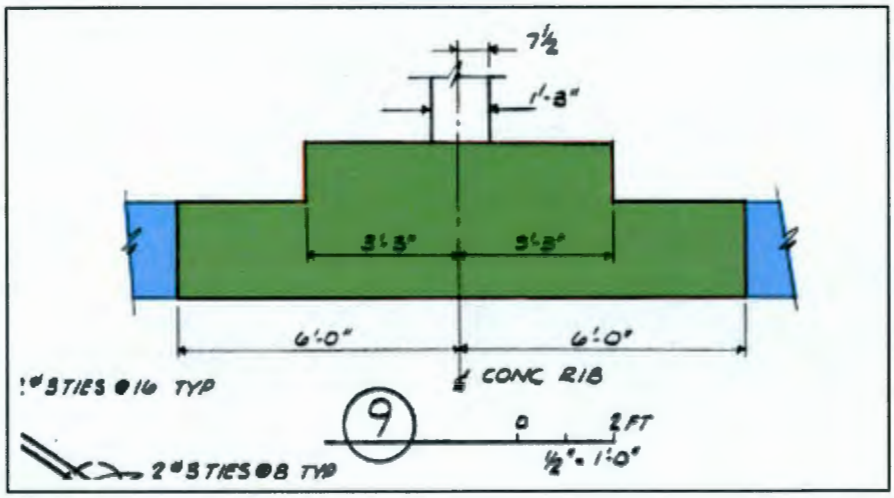

4.0 Footing Geometry:

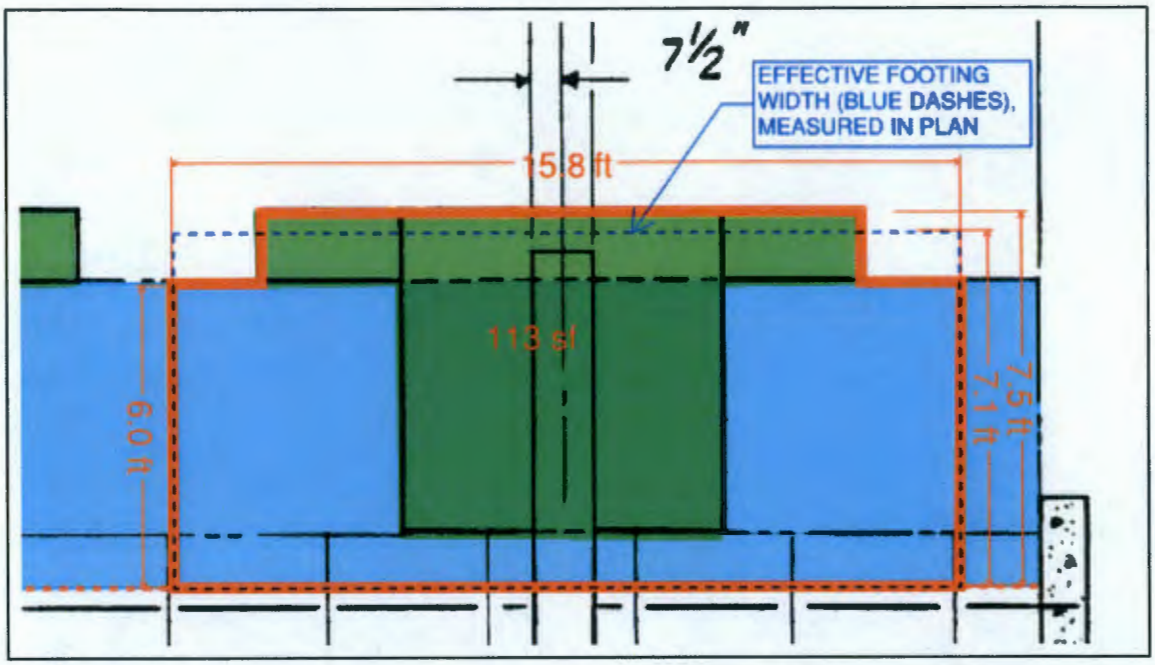

Due to irregular geometry of footing, determine average width by dividing representative footing area by the footing length. For Analysis, treat continuous footing as individual footings centered around concrete arch footings.

$$B_{ftg.avg} := \frac{112.5ft^2}{15.8ft} = 7.12\ ft$$

Planimetric average footing width

Actual footing surface is inclined convert planimentric average footing width to actual average footing width:

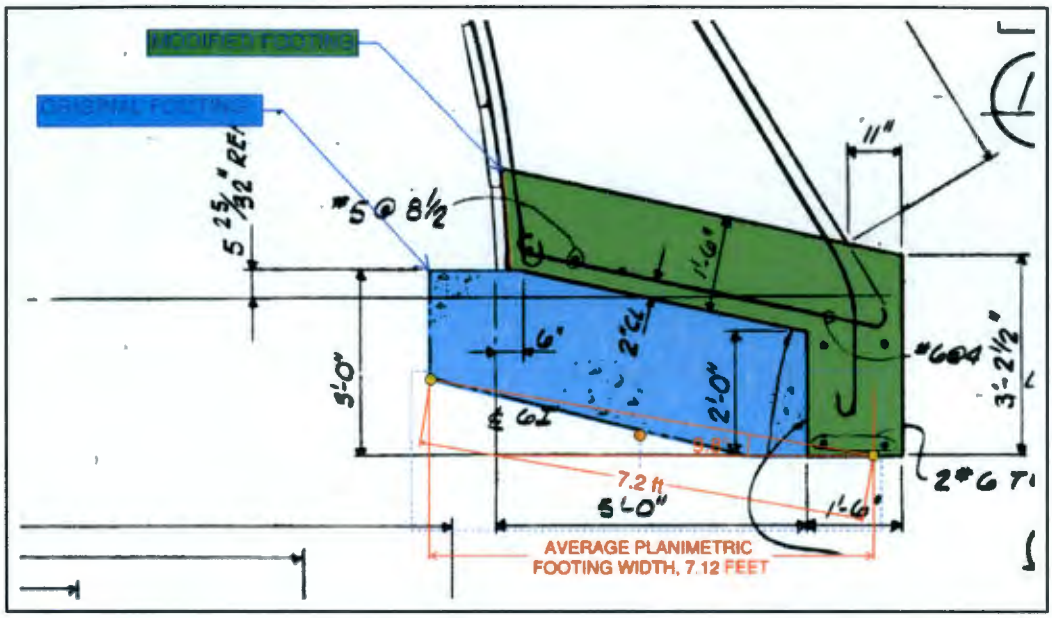

$\alpha := 10\text{deg}$ — Footing inclination

$B_{ftg} := \frac{B_{ftg.avg}}{\cos(\alpha)} = 7.23\ \text{ft}$ — Actual average footing width, measured along angle α

$L_{ftg} := 99999999999\text{ft}$ — Footing length. Extended to represent 2-D plain strain conditions similar to SLIDE.

$\beta := \text{atan}\left(\frac{1}{1.5}\right) = 33.7 \cdot \text{deg}$ — Slope inside tunnel is 1.5H:1V

$D_{ftg} := 0\text{ft}$ — Footing depth

$\sigma_{zD} := D_{ftg} \cdot \gamma_{moist} = 0 \cdot \text{psf}$ — In-situ vertical effective stress at depth, D

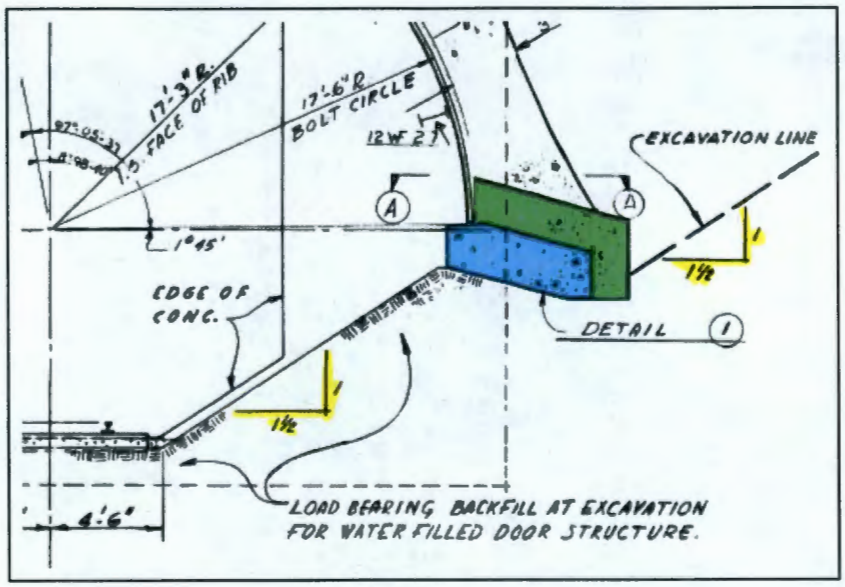

6.2 Estimate Bearing Capacity Using Vesic's Bearing Capacity Formula:

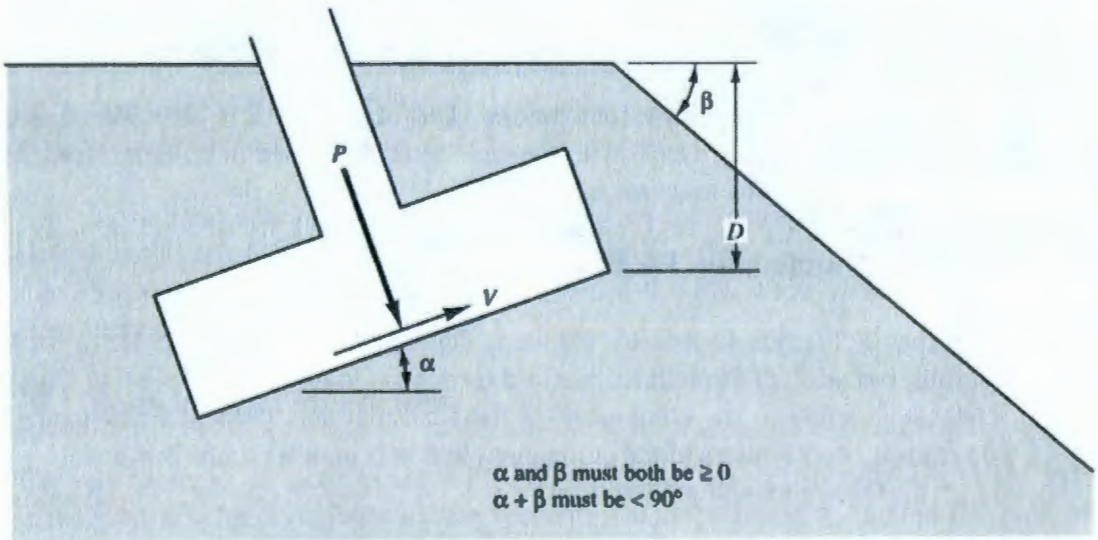

Footing Parameters for Vesic's Bearing Capacity Formula (adapted from Coduto (2001) Figure 6.8).

Function to calculate ultimate bearing capacity using Vesic's factors:

$$q_{ult} := c \cdot N_c \cdot s_c \cdot d_c \cdot i_c \cdot b_c \cdot g_c + \sigma_{zD}(D_{ftg}) \cdot N_q \cdot s_q \cdot d_q \cdot i_q \cdot b_q \cdot g_q + 0.5 \cdot \gamma \cdot B \cdot N_\gamma \cdot s_\gamma \cdot d_\gamma \cdot i_\gamma \cdot b_\gamma \cdot g_\gamma$$

where: s_c, s_q, s_γ = shape factors
d_c, d_q, d_γ = depth factors
i_c, i_q, i_γ = load inclination factors
b_c, b_q, b_γ = base inclination factors
g_c, g_q, g_γ = ground inclination factors

Vesic's Bearing Capacity Factors:

$$N_q := e^{\pi \tan(\phi)} \tan\left(45 \cdot deg + \frac{\phi}{2}\right)^2 \qquad N_q = 29.44$$

$$N_c := \begin{cases} 5.14 & \text{if } \phi = 0 \\ \dfrac{N_q - 1}{\tan(\phi)} & \text{otherwise} \end{cases} \qquad N_c = 42.164$$

$$N_\gamma := 2\left(N_q + 1\right)\tan(\phi) \qquad N_\gamma = 41.064$$

Vesic's Footing Shape Factors

$$s_c := 1.0 + \left(\frac{N_q}{N_c}\right)\left(\frac{B_{ftg}}{L_{ftg}}\right) \qquad s_c = 1$$

$$s_q := 1.0 + \left(\frac{B_{ftg}}{L_{ftg}}\right) \cdot \tan(\phi) \qquad s_q = 1$$

$$s_\gamma := 1.0 - 0.4 \cdot \left(\frac{B_{ftg}}{L_{ftg}}\right) \qquad s_\gamma = 1$$

Vesic's Depth Factors:

$$k\left(D_{ftg}\right) := \begin{cases} \dfrac{D_{ftg}}{B_{ftg}} & \text{if } \dfrac{D_{ftg}}{B_{ftg}} \le 1.0 \\ \operatorname{atan}\left(\dfrac{D_{ftg}}{B_{ftg}}\right) & \text{otherwise} \end{cases} \qquad D_{ftg} = 0 \cdot ft \qquad k\left(D_{ftg}\right) = 0$$

$$d_c := 1 + 0.4 \cdot k\left(D_{ftg}\right) \qquad d_c = 1$$

$$d_q := 1 + 2 \cdot \tan(\phi) \cdot (1 - \sin(\phi))^2 \cdot k\left(D_{ftg}\right) \qquad d_q = 1$$

$$d_\gamma := 1.00 \quad \text{for all } \phi \qquad d_\gamma = 1$$

Vesic's Load Inclination Factors:

$Q := 400000lbf$ — Total footing load, magnitude is not relevant, used only to establish ratio of normal to shear forces in calculation of "i" factors below.

$V := 0lbf \qquad P := Q$ — For comparision, consider that load is vertical only.

$A := B_{ftg} \cdot L_{ftg}$ — Base area of footing

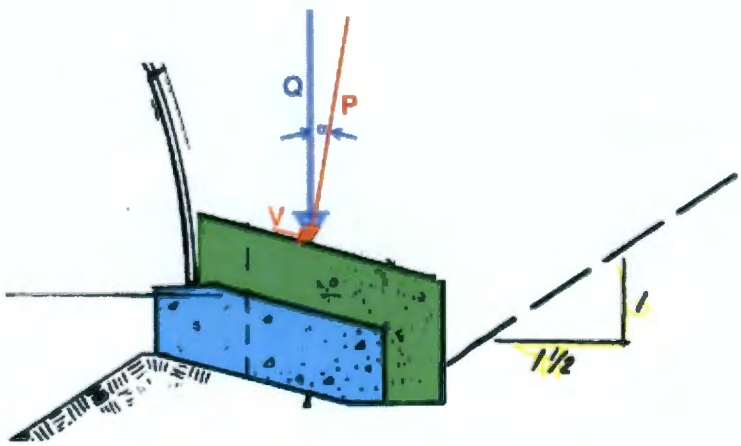

$$m := \frac{2 + \frac{B_{ftg}}{L_{ftg}}}{1 + \frac{B_{ftg}}{L_{ftg}}} = 2$$

For load inclination transverse to axis of tunnel

$$i_q := \left(1 - \frac{V}{P + \frac{A \cdot c}{\tan(\phi)}}\right)^m \qquad i_q = 1$$

$$i_\gamma := \left(1 - \frac{V}{P + \frac{A \cdot c}{\tan(\phi)}}\right)^{m+1} \qquad i_\gamma = 1$$

$$i_c := i_q - \left(\frac{1 - i_q}{N_c \cdot \tan(\phi)}\right) \qquad i_c = 1$$

Ground Inclination Factors:

Vesic's factors for accounting for inclined ground surface

$\beta = 33.7 \cdot deg$ $\qquad \frac{1}{\tan(\beta)} = 1.5$ $\qquad$ 1.5H:1V slope

$$g_c := 1 - \frac{\beta}{147deg} \qquad g_c = 0.771$$

$$g_q := (1 - \tan(\beta))^2 \qquad g_q = 0.111$$

$$g_\gamma := g_q \qquad g_\gamma = 0.111$$

Base Inclination Factors:

Vesic's factors for inclined base of footing.

$\alpha = 10 \cdot deg$ $\qquad$ Angle of inclination of base of footing.

$$b_c := 1 - \frac{\alpha}{147deg} \qquad b_c = 0.932$$

$$b_q := \left(1 - \frac{\alpha \cdot \tan(\phi)}{57deg}\right)^2 \qquad b_q = 0.777$$

$$b_\gamma := b_q \qquad b_\gamma = 0.777$$

Estimate Ultimate and Allowable Bearing Capacity Using Vesic's Extended Bearing Capacity Equation:

$$q_{ult.vesic} := c \cdot N_c \cdot s_c \cdot d_c \cdot i_c \cdot b_c \cdot g_c + \sigma_{zD} \cdot N_q \cdot s_q \cdot d_q \cdot i_q \cdot b_q \cdot g_q + 0.5 \cdot \gamma_{moist} \cdot B_{ftg} \cdot N_\gamma \cdot s_\gamma \cdot d_\gamma \cdot i_\gamma \cdot b_\gamma \cdot g_\gamma$$

$c = 0 \cdot psf$	$\sigma_{zD} = 0 \cdot psf$	$\gamma_{moist} = 125 \cdot pcf$	$B_{ftg} = 7.23\ ft$
$N_c = 42.164$	$N_q = 29.44$	$N_\gamma = 41.064$	
$s_c = 1$	$s_q = 1$	$s_\gamma = 1$	
$d_c = 1$	$d_q = 1$	$d_\gamma = 1$	
$i_c = 1$	$i_q = 1$	$i_\gamma = 1$	
$b_c = 0.932$	$b_q = 0.777$	$b_\gamma = 0.777$	
$g_c = 0.771$	$g_q = 0.111$	$g_\gamma = 0.111$	

$q_{ult.vesic} = 1603 \cdot psf$ Ultimate Bearing Capacity (FS=1.0)

$FS := 3$ factor of safety recommended for bearing capacity. Higher FS may be justified considering the poorly-defined subsurface conditions and the consequences of failure

$q_{allow.vesic} := \frac{q_{ult.vesic}}{FS} = 534 \cdot psf$ Allowable Bearing Capacity for noted Factor of Safety

Check using SLIDE 2-D Limit Equilibrium Analysis:

Simplified Geometry Used in SLIDE to Compare to Vesic:

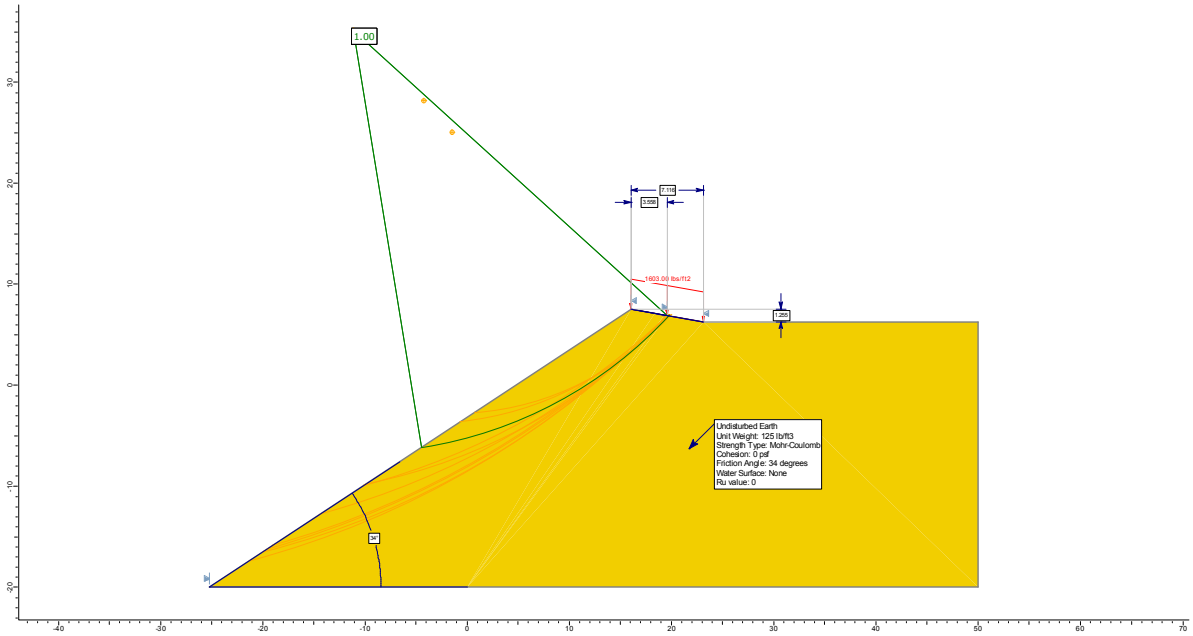
1.00
7.116
3.558
1603.00 lbs/ft2
1.288
Undisturbed Earth
Unit Weight: 125 lb/ft3
Strength Type: Mohr-Coulomb
Cohesion: 0 psf
Friction Angle: 34 degrees
Water Surface: None
Ru value: 0
34°

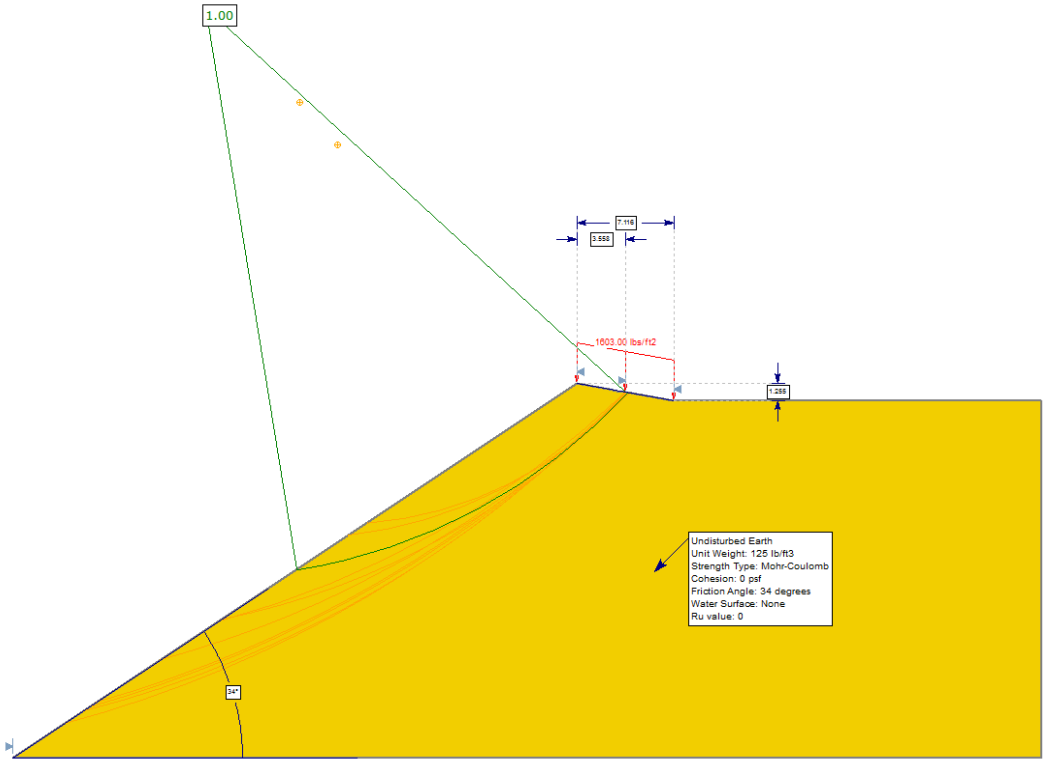
1.00
7.116
3.558
1603.00 lbs/ft2
1.288
Undisturbed Earth
Unit Weight: 125 lb/ft3
Strength Type: Mohr-Coulomb
Cohesion: 0 psf
Friction Angle: 34 degrees
Water Surface: None
Ru value: 0
34°

$q_{ult.SLIDE} := 1603psf$ for FS = 1.0

Comparison of Vesic's method, used herein, and 2D Limit Equilibrium Method in SLIDE produces identical results for simila loading adjacent to sloping ground surface. Within SLIDE, Spencer's method was used, along with a unit weight of 125 pcf, an internal friction angle of 34 degrees, a cohesion of 0 psf, vertical footing stresses, footing inclination of 10 degrees, and a slope angle of 1.5H:1V as shown in the attached screen captures. It was found necessary to move the slope limits to a distance of B/2 to produce identical results.

Through this exercise, it is concluded that SLIDE is an acceptable tool for evaluating bearing capacity of footings, and can b used to account for the complex geometry of Tunnel 2.

END OF CALCULATION

Tunnel 2 Soil Loading

Estimated Actual Bearing Pressure on Footings

Spot Check Soil Prism Geometry to Confirm Soil Loading

γ_{moist}	110 pcf	Moist unit weight expected to vary between 105 and 115pcf
Snow Load	15 psf	
Footing Width	7.5 feet	

STA	Footing	Soil Volume per LF (FT^3)	Soil Weight (LB)	Snow Load Width (feet)	Snow Load (LB)	Total Vertical Load on Footing (SOIL + SNOW)	Estimated Bearing Pressure (PSF)
3+32	Left (East)	377	41470	24.5	367.5	41837.5	5578
3+32	Right (West)	329	36190	24.5	367.5	36557.5	4874
6+00	Left (East)	342	37620	24.5	367.5	37987.5	5065
6+00	Right (West)	337	37070	24.5	367.5	37437.5	4992
7+00	Left (East)	344	37840	24.5	367.5	38207.5	5094
7+00	Right (West)	338	37180	24.5	367.5	37547.5	5006
10+00	Left (East)	334	36740	24.5	367.5	37107.5	4948
10+00	Right (West)	344	37840	24.5	367.5	38207.5	5094
14+00	Left (East)	326	35860	24.5	367.5	36227.5	4830
14+00	Right (West)	312	34320	24.5	367.5	34687.5	4625
20+00	Left (East)	352	38720	24.5	367.5	39087.5	5212
20+00	Right (West)	334	36740	24.5	367.5	37107.5	4948
						MIN	4625
						AVG	5022
						MAX	5578

NOTES:

Does not include weight of structure

Does not include weight of concrete footing

Assumes vertical projection of soil over footing as shown

View in cross sections is looking down-station, left side is east of centerline, right side is west of centerline

This is not a comparison against expected ultimate or allowable bearing pressures

EXAMPLE GEOMETRY:

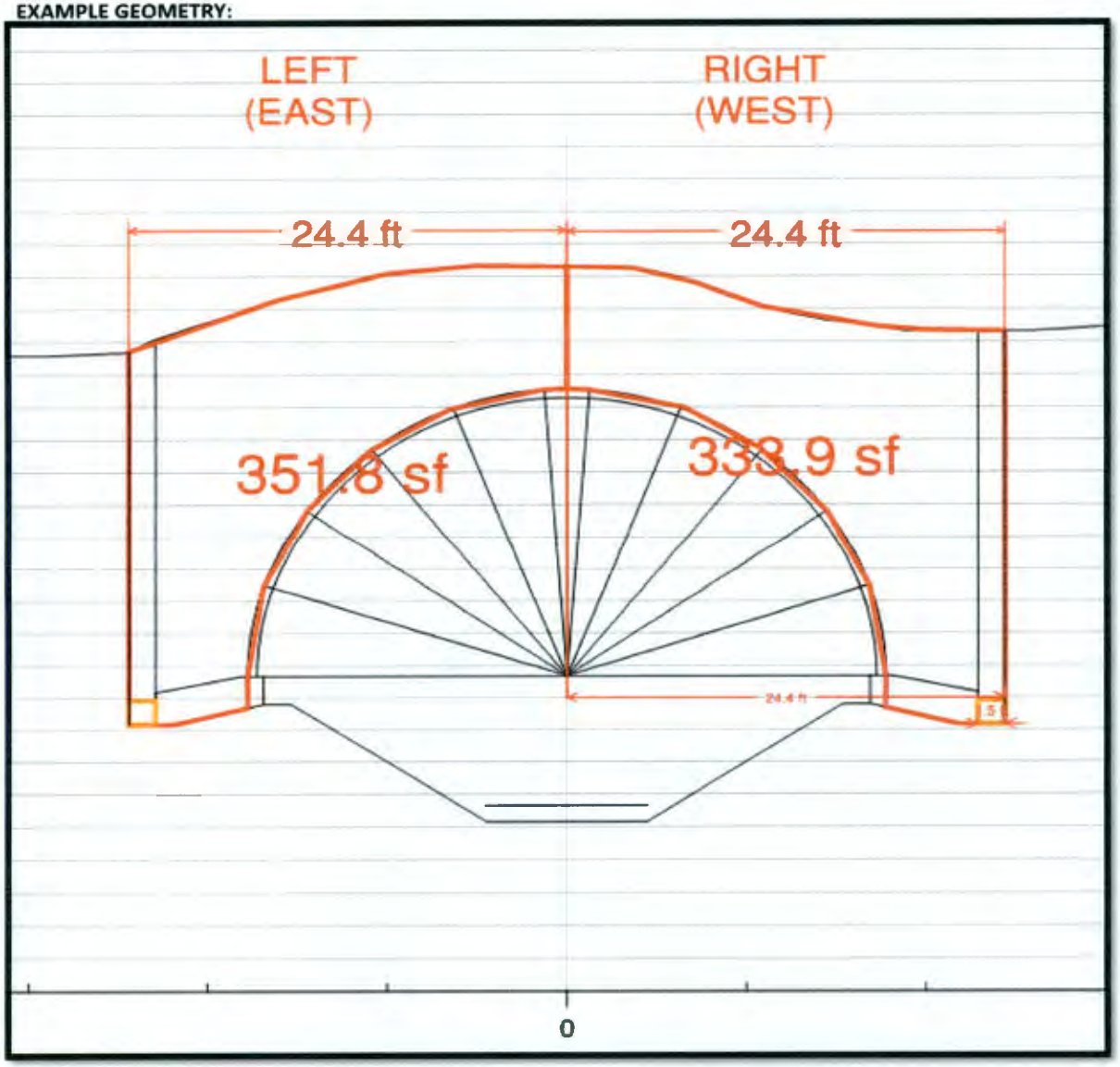

Tunnel No. 2 Bearing Pressure Evalutation:

Maximum Bearing Pressure is approximately 5600 psf, as interpreted from 2008 LIDAR topography and design tunnel geometry.
Bearing Pressure estimated as weight Tunnel 2 cover soil, using unit weight of soil of 110 pcf, snow load of 15 psf, footing width of 7.5 feet.
Bearing pressure assumed to act vertically.
Weight of structure and concrete footing not included.
Actual bearing pressures may vary.

Shear strength of Upper Hanford Formation and Hanford Formation from Shannon and Wilson (2015):

TABLE 1
INTERPRETED RANGE OF ENGINEERING SOIL PARAMETERS

Geologic Formation	General Material Description[1]	Moist Unit Weight[2], γ (pcf)	Shear Strength, τ: Internal Friction Angle[2], ϕ (deg)	Shear Strength, τ: Cohesion[2], C (psf)	Modulus of Subgrade Reaction[2], k, (pci)	Young's Modulus[2], E (ksi)
Dune sand/ Upper Hanford Formation	Loose to medium dense, trace silt to silty fine to medium SAND to fine sandy SILT	115 – 130	32 – 37	0	100 – 400 (200)	1.5 – 3.5
Hanford Formation	Loose to dense, silty to clean, sandy gravel and gravelly sand. Subangular to subrounded cobbles and boulders are common, as large as several feet in diameter.	120 – 130	38 – 54	0	400 – 1,600 (700 – 1,000)	10 – 25

Notes:
1. See the report text for an explanation of the geologic units, including more detailed discussion of the material descriptions. The Unified Soil Classification System (USCS) definitions are provided in Appendix B, Figure B-1.
2. The parameters above are based on index properties, laboratory tests, published correlations, testing from previous projects, and engineering judgment. Second line values in (), where provided, are recommended values. Please refer to the report text for additional information.
deg – degrees; ft = foot; ksi = kips per square inch; pcf = pounds per cubic foot; pci = pounds per cubic inch; psf = pounds per square foot

Recommended Geotechnical Properties for PUREX Site from Dames and Moore (1984):

- angle of internal friction (ϕ) = 34 degrees
- cohesion (C) = 0 psf
- mass density (γ) = 110 pcf

Internal Friction Angle, ϕ' (deg)	Cohesion, c' (psf)	Unit Weight of Soil, γ_m (psf)	Applied Bearing Pressure, q (psf)	Factor of Safety	
32	0	125	5600	0.8	Minimum soil strength for Upper Hanford Formation from Shannon and Wilson (2015)
34	0	125	5600	0.9	Soil properties from Dames & Moore (1984)
37	0	125	5600	1.0	Maximum soil strength for Upper Hanford Formation from Shannon and Wilson (2015)
38	0	125	5600	1.0	Minimum soil strength for Hanford Formation described by Shannon and Wilson (2015)
40	0	125	5600	1.1	
42	0	125	5600	1.2	
44	0	125	5600	1.3	
46	0	125	5600	1.3	Midpoint of range for Hanford Formation described by Shannon and Wilson (2015)
48	0	125	5600	1.4	
50	0	125	5600	1.5	
52	0	125	5600	1.7	
54	0	125	5600	1.8	Maximum soil strength for Hanford Formation described by Shannon and Wilson (2015)

SLIDE has been calibrated against Vesic's method to verify similar results, SLIDE is utilized for bearing capacity evaluation in this case due to it's ability to incorporate irregular geometry of slopes and footings. The 2D limit equilibrium approach used by slide is appropriate considering the length of the tunnel (very closely approximates plane-strain conditions)

Tunnel 2 has not failed, and has not shown evidence of foundation distress.

Shear strength of subgrade is uncertain.

Shear strength estimate provided by Dames and Moore (1984) for PUREX Process Facility Mods project indicates inadequate bearing capacity (FS=0.87) under expected loading.

Range of strenghts provided by Shannon and Wilson (2015) for Hanford Formation result in ultimate bearing capacity factors of safety greater than unity.

It is assumed that the bearing capacity of the existing footings has a factor of safety of at least 1.1

Subgrade soils with a unit weight of 125 pcf, a friction angle of 40 degrees, and a cohesion of 0 provide this factor of safety.

These geotechnical properties are within the range of recommended strengths provided by Shannon and Wilson (2015)

Factors of safety of 3.0 are commonly used in geotechnical practice for development of allowable bearing pressures for footings, higher factors of safety may be justified commensurate with uncertainty in subsurface conditions and consequences of failure.

The estimated factor of safety using the upper end of the shear strengh properties provided by Shannon and Wilson (2015) gives a factor of safety of 1.8 for the expected in-situ loading condition.

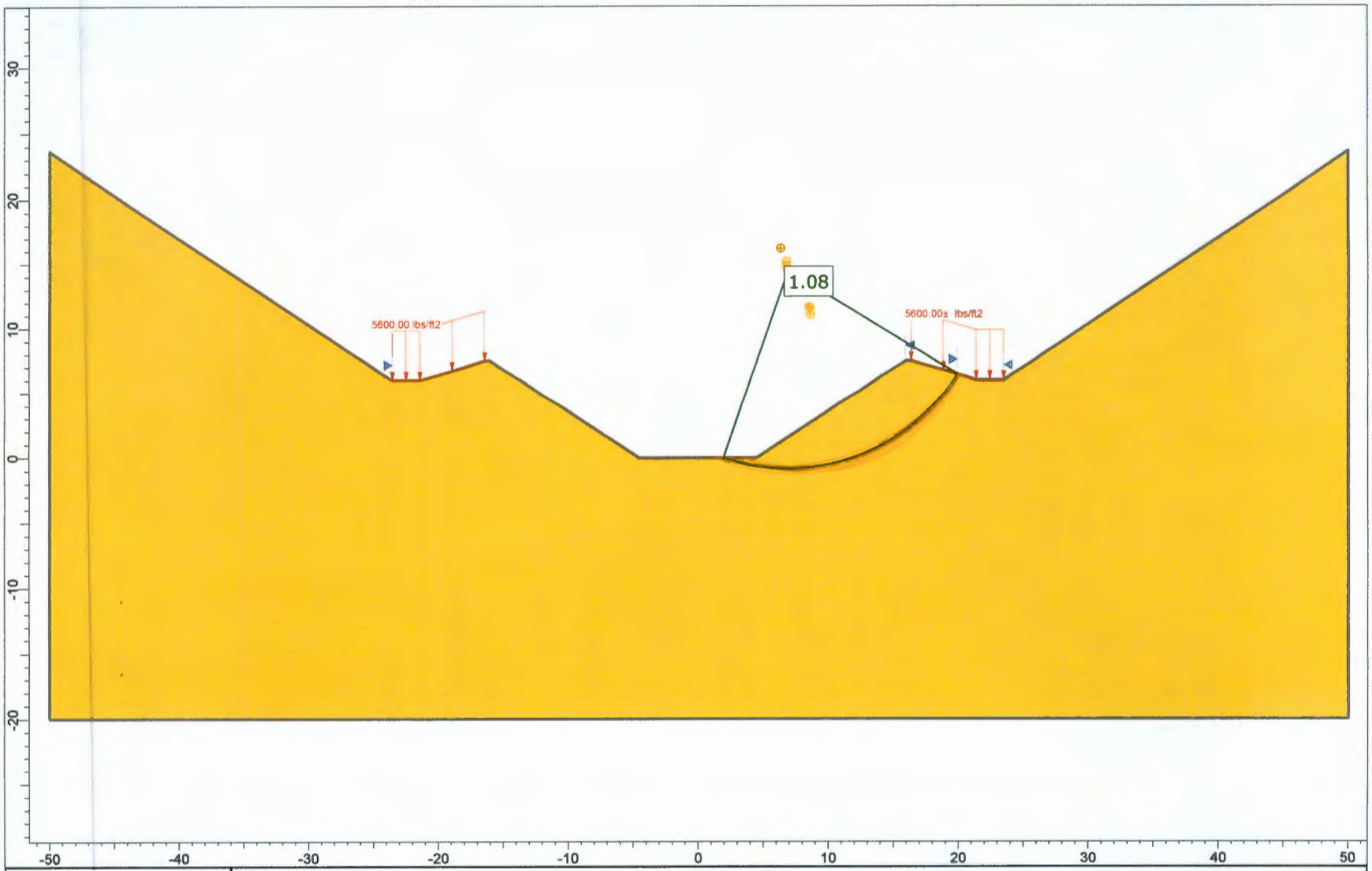

ch2m	Project: PUREX Tunnel 2 Evaluation	
	Bearing Capacity Evaluation	
	Scale: 1:120	File Name: Tunnel 2 Bearing Capacity.slim

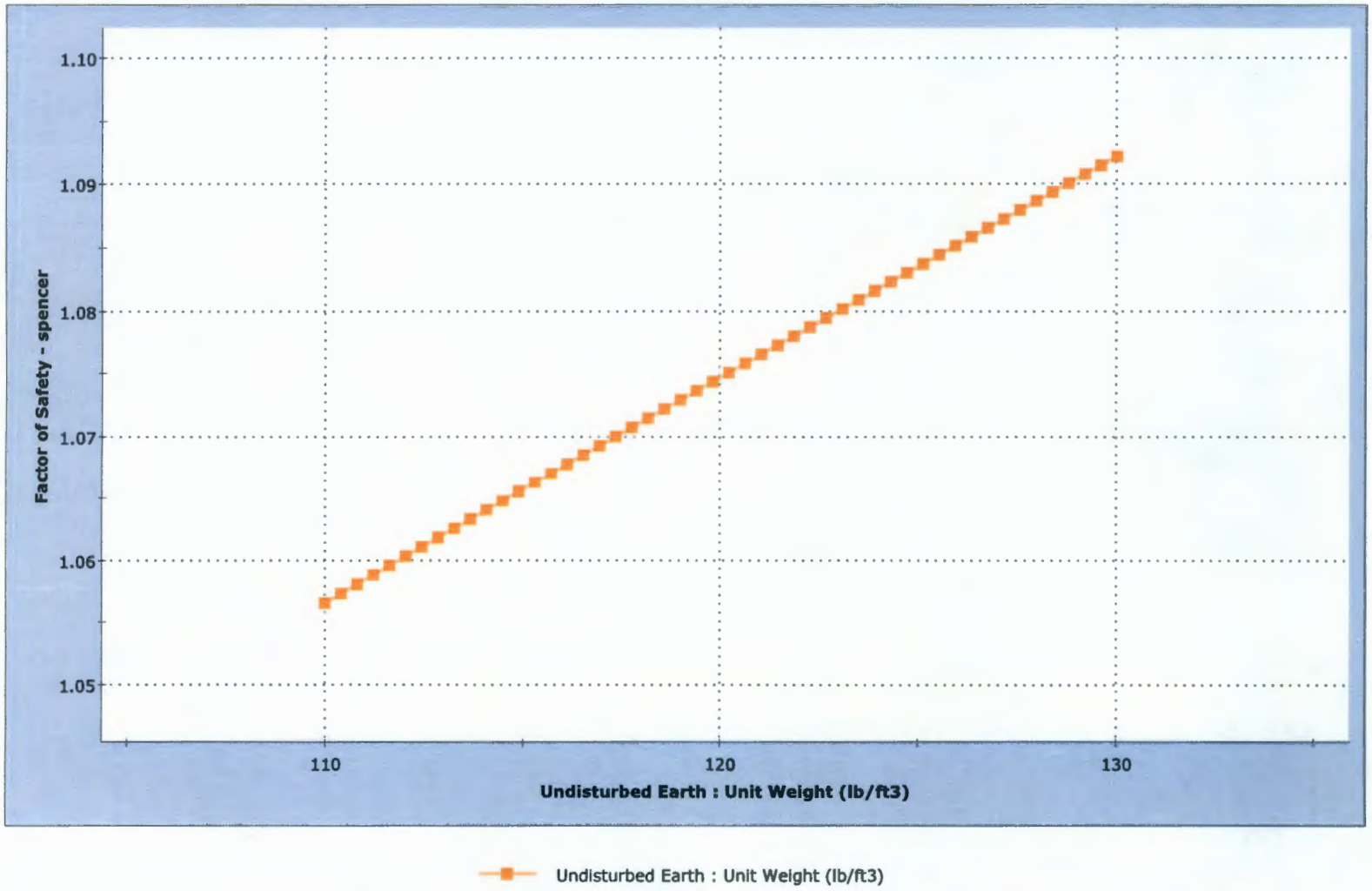

ch2m	Project	PUREX Tunnel 2 Evaluation
		Bearing Capacity Evaluation
	Scale	File Name: Tunnel 2 Bearing Capacity.slim

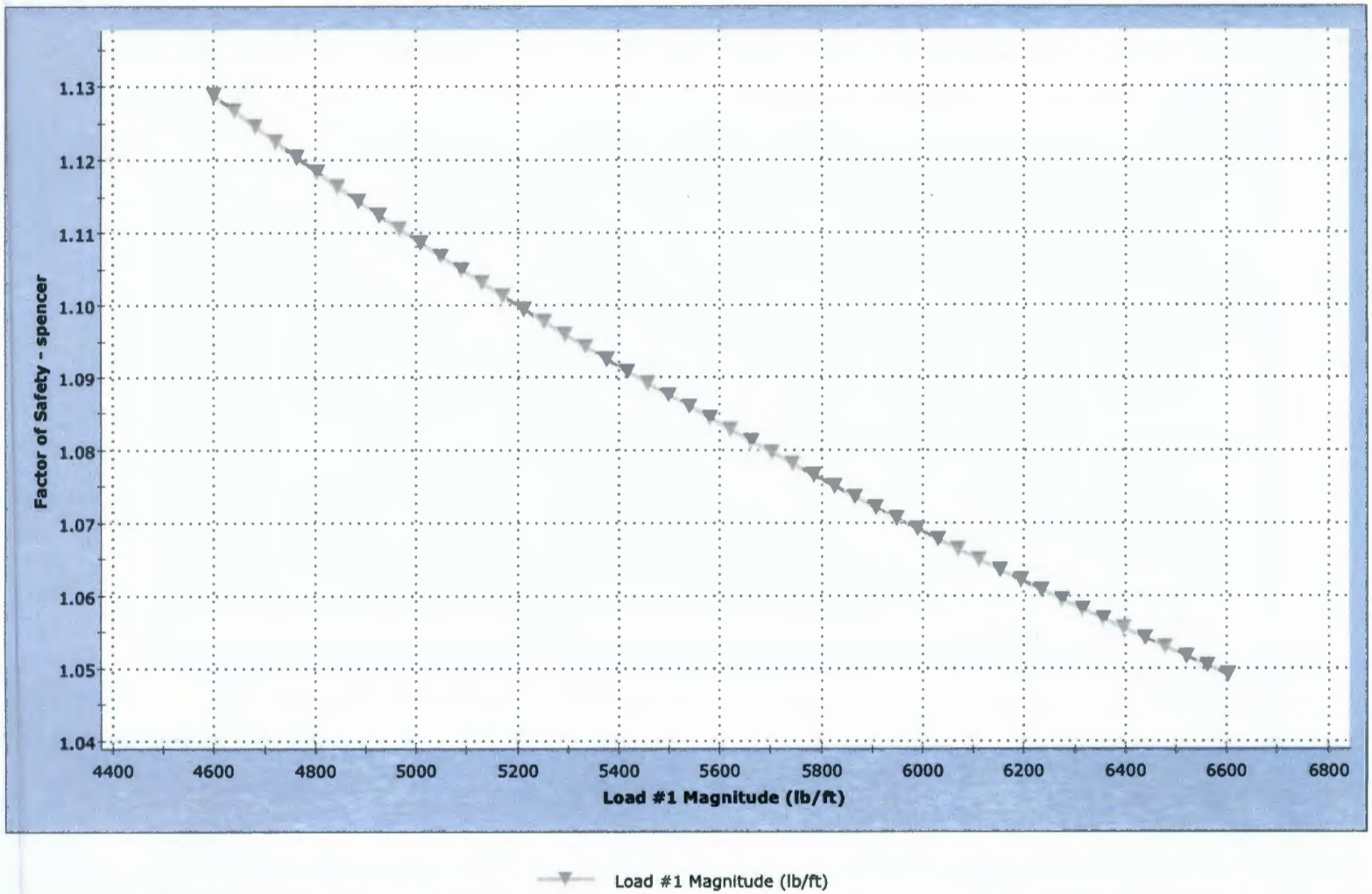

ch2m	Project: PUREX Tunnel 2 Evaluation	
	Bearing Capacity Evaluation	
	Scale	File Name: Tunnel 2 Bearing Capacity.slim

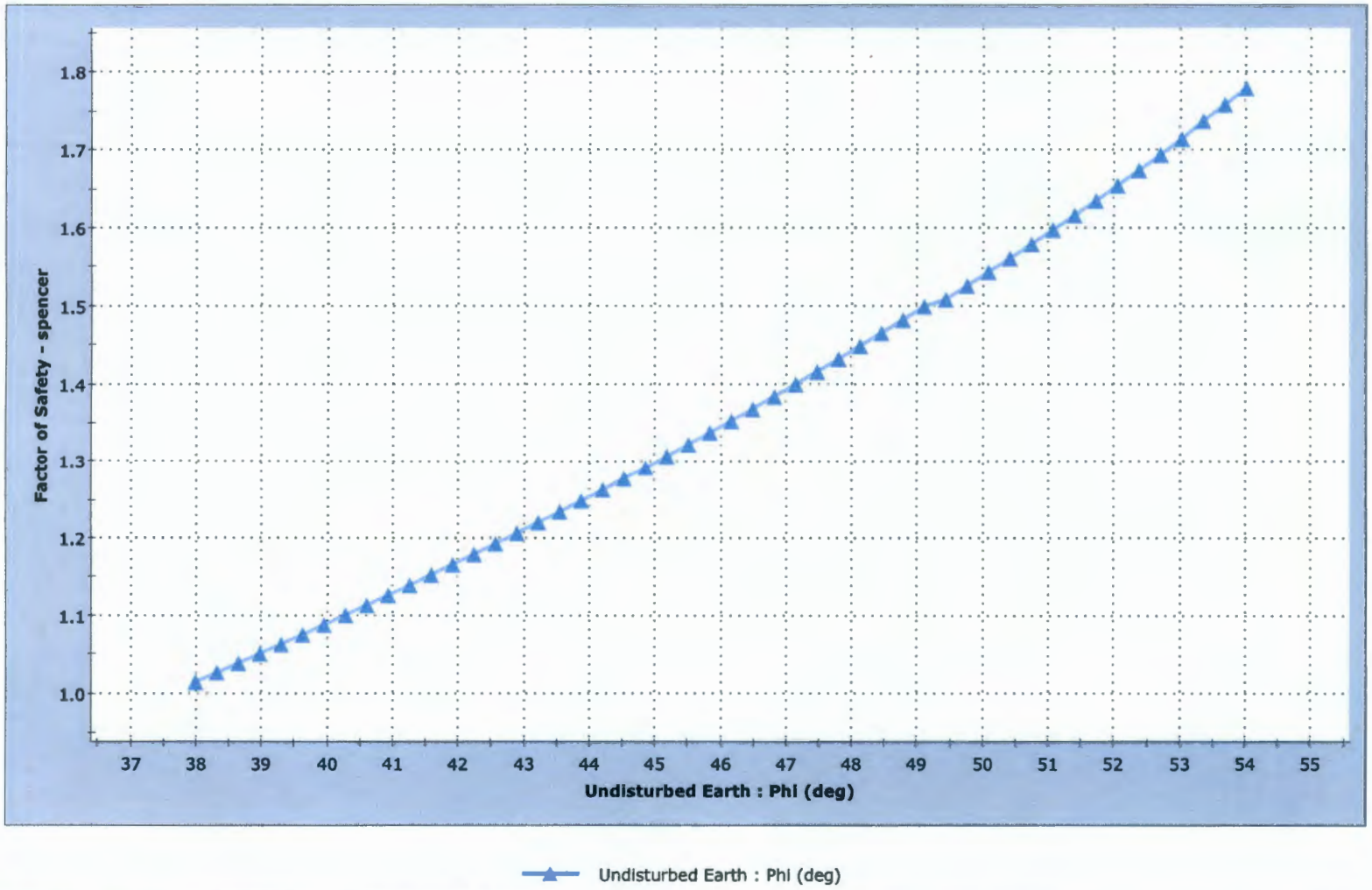

ch2m	Project: PUREX Tunnel 2 Evaluation	
	Bearing Capacity Evaluation	
	Scale	File Name: Tunnel 2 Bearing Capacity.slim

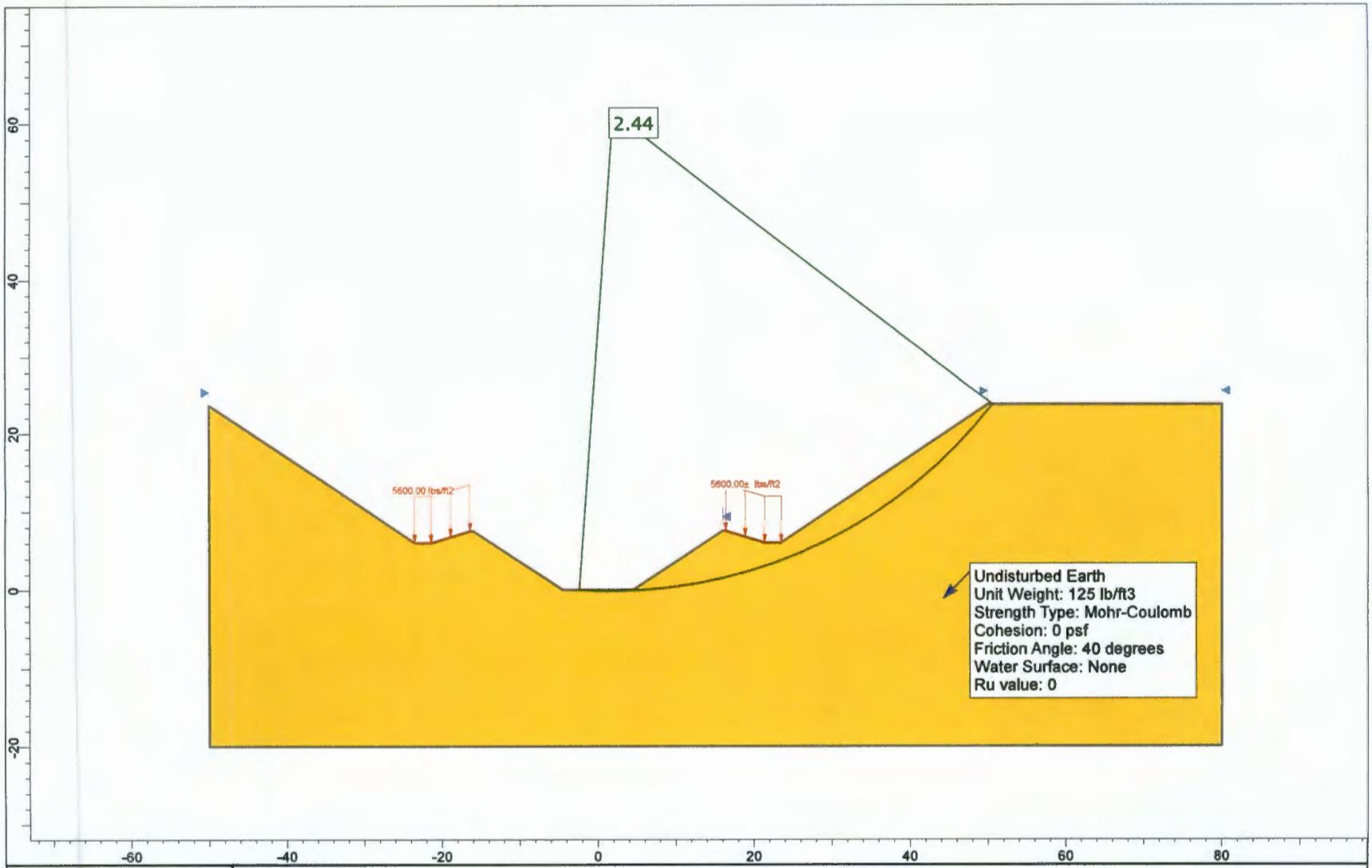

ch2m	Project: PUREX Tunnel 2 Evaluation	
	Global Stability Check	
	Scale: 1:200	File Name: Tunnel 2 Global Stability.slim