9 0 1 1 3 0 0 1 9 2

DOE 0180

WASTE PRETREATMENT PROCESS

SEPTEMBER 6, 1990

TECHNOLOGY INDEPENDENT REVIEW TEAM MEETING

WESTINGHOUSE HANFORD

2750/200E/B103

PRESENTED BY

WASTE PRETREATMENT TECHNOLOGY

J. N. APPEL, MANAGER

MAY 1991
RECEIVED
EDMC

0013766

9 0 1 1 0 0 3 1 9 0 3

INTRODUCTION

Double–Shell Tank Waste Treatment, Storage, and Disposal

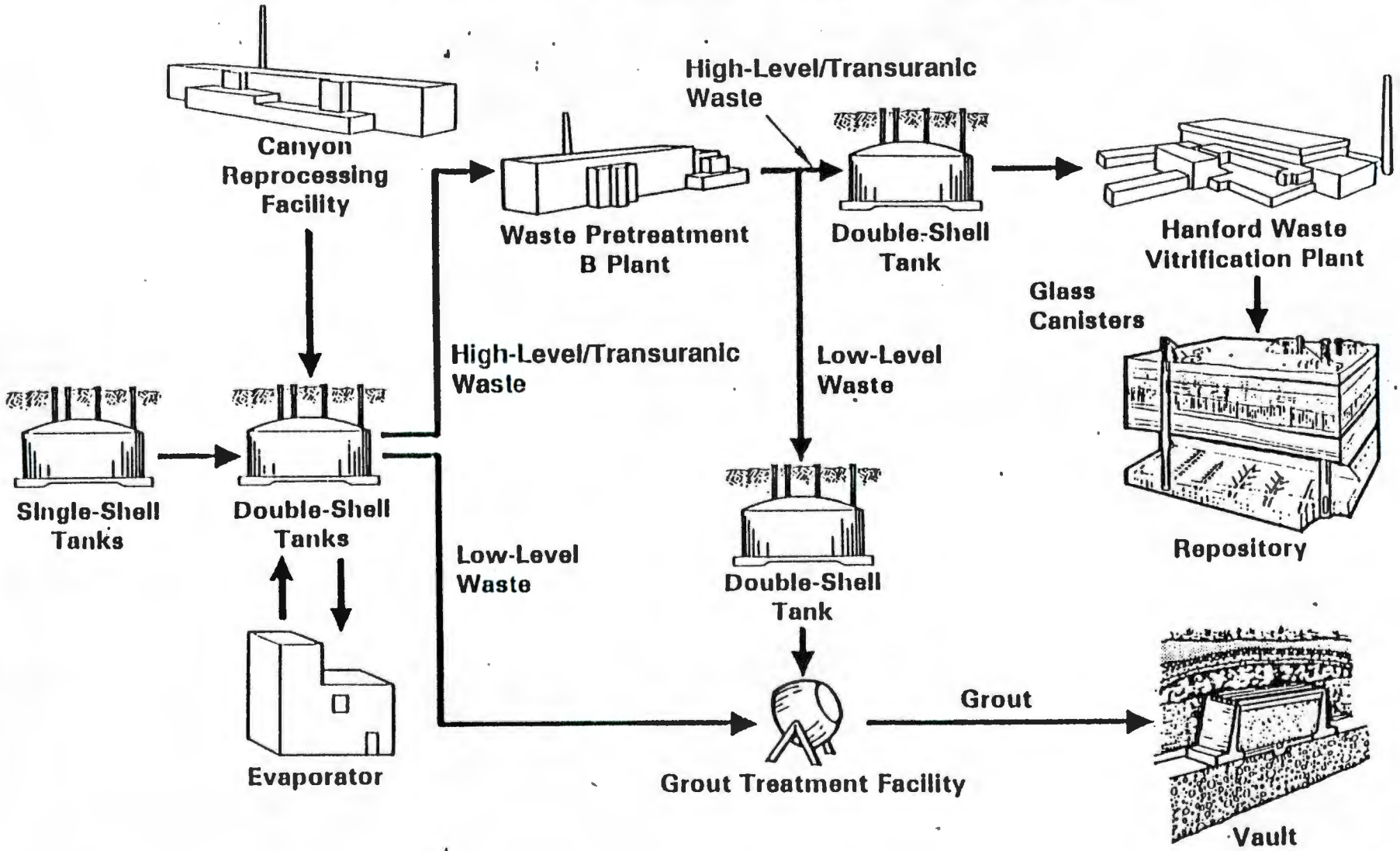

28808014.1

Waste Management Practices Hanford vs. Savannah River

- Hanford wastes are segregated
- Hanford DSTs do not have cooling coils
- The use of complexant in past strontium recovery operations poses unique problems

Double-Shell Tank Waste Types

- o Pretreatment and Vitrification (HWVP)
  - Neutralized Current Acid Waste (NCAW)
  - Neutralized Cladding Removal Waste (NCRW)
  - Plutonium Finishing Plant waste (PFP)
  - Complexant Concentrates (CC)
- o Cementation
  - Double-Shell Slurry Feed (DSSF)
  - Double-Shell Slurry (DSS)
  - Phosphate Sulphate Waste (PSW)

Technology Assessment

DST Wastes for Pretreatment and Vitrification Neutralized Current Acid Waste (NCAW)

- High-heat, first-cycle PUREX waste
- Iron hydroxide sludge (20 percent volume) contaminated with actinides and strontium. Contains aluminum and sodium salts.
- Alkaline supernate contaminated with cesium
- Present inventory 1.4 million gallon, with an additional 0.6 million gallons from future PUREX operation (2.0 million gallons total)
- Stored in tanks 101-AZ and 102-AZ

In addition,

The HWVP feed tank 102-AY contains heel (gallons) contaminated with transuranics and cholorides which may require pretreatment.

DST Wastes for Pretreatment and Vitrification Neutralized Cladding Removal Waste (NCRW)

- Waste from PUREX fuel cladding dissolution cycle
- Zirconium containing sludge contaminated with TRU
- Alkaline supernate is a low-level waste
- Stored in tanks 103-AW and 105-AW
- Present inventory is 0.9 million gallons sludge, with an additional 0.3 million gallons from future PUREX operations (1.2 million gallons total)

Technology Assessment

DST Wastes for Pretreatment and Vitrification Plutonium Finishing Plant (PFP) Waste

- Low-heat, high TRU waste from PFP operation
- Metal containing sludge
- TRU elements are present in the sludge in insoluble compound
- Alkaline supernate is a low-level waste
- Stored in tank 102-SY (200W)
- Present inventory 0.1 million gallons sludge with an additional 0.7 million gallons possible from future operations

BACKGROUND

OBJECTIVE OF PRESENTATION

- O REVIEW RESULTS OF WASTE PRETREATMENT ALTERNATIVES STUDIES.
- O REVIEW CURRENT STATUS.
- O OVERVIEW PRETREATMENT TECHNOLOGY PLANS/SCHEDULES.

Treatment of Hanford Site Wastes for Disposal

Objective

- Partition waste
  - Large fraction suitable for near-surface disposal
  - Small fraction for disposal in geologic repository
- Convert waste to forms suitable for final disposal

DST WASTE PRETREATMENT ALTERNATIVES STUDIES

O 1983 STUDY (SCHULZ, ET AL, 1983; SD-WM-ES-023)

- RECOMMENDED PRETREATMENT IN B PLANT.

- SLUDGE WASHING FOR NCAW, PFP, NCRW;
  Cs REMOVAL NCAW,
  COMPLEXANT DESTRUCTION CC.

DST WASTE PRETREATMENT ALTERNATIVES STUDIES (CONT'D)

- O LAB AND ENGINEERING STUDIES SHOWED LARGE ECONOMIC ADVANTAGES FOR WASTE PARTITIONING
- O 1986 HANFORD WASTE MANAGEMENT PLAN (HWMP) PRETREATMENT BASELINE CHANGED TO:
  - INCORPORATE WASTE TRU REMOVAL CONCEPT; TRANSURANIC EXTRACTION PROCESS (TRUEX) FOR PFP, NCRW, CC.

DST WASTE PRETREATMENT ALTERNATIVES STUDIES (CONT'D)

- O 1988-89 STUDY (KUPFER, BOLDT, SD-WM-TA-015, SEPT. 1989)
  - REASSESSED PROCESSES AND FACILITIES FOR PRETREATMENT OF HANFORD TANK WASTES.
    - o INCORPORATED RECENT TECHNOLOGY DEVELOPMENT AND EVENTS.
    - o SYSTEM OPTIMIZATION.
- O 1989 STUDY (NOORDHOFF, WHC-SP-0464, MARCH 1989)
  - A FOLLOW ON STUDY TO SD-WM-TA-015.
    - o UPDATED COSTS, SCHEDULES.
    - o REASSESSED ALTERNATIVE PRETREATMENT FACILITIES.
    - o ASSESSED VIABILITY OF EXISTING FACILITIES.

SUMMARY OF 1988 - 1989 STUDIES

O BASELINE PLAN WHEN STUDIES WERE PERFORMED (HWMP).

- WASH NCAW IN B PLANT.
- TRUEX PROCESS REMAINING WASTE IN B PLANT.
- VITRIFY WASTE @ 45 KG/H RATE.

SUMMARY OF 1988 - 1989 STUDIES (CONT'D)

O CHANGES THAT IMPACTED BASELINE PLAN.

- N REACTOR PLACED IN COLD STANDBY; DST WASTES CAN BE PROCESSES EARLIER.

- NCAW WILL BE "AGED" WASTE -- SETTLE-DECANT MAY BE POSSIBLE IN DST OR AR VAULT.

- HWVP DESIGN BASIS PROVIDED FOR INSTALLATION OF 100 KG/H MELTER FOR SST WASTE -- COULD BE USED FOR DST WASTE.

SUMMARY OF 1988 - 1989 STUDIES (CONT'D)

PRETREATMENT STUDY OPTIONS

PROCESS ALTERNATIVES

- SLUDGE WASHING
- DISSOLUTION/TRUEX

FACILITY OPTIONS

- B PLANT
- AR VAULT
- PUREX
- EXPANDED HWVP
- NEW STAND-ALONE
- DST

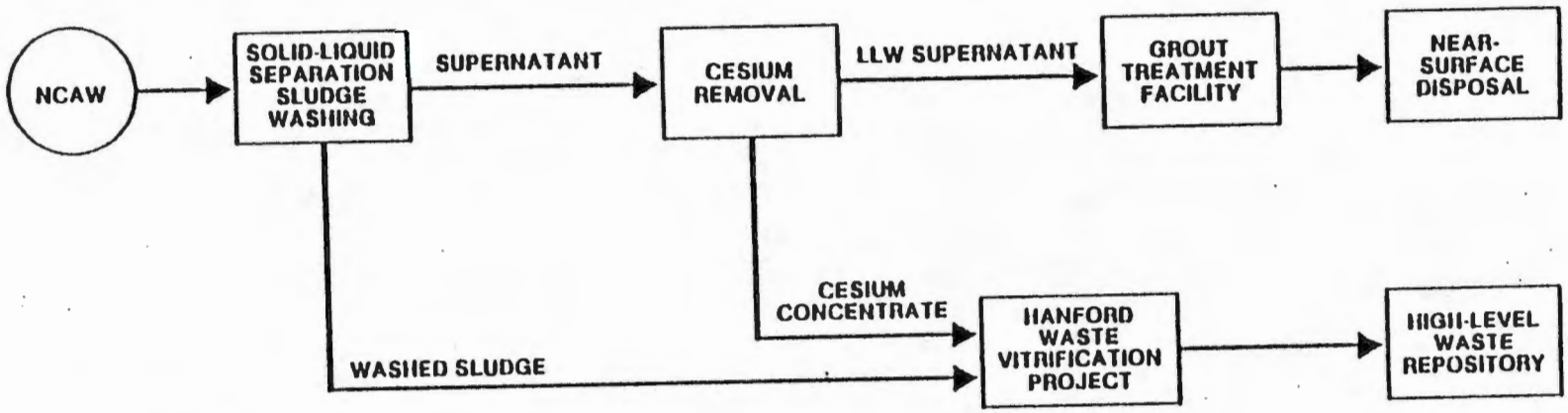

LLW = LOW-LEVEL WASTE.
NCAW = NEUTRALIZED CURRENT ACID WASTE.

P588-3209-A-1

Figure A-1. Neutralized Current Acid Waste Pretreatment Process Options--Sludge Washing, Cesium Removal--Current Hanford Waste Management Plan Baseline.

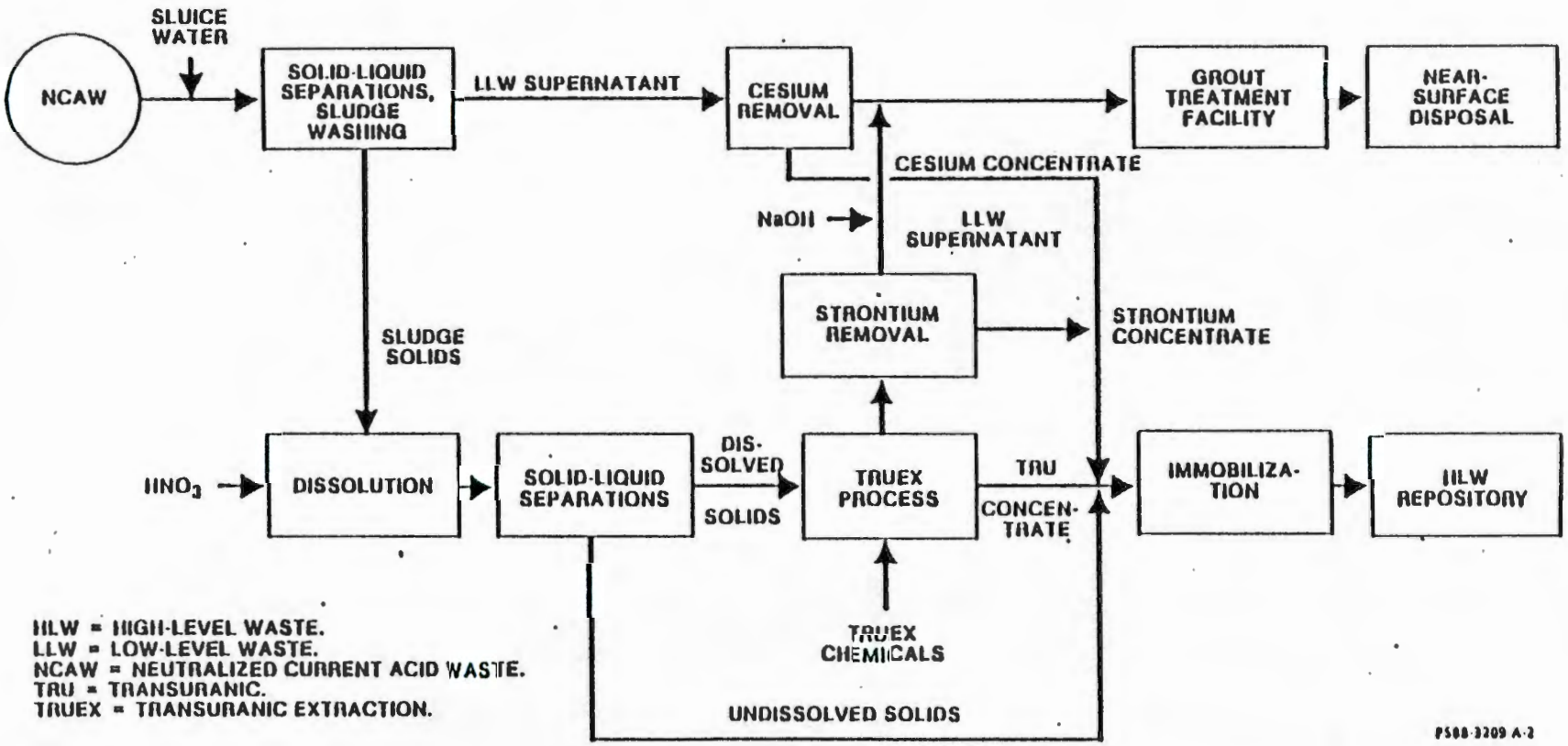

Figure A-2. Neutralized Current Acid Waste Pretreatment Process Options--Sludge Washing, Cesium Removal, Transuranic Extraction, Strontium Removal.

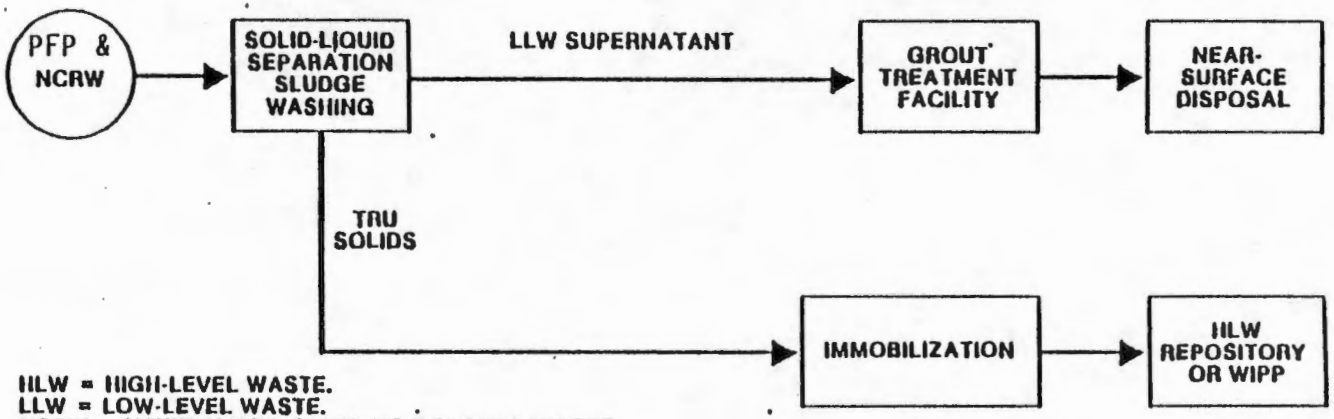

HLW = HIGH-LEVEL WASTE.
LLW = LOW-LEVEL WASTE.
NCRW = NEUTRALIZED CLADDING REMOVAL WASTE.
TRU = TRANSURANIC.
WIPP = WASTE ISOLATION PILOT PLANT.

PS88-3209-A-5

Figure A-5. Neutralized Cladding Removal Waste Pretreatment Process Options--Sludge Washing.

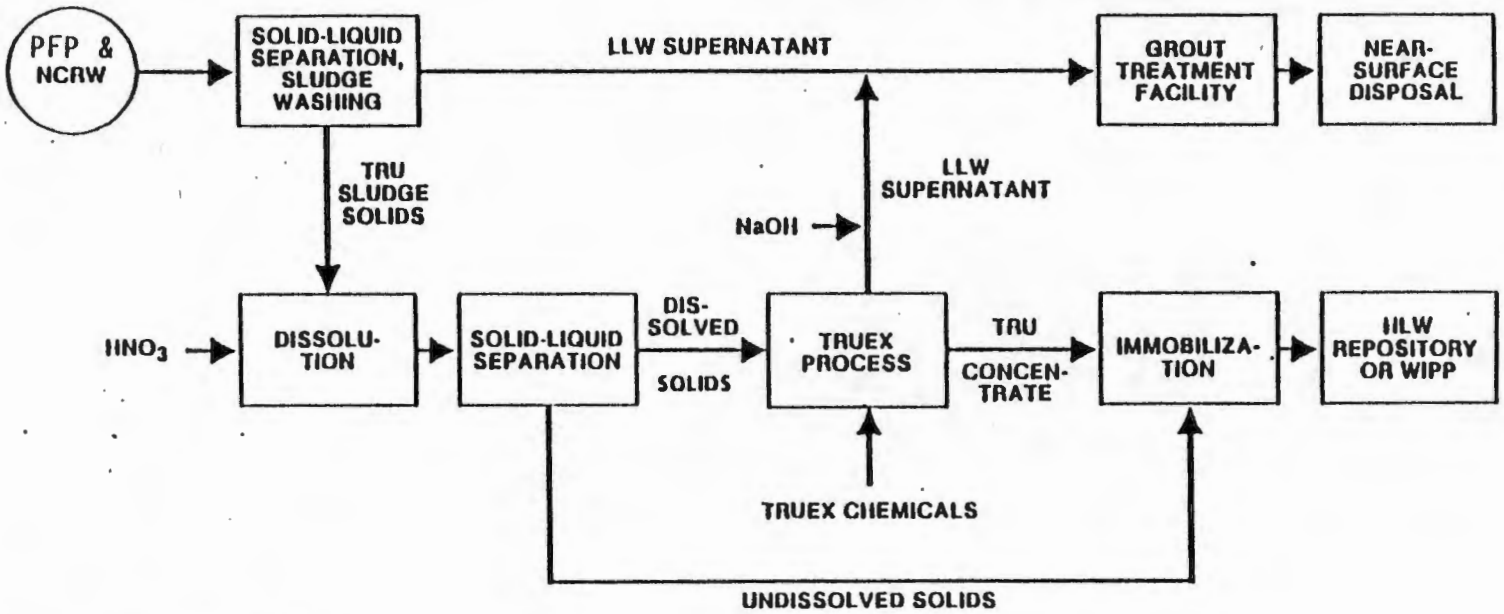

HLW = HIGH-LEVEL WASTE.
LLW = LOW-LEVEL WASTE.
NCRW = NEUTRALIZED CLADDING REMOVAL WASTE.
TRU = TRANSURANIC.
TRUEX = TRANSURANIC EXTRACTION.
WIPP = WASTE ISOLATION PILOT PLANT.

PS88-3209-A-6

Figure A-6. Neutralized Cladding Removal Waste Pretreatment Process Option--Transuranic Extraction--Current Hanford Waste Management Plan Baseline.

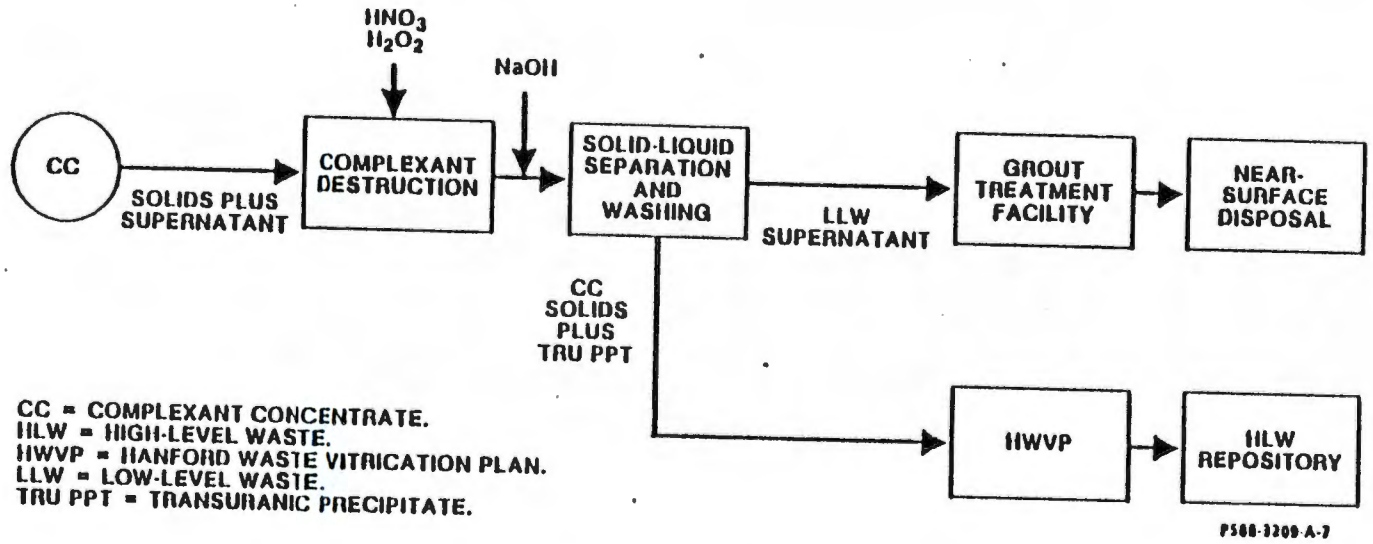

Figure A-7. Complexant Concentrate Pretreatment Process Options--Complexant Destruction.

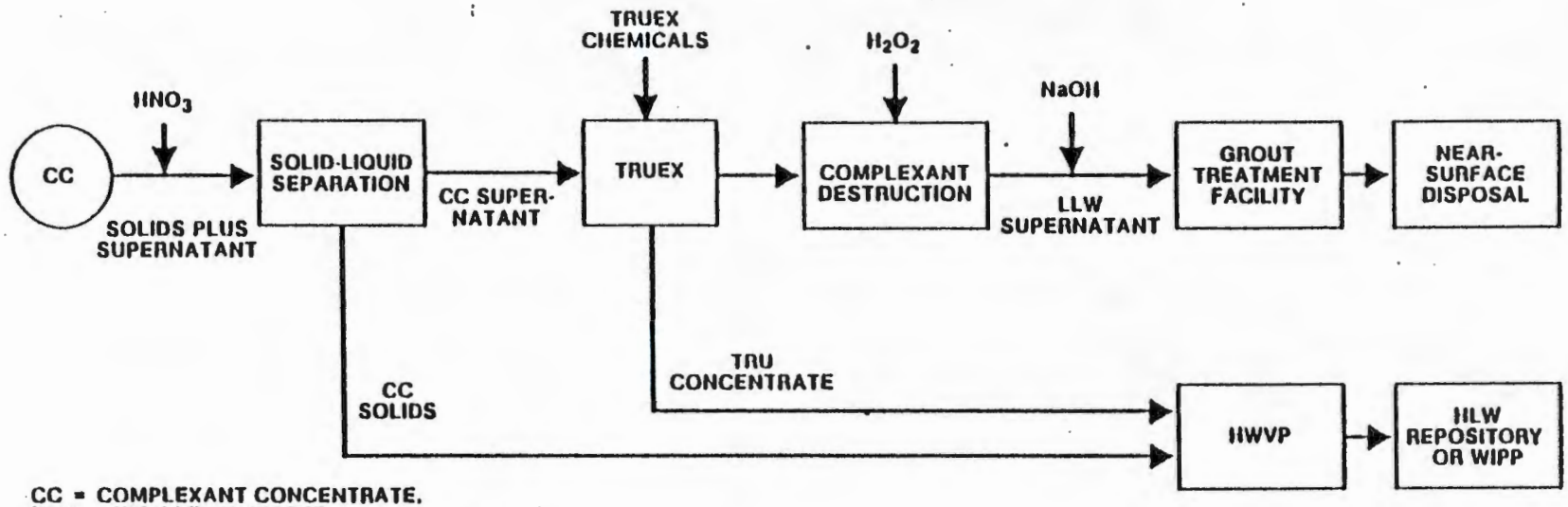

CC = COMPLEXANT CONCENTRATE.
HLW = HIGH-LEVEL WASTE.
HWVP = HANFORD WASTE VITRIFICATION PLAN.
LLW = LOW-LEVEL WASTE.
TRU = TRANSURANIC.
TRUEX = TRANSURANIC EXTRACTION.
WIPP = WASTE ISOLATION PILOT PLANT.

PSBB-3209-A-9

Figure A-9. Complexant Concentrate Pretreatment Process Options--Transuranic Extraction, Complexant Destruction.

SUMMARY OF 1988-1989 STUDIES (CONT'D)

STUDY RESULTS

- O ATTRACTIVE ALTERNATE BASELINE PLAN IDENTIFIED
  - WASH NCAW IN AR VAULT RATHER THAN B PLANT
  - TRUEX PROCESS REMAINING DST WASTE IN B PLANT - ACCELERATE SCHEDULE
  - INSTALL 100 KG/H HWVP MELTER FOR DST WASTE VITRIFICATION

SUMMARY OF 1988 - 1989 STUDIES (CONT'D)

LESS ATTRACTIVE ALTERNATIVES

- ALL SLUDGE WASHING - HIGH COST
- ALL TRUEX - TECHNOLOGY RISK (NCAW ^{90}Sr REMOVAL)
- ALTERNATIVE FACILITIES TO B PLANT
  - EXPANDED HWVP - REQUIRES 1989 PROJECT CHANGE
  - NEW STAND-ALONE - INCREASED COST, 1994 LINE ITEM
  - PUREX - COLD STANDBY, INCREASED COST, 1994 LINE ITEM
  - DST - POSSIBLE ALTERNATIVE TO AR VAULT FOR WASHING NCAW; FURTHER STUDY REQUIRED

SUMMARY OF 1988 - 1989 STUDIES (CONT'D)

PRETREATMENT COSTS

PROCESS OPTION	CANISTERS OF GLASS	TOTAL COST MILLIONS FY 1988 $
SLUDGE WASH ALL	3350	3400 - 3800
SLUDGE WASH NCAW-TRUEX PROCESS REMAINING WASTE	1560	2850 - 3150

SUMMARY OF 1988 - 1989 STUDIES (CONT'D)

POTENTIAL COST REDUCTIONS FROM BASELINE PLAN

	ACTION	COST REDUCTION* MILLIONS, FY 88 $
1)	MAXIMIZE TRUEX CAPACITY IN B PLANT; 100 KG/H MELTER FOR DST WASTE	250
2)	WASH NCAW IN AR VAULT	250
	TOTAL	500

* FROM BASELINE COST OF $3,400 MILLION (FY 1988)

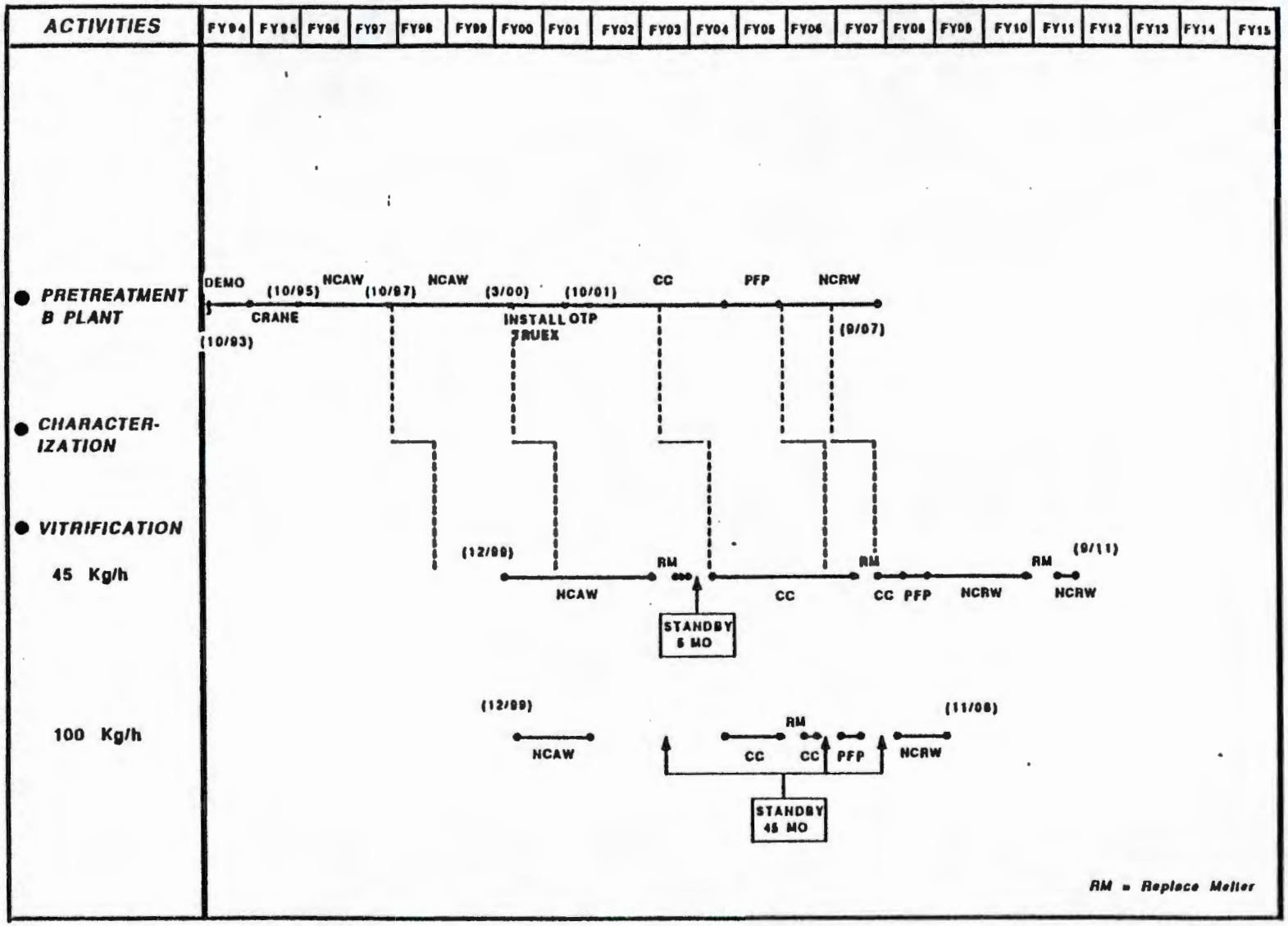

Figure 8-1. Option A--B Plant Baseline (Revised). (All Pretreatment at B Plant. October 1993 Start of Neutralized Current Acid Waste Demonstration.)

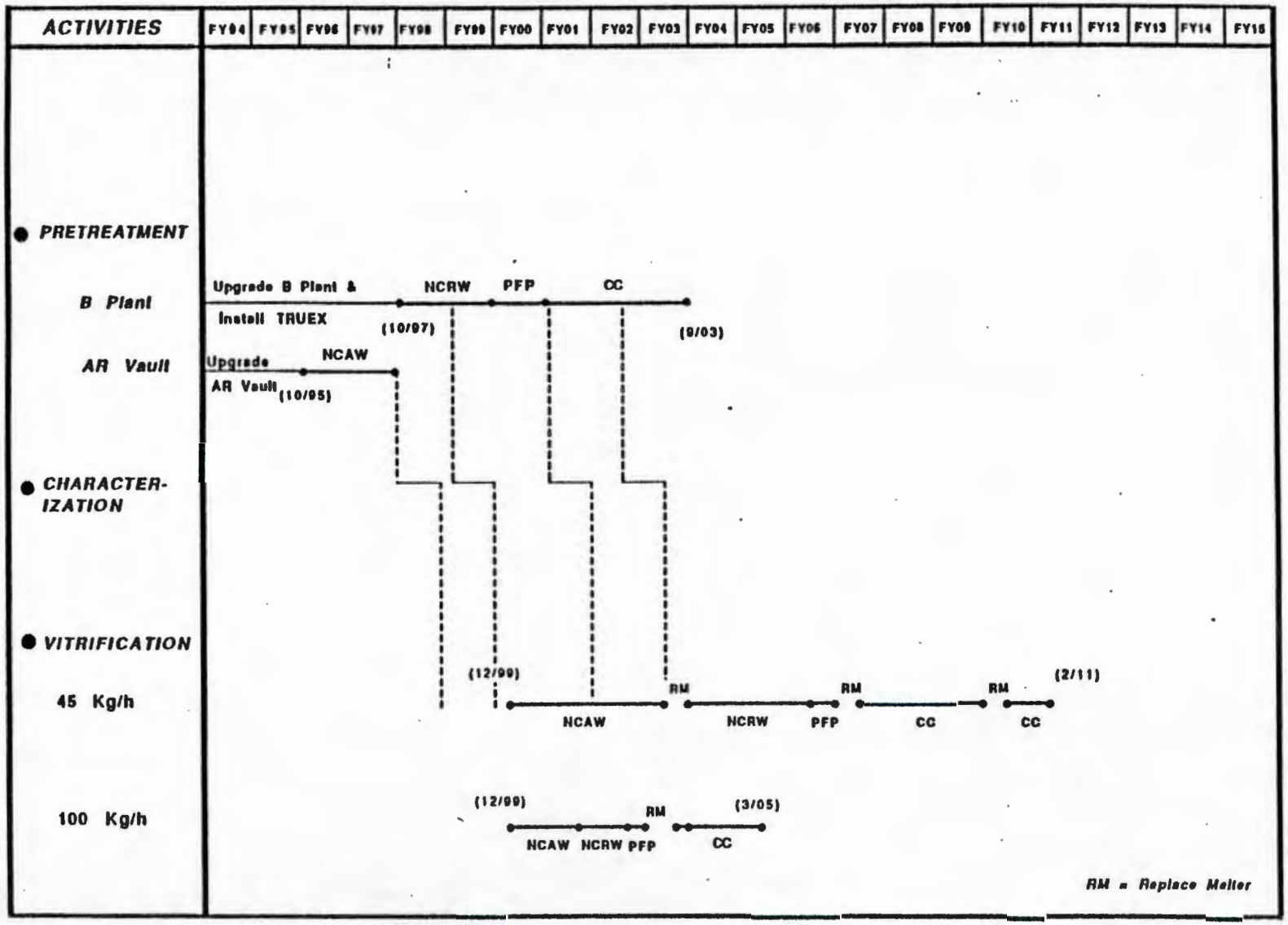

Figure 8-2. Option B--B Plant/244-AR Vault. (Wash Neutralized Current Acid Waste in 244-AR Vault. Accelerate TRUEX in B Plant.)

PRESENT SCHEDULE - OPTION B

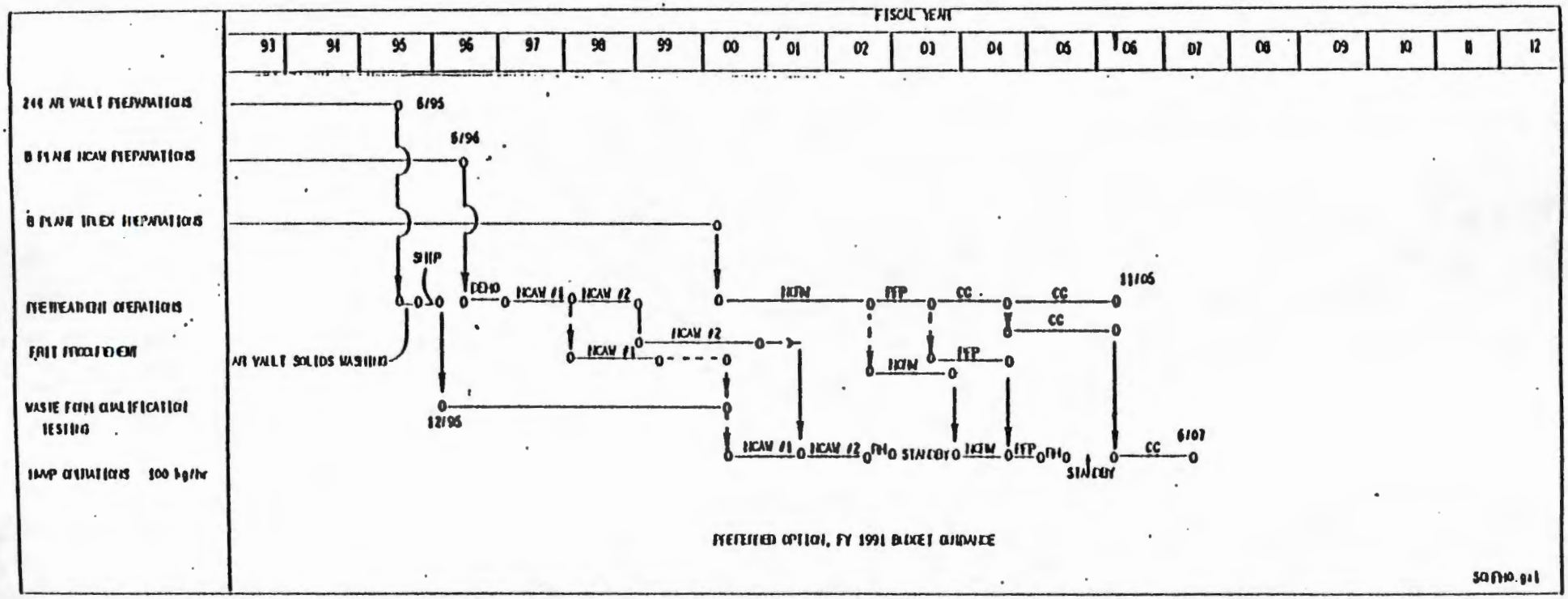

WVD TECHNOLOGY
FY 1991 DST WASTE CHARACTERIZATION

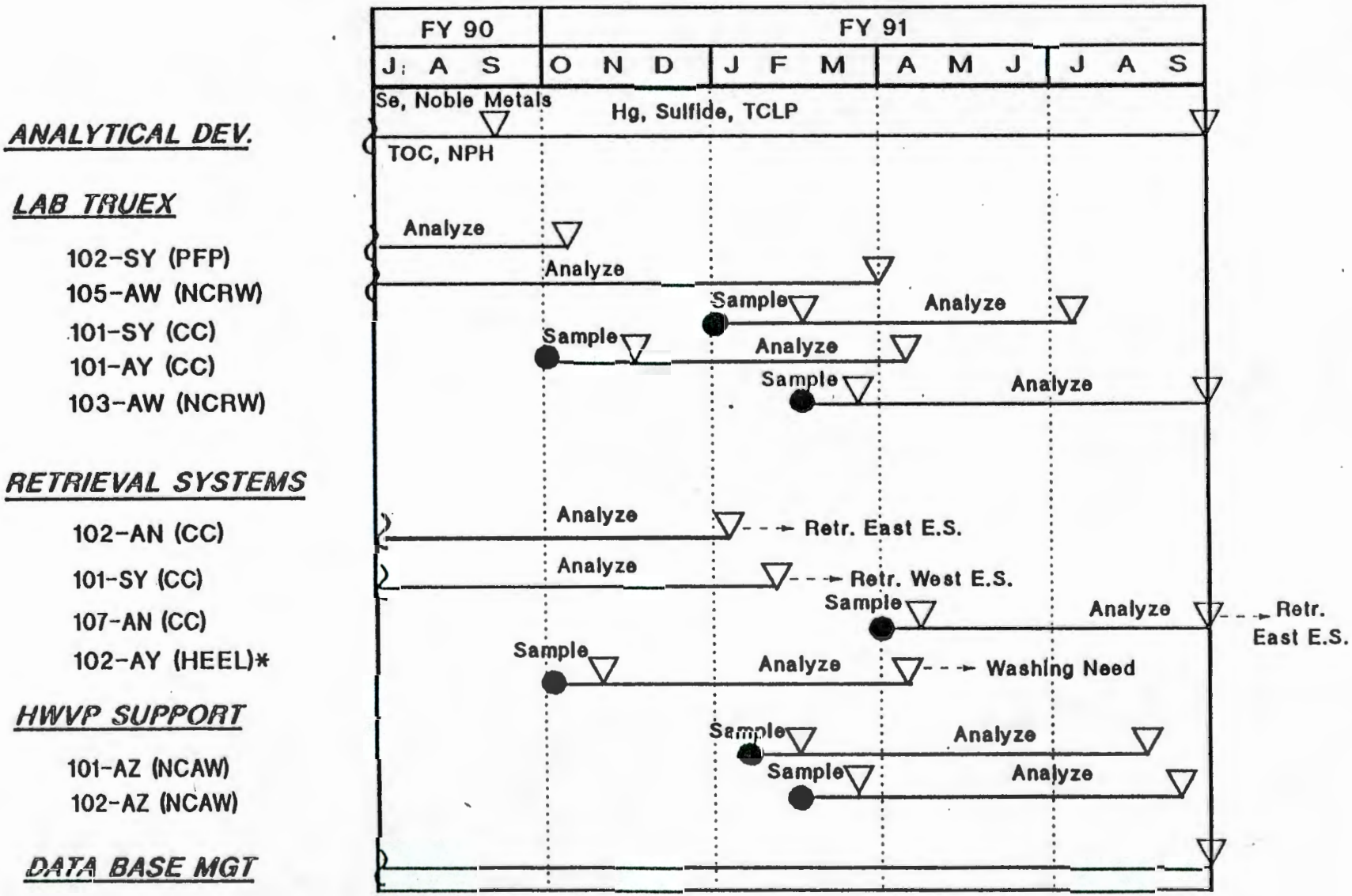

*ALSO SUPPORTS HWVP

NCAW PRETREATMENT

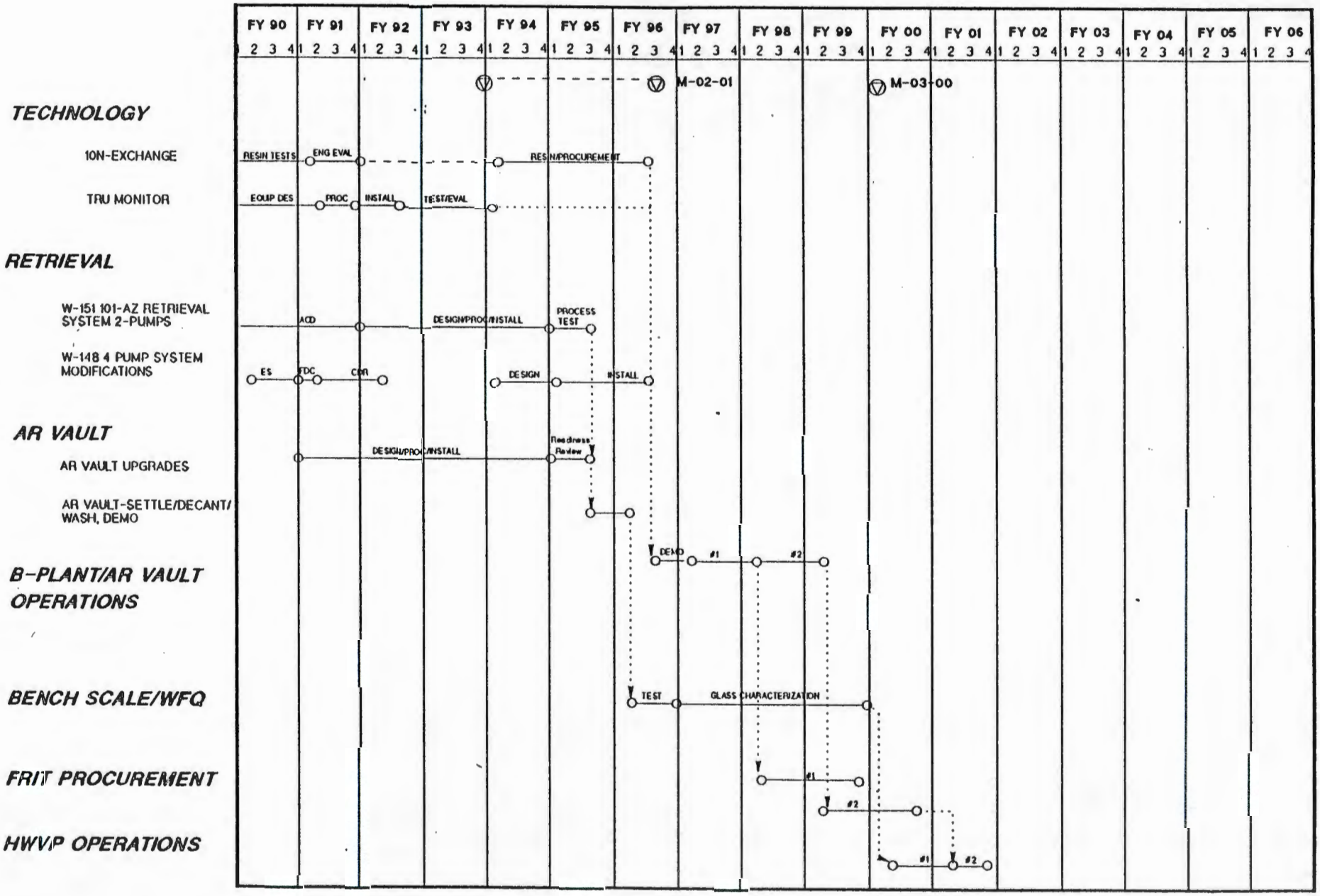

POST NCAW TECHNOLOGY

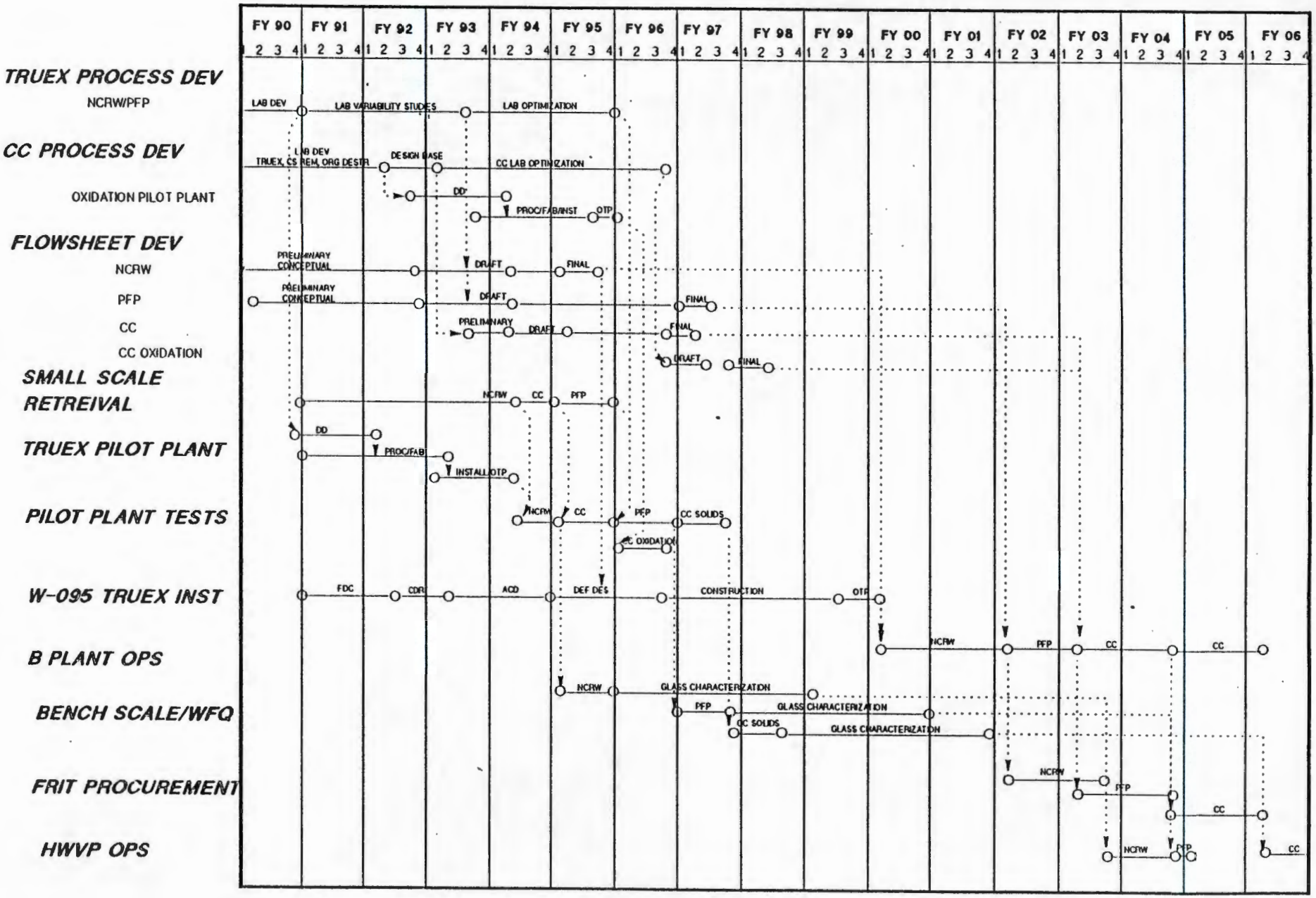

NCAW

NEUTRALIZED CURRENT ACID WASTE

PRETREATMENT OBJECTIVE: MINIMIZE OVERALL WASTE DISPOSAL COST

GROUT COST ~ $1/UNIT VOLUME

GLASS COST ~ $40/UNIT VOLUME

PROCESS REQUIREMENTS:

MEET PRODUCT FEED CRITERIA

GROUT CRITERIA:
- THERMAL GENERATORS
- TRU LIMIT

GLASS CRITERIA: MINIMIZE VOLUME

- MINIMIZE WATER SOLUBLE COMPONENTS
  - Na, K
- MINIMIZE & CONTROL HIGH TEMP VOLATILES
  - Ru, I,
- CONTROL REDUCTION-OXIDATION
  - C, Cr
- CONTROL GLASS MELT (TEMP & PHASES)
  - SO_4, PO_4, NOBLE METALS
- CONTROL GLASS PROPERTIES
  - Al, Na

COMPARE SOLIDS & SUPERNATE PROPERTIES:
MOST CRITERIA MET BY SOLIDS/LIQUID SEPARATION

NCAW PRETREATMENT

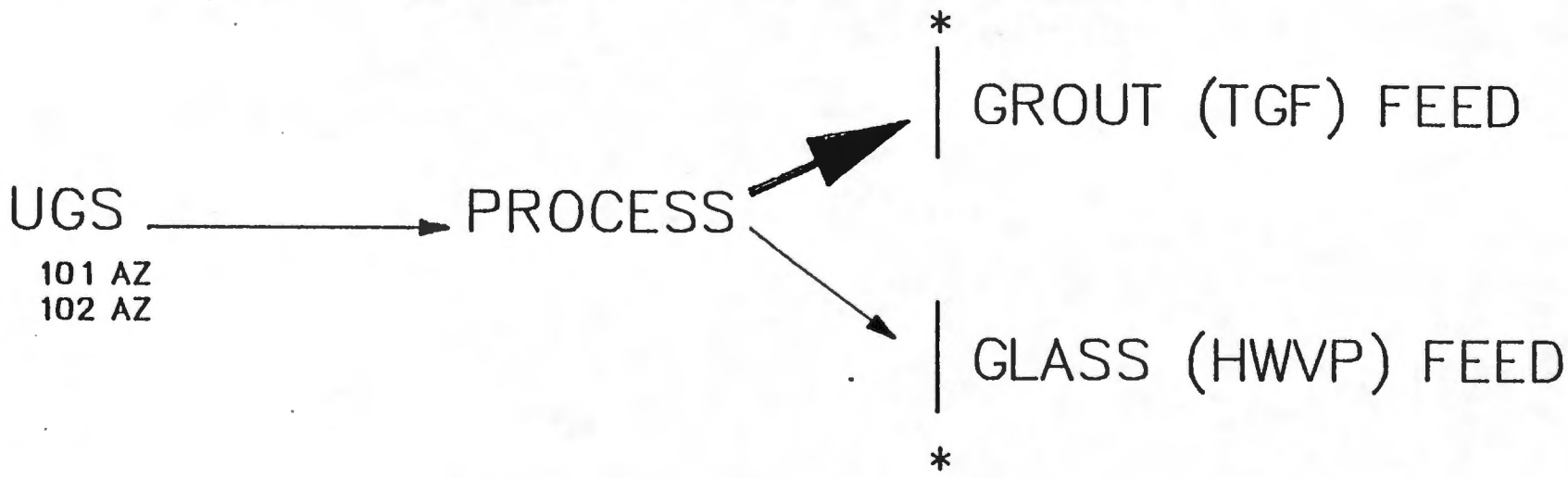

* LIMITING FACTORS:

GROUT CRITERIA
GLASS CRITERIA

SELECTION OF SEPARATIONS PROCESS STEPS

	OBJECTIVES	ALTERNATIVES
I.	SEPARATE SOLIDS AND LIQUID (BULK SEPARATION)	1) CENTRIFUGE 2) SETTLE/DECANT
II.	CLEAN SOLIDS (REMOVE SOLUBLE SALTS)	1) WATER WASH
III.	CLEAN SUPERNATE (REMOVE FINES)	1) INERTIAL FILTRATION 2) PNEUMATIC HYDROPULSE FILTER (PHP)
IV.	REMOVE SOLUBLE HEAT SOURCES FROM SUPERNATE (Cs 137)	1) ION EXCHANGE A) OLD TYPE RESIN B) NEW RESIN C) EXPERIMENTAL RESIN

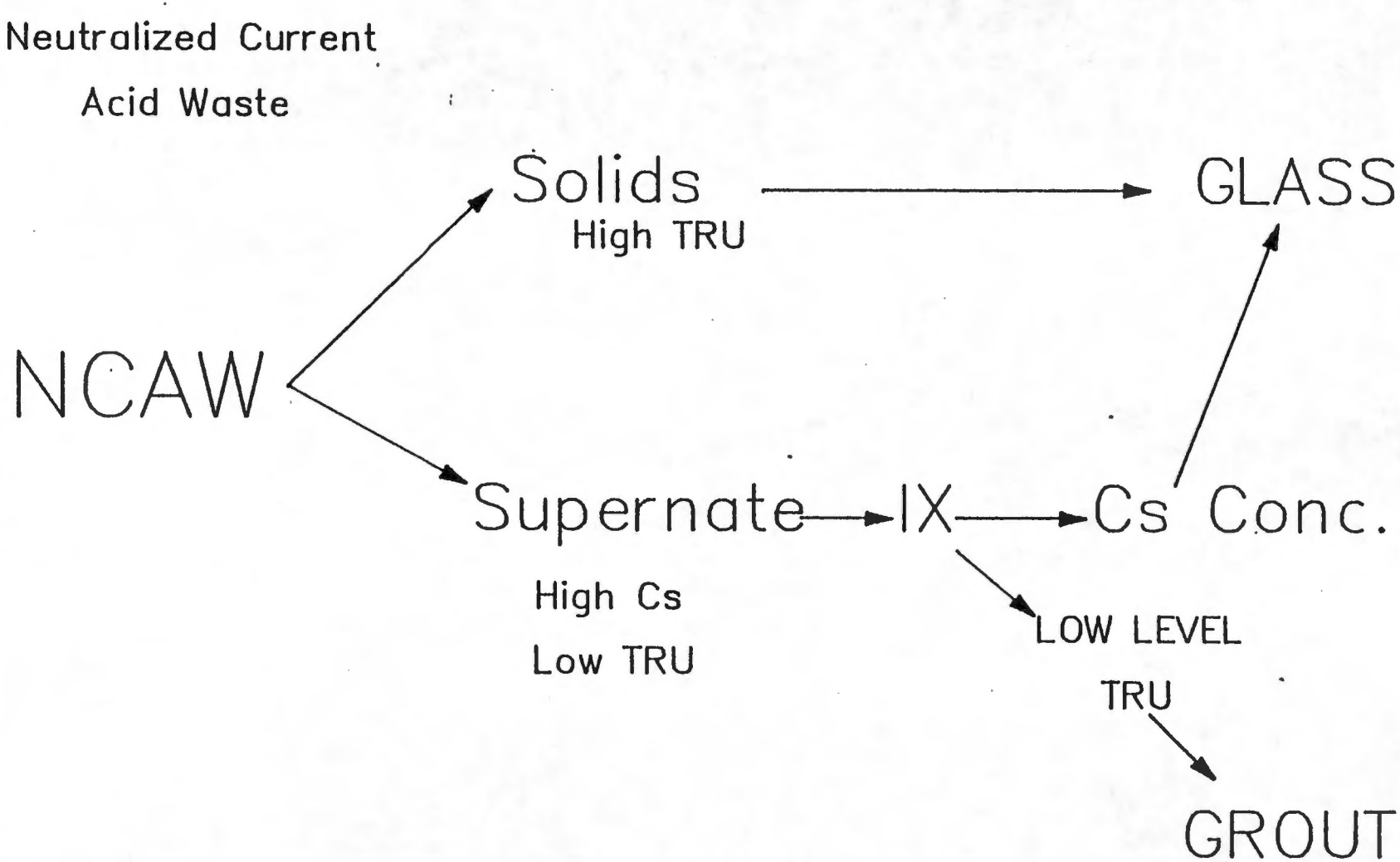
Neutralized Current
Acid Waste
NCAW
Solids
High TRU
GLASS
Supernate
High Cs
Low TRU
IX
Cs Conc.
LOW LEVEL
TRU
GROUT

I. BULK SOLIDS SEPARATION

ALTERNATIVE	PRO	CON
CENTRIFUGE	FAMILIAR PROCESS EQUIPMENT IN PLACE	LOW EFFICIENCY HIGH MAINTENANCE COST HIGH REPLACEMENT COST
SETTLE/DECANT	HIGHER EFFICIENCY LOW MAINTENANCE LOW CAPITAL COST	UNPROVEN TECHNOLOGY

PREFERRED OPTION: SETTLE/DECANT (S/D)

RESOLUTION: PROVIDE ADEQUATE DEVELOPMENT TO REMOVE UNCERTAINTIES IN S/D.

Technology Assessment

NCAW Pretreatment

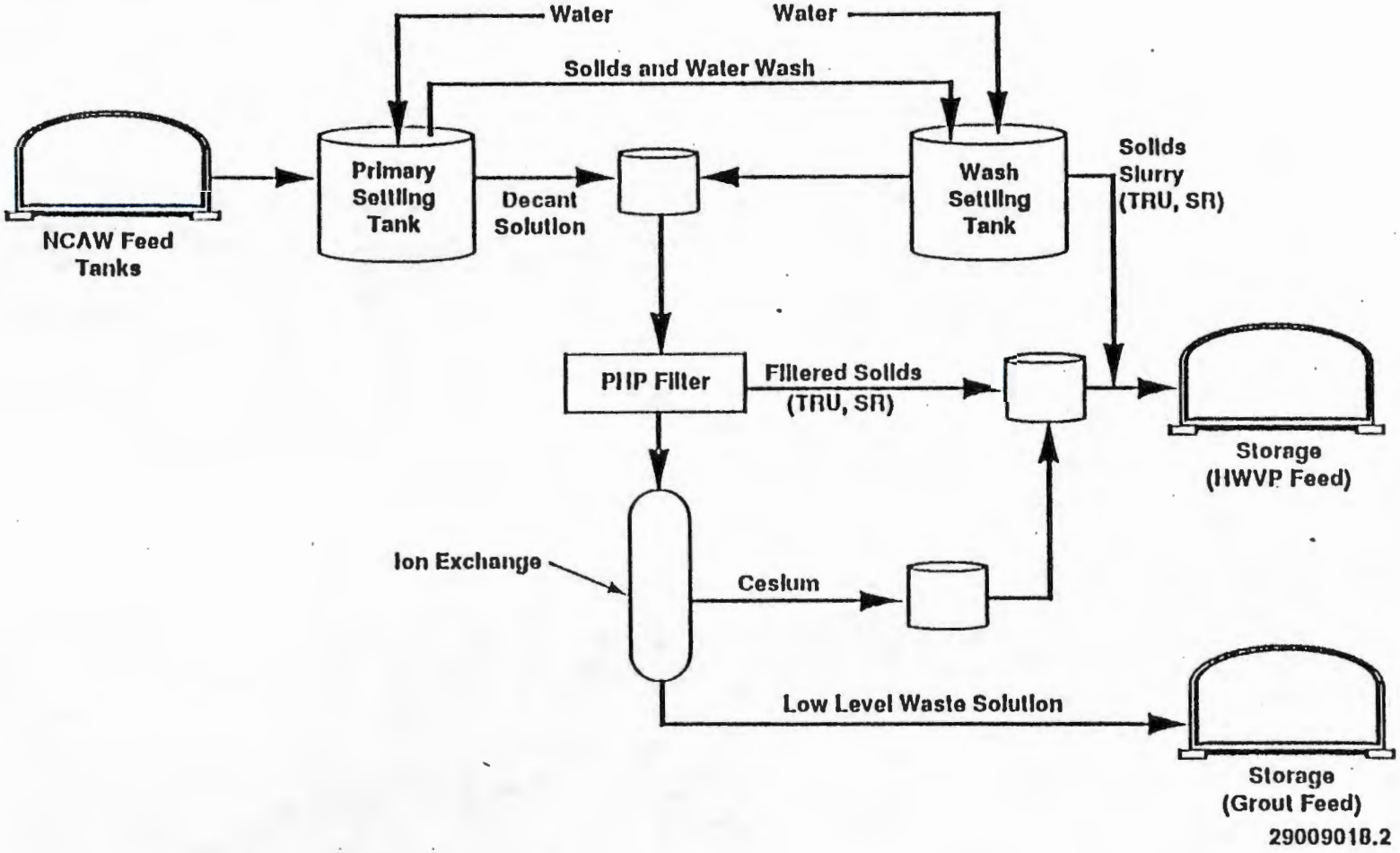

II. SOLIDS CLEANING REMOVE SOLUBLE SALTS

WATER WASHING

UNCERTAINTY: EFFECTIVENESS IN REMOVING GLASS COST CONTRIBUTORS

RESOLUTION: CONDUCT LAB SCALE STUDIES USING SYNTHETICS

CONDUCT LAB SCALE STUDIES USING ACTUAL WASTE

III. SUPERNATE & WASH LIQUOR CLEANING REMOVE FINE SUSPENDED SOLIDS

ALTERNATIVE	EVALUATION AND RESOLUTION
INERTIAL FILTRATION (I.F.)	INITIALLY SELECTED AS PRIME CANDIDATE, I.F. TEST FAILED-SOLIDS PENETRATED FILTER
PNEUMATIC HYDROPULSE FILTRATION (PHP)	PHP SUCCEEDED DUE TO NO SHEAR, LOW PRESSURE PROCESS CONDITIONS. OPTIONS: TESTED WITH PRECOAT AND BODY FEED ADDITIVES (DIATOMACEOUS EARTH) - INCREASED EFFICIENCY WITH OFFSETTING INCREASE IN GLASS COST.

IV. REMOVE SOLUBLE HEAT SOURCES

CESIUM^{137} IS THE PRIMARY SOLUBLE HEAT SOURCE IN NCAW

<u>ION EXCHANGE TECHNOLOGY</u>

<u>PRO</u>

EXTENSIVE EXPERIENCE WITH ION EXCHANGE

NO SIGNIFICANT CONTENDER

<u>CON</u>

POTENTIAL EXOTHERMIC REACTION WITH NITRIC ACID
(UNDER SPECIFIC CONDITIONS)

IV. REMOVE SOLUBLE HEAT SOURCES (CONT'D)

ION EXCHANGE RESIN SELECTION

	PRO	CON
OLD RESIN TYPE ARC-359N (DIAMOND SHAMROCK)	EXTENSIVE EXPERIENCE	LIMITED AVAILABILITY (NO PRODUCTION) ORGANIC - CAN DECOMPOSE ELUTED WITH $(NH_4)_2CO_3$ (ENVIR.PROB.)
NEW RESIN TYPE CS-100 (Rhom & Haas)	EXTENSIVE LAB TESTS GOOD AVAILABILITY ELUTED WITH DILUTE HNO_3	ORGANIC-CAN DECOMPOSE NO OPERATING EXPERIENCE
INORGANIC RESIN TITANATE(ORNL)	NO REACTION POTENTIAL	STILL UNDER DEVELOPMENT NO EXPERIENCE UNKNOWN EFFICIENCIES NO BULK QUANTITIES AVAILABLE

CS 100 SELECTED - BEST AVAILABLE TECHNOLOGY
(TITANATE RESIN DEVELOPMENT WILL BE TRACKED, POTENTIAL FUTURE USE)

NCAW SYNTHETIC

PURPOSE:	PROVIDE A HANDS-ON SYNTHETIC FOR PROCESS DEVELOPMENT.
SCOPE:	DEVELOP A PHYSICAL-CHEMICAL SIMULANT FOR NCAW.
RESULTS:	A CHEMICAL RECIPE SIMULANT WAS DEVELOPED.
	PUREX PROCESS STEPS WERE INCORPORATED FOR DIGESTION OF SIMULANT.
	PHYSICAL PROPERTIES ARE SIMILAR.
ISSUES:	INCLUDE VERIFICATION TESTS THROUGHOUT PROCESS DEVELOPMENT
DOCUMENTS:	IL-12716-CEL88-140, PREPARATION OF NCAW FOR RETRIEVAL STUDIES, B. D. BULLOUGH

NCAW SOLID/LIQUID SEPARATION VIA SEDIMENTATION

PURPOSE:	TEST SETTLING CHARACTERISTICS OF NCAW
SCOPE:	DETERMINE SETTLING RATE AND CLARITY OF SUPERNATE. TEST EFFECTIVENESS OF VARIOUS FLOCCULATING AGENTS. PILOT TESTS ON 1", 3", 12" DIAM SETTLING VESSELS USING SYNTHETIC WASTE.
RESULTS:	PARTICLE SETTLING VELOCITIES 1.5-2.0 INCHES/HR. WASHED SLURRIES SETTLED FASTER BY A FACTOR OF 2. FLOCCULATING AGENTS INCREASED SETTLING VELOCITIES BY 50-100%. SUPERNATE CONTAINS LESS THAN 50 PPM SUSPENDED SOLIDS.
CONCLUSIONS:	SETTLING RATES SUPPORT FLOWSHEET. CLARITY OF SUPERNATE SUPPORTS PHP FEED (THROUGHPUT) REQUIREMENTS. FERRIC NITRATE, A COMPOUND COMPATIBLE WITH GLASS, IS AN ACCEPTABLE FLOCCULATING AGENT.
PLANS:	CONFIRM USING ACTUAL WASTE.
DOCUMENT:	SD-WM-TRP-024, NCAW SOLID/LIQUID SEPARATION VIA SEDIMENTATION, B. D. BULLOUGH, 3/26/87.

DECANT TESTING

PURPOSE: DETERMINE PROXIMITY OF SUCTION TO INTERFACE: MINIMIZE SOLIDS PICK-UP FROM SLUDGE LAYER.

SCOPE:
USED SYNTHETIC NCAW.
USED .25 AND .375 THICK WALL TUBING (.035 IN WALL).
TESTED AT FLOW VELOCITIES OF 2.5 & 7.6 FT/SEC.

RESULTS: SUCTION INLETS DID NOT DISTURB SLUDGE LAYER (AT DISTANCE OF 2 PIPE DIAMETERS).

CONCLUSIONS: FIXED DIP LEG DECANT WILL NOT TRANSFER EXCESS SOLIDS TO THE PHP AT 25 & 75 GPM THROUGH A 2 INCH PIPE (SUPPORTS FLOWSHEET ASSUMPTIONS).

DOCUMENT: SD-WM-TRP-024, NCAW SOLID/LIQUID SEPARATION VIA SEDIMENTATION, B. D. BULLOUGH, 3/26/87.

NCAW THERMAL ANALYSIS

PURPOSE: INVESTIGATE THE POTENTIAL FOR OVERHEATING (BOILING) AND THERMAL MIXING (INADEQUATE SETTLING) IN NCAW PROCESS TANKS

SCOPE: USE THERMAL MODELLING TO DETERMINE EFFECTS OF INTERNAL HEATING FROM RADIONUCLIDES IN SLUDGE

HEAT SOURCES IN WASTE

180 DAY OLD FUEL	SOLIDS:WATTS/L	LIQUID:WATTS/L
12%	1.4	0.32
6%	1.2	0.29

METHOD: "HEATING 5" COMPUTER CODE

RESULTS: PEAK TEMPERATURES RANGED FROM 100-182 F. MAXIMUM VERTICAL FLUID VELOCITIES (CONVECTION CURRENTS) RANGED FROM 0.10 TO 0.42 FT/SEC

CONCLUSIONS: OVERHEATING WILL NOT OCCUR
THERMAL MIXING SHOULD BE TESTED

ISSUES: CONDUCT SETTLING TESTS ON REAL NCAW

PLANS: VERIFY MODEL RESULTS BY FULL SCALE PLANT TEST

DOCUMENTS: IL-65610-85-307, IL-65610-85-311, THERMAL ANALYSIS OF NCAW SETTLED SOLIDS, M. W. GIBSON TO D. C. RILEY, 11/14/85.

PRIMARY SETTLE DECANT: PLANT TEST

PURPOSE: FULL SCALE PLANT TEST TO DETERMINE SETTLING PROPERTIES OF REAL NCAW

SCOPE: RUN S/D TESTS ON 4000 GALLON BATCH OF NCAW
TEST FOR 24, 48, AND 72 HOUR SETTLING TIMES

RESULTS: S/D TESTS

SETTLE TIME	ISOTOPE SEPARATION EFFICIENCY	SOLIDS SEPARATION EFFICIENCY
24 HRS(1 TEST)	94.2-95.0%	76.8%
48 HRS(2 TESTS)	92.2-99.8%	81.9-89.2%
72 HRS(1 TEST)	99.0-99.8%	94.0%

NOTE: SOLIDS RESULTS BASED ON AIR-DRIED FILTER TESTS; SKEWED LOW

CONCLUSIONS: SETTLE/DECANT IS A USABLE SEPARATION TECHNOLOGY
S/D RATES SUPPORT FLOWSHEET
SUPERNATE CLARITY SUPPORTS FLOWSHEET
TESTS SUPPORT PHP DESIGN BASIS

DOCUMENTS: IL-65920-86-108, PRELIMINARY S/D RESULTS FROM THE B PLANT NCAW PROCESS TEST, D. M. GERBOTH TO S. M. JOYCE, 6/25/86.

SD-WM-PTR-006, B PLANT NCAW PROCESS TEST REPORT, D. M. GERBOTH, 5/14/87

LAB WASHING STUDIES

PURPOSE: DETERMINE WASH EFFICIENCIES.

SCOPE: A SERIES OF LABORATORY STUDIES WERE CONDUCTED ON SYNTHETIC NCAW TO CONFIRM REMOVAL OF SOLUBLES TO HWVP LIMITS.
USE LAB STUDIES TO PROVIDE BASES FOR THE NCAW FLOWSHEET.

RESULTS: REMOVAL EFFICIENCIES OF 15.1 WASH

COMPONENT	TEST RESULTS RANGE	SELECTED FLOWSHEET VALUE
Na	95-99%	98%
Al	90-95%	93%
NO_3	95-99%	99%
F	90-99%	97%
SO_4	95-99%	98%
TOC	70-90%	80%

CONCLUSIONS: A SINGLE 15:1 WASH IS ADEQUATE TO MEET CURRENT HWVP CRITERIA (EQUIVALENT TO TWO 3:1 WASHES USED IN FLOWSHEET)

PLANS: CONDUCT WASHING STUDIES ON ACTUAL WASTE

DOCUMENTS: IL-065610-85-227, NCAW SLUDGE WASHING STUDIES: ANALYSIS OF LABORATORY DATA, W. A. ROBERTSON TO M. W. GIBSON, 8/7/85.

IL-65453-84-204, NCAW FEED PRETREATMENT LABORATORY STUDY, D. R. BRATZEL/B. R. BUCHANAN TO K. R. SHAH, 8/24/84.

FULL SCALE SOLIDS WASHING PLANT TEST

PURPOSE: DETERMINE WASHING CHARACTERISTICS OF REAL NCAW UNDER PLANT CONDITIONS.
TEST WASH RATIO TO DETERMINE WASH EFFICIENCY.

SCOPE: LIMITED SOLIDS VOLUME PERMITTED ONLY A SINGLE WASH AND S/D TEST.
TEST AT 3:1 (NOMINAL) WASH RATIO: TWO-3:1 WASHES = 15:1 WASH.

RESULTS:

WASH S/D TESTS
(48 HR. S/D ONE TEST)

ACTUAL WASH RATIO	COMPONENTS	PROJECTED @ TWO-3:1 WASH EFF.
2.4:1	SR90	96.6
	Al,Na,Cr SO_4,PO_4	91.0 - 95.6

CONCLUSION: WASHING RESULTS SUPPORT FLOWSHEET ASSUMPTIONS.

ISSUES: LIMITED TESTING.

DOCUMENTS: SD-WM-PTR-006, B PLANT NCAW PROCESS TEST REPORT, D. M. GERBOTH, 5/14/87

LAB WASHING STUDIES
ACTUAL NCAW

PURPOSE: CONFIRM WASH EFFICIENCIES

SCOPE: WATER WASHES WERE CONDUCTED ON CORE SAMPLES OF 101 AZ

9 0 1 1 6 0 0 1 9 0 4

RESULTS & CONCLUSIONS

Comparison of NCAW Core Sample Analytical Data[a] to HWVP Established Limits for Key Components

Component	Core sample composition (wt%)		Specification (wt%)	
	Core 1	Core 2	Nominal	Range
SiO_2	4.2	2.5	4.0	0.0 - 17.5
Na_2O/K_2O	15.9	10.5	17.6	4.5 - 22.0
CaO	0.1	1.4	0.3	0.0 - 20.0
Fe_2O_3	37.8	42.5	28.2	8.0 - 60.0
Al_2O_3	17.2	8.4	9.0	2.0 - 26.0
ZrO_2	7.8	15.2	15.1	0.0 - 40.0
MgO	0.2	0.3	0.2	b
CdO	1.4	3.1	3.0	0.0 - 10.0
U_3O_8	1.7	3.5	4.7	0.0 - 32.0

[a]Laboratory data--actual values will vary somewhat from these determinations.

[b]Limit of 40 wt% established for MgO plus CaO by composition variability study.

Comparison of NCAW Sample Analytical Data[a] to HWVP Established Limits for Critical Components

Component	Core sample concentration (wt%)		Specification (wt%)	
	Core 1	Core 2	Nominal	Limit
Cr_2O_3	0.8	0.1	0.5	2.0
SO_3	0.9	0.8	0.7	2.0
F	0.0	0.1	1.2	6.9
P_2O_5	2.7	<2.4	0.9	4.0
Ru	0.17[b]	<0.3	0.6	TBD

[a]Laboratory data--actual values will vary somewhat from these determinations.

[b]Calculated based on Ru^{106} measurement and ratio of Cs^{134} to Cs^{136} for determination of waste average age.

TBD = To be determined

Sample Variation - Range Limit Comparison for Major and Critical Oxide Components in NCAW

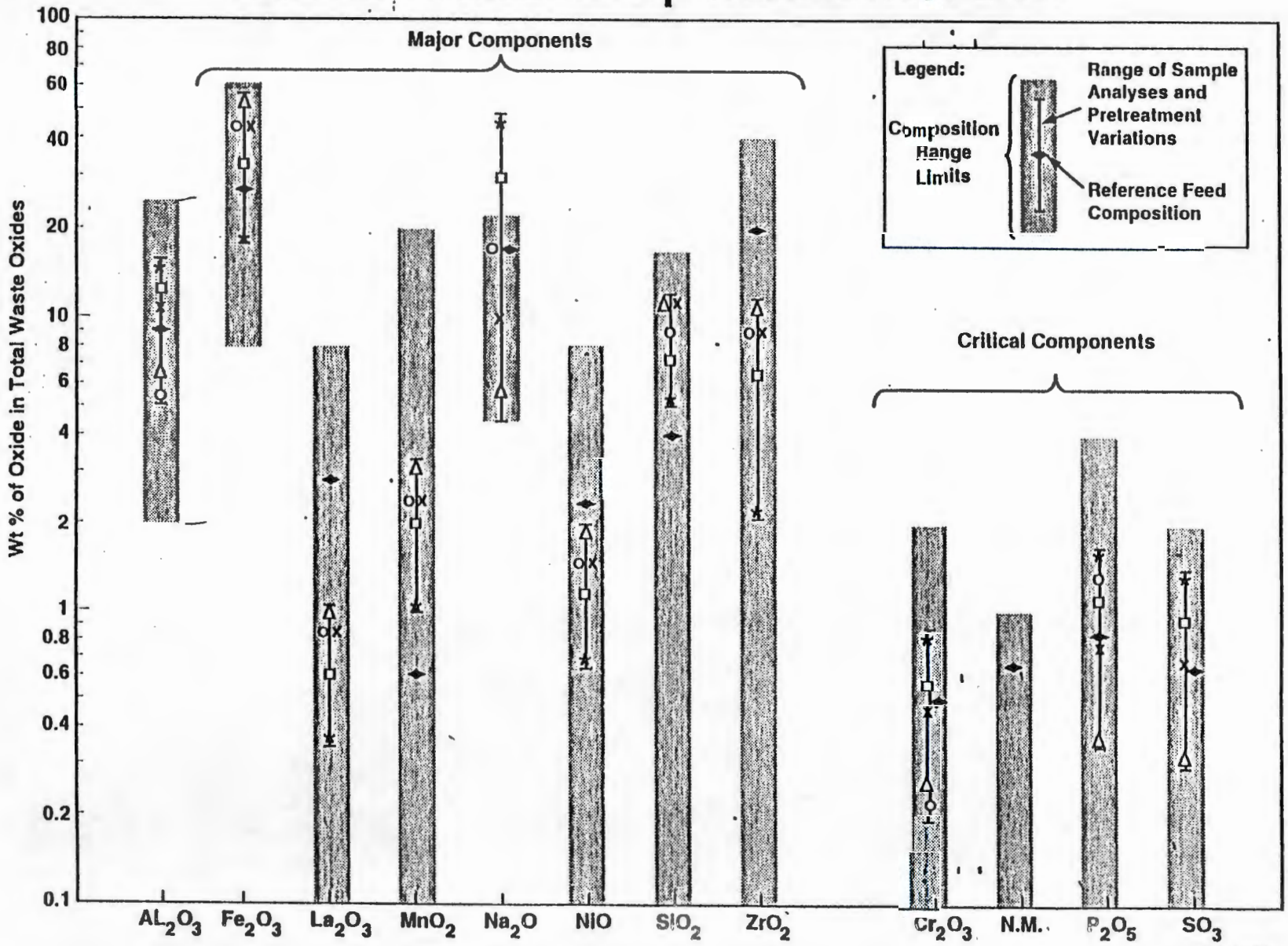

79008123

Summary of Radioactive NCAW Core Sample Characterization Data

- Two of the eight planned neutralized current acid waste (NCAW) core samples have been analyzed and characterized
- Core sample component concentrations were generally within the Hanford Waste Vitrification Plant (HWVP) acceptable range
- Other characteristics of the core sample process solutions (wt% total solids, total oxides, slurry density, pH, vol% settled solids) were generally within HWVP specification limits

POLISH FILTRATION OF TGF FEED

PURPOSE: INVESTIGATE THE USE OF PHP TECHNOLOGY FOR POLISH FILTRATION OF NCAW PRIMARY (SUPERNATE) AND SECONDARY (WASH WATER SUPERNATE) DECANT SOLUTIONS.

* DETERMINE REQUIRED FILTER AREA
* DETERMINE NEED FOR PRE-COAT
* DETERMINE NEED FOR BODY FEED
* DETERMINE CLARITY OF FILTRATE

SCOPE: TEST SYNTHETIC NCAW SLURRIES, SUPERNATE AND SOLIDS WASH DECANT SOLUTIONS IN A PILOT SCALE (1.6 SQ FT) MOTT FILTER.

RESULTS:
* NCAW SUPERNATE (SYNTHETIC) FEED FLOW MAXIMUMS ARE 0.1 TO 0.2 GPM/SQ. FT.
* PRE-COAT AND BODY FEED ARE REQUIRED;
* FILTRATE CLARITY AVERAGED 10 PPM, NEVER EXCEEDED 35 PPM.

CONCLUSIONS: THE PHP WILL REDUCE THE SOLIDS IN THE TGF STREAM TO FLOWSHEET LEVELS

LEVELS OF PRE-COAT AND BODY FEED WILL NOT SIGNIFICANTLY IMPACT HWVP FORMULAS OR VOLUME.

DOCUMENT: SD-WM-TRP-025, RESULTS OF INVERTED PNEUMATIC HYDROPULSE (IPHP) FILTRATION, D.W. BERGMANN AND SD-WM-PTR-007, WESF PNEUMATIC HYDROPULSE FILTER PROCESS TEST REPORT, M.L. KIMURA AND F.M. SIMMONS, 4/18/87.

HOT PHP PLANT TESTS

PURPOSE: TEST PHP TECHNOLOGY WITH REAL NCAW.

SCOPE: HOT TEST RUN ON A BENCH SCALE PHP FILTER: 0.5 MICRON, 0.41 SQ. FT. (PROJECTED AS 1:170 SCALE OF FULL SIZE).

RESULTS: TRU REMOVAL EFFICIENCIES OF 96 -98% (5 µci/L TRU).

Sr90 REMOVAL SEPARATION EFFICIENCY OF 65% (1.1×10^4 µci/L Sr).

CONCLUSION: SOLIDS REMOVAL EFFICIENCY WAS LOWER THAN EXPECTED: THIS IS THOUGHT TO BE DUE TO ANALYTICAL METHOD (AIR DRYING OF FILTERED SAMPLE).

PHP ACHIEVED DESIRED GOAL TO REMOVE TRU AND Sr.

DOCUMENTS: SD-WM-PTR-006, B PLANT NCAW PROCESS TEST REPORT, D. M. GERBOTH, 5/14/87 AND SD-WM-PTR-007, WESF PNEUMATIC HYDROPULSE FILTER PROCESS TEST REPORT, M.L. KIMURA AND F.M. SIMMONS, 4/18/87.

FLOWSHEET COMPUTER SIMULATION FOR DEMONSTRATION OF NCAW PRETREATMENT

PURPOSE:	PREPARE A DEFINITIVE FLOWSHEET FOR NCAW PROCESSING. PROVIDE A COMPUTER BASED, FLOWSHEET THAT CAN BE UPGRADED. INCLUDE CURRENT TEST PARAMETERS. PROVIDE INTERNAL METHOD OF REFERENCING ALL DATA AND CALCULATIONS.
SCOPE:	SPREADSHEET BASED. ASSUMPTION TABLE. USE STEP-BY-STEP TEXT FORMAT.
RESULTS:	SUCCEEDED IN PROVIDING A 'LIVING DOCUMENT' FLOWSHEET; TWO. MAJOR UPGRADES HAVE BEEN DONE AND IT HAS BEEN USED BY VARIOUS ENGINEERS FOR SENSITIVITY STUDIES.
CONCLUSIONS:	S/D IN 3000-4000 GAL TANKS IS PROCESS LIMITING: 65 GAL/HR MAX THRUPUT. 30-34 GAL/HR BASED ON 53% TOE.
DOCUMENT:	SD-RE-TI-190, FLOWSHEET COMPUTER SIMULATION OF DEMONSTRATION OF NCAW PRETREATMENT, M. W. GIBSON AND B. C. LANDEENE, 10/7/87.

244-AR CONCEPTUAL FLOWSHEET FOR PROCESSING OF NCAW

PURPOSE:	UPGRADE FLOWSHEET TO IMPROVE PRODUCTION CAPACITY.
SCOPE:	MODIFY S/D PROCESS STEPS TO USE AR VAULT FOR S/D AND SOLIDS WASH STEPS.
RESULTS:	AR VAULT TANKS WILL WORK FOR S/D AND WASH OPERATIONS. OVERALL TIME CYCLE 123 HRS. GREATLY IMPROVED PRODUCTION CAPACITY: 28,030 GAL/123 HRS. PRIMARY S/D RATE: 228 GAL/HR. NOMINAL PROCESS TIME FOR NCAW (101 & 102 AZ): 1.71-2.25 YR.
CONCLUSIONS:	THE 33,000 GALLON AR VAULT TANKS CAN BE USED EFFECTIVELY TO IMPROVE PROCESS RATES.
ISSUES:	ION EXCHANGE COLUMN CAPACITY MAY BE CHALLENGED BY THE 240 KCi OF Cs PER BATCH.
DOCUMENT:	SD-WM-TI-396, 244-AR CONCEPTUAL FLOWSHEET FOR PROCESSING OF NCAW, J. J. WONG, 10/25/89.

9 0 1 1 6 0 1 9 5 3

WHC-SA-0195

In-Line Monitor for Transuranic Elements

Vishnu B. Subrahmanyam

Date Published
January 1988

An update: Dann J. Flesher

Prepared for the U.S. Department of Energy
Assistant Secretary for Defense Programs

Westinghouse Hanford Company
P.O. Box 1970
Richland, Washington 99352

Hanford Operations and Engineering Contractor for the
U.S. Department of Energy under Contract DE-AC06-87RL10930

Copyright License By acceptance of this article, the publisher and/or recipient acknowledges the U.S. Government's right to retain a nonexclusive, royalty-free license in and to any copyright covering this paper.

LAB CONFIGURATIONS

1. 2.

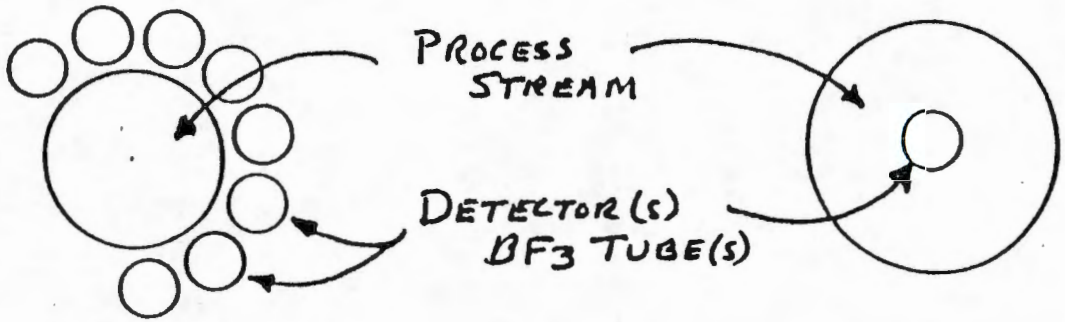

± 40 nCi/ml SENSITIVITY ± 20 nCi/ml

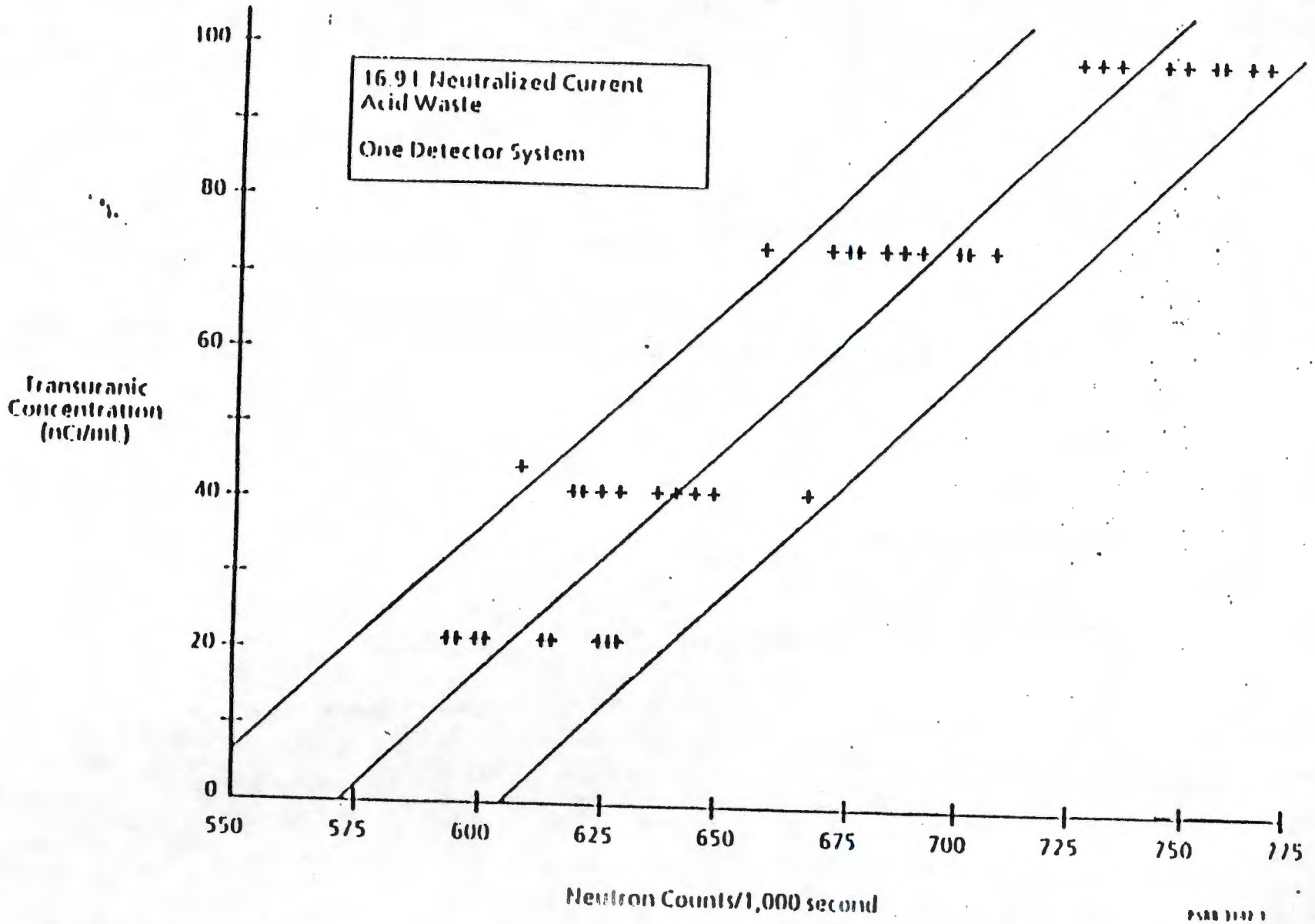
16.9 l Neutralized Current Acid Waste
One Detector System
Transuranic Concentration (nCi/ml)
100
80
60
40
20
0
550
575
600
625
650
675
700
725
750
775
Neutron Counts/1,000 second

TRU MONITOR DESIGN ISSUES

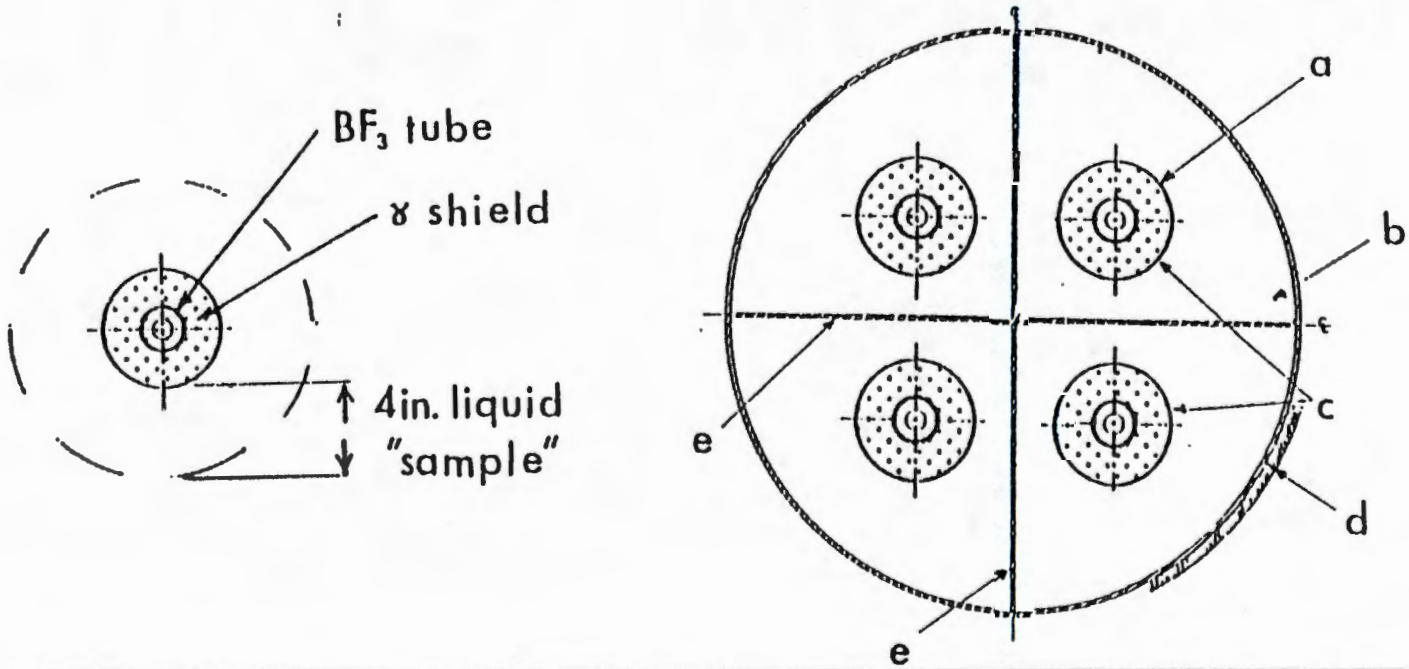

tech. problems: Gamma (Cs) a

Fluoride enhancement b

Cm-244 Spont. Fission c

External N d

design: Flow e

MOCK-UP OF TRU MONITOR SCHEMATIC

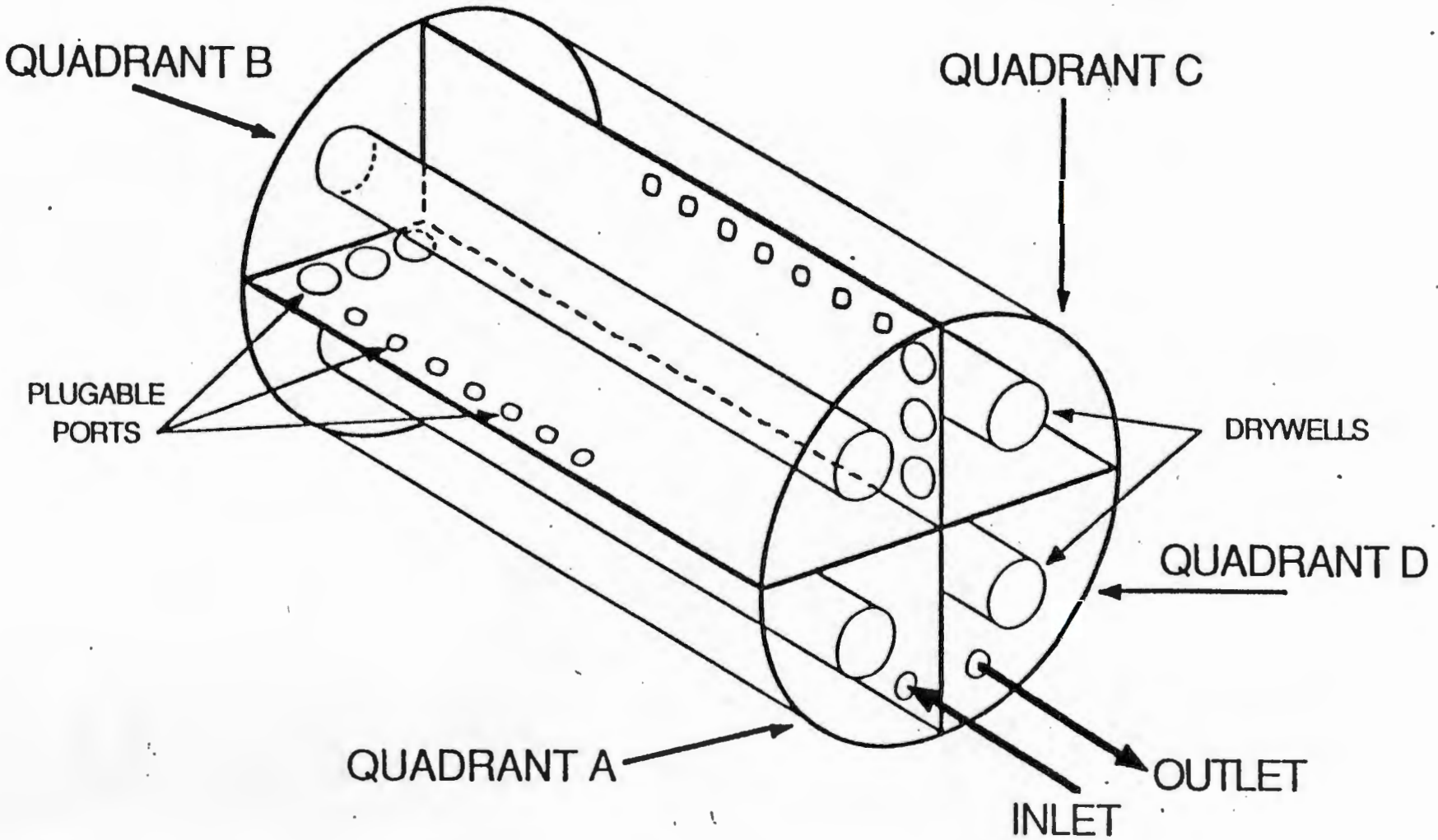

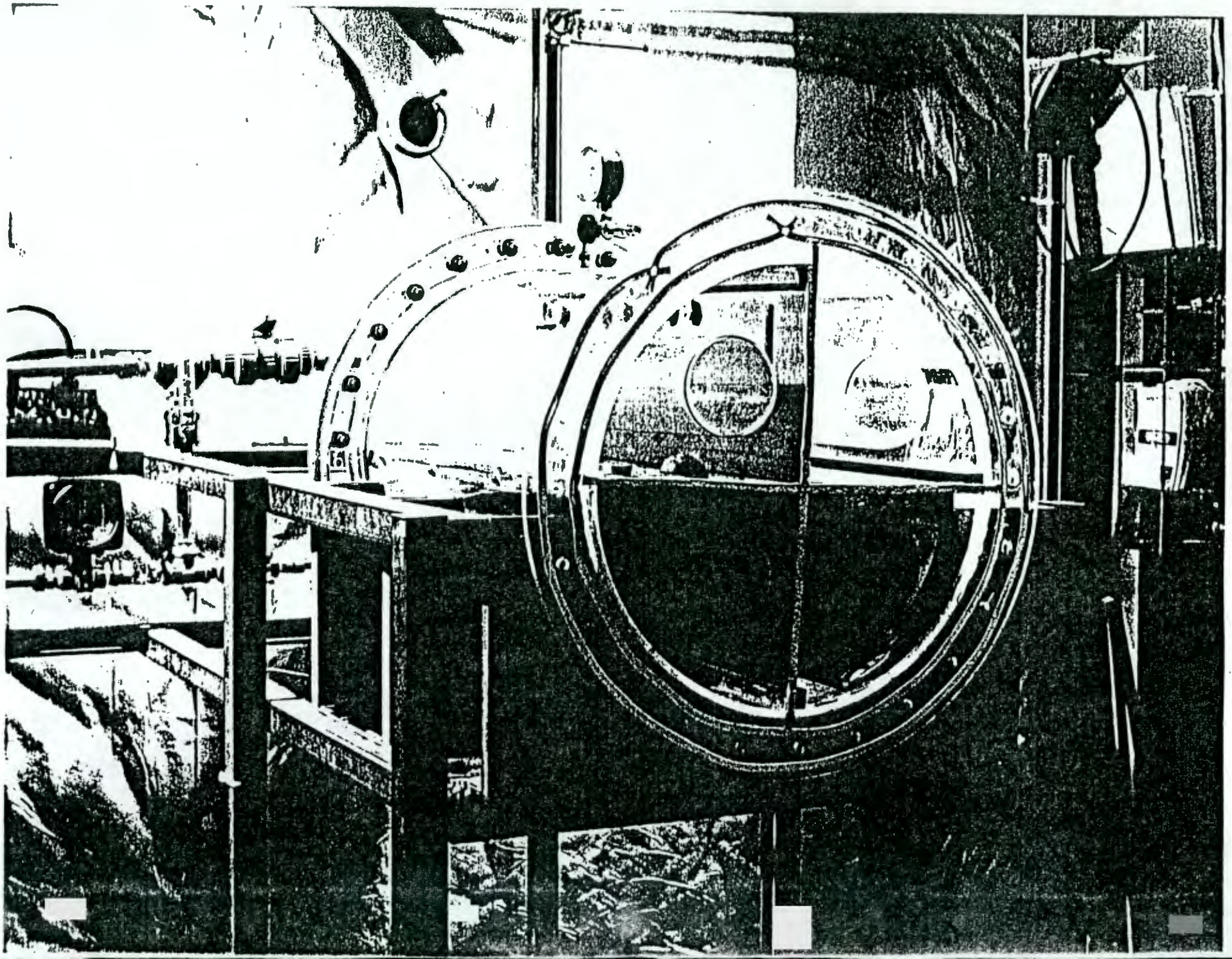

ION EXCHANGE (IX)

TECHNOLOGY DEVELOPMENT

NCAW Pretreatment

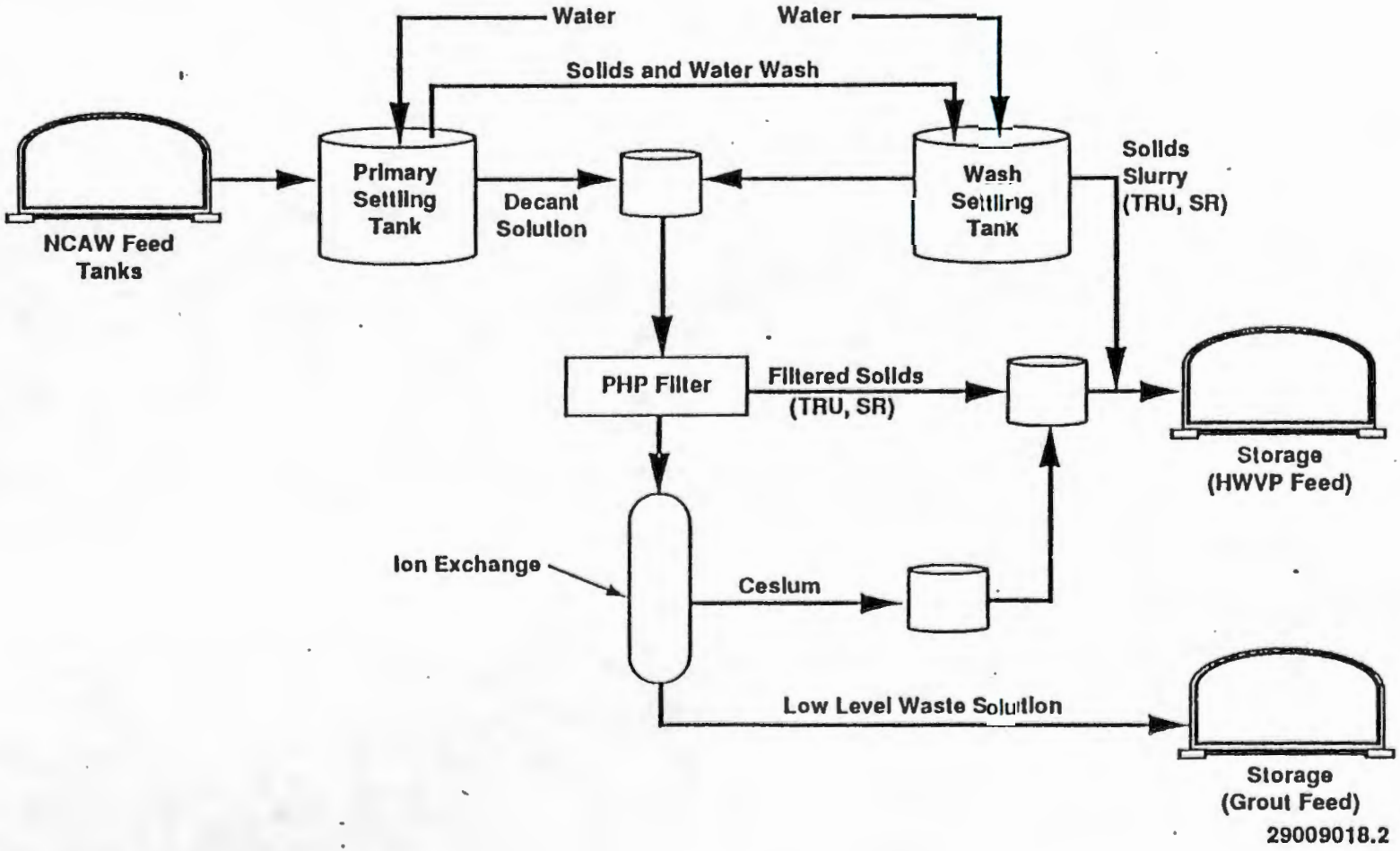

BATCH CONTACT TESTS TO SELECT RESIN

PURPOSE:	Select best IX resin for NCAW pretreatment
SCOPE:	Seven resins tested for removing cesium (Cs) from synthetic NCAW solution
	Pre-irradiated samples of CS-100 also tested for Cs capacity
RESULTS:	Duolite CS-100 and 2 other resins had highest Cs capacity
	Cs capacity of CS-100 not significantly affected up through 10^8 rad cumulative exposure
CONCLUSIONS:	CS-100 best candidate; continue further testing
ISSUES:	How will CS-100 perform in continuous IX column runs?
PLANS:	Test CS-100 in continuous column runs
DOCUMENTS:	PFD-B-033-00001, Rev. A-1
	Internal Rockwell Letter No. 65453-86-088, S. A. Gallagher to M. W. Gibson, June 20, 1986.

CONTINUOUS IX COLUMN RUNS

PURPOSE:	Provide for B Plant flowsheet IX column design/operating conditions, establish resin Cs capacity
SCOPE:	Lab IX column runs with projected synthetic NCAW feed recipe
	Tested Nitric Acid (HNO_3), and Ammonium Bicarbonate Eluants
RESULTS:	35-45 bed volumes of feed loaded
	95% recovery of Cs
	Cs successfully eluted with 0.3 M HNO_3
CONCLUSIONS:	Resin has adequate Cs capacity ($\geq$ 100K curries) for 14,000 gallon NCAW front end batch (B Plant flowsheet)
ISSUES:	How does IX column capacity vary if final feed composition changes?
	How is resin life affected by elution/Sodium Hydroxide regeneration cycles?
PLANS:	IX column capacity tests in FY 1990-1991 with revised feed recipe and AR vault (B Prime flowsheet); and aging/cycling column tests in FY 1989
DOCUMENTS:	PFD-B-033-00001, Rev. A-1; Internal Rockwell Letter No. 65453-86-088, S. A. Gallagher to M. W. Gibson, June 20, 1986; SD-RE-TD-001.
	SD-RE-TD-001, S. A. Gallagher, "Cesium Ion Exchange Column Tests Using Pre-1982 and Post-1982 Duolite CS-100 Resin," June 1987.

IX RESIN/NITRIC ACID (HNO_3) REACTION TESTS

PURPOSE:	Develop reaction data to size rupture disk for new IX column in B Plant
SCOPE:	Hazards Research Corp. test 1 to 12.2 M HNO_3 with pre-irradiated and non-irradiated Duolite CS-100 resin
RESULTS:	Heat of reaction slightly worse for pre-irradiated resin reaction with 12.2 M HNO_3
	Maximum pressure rise somewhat more for the non-irradiated resin reaction
CONCLUSIONS:	A 24-inch to 30-inch diameter rupture disk is required to protect the IX column in the worst-case incident
ISSUES:	Is rupture disk size adequate and would evaporative cooling moderate the worst-case exothermic reaction?
PLANS:	Fauske & Associates are conducting scaled down IX column venting experiments in FY 1990, 1991 to determine if vent area is adequate
DOCUMENTS:	Internal Rockwell Letter No. 65453-87-040, S. A. Gallagher to L. A. Gale, March 23 1987
	SD-RE-TI-193
	SD-WM-DTP-027

BACK-UP IX RESIN BATCH TEST WITH RESORCINOL (SRL) RESIN

PURPOSE:	Find back-up to Duolite CS-100 and test formic acid eluant
SCOPE:	Contact tests of SRL resorcinol and Duolite ARC-359N AND C-3 using synthetic NCAW
	Resin eluted with 0.3 M HNO_3 and 0.5 M formic acid
RESULTS:	SRL had highest Cs capacity but 10^6, 10^7 Rad results inconclusive
	SRL capacity deteriorates significantly at 10^8 Rad
	HNO_3 provided best elution of Cs
CONCLUSIONS:	SRL resin does not appear to have adequate resistance to radiation degradation (~10^8 Rad)
	HNO_3 eluted Cs significantly better than formic acid
ISSUES:	Need additional batch contacts to better quantify where Cs capacity for SRL declines
PLANS:	Batch contact verification tests with CS-100 and SRL resins in FY 1990-1991
DOCUMENTS:	Internal Westinghouse Memo No. 13315-89-BCL-17, B. C. Landeene to J. N. Appel, September 15, 1990.

AGING/CYCLING TESTS WITH CS-100

PURPOSE:	Determine number of Cs loading cycles resin can withstand
SCOPE:	Repeated IX cycles with synthetic NCAW per B Plant flowsheet
RESULTS:	Completed 55 elution/regeneration cycles
	Resin degraded to smaller particle size
	Cs capacity decreased by 40%
CONCLUSIONS:	Resin will last for processing one entire NCAW tank over period of 1 year (~30 cycles)
ISSUES:	How will aging/cycling effect Cs capacity under B Prime conditions (Cs capacity 100 KCi ---> 240 KCi)?
PLANS:	IX column capacity tests in FY 1990-1991 with AR vault conditions (B Prime flowsheet)
DOCUMENTS:	Internal Westinghouse Memo No. 12712-PCL-90-014, A. L. Prignano to B. C. Landeene, November 1, 1989.

CALCULATE CUMMULATIVE RADIATION EXPOSURE IN IX COLUMN

PURPOSE:	Determine cumulative radioation exposure to resin in B Plant IX column under AR vault flowsheet conditions
SCOPE:	Calculate exposure rates with computer code for cycles 1 and 2 for IX column
RESULTS:	10^7 Rads after four 1st cycle runs and one 2nd cycle run
CONCLUSIONS:	Resin needs to be able to withstand 10^8 Rad
	SRL resin appears to be inadequate at this level
ISSUES:	Will CS-100 resin withstand 10^7-10^8 Rads during IX column operation?
PLANS:	IX column capacity tests in FY 1990-1991 using CS-100 pre-irradiated to 10^8 Rads
DOCUMENTS:	Internal Westinghouse Memo No. 13315-90-BCL-002, B. C. Landeene to D. C. Deere, February 13, 1990.
	Internal Westinghouse Memo, D. C. Deere to B. C. Landeene, "Exposure Estimates for IX Resins in B Plant," June 11, 1990.

9 0 1 1 1 0 3 1 9 7 8

FUTURE PLANS

NCAW PRETREATMENT TECHNOLOGY

RUTHENIUM (Ru) EMISSIONS TESTS

PURPOSE:	Does Ru in NCAW load on IX resin?
	Does Ru then elute with Cs and then volatilize out Cs product concentrator?
SCOPE:	Batch contact/elution tests with actual NCAW supernate on Duolite CS-100 resin in FY 1990-1991
	Ru volatility test in simulated concentrator in FY 1991
DOCUMENTS:	"Ru Volatility Lab Tests," Activity Description Form, September 19, 1989.
	Test Plan in process of being signed off.

BATCH VERIFICATION TESTS FOR SRL BACK-UP RESIN

PURPOSE: Additional batch contact tests to better quantify when Cs capacity of SRL resin declines

SCOPE: Test SRL and CS-100 resins pre-irradiated to 10^6, 10^7, 10^8 rads in FY 1990, 1991

DOCUMENTS: Internal Westinghouse Memo No., 13315-89-BCL-17, B. C. Landeene to J. N. Appel, September 15, 1990.

Draft Internal Memo, S. L. Peterson to B. C. Landeene, "Maximum Total Cesium Loading Batch Contact Test for Removal of Cesium from Synthetic Neutralized Current Acid Waste," (in process of being signed off).

IX COLUMN CAPACITY TESTS

PURPOSE:	Provide the Cs capacity of Duolite CS-100 resin for AR Vault flowsheet
	Determine effectiveness of sodium scrub stream
SCOPE:	Lab IX column runs with revised synthetic NCAW feed recipe
DOCUMENTS:	Internal Westinghouse Memo, B. C. Landeene to A. L. Prignano, "Test Conditions for Ion Exchange (IX) Capacity Continuous Lab Tests and Aging/Cycling Lab Tests."
	Draft, WHC-SD-WM-TP-091, S. L. Peterson,"Continuous Capacity Ion Exchange Column Study," August 22, 1990.

DELAYED NEUTRON ACTIVATION ANALYSIS SYSTEM (DNAAS)

PURPOSE:	Complete supporting document for DNAAS development and testing in FY 1991
	Write procedures/train 222-S laboratory personnel on DNAAS in FY 1992
SCOPE:	Development and testing includes DNAAS on simulated waste and actual NCAW samples
DOCUMENTS:	WHC-SD-CP-TI-158, V. B. Subrahmanyam, "Delayed Neutron Activation Analysis System (DNAAS), Status and Applications," March 12, 1990.

TRANSURANIC (TRU) MONITOR

PURPOSE:	Demonstrate TRU monitor using actual NCAW
SCOPE:	Complete design of TRU monitor test support equipment in early FY 1991
	Issue test plan for TRU monitor hot pilot plant in FY 1991
	Test TRU monitor in WESF and evaluate results in FY 1992 and 1993
DOCUMENTS:	SD-WM-TPP-034, D. J. Flesher, "Technical Program Plan: Process Control for NCAW Demonstration at B Plant," August 1987.
	WHC-SA-0195, V. B. Subrahmanyam, "In-Line Monitor for Transuranic Elements," January 1988.

September 19, 1989.

FLOCCULATION OPTIMIZATION TESTS

PURPOSE:	Process control revisions for the ferric nitrate flocculent addition to NCAW settling
SCOPE:	Optimize the flocculating agent concentration and injection methods through pilot plant tests in FY 1992 using synthetic waste
DOCUMENTS:	"Alternate Facility for Solid-Liquid Separations," Activity Description Form, September 19, 1989.

HWVP FEED CHARACTERISTICS REPORT

PURPOSE: To establish composition and amounts of pretreated NCAW solids and cesium destined for HWVP

SCOPE: Evaluate core sample settle/decant/washing data in FY 1991-1996 from Tanks 101-AZ and 102-AZ

DOCUMENTS: "SD on Pretreatment Computer Simulation for 101-AZ/102-AZ (Core Sample Results)," Activity Description Form, September 19, 1989.

Letter No. 8904140, "Final Report - Characterization of the First Core Sample of Neutralized Current Acid Waste from Double-Shell Tank 101-AZ," M. E. Peterson, R. D. Scheele, and J. M. Tingey, Pacific Northwest Laboratory, September 29, 1989.

9 0 1 1 5 0 0 1 2 0 7

DOE 0180

NCRW Pretreatment Process

S. A. Barker

September 6, 1990

Waste Pretreatment Technology

Problem Statement

Waste Type:	Neutralized Cladding Removal Waste, NCRW
Source:	PUREX cladding removal solution containing large amounts of zirconium cladding, sodium fluoride solids, dissolved plutonium, dissolved uranium, and dissolved americium.
Volume of waste:	About 840,000 gallons of sludge in Double-shell tanks 103-AW and 105-AW, with an additional 360,000 gallons expected to be produced if PUREX restarts.
Problem:	The waste has a transuranic (TRU) activity in the range of 500 to 1000 nanoCuries per gram (nCi/g). This level of activity dictates that this waste be made into glass and sent to a repository for final disposal.

Objective

Develop a process that will pretreat the NCRW, and that will reduce the amount of material being made into glass by separating the TRU material from the zirconium metal. The low level waste stream will be made into a cementateous grout. The potential benefit for this pretreatment process is a 40 to 1 cost reduction for final disposal for all material sent to the Grout Treatment Facility (GTF) over the material processed through the Hanford Waste Vitrification Process (HWVP).

Objective

The pretreatment process selected is a process developed around Argonne National Laboratories' TRUEX, Transuranic Extraction Process. The process involves:

- Dissolution of Solids
- Solid/Liquid Separation
- TRUEX Processing of the Liquid
- Solvent Cleanup
- Product Neutralization

Status Summary

The process development is still in its early development stage at WHC. preliminary laboratory tests have demonstrated the applicability of the process, an engineering study has been completed, and a preliminary conceptual flowsheet has been issued. The location for this plant has been determined to be B Plant.

NCRW PRETREATMENT PROCESS
MAJOR COMPONENT SUMMARY

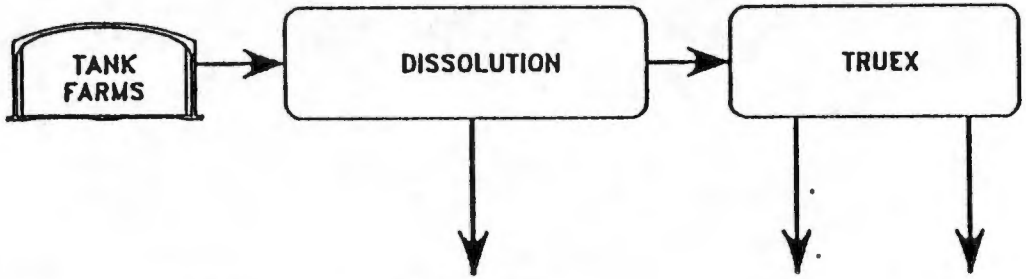

	NCRW SLUDGE	UNDISSOLVED SOLIDS	TRU STREAM	LLW STREAM
TRU ACTIVITY (nCi/g)	627	510	2200	0.002
RELATIVE ZIRCONIUM FLOW	100 %	5 %	0.003 %	95 %
RELATIVE FLOW	1.00	0.32	0.36	8.50

	HWVP FEED
TRU ACTIVITY (nCi/g)	1070
RELATIVE ZIRCONIUM FLOW	5 %
RELATIVE FLOW	0.68

SAB/SAB0009

Preliminary Pretreatment Studies

Preliminary Scouting Studies of TRU/Zr Separations

Purpose:
- Scouting studies to look at ways to separate Am and Pu from Zr - evaluation of water washing.

Scope:
- Lab scale study;
- 2-3 grams actual waste per sample;
- Use 105-AW sludge composite.

Results:
- 2 water washes remove 97 % of NaF;
- Solids liquid separation is difficult, some solids tend to float.

Conclusions:
- Water washing of NaF greatly reduces volume of original waste;
- NaF solubility is 0.63 M.

Document:
- Swanson, J. L., September 1987, "Results to Date on Separation of Pu and Am From Zr in NCRW Sludge", 8701678, Pacific Northwest Laboratories, Richland, WA, 99352.

Preliminary Pretreatment Studies

Preliminary Scouting Studies of TRU/Zr Separations

Purpose:
- Scouting studies to look at ways to separate Am and Pu from Zr - evaluate differential settling.

Scope:
- Lab scale study;
- 2-3 grams actual waste per sample;
- Use 105-AW sludge composite.

Results:
- Differential settling not feasible;
- No significant concentration of TRU upon settling.

Conclusions:
- Differential settling does not significantly segregate the TRU portion. Settling is made difficult by a portion of the solids that float. The floating solids contain enough TRU components to be a TRU waste.

Document:
- Swanson, J. L., September 1987, "Results to Date on Separation of Pu and Am From Zr in NCRW Sludge", 8701678, Pacific Northwest Laboratories, Richland, WA, 99352.

Preliminary Pretreatment Studies

Preliminary Scouting Studies of TRU/Zr Separations

Purpose:	-	Scouting studies to look at ways to separate Am and Pu from Zr - evaluate selective leaching.
Scope:	-	Lab scale study;
	-	2-3 grams actual waste per sample;
	-	Use 105-AW sludge composite.
Results:	-	Selective leaching in silver nitrate/potassium persulfate removes sufficient TRU to lower TRU activity of grout to under 50 nCi/g (later reevaluated to 120 nCi/g);
	-	Solid/liquid separation is difficult, some undissolved solids tend to float even after centrifugation;
Conclusions:	-	Initial studies indicate that selective leaching in silver nitrate/potassium persulfate may be a satisfactory pretreatment method;
Document:	-	Swanson, J. L., September 1987, "Results to Date on Separation of Pu and Am From Zr in NCRW Sludge", 8701678, Pacific Northwest Laboratories, Richland, WA, 99352.

Preliminary Pretreatment Studies
Preliminary Scouting Studies of TRU/Zr Separations

Purpose:	-	Scouting studies to look at ways to separate Am and Pu from Zr - evaluate acid dissolution of solids.
Scope:	-	Lab scale study;
	-	2-3 grams actual waste per sample;
	-	Use 105-AW sludge composite.
Results:	-	Essentially complete dissolution with nitric acid;
	-	Dissolution is much more difficult if sludge is first washed to remove NaF;
Conclusions:	-	NCRW sludge is fairly soluble in nitric acid.
Document:	-	Swanson, J. L., September 1987, "Results to Date on Separation of Pu and Am From Zr in NCRW Sludge", 8701678, Pacific Northwest Laboratories, Richland, WA, 99352.

Preliminary Pretreatment Studies
Nitric Acid Leaching of NCRW Sludge

Purpose:

- Evaluate the effectiveness of selective leaching to determine if process was able to produce a groutable material with TRU activity <50 nCi/g. Nitric acid leaching was used rather than silver nitrate/potassium persulfate leach, because of simplicity of nitric acid leach.

Scope:

- Lab scale study;
- 2-3 grams actual waste per sample;
- Used 105-AW and 103-AW sludge composites.

Results:

- Re-evaluation of previous results indicate nitric acid leaching produces grout with 90% of Zr at TRU activity of 120 nCi/g (75 nCi/g previously);
- Leaching of Pu and Am improved at 100 C and with fluoride addition, but at the expense of Zr selectivity;
- With silver persulfate at 100 C, leach gave a grout feed containing 91 % of Zr at TRU activity of 36 nCi/g for DST 105-AW, but not as effective for 103-AW;

Conclusions:

- Nitric acid leaching of NCRW sludge will not produce a grout feed containing most of the Zr and < 50 nCi/g TRU activity.
- Pu is present in more than 1 species with differing solubilities;

Document:

- Swanson, J. L., June 1988, "Selective Leaching of Pu and Am From Zr From NCRW Sludge", 8801889, Pacific Northwest Laboratories, Richland, WA, 99352.

B PLANT PRETREATMENT PROCESS FOR NEUTRALIZED CLADDING REMOVAL WASTE SLUDGE

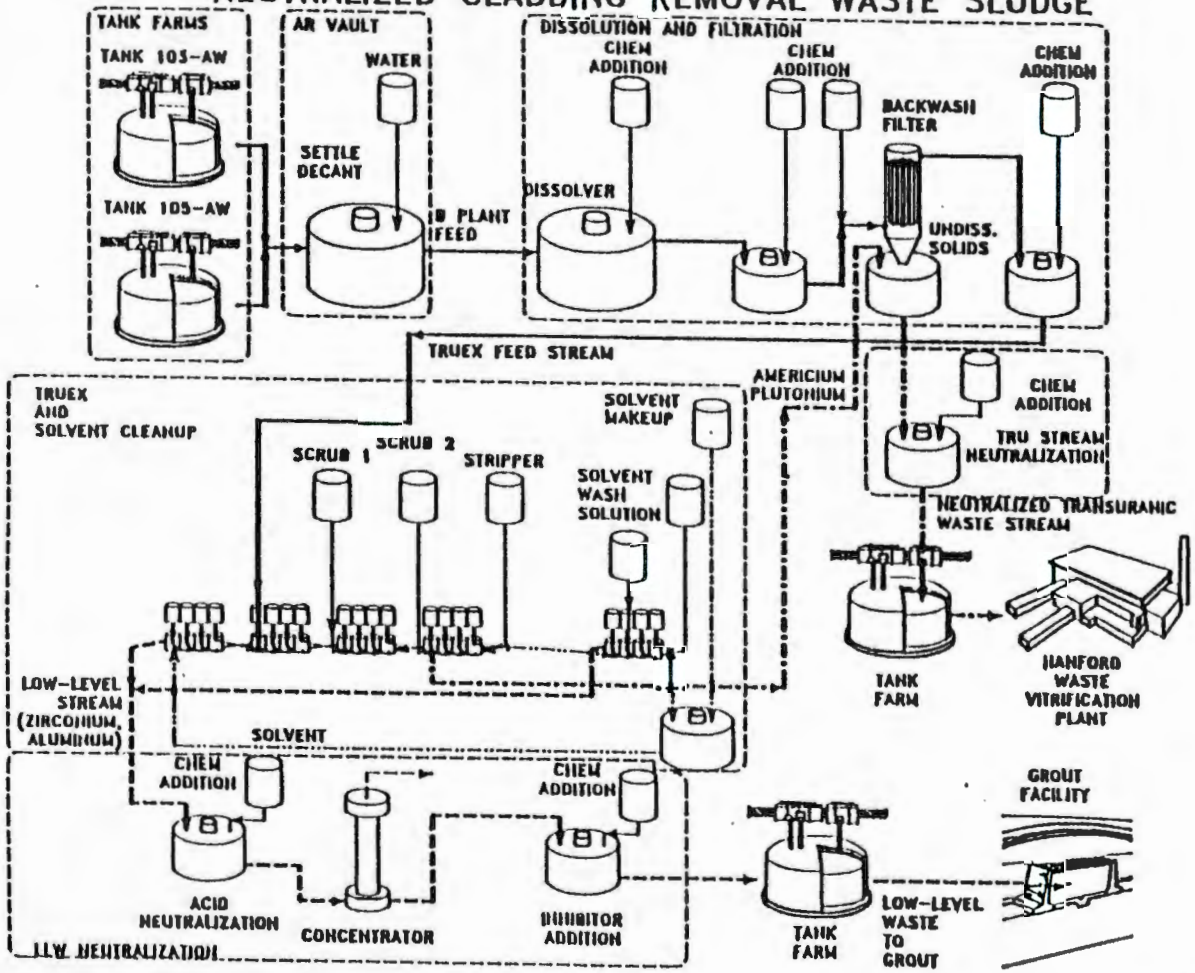

SAB/SAB0004

B PLANT PRETREATMENT PROCESS FOR NEUTRALIZED CLADDING REMOVAL WASTE SLUDGE DISSOLUTION AND SOLIDS SEPARATION TRU PRODUCT NEUTRALIZATION

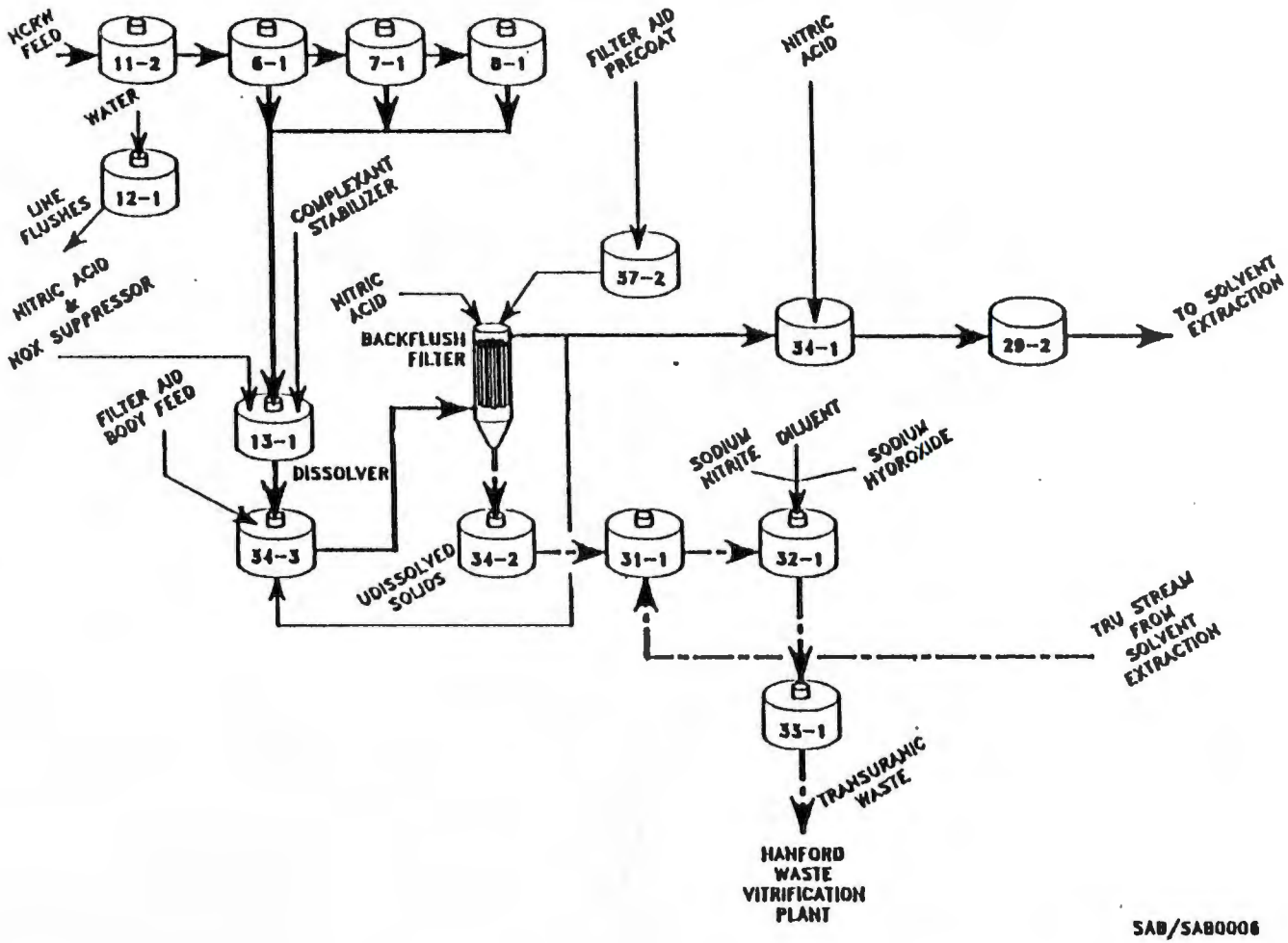

SAB/SAB0006

Dissolution Studies
TRUEX Scoping Studies - Dissolution

Purpose:	-	To support the development of a TRUEX flowsheet, investigate sludge dissolution using acid solutions. Wash sludge to remove NaF, followed with dissolution in oxalic acid or nitric/oxalic acid.
Scope:	-	Lab scale study;
	-	2-3 grams actual waste per sample;
	-	Used 105-AW and 103-AW sludge composites.
Results:	-	Water washing of solids resulted in a formidable solid/liquid separation problem;
	-	In the presence of oxalic acid, Pu & Am precipitate;
Conclusion:	-	Water washing of solids prior to dissolution results in solid/liquid separation problem and in poor dissolution of sludges in acid solution;
Document:	-	Swanson, J. L., June 1989, "TRUEX Processing of NCRW sludge, Status Report," 8902486, Pacific Northwest Laboratories, Richland, WA, 99352.

Dissolution Studies
TRUEX Scoping Studies - Dissolution

Purpose:	-	To support the development of a TRUEX flowsheet, investigate sludge dissolution using nitric acid.
Scope:	-	Lab scale study;
	-	2-3 grams actual waste per sample;
	-	Used 105-AW and 103-AW sludge composites.
Results:	-	92 to 98 % of Zr dissolved;
	-	82 to 96 % of Pu dissolved;
	-	93 to 99 % of Am dissolved;
	-	Undissolved solids are TRU;
	-	CO_2 and NO_X evolved during dissolution;
	-	Dissolution time of 2 hours is satisfactory.
Conclusion:	-	Water washing of solids prior to dissolution results in solid/liquid separation problem;
Issues:	-	Acidic fluoride solutions pose corrosion problems;
Plan:	-	Evaluate acidic fluoride corrosion effects on retro-fit of B Plant and grass roots plant.
Document:	-	Swanson, J. L., June 1989, "TRUEX Processing of NCRW sludge, Status Report," 8902486, Pacific Northwest Laboratories, Richland, WA, 99352.

Dissolution Studies
TRUEX Scoping Studies - Dissolution

Purpose:	-	To support the development of a TRUEX flowsheet, investigate sludge dissolution using 2-stages of nitric acid dissolution.
Scope:	-	Lab scale study;
	-	2-3 grams actual waste per sample;
	-	Used 105-AW and 103-AW sludge composites.
Results:	-	A second stage dissolution with 5 M nitric acid and 0.5 M hydrofluoric acid could essential dissolve all material, however, Zr precipitated upon cooling.
Conclusion:	-	Secondary dissolution not recommended due to acidic fluoride at high temperature with related corrosion problems, and probable lack of space at B Plant.
Document:	-	Swanson, J. L., June 1989, "TRUEX Processing of NCRW sludge, Status Report," 8902486, Pacific Northwest Laboratories, Richland, WA, 99352.

Materials of Construction

Purpose:	-	Analyses of NCRW dissolver solutions find that a very corrosive nitric acid/acidic fluoride solution is present. The applicability of embedded B Plant process piping and other high alloys is being investigated for this process.
Scope:	-	DOE site visits.
Results:	-	Extensive corrosion can be expected with conventional stainless steels;
	-	A combination of fluoride complexing, special material selection, and process monitoring and changes will be necessary to control process corrosion.
Conclusion:	-	A materials evaluation program is necessary for the pretreatment plant being planned for B Plant. Corrosion can be monitored and held to acceptable ranges by a combination of process changes, process monitoring, materials selection, and complexing of fluoride containing solutions.
Issues:	-	B Plant is constructed using 5 stainless steels, such as 304L, Hastelloy B, 309 Cb SS, 347 SS, and Inconel 625, none of which is noted for its resistance to acidic fluoride.
Plan:	-	Begin a test program to evaluate the ability of the embedded piping and new piping to contain the expected process solutions from the pretreatment of NCRW.
Document:	-	Barker, S. A., April, 1990, "Trip Report on visit to Westinghouse Idaho Nuclear Co, and Westinghouse Savannah River Co.," Westinghouse Hanford Co, Richland, Washington, 99352.

Materials of Construction

Purpose:	-	The applicability of embedded B Plant process piping and other high alloys is being investigated for use in a very corrosive nitric acid/acidic fluoride solution.
Scope:	-	Literature searches only, covering selection of materials in nitric acid/ acidic fluoride solutions at temperatures in the range of room temperature to 60 C.
Results:	-	High nickel-chrome alloys are most resistant;
	-	Extensive corrosion can be expected with conventional stainless steels;
	-	A combination of fluoride complexing, special material selection, and process monitoring and changes can be used to control process corrosion.
Conclusion:	-	The structure of a materials evaluation program has been drawn up. This program will initially test embedded pipe materials of construction in simulated process solutions.
Document:	-	Schwenk, E. B. Jr, To be issued Sept 1990, Westinghouse Hanford Co, Richland, Washington, 99352.

Materials of Construction

Purpose: - The applicability of embedded B Plant process piping and other high alloys is being investigated for use in a very corrosive nitric acid/acidic fluoride solution -preliminary laboratory tests.

Scope:

- Bench scale tests with test coupons of the 5 materials used for imbedded piping in B Plant and WESF.
- Process solutions to be tested include HNO_3/NaF, simulated NCRW (with no Al), and simulated NCRW solution (with Al).
- Test temperatures at room temperature and 60 C.

Materials of Construction

Purpose: - The applicability of embedded B Plant process piping and other high alloys is being investigated for use in a very corrosive nitric acid/acidic fluoride solution -expanded laboratory tests.

Scope:

- Materials evaluations of embedded B Plant piping as well as an expanded range of high nickel-chrome alloy steels;
- Evaluation of sintered metal filters;
- Process solution ranges as determined by PNL after evaluation of retrieval method and DST stratification;
- Process solution ranges to include NCRW, CC and PFP waste types;
- Process temperatures in the range of room temperature to 100 C;
- Determine the combination of fluoride complexing, special material selection, process monitoring, and process changes that will be necessary;
- Perform experiments necessary to documentation alloy selection and corrosion resistance to satisfy Washington State Administrative Code requirements for plant permitting.

B PLANT PRETREATMENT PROCESS FOR NEUTRALIZED CLADDING REMOVAL WASTE SLUDGE

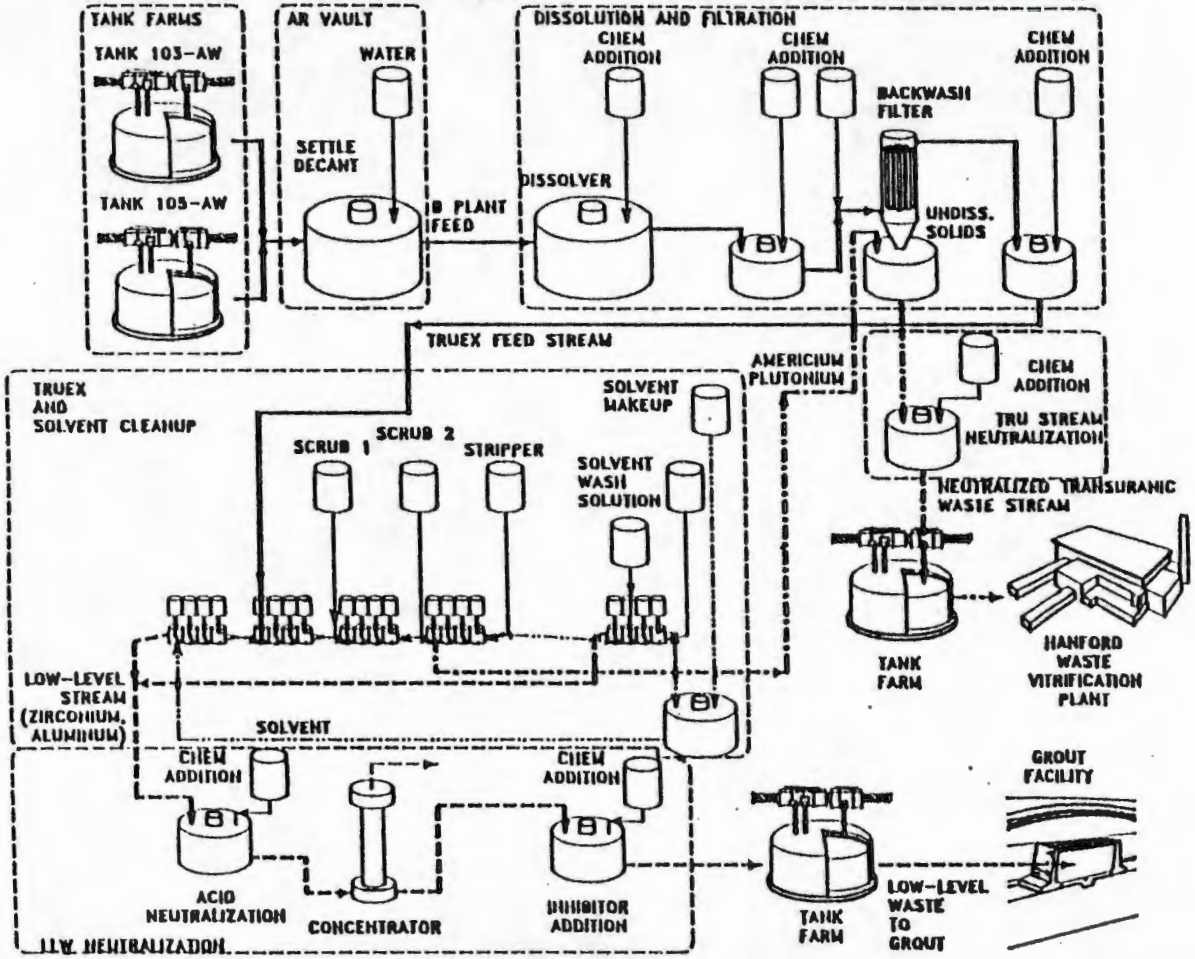

SAB/SAB0004

B PLANT PRETREATMENT PROCESS FOR NEUTRALIZED CLADDING REMOVAL WASTE SLUDGE TRUEX & LLW PRODUCT NEUTRALIZATION

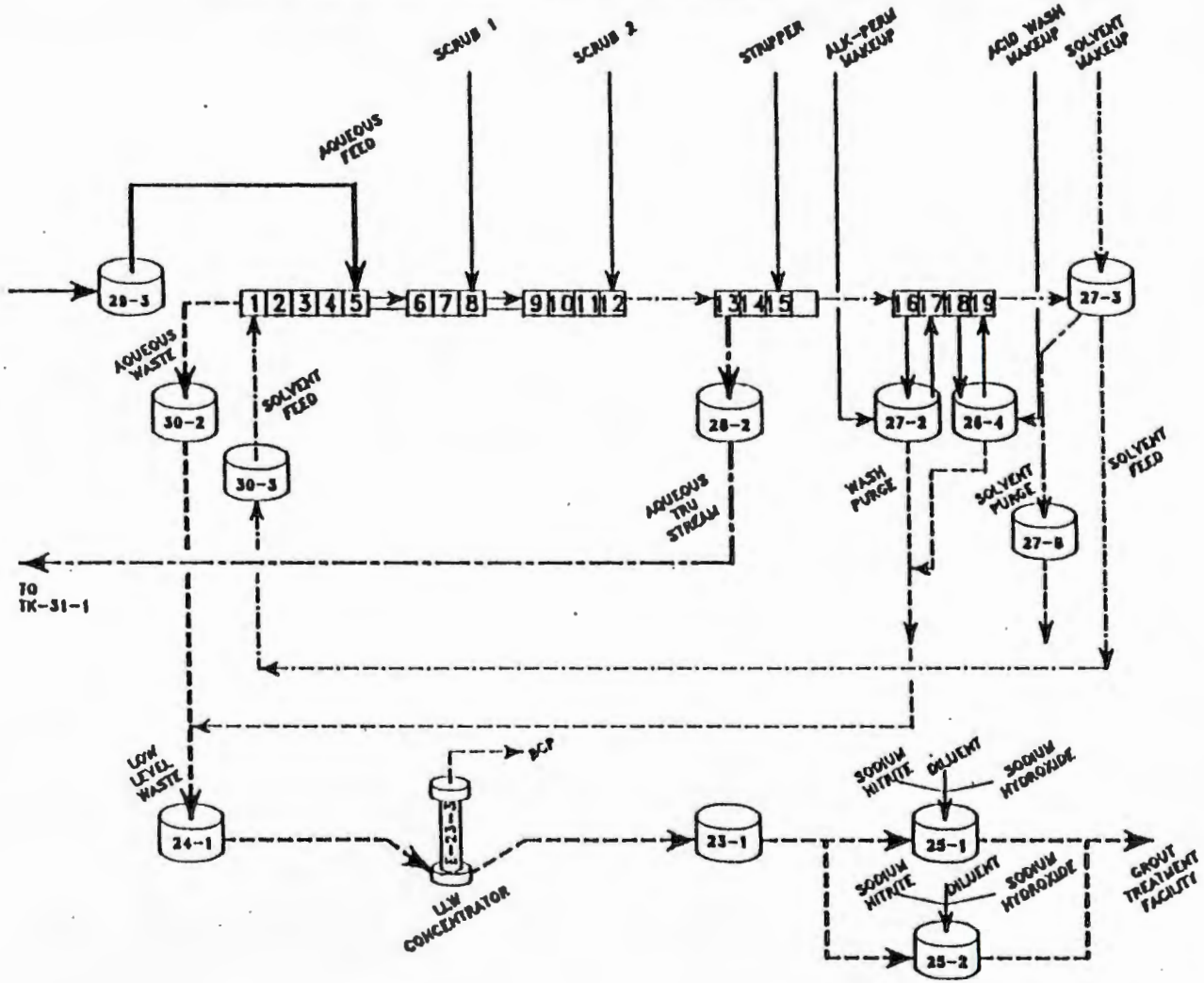

* ION EXCHANGE EQUIPMENT NOT SHOWN

SAB/SAB0007

TRUEX

TRUEX Scoping Studies - TRUEX, 1st Half FY 1989

Purpose:

- Evaluate the TRUEX process on nitric acid dissolved NCRW sludge - solvent extraction section.

Scope:

- Batch, small scale contacts;
- 2-3 grams actual waste per sample;
- Used 103-AW and 105-AW composite samples;
- TRUEX solvent is 0.2 M CMPO (octyl(phenyl)-N,N-diisobutylcarbamoylmethylphosphine oxide) + 1.4 M TBP (tributyl phosphate) in NPH (normal paraffin hydrocarbons);

Results:

- Pu and Am distribution ratios in range of 20 to 200;
- Zr distribution ratio in range of 0.2;
- Organic/Aqueous (O/A) ratio of 4;
- 5 stages are sufficient for the extraction.

Conclusion:

- The TRUEX process is able to effectively separate TRU components from the low level waste stream containing the majority of the Zr in a few stages with a low organic-to aqueous ratio.

Document:

- Swanson, J. L., June 1989, "TRUEX Processing of NCRW sludge, Status Report," 8902486, Pacific Northwest Laboratories, Richland, WA, 99352.

TRUEX

TRUEX Scoping Studies - TRUEX, 1st Half FY 1989

Purpose:

- Evaluate the TRUEX process on nitric acid dissolved NCRW sludge - scrub section.

Scope:

- Batch, small scale contacts;
- 2-3 grams actual waste per sample;
- Used 103-AW and 105-AW composite samples;
- Primary scrub solution is composed of 1.5 M nitric acid + 0.05 M oxalic acid;
- Secondary scrub solution is composed of water.

Results:

- Zr and F concentrations in organic phase are reduced by 95 % in scrub section;
- Nitric acid only scrubs resulted in 65 % reductions of organic-phase concentrations of Zr and F;
- Organic/Aqueous (O/A) ratio of 0.33;
- 7 stages are sufficient for the scrub section.

Conclusion:

- The TRUEX scrubbing section increases the selectivity of the solvent by up to 95 %.

Document:

- Swanson, J. L., June 1989, "TRUEX Processing of NCRW sludge, Status Report," 8902486, Pacific Northwest Laboratories, Richland, WA, 99352.

TRUEX

TRUEX Scoping Studies - TRUEX, 1st Half FY 1989

Purpose:	-	Evaluate the TRUEX process on nitric acid dissolved NCRW sludge - stripping section.
Scope:	-	Batch, small scale contacts;
	-	2-3 grams actual waste per sample;
	-	Used 103-AW and 105-AW composite samples;
	-	Strip solution is composed of 0.2 M HEDPA (1-hydroxyethane-1,1-diphosphonic acid);
Results:	-	Pu and Am stripping section distribution ratios are about 0.01;
	-	F distribution ratios are about 1:5;
	-	Organic/Aqueous (O/A) ratio of 0.20;
	-	3 stages are sufficient for the striping section.
Conclusion:	-	The TRUEX process is able to effectively strip TRU components from the organic TRUEX solvent, producing a stream that is low in metals such as Zr, but with a high TRU activity.
Document:	-	Swanson, J. L., June 1989, "TRUEX Processing of NCRW sludge, Status Report," 8902486, Pacific Northwest Laboratories, Richland, WA, 99352.

TRUEX

TRUEX Scoping Studies, 2nd Half FY 1989

Purpose:

- Performing scoping study to determine process characteristics pertaining to dissolver and stripper - evaluation of dissolver off-gases and NO_X suppressants.

Scope:

- Batch, small scale contacts;
- 2-3 grams actual waste per sample;
- Used 103-AW and 105-AW composite samples.

Results:

- Off-gas from dissolution predominantly CO_2 and NO_X;
- Carbonate totally converted to CO_2;
- 10 % of nitrite released as NO_X;
- NO_X levels reduced with addition of sulfamic acid;
- Resulting sulfate, did not affect TRUEX process.

Conclusion:

- Dissolver off-gas is primarily CO_2 and NO_X. NO_X levels can be reduced with a suppressant such as sulfamic acid generating N_2 and N_2O.

Document:

- Swanson, J. L., December 1989, "TRUEX Processing of NCRW sludge, Progress Report," 8905209, Pacific Northwest Laboratories, Richland, WA, 99352.

TRUEX

TRUEX Scoping Studies, 2nd Half FY 1989

Purpose:	-	Performing scoping study to determine process characteristics pertaining to dissolver and stripper - evaluation of undissolved solids.
Scope:	-	Batch, small scale contacts;
	-	2-3 grams actual waste per sample;
	-	Used 103-AW and 105-AW composite samples.
Results:	-	Solids sulfate, carbon, fluoride, and chloride appear to be low enough to meet HWVP specifications;
	-	More than 90 % of the gamma emitting radionuclides dissolved and will end up in the grout feed stream.
Conclusion:	-	Undissolved solids residue concentrations appear to be within the range required for HWVP feed.
Document:	-	Swanson, J. L., December 1989, "TRUEX Processing of NCRW sludge, Progress Report," 8905209, Pacific Northwest Laboratories, Richland, WA, 99352.

TRUEX
TRUEX Scoping Studies, 2nd Half FY 1989

Purpose:	-	Performing scoping study to determine process characteristics pertaining to dissolver and stripper - evaluation of HEDPA and fluorides as scrubbing agents.
Scope:	-	Batch, small scale contacts;
	-	2-3 grams actual waste per sample;
	-	Used 103-AW and 105-AW composite samples.
Results:	-	Use of HEDPA as scrubbing agent caused worse precipitation than oxalate;
	-	hydrogen fluoride is an effective scrubbing agent (factor of 100 for removing Zr from the organic).
Conclusion:	-	HEDPA is not a satisfactory scrubbing agent due to precipitation of solids. However, hydrogen fluoride may serve as an alternate scrubbing agent for oxalate, if the corrosion effects are not too great and if fluorides can be cleaned from the solvent.
Document:	-	Swanson, J. L., December 1989, "TRUEX Processing of NCRW sludge, Progress Report," 8905209, Pacific Northwest Laboratories, Richland, WA, 99352.

Solids Precipitation
Determination of NCRW TRUEX Feed Composition Range

Purpose:

- Determine TRUEX feed composition ranges that will enable the process to operate without precipitation of solids.

Scope:

- Batch, small scale contacts;
- 2-3 grams actual waste per sample;
- Conditions in the dissolution step where such to give a higher than normal Zr concentration in the filtrate, broadening the scope of this test.
- Used DST 103-AW sludge composite.

Results:

- An envelope of recommended operating condition were developed to avoid solids precipitation (Figure 3);
- Higher acid concentrations (>1.5 M nitric acid) appears to prevent oxalate precipitation;
- Oxalate induced precipitation appears to occur very slowly at times (over a period of weeks).

Conclusion:

- Solids formation in the TRUEX feed solution can be avoided by making adjustments to the dissolver to increase solution acidity, and to decrease Zr, F and Al concentrations. Oxalate solids precipitation appears to be very slowly occurring in these solutions.

Document:

- Swanson, J. L., April 1990, "Letter discussing Solids Precipitation in TRUEX Processing of NCRW sludge," 9001877, Pacific Northwest Laboratories, Richland, WA, 99352.

EFFECT OF ACID AND ZIRCONIUM CONCENTRATIONS ON INTERFACIAL CRUD FORMATION

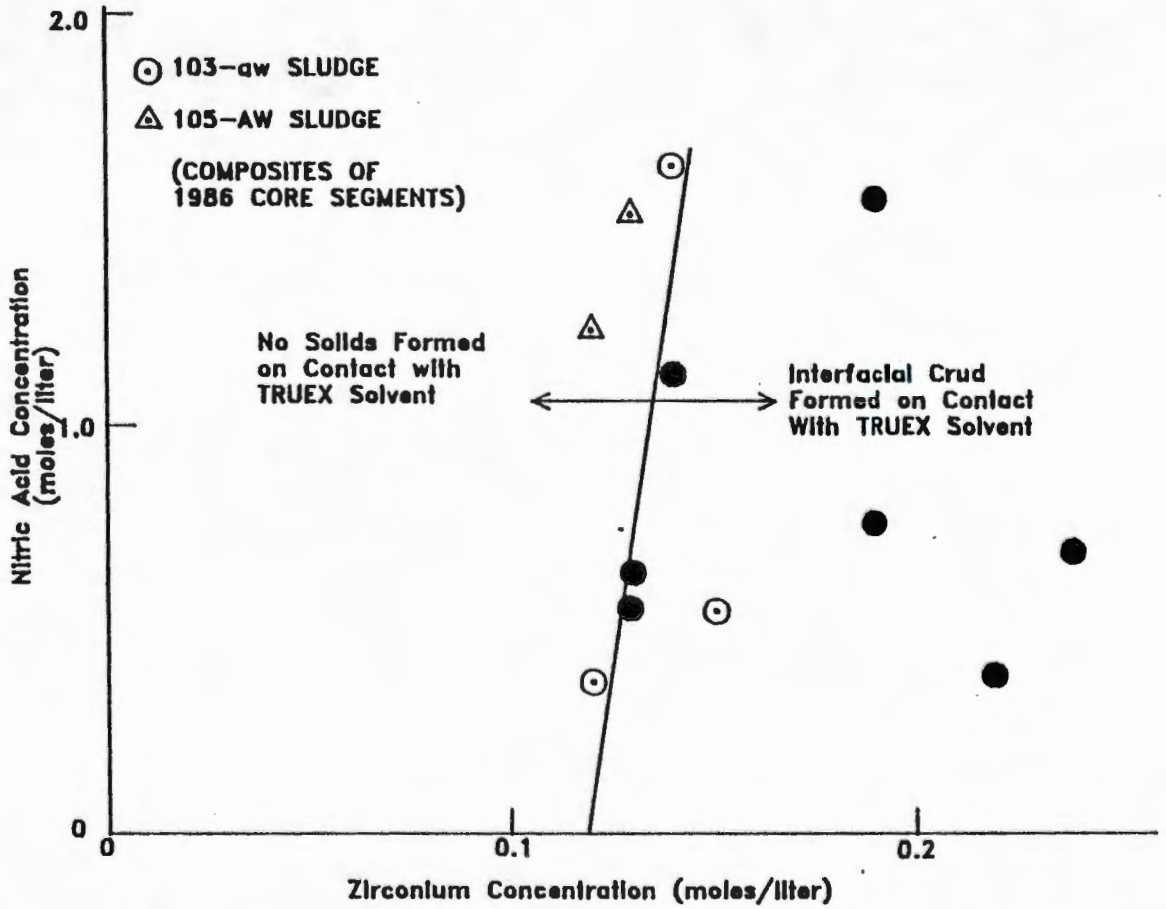

Swanson, J. L., April, 1990, Pacific Northwest Laboratories

SAB/SAB0010

Solids Precipitation
Determination of NCRW dissolver Composition Range

Purpose:	-	Determine range of expected NCRW dissolver solutions to create target corrosion study solutions. Simulated dissolver solutions are tested to determine the likelihood of precipitate formation.
Scope:	-	Batch, small scale contacts;
	-	2-3 grams actual waste per sample;
	-	Used simulated sludge compositions.
Results:	-	Range of compositions determined;
	-	Aluminum additions are not expected to cause precipitation.
Conclusion:	-	A range of dissolver solution compositions were given to the group performing the metallurgy studies. The range includes elevated Al concentrations to allow for expected Al additions for fluoride complexing.
Document:	-	Swanson, J. L., July 1990, "Letter discussing Stability of various concentrations of NCRW dissolver solutions based on NCRW compositions as distributed throughout the DST tanks," 9003311, Pacific Northwest Laboratories, Richland, WA, 99352.

CC WASTE PRETREATMENT

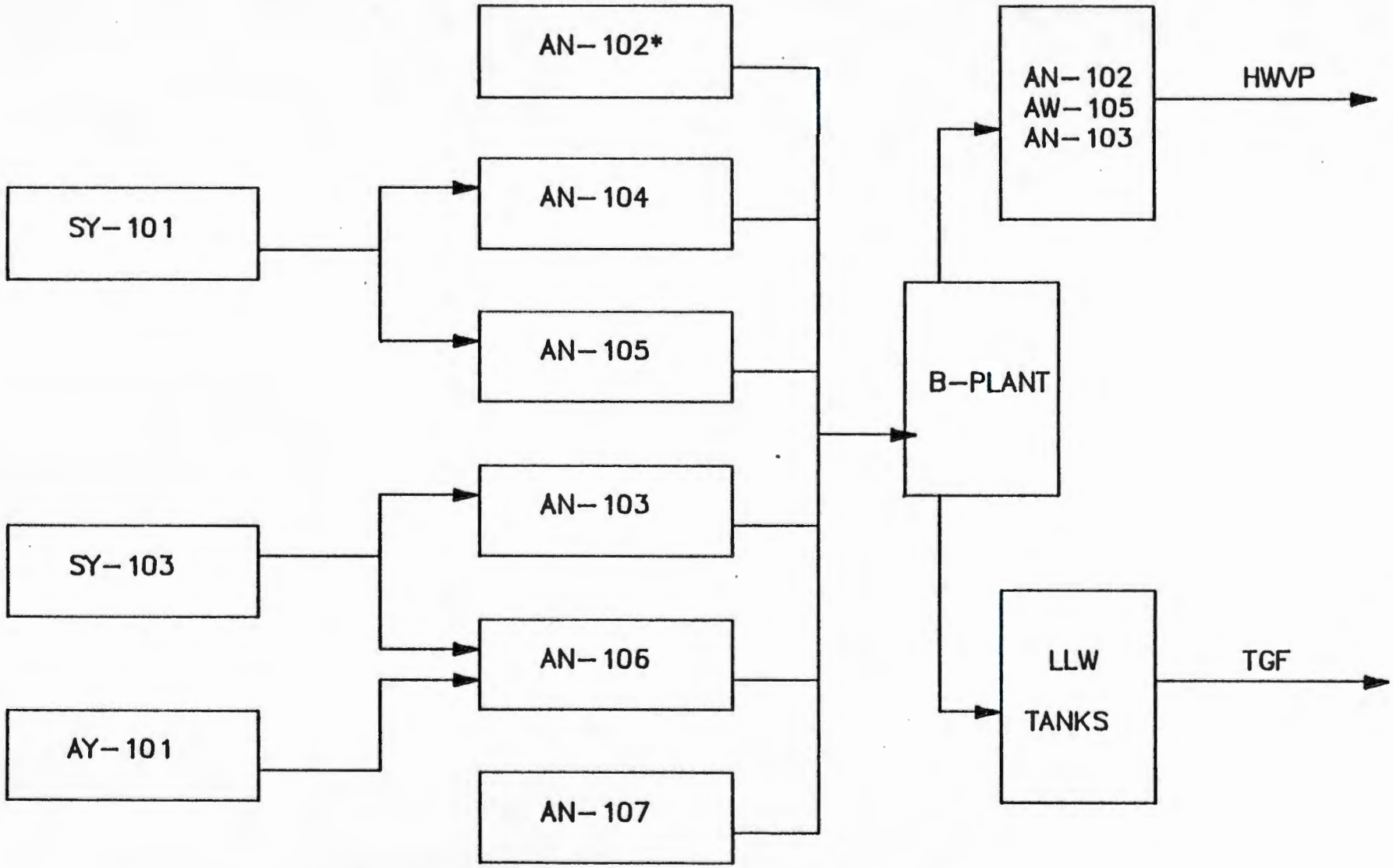

* ONLY AN-102 HAS BEEN CORE SAMPLED TO DATE

CC WASTE PRETREATMENT

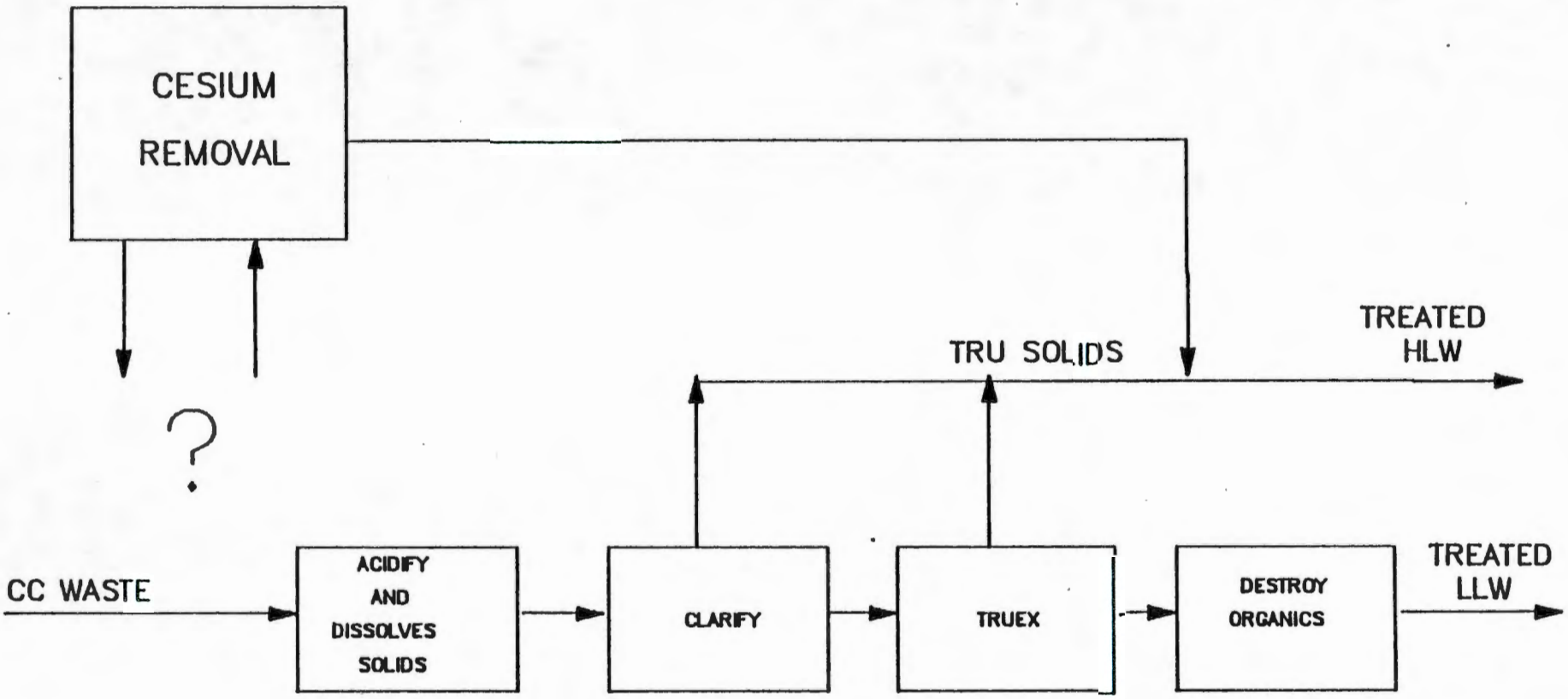

CC SUPERNATE FOAM CONTROL TESTS

PURPOSE:	Develop a method to control foaming when the supernate is acidified.
SCOPE:	Tested two methods on actual CC supernate from AN-107.
METHOD 1:	Add basic waste to concentrated acid.
METHOD 2:	Try different types of anti-foam agents. o - NPH o - Ducey CS-10A o - Ducey CS-100 o - Dow 1410
RESULTS:	Adding waste to acid reduces the amount of time to acidify waste. All the chemical additives tested reduced addition time even further. Best results were obtained with Ducey Chemicals CS-100 dissolved in NPH.
CONCLUSIONS:	Waste addition times can be improved by adding waste to acid and using anti-foam additives.
ISSUES:	To what extent does foaming affect batch prep time? Behavior of anti-foam agents in solvent extraction.
PLANS:	FY-91 lab work and engineering evaluation.
DOCUMENTS:	Internal Memo 12712-PCL89-101, Herting to Orme, Sept. 1989.

CC LAB SCALE ACIDIFICATION TESTS

PURPOSE:	Develop a method to control final acid concentration during acidification of supernates.
SCOPE:	Tested two methods on actual CC supernate from AN-107.
METHOD 1:	Titrate the basic waste sample with acid to a ph 1 end point to neutralize bases and protonate weak acids, then calculate how much additional acid is required to reach the desired nitric acid concentration (~1M).
METHOD 2:	Add the waste sample to a known amount of nitric acid, then back-titrate with caustic to determine the nitric acid concentration, then calculate how much additional acid is required to reach the desired nitric acid concentration (~1M).
RESULTS:	CC supernate has a high concentration of the salts of weak acids making it difficult to interpret the titration results (Method 1). Back-titrating with caustic is not hampered nearly so much by weak acids and the titration results are more precise (Method 2).
CONCLUSION:	Back-titrating acidified waste provides a single procedure that both determines the correct amount of acid to add and verifies that amount is correct.
ISSUES:	None
DOCUMENTS:	Internal Memo, 12221-PCL88-230, 12712-PCL88-048, 12712-PCL88-095, 12712-PCL89-161

CC SOLIDS DISSOLUTION

PURPOSE: Identify preferred acid for dissolving CC solids (AN-107 only) and characterize residual solids.

SCOPE: Tested 3 acids:
- 12M HNO_3
- 6M HNO_3/0.1M HF
- 1M Oxalic Acid

METHOD: Centrifuged sludge and water-washed sludge samples dissolved in each acid type.
Particle size analysis on residual solids.

RESULTS: Virtually complete dissolution. Too few solids to analyze for composition. 90% of particles less than 2 microns.

CONCLUSIONS: Nitric acid is preferred for AN-107 solids.
Dissolver solutions will be difficult to clarify.

ISSUES: Will solids dissolve to same extent and as quickly in 1M HNO_3?
Are residual solids TRU?
What is there composition?
What about the solids in other CC tanks?

PLANS: FY-91 lab work with AN-102, AY-101, SY-101 solids.

DOCUMENTS: 12712-PCL89-125, 12712-PCL89-146

CC WASTE TRUEX PROCESS

PURPOSE:	Determine feasibility of using TRUEX process with actual CC waste.
SCOPE:	Measure distribution coefficients for extraction, scrub and strip.
METHOD:	Repeated batch contacts.
RESULTS:	TRU extraction distribution coefficients more acid concentration dependent than expected, but acceptably high. Acid extraction higher than expected. TRU scrubbing distribution coefficients are acceptably high; more scrub stages will be needed because of high acid extraction. TRU stripping distribution coefficients are acceptably low.
CONCLUSIONS:	TRU can be extracted to less than TRU levels from actual CC waste and stripped from loaded solvent to acceptably low levels.
ISSUES:	Acid concentration dependence of distribution coefficients, and alternate stripping agents.
PLANS:	Continue lab work FY-91.
DOCUMENTS:	Internal memos 12221-PCL88-230, 12712-PCL88-048, 12712-PCL89-095.

SOLVENT POISONING TEST

PURPOSE: Determine if recycled solvent becomes "Poisoned".

SCOPE: Complete six solvent extraction cycles with the same solvent using CC waste as feed.

METHOD: Do repeated extraction-scrub-strip cycles noting the following behavior:

- Phase separation time.
- Europium extraction and stripping behavior.
- TRU in raffinate.

RESULTS: No evidence of increased phase separation time.
No deterioration of extraction or stripping behavior.
No TRU increase in raffinate.

CONCLUSIONS: If solvent poisoning occurs with CC waste, it cannot be observed after 6 recycles.

ISSUES: None.

DOCUMENT: J. L. Swanson, "Test for TRUEX Solvent Poisoning with Complexant Concentrate Waste," March 1989.

CC ORGANIC DESTRUCTION

PURPOSE: Conduct scoping tests of organic destruction technology.

SCOPE:
UV-Ozone (Radiation Disposal Systems)
Electrochemical Oxidation (PNL)
Supercritical water oxidation (LANL/Sandia)
Refluxing peroxide (WHC)
UV-Peroxide (WHC)
Sonication (WHC)
Sonication-peroxide (WHC)

RESULTS:
RDS estimates 45 days to treat a 14,000 gal tank of CC by UV-ozone.
Electrochemical with a silver catalyst is fast, but required 4 fold dilution. Also works without a catalyst, but is slower. May not be complete.
Supercritical water is very fast, but will require high dilution. Virtually complete destruction.
Refluxing peroxide is as fast as electrochemical, but leaves a 20-30% residual.
UV-peroxide is much slower that refluxing, not effective against residual.
Sonication does not work.

CONCLUSIONS:
UV-ozone and UV-peroxide are too slow to be practical for a B-Plant application.
Electrochemical and refluxing peroxide have potential if complete organic destruction is not required.
Supercritical water is the only process with the potential for complete destruction.

PLANS:
Continue lab work to optimize refluxing peroxide.
Begin cold scoping tests for supercritical water oxidation.

Future Plans - NCRW Cold Lab Studies

Purpose:

- Determine an effective method for the separation of undissolved NCRW sludge from TRUEX feed.

Scope:

- Pilot plant scale;
- Simulated NCRW solids;
- Investigate backflush and inertial filters.

Future Plans - NCRW Hot Lab Studies

Purpose: - Resolve areas of uncertainty in the development of a full-scale process for the pretreatment of NCRW.

Scope:

- Settling behavior of NCRW solids in NCRW supernate and water (rates, solids volume, and entrained fluid amounts);
- Evaluate NH_3 emissions;
- Suppression of NO_X evolution during dissolution;
- Solids dissolution and TRUEX processing as a function of feed composition and as a function of corrosion inhibitor concentrations;
- Determination of non-phosphate based stripping agents;
- Determination of alternate scrubbing agents;
- Determination of causes and solution to solids precipitation problems in extraction step;
- Evaluate solvent cleanup requirements and process;
- Determine appropriate denitrification process for waste minimization;
- Evaluate process waste stream to determine appropriate amounts of stream concentration.

FUTURE WORK - COLD CLARIFICATION STUDIES

PURPOSE: Identify filtration technology for synthetic PFP solids.

SCOPE: Based on the characterization of residual PFP solids, develop a synthetic.

Run filtration tests on a pilot size filter to determine scaleup factors for a full size unit.

FUTURE PLANS - PFP HOT LAB STUDIES

PURPOSE: Resolve areas of uncertainty in the pretreatment of PFP waste

SCOPE:

Settling behavior of PFP solids suspended in PFP supernate (rates, solids volume, changes in composition)
Sludge dissolution in water and caustic
Dissolution of water-washed, caustic-washed and untreated sludge in nitric acid
Suppression of NO_x evolution during dissolution
Characterization of undissolved solids
Solvent extraction dependence on acid concentration
Extraction batch contacts
Scrubbing batch contacts
Alternate stripping techniques
Settle decant of TRU solids product
Ion exchange of Am and Pm from strip solution
Solvent washing

FUTURE WORK - CC WASTE PROCESS DEVELOPMENT

- Process Alternatives Engineering Study (TRU, organic and cesium treatment).

- Hot lab studies - Foam Control (An-102, AY-101, SY-101)
  Dissolution

  TRUEX

  Cs Treatment

  Refluxing/Peroxide Oxidation of Organics

- Cold pilot studies- Clarification

  Supercritical Water Oxidation of Organics

TRUEX PILOT PLANT STUDIES

PURPOSE: Cold test centrifugal contactors.

SCOPE: Mechanical testing for maintainability.

Hydraulic testing to verify throughputs for 3 waste-solvent systems.

FUTURE - TRUEX PILOT PLANT FLOWSHEETS

PURPOSE: Provide pilot plant flowsheets for post NCAW waste

SCOPE: Update NCRW flowsheet

Generate Rev. 0 flowsheet for PFP and CC waste

FUTURE PLANS - POST NCAW PRETREATMENT

- Conceptual NCRW and PFP Flowsheet updates.

- Treatability studies.

  a. Hazardous Waste Analysis.

  b. Literature Search and Evaluation of Hazardous Waste Treatment Processes.

Materials of Construction

Purpose: - The applicability of embedded B Plant process piping and other high alloys is being investigated for use in a very corrosive nitric acid/acidic fluoride solution -expanded laboratory tests.

Scope:

- Materials evaluations of embedded B Plant piping as well as an expanded range of high nickel-chrome alloy steels;
- Evaluation of sintered metal filters;
- Process solution ranges as determined by PNL after evaluation of retrieval method and DST stratification;
- Process solution ranges to include NCRW, CC and PFP waste types;
- Process temperatures in the range of room temperature to 100 C;
- Determine the combination of fluoride complexing, special material selection, process monitoring, and process changes that will be necessary;
- Perform experiments necessary to documentation alloy selection and corrosion resistance to satisfy Washington State Administrative Code requirements for plant permitting.