1. DRILL 14 Ø HOLE [illegible]

8. BOLT HOLES TO STRADDLE FLANGE CENTERLINES.

I

S.

B

JUN 1990
RECEIVED
EDMC

OFFICIAL RELEASE
BY WHC
DATE JUL 09 1988

ROCKWELL REVIEW COPY ON FILE
SUBMITTAL NO. 205-20
DATE 2-18-87

IMPACT LEVEL 3
EDT #100887

	DATE
WHC APPROVAL BY LD Vanselow	7/7/88
PROJ ENGR [signature]	1/30/87
QA Randolph D Powell	1/30/89
APPROVED BY N/A	
SAFETY N/A	
APPROVED BY W. Van Bere	1/30/87
CHECKED BY L.L. Judy	1/26/87
DRAWN BY L. L. DEAN	1/12/87
DESIGNED BY J. A. Walker	8/5/86

U. S. DEPARTMENT OF ENERGY
Richland Operations Office

Associated Technologies Incorporated
212 S. Tryon St.
Charlotte, N.C.
28281

EQUIPMENT JUMPER ASSEMBLY
LIQUID COLLECTION TANK-W01

A

PROJECT TITLE
TRANSPORTABLE GROUT EQUIPMENT FACILITY

PROJ	WO	JOB
B-475		

SCALE	BLDG	INDEX
AS NOTED	243-G1	2500

DRAWING NUMBER	SHEET	OF	REV
H-2-98711	1	2	0

DESCRIPTION	REV
ONS	

2

1

3.7 2" U BOLT W/HEX NUTS

ITT GRINNELL FIG 438

009568
1 of 2

OFFICIAL RELEASE
BY WHC
DATE JUL 09 1988

IMPACT LEVEL 3
EDT #100887

ROCKWELL REVIEW COPY ON FILE
SUBMITTAL NO. 105-20
DATE 4-9-87

	DATE
WHC APPROVAL BY LD Vanselow	7/7/88
PROJ ENGR [signature]	1/30/87
QA Randolph D Powell	1/30/87
APPROVED BY N/A	
SAFETY N/A	
APPROVED BY W. Dan Rice	1/30/87
CHECKED BY L L Judy	1/26/87
DRAWN BY L.L. DEAN	1/12/87
DESIGNED BY J.A. Walker	8/5/86

U. S. DEPARTMENT OF ENERGY
Richland Operations Office

ATI Associated Technologies Incorporated
212 S. Tryon St. Charlotte, N.C. 28281

EQUIPMENT JUMPER ASSEMBLY
LIQUID COLLECTION TANK-WO1-DETAILS

PROJECT TITLE
TRANSPORTABLE GROUT EQUIPMENT FACILITY

PROJ	WO	JOB
B-475		

SCALE	BLDG	INDEX
AS NOTED	243-G1	2500

DRAWING NUMBER	SHEET	OF	REV
H-2-98711	2	2	0

DESCRIPTION	REV
IONS	

B

A

2

1

9568

2 of 2

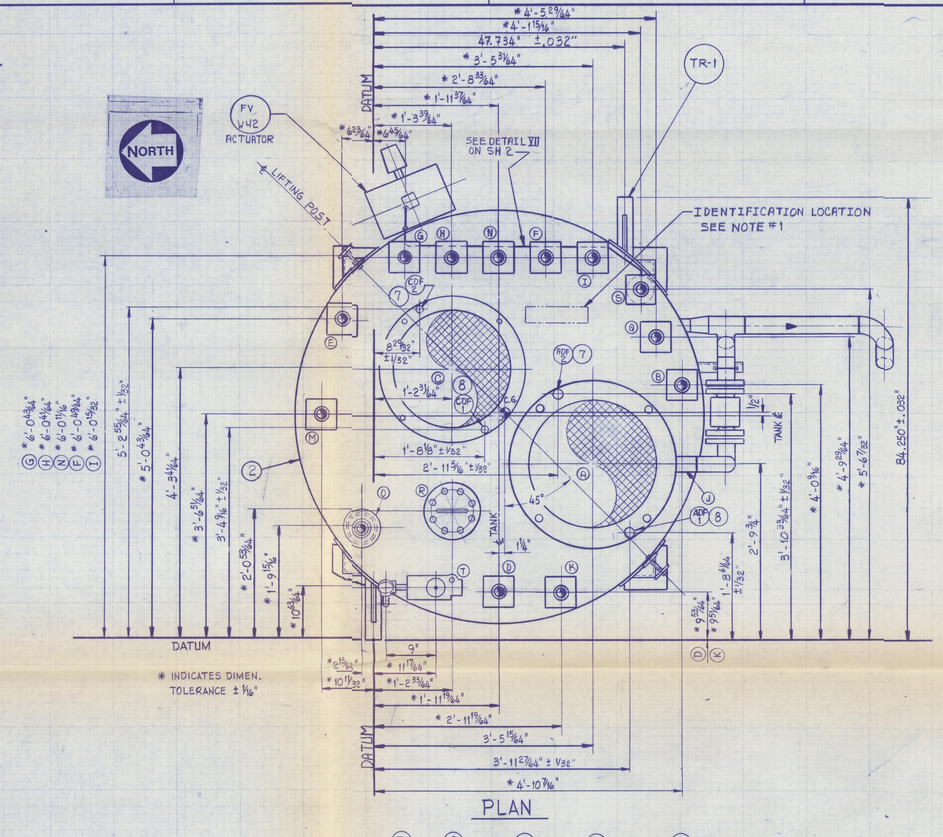

PLAN

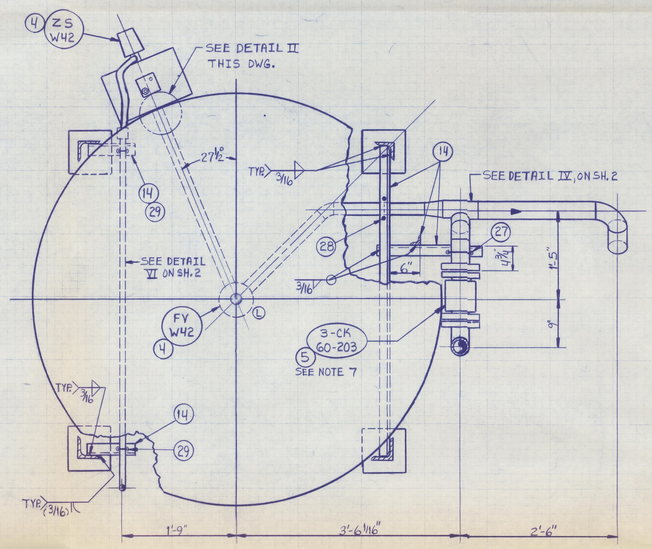

SECTION "A-A"
SCALE: 1" = 1'-0"

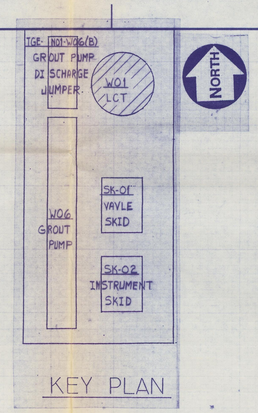

KEY PLAN

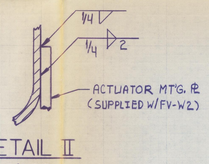

DETAIL II
SCALE: N.T.S.

QTY	PT. No.	DESCRIPTION	MATERIAL/REF
	1	ASSEMBLY (APPROX. TOTAL WT. 3382#)	—
1	2	LIQUID COLLECTION TANK-W01	A.T.I. P.O.#203-902
1	3	LOWER EQUIP. ELECT. CONNECTOR-13 PIN	H-2-32401-3 *
1	4	2" FLUSH BOT. BALL VALVE, TAG No. FV-W42	A.T.I. P.O.#203-940 *
1	5	3" CHECK VALVE, TAG No. 3-CK-60-203	A.T.I. P.O.#P-203-944 *
8	6	1 1/4" Ø STUD, WELD TYPE	A.T.I. P.O.# P-203-950 H-2-98818-4 *
2	7	2" Ø SHORT DOWEL, WELD TYPE	A.T.I. P.O.# P-203-950 H-2-98819-8 *
2	8	2" Ø LONG DOWEL, WELD TYPE	A.T.I. P.O.# P-203-950 H-2-98819-9 *
13	9	2" PLIREX MALE CONNECTOR NOZZLE	H-2-32446-3 *
12	10	KICK PLATE	H-2-98889-5
5'-0"	11	W4x13	ASTM A36, C.S.
2	12	1 1/4" ROUND BAR x 5" LG.	↓
1	13	FLAT BAR 6" x 3/8" x 8" LG. W/1/8" R 4 CORNERS	
10'-0"	14	ANGLE 2" x 2" x 1/4"	
8	15	STUD BOLT, 5/8"-11 UNC-2A x 3 3/4" LG.	ASTM A193, GR. B-7 ALLOY STL. ZINC PLATED
16	16	HEAVY HEX NUT, 5/8"-11 UNC-2B	ASTM A194, GR. 2H ALLOY STL.
2	17	3"-150# R.F.S.O. FLG S.S.T.	ASTM A182, F304L
2	18	GASKET, 3"-150# SPIRAL WOUND (304 S.S. W/FLEXICARB FILLER)	FLEXITALIC TYPE CG 1/8" THK.
7'-6"	19	3" SCH. 40S PIPE, E.F.W., S.S.T.	ASTM A312, TP304L
3'-6	20	2" SCH. 40S PIPE, E.F.W., S.S.T.	↓
1	21	2"-90° B.W. ELL, SCH. 40, S.S.T.	ASTM A403, WP-W304L
1	22	2" 45 B.W. ELL, SCH. 40, S.S.T.	
1	23	3 x 2" B.W. ECC. REDUCER, SCH. 40S	
1	24	3" B.W. TEE, SCH. 40, S.S.T.	
3	25	3"-90° B.W. ELL., SCH. 40, S.S.T.	
1	26	3"-45° B.W. ELL. SCH. 40, S.S.T.	
1	27	3" U-BOLT W/HEX NUTS	ITT GRINNELL F16.137
1	28	2" U-BOLT W/HEX NUTS	
2	29	3/4" U-BOLT W/HEX NUTS	
11'-0"	30	3/4" Ø RIGID CONDUIT	GALV. C.S.
1	31	1" x 3/4" FLUSH BUSHING	COMM'L.
1	32	CONDUIT OUTLET BODY, 3/4" ELL	CROUSE-HINDS GUAN 26
1	33	3/4" LIQUID-TIGHT ADAPTER	T+B #5273
AR	34	3/4" Ø LIQUID-TIGHT FLEXIBLE CONDUIT	COMM'L.
1	35	3/4" LIQUID-TIGHT CONDUIT FITTING, STRAIGHT W/S.STL. SEALING RING, A.R.	T+B #5833
1	36	2" SQ. HD. PIPE PLUG	COMM'L.
AR	37	STRANDED COPPER, SINGLE CONDUCTOR WIRE, 14 AWG, 600V, THHN	COMM'L.
10'-0"	38	1/2" O.D. x .049" WALL TUBING S.STL.	ASTM A213, TP304L
1	39	1/2" x 1/4" MALE CONNECTOR	SWAGE LOK 304L-810-1-4
1	40	3" O-RING GASKET	CROUSE-HINDS GASK-458

GENERAL NOTES:

1. DUNNAGE SHALL BE FABRICATED AND ASSEMBLED IN ACCORDANCE WITH A.T.I. FABRICATION AND ASSEMBLY OF THE LIQUID COLLECTION TANK/MIXER MODULE SPECIFICATION No. 203-M-012.
2. ALL PARTS WITH AN ASTERISK(*) IN THE MATERIAL/REF. COLUMN WILL BE SUPPLIED BY A.T.I..
3. USE LIFTING YOKE # H-2-98821-1, BY A.T.I..
4. ALL DIMENSIONS MEASURED FROM DATUMS TO HAVE ± 1/16" TOLERANCE.
5. ASSEMBLY TO BE FABRICATED IN ACCORDANCE WITH A.T.I. FABRICATION + ASSEMBLY OF THE LIQUID COLLECTION TANK/MIXER MODULE SPECIFICATION No. 203-M-012.
6. PIPING TO BE IN ACCORDANCE WITH A.T.I. SPECIFICATION No. 203-M-002.
7. DRILL 1/4" Ø HOLE THRU. DISC ON THE VERTICAL ℄ AT THE BOTTOM OF DISC.
8. BOLT HOLES TO STRADDLE FLANGE CENTERLINES.

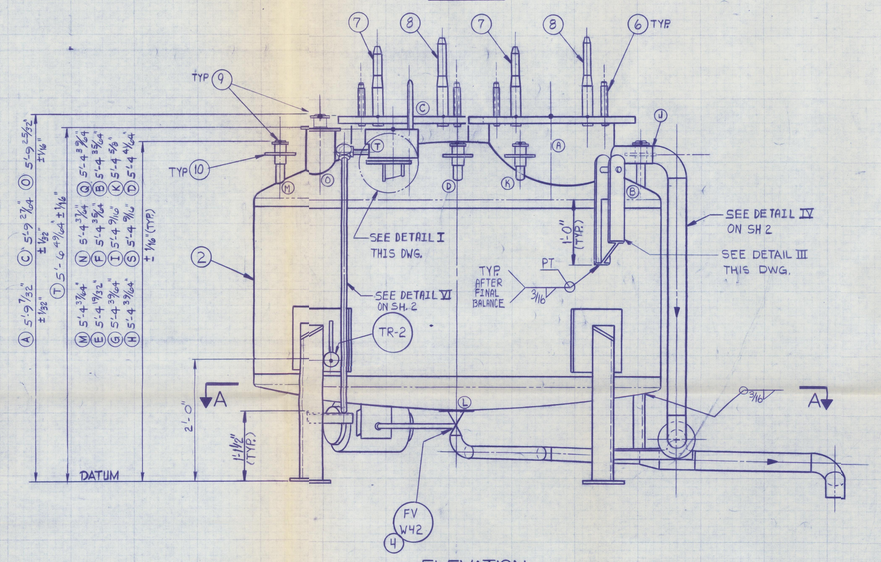

ELEVATION
1 ASSEMBLY
SCALE: 1" = 1'-0"

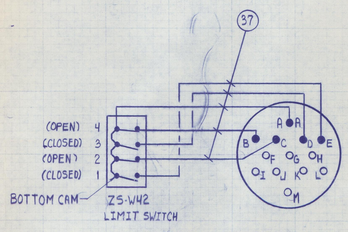

WIRING DIAGRAM
(H-2-98507)

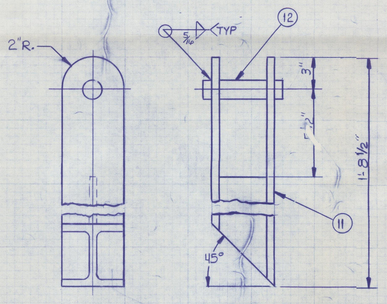

DETAIL III
2 REQ'D.
SCALE: N.T.S.

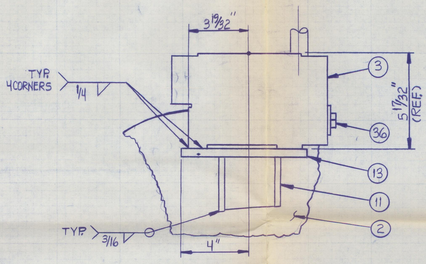

DETAIL I
SCALE: N.T.S.

OFFICIAL RELEASE BY WHC
DATE JUL 09 1988

JUN 1988 RECEIVED EDMC

IMPACT LEVEL 3
EDT #100887

ROCKWELL REVIEW COPY ON FILE
SUBMITTAL NO.
DATE

WHC APPROVAL BY		DATE 7/7/88	U. S. DEPARTMENT OF ENERGY Richland Operations Office
PROJ ENGR		1/6/87	Associated Technologies Incorporated, P.O. Box 10, Richland, WA 99352
DA		1/20/87	EQUIPMENT JUMPER ASSEMBLY LIQUID COLLECTION TANK-WO1
APPROVED BY			
SAFETY			
APPROVED BY		1/29/87	PROJECT TITLE TRANSPORTABLE GROUT EQUIPMENT FACILITY
CHECKED BY		1/26/87	PROJ B-475 / WO / JOB
DRAWN BY	L. L. DEAN	1/12/87	SCALE AS NOTED / BLDG 243-G1 / INDEX 2500
DESIGNED BY		8/5/86	DRAWING NUMBER H-2-98711 / SHEET 1 OF 2 / REV 0

BY-DATE	BY-DATE	REV BY DATE	DESCRIPTION	REV
APPROVAL	APPROVAL			
REVISIONS				
COMMENT REVIEW				

MICROFILMED

NUMBER	TITLE
H-2-98507	ELEMENTARY WIRING DIAGRAM
H-2-98663	EQUIPMENT ARRANGEMENT-LCT/MIX. MOD.
H-2-98814	DRAWING LIST

DRAWING TRACEABILITY LIST — REFERENCES — NEXT USED ON H-2-98670

0008558
1 of 2

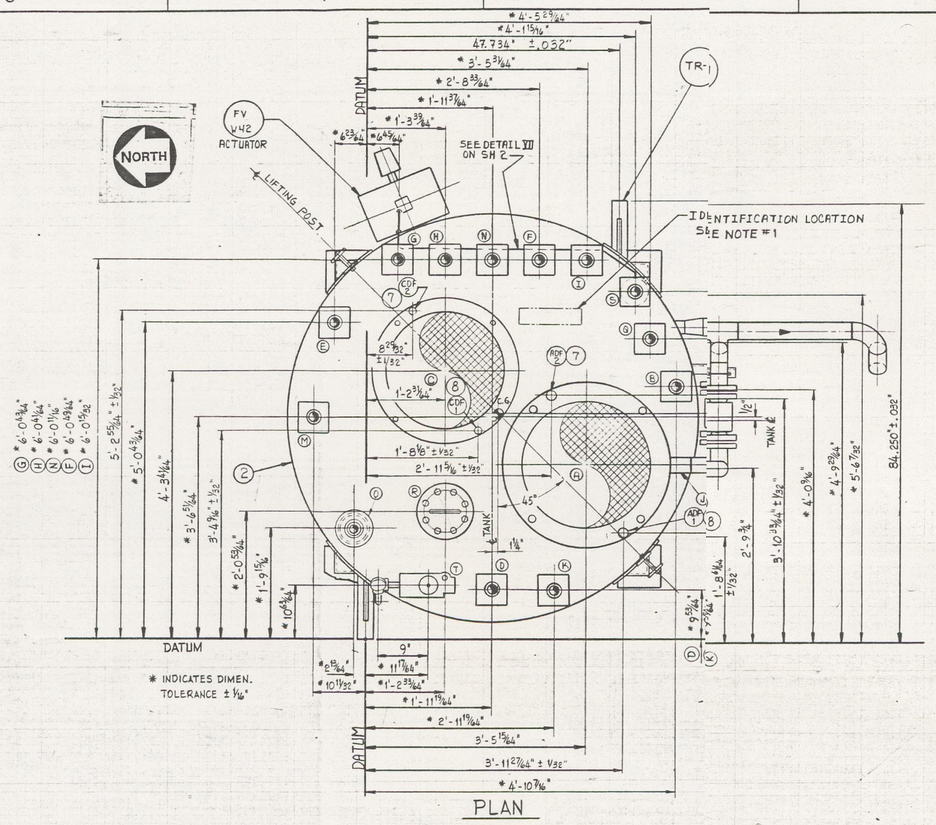

PLAN

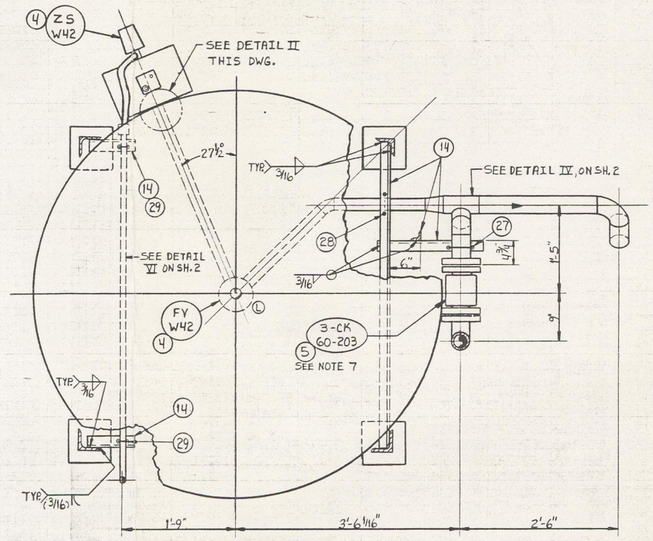

SECTION "A-A"
SCALE: 1" = 1'-0"

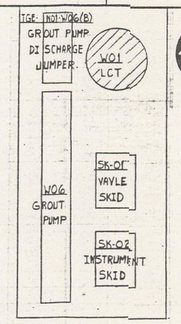

KEY PLAN

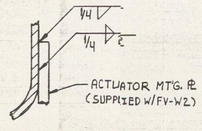

DETAIL II
SCALE: N.T.S.

QTY	PT. No.	DESCRIPTION	MATERIAL/REF.
X	1	ASSEMBLY (APPROX. TOTAL WT. 3362#)	—
1	2	LIQUID COLLECTION TANK-W01	A.T.I. P.O.#203-902
1	3	LOWER EQUIP. ELECT. CONNECTOR-13 PIN	H-2-32401-3 *
1	4	2" FLUSH BOT. BALL VALVE, TAG No. FV-W42	A.T.I. P.O.# 203-940 *
1	5	3" CHECK VALVE, TAG No. 3-CK-60-203	A.T.I. P.O.# P-203-944 *
8	6	1 1/4" Ø STUD, WELD TYPE	A.T.I. P.O.# P-203-950 H-2-98818-4 *
2	7	2" Ø SHORT DOWEL, WELD TYPE	A.T.I. P.O.# P-203-950 H-2-98819-8 *
2	8	2" Ø LONG DOWEL, WELD TYPE	A.T.I. P.O.# P-203-950 H-2-98819-9 *
13	9	2" PLUREX MALE CONNECTOR NOZZLE	H-2-32446-3 *
12	10	KICK PLATE	H-2-98819-5
5'-0"	11	W4x13	ASTM A36, C.S.
2	12	1 1/4" ROUND BAR x 5" LG.	
1	13	FLAT BAR 6" x 3/8" x 8" LG., W/1/8" R 4 CORNERS	
10'-0"	14	ANGLE 2" x 2" x 1/4"	
8	15	STUD BOLT, 5/8"-11 UNC-2A x 3 3/4" LG.	ASTM A193, GR. B-7 ALLOY STL. ZINC PLATED
16	16	HEAVY HEX NUT, 5/8"-11 UNC-2B	ASTM A194 GR. 2H ALLOY STL.
2	17	3"-150# R.F.S.O. FLG S.S.T.	ASTM A182, F304L
2	18	GASKET, 3-150# SPIRAL WOUND (304 S.S. W/FLEXIGRAB FILLER)	FLEXITALLIC TYPE CG, 1/8" THK.
7'-6"	19	3" SCH. 40S PIPE, E.F.W., S.S.T.	ASTM A312, TP304L
3'-6	20	2" SCH. 40S PIPE, E.F.W., S.S.T.	
1	21	2"-90° B.W. ELL, SCH. 40, S.S.T.	ASTM A403, WP-W304L
1	22	2" 45 B.W. ELL, SCH. 40, S.S.T.	
1	23	3 x 2" B.W. ECC. REDUCER, SCH. 40S	
1	24	3" B.W. TEE, SCH. 40, S.S.T.	
3	25	3"-90° B.W. ELL, SCH. 40, S.S.T.	
1	26	3" 45° B.W. ELL. SCH. 40, S.S.T.	
1	27	3" U-BOLT W/HEX NUTS	LTT GRINNELL F16.137
1	28	2" U-BOLT W/HEX NUTS	
2	29	3/4" U-BOLT W/HEX NUTS	
11'-0"	30	3/4" Ø RIGID CONDUIT	GALV. C.S.
1	31	1" x 3/4" FLUSH BUSHING	COMM'L.
1	32	CONDUIT OUTLET BODY, 3/4" ELL	CROUSE-HINDS GUAN 26
1	33	3/4" LIQUID-TIGHT ADAPTER	T+B # 5273
AR	34	3/4" Ø LIQUID-TIGHT FLEXIBLE CONDUIT	COMM'L.
1	35	3/4" LIQUID-TIGHT CONDUIT FITTING, STRAIGHT W/S.STL. SEALING RING, A.R.	T+B # 5333
1	36	2" SQ. HD. PIPE PLUG	COMM'L.
AR	37	STRANDED COPPER, SINGLE CONDUCTOR WIRE, 19AWG, 600V, THHN	COMM'L.
10'-0"	38	1/2" O.D. x .049" WALL TUBING S.STL.	ASTM A213, TP304L
1	39	1/2" x 1/4" MALE CONNECTOR	SWAGE LOK 304L-810-1-4
1	40	3" O-RING GASKET	CROUSE-HINDS GASK-45B

GENERAL NOTES:

1. DUNNAGE SHALL BE FABRICATED AND ASSEMBLED IN ACCORDANCE WITH A.T.I. FABRICATION AND ASSEMBLY OF THE LIQUID COLLECTION TANK/MIXER MODULE SPECIFICATION No. 203-M-012.
2. ALL PARTS WITH AN ASTERISK(*) IN THE MATERIAL/REF. COLUMN WILL BE SUPPLIED BY A.T.I..
3. USE LIFTING YOKE # H-2-98821-1, BY A.T.I..
4. ALL DIMENSIONS MEASURED FROM DATUMS TO HAVE ± 1/16" TOLERANCE.
5. ASSEMBLY TO BE FABRICATED IN ACCORDANCE WITH A.T.I. FABRICATION & ASSEMBLY OF THE LIQUID COLLECTION TANK/MIXER MODULE SPECIFICATION No. 203-M-012.
6. PIPING TO BE IN ACCORDANCE WITH A.T.I. SPECIFICATION No. 203-M-002.
7. DRILL 1/4" Ø HOLE THRU. DISC ON THE VERTICAL ℄ AT THE BOTTOM OF DISC.
8. BOLT HOLES TO STRADDLE FLANGE CENTERLINES.

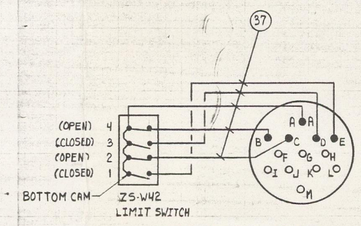

WIRING DIAGRAM
(H-2-98507)

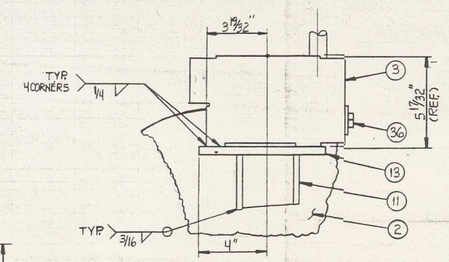

DETAIL I
SCALE: N.T.S.

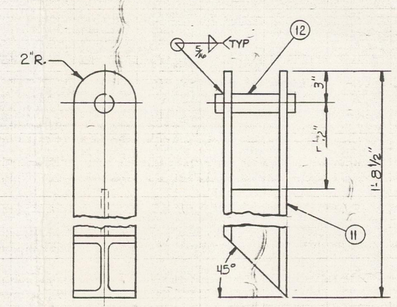

DETAIL III
2 REQ'D,
SCALE: N.T.S.

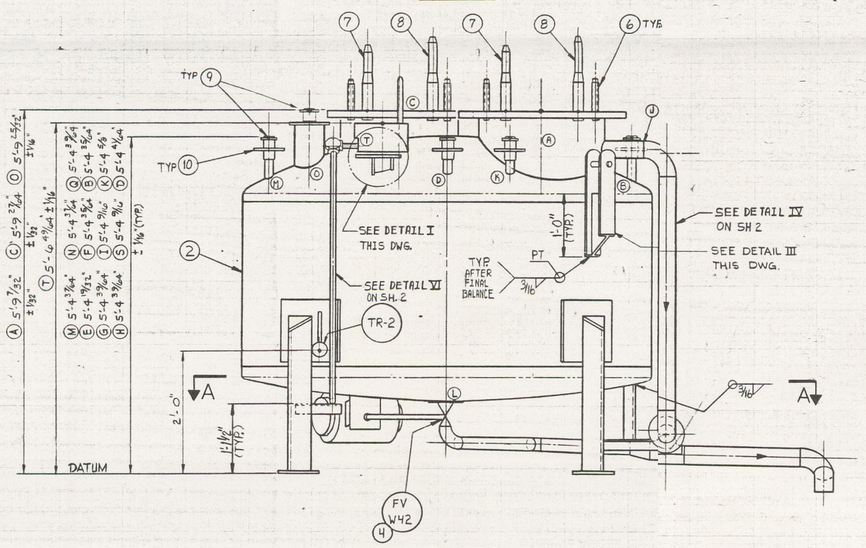

ELEVATION

(1) ASSEMBLY
SCALE: 1" = 1'-0"

OFFICIAL RELEASE BY WHC
DATE JUL 09 1988

IMPACT LEVEL 3
EDT #100887

ROCKWELL REVIEW COPY ON FILE
SUBMITTAL NO.
DATE

WHC APPROVAL BY J.D. Vanderbur		DATE 7/7/88	U. S. DEPARTMENT OF ENERGY Richland Operations Office
PROJ ENGR.		1/5/87	Associated Technologies Incorporated
DD		1/09/87	EQUIPMENT JUMPER ASSEMBLY - LIQUID COLLECTION TANK-W01
APPROVED BY NA			PROJECT TITLE TRANSPORTABLE GROUT EQUIPMENT FACILITY
SAFETY NA			PROJ B-475 / WO / JOB
APPROVED BY		1/13/87	SCALE AS NOTED / BLDG 243-G1 / JNDEX # 2500
CHECKED BY		1/26/87	DRAWING NUMBER H-2-98711 / SHEET 1 / OF 2 / REV 0
DRAWN BY L.L. DEAN		1/12/87	
DESIGNED BY		8/5/86	

NUMBER	TITLE
	DRAWING TRACEABILITY LIST

REFERENCES	
H-2-98507	ELEMENTARY WIRING DIAGRAM
H-2-98665	EQUIPMENT ARRANGEMENT-LCT/MIX. MOD.
H-2-98814	DRAWING LIST
NUMBER	TITLE
NEXT USED ON	H-2-98670

REVISIONS				
BY-DATE	BY-DATE	REV BY DATE	DESCRIPTION	REV
APPROVAL	APPROVAL			

MICROFILMED

COMMENT REVIEW

00098 1 of 2

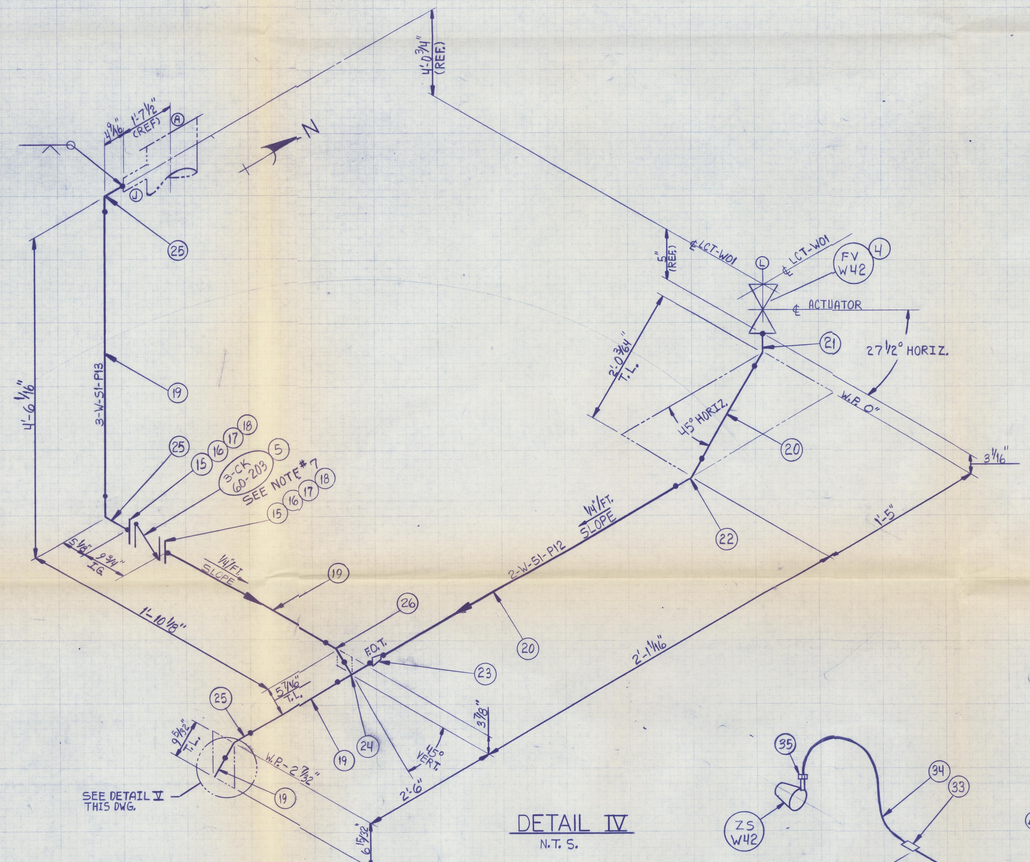

DETAIL IV
N.T.S.

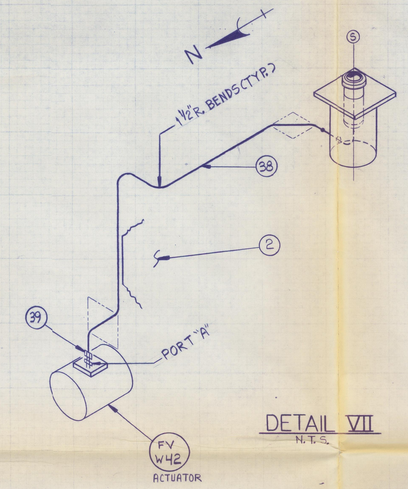

DETAIL VII
N.T.S.

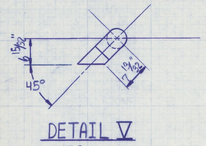

DETAIL V
N.T.S.

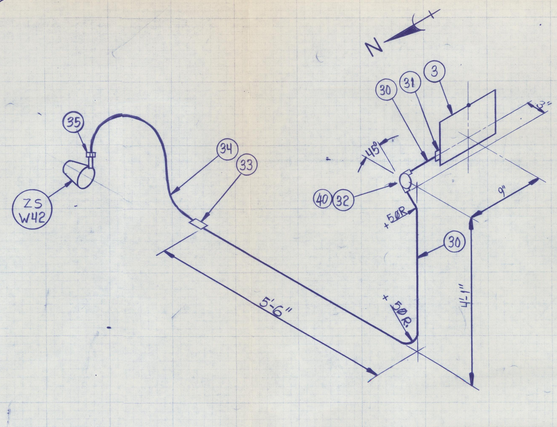

DETAIL VI
N.T.S.

OFFICIAL RELEASE BY WHC
DATE JUL 09 1988

ROCKWELL REVIEW COPY ON FILE
SUBMITTAL NO.
DATE

IMPACT LEVEL 3
EDT #100887

WHC APPROVAL BY LD Vanselow	DATE 7/7/88	U. S. DEPARTMENT OF ENERGY Richland Operations Office
PROJ ENGR		WTI Westinghouse Technical Services Company, Inc. P.O. Box 1970 Richland, WA 99352
QA		
APPROVED BY		EQUIPMENT JUMPER ASSEMBLY LIQUID COLLECTION TANK-WO1-DETAILS
SAFETY		
APPROVED BY	1/14/87	PROJECT TITLE TRANSPORTABLE GROUT EQUIPMENT FACILITY
CHECKED BY	1/26/87	PROJ B-475 / WO / BLDG 243-G1 / JOB / INDEX 2500
DRAWN BY L.L. DEAN	1/12/87	SCALE AS NOTED
DESIGNED BY	8/5/86	DRAWING NUMBER H-2-98711 / SHEET 2 / OF 2 / REV 0

NUMBER	TITLE
H-2-98507	ELEMENTARY WIRING DIAGRAM
H-2-98665	EQUIPMENT ARRANGEMENT-LCT/M.L. MOD.
H-2-98814	DRAWING LIST

DRAWING TRACEABILITY LIST — REFERENCES — NEXT USED ON H-2-98670

MICROFILMED

BY-DATE	BY-DATE	REV BY DATE	DESCRIPTION	REV
APPROVAL	APPROVAL			

REVISIONS

COMMENT REVIEW

0009558
3 of 2

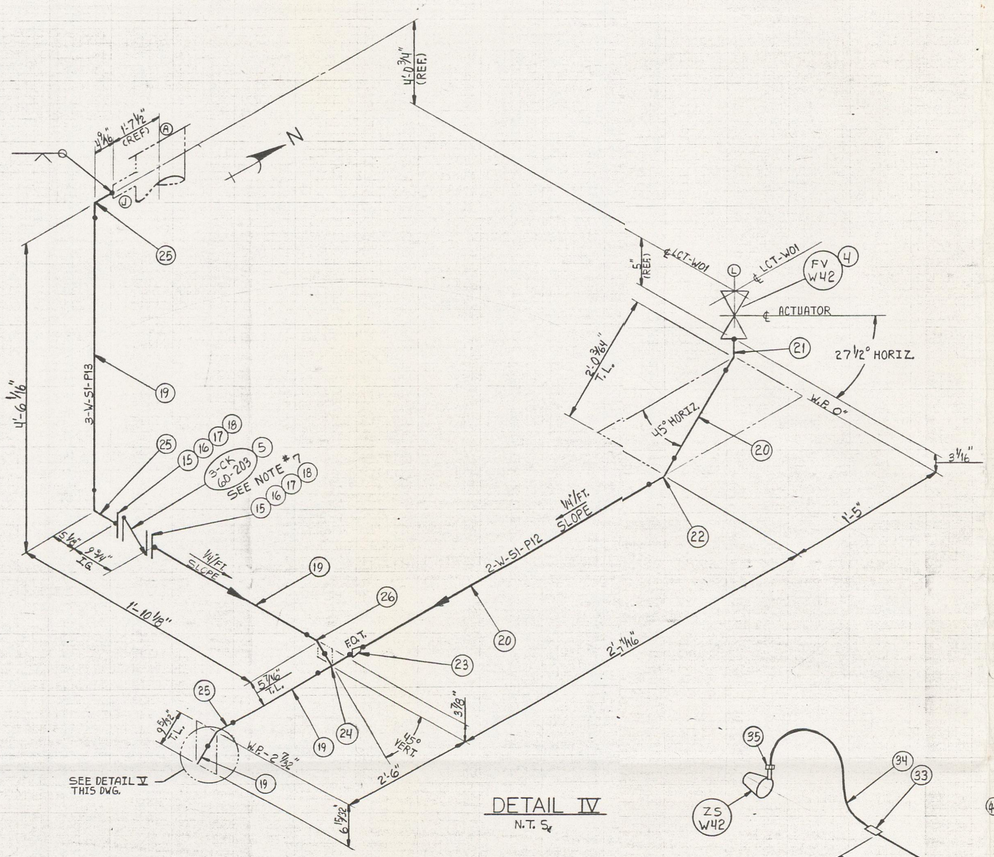

DETAIL IV
N.T.S.

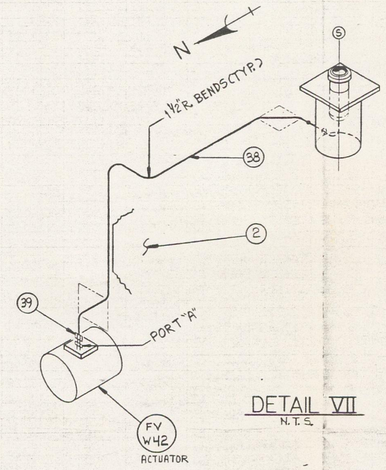

DETAIL VII
N.T.S.

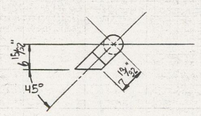

DETAIL V
N.T.S.

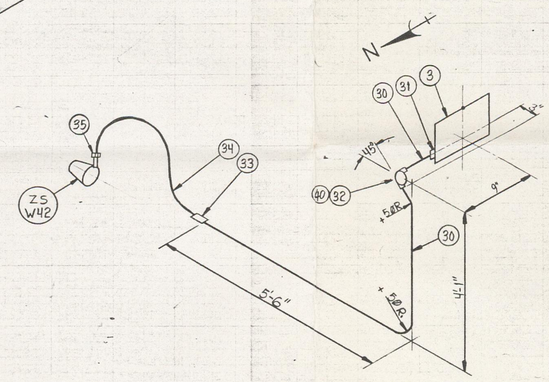

DETAIL VI
N.T.S.

OFFICIAL RELEASE BY WHC
DATE JUL 09 1988

IMPACT LEVEL 3
EDT #100887

ROCKWELL REVIEW COPY ON FILE
SUBMITTAL NO.
DATE

WHC APPROVAL BY J D Vanderlow	DATE 7/7/88	U. S. DEPARTMENT OF ENERGY Richland Operations Office
PROJENGR		ATW Automated Technology Incorporated P.O. Box 1 Richland, WA 99352
APPROVED BY		EQUIPMENT JUMPER ASSEMBLY LIQUID COLLECTION TANK-W01-DETAILS
SAFETY		PROJECT TITLE TRANSPORTABLE GROUT EQUIPMENT FACILITY
APPROVED BY	1/19/87	PROJ B-475 / WO / JOB
CHECKED BY	1/26/87	SCALE AS NOTED / BLDG 243-G1 / INDEX 2500
DRAWN BY L.L. DEAN	7/12/87	DRAWING NUMBER H-2-98711 / SHEET 2 / OF 2 / REV 0
DESIGNED BY	8/5/86	

NUMBER	TITLE
H-2-98507	ELEMENTARY WIRING DIAGRAM
H-2-98665	EQUIPMENT ARRANGEMENT-LCT/MIX MOD.
H-2-98814	DRAWING LIST

DRAWING TRACEABILITY LIST — REFERENCES — NEXT USED ON H-2-98670

BY-DATE	BY-DATE	REV BY DATE	DESCRIPTION	REV
APPROVAL	APPROVAL		REVISIONS	

MICROFILMED

COMMENT REVIEW

009548