0052667

DOE/RL-97-68
Rev. 1

Sampling and Analysis Plan for 221-U Facility

United States
Department of Energy

TRADEMARK DISCLAIMER

Reference herein to any specific commercial product, process, or service by trade name, trademark, manufacturer, or otherwise, does not necessarily constitute or imply its endorsement, recommendation, or favoring by the United States Government or any agency thereof or its contractors or subcontractors.

This report has been reproduced from the best available copy.
Available in paper copy and microfiche.

Available for a processing fee to U.S. Department of Energy and its contractors from:
U.S. Department of Energy
Office of Scientific and Technical Information
P.O. Box 62
Oak Ridge, TN 37831-0062
(865) 576-8401
fax: (865) 576-5728
email: reports@adonis.osti.gov
online ordering: http://www.doe.gov/bridge

Available for sale to the public, in paper, from:
U.S. Department of Commerce
National Technical Information Service
5285 Port Royal Road
Springfield, VA 22161
(800) 553-6847
fax: (703) 605.6900
email: orders@ntis.fedworld.gov
online ordering: http://www.ntis.gov/ordering.htm

Printed in the United States of America

DISCLM-5.CHP (11/99)

Concurrence to the CDI Sampling and Analysis Plan

John Sands 2/2/00

John Sands, RL

Craig Cameron 2/2/00

Craig Cameron, EPA

Shri Mohan 2/2/2000

Shri Mohan, Washington State Department of Ecology

DOE/RL-98-20
Rev. 1

Sampling and Analysis Plan for 221-U Facility

February 2000

United States Department of Energy

P.O. Box 550, Richland, Washington 99352

CONTENTS

1.0 INTRODUCTION 1-1

1.1 BACKGROUND AND FACILITY DESCRIPTION 1-1
1.1.1 221-U Facility Layout 1-2
1.1.2 Gallery Levels 1-5
1.1.3 Design Features of the Canyon (221-U) Building 1-5

1.2 PROCESS KNOWLEDGE 1-8
1.2.1 Uranium Recovery Process 1-8
1.2.2 TPB Process 1-10
1.2.3 Simplified Flowsheet 1-10
1.2.4 Layaway Operation 1-12
1.2.5 Inactive Facility Surveillance and Maintenance 1-12

1.3 EXISTING DATA INFORMATION 1-13
1.3.1 Concrete 1-13
1.3.2 Equipment 1-13
1.3.3 Contaminants of Potential Concern 1-14

1.4 DATA QUALITY OBJECTIVES PROCESS – CHEMICAL AND RADIOLOGICAL 1-15
1.4.1 Step 1: State the Problem 1-15
1.4.2 Step 2: Identify the Decisions 1-16
1.4.3 Step 3: Identify Inputs to the Decisions 1-18
1.4.4 Step 4: Define the Study Boundaries 1-18
1.4.5 Step 5: Develop Decision Rule 1-19
1.4.6 Step 6: Specify Limits on Decision Error 1-21
1.4.7 Step 7: Optimize the Design for Obtaining Data 1-23

1.5 DATA QUALITY OBJECTIVES PROCESS – STRUCTURAL INTEGRITY 1-29
1.5.1 Data Quality Objective Step 1: Problem Statement 1-29
1.5.2 Data Quality Objective Step 2: Decision Statement(s) 1-30
1.5.3 Background 1-31
1.5.4 The Structural Evaluation Process 1-32
1.5.5 Data Quality Objective Step 3: Inputs 1-34
1.5.6 Data Quality Objective Step 4: Boundary 1-34
1.5.7 Data Quality Objective Step 5: Decision Rules 1-34
1.5.8 Data Quality Objective Step 6: Specify Tolerance Limits on Decision Errors 1-34
1.5.9 Data Quality Objective Step 7: Optimize the Design for Obtaining Data (Strategy for Obtaining Structural Information) 1-34

CONTENTS (CONTINUED)

2.0 QUALITY ASSURANCE PROJECT PLAN 2-1

2.1 PROJECT MANAGEMENT/DATA QUALITY OBJECTIVES 2-1
2.1.1 Project/Task Organization 2-1
2.1.2 Problem Definitions/Background 2-2
2.1.3 Project/Task Description 2-2
2.1.4 Quality Objectives and Criteria for Measurement Data 2-2
2.1.5 Project Narrative 2-2
2.1.6 Special Training Requirements/Certification 2-2
2.1.7 Documentation 2-2

2.2 MEASUREMENT/DATA ACQUISITION 2-3
2.2.1 Sampling Process Design 2-3
2.2.2 Sampling Methods Requirements 2-3
2.2.3 Sampling Handling and Custody Requirements 2-3
2.2.4 Sample Preservation, Containers, and Holding Times 2-3
2.2.5 Analytical Technique Requirements 2-3
2.2.6 Quality Control Requirements 2-3
2.2.7 Instrument/Equipment Testing, Inspection, and Maintenance Requirements 2-4
2.2.8 Instrument Calibration and Frequency 2-4
2.2.9 Inspection/Acceptance Requirements for Supplies and Consumables 2-4
2.2.10 Data Management 2-4
2.2.11 Field Documentation 2-5

2.3 ASSESSMENT/OVERSIGHT 2-5
2.3.1 Assessments and Response Actions 2-5
2.3.2 Reports to Management 2-5

2.4 DATA VALIDATION AND USABILITY 2-6
2.4.1 Data Review, Validation, and Verification Requirements 2-6
2.4.2 Validation and Verification Methods 2-6
2.4.3 Reconciliation with User Requirements 2-6

3.0 SAMPLING OBJECTIVES 3-1

3.1 SAMPLING LOCATIONS AND FREQUENCIES 3-1
3.1.1 Canyon Deck 3-1
3.1.2 Cells 3-2
3.1.3 Pipe Drain 3-4
3.1.4 Hot Pipe Trench 3-4
3.1.5 Galleries and Crane Way 3-5
3.1.6 Railroad Tunnel 3-6

CONTENTS (CONTINUED)

3.1.7 Ventilation Tunnel 3-6
3.1.8 Samples for Structural Analysis 3-6
3.1.9 Archive Samples 3-7
3.1.10 Summary 3-7
3.1.11 Field Sampling Activities 3-7

3.2 SAMPLING PROCEDURES 3-8

3.3 SAMPLE MANAGEMENT 3-8

3.4 MANAGEMENT OF INVESTIGATION DERIVED WASTE 3-8

3.5 MANAGEMENT OF UNKNOWN WASTE GENERATED BY CDI 3-9

4.0 HEALTH AND SAFETY 4-1

5.0 REFERENCES 5-1

APPENDIX

APPENDIX A – Technology Deployment Final Report A-1

FIGURES

1-1. Cross-Section of the 221-U Canyon Building 1-3
1-2. Simplified TBP Plant (221-U Building) Layout 1-4
1-3. Simplified Uranium Recovery Plant 1-11
1-4. Decision Logic 1-20
1-5. General Structural Assessment and Evaluation Procedure 1-33
2-1. 221-U Facility Characterization – Project Organization Chart 2-1

TABLES

1-1. U Plant Canyon Cell Functions, Equipment, and Volumes 1-39
1-2. Bismuth Phosphate Plant Output 1-41
1-3. Fission Products Associated with U Plant Feed 1-41
1-4. Summary of Direct Radiological Survey Data and General Area Dose Data for the Galleries 1-42
1-5. Summary of Direct Radiological Survey Data for the Stairwells Between Galleries 1-43

CONTENTS (CONTINUED)

1-6. Summary of Direct Radiological Survey Data for the Canyon and Crane Way 1-43
1-7. Summary of Direct Radiological Survey Data for the Canyon Deck 1-44
1-8. Summary of Removable Radiological Survey Data for the Galleries and Crane Way 1-45
1-9. Summary of Removable Radiological Survey Data for the Stairwells between Galleries 1-46
1-10. Summary of Removable Radiological Survey Data for Equipment on the Canyon Deck 1-47
1-11. 221-U Canyon Functional Processes with Equipment and COPC 1-48
1-12. 221-U Canyon Disposition Team 1-52
1-13. Inputs 1-53
1-14. Decision Limit Criteria 1-57
1-15. Endpoint: Entombment 1.0 Structural Capacities 1-58
1-16. Endpoint: Entombment 2.0 Flow Paths 1-61
2-1. Decision Makers and Technical Support Staff 2-8
3-1. Sampling Design Summary 3-10
3-2. Analytical Techniques and Detection Limits 3-12
3-3. COPC/Area Matrix 3-13

ACRONYMS AND ABBREVIATIONS

ALARA	as low as reasonably achievable
BHI	Bechtel Hanford, Inc.
CDI	Canyon Disposition Initiative
CFR	*Code of Federal Regulations*
COPC	contaminant of potential concern
DOE	U.S. Department of Energy
DQA	data quality assessment
DQO	data quality objective
DST	double-shell tanks
Ecology	State of Washington Department of Ecology
EPA	U.S. Environmental Protection Agency
ERC	Environmental Restoration Contractor
ERDF	Environmental Restoration Disposal Facility
ERDF WAC	ERDF Waste Acceptance Criteria
FIG	Field Instruction Guide
FS	Feasibility Study
FSR	Field Sampling Request
GEA	gamma energy analysis
HASQARD	*Hanford Analytical Services Quality Assurance Requirements Documents*
IDW	investigation derived waste
NDA	non-destructive assay
NDE	non-destructive examination
PCB	polychlorinated bipheyls
PUREX	plutonium uranium extraction
QC	quality control
RCRA	*Resource Conservation and Recovery Act of 1976*
REDOX	reduction and oxidation
SAF	sample authorization form
SAP	sampling and analysis plan
TBP	tributyl phosphate
TDT	Technology Deployment Team
TRU	transuranic
WCP	waste control plan

1.0 INTRODUCTION

This sampling and analysis plan (SAP) presents the rationale and strategy for the sampling and analysis activities proposed to be conducted to support the evaluation of alternatives for the final disposition of the 221-U Facility as defined in the Feasibility Study (FS) (DOE-RL 1997).

This SAP will describe general sample locations and the minimum number of samples required. It will also identify the specific contaminants of potential concern (COPC) and the required analysis. This SAP does not define the exact sample locations and equipment to be used in the field due to the nature of unknowns associated with the 221-U Facility.

Appendix A of this document is intended as a guide to potential technologies that may be employed during the sampling events of the 221-U Facility. It also includes general baseline or current technologies which may be used for field activities. These technologies are available and ready to deploy to perform specific operations. The Technology Deployment Team (TDT) has arranged these technologies into workable field plans that will require integration with the field team prior to sampling. The Field Instruction Guide (FIG) process will be used to actually plan and perform the field work in phases. There are many details that need planning as the project proceeds into the field. The details of each specific FIG will address each sampling event and how they will address the Quality Assurance Project Plan, the tolerance limits, and detection errors.

1.1 BACKGROUND AND FACILITY DESCRIPTION

This section provides background information about the project, along with a description of the facility, process knowledge information, and previous investigation data. Also provided is a list of the COPCs, and a summary of the data quality objectives (DQO) (BHI 1997a).

The Hanford Site became a Federal facility in 1943 when the U.S. Government took possession of the land to produce nuclear materials for defense purposes. The Hanford Site's production mission continued until the late 1980s, when the mission changed from producing nuclear materials to cleaning up the radioactive and hazardous wastes that had been generated over the previous years.

The 221-U Facility is one of three identical chemical separations plants constructed at the Hanford Site in support of plutonium production. Called "canyon buildings" because of their monolithic size and the canyon-like appearance of their interiors, B Plant, T Plant, and the 221-U Facility were built to extract plutonium from fuel rods irradiated in the Hanford Site production reactors. Each separations plant was equipped to utilize a bismuth phosphate separation process. Because early operational experience indicated that B Plant and T Plant were sufficient to meet production goals, the 221-U Facility was held in reserve. The 221-U Facility was initially used

for training of B and T Plant operators. The facility was then used to recover uranium and then to store equipment from other canyons before being placed in the surveillance and maintenance program. A cross-section of the 221-U Canyon Building is illustrated in Figure 1-1.

1.1.1 221-U Facility Layout

The 221-U Facility is a multi-storied, reinforced-concrete structure, approximately 247 m (810 ft) in length. Figure 1-2 is a simplified sketch of the building layout during uranium recovery mission.

The building had two major portions: the process portion, which contained the "hot" process equipment, and the regulated work zones; and the service portion, which housed personnel and equipment necessary for remote operation of the process portion. The service portion of the building includes the Operating, Pipe, and Electrical Galleries. Other service areas are located adjacent to the 221-U Building in the 271-U Building.

Regulated work zones were areas where personnel worked with limited radiation exposure. The canyon deck level and the Canyon Crane Gallery were both classed as regulated work zones. The special work permit (regulated work) change room, located at the northwest end of the operating gallery, was the central point used for entrance into the Canyon.

The Canyon cells housed the processing equipment for feed concentration and centrifugation, solvent-extraction, waste treatment, and solvent treatment. Piping connections between cells were made through the cell walls and the pipe trench. Because of the large volumes of solution necessary to process uranium at the instantaneous design rate (10 tons/day), two process lines were installed in the building (each capable of processing 5 tons of uranium/day) so that the smaller equipment sizes necessary to fit the Canyon cells could be used. Also, the installation of two process lines was desirable to give the Tributyl Phosphate (TBP) Plant (221-U) greater flexibility of operation and a greater range of feasible processing rates. The function of each Canyon section (a section contains two cells) is noted in Figure 1-2; cell functions are identified in Table 1-1, along with the currently available inventory of equipment within the cells and the cell volume. Stepped, removable 1.8-m- (5.9-ft-) thick concrete blocks cover and provide access to the cells.

The hot pipe trench runs parallel to the cells from Section 3 to Section 20 and is 2.4 m (7.87 ft) wide by 3.0 m (9.84 ft) deep. It contains intercell process piping and residual material transfer piping. Stepped, removable concrete blocks, similar to those over the cells, cover the hot pipe trench and provide access. Covers for the hot pipe trench are sized to match the adjacent cell, allowing uninterrupted access to contiguous work areas. The Ventilation Tunnel, 3.3 m (10.83 ft) high and 3.2 m (10.5 ft) wide, is directly beneath the hot pipe trench and provides exhaust ventilation for the cells and pipe trench.

Figure 1-1. Cross-Section of the 221-U Canyon Building

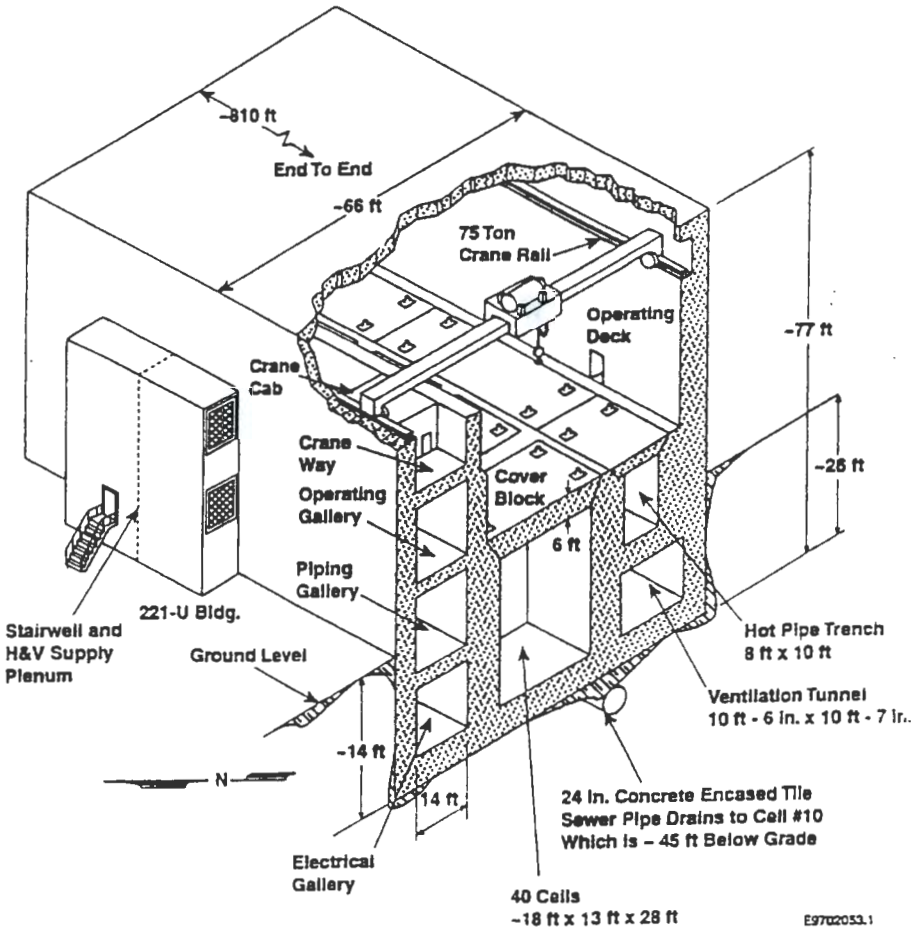

Figure 1-2. Simplified 221-U Building Layout

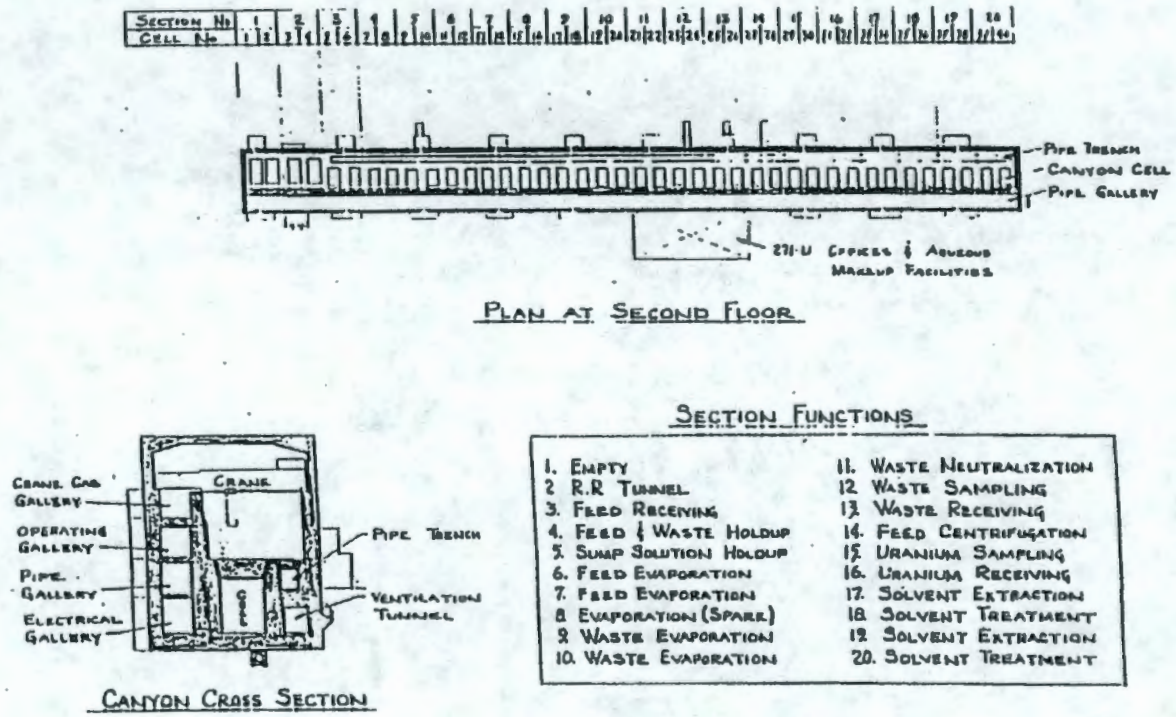

Above the cells and hot pipe trench is 12.2 m (40 ft) of open space containing the overhead traveling bridge crane, equipped with 68-metric-ton and 9-metric-ton hoists. The final component of the canyon side is the railroad tunnel that enters at Section 2, Cell 3, and runs the width of the building.

1.1.2 Gallery Levels

The Galleries are separated from the canyon by a 1.5-m- (4.92-ft-) to 2.7-m- (8.86-ft-) thick concrete wall. The four Galleries, ordered from top to bottom, consist of the crane gallery, operating gallery, pipe gallery, and electrical gallery. The gallery side of the structure is 4.3 m (14.1 ft) wide.

The Crane gallery, or cab way, is partitioned from the canyon by a 1.5-m- (4.92-ft-) thick wall, but it has no ceiling and is open to the process canyon. Located immediately beneath the Crane Gallery, the Operating Gallery allows complete remote operation of the process equipment through instrument and operating boards at each section. Under the Operating Gallery, all chemical, electrical, steam, and instrument lines enter the cells from the Pipe Gallery. Remote maintenance was not required in the Electrical and Pipe Galleries; therefore, all fixtures are standard. On the lowest level, the Electrical Gallery contains all electrical and steam lines that enter the building and pass through the Pipe Gallery.

1.1.3 Design Features of the Canyon (221-U) Building

The design of the separation plant was based on five essential considerations:

1. adequate protection of operating personnel from radiation,
2. remote operation of process equipment,
3. remote maintenance of process equipment due to the presence of high radiation levels,
4. flexibility of arrangement and layout so that a wide range of process steps could be undertaken without major redesign or rebuilding of the plant, and
5. specific design features of facility components.

Flexibility in the layout was necessary because of the undeveloped state of the separation process when design was initiated on the project.

1.1.3.1 Protection of Personnel. The radiation hazards existing in the separation plant are those normally associated with radioactive materials-penetrating gamma radiation and intense, but relatively non-penetrating, beta and alpha radiation. Protection from all three sources of radiation can be obtained by a suitable combination of distance and shielding between personnel and the source of radiation. In the separation plant, shielding is obtained almost entirely by massive walls of concrete, which also serve as structural elements of the buildings themselves. Overall, the concrete shielding is heavy enough so that protection by distance is of secondary importance. Equipment placed behind the massive concrete walls, however, must be operated by remote control.

1.1.3.2 Remote Operation of Process Equipment. Recording and indicating instruments were used to follow temperature and density changes in process equipment, while motors and other moving parts were controlled electrically.

1.1.3.3 Remote Maintenance of Process Equipment. Remote maintenance of the separation plant was necessary, in most instances, due to the difficulty of decontaminating a piece of process equipment. In addition, it was essential that the process equipment contain no valves, pumps, stuffing boxes, or other items that required periodic inspection and maintenance, or that during ordinary operation, might leak or drip process solutions. This requirement was met by designing the process piping with single lines without T's or multiple connections, and designing the vessels to contain no bottom outlets. Pumps were eliminated by using steam-jet ejectors for all process transfers.

The process vessels themselves were designed to be removed or installed by a specially developed crane. The operator of this crane was protected in a heavily shielded cab and viewed the operations through a periscope. Piping connections were designed and could be made or broken by means of a remotely controlled, electrically operated impact wrench, which was carried on the crane. The piping itself was made up in standard prefabricated units that could be dropped into place by the crane. Special auto connectors were used to connect equipment and pipe.

1.1.3.4 Flexibility of Flow and Equipment Arrangement. When the design of the 221-U Facility began, the process itself was largely undeveloped. This required that the layout allow fundamental alterations in the equipment arrangement and process flow. In order to achieve this flexibility, the 221-U Building was designed, as far as possible, as a group of standard units in which different types of process vessels, pipe connections, and instrument hookups could be installed without requiring structural modification. The various equipment pieces were designed to permit installation at various locations in the standard units, as changing process requirements might dictate. Process piping entered each cell directly from the hot pipe trench. Cells are grouped by sections. Inter-cell connections are limited to cells within the same section.

1.1.3.5 Specific Design Features of Facility Components

1.1.3.5.1 Standard Cell. The standard cell is a 3.97 m by 5.19 m 20.32 cm (13 ft by 17 ft 8 in.) room that is 6.71 m (22 ft) high with 2.14 m (7 ft) thick concrete walls, and has a 1.83 m (6 ft) thick cover. The cover has removable sections and is the only means of access to the cell. The massive walls and cover shield personnel against radiation from process materials within the cell. The cover sections have stepped interlocking edges so that there are no straight cracks through which radiation can pass.

All pipe, instruments, sampling and control lines into the cell were buried in the concrete and terminate in connector flanges on the cell walls. These flanges were installed with a high degree of precision, and the cell walls and floor were finished accurately to standard dimensions so that the connector arrangement in the cells was fixed and uniform. Piping from a cell to the gallery is

brought up in an S shape rather than straight through the concrete in order to minimize streaming of gamma radiation from the cell.

Equipment was placed on the cell floor and held in position by guides built into the cell, thus establishing a standard relationship between the connector flanges on vessels and cell walls. This standard relationship made remote maintenance possible, because piping could be prefabricated to fit. Process transfer lines between cells in the section were run directly through the cell walls

Because of difficulties created by the expansion joint that separated adjacent sections, no piping runs through the walls between sections.

Cell #10 is the low point within the 221-U Canyon Building and contains tank 5-6. All process areas drain to this cell via a 60.97 cm (24-in.) concrete encased tile sewer pipe; consequently, any leaks or spills would have drained into this cell.

1.1.3.5.2 Hot Pipe Trench. Process piping that carried active solution between sections was installed in a pipe trench that runs from Section 3 to Section 20 (hot pipe trench). Lines to and from the cells terminate in connector flanges in the trench. Just as in the cells, the connector flanges are held in fixed standard position by steel supports embedded in the concrete trench floor. The trench piping was in prefabricated sections attached to the flanges with automatic connectors. Between the piping and associated hardware, the hot pipe trench is extremely congested. The trench cover is in removable sections, similar to the cell covers. Alterations and replacements of trench piping could be made with the same remotely operated equipment used for cell maintenance.

Besides avoiding lines through expansion joints, the hot pipe trench served other purposes. It made process lines accessible for maintenance and contributed flexibility, since sections could be hooked up through the trench in different ways to conform to process changes. This hot pipe trench drained into the concrete encased tile sewer pipe, which drains into cell #10.

1.1.3.5.3 Ventilation Tunnel. The 3.23 m by 3.26 m (10 ft 6 in. by 10 ft 7 in.) concrete ventilation tunnel is located directly beneath the hot pipe trench. Air from the canyon deck flows through slots in the cell block covers to the cells and pipe trench, and then through 25.4 cm (10 in.) diameter terra cotta ducts from each cell and each section of the pipe trench to the ventilation tunnel. The tunnel exhausts into the 291-U exhaust stack. The tunnel was constructed with baffles spaced regularly along the floor to contain any condensate or other liquid that may have entered and to disrupt the air flow to minimize particulates entering the stack. The ventilation tunnel also drains any condensation to the concrete-encased tile sewer pipe which drains into cell #10.

1.1.3.5.4 Operating and Crane Galleries. The operating gallery was the control center for cell equipment. At each section was a gauge board from which control and instrument lines ran to the cells, via the pipe gallery. Tanks used to weigh chemicals were provided with inlet connections from appropriate chemical headers in the pipe gallery and outlets to the cell vessel

connections, also located in the pipe gallery. The crane gallery is located over the top of the operating gallery.

1.1.3.5.5 Pipe Gallery. All cell piping, except process transfer lines, was brought up to the pipe gallery, terminating in connections on the wall. From here, connections were made to the weigh tanks and control boards in the operating gallery. Remote maintenance was not required; therefore, all connections were of the normal type. Chemical headers, and electrical and steam distribution lines were also located in this gallery.

1.1.3.5.6 Electrical Gallery. The electrical, or basement gallery, contained principally electrical lines. The steam main also entered the building through this gallery.

1.1.3.5.7 Ventilation in 221-U Building. The 221-U Building contains two separate and distinct systems for ventilation. One system ventilates the process equipment areas, while the other ventilates the operating areas. Ten separate wet air washing units ventilate the process equipment areas, including the crane cabway and the cell deck area. This air exhausts to the ventilation tunnel (see Section 1.1.3.5.3).

Ventilation of the operating gallery is accomplished by ten air filtering and washing units distributed along the operating gallery proper; some air also flows from the 271-U Building into the operating gallery. Air from the operating gallery flows through gratings in the floor to the pipe gallery. Air is exhausted to the outside from the pipe gallery by nine exhaust fans and from the electrical gallery by three exhaust fans, one on each end of the gallery, and one in Section 1.

The air flow described above is always away from the operating areas toward the outside or into the process area.

1.2 PROCESS KNOWLEDGE

The separations plants were used to extract plutonium, chemically, utilizing the bismuth phosphate process, from fuel irradiated in the 100-Area Reactors. Because the capacity and recovery efficiency of the separations process were better than estimates made based on small-scale experiments, only T and B Plants were needed. U Plant subsequently was used to train operators for T and B Plants until 1952, when it was converted to the TBP process to recover uranium from bismuth phosphate wastes. At that time, it became known as the Uranium Recovery Plant. The facility was placed in standby in 1958 and was subsequently retired.

1.2.1 Uranium Recovery Process

Each plant (Uranium Oxide Plant, Bismuth Phosphate Plant, and the TBP Plant) represents a step in the process. The function of the Uranium Recovery Plant was to produce a relatively pure uranium trioxide powder from the uranium irradiated in the Hanford piles (reactors) and processed, for plutonium recovery, through one of the Bismuth Phosphate Plants or the Reduction Oxidation (REDOX) Plant.

The uranium from the Bismuth Phosphate Plant was stored in single-shell tanks in the "Tank Farms" in the form of a uranium-bearing sludge and supernatant liquid. This material contained a large fraction of the radioactive fission products and traces of the plutonium formed in the pile-irradiation of the uranium. Facilities for removal of this uranium from underground storage constitute one of the three major components of the Uranium Recovery Plant.

The second major component of the Uranium Recovery Process is the TBP (221-U) Plant, where uranium is separated from fission products and residual plutonium by a solvent-extraction process.

The third major component of the Uranium Recovery Process is the Uranium Oxide Plant, where uranyl nitrate solutions produced by the TBP and REDOX Plants, meeting the required purity and radioactivity specifications, were converted to uranium trioxide (UO_3) powder by calcination.

1.2.1.1 Design Production Capacity and Yield. The uranium removal facilities and the TBP (221-U) Plant were designed to process the approximately 5,900 short tons of uranium in underground storage (as of January 1, 1952) at an average rate of 8 short tons/day. The maximum instantaneous design production capacity was 10 short tons of uranium/day. The removal facilities and the TBP Plant were designed to recover at least 95 percent of the uranium in underground storage. The estimated uranium loss in the TBP Plant, at a 10-ton/day instantaneous uranium processing rate, was approximately 1 percent. This loss represents uranium that did not separate out in solution.

1.2.1.2 Feed Material. The feed to the Uranium Recovery Plant consisted of uranium wastes from the Bismuth Phosphate Plants (B and T Plants) and the uranium product of the REDOX Plant. The Bismuth Phosphate Plants were used since the start-up of Hanford Works in 1944 to recover plutonium from uranium slugs irradiated in the Hanford piles. The uranium, accompanied by the bulk of the radioactive fission products, was discharged to tanks from the Bismuth Phosphate Plants in a slightly alkaline metastable waste solution (with a pH of approximately 10.5) described below. Table 1-2 lists the approximate proportions of the ingredients.

The metastable waste solution was stored in underground tanks at the Tank Farms, where solids—mainly complex sodium uranyl phosphocarbonates—separated and settled out, forming sludge. Approximately 75 percent of the uranium was contained in the sludge and the remaining 25 percent in the supernatant liquid. The feed to the Uranium Recovery Plant contained both the sludge and the supernate.

The fission-product radioactivity associated with the uranium was a function of the irradiation history of the parent slugs and of the time elapsed since irradiation. Table 1-3 lists the approximate ranges of radioactivities involved.

1.2.2 TBP Process

The TBP process utilized the preferential extractability of uranyl nitrate by TBP to separate uranium from the plutonium and fission products with which it was associated in the $BiPO_4$ process wastes.

The salts of uranium consist chiefly of two classes: (a) the uranous (U^{+4}), and (b) the uranyl (UO_2^{+2}). Uranium can exist in other valence states, but only the tetravalent and hexavalent forms are comparatively stable in aqueous solutions. U^{+4} is a strong reducing agent; it, therefore, follows that it is difficult to reduce UO_2^{+2} to U^{+4}. $UO_2(NO_3)_2$, the product of the dissolution of uranium in nitric acid, is very soluble in aqueous solutions and forms an organic-soluble complex with TBP ($UO_2[NO_3]_2[TBP]_2$). When aqueous solutions are contacted with organic solutions of TBP (i.e., solutions of TBP in inert organic diluents), the uranium can be made to distribute preferentially into the organic phase by adding a salting agent (nitric acid or a nitrate salt) to the aqueous phase. Under these conditions, the plutonium, when reduced to the plus III valence state, and the fission products, still favors the aqueous phase. This preferential distribution, and the non-reducibility of UO_2^{+2} under conditions where plutonium is reduced to the plus III valence state, makes possible the separation of uranium from plutonium and the fission products in the TBP process.

1.2.3 Simplified Flowsheet

Figure 1-3 is a simplified flowsheet for the entire Uranium Recovery Plant. The path of uranium from the underground storage tanks and from REDOX to the final uranium product is shown across the top of the figure, and is labeled "Uranium Recovery." The operations illustrated are conducted in three locations: in the removal facilities at the various $BiPO_4$ process tank farms, in the TBP Plant, and in the Uranium Oxide Plant. Also shown are the flow diagrams for auxiliary processing operations: HNO_3 recovery (Uranium Oxide Plant), solvent treatment (TBP Plant).

Figure 1-3 shows the code letters used to identify the process streams entering and leaving the TBP Plant solvent-extraction columns. For example, the three feed streams to the decontamination column (the RA Column) are the RAS (scrub) stream, the RAF (feed) stream, and the RAX (extractant) stream. The first letter, "R," identifies the uranium recovery process.

The second letter, "A," "C," or "O," identifies the column (i.e., the RA [decontamination], RC [stripping], or RO [solvent recovery] column). The last letter identifies the stream. Influent stream abbreviations end in F, X, or S, which stand for feed, extractant, and scrub, respectively. Effluent streams end in U, W, or O, which stand for uranium, waste, and organic, respectively. Thus, the RAF is the uranium-containing feed stream to the RA Column, and the ROO is the purified organic effluent for the RO Column.

Figure 1-3. Simplified Uranium Recovery Plant Flowsheet

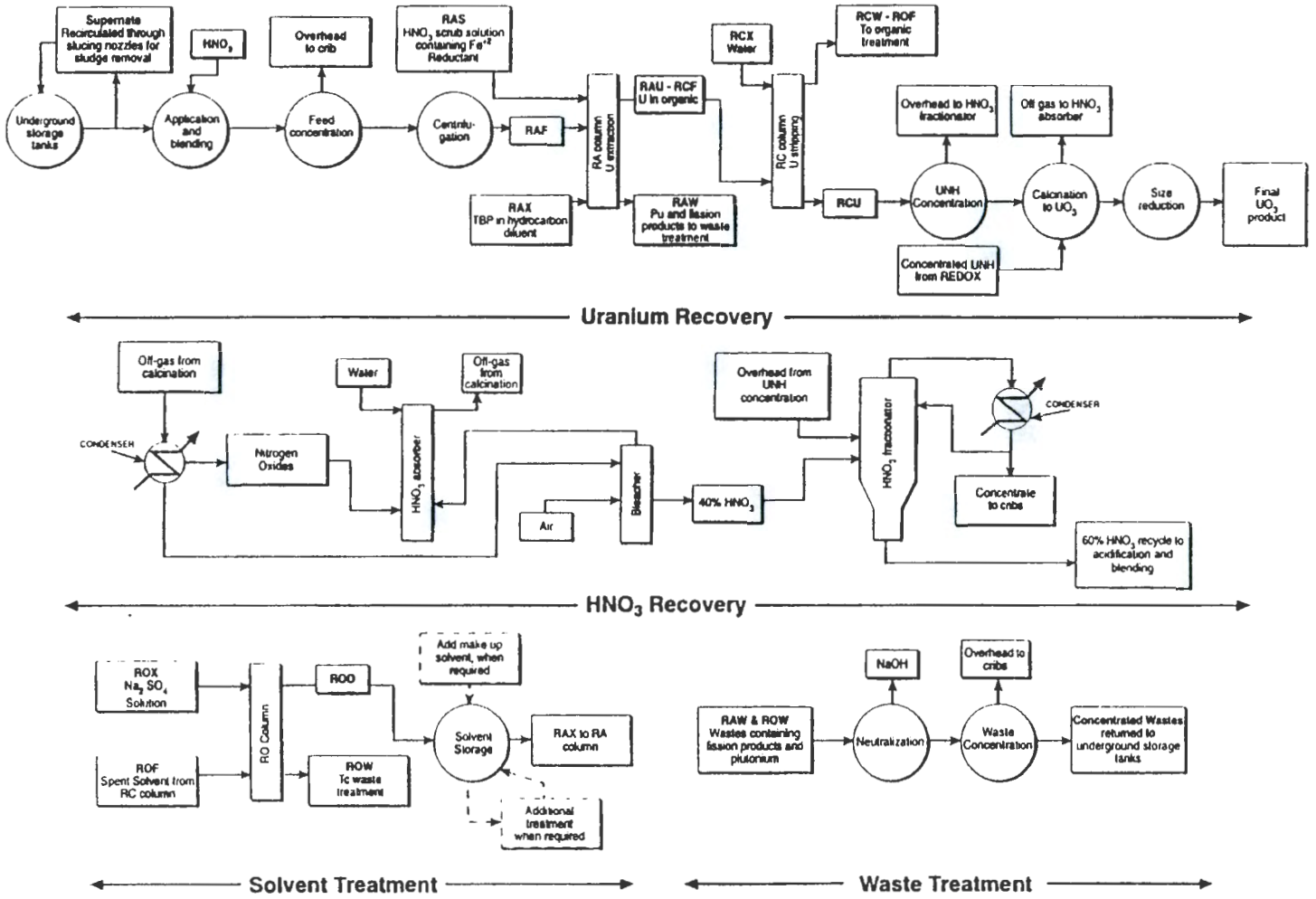

1.2.4 Layaway Operation

The processing of all available recovered uranium was completed in the TBP Plant during March 1957, and layaway of the Plant was started. Flushing of the process vessels was completed on April 12, 1957. All dry chemicals have been removed from the building. Acid and caustic solution left over in the 211 storage tanks was left for use by the Waste Handling and Decontamination Operation. Canyon cells from 19 through 40 have been inventoried and steam cleaned. Cells 1 through 18 were not inventoried or steam cleaned.

Maintenance work of flushing, draining, and capping process, steam, water, and air lines was approximately 50 percent complete as of April 1957. Instrument and electrical layaway was 65 percent complete as of April 1957. Work remaining to be completed, as of April 1957, included decontamination of cover blocks and disposal of trash.

Since the shutdown of U Plant, the canyon has been used to store deactivated equipment. Table 1-1 details the function, equipment (both 221-U process and equipment imported from other) contained, and volume of each cell. After the final placement of the cell cover blocks, any deactivated equipment received was stored on the canyon deck. Although no volume estimates could be generated, a listing of the equipment on the canyon deck is contained in Appendix A of the DQO report (BHI 1997a), along with the available sources of information for the equipment. Approximately 85 m^3 (3,002 yd^3) of equipment is on the walkway from Section 3 to Section 20.

1.2.5 Inactive Facility Surveillance and Maintenance

The 221-U Facility was placed in standby in 1958, and was subsequently retired. All TBP process hardware supposedly remains in place. Decontamination and reclamation activity supposedly was accomplished at the 221-U Facility for an unspecified period. No record information could be found on this activity. Indications are that this activity took place on the canyon deck. The cells were used to store equipment until decontamination could be performed. The canyon deck allowed personnel access to the equipment to decontaminate it. Decontamination chemicals appear to have been acids and bases, based on containers of residual materials removed from the canyon. The overhead crane can be made operable. Electrical power, sanitary and raw water, and steam are available. The deck level of the canyon has been decontaminated to a level that allows reasonable access with a low level of radiation exposure. The electrical gallery is contaminated in spots (see DQO Scoping Binder [BHI 1997b]). Radiological conditions in the Railroad Tunnel have not been characterized; conditions in the process areas below the canyon deck (i.e., cells, ventilation tunnel, and hot pipe trench) are considered prohibitive for personnel access. One building air supply fan and one exhaust fan continue to operate; the exhaust fan exhausts through the 291-U sand filter.

1.3 EXISTING DATA INFORMATION

1.3.1 Concrete

The existing data available for the 221-U Facility are inadequate to statistically estimate the number of samples required for all of the COPCs in all areas of the facility. The historical data consist of radiological survey results that provide no information about the isotopic distribution of radionuclide contamination. The survey results also do not provide information about the depth of contamination in the concrete. There are several areas of the facility that have no associated information about either radiological or non-radiological contamination. However, the data may be used qualitatively to determine whether isotopic and depth distribution information will be acquired in some areas through sampling or through inference based on sampling that will take place in adjacent areas.

Tables 1-4 through 1-10 show summaries of direct and swipe radiological surveys, and the general dose rate for accessible areas within the facility. Swipe samples provide data for removable radiological contaminants. Tables 1-4 through 1-7 show summaries for fixed contamination and general dose rates; Tables 1-8 through 1-10 show summaries for removable contamination for the same areas. Summaries include ranges of detected values, or the detection limit, for alpha and beta/gamma contamination, and general area dose in uR/hr or mR/hr, as noted. All of the survey data summarized in the tables were collected during 1996, except the general dose information presented for the canyon deck. The canyon deck general dose data originate from the Adam's report found in the DQO Scoping Binder (BHI 1997b). None of the boundaries within the facility have associated laboratory data for either radiological or non-radiological COPCs.

A review of the summary data shows that the dose rates in the canyon are approximately three orders of magnitude greater than the dose rates in the galleries and in the crane way; measurement units are mR/hr from the canyon and uR/hr from the other areas. A statistical comparison was performed to verify the qualitative conclusions. Results of the statistical comparison are presented in Appendix D of the DQO report (BHI 1997a). Comparison of fixed or loose contamination was not performed because the general dose rate represents both fixed and loose contamination. The conclusion, based on the dose rate comparison, is that the contribution to dose from the entire facility is not greatly increased by the radiological inventory in the galleries or the crane way. It is also concluded that the application of the isotopic distribution of contamination in the canyon concrete to the concrete in the galleries and crane way will result in a conservatively high estimate of the radiological inventory in these areas.

1.3.2 Equipment

Equipment is currently stored in the cells and on the canyon deck. It originates from REDOX, plutonium uranium extraction (PUREX), B Plant, and U Plant and includes large pieces (i.e., tanks and casks) and small pieces (i.e., valves and buckets). A limited amount of historical data is available for the equipment in the cells; more information is available for equipment on the deck.

Records and interviews indicate that the equipment in the cells consists of U-Plant process equipment and also equipment from the other facilities; it is expected that the equipment in the cells is the most contaminated. It is assumed that non-process equipment being stored in the cells is there because of high associated dose rates.

Process knowledge indicates that the equipment on the deck substantially contributes to the chemical and radiological inventory of the facility. Equipment dose rates range from <20 - 14,000 dpm/100 cm^2 alpha and 20 x 10^3 - > 1 million dpm/100 cm^2 beta/gamma (see DQO Scoping Binder). Historical information indicates that the equipment brought into the facility for storage was decontaminated to some extent before being transported to 221-U, but the extent of decontamination is unknown. Some equipment, such as the tanks, may contain liquid. Pieces of equipment that required lubrication may have liquid oil still in their reservoirs.

Video tapes and digital pictures of the equipment on the canyon deck, along with the inventory in the DQO Scoping Binder (BHI 1997b), was used to create an inventory of the types of equipment being stored. This information was compiled to determine the sampling approach for the equipment and to determine where to move equipment to implement the sampling plan for the cells and hot pipe trench.

The equipment in the cells consists of 221-U equipment that is still jumpered or otherwise installed, along with equipment whose origin is unknown. The 40 cells have been divided by process (see Table 1-11) and the COPCs associated with each process have been identified. This information may be used to associate COPCs with particular pieces of equipment in the cells.

1.3.3 Contaminants of Potential Concern

The results from previous investigations, process knowledge and/or DQO have identified the following radionuclides and/or chemicals as COPCs:

Pu-238, Pu-239/240	AM-241	Np-237
U-234, U-235, U-238	Th-232	Co-60
Cs-137	Eu-152	Eu-154
Sr-90	Gross Alpha	Gross Beta
$A1(NO_3)_3$, NH_4NO_3, $NaNO_3$, HNO_3	$NaNO_2$	H_2SO_4, Na_2SO_4, $Fe(NH_4)_2(SO4)_2$
NH_4 F	H_3 PO_4	Acids
Hexone	Tribuytl Phosphate	Kerosene, Normal Paraffin Hydrocarbons
PCB's	Sodium Dichromate	Lead Based Paint, Bulk Lead
Asbestos	Mercury	

1.4 DATA QUALITY OBJECTIVES – CHEMICAL AND RADIOLOGICAL

The Environmental Protection Agency's (EPA) DQO procedure was used to support the development of this SAP (EPA 1994b). The DQO procedure is a strategic planning approach that provides a systematic procedure for defining the criteria that a data collection design should satisfy. Using the DQO process ensures that the type, quantity, and quality of environmental data used in decision making will be appropriate for the intended application. The DQO process was performed according to BHI-EE-01, *Environmental Investigations Procedures*, EIP. 1.2, "Data Quality Objectives," Rev. 2. The DQO Process examines why data is needed, the decisions the data will support, and the sampling design required. In order to make the decisions related to the disposition of the facility (as described in the FS [DOE-RL 1997]), two types of data/information are required:

- chemical/radiological data
- structural.

The decisions and approach for collection of these two types of data differ significantly and are discussed in separate sections of this document. This section provides the output from the DQO Process for collection of chemical and radiological data. Section 1.5 provides the output from each step of the DQO Process for collection of structural information and data.

The seven steps that comprise the DQO process are:

- Step 1: State the problem
- Step 2: Identify the decisions
- Step 3: Identify inputs to the decisions
- Step 4: Define the study boundaries
- Step 5: Develop decision rules
- Step 6: Specify limits on decision error
- Step 7: Optimize the design for obtaining data.

1.4.1 Step 1: State the Problem

The objective of this step in the DQO process is to develop a concise description of the problem, identify the primary organizations involved in the study, provide a list of the technical backgrounds of the planning team members, identify the primary decision maker(s), and provide relevant schedule milestones for the study. Information addressing these issues is summarized below.

1.4.1.1 Concise Description of the Problem. The volume and concentrations of chemicals and radionuclides are not well defined and are needed to allow evaluation of the three bounding cases for facility disposition.

Health and safety is a priority during disposition activities. The impacts to personnel cannot be calculated without the information in the previous statement. Any removal/disposal,

entombment, or leave-in-place alternative requires an estimate of the information in the problem statement for purposes of meeting regulatory criteria for the disposal options and risk evaluation.

1.4.1.2 Primary Planning Team Members and Roles. The 221-U Canyon Disposition Team participants, their roles, and respective organizations are listed in Table 1-12.

1.4.1.3 Relevant Schedule Milestones. Currently the particulars of the schedule are undefined and therefore not reported.

1.4.2 Step 2: Identify the Decisions

The goal of this step is to define the questions that the study will attempt to resolve and to identify the alternative actions that may be taken based on the outcome of the study. The study questions and their corresponding alternative actions will then be joined to form decision statements.

1.4.2.1 Principal Study Question. What are the concentrations of the radiological and chemical contaminants present in the 221-U Facility?

1.4.2.1.1 Alternative Actions.

- Current knowledge provides an adequate definition of the nature and distribution of contaminants present in the canyon, cells, and other parts of the facility to allow an evaluation of regulatory, health and safety, and compatibility concerns. No additional sampling is required to support characterization.

- Existing information does not provide sufficient information to decide regulatory, health and safety, and/or compatibility issues; additional sampling is required.

- Existing information provides sufficient information for some, but not all of the data needs for the various alternatives; additional sampling is required.

1.4.2.1.2 Decision Statement. Determine the nature and extent of radiological and chemical contamination present in the 221-U Facility with sufficient detail to support regulatory, health and safety, and compatibility decisions for the entombment and removal alternatives.

1.4.2.2 Secondary Study Question - Does existing material/equipment designate as transuranic (TRU)?

1.4.2.2.1 Alternative Actions.

- Segregate and remove material that is TRU and dispose in a facility permitted to accept TRU waste. Full entombment remains an alternative.

- Too much TRU material exists to remove to allow full entombment to be an option. Assess alternatives as appropriate.

1.4.2.2.2 Decision Statement. Determine whether equipment/material designates as TRU.

1.4.2.3 Secondary Study Question - Does existing material or process equipment exceed Class C criteria?

1.4.2.3.1 Alternative Actions.

- Segregate and remove material that is greater than Class C for special safety analysis and disposal handling criteria and dispose in a facility allowed to accept greater than Class C waste. Full entombment remains an alternative.

- Too much greater than Class C material exists to remove to allow full entombment to be an option. Assess alternatives as appropriate.

1.4.2.3.2 Decision Statement. Determine whether equipment/material contains greater than Class C contamination levels to assess alternatives.

1.4.2.4 Does material/equipment contain leachable non-radioactive constituents (listed in Table 3-2)?

1.4.2.4.1 Alternative Actions.

- Segregate and either treat or remove constituents as appropriate prior to entombment. Entombment remains an alternative.

- Sufficient, unremovable, leachable, non-radiological constituents are identified in the facility which preclude entombment. The removal disposition alternative is selected.

1.4.2.4.2 Decision Statement. Determine whether equipment/material contain leachable non-radioactive constituents, as listed in Table 3-2, and assess alternatives.

1.4.2.5 Secondary Study Question - Does the conceptual model indicate that the groundwater will be protected?

1.4.2.5.1 Alternative Actions.

- Fate and transport and risk models indicate that groundwater will be protected. Full entombment remains an alternative.

- Fate and transport and risk models indicate that groundwater will not be protected. Assess alternatives as appropriate.

1.4.2.5.2 Decision Statement. Determine whether contaminants exceed groundwater protection criteria to assess alternatives.

1.4.3 Step 3: Identify Inputs to the Decisions

The purpose of this step is to identify the information inputs that will be required to resolve each decision statement and determine which inputs require measurements and/or sampling. The key information requirements include the measurements that may be required, the source of data or information, and the basis for the action levels.

1.4.3.1 Identified Inputs. Table 1-13 provides a list of the inputs that will be required to support the 221-U Facility disposition alternatives. Inputs in this table are listed by boundaries as discussed in Section 1.4.4. The purpose of this sampling program is to develop an assessment of the materials present in the 221-U Facility. This information will support policy decisions regarding the disposition of the facility. For the described purposes, the results are not intended to quantify each COPC in all areas.

The 221-U DQO project team reviewed a considerable amount of process and equipment information for the 221-U Facility and the other site processes that were sources for equipment stored in the Canyon. Appendix C in the DQO report (BHI 1997a), lists all of the potential contaminants that could be associated with specific pieces of equipment from each plant. This information was used to generate a master list of COPCs. The master list was reviewed to determine which of the COPCs present potential risk to human health, groundwater degradation, or are concerns for disposal at the 221-U Facility and require sampling and analysis. This list and the reasoning for each COPC are provided in the DQO report.

1.4.4 Step 4: Define the Study Boundaries

Step 4 of the DQO Process defines the physical and temporal boundaries of the problem. The spatial (physical) boundaries are discussed below. Temporal boundaries are important when contaminant concentration changes (over time) are significant. The facility has been shut down since 1958 and no obvious temporal effects are noted.

1.4.4.1 Physical Boundaries. As seen through Table 1-13, the 221-U Canyon structure has been segregated into four areas for purposes of this investigation:

- Service Galleries. These galleries are in the service part of the structure, including the electrical gallery, piping gallery, and operating gallery. These areas are the parts of the facility where personnel did routine maintenance and operating functions. Overall, protection was not required in these areas and the existing levels of contamination present limited exposure concerns. Sampling for this area is more to confirm the absence of contamination than to establish inventory. The crane way is grouped with the service galleries, based on existing radionuclide survey information for that area.

- Canyon Deck. The Canyon area was exposed to elevated levels of radiological contamination through spills and normal process operations. In addition, there is a significant inventory of contaminated equipment on the canyon deck that has an undetermined radiological and chemical inventory. Although the crane way air space is in direct communication with the air above the Canyon, there is no evidence that this has resulted in a source of contamination in the crane way.

- Process Support Areas. The hot pipe trench and the Ventilation Tunnel were exposed to high levels of radiation and retain significant levels of radiologic contamination. The ventilation tunnel was exposed to all of the potential airborne COPCs found in the process areas of the structure. The hot pipe trench transferred the process materials to the process cells; there was likely some amount of leakage within this trench.

- Cells. The process cells were exposed to the highest levels of radiologic contamination in the facility. Leaks from process lines and spills from process vessels would have been contained within the cells and drained via floor drains to cell #10.

1.4.4.2 Sample Media/Matrix. Within each area described above, there are two types of sampling that will take place. Concrete samples and surveys will determine the ambient levels of contamination and be used to assess the total inventory for a given area. Analyses also will be conducted for piping and equipment in these areas. These analyses will ascertain the levels of concern associated with particular pieces of equipment and will also contribute to an understanding of the total radionuclide and chemical inventory for the facility.

Concrete samples generally will be limited to surface analyses for radionuclides. An exception to this approach will be used for the cells, where cores will be sampled in order to determine the penetration of contaminants into the concrete. Specific chemical constituents will be sampled for if process knowledge suggests that there is a reason to believe that the compound might be present and there is visible evidence to point to a sample location.

1.4.5 Step 5: Develop Decision Rule

The following decision rules summarize the attributes the decision maker needs to know about the sample population and how this knowledge will guide the selection of a course of action to solve the problem.

Figure 1-4 provides the decision logic based on Section 1.4.2. The logic diagram negates the need for "if . . . then" statements normally included in the DQO that provide the decision limits and resulting actions. Table 1-14 lists the criteria for the decision limits or provide the reference document that provides the decision limits used in the decision logic.

Figure 1-4. Decision Logic

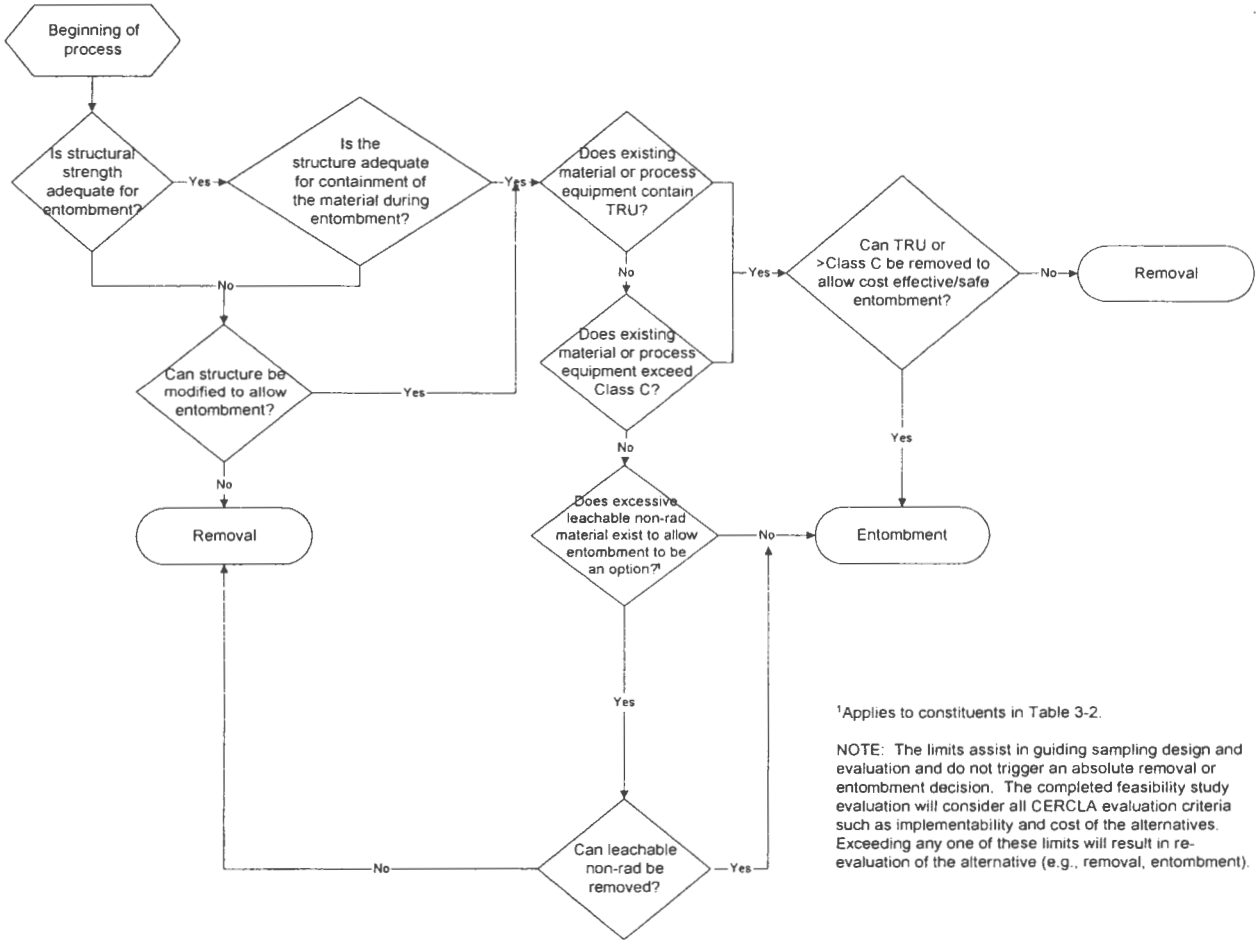

[1]Applies to constituents in Table 3-2.

NOTE: The limits assist in guiding sampling design and evaluation and do not trigger an absolute removal or entombment decision. The completed feasibility study evaluation will consider all CERCLA evaluation criteria such as implementability and cost of the alternatives. Exceeding any one of these limits will result in re-evaluation of the alternative (e.g., removal, entombment).

The assessment of the protection of groundwater will be based on models of fate and transport and risk to human health and the environment. These models are currently under evaluation by the U.S. Department of Energy (DOE), EPA, and State of Washington Department of Ecology (Ecology), external to this project. However, the technical team reviewed the typical parameters in the models to assure that the data collection for this project includes the information used by the models.

Besides the logic provided, the additional criteria required by the *Comprehensive Environmental Response, Compensation, and Liability Act of 1980* and *Resource Conservation and Recovery Act of 1976* (RCRA) for evaluation of disposition alternatives will be examined in the disposition assessment. These additional criteria include risk evaluation, implementability, cost of the disposition alternative, and effectiveness (EPA 1988).

1.4.6 Step 6: Specify Limits on Decision Error

The following section identifies the possible range of the parameters of interest by estimating likely upper and lower bounds, as well as identifying the decision errors, the null hypothesis, the "gray region" where the consequences of decision error are relatively minor, and the tolerable probability for the occurrence of decision error. Step 6 of the DQO Process is used to specify the acceptable limits on decision errors. These limits will be used in Step 7 of the DQO Process to develop an adequate sampling design for the intended data use.

One set of decision limits for the 221-U DQO is based on the Environmental Restoration Disposal Facility (ERDF) Waste Acceptance Criteria (WAC) (BHI 1996). The following text discusses decision errors and the consequences of making an incorrect decision.

One of the goals of sampling in the 221-U Facility is to estimate the nature and extent of contaminants within the different areas of the facility. Sample results will be compared with ERDF WAC limits for characterization of concrete, equipment, and other materials located within the facility. When making these comparisons, there are two types of possible error associated with the characterization:

- One could conclude that the mean concentration of a contaminant is less than the associated decision threshold, when in fact the mean concentration is greater than the decision threshold. In simple terms, this error is concluding that the material is "not regulated waste" when it is actually "regulated waste."

- The second type of error would be to conclude that the mean concentration of a contaminant is greater than the associated decision threshold, when in fact the mean concentration is less than the decision threshold. This error is concluding that the material is "regulated waste," when in fact it is actually "not regulated waste."

The typical hypothesis when characterization is the goal is to assume that the material is in the more restrictive class (i.e., assume that the material is greater than the limit); samples may indicate otherwise. This scenario is often chosen because the consequences of concluding that

the waste is less than the disposal limit when it actually is greater than the limit are usually the more important consequences to minimize. Under this hypothesis, Type I error is incorrectly concluding that the material is less than the limit and Type II error is incorrectly concluding that the waste is greater than the limit. The error rate for both types of decision errors may be controlled through adequately estimating the number of samples and a designing statistical approach for collecting the samples that is consistent with the conceptual model developed in DQO Steps 1 through 5.

Identifying the consequences of making an incorrect decision provides input for determining the decision error rates that are acceptable for the project. Once the consequences are identified, costs, not necessarily monetary, of making an incorrect decision can be considered, resulting in the determination of what level of each error rate is tolerable.

The consequences of concluding that the material is less than the limit when it is actually greater than the limit (error) include the following:

1. an entombment alternative is chosen and cannot be implemented;

2. an entombment alternative is chosen, implementation begins, and it is discovered that it is not feasible; and

3. an entombment alternative is implemented and monitoring shows that the facility is not performing properly.

The potential consequences may result in milestone delays, enormous amounts of wasted resources, and human health or ecological safety hazards for several generations.

Concluding that the material is greater than the limit when it is actually less than the limit (error), also has associated consequences, including unnecessary remediation or removal of the facility and loss of credibility. Expensive and unnecessary disposal costs may be incurred for this project and several others at the Hanford Site, and milestones may be renegotiated unnecessarily.

Relating the above consequences to the costs of making an incorrect conclusion are difficult to quantify, but the consequences of an error are considered the more important ones to minimize. As described below, the error rate will not be specified in advance, but will be determined when a data quality assessment (DQA) is performed for the data that will be collected as a result of this DQO Process.

A statistical design offers the opportunity to control decision error rates. A statistical estimation of the number of samples required to meet error tolerances is not feasible; because there are no data available to estimate the mean and variance, which are required to perform the calculations. A stratified, random sampling design is possible for the canyon deck, but the number of samples cannot be statistically determined before sampling because of the lack of historical data. Therefore, the number of samples to collect from each area (stratum) on the canyon deck will be determined by best professional judgement, with the understanding that once the data are

collected, error rates will be quantified as part of a DQA and additional sampling may be required. Biased sampling will take place in the cells, based on cell function and accessibility. The radiological results of sampling the concrete of the canyon deck and the cells will be used to estimate the isotopic distribution of radiological COPCs. This distribution will be used to determine concentrations in the galleries and other areas of the facility that have only radiological survey data.

1.4.7 Step 7: Optimize the Design for Obtaining Data

The purpose of Step 7 of the DQO Process is to develop a sampling strategy that satisfies the requirements of the previously described DQO steps. The order in which the designs are presented does not imply that the order of sampling will be the same. The designs for the canyon deck and cells are presented first because results from sampling these areas will be applied to other areas, such as the galleries, where additional radiological sampling is not proposed.

1.4.7.1 Canyon Deck

1.4.7.1.1 Concrete. Based on the historical survey data, the canyon deck is an area where the removable contamination and general dose rates are highest. It represents one of the worst-case areas in terms of concentration of most of the COPCs; however, no isotopic or depth of distribution data for any COPCs are available. A two-phased sampling approach using stratified biased sampling is planned.

Process knowledge and dose rate data indicate that the walkway area of the deck has relatively lower levels of contamination when compared with the areas over the cells and hot pipe trench. The dose rate is higher in these areas because of the processes that took place there and the equipment is now being stored on top of the cover blocks. Based on this information, it is reasonable to divide the canyon deck into three strata: the walkway, areas (not on the walkway) where equipment is not stored but may have been in the past, and areas where equipment is currently being stored (equipment will not be moved to collect Phase I samples). It is anticipated that this location may substantially contribute to the total variability; therefore, stratifying in this manner will take location into account.

A phased sampling approach is recommended so an initial amount of information may be gathered, not only for the characterization of the canyon deck, but also to provide information that will be applied to other areas of the facility that also do not have associated isotopic distribution or depth data. Phase I involves collecting 3 samples in each of the three strata, locations will be biased by survey information or visual inspection for staining; the number of Phase II samples will be determined based on a DQA of the Phase I data.

The number of samples for the Phase I stage of data collection is based on professional judgement. A total of 9 samples will be collected during Phase I; it is anticipated that stratification will provide reasonable coverage, based on the assumption that geographical location is an important source of variability. Only surface samples will be collected because

there is no driver for COPCs to penetrate the concrete. If the DQA of these data indicates that the COPCs have not been adequately characterized, additional samples may be collected. Each sample will be analyzed for all of the COPCs.

1.4.7.1.2 Equipment. Process knowledge and dose rate data indicate that the equipment on the deck substantially contributes to the chemical inventory of the facility. Equipment dose rates range from <20 - 14,000 dpm/100 cm^2 alpha and 20 x 10^3 - > 1 million dpm/100 cm^2 beta/gamma. The first step in characterizing the equipment is to identify the locations and types of equipment that are currently being stored. This information will also be used in the Phase I concrete sampling described above. Table 1-10 lists specific pieces of equipment identified and surveyed in 1996.

The inventory will be created from the video, digital pictures, and historical inventory and will be used to classify the equipment into categories, such as dissolver, centrifuge, etc., so that representative samples can be collected. If the equipment cannot be classified by function/origin (i.e., a dissolver tank from B Plant), it will be classified by available dose rate information (available from the DQO Scoping Binder [BHI 1997b] and Table 1-10) into low, medium, and high dose rate categories.

Once the equipment is categorized, the data that will be collected will include the determination of the presence of liquid, the collection survey data, (removable, fixed contamination and dose rate date) and, possibly, the collection of a liquid sample. Each piece of equipment that may have contained liquid will be examined, to determine the presence or absence of free-standing liquid. If free-standing liquid is found, it will be noted, and its volume estimated and sampled, if possible. Oil reservoirs will be sampled if oil is associated with electrical equipment and will be analyzed for polychlorinated biphenyls (PCB). The large- and medium-sized pieces of equipment will be assessed for size of void space.

If possible, at least 2 liquid samples from each category of equipment (function/origin or dose rate) will be collected and analyzed for the applicable COPCs as identified in paragraph 1.3.3 and Table 1-11. At least three pieces of equipment in each category will also be surveyed for general dose and gamma energy analysis (GEA). The total number of samples will not be known until the number of categories is determined. Shipping casks, barrels, and other storage equipment will be examined to determine if fuel or other materials are still present.

1.4.7.2 Cells

1.4.7.2.1 Concrete. A limited amount of historical data exists for the cells. Each cell has been identified with one or more processes (see Table 1-11): 20 uranium recovery cells, 10 residual material treatment cells, 8 solvent treatment cells, and 8 miscellaneous function cells. Historical information indicates that equipment from other facilities (REDOX, PUREX, B Plant) is stored in some cells. It is anticipated that the equipment in the cells is the most highly contaminated in the facility.

Non-destructive Assay (NDA)for TRU materials and for criticality potential will be performed as each cell is opened. The concrete in the cells will be sampled so that each process is represented; ideally, the concrete associated with multiple processes will be accessible and sampled. The equipment on top of the cells and hot pipe trench will be moved so that each cell may be opened, video taped and examined, and surveyed to obtain general area dose and gamma-scan data. Some cells may be so full of equipment or liquid that collection of a concrete sample is not possible. The goal of sampling will be to collect at least 2 concrete cores from every process, as early in the implementation of the SAP as possible. If a sample cannot be collected from the same-process cells early in the sampling activities, a sample will be collected from the concrete in the hot pipe trench adjacent to the process cells.

The goal during sample collection will be to collect a core as near the drain as possible or where staining is present, so that potential worst-case contamination may be determined. Sample cores will be 15.24 to 20.32 cm (6 to 8 in.) long, and will be scanned to determine the vertical distribution of contamination. Each core will be analyzed from the surface of the core and from the deepest interval at which contamination is present, based on the scan. This will result in depth of penetration data and the isotopic distribution of COPCs for the cells, and also other areas where depth information and isotopic distribution are not available.

Once two samples from every process are sampled, additional samples will be collected based on the judgement of the field team about the condition of a cell compared with previous cells. For example, if a uranium process cell is encountered that looks more stained than previous uranium process cells, or has non-process equipment stored in it, and the stained areas or the floor is accessible, a sample will be collected. If the floor concrete is not accessible, but wall concrete can be accessed, a sample of wall concrete (biased towards areas of staining) will be collected. At the end of the sample collection activities, samples from same-process cells will be selected for laboratory analysis so that at least two, and at most three, samples from each process will be analyzed. The samples from locations nearest the drains or where the most staining occurred will be selected for laboratory analyses. If a determination cannot be made about where sample(s) should be taken, sample locations will be selected by the Person in Charge.

1.4.7.2.2 Equipment. Historical data associated with the equipment in the cells is limited. Pictures and videos indicate that some cells are empty, some still have equipment installed, and some have equipment stored from other facilities. When the cells are uncovered for characterization, an inventory of equipment present will be recorded and still or video pictures will be taken. The equipment that is jumpered or otherwise installed will be classified as process equipment; all other equipment in a cell will be classified as non-process equipment. This classification will help guide sample collection and determine what analyses will be performed.

Each piece, if possible, of process equipment that may have contained liquid will be examined to determine the presence or absence of free-standing liquid. If free-standing liquid is found, it will be noted, and its volume estimated and sampled, if possible. The liquid and sludge in the cell 10 tank (tank 5-6) will be sampled, so that each can be analyzed in the event no other liquid samples can be collected; the sludge sample will be used for the characterization of the pipe drain in case a sludge sample cannot be collected there. Oil reservoirs will be sampled if oil is associated with

electrical equipment. Each piece of non-process equipment that may have contained liquid will be examined in the same manner as the process equipment; volume estimates of liquid and oil will be calculated. Liquid samples will be collected from the equipment only if a similar type of equipment on the canyon deck has not been previously sampled.

The goal of sampling the equipment in the cells is to obtain at least one liquid sample to represent each process and to obtain a representation of the non-process liquid that may be present. Therefore, process equipment sampling should result in 1 to 4 samples, dependent upon the amount of liquid that is present in the process equipment. If no liquid is found in the process equipment, other than in tank 5-6 (cell 10), the cell 10 liquid sample will be analyzed. Otherwise, the samples that will be analyzed are the ones from the cells with the highest survey readings or the largest amount of liquid.

The number of samples from the non-process equipment that will be analyzed will not be known until the types of equipment are understood and the amount of liquid is known. If no liquid is present, or similar types of equipment on the canyon deck were sampled, no samples from the non-process equipment in the cells may be analyzed. At the other extreme, every piece of non-process equipment may be sampled, resulting in several samples that will be analyzed.

1.4.7.3 Pipe Drain

The pipe drain is considered a special case of the cells, because liquid from the cells drained to cell 10 via the pipe drain. The COPCs related to the drain pipe are all of the possible process COPCs from the 221-U Facility, and also the COPCs related to the other facilities where stored equipment may have originated. The historical data associated with the pipe drain is limited to engineering drawings.

Characterization data that will be collected include a video tape to assess the structural integrity of the pipe and where liquid may be draining from; a scale or sludge sample to obtain the isotopic distribution of radiological COPCs and the inventory of non-radiological COPCs; and a radiological survey of the pipe (GEA) to correlate with the isotopic distribution obtained from the scale/sludge sample. If the scale/sludge sample cannot be collected, the gamma-scan data from the pipe drain will be compared with the gamma-scan data from tank 5-6 (cell 10) to determine whether the sludge sample from tank 5-6 may be considered to characterize the pipe drain. Otherwise, the isotopic distribution and chemical inventory will be inferred by correlating the gamma-scan data from the pipe with the isotopic and chemical data from the cells' concrete results.

1.4.7.4 Hot Pipe Trench

1.4.7.4.1 Concrete. The historical information from the hot pipe trench is limited to engineering drawings. Evidence that anyone ever visited the hot pipe trench has not been discovered. Due to the large number of pipes and their configuration within the trench, accessibility to the concrete is a major issue when considering what concrete data are necessary from the hot pipe trench. Because of accessibility issues, the proposal is to avoid the collection

of any samples from the hot pipe trench concrete by calculating the radiological and chemical inventory based on the results of concrete samples in the process cells and a remote survey (GEA) of the trench. An instance when samples may be collected from the concrete in the hot pipe trench is if the concrete in a parallel area of the cells is not accessible.

1.4.7.4.2 Pipes. Historical knowledge indicates that the pipes in the hot pipe trench were flushed when the facility was shut down. To verify this information, the pipes in the hot pipe trench will be examined (as described in Appendix A) for the presence of free-standing liquid and a volume estimate will be calculated. Because of as low as reasonably achievable (ALARA) concerns, remote testing may be the only option; if non-destructive technology cannot be deployed, the absence of liquid will not be verified.

Engineering drawings will be used to identify the types of liquid that still may be present. Process knowledge will then be used to estimate the inventory of liquid in each pipe. Sampling the liquid in the pipes is not feasible due to ALARA concerns, so the inventory will be estimated based on volume estimates, process knowledge, and the remote survey of the hot pipe trench.

1.4.7.5 Galleries and Crane Way

1.4.7.5.1 Concrete. Because the concrete of the galleries and the crane way has been extensively surveyed, additional sampling for the radiological characterization of these areas is not proposed. There are no historical data for the characterization of non-radiological contamination that may exist in the galleries and the crane way. Therefore, sampling and analysis for non-radiological COPCs associated with these areas will be performed.

The concrete walls and floors within the galleries and the floor of the crane way were surveyed in 1996; the canyon deck was surveyed in 1993 (see Tables 1-4 through 1-9). A comparison of the survey data from the galleries and the crane way to the canyon deck survey data indicate that the general area dose rate in the galleries and the crane way are significantly less than that in the canyon. Based on this comparison, additional radiological sampling of the galleries and the crane way is not proposed; the conclusion is that the radiological inventory of these areas does not significantly contribute to the inventory of the entire 221-U Facility. Once the isotopic and spatial distribution data are available from sampling that will take place in the cells and on the canyon deck, isotopic concentrations will be calculated for the galleries and crane way survey data. Then a DQA will be performed to determine the adequacy of the data from these areas to support the decisions outlined in the DQO (BHI 1997a).

Because no characterization data are available for non-radiological COPCs, biased locations for sampling of the COPCs will take place in order to obtain a worst-case estimate for their concentrations. Because all of the galleries drain to the sumps in the electrical gallery, it is assumed that the sumps are the worst-case location to sample for the galleries. Therefore, sludge/scale material will be collected from each sump in the electrical gallery, provided sufficient material exists for analysis. All of the material will be composite into a single analytical sample that will be analyzed for all of the COPCs identified for each gallery. For the purposes of estimating the COPC inventory of the facility, it will be assumed that the

concentrations of COPCs from this datum are present uniformly distributed on the surface of the floor and the walls of each gallery; the ceilings of the galleries are assumed to be uncontaminated.

1.4.7.5.2 Pipes. Currently, there are no historical data to characterize the pipes in the galleries. However, there is process knowledge to identify process and non-process related pipes. This information will be used to divide the sampling of pipes in the galleries into two groups: process and non-process related pipes. Each population will be examined for remaining, free-standing liquid; the liquid will be sampled; and the pipes will be surveyed to get an estimate of dose contribution.

Pipes will be classified as process or non-process based on historical knowledge and engineering drawings. A radiological survey (GEA) will be performed along the length of each pipe and a non-intrusive method, such as tapping the potential collection points and traps, will be used to determine whether free-standing liquid is present. If free-standing liquid is found, its volume for each type of piping will be estimated and samples will be collected, if possible. The samples will be composite, based on classification, into a single sample for analysis, resulting in two pipe samples (one from the process piping and one from the non-process piping). These samples will be analyzed for the COPCs associated with the galleries.

1.4.7.6 Railroad Tunnel

The historical information about the railroad tunnel is limited to engineering drawings, photographs, and video. There is no evidence that personnel have surveyed or otherwise collected data from the tunnel; the rail car bay is located in cell 3. Video and still photos of the rail car bay are available and show many stained areas. For radionuclides, the proposed sampling design includes performing a survey and assigning concentrations based on the canyon deck samples. The proposed sampling design for the non-radiological chemicals involves collecting samples from biased locations.

The railroad tunnel is being considered a special case of the canyon deck and not the cells because the conceptual model for how it became contaminated is similar to that of the canyon deck. Materials and equipment were remotely unloaded from the rail cars by the crane and lifted to where they were needed. Contamination resulted from equipment leaks and exposure to the air space of the canyon deck and the crane way. Therefore, the radiological data collected from the railroad tunnel will be a GEA and general area dose survey. The data from the Phase I sampling on the canyon deck concrete will be used to establish concentration levels from the survey results.

As with the crane way and the galleries, the method for estimating the non-radiological inventory is based on collecting samples from biased locations. Locations will be biased based on staining or radiological survey results. The video tape shows several visible areas of staining; therefore, selecting locations based on stains is feasible. The technical team is comfortable applying worst-

case contamination to the entire railroad tunnel because it is assumed that, similar to the crane way, the railroad tunnel inventory will not substantially contribute to the overall inventory of the facility. Therefore, limiting samples to biased locations is appropriate.

A minimum of 8 concrete chip samples from biased locations will be sampled and composited into 2 samples with 4 grabs in each sample. If 12 biased locations can be identified, then 3 composite samples will be collected. The stained area should be located throughout the length of the railroad tunnel so that an estimate of spatial variability of the stained areas may be calculated, if needed. The number of samples is based on professional judgement and is consistent with the number of samples proposed for the galleries and crane way. Samples will be analyzed for all of the COPCs associated with the canyon deck, which includes all REDOX, PUREX, B Plant, and U Plant process COPCs.

1.4.7.7 Ventilation Tunnel

The historical information about the ventilation tunnel is limited to engineering drawings; there are no personal accounts of anyone ever entering the ventilation tunnel and there is no evidence of any video or survey information. The proposed sampling design for the ventilation tunnel is similar to that of the galleries and crane way: radiological COPCs will be characterized by survey and related to isotopic and depth distribution data from the cells; other COPCs will be characterized by sampling the sediment and/or dust around the baffles on the floor of the tunnel.

1.5 DATA QUALITY OBJECTIVES PROCESS – STRUCTURAL INTEGRITY

The purpose of this section is to present a strategy for structural evaluations and define associated information needs required to support an endpoint decision for entombment of the 221-U Building in the 200 Area on the Hanford Site. A structural integrity evaluation is primarily needed for the entombment disposition alternatives.

A generalized process is recommended for building structural evaluations based on ASCE 11-90, "Guidelines for Structural Condition Assessment of Existing Buildings." This process identifies the type of information needed for a condition assessment. Within the context of this process for structural condition assessment, the DQO process referenced in Section 1.4 has been used to develop a presentation identifying how much of the information we now have, currently available information sources, and a preliminary estimate of additional information that will be needed and potential sources.

1.5.1 Data Quality Objective Step 1: Problem Statement

A complete structural assessment has not been previously performed for disposition evaluation. The structural integrity for the purposes of long-term disposition is not known.

1.5.2 Data Quality Objective Step 2: Decision Statement(s)

The purpose of this step is to identify the key decisions that will be made regarding the nature, timing, and location of samples to be collected.

1.5.2.1 Structural Integrity of Building

1.5.2.1.1 Principal Study Question. Does the 221-U Canyon Building have the structural capacity to hold material proposed for placement under alternatives 3, 4, and 5 in the FS (DOE-RL 1997)?

1.5.2.1.2 Alternative Actions.

- Structural analysis of the building determines that there is sufficient loading capacity to place the proposed material within the facility; alternatives 3, 4, and 5 of the FS remain viable alternatives.

- Structural analysis determines that the building cannot withstand the loads from the proposed placement of material without unacceptable consequences (e.g., structural failure, concern for worker health and safety, etc.); alternatives 3, 4, and 5 of the FS are eliminated as alternatives.

1.5.2.1.3 Decision Statement. Determine the load capacity of the 221-U Facility against the requirements for placement of material as proposed in alternatives 3, 4, and 5 of the FS.

1.5.2.2 Leach Rate

1.5.2.2.1 Principal Study Question. Is there the potential for contaminants of concern to leach from the 221-U Facility to groundwater at levels that exceed regulatory criteria?

1.5.2.2.2 Alternative Actions.

- COPCs within the facility are presently leaching or have the potential to leach to groundwater at levels that exceed regulatory criteria. This material/equipment containing these COPCs will be removed or stabilized before proceeding with alternatives 2 through 6.

- COPCs within materials proposed for placement in or around the facility have the potential for leaching to groundwater at levels that exceed regulatory criteria. These contaminants would be removed or stabilized before proceeding with alternatives 3 or 4.

- COPCs do presently or have the potential to leach from the facility but at levels that are not anticipated to exceed regulatory criteria. Incorporate a monitoring program for the COPCs into the implementation program for alternatives 2 through 6 along with a contingency plan if levels should exceed the regulatory threshold(s).

- There is no potential for COPCs to leach from the facility at levels that exceed regulatory criteria.

1.5.2.2.3 Decision Statement. Determine whether there is potential for COPCs to leach from materials presently located within the 221-U Facility or wastes proposed for placement in or around the facility.

1.5.2.3 Regulatory Equivalence of Concrete

1.5.2.3.1 Principal Study Question. Does the concrete structure of the 221-U Facility provide a level of protection to groundwater equivalent to the liner requirements for a land disposal facility?

1.5.2.3.2 Alternative Actions.

- Regulatory criteria for a liner are not imposed on the facility for any of the entombment alternatives; no further consideration of this issue is required.

- Liner requirements are established as applicable for the entombment alternatives; the concrete of the facility is shown to be the functional equivalent of a liner and no further action is required for this issue.

- Liner requirements are established as applicable for the entombment alternatives; the concrete is not accepted as functionally equivalent to a liner. Determine an approach to retrofit a liner to the facility or eliminate the entombment alternatives.

1.5.2.3.3 Decision Statement. Determine liner requirements for the entombment alternatives and the functional ability of the concrete as a barrier.

1.5.3 Background

The 221-U Building is one of many buildings built in early 1943 through 1945 as part of the Hanford Engineer Works. Documentation of the construction process is available in a report, *DuPont Construction History of the Hanford Engineer Works 1943-1945* (DuPont 1945). Much of the information of interest is reported in Volume 3, pp 800 - 950.

The process canyons, 221-T/U/B, are sister plants, built using the same sets of drawings with modifications for differences in final mission. Common specifications were used for all three plants. They were built in a series with interleaved construction schedules. Concrete forms for the cells were shared among the plants as well as a rolling steel form used for placing the concrete roofs of the buildings. The schedule for the construction of the lower process cell structures for these buildings was:

Building	Date Started	Date Completed
221-T	05-10-44	09-01-44
221-U	08-24-44	11-22-44
221-B	10-30-44	01-24-45

As shown by this schedule, when the lower cell structure of 221-T was completed, the crews moved on to start the lower cell structure of 221-U. A similar relationship is seen for the 221-B plant lower cell structure. At the time of their construction, the 221 process buildings were among the largest close-tolerance concrete structures ever attempted. The upper portions of the canyons were completed after the outer envelope of the building was brought up to the elevation of the crane rails.

These facilities were constructed under one contract by the same crews in a time-phased schedule designed to provide product from the chemical process plant sooner. Thus, the buildings are physically separated, but were constructed as one project. Based on the history reported in the construction history, extrapolation of construction material properties from in situ measurements at B Plant to U Plant is reasonable.

The construction history includes other information that is applicable to current and proposed structural evaluations including:

- boring logs below the 221-U foundations,
- plate bearing test data taken before construction of building 221-U,
- discussions on aggregate barrow pits,
- discussions of available concrete mixing plants and scheduled use, and
- specification changes including the material for the chemical sewer drain pipe.

Historical construction information in combination with more recent structural analyses, material investigations, and soil investigations can be used to make preliminary structural evaluations of the adequacy of the 221-U Facility for planned entombment activities. Results from additional efforts to secure site-specific material properties information, conduct of enhanced existing condition assessments, and additional structural evaluations will be used to confirm the preliminary structural evaluations and reduce residual uncertainties.

1.5.4 The Structural Evaluation Process

The generalized process for structural assessments of existing buildings and the steps in this iterative process are shown in Figure 1-5.

Figure 1-5. General Structural Assessment and Evaluation Procedure

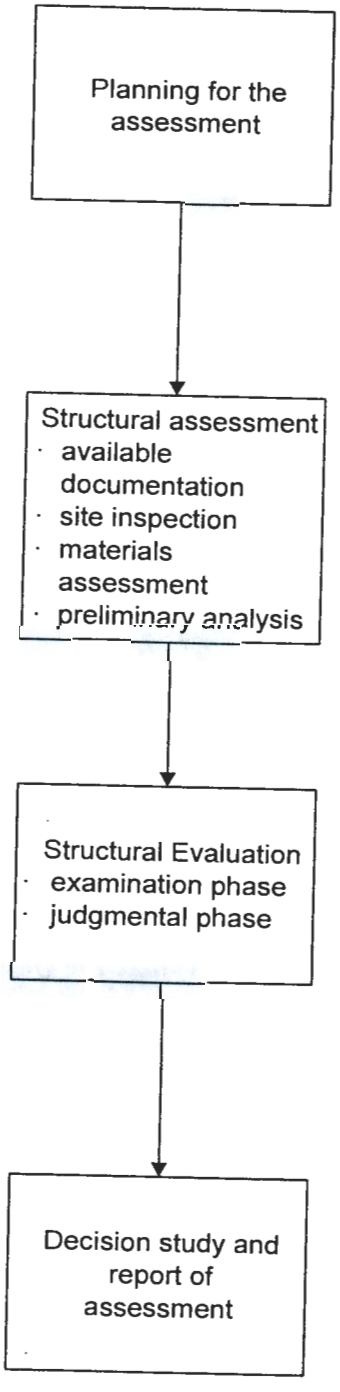

1.5.5 Data Quality Objective Step 3: Inputs

Two inputs are needed to support the structural key decisions. They are:

1. Conduct a structural condition assessment for building 221-U to evaluate current capacities of the building structural systems safely to resist loadings during and after entombment operations.

2. Conduct a structural condition assessment for building 221-U to evaluate the flow paths into and out of the canyon during and after entombment.

These inputs are the basis for the activities identified in the structural DQO tables. Supporting activities are based on the general evaluation process shown in Figure 1-5. General program objectives for structural sampling and studies are presented in Tables 1-14 and 1-15.

1.5.6 Data Quality Objective Step 4: Boundary

The boundary is the entire facility and the concrete-covered .61-m (2-ft) diameter pipe that is underneath the building and runs the length of the facility.

1.5.7 Data Quality Objective Step 5: Decision Rules

The decision logic is included in Figure 1-4. The structural evaluation does not lend itself to establishing decision limits; therefore, decision limits are not included in this document.

1.5.8 Data Quality Objective Step 6: Specify Tolerance Limits on Decision Errors

The structural assessment does not lend itself to calculations of variance. Therefore, assessment of decision errors does not apply.

1.5.9 Data Quality Objective Step 7: Optimize the Design for Obtaining Data (Strategy for Obtaining Structural Information)

This section is analogous to the optimization of the design step in the DQO process. This section is divided into subjects consistent with the flowchart shown in Figure 1-5 for the structural existing condition evaluation process. Discussion is furnished identifying overall strategies, required plan development, and engineering standards applicable to the individual information acquisition activities. Key assumptions are identified for several of these items.

1.5.9.1 Site Inspection for Structural Condition. Partial walkdowns have been conducted of both U Plant (Baxter 1991) and B Plant (Wagenblast et al. 1988; Winkel et al. 1989). Walkdown plans will have to be developed identifying the walkdown objectives relating to both structural current condition assessment as well as flow path assessments. Access plans for remote closed-circuit television inspections of the wind tunnel and the 60.96-cm (24-in.) process cell sewer should be integrated into the overall observational condition assessment.

Past B-Plant assessments included subcontract work by Muenow and Associates (Winkel et al. 1989, Chapter 4, Appendix A). Pulse echo inspection and ground penetrating radar were used to establish in situ estimates for concrete strength, modules, and rebar locations. Inconsistencies in rebar location between the non-destructive examination (NDE) testing and the drawings led to in situ excavation of roof concrete to verify rebar locations. The drawings were accurate. Additional in situ investigations by Cruz (1992) also demonstrated that the drawings were accurate.

Prior walkdowns were conducted using the guidance in ACI 201.1R-84 "Guide for Making a Condition Survey of Concrete in Service" for visual inspection of existing concrete structures; similar rules should be used for future walkdown assessments. Additional guidance is now available in ACI 364.1R-94 "Guide for Evaluation of Concrete Structures Prior to Rehabilitation," a more recent publication that parallels information in ASCE 11-90 and provides additional detail for evaluations of existing concrete structures.

It is a common problem during walkdowns to encounter plant areas with poor illumination and some detail at a higher elevation of interest. Walkdown equipment should include high-power, hand-held flood lights, and adequate telephoto lenses on cameras and video cassette recorders to record anticipated information adequately. Tape recorders can usefully speed up recording of the field observations.

A preliminary suggestion for flow path observations is to check for deviations from the dimensions shown on the as-built drawings that would contribute to enhanced flow in to and out of the canyon. For example, evidence of opening or gapping on the expansion joints between the canyon segments, or extensive cracking at the corners of door openings or pipe chases that produce paths running through the entire wall thickness. The required observations should be developed and coordinated with the groundwater modeling team that will be developing contaminant transport models. It is highly likely that bounding estimates will be used for flow path estimates, rather than actual test data.

1.5.9.2 Structural Analysis to Establish Load Capacities

1.5.9.2.1 Loading and Performance Criteria. Current concrete building codes will be used to evaluate structural adequacy of the U-Plant structural systems. Design criteria applicable during entombment operations are found in ACI 318. Current natural phenomena loadings are available for the Hanford Site according to DOE Order 420.1, which is scheduled to become a *Code of Federal Regulations* (CFR) through rulemaking later this year. Federal regulation, 10 CFR 61, applies to the entombed facility after it has been closed. Additional load cases may have to be developed and evaluated for construction sequences associated with entombment operations, with respect to limiting differential loadings between the spaces inside the canyon and the space surrounding the canyon due to backfill activities. Large backfill loadings were not part of the original design, and will have to be investigated in detail.

1.5.9.2.2 Primary Structural Systems. Prior B-Plant studies (Wagenblast et al. 1988; Winkel et al. 1989; Scott and Moody 1996) have identified some primary structural systems for lateral loadings, but have not addressed a complete set of these systems for both gravity and lateral loads. An additional engineering study will be required to complete the identification of the primary structural systems for U Plant. Areas needing additional development include seismic and wind lateral loadings parallel to the long axis of the canyon structures, and the gravity load systems for the main process deck, galleries, and the roof. Detailed differences in layout between U Plant and the sister plants will have to be identified and addressed. This study will have applicability later when the entombment option is considered for both B and T Plants.

1.5.9.2.3 Establish the As-built Strength of U-Plant Materials. Key Assumption: Drawings for U Plant indicate that the original concrete design strength specified was 2,500 psi. Cruz (1992) developed a test plan for obtaining 12 core samples from B-Plant wall areas in 1992 and conducting compressive strength tests. The average compressive strength for these tests was 4,180 psi, which greatly exceeds the original design strength of 2,500 psi. No additional efforts will be made to justify higher in situ strengths.

T/U/B Plants were built during wartime shortages of steel (including rebar). All of the structural members in these facilities are highly under reinforced. The strength of these members does not depend so much on concrete strength, as it does on the availability of the original rebar steel at the design location in good condition. Several efforts have been made to evaluate the in situ location and condition of rebar at B Plant (Wagenblast et al. 1988; Cruz 1992). All efforts to date have shown that the drawings are accurate, and that the rebar is in excellent condition.

Two in situ assessments are recommended for evaluation of U-Plant concrete member strength. Cruz (1992) conducted an investigation with 12 7.62-cm (3-in.) diameter cores taken from 4 elevations in one segment of B Plant. Three trenches were excavated to obtain rebar samples for condition assessment and tensile samples. Operational safety will be primarily influenced by the concrete structures located above the canyon working deck. Therefore, it is suggested that a total of 12 cores be taken from 4 segments in U Plant at elevations above the canyon working deck. This will allow estimation of a mean and standard deviation for concrete strength in each segment, and a segment-to-segment comparison within U Plant. The results can also be compared to Cruz (1992) to establish the degree of consistency in this parameter from U Plant to B Plant. Larger 12.7-cm (5-in.) diameter cores will be required because of the aggregate size. Cruz found that two out of 12 core samples contained aggregate particles that were too large for testing conducted on 7.62-cm (3-in.) diameter cores. Hanford Site construction history mentions the batch plant large screen size as 6.35 cm (2.5 in.). Compressive strength cores should have a minimum diameter equal to at least twice the diameter of the largest aggregate; therefore, the future cores will be 12.7 cm (5 in.) diameter at a minimum.

Trenches should be excavated in locations proximate to each of these new coring locations to take a minimum of 3 rebar samples for each core because the facility strength depends primarily on the rebar condition, location, and strength. An alternative that should be considered during development of the test plan is the use of NDE methods to assess rebar locations for comparison to the drawings at most locations in lieu of only conducting concrete excavation to obtain rebar

samples at most locations. Compressive strength testing of this core population and tensile testing of the rebar should be sufficient to confirm the current strength of the U Plant canyon primary structural materials.

Concerns for the long-term integrity of Hanford Site concretes have recently arisen in reviews of the Canister Storage Building project. The essence of these concerns is that the groundwater chemistry is sufficiently aggressive to degrade concrete placed on site in a relatively short period. This is also a 10 CFR 61 concern for long-term storage of Class C and below waste. Excavations will have to be made at both ends of U Plant down to elevations of the process cell sewer plugs to allow access for remote inspection of the 60.97 cm (24 in.) process cell sewer (per previous discussion of walkdowns). It is proposed that 12 concrete cores be obtained from the end wall of U Plant at varying elevations down to the elevation of the plugs for the process sewers. One-half of these cores should be used for concrete strength testing. The other half of the cores are to be reserved for petrographic examination to assess the long-term effect of Hanford Site groundwater on the integrity of concrete with time as a function of depth from the surface into the concrete members. Cruz (1992) contains all of the applicable testing standards necessary to conduct both of the coring programs and the rebar testing. Developing criteria for the petrographic examinations of concrete will be necessary relative to durability under contact with groundwater.

Long-term effects of radiation on concrete integrity have come up as a concern in the DQO process. Radiation effects on concrete have been studied for many years as the nuclear industry has developed. An instantaneous radiation dose to a material is generally discussed in terms of the "flux;" an instantaneous radiation dose per second of time. Long-term cumulative effects are generally discussed in terms of the time-integrated total dose called fluence. This question came up with respect to previous evaluations of the Hanford double-shell tanks (DST). It was not a major concern for evaluations of the DSTs, but it can be a concern for evaluation of concrete immediately surrounding the core of operating reactors. Design requirements for the Fast Flux Test Facility considered this issue; however, it is not an important concern for evaluation of U Plant structures because the exposures (cumulative fluence) are below levels of concern by orders of magnitude.

1.5.9.2.4 Structural Analyses to Establish Load Capacities. These analyses will have to address two major concerns for structural adequacy: the soils below U Plant and the concrete members of the building itself.

1.5.9.2.5 Soils. Original siting information contained in DuPont (1945) provides both characterization data for the strata below the U Plant foundations and "New York City" plate bearing test data for the foundation excavations. Plate bearing test data can be used to back out an angle of internal friction for the foundation sands and gravels. More recent geotechnical investigations by Dames & Moore (1989) and Shannon and Wilson (1994) provide sufficient information to corroborate the original estimate for foundation bearing capacity determinations. More recent efforts to evaluate the deformability of sands and gravels below the 241-AX tank farm (Baxter and Moore 1997) provide adequate information to establish settlement limits.

1.5.9.2.6 Existing Member Capacities. Concerns for member capacities revolve around operational safety issues related to floor and roof capacities for gravity loading during entombment operations. A second concern is the ability of the facility superstructure (areas above the canyon operating deck) to resist natural phenomena loadings such as wind and earthquake.

Since 1943, gravity load evaluations have been focused toward evaluating concrete design code changes on the capacities of the operating gallery floors and the canyon roof to resist gravity loads during and after entombment. The most significant changes have been in development length requirements for rebar and allowable shear stresses for one-way slab design. This will mean derating the floors and roof against the original gravity load intensities. Members of the DQO team noted that the original floor load ratings are still on the walls in U Plant, 113.5 kg (250 lb) per square foot. Derating will result in a number that will support entombment.

Three reasonably current state-of-the-art evaluations (Wagenblast, et al. 1988; Winkel, et al. 1989; and LATA 1989), have been made for lateral load resistance of B-Plant transverse to the long axis of the canyon. An additional evaluation has been made for the B Plant end wall next to the Waste Encapsulation and Storage Facility by Scott and Moody (1996). All of the lateral load evaluations are limited, in that they do not address the question of load combinations for lateral loads in both north-south and east-west directions. It is suggested that this be approached through a linear combination of demand/capacity for both directions with a summation equal to, or less than 1.0. It is anticipated that the U Plant can be shown to have lateral load capacities adequate to assure worker safety during entombment.

1.5.9.2.7 Structural Evaluation, Summary Report. This report should be prepared in several phases consistent with the overall program plan for entombment of the U Plant Facility. An initial version should be prepared in the short term consistent with the DQO process. Updates should be issued as each of the major structural issues are dispositioned, whether structural capacity for safety, or flow paths. Utilizing a change control process for these changes will be useful rather than having to reissue entire documents.

Activities to develop backfill performance requirements and specifications for materials and construction sequences for entombment of U Plant should be planned, but are outside the scope of this DQO process. These considerations should be addressed in the overall program plan for entombment of U Plant.

Table 1-1. U Plant Canyon Cell Functions, Equipment, and Volumes (page 1 of 2)

Cell	Function	Equipment	Cell Volume (m^3)
1	Storage	Empty	143
2	Storage	REDOX vessels D-13, G-13 tank, G-3 concentrator, H-4 coil	143
3	Access to railroad tunnel	Unknown	640
4	Storage	Fuel storage rack (0.4 x 3.0 x 4.3)	555
5	Storage	B Plant centrifuges (3) Pair of fuel canisters (19)	143
6	Feed receiving	U Plant tank (2.7 x 2.7)	143
7	Storage	PUREX Equipment: Pumps (3) B Plant Equipment: Pumps (2) Agitators (4)	143
8	Cell drainage	Tank 4-6	143
9	Cell drainage	Tanks 5-1 and 5-2	143
10	Cell drainage	Active residual material handling tank 5-6	312
11	Evaporation and concentration	Evaporator dunnage from U Plant U Plant tank 6-4 B Plant F-22 filter	143
12	Storage	PUREX pot dissolver B Plant centrifuge	143
13	Evaporation and concentration	Evaporator Concentrator cooler Feed stripping tower Concentrator seal pot Concentrator condenser	143
14	Storage, residual material concentration	Agitators (6) Pumps (8) U Plant tank	143
15	Evaporation and concentration	Evaporator Concentrator cooler Feed stripping tower Concentrator seal pot Concentrator condenser	143
16	Storage, residual material concentration	B Plant tank PUREX thorium jumpers (17) Concentrator feed receiver	143
17	Evaporation and concentration	Evaporator Concentrator cooler Concentration tower Concentrator seal pot Concentrator condenser	143
18	Storage	PUREX F-8 tank	143

Table 1-1. U Plant Canyon Cell Functions, Equipment, and Volumes (page 2 of 2)

Cell	Function	Equipment	Cell Volume (m^3)
19	Evaporation and concentration	Evaporator Concentrator cooler Concentration tower Concentrator seal pot Concentrator condenser	143
20	Residual material concentration	Concentrator for feed tank Concentrator feed receiver	143
21	Residual material sampling	Sampler tank	143
22	Residual material neutralization	Neutralizer tank	143
23	Residual material sampling	Residual material sampler tank	143
24	Residual material sampling	U Plant tank (2.4 x 4.3) U Plant pump PUREX crane toolbox	143
25	Residual material sampling	Residual material sampler tank	143
26	Aqueous effluent, spent solvent stream receiving	Receiver tank	143
27	Feed preparation	Centrifuge catch tank	143
28	Feed preparation	Centrifuge catch tank	143
29	Storage	B Plant ti-tube bundles (2)	143
30	Storage	REDOX pots (2) REDOX towers (2)	143
31	Storage	B Plant centrifuges REDOX tube bundles (2)	143
32	Aqueous effluent receiving	Tank (2.7 x 2.7)	143
33	Spent solvent stream receiving, stripping and aqueous effluent processing	Spent solvent stream receiver tank Stripping column Aqueous effluent pump-out tank	143
34	Residual material receiving and treatment	Uranium-containing stream feed tank Aqueous effluent receiver tank Decontamination column	143
35	Residual material receiving and treatment	RIOW receiver tank RIO column RIOO receiver tanks	143
36	Hydrocarbon diluent feed	U Plant tank (2.1 x 4.3)	143
37	Spent solvent stream receiving, stripping, and aqueous effluent processing	Stripping column Pump-out and receiving tanks	143
38	Residual material receiving and treatment	Uranium-containing stream feed tank Decontamination column Aqueous effluent receiver tank	143
39	RIIOO and RIIOW receiving, RIIO processing	RIIOO receiver tank RIOO column RIIOW receiver tank	143
40	Feed receiving	Hydrocarbon diluent feed tank	143
Source: DQO Scoping Document (TBD)			

Table 1-2. Bismuth Phosphate Plant Output.

Constituent	lb/Short Ton U
UNH - Uranyl Nitrate	4,220
HNO_3 - Nitric Acid	170 to 210
H_2SO_4- Sulfuric Acid	700 to 810
H_3PO_4 - Phosphoric Acid	730 to 1,110
$NaNO_3$ - Sodium Nitrate	130 to 210
NaOH - Sodium Hydroxide	1,560 to 1,680
Na_2CO_3 - Sodium Carbonate	3,960 to 4,060
H_2O – Water	About 27,000 to 28,000

NOTE: The volume associated with 1 ton of uranium was approximately 15,200 L (4,000 gal).

Table 1-3. Fission Products Associated with U Plant Feed.

Age (Years)	Irradiation Level, Mw Days/Ton	Fission-Product Radioactivity, (Theoretical) Curies/g U		Remarks
		Beta	Gamma	
7	200	2.8×10^{-3}	6.0×10^{-4}	Oldest, least radioactive residual material available.
2	200	1.1×10^{-2}	3.9×10^{-3}	This is approximately the most highly radioactive feed that can be successfully decontaminated from fission products in the TBP Plant to meet specifications for recovered uranium.
2	400	1.9×10^{-2}	6.5×10^{-3}	

NOTE: The plutonium content of the uranium residual was about 2 to 4 g/ton of uranium.

Table 1-4. Summary of Direct Radiological Survey Data and General Area Dose Data for the Galleries.

Section	Gallery								
	Electrical			Piping			Operating		
	Alpha (dpm)	Beta/Gamma (10^3 dpm)	Dose (uR/hr)	Alpha (dpm)	Beta/Gamma (10^3 dpm)	Dose (uR/hr)	Alpha (dpm)	Beta/Gamma (10^3 dpm)	Dose (uR/hr)
1[a]	N/A	N/A	N/A	N/A	N/A	N/A	<20	2 - 35	7 - 11
2[b]	<20	2 - 8	9	<20	5 - 15	10			
3	<20	<1	10	<20	2 - 5	9 - 10	<20	<1	8
4	<20	3 - 10	9 - 10	<20	10 - 50	11	<20	10	7 - 8
5	<20	1 - 72	9	<20	40 - 50	20 - 50	<20	<1	7 - 8
6	<20	3 - 20	9 - 10	<20	2	10 - 30	<20	8 - 20	8 - 9
7	<20	4.5 - 55	9 - 10	<20	<1	9	<20	2	8 - 9
8	<20	10 - 25	9 - 11	<20	10 - 25	9 - 10	<20	5 - 40	9
9	<20	4 - 20	9 - 10	<20	30	9 - 10	<20	3 - 5	8
10	<20	25	9	<20	<1	9 - 10	<20	5	9
11	<20	10 - 50	9 - 10	<20	<1	9 - 10	<20	25	8 -9
12	<20	2.5 - 12	9	<20	2	8	<20	20	8
13	<20	8	10 - 11	<20	2	9	<20	<1	8
14	<20	20	9 - 10	<20	<1	8 - 9	<20	20	9
15	<20	4 - 15	9 - 10	<20	<1	9	<20	20	8 - 9
16	<20	<1	9 - 11	<20	<1	9 - 10	<20	35	8 -9
17	<20	4	9	<20	<1	9 - 10	<20	5 - 40	9 - 10
18	<20	<1	9 - 11	<20	4 - 20	9	<20	<1	8 - 9
19	<20	<1	9 - 10	<20	10 - 125	9 - 10	<20	4 - 30	8 - 9
20	<20	<1	9 - 40	<20	<1	9 - 150	<20	<1	9 - 10

[a] The electrical and piping galleries do not extend into Section 1. The operating gallery contains showers and a changing area in Sections 1 and 2.

[b] This Section is half the size of the other Sections, in each the galleries, except the operating gallery.

Table 1-5. Summary of Direct Radiological Survey Data for the Stairwells between Galleries.

Stairwell	Alpha (dpm)	Beta/Gamma (10^3 dpm)	Dose (uR/hr)
7[a]	<20	2 - 40	7 -8
Stairwell to crane way	N/A	N/A	< 0.5 mR/hr
15	<20	1 - 5	7 - 8
9	< 20	N/A	6 - 8
17	<20	<1	8
1	<20	2 - 25	7 - 11

[a] Some areas were not surveyed due to evidence of animal intrusion.

Table 1-6. Summary of Direct Radiological Survey Data for the Canyon and Crane Way.

Section	Crane Way			Canyon Deck		
	Alpha (dpm)	Beta/Gamma (10^3 dpm)	Dose (mR/hr)	Alpha (dpm)	Beta/Gamma (10^3 dpm)	Dose[a] (mR/hr)
1	<20	20	<0.5 - 2	N/A	N/A	<0.5 - 6
2	<20	N/A	<0.5	N/A	N/A	0.5
3	<20	N/A	<0.5	N/A	N/A	0.7
4	<20	100	<0.5	N/A	N/A	1
5	<20	N/A	<0.5	N/A	N/A	1.5 - 90
6	<20	N/A	<0.5	N/A	N/A	2 - 84
7	<20	N/A	<0.5	N/A	N/A	1 -.3.5
8	<20	N/A	0.8	N/A	N/A	1
9	<20	N/A	1	N/A	N/A	1.5 - 6
10	<20	N/A	<0.5	N/A	N/A	1
11	<20	N/A	<0.5	N/A	N/A	1 - 60
12	<20	N/A	<0.5	N/A	N/A	2 - 8
13	<20	N/A	<0.5	N/A	N/A	N/A
14	<20	N/A	<0.5	N/A	N/A	5
15	<20	N/A	<0.5	N/A	N/A	N/A
16	<20	80	<0.5	N/A	N/A	1.5 - 2
17	<20	N/A	<0.5	N/A	N/A	3.5 - 25
18	<20	22	0.5	N/A	N/A	N/A
19	<20	80	<0.5	N/A	N/A	96
20	<20	10	0.8	N/A	N/A	510

[a]These values are from the Adams report; 1996 survey data are mostly non-detect

Table 1-7. Summary of Direct Radiological Survey Data for the Canyon Deck.

Section	Alpha (dpm/100 cm^2)	Beta/Gamma (10^3 dpm/100 cm^2)
1	<20	20 - 50
2	<20	4 - 20
3	<20	7 - 700
4	<20	10 - 60
5	<20 - 420	40 - 100
6	< 20 - 700	10 - >10^3
7	< 20	10 - 60
8	> 20 - 420	70 - 200
9	700 - 7,000	30 - 100
10	14,000	200
11	280 - 1,400	8 - >10^3
12	280 - 700	100 - 200
13	<20 - 700	65 - 300
14	560 - 140,000	200 - >10^3
15	14 - 1,400	10 - 400
16	280 - 4,900	7 - >10^3
17	< 20 - 280	10 - 80
18	<20 - 280	4 - 30
19	<20 - 280	10 - 70
20	< 20	1 - 25

Table 1-8. Summary of Removable Radiological Survey Data for the Galleries and Crane Way.

Section	Gallery							
	Electrical		Piping		Operating		Crane Way	
	Alpha (dpm/ 100 cm^2)	Beta/Gamma (10^3 dpm/ 100 cm^2)	Alpha (dpm/ 100 cm^2)	Beta/Gamma (10^3 dpm/ 100 cm^2)	Alpha (dpm/ 100 cm^2)	Beta/Gamma (10^3 dpm/ 100 cm^2)	Alpha (dpm/ 100 cm^2)	Beta/Gamma (10^3 dpm/ 100 cm^2)
1	N/A	N/A	N/A	N/A	<20	<1 - 5	<20	1 - 5
2	<20	<1	<20	<1			<20	25
3	<20	<1	<20	<1 - 2	<20	N/A	<20	N/A
4	<20	1 - 3	<20	<1	<20	<1	<20	2
5	<20	1 - 9	<20	<1	<20	N/A	<20	3
6	<20	<1	<20	<1	<20	<1	<20	N/A
7	<20	< 1 - 3	<20	<1	<20	<1	<20	4
8	<20	<1	<20	<1	<20	<1	<20	4
9	<20	<1	<20	<1	<20	<1	<20	5 - 20
10	<20	<1	<20	N/A	<20	<1	<20	3
11	<20	<1 - 2	<20	<1	<20	<1	<20	8
12	<20	<1	<20	N/A	<20	<1	<20	2
13	<20	<1	<20	<1	<20	N/A	<20	1
14	<20	5	<20	N/A	<20	<1	<20	25 - 100
15	<20	<1	<20	N/A	<20	<1	<20	4 - 15
16	<20	<1	<20	N/A	<20	<1	<20	4
17	<20	<1	<20	<1	<20	<1	<20	4
18	<20	N/A	<20	N/A	<20	N/A	<20	4 - 5
19	<20	<1	<20	<1	<20	<1 - 15	<20	2
20	<20	<1	<20	<1	<20	<1	<20	1 -10

Table 1-9. Summary of Removable Radiological Survey Data for the Stairwells between Galleries.

Stairwell	Alpha (dpm/100 cm^2)	Beta/Gamma (10^3 dpm/100 cm^2)
7[a]	<20	<1 - 2
Stairwell to Crane Way	N/A	N/A
15	<20	2 - 3.5
9	N/A	N/A
17	N/A	N/A
1	<20	<1

[a]Some areas were not surveyed due to evidence of animal intrusion.

Table 1-10. Summary of Removable Radiological Survey Data for the Equipment on the Canyon Deck.

Description	Location Section(s)	Alpha (dpm/100 cm^2)	Beta/Gamma (10^3 dpm/100 cm^2)
wheel barrow	1	<20	10
impact wrench	1	<20	10
sink	2, 10	<20 - 700	20 - 100
piping	2, 5, 7, 12, 13, 15	<20 - 2,800	10 - 900
cabinet	3, 6	<20 - 420	41 - 400
centrifuge	3, 4, 7, 12, 16	20 – 4,200	30 - >1,000
pump	4	<20 - 420	100 - 200
Tanks	5, 6, 7, 8, 10, 12, 15	<20 - 2,100	50 - 700
drums	9	14,000 - 41,000	80 - 300
adjitator	9, 13, 14	1,400 - 2,100	10 - >1,000
vessel	9	1,400 - 3,800	200 - 300
jumper components	11, 16	280	30
lifting yoke	11	700	>1,000
ventilator assembly	11	140	40
condenser column	12	280 - 420	100 - 150
motor	12	<20 - 420	50 - 150
pot	13, 16	<20 - 280	30 - 70
cask	14, 16, 17, 18	<20 - 140	15 - 900
"A" frame	14	140	8
platform	15	420	60
off gas heater	15	140	10
condenser	16	<20 - 140	50 - 65
dissolver	17, 18	700 - 2,800	10 - 50
Miscellaneous*	3, 5, 6, 7, 8, 9, 10, 11, 12, 13, 14	Not Available	Not Available

*plastic, wood, buckets, pallets, metal, fuel holder, tripod, welder, paper, table.

Table 1-11. 221-U Canyon Functional Processes with Equipment and Contaminants of Potential Concern. (page 1 of 4)

Section #	Cell #	Simplified Function(s)	TBP Process Equipment	Contaminants of Potential Concern (COPC)
1	1	Empty		UNH, SO_4, PO_4, NO_3, CO_3, OH, Cl^-, Na, HNO_3, $Fe(NH_4)_2(SO_4)_2$, H_2NSO_3, Fe_3^+, NH_4, TBP, Kerosine
	2	Empty		UNH, SO_4, PO_4, NO_3, CO_3, OH, Cl^-, Na, HNO_3, $Fe(NH_4)_2(SO_4)_2$, H_2NSO_3, Fe_3^+, NH_4, TBP, Kerosine
2	3	RR Tunnel		UNH, SO_4, PO_4, NO_3, CO_3, OH, Cl^-, Na, HNO_3, $Fe(NH_4)_2(SO_4)_2$, H_2NSO_3, Fe_3^+, NH_4, TBP, Kerosine
	4	RR Tunnel		UNH, SO_4, PO_4, NO_3, CO_3, OH, Cl^-, Na, HNO_3, $Fe(NH_4)_2(SO_4)_2$, H_2NSO_3, Fe_3^+, NH_4, TBP, Kerosine
3	5	Uranium Recovery	Feed Receiver Tank (3-1)	UNH, SO_4, PO_4, NO_3, CO_3, OH, Cl^-, Na, HNO_3
	6	Uranium Recovery	Feed Receiver Tank (3-6)	UNH, SO_4, PO_4, NO_3, CO_3, OH, Cl^-, Na, HNO_3
4	7	Uranium Recovery	Feed Utility Holdup (4-1)	UNH, SO_4, PO_4, NO_3, CO_3, OH, Cl^-, Na, HNO_3
	8	Uranium Recovery	Waste Utility Holdup (4-6)	UNH, SO_4, PO_4, NO_3, CO_3, OH, Cl^-, Na, HNO_3, $Fe(NH_4)_2(SO_4)_2$, H_2NSO_3, Fe_3^+, NH_4, TBP, Kerosine
5	9	Uranium Recovery	Organic Sump Holdup (5-1)	UNH, SO_4, PO_4, NO_3, CO_3, OH, Cl^-, Na, HNO_3, $Fe(NH_4)_2(SO_4)_2$, H_2NSO_3, Fe_3^+, NH_4, TBP, Kerosine
	9	Uranium Recovery	Aqueous Sump Holdup (5-2)	UNH, SO_4, PO_4, NO_3, CO_3, OH, Cl^-, Na, HNO_3, $Fe(NH_4)_2(SO_4)_2$, H_2NSO_3, Fe_3^+, NH_4, TBP, Kerosine
	10	Uranium Recovery	Deep Cell Sump (5-6)	UNH, SO_4, PO_4, NO_3, CO_3, OH, Cl^-, Na, HNO_3, $Fe(NH_4)_2(SO_4)_2$, H_2NSO_3, Fe_3^+, NH_4, TBP, Kerosine
6	11	Uranium Recovery	Concentrator Feed Cooler (6-2)	UNH, SO_4, PO_4, NO_3, CO_3, OH, Cl^-, Na, HNO_3
	11	Uranium Recovery	Feed Concentrator Tower (6-4)	UNH, SO_4, PO_4, NO_3, CO_3, OH, Cl^-, Na, HNO_3
	11	Uranium Recovery	Feed Concentrator Condensor (6-5)	UNH, SO_4, PO_4, NO_3, CO_3, OH, Cl^-, Na, HNO_3
	12	Uranium Recovery	Feed Concentrator Feed (6-6)	UNH, SO_4, PO_4, NO_3, CO_3, OH, Cl^-, Na, HNO_3
	12	Uranium Recovery	Concentrator Feed Receiver (6-7)	UNH, SO_4, PO_4, NO_3, CO_3, OH, Cl^-, Na, HNO_3

Table 1-11. 221-U Canyon Functional Processes with Equipment and Contaminants of Potential Concern. (page 2 of 4)

Section #	Cell #	Simplified Function(s)	TBP Process Equipment	Contaminants of Potential Concern (COPC)
7	13	Uranium Recovery	Concentrator Feed Cooler (7-2)	UNH, SO_4, PO_4, NO_3, CO_3, OH, Cl^-, Na, HNO_3
	13	Uranium Recovery	Feed Concentrator Tower (7-4)	UNH, SO_4, PO_4, NO_3, CO_3, OH, Cl^-, Na, HNO_3
	13	Uranium Recovery	Feed Concentrator Condensor (7-5)	UNH, SO_4, PO_4, NO_3, CO_3, OH, Cl^-, Na, HNO_3
	14	Uranium Recovery	Feed Concentrator Feed (7-6)	UNH, SO_4, PO_4, NO_3, CO_3, OH, Cl^-, Na, HNO_3
	14	Uranium Recovery	Concentrator Feed Receiver (7-7)	UNH, SO_4, PO_4, NO_3, CO_3, OH, Cl^-, Na, HNO_3
8	15	Spare	Concentrator Spare Cooler (8-2)	UNH, SO_4, PO_4, NO_3, OH, Cl^-, Na, Fe_3^+, NH_4, TBP Kerosine
	15	Spare	Spare Concentrator Tower (8-4)	UNH, SO_4, PO_4, NO_3, OH, Cl^-, Na, Fe_3^+, NH_4, TBP Kerosine
	15	Spare	Spare Concentrator Condensor (8-5)	UNH, SO_4, PO_4, NO_3, OH, Cl^-, Na, Fe_3^+, NH_4, TBP Kerosine
	16	Spare	Spare Concentrator Feed (8-6)	UNH, SO_4, PO_4, NO_3, OH, Cl^-, Na, Fe_3^+, NH_4, TBP Kerosine
	16	Spare	Concentrator Spare Receiver (8-7)	UNH, SO_4, PO_4, NO_3, OH, Cl^-, Na, Fe_3^+, NH_4, TBP Kerosine
9	17	Waste Treatment	Concentrator Waste Cooler (9-2)	UNH, SO_4, PO_4, NO_3, OH, Cl^-, Na, Fe_3^+, NH_4, TBP Kerosine
	17	Waste Treatment	Waste Concentrator Tower (9-4)	UNH, SO_4, PO_4, NO_3, OH, Cl^-, Na, Fe_3^+, NH_4, TBP Kerosine
	17	Waste Treatment	Waste Concentrator Condensor (9-5)	UNH, SO_4, PO_4, NO_3, OH, Cl^-, Na, Fe_3^+, NH_4, TBP Kerosine
	18	Waste Treatment	Waste Concentrator Feed (9-6)	UNH, SO_4, PO_4, NO_3, OH, Cl^-, Na, Fe_3^+, NH_4, TBP Kerosine
	18	Waste Treatment	Concentrator Waste Receiver (9-7)	UNH, SO_4, PO_4, NO_3, OH, Cl^-, Na, Fe_3^+, NH_4, TBP Kerosine
10	19	Waste Treatment	Concentrator Waste Cooler (10-2)	UNH, SO_4, PO_4, NO_3, OH, Cl^-, Na, Fe_3^+, NH_4, TBP Kerosine
	19	Waste Treatment	Waste Concentrator Tower (10-4)	UNH, SO_4, PO_4, NO_3, OH, Cl^-, Na, Fe_3^+, NH_4, TBP Kerosine
	19	Waste Treatment	Waste Concentrator Condensor (10-5)	UNH, SO_4, PO_4, NO_3, OH, Cl^-, Na, Fe_3^+, NH_4, TBP Kerosine
	20	Waste Treatment	Waste Concentrator Feed (10-6)	UNH, SO_4, PO_4, NO_3, OH, Cl^-, Na, Fe_3^+, NH_4, TBP Kerosine
	20	Waste Treatment	Concentrator Waste Receiver (10-7)	UNH, SO_4, PO_4, NO_3, OH, Cl^-, Na, Fe_3^+, NH_4, TBP Kerosine

Table 1-11. 221-U Canyon Functional Processes with Equipment and Contaminants of Potential Concern. (page 3 of 4)

Section #	Cell #	Simplified Function(s)	TBP Process Equipment	Contaminants of Potential Concern (COPC)
11	21	Waste Treatment	Waste Sampler (11-1)	UNH, SO_4, PO_4, NO_3, OH, Cl^-, Na, Fe_3^+, NH_4, TBP Kerosine
	22	Waste Treatment	Neutralizer (11-6)	UNH, SO_4, PO_4, NO_3, OH, Cl^-, Na, Fe_3^+, NH_4, TBP Kerosine
12	23	Waste Treatment	Waste Sampler (12-1)	UNH, SO_4, PO_4, NO_3, OH, Cl^-, Na, Fe_3^+, NH_4, TBP Kerosine
	24	Waste Treatment	Waste Sampler (12-6)	UNH, SO_4, PO_4, NO_3, OH, Cl^-, Na, Fe_3^+, NH_4, TBP Kerosine
13	25	Waste Treatment	Waste Sampler (13-1)	UNH, SO_4, PO_4, NO_3, OH, Cl^-, Na, Fe_3^+, NH_4, TBP Kerosine
	26	Waste Treatment	Pooled RAW-ROW (13-6)	UNH, SO_4, PO_4, NO_3, OH, Cl^-, Na, Fe_3^+, NH_4, TBP Kerosine
14	27	Uranium Recovery	40 HP Bird Centrifuge 40" (14-1)	UNH, SO_4, PO_4, NO_3, CO_3, OH, Cl^-, Na, HNO_3
	27	Uranium Recovery	Centrifuge Catch (14-2)	UNH, SO_4, PO_4, NO_3, CO_3, OH, Cl^-, Na, HNO_3
	28	Uranium Recovery	40 HP Bird Centrifuge 40" (14-6)	UNH, SO_4, PO_4, NO_3, CO_3, OH, Cl^-, Na, HNO_3
	28	Uranium Recovery	Centrifuge Catch (14-7)	UNH, SO_4, PO_4, NO_3, CO_3, OH, Cl^-, Na, HNO_3
15	29	Uranium Recovery	RCU Sampler (15-1)	UNH, HNO_3, Cl^-, TBP, Kerosine
	30	Uranium Recovery	RCU Sampler (15-6)	UNH, HNO_3, Cl^-, TBP, Kerosine
16	31	Uranium Recovery	RCU Receiver (16-1)	UNH, HNO_3, Cl-, TBP, Kerosine
	32	Uranium Recovery	RCU Receiver (16-6)	UNH, HNO_3, Cl-, TBP, Kerosine
17	33	Uranium Recovery	RC Column (17-2)	UN, HNO_3, Cl^-, Pu
	33	Uranium Recovery, Solvent Treatment	RCW Receiver (17-1)	UN, HNO_3, TBP, Kerosine
	33	Uranium Recovery	RCU Pump Out (17-3)	UNH, HNO_3, Cl^-, TBP, Kerosine
	34	Uranium Recovery	RAF Feed (17-6)	UNH, SO_4, PO_4, NO_3, CO_3, OH, Cl^-, Na, HNO_3
	34	Uranium Recovery	RAW Receiver (17-7)	UNH, SO_4, PO_4, NO_3, CO_3, OH, Cl^-, Na, HNO_3, (H_2NSO_3)-, H^+, Na^+, Fe^{++}, NH, TBP, Kerosine
	34	Uranium Recovery	RA Column (17-8)	UNH, SO, PO, NO, CO, OH, Cl^-, Na, HNO, $Fe(NH_4)_2(SO_4)_2$, H_2NSO_3, TBP, Kerosine

Table 1-11. 221-U Canyon Functional Processes with Equipment and Contaminants of Potential Concern. (page 4 of 4)

Section #	Cell #	Simplified Function(s)	TBP Process Equipment	Contaminants of Potential Concern (COPC)
18	35	Solvent Treatment	ROO Receiver (18-1)	Kerosine
	35	Solvent Treatment	RO Column (18-2)	UNH, HNO_3, Na_2SO_4, H_2SO_4, H_3PO_4, TBP, Kerosine
	35	Solvent Treatment, Waste Treatment	ROW Receiver (18-3)	UNH, Na_2SO_4, H_2SO_4, H_3PO_4, TBP, Kerosine
	36	Uranium Recovery	RAX Feed (18-6)	TBP, Kerosine
19	37	Uranium Recovery	RC Column (19-2)	UN, HNO_3, Cl^-, Pu
	37	Uranium Recovery, Solvent Treatment	RCW Receiver (19-1)	UN, HNO_3, TBP, Kerosine
	37	Uranium Recovery	RCU Pump Out (19-3)	UNH, HNO_3, Cl^-, TBP, Kerosine
	38	Uranium Recovery	RAF Feed (19-6)	UNH, SO_4, PO_4, NO_3, CO_3, OH, Cl-, Na, HNO_3
	38	Uranium Recovery	RAW Receiver (19-7)	UNH, SO_4, PO_4, NO_3, CO_3, OH, Cl^-, Na, HNO_3, (H_2NSO_3)-, H^+, Na^+, Fe^{++}, NH_4, TBP, Kerosine
	38	Uranium Recovery	RA Column (19-8)	UNH, SO_4, PO_4, NO_3, CO_3, OH, CL^-, Na, HNO_3, $Fe(NH_4)_2(SO_4)_2$, H_2NSO_3, TBP, Kerosine
20	39	Solvent Treatment	ROO Receiver (20-1)	Kerosine
	39	Solvent Treatment	RO Column (20-2)	UN, HNO_3, Na_2SO_4, H_2SO_4, H_3PO_4, TBP, Kerosine
	39	Solvent Treatment, Waste Treatment	ROW Receiver (20-3)	UNH, Na_2SO_4, H_2SO_4, H_3PO_4, TBP, Kerosine
	40	Uranium Recovery, Solvent Treatment	RAX Feed (20-6)	TBP, Kerosine

Note: The following Radioisotopes are a COPC in all cells: ^{241}Am, ^{60}Co, ^{134}Cs, ^{152}Eu, ^{154}Eu, ^{237}Np, ^{238}Pu, $^{239/240}Pu$, ^{226}Ra, ^{90}Sr, ^{228}Th, ^{234}U, ^{235}U, ^{238}U

Table 1-12. 221-U Canyon Disposition Team.

Participants			1997 Meeting Dates				
Name	Role	Organization	6/16	6/18	6/26	7/17	7/21
J. Baxter	Structural Engineer	FDNW			√	√	√
R. R. Borisch	Eng. Support	BWHC	√	√			
T. M. Brown	Data Support	CHI	√	√	√	√	√
D. Carlson	Statistician	EQM/Neptune	√	√	√	√	
G. Cox	Eng. Support	BWHC	√	√		√	√
J. W. Donnelly	Regulator	DOE	√	√	√	√	
D. B. Encke	Data Support	CHI	√	√	√	√	√
J. Goodenough	D&D Manager	DOE-RL	√	√			
R. P. Henckel	Task Lead	BHI	√	√	√	√	√
P. S. Innis	Regulator	EPA	√	√	√	√	√
K. Jackson	Sampling Specialist	BHI			√		
M. S. Miller	Facilitator	EQM	√	√	√	√	√
S. Mohan	Regulator	Ecology				√	
L. E. Oates	Co-Facilitator	EQM	√	√	√	√	√
A. Robinson	Radiological Support	EQM		√	√	√	
J. E. Rugg	Environmental Technical Lead	BHI		√	√	√	√
J. P. Sands	EM 40 Project Lead	DOE-RL			√	√	√
W. S. Thompson	Sampling Specialist	BHI			√		
R. Weiss	Analytical Specialist	CHI			√	√	√
R. Winslow	Radiological Engineer	THI			√		

The Global Issues meeting was held on June 10, 1997. External DQO meetings were held June 16, 18, and 26, and July 17 and 21, 1997.

Table 1-13. Inputs.
(page 1 of 4)

Boundaries	Input	Data Needs/Data Sources
Electrical Gallery	Characterization data for equipment, tanks, etc.	• COPCs: - Radionuclides: ^{241}Am, ^{60}Co, ^{134}Cs, ^{137}Cs, ^{152}Eu, ^{154}Eu, ^{237}Np, ^{238}Pu, $^{239/240}Pu$, ^{226}Ra, ^{228}Ra, ^{90}Sr, ^{228}Th, ^{234}U, ^{235}U, ^{238}U (from Table 2-1, pg. 2-18 of DOE/RL-97-11) - PCBs (breakers, switch gear) - Hg (sumps – collection points for condensate leakage, rainwater, liquid spills) - RCRA metals - Asbestos - Th (glass on equipment panels) - Biological contamination from "critters" - Electrical hazards (hot wires/wiring systems) • Class C or less – can be determined through radiological survey data already available • Liquids - sumps are liquid collection points. At least one sump continues to collect liquid. • Liquids in pipes – verify that pipes in the Electrical Gallery contain no fre-standing liquid. If they do contain free-standing liquid, determine if removal of the liquid is necessary. If no liquid is found, assume remaining residual contamination will not greatly contribute to the radionuclide or chemical inventory for the purposes of health & safety or inventory limits.
	Type, location, condition, amount of materials	No materials stored in the Electrical Gallery
Piping Gallery	Characterization data for equipment, tanks, etc.	• COPCs: - same as Electrical Gallery, except electrical hazards - Add process reagents: acetylene tetrabromide, Pb, TBP, bismuth phosphate, selenium, HNO_3 (from Table 2-1, pg. 2-18 of DOE/RL-97-11) - Add kerosene (DEOBASE™) • Class C or less – can be determined through radiological survey data already available • Liquids – verify that pipes in the Electrical Gallery contain no free- standing liquid. If they do contain free standing liquid, determine if removal of the liquid is necessary. If no liquid is found, assume remaining residual contamination will not greatly contribute to the radionuclide or chemical inventory for the purposes of health & safety or inventory limits.
	Type, location, condition, amount of materials	No materials stored in the Piping Gallery

Table 1-13. Inputs.
(page 2 of 4)

Boundaries	Input	Data Needs/Data Sources
Operating Gallery	Characterization data for equipment, tanks, etc.	• COPCs: - same as Electrical Gallery - Add red oil (manometers) • Class C or less – can be determined through radiological survey data • Liquids –verify that pipes in the Electrical Gallery contain no free-standing liquid. If they do contain free-standing liquid, determine if removal of the liquid is necessary. If no liquid is found, assume remaining residual contamination will not greatly contribute to the radionuclide or chemical inventory for the purposes of health & safety or inventory limits. - Strong possibility of cross-contamination between process flow pipes & instrument valves - Determine whether shower drains & incoming pipes are empty. If not empty, take action to characterize & remove liquid.
	Type, location, condition, amount of materials	No materials stored in the Operating Gallery
Crane Way	Characterization data for equipment, tanks, etc.	• COPCs: - same as Electrical Gallery, except drop PCBs • Class C or less – can be determined through radiological survey data • Liquids – none expected
	Type, location, condition, amount of materials	No materials stored in the crane way or crane cab
Ventilation Tunnel	Characterization data for equipment, tanks, etc.	• COPCs: - same as Electrical Gallery, except drop PCBs & asbestos - Add process reagents: Pb, TBP, $BiPO_4$, Se, HNO_3, (from Table 2-1, pg. 2-18 of DOE/RL-97-11 Phase 1 FS) • Class C or less - no radiological survey data for Ventilation Tunnel • Liquids - none likely, condensate has probably evaporated
	Type, location, condition, amount of materials	No materials stored in the Ventilation Tunnel

Table 1-13. Inputs.
(page 3 of 4)

Boundaries	Input	Data Needs/Data Sources
Hot pipe trench	Characterization data for equipment, tanks, etc.	• COPCs: - same as Electrical Gallery - Add process inflows: uranyl nitrate hexahydrate - Add process reagents: acetylene tetrabromide, Pb, TBP, bismuth phosphate, selenium, HNO_3 (from Table 2-1, pg. 2-18 of DOE/RL-97-11) - Add process feed materials: UNH, H^+, Na^+, SO_4^+, PO_4^+, NO_3^-, Cl^-(from HW- 19140, Technical Manual, Nov. 10, 1951) • Class C or less - no radiological survey data for hot pipe trench • Liquids – unknown nature/amounts in pipes.
	Type, location, condition, amount of materials	No materials stored in the hot pipe trench
Cells	Characterization data for equipment, tanks, etc.	Definition of process equipment: equipment within the cells that is jumpered to the walls or otherwise installed • COPCs: - same as Electrical Gallery - Add process inflow: uranyl nitrate hexahydrate - Add process reagents: acetylene tetrabromide, Pb, TBP, bismuth phosphate, selenium, HNO_3 (from Table 2-1, pg. 2-18 of DOE/RL-97-11) - Add COPCs from PUREX, REDOX, B Plant* • Class C or less - no radiological survey data for Cells • Liquids - unknown nature/amounts in process equipment and tanks within the cells - If liquid is found, sample for process COPCs - If no free standing liquid is found, assume remaining residual contamination will not greatly contribute to the radionuclide or chemical inventory for purposes of health & safety or inventory limits

Table 1-13. Inputs.
(page 4 of 4)

Boundaries	Input	Data Needs/Data Sources
Cells (cont.)	Type, location, condition, amount of materials	Definition of " disposed material": any piece of equipment or debris that is not process equipment or cannot be determined as process equipment • COPCs: - same as Electrical Gallery - Add process inflow: uranyl nitrate hexahydrate - Add process reagents: acetylene tetrabromide, Pb, TBP, bismuth phosphate, selenium, HNO_3 (from Table 2-1, pg. 2-18 of DOE/RL-97-11) - Add COPCs from PUREX, REDOX, B Plant* • Class C or less - no radiological survey data for non-process equipment within cells • Liquids – unknown nature/amounts in process equipment and tanks within the cells - If liquid is found, sample for all COPCs - If empty, assume remaining residual contamination will not greatly contribute to the radionuclide or chemical inventory for the purposes of health & safety or inventory limits • Liquids – unknown nature/amount within the cells themselves - Sample Cell 10 first...it is the collection point for liquids from the rest of the building, except the galleries and crane way - Will give an indication of what might be in the other cells - Will give an indication of what might be in underground pipe
Canyon Deck Crane	Characterization data for equipment, tanks, etc.	Definition of "disposed material:" all equipment and debris on the canyon deck
	Type, location, condition, amount of material	• COPCs: - same as for the Cells • Class C or less - no radiological survey data • Liquids - unknown nature/amounts in equipment - if liquid is found, sample for all COPCs - If no free-standing liquid is found, assume remaining residual contamination will not greatly contribute to the radionuclide or chemical inventory for the purposes of health & safety or inventory limits

Table 1-14. Decision Limit Criteria.

Criteria/Decision Limit	Criteria Reference
TRU	Transuranic waste is defined as "Waste (without regard to source of form) that is contaminated with alpha emitting transuranium (TRU) radionuclides with an atomic number >92 and with half-lives greater than 20 years and concentrations greater than 100 nCi/g alpha per gram of waste at the time of assay." In addition Radium sources and waste with ^{233}U concentrations greater than 100 nCi/g of the waste matrix are managed as TRU waste. Transuranic elements are actinides with atomic numbers from 93 (neptunium) through 103 (lawrencium). Most have isotopes with half-lives of the order of minutes or less and, thus, are not of substantive health concern. The nuclides of greatest interest in radiation protection are typically ^{237}Np, ^{238}Pu, ^{239}Pu, ^{241}Am, and ^{244}Cm.
Class C	WHC (1996)

Table 1-15. Endpoint: Entombment.
1.0 Structural Capacities (page 1 of 3)

Information Needed	What is Available?	Where is the Source?	What Additional Information is Needed?
Structural Assessment			
1.1 Available documents review			
1.1.1 Civil/structural drawings	Structural drawings including changes	Hanford Site record system	Additional walkdown to establish current as-built condition
1.1.2 Construction specifications	Original facility construction specifications	Hanford Site record system	Locate and review
1.1.3 Original designcriteria	Subset of drawings, some illegible	Structural drawings in Hanford Site record system	Obtain legible set of copies from originals and review
1.1.4 Soil investigations	Soil boring and plate bearing test data from the original construction. Additional soil reports for more recent projects.	• Hanford Site record system. • DuPont (1945, Vol. III, pp 815-817) • Dames & Moore (1989) • Shannon & Wilson (1994) • Baxter and Moore (1997)	Available information is adequate to support a preliminary structural assessment and evaluation for bearing capacities and projected settlements during and after entombment.
1.1.5 Structural design calculations	Not available	Unknown	Perform structural calculations to assure safety during and after entombment operations
1.1.6 Existing reports review	Walkdown reports for U Plant and B Plant seismic analyses	• Baxter (1991) • Wagenblast et al. (1988) • Winkel et al. (1989)	Have in file
1.2 Site inspection for structural condition			
1.2.1 Confirm that drawings as representative of the building as-built condition.	U Plant walkdown for structural condition only, B Plant walkdowns and seismic analyses	• Baxter (1991) • Wagenblast et al. (1988) • Winkel et al. (1989)	As a minimum, visual inspection of the currently unexamined spaces within U Plant will be required
1.2.2 Assess current condition of the building for deterioration of materials, evidence of foundation settlements, intersegment offsets, and structural member or connection distress	U Plant walkdown for structural condition only, B Plant walkdowns and seismic analyses	• Baxter (1991) • Wagenblast et al. (1988) • Winkel et al. (1989)	Walkdowns have been completed for both U Plant and B Plant. An additional walkdown should be conducted to compare the two facilities.

Table 1-15. Endpoint: Entombment.
1.0 Structural Capacities (page 2 of 3)

Information Needed	What is Available?	Where is the Source?	What Additional Information is Needed?
Structural Assessment			
1.3 Structural analysis to establish load capacities			
1.3.1 Establish loading and performance criteria	Use current building codes and current Hanford Site natural phenomena loading requirements	• ASCE 11-90 • DOE Order 420.1 • 10 CFR 61	None required
1.3.2 Primary structural systems. Identify the primary vertical and later force paths that transfer loads to the foundations. Identify the members and connections in each of these systems and paths, and the physical properties and details for each of these structural elements.	Partially complete with current inventory of seismic studies for B Plant.	• Wagenblast et al. (1988) • Winkel et al. (1989) • Scott and Moody (1996)	An engineering study will be performed to complete the identification of the primary vertical and horizontal load resisting structural systems, the force paths, and the primary resisting members and connections.
1.3.3 Establish the as-built strength of the materials used for the structural load carrying systems	Existing studies of B Plant provide strength information that can be extrapolated to U Plant	• Wagenblast et al. (1988) • Winkel et al. (1989) • Cruz (1992)	Existing data can be extrapolated to U Plant, a confirmatory coring and testing plan will be developed and completed to verify the preliminary extrapolation.
1.3.4 Member analyses. Analyze critical members and their connections to determine resistant capacities and compare these capacities to demand capacities for the loading conditions expected during entombment using current design criteria. Use capacity reduction factors to account for different detailing practices allowed by original design codes.	Lateral load system evaluations are available for B Plant. These evaluations have not considered detailing design changes with code evolution. Gravity load analyses are not available. Additional load cases will have to be considered representing operations during and after entombment	• Wagenblast et al. (1988) • Winkel et al. (1989) • Scott and Moody (1996)	A study will be conducted to assess structural demands on structural members for comparison to their capacities based on current condition. A subset is complete, more work is needed to address all loadings to be encountered during and after entombment.

Table 1-15. Endpoint: Entombment.
1.0 Structural Capacities (page 3 of 3)

Information Needed	What is Available?	Where is the Source?	What Additional Information is Needed?
Structural Assessment			
1.4 Structural evaluation, Summary Report			
Integrate the information and data regarding the existing building with the results from analyses of critical components and connections to determine the existing structural condition of the building. Provide an evaluation of the actual/ required capacity for the important members for all load cases to be encountered during and after entombment. If the building meets the performance criteria, the structural condition is adequate. If the structural condition is inadequate, conduct an upgrade study to evaluate cost-benefits; or a recommendation will be made to eliminate the entombment option.	See sections 1.1 through 1.3 for available information.	See sections 1.1 through 1.3 for available information.	Structural Feasibility Study is required to provide additional information in the following areas: • Required additional walkdowns and remote inspections for facility areas not accessible by radiation worker qualified personnel. • Additional structural core testing and NDE/NDT inspections required at U Plant. • Engineering study to complete the facility lateral load analyses and establish vertical load limits for the floors and roof during and after entombment. • Engineering study to identify structural elements requiring backfitting prior to entombment. • Engineering study to develop backfill/grout specifications, backfill procedures, and construction sequences for the entombment operations.
1.5 Cost-Impact Study			
Conduct a cost-impact study to estimate the cost of bringing the building into compliance with current standards. Integrate this study with the other cost factors being developed to support the entombment option.	Interface to overall program.	Interface to overall program.	See U Plant Entombment Program Plan.

Table 1-16. Endpoint: Entombment.
2.0 Flow Paths (page 1 of 2)

Information Needed	What is Available?	Where is the Source?	What Additional Information is Needed?
Flow Paths Assessment			
2.1 Available document review			
2.1.1 – 2.1.6	Same as 1.1.1 - 1.1.6 in Table 6-1. Focus of review is flowpaths for liquids into and out of the canyon. No work to date.	Same as 1.1.1 - 1.1.6 in Table 6-1.	Interface to groundwater hydrology
2.1.7 Existing reports – flowpath assessments	Remote closed-circuit television (CCTV) inspection of the B-Plant 24 Inch Cell Drain Header (Werry 1990)	Hanford Site Record System	Remote CCTV inspection of the U-Plant 24 Inch Cell Drain Header
2.2 Site inspection - Flow Paths			
2.2.1 Confirm drawings are an accurate representation of all flow paths into and out of U Plant: • access ways; doors, airlocks, penetrations • construction joints, expansion joints, cover block gaps • mechanical and piping penetrations	No work to date. Facility drawings are available in the Hanford Site Record System.	Hanford Site Record System	Walkdowns and remote inspections to establish the as-built configuration of all flow paths.
2.2.2 Assess current conditions of the flow paths for: • building modifications • deterioration of materials • evidence of building settlement • long-term deflections that may influence flow paths	No work to date. Facility drawings are available in the Hanford Site Record System.	Hanford Site Record System	Walkdowns and remote inspections to establish the as-built configuration of all flow paths. Interface to groundwater hydrology

Table 1-16. Endpoint: Entombment.
2.0 Flow Paths (page 2 of 2)

Information Needed	What is Available?	Where is the Source?	What Additional Information is Needed?
Flow Paths Assessment			
2.3 Structural analysis for evaluation of flow paths and remedial design			
2.3.1 Evaluate concrete bulk properties • permeability • void ratio • density	Open literature	Not applicable	Suggest using handbook values for initial groundwater modeling
2.3.2 Evaluate fracture flow parameters • aperture • length • tortuosity	Drawings provide initial design configurations.	Hanford Site Record System	Walkdowns conducted under item 2.2.2 will provide information on current condition of each aperture. Interface to groundwater modeling. Will require a joint effort to decide on information needs and required model simplifications.
2.3.3 Design plugs for large scale building apertures to be installed during entombment operations.	No work to date.	No work to date.	Activity for feasibility study.
2.4 Structural assessment of flow paths			
No work to date.	No work to date.	No work to date.	

2.0 QUALITY ASSURANCE PROJECT PLAN

The following section identifies the individuals or organizations participating in the project and discusses specific roles and responsibilities. This section also discusses the quality objectives for measurement data and discusses the special training requirements for the staff performing the work.

2.1 PROJECT MANAGEMENT/DATA QUALITY OBJECTIVES

The following sections cover the basic area of project management, including project history and objectives, roles and responsibilities of project participants, etc. These elements ensure that the project has a defined goal, that the participants understand the goal and the approach to be used, and that the planning outputs have been documented.

2.1.1 Project/Task Organization

Figure 2. 221-U Facility Characterization - Project Organization Chart.

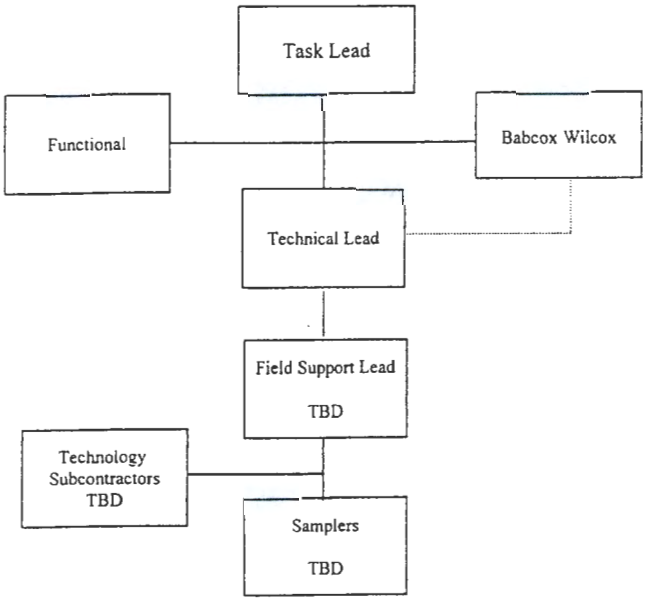

2.1.2 Problem Definitions/Background

See Sections 1.1 for background information about the site under investigation and a definition of the problem to be resolved.

2.1.3 Project/Task Description

See Section 3.0 for a detailed description of the project to be performed.

2.1.4 Quality Objectives and Criteria for Measurement Data

The detection limits for each of the analyses to be performed are summarized in Table 3-2. The accuracy and precision will meet the requirements of DOE/RL-97-68, Volume 4 (DOE-RL 1996). These requirements were derived as part of Step 6 in the DQO process (see Section 1.4.6). Specific field methods have not been identified. This will be addressed in the specific FIG/Work Instruction. If there is not enough sample media to meet all of the HASQARD requirements, a prioritization of the sample media will be determined by the team.

2.1.5 Project Narrative

Refer to the following sections that contain the information requested by *EPA Requirements for Quality Assurance Project Plans for Environmental Data Operations* (EPA 1994a). See Section 1.3 for a clear description of the hypothesis to be tested and the anticipated use of the resulting data. Refer to Section 2.2 for requirements related to analytical methods, quality control, and sample handling and custody. See Section 3.0 for a description of the proposed survey design, sampling locations for various media types, and assessments to be performed.

2.1.6 Special Training Requirements/Certification

Training or certification requirements for personnel are described in BHI-HR-02, *ERC Training Procedures,* and BHI-QA-03, *ERC Quality Assurance*, Plan Numbers 5.1, "Field Sampling Quality Assurance Program Plan," and 5.2, "Onsite Measurements Quality Assurance Program Plan." Training shall be conducted in accordance with BHI-EE-01, Procedure 1.12, "Indoctrination, Training, and Qualification." Site-specific training will be outlined in the governing work package.

2.1.7 Documentation

The desired data delivery package and sample holding times will be specified on the project-specific Sample Authorization Form (SAF) and on the Field Sampling Requirements (FSR) form, respectively (BHI-EE-01, Procedure 2.0, "Sample Event Coordination"). Field documentation requirements are discussed in Section 2.2.11.

2.2 MEASUREMENT/DATA ACQUISITION

The following section presents the sampling process design and the requirements for sampling methods, sample handling and custody, analytical methods, and field and laboratory quality control. This section also addresses the requirements for instrument calibration and maintenance, supply inspections, data acquisition, and data management.

2.2.1 Sampling Process Design

For details on the rationale for the design, (see Section 1.4.7) field screening methods to be implemented will be in the FIG, number and type of samples to be collected (Section 3.1), sampling locations and frequency, and parameters of interest see (Table 3-2 [e.g., physical, chemical, and geotechnical]).

2.2.2 Sampling Methods Requirements

The procedures to be implemented in the field should be consistent with those outlined in BHI-EE-01, Section 4, "Soil Ground Water, and Biota Sampling." Any sampling not addressed in this procedure will be described in the work package.

2.2.3 Sampling Handling and Custody Requirements

All sample handling, shipping, and custody requirements should be performed in accordance with BHI-EE-01, Procedure 3.1, "Sample Packaging and Shipping;" Procedure 3.0, "Chain of Custody;" and Procedure 4.2, "Sample Storage and Shipping Facility."

2.2.4 Sample Preservation, Containers, and Holding Times

Sample preservation and container details will be addressed on the SAF/FSR in accordance with BHI-EE-01, Procedure 2.0.

2.2.5 Analytical Technique Requirements

Analytical techniques are provided in Table 3-2. Specific field methods have not been identified. This will be addressed in the specific FIG/Work Instruction.

2.2.6 Quality Control Requirements

The Quality Control (QC) procedures must be followed in the field and laboratory to ensure that reliable data are obtained. When performing this field sampling effort, care shall be taken to prevent the cross-contamination of sampling equipment, sample bottles, and other equipment that could compromise sample integrity.

QC requirements for the field sample collection process are as follows:

- One equipment rinsate blank will be collected for each type of sampling equipment used in the field to assess the cleanliness of the sampling equipment and the effectiveness of the sample equipment decontamination process. The equipment blank will be collected using ASTM Type II water passed through the decontaminated sampling equipment before use.

  The rinsate blank will be analyzed for the same radionuclide and chemical analytes as actual samples collected during use of the equipment.

- One duplicate sample, or a minimum of one field duplicate per every 20 samples of the same matrix, will be collected. Field duplicates are two samples produced from the same material and collected in the same location or from the same equipment. Field duplicates provide information concerning the homogeneity of the matrix, and an evaluation of the precision of the sampling and analysis process.

2.2.7 Instrument/Equipment Testing, Inspection, and Maintenance Requirements

All field screening and analytical instruments shall be tested, inspected, and maintained in accordance with BHI-QA-03, Procedure 5.2. The results from all testing, inspection, and maintenance activities shall be recorded in a bound logbook in accordance with procedures outlined in BHI-EE-01, Procedure 1.5, "Field Logbooks."

2.2.8 Instrument Calibration and Frequency

All field screening and analytical instruments shall be calibrated in accordance with BHI-QA-03, Procedure 5.2, "Onsite Measurements Quality Assurance Program." The results from all instrument calibration activities shall be recorded in a bound logbook in accordance with procedures outlined in BHI-EE-01, Procedure 1.5, "Field Logbooks." Tags will be attached to all field screening and onsite analytical instruments, noting the date when the instrument was last calibrated, along with the calibration expiration date.

2.2.9 Inspection/Acceptance Requirements for Supplies and Consumables

These items will be addressed in the work package as required.

2.2.10 Data Management

Data resulting from the implementation of this SAP will be managed and stored by the Environmental Restoration Contractor's (ERC) Sample and Data Management organization in accordance with BHI-EE-01, Section 2, "Sample Management."

All validated reports and supporting analytical data packages shall be subject to final technical review by qualified reviewers before their submittal to regulatory agencies or inclusion in reports or technical memoranda, at the direction of the Bechtel Hanford, Inc. (BHI) Project Task Lead. Electronic data access, when appropriate, shall be through computerized databases (i.e., Hanford Environmental Information System). Where electronic data are not available, hard copies will be provided in accordance with Section 9.6 of the *Hanford Federal Facility Agreement and Consent Order* (Ecology, et al. 1994).

2.2.11 Field Documentation

Field documentation shall be kept in accordance with BHI-EE-01 including the following procedures:

- Procedure 1.5, "Field Logbooks"
- Procedure 1.13, "Environmental Site Identification and Information Reporting"
- Procedure 3.0, "Chain of Custody."

2.3 ASSESSMENT/OVERSIGHT

2.3.1 Assessments and Response Actions

The Compliance and Quality Programs Group may conduct random surveillance and assessments in accordance with BHI-MA-02, *ERC Project Procedures*, Procedure 5.3, "Self-Assessments," to verify compliance with the requirements outlined in this sampling and analysis plan, project work packages, BHI-QA-01, *ERC Quality Program*, and BHI-QA-03.

Deficiencies identified by one of these assessments shall be reported in accordance with BHI-MA-02, Procedure 5.3. When appropriate, corrective actions will be taken by the Project Engineer in accordance with HASQARD, Volume 1, Section 4.0 (DOE-RL 1996) to minimize recurrence.

2.3.2 Reports to Management

Management shall be made aware of all deficiencies identified by the self-assessments and shall report deficiencies in accordance with BHI-MA-02, Procedure 5.3.

2.4 DATA VALIDATION AND USABILITY

2.4.1 Data Review, Validation, and Verification Requirements

Data verification and validation is performed on analytical data sets, primarily to confirm that sampling and chain-of-custody documentation is complete, sample numbers can be tied to the specific sampling location, samples were analyzed within the required holding times, and analyses met the data quality requirements specified in the sampling and analysis instruction.

2.4.2 Validation and Verification Methods

All data verification and validation shall be performed in accordance with BHI-EE-01, Procedure 2.5, "Data Package Validation Process;" WHC-SD-EN-SPP-001, *Data Validation Procedures for Radiochemistry Analyses* (WHC 1993a); and WHC-SD-EN-SPP-002, *Data Validation Procedures for Chemical Analyses* (WHC 1993b). A validation performed in a comparable manner to Level C will be performed on onsite laboratory analyses. This allows the review of all QC data, transcription error verification, and holding time review. This level is the middle validation level and does not require review of raw data and recalculation of data. Should problems arise from the level C review, the project reserves the option of recalculation and review of raw data.

2.4.3 Reconciliation with User Requirements

A DQA shall be performed on the resulting analytical data in accordance with (EPA 1996). The DQA is a scientific and statistical evaluation of the data set to determine if the data are the right type, quality, and quantity to support their intended use.
Data assessment is performed after data validation of the survey and laboratory analyses. The following steps are taken in data assessment.

1. Review the project DQOs. This includes the variance, decision levels based on ERDF WAC (BHI 1996) and any groundwater protection/risk levels.

2. Examine the distribution of data. The distribution should be examined both spatially on a map of the structure or area of soil being evaluated, and examined for numerical distribution. An assessment whether the distribution is normal or skewed should be made.

3. Examine the data for outliers for anomalous values. This includes both statistical outliers, anomalous values, results that are above the decision level, and results that are two or more times greater than the decision level. Any anomalous values should be validated and closely examined to assess potential reasons for the anomaly. Assess any data point that is above the decision levels.

4. Determine whether the data are consistent with the conceptual ideas presented in the DQO. Compare the statistical results to other surveys and to other areas of the facility that use the same model. If the conceptual model differs from the data, the decision makers and technical staff must determine the consequences of using a different conceptual model.

5. Use the Phase I data from the canyon deck to determine the isotopic distribution of radionuclides in other areas of the facility. Compare COPCs to the appropriate action levels to determine whether a sufficient number of samples has been collected.

Table 2-1. Decision Makers and Technical Support Staff.

Participant	Company	Responsibility
P. S. Innis	EPA	Decision Maker
J. W. Donnelly	Ecology	Decision Maker
J. P. Sands	DOE	Decision Maker
R. P. Henckel	Bechtel Hanford, Inc.	Task Lead
J. E. Rugg	Bechtel Hanford, Inc.	Technical Lead
Thomas M. Brown	CH2M Hill Hanford, Inc.	Technical Data Coordinator
D. B. Encke	CH2M Hill Hanford, Inc.	Scientist
R. C. Winslow	Bechtel Hanford, Inc.	Radiological Engineer
R. L. Weiss	Bechtel Hanford, Inc.	Laboratory and Analytical Services
R. R. Borisch	B&W Hanford Company	Technical Support Staff

3.0 SAMPLING OBJECTIVES

This Field Sampling Plan outlines the strategy and procedures to be used for sample collection and analysis that provides necessary information to support the Canyon Disposition Initiative (CDI). The selection of analytical parameters, laboratory arrangements, sample locations and frequencies, sampling equipment selection, and QC measures are based on the DQO (BHI 1997a).

3.1 SAMPLING LOCATIONS AND FREQUENCIES

This section identifies the general sampling strategy identified by the DQO process. General sampling locations and minimum number of samples have been identified; since exact sample locations will remain unknown until field activities commence.

Several unknown physical conditions are posed by the 221-U Facility creating uncertainties such as use of sampling equipment and accessability. Therefore, the key to success of the characterization effort lies within efforts conducted in the field. Section 3.1.11 describes the general field approach.

3.1.1 Canyon Deck

Prior to collection of samples or movement of major pieces of equipment, the Canyon Deck Area shall be NDA'd for TRU materials and a determination made that the potential for criticality does not exist (or has been addressed).

3.1.1.1 Concrete. Based on the historical survey data, the canyon deck is an area where the removable contamination and general dose rates are highest. It represents one of the worst-case areas in terms of concentration of most of the COPCs; however, no isotopic or depth of distribution data for any COPCs are available. A two-phased sampling approach using stratified biased sampling is planned.

Process knowledge and dose rate data indicate that the walkway area of the deck has relatively lower levels of contamination when compared with the areas over the cells and hot pipe trench. The dose rate is higher in these areas because of the processes that took place there and the equipment is now being stored on top of the cover blocks. Based on this information, it is reasonable to divide the canyon deck into three strata: the walkway, areas (not on the walkway) where equipment is not stored but may have been in the past, and areas where equipment is currently being stored (equipment will not be moved to collect Phase I samples). It is anticipated that this location may substantially contribute to the total variability; therefore, stratifying in this manner will take location into account.

A phased sampling approach will be used so that the initial information gathered may be used, not only for the characterization of the canyon deck, but also to provide information that will be applied to other areas of the facility that do not have associated isotopic distribution or depth data. Phase I involves collecting 3 samples in each of the three strata. Locations will be biased by survey information and/or visual inspection for staining; the number of Phase II samples will be determined based on a DQA of the Phase I data.

A total of 9 samples will be collected during Phase I. Only surface samples (maximum depth ½ inch) will be collected because there is no driver for COPCs to penetrate the concrete. If the DQA of these data indicates that the COPCs have not been adequately characterized, additional samples may be collected. Each sample will be analyzed for all of the COPCs.

3.1.1.2 Canyon Equipment. Process knowledge and dose rate data indicate that the equipment on the deck may substantially contribute to the chemical and radiological inventory of the facility. The first step in characterizing the equipment is to identify the locations and types of equipment that are currently being stored. An inventory from the video, digital pictures, and historical inventory to classify the equipment into categories, such as dissolver, centrifuge, etc., so that representative samples can be collected.

Once the equipment is categorized, each piece of equipment that may have contained liquid will be examined using NDE, visual inspection, or other non-intrusive method (see Appendix A) to determine the presence or absence of free-standing liquid. If free-standing liquid is found, it will be noted in the field logbook, and its volume estimated and sampled using one of the technologies identified in Appendix A, if possible. Samples from oil reservoirs for PCBs analysis will only be taken if the oil is associated with electrical equipment. Estimated volume of all oils identified in the field logbook will be recorded. The void space in all equipment that is larger than a 55-gallon drum will be estimated and recorded in the field logbook.

If possible, at least 2 liquid samples from each category of equipment will be sampled and analyzed for all COPCs. For each category of equipment, surveys will be conducted for general dose, gamma emitting radionuclides, smearable & fixed alpha contamination, and NDA for TRU on a minimum of three pieces of equipment in each category. Note: Some categories may contain less than three pieces of equipment. For these cases, all the equipment should be surveyed. All equipment that is suspected of containing fuel shall be NDA'd for TRU. Shipping casks should be opened, verified "empty," and documented via photos or video. Where feasible, survey/detection methods identified in Appendix A will be utilized. Otherwise, routine BHI radiological survey techniques identified in BHI-SH-02, *Safety and Health Procedures*, should be used. The total number of samples will be unknown until the number of categories is determined.

3.1.2 Cells

Prior to collection of samples or movement of equipment within the cells, NDA for TRU materials and make a determination that the potential for criticality does not exist (or has been addressed).

3.1.2.1 Concrete. The concrete in the cells will be sampled so that each of the four processes executed in the cells is represented (see DQO for the 4 processes); ideally, the cells (33, 35, 37, 39, 40) associated with multiple processes will be accessible and sampled. Equipment on top of the cells may have to be moved to gain access. Cover block(s) on cell to be examined will be removed. Caution: If general area dose rates are above the limits established by the radiation work permit, it may be necessary to replace some of the blocks to reduce the dose rate. Each cell should be video taped or photographed to document the equipment in the cell and the condition of the cell. The cell should be surveyed to obtain general area dose and gamma-scan data. Some cells may be so full of equipment or liquid that collection of a concrete sample is not possible. The goal of sampling will be to collect at least 2 concrete cores from cells for each of the four processes identified in the DQO. Concrete core samples should be obtained using methods identified in Appendix A, as early in the implementation of the cell coverblock removals as possible. If a sample cannot be collected from the same-process cells early in the coverblock removal activities, a sample will be collected from the concrete in the hot pipe trench adjacent to the process cells.

The goal during sample collection will be to collect a core as near the drain as possible or where staining is present, so that potential worst-case contamination may be determined. The location of sample collection should be documented with video and/or photographs. Sample cores will be 15.24 to 20.32 cm (6 to 8 in.) long, and will be scanned to determine the vertical distribution of contamination. Each core will be analyzed from the surface of the core and from the deepest interval at which contamination is present, based on the scan.

Once two samples from every process are sampled, additional samples will be collected based on the judgement of the field team about the condition of a cell compared with previous cells. For example, if a uranium process cell is encountered that looks more stained than previous uranium process cells, or has non-process equipment stored in it, and the stained areas or the floor are accessible, a sample will be collected. If the floor concrete is not accessible, but wall concrete can be accessed, a sample of wall concrete will be collected. At the end of the sample collection activities, samples from same-process cells will be selected for laboratory analysis so that at least two, and at most three, samples from each process will be analyzed. The samples from locations nearest the drains or where the most staining occurred will be selected for laboratory analyses. If a determination cannot be made about which sample(s) are most representative, samples will be randomly selected.

3.1.2.2 Equipment. When the cells are uncovered for characterization, the equipment will be inventoried and documented with still or video pictures. The equipment that is jumpered or otherwise installed will be classified as process equipment; all other equipment in a cell will be classified as non-process equipment. This classification will help guide sample collection and determine what analyses will be performed.

Each piece of process equipment that may have contained liquid will be non-intrusively examined using a method described in Appendix A to determine the presence or absence of free-standing liquid. If free-standing liquid is found, it will be noted, and its volume estimated and sampled using a method described in Appendix A, if possible. The liquid and sludge in the

cell 10 tank (tank 5-6) will be sampled, so that each can be analyzed. The sludge sample will be used for the characterization of the pipe drain in case a sludge sample cannot be collected there. Oil reservoirs will only be sampled if the oil is associated with electrical equipment. The volume of oil present in any piece of equipment will be estimated and recorded. Each piece of non-process equipment that may have contained liquid will be examined in the same manner as the process equipment; volume estimates of liquid and oil will be calculated. Liquid samples from the equipment in the cell will be collected only if a similar type of equipment on the canyon deck has not been previously sampled. Based on equipment use, each piece that may contain TRU will be assayed. A dose rate from each piece of equipment will be obtained and a GEA will be done if dose levels indicate a potential for significant holdup of materials.

The goal of sampling the equipment in the cells is to obtain at least one liquid sample to represent each process and to obtain a representation of the non-process liquid that may be present. Therefore, process equipment sampling should result in 1 to 4 samples, dependent upon the amount of liquid that is present in the process equipment. Whether or not liquid is found in process equipment, tank 5-6 (cell 10) will be sampled. Liquids will be analyzed for volatile organics. Other samples that will be analyzed are the ones from the cells with the highest survey readings or the largest amount of liquid.

The number of samples from the non-process equipment that will be analyzed will be unknown until the types of equipment are understood and the amount of liquid is estimated. If no liquid is present, or similar types of equipment on the canyon deck were sampled, no samples from the non-process equipment in the cells need be analyzed. At the other extreme, every piece of non-process equipment may be sampled, resulting in several samples for analysis.

3.1.3 Pipe Drain

The COPCs related to the drain pipe are all of the possible process COPCs from the 221-U Facility, and also the COPCs related to the other facilities where equipment may have been stored.

Using robotics or other remote viewing method (Appendix A) the interior of the 24-inch drain pipe will be videoed to assess the structural integrity of the pipe and to determine where liquid may be draining from. Radiological survey will be obtained for the length of the pipe, this should be correlated with the video tape. If scale or sludge is present, a sample will be obtained and analyzed for the entire lists of COPCs.

3.1.4 Hot Pipe Trench

Prior to intrusive work taking place within the Hot Pipe Trench, NDA for TRU materials and make a determination that the potential for criticality does not exist (or has been addressed).

3.1.4.1 Concrete. Because of accessibility issues, it is proposed to avoid collection of any samples from the hot pipe trench concrete by calculating the radiological and chemical inventory based on the results of concrete samples in the process cells and a remote survey (GEA) of the trench. An instance when samples may be collected from the concrete in the hot pipe trench is if the concrete in a parallel area of the cells is not accessible.

The cover block(s) from the hot pipe trench will be removed and video taped/photographed to show the condition of the trench, concrete, and piping. A remote survey of the trench will be performed using one of the methods identified in Appendix A. Survey data will be correlated with the video tape/photographs. If concrete samples are required, the same sampling methods as used in the cells will be used to obtain the sample from the trench. If possible, obtain the sample from the deepest part of that particular section of the trench (trench floor slopes towards the cells).

3.1.4.2 Pipes. The pipes will be examined for free standing liquids using NDE. The volume of liquid in the pipes will be estimated. If the remote survey of the trench indicates a potential for a significant radiological inventory in the pipes, perform an assay to determine if TRU materials are present.

3.1.5 Galleries and Crane Way

3.1.5.1 Concrete. A sample from each sump will be collected from the electrical gallery and composited into a single analytical sample. The sample will be analyzed for chemical COPCs (pH, RCRA metals, PCBs, asbestos) associated with the galleries and radiological-screen for GEA, gross alpha, and gross beta.

3.1.5.2 Pipes. The non-process pipes in the galleries will be identified and those still in use will be marked. Non-process pipes include steam, steam condensate, raw water, demineralized water, filtered water, instrument air, fire protection, and sanitary sewer lines. For the non-process pipes not in-use, the low point drains will be identified and a liquid sample collected from each line that contains a liquid. These will be composited into one analytical sample and analyzed for pH, RCRA metals and anions. The volume of liquids remaining in the pipes will be analyzed using NDA if possible. A routine radiological survey of all the non-process piping will be performed.

A radiological survey of all process piping will be performed, to include smearable and fixed contamination and dose rate measurements. If practical, survey technologies identified in Appendix A will be used, otherwise routine methods will be used. The low point of each system will be identified and NDA performed to determine the presence of liquids and estimate the volume if present. A sample from each process line that contains liquid will be collected. Samples will be analyzed for pH, RCRA metals, anions, and tributyl phosphate (semivolatile organics); radiological screen for GEA, gross alpha, and gross beta.

3.1.6 Railroad Tunnel

The railroad tunnel will be video taped and/or photographed. A radiological survey of the railroad tunnel will be performed to include general area dose rates, smearable, and fixed contamination. Technologies identified in Appendix A will be utilized if practical, otherwise routine survey methods will be used. Video tape/photographs will be correlated with the radiological surveys if feasible.

NOTE: For ALARA and safety reasons, personnel may not be allowed into the railroad tunnel, and surveys and sampling may have to be accomplished remotely. However, the preferred method is to place personnel into the tunnel for sample/data collection.

As with the crane way and the galleries, the method for estimating the non-radiological inventory is based on collecting samples from biased locations. Locations will be biased based on staining or radiological survey results. A minimum of 8 biased locations will be sampled and composited into 2 samples with 4 grabs in each sample. If 12 biased locations can be identified, they will be composited into samples. Composite samples will consist of a maximum of four grabs per composite sample. The stained areas should be located throughout the length of the railroad tunnel. Samples will be analyzed for the entire list of COPCs for solids.

3.1.7 Ventilation Tunnel

The ventilation tunnel will be remotely video taped/photographed and radiologically surveyed. The survey data will be correlated with the video tape/photos. The radiological survey should include general areas dose rates, at a minimum. Additional radiological and/or chemical data will be collected using technologies identified in Appendix A, if practical. A dust/scale sample will be collected remotely by compositing materials from the entire length of the tunnel, if possible. The sample will be analyzed for the entire list of chemical COPCs and radiologically screened for GEA, gross alpha, and gross beta.

3.1.8 Samples for Structural Analysis

Under the direction of the 221-U CDI team's structural expert, four sections of the canyon will be selected for obtaining core samples. Three cores will be obtained from each section a minimum of 5 inches in diameter and 12 inches deep. (**NOTE:** Cores must be of sufficient length to make a right cylinder with surfaced faces with length at least twice the diameter, i.e., 5 inches in diameter by 10 inches long). One core should be within 5 feet of the canyon deck, one approximately halfway between the deck and the roof, and the third within 5 feet of the roof. A total of twelve core samples will be collected and sent to a laboratory for compressive strength testing. Trenches will be made proximate to each of the coring locations and a minimum of three horizontal rebar samples at least 12-inches long for each core will be taken. A total of 36 rebar samples are to be tested for tensile strength.

Both ends of U Plant down to the elevations of the process sewer lines (24-inch lines) will be excavated. Six concrete core samples will be obtained from each end that are a minimum of 5 inches in diameter and 12 inches deep, (see note in previous paragraph.) Two cores about 5 feet below grade, two at 10 feet below grade, and two at about 15 feet below grade will be obtained at each end of the canyon. Three cores will be selected from each end and sent to the laboratory for compressive strength testing. The other six cores will be properly identified and archived for future petrographic examination.

3.1.9 Archive Samples

Provided volume allows, a sufficient volume of liquid and sediment will be kept in an archive until data have been returned and have been found to meet criteria. The sample archived will be a subset of the homogenized material sent to the laboratory. The samples will be archived at the 221-U Facility.

3.1.10 Summary

Table 3-1 summarizes the sampling design, survey locations, and general analyses. Table 3-2 identifies the analytical techniques and detection limits. Table 3-3 provides a COPC to canyon area matrix.

3.1.11 Field Sampling Approach

The field sampling will be conducted using a phased approach. Phase I will observe specific facility conditions to identify accessible sample locations. Phase II will determine exact sample locations through consultation with characterization team members including DOE, EPA, and Ecology. Phase II will also include integration engineering in order to define and select the appropriate technologies needed to obtain physical samples and or surveys for analysis. Integration engineering is a critical activity that must be accomplished prior to implementation of Phase III, fieldwork, in order for achievement of successful characterization. Phase III, which is the final phase, is the direct field implementation of the planning conducted during Phase II.

The ERC work package will be used to control Phase I and Phase III of the Field Sampling portion of the 221-U characterization effort. The work package contains all the required documentation to perform the task in a safe efficient manner. Included in the work package are the personnel training requirements, activity hazard assessment, radiological work permits, waste management instructions, other special permits, and the Task Instruction. The Task Instruction contains specific instructions for obtaining samples or performing NDA. It includes hold points and details on specific sample locations. It will contain options for obtaining additional samples or changing of sample locations and/or methods if for unknown reasons the original sample point can not be utilized.

During the review/approval of the work package it shall be the Project Lead's responsibility to ensure all the requirements of the regulators are addressed and if necessary insert hold points to ensure this.

If during sampling, information/samples can not be obtained as required by the SAP, a hold point will be included in the work package (Task Instruction) for the Task Lead to verify the regulators have agreed to an alternate method/sample. The resolution will be included in the work package as an attachment.

3.2 SAMPLE PROCEDURES

Sampling methods will follow Standard Operating Procedures per BHI-EE-01 and radiological surveys will follow standard survey procedures per BHI-SH-04, *Radiological Control Work Instructions*, and BHI-EE-05, *Field Screening Procedures* where practical. However, due to ALARA, safety, and access problems associated with the 221-U canyon, some sampling and survey methods will have to be based on technologies identified in Appendix A. If technologies from the appendix are used, the work package will contain instructions for operating the sampling or survey equipment.

3.3 SAMPLE MANAGEMENT

Sample management activities shall be performed in accordance with the following BHI-EE-01 procedures, including:

- Procedure 3.1, "Sample Packaging and Shipping"
- Procedure 4.2, "Sample Storage and Shipping Facility"
- Procedure 3.0, "Chain of Custody"

3.4 MANAGEMENT OF INVESTIGATION DERIVED WASTE

Investigation-derived waste generated by characterization activities will be managed in accordance with BHI-EE-10, *Waste Management Plan*. Unused samples and associated laboratory/analysis waste will be dispositioned in accordance with the laboratory contract and agreements for return to the Hanford Site. EPA and Ecology will be given the opportunity to review the site specific waste management instructions.

The CDI will generate investigative derived waste (IDW) identified in the regulator-approved waste control plan (WCP) which identifies types of IDW management activities and requirements for the storage and disposal of IDW generated as a result of the 221-U CDI. The IDW that is generated as part of the CDI activities include miscellaneous solid waste as defined by section 6.6 of the IDW strategy (BHI-EE-10, Attachment 5), which includes rags, maslin cloth, radiological sampling swipes, personnel protective equipment, samples and sampling equipment, robotic or remote viewing equipment, crane maintenance activities, and equipment and ancillary piping removed to support CDI characterization. When samples (if required) are sent off the Hanford site for analysis, preliminary radiological counting and isotope analysis is

performed by the Radiological Counting Facility (RCF). These samples shall be returned to the CDI project and managed as IDW. The CDI schedule activities will be conducted throughout fiscal year 2000 and will be completed by September 30, 2001. Management of waste will continue until issuance of the CDI record of decision.

IDW that meets the ERDF WAC (BHI 1996) will be disposed to ERDF in accordance with the Environmental Restoration Program Strategy for the Management of IDW, Sections 8.0 and 9.0. Ecology and EPA shall approve any treatment of IDW necessary to meet the ERDF WAC. The IDW waste that cannot be disposed in ERDF, will be targeted for disposal at another treatment, storage, and disposal facility, approved by EPA and Ecology through an offsite determination. Waste Designation will be completed as per the regulator approved Waste Control Plan (BHI 2000).

Treatment of waste streams may be necessary to provide for safe transport or effective disposal. The type of treatment, and the location where treatment will be accomplished, will be determined by the EPA and Ecology on a case-by-case basis, in accordance with the substantive requirements of *Washington Administrative Code* (WAC) 173-303. Upon regulatory agency approval, solidification, encapsulation, neutralization, and size reduction/compaction may be employed to treat various wastes.

3.5 MANAGEMENT OF UNKNOWN WASTE GENERATED BY CDI

Any unknown waste generated during CDI activities, not covered specifically by this SAP, will be managed in accordance with the regulator-approved WCP for the CDI. The lead regulatory agencies will be consulted to the proper management and disposition of the unknown waste.

Table 3-1. Sampling Design Summary (page 1 of 2)

Area	Matrix	Summary of Sampling Design
Canyon deck	Concrete	Phase 1 • Stratify (walkway, open areas w/o equipment, next to equipment) • Collect 9 shallow samples Perform DQA Phase 2 (if necessary)
	equipment	• Categorize by type (tank, centrifuge, etc.) • Non-destructive examination (NDE), if possible • Document liquid level • Document oil level if present • collect 2 samples of liquid/sludge per category • rad survey 3 pieces per category
Cells	concrete	• divide cells by process • rad survey for dose and gamma • collect minimum of 2 (6 to 8 in.) cores/process • assess depth of radiological contamination • see Section 5.7.2.1 for contingencies
	equipment	• divide cells by process • record inventory • categorize equipment into process, "non-process" • NDE if possible • document liquid level • document oil level if present • collect oil if associated with electrical equipment • collect minimum of 1 sample of liquid/sludge per process • collect sample from non-process equipment if similar type of equipment was not sampled on canyon deck • collect 1 sample from tank 5-6, cell 10
Pipe drain	drain in cell 10, exposed to all process liquid	• video tape for structural integrity • collect scale/sludge sample for isotopic distribution • if no scale/sludge, perform GEA and compare to cell 10 GEA

Table 3-1. Sampling Design Summary (page 2 of 2)

Area	Matrix	Summary of Sampling Design
Hot pipe trench	concrete	• categorize by same processes as cells • no samples, unless no concrete from cell of same process is accessible • calculate inventory based on results from cell from same process.
	pipes	• NDE • estimate liquid and rad inventory based on drawings and cell information from the same process
Galleries and crane way	concrete	• collect sludge/scale from sumps in electrical galleries • analyze for chemical (non-radiological) only • use current survey data and isotopic distribution from cells to assess total radiological inventory
	pipes	• categorize into process and non-process pipes • examine for free-standing liquid using NDE • survey for dose • collect liquid if sufficient volume exists
Railroad tunnel	concrete	• collect samples from stained areas for non-radiological COPCs; collect minimum of 8 locations, composite to 2 samples or collect from 12 locations and composite to 3 samples. Collect from stained areas throughout length of tunnel. • use survey data with isotopic distribution from concrete samples on canyon deck to estimate isotopic distribution.
Ventilation tunnel	concrete	• video of tunnel • collect dust/scale from near baffles • analyze for chemical (non-radiological) only • use current survey data and isotopic distribution from cells to assess total radiological inventory

Table 3.2. Analytical Techniques and Detection Limits.

221-U

Contaminant of Concern (COC)	Analytical Callout	Analytical Technique	COMMERCIAL LABORATORY				ONSITE LABORATORY			
			Detection Limits[1]		Volume Requirements[1]		Detection Limits		Volume Requirements	
			Solid[2]	Liquid[2]	Solid[3]	Liquid[3]	Solid[2]	Liquid[2]	Solid[3]	Liquid[3]
Pu-238, Pu-239/240	Pu Isotopic	Alpha Energy Analysis	1 20	1 20	25 4	600 50	20000	200	2	10
Am-241	Am/Cm Isotopic	Alpha Energy Analysis	1 20	1 20	25 4	600 50	20000	200	2	10
Np-237	Np-237	Alpha Energy Analysis	1 20	1 20	25 4	600 50	20000	200	2	10
U-234, U-235, U-238	U Isotopic	Alpha Energy Analysis	1 20	1 20	25 4	600 50	NA	NA	NA	NA
U-234, U-235, U-238	U Isotopic	ICP/MS[5]	NA	NA	NA	NA	0.5	5	2	10
Th-232	Th-isotopic	Alpha Energy Analysis	1 20	1 20	25 4	600 50	NA	NA	NA	NA
Th-232	Th-isotopic	ICP/MS[5]	NA	NA	NA	NA	1	10	2	10
Co-60	GEA	Gamma Energy Analysis	0.1 1	15 100	1500 50	1500 50	10000	100	2	25
Cs-137	GEA	Gamma Energy Analysis	0.1 1	25 100	above	above	10000	100	above	above
Eu-152	GEA	Gamma Energy Analysis	0.1 1	50 400	above	above	30000	300	above	above
Eu-154	GEA	Gamma Energy Analysis	0.1 1	50 400	above	above	30000	300	above	above
Sr-90	Total Radioactive Sr	Beta Counting	1 5	2 10	18 3	3000 250	5000	50	2	10
Gross Alpha	Gross Alpha	Proportional Counting	10 25	3 7	2 .5	600 150	10000	100	2	10
Gross Beta	Gross Beta	Proportional Counting	15 30	4 8	above	above	30000	300	above	above
$Al(NO_3)_3$, NH_4NO_3, $NaNO_3$, HNO_3	Anions - Nitrate	Ion Chrom. - EPA300.0	0.1 5	10 50	40 5	300 50	NA	10000	NA	10
$NaNO_2$	Anions - Nitrite	Ion Chrom. - EPA300.0	0.1 5	10 50	above	above	NA	10000	NA	above
H_2SO_4, Na_2SO_4, $Fe(NH_4)_2(SO_4)_2$	Anions - Sulfate	Ion Chrom. - EPA300.0	2 10	150 700	above	above	NA	15000	NA	above
NH_4F	Anions - Fluoride	Ion Chrom. - EPA300.0	0.2 1	15 70	above	above	NA	2000	NA	above
H_3PO_4	Anions - Phosphate	Ion Chrom. - EPA300.0	2 10	150 700	above	above	NA	15000	NA	above
Acids	pH	Electrode/paper	0.1 0.1	0.1 0.1	10 3	100 25	0.1 0.1	0.1 0.1	1	25
Hexone	Volatile Organic	GC/MS SW-846 - 8260	.002 .002	1 1	20 5	120 40	NA	NA	NA	NA
Tributyl Phosphate	Semivolatile Organic	GC/MS SW-846 - 8270	0.5 0.5	50 50	120 15	2000 250	NA	NA	NA	NA
Keorsene, Normal Paraffin Hydrocarbon	Kerosene Range TPH	GC SW-846 - 8015	5 5	50 50	20 5	120 40	NA	NA	NA	NA
PCBs	PCBs	GC SW-846 - 8080	0.05 10	0.5 100	120 1	2000 20	NA	NA	NA	NA
Sodium Dichromate	Total Cr	ICP SW846 - 6010	0.5 5	3 20	15 2	500 150	10	50	4	25
Lead Based Paint, Bulk Lead	Total Pb	ICP SW846 - 6010	20 40	250 500	15 2	500 150	100	400	4	25
	Total Pb	GFAA SW846 - 7421	0.4 0.4	2 2	15 2	500 150	NA	NA	NA	NA
	TCLP extraction - Pb	SW846 - 1311/6010	Extract[4]	250 500	300 25	above	Extract[4]	400	10	above
Asbestos	Asbestos	Microscopy	NA	NA	NA	NA	<1%	<1%	1	1

[1]First value is for "Full Protocol", second value is for Rapid Turanaound or Reduced Volume anlaysis. Full Protocol detection limits require larger volume shown.

Detection limits are based on optimal conditions. Sample specific matrix effects or interferences may raise the values shown.

[2]Values in pCi/g or mg/Kg for solids and pCi/L or ug/L for liquids.

[3]Values in g for solids or ml for liquids. Radionuclide analyses and metals analyses volumes maybe combined to reduce total volume needed, per the liquid detection limits.

[4]TCLP values are reported as liquid extract concentrations for solid samples and bulk liquid concentrations for liquid samples.

[5]ICP/MS detection limits are experssed in mg/Kg for solids and ug/L for liquids

Table 3-3. COPC/Area Matrix. (page 1 of 2)

COPC	Sample for COPC in Liquids (Y/N)	Sample for COPC in Solids/Sludges (Y/N)	Sample for COPC in Concrete (Y/N)	Electrical Gallery	Piping Gallery	Operating Gallery	Crane Way	Ventilation Tunnel	Hot Pipe Trench	Cells	Canyon Deck Crane
Acetylene Tetrabromide (Visual observation)	N	N	N		✓	✓				✓	✓
Aluminum (fines) (Visual observation)	N	N	N							✓	✓
Aluminum Nitrate Nonahydrate	Y	Y	N							✓	✓
Ammonium Fluoride/Ammonium Nitrate	Y	Y	N							✓	✓
Asbestos (Visual observation)	N	Y	N	✓	✓	✓	✓		✓	✓	✓
Bismuth Phosphate ($BiPO_4$)	Y	Y	Y		✓			✓	✓	✓	✓
Hexone	Y	N	N							✓	✓
Kerosene	Y	N	N		✓					✓	✓
Lead (Bricks/Shielding) (Visual observation)	N	N	N		✓			✓	✓	✓	✓
Lead (Other) (RCRA metals)	N	Y	N		✓			✓	✓	✓	✓
Mercury (RCRA metals)	Y	Y	N	✓	✓	✓	✓	✓	✓	✓	✓
Nitric Acid (HNO_3)	Y	N	N							✓	✓
Normal Paraffin Hydrocarbons (NPH)	Y	N	N							✓	✓
Phosphoric Acid (H_3PO_4)	Y	N	N						✓	✓	✓
Polychlorinated Biphenyls (PCBs)	Y	N	N	✓	✓	✓				✓	✓
RCRA metals (Arsenic, Barium, Cadmium, Chromium, Lead, Mercury, Selenium, Silver)	Y	Y	Y	✓	✓	✓	✓	✓	✓	✓	✓
Sodium Dichromate (RCRA metals)	Y	Y	N							✓	✓
Sodium Hydroxide	Y	N	N						✓	✓	✓
Sodium Nitrate	Y	Y	*						✓	✓	✓
Sodium Nitrite	*	*	*						✓	✓	✓

Table 3-3. COPC/Area Matrix. (page 2 of 2)

COPC	Sample for COPC in Liquids (Y/N)	Sample for COPC in Solids/Sludges (Y/N)	Sample for COPC in Concrete (Y/N)	Electrical Gallery	Piping Gallery	Operating Gallery	Crane Way	Ventilation Tunnel	Hot Pipe Trench	Cells	Canyon Deck Crane
Sulfamic Acid	Y	N	N						✓	✓	✓
Tributyl Phosphate (TBP)	Y	N	N		✓			✓	✓	✓	✓
Uranyl Nitrate Hexahydrate (UNH) Rad Analysis	N	N	N						✓	✓	✓
Zirconium (fines) (Visual observation)	N	N	N							✓	✓
Am-241	Y	Y	Y	✓	✓	✓	✓	✓	✓	✓	✓
Co-60	Y	Y	Y	✓	✓	✓	✓	✓	✓	✓	✓
Cs-137	Y	Y	Y	✓	✓	✓	✓	✓	✓	✓	✓
Eu-152	Y	Y	Y	✓	✓	✓	✓	✓	✓	✓	✓
Eu-154	Y	Y	Y	✓	✓	✓	✓	✓	✓	✓	✓
Np-237	Y	N	Y	✓	✓	✓	✓	✓	✓	✓	✓
Pu-238	Y	Y	Y	✓	✓	✓	✓	✓	✓	✓	✓
Pu-239/240	Y	Y	Y	✓	✓	✓	✓	✓	✓	✓	✓
Sr-90	Y	Y	Y	✓	✓	✓	✓	✓	✓	✓	✓
Th-232	Y	Y	Y	✓	✓	✓	✓	✓	✓	✓	✓
U-234	Y	Y	Y	✓	✓	✓	✓	✓	✓	✓	✓
U-235	Y	Y	Y	✓	✓	✓	✓	✓	✓	✓	✓
U-238	Y	Y	Y	✓	✓	✓	✓	✓	✓	✓	✓
Gross Alpha[1]	Y	Y	Y	✓	✓	✓	✓	✓	✓	✓	✓
Gross Beta	Y	Y	Y	✓	✓	✓	✓	✓	✓	✓	✓
GEA	Y	Y	Y	✓	✓	✓	✓	✓	✓	✓	✓

[1]Because the B-Plant equipment would have been drained before moving it to U Plant, there is no reason to believe it will be present in significant quantities. If large volumes are encountered, the liquid will be removed, eliminating any potential risk.

4.0 HEALTH AND SAFETY

All field operations will be performed in accordance with BHI health and safety requirements outlined in BHI-SH-01, *Hanford ERC Environmental, Safety, and Health Program*, and the requirements of HSRCM-1, *Hanford Site Radiological Control Manual*. In addition, a work control package will be prepared in accordance with BHI-MA-02 which will further control site operations. This package will include an activity hazard analysis, site-specific health and safety plan, and applicable radiological work permits.

The sampling procedures and associated activities will take into consideration exposure reduction and contamination control techniques which will minimize the radiation exposure to the sampling team as required by BHI-QA-01 and BHI-SH-01.

5.0 REFERENCES

10 CFR 61, "Licensing Requirements for Land Disposal of Radioactive Waste," *Code of Federal Regulations*, as amended.

ACI 201.1R-92, "Guide for Making a Condition Survey of Concrete in Service," American Concrete Institute, 1992.

ACI 364.1R-94, "Guide for Evaluation of Concrete Structures Prior to Rehabilitation," American Concrete Institute, 1994.

ASCE 11-90, "Guidelines for Structural Condition Assessment of Existing Buildings," American Society of Civil Engineers.

Baxter, J. T., 1991, *Qualitative Structural Evaluation of U-Plant and REDOX Buildings*, WHC-SD-DD-SA-001, Rev. 0, Westinghouse Hanford Company, Richland, Washington.

Baxter, J. T. and C. J. Moore, 1997, *Structural Performance of Candidate Fill Materials*, HNF-SD-HTI-ES-003, Rev. 0, DRAFT, Numatec Hanford Company, Richland, Washington.

BHI-EE-01, *Environmental Investigations Procedures,* EIP 1.2, "Data Quality Objectives," Bechtel Hanford, Inc., Richland, Washington.

BHI-EE-05, *Field Screening Procedures*, Bechtel Hanford, Inc., Richland, Washington.

BHI-EE-10, *Waste Management Plan,* Bechtel Hanford, Inc., Richland, Washington.

BHI-HR-02, *ERC Training* Procedures, Bechtel Hanford, Inc., Richland, Washington.

BHI-MA-02, *ERC Project Procedures*, Bechtel Hanford, Inc., Richland, Washington.

BHI-QA-01, *ERC Quality Program*, Bechtel Hanford, Inc., Richland, Washington.

BHI-QA-03, *ERC Quality Assurance*, Bechtel Hanford, Inc., Richland, Washington.

BHI-SH-01, *Hanford ERC Environmental, Safety, and Health Program*, Bechtel Hanford, Inc., Richland, Washington.

BHI-SH-02, *Safety and Health Procedures*, Bechtel Hanford, Inc., Richland, Washington.

BHI-SH-04, *Radiological Control Work Instructions*, Bechtel Hanford, Inc., Richland, Washington.

BHI-SH-05, *Industrial Hygiene Work Instructions,* Bechtel Hanford, Inc., Richland, Washington.

BHI, 1997a, *Data Quality Objectives Summary Report for the 221-U Canyon Disposition Alternatives*, BHI-01091, Rev. 0, Bechtel Hanford, Inc., Richland, Washington.

BHI, 1997b, Letter, J. E. Rugg, BHI, to C. M. Jones, BHI, *DQO Scoping Binder/Checklist*, CCN 051182, dated September 10, 1997.

BHI, 1998, *Environmental Restoration Disposal Facility Waste Acceptance Criteria*, BHI-00139, as amended, Bechtel Hanford, Inc., Richland, Washington.

BHI, 2000, *Waste Control Plan for the 221-U Canyon Disposition Intiative (CDI)*, Bechtel Hanford, Inc., Richland, Washington.

Comprehensive Environmental Response, Compensation and Liability Act of 1980, 42 U.S.C 9601, et seq.

Cruz, C. R., 1992, *Material Strength Properties of B Plant*, WHC-SD-WM-TRP-040, Rev. 1, Westinghouse Hanford Company, Inc., Richland, Washington.

Dames & Moore, 1989, *Report of Geotechnical Investigation Proposed Hanford Waste Vitrification Plant Hanford, Washington*, Job No. 10805-383-016 by Dames & Moore, Seattle, Washington for Kaiser Engineers Hanford Co., Richland, Washington.

DOE-RL, 1996, *Hanford Analytical Services Quality Assurance Requirements Documents*, DOE/RL-96-68, Rev. 0, U.S. Department of Energy, Richland Operations Office, Richland, Washington.

DOE-RL, 1997, *Phase I Feasibility Study for the Canyon Disposition Initiative (221-U Facility)*, DOE/RL-97-11, U.S. Department of Energy, Richland Operations Office, Richland, Washington.

DuPont, 1945, *DuPont Construction History of the Hanford Engineer Works 1943-1945*, Available from the DOE reading room in the Library, Washington State University, Richland, Washington

Ecology, EPA, and DOE, 1994, *Hanford Federal Facility Agreement and Consent Order* (Tri-Party Agreement), 2 vols., as amended, State of Washington Department of Ecology, U.S. Environmental Protection Agency, and U.S. Department of Energy, Olympia, Washington.

EPA, 1988, *Guidance for Conducting Remedial Investigations and Feasibility Studies Under CERCLA*, EPA/540/G-89/004, Interim Final, U.S. Environmental Protection Agency, Washington, D.C.

EPA, 1994a, *EPA Requirements for Quality Assurance Project Plans for Environmental Data Operations*, EPA QA/R-5, Draft, U.S. Environmental Protection Agency, Washington, D.C.

EPA, 1994b, Guidance for the Data Quality Objectives Process, EAP QA/G-4, September, U.S. Environmental Protection Agency, Washington, D.C.

EPA, 1996, Guidance for Data Quality Assessment, EPA QA/G-9, July, U.S. Environmental Protection Agency, Washington, D.C.

GAO/RCED-91-165, 1991, *Pretreatment Modifications at DOE Hanford's B Plant Should Be Stopped*, United States General Accounting Office, Washington, D.C.

Gunderson, M. J., 1992, *B Plant Cell Drain Header Work Plan*, WHC-SD-WM-WP-080, Rev. 0, Westinghouse Hanford Company, Inc., Richland, Washington.

HSRCM-1, 1996, *Hanford Site Radiological Control Manual*, as amended, Hanford Site Contractors, Richland, Washington.

LATA, 1989, *Independent Third-Party Review of B-Plant Canyon Structure Seismic Evaluation*, WH-007-00, Los Alamos Technical Associates, Inc., Albuquerque, New Mexico.

Resource Conservation and Recovery Act of 1976, 42 U.S.C 6901, et seq., as amended.

Scott, M. A. and D. A. Moody, 1996, *B-Plant Canyon End Wall Study*, WHC-SD-WM-SA-013, Rev. 0, Westinghouse Hanford Company, Richland, Washington.

Shannon & Wilson, 1994, *Geotechnical Investigation, KEH-W236A, Multi-function Waste Tank Facility, Hanford Site, Richland, Washington*, Project H-1053-05 by Shannon & Wilson Geotechnical and Environmental Consultants, Kennewick, Washington for Kaiser Engineers Hanford, Inc., Richland, Washington.

WAC 173-303, "Dangerous Waste Regulations," *Washington Administrative Code*, as amended.

Wagenblast, G. R., et al., 1988, "*B-Plant Structural Qualification Interim Report*, SD-WM-SA-001, Rev. 0, Westinghouse Hanford Company, Richland, Washington.

Werry, S. M., 1990, *CCTV Inspection of B Plant 24 Inch Cell Drain Header*, WHC-SD-NR-IP-001, Rev. 0, Westinghouse Hanford Company, Inc., Richland, Washington.

WHC, 1993a, *Data Validation Procedures for Radiochemical Analysis*, WHC-SD-EN-SPP-001, Rev. 1, Westinghouse Hanford Company, Richland, Washington.

WHC, 1993b, *Data Validation Procedures for Chemical Analysis*, WHC-SD-EN-SPP-002, Rev. 2, Westinghouse Hanford Company, Richland, Washington.

WHC, 1996, *Hanford Site Solid Waste Acceptance Criteria*, WHC-EP-0063-4, Westinghouse Hanford Company, Richland, Washington.

Winkel, B. V., et al., 1989, *B Plant Canyon Structure Seismic Evaluation*, WHC-SD-WM-SA-005, Rev. 0, Westinghouse Hanford Company, Richland, Washington.

APPENDIX A

TECHNOLOGY DEPLOYMENT FINAL REPORT

1.0 INTRODUCTION/BACKGROUND

A U Plant Characterization Technology Deployment Team (TDT) was selected to assist in bringing appropriate proven new technologies and adaptations of other proven state-of-the-art technologies for the Characterization of the Hanford Site's U Plant Fuel Reprocessing (Canyon) Facility during fiscal year 1998 (FY98). The TDT was comprised of technical experts within various applicable fields from across the nation (see Table A-1). This Appendix describes the objective of the TDT work, and the information provided by the TDT to be used in selecting the characterization and deployment technologies. Additionally, this Appendix provides a discussion of baseline technologies normally implemented for characterizing facilities with ready access and limited radiological concerns.

1.1 OBJECTIVE

The objective of the TDT work was to select and recommend the best available and proven field-ready technologies to be deployed for the characterization of the U Plant canyon facility, thus ensuring that data gathered during the characterization is accurate, reproducible and of consistent quality. The TDT process is depicted in Figure A-1. This Appendix provides the U Plant Characterization Project a list of selected candidate technologies and suppliers for the characterization work within select categories as presented in section 2.0 through 10.0 of this Appendix. Due to the unknowns associated with field implementation as described in section 3.1.11 of this sampling and analysis plan (SAP), specific recommended technologies have not been provided. All TDT members agreed that integration engineering must be performed, after visual observation of current facility conditions, in order to select appropriate technologies.

1.2 BASELINE APPROACH FOR CHARACTERIZATION

The typical baseline approach to characterizing a facility begins by characterizing the least contaminated/hazardous area, then working towards the most contaminated area. At 221-U we would begin in the galleries, crane cabway, then canyon deck, railroad tunnel, cells, hot pipe trench and last the ventilation tunnel and sewer pipe line.

Characterization would consist of performing routine type radiological surveys for; removable, fixed contamination, and dose rate data using hand held instruments.

Sampling would be primarily intrusive sampling, opening systems to obtain radioactive and chemical samples. Visual inspections of tanks and sumps using dip sticks, bailers, peristaltic pumps to check levels or obtain samples for analysis.

We would manually enter confined spaces and high radiation areas to obtain samples.

Sampling for liquids would include, dipper, bailer, peristaltic pump after visual inspection to determine that liquids are present. Sampling for solids would utilize: scoop, shovel, corer/trier, scrapers. Sampling for concrete would include: core samples, drill samples, chisels/roto hammer samples.

2.0 REMOTE TECHNOLOGY TEAM RESULTS

The remote technology team identified two different types of robots that could be used to access areas of the U-Plant Facility which could not be reached using conventional methods or personnel. Each robot is capable of entering high radiation areas with little or no effect on its operation. Robots come equipped with on board sensors and video systems and can be customized in size and different features such as manipulator arms and attachments used to transport survey and sampling equipment. Specific questions were asked by different team members regarding the amount of time the robots could remain in remote areas of the facility and how far the robots could travel remotely. It was answered that the robots could operate for about 2 to 3 hours based on battery limitations only and that range of remote travel was approximately 100 ft. Another remote sensor technology identified was the Sandia National Laboratory MiniLab as well as several different varieties of manipulator arms. This section summarized the remote capabilities presented at the meeting including robotics and manipulator arms.

It was determined in the first presentation of the TDT meeting that the entire key to the success of the technology deployment effort (and the U-Plant Characterization) revolves around the ability to effectively integrate the wide range of existing technologies. A detailed and complex level of engineering will be needed to make each technology successful. Each TDT member agreed that such integration has never been performed within the Department of Energy complex.

REMOTE TECHNOLOGIES - 1

TECHNOLOGY	INTENDED USE	SUPPLIER	COST	COMMENTS
RATLER	Integration of manipulator, sensors, video systems, and actuators.	Sandia National Laboratories (SNL)	Depending on size and number of units.	Availability is near term, ~6 months.
RETRVIR	Mobile manipulation with on-board navigation and video.	Sandia National Laboratories	Depending on level of custom features.	This unit is available and is ~ 7'x10'x8'. Can be customized in size but will require time and money. Presence of hydraulic fluid.
MiniLab	This is a miniaturized characterization laboratory intended for on-site analysis of hazardous material.	Sandia National Laboratories	Depending on number of sensors and features.	MiniLab provides multi-channel data processing; uses commercial sensors to reduce overall system cost; sensor technologies include gas sampling, pyrometry, radiation detection, video imaging, pH, chloride, galvanic current analysis, specific gravity, viscosity, and ultrasound ranging.
Crane mounted manipulation platform	In-cell multi-arm manipulation of layered objects.	Schilling or Fanuc for manipulators. Laboratories such as SNL to provide "glue" technology for overall system.	~250K for 2 manipulators. Engineering costs additional.	Requires fair amount of engineering and integration. Need out-riggers for lateral stability. Presence of hydraulic fluid.
Gantry multi-arm work unit	Independent platform for moving heavy objects where unit will work in conjunction with crane.	Schilling or Fanuc for manipulators. Laboratories such as SNL to provide "glue" technology for overall system.	~250K for 2 manipulators. Engineering costs additional.	Requires fair amount of engineering and integration. Need out-riggers for lateral stability. Presence of hydraulic fluid.

REMOTE TECHNOLOGIES – 2

TECHNOLOGY	INTENDED USE	SUPPLIER	COST	COMMENTS
Various Schiling arms	Attach to platform and connect to sample collector	Schilling Roboitcs Inc.	~150 K	Engineering required for stabilization and optimal collection. Note presence of hydraulic fluid.
SNL arm	Attach to platform and connect to sample collector.	Sandia National Laboratories	Depending on level of custom features.	Same as above. Has advantage of longer reach and higher payload.

NOTE: Becthel staff have actual sample collection device. The only requirement is the link between robotic platform and collection devices.

SLUDGE AND SOLID SAMPLE COLLECTION

TECHNOLOGY	INTENDED USE	SUPPLIER	COST	COMMENTS
Various manipulator arms	Can be fitted with a variety of tools or can be used to deploy sampling equipment	Schilling, Kraft, PAR, AEA, Spar, etc. Special Case: SNL arm	150K for arm 150 - 300K for controller system Additional cost for specific tooling or end-effectors	Engineering required for stabilization and optimal collection. Note presence of hydraulic fluid.
Rosie	Mobil work platform with 20' reach and 2000 lb capacity	Red Zone Robotics or surplus (owned by DOE)	1.2 million	Requires sizeable area to operate
Dual Arm Work Platform	Supports 2 manipulator arms and is equipped with camera light; utilities such as electric, pneumatic and hydraulic.	Red Zone Robotics or surplus (owned by DOE)	900K	May already be available.

3.0 NON-DESTRUCTIVE ASSAY TEAM RESULTS

Several different non-destructive assay (NDA) technology's were identified for a variety of applications. The primary focus of the NDA team was to focus on technologies used to detect transuranics. This section summarizes the findings of the NDA team.

TECHNOLOGY	INTEDED USE	POSSIBLE SUPPLIERS	ORDER OF MAGNITUDE COST
Passive Neutron Counting System for TRU Assessment of U Plant Process Cells	One/several bare/moderated neutron proportional counters to establish levels of alpha activity caused by (alpha,n) reactions and/or spontaneous fissions.	Reuter-Stokes	1"-diam., 40"-long, 1-atm tubes filled with He-3 at ~$1K [2" at ~$2.5K]; electronics include NIM bin, HV source, Timer, Counter, Data Recorder, Position Sensors, Pulse-pileup Rejection Circuitry, cabling, connectors-
Same	Same	LND Inc.	Same
Same	Same	N. Wood Counter Laboratory Inc.	As Above, except BF3 tubes
Same	Copper plated/treaded-pipes placed at various locations inside the cell and left for 12-24 hours	Pacific Northwest National Laboratory	~$20K for material, maching time, use of multi-dimensional counters
Pulse-Pileup Rejection Circuitry	Allow neutron proportional counters to operate in elevated radiation fields by eliminating false count rate that arises from gamma-ray pulse pileup, hence, need for shielding; stable HV from +5V or +12V power source; TTL signal output	Precision Data Technology, Inc.	Each module at ~$2.5K
Same	Same	AMPTEK	Each module at ~2.5K
Passive Neutron Counting System for TRU Assessment of Containers and Equipment Stored above Process Cell	Large-area neutron-counting panels to perform LLW vs. TRU determination prior to shipping possible-TRU containers to WRAP Facility to meet WIPP requirement	Canberra Industries, Inc.	
Same	Same	Pacific Northwest National Laboratory	Neither provider has a turn-key system for a situation involving a wide variety of configurations and containers; however, adequate hardware for system inlcuding detector slab & electronics ~$20K

TRU NDA SYSTEMS COMMENTS	COMMENTS	COMMENTS
Use of bare and moderated tubes allows some information on neutron energies (hence, provenance); bare tubes may suffice given quantity of water in concrete walls; coincidence of multiplicity counting may be desirable if neutron count is too high.	A series of tubes inside an anti-contamination sleeve can be hung from the overhead crane by aircraft wire without serious weight-related problem - clutter may cause some insertion difficulty at center of cells.	One system consisting of 5 tubes of 6" length would expedite counting white minimizing cost of electronic modules
	He-3 tubes at PNNL have not performed well after long storage.	
BF-3 tubes are less sensitive to effects of gamma-ray pile-up, but are more difficult to transport.	These tubes are shown to have decades-long shelf life with minimal loss of resolution.	
A multi-dimensional counter is required to record the annihilation photons generated by position emission of Cu 64 (t-1/2=12.7h)	Technique is not real time, so analysis must be performed either with a nulti-dimensional NaI(Ti) detector close by or at a facility within transportable range.	Technique is totally insensitive to gamma ray effects and should be considered as a backup technique, esp, for REDOX
Radiation resistance >100K rad, which makes TRU NDA feasible in REDOX.	Internal HV is optional but desirable in this application.	Intended for use with both He-3 and BF3 neutron proportional counting tubes
The Waste Receiving and Processing (WRAP) Facility is the designated analysis-of-record for WIPP waste		
Arrays of He-3 or BF3 tubes sandwiched between sheets of HDPE, large neutron-counting scintillating fiber-optic (SCIFI)panels area also available.		

4.0 GAMMA SURVEY TEAM RESULTS

Several ionizing radiation measurement devices were discussed along with available collimator/shield assemblies. The major area of concern lies within the ability to adequately shield the devices to obtain accurate measurements. In addition to the gamma ray spectroscopy devices several dosimeters and survey meters were identified to assess dose rates in areas scheduled for characterization and for personnel monitoring. This section summarizes the findings of the gamma survey team.

DISCUSSION OF GAMMA-RAY CAMERAS

There are two gamma-ray imaging devices available. While they differ in their operating details, they both possess the same general features, and these are:

- Provide visual images simultaneously with the radiation field images and superpose them in a computer in real time to accurately locate the radioactive materials.
- Since the radiations are penetrating, can image sources that are located behind walls and in enclosures and are not limited to surface contaminations.
- Radiation images cover a variable field of view.
- Can obtain dose estimates if the source-to-detector distance and the types and thicknesses of the intervening materials are known.
- Can be mounted on almost any kind of support, including cart, tripod, crane, and robotic platform.
- Are somewhat sensitive to background radiations, so some shielding may be required in high level conditions.

The GammaCam:

- Uses a pinhole "lens" and position sensitive photomultiplier to view a scintillation detector.
- The field of view is either 25 or 50 degrees with an object resolution ranging from 1.3 to 2.6 degrees (software selected).
- Typical cable length between sensor and computer is 200 feet, but can be varied as needed.
- Is relatively insensitive to background radiation.
- Detection sensitivity is effective from 0.1 to > 2 Mev, but does not measure gamma-ray energy.
- Sensor head measures 48 by 25 by 38 cm and weighs 25 kg.
- Available from AIL Systems, Inc.; Telephone: (516) 595-5595; Email: bpatrie@ail.com.

- Technical contact: Richard A. Migliaccio; Engineering Manager; AIL Systems, Inc.; migliaccio@ail.com.

- Cost: $200K, and can be leased.

- Additional information available in Innovative Technology Summary Report (Large Scale Demo).

- Device works by using a scintillation screen, position sensitive PMT, and a pinhole "lens" to record the positions of the scintillations on the screen. In this manner the entire radiation image is recorded in parallel (simultaneously). No collimator is needed for this device.

The RadScan:

- Single collimator with an array of CsI scintillation detectors.

- Has 360 degree pan with -55 to +90 degree tilt and a detector spatial resolution fixed at either 2 or 4 or 9 degrees.

- Model 700 can superpose the visual and radiation fields (Model 600 does not have this feature).

- Somewhat sensitive to background radiation.

- Can select gamma-ray energies in three different energy regions of the CsI spectra, i.e., has limited energy selection.

- Measures 31.5 by 37 by 47.5 cm in size and weighs 30 to 55 kg, depending on the collimator.

- Available from: BNFL Instruments Ltd.; Telephone: (703) 218-3010; Internet: www.bnflinst.co.uk; Sales representative: Scott Dam; Location: Fairfax, VA.

- Cost: $200K

- Additional information available in Innovative Technology Summary Report (Large Scale Demo).

- Device works by using a computer-controlled, mechanically-operated collimator and an array of individual CsI scintillation detectors. The collimator directs the gamma rays sequentially to individual CsI pixels for periods of time determined by the counting rate. In this manner all pixels are scanned with each one having its own readout. Since the image is accumulated serially (one pixel at a time), the recording times can be long.

5.0 CHEMICAL CHARACTERIZATION TEAM RESULTS

The chemical characterization team identified many readily available technologies for use during actual field sampling, field detection, and laboratory analysis. The findings of the team are summarized in this section.

CHEMICAL CHARACTERIZATION TECHNOLOGIES – 1

COMPOUND	LABORATORY	FIELD
Acetylene Tetrabromide, b.p. 239-242°C dec	GC-MS, PHLC, FTIR, elemental analysis	Field GC, Field MS
Aluminum	SEM, EDS	XLF
Aluminum Nitrate	AA, IC, UV	
Ammonium Fluoride	Sp.ION Elec, wet chemistry	
Asbestos	TEM, SEM	
Di-2-ethylhexyl phosphoric acid	FTIR, HPLC, elemental analysis, titrimetry	Field MS, XLF
Diatomaceous Earth	SEM	
Ferrous ammonium sulfate	Wet Chemistry, AA	Field detection
Hexone (methylisobutyl ketone)	GC, FTIR	Field GC, field MS
Kerosine	HPLC, GC, FTIR	
Lead Bricks	Visual	Visual
Lead Paint	SEM, EDS	
Mercury	Visual	Visual
Nitric Acid	UV, titrimetry	
Hydrocarbons	GC-MS, FTIR	
Oils and Grease	FTIR, HPLC	
Phosphoric Acid	Wet Chemistry	
KOH	Wet Chemistry, Flame ID	
Potassium Permanganate	Visual, wet chemistry	
Rare Earths	SEM, EDS	
Selenium	SEM, EDS	
Sodium Carbonate	Acidification	
Sodium chloride	Wet chemistry, flame ID	
Sodium chromate	Visual, AA, wet chemistry	
Sodium gluconate	Polarimetry	
Sodium nitrate	UV. Sp.IONElect.	
Sodium sulfate	Wet chemistry	
Sulfamic acid, m.p. 205°C	HPLC, pH, FTIR	
Dibutyl phosphate, b.p. 298°C	HPLC, elemental analysis	XLF
Uranyl nitrate	SEM, EDS	
Zirconium	SEM, EDS	

Note: Chemicals on this list are not necessarily chemicals that will be analyzed for during the characterization of U Plant. A number of these have been eliminated through the DQO process.

CHEMICAL CHARACTERIZATION TECHNOLOGIES – 2

COMPOUND	FIELD
Acetylene Tetrabromide	Raman
Al	XRF.LIBS
Aluminum Nitrate	Raman (solids)
Ammonium Fluoride	Raman (solids), ion selective electrode, uv/vis (F ion in solution)
Asbestos	
Di-2-ethylhexyl phosphoric acid	
Diatomaceous Earth	
Ferrous ammonium sulfate	Raman (solids) uv/vis (solutions)
Hexone	Open path IR (vapor), GC, MS (vapor or liquid)
Kerosine	Open path IR, GC, Raman, MS
Lead Bricks	XRF (if visual is insufficient)
Lead Paint	XRF, LIBS
Mercury	Commercial sensors (vapor), XRF, LIBS, (solid)
Nitric Acid	uv/vis, pH electrode
Hydrocarbons	Commercial sensors, emerging optical and SAW sensors. Raman, GC. MS
Oils and Grease	Raman
Phosphoric Acid	uv/vis, pH electrode
KOH	uv/vis, pH electrode
Potassium permanganate	uv/vis
Rare Earths	LIBS, port. ICP, uv/vis
Selenium	LIBS, XRF, (solid), uv/vis, ion selective electrode, port. ICP (solution)
Sodium carbonate	Raman (solids) uv/vis (solutions)
Sodium chromate	Raman (solids) uv/vis (solutions)
Sodium gluconate	Raman (solids) uv/vis (solutions)
Sodium nitrate	Raman (solids) uv/vis (solutions)
Sodium sulfate	Raman (solids) uv/vis (solutions)
Sulfamic acid	Raman
Dibutyl phosphate	Raman
Uranyl nitrate	Raman, LIFI (solid), uv/vis (solutions)
Zirconium	LIBS, XRF, (solid), uv/vis, port. ICP (solution)
NOTE: Chemicals on this list are not necessarily chemicals that will be analyzed for during the characterization of U Plant. A number of these have been eliminated through the DQO process.	

TABLE 1 CANYON OVERVIEW

	CELLS	CANYON DECK	HOT PIPE TRENCH	GALLERIES	WIND TUNNEL	CELL 10
ASSUMED POSSIBLE CONTAMINANTS	Installed Process Equipment Stored Process Equipment Liquids Dust Debris Concrete Radioactive contaminants	Airborne Contaminants Radioactive contaminants Concrete Shipping casks Liquids	Radioactive contaminants Liquid in pipes	Liquid Sludge Stains	Concrete	Radioactive contaminants Liquid Sludge
CHARACTERIZATION NEEDS	Visual Radiological Survey Liquid pressure Liquid level Concrete Core Air sampling	Visual Radiological Survey Liquid Pressure Liquid Level Concrete core Air sampling	Visual Radiological Survey Liquid Pressure in pipes	Visual Liquid Presence Sludge Presence	Concrete Core Sample Radiological Survey	Visual Radiological Survey Liquid presence Sludge Presence
SAMPLING TECHNIQUES	Visual - Remote camera Radiological-remote meter Liquid-Thermal Imaging, sonic Concrete - remote drilling Air - Remote filter	Visual - Remote camera Radiological - Remote meter Liquid - Thermal Imaging, sonic Concrete - remote drilling Air - Remote filter	Visual - Remote camera Radiological - Remote meter Liquid - Thermal Imaging, Sonic	Visual - Manned camera Liquid - Manned Sample from Trap Sludge - Manned sample	Radiological - Remote Meter Concrete - Remote drilling	Visual - Remote Camera Liquid - Thermal Imaging, Sonic

TABLE 2. SEPARATION TECHNIQUES

AIRBORNE SOLIDS	Draw through and capture on filter
AIRBORNE LIQUIDS (Organic)	Bubble through solvent
MIXED AQUEOUS/ORGANIC LIQUID	Extract with organic or aqueous solvent. Analyze organic layer. Analyze aqueous layer
SLUDGE	Extract with organic solvent and/or water and/or acid/base. Ignite.
CONCRETE	Physical removal. Thermogravimetric analysis, SEM, EDS
STAINS	Physical removal. Extract with organic solvent and/or water and/or acid/base

6.0 LIQUID DETECTION TECHNOLOGIES TEAM RESULTS

Liquid detection is one of the most important and challenging aspects of the U Plant characterization effort. Many existing and new technologies were identified to accomplish such a task. The technologies presented at the meeting are extremely dependent on the techniques used to both obtain and assess data. Some technologies must rely on the abilities of remote systems in order to be effective. Liquid detection methods must be effectively integrated with other technologies in order for the U Plant characterization to be successfully implemented. This section identifies the findings of the liquid detection technologies team.

LIQUID DETECTION TECHNOLOGIES - 1

TECHNOLOGY	SUPPLIERS	COST (w/o remote)	COMMENTS
Active Thermography	Thermo Wave Imaging (810) 569-4960 Steve Sheppard	$100K-125K	Must be able to access side to see liquid/vessel interface. System must be adapted to this particular application.
Infrared/Thermo Imaging (Passive)	InfraRed, Inc. Jerry Gamroth (702) 827-2440 Cincinnati Electronics Tom Venable (800) 852-5105	$30K-50K	Detection based on temperature difference between liquid and vessel or the emissivity difference of the surfaces of the liquid and vessel material. Distance from side wall required for imaging approximately 18 inches. Imaging head approximately 8"x8"x8".
"Other" Passive Thermal Imaging	NT$, RSV	~$100K	Same as above, but a system can easily be put together to have much less stand-off using special fiber optics.
Ultrasonic	Southwest Research Labs Glenn Light (210) 684-51211	$40K-50K	Must be able to access side of tank at the level of the liquid. Surface condition of vessel could effect results. Oxides or deposits bad. Sludge (inside) may be OK (if wet, same as liquid). Transducer placement is critical.
Low Frequency Acoustics	John Hopkins Applied Physics Lab	~$100K	Same principle as ultrasonics except lower frequency sound waves. Possible to have stand- off measurement so surface condition of vessel is less important. Application is relatively cheap, but technique must be tested for this use.
Radiography			Standard radiography limited to pipe systems and small vessels outside of process cells. Active transmission systems can be assembled in conjunction with pipe creepers to measure gamma attenuation from cobalt-60 source. Limit is robotics platform.

LIQUID DETECTION TECHNOLOGIES – 2

Thermal Neutron Transmission	ORNL or LLNL???		System is similar to active gamma transmission above. Developed for treaty verification and HEU transparency program w/Russia. Very sensitive to water, limited by deployment platform. Criticality concern.
Compton Backscatter Gage	LANL	~$200K	Common technique in airline industry using x-rays. Think of as backscatter radiography. Use cobalt-60 source and can probe depths requried to "see" inside vessels, pipes. Characteristic signal. Design on paper, needs to be prototyped.
Probe: Dipstick Video camera Liquid Detector		$10K-20K	There are a number of sensors on the market for humidity and volatile organics that could be used in conjunction with a fiber optic video system to look inside a vessel or pipe if access is available. Depends on abilities of remote systems.

7.0 LIQUID SAMPLING TEAM RESULTS

It was determined by the liquid sampling team that no new or unique technologies exist that would be needed for obtaining liquid samples for the U Plant characterization. Sample bottles and other simple devices are adequate. All TDT members agreed that liquid sampling could be divorced from the technology deployment effort for the U Plant.

8.0 SLUDGE SAMPLING TEAM RESULTS

Several technologies were identified for sampling sludge and are included in this section. As with other sampling technologies, the critical issue is how to integrate sludge sampling technologies with other remote technologies in order to obtain samples in inaccessible areas of U Plant.

SLUDGE SAMPLING TECHNOLOGIES – 1

Technology	Intended Use	Possible Suppliers
Jet-Pump Ventuoi (Sludge)	Sludge sampling	Renta Jet/AEAT* Combined effort
Jet Homogenizer (Sludge)	Sludge sampling, homogenous sludge and liquid	AEAT*/Renta Jet
		*SBURKE as initial contact

9.0 OTHER SOLIDS SAMPLING TECHNOLOGIES TEAM RESULTS

The focus of the solids sampling team was in the area of manipulator arms and other attachments for use in conjunction with the remote technologies. This information has been included in Section 2.0.

SOLID SAMPLING TECHNOLOGIES - 1

Technology	Intended Use	Possible Suppliers
Strippable coatings	Sample dust in galleries, pipe trench	Spraylot Gramos UK Suppliers
Scabblers peening tool needle gun	Surface sampling of concrete	Trelawny (brochure attached) MacDonalds
		*SBURKE as initial contact

10.0 CONCRETE SAMPLING TEAM RESULTS

There are many technologies available in the current market for drilling and obtaining concrete core samples. This section details the wide range of possibilities. The difference between the individual technologies is the level of competence provided for adaptability in the field. It will take a major engineering effort to integrate the drilling technology with other technologies identified for potential deployment during U Plant characterization activities.

HANFORD CANYON TDT DATA

TECHNOLOGY	INTENDED USE	POSSIBLE SUPPLIERS	ORDER OF MAGNITUDE COST	COMMENTS
Remotely operated sludge sampler	Sample sludge in Cell 10 & Electrical Gallery	AEA Technology plc, Recycling and Waste Management (R&WM) Decommissioning & Waste Managmeent Group - South Rm 201 bld B44 Winfrith Technology Centre Dorchester Dorset DT2 8DH UK Tel 01305 203167 Fax 01305 202784 Contact: Mr. Steve Simpson	$8,000	Simple, proven technology; successfully used in reactor ponds at Winfrith UK; has own IAEA approved llask for transport; supplier has many years experience in all types of sludge sampling devices/procedures incl work at Sellafield & many power stations
Hollow drill concrete sampling method for contamination	Concrete sampling man accessible areas (galleries, deck) & possibly cells & pipe trench	AEA Technology plc, Process & Radwaste Chemistry, Decommissioning & Waste Management Group - North, B552, Windscale, Seascale, Cumbria, CA20 1PF, UK Tel 019467 72466 Fax 9184567 62460	$2,000	Successfully used in Pu facilities in UK; system comprises "off the shelf" items; sampling & analysis methods fully developed; some development to allow remote deployment needed.
Remote concrete coring for contamination & structural analysis	Concrete core sampling all locations	Holemasters Demtech Ltd Gregson House, Mowbray Drive, Blackpool,FY37UN, UK Tel 01253 396181 Fax 01253 301819 Contact: Mr. D. Bailie	$17,000	Complete. Remotely deployable coring system using suction pad based on proprietary items.

Table A-1. U Plant Fuel Reprocessing Facility (Canyon) Characterization.

Technology Deployment Team Members

Members of the U Plant Characterization Technology Deployment Team (TDT) have been selected to provide government, academia and industry expertise in the selection of appropriate technologies for use in the characterization of the U Plant canyon. This list identifies the team members, their company/organization and telephone number.

John Sands	DOE/AME	(509) 372-2282	John_P_Sands@rl.gov
Roger Pressentin	DOE/RL/STP	(509) 372-4675	Roger_A_Pressentin@rl.gov
Richard Arthur	Pacific Northwest National Lab.	(509) 372-4266	Richard_J_Arthur@rl.gov
Sam Bhattarcharyya	Argonne National Laboratory	(630) 252-3293	bhatt@anl.gov
Ronald R. Borisch	B&W Hanford Company	(509) 372-3382	Ronald_R_Borisch@rl.gov
Steve Burke	AEA Technologies, plc	011 44 1305 251 888	laurie.judd@aeat.co.uk
Richard Burton	Florida International University	(305) 348-1677	richardb@eng.fiu.edu
George Cox	B&W Hanford Company	(509) 372-3272	George_Cox@rl.gov
David B. Encke	CH2M Hill Hanford, Inc.	(509) 373-3461	David_B_Encke@rl.gov
Stan Fern	LM-T&O INEEL	(208)526-9823	stf@inel.gov
Bob Henckel	Bechtel Hanford, Inc.	(509) 373-6876	rphenckel@bhi-erc.com
Paul Hurley	Bechtel Nevada Company	(805) 681-2472	hurley.west.net
Philip K. (Ken) Jackson	Bechtel Hanford, Inc.	(509) 372-9295	Philip_K_(Ken)_Jackson@rl.gov
Kwan S. Kwok	Sandia National Laboratory	(505) 845-7170	kskwok@sandia.gov
Cecil May	Westinghouse Savannah River Co.	(803) 725-5813	cecil.may@srs.gov
Mike Mohar	Bechtel Nevada, Inc.(WAMO)	(301) 817-3366	moharmf@nv.doe.gov
John D. Moroney	Thermo Hanford, Inc.	(509) 375-4675	John_D_Moroney@rl.gov
Jim Rugg	Bechtel Hanford, Inc.	(509) 373-6585	jerugg@bhi-erc.com
Stan Solomon	Florida International University	(305) 348-1677	stans@eng.fiu.edu

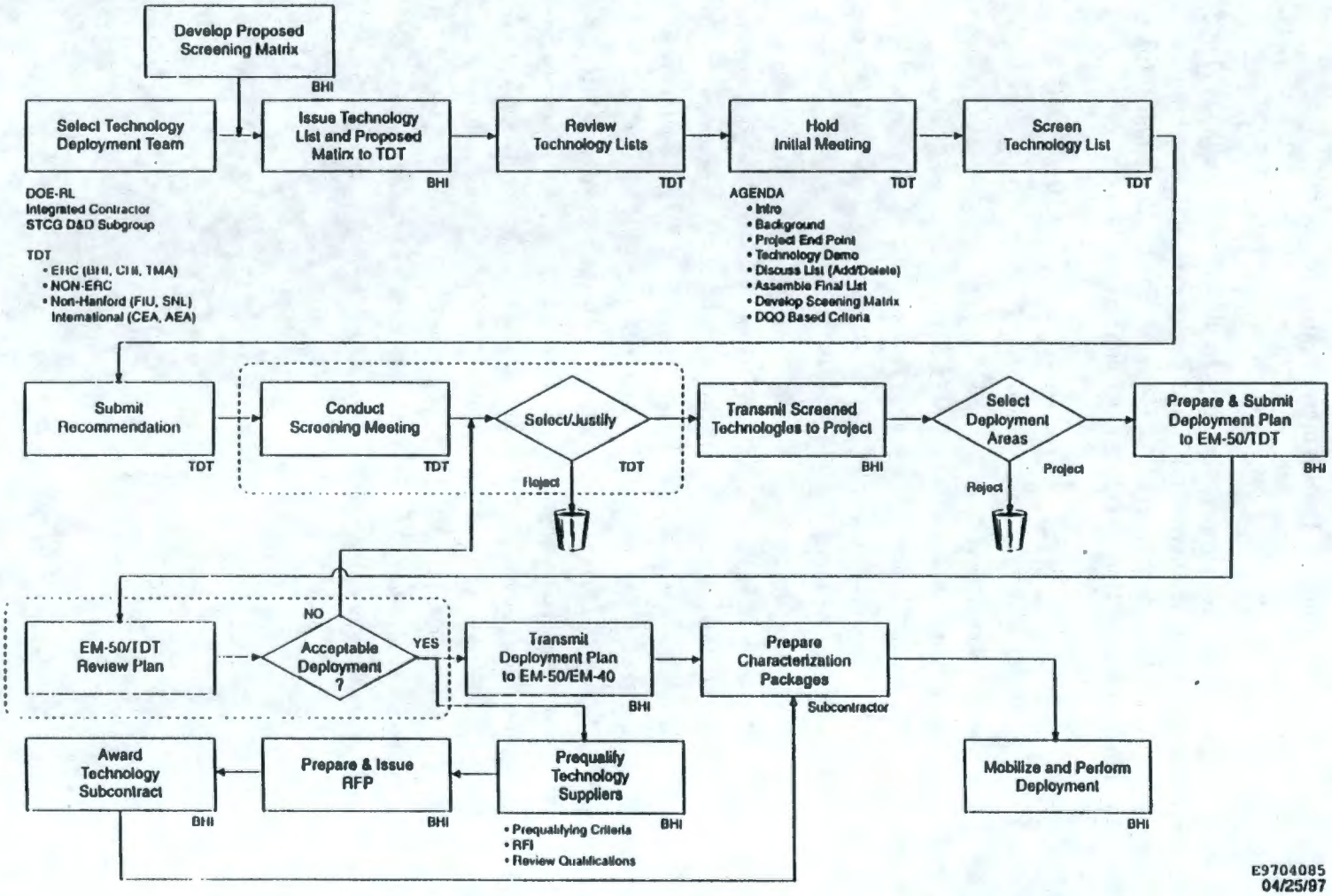

Figure A-1. Technology Deployment Process

DISTRIBUTION

U.S. Department of Energy
Richland Operations Office

T. W. Ferns	H0-12
R. A. Pressentin	A6-38
J. P. Sands	H0-12

Fluor Hanford, Inc.

R. R. Borisch	R3-57
G. Cox	G1-32

CH2M Hill Hanford Group, Inc.

J. A. Voogd	H6-64

Pacific Northwest National Laboratory

S. A. Bailey	K5-08

ERC Team

R. G. Egge	S3-21
D. B. Encke	T6-05
G. L. Funnell	T7-05
J. J. Gilley	T7-05
R. P. Henckel	X9-08
R. L. Henke	T7-05
I. D. Jacques	S3-21
C. J. Kemp	S3-20
N. R. Kerr	S3-21
K. J. Koegler	H0-05
S. P. Kretzschmar	S3-21
R. J. Landon	H0-02
J. J. McGuire	S3-20
W. H. Price	H0-20
J. D. Showman	T7-05

DISTRIBUTION (continuted)

ERC Team (continuted)

R. G. Shuck	T7-05
S. C. Tinall	H0-02
P. J. Woods	S3-20
S/M&T Project File	S3-20
Document and Information Services (3)	H0-09
Hanford Technical Library	P8-55
RL Public Reading Room	P8-53
Administrative Record File	H6-08