0031194

Westinghouse Hanford Company

Facility Description Manual

204-AR Rail Car

SEP 1993
RECEIVED
EDMC

Westinghouse
Hanford Company Richland, Washington

Hanford Operations and Engineering Contractor for the
U.S. Department of Energy under Contract DE-AC06-87RL10930

ODC Administered Document

LEGAL DISCLAIMER

This report was prepared as an account of work sponsored by an agency of the United States Government. Neither the United States Government nor any agency thereof, nor any of their employees, nor any of their contractors, subcontractors or their employees, makes any warranty, express or implied, or assumes any legal liability or responsibility for the accuracy, completeness, or any third party's use or the results of such use of any information, apparatus, product, or process disclosed, or represents that its use would not infringe privately owned rights. Reference herein to any specific commercial product, process, or service by trade name, trademark, manufacturer, or otherwise, does not necessarily constitute or imply its endorsement, recommendation, or favoring by the United States Government or any agency thereof or its contractors or subcontractors. The views and opinions of authors expressed herein do not necessarily state or reflect those of the United States Government or any agency thereof.

This report has been reproduced from the best available copy.

Printed in the United States of America

DISCLM-2.CHP (1-91)

Westinghouse Hanford Company

Facility Description Manual

204-AR Rail Car

Westinghouse
Hanford Company Richland, Washington

Hanford Operations and Engineering Contractor for the
U.S. Department of Energy under Contract DE-AC06-87RL10930

ODC Administered Document

204-AR RAIL CAR UNLOADING FACILITY

FACILITY DESCRIPTION MANUAL

Operating Documents Group
Process Engineering Department
Research and Engineering

This document replaces Document No. RHO-MA-215

OFFICIALLY RELEASED
ODM

Release Date	Expiration	Document No.	Rev/Mod	Page
2-27-86	----	FDM-T-290-00001	A-0	1 of 70

PREFACE

This Facility Description Manual is a technical document which describes the design and basic operations of the 204-AR Vault equipment and facilities. The manual is an information reference for use by Engineering and Operations personnel involved with the design and operation of the facility. It is also a training manual for those unfamiliar with rail car unloading activities performed at the 204-AR Facility.

TABLE OF CONTENTS

1.0 INTRODUCTION 6

1.1 PURPOSE OF THE FACILITY 6
1.2 SCOPE OF MANUAL 6

2.0 PROCESS/OPERATION DESCRIPTION 8

2.1 OVERVIEW 8
2.2 WASTE RECEIVING OPERATIONS 8

2.2.1 Waste Receiving at 204-AR 10
2.2.2 Waste Sampling 11
2.2.3 Chemical Adjustment 15
2.2.4 Waste Transfer to Tank Farms 19
2.2.5 Tank Car Sluicing 21
2.2.6 Release of Tank Cars 22
2.2.7 Catch Tank Operations 22

2.3 204-AR EFFLUENT STREAMS 23

3.0 FACILITIES DESCRIPTION 24

3.1 204-AR BUILDING 24

3.1.1 Tank Car Unloading Canyon 24
3.1.2 Mechanical Equipment Room 26
3.1.3 Control Room and Instrumentation 28

3.2 PROCESS SYSTEMS AND EQUIPMENT 32

3.2.1 Tank Cars 33
3.2.2 Transfer Pumps P-1A and P-1B 35
3.2.3 Catch Tank 38
3.2.4 Chemical Makeup System 42
3.2.5 Floor Drainage System 48

3.3 UTILITIES 50

3.3.1 Sanitary Water 50
3.3.2 Raw Water 50
3.3.3 Steam 53
3.3.4 Electrical Power 55
3.3.5 Instrument Air 55
3.3.6 Sanitary Waste Disposal 57

TABLE OF CONTENTS (Cont.)

3.4 VENTILATION SYSTEM 58

3.4.1 Personnel Area Ventilation System 58
3.4.2 Radiation Zone Ventilation System 59
3.4.3 Mechanical Equipment Room Ventilation System . 60

3.5 RADIATION MONITORING SYSTEMS 63

3.5.1 Area Radiation Probes 63
3.5.2 Vacuum System 63
3.5.3 Record Air Sampler 65
3.5.4 Continuous Air Monitors (CAMs) 65
3.5.5 Exhaust Stack Monitor 66
3.5.6 Alarms and Annunciators 66

4.0 GLOSSARY 67

5.0 APPENDICES 68

5.1 REFERENCES 68
5.2 DRAWING LIST 69

LIST OF FIGURES

Figure No.	Title	
1	204-AR Rail Car Unloading Facility Area Map	7
2	204-AR Building	9
3	Tank Car Access Fittings	12
4	Sample System and Cabinet	14
5	Chemical Makeup System	16
6	Caustic Solution System	17
7	Process Transfer System Schematic	18
8	Solution Transfer Flow Schematic	20
9	204-AR Rail Car Unloading Facility Cutaway	25
10	204-AR Equipment Room	27
11	204-AR Control Room Layout	29
12	Graphic Panel Board	30
13	Auxiliary Panel Board	31
14	Seal Water System - Pumps P-1A and P-1B	37
15	Catch Tank (TK-1)	39
16	Catch Tank Services	40
17	Tank 5	43
18	Tanks 2, 3 and 4	46
19	204-AR Floor Drainage Schematic	49
20	204-AR Raw Water System	51
21	204-AR Steam System	54
22	Compressor Building 209A	56
23	HVAC Flow Chart	58
24	Radiation Zone HVAC	59
25	Radiation Zone HVAC in Mechanical Equipment Room	61
26	Radiation Monitoring Vacuum Systems	65

LIST OF TABLES

Table No.	Title	
1	204-AR Facility Waste Requirements for Inline Neutralization	13
2	Tank Car Access Fittings	34
3	204-AR Safety Interlocks	41
4	204-AR Chemical Tanks	44
5	204-AR Fans	62
6	204-AR Unit Heaters	62

1.0 INTRODUCTION

1.1 PURPOSE OF THE FACILITY

The 204-AR Vault serves as the rail car unloading facility. Liquid radioactive wastes from Hanford contractors are delivered to this facility via railroad tank cars. The tank cars are received in a fully-enclosed, heated and ventilated building.

In addition to providing facilities and equipment for the transfer of waste from tank cars to a designated east area tank farm, the 204-AR Facility also has the capability to chemically adjust waste prior to or during pumpout operations. Waste sampling equipment is used to ensure that all waste conforms to required specifications. Additionally, tank car sluicing equipment is provided to remove sludge and other radioactive material from tank cars during or after pumpout operations.

The facility permits processing of customer wastes with minimum radiation exposure to operating personnel. Once a tank car is positioned and connected for operations, routinely operated valving is performed remotely from a panel board in the Control Room. Most process operations are performed without personnel present in the tank car unloading canyon.

1.2 SCOPE OF MANUAL

This manual describes the overall operation of the 204-AR Facility. It also contains information which describes the equipment and the design and construction of the facility.

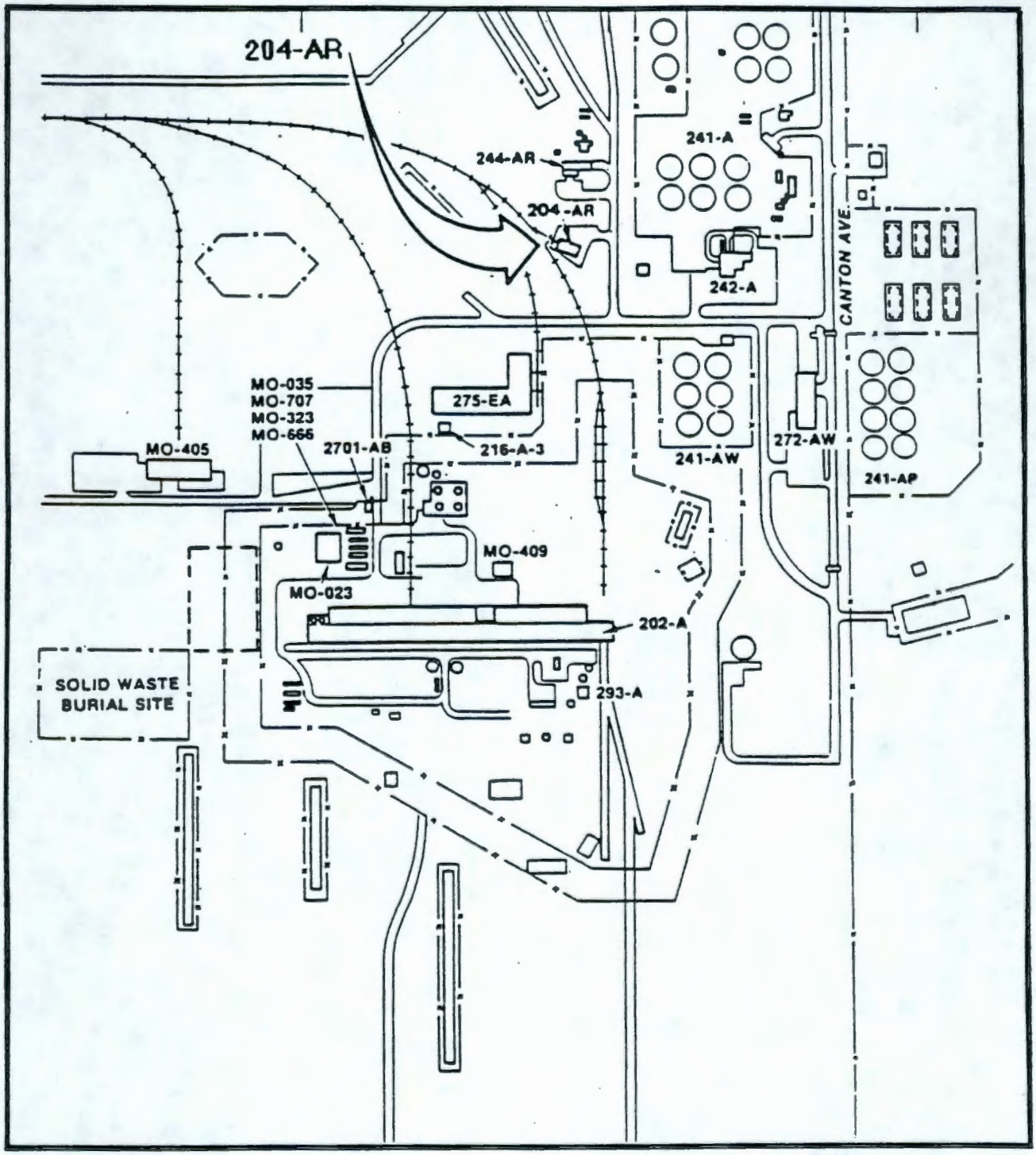

FIGURE 1. 204-AR Rail Car Unloading Facility Area Map

2.0 PROCESS/OPERATION DESCRIPTION

2.1 OVERVIEW

Radioactive liquid wastes generated by various Hanford contractors are shipped in 20,000-gallon railroad tank cars to the 204-AR Facility (Figure 2). The incoming waste must meet 204-AR and operating specifications. If the incoming waste does not meet tank farm storage specifications, the contents may be neutralized by metering caustic/nitrite solution through an in-line mixer system concurrent with rail car waste transfers to an underground storage tank. Waste may be adjusted by adding necessary chemicals directly to the tank car prior to transfer operations. Waste delivered via a tank car is held in interim storage at a tank farm for subsequent evaporation, or to be used as feed for the grout facility.

After being unloaded, tank cars are sluiced to reduce the build-up of radioactive sludge which is a major cause of high radiation dose rates. When sluicing operations are complete, tanks are decontaminated externally (if necessary), unhooked and then removed from the facility.

2.2 WASTE RECEIVING OPERATIONS

Hanford facility waste (HFW) originates primarily in the 100-N and 300 Areas. The majority of the liquid waste received at the 204-AR is shipped from the 100-N Area and consists of three different waste types. These wastes are:

- N-reactor decontamination waste which is a dilute phosphate waste containing some complexing agents

- Ion exchange regeneration waste which is a non-complexed, dilute sulfate solution

- Sand filter backwash waste which is formed when the filtering system is flushed to remove entrained solids.

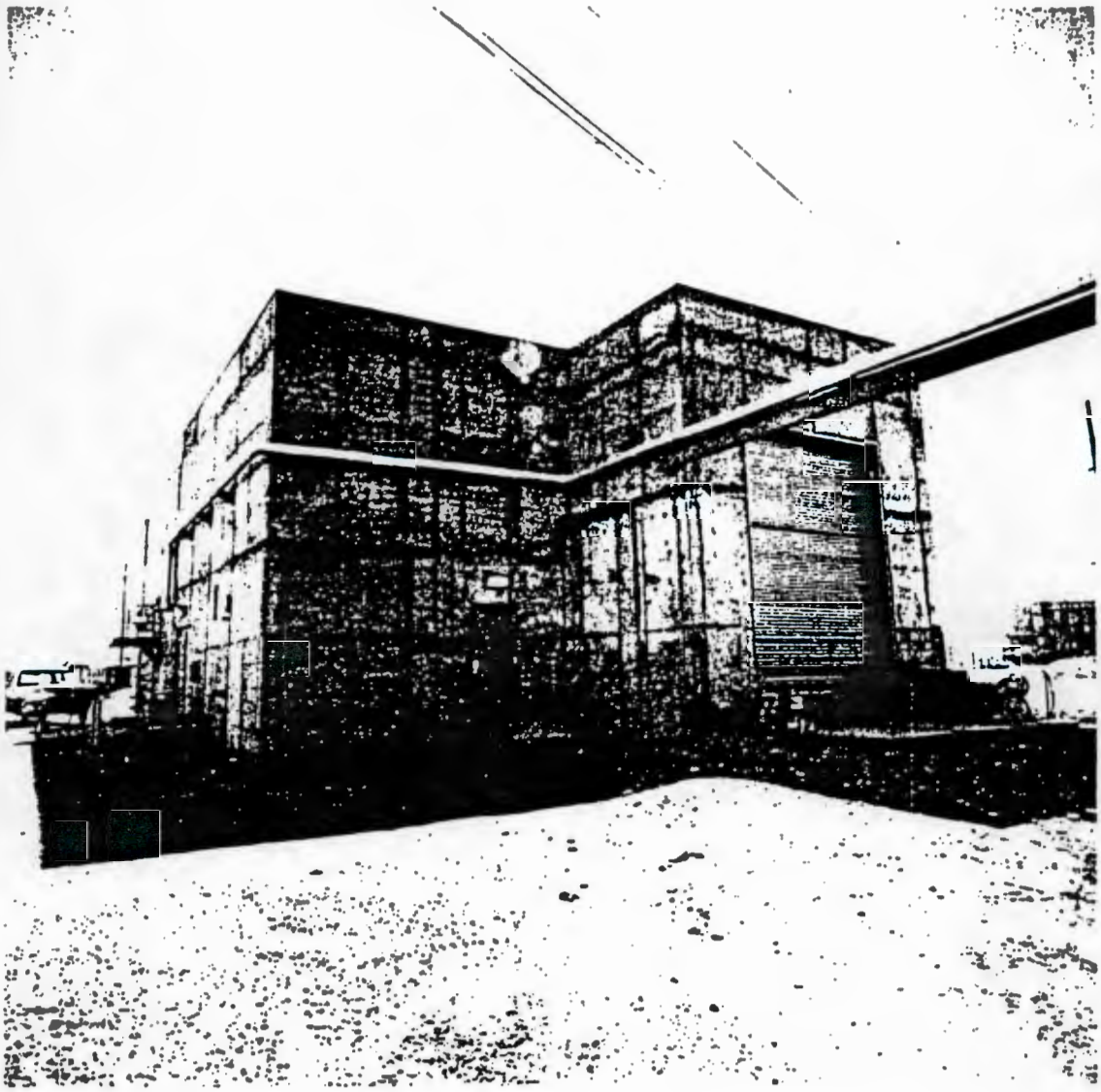

FIGURE 2. 204-AR Building

Liquid waste from the 300 Area is a dilute, noncomplexed solution which is primarily laboratory waste. Some radioactive aqueous wastes from the Fast Flux Test Facility (FFTF) are mixed with the general laboratory waste prior to shipment to the 204-AR.

2.2.1 Waste Receiving at 204-AR

Tank cars are loaded at the 1213-N Building (100-N) and the 340 Building (300 Area), then moved to the 204-AR Facility via the Hanford Railroad. During transport, a spacer car is used between the engine and the tank car to provide shielding for the engine crew to assure a dose equivalent rate of 6 mrem/hr or less. The train consists of the locomotive, at least one spacer car and the liquid waste tank car. Tank cars are not coupled directly to commercial cars. When tank cars and commercial cars move in the same train, a Hanford spacer car must be used between the tank car and the commercial cars, and the tank car and spacer car(s) must be carried at the end of the train.

The tank cars can only be stored on specific tracks that have been designated as radiation zones when unattended. In the 200 East Area, track TC-4 is normally used to store tank cars associated with 204-AR operations. The lead track into 204-AR cannot be used for this purpose.

When a train arrives at 204-AR, the lead spacer car is set off on the TC-4 spur. Next, the tank car is surveyed and decontaminated, if necessary. Then the doors to the unloading room are opened, and the tank car is spotted inside the unloading room. The hand brake on tank cars being spotted must always face the unloading room doors. Hand brakes on the car are set to secure the car in the correct unloading position, and the doors are closed upon departure of the train.

With the tank car in place, the process plan is developed. Process plans may vary for each car, depending upon the type of waste received, and the radiological conditions encountered. They may include sampling and in-line neutralization or chemical adjustment of tank car contents (if necessary), transfer operations and sluicing operations.

Depending upon the process plan developed, up to six hoses with quick disconnects are coupled to the following tank car access fittings (Figure 3):

- Cupola vent/drain
- Pumpout
- Tank car vent
- Sluice
- Chemical addition
- Weight factor (1/2-inch).

All access fittings except the cupola vent/drain are located in the tank car dome. Detailed tank car receiving and hookup information is contained in SOP TO-290-010, RECEIVING, PROCESSING AND RELEASING TANK CARS IN 204-AR.

2.2.2 Waste Sampling

Wastes received at the 204-AR Facility must meet specifications as established in Document No. OSD-T-151-00008, OPERATING SPECIFICATIONS FOR THE 204-AR WASTE UNLOADING FACILITY. If in-line neutralization is used, specifications shown in Table 1 apply. Wastes pumped to tank farms from 204-AR must meet the requirements of OSD-T-151-00007, OPERATING SPECIFICATIONS FOR 241-AN, -AP, -AW, -AY, -AZ and -SY FARMS.

The sampling system is designed for remote sampling of the tank car and catch tank. Valving is set up from the Control Room. The sample bottle is filled at the sample hood on the tank car room balcony.

The sampling system consists of a steam vacuum jet and a standard vacuum-trap sampler (Figure 4). The vacuum jet draws the sample liquid through a small sample trap that is vented to a glass sample bottle. When the jet is on, a vacuum develops in the sample bottle as the sample stream flows through the trap. When the steam is turned off, the vacuum in the bottle draws the liquid from the trap into the bottle. This system prevents overfilling or pressurizing the sample bottle.

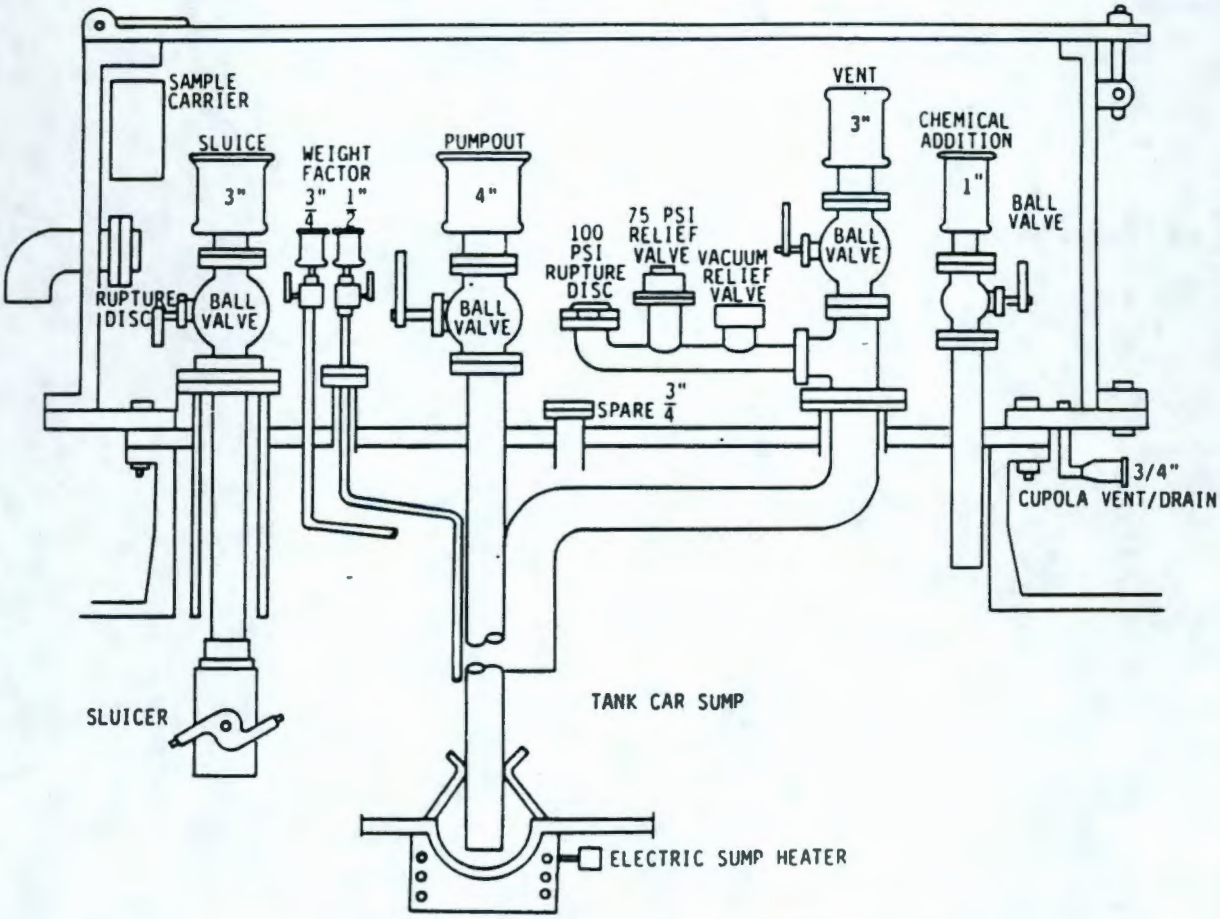

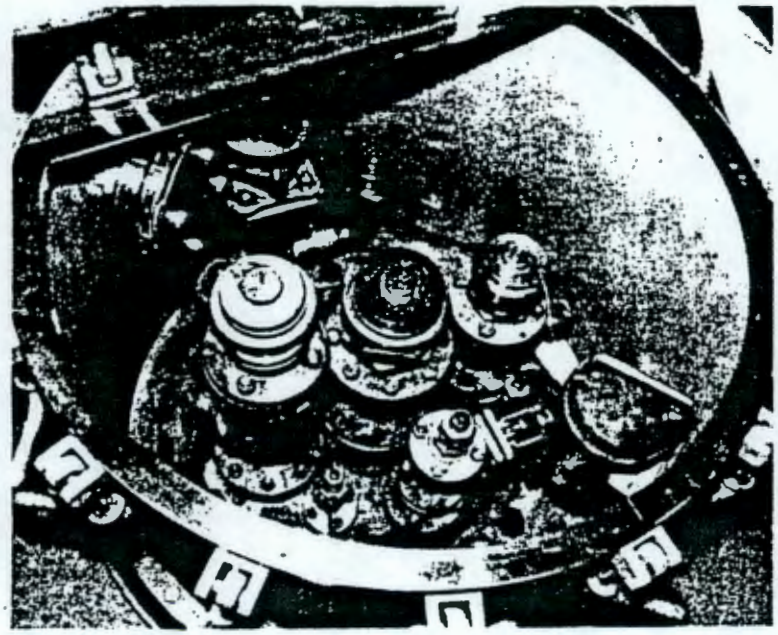

FIGURE 3. Tank Car Access Fittings

TABLE 1

204-AR FACILITY WASTE REQUIREMENTS FOR INLINE NEUTRALIZATION

For $NO_3 \leq 1.0M$	
OH	$0.0M \leq OH \leq 5.0M$
NO_2	$0.0M \leq NO_2 \leq 5.5M$
pH	$pH \geq 7.0$
For $1.0M < NO_3 \leq 3.0M$ (*)	
OH	0.1 (NO_3 Concentration) $\leq OH < 10.0M$
$OH + NO_2$	$\geq$ 0.4 (NO_3 Concentration)
For $NO_3 > 3.0M$ (*)	
OH	$0.3M \leq OH < 10.0M$
$OH + NO_2$	$\geq 1.2M$
NO_3	$\leq 5.5M$
Cl 0.01M for all shipments	
Fissile Content (**) less than 15.0 g/tank car	

A laboratory analysis is required prior to each waste shipment ($) and shall include the following elements:

OH, NO_2, NO_3, CO_3, PO_4, SO_4, Cl, Al, Na, Pu, U, TOC ($$), pH, SpG, % solids, and an NaOH titration to pH 12.5 (report NaOH required)

NOTES

* This specification is identical to Tank Farm operating specifications since 204-AR does not have the capacity to neutralize waste above 1.0M NO_3.

** Fissile elements shall include U^{235} and Pu^{239} with any equivalents of other fissile elements in compliance with RHO-MA-236 Standard #2.

$ Tank Farm and Evaporator Process Engineering can waive this requirement in some instances.

$$ Also, visual verification that no separable organic phase is present is required.

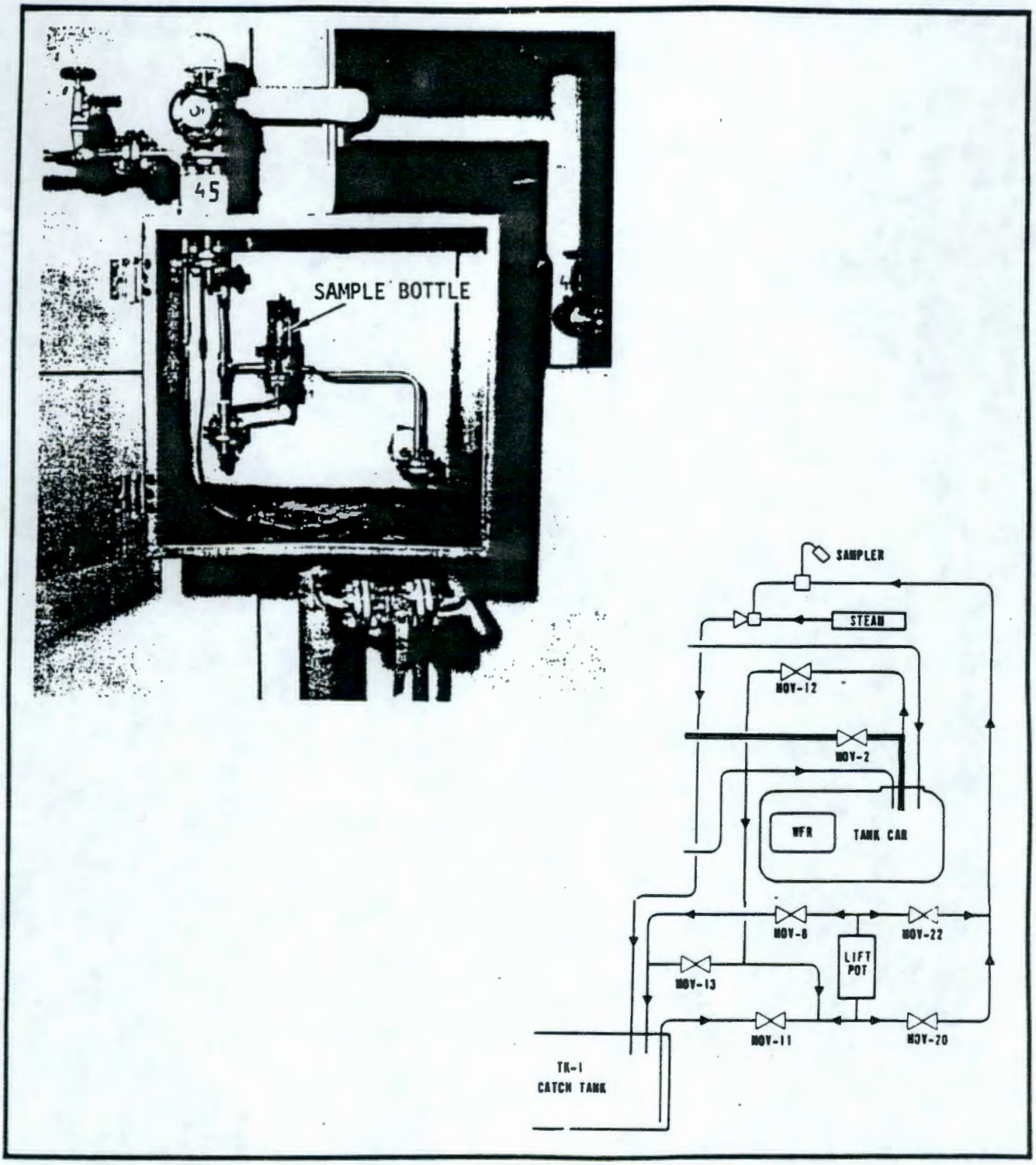

FIGURE 4. Sample System and Cabinet

The sampling system is installed in a stainless steel hood on the balcony. Tank car samples are drawn from the tank car pumpout line (ahead of MOV-2) directly into the sampler. The vertical rise from the catch tank to the sample station is too great for a single vacuum lift. Catch tank samples are first drawn into an intermediate sample lift pot. When full, the lift pot is vented and the sample is drawn into the sample station in a second lifting operation. The sample system will not function without a sample bottle in place.

When it is necessary to make an immediate pH determination, pH paper is placed into the sample bottle before installing it on the sampler. All sample bottles containing liquid are transported to the laboratory for analysis or disposal. Sample liquids are not drained out of bottles into the sample hood. The hood is not ventilated and must be maintained as a clean area at all times. The plexiglass door on the hood is intended for splash protection only. It does not provide radioactive containment.

The steam jet is equipped with a vacuum breaker to prevent contaminated liquid from entering the steam supply line. The jet exhaust is routed to the catch tank. When the jet is drawing air, a considerable amount of vapor (steam) is discharged into the catch tank vapor space. It is important to avoid unnecessary steam jet operation to minimize moisture-loading of the catch tank ventilation system. The sample lift pot is not equipped with a liquid level measuring system. Jetting time required to fill the pot is posted on the sample hood.

A detailed description of sampling operation is contained in SOP TO-290-060, SAMPLING OF RAILROAD TANK CARS AND CATCH TANK AT 204-AR.

2.2.3 Chemical Adjustment

If the contents of the tank car or catch tank do not meet tank farm specifications, chemical adjustment solutions are prepared in the chemical makeup system (Figure 5). The required volume of adjustment solution is either metered into the tank car pumpout line during waste transfer operations (in-line neutralization) or added directly into the tank car or catch tank.

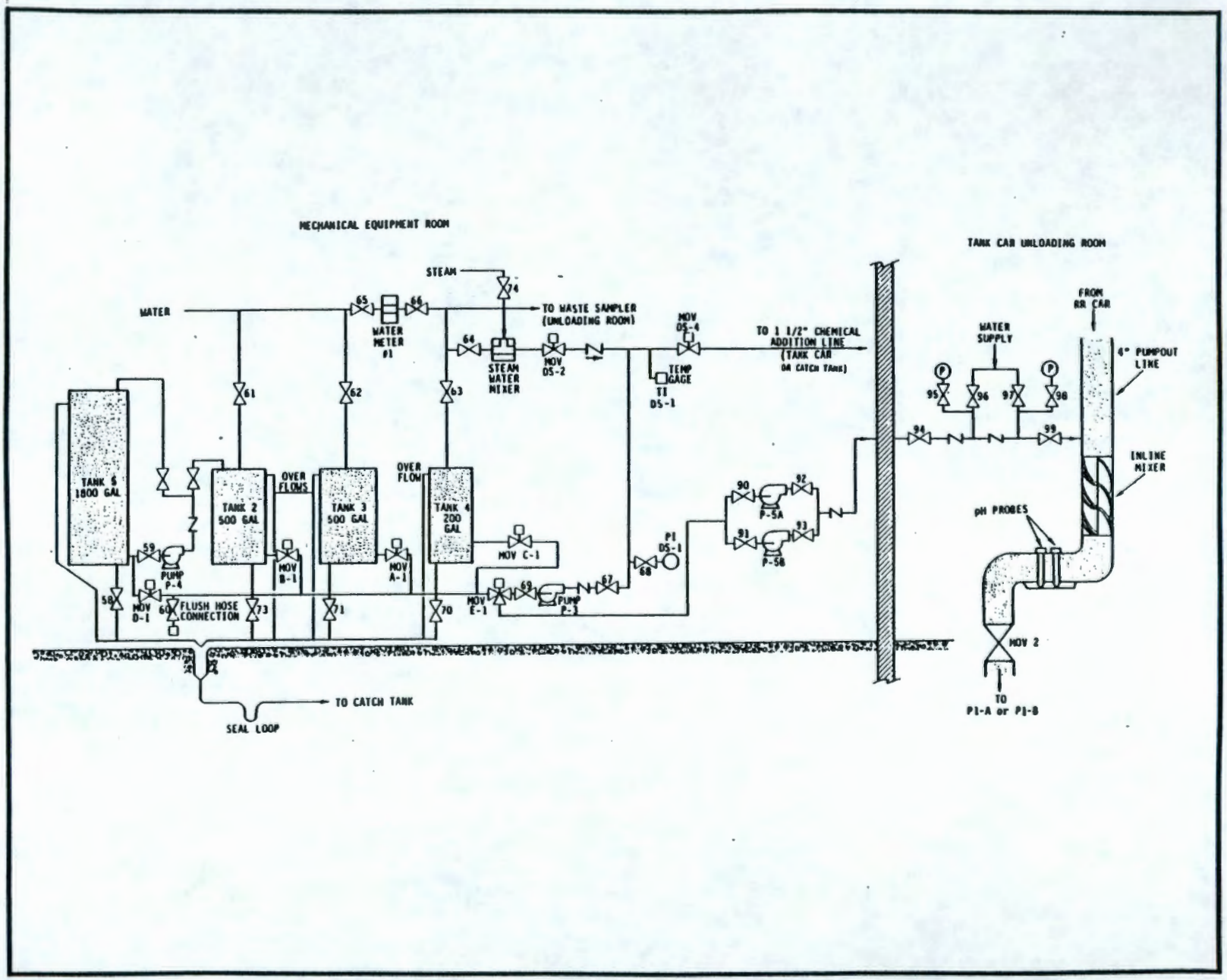

FIGURE 5. Chemical Makeup System

Document No.	Rev/Mod	Page
FDM-T-290-00001	A-0	16

A-6400-183.2 (N-4-82)

The four storage/makeup tanks are used as follows:

- Tank 2 - caustic/nitrite mixtures
- Tank 3 - nitrite solution makeup
- Tank 4 - high pH buffer solution
- Tank 5 - 50% caustic solution.

Caustic solution is delivered to Tank 5 from PUREX via a tank truck (Figure 6). Chemical additions to Tanks 2, 3 and 4 are performed in the mechanical equipment room. A detailed description of chemical makeup operations is contained in SOP TO-290-070, CHEMICAL MAKEUP IN 204-AR.

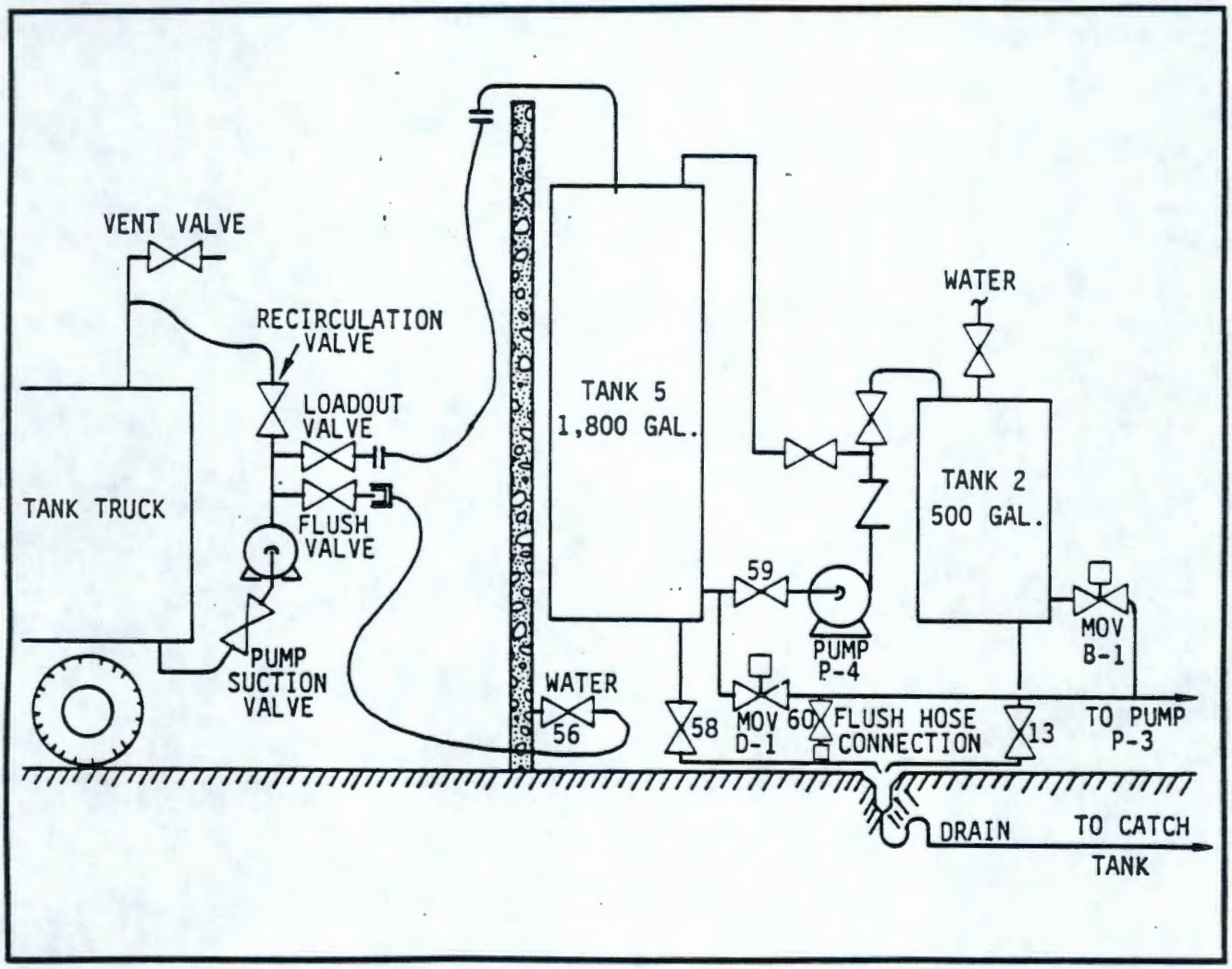

FIGURE 6. Caustic Solution System

As part of a 1985 modification program at the 204-AR Facility, an in-line mixer system was installed. This mixer system allows the receipt of liquid waste at a solution pH as low as 7 and with no corrosion inhibitors.

The problems of precipitating solids becomes greater as the pH of the waste solution is raised. The new, in-line mixer system provides a means of pumping out the low pH waste and mixing it with the required nitrite/caustic solution in the pumpout line (see Figure 7). The system keeps solids suspended in turbulent flow and reduces the accumulation of sludge inside the tank car.

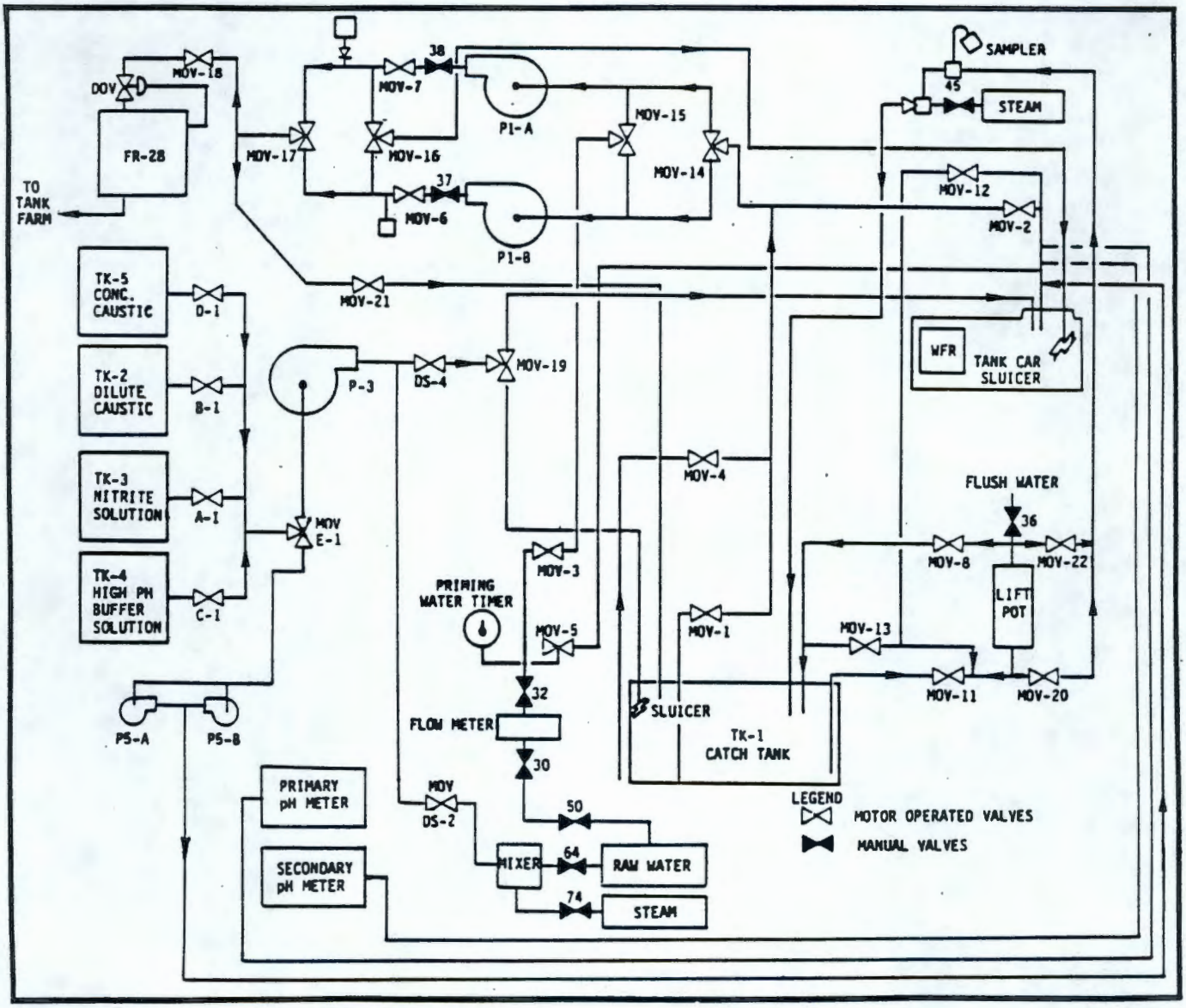

FIGURE 7. Process Transfer System Schematic

Two positive displacement metering pumps, P5-A and P5-B, are installed in parallel to feed the necessary nitrite/caustic additive to the static mixing device. A pH probe system is incorporated downstream from the mixer to ensure that the liquid waste meets tank farm storage specifications for a minimum pH of 12.0.

2.2.4 Waste Transfer to Tank Farms

Either pump P1-A or P1-B is used to transfer waste from the 204-AR to a tank farm (see Figure 8). A flow recorder/controller on the 204-AR graphic panel board indicates the flow rate and permits adjustments to be made to the flow. Measurement and control are made via an ultrasonic flowmeter and a diaphragm-operated valve (DOV) in the transfer line.

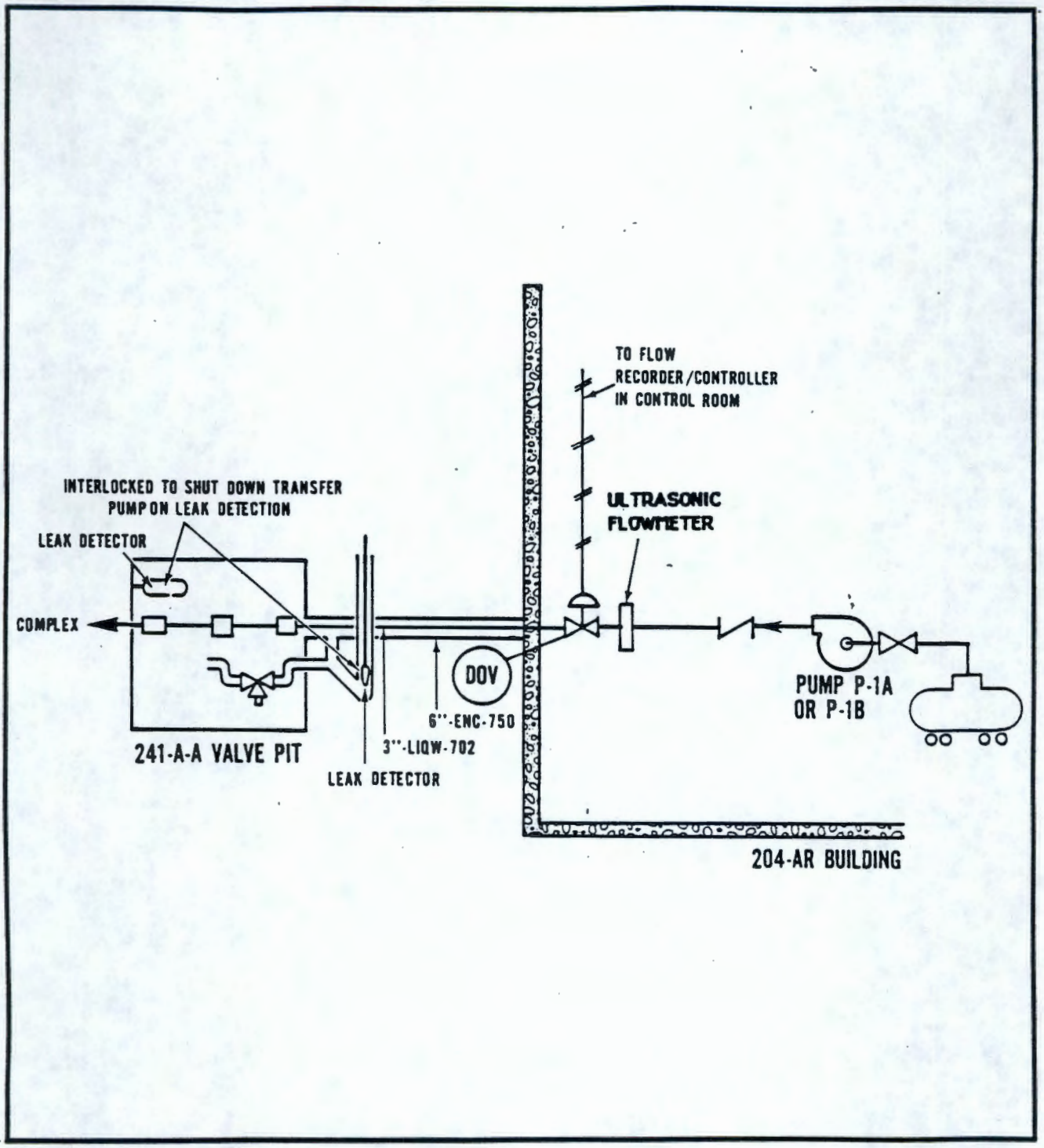

FIGURE 8. Solution Transfer Flow Schematic

Waste pumped from the 204-AR enters the processing system via transfer line LIQW-702 to nozzle L-11 in valve pit 241-A-A. The transfer line encasement drains to the valve pit through a seal loop installed in the pit. The seal loop contains a conductivity probe to detect liquid flowing through the encasement. The probe activates the master shutdown circuit which shuts off P-1A or P-1B through the interlock system. Jumpers installed in 241-A-A route 204-AR waste to tank farm piping systems and eventually to the designated waste receiver tank. A detailed description of waste transfer operations is contained in SOP TO-290-130, TRANSFER FROM 204-AR TO TANK FARM.

2.2.5 Tank Car Sluicing

Most tank car waste shipments contain suspended solids and sludge from waste neutralization operations. These solids often carry the bulk of the radioactive contaminants in the shipment. If the solids and sludge are allowed to settle and accumulate in the tank car, extremely high dose rates would occur outside the car.

Sluicing with high pressure water and pumping the resulting slurry to the tank farm removes most of the solid material from the tank car. All tank cars are equipped with a permanently mounted sluicing jet to clean the inside surface of the car (Figure 20).

One of the transfer pumps (P1-A or P1-B) is used to boost the water pressure approximately 80 psi above the pressure of the raw water system. The liquid-driven sluicer continually sweeps the tank car interior with two water jets to loosen sludge layers from the tank car surfaces.

During a 1985 upgrade program, a DOV was installed to regulate raw water flow to the tank car sluicer. The DOV, installed upstream of the sluicer inlet, provides a means to maintain a minimum liquid level in the tank car throughout the sluicing operation. Equalizing the liquid pumpout and sluicer addition rates greatly increases sludge removal capability by keeping more sludge bearing surfaces exposed to the cleaning action of the sluicer.

The liquid stream entering the sluicer drives a small turbine. The turbine in turn operates a gearbox which rotates the main body of the sluicer as well as the sluicing nozzle. The rotation speed of the opposed 3/4-inch nozzles is slightly slower than that of the sluicer body and produces a figure eight spray pattern. Complete coverage of a tank car interior requires one cycle of from two to five minutes. A detailed description of tank car sluicing operations is contained in SOP TO-290-130, TRANSFER FROM 204-AR TO TANK FARMS.

2.2.6 Release of Tank Cars

When waste neutralization, waste transfer and sluicing operations have been completed, the tank car is disconnected from the unloading hoses, and, if required, decontaminated by Operations personnel. Tank car fittings, cupola interior, drain manifold and hoses are surveyed for smearable contamination. Upon release of the tank car by RPT, the inner and outer doors of the unloading room are opened and the tank car is removed by railroad personnel.

Tank car release operations are described in SOP TO-290-010, RECEIVING, PROCESSING AND RELEASING TANK CARS IN 204-AR BUILDING.

2.2.7 Catch Tank Operations

The 1500-gallon catch tank, located in the tank car unloading canyon, receives miscellaneous spills, overflows, steam condensate, sample jet discharges and chemical waste. The catch tank can be sampled with the same equipment designed for tank car sampling. Because of the high lift required from the catch tank to the sample hood, sampling is performed in two stages: catch tank to lift pot and lift pot to sampler.

Catch tank waste is chemically adjusted as required to meet tank farm specifications. The catch tank is equipped with a recirculation line so that tank contents can be recirculated for blending. Normally 5 to 10 minutes is adequate recirculation time.

The catch tank and sump are pumped out with the same equipment used to pump out tank cars. A small sluicer is used to remove any solids buildup in the catch tank. Water at system pressure is supplied from the mechanical equipment room. Slurry is pumped out at approximately the same rate at which water is supplied. Sluice water streams are directed downward to prevent the water from entering the catch tank vent system.

2.3 204-AR EFFLUENT STREAMS

The 204-AR Facility produces one process gaseous effluent: exhaust from the radiation zone HVAC system. The exhaust exits the facility through exhaust stack (296-A-26). Before entering the atmosphere, the exhaust passes through primary and secondary HEPA filters.

All liquid effluents are discharged through transfer line LIQW-702 to the 241-A-A valve pit. Steam condensate, miscellaneous spills, overflows, sample jet discharges, floor drainage and chemical sewage are routed to the facility catch tank, and accumulated catch tank liquids are transferred to tank farm storage on a nonroutine basis.

3.0 FACILITIES DESCRIPTION

3.1 204-AR BUILDING

The 204-AR Building, which was completed in 1981, is a reinforced concrete building 25 foot 6 inch high, 65 foot long and 40 foot wide. A clean laundry storage shed is located just outside the west door. A newly-installed air compressor is located in a small, prefabricated steel building near the northeast corner of 204-AR (Building 209-A). The building is divided into three primary areas (see Figure 9):

- Tank car unloading canyon which contains transfer pumps, process piping, remotely operated valves and the facility catch tank
- Mechanical equipment room which contains chemical storage/ makeup tanks, metering pumps, motor control center, HVAC system and fire system
- Control room and personnel facilities.

3.1.1 Tank Car Unloading Canyon

The unloading canyon contains the transfer pumps (P1-A and P1-B), a waste catch tank, and associated valves and piping. The unloading room has concrete walls to provide radiation shielding. The walls vary in thickness from 1 foot 11 inches at the base to 10 inches at the top of the first level. Three floor drains route waste liquids to the catch tank. Floor and wall surfaces subject to contamination are painted and corners are rounded for easier decontamination.

Tank cars enter the unloading area through a rollup door, a vestibule and then through hinged steel doors. The two doors provide a double barrier against contamination escaping from the building. Rail car stops allow easy spotting of the tank car and prevent accidental damage to unloading area equipment (pumps and piping) located at the end of the tracks. A concrete shielding wall between the tank car and the transfer pumps reduces personnel exposure and minimizes liquid spray to the tank car in the event of a pump seal failure or line rupture.

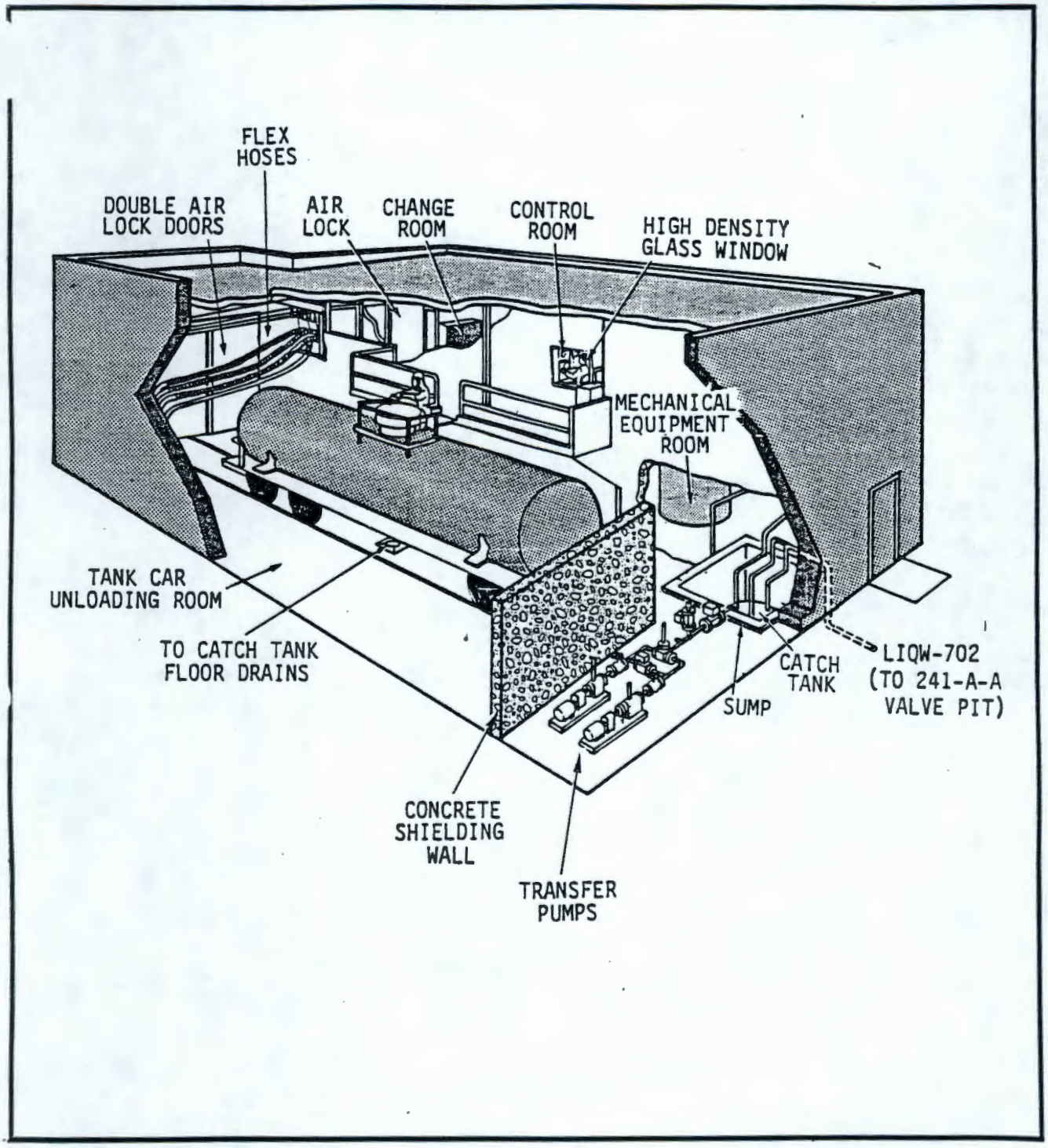

FIGURE 9. 204-AR Rail Car Unloading Facility Cutaway

Flexible hoses connected to fittings on the top of the tank car allow chemicals to be added to the car and waste solutions to be pumped out. The flexible stainless steel hoses have quick-disconnect fittings to allow easy coupling and uncoupling. The hoses are suspended from pulleys and counterweighted for ease of operation. The operator has access to the top of the tank car from a platform mounted on each car. A fold-down ramp provides access from the balcony to the tank car platform.

3.1.2 Mechanical Equipment Room

The first floor mechanical equipment room (Figure 10) houses the following process equipment:

- Chemical storage tanks
- Motor control center
- Personnel area HVAC equipment
- Chemical metering pumps
- Radiation zone HVAC equipment (excluding primary HEPA filters)
- Fire protection equipment.

Floor drains to the waste catch tank facilitate cleanup. The drain line has a 9-inch seal loop to prevent venting from the catch tank into the equipment room.

The personnel facilities located on the second floor include the Control Room, a locker room, a toilet and shower room, and a soiled clothes change room. The facilities are sized for a normal occupancy of three operating personnel. A radiation monitoring station is provided at the entrance to the soiled clothing room.

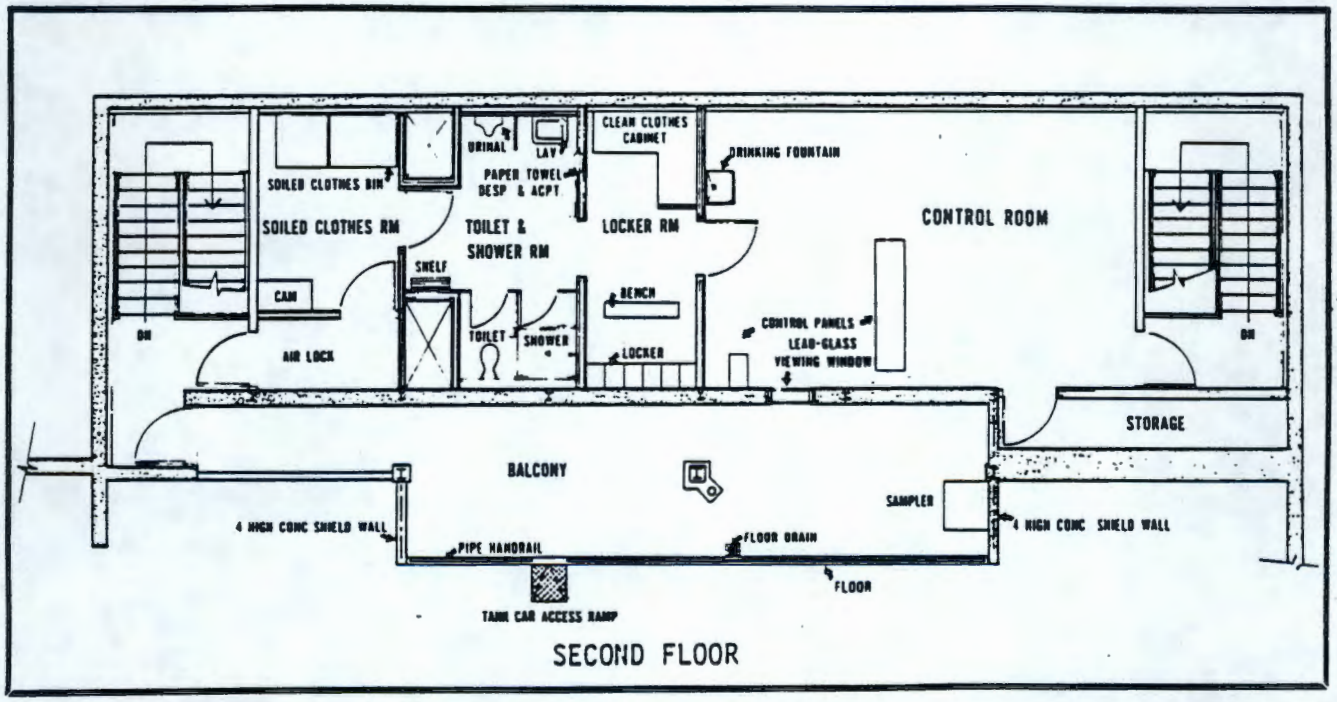

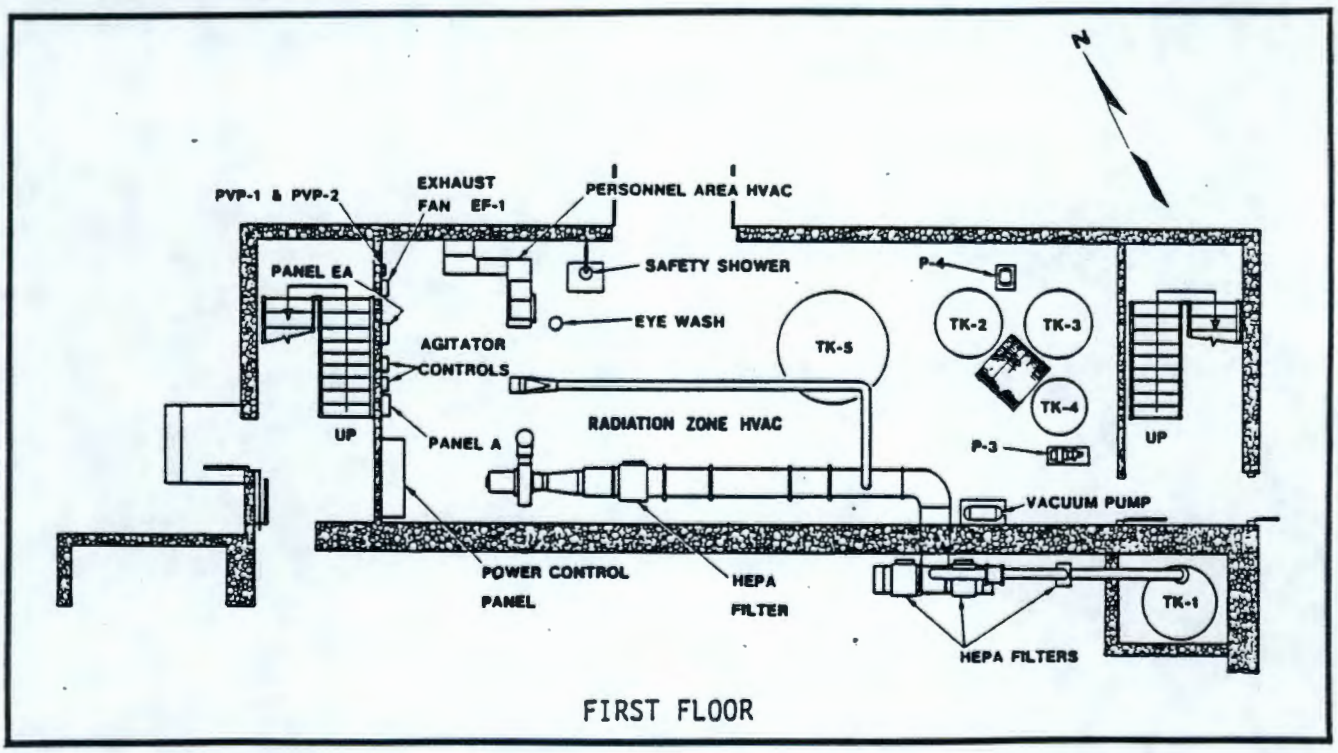

FIGURE 10. 204-AR Equipment Room

3.1.3 Control Room and Instrumentation

Most 204-AR operations are performed and monitored from the Control Room (see Figure 11). The large control panel is a graphic representation of most lines and equipment systems (see Figure 12). MOVs, control switches, valve position indicators, pumps and pump controls are shown for each flow line. Recorders or gauges display tank car and catch tank liquid levels as well as the solution flow rate to the tank farm.

The auxiliary control panel (Figure 13) contains:

- Bypass selector switches for the leak detection and MOV-2 interlock
- The P1-A and P1-B pump discharge pressure indicators
- The P1-A and P1-B pump casing drain valve controls
- The tank car access door controls and power switches
- DOV 23 control station
- Radiation Recorder (3-pen) for monitoring stack, soiled clothing room and unloading room radiation levels.

The auxiliary panel also includes a visual and audible annunciator panel for nineteen safety-related operating limits or variables as follows:

- Radiation, H/failure (RA-SC-2) soiled clothing room
- Radiation, H/failure (RA-EXH-1A) EF-1 exhaust stack
- Radiation, H/failure (RA-UNL-1C) rail car unloading room air (CAM)
- Radiation, H/failure (RA-UNL-1D) rail car unloading room area (ionization chamber)
- Level, low (LA-TK-1B) catch tank
- Level, high (LA-TK-1A) catch tank
- Interlock bypass active YA-1 leak detn/MOV-2 WT factor
- Leak detected (LDA-SMP) catch tank sump
- Flow, low (FAL-28) liquid waste to tank farm
- Leak detected (LDA-LIQW-1A) VP-241-A-A/Line 3 LIQW-701 MB
- Fan failure (FA-HVAC-1A) exhaust fan EF-1
- Operating alarm (OA-RD-1) outer door

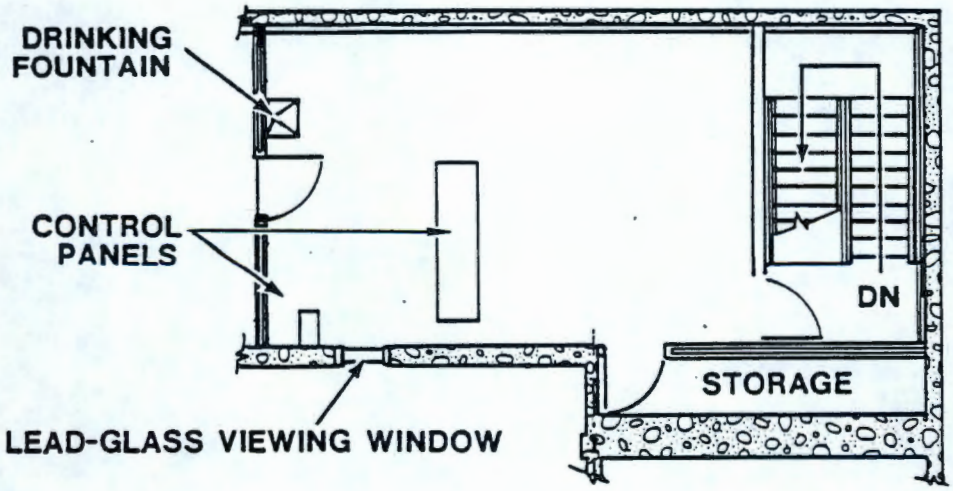

FIGURE 11. 204-AR Control Room Layout

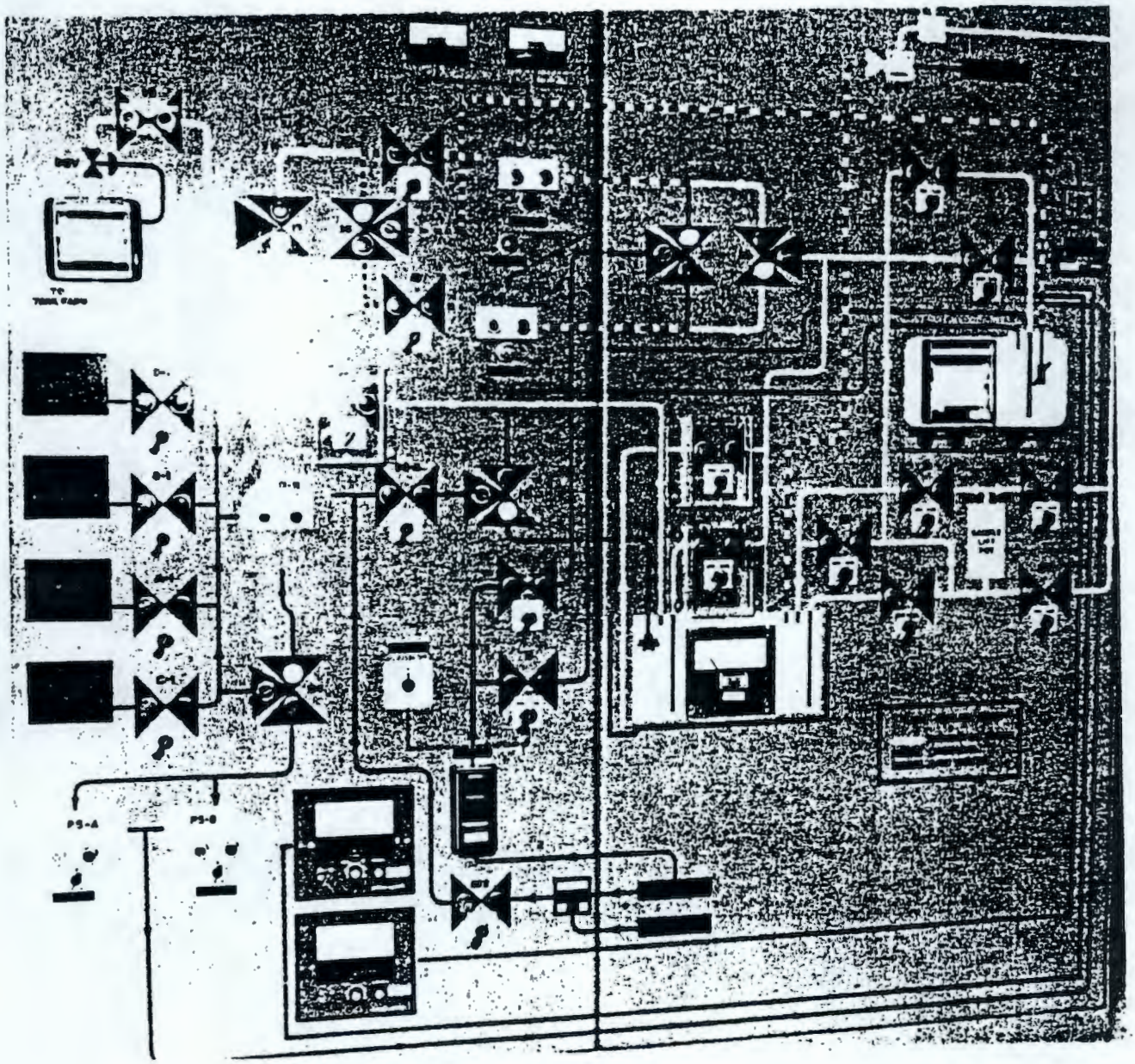

FIGURE 12. Graphic Panel Board

- Operating alarm (OA-DD-1) inner door
- Low vacuum (LVA-EXH-1) vacuum pump PVP-1
- Radiation H/failure (RA-UNL-1F) sample sink area (ionization chamber)
- Radiation High (RM-ME-1A) Mechanical Equipment Room
- CAM Failure (RM-ME-1B) Mechanical Equipment Room
- High Diff. Press. (PS-HVAC-2) Primary HEPA Filter
- High Diff. Press. (PS-HVAC-3) Secondary HEPA Filter.

A common alarm system is installed in the 242-A Evaporator/Crystallizer Building to annunciate trouble in the nearby 204-AR Facility so 242-A personnel can respond when 204-AR is unoccupied. The annunciators, Numbers 29A and 29B, are mounted on Panel G-1. The annunciator 29A legend reads: "Building 204-AR Trouble." This alarm is triggered by the following seven 204-AR alarms:

- Radiation, H/failure (RA-SC-2) soiled clothing room
- Radiation, H/failure (RA-EXH-1A) EF-1 exhaust stack
- Radiation, H/failure (RA-UNL-1C) rail car unloading room air (CAM)
- Radiation, H/failure (RA-UNL-1D) rail car unloading room area (ionization chamber)
- Level, low (LA-TK-1B) catch tank
- Level, high (LA-TK-1A) catch tank
- Leak detected (LDA-SMP) catch tank sump.

The annunciator 29B legend reads: "Building 204-AR Fire System Trouble." This alarm and an alarm at the 200E fire station are triggered simultaneously.

3.2 PROCESS SYSTEMS AND EQUIPMENT

The 204-AR process systems and equipment includes the radioactive waste handling facilities, the chemical storage/makeup equipment and the process control apparatus.

The bulk of the radioactive process piping and equipment is located behind the concrete shield in the tank car unloading room. The shield protects personnel performing maintenance on the process equipment from high radiation levels generated by the tank car's contents. In addition, the shield acts as a spray barrier in the event of a major, although highly unlikely, equipment failure. The shield itself consists of six concrete slabs. The faces of two slabs are bolted together, creating a barrier two-slabs thick. The three sets of two slabs are lined up and bolted edge-to-edge on end. This wall is bolted to supports on the floor and south wall. In the event major maintenance work is required, the shield can be unbolted, and the individual panels can be removed with a crane.

3.2.1 Tank Cars

Customer radioactive liquid waste is transported in four 20,000-gallon-capacity stainless steel railroad tank cars. The tank cars are of standard commercial interstate railroad tank car design (single-shell), classified as Department of Transportation (DOT) Type 111 A 100 WG, and are numbered 10 H-18579, -80, -81 and -82. The tank car's cylindrical vessel is 44 foot long and 9 foot in diameter.

A 24-inch dome in the center of the car provides access to the vessel interior by means of risers, valves and quick disconnects (see Figure 3). The vessel contains no baffles or obstructions of any kind except for a funnel guide for the 4-inch pumpout line and spray-nozzle header running along inside the top of the vessel.

The four originally supplied tank cars have been modified for current usage. The modifications made to these cars are shown in Table 2.

TABLE 2. TANK CAR ACCESS FITTINGS

Riser	Location	Equipment/Status	
		Original Car	Modified Car
8-inch	Top of Vessel	Pressure Relief Valve	Removed and Welded shut
3-inch	Top of Vessel	Vacuum Relief Valve	Removed and Welded Shut
1 1/2-inch	Top of Vessel	Spray Header/Chemical Addition*	Removed and Welded Shut
4-inch	Dome	4-inch Pumpout*	4-inch Pumpout*
3-inch	Dome	3-inch Vent*	3-inch Sluicer*
3 1/2-inch	Dome	No. 79 - Conductance Probe* No. 80 - Blank Nos. 81 and 82 - 1/2-inch 3/4-inch WF	3-inch Vent and Manifold with: Pressure Relief Valve Vacuum Relief Valve Rupture Disc
2-inch	Dome	Steam Heater**	1-inch Chemical Add.*
1-inch	Dome	Temperature Gage	1/2-inch WF Dip Tube*
3/4-inch	Dome	Steam Heater* Control Vent	3/4-inch Spare**
3/4-inch	Dome	3/4-inch Sump Sparger*	Spare**

* Denotes valve and Snap-Tite® quick disconnect.
** Not used.

Seven hose connections are provided to connect the tank car to the 204-AR process equipment:

- 4-inch - Pumpout to pumps P1-A, P1-B
- 3-inch - Vent to catch tank
- 3-inch - Sluicer supply from pumps P1-A, P1-B
- 1-inch - Chemical addition from pump P3
- 1/2-inch - WF
- 3/4-inch - Cupola vent/drain to manifold
- 3/4-inch - Spare (not used).

Four of the hoses are stainless steel flex lines equipped with stainless steel Snap-Tite® quick disconnects. Two of the hoses (WF and cupola vent/drain) are rubber. The quick disconnects are equipped with check valves actuated by the mating connector on the tank car. When not in use, the hoses are connected to a manifold that drains any liquid left in the hoses or connectors to the catch tank. Because the hoses are relatively heavy, they are supported by a system of pulleys and counter-weights for easy handling. The counterweights can be filled with lead shot for weight adjustment.

3.2.2 Transfer Pumps P1-A and P1-B

Two identical, self-priming pumps are used to transfer radioactive liquids or boost raw water pressure. The P1-A pump normally pumps tank car, catch tank and sump liquids. The P1-B pump raises the raw water pressure up to as much as 200 psi during the tank car sluicing operation. Pump design allows either pump to provide each function.

After the built-in priming chambers are initially filled with water, the pumps prime themselves, allowing direct pumping out of the catch tank and sump. Self-priming of the suction line from the tank car is theoretically possible, but the large volume of the 4-inch line would require an excessively long priming time. Therefore, an operator can open MOV-5 and manually prime the 4-inch pumpout line.

Full pumping capacity, when transferring liquid from the tank car to the tank farm, is 150 to 200 gpm. This, however, depends on the transfer route involved. Pumping from the catch tank or the sump to the tank farms is administratively limited to 80 gpm to avoid pump cavitation because of the high suction lift. The flow rate is controlled with the FRC-1 Flow Recorder/Controller.

The shaft connecting the motor and pump impeller is sealed with two sets of hard-faced mechanical seals to prevent liquid leakage through the shaft opening. Each seal consists of a shaft-mounted tungsten carbide ring that rotates against a second stationary ring. The space between the two back-to-back seals of the double mechanical seal receives a small stream of high pressure water to assure that any seal leakage will be into, rather than out of, the pump casing. A special seal water system (Figure 14) assures that the seal water pressure always exceeds the pump's discharge pressure.

Seal water is taken from the process water line ahead of Motor-Operated Valve (MOV)-3. The seal water system operates automatically and requires no operator action other than assurance that manual valve 41 is open.

Depressing the start button on P1-A or P1-B activates a relay which starts the seal water booster pump and opens a solenoid valve (SV-274-1 for P1-A or SV-274-2 for P1-B). When pressure switch PS-274-1 senses 120 psi and the flow switch on the respective pump seal water discharge line senses flow, the pump relays start the transfer pump.

The pump seal water pressure sensing circuit has a five-second time delay built in to allow for pressure fluctuations without shutting down the pump.

MOV-3 will not open unless P1-A or P1-B is running to ensure that the seal water pressure exceeds the pump casing pressure. (MOV-3 is interlocked with the P1-A/1-B Motor Master Relay.)

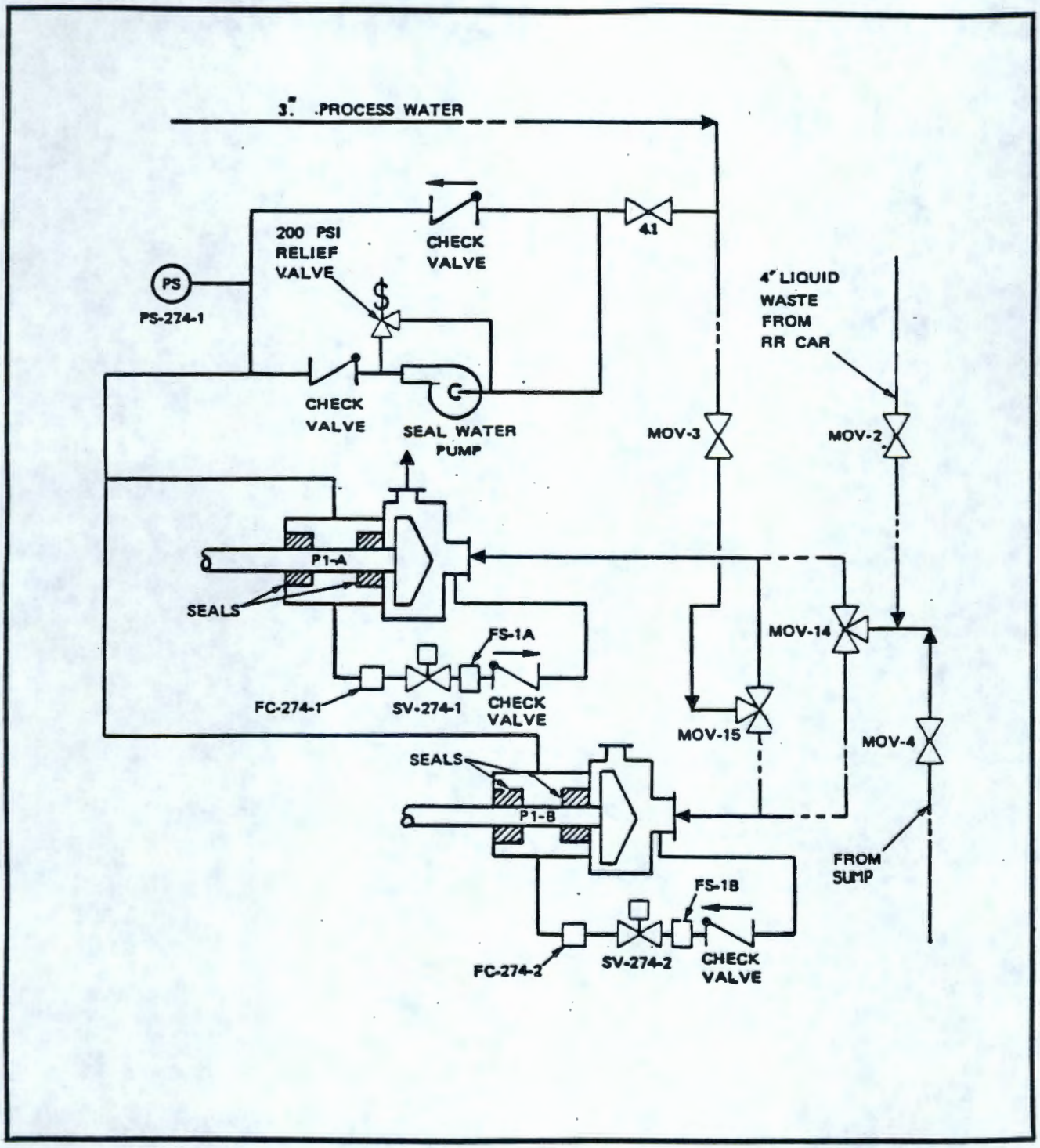

FIGURE 14. Seal Water System - Pumps P1-A and P1-B

3.2.3 Catch Tank

The catch tank (TK-1) (Figure 15) is a 1500-gallon stainless steel vessel located in a pit in the northeast corner of the tank car unloading room. The tank collects miscellaneous liquid from the unloading room and the mechanical equipment room. All liquid drainage into the catch tank is intermittent and nonroutine. Four infrequently used process streams (Figure 16) enter the catch tank on a planned basis:

- Unloading room and mechanical equipment room floor drainage from such sources as flush hoses, eye and safety showers and fire protection sprinklers
- Chemical tankage overflow and drainage
- Unloading room hose manifold drainage
- Condensate from chemical tanks and sampler.

The P1-A or P1-B pump transfers catch tank liquid to the tank farm on a batch basis. Transfers are initiated manually. Any liquid in excess of catch tank capacity will overflow into the catch tank pit. Both the catch tank and the catch tank pit (sump) are equipped with high level alarms that annunciate in the Control Room as well as at the 242-A Evaporator. The alarm signals are interlocked to close MOVs 2, 3, 5, 12, 21 and DS-4 to minimize flow of process liquid into the catch tank (see Table 3).

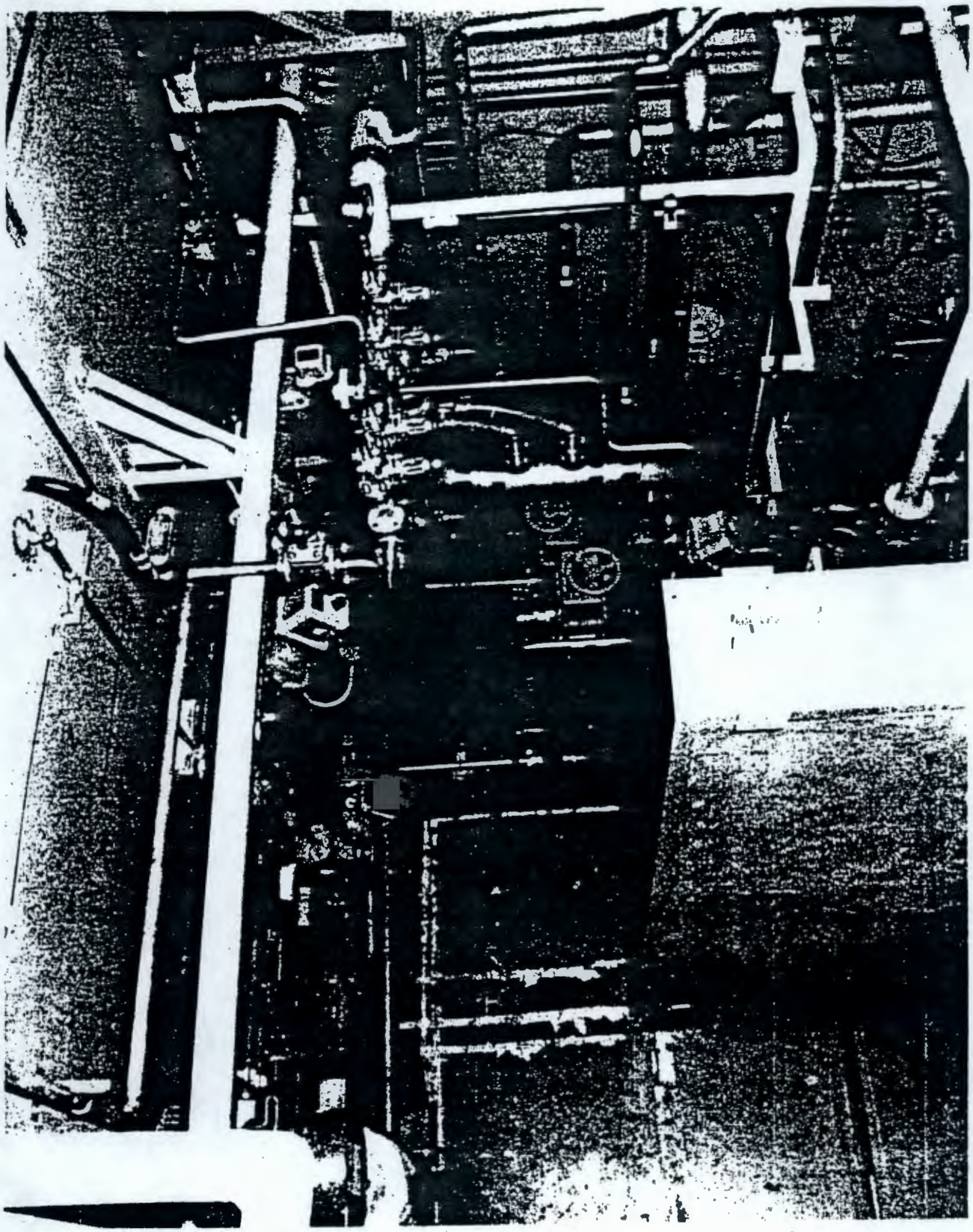

FIGURE 15. Catch Tank (TK-1)

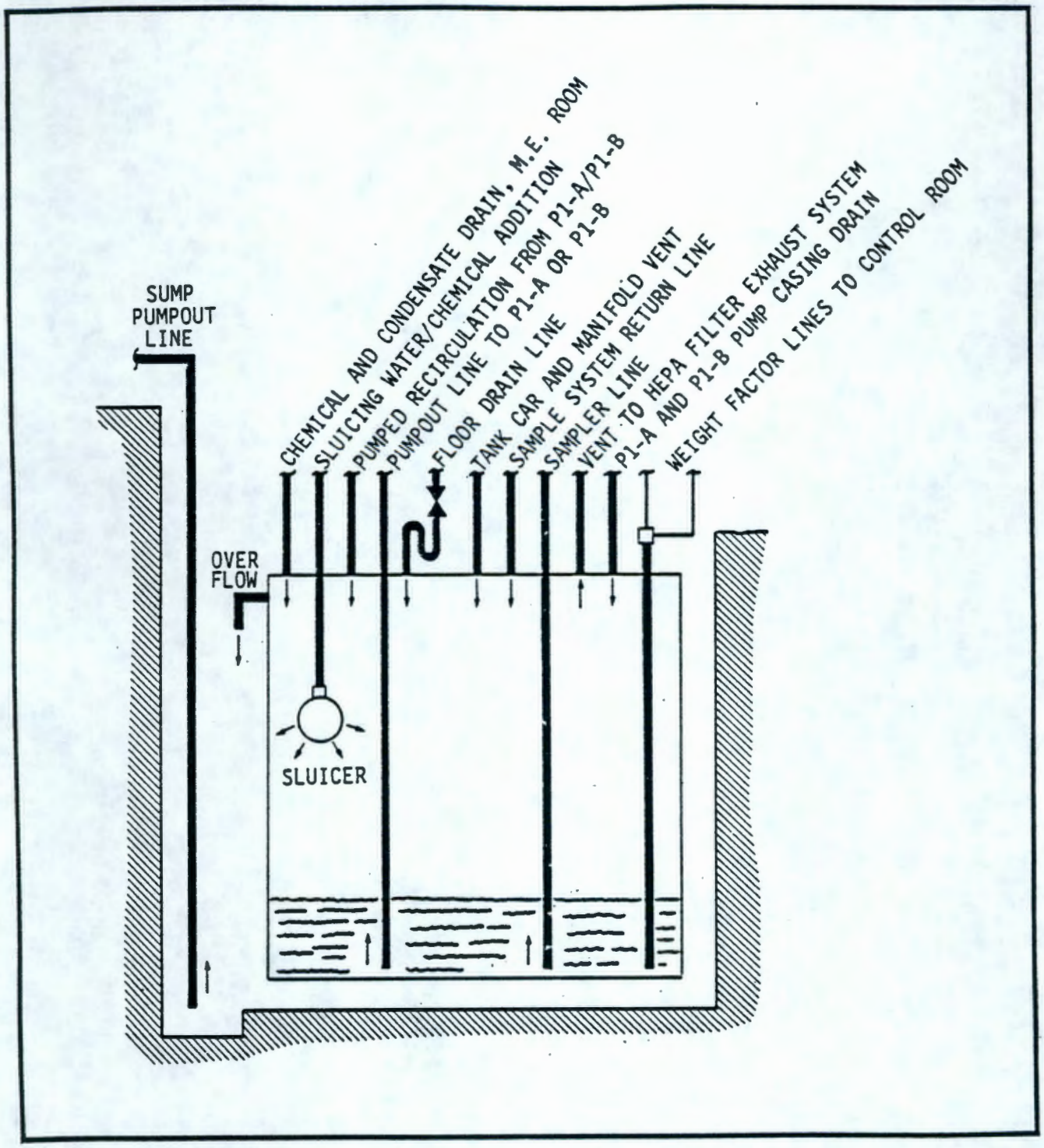

FIGURE 16. Catch Tank Services

TABLE 3. TANK CAR SAFETY INTERLOCKS

INTER-LOCK	EFFECT	CAUSE	PURPOSE	RECOVERY
1.	Pump P-3 will not run.	Low level in chemical tank valved to P-3 intake.	Prevent damage to P-3 pump from running dry.	Increase level in chemical tank or route pump intake to different chemical tank.
2.	Pump P-3 will not run.	MOVs A-1, B-1, C-1 and D-1 all closed.	Prevent damage to P-3 pump from running dry.	Open appropriate valve for tank to be pumped.
3.	Agitators in tanks 2, 3 or 4 will not run.	Level low in respective tank.	Protect agitator from damage by running in air.	Increase liquid level in tank.
4.	Pump P-4 will not run.	Level low in tank 5.	Prevent damage to P-4 pump from running dry.	Increase liquid level in tank 5.
5.	Pumps P-1A and P-1B will not run. MOV 18 closes and will not open.	Activation of tank farm master shutdown circuit caused by any of the leak detection circuits tied into the master shutdown, including leak in 204-AR to the AA valve pit encasement, and leak into diversion boxes of 204-AR to tank farm routing.	Protect tank farm from liquid spill.	Determine cause of alarm, correct problem, and reset master shutdown circuit. If shutdown is unrelated to 204-AR operations, set LEAK DETECTOR INTERLOCK BYPASS switch to BYPASS to perform 204-AR internal transfers only until master shutdown is cleared.
6.	Pumps P-1A and P-1B will not run. LOSS OF SEAL WATER PRESSURE light is ON.	Seal water pressure is below 120 psi. Likely specific causes: • Seal water pump not running • Raw water supply to seal water system is valved off.	Protect pump P-1A or P-1B from running without seal water - prevents seal overheating and contaminated leakage through seals.	Determine cause of low seal water pressure and correct.
7.	Pumps P-1A and P-1B will not run. LOSS SEAL WATER FLOW P-1A/P-1B.	Seal water flow through the seal water discharge line is not being sensed. Likely specific causes: • Raw water supply to seal water system is valved off • Variable orifice of seal water discharge line is plugged • Solenoid valves SV-274-1/ SV-274-2 are not opening.	Protect pump P-1A or P-1B from running without seal water - prevents seal overheating and contaminated leakage through seals.	Determine cause of loss of seal water flow and correct.
8.	MOV 3 will not open.	Pump P-1A or P-1B not operating.	Protect high pressure on seals without pump running.	Turn pump P-1A or P-1B on before opening MOV 3.
9.	Restroom exhaust fan EF-2 will not run.	Exhaust fan EF-1 is off.	Prevent negative pressure differential between restroom and tank car room.	Operate fan EF-2 only when EF-1 is operating.
10.	MOVs 2, 3, 5, 12, 21 and DS-4 closed, or will not open.	High level alarm in catch tank, sump or tank car.	Stop liquid flows into catch tank, sump or tank car to avoid overflow or contamination release.	Determine cause of high level alarm and reduce liquid level as required. Correct cause of high level. If tank car required pumping, turn HIGH LEVEL INTERLOCK BYPASS key switch to BYPASS (to allow MOV 2 to open) until alarm shuts off.
11.	MOV 16 will not switch.	MOV 17 will not switch.	Prevents inadvertent flow to tank farms through MOV 17.	MOV 17 must be unstuck.
12.	Stack exhaust fan EF-1 shuts down and will not run.	High or low differential pressure across the primary or secondary filters.	Prevents filter breach from high differential pressure and prevents releases through breached filters.	Replace filters.
13.	Pumps P-5A and P-5B will not run.	MOVs A-1, B-1, C-1 and D-1 all closed; MOV E-1 in wrong position.	Prevents damage to pumps from running dry.	Open appropriate valve or change position of MOV E-1.
14.	Pumps P-5A and P-5B will not run.	Low level in chemical tank valved to P-5A/P-5B intake.	Prevents damage to pumps from running dry.	Increase liquid level in chemical tank.

3.2.4 Chemical Makeup System

Equipment for the makeup of chemical solutions is located in the mechanical equipment room and consists of four tanks (Figures 17 and 18) with associated pumps, valving and piping. Three types of chemicals are routinely handled:

- Sodium hydroxide for neutralizing liquids shipped to the tank farm
- Sodium nitrite for corrosion prevention in the tank farm
- Inhibited acidic or basic decontamination solutions (such as the Turco decontamination chemicals).

Strong acids (such as nitric acid) are not normally required in the 204-AR Facility. Sodium hydroxide mixtures are delivered by tank truck and pumped directly into Tank 5. Tank 2 is normally used to make up dilute caustic. Tank 3 is normally used for nitrite makeup, and Tank 4 is used for high pH buffer solution. See Table 4 for tank descriptions. The following equipment is used in the chemical makeup system:

Tank 5. This caustic storage tank is an 1800-gallon carbon steel vessel used for receiving 50% sodium hydroxide delivered by tank truck. The caustic fill pipe penetrates the 204-AR wall and terminates next to a platform provided for making a connection with the tank truck unloading hose. The pump mounted on the truck transfers the caustic to Tank 5. From Tank 5, chemicals can be transferred to Tank 2 via pump P-4 or directly to the catch tank or tank car via pump P-3. Pump P5-A or P5-B can also be used to transfer liquid from TK-5 to the 4-inch pumpout line upstream of MOV-2. Tank 5 services include drain and overflow to the catch tank, a steam heating coil and WF liquid level sensing system.

FIGURE 17. Tank 5

TABLE 4. 204-AR CHEMICAL TANKS

	TK-2	TK-3	TK-4	TK-5
Capacity (Gallons)	500	500	200	1800
Construction	Carbon Steel	Stainless	Stainless	Carbon Steel
Intended Solution Storage	Sodium Hydroxide/ Sodium Nitrite	Nitrite Solution Makeup	High pH Buffer Solution	Sodium Hydroxide (50%)
Water Supply	Yes	Yes	Yes	No
Truck Load-in	No	No	No	Yes
Chem. Add. Port	Yes	Yes	Yes	No
Agitator	Yes	Yes	Yes	No
Overflow (to Catch Tank)	Yes	Yes	Yes	Yes
Drain (to Catch Tank)	Yes	Yes	Yes	Yes
Routing to Pump P-3	Yes	Yes	Yes	Yes
Routing to P5-A and P5-B	Yes	Yes	Yes	Yes
Recirculation Capabilities	No	No	No	Yes
Steam Heating Coil	Yes	Yes	No	Yes
WF Liquid Level Instr.	Yes	Yes	Yes	Yes

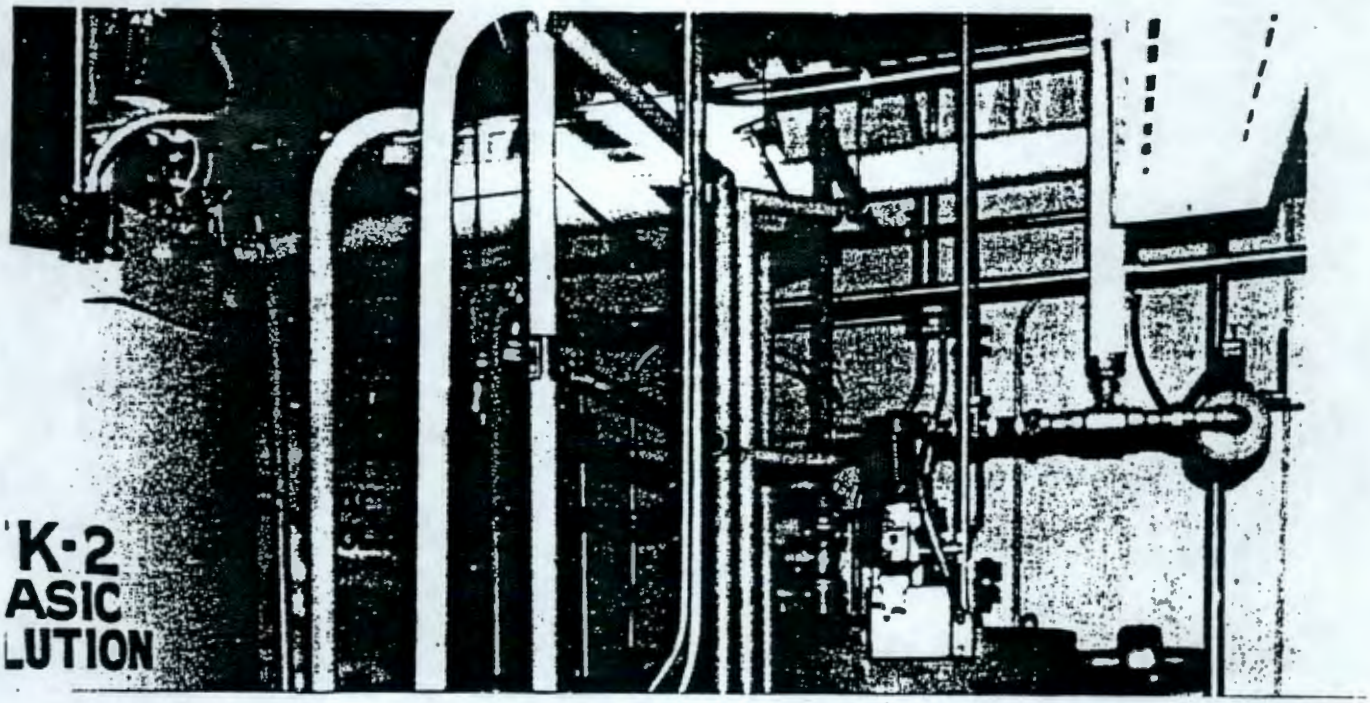

Tank 2. Tank 2 is a 500-gallon carbon steel tank used for makeup of dilute sodium hydroxide or sodium hydroxide/sodium nitrite solutions. Tank 2 services include drain and overflow lines to the catch tank, a steam heating coil, a WF liquid level sensing system, a water supply line, a chemical addition port and an agitator. Chemicals can be received from Tank 5 via pump P-4 and routed to the tank car or catch tank via pump P-3. Pumps P5-A and P5-B can pump chemicals from TK-2 into the 4-inch pumpout line.

Tank 3. Tank 3 is a 500-gallon stainless steel tank used for makeup of sodium nitrite solution. Services include drain and overflow lines to the catch tank, a steam heating coil, a WF liquid level sensing system, a water supply line, a chemical addition port and an agitator. Decontamination chemicals are routed to the tank car or catch tank via pump P-3 or to the 4-inch pumpout line via pump P5-A or P5-B. This tank is used infrequently.

Tank 4. Tank 4 is a 200-gallon stainless steel tank used for makeup of a high pH buffer solution that is used for pH probe calibration. Tank 4 services include drain and overflow lines to the catch tank, a WF liquid level sensing system, a water supply line, a chemical addition port and an agitator. Buffer solution is routed to the pH probe cavity via pump P5-A or P5-B.

Interlocks. The agitators in Tanks 2, 3 and 4 are interlocked with the WF liquid level sensing sysems to prevent agitator operation when the agitator blades are not fully covered with liquid.

The P-3 pump is interlocked with MOVs A-1, B-1, C-1, D-1 and E-1. Before the pump will operate, MOV E-1 must be in the correct position, and at least one of the remaining four MOVs (A through D) must be open to avoid running the pump dry. The pump is also interlocked with the chemical tank liquid level sensing systems. The pump operates when the tank routed to the pump via valves A-1, B-1, C-1 or D-1 contains more than a minimum liquid level heel.

The P-4 pump is interlocked with the Tank 5 liquid level system to assure that the pump will not run dry.

Metering pumps P5-A and P5-B are interlocked to run only when MOV E-1 is set to route from the chemical tanks to the pumps (P5-A or P5-B), and at least one of the tank isolation valves (MOV A-1, B-1, C-1 or D-1) is open. In addition, P5-A and P5-B are interlocked to operate only if the chemical tanks are above a minimum liquid level.

3.2.5 Floor Drainage System

Floor drainage from the mechanical equipment room, the unloading room balcony and the tank car room is routed to the facility catch tank (Figure 19).

Three drain lines enter the catch tank. The chemical tank area drain is protected by a seal loop and leads directly to the catch tank. The main mechanical equipment floor drain is likewise protected by a seal loop that leads to the tank car room floor drain system. The tank car room floor drains are tied into a single seal loop just above the catch tank. The three seal loops require routine water filling to assure that the water seals remain a contamination barrier.

The ventilation duct drain and the sample hood drain are equipped with valves rather than seal loops. The valves are normally closed, with the ventialtion duct drain padlocked to avoid drawing contamination into the duct system. The sample hood drain shares a common line with the sample jet discharge line. It may only be opened when the steam jet is off.

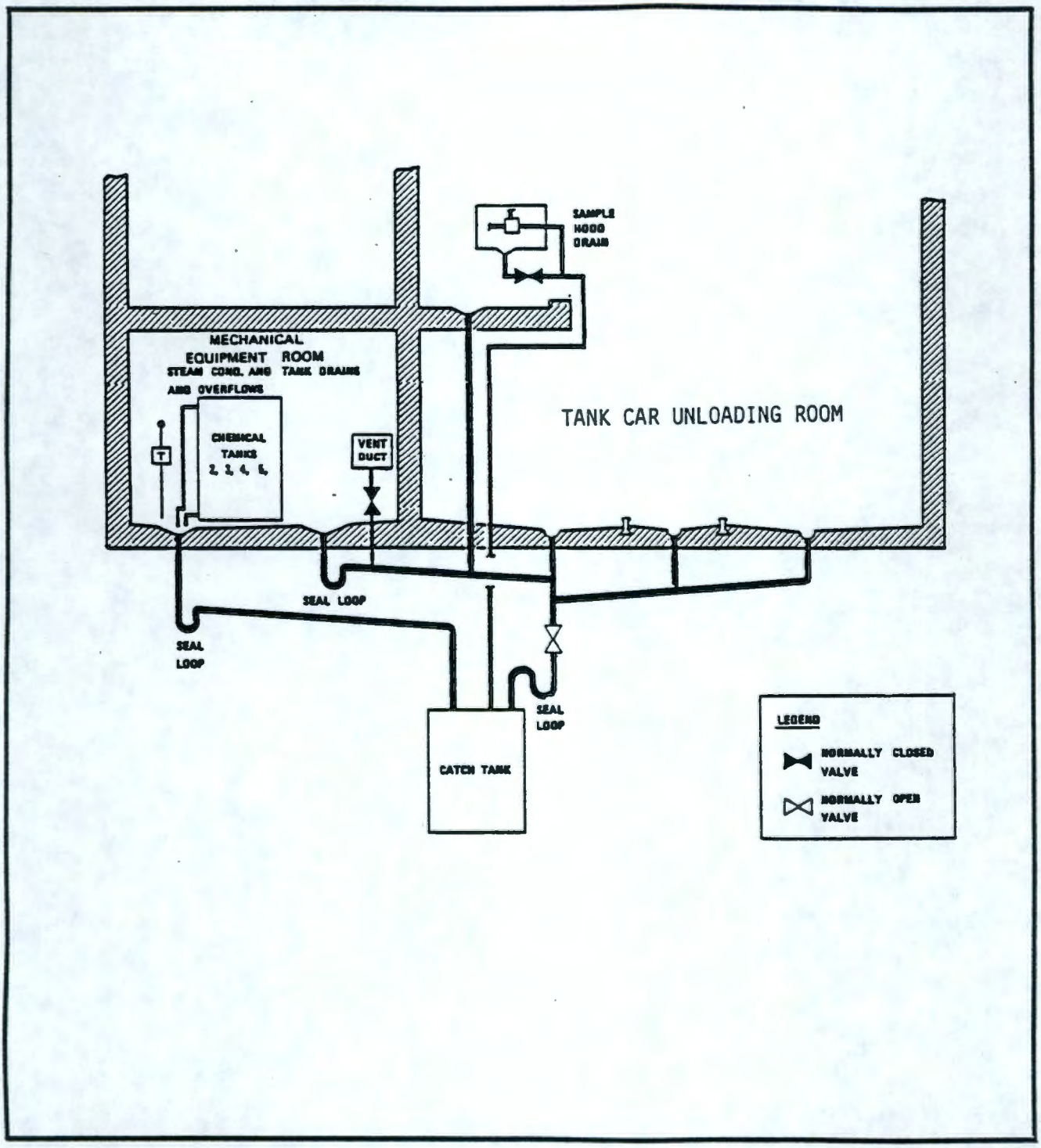

FIGURE 19. 204-AR Floor Drainage Schematic

3.3 UTILITIES

Utilities are supplied to the 204-AR Facility through tie-ins to existing 200 East Area utility lines.

3.3.1 Sanitary Water

Sanitary water serves the following functions at 204-AR:

- Drinking water
- Safety showers and eyewash stations
- Sanitary facilities.

A 2-inch line from the 6-inch sanitary water main supplies the 204-AR Facility. A pressure relief valve (PRV) outside the building lowers the pressure to 60 psi to avoid excessive water force in the safety showers and eyewash stations. To prevent contamination, the sanitary water is separated from the process systems. Drawing H-2-70698 shows the plumbing details.

3.3.2 Raw Water

Raw water serves the following functions:

- Fire protection
- Chemical makeup
- Process flush water
- Tank car and catch tank sluicing
- Other process functions.

Two raw water lines, 2- and 6-inches in diameter, enter the 204-AR Facility from the 8-inch raw water main (Figure 20). A caisson northwest of the building contains shutoff valves for the two lines. Pressure in

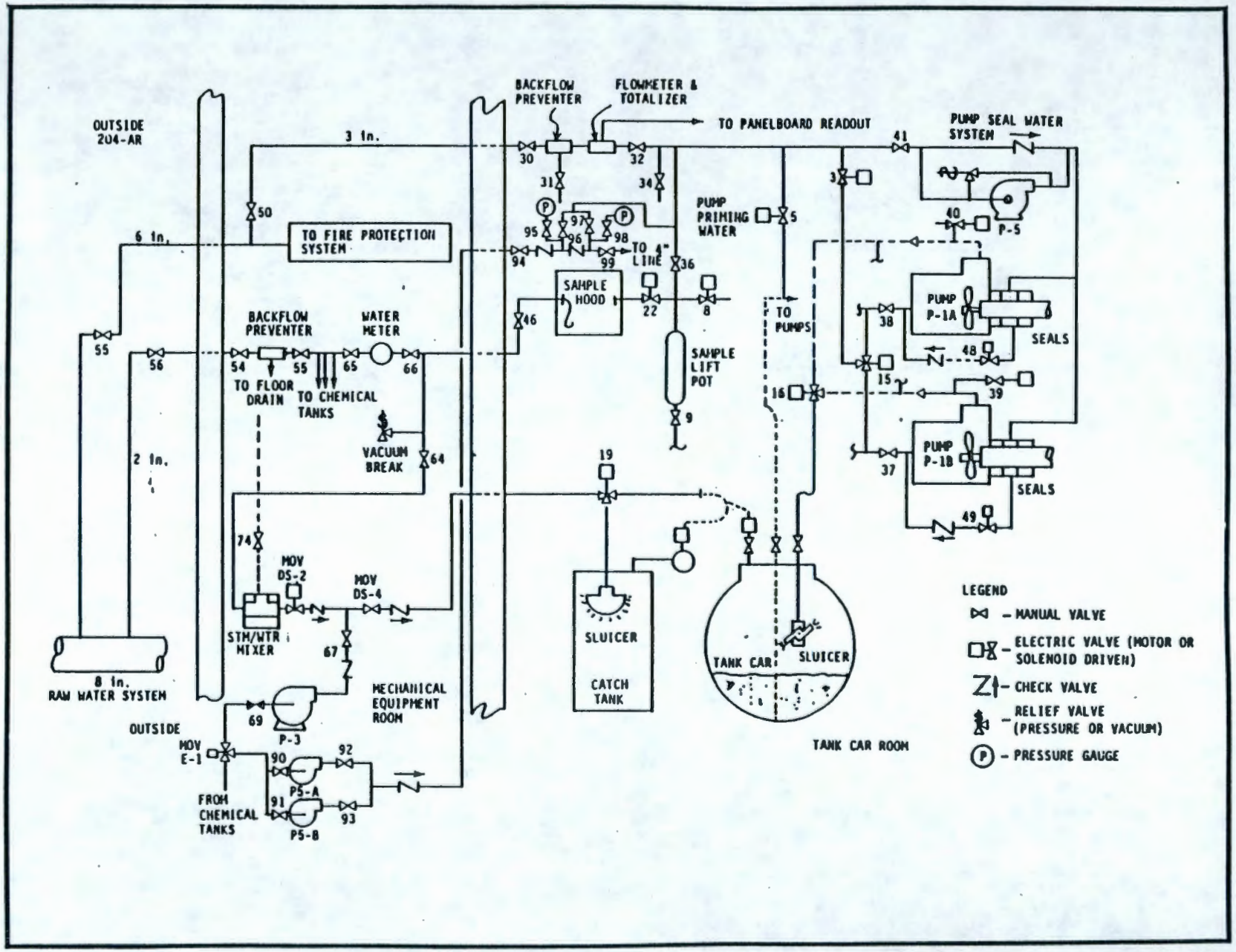

FIGURE 20. 204-AR Raw Water System

the system ranges from 50-120 psig. The 6-inch line is separated into three main raw water systems:

- A 3-inch branch from the 6-inch line provides water for tank car unloading room operations, including tank car sluicing, P1-A and P1-B pump seal water, pump priming water and sample system flushing
- A 4-inch branch from the 6-inch line provides water for the fire protection system
- The 2-inch raw water line provides water for chemical makeup, catch tank sluicing, and hot or cold water flushing.

Backflow prevention in the 2-inch and 3-inch systems protects against accidental contamination of the raw water system. The 3-inch backflow preventer is located in the tank car room. The 2-inch backflow preventer is located in the mechanical equipment room. Both systems are equipped with volume totalizers (water meters). The 2-inch line readout is in the mechanical equipment room. The 3-inch line readout is on the Control Room panel board.

Water for the fire protection system is obtained via a 4-inch branch from the 6-inch raw water line. The four manual fire stations in 204-AR are each located near a building exit. The fire alarm master box, control panel, trouble code transmitter and supervisory annunciator panel are all located near the door at the southeast end of the building. Heat and smoke detectors and fire protection sprinklers are installed throughout the facility. A fog spray nozzle is installed just before the de-entrainer to protect the HEPA system from fire damage. Fire screens are installed in the intake ducts in the tank car room to further protect the HEPA system. An alarm mounted in Panel G-1 at the 242-A Building (No. 29B) annunciates trouble in the 204-AR fire system.

3.3.3 Steam

Steam serves the following functions at 204-AR:

- Heating chemicals in Tanks 2, 3 and 5 by means of thermostatically controlled heating coils
- Heating flush water for the tank car and catch tank by means of a steam/water mixer
- Drawing tank car and catch tank liquid into the sampling system by means of a steam jet.

Steam enters the facility through a 2-inch tie-in to the 6-inch main steam line (Figure 21). A pressure relief valve (PRV) outside the building reduces the pressure from 225 psig to 100 psig. A safety relief valve vents steam to the atmosphere if steam pressure exceeds 110 psig. An outside steam trap drains condensate to a dry well before the steam line enters the building. Inside the building, 100 psig steam is used for the steam/water mixer (process water heater) and for the sample jet.

A second pressure reducing system lowers 100 psig steam to 20 psig for use in the chemical tank heating coils. A second steam trap installed in front of the PRV drains condensate to a second outside dry well. The safety relief valve is set at 22 psig to vent steam to the atmosphere.

All steam used in the building eventually enters the catch tank as steam condensate which is then pumped to a tank farm on a batch basis.

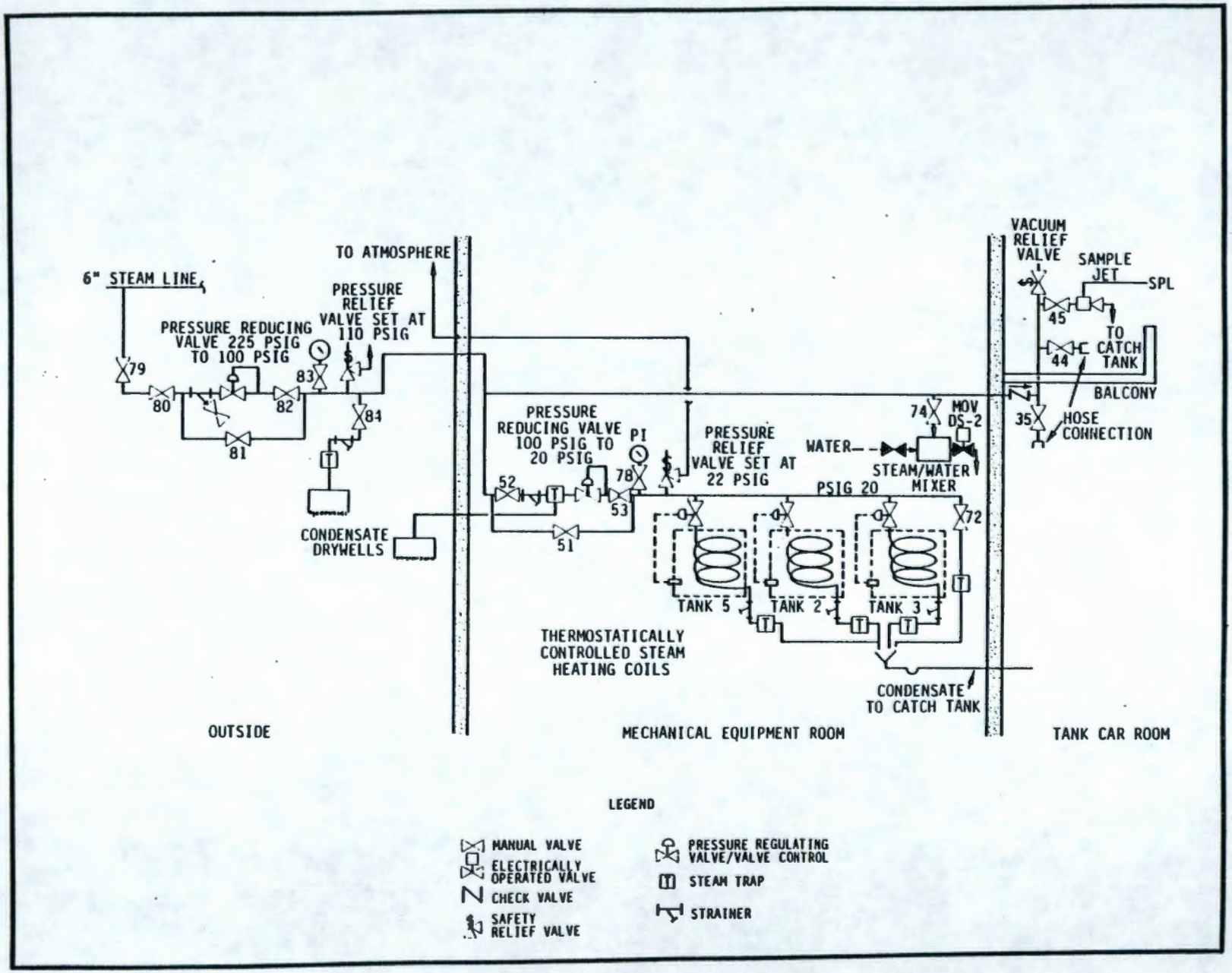

FIGURE 21. 204-AR Steam System

3.3.4 Electrical Power

Two systems provide power to the 204-AR Facility. The first system provides 480 V power from panel board D in the 242-A Evaporator Building to exhaust fan EF-1 (the tank car unloading canyon ventilation system) and to panel board EA in the mechanical equipment room. Panel board EA supplies power for unloading area lighting, MOVs, backup instrument air compressor, radiation monitoring instrumentation, fire alarm system and fire system excess pressure pump. This system is backed up by the 242-A diesel generator. In the event of a power failure, the generator provides power for all equipment operated from panel board D. The exhaust fan EF-1 restarts automatically after a power outage.

A second system provides power from the 13.8 kV line C8-L6. Power is fed to the pad-mounted transformer (T1) and supplies the instrument air compressor, pumps P1-A and P1-B, HVAC systems except exhaust fan EF-1, tank car unloading room doors and panel board A (all other electrical systems).

3.3.5 Instrument Air

A five hp electric compressor is located in a new, pre-fabricated steel building (Figure 22) outside the northeast corner of the 204-AR Building. The compressor building is 10 foot 8 inches long, 8 foot wide and 8 foot high.

The compressor delivers 15 cfm at 100 psig on demand to a storage reservoir. The air passes through a dryer, filter and liquid separator to prevent damage to instruments. This air pressure is reduced with a PRV to 20-22 psig for instrument use. Backup electrical power is not provided for this compressor. A 1/3 hp electric air compressor, also installed in 209-A, serves as a backup in case of power failure. Power for the 1/3 hp compressor is provided from EA panel.

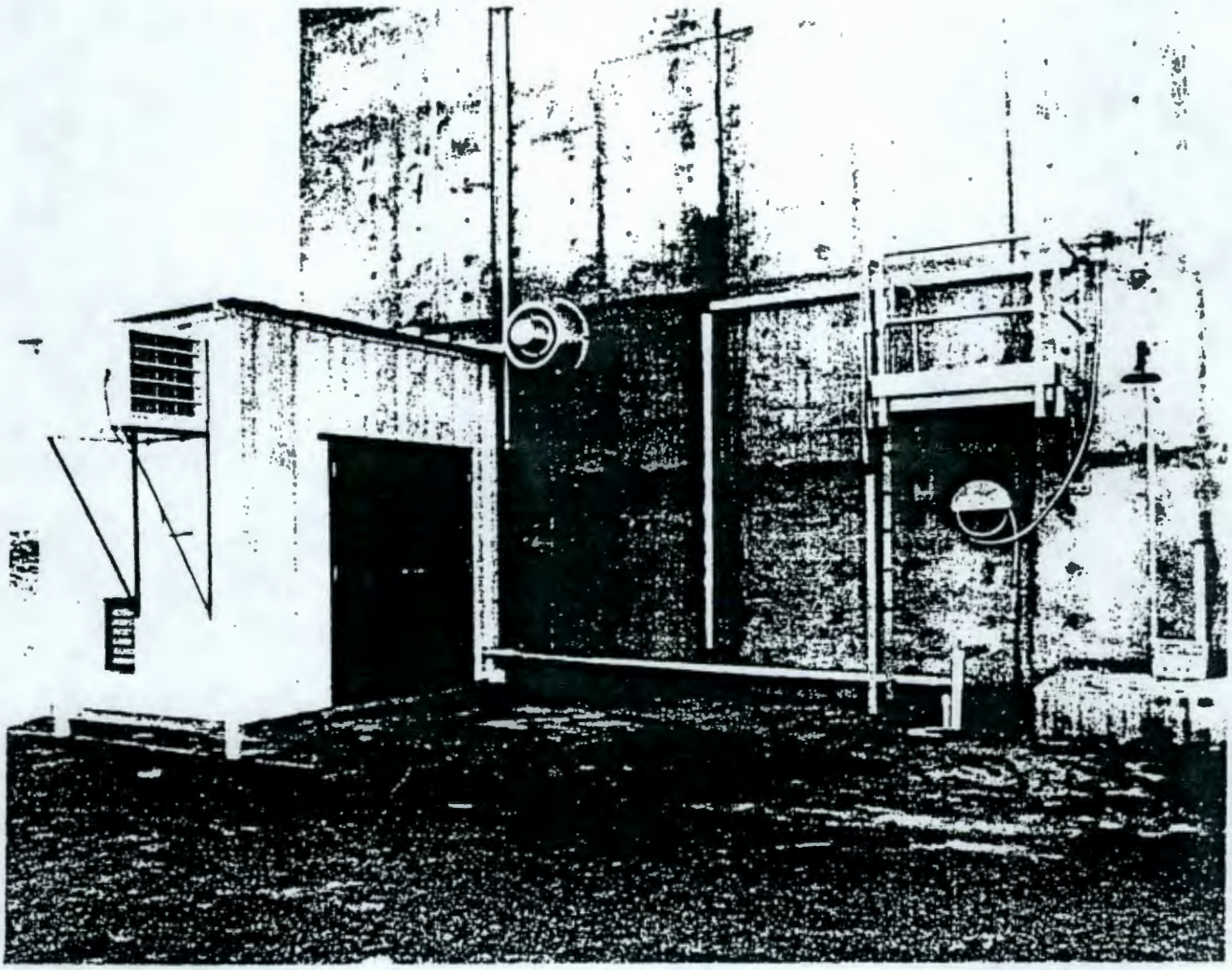

FIGURE 22. Compressor Building 209A

Instrument air is provided for the following operations at 204-AR:

- Weight factor (bubbler tube) liquid level measurement in the following vessels:
  - Tank 1 (unloading room catch tank)
  - Tank 2 (caustic/nitrite tank)
  - Tank 3 (nitrite solution makeup tank)
  - Tank 4 (buffer solution tank)
  - Tank 5 (caustic tank)
  - Railroad tank car
- Pneumatic flow rate signal transmission to flow recorder/controller FRC-1
- Pneumatic flow control signal transmission for DOV 22 regulating flow to tank farm
- Pneumatic control to pressure regulator/DOV for sluicing flow control (DOV 23)
- Pneumatic temperature controller on steam heating coils for Tanks 2, 4 and 5.

3.3.6 Sanitary Waste Disposal

Sanitary wastes are routed to a septic tank located between the 204-AR Facility and the 244-AR Vault.

3.4 VENTILATION SYSTEMS

Three ventilation systems provide fresh air, temperature control and radioactive containment at 204-AR. The systems are designed to ensure that air will flow from areas with no possibility of becoming contaminated into areas that could become contaminated.

3.4.1 Personnel Area Ventilation System

The personnel area HVAC system (Figure 23) operates at a positive pressure using a mixture of recirculated and outside air. Heating and cooling are thermostatically controlled. The system provides air to the Control Room, locker room, toilet and soiled clothing room. Most of the air supplied to the Control Room returns as recirculated air. The air from the other rooms is eventually exhausted to the outside through the soiled clothing room to the filter system or through the toilet exhaust fan. The toilet exhaust fan EF-2 is electrically interlocked and operates only when both the personnel area HVAC fan and the tank car unloading room exhaust fan EF-1 are running.

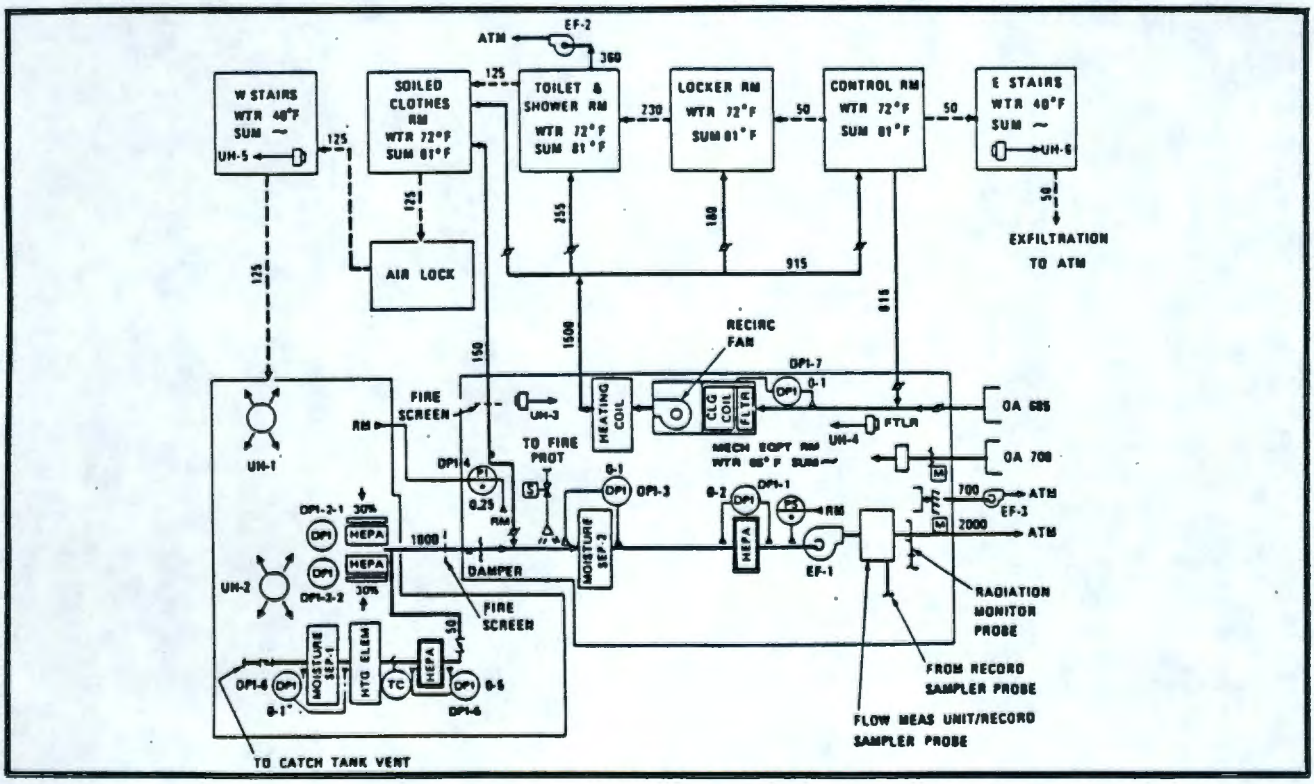

FIGURE 23. HVAC Flow Chart

3.4.2 Radiation Zone Ventilation System

The radiation zone ventilation system (Figure 24) operates at a negative pressure and exhausts air from the tank car unloading room, the soiled clothing room and the catch tank. A single 2000 cfm fan exhausts air through a roof-mounted stack. The tank car unloading room contains two sets of filters in parallel. The unloading room air passes through a parallel set of 30% filters and primary HEPA filters before entering the exhaust duct into the mechanical equipment room. Here the air passes through a damper and a de-entrainer (installed to prevent wetting the secondary HEPA filter in the event the in-duct fire spray nozzle is opened) before entering the second HEPA filter bank. The unloading room exhaust air is not heated directly, but depends on the ceiling-mounted space heaters in the unloading area to warm cold or wet air.

The catch tank is vented separately through a small 50 cfm system consisting of a moisture separator, a heater and a HEPA filter. The exhaust from the catch tank vent system enters the main vent system just behind the primary HEPA filter bank and passes through the second main HEPA bank before release to the stack.

The soiled clothing room is vented into the main exhaust duct ahead of the de-entrainer and second HEPA filter bank. A small damper controls the exhaust flow from the room.

All HEPA filter systems are of the bag-in, bag-out type that provide a high degree of radiological containment during filter changing.

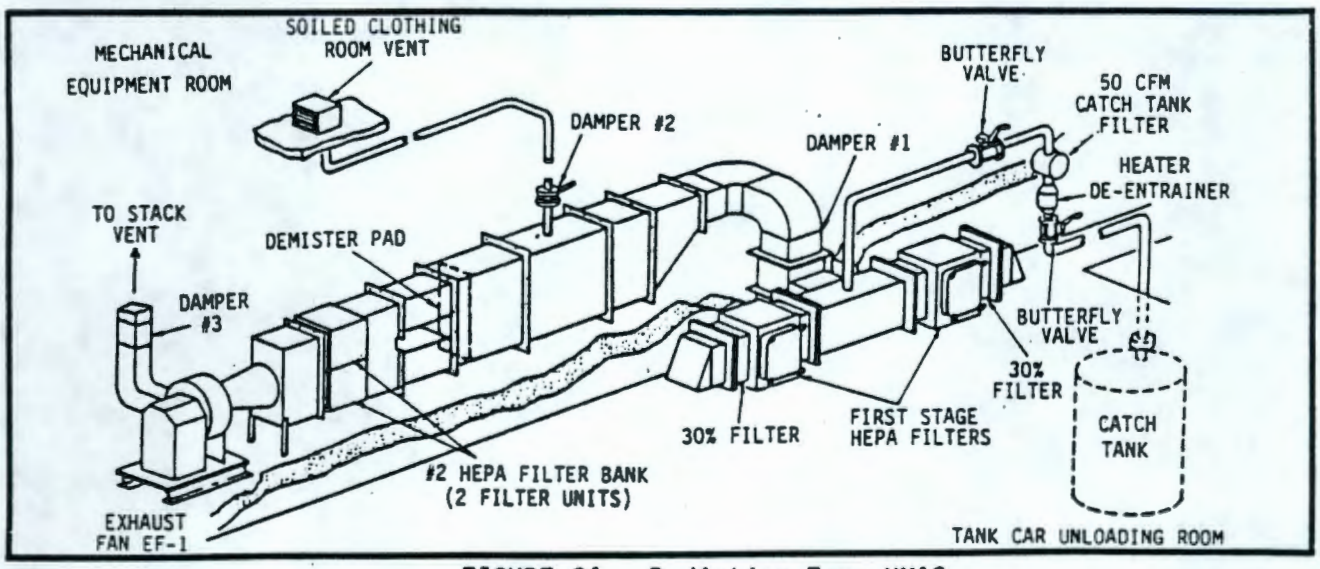

FIGURE 24. Radiation Zone HVAC

3.4.3 Mechanical Equipment Room Ventilation System (Figure 25)

Two thermostatically controlled ceiling-mounted heaters provide temperature control in the mechanical equipment room. Routine ventilation is provided by exfiltration through the doors and the gravity-operated exhaust damper. During operations requiring additional ventilation, such as during chemical makeup, exhaust fan EF-3 can be started with a manual switch located in the room. Operation of the fan generates a small vacuum in the mechanical equipment room. To avoid drawing contamination through potential leaks in the contaminated exhaust ducting, the operation of the EF-3 fan is limited administratively to periods when the main EF-1 fan is operating and drawing a greater vacuum on the contaminated system.

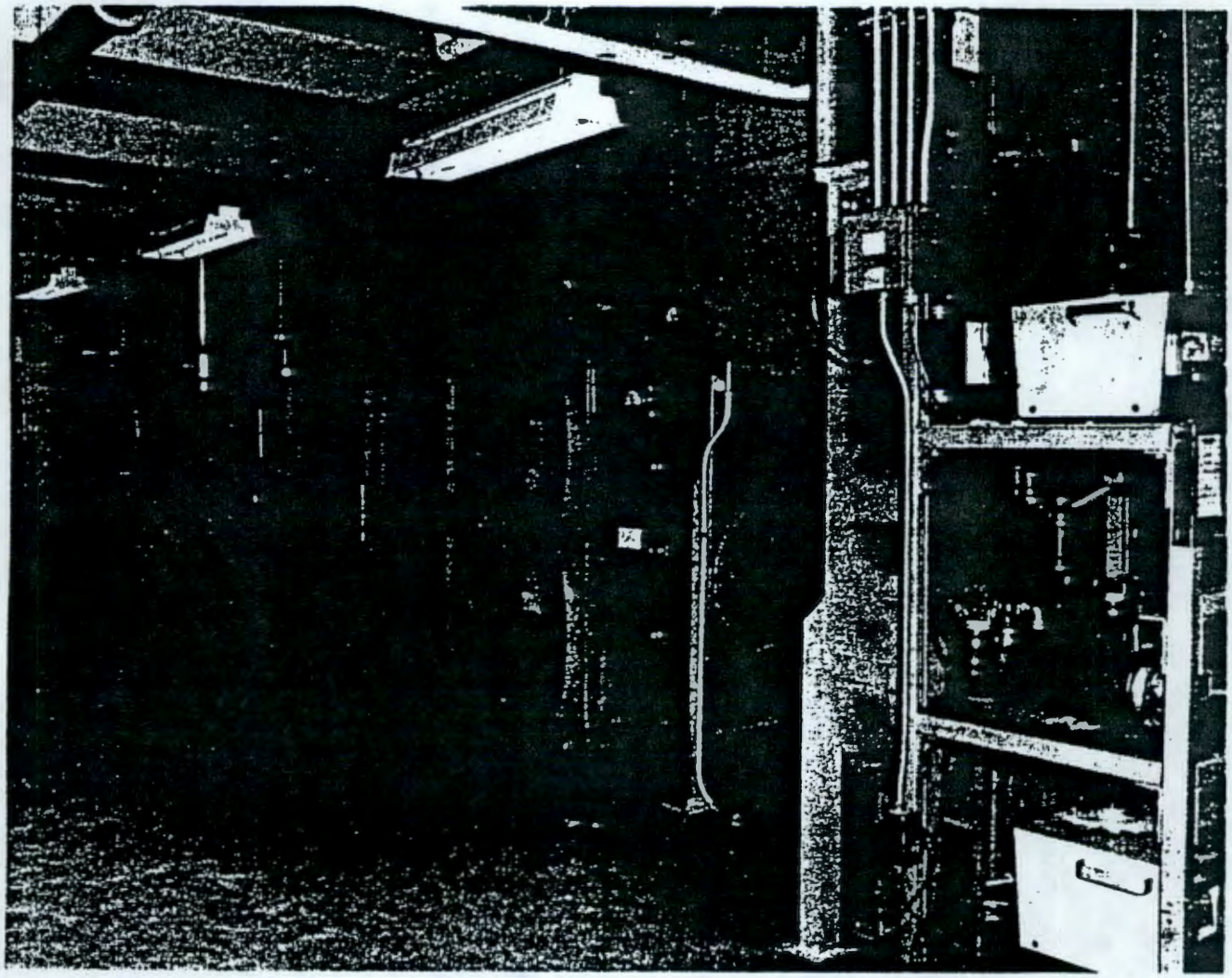

FIGURE 25. Radiation Zone HVAC in Mechanical Equipment Room

TABLE 5. 204-AR FANS

	EF-1	EF-2	EF-3	Recirculation
CFM	2000	360	700	1500
Type	Centrifugal	Centrifugal Roof Exhaust	Centrifugal Wall Exhaust	Centrifugal
Make	Aladdin, Series	Exit Air CX-1032	Exit Air WX-1225	Carrier 40F5200
Motor	5 hp, 460V, 3 Phase	120V 1 Phase	120V 1 Phase	3/4 hp, 208V 1 Phase
Drive	V-Belt	Direct	Direct	Direct
Function	Radiation Zone Exhaust	Rest Room Exhaust	Mechanical Equipment Room Exhaust	Personnel Area Ventilation

NOTE - Refer to Drawing H-2-70696 for further information.

TABLE 6. 204-AR UNIT HEATERS

Heater Designation	kW	Electrical Supply	Make	Location
UH-1 and -2	30	480V, 3 Phase	Tricorp 43DFH30	Tank Car Unloading Room
UH-3 and -4	7.5	480V, 3 Phase	Tricorp 43UH7	Mechanical Equipment Room
UH-5 and -6	3.3	480V, 3 Phase	Tricorp 43UH3	East and West Stairs

NOTE - Refer to Drawing H-2-70696 for further information.

3.5 RADIATION MONITORING SYSTEMS

The 204-AR Facility is equipped with three types of radiation monitoring systems for the radiological protection of personnel and the environment. These systems are:

- Area radiation probes
- Continuous air monitors (CAMs)
- Record air samplers.

3.5.1 Area Radiation Probes

Two area radiation probes are located in the tank car unloading area. One is located on the balcony and the other on the main floor. These probes warn of high radiation fields.

The instruments are single-channel gamma monitoring units with local readouts and audible and visual alarms both at the instrument and in the 204-AR Control Room. A radiation probe alarm also actuates the TROUBLE 204-AR FACILITY alarm in the 242-A Evaporator.

3.5.2 Vacuum Systems

Two vacuum systems provide the vacuum required for all record air samplers (Figure 26).

One system provides vacuum for the stack record sampler and stack CAM and for the mechanical equipment room CAM. This system is operated by two 0.5 hp vacuum pumps located in the mechanical equipment room. The pumps are equipped with a vacuum alarm, mounted in the control panel, that annunciates on low system vacuum. Each pump draws approximately 9.5 cfm. Both pumps are used to operate this air sampling system, although one would be marginally sufficient if the other failed. Normal air flow through the stack record sampler is 1.5 cfm.

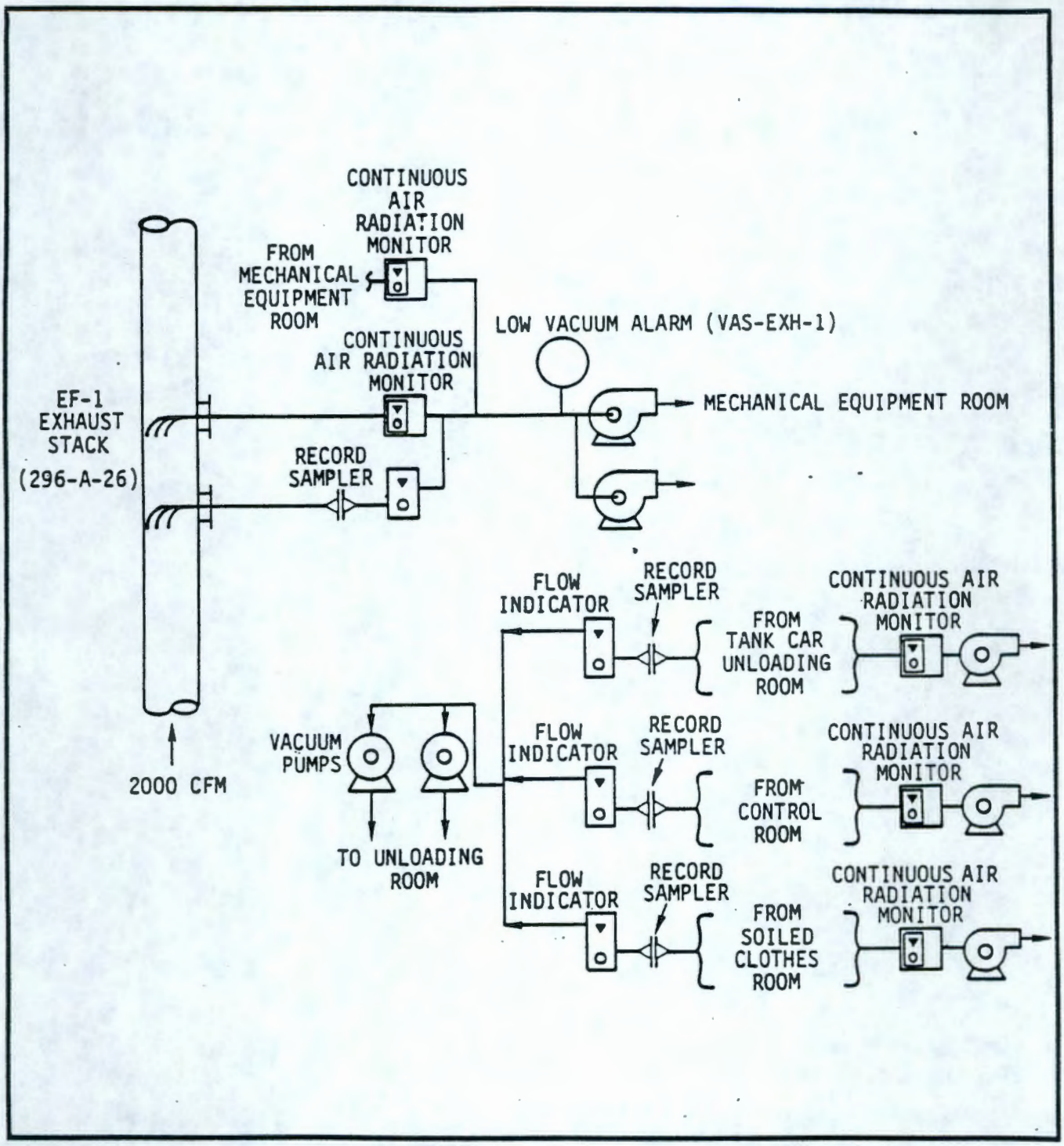

FIGURE 26. Radiation Monitoring Vacuum Systems

A similar vacuum pump system provides vacuum for tank car unloading room, Control Room and soiled clothing room record air samplers. Air flow through these samplers is also 1.5 cfm.

The unloading room, soiled clothing room and control room CAMs use their own vacuum pump. No low flow alarms are associated with these pumps.

3.5.3 Record Air Samplers

Record air samplers collect particulate matter on filter paper at the following four 204-AR locations:

- Tank car unloading room balcony
- Soiled clothing room
- Control Room
- Exhaust stack (296-A-26).

3.5.4 Continuous Air Monitors (CAMs)

CAMs monitor and record beta-gamma activity in the airflow through the tank car unloading area, soiled clothing room, mechanical equipment room, control room and exhaust stack.

The instruments have a range of 10^3 to 10^5 cpm and a sensitivity of 3×10^{-11} mCi/ml for ^{90}Sr. Normal airflow rate is 2 cfm. The units have background radiation subtraction capability that enables them to indicate only the radiation produced by particulate matter from the air. Audible and visual alarms annunciate at the CAM, in the 204-AR Control Room, and at 242-A via the TROUBLE 204-AR FACILITY alarm. A multi-pen recorder on the 204-AR Control Room auxiliary panel records CAM levels for the exhaust stack, unloading area and soiled clothing room.

3.5.5 Exhaust Stack Monitor

The exhaust stack monitoring system consists of a Record Air Sampler and a CAM. The CAM monitors particulate emissions from the stack through isokinetic probes mounted in the stack. Alarms and readouts for the stack CAM operate identically to the soiled clothing room and unloading room CAMs.

3.5.6 Alarms and Annunciators

Alarms and annunciators are located in the 204-AR Facility and in the 242-A Evaporator Control Room. All alarms displayed on the panel boards (Figures 12 and 13) in the 204-AR Control Room are accompanied by an audible alarm when activated. Alarms and annunciators are described in detail in Paragraph 3.1.3 (Control Room and Instrumentation). The facility fire alarm is described in Paragraph 3.3.2 (Raw Water). Alarm response is described in SOP TO-290-040.

4.0 GLOSSARY

air sample - a sample of air used to determine the amount of radioactivity present. A known volume of air is passed through a filter paper and the particles concentrated on the filter surface are measured in special counters.

catch tank - small-capacity single-shell tank used for collection and short-term storage of miscellaneous liquid waste.

continuous air monitor (CAM) - instrumentation for measuring airborne radioactive contamination.

high efficiency filter - filter designed to achieve 99.95 percent minimum efficiency in the containment of radioactive particulates greater than 0.3 micron size.

high-level alarm - an instrument device set to alarm at a predetermined maximum level.

low-level alarm - an instrument device set to alarm at a predetermined minimum level.

interlock - circuitry and instrumentation which prevent activation of equipment until required conditions have been met.

particulate - generally refers to particles in a gas stream which usually can be removed by filtration.

raw water - untreated and unfiltered water.

specific gravity - weight ratio of a given substance compared to an equal volume of pure water at 4 ^{o}C.

ventilation system - equipment through which a tank, building or other structure may be vented to atmospheric pressure.

weight factor - a measure of the hydrostatic pressure in a dip tube used to indicate the liquid level in a vessel. It is used with the vessel calibration and specific gravity value to determine the liquid volume.

5.0 APPENDICES

5.1 REFERENCES

DOCUMENT NUMBER	TITLE
TO-290-010	Receiving, Processing and Releasing Tank Cars in 204-AR Building
TO-290-040	Response to Trouble Alarms at 204-AR Building
TO-290-052	Internal Transfers in 204-AR
TO-290-060	Sampling of Railroad Tank Cars and Catch Tank at 204-AR
TO-290-070	Chemical Makeup in 204-AR
TO-290-130	Transfer from 204-AR to Tank Farm
SD-WM-OTR-047	Operability Test Reports for the 204-AR Inline Mixer System
OSD-T-151-00007	Operating Specifications for 241-AN, -AP, -AW, -AY, -AZ and -SY Farms
OSD-T-151-00008	Operating Specifications for the 204-AR Waste Unloading Facility

5.2 DRAWING LIST

DRAWING NUMBER	TITLE
H-2-70680	Sampler Enclosure Assembly and Details
H-2-70681	Sampler Enclosure Arrangement and Detail
H-2-70682	Civil/Drawing Index Site Plan
H-2-70683	Civil Profiles
H-2-70684	Civil 2"-St Line and Dry Well Details
H-2-70685	Architectural Plans, Details and Schedules
H-2-70686	Architectural Plans, Sections, Elevations and Details
H-2-70687	Architectural Stair and Miscellaneous Details
H-2-70688	Structural Misc Steel Plan Sections and Details
H-2-70689	Structural Exst 6"-Steam Modifications
H-2-70690	Structural Foundation Plan Sections and Details
H-2-70691	Structural Concrete Sections and Details
H-2-70692	Structural Plans Sections and Details
H-2-70693	Structural Misc Steel Plans Sections and Details
H-2-70694-1	Electrical Lighting and Fire Alarm Plans
H-2-70694-2	Electrical Wiring Diagrams
H-2-70695-1	Electrical Diagrams and Panel Schedules
H-2-70695-3	Electrical Wiring Diagrams
H-2-70695-3	Electric Details and Pole Line Plans and Details
H-2-70695-4, -5, -6	Electrical Wire Run List and Conduit Schedule
H-2-70695-7	Electrical Wiring Diagrams
H-2-70696	HVAC Schedules, Diagrams and Details
H-2-70697	HVAC Plan, Sections and Details
H-2-70698	Plumbing Plans, Details and Diagrams
H-2-70699	Fire Protection Sprinkler System Plans and Sections
H-2-70700-1, -2, -3, -4	Instrumentation Panel Arrangements, Wiring and Details
H-2-70701-1, -2	Instrumentation Plan, Sections and Details

DRAWING NUMBER	TITLE
H-2-70703-1, -2	Engineering Flow Diagram
H-2-70704	Piping Plans and Elevations
H-2-70705	Piping Sections and Details
H-2-70706	Piping Plans and Profile 204-AR to 241-A-A Valve Pit
H-2-70707	Tank Assembly No. 6 Primer Pot No. 1 Catch Tank
H-2-70708	Tank Assembly No. 4 and 5 Chemical Storage
H-2-70709	Tank Assembly No. 2 and 3 Chemical Storage
H-2-71503	Piping Plan and Sections
H-2-71504	Piping Plans and Sections
H-2-71505	Piping Plans, Sections and Details
H-2-71506	Hose Installation
H-2-71507-1, -2	Hose and Mounting Components
H-2-71558	Elec/Instm Substation A Connection Diagram
H-2-92187-1, -2 -3, -4	Air Monitor and Control Installation
H-2-94751	Railroad Tank Car Drain Plug Tool
H-2-95302	Compressor Aftercooler Installation
SK-2-04263	Plot Plan Waste Unloading Facility
SK-2-04264	Architectural Plans, Section, Elevations and Notes
SK-2-04265	Foundations and Floors Framing Plans Elevation, Sections and Details
SK-2-04266	Electrical and Ventilation Plans, Sections and Diagrams
SK-2-04267	Conceptual Engineering and Hydraulic Flow Diagram
SK-2-04361	Civil Site Plan